Bridge #1-687

Walnut Street Bridge
over Christina River

Prepared by:

Hardesty & Hanover

MAINTENANCE MANUAL – VOLUME II

DelDOT

Published: May 2013

Updated: September 2013

Updated: July 2018 (Replacement Chapter 8)

Prepared for:

AECOM

TABLE OF CONTENTS

CHAPTER 6 - PURPOSE AND SCOPE OF MAINTENANCE MANUAL 6-1
6.1 PURPOSE OF MAINTENANCE MANUAL 6-1
6.2 LAYOUT OF MAINTENANCE MANUAL 6-1
6.3 REFERENCES 6-1

CHAPTER 7 - MAINTENANCE POLICIES 7-1
7.1 INTRODUCTION 7-1
7.2 MAINTENANCE TECHNICIAN TRAINING 7-1
7.2.1 BRIDGE LAYOUT 7-1
7.2.2 BRIDGE OPERATION 7-1
7.2.3 TROUBLESHOOTING AND EMERGENCY SITUATIONS 7-1
7.2.4 BRIDGE MAINTENANCE 7-1
7.3 LOCKOUT/TAGOUT PROCEDURE 7-1
7.4 PERSONAL PROTECTIVE EQUIPMENT 7-1
7.5 MAINTENANCE ACCESS 7-1
7.5.1 ENTRANCE ROOM 7-2
7.5.2 CONTROL ROOM 7-2
7.5.3 STORAGE ROOM 7-2
7.5.4 ELECTRICAL/MECHANICAL ROOMS 7-2
7.5.5 SPAN LOCK AND RECEIVING SOCKET PLATFORMS 7-2
7.5.6 COUNTERWEIGHT ACCESS PLATFORM 7-2
7.5.7 COUNTERWEIGHT PIT 7-2
7.5.8 FENDERS 7-3
7.6 MAINTENANCE OPENINGS 7-3
7.7 MAINTENANCE AND BRIDGE OPERATORS DURING OPENINGS 7-3
7.8 MAINTENANCE FORMS 7-3
7.9 MAINTENANCE REPORTING PROCEDURES 7-3

CHAPTER 8 - ELECTRICAL AND MECHANICAL MAINTENANCE 8-1
8.1 LEAF SUPPORT SYSTEM AND COUNTERWEIGHTS 8-1
8.1.1 TRUNNION BEARINGS 8-1
8.1.2 LIVE LOAD BEARINGS 8-2
8.1.3 COUNTERWEIGHTS 8-3
8.2 SPAN DRIVE MACHINERY 8-4

8.2.1 MOTOR BRAKES 8-4
8.2.2 COUPLINGS 8-5
8.2.3 PRIMARY REDUCERS 8-7
8.2.4 BEARINGS 8-8
8.2.5 OPEN GEARING 8-9
8.2.6 INSTRUMENTATION DRIVE EQUIPMENT 8-11
8.3 SPAN LOCK MACHINERY AND CENTERING EQUIPMENT 8-11
8.3.1 LOCK BARS, GUIDES AND RECEIVERS 8-12
8.3.2 SPAN LOCK REDUCER 8-13
8.3.3 SPAN LOCK MOTOR COUPLING 8-14
8.3.4 SPAN LOCK RACK AND PINION 8-15
8.3.5 CENTERING DEVICE AND CENTERING GUIDE 8-16
8.4 TRAFFIC GATES 8-17
8.4.1 WARNING GATES 8-17
8.5 ELECTRICAL POWER SYSTEMS 8-18
8.5.1 MOTOR CONTROL CABINETS 8-18
8.5.2 DRIVE CABINETS AND RESISTORS 8-20
8.5.3 PANELBOARDS 8-22
8.5.4 TRANSFORMERS 8-22
8.5.5 STANDBY EMERGENCY GENERATOR RECEPTACLE 8-23
8.5.6 SAFETY (MANUAL TRANSFER) AND DISCONNECT SWITCHES 8-24
8.5.7 ELECTRICAL CONDUCTORS 8-25
8.5.8 DROOP CABLES 8-25
8.5.9 SUBMARINE CABLES 8-26
8.6 LIGHTING SYSTEMS 8-27
8.6.1 NAVIGATION LIGHTS 8-27
8.6.2 INTERIOR/EXTERIOR LIGHTS 8-28
8.6.3 TRAFFIC SIGNALS 8-28
8.6.4 TRAFFIC GATE ARM LIGHTS 8-29
8.7 ELECTRIC MOTORS 8-29
8.7.1 LOCK MOTORS 8-29
8.7.2 MAIN LEAF (SPAN) MOTORS 8-30
8.7.3 TRAFFIC GATE MOTORS 8-31
8.8 CONTROL SYSTEM 8-32
8.8.1 RELAY CABINETS 8-32

8.8.2 CONTROL CONSOLE 8-34
8.8.3 LIMIT SWITCHES 8-35
8.8.4 SPEED SWITCHES AND TACHOMETER ASSEMBLY 8-37
8.9 MISCELLANEOUS EQUIPMENT 8-38
8.9.1 SIREN 8-38
8.9.2 HEATING AND AIR CONDITIONING SYSTEMS 8-38
8.9.3 SUMP PUMPS 8-39
8.9.4 HOT WATER HEATER 8-40
8.9.5 HEAT TRACE 8-40
8.9.6 PITS, PLATFORMS, AND WALKWAYS 8-41
8.9.7 CONDUIT SYSTEMS 8-41

CHAPTER 9 - PHOTOS 9-1
9.1 LEAF SUPPORT SYSTEM AND COUNTERWEIGHTS 9-4
9.2 SPAN DRIVE MACHINERY 9-7
9.3 SPAN LOCK MACHINERY AND CENTERING EQUIPMENT 9-13
9.4 TRAFFIC CONTROL DEVICES AND NAVIGATION LIGHTS 9-17
9.5 POWER DISTRIBUTION EQUIPMENT 9-20
9.6 CONTROL EQUIPMENT 9-22
9.7 MISCELLANEOUS EQUIPMENT 9-32

CHAPTER 10 - MAINTENANCE FORMS 10-1
10.1 MECHANICAL AND ELECTRICAL MAINTENANCE CHECKLIST 10-1

CHAPTER 11 - SUPPLEMENTAL INFORMATION AND SPECIFICATIONS 11-1
11.1 COMPONENT IDENTIFICATION CHARTS AND DIAGRAMS 11-3
11.2 MACHINERY LUBRICATION SCHEMATICS 11-6
11.3 MACHINERY LUBRICATION SCHEDULE 11-9
11.4 BRIDGE MAINTENANCE PERFORMANCE STANDARDS (PLATES) 11-12
11.4.1 SLEEVE BEARING AND TRUNNION BEARING LUBRICATION 11-12
11.4.2 MOTOR BRAKE MAINTENANCE 11-13
11.4.3 COUPLING LUBRICATION 11-16
11.4.4 SPEED REDUCER LUBRICATION 11-18
11.4.5 OPEN GEARING LUBRICATION 11-20
11.4.6 MOTOR BEARING LUBRICATION 11-22
11.4.7 SPAN LOCK MACHINERY LUBRICATION 11-24
11.4.8 CENTERING GUIDE AND CENTERING DEVICE LUBRICATION 11-32

11.4.9 INSTRUMENTATION DRIVE CHAIN LUBRICATION 11-33
11.5 MATERIAL DATA SHEETS 11-34
11.5.1 MOBIL MOBILUX EP-0, EP-2 11-34
11.5.2 FALK LONG TERM GREASE 11-53
11.5.3 MOBIL MOBILTAC 325 NC 11-61
11.5.4 MOBIL MOBILGEAR 600 XP 100, 220 11-75
11.5.5 MOBIL UNIREX N2 11-96
11.5.6 MOBIL DTE 21 11-106
11.5.7 MOBIL 600W CYLINDER OIL 11-119
11.5.8 CRC TAC 2 ADHESIVE CHAIN LUBRICANT 11-129
11.5.9 PERMATEX GEAR OIL RTV SEALANT 11-138
11.5.10 CRC QUICKCLEAN HEAVY DUTY DEGREASER 11-143
11.5.11 CAIG LABORATORIES DEOXIT D5 CONTACT CLEANER 11-152
11.6 COMPONENT MANUFACTURER LIST 11-160
11.7 MECHANICAL EQUIPMENT MANUALS AND SPECIFICATIONS 11-162
11.7.1 PRIMARY – EARLE GEAR SPEED REDUCER TYPE S 11-162
11.7.2 SPAN LOCK – FALK SPEED REDUCER TYPE C 11-169
11.7.3 MOTOR BRAKES – GENERAL ELECTRIC IC9516-465N 11-173
11.7.4 BRAKE THRUSTER – EMG ELDRO ED80/12S 11-179
11.7.5 SPAN LOCK MOTOR COUPLING – FALK TYPE T10 11-196
11.7.6 BRAKEWHEEL COUPLING – FALK 12BW 11-202
11.8 TRAFFIC CONTROL EQUIPMENT MANUALS AND SPECIFICATIONS 11-204
11.8.1 WARNING GATE SCHEMATIC – B&B ELECTROMATIC VT-40 11-204
11.9 ELECTRICAL EQUIPMENT MANUALS AND SPECIFICATIONS 11-216
11.9.1 TACHOMETER/OVERSPEED SWITCH ASSEMBLY – HUBBELL 11-216
11.9.2 DRIVE (SECONDARY THYRISTOR CONTROLLER) – HUBBELL 4922C 11-217

CHAPTER 12 - CONTACTS, TELEPHONE NUMBERS AND EMERGENCY CALL OUTS 12-1
12.1 CONTACTS AND TELEPHONE NUMBERS 12-1
12.2 EMERGENCY CALL OUT PROCEDURES 12-1
12.2.1 MALFUNCTION (FAILURE TO OPEN OR CLOSE) 12-1
12.2.2 DAMAGE TO BRIDGE FROM VESSEL OR VEHICLE 12-1
12.2.3 VEHICLE ACCIDENT OR DISABLED VEHICLE ON BRIDGE 12-1
12.2.4 MARINE RELATED EMERGENCIES 12-2
12.2.5 WEATHER RELATED EMERGENCIES 12-2

Refer to Volume 1 – Operations Manual for Chapters 1-5

Refer to Volume 3 – As-Built Drawings for Chapters 13-14

CHAPTER 6 - PURPOSE AND SCOPE OF MAINTENANCE MANUAL

6.1 PURPOSE OF MAINTENANCE MANUAL

Schedules and procedures are established for the inspection, replacement, cleaning, adjustment, and general maintenance of the mechanical and electrical equipment used to operate the bridge. The frequency of maintenance is based on recommendations by the manufacturers and guidelines established by AASHTO Movable Bridge Inspection, Evaluation and Maintenance Manual. All maintenance forms and activities are to be recorded and maintained by the Maintenance Supervisor.

6.2 LAYOUT OF MAINTENANCE MANUAL

The maintenance section is divided into subsections that group equipment by type. Each subsection describes an equipment item, the number of such items, location, the maintenance frequency, and describes maintenance procedures. Photo references are included where applicable. Chapter 10 Maintenance Forms are identified for the specific equipment.

6.3 REFERENCES

- AASHTO Movable Highway Bridge Design Specifications
- AASHTO Movable Bridge Inspection, Evaluation, and Maintenance Manual
- Manual on Uniform Traffic Control Devises (MUTCD)
- Drawbridge Operation Regulations 33CFR Part 117
- National Electrical Code (NEC)
- National Fire Protection Association (NFPA) 70E - Standard for Electrical Safety in the Workplace

THIS PAGE INTENTIONALLY LEFT BLANK

CHAPTER 7 - MAINTENANCE POLICIES

7.1 INTRODUCTION

This chapter describes minimum qualifications for maintenance technicians and provides detailed information for maintenance personnel to properly maintain the bridge in accordance with AASHTO guidelines.

7.2 MAINTENANCE TECHNICIAN TRAINING

Maintenance technicians must be familiar with the layout of the bridge and all associated electrical and mechanical equipment and must be trained in the following areas. Training shall be scheduled and conducted by Delaware Department of Transportation.

7.2.1 BRIDGE LAYOUT

Each maintenance technician must be able to locate any piece of equipment of the bridge by name and designation (i.e. SW span lock motor). He or she must have an in-depth understanding of the electrical and mechanical systems and understand the functions of these systems.

7.2.2 BRIDGE OPERATION

Maintenance technicians must be able to operate the bridge and all ancillary devices in a safe manner as described herein. Each maintenance technician must be trained on all modes of operation and have a basic understanding of operation of the bridge.

7.2.3 TROUBLESHOOTING AND EMERGENCY SITUATIONS

Maintenance personnel must be trained in emergency situations and be capable to perform troubleshooting as described in this manual. In the event of an emergency, the operator must have knowledge of proper procedures describes herein.

7.2.4 BRIDGE MAINTENANCE

Maintenance technicians must be trained in bridge maintenance activities as specified herein.

7.3 LOCKOUT/TAGOUT PROCEDURE

No electrical apparatus or electrically driven apparatus should be worked on while energized. The appropriate circuit breakers and/or disconnect handles for the equipment being worked on shall be locked in the open (off) position and tagged. The appropriate, immediate upstream circuit breaker or protective device should always be used to electrically isolate the equipment. A sign should be posted on the control desk to identify that the devices are tagged out of service. A contact person shall be identified on the tag. All lock-out and tag-out procedures shall meet the requirements of NFPA 70E. Use a voltage meter to check for stray voltage prior to servicing electrical equipment.

7.4 PERSONAL PROTECTIVE EQUIPMENT

Appropriate Personal Protective Equipment (PPE) should be utilized when performing all maintenance tasks. Refer to Section 11.5 “Material Data Sheets” for material information (including MSDS sheets) which indicate recommended PPE when handling specific materials. Appropriate PPE should also be used when working on electrical components.

7.5 MAINTENANCE ACCESS

Maintenance personnel can access the bridge equipment by following the information provided below.

7.5.1 ENTRANCE ROOM

An entrance room is located on the bridge deck level in the control house and is accessible from a door facing south. Power distribution equipment such as the main service disconnect switch, generator receptacle, panel board, lighting transformer and disconnect switch are installed in the entrance room.

7.5.2 CONTROL ROOM

The control room is located on the upper level of the control house. A stairway located in the entrance room leads from the entrance room to the control room. A control desk is installed in the control room, and contains pilot devices and indicating lights to operate traffic signals, leaf motors, warning gates, brakes, and navigation lights.

7.5.3 STORAGE ROOM

The storage room is located on the upper level of the storage house located on the north side of the bridge. The storage room contains the spare parts for the mechanical and electrical systems.

7.5.4 ELECTRICAL/MECHANICAL ROOMS

The north and south electrical/mechanical rooms are located on the sublevel floor of the control house and storage house, respectively. A stairway in the control house leads from the entrance room down to the south electrical/mechanical room; and similarly stairs in the storage house leads to the north electrical and mechanical room.

The following equipment is located in each electrical/mechanical room:

- Leaf motors, brakes, primary speed reducer, machinery shafts and couplings, rotary cam and brake limit switches, and disconnect switches
- Starter cabinets, relay control cabinet, span drive cabinets, and secondary resistors.

7.5.5 SPAN LOCK AND RECEIVING SOCKET PLATFORMS

Two span lock platforms are located underneath the east and west sides of the south leaf, and can be accessed through a pair of hatches on the curb of the roadway. Each span lock platform on the south leaf contains a span lock motor, motor coupling, span lock speed reducer, span lock disconnect switch, lock bar, lock bar position limit switches, front and rear guide, rack and pinion, an electrical enclosure, and conduits.

The receiving sockets can be accessed from the roadway by partially raising the north leaf.

7.5.6 COUNTERWEIGHT ACCESS PLATFORM

The counterweight access platform is located between the bascule girders and connects the east and west sides of the bascule pier. The bascule pier is accessed via one of two doors in the electrical/mechanical room.

The bascule pier provides access to the live load bearings and the trunnion bearings and shafts. The counterweight access platform provides access to an opening in the trunnion girder which houses the secondary open gearing, one of the sleeve bearings, couplings, and shafting. The platform also provides access to the counterweight pockets. A pair of ladders connects the counterweight access platform to the top of the counterweight where the primary open gear frame is located.

7.5.7 COUNTERWEIGHT PIT

Two counterweight pits are located on the lower level of the control house and storage house, and can be accessed by descending down the stairs located in the bascule pier, just outside of the electrical/mechanical

room. Sump pumps, live load bearing anchorages, and submarine termination cabinets are installed on the counterweight pit platform. The rack is mounted to the rack frame encased into the bascule pier concrete.

7.5.8 FENDERS

Fenders can be accessed through an access door adjacent to the electrical/mechanical rooms on the sublevel floor. Fenders provide access to the fender navigation lights.

7.6 MAINTENANCE OPENINGS

For the requirements on maintenance openings, refer to Chapter 2.

7.7 MAINTENANCE AND BRIDGE OPERATORS DURING OPENINGS

The bridge must be staffed with the following personnel unless otherwise noted during all maintenance openings:

- One (1) Trained Bridge Operator
- Two (2) Maintenance Technicians (not required for vessel openings)

The bridge operator shall be stationed in the control room level of the operator house. During emergency situations where the bridge and/or ancillary devices malfunction, one of the trained technicians shall be capable of relocating to one of the electrical/mechanical rooms as required.

The maintenance technicians shall be stationed in the vicinity of the electrical/mechanical rooms and capable of relocating as directed by the operator.

7.8 MAINTENANCE FORMS

Maintenance personnel are required to complete maintenance forms provided in Chapter 10.

7.9 MAINTENANCE REPORTING PROCEDURES

All maintenance shall be conducted in accordance with procedures and protocols defined herein and in accordance with the latest edition of the AASHTO Movable Bridge Inspection, Evaluation and Maintenance Manual.

All maintenance activities shall be documented using forms provided in Chapter 10 of this manual. Record copies of maintenance forms shall be kept and filed by the supervisor.

THIS PAGE INTENTIONALLY LEFT BLANK

CHAPTER 8 - ELECTRICAL AND MECHANICAL MAINTENANCE

Each section of Chapter 8 is to be used in conjunction with Chapter 11 providing additional details on each component to be maintained.

8.1 LEAF SUPPORT SYSTEM AND COUNTERWEIGHTS

The leaf support system consists of trunnion bearings, live load bearings and counterweights. The following outlines the basic maintenance of these items.

8.1.1 TRUNNION BEARINGS

8.1.1.1 DESCRIPTION

Each trunnion bearing assembly supports the bascule leaves and provides the rotational axis through the trunnion shaft. The trunnion shafts are supported by a trunnion bearing and the trunnion girder. Each trunnion bearing is supported by a trunnion tower encased in the bascule pier concrete. The trunnion girder connects the two bascule girders while supporting the inboard end of each trunnion shaft.

The trunnion bearings are split sleeve type journal bearings with split pillow blocks. The base is cast steel, and the bearing cap and lower bushing are a bronze alloy. Brass liners of various thicknesses are located between the bearing cap and base for adjustment to accommodate wear of the lower bushing.

Each trunnion bearing has four grease fittings, two in the cap and two in the base. Grease is purged through the trunnion shaft and bushing interface.

The trunnion bearings closest to the electrical/mechanical room have shafting, which connects the output of the primary reducer to the input of the secondary open gear frame, running through the bore of the trunnion shaft.

Refer to Photos numbered 9.1A and 9.1B.

Refer to Sections 11.1 for component identification and 11.2 for lubrication schematics.

8.1.1.2 NUMBER OF ITEMS AND LOCATION

There are four trunnion bearings. Two are used to support each bascule leaf. The trunnion assemblies are located in the bascule piers just forward of the leaf counterweights.

8.1.1.3 MAINTENANCE AND SCHEDULE

!!! WARNING !!!

Use EXTREME CARE and ALWAYS REMOVE POWER from all pertinent electrical equipment, which includes multiple power sources, before beginning maintenance. Refer to Section 7.3, "Lockout/Tagout Procedure."

Document completed maintenance tasks on the maintenance checklists included in Appendix B of the Contract.

MONTHLY (Refer to Section 11.4.1 for Bridge Maintenance Performance Standard)	• Purge old grease by pumping new lubricant into the grease fittings. There are four grease fittings per trunnion bearing. Remove excess grease from the inboard and outboard sides of the trunnion bearings after lubricating. The lubricant should be Mobil Mobilux EP-2 grease or equivalent. • Remove any debris that has accumulated on and around the trunnion assemblies and the portions of the bascule girders near the trunnions.
ANNUALLY	• Check housing and supporting steel for signs of corrosion. Clean and spot paint areas of corrosion. • Check housing cap bolts and base bolts for tightness. Tighten loose fasteners. • Observe the trunnion bearings during opening and closing operations of the leaf. Note any unusual movements, binding, or abnormal sounds.

8.1.2 LIVE LOAD BEARINGS

8.1.2.1 DESCRIPTION

The live load bearings react against the live load from traffic. The live load bearing consists of a strike plate which is in contact with the live load bearing plate.

The strike plates and bearing plates are both American Society for Testing and Materials (ASTM) A36 steel. The strike plates are mounted to the bottom flange of the horizontal live load anchorage beam, supported by two vertical steel columns encased in the bascule pier concrete. The bearing plate is mounted to the bascule girder.

The live load bearings are adjusted by adding or removing shims below the live load bearing plate.

Refer to Photos numbered 9.1C and 9.1D.

Refer to Sections 11.1 for components identification and 11.2 for lubrication schematics.

8.1.2.2 NUMBER OF ITEMS AND LOCATION

There are four live load bearings, one located at each bascule girder upper flange behind the trunnion bearing. One live load bearing on each leaf is accessible outside of the electrical/mechanical room. The other live load bearing on each leaf is located on the access walkway on the outboard side of the opposite bascule girder.

8.1.2.3 MAINTENANCE AND SCHEDULE

!!! WARNING !!!

Use EXTREME CARE and ALWAYS REMOVE POWER from all pertinent electrical equipment, which includes multiple power sources, before beginning maintenance. Refer to Section 7.3, "Lockout/Tagout Procedure."

Document completed maintenance tasks on the maintenance checklists included in Appendix B of the Contract.

THREE MONTHS	• Check that all live load bearings are in contact with their bearing plates when the span is closed and the span locks are driven. There should be no movement of the live load bearing plate when heavy traffic loads cross the span. • Clean debris from all supporting members and plates
SIX MONTHS	• Remove debris from the area surrounding the connection of the live load anchor to concrete foundation. • Clean and spot paint areas of corrosion to the live load bearing assembly and anchorage. The live load bearing components shall be painted using the paint system specified by the DelDOT standard Specifications for painting existing structural steel.
ANNUALLY	• Check that all fasteners are tight. Tighten loose fasteners. • Check the contacting surfaces between the strike plate and bearing plate for deformations and wear. There should be no corrosion on the contact areas of either plate. If corrosion is present, clean the bearing surfaces.

8.1.3 COUNTERWEIGHTS

8.1.3.1 DESCRIPTION

The counterweights are concrete masses that counterbalance the weight of the forward portion of the bascule leaves.

Each counterweight has four pockets located on the front face where balance blocks can be placed.

Refer to Photos numbered 9.1E and 9.1F.

8.1.3.2 NUMBER OF ITEMS AND LOCATION

There are a total of two counterweights, one on each bascule leaf located behind the trunnion bearings.

8.1.3.3 MAINTENANCE AND SCHEDULE

!!! WARNING !!!

Use EXTREME CARE and ALWAYS REMOVE POWER from all pertinent electrical equipment, which includes multiple power sources, before beginning maintenance. Refer to Section 7.3, "Lockout/Tagout Procedure."

Document completed maintenance tasks on the maintenance checklists included in Appendix B of the Contract.

ANNUALLY	• Check counterweight balance pockets for proper drainage and clean out debris. • From the counterweight pit floor and platforms/walkways, visually check the counterweight concrete for spalling, cracks, and signs of structural distress. • Check for shifting of balance blocks. Neatly restack blocks or plates that have fallen over or shifted out of position.

8.2 SPAN DRIVE MACHINERY

The span drive machinery for each leaf is located in the electrical/mechanical room on the bascule piers and within the bascule piers. Span drive machinery for each leaf consists of two 60 HP electric motors, three brakes, one enclosed speed reducer, two bevel gear sets, one intermediate spur gear set, rack and pinion, shaft bearings, couplings and shafts. Each AC motor has a full load torque of 450 ft-lb at a speed of 700 RPM, and full load current of 109 Amperes.

8.2.1 MOTOR BRAKES

8.2.1.1 DESCRIPTION

The motor brakes are used to brake the span for normal and emergency stopping of the span during bridge operations.

The motor brakes were manufactured by General Electric and are electric shoe brakes. All General Electric brakes have been modified from their original installation with an Eldro Thruster and modified brake yoke bracket to accommodate the new thruster.

The motor brake frames are model number IC9516-465N and manufactured by General Electric. North motor brake No. 1 (south motor brake No. 2) has a 14 inch diameter brake wheel. North motor brake No. 2 (south motor brake No. 1) and motor brake No. 3 have a 14 inch diameter brake wheel mounted to the coupling. Nameplates on the brakes indicate that a spring length of $6\ ^{19}/_{32}$ inches provides a braking torque of approximately 700 ft-lbs. All motor brakes are spring set and electro-hydraulically released, as commanded by the bridge control system.

Refer to Photos numbered 9.2A, 9.2B, 9.2C, 9.2D, and 9.2E.

Refer to Sections 11.1 for component identification and 11.2 for lubrication schematics.

8.2.1.2 NUMBER OF ITEMS AND LOCATION

Each leaf is equipped with a total of three motor brakes.

One motor brake is located between each main span motor and primary speed reducer. The other motor brake is located at the rear of the main leaf motor No. 1.

8.2.1.3 MAINTENANCE AND SCHEDULE

!!! WARNING !!!

Use EXTREME CARE and ALWAYS REMOVE POWER from all pertinent electrical equipment, which includes multiple power sources, before beginning maintenance. Refer to Section 7.3, "Lockout/Tagout Procedure."

Document completed maintenance tasks on the maintenance checklists included in Appendix B of the Contract.

GENERAL	• Maintenance personnel shall reference the Manufacturer's Operation and Maintenance Manuals for detailed instructions on specific Annual maintenance requirements. • Brake actuator repairs shall be performed by an EMG authorized specialist. The brake frames shall be adjusted by the contractor.
MONTHLY	• Perform brake test. Refer to Section 4.10 for the brake test procedure.

ANNUALLY (Refer to Section 11.4.2 for Bridge Maintenance Performance Standard)	• Inspect brake shoes and brakewheel for wear, dust, dirt, grease and proper adjustment. Check the brake pad thickness. Notify the Engineer if the remaining thickness is less than 1/16 inch. • Check clearance between the brake shoe and brakewheel. The measured gap shall have a minimum of 1/64 inch clearance between brake shoe and brakewheel when hand released. If clearances need to be adjusted, the linkages shall be adjusted in accordance with Section 11.7.3. If adjustments are made to the linkages, the reserve stroke and spring length should be verified and adjusted as well. Adjustment procedures are located within Section 11.7.3. • Inspect mechanical linkages for wear, broken parts and tightness of nuts and bolts. Check for freedom of moving parts (no binding or sticking). • Check for excessive heating of parts evident by discoloration of metal parts. • Check operations of the brake during test operations of the bridge. Check for any unusual odor and excessive vibration. • Check the brake housing and linkages for evidence of water dripping on the brake and corrosion. • Check adjustment of limit switches and hand release devices and adjust for proper operation. • Check brake actuator reserve stroke is approximately 0.8 inches +/- 1/16 inch. As the brake pads wear, the reserve stroke becomes shorter. If the reserve stroke is less than 1/4 inch, adjust linkages as specified in Section 11.7.3. • Check the brake spring length. Use a tape measure to measure the length of the spring. Adjustment procedure for adjusting the spring length as well as corresponding brake torque data graphs are located in Section 11.7.3. The spring length shall be adjusted to within 1/16 inch. At the time this Manual was created, the spring lengths were measured to be 6 7/8 +/- 5/16 inch. Table 3 in Section 11.7.3 shows the existing motor brake torque range is 550 ft-lbs to 750 ft-lbs. • Lubricate bearing pins using Mobil Mobilgear 600 XP 220 or equivalent lubricant. Lubricate pins using an oil can and applying a couple of drops to the brake pins. Cycle brakes manually using the hand release lever while applying the lubricating oil. Do not allow oil to drip onto the brake wheel. Remove any oil residue that drips from the brake pins. • Check for loose brake terminations. Tighten loose connections. • During winter months, verify that the brake pads are not frozen to the brakewheel.

!!! WARNING !!!

Use EXTREME CARE and VERIFY that no oil gets on the brakewheel surface as this may cause the brakewheel to slip within the brake shoes which may decrease the overall braking capacity.

8.2.2 COUPLINGS

8.2.2.1 DESCRIPTION

Each coupling transfers torque from one shaft to another.

Gear couplings are used to transmit the torque in the span drive machinery shafting from the primary speed reducer output shaft through the span drive machinery open gear shafting. The gear couplings have one grease fitting and one purge plug located in the coupling cover.

Grid couplings are used at the brakewheel couplings to transmit torque from the motors to the primary speed reducer input shaft. The brakewheels are mounted to the grid couplings to provide a braking surface for the motor brakes.

Jaw couplings, manufactured by Lovejoy, are used to connect the instrumentation equipment to the span drive machinery and to connect the transmitter to the rotary cam limit switch. The jaw couplings do not require lubrication.

Refer to Photos numbered 9.2B, 9.2F, 9.2G, 9.2H, 9.2I, and 9.2J.

Refer to Sections 11.1 for component identification and 11.2 for lubrication schematics.

8.2.2.2 NUMBER OF ITEMS AND LOCATION

The span drive machinery for each leaf has five gear couplings and two brakewheel couplings. Brakewheel couplings connect each main leaf motor front output shaft to the input shaft of the primary speed reducer. A gear coupling with a split sprocket affixed to the coupling hub connects the primary speed reducer output to the span drive machinery output shaft. Two gear couplings connect shafting from the primary reducer output shaft to the secondary open gear frame bevel pinion shaft. Two gear couplings connect a floating shaft between the secondary open gear frame bevel gear shaft and the primary open gear frame bevel pinion shaft.

Jaw couplings are used to connect the main leaf motor No. 1 rear output shaft to the overspeed switch/tachometer assembly. A jaw coupling is used to connect the span position rotary cam limit switch to the sprocket driven by the primary speed reducer output shaft coupling. A jaw coupling is also used to connect the rotary cam limit switch output shaft to the transmitter input shaft.

8.2.2.3 MAINTENANCE AND SCHEDULE

!!! WARNING !!!

Use EXTREME CARE and ALWAYS REMOVE POWER from all pertinent electrical equipment, which includes multiple power sources, before beginning maintenance. Refer to Section 7.3, "Lockout/Tagout Procedure."

!!! WARNING !!!

Do not disassemble couplings unless shafts are properly supported.

Document completed maintenance tasks on the maintenance checklists included in Appendix B of the Contract.

MONTHLY	• Inspect key and keyways at all couplings for grease leakage, tightness, and cracking. Check coupling flange bolts for corrosion and tightness. Tighten loose fasteners. • Inspect for leaks at seals and gaskets. If the seal is leaking, inspect for damage. Notify the Engineer if the seal is damaged. • Inspect jaw couplings for cracking or damage.

SIX MONTHS (Refer to Section 11.4.3 for Bridge Maintenance Performance Standard)	• For gear couplings, purge lubricant and replace with new Mobil Mobilux EP-0 or equivalent. • Visually inspect couplings and brakewheel couplings for relative movement between coupling components during operation of the span drive machinery.
FIVE YEAR (Refer to Section 11.5.3 for Bridge Maintenance Performance Standard)	• For brakewheel couplings, purge lubricant and replace with new Falk Long Term Grease (LTG) or equivalent.

!!! WARNING !!!

Use EXTREME CARE and VERIFY that no grease gets on the brakewheel surface as this may cause the brakewheel to slip within the brake shoes as the brake is activated which may decrease the overall braking capacity.

8.2.3 PRIMARY REDUCERS

8.2.3.1 DESCRIPTION

The primary speed reducer is operated to increase torque and reduce speed from the input shaft to the output shaft through internal gearing.

The primary reducers are Earle Gear speed reducers. The primary reducer is a parallel shaft reducer and has a gear ratio of 6.42:1. The nameplate on the primary reducer has a serial number specific to the particular unit that should be referenced if inquiries to the manufacturers are ever required (Refer to Section 11.7.1 for specifications).

The primary reducers are oil lubricated enclosed speed reducers. The input and output shaft bearings have oil reservoirs that require oil lubrication from the plugged port located in the top of the reducer housing at each bearing location.

Refer to Photos numbered 9.2B, 9.2C, and 9.2F.

Refer to Sections 11.1 for component identification and 11.2 for lubrication schematics.

8.2.3.2 NUMBER OF ITEMS AND LOCATION

There is one primary reducer on each leaf. The primary reducer is located in the electrical/mechanical room.

8.2.3.3 MAINTENANCE AND SCHEDULE

!!! WARNING !!!

Use EXTREME CARE and ALWAYS REMOVE POWER from all pertinent electrical equipment, which includes multiple power sources, before beginning maintenance. Refer to Section 7.3, "Lockout/Tagout Procedure."

Document completed maintenance tasks on the maintenance checklists included in Appendix B of the Contract.

MONTHLY (Refer to Section 11.4.4 for Bridge Maintenance Performance Standard)	• Visually inspect the oil level in the sight gauge and bearing reservoirs before operating the leaf. Add oil to the reducer if the oil level in the sight glass is more than ¼" below the oil level line on the lubrication plate. • Listen for unusual noises during operation of the machinery. Report any unusual noises to bridge management. • Inspect the breather. Replace the breather if it is saturated or damaged.
ANNUALLY (Refer to Section 11.4.4 for Bridge Maintenance Performance Standard)	• Check for excessive leakage at the seals. • Check fasteners for tightness. Tighten loose fasteners.
FIVE YEAR (Refer to Section 11.4.4 for Bridge Maintenance Performance Standard)	• Replace oil in the speed reducer housings with Mobil Mobilgear 600 XP 220 or equivalent.

8.2.4 BEARINGS

8.2.4.1 DESCRIPTION

Each bearing supports the span drive machinery shafting throughout the mechanical system. Sleeve type journal bearings support the span drive machinery shafting.

The sleeve bearing housings contains a bronze bushing secured to the cap and base. A grease fitting is located in the bearing cap and grease is purged through the shaft/bushing interface. Laminated brass liners are located between the bearing cap and base to accommodate for wear of the bronze bushing.

There are also two instrumentation bearings with nonadjustable single piece housings.

Refer to Photos numbered 9.2H, 9.2I, 9.2J, 9.2K, and 9.2L.

Refer to Sections 11.1 for component identification and 11.2 for lubrication schematics.

8.2.4.2 NUMBER OF ITEMS AND LOCATION

There are a total of eleven bearings used to support the various shafts in the span drive machinery. On the primary open gear frame located on the counterweight, two sleeve bearings support the main pinion shaft, two sleeve bearings support the intermediate pinion shaft, and two sleeve bearings support the bevel pinion shaft. On the secondary open gear frame, two sleeve bearings support the bevel gear shaft and two sleeve bearings support the bevel pinion shaft. One sleeve bearing supports the shaft connected to the primary reducer output shaft, which runs through the trunnion bearing.

Two bearings support the sprocket shaft which is connected to the rotary cam limit switch input shaft.

8.2.4.3 MAINTENANCE AND SCHEDULE

!!! WARNING !!!

Use EXTREME CARE and ALWAYS REMOVE POWER from all pertinent electrical equipment, which includes multiple power sources, before beginning maintenance. Refer to Section 7.3, "Lockout/Tagout Procedure."

Document completed maintenance tasks on the maintenance checklists included in Appendix B of the Contract.

MONTHLY (Refer to Section 11.4.1 for Bridge Maintenance Performance Standard)	• Fill with new grease, as required to completely purge the bearing of the existing grease. Remove excess purged grease. Use Mobil Mobilux EP-2 or equivalent.
ANNUALLY	• Check bearing cap and base fasteners for tightness. Tighten loose fasteners.

8.2.5 OPEN GEARING

8.2.5.1 DESCRIPTION

Each open gear set increases torque and reduces rotational speed to operate the bridge.

The primary open gear frame consists of a rack and pinion set, an intermediate spur gear and pinion set, and a bevel gear and pinion set.

The rack is an 88 tooth rack with a 600 inch pitch diameter, special 20° stub cut involute tooth profile, and a face width of 13 ¾ inches. The rack is composed of 4 rack segments and made of grade 65-35 cast carbon steel. The main pinion is a 15 tooth spur gear with a 23.873" pitch diameter, special 20° stub cut involute tooth profile, and a face width of 14 ½ inches. The main pinion is made of Class A forged alloy steel and is integral with the pinion shaft.

The intermediate spur gear is a 63 tooth gear with a 70.187 inch pitch diameter, 20° full depth involute tooth profile, and 8 inch face width. The spur gear is made of grade 65-35 cast carbon steel and is keyed to the shaft. The intermediate pinion is a 17 tooth spur gear with an 18.939 inch pitch diameter, 20° full depth involute tooth profile, and a face width of 8 ½ inches. The pinion is made of Class A forged alloy steel and is integral with the pinion shaft.

The bevel gear is a 79 tooth gear with 56.580 inch pitch diameter, 20° full depth involute tooth profile, and a face width of 6 ½ inches. The bevel gear is made of grade 65-35 cast carbon steel and is keyed to the shaft. The mating bevel pinion is a 21 tooth gear with a 15.040 inch pitch diameter, 20° full depth involute tooth profile, and a face width of 6 ½ inches. The bevel pinion is made of Class A forged alloy steel and is integral with the shaft.

The secondary open gear frame consists of a bevel gear and pinion set.

The bevel gear is a 50 tooth gear with a 35.810 inch pitch diameter, 20° full depth involute tooth profile, and a face width of 4 ¼ inches. The bevel gear is made of grade 65-35 cast carbon steel and is keyed to the shaft. The mating gear is a 23 tooth bevel pinion with a 16.473 inch pitch diameter, 20° full depth involute tooth profile, and a face width of 4 ¼ inches. The bevel pinion is made of Class A forged alloy steel and is integral to the shaft.

All open gearing is lubricated with grease that is brushed onto the gear teeth manually.

Refer to Photos numbered 9.2I, 9.2J, 9.2K, and 9.2L.

Refer to Sections 11.1 for component identification and 11.2 for lubrication schematics.

8.2.5.2 NUMBER OF ITEMS AND LOCATION

Each leaf has one primary open gear frame located on the counterweight and one secondary open gear frame located in the trunnion girder.

The main pinion shaft, intermediate pinion shaft, and bevel pinion shaft of the primary open gear frame are each supported by two sleeve bearings. The racks are fastened to a rack girder which is encased in the bascule pier concrete. The bevel pinion shaft and bevel gear shaft in the secondary open gear frame are each supported by two sleeve bearings.

8.2.5.3 MAINTENANCE AND SCHEDULE

!!! WARNING !!!

Use EXTREME CARE and ALWAYS REMOVE POWER from all pertinent electrical equipment, which includes multiple power sources, before beginning maintenance. Refer to Section 7.3, "Lockout/Tagout Procedure."

Document completed maintenance tasks on the maintenance checklists included in Appendix B of the Contract.

MONTHLY (Refer to Section 11.4.5 for Bridge Maintenance Performance Standard)	• Lubricate teeth using Mobil Mobiltac 325 NC or equivalent grease.

ANNUALLY (Refer to Section 11.4.5 for Bridge Maintenance Performance Standard)	• Replace open gear lubricant using Mobil Mobiltac 325 NC or equivalent. • Verify that fasteners connecting the rack to the rack support are secure and free of corrosion. Tighten loose fasteners. Clean and spot paint areas of corrosion on the rack support and fasteners. • Inspect keys and keyways for tightness and cracking. • Observe the open gearing during raising and lowering operations. Note excessive vibrations, binding, and unusual noises.

8.2.6 INSTRUMENTATION DRIVE EQUIPMENT

8.2.6.1 DESCRIPTION

The instrumentation drive equipment transfers the rotation of the primary reducer output shaft to the input shaft of the rotary cam limit switch.

A split sprocket is mounted to the flange of the coupling on the output shaft of the primary reducer. A drive chain connects the split sprocket to a shaft mounted sprocket, which is connected to the input shaft of the rotary cam limit switch.

Refer to Photos numbered 9.2F and 9.2G.

Refer to Sections 11.1 for component identification and 11.2 for lubrication schematics.

8.2.6.2 NUMBER OF ITEMS AND LOCATION

One set of instrumentation drive equipment is located in each electrical/mechanical room.

8.2.6.3 MAINTENANCE AND SCHEDULE

!!! WARNING !!!

Use EXTREME CARE and ALWAYS REMOVE POWER from all pertinent electrical equipment, which includes multiple power sources, before beginning maintenance. Refer to Section 7.3, "Lockout/Tagout Procedure."

Document completed maintenance tasks on the maintenance checklists included in Appendix B of the Contract.

SIX MONTHS (Refer to Section 11.4.9 for Bridge Maintenance Performance Standard)	• Lubricate the instrumentation drive chain using CRC TAC 2 Adhesive Chain Lubricant or equivalent lubricant. Remove any excess lubricant from components.

8.3 SPAN LOCK MACHINERY AND CENTERING EQUIPMENT

The span lock machinery is located at the toe of the south bascule leaf and provides a locking mechanism and transfers live loads (traffic loads) between the north and south leaves of the bridge's bascule span. There is one span lock system on both the east and west sides of the bridge. Each span lock system is

comprised of a span lock motor, motor coupling, span lock speed reducer, lock bar, rack and pinion, front and rear guides, and a receiving socket.

Refer to Photo numbered 9.3A for span lock machinery access identification.

8.3.1 LOCK BARS, GUIDES AND RECEIVERS

8.3.1.1 DESCRIPTION

The span lock machinery electrically operates a lock bar that provides a locking mechanism and transfers live load between the two bascule leaves.

The span lock machinery retracts and extends a lock bar through the front and rear guides and into and out of the receiving socket. The guides support the lock bar when it is in the retracted position.

The rear guides, front guides, and receiving sockets are castings which contains an upper and lower bronze bushing which is fastened to the respective guides/sockets.

The lock bar and receiving sockets require grease to be brushed onto the sliding surfaces of the lock bar and bushings. In order to lubricate the guides, traffic needs to be stopped and the lock bars pulled to access the areas of the lock bar that are normally engaged with the guides with the lock bars driven.

Refer to Photos numbered 9.3A, 9.3B, 9.3C, 9.3D, and 9.3E.

Refer to Sections 11.1 for component identification and 11.2 for lubrication schematics.

8.3.1.2 NUMBER OF ITEMS AND LOCATION

There are two span lock systems on the bridge. Each span lock system includes a lock bar, receiving socket and front and rear guide. The span lock rear guides are mounted to the inboard side of the south leaf bascule girder web (one on the east side and one on the west). The front guides are mounted to the south leaf Floorbeam 0 web. The receiving sockets are mounted to the north leaf Floorbeam 0 web.

8.3.1.3 MAINTENANCE AND SCHEDULE

!!! WARNING !!!

Use EXTREME CARE and ALWAYS REMOVE POWER from all pertinent electrical equipment, which includes multiple power sources, before beginning maintenance. Refer to Section 7.3, "Lockout/Tagout Procedure."

Document completed maintenance tasks on the maintenance checklists included in Appendix B of the Contract.

MONTHLY (Refer to Section 11.4.7.4 for Bridge Maintenance Performance Standard)	• Remove existing lubricant and brush or swab the lock bar and receiving socket sliding surfaces with Mobil Mobilux EP-2 grease or equivalent. • Visually inspect guides and sockets, lock bars, fasteners and shims for damage. With traffic on the span, observe the lock bars, guides, and receiving sockets for relative vertical movement, resulting in the lock bars impacting the top or bottom of the guide or receiving socket sliding surfaces.

ANNUALLY	• Check the guide and socket fasteners for tightness. Tighten loose fasteners. • The socket guide and housings shall be checked for cracking (Refer to Photos 9.3D and 9.3E). Inspect the areas where the housing changes shape (flange radii). One way a crack is observed is a thin line of corrosion emanating from the stress concentrations (flange radii). • Check sockets and guides for paint failure. Clean flaking paint from components and spot paint areas of corrosion.

8.3.2 SPAN LOCK REDUCER

8.3.2.1 DESCRIPTION

The span lock speed reducer is operated to increase torque and reduce speed from the input shaft to the output shaft through internal gearing.

The span lock reducers are manufactured by Falk. The span lock reducer is a quadruple reduction concentric shaft speed reducer and has a gear ratio of 205:1. The name plate on the span lock reducer has a serial number specific to the particular unit that should be referenced if inquiries to the manufacturers are ever required (Refer to Section 11.7.2 for specifications).

The span lock reducers are oil lubricated enclosed speed reducers.

Refer to Photo numbered 9.3B.

Refer to Sections 11.1 for component identification and 11.2 for lubrication schematics.

8.3.2.2 NUMBER OF ITEMS AND LOCATION

Each span lock system has one span lock speed reducer located on the span lock platform.

8.3.2.3 MAINTENANCE AND SCHEDULE

!!! WARNING !!!

Use EXTREME CARE and ALWAYS REMOVE POWER from all pertinent electrical equipment, which includes multiple power sources, before beginning maintenance. Refer to Section 7.3, "Lockout/Tagout Procedure."

Document completed maintenance tasks on the maintenance checklists included in Appendix B of the Contract.

MONTHLY (Refer to Section 11.4.7.2 for Bridge Maintenance Performance Standard)	• Before operating the span lock machinery, temporarily loosen / remove the oil level plug and check the oil level inside the reducer housing. Add oil to the reducer if the oil level is more than ¼" below the oil level plug. • Listen for unusual noises during operation of the machinery. Report any unusual noises to bridge management. • Inspect the breather. Replace the breather if it is saturated or damaged.

ANNUALLY (Refer to Section 11.4.7.2 for Bridge Maintenance Performance Standard)	• Check for excessive leakage at the seals. • Check fasteners for tightness. Tighten loose fasteners. Refer to Section 11.7.2 for torque specifications.
FIVE YEAR (Refer to Section 11.4.7.2 for Bridge Maintenance Performance Standard)	• Replace oil in the speed reducer housings with Mobil Mobilgear 600 XP 220 or equivalent.

8.3.3 SPAN LOCK MOTOR COUPLING

8.3.3.1 DESCRIPTION

The span lock motor coupling transfers torque from the output shaft of the span lock motor to the input shaft of the span lock reducer.

The span lock motor coupling is a Falk 1030T10 grid coupling.

Refer to Photo numbered 9.3B.

Refer to Sections 11.1 for component identification and 11.2 for lubrication schematics.

8.3.3.2 NUMBER OF ITEMS AND LOCATION

Each span lock system has one span lock motor coupling connecting the span lock motor output shaft to the span lock reducer input shaft.

8.3.3.3 MAINTENANCE AND SCHEDULE

!!! WARNING !!!

Use EXTREME CARE and ALWAYS REMOVE POWER from all pertinent electrical equipment, which includes multiple power sources, before beginning maintenance. Refer to Section 7.3, "Lockout/Tagout Procedure."

Document completed maintenance tasks on the maintenance checklists included in Appendix B of the Contract.

MONTHLY	• Inspect keys and keyways at all couplings for grease leakage, tightness and cracking. Check coupling flange bolts for corrosion and tightness. Tighten loose fasteners. • Inspect for leaks at seals and gaskets. If coupling is leaking grease from seals, remove coupling cover to inspect seal. Notify the Engineer if the seal is damaged. If coupling covers are removed, replace lubricant.

FIVE YEAR (Refer to Section 11.4.7.1 for Bridge Maintenance Performance Standard)	• Replace coupling lubricant and check for misalignment. Use Falk Long Term Grease or equivalent

8.3.4 SPAN LOCK RACK AND PINION

8.3.4.1 DESCRIPTION

The span lock rack and pinion converts the rotary motion from the span lock speed reducer output shaft into linear motion to drive and retract the lock bar.

The rack has 26 teeth with a 20° full depth involute tooth profile and a 2 ½ inch face width. The rack is made of grade 65-35 cast carbon steel and is fastened to the bottom of the lock bar. The span lock pinion is a 17 tooth spur gear with a 6.764 inch pitch diameter, 20° degree full depth involute tooth profile, and 3" face width. The span lock pinion is made of Class E forged alloy steel and is keyed to the speed reducer output shaft.

Refer to Photos numbered 9.3B and 9.3C.

Refer to Sections 11.1 for component identification and 11.2 for lubrication schematics.

8.3.4.2 NUMBER OF ITEMS AND LOCATION

Each span lock system has one rack and pinion set. The rack is bolted to the underside of the lock bar. The pinion is keyed to the span lock speed reducer output shaft.

8.3.4.3 MAINTENANCE AND SCHEDULE

!!! WARNING !!!

Use EXTREME CARE and ALWAYS REMOVE POWER from all pertinent electrical equipment, which includes multiple power sources, before beginning maintenance. Refer to Section 7.3, "Lockout/Tagout Procedure."

Document completed maintenance tasks on the maintenance checklists included in Appendix B of the Contract.

MONTHLY (Refer to Section 11.4.7.3 for Bridge Maintenance Performance Standard)	• Lubricate teeth using Mobil Mobiltac 325 NC or equivalent grease.
THREE MONTHS	• Check rack mounting fasteners for tightness. Tighten loose fasteners.

ANNUALLY (Refer to Section 11.4.7.3 for Bridge Maintenance Performance Standard)	• Replace rack and pinion lubricant with Mobil Mobiltac 325 NC. • Inspect keys and keyways for tightness and cracking. • Observe the open gearing during operation of the span lock machinery. Note excessive vibrations, binding, and unusual noises.

8.3.5 CENTERING DEVICE AND CENTERING GUIDE

8.3.5.1 DESCRIPTION

As the spans are lowered into the final seated position, the centering device and guide ensures that the spans are properly aligned.

The centering device is made of Class E forged carbon steel and has a pair of manganese steel wear plates on the outboard sides. The centering guide is a steel casting and has a pair of manganese steel wear plates on the inboard faces.

Refer to Photos numbered 9.3F, 9.3G, and 9.3H.

Refer to Sections 11.1 for component identification and 11.2 for lubrication schematics.

8.3.5.2 NUMBER OF ITEMS AND LOCATION

There is one centering device and centering guide on the bridge. The centering device is mounted to the web of Floorbeam 0 at the toe of the south leaf. The centering guide is mounted to the web of Floorbeam 0 at the toe of the north leaf.

In order to lubricate the centering device and guide, one leaf needs to be raised to eye level in order to access the wear plate surfaces. Once complete, the leaf needs to be lowered into the seated position and the opposite leaf raised to eye level to repeat lubrication.

8.3.5.3 MAINTENANCE AND SCHEDULE

!!! WARNING !!!

Use EXTREME CARE and ALWAYS REMOVE POWER from all pertinent electrical equipment, which includes multiple power sources, before beginning maintenance. Refer to Section 7.3, "Lockout/Tagout Procedure."

Document completed maintenance tasks on the maintenance checklists included in Appendix B of the Contract.

MONTHLY (Refer to Section 11.4.8 for Bridge Maintenance Performance Standard)	• Apply grease to the sliding surfaces of the centering device and guide. Remove existing lubricant and brush or swab the centering device and centering guide wear plates with Mobil Mobilux EP-2 grease or equivalent. • Visually inspect centering device, centering guide, wear plates, and fasteners for excessive wear, deformation, fit, or damage.

ANNUALLY	• Visually inspect centering device and centering guide components at flange radii and mounting connections. Components should be checked for cracks, rust and section loss. Mounting connections should be checked for corrosion and tightness. All components should have flaking paint brushed clean and spot painted. Do not paint the wear plate contacting surfaces.

8.4 TRAFFIC GATES

Traffic gates are comprised of warning gates located on the approaches and are used to stop traffic prior to a bridge opening.

8.4.1 WARNING GATES

8.4.1.1 DESCRIPTION

Warning gates signal on and off going traffic to stop for a bridge opening. The gate support stand is mounted adjacent to the roadway.

Refer to Photos numbered 9.4A, 9.4B, 9.4C, and 9.4D.

Refer to Section 11. 2 for lubrication schematic, Section 11.6 for component manufacturer list, and Section 11.8.1 for the manufacturer's manual of the unit.

8.4.1.2 NUMBER OF ITEMS AND LOCATION

There are four warning gates on the bridge, located on both the north and south sides of the bascule span.

8.4.1.3 MAINTENANCE AND SCHEDULE

!!! WARNING !!!

Use EXTREME CARE and ALWAYS REMOVE POWER from all pertinent electrical equipment, which includes multiple power sources, before beginning maintenance. Refer to Section 7.3, "Lockout/Tagout Procedure."

Document completed maintenance tasks on the maintenance checklists included in Appendix B of the Contract.

GENERAL	• The warning gates are outfitted with a shear pin that is intended to fail if the gate is impacted by a vehicle. Spare pins should be available in the event of a failure. If additional pins are required, they can be obtained from the gate manufacturer. Replacement of a failed shear pin requires tightening a nut onto the shear pin. Use nylon insert lock nuts. Hand-tighten the nut with a small wrench; the nut should not be heavily tightened. The shear pin should be able to rotate when turned by hand or with a small wrench after tightening. The gate should not be operated with a failed pin, if not otherwise restrained.

SIX MONTHS	• Check the transmission oil level. If oil is low check seals for evidence of leaks and add oil until the oil is up to the appropriate level. Use Mobil 600W Cylinder Oil or equivalent. • Lubricate shaft bearings and rod ends until clean grease is purged from the bearing or rod end. Use Mobil Mobilux EP-2 or equivalent. • Lubricate the rotary cam limit switch roller chain with CRC TAC 2 Adhesive Chain Lubricant or equivalent. • Check the roller chain tension and tighten if loose.
ANNUALLY	• Replace warning gate transmission oil with Mobil 600W Cylinder Oil or equivalent. • Check hardware for damage and corrosion. Replace damaged hardware. • Check electrical connections and tighten loose connections. • Remove excess grease, oil and debris from equipment. • Check gate housing for corrosion. Clean and spot paint areas of corrosion on the housing. • Check condition of gaskets and replace if damaged.

8.5 ELECTRICAL POWER SYSTEMS

8.5.1 MOTOR CONTROL CABINETS

8.5.1.1 DESCRIPTION

The control cabinets house motor controllers, relays, over-current protection, and metering equipment. The motor control cabinet North (MCC-N) and South (MCC-S) are located in their respective electrical/mechanical rooms.

Refer to Photos numbered 9.6A and 9.6B.

8.5.1.2 NUMBER OF ITEMS AND LOCATION

Quantity	Location	Equipment Name
1	Operator's House	MCC-S
1	Storage House	MCC-N

8.5.1.3 MAINTENANCE AND SCHEDULE

!!! WARNING !!!

Use EXTREME CARE and ALWAYS REMOVE POWER from all pertinent electrical equipment, which includes multiple power sources, before beginning maintenance. Refer to Section 7.3, Lockout/Tagout Procedure.

Document completed maintenance tasks on the maintenance checklists included in Appendix B of the Contract.

THREE MONTH	• Open and clean with a vacuum cleaner. • Remove accumulation of dirt, grease, and gum with DexoIT D5 contact cleaner or equivalent. • Check for corrosion and moisture. • Examine connections for poor or loose connections and evidence of overheating. • Lubricate door hinges and latches. • Check circuit breaker disconnects for proper operation. • Inspect terminal block screws and hand tighten loose connections. • Inspect wiring from unit terminal blocks for deterioration of insulation • Inspect all circuit breakers. Verify with a meter that continuity is broken on trip or switch off conditions. With the circuit breaker in the OFF position, use a multimeter to measure the current and voltage on the load side conductors. The multimeter should read 0 amps and 0 volts. • Check all starter contacts. Note when nearly all of the silver tip is gone and the contact tip support is exposed. Do not file the contacts. Filing or otherwise dressing the contacts only results in lost tip material and reduces starter life. • Inspect all fuses with a meter and verify continuity. For fuse replacement, always install the same type and rating fuses furnished with the motor control center. Evolution in fuse design has produced fuses that are mechanically equivalent but not electrically equivalent. They may not have the same short-circuit withstand ability and current limiting ability. • Inspect fuse clips for dirt and verify that the clips provide a tight fit. • Verify enclosure lights turn on when doors are open. Replace burned out bulbs. • Verify enclosure heaters and thermostats are functioning properly. • Check the condition of gaskets and replace if damaged.
ANNUALLY	• Check for discolored connections on terminals, contact supports, bus bars, or connectors. Discoloration usually indicates that overheating has occurred, probably because of loose connections. Clean connection points that are discolored. Tighten all loose hardware. Check wires and connectors for damage. • Operate the motor controller/contactor without load (turn circuit breakers off) and observe contact operation to be sure it opens and closes cleanly and that the contacts are fully sealed in the closed position. In order to manually operate a motor controller/contactor without load, remove power to the MCC cabinet and with a non-conductive object, press the button on the contactor. The button is usually located on the front or bottom of the housing. • Operate the motor controller/contactor under load and check for loud noise and arcing, both on opening and on closing. A loud noise and arcing on closing is usually due to contact bounce. • Measure and record current draw on load side of contactor. An elevated reading may indicate a poor connection. If the recorded current (excluding the current at startup) exceeds the full load current on the motor nameplate, notify bridge management.

8.5.2 DRIVE CABINETS AND RESISTORS

8.5.2.1 DESCRIPTION

Drive Cabinets are free standing enclosures which house the leaf motor drive, control relays, contactors, circuit breakers, fuses, and terminal blocks. Primary and secondary resistors are installed in close proximity to each drive cabinet.

Refer to Photos numbered 9.6A, 9.6B, 9.6C, 9.6G, and 9.6T.

8.5.2.2 NUMBER OF ITEMS AND LOCATION

Each electrical/mechanical room contains two drives, two sets of primary resistors, and two sets of secondary resistors. Each set of drives are capable of operating in a master/slave arrangement. Each drive can be selected from master to slave via a control switch located inside one of the drive cabinets. A master-slave control is used when multiple motors share a common system speed feedback tachometer. The system is used when multiple motors must operate in a shared load arrangement and the control is to supply dynamic current limiting for each motor. The supervising speed regulation function is provided by the master control with an auxiliary speed error signal supplied to the slave control. The Master/Slave system can operate the bridge with a control power section or individual motor disabled, thus providing a built in back-up capability. The switch to change the master drive is located in one of the drive cabinets for each leaf (refer to Photo 9.6C).

8.5.2.3 MAINTENANCE AND SCHEDULE

!!! WARNING !!!

Use EXTREME CARE and ALWAYS REMOVE POWER from all pertinent electrical equipment, which includes multiple power sources, before beginning maintenance. Refer to Section 7.3, "Lockout/Tagout Procedure."

Document completed maintenance tasks on the maintenance checklists included in Appendix B of the Contract.

THREE MONTHS Drive Cabinets	• Open and clean with a vacuum cleaner. • Remove accumulation of dirt, grease, and gum with DexoIT D5 contact cleaner or equivalent. • Check for corrosion and moisture. • Lubricate door hinges and latches. • Inspect and test terminal block screws for tightness. Hand tighten all loose connections. • Inspect wiring from unit terminal blocks for deterioration of insulation. • Inspect all circuit breakers. Verify with a meter that continuity is broken on trip or switch off conditions. With the circuit breaker in the OFF position, use a multimeter to measure the current and voltage on the load side conductors. The multimeter should read 0 amps and 0 volts. • Inspect all fuses with a meter and verify continuity. For fuse replacement, always install the same type and rating fuses furnished with the motor control center. Evolution in fuse design has produced fuses that are mechanically equivalent but not electrically equivalent. They may not have the same short-circuit withstand ability and current limiting ability. • Inspect all relays and tighten loose connections. • Verify enclosure heaters are functioning. • Verify enclosure lights turn on when doors are open. Replace burned out bulbs. • Change the master drive on each leaf to the slave drive (Refer to Section 4.12).
ANNUALLY Drive Cabinets and Resistor Enclosures	• Check the condition of filters. Replace dirty or damaged filters. • Verify enclosure fan is functioning. • Check for discolored connections on terminals, contact supports, bus bars, or connectors. Discoloration usually indicates that overheating has occurred, probably because of loose connections. Clean connection points that are discolored. Tighten all loose hardware. • Operate the motor controller/contactor without load (turn circuit breakers off) and observe contact operation to be sure it opens and closes cleanly and that the contacts are fully sealed in the closed position. In order to manually operate a motor controller/contactor without load, remove power to the cabinet, and with a non-conductive object, press the button on the contactor. The button is usually located on the front or bottom of the housing. • Operate the motor controller/contactor normally (under load) from the control desk during a vessel or maintenance opening and check for loud noise and arcing, both on opening and on closing. A loud noise and arcing on closing is usually due to contact bounce. • Measure and record current draw on load side of contactor. An elevated reading may indicate poor connection. If the recorded current (excluding the current at startup) exceeds the full load current on the motor name plate, notify bridge management. • Open and clean resistor enclosure with a vacuum cleaner. • Check hardware for corrosion. • Check condition of gaskets and replace if damaged.
FIVE YEAR	• Replace the general purpose plug-in ice cube style relays.

8.5.3 PANELBOARDS

8.5.3.1 DESCRIPTION

Lighting panels, also known as panelboards, are assemblies of bus bars and main/branch circuit breakers. The circuit breakers provide over-current protection as well as a means of turning on and off electrical distribution circuits.

Refer to Photo numbered 9.5D.

8.5.3.2 NUMBER OF ITEMS AND LOCATION

A single panelboard is located in the South Entrance Room, adjacent to the lighting transformer.

8.5.3.3 MAINTENANCE AND SCHEDULE

!!! WARNING !!!

Use EXTREME CARE and ALWAYS REMOVE POWER from all pertinent electrical equipment, which includes multiple power sources, before beginning maintenance. Refer to Section 7.3, "Lockout/Tagout Procedure."

Document completed maintenance tasks on the maintenance checklists included in Appendix B of the Contract.

ANNUALLY	• Open and clean with a vacuum cleaner. • Remove accumulation of dirt, grease, and gum with DexoIT D5 contact cleaner or equivalent. • Check for moisture and corrosion. Replace corroded hardware. • Examine bus bar connections for poor or loose connections and evidence of overheating. If necessary, pop out, but do not disconnect the circuit breakers. • Lubricate door hinges and latches. • Inspect all circuit breakers. Verify with a meter that continuity is broken on trip or switch off conditions. With the circuit breaker in the OFF position, use a multimeter to measure the current and voltage on the load side conductors. The multimeter should read 0 amps and 0 volts. • Measure resistance to ground at each panelboard using a ground test kit. Verify resistance is 25 ohms or less.

8.5.4 TRANSFORMERS

8.5.4.1 DESCRIPTION

Transformers are electrical devices that change the electrical power source by either changing the voltage or improving the power distribution. The purpose of the lighting transformer is to change the voltage from 480V or 208V to 120V in order to provide single phase power to lights and other small electrical equipment.

Refer to Photos numbered 9.5A, 9.5B, and 9.5C.

8.5.4.2 NUMBER OF ITEMS AND LOCATION

There is a single lighting transformer located in the Operator's House for lighting circuits. Three additional single phase transformers are provided on the main entrance level adjacent to the main circuit breaker. These transformers are arranged in a zig-zag connection pattern and are used as a grounding transformer.

An additional utility service transformer is located on the southwest side of the bridge but does not require maintenance by DelDOT.

8.5.4.3 MAINTENANCE AND SCHEDULE

!!! WARNING !!!

Use EXTREME CARE and ALWAYS REMOVE POWER from all pertinent electrical equipment, which includes multiple power sources, before beginning maintenance. Refer to Section 7.3, "Lockout/Tagout Procedure."

Document completed maintenance tasks on the maintenance checklists included in Appendix B of the Contract.

ANNUALLY	• Open and clean with vacuum cleaner. • Check for corrosion and moisture. Replace corroded hardware. • Verify all hardware is secure. Tighten loose fasteners. • Check transformer components (terminals, insulation, etc.) for evidence of overheating.

8.5.5 STANDBY EMERGENCY GENERATOR RECEPTACLE

8.5.5.1 DESCRIPTION

A standby emergency generator receptacle is provided to supply power to the bridge through a portable emergency generator in the event of a power failure.

Refer to Photo numbered 9.5B.

8.5.5.2 NUMBER OF ITEMS AND LOCATION

The standby emergency generator receptacle is located in the entrance room of the control house, adjacent to the incoming service disconnect switch.

8.5.5.3 MAINTENANCE AND SCHEDULE

!!! WARNING !!!

Use EXTREME CARE and ALWAYS REMOVE POWER from all pertinent electrical equipment, which includes multiple power sources, before beginning maintenance. Refer to Section 7.3, "Lockout/Tagout Procedure."

Document completed maintenance tasks on the maintenance checklists included in Appendix B of the Contract.

ANNUALLY	• Using an off-site portable generator, start and run each leaf individually for one complete opening (Refer to instructions under Chapter 4.) • Visually inspect the generator receptacle and associated equipment for wear or damage.

8.5.6 SAFETY (MANUAL TRANSFER) AND DISCONNECT SWITCHES

8.5.6.1 DESCRIPTION

Switches are devices for making, breaking, or changing connections in an electric circuit under the conditions of the load for which it is rated. There are various types of switches; some of the more common are main circuit breakers and motor disconnect switches

Refer to Photos numbered 9.5A, 9.6E, 9.6F, and 9.6G

8.5.6.2 NUMBER OF ITEMS AND LOCATION

Numerous switches are located throughout the bridge and are individually mounted as main circuit breakers, disconnect switches, and motor disconnect switches. One manual transfer switch is located in the entrance room of the control house, adjacent to the incoming service disconnect switch.

8.5.6.3 MAINTENANCE AND SCHEDULE

!!! WARNING !!!

Use EXTREME CARE and ALWAYS REMOVE POWER from all pertinent electrical equipment, which includes multiple power sources, before beginning maintenance. Refer to Section 7.3, "Lockout/Tagout Procedure."

!!! WARNING !!!

Use proper personal protective equipment when working on energized equipment. Arc flash and other dangers are present and may result in injury or death.

Document completed maintenance tasks on the maintenance checklists included in Appendix B of the Contract.

GENERAL	• When replacing contacts or other current-carrying parts, clean surfaces that are to be bolted together.
ANNUALLY	• Remove accumulation of dirt, grease, and gum with DexoIT D5 contact cleaner or equivalent. • Check for corrosion and moisture. Replace corroded hardware. • Examine for excessive heating of parts, discoloration of metal parts, charred insulation, odor, or blistering. • Check for freedom of moving parts. • Check for worn or broken mechanical parts. • Tighten loose mountings and connections. • Check contacts for wear and pitting. • Check for excessive arcing. • Check condition of gaskets (for dust-tight or watertight units). Replace damaged gaskets. • For fused units, inspect all circuit breakers. Verify with a meter that continuity is broken on trip or switch off conditions. With the circuit breaker in the OFF position, use a multimeter to measure the current and voltage on the load side conductors. The multimeter should read 0 amps and 0 volts. • Test the manual transfer switch with operation of the portable generator.

8.5.7 ELECTRICAL CONDUCTORS

8.5.7.1 DESCRIPTION

Conductors may be stranded single-conductor or multiple-conductor cable.

8.5.7.2 NUMBER OF ITEMS AND LOCATION

Numerous electrical conductors are located throughout the bridge.

8.5.7.3 MAINTENANCE AND SCHEDULE

!!! WARNING !!!

Use EXTREME CARE and ALWAYS REMOVE POWER from all pertinent electrical equipment, which includes multiple power sources, before beginning maintenance. Refer to Section 7.3, "Lockout/Tagout Procedure."

Document completed maintenance tasks on the maintenance checklists included in Appendix B of the Contract.

ANNUALLY	• Visually inspect terminations and splices for cracks, deterioration, corrosion, discoloring, or any other abnormalities. • Check tightness at each conductor termination at each terminal box. Tighten loose connections. • Check the strain relief fittings for signs of distress. • Inspect wires and electrical cables for grease and oil contamination, fraying, abrasions, sweating, cracked, melted or overheated blue tinted insulation. Clean the insulation of moisture, grease and oil after removing power sources if present.

8.5.8 DROOP CABLES

8.5.8.1 DESCRIPTION

Droop cables are flexible electrical conductors that are routed from the fixed portion of the bascule pier through to the movable bascule span equipment.

These cables carry power and control conductors to equipment located on the span (navigation lights and span lock equipment).

Refer to Photo numbered 9.6K.

8.5.8.2 NUMBER OF ITEMS AND LOCATION

Droop cables and associated termination cabinets are located outside each electrical/mechanical room.

8.5.8.3 MAINTENANCE AND SCHEDULE

!!! WARNING !!!

Use EXTREME CARE and ALWAYS REMOVE POWER from all pertinent electrical equipment, which includes multiple power sources, before beginning maintenance. Refer to Section 7.3, "Lockout/Tagout Procedure."

Document completed maintenance tasks on the maintenance checklists included in Appendix B of the Contract.

ANNUALLY	• Visually inspect terminations and splices for cracks, deterioration, corrosion, discoloring, or any other abnormalities. • Check tightness of each conductor termination at each terminal box. Tighten loose connections. • Check the strain relief fittings for signs of distress. • Check cables for any wear or abrasions on the outer jacket. • Inspect wires and electrical cables for grease and oil contamination, fraying, abrasions, sweating, cracked, melted or overheated blue tinted insulation. Clean the insulation of moisture, grease and oil after removing power sources if present.

8.5.9 SUBMARINE CABLES

8.5.9.1 DESCRIPTION

Submarine cables are electrical conductors routed from the Operator's House underneath the river to the Storage House to distribute power to and control the various electrical/mechanical components. The submarine cable system consists of conduit and wire (single conductor wire and shielded signal cables) and multiple termination points located in enclosures on the lower level of the Operator's House and Storage House.

Refer to Photos numbered 9.6H, 9.6I and 9.6J

8.5.9.2 NUMBER OF ITEMS AND LOCATION

Submarine Cables and associated termination cabinets on the bridge are located as follows:

- Bridge Control and Power Submarine Cables (2) – Two located beneath the riverbed and into the bascule piers
- Termination Boxes/Cabinets (8) – Four located in the lower level of the control house and storage house

8.5.9.3 MAINTENANCE AND SCHEDULE

!!! WARNING !!!

Use EXTREME CARE and ALWAYS REMOVE POWER from all pertinent electrical equipment, which includes multiple power sources, before beginning maintenance. Refer to Section 7.3, "Lockout/Tagout Procedure."

Document completed maintenance tasks on the maintenance checklists included in Appendix B of the Contract.

ANNUALLY	• Visually inspect terminations and splices for cracks, deterioration, corrosion, discoloring, or any other abnormalities. • Check the tightness of each conductor termination at each terminal box. Tighten loose connections. • Check the strain relief fittings for signs of distress. • Visually inspect the submarine cable and watch for signs of cracks, deterioration and discoloration of the cable jacket.

8.6 LIGHTING SYSTEMS

8.6.1 NAVIGATION LIGHTS

8.6.1.1 DESCRIPTION

Pier lights are red lighting fixtures. Their function is to enhance visibility of the piers and locate the channel for marine vessels.

The red/green bascule span pendulum navigation lights are divided fixtures, with portions that are red and portions that are green. When both leafs are fully open, the four (4) outboard lights located at the toes of each leaf turn from red to green. When any one leaf is not fully open, all pendulum lights are red.

Refer to Photo numbered 9.4E.

8.6.1.2 NUMBER OF ITEMS AND LOCATION

Three red fender lights are located on each fender. There are four (4) bascule span pendulum navigation lights.

8.6.1.3 MAINTENANCE AND SCHEDULE

!!! WARNING !!!

Use EXTREME CARE and ALWAYS REMOVE POWER from all pertinent electrical equipment, which includes multiple power sources, before beginning maintenance. Refer to Section 7.3, "Lockout/Tagout Procedure."

Document completed maintenance tasks on the maintenance checklists included in Appendix B of the Contract.

MONTHLY	• Check navigation lights for proper operation. • Replace lamps if damaged or nonfunctional.
ANNUALLY	• Check gaskets and replace if damaged. • Tighten loose connections. • Check for corrosion of metal parts. Replace corroded hardware. • Check for worn or broken mechanical parts. Check for cracked lenses. • Replace lamps.

8.6.2 INTERIOR/EXTERIOR LIGHTS

8.6.2.1 DESCRIPTION

Incandescent and florescent fixtures are mounted throughout the bridge.

Refer to Photo numbered 9.7C.

8.6.2.2 NUMBER OF ITEMS AND LOCATION

There are numerous lights located throughout the bridge in the enclosed rooms, platforms, ladders, and catwalks.

8.6.2.3 MAINTENANCE AND SCHEDULE

!!! WARNING !!!

Use EXTREME CARE and ALWAYS REMOVE POWER from all pertinent electrical equipment, which includes multiple power sources, before beginning maintenance. Refer to Section 7.3, Lockout/Tagout Procedure.

Document completed maintenance tasks on the maintenance checklists included in Appendix B of the Contract.

MONTHLY	• Check for burned-out lamps. Replace burned-out lamps. Verify light switches function properly.
ANNUALLY	• Clean luminaire lenses, interior surfaces, and weep holes (where applicable). • Check gaskets for damage and cracks. Replace damaged gaskets. • Tighten loose connections. • Inspect for corrosion of metal parts. Clean and spot paint corroded components. • Check parts for wear or damage.

8.6.3 TRAFFIC SIGNALS

8.6.3.1 DESCRIPTION

Traffic signals caution roadway and pedestrian traffic before and during periods of span operation.

Refer to Photo numbered 9.4A.

8.6.3.2 NUMBER OF ITEMS AND LOCATION

There are four three section-red/green/amber traffic signals on the on-coming approach mounted to two sets of mast arm assemblies ahead of the warning gates. The lights turn from green to red flashing before each opening.

8.6.3.3 MAINTENANCE AND SCHEDULE

!!! WARNING !!!

Use EXTREME CARE and ALWAYS REMOVE POWER from all pertinent electrical equipment, which includes multiple power sources, before beginning maintenance. Refer to Section 7.3, "Lockout/Tagout Procedure."

Document completed maintenance tasks on the maintenance checklists included in Appendix B of the Contract.

MONTHLY	• Check lights for proper illumination and replace burned out bulbs. • Verify proper operation during marine and maintenance openings.
ANNUALLY	• Clean all reflectors, lenses and spot paint heads.

8.6.4 TRAFFIC GATE ARM LIGHTS

8.6.4.1 DESCRIPTION

Traffic gate arm lights caution roadway traffic before and during periods of span operation.

Refer to Photo numbered 9.4D.

8.6.4.2 NUMBER OF ITEMS AND LOCATION

There are red flashing gate arm lights mounted on the four warning gate arms.

8.6.4.3 MAINTENANCE AND SCHEDULE

!!! WARNING !!!

Use EXTREME CARE and ALWAYS REMOVE POWER from all pertinent electrical equipment, which includes multiple power sources, before beginning maintenance. Refer to Section 7.3, "Lockout/Tagout Procedure."

Document completed maintenance tasks on the maintenance checklists included in Appendix B of the Contract.

MONTHLY	• Check traffic gate arm lights for proper operation. Replace burned out bulbs.
SIX MONTHS	• Check gate arm lights and wiring for damage.

8.7 ELECTRIC MOTORS

8.7.1 LOCK MOTORS

8.7.1.1 DESCRIPTION

The electric span lock motors transform electric power to mechanical power to drive and pull the lock bars.

Refer to Photos numbered 9.3B and 9.6E

8.7.1.2 NUMBER OF ITEMS AND LOCATION

The south leaf contains two (2) – 3 HP span lock motors. A span lock motor is located on each span lock platform and includes an internal solenoid brake.

8.7.1.3 MAINTENANCE AND SCHEDULE

!!! WARNING !!!

Use EXTREME CARE and ALWAYS REMOVE POWER from all pertinent electrical equipment, which includes multiple power sources, before beginning maintenance. Refer to Section 7.3, "Lockout/Tagout Procedure."

DO NOT USE WATER TO HOSE DOWN THE MOTOR HOUSING

Document completed maintenance tasks on the maintenance checklists included in Appendix B of the Contract.

ANNUALLY	Motors	• Check for leakage around bearings. Clean off excess grease and dirt using a rag and WD-40 Specialist Machine and Engine Degreaser or equivalent. • Verify that shaft end-play is normal. • Inspect and tighten loose electrical connections on motor. • Verify that all keys, bolts, and pins are in their proper position. Check all bolts for tightness. If loose, tighten. • During operation, examine motor for smooth running and absence of vibration. • During operation, check motor and bearings for overheating. • Check painted surfaces for signs of corrosion. Clean and spot paint areas of corrosion. Do not paint nameplates. • Check the phase currents flowing in motors under loaded conditions with a clamp-on ammeter for all motors. Utilize a true RMS ammeter. Compare the measured current with the nameplate data. Record values in the "Notes" sections of the maintenance checklist.
	Solenoid Brakes	• Check electrical connections. Tighten loose connections. • Check components for wear or damage. Check for loose fasteners. Tighten loose fasteners. Check for freedom of moving parts (parts are free of binding and sticking). • Check for excessive heating of parts evidenced by discoloration of metal parts, charred insulation, or odor. Check for collections of dirt or gum, evidence of water dripping, or corrosion. Clean the components of dirt, gum, water, and corrosion. • Observe the brake during operation of the span locks. Check for excessive vibration or unusual noise during operation.
FIVE YEAR		• Clean and paint the motors. Do not paint nameplates.

8.7.2 MAIN LEAF (SPAN) MOTORS

8.7.2.1 DESCRIPTION

The electric main leaf motors transform electric power to mechanical power to raise and lower each leaf.

Refer to Photos numbered 9.2A, 9.2B, 9.2C, 9.2D, and 9.2E.

Refer to Section 11.2 for lubrication schematic.

8.7.2.2 NUMBER OF ITEMS AND LOCATION

Each leaf contains two 60 HP main leaf motors which are located in the electrical/mechanical rooms. During normal operation both motors are used to raise and lower the leaf. Under special circumstances, when one motor is out of service and weather conditions are favorable it is possible to operate the leaf with a single motor, provided specific criteria is met (Refer to Section 4.2)

8.7.2.3 MAINTENANCE AND SCHEDULE

!!! WARNING !!!

Use EXTREME CARE and ALWAYS REMOVE POWER from all pertinent electrical equipment, which includes multiple power sources, before beginning maintenance. Refer to Section 7.3, "Lockout/Tagout Procedure."

DO NOT USE WATER TO HOSE DOWN THE MOTOR HOUSING

Document completed maintenance tasks on the maintenance checklists included in Appendix B of the Contract.

ANNUALLY (Refer to Section 11.4.6 for Bridge Maintenance Performance Standard)	• Check for leakage around bearings. Clean off excess grease and dirt using a rag and WD-40 Specialist Machine and Engine Degreaser or equivalent. • Verify that shaft end-play is normal. • Inspect and tighten loose electrical connections on motor. • Verify that all keys, bolts, and pins are in their proper position. Check all bolts for tightness. If loose, tighten. • During operation, examine motor for smooth running and absence of vibration. • During operation, check motor and bearings for overheating. • Lubricate main leaf motor bearings. • Check painted surface for signs of corrosion. Clean and spot paint areas of corrosion. Do not paint nameplates. • Check the phase currents flowing in motors under loaded conditions with a clamp-on ammeter for all motors. Utilize a true RMS ammeter. Compare the measured current with the nameplate data. Record values in the "Notes" sections of the maintenance checklist.
FIVE YEAR	• Clean and paint the motors. Do not paint nameplates.

8.7.3 TRAFFIC GATE MOTORS

8.7.3.1 DESCRIPTION

The ½ HP electric motors for the warning gates transform electric power to mechanical power to operate each traffic gate. Each gate motor is provided with an external solenoid brake to provide holding torque on the specific device.

Refer to Photos numbered 9.4B and 9.4C.

8.7.3.2 NUMBER OF ITEMS AND LOCATION

Each warning gate contains a ½ HP electric motor which is located in warning gate housing.

8.7.3.3 MAINTENANCE AND SCHEDULE

!!! WARNING !!!

Use EXTREME CARE and ALWAYS REMOVE POWER from all pertinent electrical equipment, which includes multiple power sources, before beginning maintenance. Refer to Section 7.3, "Lockout/Tagout Procedure."

DO NOT USE WATER TO HOSE DOWN THE MOTOR HOUSING

Document completed maintenance tasks on the maintenance checklists included in Appendix B of the Contract.

ANNUALLY	Motors	• Check for leakage around bearings. Clean off excess grease and dirt using a rag and WD-40 Specialist Machine and Engine Degreaser or equivalent. • Verify that shaft end-play is normal. • Inspect and tighten loose electrical connections on the motor. • Verify that all keys, bolts, and pins are in their proper position. Check all bolts for tightness. If loose, tighten. • During operation, examine motor for smooth running and absence of vibration. • During operation, check motor and bearings for overheating. • Check painted surface for signs of corrosion. Clean and spot paint areas of corrosion. Do not paint nameplates. • Check the phase currents flowing in motors under loaded conditions with a clamp-on ammeter for all motors. Utilize a true RMS ammeter. Compare the measured current with the nameplate data. Record values in the "Notes" sections of the maintenance checklist.
	Solenoid Brakes	• Check electrical connections. Tighten loose connections. • Check components for wear or damage. Check for loose fasteners. Tighten loose fasteners. Check for freedom of moving parts (parts are free of binding and sticking). • Check for excessive heating of parts evidenced by discoloration of metal parts, charred insulation, or odor. Check for collections of dirt or gum, evidence of water dripping, or corrosion. Clean the components of dirt, gum, water, and corrosion. • Observe the brake during operation of the traffic gate. Check for excessive vibration or unusual noise during operation.

8.8 CONTROL SYSTEM

8.8.1 RELAY CABINETS

8.8.1.1 DESCRIPTION

Relay cabinets are free standing cabinets which house motor control relays, contactors, circuit breakers, fuses, power supplies and terminal blocks.

Refer to Photos numbered 9.6B and 9.6D.

8.8.1.2 NUMBER OF ITEMS AND LOCATION

A single relay cabinet is located in the Operator's House inside the electrical/mechanical room.

8.8.1.3 MAINTENANCE AND SCHEDULE

!!! WARNING !!!

Use EXTREME CARE and ALWAYS REMOVE POWER from all pertinent electrical equipment, which includes multiple power sources, before beginning maintenance. Refer to Section 7.3, "Lockout/Tagout Procedure."

Document completed maintenance tasks on the maintenance checklists included in Appendix B of the Contract.

THREE MONTHS	• Open and clean with a vacuum cleaner. • Remove accumulation of dirt, grease, and gum with DexoIT D5 contact cleaner or equivalent. • Check for corrosion and moisture. • Lubricate door hinges and latches. • Inspect terminal block screws and tighten all loose connections. • Inspect wiring from unit terminal blocks for deterioration of insulation. • Inspect all circuit breakers. Verify with a meter that continuity is broken on trip or switch off conditions. With the circuit breaker in the OFF position, use a multimeter to measure the current and voltage on the load side conductors. The multimeter should read 0 amps and 0 volts. • Inspect all fuses with a meter and verify continuity. For fuse replacement, always install the same type and rating fuses furnished with the relay control cabinet. Evolution in fuse design has produced fuses that are mechanically equivalent but not electrically equivalent. They may not have the same short-circuit withstand ability and current limiting ability. • Inspect all relays and tighten loose connections. • During operation, verify each relay lamp turns on. Replace non-operational bulbs. • Verify enclosure heaters are functioning. • Verify enclosure lights turn on when doors are open. Replace burned out bulbs. • Check the condition of gaskets and replace if damaged.

ANNUALLY	• Check for discolored connections on terminals, contact supports, bus bars, or connectors. Discoloration usually indicates that overheating has occurred, probably because of loose connections. Clean connection points that are discolored. Tighten all loose hardware. Check wires and connectors for heat damage. • Manually operate each relay and contactor with associated circuit breakers off and observe contact operation to be sure it opens and closes cleanly and that the contacts are fully sealed in the closed position. In order to manually operate a relay or contactor with the associated circuit breaker off, verify that power is off, and with a non-conductive object, press the button on the relay or contactor. The button is usually located on the front or bottom of the housing. • Monitor relay and contactor operation during normal operation and check for loud noise and arcing, both on opening and on closing. A loud noise and arcing on closing is usually due to contact bounce.

8.8.2 CONTROL CONSOLE

8.8.2.1 DESCRIPTION

The control console is fabricated from an individual free standing cabinet which houses indicating lights, selector switches, pushbuttons, meters, control relays, contactors, circuit breakers, fuses, and terminal blocks.

Refer to Photo numbered 9.6L.

8.8.2.2 NUMBER OF ITEMS AND LOCATION

The main control console is located in the Control House (upper level floor).

!!! WARNING !!!

Use EXTREME CARE and ALWAYS REMOVE POWER from all pertinent electrical equipment, which includes multiple power sources, before beginning maintenance. Refer to Section 7.3, "Lockout/Tagout Procedure."

Document completed maintenance tasks on the maintenance checklists included in Appendix B of the Contract.

THREE MONTHS	• Open and clean with a vacuum cleaner. • Remove accumulation of dirt, grease, and gum with DexoIT D5 contact cleaner or equivalent. • Check components for corrosion and evidence of moisture. Replace corroded hardware. • Lubricate door hinges and latches. • Inspect terminal block screws and tighten all loose connections. • Inspect wiring from unit terminal blocks for deterioration of insulation • Inspect all fuses with a meter and verify continuity. For fuse replacement, always install the same type and rating fuses furnished with the control console. Evolution in fuse design has produced fuses that are mechanically equivalent but not electrically equivalent. They may not have the same short-circuit withstand ability and current limiting ability. • Check all pushbuttons, selector switches and meters for damage and proper operation. • Check all indicating lights by pushing each light and verifying that it illuminates. Replace burned out bulbs. • Verify enclosure lights turn on when doors are open. Replace burned out bulbs. • Check condition of gaskets and replace if damaged.
ANNUALLY	• Check for discolored connections on terminals, contact supports, bus bars, or connectors. Discoloration usually indicates that overheating has occurred, probably because of loose connections. Clean connection points that are discolored. Tighten all loose hardware. Check wires and connectors for damage. • Manually operate each relay and contactor with associated circuit breakers off and observe contact operation to be sure it opens and closes cleanly and that the contacts are fully sealed in the closed position. In order to manually operate a relay or contactor with the associated circuit breaker off, verify that power is off, and with a non-conductive object, press the button on the relay or contactor. The button is usually located on the front or bottom of the housing. • Monitor relay and contactor operation during normal operation and check for loud noise and arcing, both on opening and on closing. A loud noise and arcing on closing is usually due to contact bounce.

8.8.3 LIMIT SWITCHES

8.8.3.1 DESCRIPTION

A limit switch is a switching device that provides feedback in an electrical circuit. When actuated, this device will restrict or initiate an operation.

Refer to Photos numbered 9.2A, 9.2C, 9.2G, 9.6M, 9.6N, 9.6O, 9.6P, 9.6Q, and 9.6R.

Refer to Section 11.1 for component identification.

8.8.3.2 NUMBER OF ITEMS AND LOCATION

Limit switches and resolvers on the bridge are located as follows:

- Span Control
    - Seven Circuit Span Position Rotary Cam Limit Switches (2) - Adjacent to the span drive machinery
    - Brake Limit Switches (12) – Two located on each brake frame
    - Fully Seated Limit Switch (2) – One located on each leaf (SE corner and NW corner)
    - Selsyn Position Transmitter (2) – One located adjacent to each span position rotary cam limit switch
- Lock Control
    - Span Lock Pulled Limit Switch (2) – One located on each span lock platform
    - Span Lock Driven Limit Switch (2) - One located on each span lock platform
    - Span Lock Hand Crank Cover Limit Switch (2) – One located at the rear of each span lock motor
- Traffic Control
    - Eight Circuit Warning Gate Rotary Cam Limit Switch (4) – One located inside each warning gate housing
    - Warning Gate Door Switches (8) – One located on each warning gate housing access door

8.8.3.3 MAINTENANCE AND SCHEDULE

!!! WARNING !!!

Use EXTREME CARE and ALWAYS REMOVE POWER from all pertinent electrical equipment, which includes multiple power sources, before beginning maintenance. Refer to Section 7.3, "Lockout/Tagout Procedure."

Document completed maintenance tasks on the maintenance checklists included in Appendix B of the Contract.

ANNUALLY	All	• Inspect all limit switches for wear. • Remove accumulated dust, dirt, and moisture on housing. Use brush, soft cloth, or vacuum cleaner. • Remove accumulated dust, dirt, and moisture from all shafts, keeping it clean and free of galling. • Inspect latches, mounting hardware and seals to ensure proper seal of housing. • Inspect all fasteners and tighten loose connections. Replace corroded hardware. • If accessible, remove the cover and visually inspect condition of all internal parts. • Check for worn or broken mechanical parts.
	Rotary Cam Limit Switch	• Inspect the rollers and cams for wear.
	Span Lock and Brake Limit Switches	• Inspect snap action contact blocks and all internal component connections. Tighten loose connections. • Inspect all wiring from snap action contact blocks for deterioration. • Cycle lever arm several times.

Fully Seated Limit Switch	• Inspect all wiring for deterioration. • Inspect limit switch body and remove debris. • Inspect strike plate and magnet for corrosion and remove debris.

8.8.4 SPEED SWITCHES AND TACHOMETER ASSEMBLY

8.8.4.1 DESCRIPTION

A centrifugal speed switch and tachometer assembly is installed in each electrical/mechanical room to check operating speeds during normal operation and provide feedback to the motor drives. In the event the correct speed is not reached during deceleration or the running speeds exceed 650 RPM, the control system will perform an emergency stop.

Refer to Photos numbered 9.2A, 9.2D and 9.6S

Refer to Section 11.1 for component identification.

8.8.4.2 NUMBER OF ITEMS AND LOCATION

A single overspeed and tachometer assembly is located in each electrical/mechanical room coupled to an output shaft extended from the brakewheel of north motor brake No. 1 (south motor brake No. 2).

8.8.4.3 MAINTENANCE AND SCHEDULE

!!! WARNING !!!

Use EXTREME CARE and ALWAYS REMOVE POWER from all pertinent electrical equipment, which includes multiple power sources, before beginning maintenance. Refer to Section 7.3, "Lockout/Tagout Procedure."

Document completed maintenance tasks on the maintenance checklists included in Appendix B of the Contract.

ANNUALLY	• Remove accumulated dust, dirt, and moisture on housing. Use brush, soft cloth, or vacuum cleaner. • Remove accumulated dust, dirt, and moisture from shafts, keeping them clean and free of galling where sleeve bearings slide. • Inspect cover to ensure proper seal of housing. • Inspect all fasteners and tighten connections if loose. Replace corroded fasteners. • Check components for wear or damage. Replace worn or damaged belts. Consult the manufacturer for the correct belt type and size. • Check belt tension per manufacturer's recommendations and adjust tension if belt is excessively loose. Correct tension is obtained when 3.5 ounces of force in the center of the timing belt between the pulleys gives 0.015 inches of belt deflection per inch of distance between pulleys. • Check condition of gaskets and replace if damaged.

8.9 MISCELLANEOUS EQUIPMENT

8.9.1 SIREN

8.9.1.1 DESCRIPTION

The siren provides an audible signal to vessels for an upcoming operation. The siren is activated manually by a pushbutton on the control desk.

Refer to Photo numbered 9.7D.

8.9.1.2 NUMBER OF ITEMS AND LOCATION

One double unit air horn is located on the Control House.

8.9.1.3 MAINTENANCE AND SCHEDULE

!!! WARNING !!!

Use EXTREME CARE and ALWAYS REMOVE POWER from all pertinent electrical equipment, which includes multiple power sources, before beginning maintenance. Refer to Section 7.3, "Lockout/Tagout Procedure."

Document completed maintenance tasks on the maintenance checklists included in Appendix B of the Contract.

MONTHLY	• Perform a general visual inspection of the equipment and check for the proper operation of the system.
ANNUALLY	• Check electrical connections and tighten loose connections. • Operate the siren and associated equipment to check for excessive heating of parts evidenced by discoloration of metal parts, charred insulation, or odor. • Check and clean components of collections of dirt or gum, evidence of water dripping, or corrosion. • Check the siren for debris inside the unit. • Inspect connections for cracking or leaks. • Tighten loose hardware.

8.9.2 HEATING AND AIR CONDITIONING SYSTEMS

8.9.2.1 DESCRIPTION

Comfort heaters serve the electrical/mechanical rooms and control room on the bridge. Window mounted air conditioners are located in the control room.

Refer to Photo numbered 9.7A.

8.9.2.2 NUMBER OF ITEMS AND LOCATION

Two window mounted air conditioners are located in the control room. A comfort heater is located in the stairway leading up to the control room. A comfort heater is also located in each electrical/mechanical room.

8.9.2.3 MAINTENANCE AND SCHEDULE

!!! WARNING !!!

Use EXTREME CARE and ALWAYS REMOVE POWER from all pertinent electrical equipment, which includes multiple power sources, before beginning maintenance. Refer to Section 7.3, "Lockout/Tagout Procedure."

Document completed maintenance tasks on the maintenance checklists included in Appendix B of the Contract.

MONTHLY	• Check all air filters. Replace dirty or damaged filters. • Check all cooling coils, seals, fittings, ducting connections and pipelines for leaks. • Check surfaces of casing for signs of corrosion. Retreat or repaint areas of corrosion. • Inspect the condition of all safety devices for deterioration. • Check performance of equipment related to temperature and humidity control.

8.9.3 SUMP PUMPS

8.9.3.1 DESCRIPTION

A pump system is used to remove water from the counterweight pits and the lower level of the control and storage houses. The sump pump control panels located in each electrical/mechanical room have been abandoned and are no longer connected.

Refer to Photo numbered 9.7E.

8.9.3.2 NUMBER OF ITEMS AND LOCATION

A sump pump is located in each counterweight pit and has to be manually turned on to remove water. A similar sump pump system is located on the lower level of the control and storage houses.

8.9.3.3 MAINTENANCE AND SCHEDULE

!!! WARNING !!!

Use EXTREME CARE and ALWAYS REMOVE POWER from all pertinent electrical equipment, which includes multiple power sources, before beginning maintenance. Refer to Section 7.3, "Lockout/Tagout Procedure."

Document completed maintenance tasks on the maintenance checklists included in Appendix B of the Contract.

MONTHLY	• Dump buckets of water or run water from a hose into the sump to test the pump's response and look for leaks. Verify that water is pumped out from sump and there is no back-flow. Do not flood the surrounding floor or area. • Check that the motor is free of all debris. • During operation, examine motor for smooth running and absence of excessive vibration.

8.9.4 HOT WATER HEATER

8.9.4.1 DESCRIPTION

A hot water heater is used to supply the bathroom sink with hot water.

Refer to Photo numbered 9.7B.

8.9.4.2 NUMBER OF ITEMS AND LOCATION

A single hot water heater is located on a shelf above the stairway leading to the south electrical/mechanical room.

8.9.4.3 MAINTENANCE AND SCHEDULE

!!! WARNING !!!

Use EXTREME CARE and ALWAYS REMOVE POWER from all pertinent electrical equipment, which includes multiple power sources, before beginning maintenance. Refer to Section 7.3, "Lockout/Tagout Procedure."

Document completed maintenance tasks on the maintenance checklists included in Appendix B of the Contract.

MONTHLY	• Check the unit and associated piping for leaks. • Turn the hot water on at the sink and verify that the water turns hot.

8.9.5 HEAT TRACE

8.9.5.1 DESCRIPTION

Heat trace cabling is installed on the water and waste lines to prevent freezing during winter months

8.9.5.2 NUMBER OF ITEMS AND LOCATION

The heat trace cable is installed on piping routed along the south approach

8.9.5.3 MAINTENANCE AND SCHEDULE

!!! WARNING !!!

Use EXTREME CARE and ALWAYS REMOVE POWER from all pertinent electrical equipment, which includes multiple power sources, before beginning maintenance. Refer to Section 7.3, "Lockout/Tagout Procedure."

Document completed maintenance tasks on the maintenance checklists included in Appendix B of the Contract.

ANNUALLY	• Visually inspect the pipe, insulation, and connections to the heating cable for physical damage. Check that no moisture is present in junction boxes, electrical connections are tight and grounded, and insulation is dry and sealed. Tighten fasteners if loose.

8.9.6 PITS, PLATFORMS, AND WALKWAYS

8.9.6.1 DESCRIPTION

Each counterweight pit provides an area for the counterweight to travel during operation of the bridge. Platforms and walkways provide access to electrical and mechanical components throughout the bascule pier.

Refer to Photos numbered 9.1A, 9.1B, 9.1E, 9.1F, 9.7F, and 9.7G.

8.9.6.2 NUMBER OF ITEMS AND LOCATION

One counterweight pit is located at the bottom of each bascule pier. One platform is located within each bascule pier. Walkways are located within the bascule pier.

8.9.6.3 MAINTENANCE AND SCHEDULE

!!! WARNING !!!

Use EXTREME CARE and VERIFY that electrical components and enclosures do not get wet.

Document completed maintenance tasks on the maintenance checklists included in Appendix B of the Contract.

SIX MONTHS	• Clean and power wash the counterweight pits, platforms, and walkways of dirt and debris. Electrical equipment must be protected prior to power washing walkways to prevent water from entering any electrical component. Water intrusion may cause failure to components.

8.9.7 CONDUIT SYSTEMS

8.9.7.1 DESCRIPTION

Conduit, boxes, and supports are used throughout the bridge to route and protect the control and power cables.

8.9.7.2 NUMBER OF ITEMS AND LOCATION

Conduit, boxes, and supports are located throughout the bridge including in the control house, at the span lock platform, in the electrical/mechanical rooms, etc.

8.9.7.3 MAINTENANCE AND SCHEDULE

!!! WARNING !!!

Use EXTREME CARE and ALWAYS REMOVE POWER from all pertinent electrical equipment, which includes multiple power sources, before beginning maintenance. Refer to Section 7.3, "Lockout/Tagout Procedure."

Document completed maintenance tasks on the maintenance checklists included in Appendix B of the Contract.

ANNUALLY	• Open and clean boxes with a vacuum cleaner. • Remove accumulation of dirt, grease, and gum from conduit. • Check for corrosion and moisture. Check conduit for cracking or other damage. Replace corroded hardware. • Tighten loose mounting and connections. • Check condition of gaskets in boxes and replace gaskets if damaged. • Lubricate door hinges and latches, where provided, with 3-IN-ONE Multipurpose oil. • Check and clean all drain holes and fittings.
FIVE YEAR	• Clean and paint all corrosion and oxidation from steel conduit and supports. • Where PVC coated steel conduit is installed, apply touch up compound to cracks and/or cuts in coating.

CHAPTER 9 - PHOTOS

GUIDE TO PHOTOS

9.1 Leaf Support System and Counterweights

9.1A - Typical Trunnion Bearing (Non Span Drive Machinery Side) 9-4
9.1B - Typical Trunnion Bearing (Span Drive Machinery Side) 9-4
9.1C - Typical Live Load Bearing 9-5
9.1D - Typical Live Load Anchorage 9-5
9.1E - Typical Counterweight 9-6
9.1F - Typical Counterweight Pockets 9-6

9.2 Span Drive Machinery

9.2A - South Motor Brake No. 2 / North Motor Brake No. 1 9-7
9.2B - Typical Motor Brake No. 3 9-7
9.2C - North Span Drive Machinery in Electrical/Mechanical Room 9-8
9.2D - .South Main Leaf Motor No. 1 9-8
9.2E - South Main Leaf Motor No. 2 9-9
9.2F - Primary Reducer Output With Split Sprocket 9-9
9.2G - Typical Span Control Rotary Cam Limit Switch 9-10
9.2H - Typical Bearing and Coupling Inside Of Trunnion Girder 9-10
9.2I - Typical Secondary Open Gear Frame 9-11
9.2J - Typical Primary Open Gear Frame Configuration 9-11
9.2K - Typical Primary Open Gear Frame 9-12
9.2L - Typical Main Rack And Pinion 9-12

9.3 Span Lock Machinery and Centering Equipment

9.3A - Typical Span Lock Machinery Platform 9-13
9.3B - Typical Span Lock Machinery 9-13
9.3C - Typical Span Lock Bar 9-14
9.3D - Typical Span Lock Bar Front Guide (Lock Bar Retracted) 9-14
9.3E - Typical Span Lock Receiving Socket 9-15
9.3F - Centering Device and Centering Guide 9-15
9.3G - Centering Guide 9-16
9.3H - Centering Device 9-16

9.4 Traffic Control Devices and Navigation Lights

9.4A - Typical Traffic Control Equipment 9-17
9.4B - Typical Warning Gate Equipment (Front) 9-17
9.4C - Typical Warning Gate Equipment (Back) 9-18
9.4D - Typical Warning Gate Gong and Arm Lights 9-18
9.4E - Typical Navigation Lights 9-19

9.5 Power Distribution Equipment

9.5A - Main Incoming Disconnect Switch 9-20
9.5B - Generator Receptacle, Transformers and Disconnect Switches 9-20
9.5C - Main Incoming Transformer 9-21
9.5D - Distribution Panelboard 9-21

9.6 Control Equipment

9.6A - North Motor Control Cabinet 9-22
9.6B - South Control Cabinets 9-22
9.6C - Typical Drive Cabinet 9-23
9.6D - Typical Relay Cabinet 9-23
9.6E - Typical Span Lock Motor and Disconnect Switch 9-24
9.6F - Typical Motor Brake Disconnect Switch 9-24
9.6G - Typical Leaf Motor Disconnect Switches and Secondary Resistors 9-25
9.6H - North Control Submarine Termination Box 9-25
9.6I - South Control Submarine Termination Box 9-26
9.6J - Typical Power Submarine Termination Box 9-26
9.6K - Typical Droop Cable Termination Boxes 9-27
9.6L - Control Console 9-27
9.6M - Typical Fully Seated Limit Switch (Plunger Style) 9-28
9.6N - Typical Fully Seated Limit Switch (Cover Removed) 9-28
9.6O - Typical Span Lock Limit Switch: Pulled (Lever Style) 9-29
9.6P - Typical Span Lock Limit Switch: Driven (Lever Style) 9-29
9.6Q - Typical Span Control Rotary Cam Limit Switch & Transmitter 9-30
9.6R - Typical Span Control Rotary Cam Limit Switch (Cover Removed) 9-30
9.6S - Typical Tachometer and Speed Switch Assembly 9-31
9.6T - Typical Span Drive Primary Resistor 9-31

9.7 Miscellaneous Equipment

9.7A - Control Room Heater 9-32

9.7B - Hot Water Heater 9-32

9.7C - Typical Service Light Fixture 9-33

9.7D - Warning Siren 9-33

9.7E - Typical Sump Pump 9-34

9.7F - Typical Counterweight Pit 9-34

9.7G - Typical Bascule Pier Walkway 9-35

9.1 LEAF SUPPORT SYSTEM AND COUNTERWEIGHTS

PHOTO 9.1A – TYPICAL TRUNNION BEARING (NON-SPAN DRIVE MACHINERY SIDE)

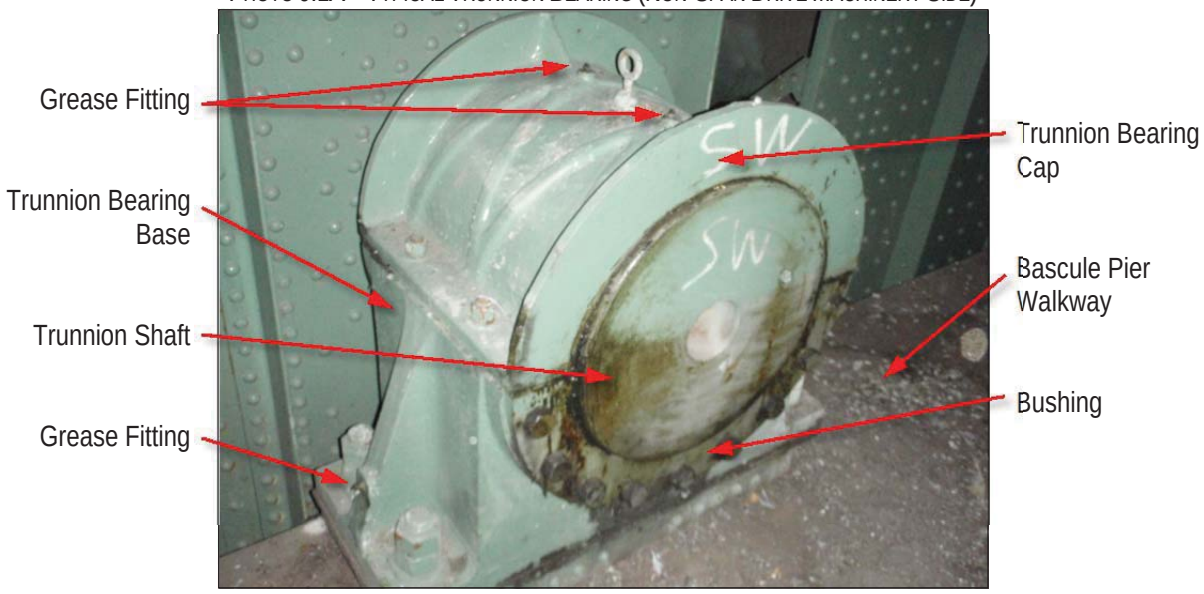

PHOTO 9.1B – TYPICAL TRUNNION BEARING (SPAN DRIVE MACHINERY SIDE)

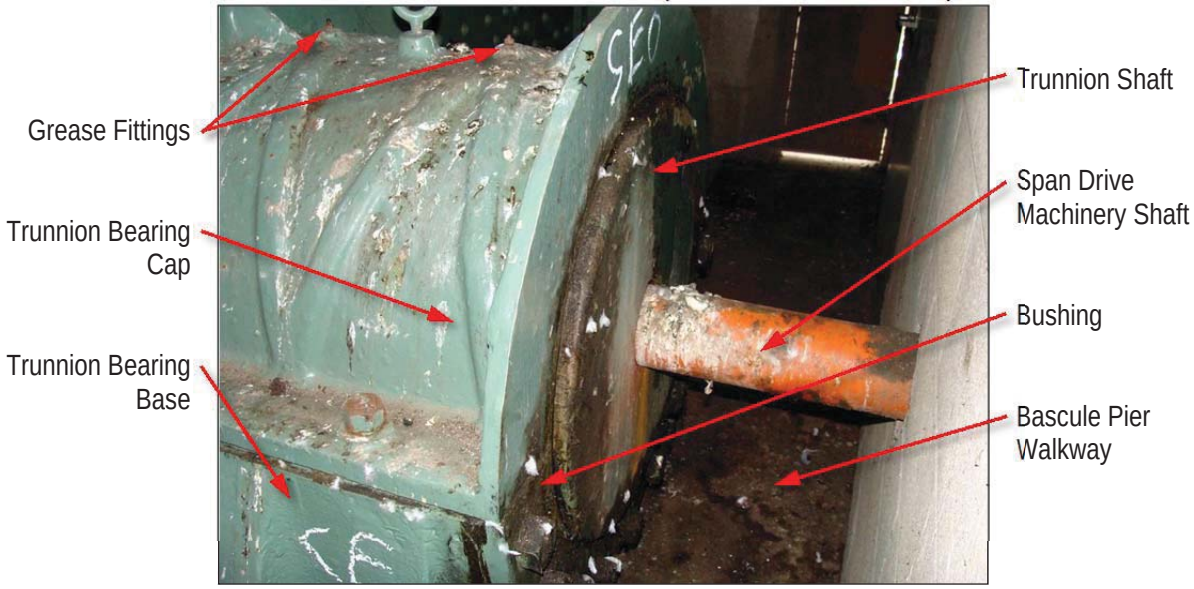

PHOTO 9.1C – TYPICAL LIVE LOAD BEARING

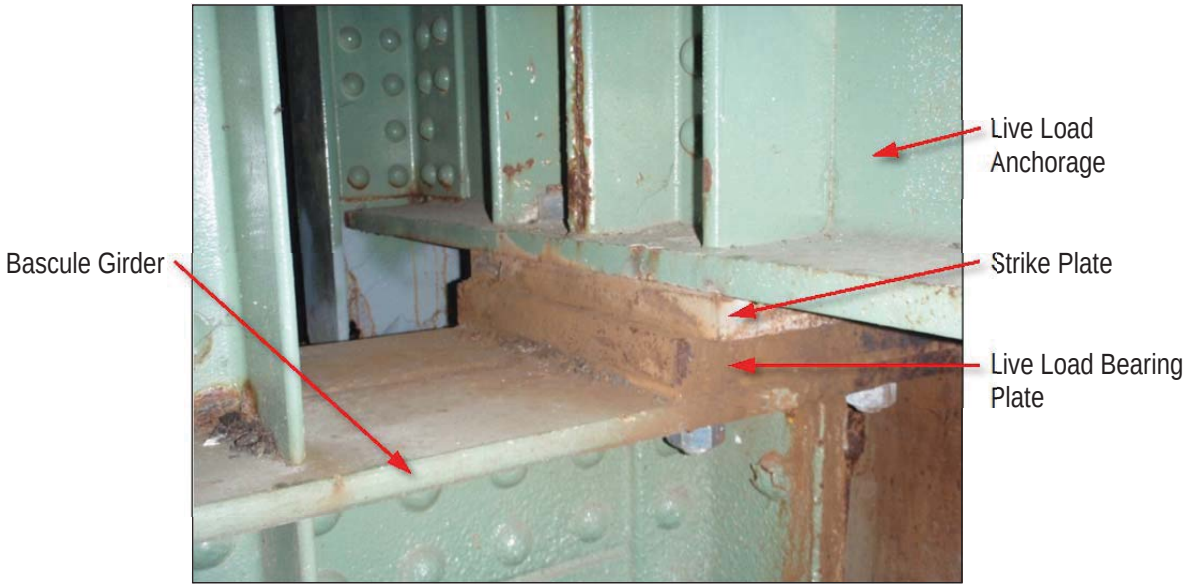

PHOTO 9.1D – TYPICAL LIVE LOAD ANCHORAGE

PHOTO 9.1E – TYPICAL COUNTERWEIGHT

PHOTO 9.1F – TYPICAL COUNTERWEIGHT POCKETS

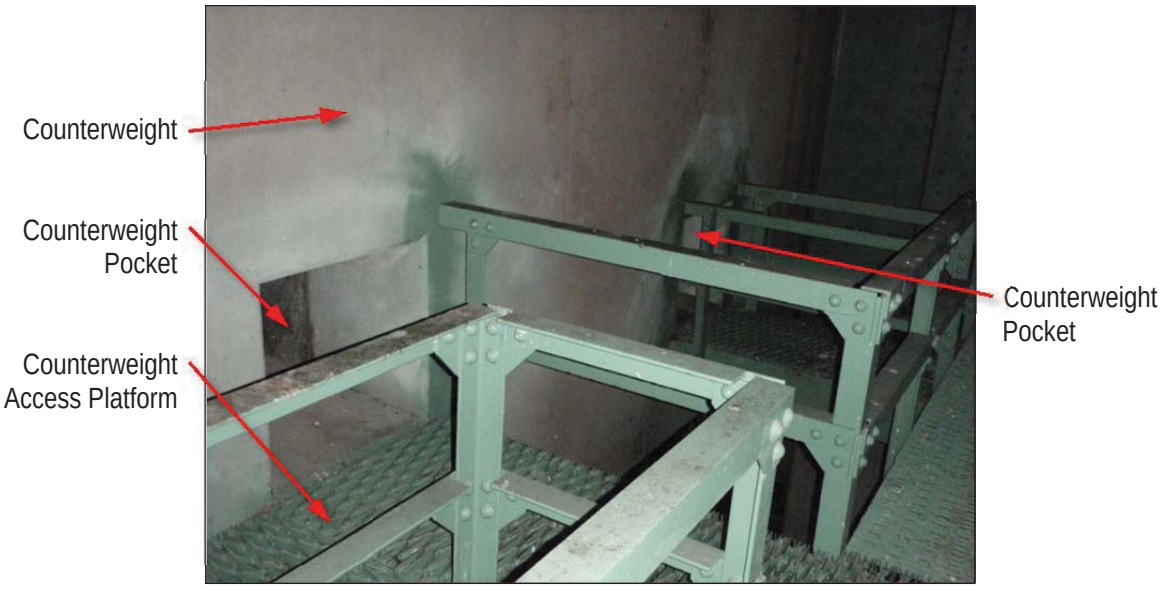

9.2 SPAN DRIVE MACHINERY

PHOTO 9.2A – SOUTH MOTOR BRAKE NO. 2 / NORTH MOTOR BRAKE NO. 1

PHOTO 9.2B –TYPICAL MOTOR BRAKE NO. 3

PHOTO 9.2C – NORTH SPAN DRIVE MACHINERY IN ELECTRICAL/MECHANICAL ROOM
(SOUTH ELECTRICAL/MECHANICAL ROOM MOTOR BRAKE 1 &2 ARE OPPOSITE)

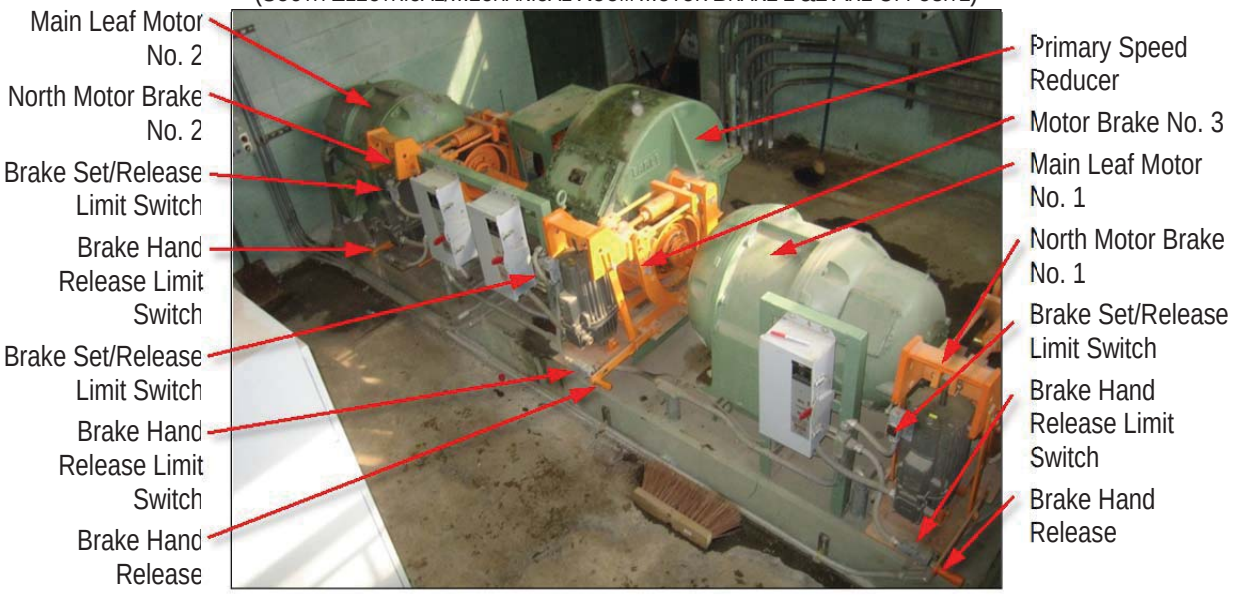

PHOTO 9.2D – SOUTH MAIN LEAF MOTOR NO. 1 (NORTH IS SIMILAR)

PHOTO 9.2E – SOUTH MAIN LEAF MOTOR NO. 2 (NORTH IS SIMILAR)

PHOTO 9.2F – PRIMARY REDUCER OUTPUT WITH SPLIT SPROCKET

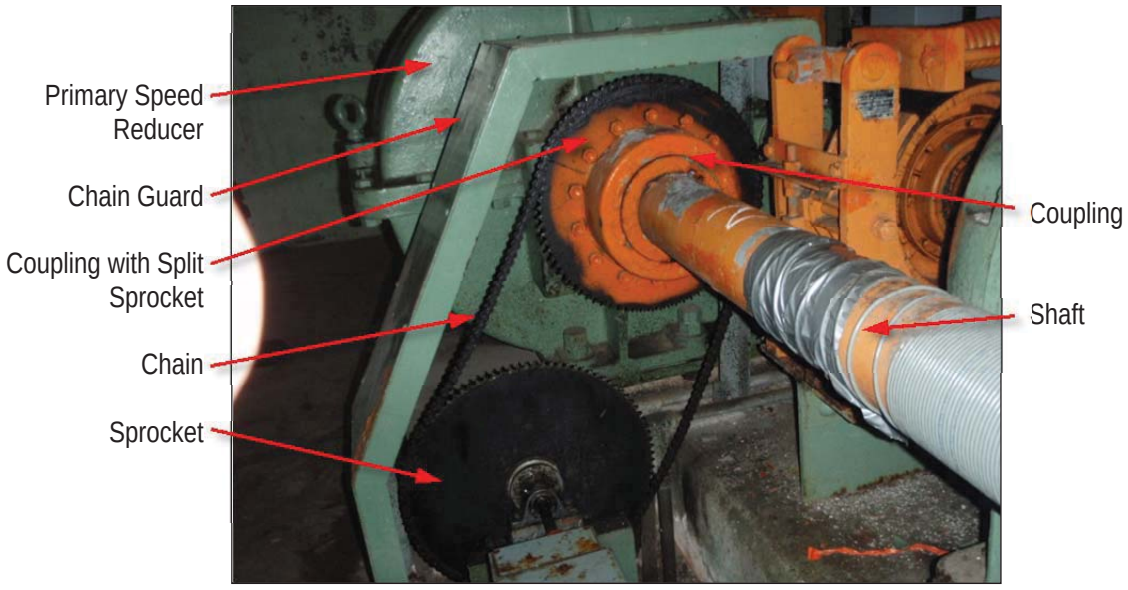

PHOTO 9.2G – TYPICAL SPAN CONTROL ROTARY CAM LIMIT SWITCH

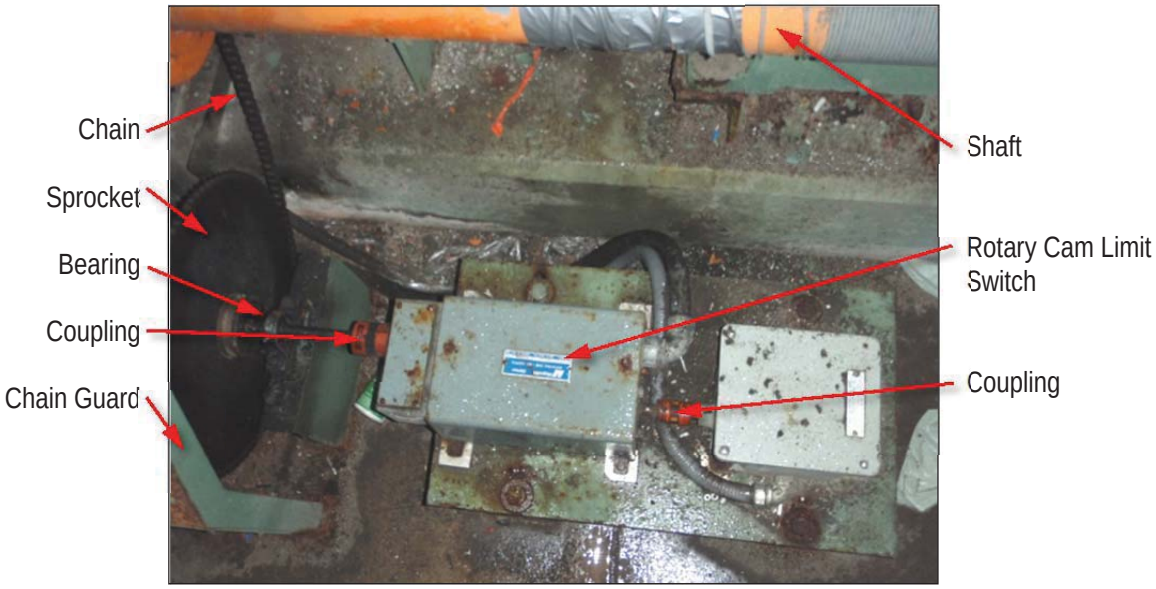

PHOTO 9.2H – TYPICAL BEARING AND COUPLING INSIDE OF TRUNNION GIRDER

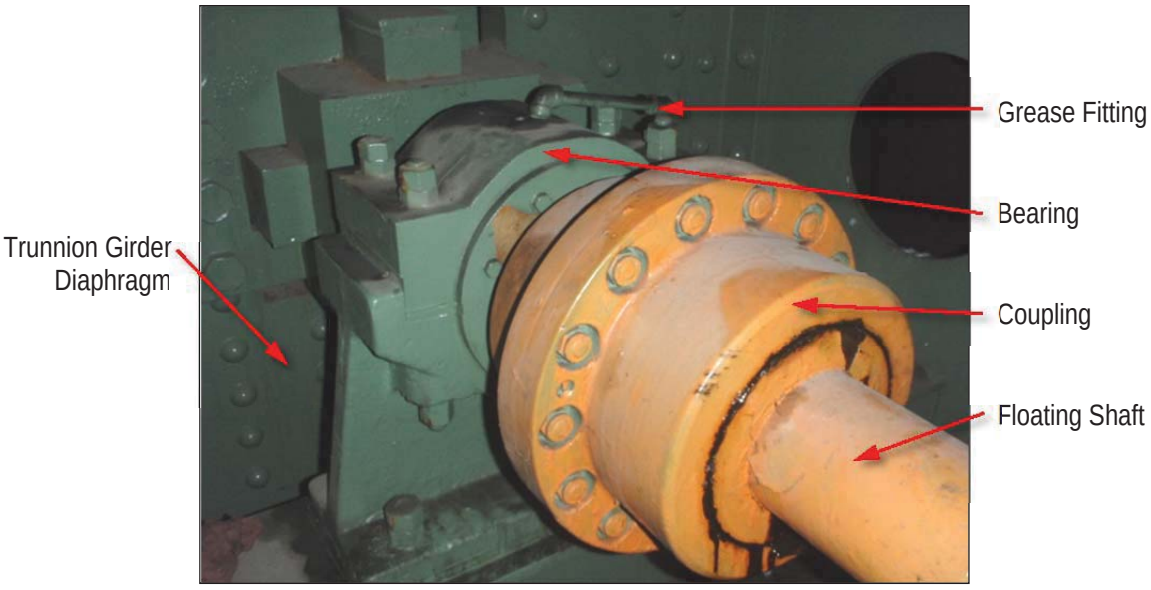

PHOTO 9.2I – TYPICAL SECONDARY OPEN GEAR FRAME

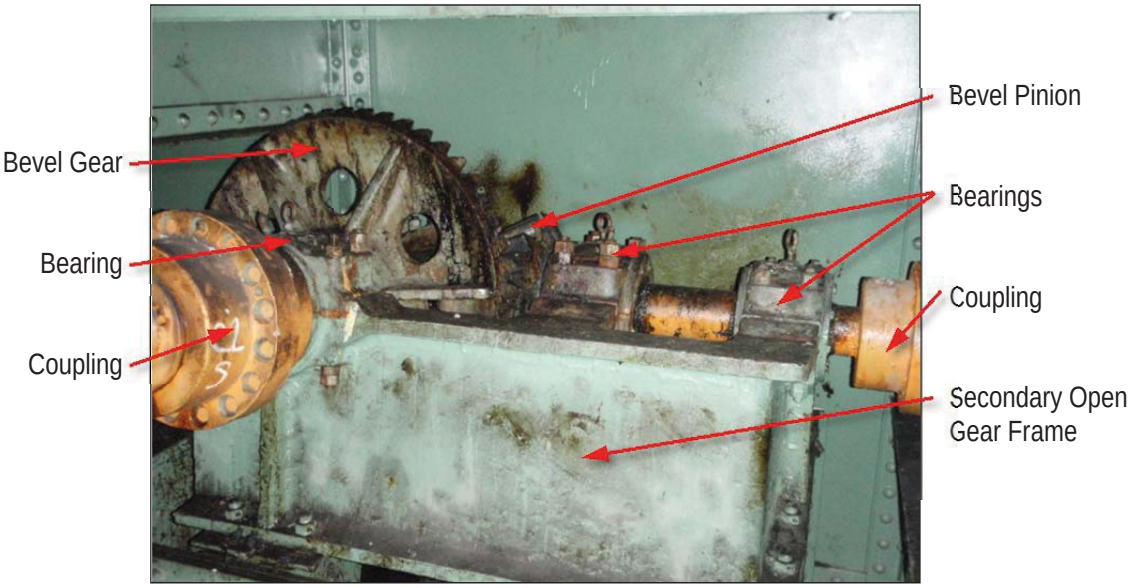

PHOTO 9.2J – TYPICAL PRIMARY OPEN GEAR FRAME CONFIGURATION

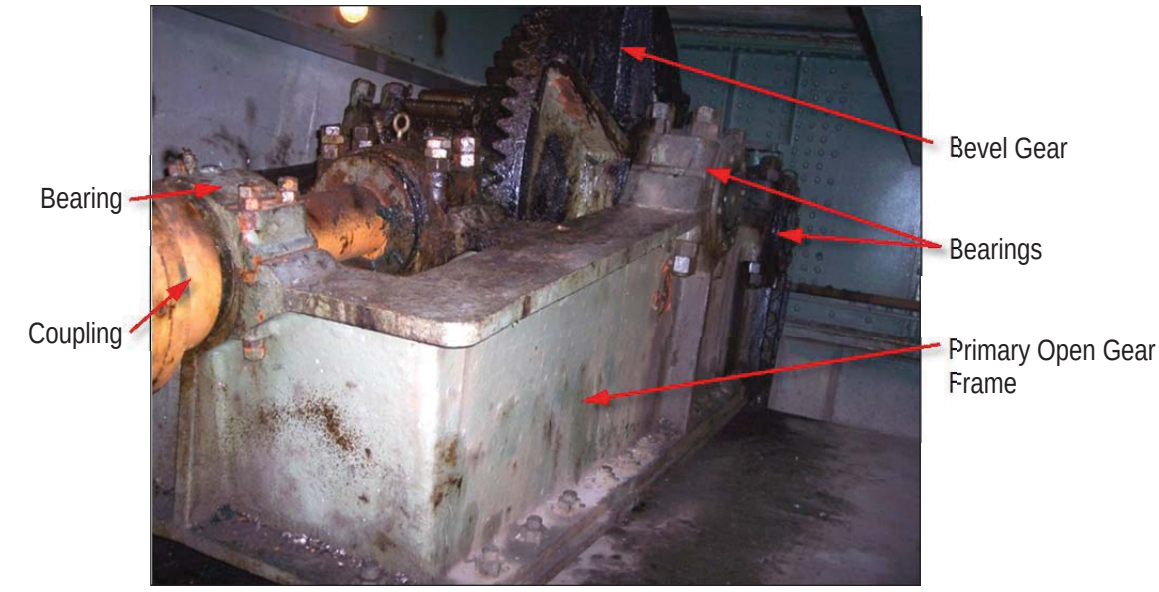

PHOTO 9.2K – TYPICAL PRIMARY OPEN GEAR FRAME

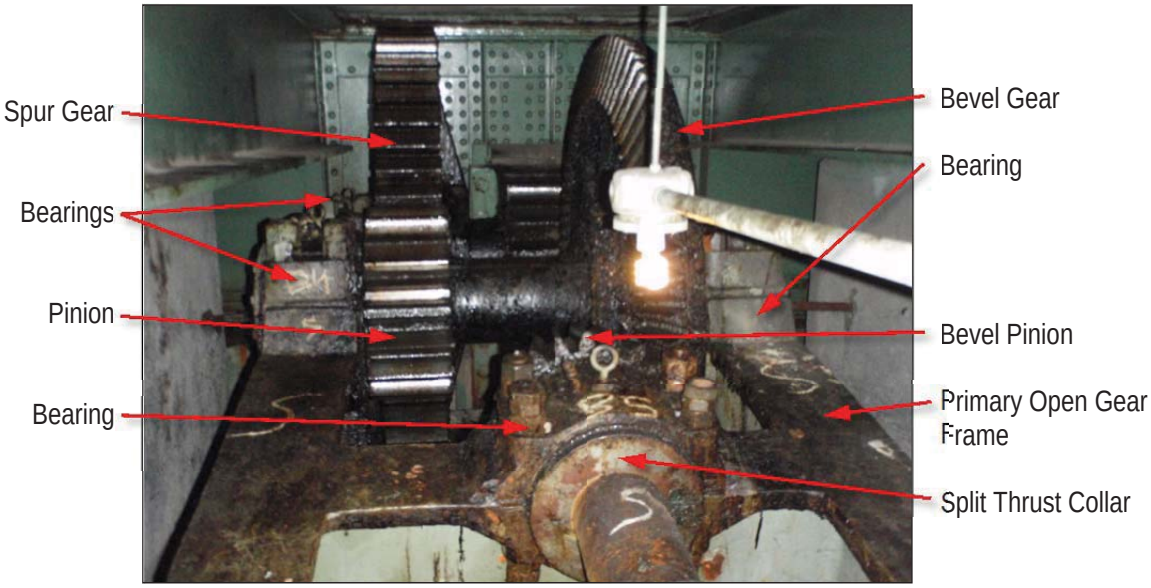

PHOTO 9.2L – TYPICAL MAIN RACK AND PINION

9.3 SPAN LOCK MACHINERY AND CENTERING EQUIPMENT

PHOTO 9.3A – TYPICAL SPAN LOCK MACHINERY PLATFORM

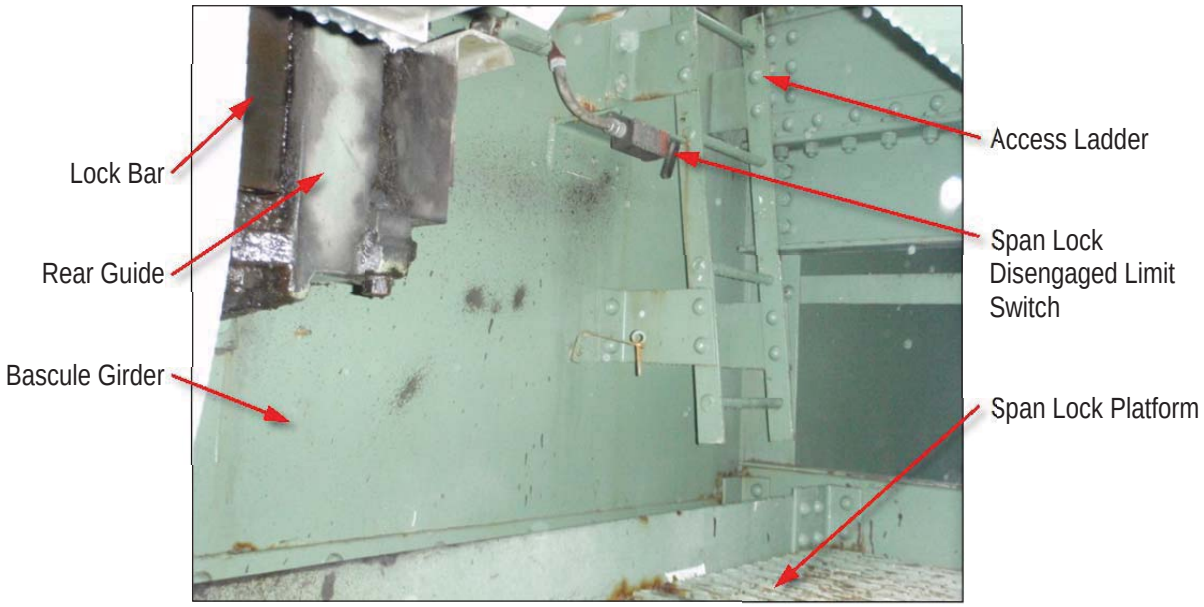

PHOTO 9.3B – TYPICAL SPAN LOCK MACHINERY

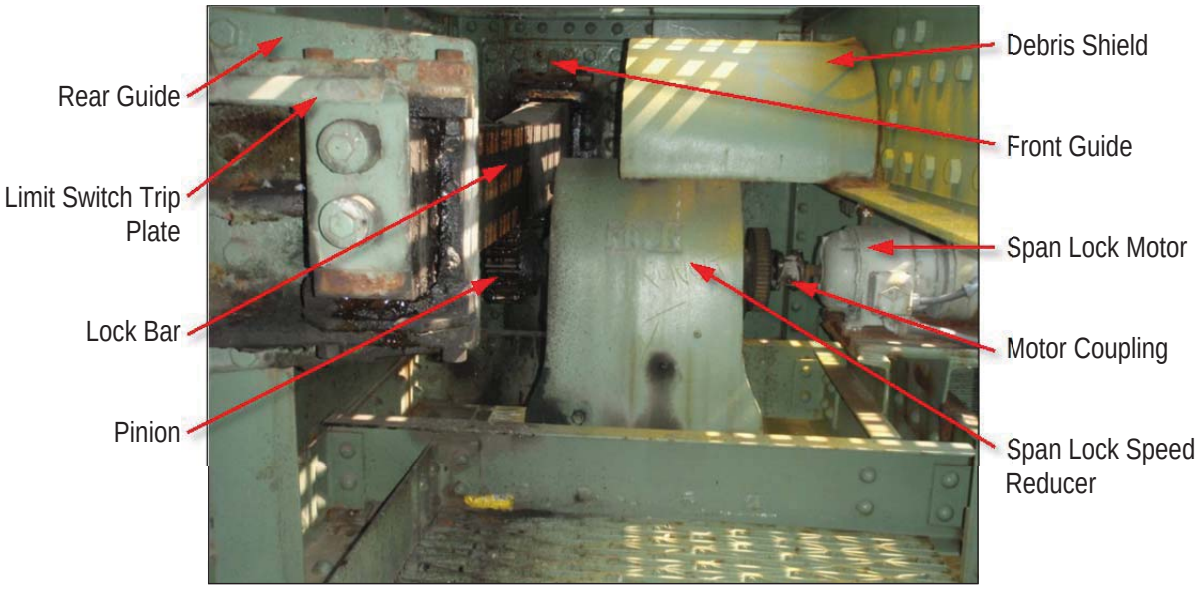

PHOTO 9.3C – TYPICAL SPAN LOCK BAR

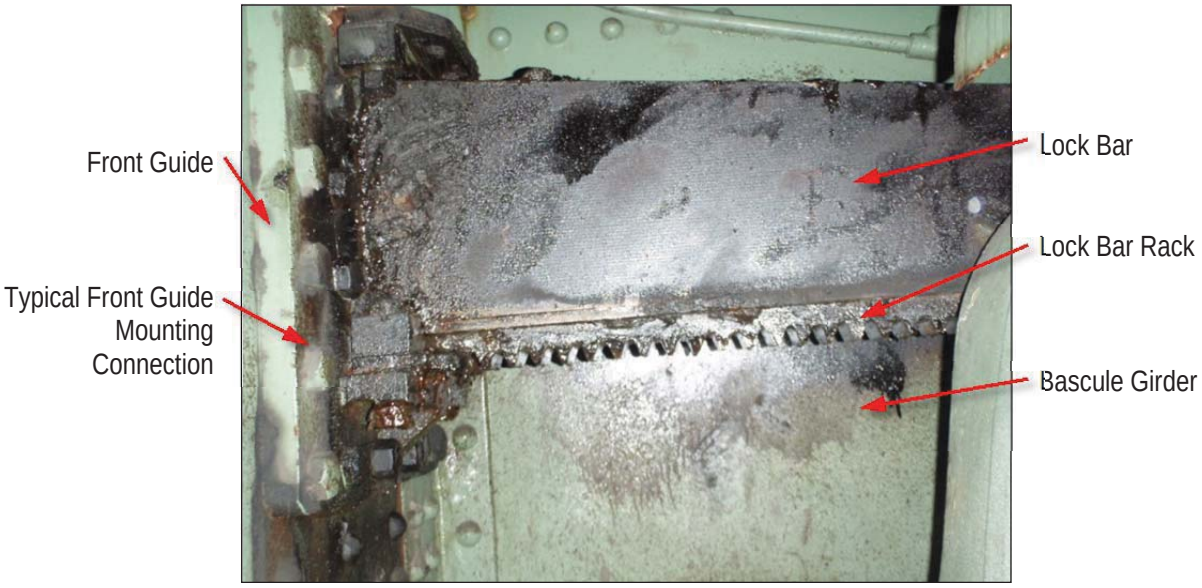

PHOTO 9.3D – TYPICAL SPAN LOCK BAR FRONT GUIDE (LOCK BAR RETRACTED)

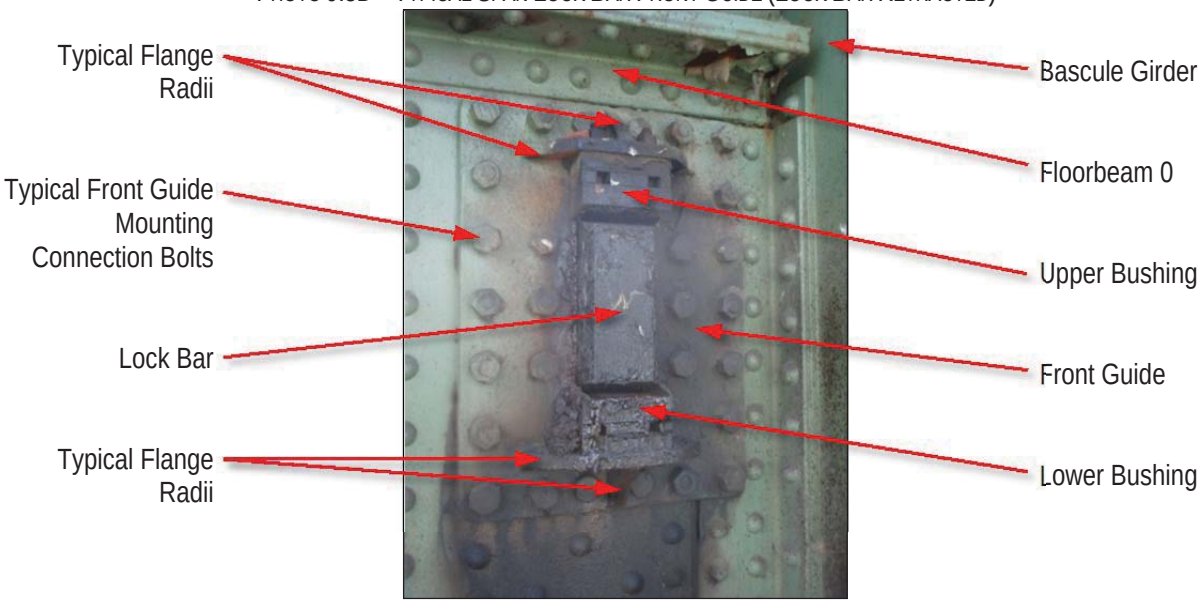

PHOTO 9.3E – TYPICAL SPAN LOCK RECEIVING SOCKET

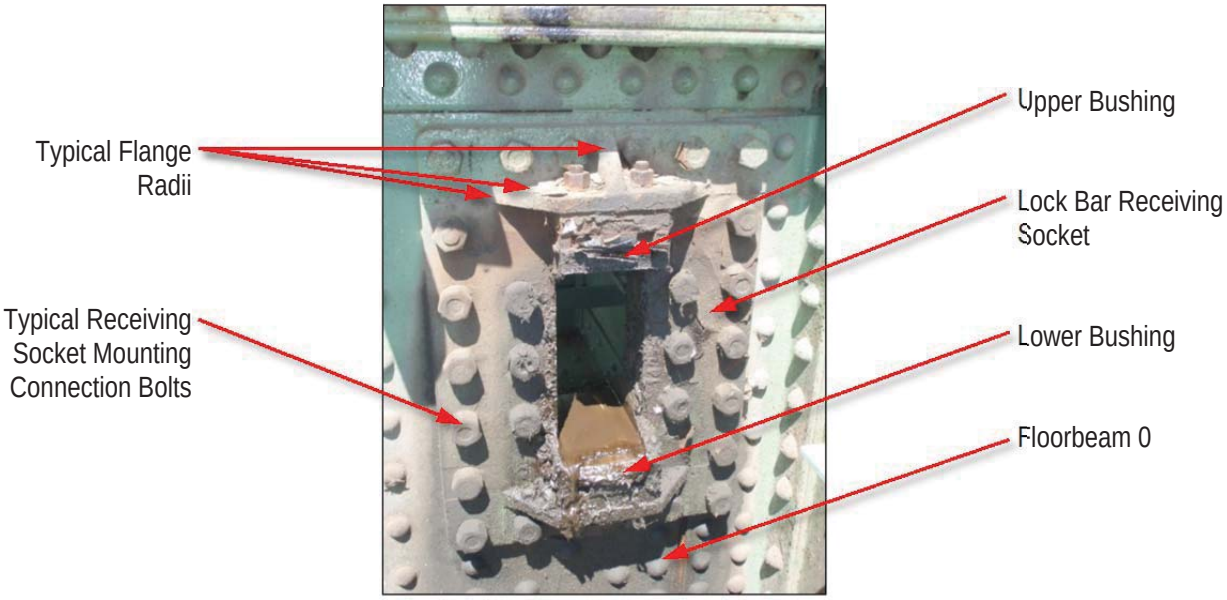

PHOTO 9.3F – CENTERING DEVICE AND CENTERING GUIDE

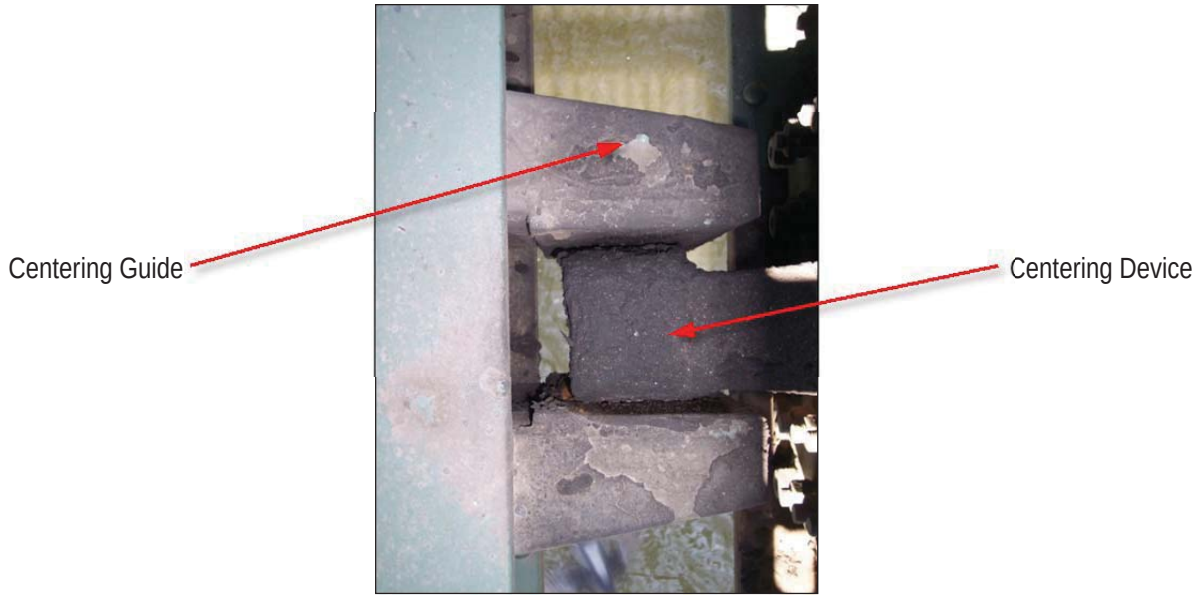

PHOTO 9.3G – CENTERING GUIDE

PHOTO 9.3H – CENTERING DEVICE

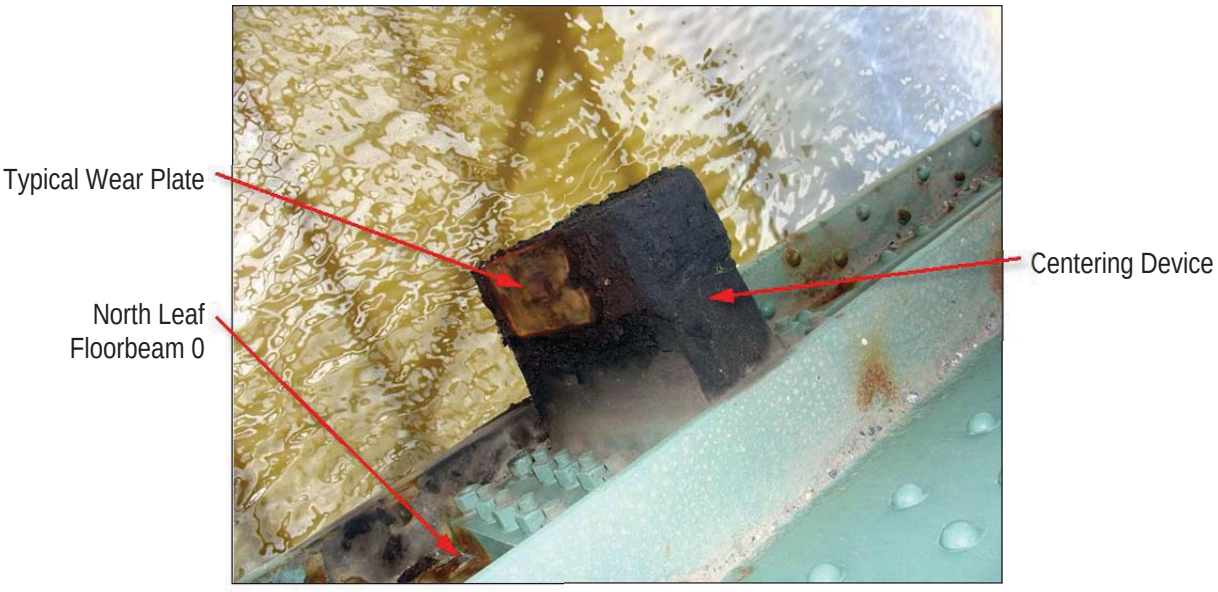

9.4 TRAFFIC CONTROL DEVICES AND NAVIGATION LIGHTS

PHOTO 9.4A – TYPICAL TRAFFIC CONTROL EQUIPMENT

PHOTO 9.4B – TYPICAL WARNING GATE EQUIPMENT (FRONT)

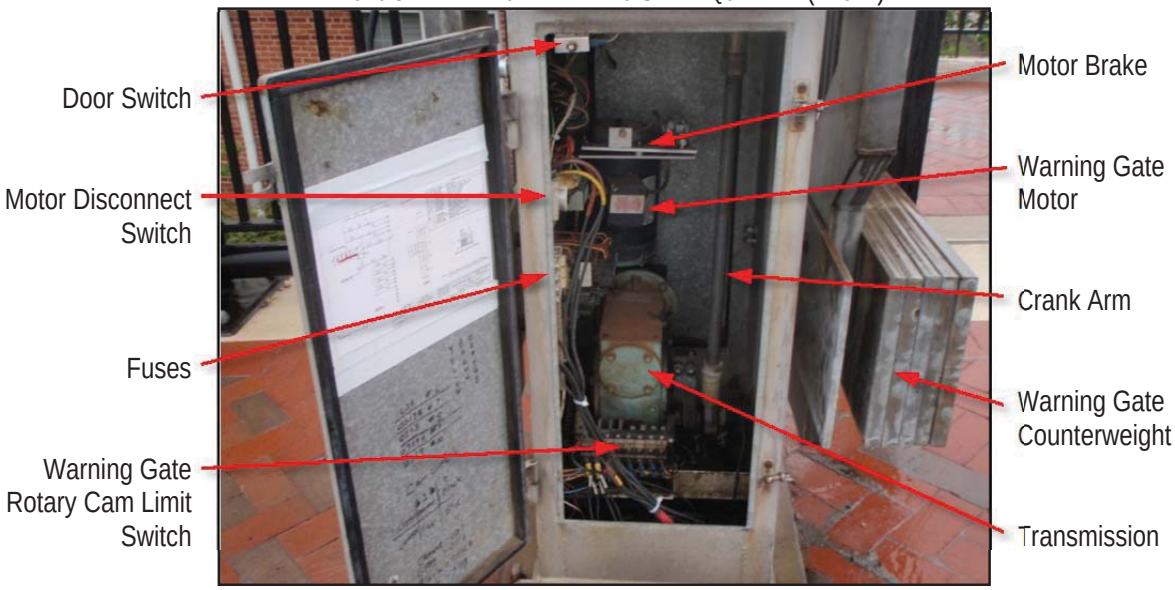

PHOTO 9.4C – TYPICAL WARNING GATE EQUIPMENT (BACK)

PHOTO 9.4D – TYPICAL WARNING GATE GONG AND ARM LIGHTS

PHOTO 9.4E – TYPICAL NAVIGATION LIGHTS

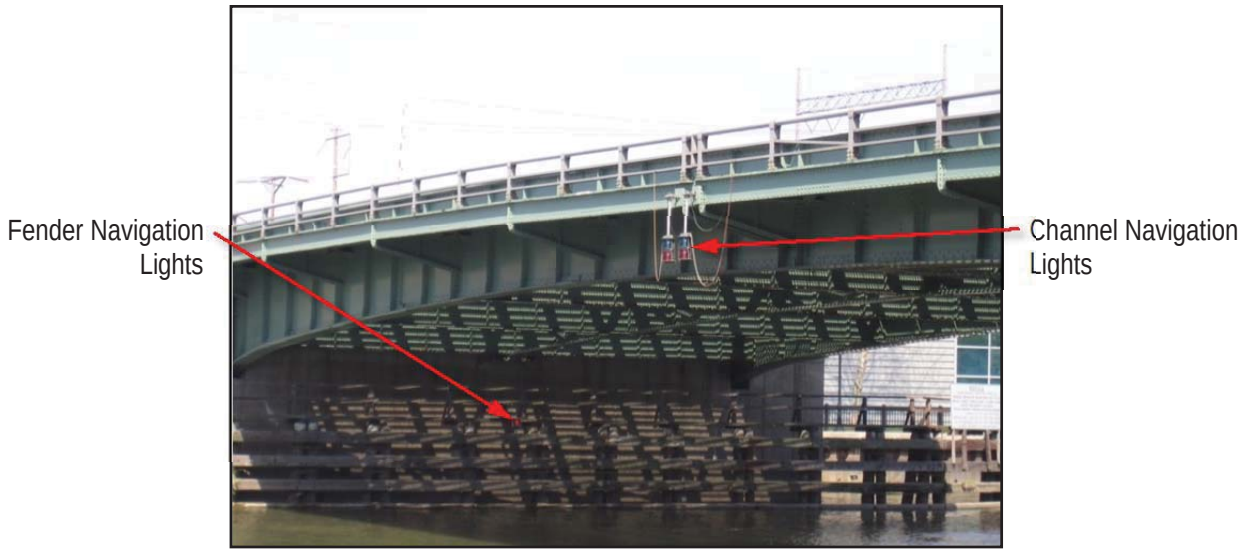

9.5 POWER DISTRIBUTION EQUIPMENT

PHOTO 9.5A – MAIN INCOMING DISCONNECT SWITCH

PHOTO 9.5B – GENERATOR RECEPTACLE, LIGHTING TRANSFORMERS AND DISCONNECT SWITCHES

PHOTO 9.5C – MAIN INCOMING TRANSFORMER

PHOTO 9.5D – DISTRIBUTION PANELBOARD

9.6 CONTROL EQUIPMENT

PHOTO 9.6A – NORTH MOTOR CONTROL CABINET

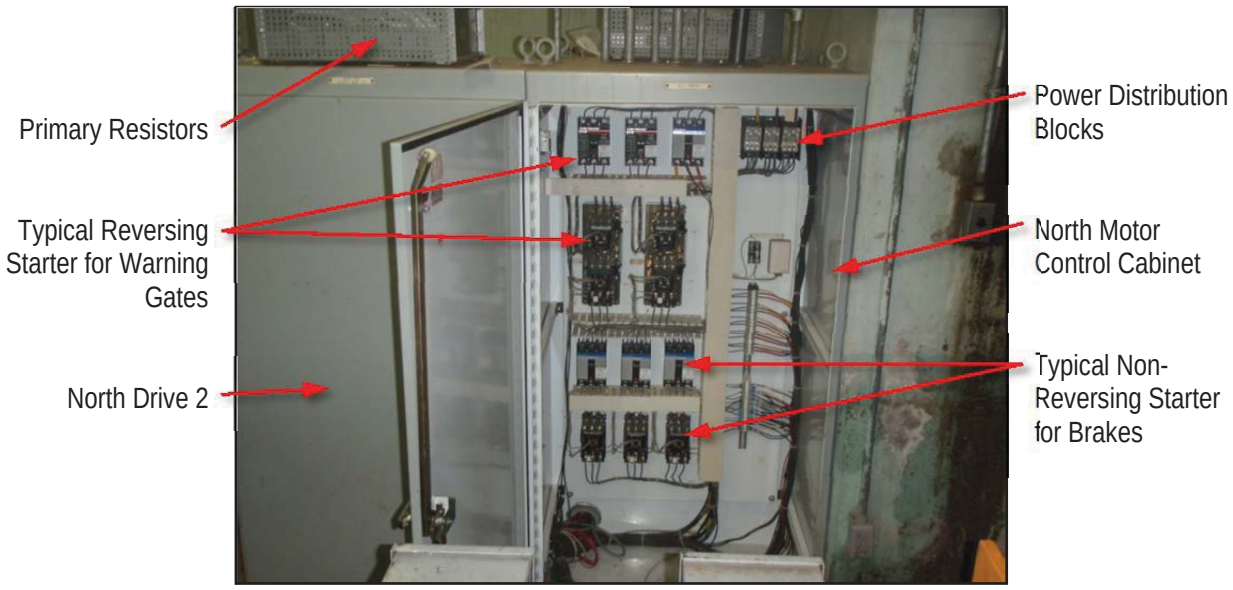

PHOTO 9.6B – SOUTH CONTROL CABINENTS

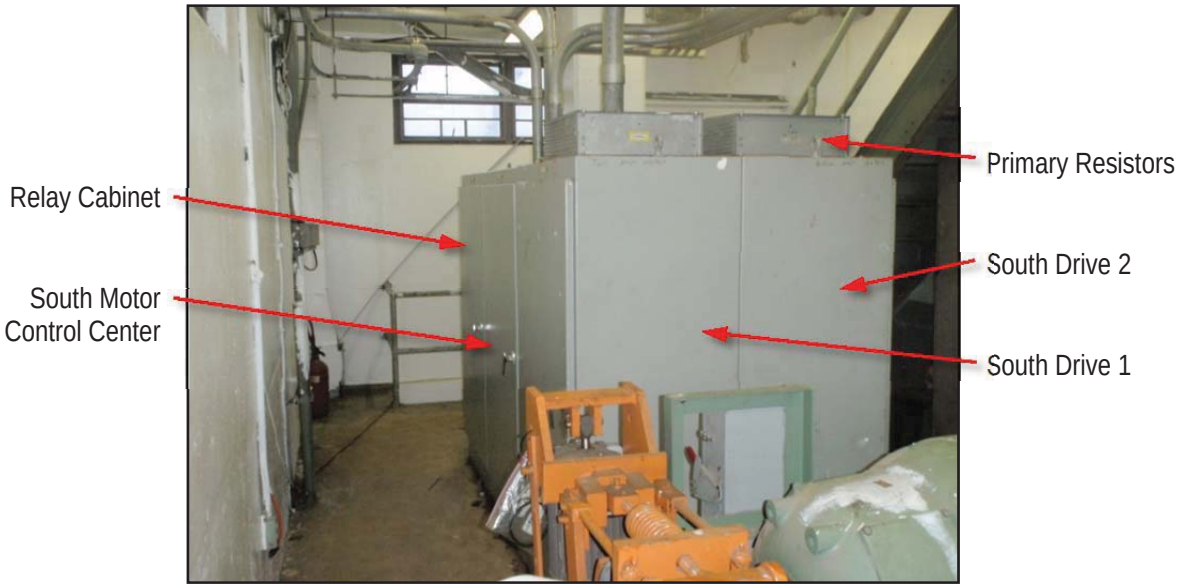

PHOTO 9.6C – TYPICAL DRIVE CABINET

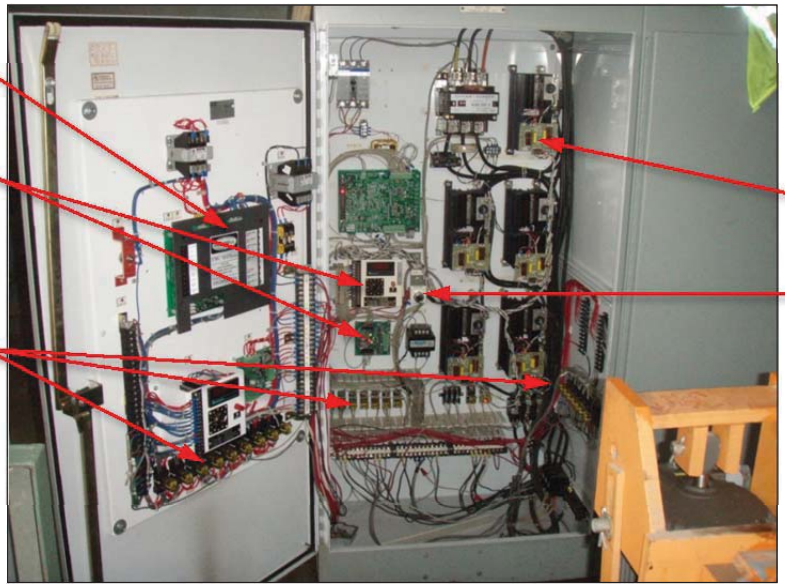

PHOTO 9.6D – TYPICAL RELAY CABINET

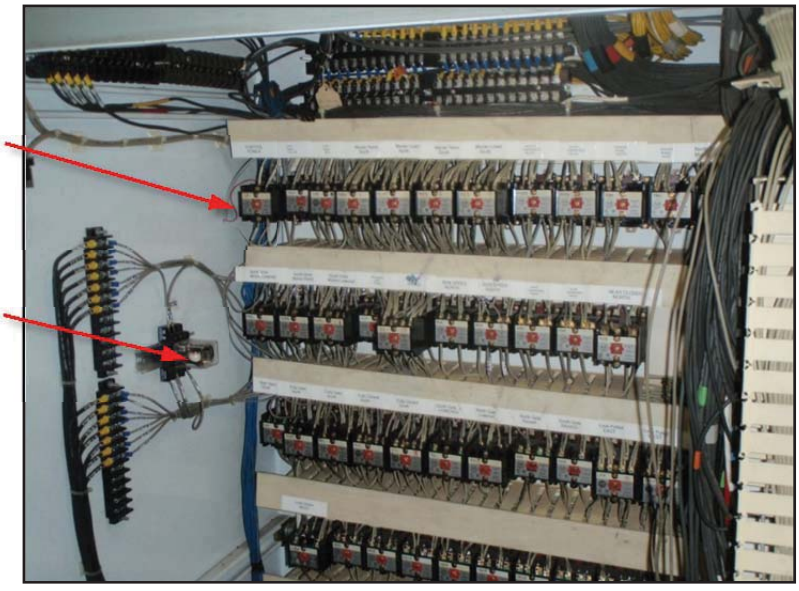

PHOTO 9.6E – TYPICAL SPAN LOCK MOTOR AND DISCONNECT SWITCH

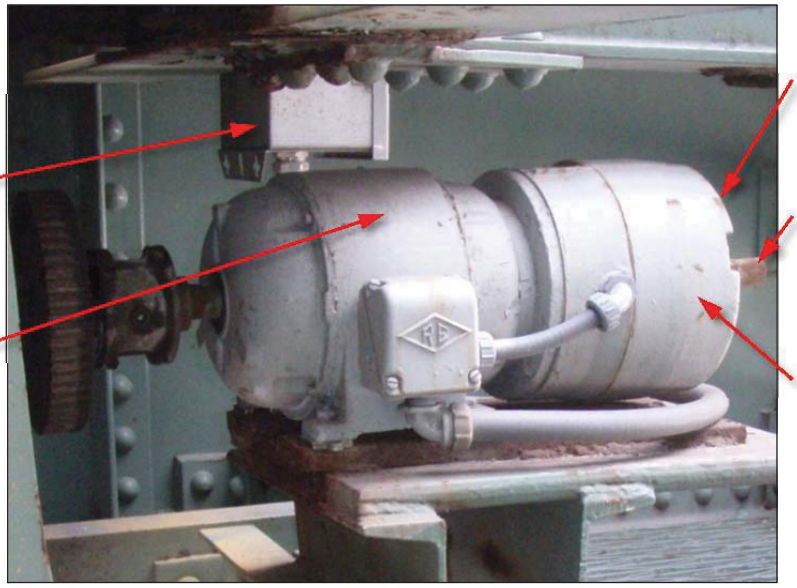

PHOTO 9.6F – TYPICAL MOTOR BRAKE DISCONNECT SWITCH

PHOTO 9.6G – TYPICAL LEAF MOTOR DISCONNECT SWITCHES AND SECONDARY RESISTORS

PHOTO 9.6H – NORTH CONTROL SUBMARINE TERMINATION BOX

PHOTO 9.6I – SOUTH CONTROL SUBMARINE TERMINATION BOX

PHOTO 9.6J – TYPICAL POWER SUBMARINE TERMINATION BOX

PHOTO 9.6K – TYPICAL DROOP CABLE TERMINATION BOXES

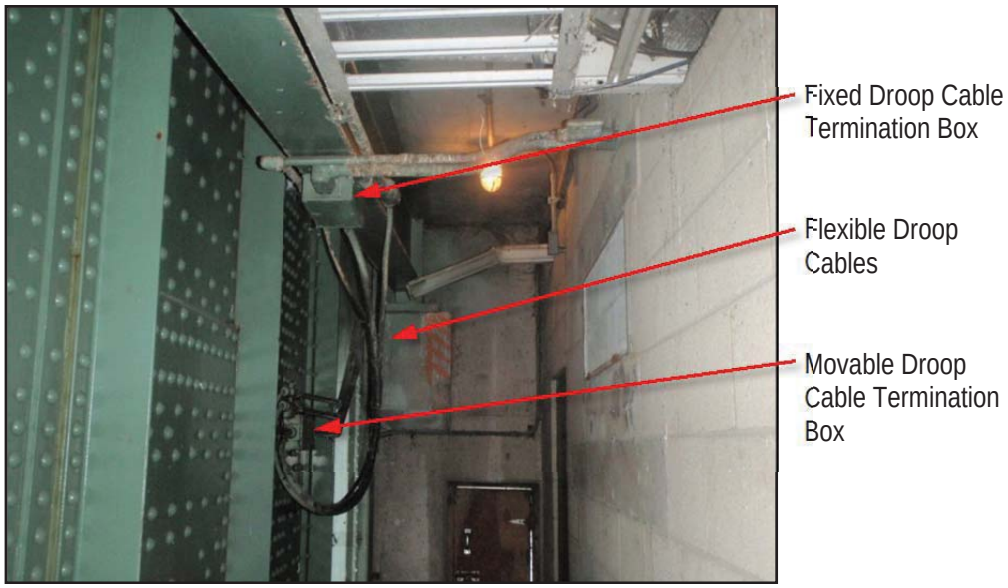

PHOTO 9.6L – CONTROL CONSOLE

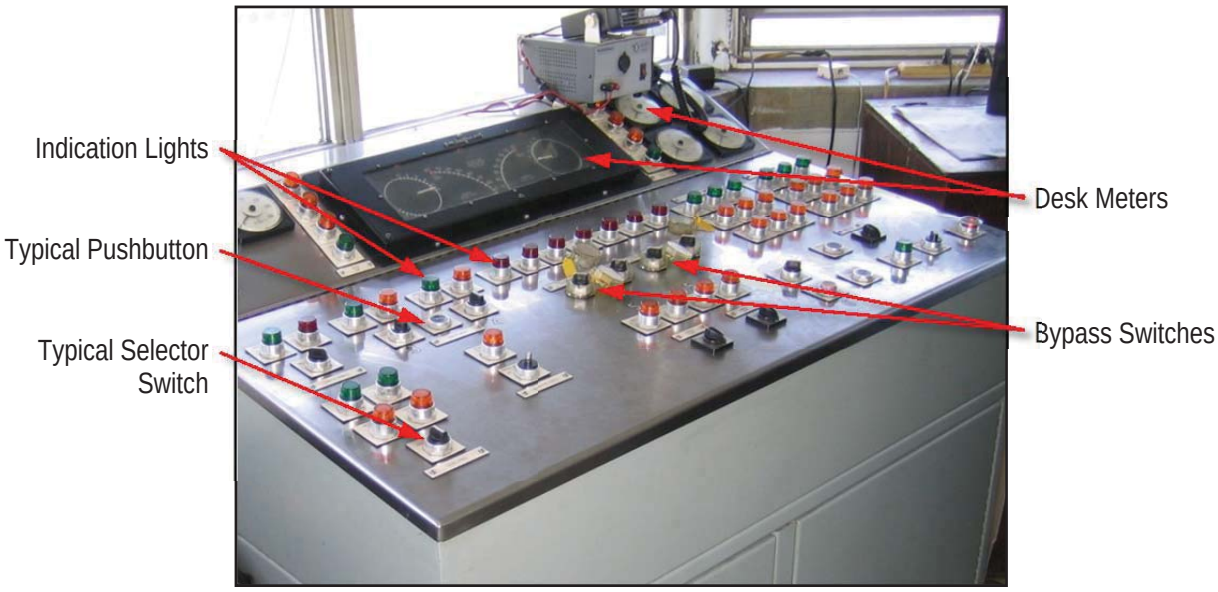

PHOTO 9.6M – TYPICAL FULLY SEATED LIMIT SWITCH (PLUNGER STYLE)

PHOTO 9.6N – TYPICAL FULLY SEATED LIMIT SWITCH COMPONENTS (COVER REMOVED)

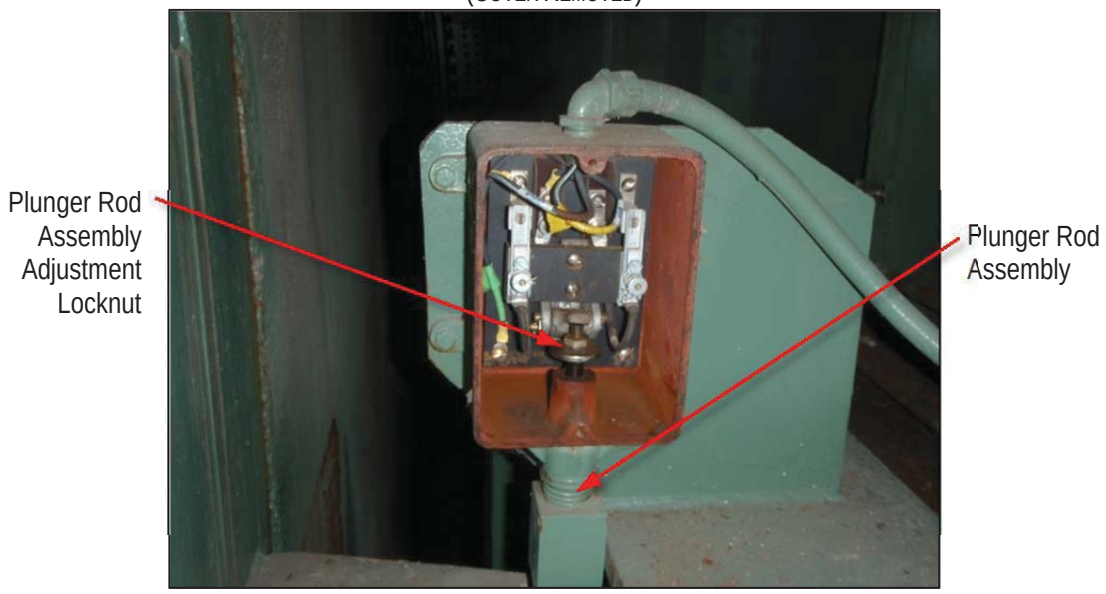

PHOTO 9.6O – TYPICAL SPAN LOCK LIMIT SWITCH: PULLED (LEVER STYLE)

PHOTO 9.6P – TYPICAL SPAN LOCK LIMIT SWITCH: DRIVEN (LEVER STYLE)

PHOTO 9.6Q – TYPICAL SPAN CONTROL ROTORY CAM LIMIT SWITCH AND TRANSMITTER

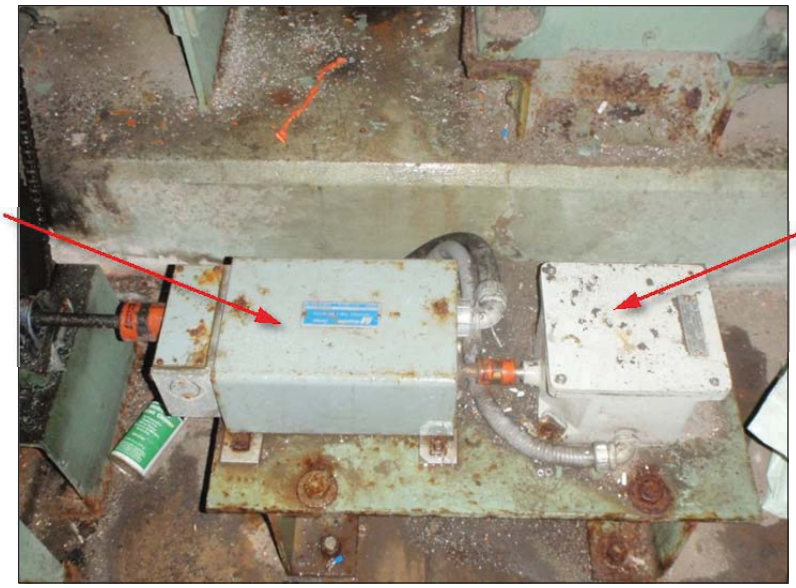

PHOTO 9.6R – TYPICAL SPAN CONTROL ROTORY CAM LIMIT SWITCH (COVER REMOVED)

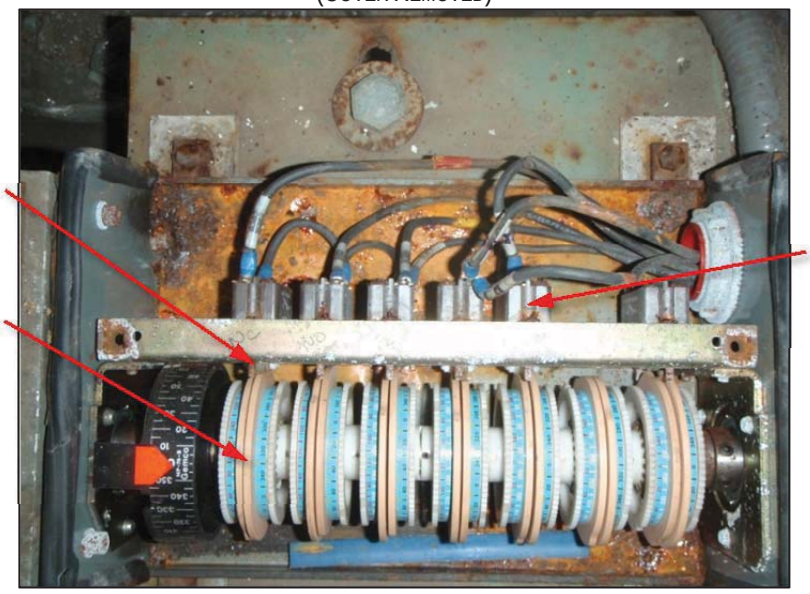

PHOTO 9.6S – TYPICAL TACHOMETER AND SPEED SWITCH ASSEMBLY

PHOTO 9.6T – TYPICAL SPAN DRIVE PRIMARY RESISTOR

9.7 MISCELLANEOUS EQUIPMENT

PHOTO 9.7A – CONTROL ROOM HEATER

PHOTO 9.7B – HOT WATER HEATER

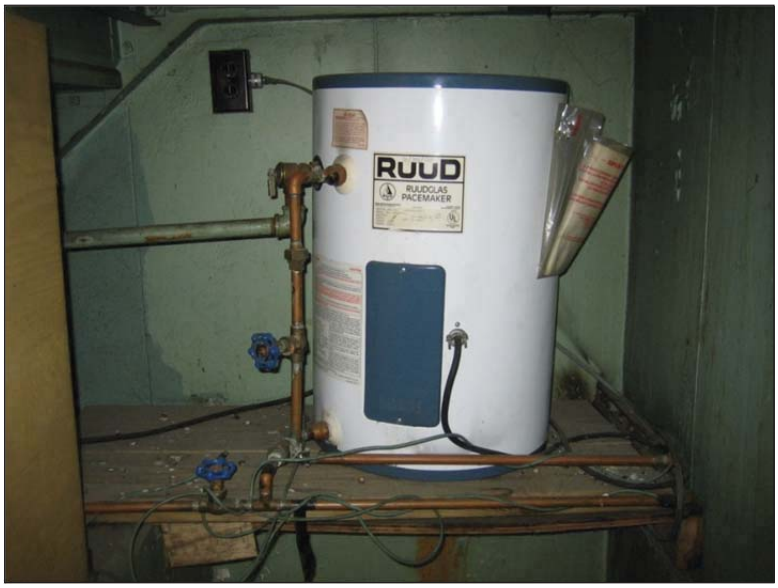

PHOTO 9.7C – TYPICAL SERVICE LIGHT FIXTURE

PHOTO 9.7D – WARNING SIREN

PHOTO 9.7E – TYPICAL SUMP PUMP

PHOTO 9.7F – TYPICAL COUNTERWEIGHT PIT

PHOTO 9.7G – TYPICAL BASCULE PIER WALKWAY

THIS PAGE INTENTIONALLY LEFT BLANK

CHAPTER 10 - MAINTENANCE FORMS

10.1 MECHANICAL AND ELECTRICAL MAINTENANCE CHECKLIST

Form 10-1 – Leaf Support System and Counterweight....10-2
Form 10-2 – Span Drive Machinery....10-3
Form 10-3 – Span Lock Machinery and Centering Equipment....10-5
Form 10-4 – Traffic Gates....10-6
Form 10-5 – Electrical Power Systems....10-7
Form 10-6 – Lighting Systems....10-10
Form 10-7 – Electric Motors....10-11
Form 10-8 – Control System....10-13
Form 10-9 – Miscellaneous Equipment....10-15

Mechanical Maintenance Checklist - Leaf Support System and Counterweight

Form 10-1
Page 1 of 1

Date: _____ Maintenance Personnel: _____	Maintenance Tasks to be Performed: Monthly	Three Month	Six Month	Annual
	☐	☐	☐	☐

Maintenance Tasks	Maintenance Tasks Completed: Monthly	Three Month	Six Month	Annual
Trunnion Bearing (Section 8.1.1) (Component ID # 19 & 20)				
Lubricate the trunnion bearings.	☐			
Check housing and supporting steel for corrosion. Clean and spot paint as necessary.				☐
Check housing cap bolts and base bolts for tightness. Tighten as necessary.				☐
Observe trunnion bearings during operation of the leaf.				☐
Live Load Bearings (Section 8.1.2) (Component ID # 56)				
Check live load bearing contact.		☐		
Clean debris from all supporting members and plates.		☐		
Clean the area surrounding the connection of the live load anchor to concrete foundation.			☐	
Remove dirt, debris, and corrosion from live load anchor.			☐	
Paint the live load anchor.			☐	
Check that all fasteners are secure and corrosion free.				☐
Check the contacting surfaces between the strike plate and bearing plate for deformations and wear.				☐
If necessary, adjust the shims below the strike plate.				☐
Counterweight (Section 8.1.3)				
Check counterweight balance pockets for proper drainage and clean out debris.				☐
Check for concrete spalling, cracks, and signs of structural distress in the counterweight concrete.				☐
Check for shifting of balance blocks during leaf operation.				☐

Refer to Section 8.1 "Leaf Support System and Counterweight" for component locations, quantities, and additional maintenance information. Component ID # corresponds to components listed in Section 11.1.

Notes:

Mechanical Maintenance Checklist – Span Drive Machinery

Form 10-2
Page 1 of 2

	Maintenance Tasks to Be Performed:			
	Monthly	Six Month	Annual	Five Year
Date: _____ Maintenance Personnel: _____	☐	☐	☐	☐

	Maintenance Tasks Completed			
Maintenance Tasks	**Monthly**	**Six Month**	**Annual**	**Five Year**
Motor Brakes (Section 8.2.1) (Component ID # 4 & 6)				
Perform brake test.	☐			
Check fluid level in hydraulic reservoir, check for leakage of fluid and clean as necessary. Fill as needed. (EMG technician)			☐	
Inspect brake shoes and drums for wear, dust, dirt, grease and proper adjustment. Inspect brake pad thickness. Replace as needed.			☐	
Check clearance between the brake shoes and the brakewheel			☐	
Inspect mechanical linkages for freedom of moving parts, wear, broken parts and tightness of nuts and bolts.			☐	
Check for excessive heating of parts.			☐	
Check operations of the brake during test operations of the bridge.			☐	
Check the brake housing and linkages for evidence of water dripping on brake and corrosion.			☐	
Check adjustment of limit switches and hand release devices.			☐	
Check brake actuator reserve stroke.			☐	
Check the brake spring length.			☐	
Lubricate bearing pins.			☐	
Couplings (Section 8.2.2) (Component ID # 3, 7, 9, 14, 16 & 29)				
Inspect key and keyways at all couplings for grease leakage, tightness, and cracking. Check flange bolts for corrosion and tightness.	☐			
Inspect seals and gaskets for leaks. Replace as needed.	☐			
Inspect jaw couplings for cracking or damage.	☐			
Replace gear coupling lubricant.		☐		
Check all gear couplings and brakewheel couplings for any excessive misalignment.		☐		
Replace brakewheel coupling lubricant. (To be performed by Mechanical/Electrical Inspection Team)				☐
Primary Reducers (Section 8.2.3) (Component ID # 8)				
Visually inspect the oil level in the sight gauge and bearing reservoirs. Add oil as necessary.	☐			
Listen for unusual noises during operation of the machinery.	☐			
Check for excessive leakage at the seals.			☐	
Check fasteners for tightness.			☐	
Replace oil in the speed reducer housings.			☐	
Bearings (Section 8.2.4) (Component ID # 13, 21, 23, 24, 26, 31, 32, 35 & 37)				
Lubricate bearings.	☐			
Check bearing cap and base fasteners for tightness. Tighten as necessary.			☐	

Mechanical Maintenance Checklist – Span Drive Machinery

Form 10-2
Page 2 of 2

Maintenance Tasks	Maintenance Tasks Completed			
	Monthly	Six Month	Annual	Five Year
Open Gearing (Section 8.2.5) (Component ID # 25, 28, 33, 34, 36, 38, 39 &40)				
Lubricate open gearing teeth.	☐			
Replace open gear lubricant.			☐	
Verify that fasteners connecting the rack to the rack support are secure and free of corrosion. Torque fasteners as needed. Spot paint as needed.			☐	
Inspect keys and keyways for tightness and cracking			☐	
Observe the open gearing during raising and lowering operations.			☐	
Instrumentation Drive Equipment (Section 8.2.6) (Component ID # 12)				
Lubricate the instrumentation drive chain.		☐		

Refer to Section 8.2 "Span Drive Machinery" for component locations, quantities, and additional maintenance information. Component ID # corresponds to components listed in Section 11.1.

Notes:

Mechanical Maintenance Checklist – Span Lock Machinery and Centering Equipment

Form 10-3
Page 1 of 1

		Maintenance Tasks to Be Performed:			
		Monthly	Three Month	Annual	Five Year
Date: _____	Maintenance Personnel: _____	☐	☐	☐	☐

	Maintenance Tasks Completed			
Maintenance Tasks	**Monthly**	**Three Month**	**Annual**	**Five Year**
Lock Bars, Guides, and Receivers (Section 8.3.1) (Component ID # 43, 44, 47 & 48)				
Apply grease to the sliding surfaces of the lock bar and receiving socket.	☐			
Inspect guides and sockets, lock bars, fasteners and shims for excessive wear, fit or damage.	☐			
Inspect all lock bar guides and receiver castings at flange radii and connections. Spot paint as needed.			☐	
Span Lock Reducers (Section 8.3.2) (Component ID # 49)				
Inspect the oil level from the oil fill plug. Add oil as needed.	☐			
Listen for unusual noises during operation of the machinery.	☐			
Check for excessive leakage at the seals.			☐	
Check fasteners for tightness.			☐	
Replace speed reducer oil.			☐	
Span Lock Motor Coupling (Section 8.3.3) (Component ID # 50)				
Inspect keys and keyways at all couplings for grease leakage, tightness and cracking. Inspect flange bolts for corrosion and tightness.	☐			
Inspect seals and gaskets for leaks. Replace as needed.	☐			
Replace motor coupling lubricant and check for misalignment. (To be performed by Mechanical/Electrical Inspection Team)				☐
Span Lock Rack and Pinion (Section 8.3.4) (Component ID # 45 & 46)				
Lubricate open gearing teeth.	☐			
Check rack mounting fasteners for tightness.		☐		
Replace rack and pinion lubricant.			☐	
Inspect keys and keyways for tightness and cracking.			☐	
Observe the open gearing during operation of the span lock machinery.			☐	
Centering Device and Centering Guide (Section 8.3.5) (Component ID # 53 & 54)				
Apply grease to the sliding surfaces of the centering surface and guide.	☐			
Inspect centering device, centering guide, wear plates, and fasteners for excessive wear, deformation, fit, or damage.	☐			
Inspect centering device and centering guide components at flange radii and mounting connections. Spot paint as needed.			☐	

Refer to Section 8.3 "Span Lock Machinery and Centering Equipment" for component locations, quantities, and additional maintenance information. Component ID # corresponds to components listed in Section 11.1.

Notes:

Electrical Maintenance Checklist – Traffic Gates

Form 10-4
Page 1 of 1

Date: _____	Maintenance Personnel: _____	Maintenance Tasks to Be Performed: Six Month	Annual
		☐	☐

Maintenance Tasks	Maintenance Tasks Completed	
	Six Month	Annual
Warning Gates (Section 8.4.1) (Component ID # 60, 62, 64, 67 & 71)		
Check the transmission oil level. Add oil as needed.	☐	
Lubricate shaft bearings and rod ends.	☐	
Lubricate the rotary cam limit switch roller chain.	☐	
Check the roller chain tension and tighten as required.	☐	
Replace transmission oil level.		☐

Refer to Section 8.4 "Traffic Gates" for component locations, quantities, and additional maintenance information. Component ID # corresponds to components listed in Section 11.1.

Notes:

Electrical Maintenance Checklist – Electrical Power Systems

Form 10-5
Page 1 of 3

Date: _____ Maintenance Personnel: _____	Maintenance Tasks to Be Performed: Three Month ☐	Annual ☐	Five Year ☐

Maintenance Tasks	Maintenance Tasks Completed		
	Three Month	**Annual**	**Five Year**
Motor Control Cabinets (Section 8.5.1)			
Open and clean enclosures with a vacuum cleaner.	☐		
Remove accumulation of dirt, grease, and gum with contact cleaner.	☐		
Inspect enclosures for corrosion and moisture.	☐		
Examine connections for poor or loose connections and evidence of overheating.	☐		
Lubricate door hinges and latches.	☐		
Check circuit breaker disconnects for proper operation.	☐		
Inspect terminal block screws for tightness. Hand tighten all loose connections.	☐		
Inspect wiring from unit terminal bocks for deterioration and/or overheating of insulation.	☐		
Inspect all circuit breakers. Verify with meter that continuity is broken on trip or switch off conditions.	☐		
Check all starter contacts. Replace contacts when nearly all the silver tip is gone and contact tip support is exposed.	☐		
Inspect all fuses with meter and verify continuity. Replace fuses as needed.	☐		
Inspect fuse clips for dirt and verify that the clips provide a tight fit.	☐		
Verify enclosure lights turn on when doors are open. Replace bulbs as required.	☐		
Verify enclosure heaters are functioning.	☐		
Check for discolored connections on terminals, contact supports, bus bars, or connectors. Clean discolored connection points. Tighten all loose hardware. Replace or repair heat-damaged wires and connectors as necessary.		☐	
Operate the motor controller/contactor without load and observe contact operation. To be sure it opens and closes cleanly and that the contacts are fully sealed in the closed position.		☐	
Operate the motor controller/contactor under load and check for loud noise and arcing.		☐	
Measure and record current draw on load side of contactor.		☐	
Drive Cabinets and Resistors (Section 8.5.2)			
Open and clean enclosures with a vacuum cleaner.	☐		
Remove accumulation of dirt, grease, and gum with contact cleaner.	☐		
Inspect enclosures for corrosion and moisture.	☐		
Lubricate door hinges and latches.	☐		
Inspect terminal block screws for tightness. Hand tighten all loose connections.	☐		
Inspect wiring from unit terminal bocks for deterioration of insulation.	☐		
Inspect all circuit breakers. Verify with meter that continuity is broken on trip or switch off conditions.	☐		
Inspect all fuses with meter and verify continuity. Replace fuses as needed.	☐		
Inspect all relays and tighten connections as necessary.	☐		
Verify enclosure heaters are functioning.	☐		
Verify enclosure lights turn on when doors are open. Replace bulbs as required.	☐		
Change the master drive on each leaf to the slave drive.	☐		
Open drive cabinets and resistor enclosures and clean with a vacuum cleaner.		☐	
Verify drive cabinets and resistor enclosures enclosure fans are functioning.		☐	

Electrical Maintenance Checklist – Electrical Power Systems

Form 10-5
Page 2 of 3

Maintenance Tasks	Maintenance Tasks Completed		
	Three Month	Annual	Five Year
Drive Cabinets and Resistors (cont.)			
Check drive cabinets and resistor enclosures for discolored connections on terminals, contact supports, bus bars, or connectors. Tighten all loose hardware. Replace or repair damaged wires and connectors as needed.		□	
Operate the motor controller/contactor without load and observe contact operation.		□	
Operate the motor controller/contactor under load and check for loud noise and arcing.		□	
Measure and record current draw on load side of contactor.		□	
Replace general purpose plug in style ice cube relays.			□
Panelboards (Section 8.5.3)			
Open and clean with a vacuum cleaner.		□	
Remove accumulation of dirt, grease, and gum with contact cleaner.		□	
Check for corrosion and moisture.		□	
Examine bus bar connections for poor or loose connections and evidence of overheating.		□	
Lubricate door hinges and latches.		□	
Operate each circuit breaker to check for proper operation.		□	
Measure resistance to ground at each panelboard using a ground test kit.		□	
Transformers (Section 8.5.4)			
Open and clean with vacuum cleaner.		□	
Check for corrosion and moisture.		□	
Verify all hardware is secure. Tighten as needed.		□	
Standby Emergency Generator Receptacle (Section 8.5.5)			
Using an off-site portable generator, start and run each leaf individually for one complete opening.		□	
Visually inspect the generator receptacle, cables, and associated equipment.		□	
Safety and Disconnect Switches (Section 8.5.6)			
Remove accumulation of dirt, grease, and gum with contact cleaner.		□	
Check for corrosion and moisture.		□	
Examine for excessive heating of parts, discoloration of metal parts, charred insulation, odor, or blistering.		□	
Check for freedom of moving parts.		□	
Check for worn or broken mechanical parts.		□	
Tighten loose mountings and connections.		□	
Replace pitted or worn contacts or replace entire unit if needed.		□	
Check for excessive arcing.		□	
Check condition of gaskets (for dust-tight or watertight units).		□	
Electrical Conductors (Section 8.5.7)			
Visually inspect terminations and splices for cracks, deterioration, corrosion, discoloring, or any other abnormalities.		□	
Check tightness of each conductor termination at each terminal box.		□	
Check the strain relief fittings for signs of distress.		□	

Electrical Maintenance Checklist – Electrical Power Systems

Form 10-5
Page 3 of 3

Maintenance Tasks	Maintenance Tasks Completed		
	Three Month	Annual	Five Year
Electrical Conductors (cont.)			
Inspect wires and electrical cables for grease and oil contamination, fraying, abrasions, sweating, cracked, melted or overheated blue tinted insulation. Clean or replace in kind as needed.		☐	
Droop Cables (Section 8.5.8)			
Visually inspect terminations and splices for cracks, deterioration, corrosion, discoloring, or any other abnormalities.		☐	
Check tightness of each conductor termination at each terminal box. Tighten loose connections.		☐	
Check the strain relief fittings for signs of distress.		☐	
Check cables for any wear or abrasions on the outer jacket.		☐	
Inspect wires and electrical cables for grease and oil contamination, fraying, abrasions, sweating, cracked, melted or overheated blue tinted insulation. Clean or replace in kind as needed.		☐	
Submarine Cables (Section 8.5.9)			
Visually inspect terminations and splices for cracks, deterioration, corrosion, discoloring, or any other abnormalities.		☐	
Check tightness of each conductor termination at each terminal box. Tighten loose connections.		☐	
Check the strain relief fittings for signs of distress.		☐	
Tighten loose connections.		☐	
Visually inspect the submarine cable and watch for signs of cracks, deterioration and discoloration of the cable jackets.		☐	

Refer to Section 8.5 "Electrical Power Systems" for component locations, quantities, and additional maintenance information.

Notes:

Electrical Maintenance Checklist – Lighting System

Form 10-6
Page 1 of 1

	Maintenance Tasks To Be Performed:							
	Week 1	Week 2	Week 3	Week 4	Week 5	Monthly	Six Month	Annual
Date: _____ Maintenance Personnel: _____	☐	☐	☐	☐	☐	☐	☐	☐
Date: _____ Maintenance Personnel: _____	☐	☐	☐	☐	☐	☐	☐	☐
Date: _____ Maintenance Personnel: _____	☐	☐	☐	☐	☐	☐	☐	☐
Date: _____ Maintenance Personnel: _____	☐	☐	☐	☐	☐	☐	☐	☐
Date: _____ Maintenance Personnel: _____	☐	☐	☐	☐	☐	☐	☐	☐

	Maintenance Tasks Completed							
Maintenance Tasks	**Week 1**	**Week 2**	**Week 3**	**Week 4**	**Week 5**	**Monthly**	**Six Month**	**Annual**
Navigation Lights (Section 8.6.1)								
Check navigation lights for proper operation.	☐	☐	☐	☐	☐			
Replace lamps or fixtures as needed.	☐	☐	☐	☐	☐			
Check gaskets.								☐
Tighten loose connections.								☐
Inspect for corrosion of metal parts.								☐
Replace worn or broken mechanical parts.								☐
Replace lamps.								☐
Interior/Exterior Lights (Section 8.6.2)								
Check for burned-out lamps. Replace lamp as needed.	☐	☐	☐	☐	☐			
Clean luminaire lenses, interior surfaces, and weep holes (where applicable).								☐
Check gaskets and replace as needed.								☐
Tighten loose connections.								☐
Inspect for corrosion of metal parts. Spot paint as necessary.								☐
Replace worn or broken parts.								☐
Traffic Signals (Section 8.6.3)								
Check lights for proper illumination. Replace bulbs as needed.						☐		
Verify proper operation of the traffic signals and gongs during openings.						☐		
Clean reflectors and lenses. Spot paint heads as needed.								☐
Traffic Gate Arm Lights (Section 8.6.4)								
Check gate arm lights for proper operation. Replace bulbs as needed.	☐	☐	☐	☐	☐			
Replace gate arm light lamps and wiring that is non-functional or damaged.							☐	

Refer to Section 8.6 "Lighting Systems" for component locations, quantities, and additional maintenance information.

Notes:

Electrical Maintenance Checklist – Electric Motors

Form 10-7
Page 1 of 2

Date: _____ Maintenance Personnel: _____	Maintenance Tasks To Be Completed: Annual	Six Year
	☐	☐

Maintenance Tasks	Maintenance Tasks Completed	
	Annual	**Six Year**
Lock Motors (Section 8.7.1) (Component ID # 51)		
Verify that the motor shaft is free of oil and grease from bearings.	☐	
Check for leakage around motor bearings. Clean off excess grease and dirt.	☐	
Verify that motor shaft end-play is normal.	☐	
Inspect and tighten loose electrical connections on motor.	☐	
Verify that all keys, bolts, and pins are in their proper position. Check all bolts for tightness. Tighten as needed.	☐	
During operation, examine motor for smooth running and absence of vibration.	☐	
During operation, check motor and bearings for overheating.	☐	
Check painted surfaces for signs of corrosion. Spot paint as necessary.	☐	
Perform a general visual inspection of the solenoid brakes while stationary and during lock operation.	☐	
Check solenoid brake electrical connections and tighten as necessary.	☐	
Inspect solenoid brake mechanical parts for wear, damage, and bolt and nut tightness. Check freedom of moving parts.	☐	
Check solenoid brake for excessive heating of parts. Check for collections of dirt or gum, evidence of water dripping, or corrosion. Clean as necessary.	☐	
Check solenoid brakes for excessive vibration or noise during operation.	☐	
Repaint motors.		☐
Main Leaf (Span) Motor (Section 8.7.2) (Component ID # 5)		
Verify that shaft is free of oil and grease.	☐	
Check for leakage around bearings. Clean off excess grease and dirt.	☐	
Verify that shaft end-play is normal.	☐	
Inspect and tighten loose electrical connections on motor.	☐	
See that all keys, bolts, and pins are in their proper position. Check all bolts for tightness. Tighten as needed.	☐	
During operation, examine motor for smooth running and absence of vibration.	☐	
During operation, check motor and bearings for overheating.	☐	
Lubricate main leaf motor bearings.	☐	
Check painted surfaces for corrosion. Spot paint as necessary.	☐	
Repaint motor.		☐
Traffic Gate Motors (Section 8.7.3) (Component ID # 59)		
Check for leakage around bearings. Clean off excess grease and dirt.	☐	
Verify that shaft end-play is normal.	☐	
Inspect and tighten loose electrical connections on motor.	☐	
See that all keys, bolts, and pins are in their proper position. Check all bolts for tightness. Tighten as needed.	☐	
During operation, examine motor for smooth running and absence of vibration.	☐	
During operation, check motor and bearings for overheating.	☐	

Electrical Maintenance Checklist – Electric Motors

Form 10-7
Page 2 of 2

Maintenance Tasks	Maintenance Tasks Completed	
	Annual	Six Year
Traffic Gate Motor (cont.)		
Check painted surfaces for corrosion. Spot paint as necessary. Do no paint nameplates.	☐	
Visually inspect solenoid brake while stationary and during gate operation.	☐	
Check solenoid brake electrical connections and tighten as necessary.	☐	
Inspect solenoid brake for wear, damage, and bolt and nut tightness. Check for freedom of moving parts.	☐	
Check solenoid brake components for evidence of excessive heating. Check for accumulation of dirt or gum, evidence of water dripping, or corrosion. Clean as necessary.	☐	
Check solenoid brake for excessive vibration or noise during operation.	☐	

Refer to Section 8.7 "Electric Motors" for component locations, quantities, and additional maintenance information. Component ID # corresponds to components listed in Section 11.1.

Notes:

Electrical Maintenance Checklist – Control Systems

Form 10-8
Page 1 of 2

	Maintenance Tasks To Be Completed:	
	Three Month	Annual
Date: _____ Maintenance Personnel: _____	☐	☐

	Maintenance Tasks Completed	
Maintenance Tasks	**Three Month**	**Annual**
Relay Cabinets (Section 8.8.1)		
Open and clean with a vacuum cleaner.	☐	
Remove accumulation of dirt, grease, and gum with contact cleaner.	☐	
Check for corrosion and moisture.	☐	
Lubricate door hinges and latches.	☐	
Inspect terminal block screws and tighten all loose connections.	☐	
Inspect wiring from unit terminal blocks for deterioration of insulation.	☐	
Inspect all circuit breakers. Verify with meter than continuity is broken on trip or switch off conditions.	☐	
Inspect all fuses with meter and verify continuity. Replace fuses if needed.	☐	
Inspect all relays and tighten connections as necessary.	☐	
During operation, verify each relay lamp turns on. Replace bulbs as required.	☐	
Verify enclosure heaters are functioning.	☐	
Verify enclosure lights turn on when doors are open. Replace bulbs as required.	☐	
Check for discolored connections on terminals, contact supports, bus bars, or connectors. Clean connection points that are discolored. Tighten all loose hardware. Replace or repair heat damaged wires and connectors as necessary.		☐
Manually operate each relay with associated circuit breakers off and observe contact operation to be sure it opens and closes cleanly and that the contacts are sealed when in the closed position.		☐
Monitor relay operations during normal operation and check for loud noise and arcing during opening and closing operations.		☐
Control Console (Section 8.8.2)		
Open and clean with a vacuum cleaner.	☐	
Remove accumulation of dirt, grease, and gum with contact cleaner.	☐	
Check for corrosion and moisture.	☐	
Lubricate door hinges and latches.	☐	
Inspect terminal block screws and tighten all connections.	☐	
Inspect wiring from unit terminal blocks for deterioration of insulation.	☐	
Inspect all fuses with meter and verify continuity. Replace fuses if needed.	☐	
Check all pushbuttons, selector switches and meters and replace as necessary.	☐	
Check all indicating lights. Replace bulbs as required	☐	
Verify enclosure lights turn on when doors are open. Replace bulbs as required.	☐	
Check for discolored connections on terminals, contact supports, bus bars, or connectors. Clean connection points that are discolored. Tighten all loose hardware. Replace or repair heat damaged wires and connectors as necessary.		☐
Manually operate each relay with associated circuit breakers off and observe contact operation to be sure it opens and closes cleanly and that the contacts are sealed when in the closed position.		☐
Monitor relay operations during normal operation and check for loud noise and arcing, during opening and on closing operations.		☐

Electrical Maintenance Checklist – Control System

Form 10-8
Page 2 of 2

Maintenance Tasks	Maintenance Tasks Completed	
	Three Month	Annual
Limit Switches (Section 8.8.3) (Component ID # 4, 6, 15, 17,41, 42, 57, 72 & 73)		
Inspect all limit switches for wear.		☐
Remove accumulated dust, dirt, and moisture on housing.		☐
Remove accumulated dust, dirt, and moisture from all shafts.		☐
Inspect latches, mounting hardware, and seals.		☐
Inspect all fasteners and tighten connections as necessary.		☐
If accessible, remove the cover and visually inspect the condition of all internal parts.		☐
Inspect rotary cam limit switch switches for wear.		☐
Inspect rotary cam limit switch rollers for wear.		☐
Inspect rotary cam limit switch cams for wear.		☐
Inspect span lock and brake limit switches snap action contact blocks and all internal component connections. Tighten if necessary.		☐
Inspect all span lock and brake limit switches wiring from snap action contact blocks for deterioration.		☐
Cycle span lock and brake limit switches lever arm several times.		☐
Lubricate fully seated limit switches internal assembly with light weight non-gumming oil.		☐
Inspect fully seated limit switches locknuts and tightened as necessary.		☐
Inspect fully seated limit switches springs for corrosion and clean and/or replace as required.		☐
Verify fully seated limit switches adjustment of plunger rod and contact assembly.		☐
Speed Switches and Tachometer Assembly (Section 8.8.4) (Component ID # 1, 2 & 55)		☐
Remove accumulated dust, dirt, and moisture on housing.		☐
Remove accumulated dust, dirt, and moisture from overspeed switch shafts.		☐
Inspect cover to ensure proper seal of housing.		☐
Inspect all screws and tighten connections as necessary.		☐
Inspect the assembly and timing belt for wear. Replace belt if needed.		☐
Check belt tension.		☐

Refer to Section 8.8 "Control System" for component locations, quantities, and additional maintenance information. Component ID # corresponds to components listed in Section 11.1.

Notes:

Electrical Maintenance Checklist – Miscellaneous Equipment

Form 10-9
Page 1 of 2

		Maintenance Tasks To Be Performed:							
		Week 1	Week 2	Week 3	Week 4	Week 5	Monthly	Six Month	Annual
Date: _____	Maintenance Personnel: _____	☐	☐	☐	☐	☐	☐	☐	☐
Date: _____	Maintenance Personnel: _____	☐	☐	☐	☐	☐	☐	☐	☐
Date: _____	Maintenance Personnel: _____	☐	☐	☐	☐	☐	☐	☐	☐
Date: _____	Maintenance Personnel: _____	☐	☐	☐	☐	☐	☐	☐	☐
Date: _____	Maintenance Personnel: _____	☐	☐	☐	☐	☐	☐	☐	☐

	Maintenance Tasks Completed							
Maintenance Tasks	**Week 1**	**Week 2**	**Week 3**	**Week 4**	**Week 5**	**Monthly**	**Six Month**	**Annual**
Siren (Section 8.9.1)								
Perform a general visual inspection and check for proper operation. Correct as necessary.	☐	☐	☐	☐	☐			
Check electrical connections and tighten as necessary.								☐
Operate the siren and associated equipment to check for excessive heating of parts.								☐
Check for collections of dirt or gum, evidence of water dripping, or corrosion. Clean as necessary.								☐
Check the siren for debris inside the unit.								☐
Inspect connections for cracking or leaks.								☐
Heating and Air Conditioning Systems (Section 8.9.2)								
Check all air filters. Clean or replace as necessary.						☐		
Check all cooling coils, seals, fittings, ducting connections, and pipelines for leaks. Correct as necessary.						☐		
Check surfaces of casing for signs of corrosion and retreat or paint as necessary.						☐		
Inspect the condition of all safety devices for deterioration.						☐		
Check the performance of all equipment related to temperature and humidity.						☐		
Sump Pump (Section 8.9.3)								
Test operation each sump pump motor.						☐		
Check that the motor is free of debris.						☐		
During operation, examine motor for smooth running and absence of vibration.						☐		
Hot Water Heater (Section 8.9.4)								
Check the unit and associated piping for leaks.						☐		
Heat Trace (Section 8.9.5)								
Visually inspect the pipe, insulation, and connections to the heating cable for physical damage.						☐		
Pits, Platforms, and Walkways (Section 8.9.6)								
Clean and power wash the counterweight pits, platforms, and walkways of dirt and debris.							☐	

Refer to Section 8.9 "Miscellaneous Equipment" for component locations, quantities, and additional maintenance information.

Notes:

THIS PAGE INTENTIONALLY LEFT BLANK

CHAPTER 11 - SUPPLEMENTAL INFORMATION AND SPECIFICATIONS

CONTENTS

11.1 COMPONENT IDENTIFICATION CHARTS AND DIAGRAMS 11-3
11.2 MACHINERY LUBRICATION SCHEMATICS 11-6
11.3 MACHINERY LUBRICATION SCHEDULE 11-9
11.4 BRIDGE MAINTENANCE PERFORMANCE STANDARDS (PLATES) 11-12
11.4.1 SLEEVE BEARING AND TRUNNION BEARING LUBRICATION 11-12
11.4.2 MOTOR BRAKE MAINTENANCE 11-13
11.4.3 COUPLING LUBRICATION 11-16
11.4.4 SPEED REDUCER LUBRICATION 11-18
11.4.5 OPEN GEARING LUBRICATION 11-20
11.4.6 MOTOR BEARING LUBRICATION 11-22
11.4.7 SPAN LOCK MACHINERY LUBRICATION 11-24
11.4.7.1 SPAN LOCK COUPLING LUBRICATION 11-24
11.4.7.2 SPAN LOCK SPEED REDUCER LUBRICATION 11-26
11.4.7.3 SPAN LOCK OPEN GEARING LUBRICATION 11-28
11.4.7.4 SPAN LOCK BAR, GUIDES, AND RECEIVING SOCKET LUBRICATION 11-30
11.4.8 CENTERING GUIDE AND CENTERING DEVICE LUBRICATION 11-32
11.4.9 INSTRUMENTATION DRIVE CHAIN LUBRICATION 11-33
11.5 MATERIAL DATA SHEETS 11-34
11.5.1 MOBIL MOBILUX EP-0, EP-2 11-34
11.5.2 FALK LONG TERM GREASE 11-53
11.5.3 MOBIL MOBILTAC 325 NC 11-61
11.5.4 MOBIL MOBILGEAR 600 XP 100, 220 11-75
11.5.5 MOBIL UNIREX N2 11-96
11.5.6 MOBIL DTE 21 11-106
11.5.7 MOBIL 600W CYLINDER OIL 11-119
11.5.8 CRC TAC 2 ADHESIVE CHAIN LUBRICANT 11-129
11.5.9 PERMATEX GEAR OIL RTV SEALANT 11-138
11.5.10 CRC QUICK CLEAN HEAVY DUTY DEGREASER 11-143
11.5.11 CAIG LABORATORIES DEOXIT CONTACT CLEANER 11-152
11.6 COMPONENT MANUFACTURER LIST 11-160
11.7 MECHANICAL EQUIPMENT MANUALS AND SPECIFICATIONS 11-162

11.7.1 PRIMARY – EARLE GEAR SPEED REDUCER TYPE S 11-162
11.7.2 SPAN LOCK – FALK SPEED REDUCER TYPE C 11-169
11.7.3 MOTOR BRAKES – GENERAL ELECTRIC IC9516-465N 11-173
11.7.4 BRAKE THRUSTER – EMG ELDRO ED80/12S 11-179
11.7.5 SPAN LOCK MOTOR COUPLING – FALK TYPE T10 11-196
11.7.6 BRAKEWHEEL COUPLING – FALK 12BW 11-202
11.8 TRAFFIC CONTROL EQUIPMENT MANUALS AND SPECIFICATIONS 11-204
11.8.1 WARNING GATE – B&B ELECTROMATIC VT-40 11-204
11.9 ELECTRICAL EQUIPMENT MANUALS AND SPECIFICATIONS 11-216
11.9.1 TACHOMETER/OVERSPEED SWITCH ASSEMBLY - HUBBELL 11-216
11.9.2 DRIVE (SECONDARY THYRISTOR CONTROLLER) – HUBBELL 4922C 11-217

11.1 COMPONENT IDENTIFICATION CHARTS AND DIAGRAMS

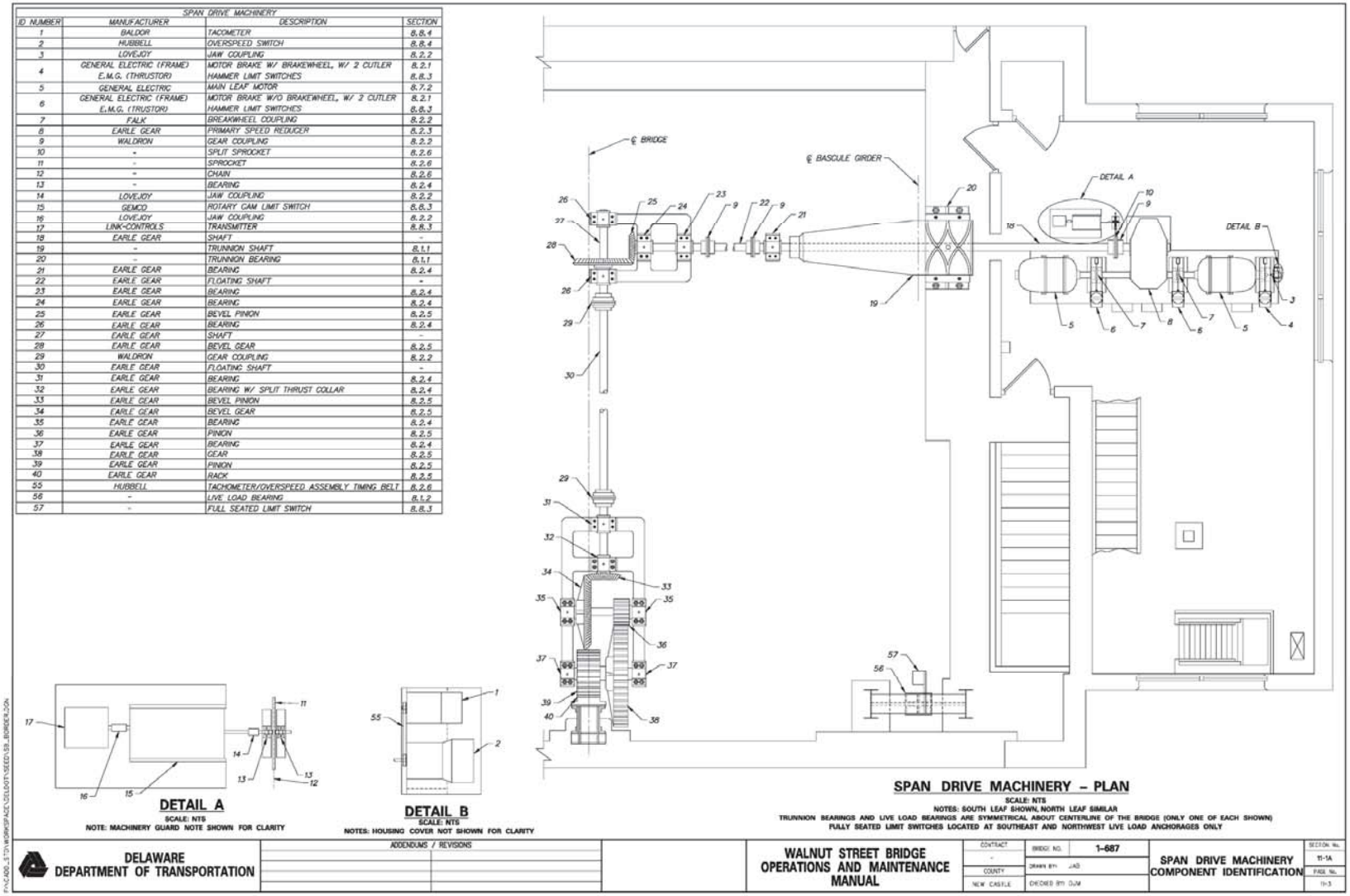

SPAN DRIVE MACHINERY

ID NUMBER	MANUFACTURER	DESCRIPTION	SECTION
1	BALDOR	TACOMETER	8.8.4
2	HUBBELL	OVERSPEED SWITCH	8.8.4
3	LOVEJOY	JAW COUPLING	8.2.2
4	GENERAL ELECTRIC (FRAME) E.M.G. (THRUSTOR)	MOTOR BRAKE W/ BRAKEWHEEL, W/ 2 CUTLER HAMMER LIMIT SWITCHES	8.2.1 8.8.3
5	GENERAL ELECTRIC	MAIN LEAF MOTOR	8.7.2
6	GENERAL ELECTRIC (FRAME) E.M.G. (TRUSTOR)	MOTOR BRAKE W/O BRAKEWHEEL, W/ 2 CUTLER HAMMER LIMIT SWITCHES	8.2.1 8.8.3
7	FALK	BREAKWHEEL COUPLING	8.2.2
8	EARLE GEAR	PRIMARY SPEED REDUCER	8.2.3
9	WALDRON	GEAR COUPLING	8.2.2
10	-	SPLIT SPROCKET	8.2.6
11	-	SPROCKET	8.2.6
12	-	CHAIN	8.2.6
13	-	BEARING	8.2.4
14	LOVEJOY	JAW COUPLING	8.2.2
15	GEMCO	ROTARY CAM LIMIT SWITCH	8.8.3
16	LOVEJOY	JAW COUPLING	8.2.2
17	LINK-CONTROLS	TRANSMITTER	8.8.3
18	EARLE GEAR	SHAFT	-
19	-	TRUNNION SHAFT	8.1.1
20	-	TRUNNION BEARING	8.1.1
21	EARLE GEAR	BEARING	8.2.4
22	EARLE GEAR	FLOATING SHAFT	-
23	EARLE GEAR	BEARING	8.2.4
24	EARLE GEAR	BEARING	8.2.4
25	EARLE GEAR	BEVEL PINION	8.2.5
26	EARLE GEAR	BEARING	8.2.4
27	EARLE GEAR	SHAFT	-
28	EARLE GEAR	BEVEL GEAR	8.2.5
29	WALDRON	GEAR COUPLING	8.2.2
30	EARLE GEAR	FLOATING SHAFT	-
31	EARLE GEAR	BEARING	8.2.4
32	EARLE GEAR	BEARING W/ SPLIT THRUST COLLAR	8.2.4
33	EARLE GEAR	BEVEL PINION	8.2.5
34	EARLE GEAR	BEVEL GEAR	8.2.5
35	EARLE GEAR	BEARING	8.2.4
36	EARLE GEAR	PINION	8.2.5
37	EARLE GEAR	BEARING	8.2.4
38	EARLE GEAR	GEAR	8.2.5
39	EARLE GEAR	PINION	8.2.5
40	EARLE GEAR	RACK	8.2.5
55	HUBBELL	TACHOMETER/OVERSPEED ASSEMBLY TIMING BELT	8.2.6
56	-	LIVE LOAD BEARING	8.1.2
57	-	FULL SEATED LIMIT SWITCH	8.8.3

DETAIL A
SCALE: NTS
NOTE: MACHINERY GUARD NOTE SHOWN FOR CLARITY

DETAIL B
SCALE: NTS
NOTES: HOUSING COVER NOT SHOWN FOR CLARITY

SPAN DRIVE MACHINERY – PLAN
SCALE: NTS
NOTES: SOUTH LEAF SHOWN, NORTH LEAF SIMILAR
TRUNNION BEARINGS AND LIVE LOAD BEARINGS ARE SYMMETRICAL ABOUT CENTERLINE OF THE BRIDGE (ONLY ONE OF EACH SHOWN)
FULLY SEATED LIMIT SWITCHES LOCATED AT SOUTHEAST AND NORTHWEST LIVE LOAD ANCHORAGES ONLY

DELAWARE DEPARTMENT OF TRANSPORTATION

ADDENDUMS / REVISIONS

WALNUT STREET BRIDGE OPERATIONS AND MAINTENANCE MANUAL

CONTRACT -
COUNTY NEW CASTLE
BRIDGE NO. 1-687
DRAWN BY: JAD
CHECKED BY: DJM

SPAN DRIVE MACHINERY COMPONENT IDENTIFICATION

SECTION No. 11-1A
PAGE No. 11-3

THIS PAGE INTENTIONALLY LEFT BLANK

SPAN LOCK MACHINERY			
ID NUMBER	MANUFACTURER	DESCRIPTION	SECTION
41	NAMCO	SPAN LOCK PULLED LIMIT SWITCH	8.8.3
42	NAMCO	SPAN LOCK DRIVEN LIMIT SWITCH	8.8.3
43	EARLE GEAR	LOCK BAR	8.3.1
44	EARLE GEAR	SPAN LOCK REAR GUIDE	8.3.1
45	EARLE GEAR	PINION	8.3.4
46	EARLE GEAR	RACK	8.3.4
47	EARLE GEAR	SPAN LOCK FRONT GUIDE	8.3.1
48	EARLE GEAR	SPAN LOCK RECEIVING SOCKET	8.3.1
49	FALK	SPAN LOCK SPEED REDUCER	8.3.2
50	FALK	GRID COUPLING	8.3.3
51	REULAND	SPAN LOCK MOTOR	8.7.1
52	-	MANUAL HANDWHEEL	-
53	EARLE GEAR	CENTERING DEVICE	8.3.5
54	EARLE GEAR	CENTERING GUIDE	8.3.5

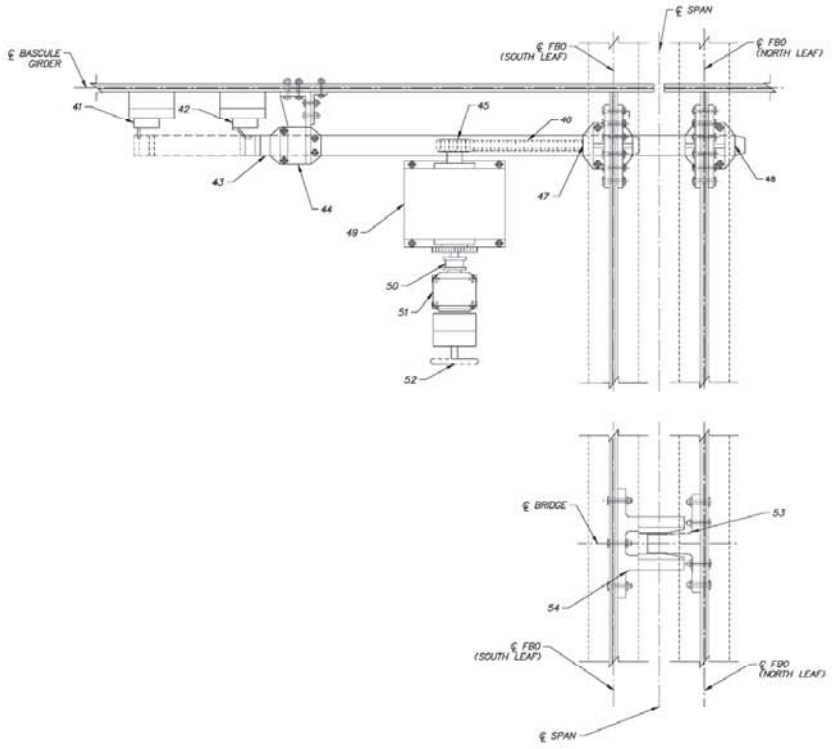

SPAN LOCK MACHINERY AND CENTERING GUIDE – PLAN

SCALE: NTS

NOTE: SPAN LOCK MACHINERY SYMMETRICAL ABOUT CENTERLINE OF BRIDGE

P:\CADD_STS\WORKSPACE\OLDOT\SEED\SS_BORDER.DGN

DELAWARE DEPARTMENT OF TRANSPORTATION	ADDENDUMS / REVISIONS		WALNUT STREET BRIDGE OPERATIONS AND MAINTENANCE MANUAL	CONTRACT -	BRIDGE NO. 1-687	SPAN LOCK MACHINERY AND CENTERING GUIDE COMPONENT IDENTIFICATION	SECTION No. 11-18
				COUNTY NEW CASTLE	DRAWN BY: JAB		PAGE No. 11-4
					CHECKED BY: DJM		

THIS PAGE INTENTIONALLY LEFT BLANK

WARNING GATE MACHINERY			
ID NUMBER	MANUFACTURER	DESCRIPTION	SECTION
58	B&B ROADWAY	SOLENOID BRAKE	8.7.3
59	LEESON	WARNING GATE MOTOR	8.7.3
60	WINSMITH	WARNING GATE TRANSMISSION	8.4.1
61	B&B ROADWAY	TRANSMISSION OUTPUT CRANK ARM	8.4.1
62	B&B ROADWAY	ROD END	8.4.1
63	B&B ROADWAY	CONNECTING ROD	8.4.1
64	B&B ROADWAY	ROD END	8.4.1
65	B&B ROADWAY	GATE ARM PIVOT CRANK	8.4.1
66	B&B ROADWAY	GATE ARM PIVOT SHAFT	8.4.1
67	B&B ROADWAY	COLLAR BEARING	8.4.1
68	B&B ROADWAY	GATE ARM CONNECTING FLANGE	8.4.1
69	B&B ROADWAY	MANUAL HAND CRANK	8.4.1
70	B&B ROADWAY	TRANSMISSION OUTPUT SPROCKET	8.4.1
71	B&B ROADWAY	DRIVE CHAIN	8.4.1
72	B&B ROADWAY	WARNING GATE ROTARY CAM LIMIT SWITCH	8.8.3
73	CHERRY CORP.	WARNING GATE DOOR SWITCH	8.8.3

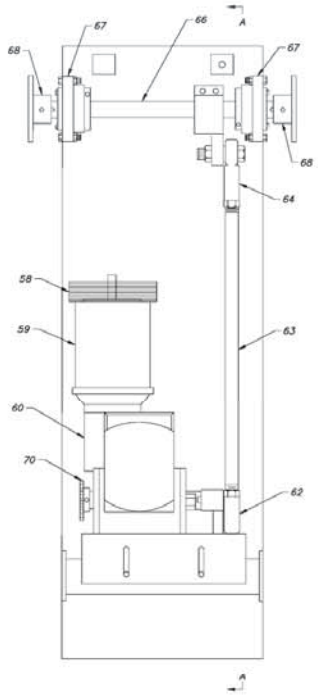

WARNING GATE MACHINERY – ELEVATION

SCALE: NTS

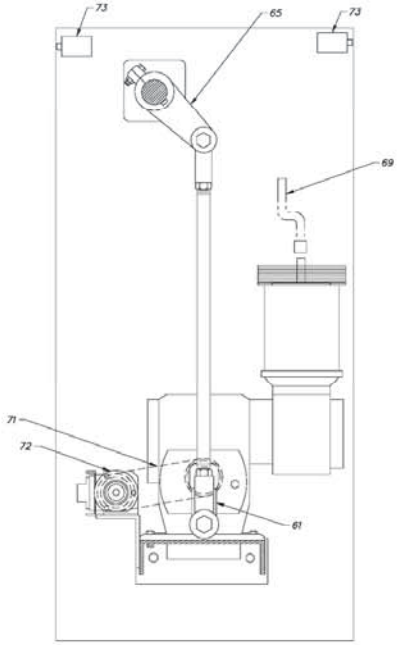

SECTION A–A

SCALE: NTS

NOTES:

FOR ADDITIONAL COMPONENTS AND PART NUMBERS, REFER TO B&B ELECTROMATIC DRAWING No. 00400A0002

P:\ACAD_STY\WORKSPACE\DELDOT\SEED\SB_BORDER.DGN

DELAWARE DEPARTMENT OF TRANSPORTATION	ADDENDUMS / REVISIONS	WALNUT STREET BRIDGE OPERATIONS AND MAINTENANCE MANUAL	CONTRACT	BRIDGE NO. 1-687	WARNING GATE MACHINERY COMPONENT IDENTIFICATION	SECTION No. 11-10
				DRAWN BY: JAS		PAGE No. 11-5
			COUNTY NEW CASTLE	CHECKED BY: DJM		

THIS PAGE INTENTIONALLY LEFT BLANK

11.2 MACHINERY LUBRICATION SCHEMATICS

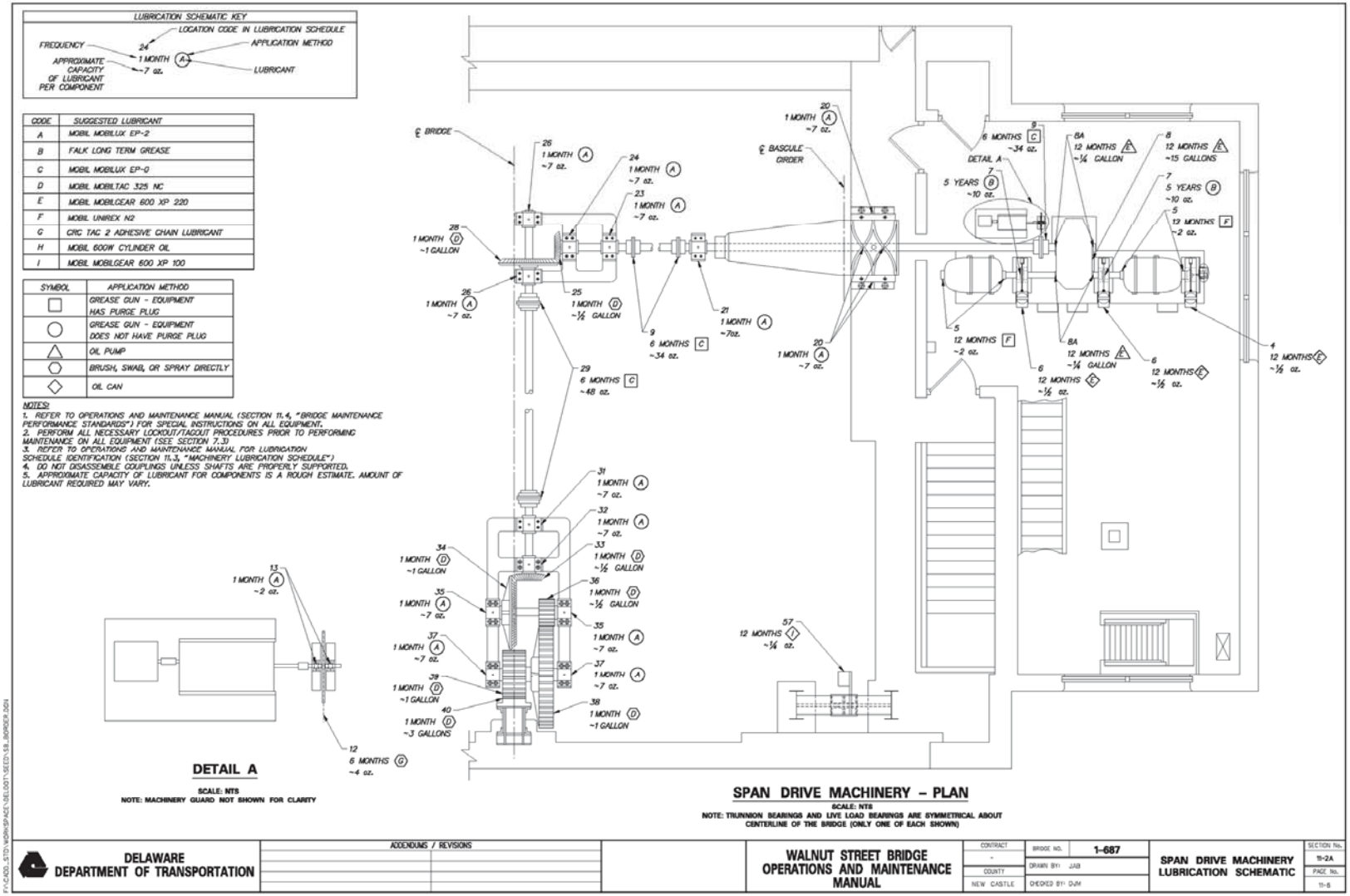

THIS PAGE INTENTIONALLY LEFT BLANK

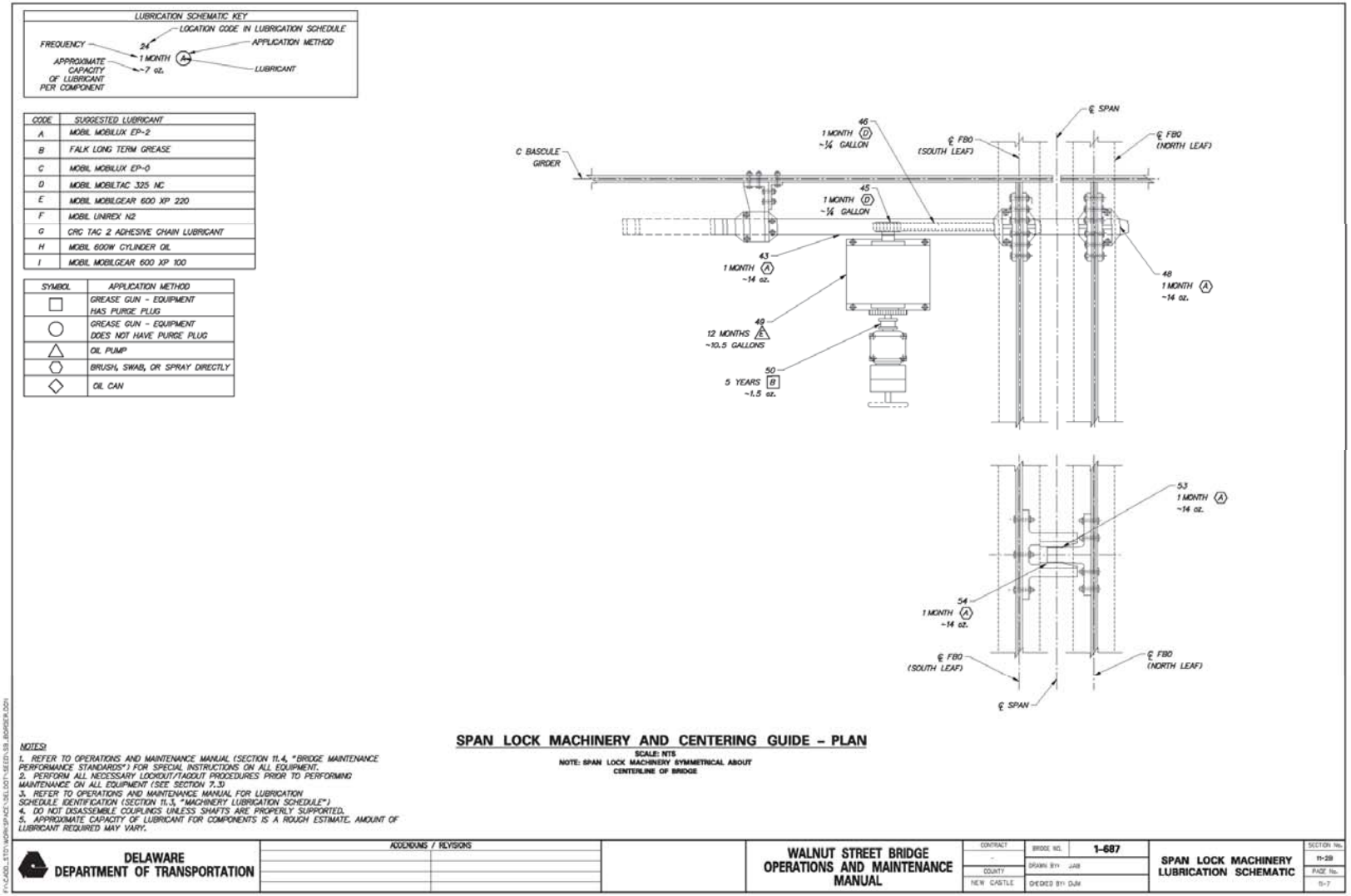

SPAN LOCK MACHINERY AND CENTERING GUIDE – PLAN

SCALE: NTS
NOTE: SPAN LOCK MACHINERY SYMMETRICAL ABOUT CENTERLINE OF BRIDGE

NOTES:
1. REFER TO OPERATIONS AND MAINTENANCE MANUAL (SECTION 11.4, "BRIDGE MAINTENANCE PERFORMANCE STANDARDS") FOR SPECIAL INSTRUCTIONS ON ALL EQUIPMENT.
2. PERFORM ALL NECESSARY LOCKOUT/TAGOUT PROCEDURES PRIOR TO PERFORMING MAINTENANCE ON ALL EQUIPMENT (SEE SECTION 7.3).
3. REFER TO OPERATIONS AND MAINTENANCE MANUAL FOR LUBRICATION SCHEDULE IDENTIFICATION (SECTION 11.3, "MACHINERY LUBRICATION SCHEDULE").
4. DO NOT DISASSEMBLE COUPLINGS UNLESS SHAFTS ARE PROPERLY SUPPORTED.
5. APPROXIMATE CAPACITY OF LUBRICANT FOR COMPONENTS IS A ROUGH ESTIMATE. AMOUNT OF LUBRICANT REQUIRED MAY VARY.

DELAWARE DEPARTMENT OF TRANSPORTATION

ADDENDUMS / REVISIONS

WALNUT STREET BRIDGE OPERATIONS AND MAINTENANCE MANUAL

CONTRACT: -
COUNTY: NEW CASTLE
BRIDGE NO.: 1-687
DRAWN BY: JAB
CHECKED BY: DJH

SPAN LOCK MACHINERY LUBRICATION SCHEMATIC

SECTION No.: 11-28
PAGE No.: 11-7

THIS PAGE INTENTIONALLY LEFT BLANK

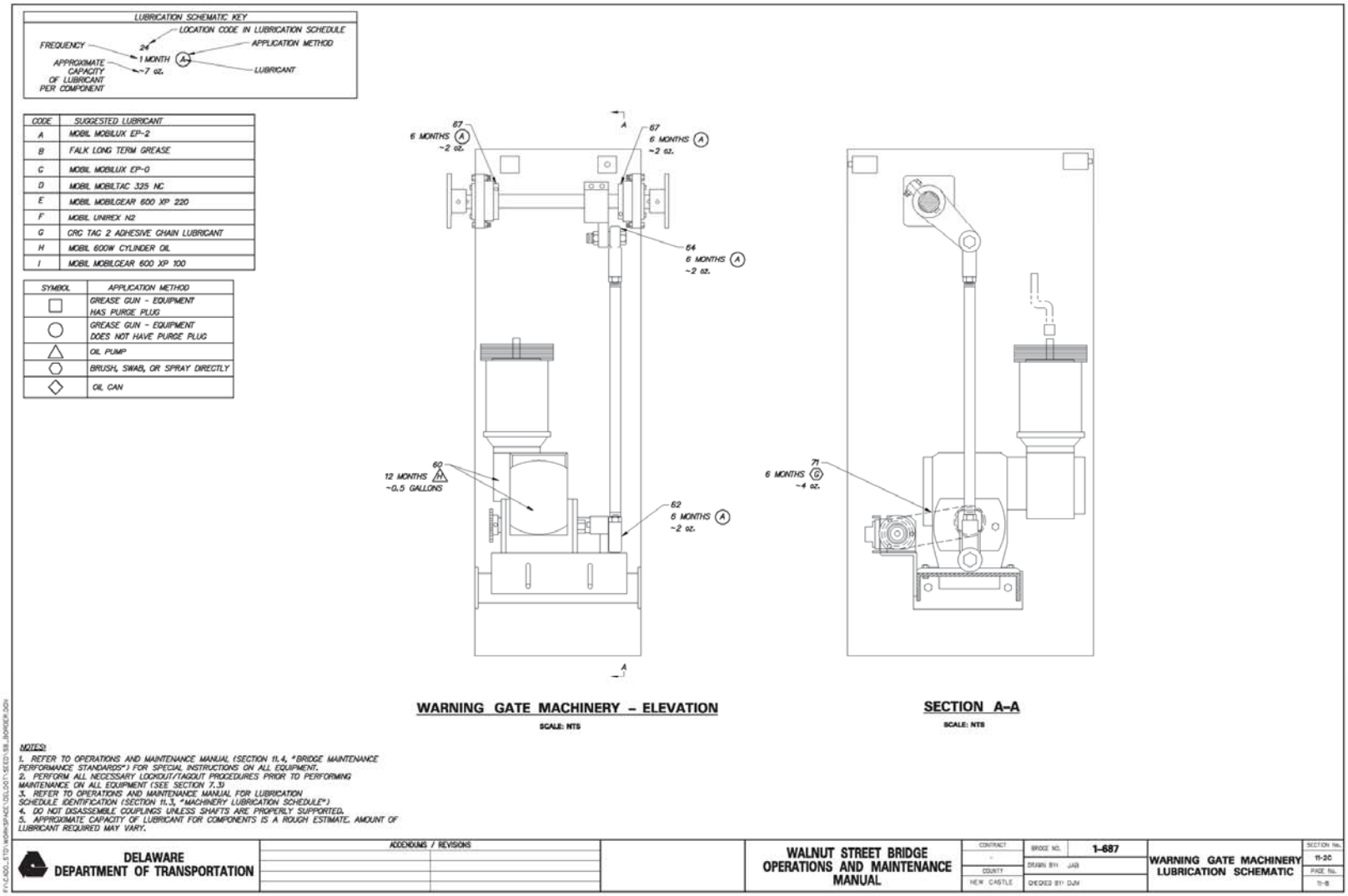
LUBRICATION SCHEMATIC KEY
LOCATION CODE IN LUBRICATION SCHEDULE
FREQUENCY
24
1 MONTH
A
APPLICATION METHOD
APPROXIMATE CAPACITY OF LUBRICANT PER COMPONENT
~7 oz.
LUBRICANT
CODE | SUGGESTED LUBRICANT
A | MOBIL MOBILUX EP-2
B | FALK LONG TERM GREASE
C | MOBIL MOBILUX EP-0
D | MOBIL MOBILTAC 325 NC
E | MOBIL MOBILGEAR 600 XP 220
F | MOBIL UNIREX N2
G | CRC TAC 2 ADHESIVE CHAIN LUBRICANT
H | MOBIL 600W CYLINDER OIL
I | MOBIL MOBILGEAR 600 XP 100
SYMBOL | APPLICATION METHOD
GREASE GUN - EQUIPMENT HAS PURGE PLUG
GREASE GUN - EQUIPMENT DOES NOT HAVE PURGE PLUG
OIL PUMP
BRUSH, SWAB, OR SPRAY DIRECTLY
OIL CAN
67
6 MONTHS
A
~2 oz.
64
6 MONTHS
A
~2 oz.
60
12 MONTHS
H
~0.5 GALLONS
62
6 MONTHS
A
~2 oz.
71
6 MONTHS
G
~4 oz.
A
A
WARNING GATE MACHINERY – ELEVATION
SCALE: NTS
SECTION A–A
SCALE: NTS
NOTES:
1. REFER TO OPERATIONS AND MAINTENANCE MANUAL (SECTION 11.4, "BRIDGE MAINTENANCE PERFORMANCE STANDARDS") FOR SPECIAL INSTRUCTIONS ON ALL EQUIPMENT.
2. PERFORM ALL NECESSARY LOCKOUT/TAGOUT PROCEDURES PRIOR TO PERFORMING MAINTENANCE ON ALL EQUIPMENT (SEE SECTION 7.3)
3. REFER TO OPERATIONS AND MAINTENANCE MANUAL FOR LUBRICATION SCHEDULE IDENTIFICATION (SECTION 11.3, "MACHINERY LUBRICATION SCHEDULE")
4. DO NOT DISASSEMBLE COUPLINGS UNLESS SHAFTS ARE PROPERLY SUPPORTED.
5. APPROXIMATE CAPACITY OF LUBRICANT FOR COMPONENTS IS A ROUGH ESTIMATE. AMOUNT OF LUBRICANT REQUIRED MAY VARY.
DELAWARE
DEPARTMENT OF TRANSPORTATION
ADDENDUMS / REVISIONS
WALNUT STREET BRIDGE
OPERATIONS AND MAINTENANCE
MANUAL
CONTRACT
COUNTY
NEW CASTLE
BRIDGE NO. 1-687
DRAWN BY: JAB
CHECKED BY: DJH
WARNING GATE MACHINERY
LUBRICATION SCHEMATIC
SECTION No. 11-2C
PAGE No. 11-8

THIS PAGE INTENTIONALLY LEFT BLANK

11.3 MACHINERY LUBRICATION SCHEDULE

WALNUT STREET BRIDGE MACHINERY – LUBRICATION SCHEDULE							
Location Code	**Section**	**Machinery**	**Applicator**	**Specified Grade**	**Lubrication Type**	**Mfr. Spec.**	**Frequency (Months)**
1	8.8.4	TACHOMETER	LUBRICATION NOT REQUIRED				
2	8.8.4	OVERSPEED SWITCH	LUBRICATION NOT REQUIRED				
3	8.2.2	JAW COUPLING	LUBRICATION NOT REQUIRED				
4	8.2.1	MOTOR BRAKE BEARING PINS	OIL CAN	AGMA #5EP	OIL	MOBIL MOBILGEAR 600 XP 220	12
5	8.7.2	MAIN LEAF MOTOR	GREASE GUN, REMOVE PLUG, FILL WITH GREASE, REPLACE PLUG	NLGI #2	GREASE	MOBIL UNIREX N2	12
6	8.2.1	MOTOR BRAKE BEARING PINS	OIL CAN	AGMA #5EP	OIL	MOBIL MOBILGEAR 600 XP 220	12
7	8.2.2	BRAKE WHEEL COUPLING	GREASE GUN, GREASE FITTING	NLGI # 1/2	GREASE	FALK LONG TERM GREASE	60
8	8.2.3	PRIMARY SPEED REDUCER	OIL PUMP - REMOVE PLUG, DRAIN OIL, FLUSH, REPLACE PLUG, AND FILL	AGMA #5EP	OIL	MOBIL MOBILGEAR 600XP 220	12
8A	8.2.3	PRIMARY SPEED REDUCER BEARING RESERVOIR	OIL PUMP - REMOVE PLUG, DRAIN OIL, REPLACE PLUG, AND FILL	AGMA #5EP	OIL	MOBIL MOBILGEAR 600XP 220	12
9	8.2.2	GEAR COUPLING	GREASE GUN, REMOVE PLUG, FILL WITH GREASE, REPLACE PLUG	NLGI #0	GREASE	MOBIL MOBILUX EP-0	6
10	8.2.6	SPLIT SPROCKET	LUBRICATION NOT REQUIRED				
11	8.2.6	SPROCKET	LUBRICATION NOT REQUIRED				
12	8.2.6	ROLLER CHAIN	BRUSH OR SWAB	NLGI #2	GREASE	MOBIL MOBILUX EP-2	6
13	8.2.4	BEARING	GREASE GUN, GREASE FITTING	NLGI #2	GREASE	MOBIL MOBILUX EP-2	1
14	8.2.2	JAW COUPLING	LUBRICATION NOT REQUIRED				
15	8.8.3	ROTARY CAM LIMIT SWITCH	LUBRICATION NOT REQUIRED				
16	8.2.2	JAW COUPLING	LUBRICATION NOT REQUIRED				
17	8.8.3	TRANSMITTER	LUBRICATION NOT REQUIRED				
18	-	SHAFT	LUBRICATION NOT REQUIRED				
19	8.1.1	TRUNNION SHAFT	LUBRICATION NOT REQUIRED				
20	8.1.1	TRUNNION BEARING					
21	8.2.4	BEARING					
22	-	FLOATING SHAFT	LUBRICATION NOT REQUIRED				
23	8.2.4	BEARING					
24	8.2.4	BEARING					

Location Code	Section	Machinery	Applicator	Specified Grade	Lubrication Type	Mfr. Spec.	Frequency (Months)
25	8.2.5	BEVEL PINION	BRUSH OR SWAB	N/A	GREASE	MOBIL MOBILTAC 325 NC	1
26	8.2.4	BEARING	GREASE GUN, GREASE FITTING	NLGI #2	GREASE	MOBIL MOBILUX EP-2	1
27	-	SHAFT	LUBRICATION NOT REQUIRED				
28	8.2.5	BEVEL GEAR	BRUSH OR SWAB	N/A	GREASE	MOBIL MOBILTAC 325 NC	1
29	8.2.2	GEAR COUPLING	GREASE GUN, REMOVE PLUG, FILL WITH GREASE, REPLACE PLUG	NLGI #0	GREASE	MOBIL MOBILUX EP-0	6
30	-	FLOATING SHAFT	LUBRICATION NOT REQUIRED				
31	8.2.4	BEARING	GREASE GUN, GREASE FITTING	NLGI #2	GREASE	MOBIL MOBILUX EP-2	1
32	8.2.4	BEARING W/ THRUST COLLAR	GREASE GUN, GREASE FITTING	NLGI #2	GREASE	MOBIL MOBILUX EP-2	1
33	8.2.5	BEVEL PINION	BRUSH OR SWAB	N/A	GREASE	MOBIL MOBILTAC 325 NC	1
34	8.2.5	BEVEL GEAR	BRUSH OR SWAB	N/A	GREASE	MOBIL MOBILTAC 325 NC	1
35	8.2.4	BEARING	GREASE GUN, GREASE FITTING	NLGI #2	GREASE	MOBIL MOBILUX EP-2	1
36	8.2.5	PINION	BRUSH OR SWAB	N/A	GREASE	MOBIL MOBILTAC 325 NC	1
37	8.2.4	BEARING	GREASE GUN, GREASE FITTING	NLGI #2	GREASE	MOBIL MOBILUX EP-2	1
38	8.2.5	SPUR GEAR	BRUSH OR SWAB	N/A	GREASE	MOBIL MOBILTAC 325 NC	1
39	8.2.5	MAIN PINION	BRUSH OR SWAB	N/A	GREASE	MOBIL MOBILTAC 325 NC	1
40	8.2.5	RACK	BRUSH OR SWAB	N/A	GREASE	MOBIL MOBILTAC 325 NC	1
41	8.8.3	LOCK BAR PULLED LIMIT SWITCH	LUBRICATION NOT REQUIRED				
42	8.8.3	LOCK BAR DRIVEN LIMIT SWITCH	LUBRICATION NOT REQUIRED				
43	8.3.1	LOCK BAR	BRUSH OR SWAB	NLGI #2	GREASE	MOBIL MOBILUX EP-2	1
44	8.3.1	SPAN LOCK REAR GUIDE	LUBRICATION NOT REQUIRED				
45	8.3.4	SPAN LOCK PINION	BRUSH OR SWAB	N/A	GREASE	MOBIL MOBILTAC 325 NC	1
46	8.3.4	SPAN LOCK RACK	BRUSH OR SWAB	N/A	GREASE	MOBIL MOBILTAC 325 NC	1
47	8.3.1	SPAN LOCK FRONT GUIDE	LUBRICATION NOT REQUIRED				
48	8.3.1	SPAN LOCK RECEIVING SOCKET	GREASE GUN, GREASE FITTING	NLGI #2	GREASE	MOBIL MOBILUX EP-2	1
49	8.3.2	SPAN LOCK SPEED REDUCER	OIL PUMP - REMOVE PLUG, DRAIN OIL, FLUSH, REPLACE PLUG, AND FILL	AGMA #5EP	OIL	MOBIL MOBILGEAR 600XP 220	12

Location Code	Section	Machinery	Applicator	Specified Grade	Lubrication Type	Mfr. Spec.	Frequency (Months)
50	8.3.3	GRID COUPLING	GREASE GUN, REMOVE PLUG, FILL WITH GREASE, REPLACE PLUG	NLGI # 1/2	GREASE	FALK LONG TERM GREASE	60
51	8.7.1	SPAN LOCK MOTOR	LUBRICATION NOT REQUIRED				
52	-	MANUAL HAND WHEEL	LUBRICATION NOT REQUIRED				
53	8.3.5	CENTERING DEVICE	BRUSH OR SWAB	NLGI #2	GREASE	MOBIL MOBILUX EP-2	1
54	8.3.5	CENTERING GUIDE	BRUSH OR SWAB	NLGI #2	GREASE	MOBIL MOBILUX EP-2	1
55	8.2.6	INSTRUMENTATION DRIVE CHAIN	SPRAY	N/A	GREASE	CRC TAC 2 ADHESIVE CHAIN LUBRICANT	6
56	8.1.2	LIVE LOAD BEARING	LUBRICATION NOT REQUIRED				
57	8.8.3	FULLY SEATED LIMIT SWITCH	OIL CAN	AGMA #3EP	OIL	MOBIL MOBILGEAR 600 XP 100	12
58	8.7.3	SOLENOID BRAKE	LUBRICATION NOT REQUIRED				
59	8.7.3	WARNING GATE MOTOR	LUBRICATION NOT REQUIRED				
60	8.4.1	WARNING GATE TRANSMISSION	OIL PUMP - REMOVE PLUG, DRAIN OIL, FLUSH, REPLACE PLUG, AND FILL	AGMA #7	OIL	MOBIL 600W CYLINDER OIL	12
61	8.4.1	TRANSMISSION OUTPUT CRANK ARM	LUBRICATION NOT REQUIRED				
62	8.4.1	ROD END	GREASE GUN, GREASE FITTING	NLGI #2	GREASE	MOBIL MOBILUX EP-2	6
63	8.4.1	CONNECTING ROD	LUBRICATION NOT REQUIRED				
64	8.4.1	ROD END	GREASE GUN, GREASE FITTING	NLGI #2	GREASE	MOBIL MOBILUX EP-2	6
65	8.4.1	GATE ARM PIVOT CRANK	LUBRICATION NOT REQUIRED				
66	8.4.1	GATE ARM PIVOT SHAFT	LUBRICATION NOT REQUIRED				
67	8.4.1	GATE ARM PIVOT SHAFT BEARING	GREASE GUN, GREASE FITTING	NLGI #2	GREASE	MOBIL MOBILUX EP-2	6
68	8.4.1	GATE ARM CONNECTING FLANGE	LUBRICATION NOT REQUIRED				
69	8.4.1	MANUAL HAND CRANK	LUBRICATION NOT REQUIRED				
70	8.4.1	TRANSMISSION OUTPUT SPROCKET	LUBRICATION NOT REQUIRED				
71	8.4.1	DRIVE CHAIN	SPRAY	N/A	GREASE	CRC TAC 2 ADHESIVE CHAIN LUBRICANT	6
72	8.8.3	WARNING GATE ROTARY CAM LIMIT SWITCH	LUBRICATION NOT REQUIRED				
73	8.8.3	WARNING GATE DOOR SWITCH	LUBRICATION NOT REQUIRED				

11.4 BRIDGE MAINTENANCE PERFORMANCE STANDARDS (PLATES)

11.4.1 SLEEVE BEARING AND TRUNNION BEARING LUBRICATION

DELAWARE
DEPARTMENT OF TRANSPORTATION
BRIDGE MANAGEMENT SECTION
BRIDGE MAINTENANCE PERFORMANCE STANDARD

BRIDGE NUMBER
1-687

BMS ACTIVITY CODE
B065-S2J

EFFECTIVE DATE

ACTIVITY TITLE:
Sleeve Bearing and Trunnion Bearing Lubrication

UNIT OF MEASUREMENT:
Number of Sleeve Bearings and Trunnion Bearings

PROCEDURE DESCRIPTION:

WARNING

Use EXTREME CARE and ALWAYS REMOVE POWER from all pertinent electrical equipment, which includes multiple power sources, before beginning maintenance. Refer to Section 7.3, "Lockout/Tagout Procedure" in the Operations and Maintenance Manual.

Monthly

1. Clean grease fittings of dirt, debris, old grease, and any other potential contaminants with a rag and CRC Quick Clean or equivalent.
2. Inspect the grease fittings and replace any cracked or broken grease fittings. The sleeve bearings have a single grease fitting in the bearing cap. Each trunnion bearing has two grease fittings in the bearing cap and two grease fittings located on opposite sides of the bearing housing.
3. Insert grease gun tip onto grease fitting and pump Mobil Mobilux EP-2 or equivalent into the bearing until fresh grease appears along the bearing shaft. Catch old grease in a catch basin. For trunnion bearings, repeat for all four grease fittings.
4. Wipe excess grease from the bearing with a rag and solvent cleaner.
5. Inspect bearings for any unusual defects that may have occurred.

Refer to Sections 8.1.1, 8.2.4, 11.5.1, and 11.5.10 for additional component and material information. For lubrication coding details below, refer to Section 11.2 "Machinery Lubrication Schematics" in the Operations and Maintenance Manual.

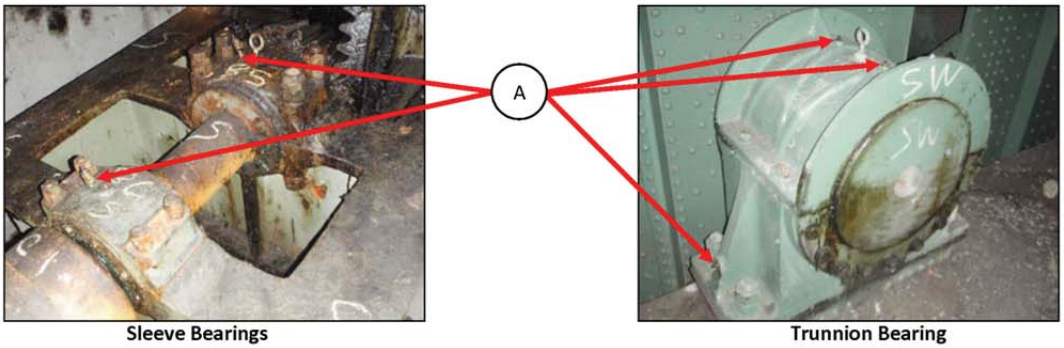

Sleeve Bearings Trunnion Bearing

SCHEDULING CONSIDERATIONS:

Sleeve bearings and trunnion bearings should be lubricated every month.

Also, inspect and lubricate sleeve bearings and trunnion bearings after an overstress situation such as a pinched span.

WORK AREA, ACTIVITY DESCRIPTION & REQUIREMENTS:

Sleeve bearings are located in the trunnion girder, on the secondary open gear frame, and on the primary open gear frame on both spans of the bridge. Trunnion bearings are located on the bascule pier on the outboard sides of the bascule girders. Tasks include locating, inspecting, and lubricating all trunnion bearings and sleeve bearings on the bridge. Lockout/Tagout is required prior to performing any maintenance on this equipment. Report any significant defects to bridge management.

Qty	EQUIPMENT	Qty	EQUIPMENT	Qty	MATERIAL
1	Grease gun	1/ Person	Set of chemical resistant Viton gloves	~19 – 14 oz. Tubes	Mobil Mobilux EP-2 or equivalent
16	Trunnion bearing grease fittings				
22	Sleeve bearing grease fittings	1/ Person	Tyvek suit		
1	Catch basin	1/ Person	Eye protection	~10 – 20 oz. Cans	CRC Quick Clean or equivalent
1	Bag of rags	1/ Person	Chemical respirator		

11.4.2 MOTOR BRAKE MAINTENANCE

DELAWARE DEPARTMENT OF TRANSPORTATION BRIDGE MANAGEMENT SECTION BRIDGE MAINTENANCE PERFORMANCE STANDARD	BRIDGE NUMBER 1-687
	BMS ACTIVITY CODE B067-S2J Page 1 of 3
	EFFECTIVE DATE

ACTIVITY TITLE:	UNIT OF MEASUREMENT:
Motor Brake Maintenance	Number of Brakes

PROCEDURE DESCRIPTION:

WARNING

Use EXTREME CARE and ALWAYS REMOVE POWER from all pertinent electrical equipment, which includes multiple power sources, before beginning maintenance. Refer to Section 7.3, "Lockout/Tagout Procedure" in the Operations and Maintenance Manual.

Annually

1. Brake actuator maintenance and checks shall be performed by an EMG authorized technician. Brake frames shall be adjusted by district or electrical/mechanical inspection team. Actuator oil used in the actuator shall be Mobil DTE21 unless otherwise specified by the EMG specialist. The brake thruster oil does not need to be replaced unless there is suspicion of oil contamination or the brake thruster is malfunctioning. A sticker shall be placed on the thrustor indicating the oil type along with the date of replacement to ensure that non-compatible oils are not mixed. The district shall schedule the EMG technician to be assisted by the electrical/mechanical inspection teams, simultaneously, so that brakes are adjusted at all times.
2. Inspect brake shoes and brakewheel for wear, dust, dirt, grease and proper adjustment. Check the brake pad thickness. Replace pads when the remaining thickness is less than 1/16 inch.
3. Check clearance between the brake shoe and brakewheel. The measured gap shall have a minimum of 1/64 inch clearance between brake shoe and brakewheel when hand released. If clearances need to be adjusted, the linkages shall be adjusted in accordance with Section 11.7.3. If adjustments are made to the linkages, the reserve stroke and spring length should be verified and adjusted as well. Adjustment procedures are located within Section 11.7.3.
4. Inspect mechanical linkages for wear, broken parts and tightness of nuts and bolts. Check for freedom of moving parts (no binding or sticking).
5. Check for excessive heating of parts evident by discoloration of metal parts.
6. Check operations of the brake during test operations of the bridge. Check for any unusual odor and excessive vibration.
7. Check the brake housing and linkages for evidence of water dripping on the brake and corrosion.
8. Check adjustment of limit switches and hand release devices.
9. Check brake actuator reserve stroke is approximately 0.8 inches +/- 1/16 inch. As the brake pads wear, the reserve stroke becomes shorter. If the reserve stroke is less than 1/4 inch, adjust linkages as specified in Section 11.7.3.
10. Check the brake spring length. Use a tape measure to measure the length of the spring. Adjustment procedure for adjusting the spring length as well as corresponding brake torque data graphs are located in Section 11.7.3. The spring length shall be adjusted to within 1/16 inch. At the time this Manual was created, the spring lengths were measured to be 6 7/8 +/- 5/16 inch. Table 3 in Section 11.7.3 shows the existing motor brake torque range is 550 ft-lbs to 750 ft-lbs.
11. Lubricate bearing pins using Mobil Mobilgear 600 XP 220 or equivalent lubricant. Lubricate pins using an oil can and applying a couple of drops to the brake pins. Cycle brakes manually using the hand release lever while applying the lubricating oil. Do not allow oil to drip onto the brake wheel. Remove any oil residue that drips from the brake pins. Refer to Chapter 11 for the lubrication schematics, schedule and details.

WARNING

Use EXTREME CARE and VERIFY that no oil gets on the brakewheel surface as this may cause the brakewheel to slip within the brake shoes as the brake is activated which may decrease the overall braking capacity.

Refer to Sections 8.2.1, 11.5.4, 11.5.6, 11.7.3, and 11.7.4 for additional component and material information. For lubrication coding details below, refer to Section 11.2, "Machinery Lubrication Schematics" in the Operations and Maintenance Manual.

DELAWARE
DEPARTMENT OF TRANSPORTATION
BRIDGE MANAGEMENT SECTION
BRIDGE MAINTENANCE PERFORMANCE STANDARD

BRIDGE NUMBER	
1-687	
BMS ACTIVITY CODE	
B067-S2J Page 2 of 3	
EFFECTIVE DATE	

ACTIVITY TITLE:	**UNIT OF MEASUREMENT:**
Motor Brake Maintenance	Number of Brakes

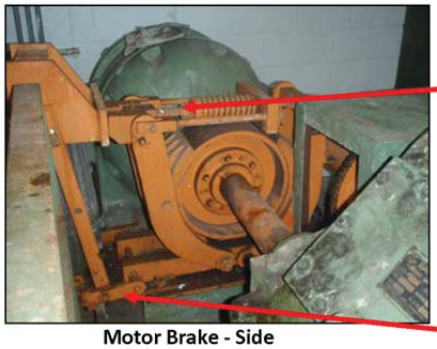

Motor Brake - Side

Motor Brake - Back

Brake Thruster

Spring Length

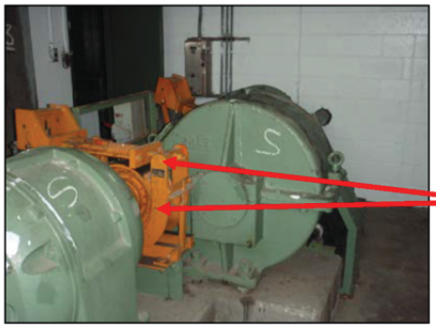

Motor Brake Bearing Pins - Front

Motor Brake Bearing Pins - Side

DELAWARE **DEPARTMENT OF TRANSPORTATION** **BRIDGE MANAGEMENT SECTION** **BRIDGE MAINTENANCE PERFORMANCE STANDARD**	**BRIDGE NUMBER** 1-687
	BMS ACTIVITY CODE B067-S2J Page 3 of 3
	EFFECTIVE DATE

ACTIVITY TITLE:	**UNIT OF MEASUREMENT:**
Motor Brake Maintenance	Number of Brakes

SCHEDULING CONSIDERATIONS:

Motor brakes should be inspected annually.

Also, inspect brakes when the bridge opens more than 150 times between Spring and Fall maintenance routines.

WORK AREA, ACTIVITY DESCRIPTION & REQUIREMENTS:

The motor brakes are located in the electrical/mechanical room. One motor brake is located between each main leaf motor and the primary reducer input shaft. The third motor brake is located at the rear of the main leaf motor #1. Tasks include locating and inspecting all brakes on the bridge. Lockout/Tagout is required prior to performing any maintenance on this equipment. Report any significant defects to bridge management.

Qty	EQUIPMENT	QTY	EQUIPMENT	Qty	MATERIAL
1	Feeler gauge set		Misc. small tools	~2-3 drops at each bearing pin	Mobil Mobilgear 600 XP 220 or equivalent (for bearing pins)
2	Adjustable wrenches	1/Person	Tyvek suit		
1	Ruler (with graduations of $^1/_{16}$")	1/Person	Set of chemical resistant Viton gloves	~1.5 gallons per thruster	Mobil DTE 21 or equivalent (for thruster if oil needs to be replaced)
1	Oil Can	1/Person	Eye protection		

11.4.3 COUPLING LUBRICATION

DELAWARE DEPARTMENT OF TRANSPORTATION BRIDGE MANAGEMENT SECTION BRIDGE MAINTENANCE PERFORMANCE STANDARD	BRIDGE NUMBER 1-687
	BMS ACTIVITY CODE B068-S2J Page 1 of 2
	EFFECTIVE DATE

ACTIVITY TITLE:	UNIT OF MEASUREMENT:
Coupling Lubrication	Number of Couplings (with Grease Fittings)

PROCEDURE DESCRIPTION:

WARNING

Use EXTREME CARE and ALWAYS REMOVE POWER from all pertinent electrical equipment, which includes multiple power sources, before beginning maintenance. Refer to Section 7.3, "Lockout/Tagout Procedure" in the Operations and Maintenance Manual.

WARNING

Do not disassemble couplings until shafts are properly supported.

Six Months

Gear Couplings

1. Clean the coupling of dirt, debris, old grease, and any other potential contaminants with a rag.
2. If it is leaking, replace seal according to manufacturer specifications.
3. Remove both lubrication plugs and insert grease fitting into the uppermost port.
4. Fill with Mobil Mobilux EP-0 or equivalent until fresh grease appears at the lower port. Catch old grease in a catch basin.
5. Reinstall plugs into coupling. Wipe off excess grease. **MAKE CERTAIN ALL PLUGS HAVE BEEN INSERTED AFTER LUBRICATION**.
6. Visually inspect gear couplings and brakewheel couplings for relative movement between coupling components during operation of the span drive machinery. Inspect the condition and tightness of the coupling fasteners.

Five Years (To be performed by Mechanical/Electrical Inspection Team)

Brakewheel Coupling

7. Clean the coupling of dirt, debris, old grease, and any other potential contaminants with a rag.
8. Remove coupling cover and remove existing grease from coupling grid and components.
9. Inspect gasket and seal for damage. Replace as necessary.
10. Fill coupling with Falk Long Term Grease or equivalent prior to reinstalling the coupling cover.
11. Reinstall cover with a feeler gauge inserted between the cover and brakewheel 180° from the grease fitting to allow grease to be purged from the coupling. Pump grease into coupling until fresh grease appears from the coupling cover where the feeler gauge was inserted.
12. Remove feeler gauge and tighten coupling cover fasteners. Wipe off excess grease. **MAKE CERTAIN ALL PLUGS HAVE BEEN INSERTED AFTER LUBRICATION.**

WARNING

Use EXTREME CARE and VERIFY that no grease gets on the brakewheel surface as this may cause the brakewheel to slip within the brake shoes as the brake is activated which may decrease the overall braking.

Refer to Sections 8.2.2, 11.5.1, 11.5.2, and 11.7.6 for additional component and material information. For lubrication coding details below, refer to Section 11.2, "Machinery Lubrication Schematics" in the Operations and Maintenance Manual.

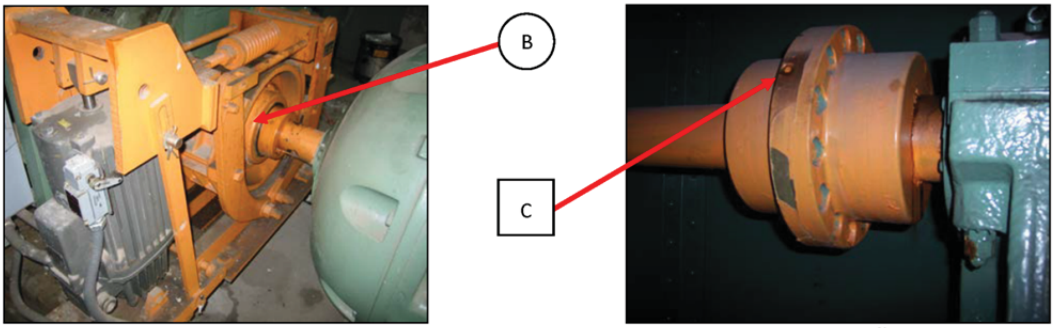

Brakewheel Coupling Gear Coupling

DELAWARE **DEPARTMENT OF TRANSPORTATION** **BRIDGE MANAGEMENT SECTION** **BRIDGE MAINTENANCE PERFORMANCE STANDARD**	**BRIDGE NUMBER** 1-687
	BMS ACTIVITY CODE B068-S2J Page 2 of 2
	EFFECTIVE DATE

ACTIVITY TITLE:	**UNIT OF MEASUREMENT:**
Coupling Lubrication	Number of Couplings (with Grease Fittings)

SCHEDULING CONSIDERATIONS:

Gear couplings should be lubricated every six months. Brakewheel couplings should be lubricated every five years and/or whenever the brakewheel couplings are disassembled.

Also, inspect and lubricate couplings with grease fittings when the bridge opens more than 150 times between Spring and Fall maintenance routines or after an overstress situation such as a pinched span.

WORK AREA, ACTIVITY DESCRIPTION & REQUIREMENTS:

Gear couplings are located in the electrical/mechanical room, inside the trunnion girder, and connecting the secondary open gearing to the primary open gearing. Brakewheel couplings are located within north motor brakes No. 2 (south motor brake No. 1) and motor brake No. 3 in the electrical/mechanical room. Tasks include locating, inspecting, and lubricating all couplings with grease fittings on the bridge with the appropriate lubricant. Lockout/Tagout is required prior to performing any maintenance on this equipment. Report any significant defects to bridge management.

Qty	EQUIPMENT	Qty	MATERIAL
1	Grease gun	29 – 14 oz. Tubes	Mobil Mobilux EP-0 or equivalent (Gear Couplings)
10	Gear coupling grease fittings		
4	Brakewheel coupling grease fittings	~2 – 14 oz. Tubes	Falk Long Term Grease or equivalent (Brakewheel Couplings)
1	Bag of rags		
1	Catch basin	6	Seal Kit for Waldron 5A Gear Coupling
1	Feeler gauges		
1	Ratchet set	6	Gasket for Waldron 5A Gear Coupling
	Miscellaneous small tools	4	Seal Kit for Waldron 6A Gear Coupling
1/Person	Tyvek suit	4	Gasket for Waldron 6A Gear Coupling
1/Person	Set of nitrile gloves	4	Seal Kit for Falk BW12 Brakewheel Coupling
1/Person	Eye protection	4	Gasket for Falk BW12 Brakewheel Coupling

11.4.4 SPEED REDUCER LUBRICATION

DELAWARE DEPARTMENT OF TRANSPORTATION BRIDGE MANAGEMENT SECTION BRIDGE MAINTENANCE PERFORMANCE STANDARD	BRIDGE NUMBER 1-687
	BMS ACTIVITY CODE B069-S2J Page 1 of 2
	EFFECTIVE DATE

ACTIVITY TITLE:	UNIT OF MEASUREMENT:
Speed Reducer Lubrication	Number of Speed Reducers

PROCEDURE DESCRIPTION:

WARNING

Use EXTREME CARE and ALWAYS REMOVE POWER from all pertinent electrical equipment, which includes multiple power sources, before beginning maintenance. Refer to Section 7.3, "Lockout/Tagout Procedure" in the Operations and Maintenance Manual.

Monthly

1. Check the speed reducer oil level. The oil level can be observed via the sight gage near the drain plug. The oil level should be at the oil level line on the lubrication plate mounted to the reducer housing near the sight gage.
2. If oil level is more than ¼" below the oil level line on the lubrication plate, oil should be added. Clean the speed reducer housing around the inspection cover. Remove the inspection cover.
3. Pour Mobil Mobilgear 600 XP 220 or equivalent into the speed reducer reservoir. Check the fluid level at the sight gage, and repeat until the fluid level is at the oil level line on the lubrication plate. **DO NOT OVERFILL THE UNITS AS LEAKAGE OR OVERHEATING MAY OCCUR.**
4. Reinstall the inspection cover with new sealant between the cover and housing.
5. Wipe up any spilled oil on the housing or surrounding area.

Annually

1. Clean the speed reducer housing around the inspection cover of dirt, debris, etc.
2. Place oil absorbent pads on floor followed by the oil catch basin under the drain plug. Remove inspection cover.
3. Remove drain plug to drain oil from the speed reducer. If the catch basin is not large enough to collect the oil, intermittently cap the drain plug and dump the oil into a larger container.
4. Flush reducer with Mobil Mobilgear 600 XP 100 or equivalent compatible oil with the permanent oil used in the reducers to remove contaminants in the reducer housing.
5. Place the catch basin below the bearing reservoir drain plug. Remove the fill plugs and drain plug from the bearing reservoir to drain oil. Flush bearings with oil to remove contaminants. Repeat for all of the bearing reservoirs.
6. Reinstall all drain plugs and tighten.
7. Inspect internal components of the reducer for unusual wear on the gear teeth.
8. Fill the bearing reservoirs with Mobil Mobilgear 600 XP 220 or equivalent. Fill the speed reducer with Mobil Mobilgear 600 XP 220 to the oil level mark on the lubrication plate as indicated by the sight gage. **DO NOT OVERFILL THE UNITS AS LEAKAGE OR OVERHEATING MAY OCCUR.**
9. Reinstall the bearing reservoir fill plugs. Reinstall the inspection cover with new sealant between the cover and housing.
10. Wipe up any spilled oil on the housing or surrounding area.

Refer to Sections 8.2.3, 11.5.4, 11.5.9, and 11.7.1 for additional component and material information. For lubrication coding details below, refer to Section 11.2, "Machinery Lubrication Schematics" in the Operations and Maintenance Manual.

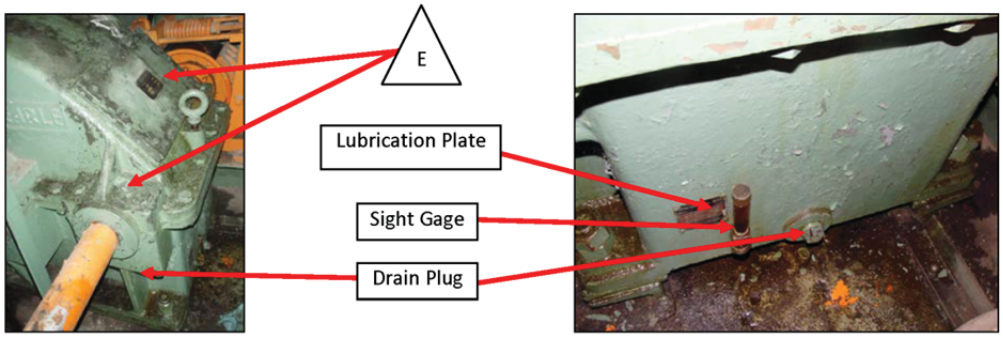

Primary Speed Reducer

Primary Speed Reducer Base

DELAWARE DEPARTMENT OF TRANSPORTATION BRIDGE MANAGEMENT SECTION BRIDGE MAINTENANCE PERFORMANCE STANDARD	BRIDGE NUMBER 1-687
	BMS ACTIVITY CODE B069-S2J Page 2 or 2
	EFFECTIVE DATE

ACTIVITY TITLE:	UNIT OF MEASUREMENT:
Speed Reducer Lubrication	Number of Speed Reducers

SCHEDULING CONSIDERATIONS:

Oil levels should be inspected monthly, with oil added as needed to maintain the proper oil level. The speed reducers (including bearing reservoirs) should be drained, inspected, and lubricated annually.

Also, inspect speed reducer lubricant levels when the bridge opens more than 150 times between Spring and Fall maintenance routines or after an overstress situation such as a pinched span.

WORK AREA, ACTIVITY DESCRIPTION & REQUIREMENTS:

Speed reducers are located in each electrical/mechanical room. Tasks include locating, inspecting, and lubricating all speed reducers on the bridge. Lockout/Tagout is required prior to performing any maintenance on this equipment. Report any significant defects to bridge management.

Qty	EQUIPMENT	Qty	MATERIAL
1	Bag of rags	~4 – 5 Gallon Buckets	Mobil Mobilgear 600 XP 100 or equivalent (for flushing)
1	Shallow catch basin (2" high		
4	Empty 5 gallon bucket or container		
6	Oil absorbent pads		
1	Holding/storage tank for transportation of used oil (50 gallon capacity)		
1	Scraper	~6 – 5 Gallon Buckets	Mobil Mobilgear 600 XP 220 or equivalent (permanent oil)
1	Ratchet set		
1	Adjustable wrench		
1	Miscellaneous small tools		
1/Person	Coveralls		
1/Person	Set of nitrile gloves	~2 – 5 oz. Tubes	Permatex Gear Oil RTV Sealant
1/Person	Eye protection	1	Roll of Teflon tape
1/Person	Chemical respirator	2 of each	Spare housing and bearing drain plugs

11.4.5 OPEN GEARING LUBRICATION

DELAWARE DEPARTMENT OF TRANSPORTATION BRIDGE MANAGEMENT SECTION BRIDGE MAINTENANCE PERFORMANCE STANDARD	BRIDGE NUMBER 1-687
	BMS ACTIVITY CODE B070-S2J Page 1 of 2
	EFFECTIVE DATE

ACTIVITY TITLE:	UNIT OF MEASUREMENT:
Open Gearing Lubrication	Number of Open Gears

PROCEDURE DESCRIPTION:

WARNING

Use EXTREME CARE and ALWAYS REMOVE POWER from all pertinent electrical equipment, which includes multiple power sources, before beginning maintenance. Refer to Section 7.3, "Lockout/Tagout Procedure" in the Operations and Maintenance Manual.

Monthly

1. Using a brush, evenly coat all gear tooth surfaces with Mobil Mobiltac 325 NC or equivalent lubricant.

Annually

1. Observe displacement patterns in open gearing lubricant for evidence of misalignment.
2. Remove old lubricant and debris by scraping the gear tooth surfaces and disposing of the lubricant in a tray or pan.
3. Apply CRC Quick Clean or equivalent to remove existing lubrication on the gear teeth.
4. With the use of a scraper and rags, remove the remaining grease and solvent and properly dispose of materials.
5. Re-inspect the gears for signs of abnormal wear or misalignment. Report abnormal wear or misalignment to bridge management.
6. Using a brush, evenly coat all gear tooth surfaces with Mobil Mobiltac 325 NC or equivalent lubricant.

Refer to Sections 8.2.5, 11.5.3, and 11.5.10 for additional component and material information. For lubrication coding details below, refer to Section 11.2, "Machinery Lubrication Schematics" in the Operations and Maintenance Manual.

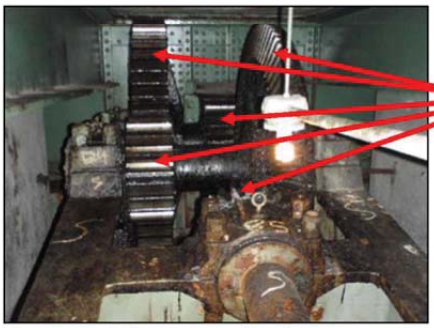

Primary Open Gearing

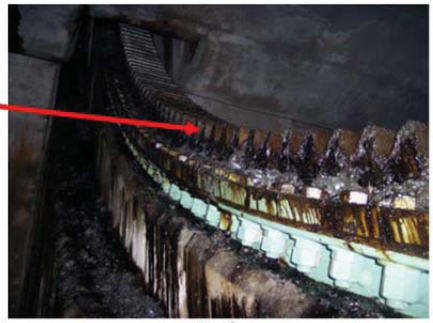

Rack

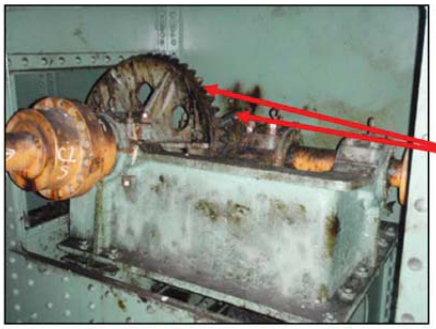

Secondary Open Gearing

DELAWARE **DEPARTMENT OF TRANSPORTATION** **BRIDGE MANAGEMENT SECTION** **BRIDGE MAINTENANCE PERFORMANCE STANDARD**	**BRIDGE NUMBER** 1-687
	BMS ACTIVITY CODE B070-S2J Page 2 of 2
	EFFECTIVE DATE

ACTIVITY TITLE:	**UNIT OF MEASUREMENT:**
Open Gearing Lubrication	Number of Open Gears

SCHEDULING CONSIDERATIONS:

Fresh grease should be applied to all open gearing monthly. Open gearing should be cleaned, inspected, and lubricated annually.

Inspect and lubricate open gearing when the bridge opens more than 150 times between Spring and Fall maintenance routines or after an overstress situation such as a pinched span.

WORK AREA, ACTIVITY DESCRIPTION & REQUIREMENTS:

Open gearing is located on top of the counterweight, in the counterweight pit, and in the trunnion girder of both spans. Tasks include locating, inspecting and lubricating all open gearing on the bridge. Lockout/Tagout is required prior to performing any maintenance on this equipment. Report any significant defects to bridge management.

Qty	EQUIPMENT	Qty	MATERIAL
2	Bag of rags	~4 – 5 Gallon Buckets	Mobil Mobiltac 325 NC or equivalent
2	Scrapers		
2	Brushes		
2	Trays or pans		
1/Person	Tyvek Suit	~10 – 20 oz. Cans	CRC Quick Clean or equivalent
1/Person	Set of chemical resistant Viton gloves		
1/Person	Chemical goggles and face shield		
1/Person	Chemical respirator		

11.4.6 MOTOR BEARING LUBRICATION

DELAWARE DEPARTMENT OF TRANSPORTATION BRIDGE MANAGEMENT SECTION BRIDGE MAINTENANCE PERFORMANCE STANDARD	BRIDGE NUMBER 1-687
	BMS ACTIVITY CODE B066-S2J Page 1 of 2
	EFFECTIVE DATE

ACTIVITY TITLE:	UNIT OF MEASUREMENT:
Motor Bearing Lubrication	Number of Motors

PROCEDURE DESCRIPTION:

WARNING

Use EXTREME CARE and ALWAYS REMOVE POWER from all pertinent electrical equipment, which includes multiple power sources, before beginning maintenance. Refer to Section 7.3, "Lockout/Tagout Procedure" in the Operations and Maintenance Manual.

Annually

1. Clean the grease fitting of dirt, debris, and any other potential contaminants with a rag.
2. Remove the purge plug opposite the grease fitting. Place a catch basin below the purge plug to catch old grease.
3. Purge old grease from the bearing by slowly pumping grease into the bearing until fresh grease flows out through the lower port. For the main leaf motor bearings use Mobil Unirex N2 or equivalent lubricant. **PUMPING GREASE INTO THE MOTOR BEARINGS WITHOUT REMOVING THE PURGE PLUG WILL RESULT IN DAMAGE TO THE SEAL AND GREASE ENTERING THE MOTOR WINDINGS.**
4. Repeat for the bearing at the other end of the motor.
5. Operate the span one time (with the purge plug still removed) to allow for excess grease to be expelled from the bearing cavity.
6. Reinstall the purge plugs and wipe excess grease from the motor housing with a rag.
7. Run the main leaf motor for three consecutive cycles.

Refer to Sections 8.7.2 and 11.5.5 for additional component and material information. For lubrication coding details below, refer to Section 11.2, "Machinery Lubrication Schematics" in the Operations and Maintenance Manual.

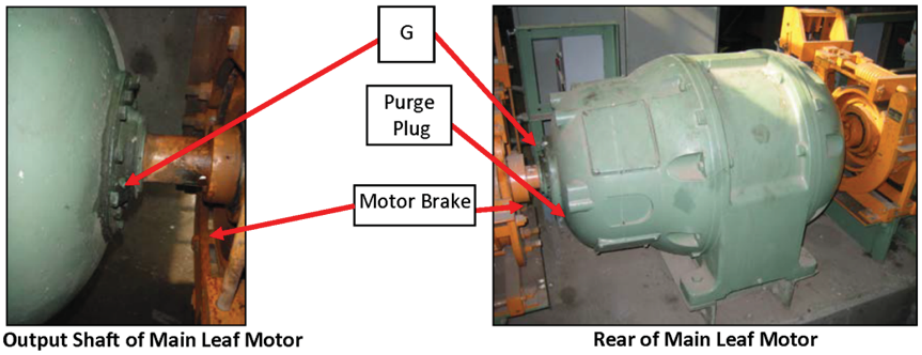

Front Output Shaft of Main Leaf Motor

Rear of Main Leaf Motor

SCHEDULING CONSIDERATIONS:

Main leaf motor bearings should be lubricated annually.

Also, inspect and lubricate motor bearings when the bridge opens more than 150 times between Spring and Fall maintenance routines or after an overstress situation such as a pinched span.

WORK AREA, ACTIVITY DESCRIPTION & REQUIREMENTS:

Main leaf motor bearings are located at the front and rear ends of each main motor in the electrical/mechanical room of each span. Tasks include locating, inspecting, and lubricating all span drive main motor bearings on the bridge. Lockout/Tagout is required prior to performing any maintenance on this equipment. Report any significant defects to bridge management.

DELAWARE
DEPARTMENT OF TRANSPORTATION
BRIDGE MANAGEMENT SECTION
BRIDGE MAINTENANCE PERFORMANCE STANDARD

BRIDGE NUMBER 1-687
BMS ACTIVITY CODE B066-S2J Page 2 of 2
EFFECTIVE DATE

ACTIVITY TITLE: Motor Bearing Lubrication	**UNIT OF MEASUREMENT:** Number of Motors

Qty	EQUIPMENT	Qty	EQUIPMENT	Qty	MATERIAL
1	Grease gun		Miscellaneous small tools	~1/8 - 14 oz. Tube / Bearing	Mobil Unirex N2 or equivalent
4	Grease fittings				
1	Bag of rags	1/Person	Coveralls		
1	Catch Basin	1/Person	Set of nitrile gloves		
1	Adjustable wrench	1/Person	Eye protection		

11.4.7 SPAN LOCK MACHINERY LUBRICATION

11.4.7.1 SPAN LOCK COUPLING LUBRICATION

DELAWARE **DEPARTMENT OF TRANSPORTATION** **BRIDGE MANAGEMENT SECTION** **BRIDGE MAINTENANCE PERFORMANCE STANDARD**	**BRIDGE NUMBER** 1-687
	BMS ACTIVITY CODE B068-S2J Page 1 of 2
	EFFECTIVE DATE

ACTIVITY TITLE:	**UNIT OF MEASUREMENT:**
Span Lock Coupling Lubrication	Number of Span Lock Couplings

PROCEDURE DESCRIPTION:

WARNING

Use EXTREME CARE and ALWAYS REMOVE POWER from all pertinent electrical equipment, which includes multiple power sources, before beginning maintenance. Refer to Section 7.3, "Lockout/Tagout Procedure" in the Operations and Maintenance Manual.

Five Years (To be performed by Mechanical/Electrical Inspection Team)

1. Clean the span lock motor coupling of dirt, debris, old grease, and any other potential contaminants with a rag.
2. Inspect the condition and tightness of the fasteners. Inspect the seal rings to see if they are leaking. If leaking is observed, replace the leaking seal(s) according to manufacturer specifications.
3. Remove the coupling cover to access coupling components.
4. Removing existing grease from coupling cover and grid.
5. Check the coupling for any excessive misalignment that may have occurred and notify bridge management if such misalignment exists. Maximum allowable misalignment values can be found in Table 2 of Section 11.7.5.
6. Reinstall the coupling cover with new gaskets.
7. Remove both lube plugs and insert a grease fitting into the uppermost port.
8. Fill with Falk Long Term Grease or equivalent until fresh grease appears at the lower port. Catch any purged grease in a catch basin.
9. Remove the grease fitting and reinstall plugs into the coupling. Wipe off excess grease. **MAKE CERTAIN ALL PLUGS HAVE BEEN INSERTED AFTER LUBRICATION.**

Refer to Sections 8.3.3, 11.5.2, and 11.7.5 for additional component and material information. For lubrication coding details below, refer to Section 11.2, "Machinery Lubrication Schematics" in the Operations and Maintenance Manual.

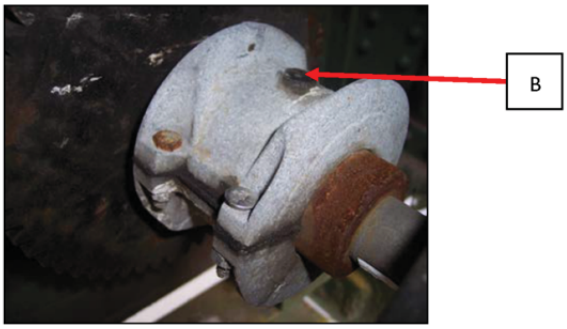

Span Lock Motor Coupling

SCHEDULING CONSIDERATIONS:

Every five years or whenever the span lock motor coupling is disassembled, the span lock motor coupling grease should be replaced.

Inspect and lubricate span lock machinery when the bridge opens more than 150 times between Spring and Fall maintenance routines or after an overstress situation such as a bound lock bar.

Contact TMC to coordinate temporary closure of the bridge for maintenance.

WORK AREA, ACTIVITY DESCRIPTION & REQUIREMENTS:

The span lock machinery is located on the inboard side of the bascule girders at the toe of the south leaf. The span lock motor coupling is located between the span lock motor and the span lock speed reducer. Tasks include locating, inspecting and lubricating the span lock motor couplings. Lockout/Tagout is required prior to performing any maintenance on this equipment. Report any significant defects to bridge management.

DELAWARE DEPARTMENT OF TRANSPORTATION BRIDGE MANAGEMENT SECTION BRIDGE MAINTENANCE PERFORMANCE STANDARD	BRIDGE NUMBER 1-687
	BMS ACTIVITY CODE B068-S2J Page 2 of 2
	EFFECTIVE DATE

ACTIVITY TITLE:	UNIT OF MEASUREMENT:
Span Lock Coupling Lubrication	Number of Span Lock Couplings

Qty	EQUIPMENT	Qty	MATERIAL
1	Grease gun	~¼ - 14 oz. Tube	Falk Long Term Grease or equivalent
2	Grease fittings		
1	Bag of rags		
1	Catch basin	2	Seal Kit for Falk 1030T10 Grid Coupling
2	Small adjustable wrenches		
1	Ruler (with graduations of 1/32")		
	Miscellaneous small tools		
1/Person	Tyvek suit	2	Gasket for Falk 1030T10 Grid Coupling
1/Person	Set of nitrile gloves		
1/Person	Eye protection		

11.4.7.2 SPAN LOCK SPEED REDUCER LUBRICATION

DELAWARE **DEPARTMENT OF TRANSPORTATION** **BRIDGE MANAGEMENT SECTION** **BRIDGE MAINTENANCE PERFORMANCE STANDARD**	**BRIDGE NUMBER** 1-687 **BMS ACTIVITY CODE** B069-S2J Page 1 of 2 **EFFECTIVE DATE**

ACTIVITY TITLE:	**UNIT OF MEASUREMENT:**
Span Lock Machinery Speed Reducer Lubrication	Number of Span Lock Speed Reducers

PROCEDURE DESCRIPTION:

WARNING

Use EXTREME CARE and ALWAYS REMOVE POWER from all pertinent electrical equipment, which includes multiple power sources, before beginning maintenance. Refer to Section 7.3, "Lockout/Tagout Procedure" in the Operations and Maintenance Manual.

Monthly

Speed Reducer

1. Check the speed reducer oil level. Place a catch basin below the oil level plug hole on the side of the reducer. A snooper is needed to place a catch basin beneath the reducer drain plugs. Clean the housing around the oil level plug hole. Slowly begin to unscrew the oil level plug. If oil begins to flow out, collect oil in catch basin ensuring no oil enters the waterway.
2. If oil does not flow from the oil level plug hole with the plug fully removed, inspect oil level through the hole to determine if the oil level is adequate. If oil needs to be added, clean the speed reducer housing around the lube plugs at the top of the reducer housing. Remove one or both lube plugs.
3. Pour Mobil Mobilgear 600 XP 220 or equivalent into the speed reducer reservoir until oil reaches the oil level plug hole. Ensure the catch basin is below the oil level plug hole to collect any oil that may leak out. Install the oil level plug. **DO NOT OVERFILL THE UNITS AS LEAKAGE OR OVERHEATING MAY OCCUR.** Reinstall the lube plugs at the top of the reducer.
4. Wipe up any spilled oil on the housing or surrounding area.

Annually

Speed Reducer

1. Clean the speed reducer housing around the lube plugs of dirt, debris, etc.
2. Place oil catch basin under the drain plug. A snooper is needed to place a catch basin beneath the reducer drain plugs. Remove both lube plugs from the top of the speed reducer.
3. Remove drain plug to drain oil from the speed reducer. Flush reducer with a Mobil Mobilgear 600 XP 100 or equivalent oil compatible with the final reducer oil used during operations to remove contaminants in the reducer housing.
4. Reinstall drain plug and tighten.
5. Remove the oil level plug on the side of the reducer. Fill reservoir with Mobil Mobilgear 600 XP 220 or equivalent until oil reaches the oil level plug hole. Reinstall the oil level plug. Reinstall the lube plugs. **DO NOT OVERFILL THE UNITS AS LEAKAGE OR OVERHEATING MAY OCCUR.**
6. Wipe up any spilled oil on the housing or surrounding area.

Refer to Sections 8.3.2, 11.5.4, and 11.7.2 for additional component and material information. For lubrication coding details below, refer to Section 11.2, "Machinery Lubrication Schematics" in the Operations and Maintenance Manual.

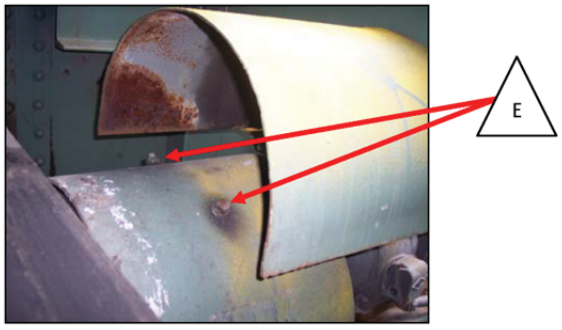

Span Lock Speed Reducer - Top

DELAWARE DEPARTMENT OF TRANSPORTATION BRIDGE MANAGEMENT SECTION BRIDGE MAINTENANCE PERFORMANCE STANDARD	BRIDGE NUMBER 1-687
	BMS ACTIVITY CODE B078-S2J Page 2 of 2
	EFFECTIVE DATE

ACTIVITY TITLE:	UNIT OF MEASUREMENT:
Span Lock Speed Reducer Lubrication	Number of Span Lock Speed Reducers

Span Lock Speed Reducer - Side

Span Lock Speed Reducer - Side

SCHEDULING CONSIDERATIONS:

The span lock speed reducer oil level should be checked monthly. Annually, the span lock speed reducer should be flushed and refilled.

Inspect and lubricate span lock machinery when the bridge opens more than 150 times between Spring and Fall maintenance routines or after an overstress situation such as a bound lock bar.

Contact TMC to coordinate temporary closure of the bridge for maintenance.

WORK AREA, ACTIVITY DESCRIPTION & REQUIREMENTS:

The span lock machinery is located on the inboard side of the bascule girders at the toe of the south leaf. Tasks include locating, inspecting and lubricating both span lock systems on the bridge. Lockout/Tagout is required prior to performing any maintenance on this equipment. Report any significant defects to bridge management.

Qty	EQUIPMENT	Qty	MATERIAL
1	Snooper	~4 – 5 Gallon Buckets	Mobil Mobilgear 600 XP 100 or equivalent (flushing oil)
1	Bag of rags		
1	Catch basin (15 gallon capacity)		
1	Adjustable wrench	~5 – 5 Gallon Buckets	Mobil Mobilgear 600 XP 220 or equivalent (permanent oil)
	Miscellaneous small tools		
1	Holding/storage tank for transportation of used oil (50 gallon capacity)		
1/Person	Set of nitrile gloves	2 of each	Spare oil level, drain, and fill plugs
1/Person	Eye protection		
1/Person	Coveralls	1	Roll of Teflon tape

11.4.7.3 SPAN LOCK OPEN GEARING LUBRICATION

DELAWARE **DEPARTMENT OF TRANSPORTATION** **BRIDGE MANAGEMENT SECTION** **BRIDGE MAINTENANCE PERFORMANCE STANDARD**	**BRIDGE NUMBER** 1-687 **BMS ACTIVITY CODE** B070-S2J Page 1 of 2 **EFFECTIVE DATE**

ACTIVITY TITLE:	**UNIT OF MEASUREMENT:**
Span Lock Machinery Open Gearing Lubrication	Number of Span Lock Machinery Open Gears

PROCEDURE DESCRIPTION:

WARNING

Use EXTREME CARE and ALWAYS REMOVE POWER from all pertinent electrical equipment, which includes multiple power sources, before beginning maintenance. Refer to Section 7.3, "Lockout/Tagout Procedure" in the Operations and Maintenance Manual.

Monthly

1. Place oil absorbent pads beneath open gear to prevent grease from falling into waterway while removing/applying grease to the gear teeth.
2. Remove debris observed in the open gearing. Using a brush, evenly coat gear tooth surfaces with Mobil Mobiltac 325 NC.

Annually

1. Observe displacement patterns in open gearing lubricant for evidence of misalignment.
2. Place oil absorbent pads beneath open gear to prevent grease from falling into waterway while removing/applying grease to the gear teeth.
3. Remove old lubricant and debris by scraping the gear tooth surfaces and disposing of the lubricant in a tray or pan.
4. Apply CRC Quick Clean to remove existing lubrication on the gear teeth. With the use of a scraper and rags, remove the remaining grease and solvent and properly dispose of materials.
5. Inspect the gears for signs of abnormal wear or misalignment. Report abnormal wear or misalignment to bridge management.
6. Using a brush, evenly coat all gear tooth surfaces with Mobil Mobiltac 325 NC or equivalent lubricant.

Refer to Sections 8.3.4, 11.5.3, and 11.5.10 for additional component and material information. For lubrication coding details below, refer to Section 11.2, "Machinery Lubrication Schematics" in the Operations and Maintenance Manual.

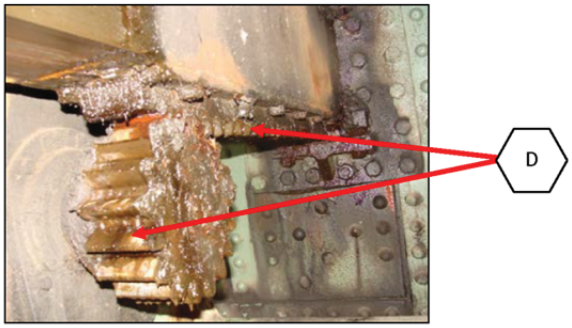

Span Lock Open Gearing

SCHEDULING CONSIDERATIONS:

Fresh grease should be applied to the open gearing monthly. Annually the rack and pinion should be cleaned, inspected, and lubricated.

Inspect and lubricate span lock machinery when the bridge opens more than 150 times between Spring and Fall maintenance routines or after an overstress situation such as a bound lock bar.

DELAWARE **DEPARTMENT OF TRANSPORTATION** **BRIDGE MANAGEMENT SECTION** **BRIDGE MAINTENANCE PERFORMANCE STANDARD**	**BRIDGE NUMBER** 1-687 **BMS ACTIVITY CODE** B070-S2J Page 2 of 2 **EFFECTIVE DATE**

ACTIVITY TITLE:	**UNIT OF MEASUREMENT:**
Span Lock Machinery Open Gearing Lubrication	Number of Span Lock Machinery Open Gears

WORK AREA, ACTIVITY DESCRIPTION & REQUIREMENTS:

The span lock machinery is located on the inboard side of the bascule girders at the toe of the south leaf. The rack is secured to the underside of each lock bar and the pinion is mounted to the span lock speed reducer output shaft. Tasks include locating, inspecting and lubricating both span lock systems on the bridge. Lockout/Tagout is required prior to performing any maintenance on this equipment. Report any significant defects to bridge management.

Qty	EQUIPMENT	Qty	MATERIAL
1	Scraper	~1/5 – 5 Gallon Bucket	Mobil Mobiltac 325 NC or equivalent
6	Oil absorbent pads		
1	Catch basin		
1	Bag of rags		
1	Brush		
1/Person	Tyvek Suit	~1 – 20 oz. Can	CRC Quick Clean or equivalent
1/Person	Set of chemical resistant Viton gloves		
1/Person	Chemical goggles and face shield		
1 / Person	Chemical respirator		

11.4.7.4 SPAN LOCK BAR, GUIDES AND RECEIVING SOCKET LUBRICATION

DELAWARE **DEPARTMENT OF TRANSPORTATION** **BRIDGE MANAGEMENT SECTION** **BRIDGE MAINTENANCE PERFORMANCE STANDARD**	**BRIDGE NUMBER** 1-687
	BMS ACTIVITY CODE B078-S2J
	EFFECTIVE DATE

ACTIVITY TITLE:	**UNIT OF MEASUREMENT:**
Span Lock Bar, Guide and Receiving Socket Lubrication	Number of Span Lock Bars, Guides and Receiving Sockets

PROCEDURE DESCRIPTION:

WARNING

Use EXTREME CARE and ALWAYS REMOVE POWER from all pertinent electrical equipment, which includes multiple power sources, before beginning maintenance. Refer to Section 7.3, "Lockout/Tagout Procedure" in the Operations and Maintenance Manual.

Monthly

1. With the lock bar fully retracted, remove the existing lubricant from the lock bar and receiving socket.
2. Visually inspect the front and rear guides, sockets, and fasteners for excessive wear or damage.
3. Brush or swab the top and bottom of the receiving socket and the sliding surfaces of the lock bar with Mobil Mobilux EP-2 or equivalent lubricant.

Refer to Sections 8.3.1, 11.5.1, and 11.5.10 for additional component and material information. For lubrication coding details below, refer to Section 11.2, "Machinery Lubrication Schematics" in the Operations and Maintenance Manual.

Front Guide

Rear Guide

Receiving Socket

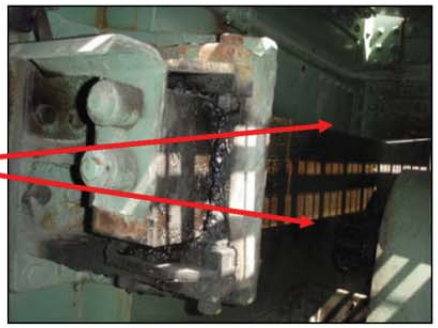

Lock Bar

SCHEDULING CONSIDERATIONS:

The span lock bar and receiving sockets should be lubricated on a monthly basis.

Inspect and lubricate span lock bar, guides and sockets when the span lock machinery has an overstress situation such as a bound lock bar.

Contact TMC to coordinate temporary closure of the bridge for maintenance.

DELAWARE **DEPARTMENT OF TRANSPORTATION** **BRIDGE MANAGEMENT SECTION** **BRIDGE MAINTENANCE PERFORMANCE STANDARD**	**BRIDGE NUMBER** 1-687
	BMS ACTIVITY CODE B078-S2J Page 2 of 2
	EFFECTIVE DATE

ACTIVITY TITLE:	**UNIT OF MEASUREMENT:**
Span Lock Bar, Guide and Receiving Socket Lubrication	Number of Span Lock Bars, Guides and Receiving Sockets

WORK AREA, ACTIVITY DESCRIPTION & REQUIREMENTS:

The span lock guides receiving sockets are located on the inboard side of each bascule girder at the toe of each span. The front guides are mounted to the south leaf Floorbeam 0 web. The rear guides are mounted to the bascule girder web. The receiving sockets are mounted to the north leaf Floorbeam 0 web. Tasks include locating, inspecting and lubricating all span lock guides and sockets on the bridge. Lockout/Tagout is required prior to performing any maintenance on this equipment. Report any significant defects to bridge management.

Qty	EQUIPMENT	Qty	MATERIAL
1	Bag of rags	~4 – 14 oz. Tubes	Mobil Mobilux EP-2 or equivalent
1	Scraper		
1	Catch basin		
1	Brush or swab		
1/Person	Tyvek Suit	~2 – 20 oz. Cans	CRC Quick Clean or equivalent
1/Person	Set of chemical resistant Viton gloves		
1/Person	Eye protection		
1/Person	Chemical respirator		

11.4.8 CENTERING GUIDE AND CENTERING DEVICE LUBRICATION

DELAWARE DEPARTMENT OF TRANSPORTATION BRIDGE MANAGEMENT SECTION BRIDGE MAINTENANCE PERFORMANCE STANDARD	BRIDGE NUMBER 1-687
	BMS ACTIVITY CODE B079-S2J
	EFFECTIVE DATE

ACTIVITY TITLE:	UNIT OF MEASUREMENT:
Centering Guide and Centering Device Lubrication	Number of Centering Guides and Centering Devices

PROCEDURE DESCRIPTION:

Monthly

1. Remove the existing lubricant from the centering guide components.
2. Visually inspect centering guide, centering device, wear plates, and fasteners for excessive wear or damage.
3. Brush or swab the sliding surfaces of the centering guide with Mobil Mobilux EP-2 or equivalent lubricant.

Refer to Sections 8.3.5, 11.5.1, and 11.5.10 for additional component and material information. For lubrication coding details below, refer to Section 11.2, "Machinery Lubrication Schematics" in the Operations and Maintenance Manual.

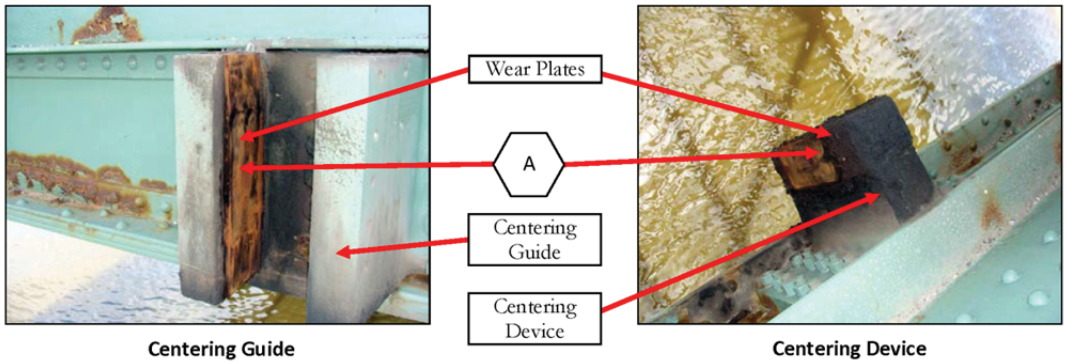

Centering Guide Centering Device

SCHEDULING CONSIDERATIONS:

Centering guide and centering device components should be lubricated monthly.

Contact TMC to coordinate temporary closure of the bridge for maintenance.

WORK AREA, ACTIVITY DESCRIPTION & REQUIREMENTS:

Centering guide components are located at the toe of each span, mounted to the web of Floorbeam 0 (per drawings). Tasks include locating, inspecting, and lubricating all centering guide components on the bridge with the appropriate lubricant. Report any significant defects to bridge management.

Qty	EQUIPMENT	Qty	MATERIAL
1	Bag of rags	~2 – 14 oz. Tubes	Mobil Mobilux EP-2 or equivalent
1	Scrapper		
1	Catch basin		
1	Brush or swab		
1/Person	Tyvek Suit	~1 – 20 oz. Can	CRC Quick Clean or equivalent
1/Person	Set of chemical resistant Viton gloves		
1/Person	Eye protection		
1/Person	Chemical respirator		

11.4.9 INSTRUMENTATION DRIVE CHAIN LUBRICATION

DELAWARE DEPARTMENT OF TRANSPORTATION BRIDGE MANAGEMENT SECTION BRIDGE MAINTENANCE PERFORMANCE STANDARD	BRIDGE NUMBER 1-687
	BMS ACTIVITY CODE B080-S2J
	EFFECTIVE DATE

ACTIVITY TITLE:	UNIT OF MEASUREMENT:
Instrumentation Drive Chain Lubrication	Number of Instrumentation Drive Chains

PROCEDURE DESCRIPTION:

WARNING

Use EXTREME CARE and ALWAYS REMOVE POWER from all pertinent electrical equipment, which includes multiple power sources, before beginning maintenance. Refer to Section 7.3, "Lockout/Tagout Procedure" in the Operations and Maintenance Manual.

Six Months

1. Clean instrumentation drive chain of dirt, debris, old grease, and any other potential contaminants with a rag and CRC Quick Clean or equivalent.
2. Inspect the chain and sprocket for damage.
3. Spray CRC TAC 2 Adhesive Chain Lubricant or equivalent onto the chain and sprocket teeth.
4. Wipe excess lubricant from the chain and sprockets with a rag and solvent cleaner.

Refer to Sections 8.2.6, 11.5.8, and 11.5.10 for additional component and material information. For lubrication coding details below, refer to Section 11.2 "Machinery Lubrication Schematics" in the Operations and Maintenance Manual.

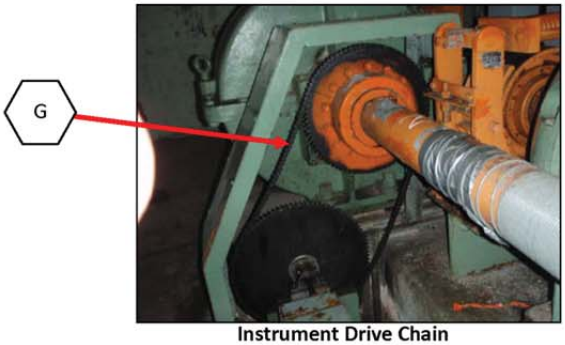

Instrument Drive Chain

SCHEDULING CONSIDERATIONS:

Instrumentation drive chains should be lubricated every six months.

WORK AREA, ACTIVITY DESCRIPTION & REQUIREMENTS:

Instrumentation drive chains are located adjacent to the primary reducers in each electrical/mechanical room. Tasks include locating, inspecting, and lubricating all instrumentation drive chains on the bridge. Lockout/Tagout is required prior to performing any maintenance on this equipment. Report any significant defects to bridge management.

Qty	EQUIPMENT	Qty	MATERIAL
1	Bag of rags	~½ - 16 oz. Can	CRC TAC 2 Chain Lubricant or equivalent
1/Person	Tyvek Suit		
1/Person	Set of chemical resistant Viton gloves	~½ - 20 oz. Can	CRC Quick Clean or equivalent
1/Person	Eye protection		
1/Person	Chemical respirator		

11.5 MATERIAL DATA SHEETS

11.5.1 MOBIL MOBILUX EP-0, EP-2

Mobil

Mobilux EP 0, 1, 2, 3, 460, 004 and 023

Grease

Product Description

Mobilux EP 0, 1, 2, 3, 460, 004 and 023 products are a high performance family of five general-purpose industrial greases and two special-duty semi-fluid greases. These lithium hydroxystearate greases are formulated to provide extra protection against wear, rusting and water washout. They are available in NLGI grades ranging from 00 to 3, with base oil viscosities ISO VG 150, 320 and 460.

Mobilux EP 0, 1, 2, 3 and 460 greases are recommended for most types of industrial applications including heavy-duty applications where high unit pressures or shock loads are present. These greases provide excellent protection against rust and corrosion and resist water wash-out which makes them particularly suitable for equipment where moist or wet conditions are common. Mobilux EP 0 and 1 are suitable for centralised systems. Mobilux EP 2 and 3 are general-purpose greases and Mobilux EP 460 is used in heavy-duty applications such as the wet ends of paper machines. The recommended operating temperature range is from -20°C to 130°C (0°C to 130°C for Mobilux EP 460) but they may be used at higher temperatures if the lubrication frequency is increased accordingly.

Mobilux EP 004 and Mobilux EP 023 are particularly suitable for the lubrication of enclosed gears and bearings in poorly sealed gear cases they can also be used in many other industrial applications where conventional gear oils cannot be retained in gear cases, chain cases, etc. because of leakage due to worn or missing seals. The recommended operating temperature range is -25 to 120°C for Mobilux EP 004 and -15 to 120°C for Mobilux EP 023.

Features and Benefits

Mobilux EP greases have a long history of proven performance and have demonstrated superior performance versus competitive products in the areas of corrosion protection, low temperature pumpability and high temperature service life. A Timken OK load of 40 lb illustrates their load carrying and extreme pressure capability.

- Reduced wear under heavy or shock loading and vibration for good equipment reliability and availability
- Protection against rust and corrosion and resistance to water washout for equipment protection and good lubrication even in presence of water
- Extended bearing life potential in wet environments for reduced bearing costs and unanticipated downtime
- Good pumpability in centralised systems (Mobilux EP 0 and 1)
- Effective leakage control (Mobilux EP 004 and Mobilux EP 023)

Applications

- Mobilux EP 0 and EP 1 provide good low temperature pumpability and are suitable for centralised lubrication systems and other applications where low temperature performance is required.
- Mobilux EP 2 is recommended for multipurpose applications in antifriction and plain bearings, bushings and pins under normal operating conditions.
- Mobilux EP 3 is a stiffer NLGI grade 3 grease recommended for applications where maximum protection against penetration of water or solid contaminants is required.

- Mobilux EP 460 is recommended for the lubrication of low to moderate speed, heavily loaded bearings including those subject to high unit pressures or shock loads. These include steel and paper mills, underground mining, tunnelling, ore crushing plants and other heavy-duty applications where moist or wet conditions are common.
- Mobilux EP 004 and Mobilux EP 023 are particularly suitable for the lubrication of enclosed gears and bearings in poorly sealed gear cases on most underground mining machinery with the exception of electric motor gearings. Mobilux EP 004 and Mobilux EP 023 can also be used in many other industrial applications where conventional gear oils cannot be retained in equipment such as gear cases, chain cases, because of leakage due to worn or missing seals. Mobilux EP 004 passes the SEW 1008 hour gear test requirement DR.EM.203 mod.

Specifications and Approvals

Mobilux EP meets or exceeds the requirements of:	Mobilux EP 0	Mobilux EP 1	Mobilux EP 2	Mobilux EP 3	Mobilux EP 460	Mobilux EP 004	Mobilux EP 023
DIN 51825: (2004-06)		KP1K-30	KP2K-30	KP3K-20	KP2K-20		
DIN 51826: (2005-01)	GP0G-20					GP00G-20	GP000G-20

Mobilux EP has the following builder approvals	Mobilux EP 0	Mobilux EP 1	Mobilux EP 2	Mobilux EP 3	Mobilux EP 460	Mobilux EP 004	Mobilux EP 023
SEW R32/302						X	

Typical Properties

	Mobilux EP 0	Mobilux EP 1	Mobilux EP 2	Mobilux EP 3	Mobilux EP 460	Mobilux EP 004	Mobilux EP 023
NLGI Grade	0	1	2	3	2	00	000
Thickener Type	Lithium	Lithium	Lithium	Lithium	Lithium	Lithium	Lithium
Color, Visual	Brown	Brown	Brown	Brown	Brown	Brown	Brown
Penetration, Worked, 25°C, ASTM D 217	370	325	280	235	280	415	460
Viscosity of Oil, ASTM D 445							
cSt @ 40°C	160	160	160	160	460	160	320
Timken OK Load, ASTM D 2509, lb	40	40	40	40	40	40	40
4-Ball Wear, ASTM D 2266, Scar, mm	0.4	0.4	0.4	0.4	0.4	0.5	0.4
4-Ball Weld Load, ASTM D 2596, Kg	250	250	250	250	250	250	250
Dropping Point, D 2265, C	190	190	190	190	190		
Rust Protection, ASTM D 6138, Distilled Water	0-0	0-0	0-0	0-0	0-0	0-0	0-0

Health and Safety

Based on available information, this product is not expected to produce adverse effects on health when used for the intended application and the recommendations provided in the Material Safety Data Sheet (MSDS) are followed. MSDS's are available upon request through your sales contract office, or via the Internet. This product should not be used for purposes other than its intended use. If disposing of used product, take care to protect the environment.

ExxonMobil

Product Name: MOBILUX EP 0
Revision Date: 30May2007
Page 1 of 8

MATERIAL SAFETY DATA SHEET

SECTION 1 PRODUCT AND COMPANY IDENTIFICATION

PRODUCT

Product Name: **MOBILUX EP 0**
Product Description: Base Oil and Additives
Product Code: 2015A0208030, 641290-00, 971553
Intended Use: Grease

COMPANY IDENTIFICATION

Supplier: **EXXON MOBIL CORPORATION**
3225 GALLOWS RD.
FAIRFAX, VA. 22037 USA

24 Hour Health Emergency	609-737-4411
Transportation Emergency Phone	800-424-9300
ExxonMobil Transportation No.	281-834-3296
MSDS Requests	713-613-3661
Product Technical Information	800-662-4525, 800-947-9147
MSDS Internet Address	http://www.exxon.com, http://www.mobil.com

SECTION 2 COMPOSITION / INFORMATION ON INGREDIENTS

Reportable Hazardous Substance(s) or Complex Substance(s)

Name	CAS#	Concentration*
ZINC DITHIOPHOSPHATE	68649-42-3	< 2.5%

* All concentrations are percent by weight unless material is a gas. Gas concentrations are in percent by volume.

SECTION 3 HAZARDS IDENTIFICATION

This material is not considered to be hazardous according to regulatory guidelines (see (M)SDS Section 15).

POTENTIAL HEALTH EFFECTS

Low order of toxicity. Excessive exposure may result in eye, skin, or respiratory irritation. High-pressure injection under skin may cause serious damage.

NFPA Hazard ID:	Health:	0	Flammability:	1	Reactivity:	0
HMIS Hazard ID:	Health:	0	Flammability:	1	Reactivity:	0

NOTE: This material should not be used for any other purpose than the intended use in Section 1 without expert advice. Health studies have shown that chemical exposure may cause potential human health risks which may vary from person to person.

SECTION 4 FIRST AID MEASURES

INHALATION

Under normal conditions of intended use, this material is not expected to be an inhalation hazard.

SKIN CONTACT

Wash contact areas with soap and water. If product is injected into or under the skin, or into any part of the body, regardless of the appearance of the wound or its size, the individual should be evaluated immediately by a physician as a surgical emergency. Even though initial symptoms from high pressure injection may be minimal or absent, early surgical treatment within the first few hours may significantly reduce the ultimate extent of injury.

EYE CONTACT

Flush thoroughly with water. If irritation occurs, get medical assistance.

INGESTION

First aid is normally not required. Seek medical attention if discomfort occurs.

SECTION 5 FIRE FIGHTING MEASURES

EXTINGUISHING MEDIA

Appropriate Extinguishing Media: Use water fog, foam, dry chemical or carbon dioxide (CO2) to extinguish flames.

Inappropriate Extinguishing Media: Straight Streams of Water

FIRE FIGHTING

Fire Fighting Instructions: Evacuate area. Prevent runoff from fire control or dilution from entering streams, sewers, or drinking water supply. Firefighters should use standard protective equipment and in enclosed spaces, self-contained breathing apparatus (SCBA). Use water spray to cool fire exposed surfaces and to protect personnel.

Hazardous Combustion Products: Aldehydes, Oxides of carbon, Smoke, Fume, Sulfur oxides, Incomplete combustion products

FLAMMABILITY PROPERTIES

Flash Point [Method]: >204C (400F) [EST. FOR OIL, ASTM D-92 (COC)]
Flammable Limits (Approximate volume % in air): LEL: N/D UEL: N/D
Autoignition Temperature: N/D

SECTION 6 ACCIDENTAL RELEASE MEASURES

NOTIFICATION PROCEDURES

In the event of a spill or accidental release, notify relevant authorities in accordance with all applicable regulations. In the event of a spill or accidental release, notify relevant authorities in accordance with all applicable regulations. US regulations require reporting releases of this material to the environment which exceed the applicable reportable quantity or oil spills which could reach any waterway including intermittent dry creeks. The National Response Center can be reached at (800)424-8802.

ExxonMobil

Product Name: MOBILUX EP 0
Revision Date: 30May2007
Page 3 of 8

SPILL MANAGEMENT

Land Spill: Allow spilled material to solidify and scrape up with shovels into a suitable container for recycle or disposal. Scrape up spilled material with shovels into a suitable container for recycle or disposal.

Water Spill: Stop leak if you can do it without risk. Confine the spill immediately with booms. Warn other shipping. Skim from surface.

Water spill and land spill recommendations are based on the most likely spill scenario for this material; however, geographic conditions, wind, temperature, (and in the case of a water spill) wave and current direction and speed may greatly influence the appropriate action to be taken. For this reason, local experts should be consulted. Note: Local regulations may prescribe or limit action to be taken.

ENVIRONMENTAL PRECAUTIONS

Prevent entry into waterways, sewers, basements or confined areas.

SECTION 7 HANDLING AND STORAGE

HANDLING

Prevent small spills and leakage to avoid slip hazard.

Static Accumulator: This material is not a static accumulator.

STORAGE

Do not store in open or unlabelled containers.

SECTION 8 EXPOSURE CONTROLS / PERSONAL PROTECTION

EXPOSURE LIMIT VALUES

NOTE: Limits/standards shown for guidance only. Follow applicable regulations.

ENGINEERING CONTROLS

The level of protection and types of controls necessary will vary depending upon potential exposure conditions. Control measures to consider:

No special requirements under ordinary conditions of use and with adequate ventilation.

PERSONAL PROTECTION

Personal protective equipment selections vary based on potential exposure conditions such as applications, handling practices, concentration and ventilation. Information on the selection of protective equipment for use with this material, as provided below, is based upon intended, normal usage.

Respiratory Protection: If engineering controls do not maintain airborne contaminant concentrations at a level which is adequate to protect worker health, an approved respirator may be appropriate. Respirator selection, use, and maintenance must be in accordance with regulatory requirements, if applicable. Types of

respirators to be considered for this material include:
No protection is ordinarily required under normal conditions of use and with adequate ventilation.

For high airborne concentrations, use an approved supplied-air respirator, operated in positive pressure mode. Supplied air respirators with an escape bottle may be appropriate when oxygen levels are inadequate, gas/vapor warning properties are poor, or if air purifying filter capacity/rating may be exceeded.

Hand Protection: Any specific glove information provided is based on published literature and glove manufacturer data. Work conditions can greatly affect glove durability; inspect and replace worn or damaged gloves. The types of gloves to be considered for this material include:
No protection is ordinarily required under normal conditions of use.

Eye Protection: If contact is likely, safety glasses with side shields are recommended.

Skin and Body Protection: Any specific clothing information provided is based on published literature or manufacturer data. The types of clothing to be considered for this material include:
No skin protection is ordinarily required under normal conditions of use. In accordance with good industrial hygiene practices, precautions should be taken to avoid skin contact.

Specific Hygiene Measures: Always observe good personal hygiene measures, such as washing after handling the material and before eating, drinking, and/or smoking. Routinely wash work clothing and protective equipment to remove contaminants. Discard contaminated clothing and footwear that cannot be cleaned. Practice good housekeeping.

ENVIRONMENTAL CONTROLS
See Sections 6, 7, 12, 13.

SECTION 9 PHYSICAL AND CHEMICAL PROPERTIES

Typical physical and chemical properties are given below. Consult the Supplier in Section 1 for additional data.

GENERAL INFORMATION
Physical State: Solid
Form: Semi-fluid
Color: Brown
Odor: Characteristic
Odor Threshold: N/D

IMPORTANT HEALTH, SAFETY, AND ENVIRONMENTAL INFORMATION
Relative Density (at 15 C): 0.918
Flash Point [Method]: >204C (400F) [EST. FOR OIL, ASTM D-92 (COC)]
Flammable Limits (Approximate volume % in air): LEL: N/D UEL: N/D
Autoignition Temperature: N/D
Boiling Point / Range: > 316C (600F)
Vapor Density (Air = 1): N/D
Vapor Pressure: < 0.013 kPa (0.1 mm Hg) at 20 C
Evaporation Rate (n-butyl acetate = 1): N/D
pH: N/A
Log Pow (n-Octanol/Water Partition Coefficient): > 3.5
Solubility in Water: Negligible

ExxonMobil

Product Name: MOBILUX EP 0
Revision Date: 30May2007
Page 5 of 8

Viscosity: 150 cSt (150 mm2/sec) at 40 C
Oxidizing Properties: See Sections 3, 15, 16.

OTHER INFORMATION
Freezing Point: N/D
Melting Point: N/D
DMSO Extract (mineral oil only), IP-346: < 3 %wt

NOTE: Most physical properties above are for the oil component in the material.

SECTION 10 STABILITY AND REACTIVITY

STABILITY: Material is stable under normal conditions.

CONDITIONS TO AVOID: Excessive heat. High energy sources of ignition.

MATERIALS TO AVOID: Strong oxidizers

HAZARDOUS DECOMPOSITION PRODUCTS: Material does not decompose at ambient temperatures.

HAZARDOUS POLYMERIZATION: Will not occur.

SECTION 11 TOXICOLOGICAL INFORMATION

ACUTE TOXICITY

Route of Exposure	Conclusion / Remarks
Inhalation	
Toxicity (Rat): LC50 > 5000 mg/m3	Minimally Toxic. Based on assessment of the components.
Irritation: No end point data.	Negligible hazard at ambient/normal handling temperatures. Based on assessment of the components.
Ingestion	
Toxicity (Rat): LD50 > 2000 mg/kg	Minimally Toxic. Based on test data for structurally similar materials.
Skin	
Toxicity (Rabbit): LD50 > 2000 mg/kg	Minimally Toxic. Based on test data for structurally similar materials.
Irritation (Rabbit): Data available.	Negligible irritation to skin at ambient temperatures. Based on assessment of the components.
Eye	
Irritation (Rabbit): Data available.	May cause mild, short-lasting discomfort to eyes. Based on assessment of the components.

CHRONIC/OTHER EFFECTS
Contains:
Base oil severely refined: Not carcinogenic in animal studies. Representative material passes IP-346, Modified Ames test, and/or other screening tests. Dermal and inhalation studies showed minimal effects; lung non-specific infiltration of immune cells, oil deposition and minimal granuloma formation. Not sensitizing in test animals.

Additional information is available by request.

The following ingredients are cited on the lists below: None.

--REGULATORY LISTS SEARCHED--

1 = NTP CARC	3 = IARC 1	5 = IARC 2B
2 = NTP SUS	4 = IARC 2A	6 = OSHA CARC

SECTION 12 ECOLOGICAL INFORMATION

The information given is based on data available for the material, the components of the material, and similar materials.

ECOTOXICITY

Material -- Not expected to be harmful to aquatic organisms.

MOBILITY

Base oil component -- Low solubility and floats and is expected to migrate from water to the land. Expected to partition to sediment and wastewater solids.

PERSISTENCE AND DEGRADABILITY

Biodegradation:

Base oil component -- Expected to be inherently biodegradable

BIOACCUMULATION POTENTIAL

Base oil component -- Has the potential to bioaccumulate, however metabolism or physical properties may reduce the bioconcentration or limit bioavailability.

SECTION 13 DISPOSAL CONSIDERATIONS

Disposal recommendations based on material as supplied. Disposal must be in accordance with current applicable laws and regulations, and material characteristics at time of disposal.

DISPOSAL RECOMMENDATIONS

Product is suitable for burning in an enclosed controlled burner for fuel value or disposal by supervised incineration at very high temperatures to prevent formation of undesirable combustion products.

REGULATORY DISPOSAL INFORMATION

RCRA Information: The unused product, in our opinion, is not specifically listed by the EPA as a hazardous waste (40 CFR, Part 261D), nor is it formulated to contain materials which are listed as hazardous wastes. It does not exhibit the hazardous characteristics of ignitability, corrosivity or reactivity and is not formulated with contaminants as determined by the Toxicity Characteristic Leaching Procedure (TCLP). However, used product may be regulated.

Empty Container Warning Empty Container Warning (where applicable): Empty containers may contain residue and can be dangerous. Do not attempt to refill or clean containers without proper instructions. Empty drums should be completely drained and safely stored until appropriately reconditioned or disposed. Empty containers should be taken

ExxonMobil

Product Name: MOBILUX EP 0
Revision Date: 30May2007
Page 7 of 8

for recycling, recovery, or disposal through suitably qualified or licensed contractor and in accordance with governmental regulations. DO NOT PRESSURISE, CUT, WELD, BRAZE, SOLDER, DRILL, GRIND, OR EXPOSE SUCH CONTAINERS TO HEAT, FLAME, SPARKS, STATIC ELECTRICITY, OR OTHER SOURCES OF IGNITION. THEY MAY EXPLODE AND CAUSE INJURY OR DEATH.

SECTION 14 TRANSPORT INFORMATION

LAND (DOT) : Not Regulated for Land Transport

LAND (TDG) : Not Regulated for Land Transport

SEA (IMDG) : Not Regulated for Sea Transport according to IMDG-Code

AIR (IATA) : Not Regulated for Air Transport

SECTION 15 REGULATORY INFORMATION

OSHA HAZARD COMMUNICATION STANDARD: When used for its intended purposes, this material is not classified as hazardous in accordance with OSHA 29 CFR 1910.1200.

NATIONAL CHEMICAL INVENTORY LISTING: DSL, EINECS, KECI, PICCS, TSCA
Special Cases:

Inventory	Status
AICS	Restrictions Apply

EPCRA: This material contains no extremely hazardous substances.

SARA (311/312) REPORTABLE HAZARD CATEGORIES: None.

SARA (313) TOXIC RELEASE INVENTORY:

Chemical Name	CAS Number	Typical Value
ZINC DITHIOPHOSPHATE	68649-42-3	< 2.5%

The Following Ingredients are Cited on the Lists Below:*

Chemical Name	CAS Number	List Citations
DIPHENYLAMINE	122-39-4	5, 9, 18
PHOSPHORUS	7723-14-0	1, 4
ZINC DITHIOPHOSPHATE	68649-42-3	13, 15, 17

--REGULATORY LISTS SEARCHED--

1 = ACGIH ALL	6 = TSCA 5a2	11 = CA P65 REPRO	16 = MN RTK
2 = ACGIH A1	7 = TSCA 5e	12 = CA RTK	17 = NJ RTK
3 = ACGIH A2	8 = TSCA 6	13 = IL RTK	18 = PA RTK
4 = OSHA Z	9 = TSCA 12b	14 = LA RTK	19 = RI RTK

ExxonMobil

Product Name: MOBILUX EP 0
Revision Date: 30May2007
Page 8 of 8

5 = TSCA 4 10 = CA P65 CARC 15 = MI 293

Code key: CARC=Carcinogen; REPRO=Reproductive

* EPA recently added new chemical substances to its TSCA Section 4 test rules. Please contact the supplier to confirm whether the ingredients in this product currently appear on a TSCA 4 or TSCA 12b list.

SECTION 16 OTHER INFORMATION

N/D = Not determined, N/A = Not applicable

THIS SAFETY DATA SHEET CONTAINS THE FOLLOWING REVISIONS:
Revision Changes:
Section 13: Empty Container Warning was modified.
Section 08: Hand Protection was modified.
Section 06: Notification Procedures was modified.
Section 02: Primary Ingredient Name was deleted.
Section 02: CAS Number was deleted.
Section 02: Concentration - Header was deleted.
Section 02: Constituents Table - Header was deleted.
Section 02: Component table was deleted.
Section 08: Exposure Limits Table was deleted.
Section 08: OEL Table - Form Column - Header was deleted.
Section 08: OEL Table - Limit Column - Header was deleted.
Section 08: OEL Table - Notation Column - Header was deleted.
Section 08: OEL Table - Source Column - Header was deleted.
Section 08: Exposure Limit Values - Header was deleted.

The information and recommendations contained herein are, to the best of ExxonMobil's knowledge and belief, accurate and reliable as of the date issued. You can contact ExxonMobil to insure that this document is the most current available from ExxonMobil. The information and recommendations are offered for the user's consideration and examination. It is the user's responsibility to satisfy itself that the product is suitable for the intended use. If buyer repackages this product, it is the user's responsibility to insure proper health, safety and other necessary information is included with and/or on the container. Appropriate warnings and safe-handling procedures should be provided to handlers and users. Alteration of this document is strictly prohibited. Except to the extent required by law, re-publication or retransmission of this document, in whole or in part, is not permitted. The term, "ExxonMobil" is used for convenience, and may include any one or more of ExxonMobil Chemical Company, Exxon Mobil Corporation, or any affiliates in which they directly or indirectly hold any interest.

Internal Use Only
MHC: 0, 0, 0, 0, 0, 0 PPEC: A

DGN: 2009904XUS (553448)

Copyright 2002 Exxon Mobil Corporation, All rights reserved

ExxonMobil

Product Name: MOBILUX EP 2
Revision Date: 21 Jul 2009
Page 1 of 9

MATERIAL SAFETY DATA SHEET

SECTION 1 PRODUCT AND COMPANY IDENTIFICATION

PRODUCT

Product Name: **MOBILUX EP 2**
Product Description: Base Oil and Additives
Product Code: 641274-00, 970717
Intended Use: Grease

COMPANY IDENTIFICATION

Supplier: **EXXON MOBIL CORPORATION**
3225 GALLOWS RD.
FAIRFAX, VA. 22037 USA

24 Hour Health Emergency	609-737-4411
Transportation Emergency Phone	800-424-9300
ExxonMobil Transportation No.	281-834-3296
Product Technical Information	800-662-4525, 800-947-9147
MSDS Internet Address	http://www.exxon.com, http://www.mobil.com

SECTION 2 COMPOSITION / INFORMATION ON INGREDIENTS

Reportable Hazardous Substance(s) or Complex Substance(s)

Name	CAS#	Concentration*
ZINC DITHIOPHOSPHATE	68649-42-3	< 2.5%

* All concentrations are percent by weight unless material is a gas. Gas concentrations are in percent by volume.

SECTION 3 HAZARDS IDENTIFICATION

This material is not considered to be hazardous according to regulatory guidelines (see (M)SDS Section 15).

POTENTIAL HEALTH EFFECTS

Low order of toxicity. Excessive exposure may result in eye, skin, or respiratory irritation. High-pressure injection under skin may cause serious damage.

NFPA Hazard ID:	Health:	0	Flammability:	1	Reactivity:	0
HMIS Hazard ID:	Health:	0	Flammability:	1	Reactivity:	0

NOTE: This material should not be used for any other purpose than the intended use in Section 1 without expert advice. Health studies have shown that chemical exposure may cause potential human health risks which may vary from person to person.

SECTION 4 FIRST AID MEASURES

Inhalation

Under normal conditions of intended use, this material is not expected to be an inhalation hazard.

SKIN CONTACT

Wash contact areas with soap and water. If product is injected into or under the skin, or into any part of the body, regardless of the appearance of the wound or its size, the individual should be evaluated immediately by a physician as a surgical emergency. Even though initial symptoms from high pressure injection may be minimal or absent, early surgical treatment within the first few hours may significantly reduce the ultimate extent of injury.

EYE CONTACT

Flush thoroughly with water. If irritation occurs, get medical assistance.

Ingestion

First aid is normally not required. Seek medical attention if discomfort occurs.

SECTION 5 FIRE FIGHTING MEASURES

EXTINGUISHING MEDIA

Appropriate Extinguishing Media: Use water fog, foam, dry chemical or carbon dioxide (CO2) to extinguish flames.

Inappropriate Extinguishing Media: Straight Streams of Water

FIRE FIGHTING

Fire Fighting Instructions: Evacuate area. Prevent runoff from fire control or dilution from entering streams, sewers, or drinking water supply. Firefighters should use standard protective equipment and in enclosed spaces, self-contained breathing apparatus (SCBA). Use water spray to cool fire exposed surfaces and to protect personnel.

Hazardous Combustion Products: Smoke, Fume, Aldehydes, Sulfur Oxides, Incomplete combustion products, Oxides of carbon

FLAMMABILITY PROPERTIES

Flash Point [Method]: >204C (400F) [EST. FOR OIL, ASTM D-92 (COC)]
Flammable Limits (Approximate volume % in air): LEL: N/D UEL: N/D
Autoignition Temperature: N/D

SECTION 6 ACCIDENTAL RELEASE MEASURES

NOTIFICATION PROCEDURES

In the event of a spill or accidental release, notify relevant authorities in accordance with all applicable regulations. US regulations require reporting releases of this material to the environment which exceed the applicable reportable quantity or oil spills which could reach any waterway including intermittent dry creeks. The National Response Center can be reached at (800)424-8802.

ExxonMobil

Product Name: MOBILUX EP 2
Revision Date: 21 Jul 2009
Page 3 of 9

SPILL MANAGEMENT

Land Spill: Allow spilled material to solidify and scrape up with shovels into a suitable container for recycle or disposal. Scrape up spilled material with shovels into a suitable container for recycle or disposal.

Water Spill: Stop leak if you can do it without risk. Confine the spill immediately with booms. Warn other shipping. Skim from surface.

Water spill and land spill recommendations are based on the most likely spill scenario for this material; however, geographic conditions, wind, temperature, (and in the case of a water spill) wave and current direction and speed may greatly influence the appropriate action to be taken. For this reason, local experts should be consulted. Note: Local regulations may prescribe or limit action to be taken.

ENVIRONMENTAL PRECAUTIONS

Prevent entry into waterways, sewers, basements or confined areas.

SECTION 7 HANDLING AND STORAGE

HANDLING

Prevent small spills and leakage to avoid slip hazard.

Static Accumulator: This material is not a static accumulator.

STORAGE

Do not store in open or unlabelled containers.

SECTION 8 EXPOSURE CONTROLS / PERSONAL PROTECTION

EXPOSURE LIMIT VALUES

NOTE: Limits/standards shown for guidance only. Follow applicable regulations.

ENGINEERING CONTROLS

The level of protection and types of controls necessary will vary depending upon potential exposure conditions. Control measures to consider:

No special requirements under ordinary conditions of use and with adequate ventilation.

PERSONAL PROTECTION

Personal protective equipment selections vary based on potential exposure conditions such as applications, handling practices, concentration and ventilation. Information on the selection of protective equipment for use with this material, as provided below, is based upon intended, normal usage.

Respiratory Protection: If engineering controls do not maintain airborne contaminant concentrations at a level which is adequate to protect worker health, an approved respirator may be appropriate. Respirator selection, use, and maintenance must be in accordance with regulatory requirements, if applicable. Types of respirators to be considered for this material include:

No protection is ordinarily required under normal conditions of use and with adequate ventilation.

For high airborne concentrations, use an approved supplied-air respirator, operated in positive pressure mode. Supplied air respirators with an escape bottle may be appropriate when oxygen levels are inadequate, gas/vapor warning properties are poor, or if air purifying filter capacity/rating may be exceeded.

Hand Protection: Any specific glove information provided is based on published literature and glove manufacturer data. Glove suitability and breakthrough time will differ depending on the specific use conditions. Contact the glove manufacturer for specific advice on glove selection and breakthrough times for your use conditions. Inspect and replace worn or damaged gloves. The types of gloves to be considered for this material include:

No protection is ordinarily required under normal conditions of use.

Eye Protection: If contact is likely, safety glasses with side shields are recommended.

Skin and Body Protection: Any specific clothing information provided is based on published literature or manufacturer data. The types of clothing to be considered for this material include:

No skin protection is ordinarily required under normal conditions of use. In accordance with good industrial hygiene practices, precautions should be taken to avoid skin contact.

Specific Hygiene Measures: Always observe good personal hygiene measures, such as washing after handling the material and before eating, drinking, and/or smoking. Routinely wash work clothing and protective equipment to remove contaminants. Discard contaminated clothing and footwear that cannot be cleaned. Practice good housekeeping.

ENVIRONMENTAL CONTROLS

See Sections 6, 7, 12, 13.

SECTION 9 PHYSICAL AND CHEMICAL PROPERTIES

Typical physical and chemical properties are given below. Consult the Supplier in Section 1 for additional data.

GENERAL INFORMATION

Physical State: Solid
Form: semi-fluid
Color: brown
Odor: Characteristic
Odor Threshold: N/D

IMPORTANT HEALTH, SAFETY, AND ENVIRONMENTAL INFORMATION

Relative Density (at 15 C): 0.92
Flash Point [Method]: >204C (400F) [EST. FOR OIL, ASTM D-92 (COC)]
Flammable Limits (Approximate volume % in air): LEL: N/D UEL: N/D
Autoignition Temperature: N/D
Boiling Point / Range: > 316C (600F)
Vapor Density (Air = 1): N/D
Vapor Pressure: < 0.013 kPa (0.1 mm Hg) at 20 C
Evaporation Rate (N-Butyl Acetate = 1): N/D
pH: N/A
Log Pow (n-Octanol/Water Partition Coefficient): > 3.5

Solubility in Water: Negligible
Viscosity: 150 cSt (150 mm²/sec) at 40 C
Oxidizing Properties: See Sections 3, 15, 16.

OTHER INFORMATION

Freezing Point: N/D
Melting Point: N/D
DMSO Extract (mineral oil only), IP-346: < 3 %wt

NOTE: Most physical properties above are for the oil component in the material.

SECTION 10 STABILITY AND REACTIVITY

STABILITY: Material is stable under normal conditions.

CONDITIONS TO AVOID: Excessive heat. High energy sources of ignition.

MATERIALS TO AVOID: Strong oxidizers

HAZARDOUS DECOMPOSITION PRODUCTS: Material does not decompose at ambient temperatures.

HAZARDOUS POLYMERIZATION: Will not occur.

SECTION 11 TOXICOLOGICAL INFORMATION

ACUTE TOXICITY

Route of Exposure	Conclusion / Remarks
Inhalation	
Toxicity: No end point data.	Minimally Toxic. Based on assessment of the components.
Irritation: No end point data.	Negligible hazard at ambient/normal handling temperatures. Based on assessment of the components.
Ingestion	
Toxicity (Rat): LD50 > 5000 mg/kg	Minimally Toxic. Based on test data for structurally similar materials.
Skin	
Toxicity (Rabbit): LD50 > 5000 mg/kg	Minimally Toxic. Based on test data for structurally similar materials.
Irritation (Rabbit): Data available.	Negligible irritation to skin at ambient temperatures. Based on assessment of the components.
Eye	
Irritation (Rabbit): Data available.	May cause mild, short-lasting discomfort to eyes. Based on assessment of the components.

CHRONIC/OTHER EFFECTS

Contains:

Base oil severely refined: Not carcinogenic in animal studies. Representative material passes IP-346, Modified Ames test, and/or other screening tests. Dermal and inhalation studies showed minimal effects; lung non-specific infiltration of immune cells, oil deposition and minimal granuloma formation. Not sensitizing in test animals.

Additional information is available by request.

The following ingredients are cited on the lists below: None.

--REGULATORY LISTS SEARCHED--

1 = NTP CARC	3 = IARC 1	5 = IARC 2B
2 = NTP SUS	4 = IARC 2A	6 = OSHA CARC

SECTION 12 ECOLOGICAL INFORMATION

The information given is based on data available for the material, the components of the material, and similar materials.

ECOTOXICITY

Material -- Not expected to be harmful to aquatic organisms.

MOBILITY

Base oil component -- Low solubility and floats and is expected to migrate from water to the land. Expected to partition to sediment and wastewater solids.

PERSISTENCE AND DEGRADABILITY

Biodegradation:

Base oil component -- Expected to be inherently biodegradable

BIOACCUMULATION POTENTIAL

Base oil component -- Has the potential to bioaccumulate, however metabolism or physical properties may reduce the bioconcentration or limit bioavailability.

SECTION 13 DISPOSAL CONSIDERATIONS

Disposal recommendations based on material as supplied. Disposal must be in accordance with current applicable laws and regulations, and material characteristics at time of disposal.

DISPOSAL RECOMMENDATIONS

Product is suitable for burning in an enclosed controlled burner for fuel value or disposal by supervised incineration at very high temperatures to prevent formation of undesirable combustion products.

REGULATORY DISPOSAL INFORMATION

RCRA Information: The unused product, in our opinion, is not specifically listed by the EPA as a hazardous waste (40 CFR, Part 261D), nor is it formulated to contain materials which are listed as hazardous wastes. It does not exhibit the hazardous characteristics of ignitability, corrosivity or reactivity and is not formulated with contaminants as determined by the Toxicity Characteristic Leaching Procedure (TCLP). However, used product may be regulated.

Empty Container Warning Empty Container Warning (where applicable): Empty containers may contain residue and can be dangerous. Do not attempt to refill or clean containers without proper instructions. Empty drums should be

ExxonMobil

Product Name: MOBILUX EP 2
Revision Date: 21 Jul 2009
Page 7 of 9

completely drained and safely stored until appropriately reconditioned or disposed. Empty containers should be taken for recycling, recovery, or disposal through suitably qualified or licensed contractor and in accordance with governmental regulations. DO NOT PRESSURISE, CUT, WELD, BRAZE, SOLDER, DRILL, GRIND, OR EXPOSE SUCH CONTAINERS TO HEAT, FLAME, SPARKS, STATIC ELECTRICITY, OR OTHER SOURCES OF IGNITION. THEY MAY EXPLODE AND CAUSE INJURY OR DEATH.

SECTION 14 TRANSPORT INFORMATION

LAND (DOT) : Not Regulated for Land Transport

LAND (TDG) : Not Regulated for Land Transport

SEA (IMDG) : Not Regulated for Sea Transport according to IMDG-Code

AIR (IATA) : Not Regulated for Air Transport

SECTION 15 REGULATORY INFORMATION

OSHA HAZARD COMMUNICATION STANDARD: When used for its intended purposes, this material is not classified as hazardous in accordance with OSHA 29 CFR 1910.1200.

NATIONAL CHEMICAL INVENTORY LISTING: AICS, IECSC, DSL, EINECS, KECI, PICCS, TSCA

EPCRA: This material contains no extremely hazardous substances.

SARA (311/312) REPORTABLE HAZARD CATEGORIES: None.

SARA (313) TOXIC RELEASE INVENTORY:

Chemical Name	CAS Number	Typical Value
ZINC DITHIOPHOSPHATE	68649-42-3	< 2.5%

The following ingredients are cited on the lists below:

Chemical Name	CAS Number	List Citations
DIPHENYLAMINE	122-39-4	5, 18
ZINC DITHIOPHOSPHATE	68649-42-3	13, 15, 17

--REGULATORY LISTS SEARCHED--

1 = ACGIH ALL	6 = TSCA 5a2	11 = CA P65 REPRO	16 = MN RTK
2 = ACGIH A1	7 = TSCA 5e	12 = CA RTK	17 = NJ RTK
3 = ACGIH A2	8 = TSCA 6	13 = IL RTK	18 = PA RTK
4 = OSHA Z	9 = TSCA 12b	14 = LA RTK	19 = RI RTK
5 = TSCA 4	10 = CA P65 CARC	15 = MI 293	

ExxonMobil

Product Name: MOBILUX EP 2
Revision Date: 21 Jul 2009
Page 8 of 9

Code key: CARC=Carcinogen; REPRO=Reproductive

SECTION 16 OTHER INFORMATION

N/D = Not determined, N/A = Not applicable

THIS SAFETY DATA SHEET CONTAINS THE FOLLOWING REVISIONS:

Revision Changes:
Section 04: First Aid Inhalation - Header was modified.
Section 04: First Aid Ingestion - Header was modified.
Section 04: First Aid Inhalation was modified.
Section 06: Notification Procedures - Header was modified.
Section 10 Stability and Reactivity - Header was modified.
Section 13: Disposal Recommendations - Note was modified.
Section 13: Empty Container Warning was modified.
Section 09: Physical State was modified.
Section 09: Color was modified.
Section 09: Boiling Point C(F) was modified.
Section 09: Evaporation Rate - Header was modified.
Section 08: Personal Protection was modified.
Section 08: Hand Protection was modified.
Section 09: Vapor Pressure was modified.
Section 07: Handling and Storage - Handling was modified.
Hazard Identification: Health Hazards was modified.
Section 11: Dermal Lethality Test Data was modified.
Section 11: Oral Lethality Test Data was modified.
Section 11: Inhalation Lethality Test Data was modified.
Section 05: Hazardous Combustion Products was modified.
Section 06: Accidental Release - Spill Management - Land was modified.
Section 06: Accidental Release - Spill Management - Water was modified.
Section 09: Relative Density - Header was modified.
Section 09: Flash Point C(F) was modified.
Section 09: Viscosity was modified.
Section 15: List Citations Table was modified.
Section 15: List Citation Table - Header was modified.
Section 11: Skin Irritation Conclusion was modified.
Section 11: Inhalation Lethality Test Comment was modified.
Section 15: National Chemical Inventory Listing was modified.
Section 16: Code to MHCs was modified.
Section 15: OSHA Hazard Communication Standard was modified.
Hazard Identification: OSHA - May be Hazardous Statement was modified.
Section 06: Notification Procedures was modified.
Section 01: Company Contact Methods Sorted by Priority was modified.
Section 08: Exposure Limit Values - Header was added.
Section 08: Exposure limits/standards was deleted.
Section 15: Special Cases - Header was deleted.
Section 15: Special Cases Table was deleted.
Section 15: Inventory - Header was deleted.
Section 15: Status - Header was deleted.

ExxonMobil

Product Name: MOBILUX EP 2
Revision Date: 21 Jul 2009
Page 9 of 9

The information and recommendations contained herein are, to the best of ExxonMobil's knowledge and belief, accurate and reliable as of the date issued. You can contact ExxonMobil to insure that this document is the most current available from ExxonMobil. The information and recommendations are offered for the user's consideration and examination. It is the user's responsibility to satisfy itself that the product is suitable for the intended use. If buyer repackages this product, it is the user's responsibility to insure proper health, safety and other necessary information is included with and/or on the container. Appropriate warnings and safe-handling procedures should be provided to handlers and users. Alteration of this document is strictly prohibited. Except to the extent required by law, re-publication or retransmission of this document, in whole or in part, is not permitted. The term, "ExxonMobil" is used for convenience, and may include any one or more of ExxonMobil Chemical Company, Exxon Mobil Corporation, or any affiliates in which they directly or indirectly hold any interest.

Internal Use Only
MHC: 0B, 0B, 0, 0, 0, 0 PPEC: A

DGN: 2009877XUS (539035)

Copyright 2002 Exxon Mobil Corporation, All rights reserved

11.5.2 FALK LONG TERM GREASE

FALK®

LONG LTG TERM GREASE

High Speed Grease Centrifuge

Typical Grease After Centrifuging

Facts on Lubrication

Separation Grease is a blend of oil and a thickener or soap. These compounds are not very stable and will eventually bleed or separate under the high centrifugal forces generated in many coupling applications. Once a grease begins to separate, the thickener accumulates in the areas where lubrication is required, and rapid wear of the contacting surfaces occurs. The oil is now free to leak out of the coupling past the seals, causing premature failure of the coupling.

Service Intervals for All-Purpose Greases It is common practice to lubricate all rotating equipment with one or two all purpose greases.

Most greases which are used as coupling lubricants were initially developed as bearing lubricants.

Bearing greases have a low viscosity and high bleed rate which is desirable to avoid heat caused by rolling friction. However, rolling friction is not present in couplings where the only movement is a sliding action caused by misalignment of shafts or thermal growth.

Bearing lubricants are adequate if the coupling manufacturer's service intervals are followed. These intervals are usually six (6) months for gear couplings and one (1) year for grid couplings.

Maintenance & Downtime In today's industrial plants the cost of equipment downtime for servicing can easily exceed hundreds of dollars per hour. So rather than shutting down this critical equipment, the connecting shaft couplings are frequently allowed to run until failure occurs or until the more expensive drive components in the system require maintenance.

In an attempt to hold the line of high maintenance costs, some users have switched to non-lubricated coupling designs. This switch seldom works out for the best however, since many elastomer designs have a short life expectancy and they induce problems elsewhere in the drive system. When they do fail, the connected equipment often has to be moved to replace the element.

Now LTG — What is it?

Our engineers have spent years measuring the wear rates on coupling components using various lubricants and coatings. Virtually every common industrial lubricant has been centrifuged under laboratory conditions per ASTM standard test methods for "Oil Separation from Lubricating Grease by Centrifuging." The results of extensive research indicated that greases with high viscosities and low bleed rates produce the longest life.

Falk LTG is specially formulated to provide superior lubrication for flexible shaft couplings.

How does it work?

The consistency of Falk LTG changes with operating conditions. As manufactured it is an NLGI #1/2 grade. Working of the lubricant under actual service conditions causes it to become semifluid while the grease near the seals will set to a heavier grade, helping to prevent leakage.

LTG is highly resistant to separation, easily out performing all other lubricants tested. The resistance to separation allows the lubricant to be used for relatively long periods of time.

Benefits for your Application

- **Increased coupling life.**
- **Significantly extended re-lubrication intervals.**
- **Reduced maintenance costs.**
- **Reduced downtime.**
- **Superior lubrication.**
- **High load carrying capabilities.**
- **Usable up to 250°F (121°C).**

USDA Approval

LTG has the United States Department of Agriculture Food Safety & Inspection Service approval for applications where there is no possibility of contact with edible products (H-2 rating).

Compatibility

Falk LTG grease is compatible with most coupling lubricants. For optimum performance it is recommended that couplings be cleaned of old grease before packing with LTG.

Extended Maintenance Intervals

Steelflex® When Steelflex couplings are initially lubricated with LTG, scheduled periodic maintenance is not needed. You can now get the superior protective features of the Steelflex, plus the toughness of steel, and eliminate periodic maintenance expense. Falk recommends that such couplings be inspected and re-lubed only when the connected equipment is being serviced or the coupling is opened for alignment checks.

Lifelign® Gear Couplings Re-lube intervals for sensitive gear couplings have been extended from six (6) months to three (3) years.

Specifications

Thickener . . . . . Lithium Soap/Polymer
Base Oil . . . . . Highly Refined Mineral Oil
Viscosity @ 100°F (38°C). 3300SSU (715cSt)
Viscosity @ 210°F (99°C). 163SSU (33cSt)
NLGI Grade . . . . . ½
Consistency (ASTM D-217) 60 stroke worked penetration value in the range of 315-360 measured at 77°F (25°C).
Minimum Timken EP O.K. Load (ASTM D 2509). . . . . 40 lbs.
Four Ball EP (ASTM D 2596)
Load Wear Index. . . . . 46 kgf
Weld Point . . . . . 250 kgf
Four Ball Wear, Scar (ASTM D 2266) . . . . . .66 mm
Dropping Point . . . . . 350°F (177°C) min.
Flash Point . . . . . 450°F (232°C)
Oxidation and Rust Inhibitors . . . . . Yes
Centrifugal Separation
(ASTM D 4425-84) . . . . . K36# 2/24 max.
Color . . . . . Dark brown
Operating Range . . . . . 20°F (29°C) to 250°F (121°C)
Minimum Pump . . . . . 20°F (-7°C)
Operating Speed Range
Steelflex Couplings . . . . . All Speeds
Gear Couplings. . . . . See Service Manual 458-110

Material Safety Data Sheet

(Form 950401) Available upon request.

5 Year Warranty

A new Steelflex coupling initially lubricated with the proper amount of LTG as described in the service manual, operated within the specified ambient temperature range and installed and aligned within the limits specified in the installation manual is warranted for five (5) years against lubrication related grid member failure.

Packaging

Falk LTG is packaged to suit every need.

Polybags
Included with Sizes 1020-1090T couplings for initial handpacking at installation.

14 ounce cartridges
For use in standard industrial lubrication guns.

35 pound pails

120 pound kegs
For plants with many small couplings or large size couplings. Best for hand packing.

400 pound drums
For plants with a pressurized lubrication system.

A 10-pack of 14 oz. cartridges or a case of 3-10 packs of 14 oz. cartridges.
Ideal for distributor stocks.

Steelflex Coupling Size	Required Lube wt-lbs (kg)	Gear Coupling Size ★	Required Lube wt-lbs (kg)	GC 02 Coupling Size	Required Lube wt-lbs (kg)
1020T	.06 (.027)				
1030T	.09 (.040)	1010G	.09 (.041)	1010G	.025 (.011)
1040T	.12 (.055)				
1050T	.15 (.068)	1015G	.16 (.073)	1015G	.063 (.0283)
1060T	.19 (.086)				
1070T	.25 (.114)	1020G	.25 (.11)	1020G	.094 (.042)
1080T	.38 (.173)	1025G	.50 (.23)	1025G	.144 (.065)
1090T	.56 (.255)	1030G	.80 (.36)	1030G	.201 (.093)
1100T	.94 (427)	1035G	2.00 (.91)	1035G	.269 (.122)
1110T	1.12 (.509)	1040G	2.50 (1.14)		
1120T	1.62 (.736)	1045G	3.00 (6.6)		
1130T	2.0 (.909)	1050G	3.50 (1.59)		
1140T	2.5 (1.136)	1055G	4.00 (1.81)		
1150T	4.3 (1.955)	1060G	4.50 (2.05)		
1160T	6.2 (2.818)	1070G	5.00 (2.27)		
1170T	7.7 (3.5)	1080G	21 (9.55)		
1180T	8.3 (3.773)	1090G	27		
1190T	9.7 (4.409)	1100G	33		
1200T	12.4 (5.636)	1110G	39		
1210T	23.2 (10.55)	1120G	46		
1220T	35.4 (16.09)	1130G	72		
1230T	53.0 (24.09)	1140G	73		
1240T	74.5 (33.86)	1150G	90		
1250T	110.5 (50.23)	1160G	95		
1260T	148.1 (67.32)	1180G	110		
		1200G	150		

★ Refer to Selection Guide 451-110 for larger sizes.

REXNORD

REXNORD INDUSTRIES, LLC • MILWAUKEE, WISCONSIN
FORM 840201D
September 2002, supersedes 9/97

MATERIAL SAFETY DATA SHEET FOR FALK™ LONG TERM GREASE (LTG)

SECTION 1 — PRODUCT AND COMPANY IDENTIFICATION

PRODUCT: Falk™ Long Term Grease

SYNONYMS/Other: NONE
MSDS NUMBER: 950401
PRODUCT TYPE: Multipurpose Grease
PREPARATION/REVISION DATE: 01/03/2012

Please note: Blank spaces are not permitted. If any item is not applicable, or no information is available, the space must be marked.

MANUFACTURER

Lubrication Technologies, Inc.
900 Mendelssohn Avenue North
Golden Valley, MN
55427-4309

TELEPHONE NUMBERS

Emergency Telephone Number: 800-424-9300

SECTION 2 — PRODUCT/INGREDIENTS

INGREDIENTS	CAS #	%	OSHA TWA	OSHA STEL	ACGIH TWA	SKIN
Asphalt (Petroleum)	8052-42-4	5-10%	5 mg/m (PEL)	10 mg/m^3	5 mg/m^3 (TVL)	NO
Phosphororodithoic Acid, O,O-DI C1-14-ALKYL ESTERS, ZINC SALTS (2:1) (ZDDP)	68649-42-3	1-5%	–	–	–	NO

Comments: (TWA) — Time Weighted Average is the employee's average airborne exposure in any 8-hour work shift of a 40-hour work week which shall not be exceeded.
(STEL) — Short Term Exposure Limit is the employee's 15-minute time weighted average exposure which shall not be exceeded at any time during a work day unless another time limit is specified.

J Applicable to Oil Mist, not defined for base oils.

SECTION 3 — HAZARDS IDENTIFICATION

WARNING: *MAY CAUSE EYE IRRITATION*
MAY CAUSE SKIN IRRITATION

Eye Contact: Direct contact may cause irritation, redness, tearing, and blurred vision. Avoid prolonged skin contact. This product contains materials that may cause skin irritation. Prolonged or repeated contact may result in dermatitis (dryness, chapping and reddening of skin). High-pressure grease injection due to break in high pressure lines or via grease gun may not be visible, may cause delayed soft-tissue damage. Delay in treatment may result in discoloration of tissue, leading to loss of body part.

Inhalation: This material has a low vapor pressure and as such is not expected to present an inhalation hazard at ambient temperature. Should heated or misted material lead to overexposure by inhalation, may cause nonspecific discomfort, such as nausea, headache, or weakness.

Ingestion: Do not ingest. Product is expected to be relatively non-toxic unless lung aspiration occurs. Aspiration is not expected with this material due to thickness of product. Coughing, choking, and gagging are often noted at the time of aspiration should it occur. This product has laxative properties and may result in abdominal cramps and diarrhea.

Other: Not applicable.

SECTION 4 — FIRST AID MEASURES

Eye Contact: Flush immediately with large amounts of water for at least 15 minutes. Eyelids should be held away from the

Date Issued: January 2012 — 1 — Form 950401

MATERIAL SAFETY DATA SHEET FOR FALK™ LONG TERM GREASE (LTG)

	eyeball to ensure thorough rinsing. Get medical attention if irritation persists. If material is hot, treat for thermal burns and take victim to hospital immediately.
Skin Contact:	Remove contaminated clothing. Wash contaminated area thoroughly with soap and water. If redness or irritation occurs, seek medical attention. If material is hot, submerge injured area in cold water. If victim is severely burned, remove to a hospital immediately. Wash contaminated clothing before reuse. Of special caution is sub-cutaneous grease injection due to high pressure. Victim may not be aware of injected material. Contact a physician as soon as possible for removal of the injected grease.
Inhalation:	If overcome by inhalation of hot vapors, remove to fresh air. Use oxygen if there is difficulty breathing or artificial respiration if breathing has stopped. Do not leave victim unattended. Seek immediate medical attention if necessary.
Ingestion:	Do not induce vomiting. If spontaneous vomiting occurs, keep head below hips to prevent aspiration and monitor for breathing difficulty. Gastric lavage should be performed only by qualified medical personnel. Keep affected person warm and at rest. Seek immediate medical attention.
Other:	Not applicable.

SECTION 5 — FIRE FIGHTING MEASURES

Flash Point:	218°C (425°F) by ASTM D 92.
Flammable Limits:	Not determined.
Extinguishing media:	Use water spray, dry chemical, alcohol foam, all purpose AFFF, or carbon dioxide to extinguish fire. Water may cause frothing.
Special Fire Fighting Procedures:	Evacuate area and fight fire from a safe distance. If leak or spill has not ignited, ventilate area and use water spray to disperse gas or vapor and to protect personnel attempting to stop a leak. Use water spray to cool adjacent structures and to protect personnel. Shut off source of flow if possible (safely). Stay away from storage tank ends. Withdraw immediately in case of rising sound from venting safety device or any discoloration of storage tank due to fire. Fire fighters must wear MSHA/NIOSH approved positive pressure breathing apparatus (SCBA) with full face mask and full protective equipment.
Unusual Fire & Explosion Hazards:	Dense smoke may be generated while burning. Toxic fumes, gases, or vapors may evolve on burning. Heavy flammable vapors may settle along ground level and low spots to create an invisible fire hazard. The vapors may extend to sources of ignition and flash back.
Byproducts of Combustion:	Fires involving this product may release oxides of carbon, nitrogen, sulfur, phosphorus and metals; reactive hydrocarbons and irritating vapors.
Autoignition Temperature:	Not determined.
Explosion Data:	Not Determined. Care should always be exercised in dust/mist areas.
Other:	Not applicable.

SECTION 6 — ACCIDENTAL RELEASE MEASURES

Spill Control Procedures (Land):	Personnel wearing proper protective equipment should contain spill immediately with inert materials (sand, earth, chemical spill pads of cotton) by forming dikes. Dikes should be placed to contain spill in a manner that will prevent material from entering sewers and waterways. Large spill, once contained, may be picked up using explosion proof, non-sparking vacuum pumps, shovels, or buckets, and disposed of in suitable containers for disposal. If a large spill occurs, notify appropriate authorities. In case of an accident or road spill, contact Chemtrec at 800-424-9300.
Spill Control Procedures (Water):	Remove from surface by skimming or with suitable absorbents. If a large spill occurs, notify appropriate authorities (normally the National Response Center or Coast Guard at 800-424-8802).
Waste Disposal Method:	Most oil based products are incinerated, land-filled, or reclaimed. All disposals must comply with federal, state, and local regulations. The material, if spilled or discarded, may be a regulated waste. Refer to state and local regulations. Department of Transportation (DOT) regulations may apply for transporting this material when spilled. See Section 14.
Other:	***CAUTION:*** *If spilled material is cleaned up using a regulated solvent, the resulting waste mixture will be regulated.*

Form 950401 — 2 — Date Issued: January 2012

MATERIAL SAFETY DATA SHEET FOR FALK™ LONG TERM GREASE (LTG)

SECTION 7 — HANDLING AND STORAGE

Handling Procedures: Keep containers closed when not in use. Do not transfer to unmarked containers. Fire extinguishers should be kept readily available. See NFPA 30 and OSHA 1910.106 — Flammable and Combustible Liquids. Empty containers retain product residue which may exhibit hazards of material, therefore do not pressurize, cut, glaze, weld, or use for any other purposes. Return drums to reclamation centers for proper cleaning and reuse.

Storage Procedures: Store containers away from heat, sparks, open flame, or oxidizing materials.

Additional Information: No additional information.

SECTION 8 — EXPOSURE CONTROLS/PERSONAL PROTECTION

Personal Protection: Applicable mainly to persons in repeated contact situations such as packaging or product, service/maintenance, and cleanup/spill control personnel.

Respiratory Protection: Under conditions of normal use, no respiratory protection is required. Should product misting occur due to use or handling, ensure airborne concentrations are maintained below threshold limits listed on Page One. Otherwise, a respiratory protection program meeting OHSH 1910.134 and ANSI Z88.2 requirements must be followed. Where misting may occur, wear an MSHA/NIOSH approved (or equivalent) half-mask form dust/mist air purifying respirator.

Eye Protection: Under conditions of normal use, eye protection is not necessary. If material is handled such that it could be splashed into the eyes, wear safety glasses with side shields or vented/splash proof goggles (ANSI Z87.1 or approved equivalent).

Hand Protection: Impervious gloves such as neoprene or nitrile rubber to avoid skin sensitization and absorption.

Other Protection: Use of an apron and overboots of chemically impervious materials such as neoprene or nitrile rubber is recommended to avoid skin sensitization and absorption. If handling hot material use insulated protective equipment. Launder soiled clothes. Properly dispose of contaminated leather articles and other material which cannot be decontaminated.

Local Control Measures: Use adequate ventilation when working with material in an enclosed area. Mechanical methods such as fume hoods or area fans may be used to reduce localized vapor/mist areas. If vapor or mist is generated when the material is handled, adequate ventilation in accordance with good engineering practice must be provided to maintain concentrations below the specified exposure levels listed on Page One.

Other: Consumption of food and drink should be avoided in work areas where product is present. Always wash hands and face with soap and water before eating, drinking, or smoking.

SECTION 9 — PHYSICAL AND CHEMICAL PROPERTIES

Vapor Pressure: 0.1 mm Hg at 20°C (68°F).

Specific Gravity: 0.909 at 15.6°C (60.0°F)

Density: 7.57 lb/gal at 15.6°C (30.0°F).

Solubility: Negligible in water, miscible inmost petroleum solvents.

Percent volatile: Negligible.

Vapor density (air=1): >2.

Evaporation rate (n-Butyl Acetate=1) Negligible.

Odor: Mild, greasy odor.

Appearance: Dark Brown semi-solid (grease).

Viscosity: 680cSt at 40°C (104°F).

Pour Point: -15°C (5°F).

Other: Melting point is 215°C (419°F).

SECTION 10 — STABILITY AND REACTIVITY

Stability: Material is stable at room temperatures and pressure.

Date Issued: January 2012 — 3 — Form 950401

MATERIAL SAFETY DATA SHEET FOR FALK™ LONG TERM GREASE (LTG)

Conditions to avoid:	Avoid high temperatures and product contamination.
Incompatibility with other Materials:	Avoid contact with acids and oxidizing materials.
Decomposition Products:	Smoke, carbon monoxide and dioxide, and other aldehydes of incomplete combustion. Oxides of carbon, nitrogen, sulfur, phosphorus, and metals; reactive hydrocarbons, and irritating vapors.
Hazardous Polymerization:	Will not occur.
Other:	Not applicable.

SECTION 11 — TOXICOLOGICAL INFORMATION

Oral Toxicity:	Not determined.
Dermal Toxicity:	Not determined.
Inhalation Toxicity:	On rare occasions, prolonged and repeated exposure to oil mist poses a risk of pulmonary disease such as chronic lung inflammation. This condition is usually asymptotic as a result of repeated small aspirations. Shortness of breath and cough are the most common symptoms. Based on data from similar materials.
Dermal sensitization:	Not determined.
Chronic Toxicity:	Not determined.
Carcinogenicity:	Not determined.
Mutagenicity:	Not determined.
Reproductive Toxicity:	Not determined.
Other:	This product contains petroleum base oils which may be refined by various processes including severe solvent extraction, severe hydrocracking, or severe hydrotreating. None of the oils require a cancer warning under the OSHA Hazard Communication Standard (29 CFR 1910.1200). These oils have not been listed in the National Toxicology Program (NTP) Annual Report nor have they been classified by the International Agency for Research on Cancer (IARC) as: carcinogenic to humans (Group 1), probably carcinogenic to humans (Group 2A), or possibly carcinogenic to humans (Group 2B).

SECTION 12 — ECOLOGICAL INFORMATION

Environmental Toxicity:	This material may be toxic to aquatic organisms and should be kept out of sewage and drainage systems and all bodies of water.
Environmental Fate:	Not determined.
Other:	Not applicable.

SECTION 13 — DISPOSAL CONSIDERATIONS

Waste Disposal:	Under RCRA, it is the responsibility of the user of the product to determine at the time of disposal whether the product meets RCRA criteria for hazardous waste. This product, unadulterated by other material, may be classified as a non-regulated waste in some areas – but still needs to be disposed of at approved facilities. Waste management should be in full compliance with federal, state, and local laws.
Disposal Consideration:	Most used and non-use oils and greases are incinerated by licensed burner facilities for heat value, or reclaimed by oil recycling services. Look in a local telephone directory or internet for headings under, "Waste", "Waste Services", "Waste Disposal: for companies licensed to handle such material. Additional information can be obtained from local EPA, DNR, Sewer and Land-Fill sites. Unused, packaged fluids may be donated to other companies or charities, (fluids MUST be unused).
Other:	the transportation, storage, treatment, and disposal of RCRA waste material must be conducted in compliance with 40 CFR 262, 263, 264, and 270. Disposal can only occur improperly permitted facilities. Check state and local regulations for any additional requirements as these may be more restrictive than federal laws and regulations. Chemical additions, processing, or otherwise altering this material may make the waste management information presented in the MSDS incomplete, inaccurate, or otherwise inappropriate. Disposal of this material must be conducted in compliance with all federal, state, and local regulations.

MATERIAL SAFETY DATA SHEET FOR FALK™ LONG TERM GREASE (LTG)

SECTION 14 — TRANSPORT INFORMATION

U.S. DOT Shipping Description:	Not regulated by DOT.
U.S. DOT Identification Number:	Not regulated by DOT.
U.S. DOT Hazard Classification:	Not Applicable.
Packaging Class:	Not Applicable.
Other:	Not Applicable.

SECTION 15 — REGULATORY INFORMATION

Clean water act/oil Pollution Act: Under Section 311, of the Clean Water Act (40 CFR 110) and the Oil Pollution Act of 1990, this material is considered an oil. Any spill or discharges that produce a visible sheen or film on surface of water, or in waterways, ditches, or sewers leading to surface water must be reported. Contact the National Response Center at 800-424-8802.

This product contains zinc compounds, a class of Clean Water Act Priority Pollutants.

This product contains antimony compounds, a class of Clean Water Act Priority Pollutants.

TSCA: All components of this material are listed in the U.S. TSCA Inventory.

Other TSCA: Not Applicable.

SARA Title III: Section 302/304 extremely hazardous substances:
This product does not contain greater than 0.1% of any chemical substance on this list.

Section 311, 312 hazard categorization:

Acute (immediate health effects):	NO
Chronic (delayed health effects):	NO
Fire (hazard):	NO
Reactivity (hazard):	NO
Pressure (sudden release hazard):	NO

Section 313 toxic chemicals:

Zinc alkyldithiophosphate
(CAS 68649-42-3)
1-5% wt.
Asphalt (petroleum) CAS 8052-42-4)
1, 13, 16, 17, 18, 19.
Phosphorodithoic Acid (CAS 68649-4-3) 13, 15, 17

CERCLA: For stationary sources – reportable quantity:
Exempt due to petroleum exclusion.

For moving sources – reportable quantity:
Exempt due to petroleum exclusion.

Other: A release of this product, as supplied, is exempt from reporting under the Comprehensive Environmental Response Compensation and Liability Act (CERCLA) by the petroleum exclusion. However, releases may be reportable to the Nation Response Center under the Clean Water Act, 33 U.S.C. 1321(b)(3) and (5) – see head of Section 15. Failure to report may result in substantial civil and criminal penalties.

Recommend contacting the local authorities in the event of any type of spill to determine local reporting requirements and also to aid in the cleanup.

Antimony compounds appear on the following lists:

Pennsylvania Hazardous Substances (environmental).

Massachusetts Hazardous Substances.

Date Issued: January 2012 — 5 — Form 950401

MATERIAL SAFETY DATA SHEET FOR FALK™ LONG TERM GREASE (LTG)

SECTION 16 — OTHER INFORMATION

	NFPA 704	NPCA-HMIS	KEY
HEALTH:	0	0	0 = Minimal
FIRE:	1	1	1 = Slight
REACTIVITY:	0	0	2 = Moderate
SPECIFIC HAZARD:	NONE	N/A	3 = Serious
PROTECTION INDEX:	N/A	B	4 = Severe
Precautionary Labels:	MAY CAUSE EYE IRRITATION MAY CAUSE SKIN IRRITATION		

This product may be formulated in part with components purchased from other companies. In many instances, especially when proprietary or trade secret materials are used. Lube-Tech must rely upon information provided by those materials manufacturers or distributors.

Version: 1

INFORMATION PROVIDED IN THIS MSDS IS CONSIDERED ACCURATE AND RELIABLE BASED ON INFORMATION ISSUED FROM INTERNAL AND OUTSIDE SOURCES TO THE BEST OF LUBE-TECH'S KNOWLEDGE. HOWEVER, LUBE-TECH MAKES NO REPRESENTATIONS, GUARANTEES OR WARRANTIES, EXPRESSED OR IMPLIED, OF MERCHANTABILITY OR FITNESS FOR THE PARTICULAR PURPOSE, REGARDING THE ACCURACY OF SUCH INFORMATION OR THE RESULT TO BE OBTAINED FROM THE USE THEREOF, OR AS TO THE SUFFICIENCY OF THE INFORMATION HEREIN PRESENTED. LUBE-TECH ASSUMES NO RESPONSIBILITY FOR INJURY TO RECIPIENT OR TO THIRD PERSONS OR FOR ANY DAMAGE TO ANY PROPERTY AND RECIPIENT ASSUMES ALL SUCH RISKS.

Revisions / Comments:

REXNORD

Form 950401 — 6 — Date Issued: January 2012

11.5.3 MOBIL MOBILTAC 325 NC

Mobil

Mobiltac 375 NC, 325 NC and 275 NC

Gear Oils

Product Description

Mobiltac 375 NC, 325 NC and 275 NC extra high performance non-leaded, diluent-type, heavy-bodied open gear lubricants designed for a wide variety of open gear and mining applications. They contain a non-chlorinated, volatile solvent that ensures fluidity during application, even at low temperatures. Once applied, the diluent evaporates and the lubricants take on a flexible, adhesive, high-strength consistency that is maintained throughout their service life. Mobiltac 375 NC, 325 NC and 275NC adhere strongly to gear teeth and other machine elements to resist excessive throw-off, thereby providing a wear-resistant, viscous, continuous film that lubricates well under boundary conditions. Mobiltac 275 NC also contains solid phase EP/anti-wear additive for added equipment protection

Mobiltac 375 NC, 325 NC and Mobiltac 275NC will not harden, chip, or flake in cold weather, are self-healing, and do not form a hard-packed buildup in gear-tooth roots. Dripping and throw-off are minimal, and the lubricants are easily cleaned up with a solvent-soaked rag. The lubricants provide resistance to rain, snow, and process water washing. Their flash points minimise the risk of fire. These new generation gear and mining lubricants are applied easily by hand or by automatic dispensers. Mobiltac NC technology has rapidly become a firm favourite among many open gear users and mine operators around the world

Features and Benefits

The Mobiltac NC Series of products are the most recent technology advance for the Mobiltac brand of products that have been used with great success in open gear and other mining applications for several decades. These new technology products provide significantly improved environmental and performance benefits over older diluent-type technologies. They offer the following features and potential benefits:

Features	Advantages and Potential Benefits
Excellent protection of gear teeth and other machine elements under boundary lubrication conditions	Less equipment wear and breakdown; lower replacement, downtime and maintenance costs
Excellent low-temperature pumpability	Easy start-up at low ambient and avoids cost of preheating
Excellent resistance to water washing	Maintains superb protection in wet environments; less unanticipated downtime
Minimal throw-off and dripping	Less product waste and new product cost
No chipping or flaking at low temperatures	Maintains protective lubricating film at low temperatures
Easy to clean up with rags and conventional solvents or cleaning fluids	Improved safety and reduced maintenance costs

Applications

Mobiltac 375 NC, 325 NC and Mobiltac 275NC are designed for use in a wide variety of open gear and mining applications:

- Mobiltac 375 NC, containing a high-viscosity base oil, is recommended for the lubrication of highly loaded open gears, including those that operate at high temperature, for example, ring gears on cement kilns and large gears on ore-processing mills
- Mobiltac 325 NC is recommended for the same applications as Mobiltac 375 NC. It contains more diluent and has a lower viscosity for ease of application at cooler temperatures
- Mobiltac 275 NC is designed for service as a lubricant for mine and quarry shovels, draglines, and related equipment; also open gears, racks and pinions, swing gears, booms and sticks

- Minimum operating temperature for Mobiltac 325 NC is -18 C, 375 NC is -1 C and 275 NC is -9 C

Typical Properties

Mobiltac NC	Mobiltac375 NC	Mobiltac325 NC	Mobiltac275 NC
Appearance	Viscous, semi-fluid, black	Viscous, semi-fluid, black	Viscous, semi-fluid, black
Viscosity, ASTM D 445			
cSt @ 40° C, with diluent	5000	1500	-
cSt @ 100° C, without diluent	1260	1000	-
Flash Point, °C, ASTM D 92	135	110	150
Specific Gravity, °C kg/l, ASTM D 1298	0.96	0.95	0.99
Maximum Temperature Use, °C	121	93	-

Health and Safety

Based on available information, this product is not expected to produce adverse effects on health when used for the intended application and the recommendations provided in the Material Safety Data Sheet (MSDS) are followed. MSDS's are available upon request through your sales contract office, or via the Internet. This product should not be used for purposes other than its intended use. If disposing of used product, take care to protect the environment.

The Mobil logotype, the Pegasus design are trademarks of Exxon Mobil Corporation, or one of its subsidiaries.

Exxon Mobil Corporation
3225 Gallows Road
Fairfax, VA 22037

1-800-ASK MOBIL (275-6624)

Typical Properties are typical of those obtained with normal production tolerance and do not constitute a specification. Variations that do not affect product performance are to be expected during normal manufacture and at different blending locations. The information contained herein is subject to change without notice. All products may not be available locally. For more information, contact your local ExxonMobil contact or visit www.exxonmobil.com
ExxonMobil is comprised of numerous affiliates and subsidiaries, many with names that include Esso, Mobil, or ExxonMobil. Nothing in this document is intended to override or supersede the corporate separateness of local entities. Responsibility for local action and accountability remains with the local ExxonMobil-affiliate entities.

© 2001-2011 Exxon Mobil Corporation. All rights reserved..

ExxonMobil

Product Name: MOBILTAC 325 NC
Revision Date: 27 Feb 2013
Page 1 of 12

MATERIAL SAFETY DATA SHEET

SECTION 1 PRODUCT AND COMPANY IDENTIFICATION

PRODUCT

Product Name: **MOBILTAC 325 NC**
Product Description: Hydrocarbons and Additives
Product Code: 201560404010, 611160-00, 976359
Intended Use: Gear oil

COMPANY IDENTIFICATION

Supplier: **EXXON MOBIL CORPORATION**
3225 GALLOWS RD.
FAIRFAX, VA. 22037 USA

24 Hour Health Emergency	609-737-4411
Transportation Emergency Phone	800-424-9300
ExxonMobil Transportation No.	281-834-3296
Product Technical Information	800-662-4525, 800-947-9147
MSDS Internet Address	http://www.exxon.com, http://www.mobil.com

SECTION 2 COMPOSITION / INFORMATION ON INGREDIENTS

Reportable Hazardous Substance(s) or Complex Substance(s)

Name	CAS#	Concentration*
ASPHALT (PETROLEUM)	8052-42-4	15 - 50%
HYDROTREATED LIGHT DISTILLATE	64742-47-8	8 - 14%
NAPHTHENIC ACIDS, ZINC SALTS	12001-85-3	3 - 6%
STRAIGHT-RUN MIDDLE DISTILLATES	64741-44-2	5 - 10%

* All concentrations are percent by weight unless material is a gas. Gas concentrations are in percent by volume.

SECTION 3 HAZARDS IDENTIFICATION

This material is considered to be hazardous according to regulatory guidelines (see (M)SDS Section 15).

POTENTIAL HEALTH EFFECTS

Irritating to eyes. Irritating to skin. Excessive exposure may result in eye, skin, or respiratory irritation. Under conditions of poor personal hygiene and prolonged repeated contact, some polycyclic aromatic compounds (PACs) have been suspected as a cause of skin cancer in humans. High-pressure injection under skin may cause serious damage.

Target Organs: Skin | Eye |

ENVIRONMENTAL HAZARDS

Harmful to aquatic organisms, may cause long-term adverse effects in the aquatic environment.

ExxonMobil

Product Name: MOBILTAC 325 NC
Revision Date: 27 Feb 2013
Page 2 of 12

NFPA Hazard ID:	Health:	1	Flammability:	1	Reactivity:	0
HMIS Hazard ID:	Health:	1	Flammability:	1	Reactivity:	0

NOTE: This material should not be used for any other purpose than the intended use in Section 1 without expert advice. Health studies have shown that chemical exposure may cause potential human health risks which may vary from person to person.

SECTION 4 FIRST AID MEASURES

INHALATION

Remove from further exposure. For those providing assistance, avoid exposure to yourself or others. Use adequate respiratory protection. If respiratory irritation, dizziness, nausea, or unconsciousness occurs, seek immediate medical assistance. If breathing has stopped, assist ventilation with a mechanical device or use mouth-to-mouth resuscitation.

SKIN CONTACT

Wash contact areas with soap and water. Remove contaminated clothing. Launder contaminated clothing before reuse. If product is injected into or under the skin, or into any part of the body, regardless of the appearance of the wound or its size, the individual should be evaluated immediately by a physician as a surgical emergency. Even though initial symptoms from high pressure injection may be minimal or absent, early surgical treatment within the first few hours may significantly reduce the ultimate extent of injury.

EYE CONTACT

Flush thoroughly with water for at least 15 minutes. Get medical assistance.

INGESTION

First aid is normally not required. Seek medical attention if discomfort occurs.

SECTION 5 FIRE FIGHTING MEASURES

EXTINGUISHING MEDIA

Appropriate Extinguishing Media: Use water fog, foam, dry chemical or carbon dioxide (CO2) to extinguish flames.

Inappropriate Extinguishing Media: Straight Streams of Water

FIRE FIGHTING

Fire Fighting Instructions: Evacuate area. Prevent runoff from fire control or dilution from entering streams, sewers, or drinking water supply. Firefighters should use standard protective equipment and in enclosed spaces, self-contained breathing apparatus (SCBA). Use water spray to cool fire exposed surfaces and to protect personnel.

Unusual Fire Hazards: Hazardous material. Firefighters should consider protective equipment indicated in Section 8.

Hazardous Combustion Products: Hydrogen sulfide, Smoke, Fume, Aldehydes, Sulfur oxides, Incomplete combustion products, Oxides of carbon

ExxonMobil

Product Name: MOBILTAC 325 NC
Revision Date: 27 Feb 2013
Page 3 of 12

FLAMMABILITY PROPERTIES

Flash Point [Method]: >97°C (207°F) [ASTM D-92]
Flammable Limits (Approximate volume % in air): LEL: N/D UEL: N/D
Autoignition Temperature: N/D

SECTION 6 ACCIDENTAL RELEASE MEASURES

NOTIFICATION PROCEDURES

In the event of a spill or accidental release, notify relevant authorities in accordance with all applicable regulations. US regulations require reporting releases of this material to the environment which exceed the applicable reportable quantity or oil spills which could reach any waterway including intermittent dry creeks. The National Response Center can be reached at (800)424-8802.

PROTECTIVE MEASURES

Avoid contact with spilled material. Warn or evacuate occupants in surrounding and downwind areas if required due to toxicity or flammability of the material. See Section 5 for fire fighting information. See the Hazard Identification Section for Significant Hazards. See Section 4 for First Aid Advice. See Section 8 for advice on the minimum requirements for personal protective equipment. Additional protective measures may be necessary, depending on the specific circumstances and/or the expert judgment of the emergency responders.

SPILL MANAGEMENT

Land Spill: Stop leak if you can do it without risk. Recover by pumping or with suitable absorbent.

Water Spill: Stop leak if you can do it without risk. Confine the spill immediately with booms. Warn other shipping. Remove from the surface by skimming or with suitable absorbents. Seek the advice of a specialist before using dispersants.

Water spill and land spill recommendations are based on the most likely spill scenario for this material; however, geographic conditions, wind, temperature, (and in the case of a water spill) wave and current direction and speed may greatly influence the appropriate action to be taken. For this reason, local experts should be consulted. Note: Local regulations may prescribe or limit action to be taken.

ENVIRONMENTAL PRECAUTIONS

Large Spills: Dike far ahead of liquid spill for later recovery and disposal. Prevent entry into waterways, sewers, basements or confined areas.

SECTION 7 HANDLING AND STORAGE

HANDLING

Avoid contact with skin. Avoid contact with eyes. Hydrogen sulfide (H2S) may be given off when this material is heated. Do not depend on sense of smell for warning. Prevent small spills and leakage to avoid slip hazard. Material can accumulate static charges which may cause an electrical spark (ignition source). When the material is handled in bulk, an electrical spark could ignite any flammable vapors from liquids or residues that may be present (e.g., during switch-loading operations). Use proper bonding and/or ground procedures. However, bonding and grounds may not eliminate the hazard from static accumulation. Consult local applicable standards for guidance. Additional references include American Petroleum Institute 2003 (Protection Against Ignitions Arising out of Static, Lightning and Stray Currents) or National Fire Protection

Agency 77 (Recommended Practice on Static Electricity) or CENELEC CLC/TR 50404 (Electrostatics - Code of practice for the avoidance of hazards due to static electricity).

Static Accumulator: This material is a static accumulator.

STORAGE

The container choice, for example storage vessel, may effect static accumulation and dissipation. Do not store in open or unlabelled containers.

SECTION 8 EXPOSURE CONTROLS / PERSONAL PROTECTION

EXPOSURE LIMIT VALUES

Exposure limits/standards (Note: Exposure limits are not additive)

Source	Form	Limit / Standard			NOTE	Source
ASPHALT (PETROLEUM) [benzene solubles]	Inhalable fraction.	TWA	0.5 mg/m3		N/A	ACGIH
HYDROTREATED LIGHT DISTILLATE [total hydrocarbon vapor]	Non-Aerosol	TWA	200 mg/m3		Skin	ACGIH
STRAIGHT-RUN MIDDLE DISTILLATES	Stable Aerosol.	TWA	5 mg/m3		N/A	ExxonMobil
STRAIGHT-RUN MIDDLE DISTILLATES	Vapor.	TWA	200 mg/m3		N/A	ExxonMobil
Hydrogen sulfide		Ceiling	20 ppm		N/A	OSHA Z2
Hydrogen sulfide		Maximum concentration	50 ppm		N/A	OSHA Z2
Hydrogen sulfide		STEL	14 mg/m3	10 ppm	N/A	ExxonMobil
Hydrogen sulfide		TWA	7 mg/m3	5 ppm	N/A	ExxonMobil
Hydrogen sulfide		STEL	5 ppm		N/A	ACGIH
Hydrogen sulfide		TWA	1 ppm		N/A	ACGIH

Exposure limits/standards for materials that can be formed when handling this product: When mists/aerosols can occur the following are recommended: 5 mg/m³ - ACGIH TLV (inhalable fraction), 5 mg/m³ - OSHA PEL.

NOTE: Limits/standards shown for guidance only. Follow applicable regulations.

ENGINEERING CONTROLS

The level of protection and types of controls necessary will vary depending upon potential exposure conditions. Control measures to consider:

No special requirements under ordinary conditions of use and with adequate ventilation.

PERSONAL PROTECTION

Personal protective equipment selections vary based on potential exposure conditions such as applications, handling practices, concentration and ventilation. Information on the selection of protective equipment for use with this material, as provided below, is based upon intended, normal usage.

Respiratory Protection: If engineering controls do not maintain airborne contaminant concentrations at a

level which is adequate to protect worker health, an approved respirator may be appropriate. Respirator selection, use, and maintenance must be in accordance with regulatory requirements, if applicable. Types of respirators to be considered for this material include:

No special requirements under ordinary conditions of use and with adequate ventilation.

For high airborne concentrations, use an approved supplied-air respirator, operated in positive pressure mode. Supplied air respirators with an escape bottle may be appropriate when oxygen levels are inadequate, gas/vapor warning properties are poor, or if air purifying filter capacity/rating may be exceeded.

Hand Protection: Any specific glove information provided is based on published literature and glove manufacturer data. Glove suitability and breakthrough time will differ depending on the specific use conditions. Contact the glove manufacturer for specific advice on glove selection and breakthrough times for your use conditions. Inspect and replace worn or damaged gloves. The types of gloves to be considered for this material include:

Chemical resistant gloves are recommended.

Eye Protection: Chemical goggles and face shield are recommended.

Skin and Body Protection: Any specific clothing information provided is based on published literature or manufacturer data. The types of clothing to be considered for this material include:

Chemical/oil resistant clothing is recommended.

Specific Hygiene Measures: Always observe good personal hygiene measures, such as washing after handling the material and before eating, drinking, and/or smoking. Routinely wash work clothing and protective equipment to remove contaminants. Discard contaminated clothing and footwear that cannot be cleaned. Practice good housekeeping.

ENVIRONMENTAL CONTROLS

Comply with applicable environmental regulations limiting discharge to air, water and soil. Protect the environment by applying appropriate control measures to prevent or limit emissions.

SECTION 9 PHYSICAL AND CHEMICAL PROPERTIES

Note: Physical and chemical properties are provided for safety, health and environmental considerations only and may not fully represent product specifications. Contact the Supplier for additional information.

GENERAL INFORMATION

Physical State: Liquid
Form: Semi-fluid
Color: Black
Odor: Characteristic
Odor Threshold: N/D

IMPORTANT HEALTH, SAFETY, AND ENVIRONMENTAL INFORMATION

Relative Density (at 15 °C): 0.96 [ASTM D1298]
Flash Point [Method]: >97°C (207°F) [ASTM D-92]
Flammable Limits (Approximate volume % in air): LEL: N/D UEL: N/D
Autoignition Temperature: N/D
Boiling Point / Range: > 174°C (345°F) [Estimated]
Vapor Density (Air = 1): > 2 at 101 kPa [Estimated]

Vapor Pressure: [N/D at 20 °C]
Evaporation Rate (n-butyl acetate = 1): N/D
pH: N/A
Log Pow (n-Octanol/Water Partition Coefficient): > 3.5 [Estimated]
Solubility in Water: Negligible
Viscosity: 1200 cSt (1200 mm2/sec) at 40 °C
Oxidizing Properties: See Hazards Identification Section.

OTHER INFORMATION
Freezing Point: N/D
Melting Point: N/A
Decomposition Temperature: N/D

SECTION 10 STABILITY AND REACTIVITY

STABILITY: Material is stable under normal conditions.

CONDITIONS TO AVOID: Excessive heat. High energy sources of ignition.

MATERIALS TO AVOID: Strong oxidizers

HAZARDOUS DECOMPOSITION PRODUCTS: Material does not decompose at ambient temperatures.

HAZARDOUS POLYMERIZATION: Will not occur.

SECTION 11 TOXICOLOGICAL INFORMATION

ACUTE TOXICITY

Route of Exposure	Conclusion / Remarks
Inhalation	
Toxicity: No end point data for material.	Minimally Toxic. Based on assessment of the components.
Irritation: No end point data for material.	Negligible hazard at ambient/normal handling temperatures. Based on assessment of the components.
Ingestion	
Toxicity: No end point data for material.	Minimally Toxic. Based on assessment of the components.
Skin	
Toxicity: No end point data for material.	Minimally Toxic. Based on assessment of the components.
Irritation: No end point data for material.	Irritating to the skin. Based on assessment of the components.
Eye	
Irritation: No end point data for material.	Irritating and will injure eye tissue. Based on assessment of the components.

CHRONIC/OTHER EFFECTS
For the product itself:
Repeated and/or prolonged exposure may cause irritation to the skin, eyes, or respiratory tract.
Contains:
Asphalt (bitumen): May contain low levels of polycyclic aromatic compounds (PACs), some of which are suspected of causing cancer under conditions of poor industrial hygiene and prolonged repeated contact.

These PACs may also be inhaled. Inhalation studies at high concentrations of fumes resulted in bronchitis, pneumonitis, fibrosis and cell damage. Avoid contact with the asphalt emissions.

The following ingredients are cited on the lists below: None.

--REGULATORY LISTS SEARCHED--

1 = NTP CARC	3 = IARC 1	5 = IARC 2B
2 = NTP SUS	4 = IARC 2A	6 = OSHA CARC

SECTION 12 ECOLOGICAL INFORMATION

The information given is based on data available for the material, the components of the material, and similar materials.

ECOTOXICITY

Material -- Expected to be harmful to aquatic organisms. May cause long-term adverse effects in the aquatic environment.

MOBILITY

More volatile component -- Highly volatile, will partition rapidly to air. Not expected to partition to sediment and wastewater solids.

High molecular wt. component -- Low solubility and floats and is expected to migrate from water to the land. Expected to partition to sediment and wastewater solids.

PERSISTENCE AND DEGRADABILITY

Biodegradation:

Low molecular wt. component -- Expected to be inherently biodegradable

High molecular wt. component -- Expected to be persistent.

Atmospheric Oxidation:

More volatile component -- Expected to degrade rapidly in air

BIOACCUMULATION POTENTIAL

Majority of components -- Has the potential to bioaccumulate, however metabolism or physical properties may reduce the bioconcentration or limit bioavailability.

SECTION 13 DISPOSAL CONSIDERATIONS

Disposal recommendations based on material as supplied. Disposal must be in accordance with current applicable laws and regulations, and material characteristics at time of disposal.

DISPOSAL RECOMMENDATIONS

ExxonMobil

Product Name: MOBILTAC 325 NC
Revision Date: 27 Feb 2013
Page 8 of 12

Product is suitable for burning in an enclosed controlled burner for fuel value or disposal by supervised incineration at very high temperatures to prevent formation of undesirable combustion products. Protect the environment. Dispose of used oil at designated sites. Minimize skin contact. Do not mix used oils with solvents, brake fluids or coolants.

REGULATORY DISPOSAL INFORMATION

RCRA Information: The unused product, in our opinion, is not specifically listed by the EPA as a hazardous waste (40 CFR, Part 261D), nor is it formulated to contain materials which are listed as hazardous wastes. It does not exhibit the hazardous characteristics of ignitability, corrositivity or reactivity and is not formulated with contaminants as determined by the Toxicity Characteristic Leaching Procedure (TCLP). However, used product may be regulated.

Empty Container Warning Empty Container Warning (where applicable): Empty containers may contain residue and can be dangerous. Do not attempt to refill or clean containers without proper instructions. Empty drums should be completely drained and safely stored until appropriately reconditioned or disposed. Empty containers should be taken for recycling, recovery, or disposal through suitably qualified or licensed contractor and in accordance with governmental regulations. DO NOT PRESSURISE, CUT, WELD, BRAZE, SOLDER, DRILL, GRIND, OR EXPOSE SUCH CONTAINERS TO HEAT, FLAME, SPARKS, STATIC ELECTRICITY, OR OTHER SOURCES OF IGNITION. THEY MAY EXPLODE AND CAUSE INJURY OR DEATH.

SECTION 14	TRANSPORT INFORMATION

LAND (DOT): Not Regulated for Land Transport

LAND (TDG): Not Regulated for Land Transport

SEA (IMDG): Not Regulated for Sea Transport according to IMDG-Code

AIR (IATA): Not Regulated for Air Transport

SECTION 15	REGULATORY INFORMATION

OSHA HAZARD COMMUNICATION STANDARD: When used for its intended purpose, this material is classified as hazardous in accordance with OSHA 29CFR 1910.1200.

Complies with the following national/regional chemical inventory requirements:: AICS, DSL, ENCS, IECSC, KECI, PICCS, TSCA

EPCRA SECTION 302: This material contains no extremely hazardous substances.

SARA (311/312) REPORTABLE HAZARD CATEGORIES: Immediate Health.

SARA (313) TOXIC RELEASE INVENTORY:

Chemical Name	CAS Number	Typical Value

ExxonMobil

Product Name: MOBILTAC 325 NC
Revision Date: 27 Feb 2013
Page 9 of 12

NAPHTHENIC ACIDS, ZINC SALTS	12001-85-3	3 - 6%

The following ingredients are cited on the lists below:

Chemical Name	CAS Number	List Citations
ASPHALT (PETROLEUM)	8052-42-4	1, 13, 16, 17, 18, 19
HYDROTREATED LIGHT DISTILLATE	64742-47-8	1, 17, 18, 19
NAPHTHENIC ACIDS, ZINC SALTS	12001-85-3	13, 15, 17

--REGULATORY LISTS SEARCHED--

1 = ACGIH ALL	6 = TSCA 5a2	11 = CA P65 REPRO	16 = MN RTK
2 = ACGIH A1	7 = TSCA 5e	12 = CA RTK	17 = NJ RTK
3 = ACGIH A2	8 = TSCA 6	13 = IL RTK	18 = PA RTK
4 = OSHA Z	9 = TSCA 12b	14 = LA RTK	19 = RI RTK
5 = TSCA 4	10 = CA P65 CARC	15 = MI 293	

Code key: CARC=Carcinogen; REPRO=Reproductive

SECTION 16 OTHER INFORMATION

N/D = Not determined, N/A = Not applicable

THIS SAFETY DATA SHEET CONTAINS THE FOLLOWING REVISIONS:

Revision Changes:
Section 04: First Aid Skin was modified.
Section 04: First Aid Eye was modified.
Section 06: Notification Procedures - Header was modified.
Section 11: Eye Irritation Conclusion was modified.
Section 11: Skin Irritation Conclusion was modified.
Section 13: Disposal Considerations - Disposal Recommendations was modified.
Section 10 Stability and Reactivity - Header was modified.
Section 13: Disposal Recommendations - Note was modified.
Section 13: Empty Container Warning was modified.
Section 09: Phys/Chem Properties Note was modified.
Section 09: Boiling Point C(F) was modified.
Section 09: Flash Point C(F) was modified.
Section 09: n-Octanol/Water Partition Coefficient was modified.
Section 08: Comply with applicable regulations phrase was modified.
Section 08: Personal Protection was modified.
Section 08: Hand Protection was modified.
Section 09: Vapor Pressure was modified.
Section 07: Handling and Storage - Handling was modified.
Section 07: Handling and Storage - Storage Phrases was modified.
Hazard Identification: Health Hazards was modified.
Section 11: Dermal Lethality Test Data was modified.
Section 11: Dermal Lethality Test Comment was modified.
Section 11: Oral Lethality Test Data was modified.

ExxonMobil

Product Name: MOBILTAC 325 NC
Revision Date: 27 Feb 2013
Page 10 of 12

Section 11: Inhalation Lethality Test Data was modified.
Section 11: Dermal Irritation Test Data was modified.
Section 11: Eye Irritation Test Data was modified.
Section 11: Oral Lethality Test Comment was modified.
Section 11: Inhalation Irritation Test Data was modified.
Section 05: Hazardous Combustion Products was modified.
Section 06: Accidental Release - Spill Management - Water was modified.
Section 09: Relative Density - Header was modified.
Section 09: Flash Point C(F) was modified.
Section 09: Viscosity was modified.
Section 08: Hand Protection was modified.
Section 08: Eye Protection was modified.
Section 08: Skin and Body Protection was modified.
Section 14: Sea (IMDG) - Header was modified.
Section 14: Air (IATA) - Header was modified.
Section 14: LAND (TDG) - Header was modified.
Section 14: LAND (DOT) - Header was modified.
Composition: Component table was modified.
Section 15: List Citations Table was modified.
Section 15: List Citation Table - Header was modified.
Section 14: LAND (DOT) - Default was modified.
Section 14: LAND (TDG) Default was modified.
Section 14: Sea (IMDG) - Default was modified.
Section 14: Air (IATA) - Default was modified.
Section 15: SARA (311/312) REPORTABLE HAZARD CATEGORIES was modified.
Section 15: National Chemical Inventory Listing - Header was modified.
Section 15: SARA (313) TOXIC RELEASE INVENTORY - Table was modified.
Section 15: National Chemical Inventory Listing was modified.
Section 16: Code to MHCs was modified.
Section 09: Relative Density was modified.
Section 15: Community RTK - Header was modified.
Section 11: Additional Health Information was modified.
Section 16: Code to PPEs was modified.
Section 08: Exposure limits/standards was modified.
Section 15: OSHA Hazard Communication Standard was modified.
Section 06: Notification Procedures was modified.
Section 08: Exposure Limits Table was modified.
Section 11: Chronic Tox - Component was modified.
Section 09: Oxidizing Properties was modified.
Section 08: OEL Table - Notation Column - Header was modified.
Section 08: Exposure Limit Values - Header was modified.
Section 01: Company Contact Methods Sorted by Priority was modified.
Section 05: Fire Fighting Measures - Unusual Fire Hazards was added.
Section 05: Fire Fighting Measures - Unusual Fire Hazards - Header was added.
Section 06: Protective Measures was added.
Section 06: Accidental Release - Protective Measures - Header was added.
Section 09: Form - Header was added.
Section 09: Physical State was added.
Hazard Identification: Health Hazards was added.
Hazard Identification: Emergency Overview Target Organs was added.
Hazard Identification: Emergency Overview Target Organ - Header was added.
Section 16: Precautionary Label Text - Header was added.

ExxonMobil

Product Name: MOBILTAC 325 NC
Revision Date: 27 Feb 2013
Page 11 of 12

Section 16: Signal Word was added.
Section 16: Health Hazards was added.
Section 16: Health Hazards - Header was added.
Section 16: Precautions was added.
Section 16: Precautions - Header was added.
Section 16: First Aid - Header was added.
Section 16: First Aid Eye - Header was added.
Section 16: First Aid Eye was added.
Section 16: First Aid Skin was added.
Section 16: First Aid Skin - Header was added.
Section 16: Fire Fighting Media - Header was added.
Section 16: Fire Fighting Media - Header was added.
Section 16: Spill - Header was added.
Section 16: Water Spill - Header was added.
Section 16: Water Spill was added.
Section 16: Land Spill was added.
Section 16: Land Spill - Header was added.
Section 16: Labeling Use was added.
Section 16: Labeling Use - Header was added.
Section 16: Target Organs was added.
Section 16: Target Organ - Header was added.
Section 16: NA Contains was added.
Section 16: NA Contains - Header was added.
Section 09: Decomposition Temperature was added.
Section 09: Decomposition Temp - Header was added.
Hazard Identification: OSHA - Hazards Statement was added.
Hazard Identification: OSHA - May be Hazardous Statement was deleted.
Hazard Identification: OSHA - Not Hazardous Statement was deleted.
Section 15: TSCA Class 2 Statement was deleted.

PRECAUTIONARY LABEL TEXT:
Contains: HYDROTREATED LIGHT DISTILLATE; STRAIGHT-RUN MIDDLE DISTILLATES
WARNING!
HEALTH HAZARDS
Irritating to eyes. Irritating to skin.
Target Organs: Skin | Eye |

PRECAUTIONS
Avoid contact with skin. Avoid contact with eyes.

FIRST AID
Eye: Flush thoroughly with water for at least 15 minutes. Get medical assistance.

Skin: Wash contact areas with soap and water. Remove contaminated clothing. Launder contaminated clothing before reuse. If product is injected into or under the skin, or into any part of the body, regardless of the appearance of the wound or its size, the individual should be evaluated immediately by a physician as a surgical emergency. Even though initial symptoms from high pressure injection may be minimal or absent, early surgical treatment within the first few hours may significantly reduce the ultimate extent of injury.

FIRE FIGHTING MEDIA
Use water fog, foam, dry chemical or carbon dioxide (CO2) to extinguish flames.

ExxonMobil

Product Name: MOBILTAC 325 NC
Revision Date: 27 Feb 2013
Page 12 of 12

SPILL/LEAK
Land Spill: Stop leak if you can do it without risk. Small Spills: Absorb with earth, sand or other non-combustible material and transfer to containers for later disposal. Recover by pumping or with suitable absorbent.

Water Spill: Stop leak if you can do it without risk. Confine the spill immediately with booms. Warn other shipping. Remove from the surface by skimming or with suitable absorbents. Report spills as required to appropriate authorities. Seek the advice of a specialist before using dispersants.
Use
Not intended or suitable for use in or around a household or dwelling.

The information and recommendations contained herein are, to the best of ExxonMobil's knowledge and belief, accurate and reliable as of the date issued. You can contact ExxonMobil to insure that this document is the most current available from ExxonMobil. The information and recommendations are offered for the user's consideration and examination. It is the user's responsibility to satisfy itself that the product is suitable for the intended use. If buyer repackages this product, it is the user's responsibility to insure proper health, safety and other necessary information is included with and/or on the container. Appropriate warnings and safe-handling procedures should be provided to handlers and users. Alteration of this document is strictly prohibited. Except to the extent required by law, re-publication or retransmission of this document, in whole or in part, is not permitted. The term, "ExxonMobil" is used for convenience, and may include any one or more of ExxonMobil Chemical Company, Exxon Mobil Corporation, or any affiliates in which they directly or indirectly hold any interest.

Internal Use Only
MHC: 0, 0, 0, 2, 4, 0 PPEC: D

DGN: 2009222XUS (1012316)

Copyright 2002 Exxon Mobil Corporation, All rights reserved

11.5.4 MOBIL MOBILGEAR 600 XP 100, 220

Mobil

Mobilgear 600 XP Series

Gear Oil

Product Description

The Mobilgear 600 XP Series are extra high performance gear oils having outstanding extreme pressure characteristics and load-carrying properties, intended for use in all types of enclosed gear drives with circulation or splash lubrication systems. Mobilgear 600 XP Series is designed to stay ahead of the changing needs of gearbox technology. Gearbox technology design trends are towards smaller units with similar power throughput. This increase in power density places increased demands on gear oils. Mobilgear 600 XP Series oils are formulated to meet the stress by providing extra protection for gears, bearings and seals.

Mobilgear 600 XP Series is formulated to protect gear teeth from wear at its earliest stages. Microscopic wear, called micropitting, can lead to significant gear tooth damage. Mobilgear 600 XP Series exceeds the industry requirement for bearing wear protection. In fact, Mobilgear 600 XP Series provides up to 15 times the wear protection as measured by the industry standard FAG FE 8 test. Mobilgear 600 XP Series' balanced formulation is able to provide maximum wear and corrosion protection while maintaining compatibility with common gearbox seal materials. Mobilgear 600 XP helps to maintain gearbox seal integrity thereby preventing oil leaks and keeping contamination out. By protecting the gears, bearings and seals, Mobilgear 600 XP can improve equipment reliability and increase productivity.

Mobilgear 600 XP Series oils are recommended for industrial spur, helical and bevel enclosed gears with circulation or splash lubrication, operating at bulk oil temperatures up to 100°C. They are particularly suitable for gear sets working under heavy or shock loads. Mobilgear 600 XP oils also find broad application in marine gearing applications. They may also be used in non-gear applications include highly loaded and slow speed plain and rolling contact bearings.

Features and Benefits

Mobilgear 600 XP Series products are a leading member of the Mobil brand of industrial lubricants that enjoy a reputation for innovation and high performance capability. These mineral-based products are designed to provide high quality industrial gear oils, meeting the latest industry standards and with high versatility to lubricate a broad range of industrial and marine equipment.

Mobilgear 600 XP Series products offer the following features and potential benefits:

Features	Advantages and Potential Benefits
Enhanced gear wear protection from micropitting	Less gear and bearing wear resulting in less unexpected downtime
Reduced debris denting from generated wear particles	Up to 22% improvement in bearing life reducing bearing replacement costs and improving productivity
Improved bearing wear protection	Improved bearing life resulting in higher productivity
Outstanding compatibility with a range of seal materials	Reduced leakage, oil consumption and contamination ingress helping to reduce maintenance, extend gearbox reliability and higher productivity
Excellent resistance to oil oxidation and thermal degradation	Helps extend lubricant life with lower lubricant and lubrication costs and reduced scheduled downtime.
High resistance to sludge and deposit formation	Cleaner systems and reduced maintenance
Wide range of applications	Fewer grades of lubricant required because of wide range of application, leading to lower purchase and

Features	Advantages and Potential Benefits
	storage costs and less danger of using wrong lubricant
Optimised resistance to rust and corrosion of steel and corrosion of copper and soft metal alloys	Excellent protection of machine parts, with reduced maintenance and repair costs
Resistance to foaming and emulsion formation	Effective lubrication and problem free operation in the presence of water contamination or in equipment prone to oil foaming

Applications

Mobilgear 600 XP lubricants are used in a wide range of industrial and marine applications, especially spur, helical, bevel and worm gearing. Specific applications include:

- Industrial gearing for conveyers, agitators, dryers, extruders, fans, mixers, presses, pulpers, pumps (including oil well pumps), screens, extruders and other heavy duty applications
- Marine gearing including main propulsion, centrifuges, deck machinery such as winches, windlasses, cranes, turning gears, pumps, elevators and rudder carriers
- Non-gear applications include shaft couplings, screws and heavily loaded plain and rolling contact bearings operating at slow speeds.
- Mobilgear 600 XP 100, 150, 220, 320, 460, and 680 are approved by Siemens for use in Flender gearboxes

Specifications and Approvals

Mobilgear 600 XP meets or exceeds the requirements of:	Mobilgear 600 XP 68	Mobilgear 600 XP 100	Mobilgear 600 XP 150	Mobilgear 600 XP 220	Mobilgear 600 XP 320	Mobilgear 600 XP 460	Mobilgear 600 XP 680
AGMA 9005-E02	2 EP	3 EP	4 EP	5 EP	6 EP	7 EP	-
DIN 51517-3: 2009-06	X	X	X	X	X	X	X
ISO 12925-1 Typ	CKD 68	CKD 100	CKD 150	CKD 220	CKD 320	CKC 460	CKC 680

Mobilgear 600 XP has the following builder approvals:	Mobilgear 600 XP 68	Mobilgear 600 XP 100	Mobilgear 600 XP 150	Mobilgear 600 XP 220	Mobilgear 600 XP 320	Mobilgear 600 XP 460	Mobilgear 600 XP 680
Siemens T 7300, Table A-1, Revision 13, FLENDER Code No.:	-	A17	A16	A15	A14	A13	A12
Mueller Weingarten DT 55 005		CLP 100	CLP 150	CLP 220	CLP 320	CLP 460	

Typical Properties

Mobilgear 600 XP	68	100	150	220	320	460	680
ISO Viscosity Grade	68	100	150	220	320	460	680
Viscosity, ASTM D 445							
mm^2/s @ 40°C	68	100	150	220	320	460	680
mm^2/s @ 100°C	8.8	11.2	14.7	19.0	24.1	30.6	39.2
Viscosity Index, ASTM D 2270	101	97	97	97	97	96	90
Pour Point, °C, ASTM D 97	-27	-24	-24	-24	-24	-15	-9
Flash Point, °C, ASTM D 92	230	230	230	240	240	240	285
Density @15.6 °C, ASTM D 4052, kg/l	0.88	0.88	0.89	0.89	0.90	0.90	0.91

Mobilgear 600 XP	68	100	150	220	320	460	680
FZG Micropitting, FVA 54, Fail Stage / Rating		10 / High	10 / High	10 / High	10 / High	10 / High	10 / High
FE 8 wear test, DIN 51819-3, D7,5/80-80. Roller wear, mg	2	2	2	2	2	2	2
Timken OK Load, ASTM D 2782, lb	65	65	65	65	65	65	65
4-Ball EP test, ASTM D 2783,							
Weld Load, kg	200	200	250	250	250	250	250
Load Wear Index, kgf	47	47	47	48	48	48	48
FZG Scuffing, Fail Stage							
A/8.3/90	12+	12+	12+	12+	12+	12+	12+
A/16.6/90		12+	12+	12+	12+	12+	12+
Rust protection, ASTM D 665, Sea Water	Pass	Pass	Pass	Pass	Pass	Pass	Pass
Copper Strip Corrosion, ASTM D 130, 3 hrs @ 100°C	1B	1B	1B	1B	1B	1B	1B
Demulsibility, ASTM D 1401, Time to 3ml emulsion, minutes @ 82°C	30	30	30	30	30	30	30
Foam Test, ASTM D 892, Tendency/Stability, ml/ml Sequence 1	0/0	0/0	0/0	0/0	0/0	0/0	0/0
Sequence 2	30/0	30/0	30/0	30/0	30/0	30/0	30/0

Health and Safety

Based on available information, this product is not expected to produce adverse effects on health when used for the intended application, following the recommendations provided in the Material Safety Data Sheet (MSDS). MSDSs are available upon request through your sales contract office, or via the Internet on http://www.exxonmobil.com. This product should not be used for purposes other than its intended use. If disposing of used product, take care to protect the environment.

All trademarks used herein are trademarks or registered trademarks of Exxon Mobil Corporation or one of its subsidiaries unless indicated otherwise.

7-2011

Exxon Mobil Corporation
3225 Gallows Road
Fairfax, VA 22037

1-800-ASK MOBIL (275-6624)

Typical Properties are typical of those obtained with normal production tolerance and do not constitute a specification. Variations that do not affect product performance are to be expected during normal manufacture and at different blending locations. The information contained herein is subject to change without notice. All products may not be available locally. For more information, contact your local ExxonMobil contact or visit www.exxonmobil.com
ExxonMobil is comprised of numerous affiliates and subsidiaries, many with names that include Esso, Mobil, or ExxonMobil. Nothing in this document is intended to override or supersede the corporate separateness of local entities. Responsibility for local action and accountability remains with the local ExxonMobil-affiliate entities.

© 2001-2011 Exxon Mobil Corporation. All rights reserved..

ExxonMobil

Product Name: MOBILGEAR 600 XP 100
Revision Date: 17 Aug 2010
Page 1 of 9

MATERIAL SAFETY DATA SHEET

SECTION 1 PRODUCT AND COMPANY IDENTIFICATION

PRODUCT

Product Name: **MOBILGEAR 600 XP 100**
Product Description: Base Oil and Additives
Product Code: 201560401210, 613612-00, 97AE97
Intended Use: Gear oil

COMPANY IDENTIFICATION

Supplier: EXXON MOBIL CORPORATION
3225 GALLOWS RD.
FAIRFAX, VA. 22037 USA

24 Hour Health Emergency	609-737-4411
Transportation Emergency Phone	800-424-9300
ExxonMobil Transportation No.	281-834-3296
Product Technical Information	800-662-4525, 800-947-9147
MSDS Internet Address	http://www.exxon.com, http://www.mobil.com

SECTION 2 COMPOSITION / INFORMATION ON INGREDIENTS

No Reportable Hazardous Substance(s) or Complex Substance(s).

SECTION 3 HAZARDS IDENTIFICATION

This material is not considered to be hazardous according to regulatory guidelines (see (M)SDS Section 15).

POTENTIAL HEALTH EFFECTS

Low order of toxicity. Excessive exposure may result in eye, skin, or respiratory irritation. High-pressure injection under skin may cause serious damage.

NFPA Hazard ID:	Health:	0	Flammability:	1	Reactivity:	0
HMIS Hazard ID:	Health:	0	Flammability:	1	Reactivity:	0

NOTE: This material should not be used for any other purpose than the intended use in Section 1 without expert advice. Health studies have shown that chemical exposure may cause potential human health risks which may vary from person to person.

SECTION 4 FIRST AID MEASURES

INHALATION

Remove from further exposure. For those providing assistance, avoid exposure to yourself or others. Use

adequate respiratory protection. If respiratory irritation, dizziness, nausea, or unconsciousness occurs, seek immediate medical assistance. If breathing has stopped, assist ventilation with a mechanical device or use mouth-to-mouth resuscitation.

SKIN CONTACT

Wash contact areas with soap and water. If product is injected into or under the skin, or into any part of the body, regardless of the appearance of the wound or its size, the individual should be evaluated immediately by a physician as a surgical emergency. Even though initial symptoms from high pressure injection may be minimal or absent, early surgical treatment within the first few hours may significantly reduce the ultimate extent of injury.

EYE CONTACT

Flush thoroughly with water. If irritation occurs, get medical assistance.

INGESTION

First aid is normally not required. Seek medical attention if discomfort occurs.

SECTION 5 FIRE FIGHTING MEASURES

EXTINGUISHING MEDIA

Appropriate Extinguishing Media: Use water fog, foam, dry chemical or carbon dioxide (CO2) to extinguish flames.

Inappropriate Extinguishing Media: Straight Streams of Water

FIRE FIGHTING

Fire Fighting Instructions: Evacuate area. Prevent runoff from fire control or dilution from entering streams, sewers, or drinking water supply. Firefighters should use standard protective equipment and in enclosed spaces, self-contained breathing apparatus (SCBA). Use water spray to cool fire exposed surfaces and to protect personnel.

Hazardous Combustion Products: Smoke, Fume, Aldehydes, Sulfur oxides, Incomplete combustion products, Oxides of carbon

FLAMMABILITY PROPERTIES

Flash Point [Method]: >200C (392F) [ASTM D-92]
Flammable Limits (Approximate volume % in air): LEL: 0.9 UEL: 7.0
Autoignition Temperature: N/D

SECTION 6 ACCIDENTAL RELEASE MEASURES

NOTIFICATION PROCEDURES

In the event of a spill or accidental release, notify relevant authorities in accordance with all applicable regulations. US regulations require reporting releases of this material to the environment which exceed the applicable reportable quantity or oil spills which could reach any waterway including intermittent dry creeks. The National Response Center can be reached at (800)424-8802.

SPILL MANAGEMENT

Land Spill: Stop leak if you can do it without risk. Recover by pumping or with suitable absorbent.

Water Spill: Stop leak if you can do it without risk. Confine the spill immediately with booms. Warn other shipping. Remove from the surface by skimming or with suitable absorbents. Seek the advice of a specialist before using dispersants.

Water spill and land spill recommendations are based on the most likely spill scenario for this material; however, geographic conditions, wind, temperature, (and in the case of a water spill) wave and current direction and speed may greatly influence the appropriate action to be taken. For this reason, local experts should be consulted. Note: Local regulations may prescribe or limit action to be taken.

ENVIRONMENTAL PRECAUTIONS

Large Spills: Dike far ahead of liquid spill for later recovery and disposal. Prevent entry into waterways, sewers, basements or confined areas.

SECTION 7 HANDLING AND STORAGE

HANDLING

Prevent small spills and leakage to avoid slip hazard. Material can accumulate static charges which may cause an electrical spark (ignition source). When the material is handled in bulk, an electrical spark could ignite any flammable vapors from liquids or residues that may be present (e.g., during switch-loading operations). Use proper bonding and/or ground procedures. However, bonding and grounds may not eliminate the hazard from static accumulation. Consult local applicable standards for guidance. Additional references include American Petroleum Institute 2003 (Protection Against Ignitions Arising out of Static, Lightning and Stray Currents) or National Fire Protection Agency 77 (Recommended Practice on Static Electricity) or CENELEC CLC/TR 50404 (Electrostatics - Code of practice for the avoidance of hazards due to static electricity).

Static Accumulator: This material is a static accumulator.

STORAGE

The container choice, for example storage vessel, may effect static accumulation and dissipation. Do not store in open or unlabelled containers. Keep away from incompatible materials.

SECTION 8 EXPOSURE CONTROLS / PERSONAL PROTECTION

Exposure limits/standards for materials that can be formed when handling this product: When mists / aerosols can occur, the following are recommended: 5 mg/m³ - ACGIH TLV, 10 mg/m³ - ACGIH STEL, 5 mg/m³ - OSHA PEL.

NOTE: Limits/standards shown for guidance only. Follow applicable regulations.

ENGINEERING CONTROLS

The level of protection and types of controls necessary will vary depending upon potential exposure conditions.

Control measures to consider:
No special requirements under ordinary conditions of use and with adequate ventilation.

PERSONAL PROTECTION

Personal protective equipment selections vary based on potential exposure conditions such as applications, handling practices, concentration and ventilation. Information on the selection of protective equipment for use with this material, as provided below, is based upon intended, normal usage.

Respiratory Protection: If engineering controls do not maintain airborne contaminant concentrations at a level which is adequate to protect worker health, an approved respirator may be appropriate. Respirator selection, use, and maintenance must be in accordance with regulatory requirements, if applicable. Types of respirators to be considered for this material include:
No special requirements under ordinary conditions of use and with adequate ventilation.

For high airborne concentrations, use an approved supplied-air respirator, operated in positive pressure mode. Supplied air respirators with an escape bottle may be appropriate when oxygen levels are inadequate, gas/vapor warning properties are poor, or if air purifying filter capacity/rating may be exceeded.

Hand Protection: Any specific glove information provided is based on published literature and glove manufacturer data. Glove suitability and breakthrough time will differ depending on the specific use conditions. Contact the glove manufacturer for specific advice on glove selection and breakthrough times for your use conditions. Inspect and replace worn or damaged gloves. The types of gloves to be considered for this material include:
No protection is ordinarily required under normal conditions of use.

Eye Protection: If contact is likely, safety glasses with side shields are recommended.

Skin and Body Protection: Any specific clothing information provided is based on published literature or manufacturer data. The types of clothing to be considered for this material include:
No skin protection is ordinarily required under normal conditions of use. In accordance with good industrial hygiene practices, precautions should be taken to avoid skin contact.

Specific Hygiene Measures: Always observe good personal hygiene measures, such as washing after handling the material and before eating, drinking, and/or smoking. Routinely wash work clothing and protective equipment to remove contaminants. Discard contaminated clothing and footwear that cannot be cleaned. Practice good housekeeping.

ENVIRONMENTAL CONTROLS
See Sections 6, 7, 12, 13.

SECTION 9 PHYSICAL AND CHEMICAL PROPERTIES

Typical physical and chemical properties are given below. Consult the Supplier in Section 1 for additional data.

GENERAL INFORMATION
Physical State: Liquid
Color: Brown
Odor: Characteristic
Odor Threshold: N/D

IMPORTANT HEALTH, SAFETY, AND ENVIRONMENTAL INFORMATION

Relative Density (at 15 C): 0.884
Flash Point [Method]: >200C (392F) [ASTM D-92]
Flammable Limits (Approximate volume % in air): LEL: 0.9 UEL: 7.0
Autoignition Temperature: N/D
Boiling Point / Range: > 316C (600F)
Vapor Density (Air = 1): > 2 at 101 kPa
Vapor Pressure: < 0.013 kPa (0.1 mm Hg) at 20 C
Evaporation Rate (n-butyl acetate = 1): N/D
pH: N/A
Log Pow (n-Octanol/Water Partition Coefficient): N/D
Solubility in Water: Negligible
Viscosity: 100 cSt (100 mm2/sec) at 40 C | 11.2 cSt (11.2 mm2/sec) at 100C
Oxidizing Properties: See Hazards Identification Section.

OTHER INFORMATION

Freezing Point: N/D
Melting Point: N/A
Pour Point: -12°C (10°F)
DMSO Extract (mineral oil only), IP-346: < 3 %wt

SECTION 10 STABILITY AND REACTIVITY

STABILITY: Material is stable under normal conditions.

CONDITIONS TO AVOID: Excessive heat. High energy sources of ignition.

MATERIALS TO AVOID: Strong oxidizers

HAZARDOUS DECOMPOSITION PRODUCTS: Material does not decompose at ambient temperatures.

HAZARDOUS POLYMERIZATION: Will not occur.

SECTION 11 TOXICOLOGICAL INFORMATION

ACUTE TOXICITY

Route of Exposure	Conclusion / Remarks
Inhalation	
Toxicity (Rat): LC50 > 5000 mg/m3	Minimally Toxic. Based on test data for structurally similar materials.
Irritation: No end point data.	Negligible hazard at ambient/normal handling temperatures. Based on assessment of the components.
Ingestion	
Toxicity (Rat): LD50 > 5000 mg/kg	Minimally Toxic. Based on test data for structurally similar materials.
Skin	
Toxicity (Rabbit): LD50 > 5000 mg/kg	Minimally Toxic. Based on test data for structurally similar materials.
Irritation (Rabbit): Data available.	Negligible irritation to skin at ambient temperatures. Based on test data for structurally similar materials.

Eye	
Irritation (Rabbit): Data available.	May cause mild, short-lasting discomfort to eyes. Based on test data for structurally similar materials.

CHRONIC/OTHER EFFECTS

For the product itself:

Repeated and/or prolonged exposure may cause irritation to the skin, eyes, or respiratory tract.

Contains:

Base oil severely refined: Not carcinogenic in animal studies. Representative material passes IP-346, Modified Ames test, and/or other screening tests. Dermal and inhalation studies showed minimal effects; lung non-specific infiltration of immune cells, oil deposition and minimal granuloma formation. Not sensitizing in test animals.

Additional information is available by request.

The following ingredients are cited on the lists below: None.

--REGULATORY LISTS SEARCHED--

1 = NTP CARC	3 = IARC 1	5 = IARC 2B
2 = NTP SUS	4 = IARC 2A	6 = OSHA CARC

SECTION 12 ECOLOGICAL INFORMATION

The information given is based on data available for the material, the components of the material, and similar materials.

ECOTOXICITY

Material -- Not expected to be harmful to aquatic organisms.

MOBILITY

Base oil component -- Low solubility and floats and is expected to migrate from water to the land. Expected to partition to sediment and wastewater solids.

PERSISTENCE AND DEGRADABILITY

Biodegradation:

Base oil component -- Expected to be inherently biodegradable

BIOACCUMULATION POTENTIAL

Base oil component -- Has the potential to bioaccumulate, however metabolism or physical properties may reduce the bioconcentration or limit bioavailability.

SECTION 13 DISPOSAL CONSIDERATIONS

Disposal recommendations based on material as supplied. Disposal must be in accordance with current applicable laws and regulations, and material characteristics at time of disposal.

ExxonMobil

Product Name: MOBILGEAR 600 XP 100
Revision Date: 17 Aug 2010
Page 7 of 9

DISPOSAL RECOMMENDATIONS

Product is suitable for burning in an enclosed controlled burner for fuel value or disposal by supervised incineration at very high temperatures to prevent formation of undesirable combustion products.

REGULATORY DISPOSAL INFORMATION

RCRA Information: The unused product, in our opinion, is not specifically listed by the EPA as a hazardous waste (40 CFR, Part 261D), nor is it formulated to contain materials which are listed as hazardous wastes. It does not exhibit the hazardous characteristics of ignitability, corrositivity or reactivity and is not formulated with contaminants as determined by the Toxicity Characteristic Leaching Procedure (TCLP). However, used product may be regulated.

Empty Container Warning Empty Container Warning (where applicable): Empty containers may contain residue and can be dangerous. Do not attempt to refill or clean containers without proper instructions. Empty drums should be completely drained and safely stored until appropriately reconditioned or disposed. Empty containers should be taken for recycling, recovery, or disposal through suitably qualified or licensed contractor and in accordance with governmental regulations. DO NOT PRESSURISE, CUT, WELD, BRAZE, SOLDER, DRILL, GRIND, OR EXPOSE SUCH CONTAINERS TO HEAT, FLAME, SPARKS, STATIC ELECTRICITY, OR OTHER SOURCES OF IGNITION. THEY MAY EXPLODE AND CAUSE INJURY OR DEATH.

SECTION 14 TRANSPORT INFORMATION

LAND (DOT): Not Regulated for Land Transport

LAND (TDG): Not Regulated for Land Transport

SEA (IMDG): Not Regulated for Sea Transport according to IMDG-Code

AIR (IATA): Not Regulated for Air Transport

SECTION 15 REGULATORY INFORMATION

OSHA HAZARD COMMUNICATION STANDARD: When used for its intended purposes, this material is not classified as hazardous in accordance with OSHA 29 CFR 1910.1200.

NATIONAL CHEMICAL INVENTORY LISTING: AICS, EINECS, KECI, PICCS, TSCA
Special Cases:

Inventory	Status
NDSL	Restrictions Apply

EPCRA: This material contains no extremely hazardous substances.

SARA (311/312) REPORTABLE HAZARD CATEGORIES: None.

SARA (313) TOXIC RELEASE INVENTORY: This material contains no chemicals subject to the supplier notification requirements of the SARA 313 Toxic Release Program.

ExxonMobil

Product Name: MOBILGEAR 600 XP 100
Revision Date: 17 Aug 2010
Page 8 of 9

The following ingredients are cited on the lists below: None.

--REGULATORY LISTS SEARCHED--

1 = ACGIH ALL	6 = TSCA 5a2	11 = CA P65 REPRO	16 = MN RTK
2 = ACGIH A1	7 = TSCA 5e	12 = CA RTK	17 = NJ RTK
3 = ACGIH A2	8 = TSCA 6	13 = IL RTK	18 = PA RTK
4 = OSHA Z	9 = TSCA 12b	14 = LA RTK	19 = RI RTK
5 = TSCA 4	10 = CA P65 CARC	15 = MI 293	

Code key: CARC=Carcinogen; REPRO=Reproductive

SECTION 16 OTHER INFORMATION

N/D = Not determined, N/A = Not applicable

THIS SAFETY DATA SHEET CONTAINS THE FOLLOWING REVISIONS:

Revision Changes:
Section 06: Notification Procedures - Header was modified.
Section 10 Stability and Reactivity - Header was modified.
Section 13: Disposal Recommendations - Note was modified.
Section 08: Personal Protection was modified.
Section 08: Hand Protection was modified.
Section 07: Handling and Storage - Handling was modified.
Section 07: Handling and Storage - Storage Phrases was modified.
Section 11: Dermal Lethality Test Data was modified.
Section 11: Oral Lethality Test Data was modified.
Section 11: Inhalation Irritation Test Data was modified.
Section 05: Hazardous Combustion Products was modified.
Section 06: Accidental Release - Spill Management - Water was modified.
Section 09: Relative Density - Header was modified.
Section 09: Viscosity was modified.
Section 14: Sea (IMDG) - Header was modified.
Section 14: Air (IATA) - Header was modified.
Section 14: LAND (TDG) - Header was modified.
Section 14: LAND (DOT) - Header was modified.
Section 15: List Citation Table - Header was modified.
Section 14: LAND (DOT) - Default was modified.
Section 14: LAND (TDG) Default was modified.
Section 14: Sea (IMDG) - Default was modified.
Section 14: Air (IATA) - Default was modified.
Section 16: Code to MHCs was modified.
Section 08: Exposure limits/standards was modified.
Hazard Identification: OSHA - May be Hazardous Statement was modified.
Section 06: Notification Procedures was modified.
Section 09: Oxidizing Properties was modified.
Section 01: Company Contact Methods Sorted by Priority was modified.

ExxonMobil

Product Name: MOBILGEAR 600 XP 100
Revision Date: 17 Aug 2010
Page 9 of 9

The information and recommendations contained herein are, to the best of ExxonMobil's knowledge and belief, accurate and reliable as of the date issued. You can contact ExxonMobil to insure that this document is the most current available from ExxonMobil. The information and recommendations are offered for the user's consideration and examination. It is the user's responsibility to satisfy itself that the product is suitable for the intended use. If buyer repackages this product, it is the user's responsibility to insure proper health, safety and other necessary information is included with and/or on the container. Appropriate warnings and safe-handling procedures should be provided to handlers and users. Alteration of this document is strictly prohibited. Except to the extent required by law, re-publication or retransmission of this document, in whole or in part, is not permitted. The term, "ExxonMobil" is used for convenience, and may include any one or more of ExxonMobil Chemical Company, Exxon Mobil Corporation, or any affiliates in which they directly or indirectly hold any interest.

Internal Use Only
MHC: 0B, 0B, 0, 0, 0, 0 PPEC: A

DGN: 7077870XUS (1012011)

Copyright 2002 Exxon Mobil Corporation, All rights reserved

ExxonMobil

Product Name: MOBILGEAR 600 XP 220
Revision Date: 05 Nov 2010
Page 1 of 9

MATERIAL SAFETY DATA SHEET

SECTION 1 PRODUCT AND COMPANY IDENTIFICATION

PRODUCT

Product Name: **MOBILGEAR 600 XP 220**
Product Description: Base Oil and Additives
Product Code: 201560401220, 613638-00, 97AE99
Intended Use: Gear oil

COMPANY IDENTIFICATION

Supplier: EXXON MOBIL CORPORATION
3225 GALLOWS RD.
FAIRFAX, VA. 22037 USA

24 Hour Health Emergency	609-737-4411
Transportation Emergency Phone	800-424-9300
ExxonMobil Transportation No.	281-834-3296
Product Technical Information	800-662-4525, 800-947-9147
MSDS Internet Address	http://www.exxon.com, http://www.mobil.com

SECTION 2 COMPOSITION / INFORMATION ON INGREDIENTS

No Reportable Hazardous Substance(s) or Complex Substance(s).

SECTION 3 HAZARDS IDENTIFICATION

This material is not considered to be hazardous according to regulatory guidelines (see (M)SDS Section 15).

POTENTIAL HEALTH EFFECTS

Low order of toxicity. Excessive exposure may result in eye, skin, or respiratory irritation. High-pressure injection under skin may cause serious damage.

NFPA Hazard ID:	Health:	0	Flammability:	1	Reactivity:	0
HMIS Hazard ID:	Health:	0	Flammability:	1	Reactivity:	0

NOTE: This material should not be used for any other purpose than the intended use in Section 1 without expert advice. Health studies have shown that chemical exposure may cause potential human health risks which may vary from person to person.

SECTION 4 FIRST AID MEASURES

INHALATION

Remove from further exposure. For those providing assistance, avoid exposure to yourself or others. Use

adequate respiratory protection. If respiratory irritation, dizziness, nausea, or unconsciousness occurs, seek immediate medical assistance. If breathing has stopped, assist ventilation with a mechanical device or use mouth-to-mouth resuscitation.

SKIN CONTACT

Wash contact areas with soap and water. If product is injected into or under the skin, or into any part of the body, regardless of the appearance of the wound or its size, the individual should be evaluated immediately by a physician as a surgical emergency. Even though initial symptoms from high pressure injection may be minimal or absent, early surgical treatment within the first few hours may significantly reduce the ultimate extent of injury.

EYE CONTACT

Flush thoroughly with water. If irritation occurs, get medical assistance.

INGESTION

First aid is normally not required. Seek medical attention if discomfort occurs.

SECTION 5 FIRE FIGHTING MEASURES

EXTINGUISHING MEDIA

Appropriate Extinguishing Media: Use water fog, foam, dry chemical or carbon dioxide (CO2) to extinguish flames.

Inappropriate Extinguishing Media: Straight Streams of Water

FIRE FIGHTING

Fire Fighting Instructions: Evacuate area. Prevent runoff from fire control or dilution from entering streams, sewers, or drinking water supply. Firefighters should use standard protective equipment and in enclosed spaces, self-contained breathing apparatus (SCBA). Use water spray to cool fire exposed surfaces and to protect personnel.

Hazardous Combustion Products: Smoke, Fume, Aldehydes, Sulfur oxides, Incomplete combustion products, Oxides of carbon

FLAMMABILITY PROPERTIES

Flash Point [Method]: >200C (392F) [ASTM D-92]
Flammable Limits (Approximate volume % in air): LEL: 0.9 UEL: 7.0
Autoignition Temperature: N/D

SECTION 6 ACCIDENTAL RELEASE MEASURES

NOTIFICATION PROCEDURES

In the event of a spill or accidental release, notify relevant authorities in accordance with all applicable regulations. US regulations require reporting releases of this material to the environment which exceed the applicable reportable quantity or oil spills which could reach any waterway including intermittent dry creeks. The National Response Center can be reached at (800)424-8802.

ExxonMobil

Product Name: MOBILGEAR 600 XP 220
Revision Date: 05 Nov 2010
Page 3 of 9

SPILL MANAGEMENT

Land Spill: Stop leak if you can do it without risk. Recover by pumping or with suitable absorbent.

Water Spill: Stop leak if you can do it without risk. Confine the spill immediately with booms. Warn other shipping. Remove from the surface by skimming or with suitable absorbents. Seek the advice of a specialist before using dispersants.

Water spill and land spill recommendations are based on the most likely spill scenario for this material; however, geographic conditions, wind, temperature, (and in the case of a water spill) wave and current direction and speed may greatly influence the appropriate action to be taken. For this reason, local experts should be consulted. Note: Local regulations may prescribe or limit action to be taken.

ENVIRONMENTAL PRECAUTIONS

Large Spills: Dike far ahead of liquid spill for later recovery and disposal. Prevent entry into waterways, sewers, basements or confined areas.

SECTION 7 HANDLING AND STORAGE

HANDLING

Prevent small spills and leakage to avoid slip hazard. Material can accumulate static charges which may cause an electrical spark (ignition source). When the material is handled in bulk, an electrical spark could ignite any flammable vapors from liquids or residues that may be present (e.g., during switch-loading operations). Use proper bonding and/or ground procedures. However, bonding and grounds may not eliminate the hazard from static accumulation. Consult local applicable standards for guidance. Additional references include American Petroleum Institute 2003 (Protection Against Ignitions Arising out of Static, Lightning and Stray Currents) or National Fire Protection Agency 77 (Recommended Practice on Static Electricity) or CENELEC CLC/TR 50404 (Electrostatics - Code of practice for the avoidance of hazards due to static electricity).

Static Accumulator: This material is a static accumulator.

STORAGE

The container choice, for example storage vessel, may effect static accumulation and dissipation. Do not store in open or unlabelled containers. Keep away from incompatible materials.

SECTION 8 EXPOSURE CONTROLS / PERSONAL PROTECTION

Exposure limits/standards for materials that can be formed when handling this product: When mists / aerosols can occur, the following are recommended: 5 mg/m³ - ACGIH TLV, 10 mg/m³ - ACGIH STEL, 5 mg/m³ - OSHA PEL.

NOTE: Limits/standards shown for guidance only. Follow applicable regulations.

ENGINEERING CONTROLS

The level of protection and types of controls necessary will vary depending upon potential exposure conditions.

Control measures to consider:
No special requirements under ordinary conditions of use and with adequate ventilation.

PERSONAL PROTECTION

Personal protective equipment selections vary based on potential exposure conditions such as applications, handling practices, concentration and ventilation. Information on the selection of protective equipment for use with this material, as provided below, is based upon intended, normal usage.

Respiratory Protection: If engineering controls do not maintain airborne contaminant concentrations at a level which is adequate to protect worker health, an approved respirator may be appropriate. Respirator selection, use, and maintenance must be in accordance with regulatory requirements, if applicable. Types of respirators to be considered for this material include:
No special requirements under ordinary conditions of use and with adequate ventilation.

For high airborne concentrations, use an approved supplied-air respirator, operated in positive pressure mode. Supplied air respirators with an escape bottle may be appropriate when oxygen levels are inadequate, gas/vapor warning properties are poor, or if air purifying filter capacity/rating may be exceeded.

Hand Protection: Any specific glove information provided is based on published literature and glove manufacturer data. Glove suitability and breakthrough time will differ depending on the specific use conditions. Contact the glove manufacturer for specific advice on glove selection and breakthrough times for your use conditions. Inspect and replace worn or damaged gloves. The types of gloves to be considered for this material include:
No protection is ordinarily required under normal conditions of use.

Eye Protection: If contact is likely, safety glasses with side shields are recommended.

Skin and Body Protection: Any specific clothing information provided is based on published literature or manufacturer data. The types of clothing to be considered for this material include:
No skin protection is ordinarily required under normal conditions of use. In accordance with good industrial hygiene practices, precautions should be taken to avoid skin contact.

Specific Hygiene Measures: Always observe good personal hygiene measures, such as washing after handling the material and before eating, drinking, and/or smoking. Routinely wash work clothing and protective equipment to remove contaminants. Discard contaminated clothing and footwear that cannot be cleaned. Practice good housekeeping.

ENVIRONMENTAL CONTROLS
See Sections 6, 7, 12, 13.

SECTION 9 PHYSICAL AND CHEMICAL PROPERTIES

Typical physical and chemical properties are given below. Consult the Supplier in Section 1 for additional data.

GENERAL INFORMATION
Physical State: Liquid
Color: Amber
Odor: Characteristic
Odor Threshold: N/D

ExxonMobil

Product Name: MOBILGEAR 600 XP 220
Revision Date: 05 Nov 2010
Page 5 of 9

IMPORTANT HEALTH, SAFETY, AND ENVIRONMENTAL INFORMATION

Relative Density (at 15 C): 0.894
Flash Point [Method]: >200C (392F) [ASTM D-92]
Flammable Limits (Approximate volume % in air): LEL: 0.9 UEL: 7.0
Autoignition Temperature: N/D
Boiling Point / Range: > 316C (600F)
Vapor Density (Air = 1): > 2 at 101 kPa
Vapor Pressure: < 0.013 kPa (0.1 mm Hg) at 20 C
Evaporation Rate (n-butyl acetate = 1): N/D
pH: N/A
Log Pow (n-Octanol/Water Partition Coefficient): > 3.5
Solubility in Water: Negligible
Viscosity: 220 cSt (220 mm2/sec) at 40 C | 19 cSt (19 mm2/sec) at 100C
Oxidizing Properties: See Hazards Identification Section.

OTHER INFORMATION

Freezing Point: N/D
Melting Point: N/A
Pour Point: -9°C (16°F)
DMSO Extract (mineral oil only), IP-346: < 3 %wt

SECTION 10 STABILITY AND REACTIVITY

STABILITY: Material is stable under normal conditions.

CONDITIONS TO AVOID: Excessive heat. High energy sources of ignition.

MATERIALS TO AVOID: Strong oxidizers

HAZARDOUS DECOMPOSITION PRODUCTS: Material does not decompose at ambient temperatures.

HAZARDOUS POLYMERIZATION: Will not occur.

SECTION 11 TOXICOLOGICAL INFORMATION

ACUTE TOXICITY

Route of Exposure	Conclusion / Remarks
Inhalation	
Toxicity (Rat): LC50 > 5000 mg/m3	Minimally Toxic. Based on test data for structurally similar materials.
Irritation: No end point data.	Negligible hazard at ambient/normal handling temperatures. Based on assessment of the components.
Ingestion	
Toxicity (Rat): LD50 > 5000 mg/kg	Minimally Toxic. Based on test data for structurally similar materials.
Skin	
Toxicity (Rabbit): LD50 > 5000 mg/kg	Minimally Toxic. Based on test data for structurally similar materials.
Irritation (Rabbit): Data available.	Negligible irritation to skin at ambient temperatures. Based on test data for structurally similar materials.

Eye	
Irritation (Rabbit): Data available.	May cause mild, short-lasting discomfort to eyes. Based on test data for structurally similar materials.

CHRONIC/OTHER EFFECTS

For the product itself:

Repeated and/or prolonged exposure may cause irritation to the skin, eyes, or respiratory tract.

Contains:

Base oil severely refined: Not carcinogenic in animal studies. Representative material passes IP-346, Modified Ames test, and/or other screening tests. Dermal and inhalation studies showed minimal effects; lung non-specific infiltration of immune cells, oil deposition and minimal granuloma formation. Not sensitizing in test animals.

Additional information is available by request.

The following ingredients are cited on the lists below: None.

--REGULATORY LISTS SEARCHED--

1 = NTP CARC	3 = IARC 1	5 = IARC 2B
2 = NTP SUS	4 = IARC 2A	6 = OSHA CARC

SECTION 12 ECOLOGICAL INFORMATION

The information given is based on data available for the material, the components of the material, and similar materials.

ECOTOXICITY

Material -- Not expected to be harmful to aquatic organisms.

MOBILITY

Base oil component -- Low solubility and floats and is expected to migrate from water to the land. Expected to partition to sediment and wastewater solids.

PERSISTENCE AND DEGRADABILITY

Biodegradation:

Base oil component -- Expected to be inherently biodegradable

BIOACCUMULATION POTENTIAL

Base oil component -- Has the potential to bioaccumulate, however metabolism or physical properties may reduce the bioconcentration or limit bioavailability.

SECTION 13 DISPOSAL CONSIDERATIONS

Disposal recommendations based on material as supplied. Disposal must be in accordance with current applicable laws and regulations, and material characteristics at time of disposal.

ExxonMobil

Product Name: MOBILGEAR 600 XP 220
Revision Date: 05 Nov 2010
Page 7 of 9

DISPOSAL RECOMMENDATIONS

Product is suitable for burning in an enclosed controlled burner for fuel value or disposal by supervised incineration at very high temperatures to prevent formation of undesirable combustion products.

REGULATORY DISPOSAL INFORMATION

RCRA Information: The unused product, in our opinion, is not specifically listed by the EPA as a hazardous waste (40 CFR, Part 261D), nor is it formulated to contain materials which are listed as hazardous wastes. It does not exhibit the hazardous characteristics of ignitability, corrositivity or reactivity and is not formulated with contaminants as determined by the Toxicity Characteristic Leaching Procedure (TCLP). However, used product may be regulated.

Empty Container Warning Empty Container Warning (where applicable): Empty containers may contain residue and can be dangerous. Do not attempt to refill or clean containers without proper instructions. Empty drums should be completely drained and safely stored until appropriately reconditioned or disposed. Empty containers should be taken for recycling, recovery, or disposal through suitably qualified or licensed contractor and in accordance with governmental regulations. DO NOT PRESSURISE, CUT, WELD, BRAZE, SOLDER, DRILL, GRIND, OR EXPOSE SUCH CONTAINERS TO HEAT, FLAME, SPARKS, STATIC ELECTRICITY, OR OTHER SOURCES OF IGNITION. THEY MAY EXPLODE AND CAUSE INJURY OR DEATH.

SECTION 14 TRANSPORT INFORMATION

LAND (DOT): Not Regulated for Land Transport

LAND (TDG): Not Regulated for Land Transport

SEA (IMDG): Not Regulated for Sea Transport according to IMDG-Code

AIR (IATA): Not Regulated for Air Transport

SECTION 15 REGULATORY INFORMATION

OSHA HAZARD COMMUNICATION STANDARD: When used for its intended purposes, this material is not classified as hazardous in accordance with OSHA 29 CFR 1910.1200.

Complies with the following national/regional chemical inventory requirements:: EINECS, KECI, PICCS, TSCA
Special Cases:

Inventory	Status
NDSL	Restrictions Apply

EPCRA: This material contains no extremely hazardous substances.

SARA (311/312) REPORTABLE HAZARD CATEGORIES: None.

SARA (313) TOXIC RELEASE INVENTORY: This material contains no chemicals subject to the supplier notification requirements of the SARA 313 Toxic Release Program.

ExxonMobil

Product Name: MOBILGEAR 600 XP 220
Revision Date: 05 Nov 2010
Page 8 of 9

The following ingredients are cited on the lists below: None.

--REGULATORY LISTS SEARCHED--

1 = ACGIH ALL	6 = TSCA 5a2	11 = CA P65 REPRO	16 = MN RTK
2 = ACGIH A1	7 = TSCA 5e	12 = CA RTK	17 = NJ RTK
3 = ACGIH A2	8 = TSCA 6	13 = IL RTK	18 = PA RTK
4 = OSHA Z	9 = TSCA 12b	14 = LA RTK	19 = RI RTK
5 = TSCA 4	10 = CA P65 CARC	15 = MI 293	

Code key: CARC=Carcinogen; REPRO=Reproductive

SECTION 16 OTHER INFORMATION

N/D = Not determined, N/A = Not applicable

THIS SAFETY DATA SHEET CONTAINS THE FOLLOWING REVISIONS:

Revision Changes:
Section 06: Notification Procedures - Header was modified.
Section 10 Stability and Reactivity - Header was modified.
Section 13: Disposal Recommendations - Note was modified.
Section 08: Personal Protection was modified.
Section 08: Hand Protection was modified.
Section 07: Handling and Storage - Handling was modified.
Section 07: Handling and Storage - Storage Phrases was modified.
Section 11: Dermal Lethality Test Data was modified.
Section 11: Oral Lethality Test Data was modified.
Section 11: Inhalation Irritation Test Data was modified.
Section 05: Hazardous Combustion Products was modified.
Section 06: Accidental Release - Spill Management - Water was modified.
Section 09: Relative Density - Header was modified.
Section 09: Viscosity was modified.
Section 14: Sea (IMDG) - Header was modified.
Section 14: Air (IATA) - Header was modified.
Section 14: LAND (TDG) - Header was modified.
Section 14: LAND (DOT) - Header was modified.
Section 15: List Citation Table - Header was modified.
Section 14: LAND (DOT) - Default was modified.
Section 14: LAND (TDG) Default was modified.
Section 14: Sea (IMDG) - Default was modified.
Section 14: Air (IATA) - Default was modified.
Section 15: National Chemical Inventory Listing - Header was modified.
Section 16: Code to MHCs was modified.
Section 08: Exposure limits/standards was modified.
Hazard Identification: OSHA - May be Hazardous Statement was modified.
Section 06: Notification Procedures was modified.
Section 09: Oxidizing Properties was modified.
Section 01: Company Contact Methods Sorted by Priority was modified.

ExxonMobil

Product Name: MOBILGEAR 600 XP 220
Revision Date: 05 Nov 2010
Page 9 of 9

The information and recommendations contained herein are, to the best of ExxonMobil's knowledge and belief, accurate and reliable as of the date issued. You can contact ExxonMobil to insure that this document is the most current available from ExxonMobil. The information and recommendations are offered for the user's consideration and examination. It is the user's responsibility to satisfy itself that the product is suitable for the intended use. If buyer repackages this product, it is the user's responsibility to insure proper health, safety and other necessary information is included with and/or on the container. Appropriate warnings and safe-handling procedures should be provided to handlers and users. Alteration of this document is strictly prohibited. Except to the extent required by law, re-publication or retransmission of this document, in whole or in part, is not permitted. The term, "ExxonMobil" is used for convenience, and may include any one or more of ExxonMobil Chemical Company, Exxon Mobil Corporation, or any affiliates in which they directly or indirectly hold any interest.

Internal Use Only
MHC: 0B, 0B, 0, 0, 0, 0 PPEC: A

DGN: 7077874XUS (1012017)

Copyright 2002 Exxon Mobil Corporation, All rights reserved

11.5.5 MOBIL UNIREX N2

Mobil

UNIREX N

High Temperature Bearing Grease

Product Description

UNIREX N greases are premium-quality, lithium-complex products suitable for high-temperature service in rolling-element bearings. These versatile greases can be used in a wide range of industrial applications and are particularly recommended for electric-motor lubrication.

Unirex N 2 in an NLGI No. 2 grade and is preferred in most cases for application by hand packing or by grease gun. UNIREX N 3 is an NLGI No. 3 grade often used for special applications such as sealed-for-life electric motor bearings, vertically mounted bearings, and higher-speed applications. UNIREX N greases are not intended to be used under extreme pressure conditions where extra anti-welding properties are required.

UNIREX N 2 meets the requirements of Lubricating Grease DIN 51825 - K2N - 30L and ISO L-XBDHA 2.

UNIREX N 3 meets the requirements of Lubricating Grease DIN 51825 - K3N - 20 and ISO L-XBDHA 3.

Features and Benefits

Unirex N greases exhibit excellent high and low temperature performance, resistance to water and corrosion, and long service life in a range of bearing applications.

Features	Advantages and Potential Benefits
Excellent high-temperature performance	Lithium-complex thickener resists softening / running out of bearings at temperatures up to 190°C
Outstanding grease life	Laboratory bearing rig tests show outstanding continuous lubrication performance at bearing temperatures of up to 140°C
Very good low-temperature characteristics	Start-up power requirements are low at temperatures down to at least -20°C and may be suitable at temperatures down to -30°C in those applications where torque is not limiting. Meets DIN 51825 low temperature torque requirements at -20°C.
Excellent mechanical stability	Exhibits excellent resistance to softening due to mechanical working
Excellent water and corrosion resistance	Resists water washout and protects bearings against corrosion
Excellent performance in high-speed applications	Channelling characteristics provide excellent performance in high-speed deep-groove ball bearings. Unirex N3 is recommended where DmN (mean bearing diameter X rpm) exceeds 360,000.

Applications

Because of their outstanding oxidation stability and resistance to softening at high temperatures, UNIREX N greases may be used in many applications such as oven-conveyor bearings, dryer-roller bearings, rotary steam joints, kiln-car bearings, induced-draft fan bearings, and equipment adjacent to high radiant heat such as ovens, soaking pits, etc.

UNIREX N 2 is an NLGI No. 2 grade and is preferred in most cases for application by hand-packing or by grease gun. UNIREX N 2 is recommended for the lubrication of electric motors. It is suitable for NEMA (National Electric Manufacturer's Association) Insulation Class A, B, and F motors.

UNIREX N 3 is an NLGI No. 3 grade and is used for special applications such as sealed-for-life bearings, vertically-mounted bearings, and higher-speed bearings.

Most of the uses for UNIREX N involve manual methods of application. Although UNIREX N 2 is suitable for use in automatic centralized systems, equipment served by these systems would normally not require the long-life properties of UNIREX N, since one of the functions of automatic systems is to replenish the lubricant at relatively short time intervals. UNIREX N 3 should not be used in such systems.

Regardless of the level of oxidation stability of a grease, an increase in temperature will affect the rate of oxidation and thermal deterioration. Consequently, more frequent relubrication is required at higher temperatures. For UNIREX N greases, it is recommended that relubrication intervals not exceed one week of continuous service at 175°C. As temperatures approach 190°C, relubrication intervals should be daily or every shift. Relubrication intervals will, of course, vary widely with the type of service and should be based primarily on the recommendations of the motor manufacturer.

Specifications and Approvals

Unirex N Series meets or exceeds the requirements of:	2	3
DIN 51825: (2004-06)	K2N-30L	K3N-20

Typical Properties

UNIREX N	2	3
Thickener Type	Lithium-complex	Lithium-complex
NLGI Grade	2	3
Color, Visual	Green	Green
Texture	Smooth, Buttery	Smooth, Buttery
Dropping Point, ASTM D 2265, °C	230	230
Base Oil Viscosity, ASTM D 445, cSt @ 40°C	115	115
Base Oil Viscosity Index, ASTM D 2270	95	95
Penetration, worked 60 stokes, ASTM D 217, mm/10	280	235
Penetration change after 100,000 strokes, ASTM D 217, mm/10	25	30
Oil Separation, ASTM D 6184, mass % @100°C / 30 hrs	1.5	0.6
EMCOR Corrosion , ASTM D 6138 (Distilled Water), rating	0,1	0,1
Water Washout @ 79°C, ASTM D 1264, mass %	3.7	3.5
Grease life, DIN 51821 (FE-9), L50 hrs @ 140°C	283	448

Health and Safety

Based on available information, this product is not expected to produce adverse effects on health when used for the intended application and the recommendations provided in the Material Safety Data Sheet (MSDS) are followed. MSDS's are available upon request through your sales contract office, or via the Internet. This product should not be used for purposes other than its intended use. If disposing of used product, take care to protect the environment.

Mobil, the Mobil logotype and the Pegasus design are registered trademarks of Exxon Mobil Corporation, or one of its subsidiaries.

12-2010

Exxon Mobil Corporation

ExxonMobil

Product Name: UNIREX N 2
Revision Date: 07 Jul 2009
Page 1 of 8

MATERIAL SAFETY DATA SHEET

SECTION 1 PRODUCT AND COMPANY IDENTIFICATION

PRODUCT

Product Name: **UNIREX N 2**
Product Description: Base Oil and Additives
Product Code: 2015A0207220, 644351-00, 97N713
Intended Use: Grease

COMPANY IDENTIFICATION

Supplier: **EXXON MOBIL CORPORATION**
3225 GALLOWS RD.
FAIRFAX, VA. 22037 USA

24 Hour Health Emergency	609-737-4411
Transportation Emergency Phone	800-424-9300
ExxonMobil Transportation No.	281-834-3296
Product Technical Information	800-662-4525, 800-947-9147
MSDS Internet Address	http://www.exxon.com, http://www.mobil.com

SECTION 2 COMPOSITION / INFORMATION ON INGREDIENTS

No Reportable Hazardous Substance(s) or Complex Substance(s).

SECTION 3 HAZARDS IDENTIFICATION

This material is not considered to be hazardous according to regulatory guidelines (see (M)SDS Section 15).

POTENTIAL HEALTH EFFECTS

Low order of toxicity. Excessive exposure may result in eye, skin, or respiratory irritation. High-pressure injection under skin may cause serious damage.

NFPA Hazard ID:	Health:	0	Flammability:	1	Reactivity:	0
HMIS Hazard ID:	Health:	0	Flammability:	1	Reactivity:	0

NOTE: This material should not be used for any other purpose than the intended use in Section 1 without expert advice. Health studies have shown that chemical exposure may cause potential human health risks which may vary from person to person.

SECTION 4 FIRST AID MEASURES

Inhalation

Under normal conditions of intended use, this material is not expected to be an inhalation hazard.

SKIN CONTACT

Wash contact areas with soap and water. If product is injected into or under the skin, or into any part of the body, regardless of the appearance of the wound or its size, the individual should be evaluated immediately by a physician as a surgical emergency. Even though initial symptoms from high pressure injection may be minimal or absent, early surgical treatment within the first few hours may significantly reduce the ultimate extent of injury.

EYE CONTACT

Flush thoroughly with water. If irritation occurs, get medical assistance.

Ingestion

First aid is normally not required. Seek medical attention if discomfort occurs.

SECTION 5 FIRE FIGHTING MEASURES

EXTINGUISHING MEDIA

Appropriate Extinguishing Media: Use water fog, foam, dry chemical or carbon dioxide (CO2) to extinguish flames.

Inappropriate Extinguishing Media: Straight Streams of Water

FIRE FIGHTING

Fire Fighting Instructions: Evacuate area. Prevent runoff from fire control or dilution from entering streams, sewers, or drinking water supply. Firefighters should use standard protective equipment and in enclosed spaces, self-contained breathing apparatus (SCBA). Use water spray to cool fire exposed surfaces and to protect personnel.

Hazardous Combustion Products: Smoke, Fume, Aldehydes, Sulfur Oxides, Incomplete combustion products, Oxides of carbon

FLAMMABILITY PROPERTIES

Flash Point [Method]: >200C (392F) [EST. FOR OIL, ASTM D-92 (COC)]
Flammable Limits (Approximate volume % in air): LEL: N/D UEL: N/D
Autoignition Temperature: N/D

SECTION 6 ACCIDENTAL RELEASE MEASURES

NOTIFICATION PROCEDURES

In the event of a spill or accidental release, notify relevant authorities in accordance with all applicable regulations. US regulations require reporting releases of this material to the environment which exceed the applicable reportable quantity or oil spills which could reach any waterway including intermittent dry creeks. The National Response Center can be reached at (800)424-8802.

SPILL MANAGEMENT

Land Spill: Scrape up spilled material with shovels into a suitable container for recycle or disposal.

Water Spill: Stop leak if you can do it without risk. Confine the spill immediately with booms. Warn other

shipping. Skim from surface.

Water spill and land spill recommendations are based on the most likely spill scenario for this material; however, geographic conditions, wind, temperature, (and in the case of a water spill) wave and current direction and speed may greatly influence the appropriate action to be taken. For this reason, local experts should be consulted. Note: Local regulations may prescribe or limit action to be taken.

ENVIRONMENTAL PRECAUTIONS

Prevent entry into waterways, sewers, basements or confined areas.

SECTION 7 HANDLING AND STORAGE

HANDLING

Prevent small spills and leakage to avoid slip hazard.

Static Accumulator: This material is not a static accumulator.

STORAGE

Do not store in open or unlabelled containers.

SECTION 8 EXPOSURE CONTROLS / PERSONAL PROTECTION

NOTE: Limits/standards shown for guidance only. Follow applicable regulations.

ENGINEERING CONTROLS

The level of protection and types of controls necessary will vary depending upon potential exposure conditions. Control measures to consider:

No special requirements under ordinary conditions of use and with adequate ventilation.

PERSONAL PROTECTION

Personal protective equipment selections vary based on potential exposure conditions such as applications, handling practices, concentration and ventilation. Information on the selection of protective equipment for use with this material, as provided below, is based upon intended, normal usage.

Respiratory Protection: If engineering controls do not maintain airborne contaminant concentrations at a level which is adequate to protect worker health, an approved respirator may be appropriate. Respirator selection, use, and maintenance must be in accordance with regulatory requirements, if applicable. Types of respirators to be considered for this material include:

No protection is ordinarily required under normal conditions of use and with adequate ventilation.

For high airborne concentrations, use an approved supplied-air respirator, operated in positive pressure mode. Supplied air respirators with an escape bottle may be appropriate when oxygen levels are inadequate, gas/vapor warning properties are poor, or if air purifying filter capacity/rating may be exceeded.

Hand Protection: Any specific glove information provided is based on published literature and glove manufacturer data. Glove suitability and breakthrough time will differ depending on the specific use conditions. Contact the glove manufacturer for specific advice on glove selection and breakthrough times for your use conditions. Inspect and replace worn or damaged gloves. The types of gloves to be considered for this material include:

No protection is ordinarily required under normal conditions of use.

Eye Protection: If contact is likely, safety glasses with side shields are recommended.

Skin and Body Protection: Any specific clothing information provided is based on published literature or manufacturer data. The types of clothing to be considered for this material include:

No skin protection is ordinarily required under normal conditions of use. In accordance with good industrial hygiene practices, precautions should be taken to avoid skin contact.

Specific Hygiene Measures: Always observe good personal hygiene measures, such as washing after handling the material and before eating, drinking, and/or smoking. Routinely wash work clothing and protective equipment to remove contaminants. Discard contaminated clothing and footwear that cannot be cleaned. Practice good housekeeping.

ENVIRONMENTAL CONTROLS

See Sections 6, 7, 12, 13.

SECTION 9 PHYSICAL AND CHEMICAL PROPERTIES

Typical physical and chemical properties are given below. Consult the Supplier in Section 1 for additional data.

GENERAL INFORMATION

Physical State: Solid
Form: semi-fluid
Color: green
Odor: Characteristic
Odor Threshold: N/D

IMPORTANT HEALTH, SAFETY, AND ENVIRONMENTAL INFORMATION

Relative Density (at 15 C): 0.93
Flash Point [Method]: >200C (392F) [EST. FOR OIL, ASTM D-92 (COC)]
Flammable Limits (Approximate volume % in air): LEL: N/D UEL: N/D
Autoignition Temperature: N/D
Boiling Point / Range: N/D
Vapor Density (Air = 1): N/D
Vapor Pressure: < 0.013 kPa (0.1 mm Hg) at 20 C
Evaporation Rate (N-Butyl Acetate = 1): N/D
pH: N/A
Log Pow (n-Octanol/Water Partition Coefficient): N/D
Solubility in Water: Negligible
Viscosity: 113 cSt (113 mm²/sec) at 40 C [Base oil]
Oxidizing Properties: See Sections 3, 15, 16.

OTHER INFORMATION

Freezing Point: N/D
Melting Point: >219°C (426°F)
DMSO Extract (mineral oil only), IP-346: < 3 %wt

NOTE: Most physical properties above are for the oil component in the material.

SECTION 10 STABILITY AND REACTIVITY

STABILITY: Material is stable under normal conditions.

CONDITIONS TO AVOID: Excessive heat. High energy sources of ignition.

MATERIALS TO AVOID: Strong oxidizers

HAZARDOUS DECOMPOSITION PRODUCTS: Material does not decompose at ambient temperatures.

HAZARDOUS POLYMERIZATION: Will not occur.

SECTION 11 TOXICOLOGICAL INFORMATION

ACUTE TOXICITY

Route of Exposure	Conclusion / Remarks
Inhalation	
Toxicity: No end point data.	Minimally Toxic. Based on assessment of the components.
Irritation: No end point data.	Negligible hazard at ambient/normal handling temperatures. Based on assessment of the components.
Ingestion	
Toxicity (Rat): LD50 > 5000 mg/kg	Minimally Toxic. Based on test data for structurally similar materials.
Skin	
Toxicity (Rabbit): LD50 > 5000 mg/kg	Minimally Toxic. Based on test data for structurally similar materials.
Irritation (Rabbit): Data available.	Negligible irritation to skin at ambient temperatures. Based on assessment of the components.
Eye	
Irritation (Rabbit): Data available.	May cause mild, short-lasting discomfort to eyes. Based on assessment of the components.

CHRONIC/OTHER EFFECTS

For the product itself:

Component concentrations in this formulation would not be expected to cause skin sensitization, based on tests of the components or similar formulations.

Contains:

Base oil severely refined: Not carcinogenic in animal studies. Representative material passes IP-346, Modified Ames test, and/or other screening tests. Dermal and inhalation studies showed minimal effects; lung non-specific infiltration of immune cells, oil deposition and minimal granuloma formation. Not sensitizing in test animals.

Additional information is available by request.

The following ingredients are cited on the lists below: None.

--REGULATORY LISTS SEARCHED--

1 = NTP CARC	3 = IARC 1	5 = IARC 2B
2 = NTP SUS	4 = IARC 2A	6 = OSHA CARC

SECTION 12 ECOLOGICAL INFORMATION

The information given is based on data available for the material, the components of the material, and similar materials.

ECOTOXICITY

Material -- Not expected to be harmful to aquatic organisms.

MOBILITY

Base oil component -- Low solubility and floats and is expected to migrate from water to the land. Expected to partition to sediment and wastewater solids.

PERSISTENCE AND DEGRADABILITY

Biodegradation:

Base oil component -- Expected to be inherently biodegradable

BIOACCUMULATION POTENTIAL

Base oil component -- Has the potential to bioaccumulate, however metabolism or physical properties may reduce the bioconcentration or limit bioavailability.

SECTION 13 DISPOSAL CONSIDERATIONS

Disposal recommendations based on material as supplied. Disposal must be in accordance with current applicable laws and regulations, and material characteristics at time of disposal.

DISPOSAL RECOMMENDATIONS

Product is suitable for burning in an enclosed controlled burner for fuel value or disposal by supervised incineration at very high temperatures to prevent formation of undesirable combustion products.

REGULATORY DISPOSAL INFORMATION

RCRA Information: Disposal of unused product may be subject to RCRA regulations (40 CFR 261). Disposal of the used product may also be regulated due to ignitability, corrosivity, reactivity or toxicity as determined by the Toxicity Characteristic Leaching Procedure (TCLP). Potential RCRA characteristics:
TCLP (BARIUM)

Empty Container Warning Empty Container Warning (where applicable): Empty containers may contain residue and can be dangerous. Do not attempt to refill or clean containers without proper instructions. Empty drums should be completely drained and safely stored until appropriately reconditioned or disposed. Empty containers should be taken for recycling, recovery, or disposal through suitably qualified or licensed contractor and in accordance with governmental regulations. DO NOT PRESSURISE, CUT, WELD, BRAZE, SOLDER, DRILL, GRIND, OR EXPOSE

SUCH CONTAINERS TO HEAT, FLAME, SPARKS, STATIC ELECTRICITY, OR OTHER SOURCES OF IGNITION. THEY MAY EXPLODE AND CAUSE INJURY OR DEATH.

SECTION 14 TRANSPORT INFORMATION

LAND (DOT) : Not Regulated for Land Transport

LAND (TDG) : Not Regulated for Land Transport

SEA (IMDG) : Not Regulated for Sea Transport according to IMDG-Code

AIR (IATA) : Not Regulated for Air Transport

SECTION 15 REGULATORY INFORMATION

OSHA HAZARD COMMUNICATION STANDARD: When used for its intended purposes, this material is not classified as hazardous in accordance with OSHA 29 CFR 1910.1200.

NATIONAL CHEMICAL INVENTORY LISTING: IECSC, DSL, EINECS, TSCA
Special Cases:

Inventory	Status
KECI	Restrictions Apply

EPCRA: This material contains no extremely hazardous substances.

SARA (311/312) REPORTABLE HAZARD CATEGORIES: None.

SARA (313) TOXIC RELEASE INVENTORY: This material contains no chemicals subject to the supplier notification requirements of the SARA 313 Toxic Release Program.

The following ingredients are cited on the lists below:

Chemical Name	CAS Number	List Citations
DIPHENYLAMINE	122-39-4	5

--REGULATORY LISTS SEARCHED--

1 = ACGIH ALL	6 = TSCA 5a2	11 = CA P65 REPRO	16 = MN RTK
2 = ACGIH A1	7 = TSCA 5e	12 = CA RTK	17 = NJ RTK
3 = ACGIH A2	8 = TSCA 6	13 = IL RTK	18 = PA RTK
4 = OSHA Z	9 = TSCA 12b	14 = LA RTK	19 = RI RTK
5 = TSCA 4	10 = CA P65 CARC	15 = MI 293	

Code key: CARC=Carcinogen; REPRO=Reproductive

ExxonMobil

Product Name: UNIREX N 2
Revision Date: 07 Jul 2009
Page 8 of 8

SECTION 16 OTHER INFORMATION

N/D = Not determined, N/A = Not applicable

THIS SAFETY DATA SHEET CONTAINS THE FOLLOWING REVISIONS:

Revision Changes:
Section 04: First Aid Inhalation - Header was modified.
Section 04: First Aid Ingestion - Header was modified.
Section 10 Stability and Reactivity - Header was modified.
Section 13: Disposal Recommendations - Note was modified.
Section 09: Physical State was modified.
Section 09: Color was modified.
Section 09: Evaporation Rate - Header was modified.
Section 08: Personal Protection was modified.
Section 07: Handling and Storage - Handling was modified.
Section 05: Hazardous Combustion Products was modified.
Section 09: Relative Density - Header was modified.
Section 09: Viscosity was modified.
Section 15: List Citation Table - Header was modified.
Section 15: National Chemical Inventory Listing was modified.
Section 15: OSHA Hazard Communication Standard was modified.
Hazard Identification: OSHA - May be Hazardous Statement was modified.
Section 08: Exposure limits/standards was deleted.

The information and recommendations contained herein are, to the best of ExxonMobil's knowledge and belief, accurate and reliable as of the date issued. You can contact ExxonMobil to insure that this document is the most current available from ExxonMobil. The information and recommendations are offered for the user's consideration and examination. It is the user's responsibility to satisfy itself that the product is suitable for the intended use. If buyer repackages this product, it is the user's responsibility to insure proper health, safety and other necessary information is included with and/or on the container. Appropriate warnings and safe-handling procedures should be provided to handlers and users. Alteration of this document is strictly prohibited. Except to the extent required by law, re-publication or retransmission of this document, in whole or in part, is not permitted. The term, "ExxonMobil" is used for convenience, and may include any one or more of ExxonMobil Chemical Company, Exxon Mobil Corporation, or any affiliates in which they directly or indirectly hold any interest.

Internal Use Only
MHC: 0B, 0B, 0, 0, 0, 0 PPEC: A

DGN: 2031341XUS (553418)

Copyright 2002 Exxon Mobil Corporation, All rights reserved

11.5.6 MOBIL DTE 21

Mobil

Mobil DTE 20 Series

Hydraulic Oils

Product Description

Mobil DTE 20 Series oils are supreme performance anti-wear hydraulic oils designed to satisfy a wide range of hydraulic equipment requirements. They provide long oil/filter life and optimum equipment protection reducing both maintenance costs and product disposal costs. They were developed in conjunction with the major builders to meet the stringent requirements of severe hydraulic systems using high pressure, high output pumps as well as handling the critical requirements of other hydraulic system components such as close clearance servo-valves and the high accuracy numerically controlled (NC) machine tools. These products meet the most rigorous performance requirements of a wide range of hydraulic system and component manufacturers using various multi-metallurgy designs allowing a single product with outstanding performance characteristics.

The DTE 20 Series oils are formulated with high quality base oils and a super-stabilised additive system that neutralises the formation of corrosive materials. They are designed to work with systems operating under severe conditions where high levels of antiwear and film strength protection are needed, yet they are formulated to work where non-antiwear hydraulic oils are generally recommended.

Features and Benefits

The Mobil DTE 20 Series hydraulic oils provide outstanding oxidation resistance allowing extension of oil and filter change intervals. Their high level of anti-wear properties and excellent film strength characteristics result in exceptional equipment performance that not only results in fewer breakdowns but helps improve production capacity. Their detergency and keep clean properties offer service over a wide range of system cleanlinesses while their controlled demulsibility permits the oils to work well in systems contaminated with small amounts of water yet readily separate large amounts of water.

Features	Advantages and Potential Benefits
Anti-wear	Helps reduce wear Protects systems using various metallurgy
Quality Reserve	Maintains performance features even under severe service conditions and extended drain intervals Helps improve system cleanliness
Oxidation Stability	Provides long oil and equipment life Helps extend filter life
Corrosion Protection	Prevents internal hydraulic system corrosion Helps reduce the negative effects of moisture in systems Provides corrosion protection of multi-metallurgy component designs
Meets a Wide Range of equipment requirements	One product can replace several products, minimizing inventory requirements Helps reduce potential for product misapplication
Air Separation Characteristics	Reduces foaming potential and it's negative effects
Water Separation	Protects systems where small quantities of moisture are present Readily separates larger quantities of water
Keep Clean Properties	Helps reduce system deposits and sludging helping to reduce maintenance costs Protects critical components such as servo-valves helping to

Features	Advantages and Potential Benefits
	extend equipment life
	Helps improve total system performance

Applications

- Hydraulic systems critical to deposit build-up such as sophisticated Numerically Controlled (NC) machines, particularly where close clearance servo-valves are used
- Where small amounts of water are unavoidable
- Applications where sludges and deposits form with conventional products
- In systems containing gears and bearings
- Systems requiring a high degree of load-carrying capability and anti-wear protection
- Applications where thin oil-film corrosion protection is an asset such as systems where small amounts of water are unavoidable
- Machines employing a wide range of components using various metallurgy

Specifications and Approvals

Mobil DTE 20 Series meets or exceeds the requirements of:	21	22	24	25	26	27	28
DIN 51524-2 2006-09	X	X	X	X	X		

Mobil DTE 20 Series has the following builder approvals	21	22	24	25	26	27	28
Cincinnati Machine							
P-68			X				
P-69					X		
P-70				X			
Vickers I-286-S			X	X	X		
Vickers M-2950-S			X	X	X		
Denison HF-0			X	X	X		

Typical Properties

Mobil DTE 20 Series	21	22	24	25	26	27	28
ISO Grade	10	22	32	46	68	100	150
Viscosity, ASTM D 445							
cSt @ 40° C	10.0	21.0	31.5	44.2	71.2	95.3	142.8
cSt @ 100° C	2.74	4.5	5.29	6.65	8.53	10.9	14.28
Viscosity Index, ASTM D 2270	98	98	98	98	98	98	98
Specific Gravity @ 15.6° C/15.6° C, ASTM D 1298	0.845	0.860	0.871	0.876	0.881	0.887	0.895
Copper Strip Corrosion, ASTM D 130, 3 hrs @ 100° C	1B	1B	1B	1B	1B	1B	1B
Rust Characteristics Proc B, ASTM D 665	Pass	Pass	Pass	Pass	Pass	Pass	Pass
Pour Point, °C, ASTM D 97	-30	-30	-27	-27	-21	-21	-15
Flash Point, °C, ASTM D 92	174	200	220	232	236	248	276

Mobil DTE 20 Series	21	22	24	25	26	27	28
FZG 4-Square Load Support, DIN 51354, Fail Stage	-	-	12	12	12	12	12
Foam Sequence I, II, III, ASTM D 892 , ml	20/0	20/0	20/0	20/0	20/0	20/0	20/0

Health and Safety

Based on available information, this product is not expected to produce adverse effects on health when used for the intended application and the recommendations provided in the Material Safety Data Sheet (MSDS) are followed. MSDS's are available upon request through your sales contract office, or via the Internet. This product should not be used for purposes other than its intended use. If disposing of used product, take care to protect the environment.

The Mobil logotype, the Pegasus design and DTE are trademarks of Exxon Mobil Corporation, or one of its subsidiaries.

11-2011

Exxon Mobil Corporation
3225 Gallows Road
Fairfax, VA 22037

1-800-ASK MOBIL (275-6624)

Typical Properties are typical of those obtained with normal production tolerance and do not constitute a specification. Variations that do not affect product performance are to be expected during normal manufacture and at different blending locations. The information contained herein is subject to change without notice. All products may not be available locally. For more information, contact your local ExxonMobil contact or visit www.exxonmobil.com
ExxonMobil is comprised of numerous affiliates and subsidiaries, many with names that include Esso, Mobil, or ExxonMobil. Nothing in this document is intended to override or supersede the corporate separateness of local entities. Responsibility for local action and accountability remains with the local ExxonMobil-affiliate entities.

© 2001-2011 Exxon Mobil Corporation. All rights reserved..

ExxonMobil

Product Name: MOBIL DTE 21
Revision Date: 13 Dec 2012
Page 1 of 10

MATERIAL SAFETY DATA SHEET

SECTION 1 PRODUCT AND COMPANY IDENTIFICATION

PRODUCT

Product Name: **MOBIL DTE 21**
Product Description: Base Oil and Additives
Product Code: 201560102005, 602599-00, 970840
Intended Use: Hydraulic fluid

COMPANY IDENTIFICATION

Supplier: **EXXON MOBIL CORPORATION**
3225 GALLOWS RD.
FAIRFAX, VA. 22037 USA

24 Hour Health Emergency	609-737-4411
Transportation Emergency Phone	800-424-9300
ExxonMobil Transportation No.	281-834-3296
Product Technical Information	800-662-4525, 800-947-9147
MSDS Internet Address	http://www.exxon.com, http://www.mobil.com

SECTION 2 COMPOSITION / INFORMATION ON INGREDIENTS

Reportable Hazardous Substance(s) or Complex Substance(s)

Name	CAS#	Concentration*
SOLVENT REFINED LIGHT PARAFFINIC DISTILLATE (PETROLEUM)	64741-89-5	80 - 90%
STRAIGHT-RUN MIDDLE DISTILLATES	64741-44-2	10 - 20%

* All concentrations are percent by weight unless material is a gas. Gas concentrations are in percent by volume.

SECTION 3 HAZARDS IDENTIFICATION

This material is considered to be hazardous according to regulatory guidelines (see (M)SDS Section 15).

POTENTIAL HEALTH EFFECTS

If swallowed, may be aspirated and cause lung damage. Frequent or prolonged contact may defat and dry the skin, leading to discomfort and dermatitis. May be irritating to the eyes, nose, throat, and lungs. High-pressure injection under skin may cause serious damage.

Target Organs: Skin |

NFPA Hazard ID:	Health:	0	Flammability:	1	Reactivity:	0
HMIS Hazard ID:	Health:	0*	Flammability:	1	Reactivity:	0

NOTE: This material should not be used for any other purpose than the intended use in Section 1 without expert advice. Health studies have shown that chemical exposure may cause potential human health risks which may vary from person to person.

SECTION 4 FIRST AID MEASURES

INHALATION

Remove from further exposure. For those providing assistance, avoid exposure to yourself or others. Use adequate respiratory protection. If respiratory irritation, dizziness, nausea, or unconsciousness occurs, seek immediate medical assistance. If breathing has stopped, assist ventilation with a mechanical device or use mouth-to-mouth resuscitation.

SKIN CONTACT

Wash contact areas with soap and water. Remove contaminated clothing. Launder contaminated clothing before reuse. If product is injected into or under the skin, or into any part of the body, regardless of the appearance of the wound or its size, the individual should be evaluated immediately by a physician as a surgical emergency. Even though initial symptoms from high pressure injection may be minimal or absent, early surgical treatment within the first few hours may significantly reduce the ultimate extent of injury.

EYE CONTACT

Flush thoroughly with water. If irritation occurs, get medical assistance.

INGESTION

Seek immediate medical attention. Do not induce vomiting.

NOTE TO PHYSICIAN

If ingested, material may be aspirated into the lungs and cause chemical pneumonitis. Treat appropriately.

SECTION 5 FIRE FIGHTING MEASURES

EXTINGUISHING MEDIA

Appropriate Extinguishing Media: Use water fog, foam, dry chemical or carbon dioxide (CO2) to extinguish flames.

Inappropriate Extinguishing Media: Straight Streams of Water

FIRE FIGHTING

Fire Fighting Instructions: Evacuate area. Prevent runoff from fire control or dilution from entering streams, sewers, or drinking water supply. Firefighters should use standard protective equipment and in enclosed spaces, self-contained breathing apparatus (SCBA). Use water spray to cool fire exposed surfaces and to protect personnel.

Unusual Fire Hazards: Pressurized mists may form a flammable mixture.

Hazardous Combustion Products: Smoke, Fume, Aldehydes, Sulfur oxides, Incomplete combustion products, Oxides of carbon

FLAMMABILITY PROPERTIES

Flash Point [Method]: >166°C (331°F) [ASTM D-92]
Flammable Limits (Approximate volume % in air): LEL: 0.9 UEL: 7.0

ExxonMobil

Product Name: MOBIL DTE 21
Revision Date: 13 Dec 2012
Page 3 of 10

Autoignition Temperature: N/D

SECTION 6 ACCIDENTAL RELEASE MEASURES

NOTIFICATION PROCEDURES

In the event of a spill or accidental release, notify relevant authorities in accordance with all applicable regulations. US regulations require reporting releases of this material to the environment which exceed the applicable reportable quantity or oil spills which could reach any waterway including intermittent dry creeks. The National Response Center can be reached at (800)424-8802.

PROTECTIVE MEASURES

Avoid contact with spilled material. Warn or evacuate occupants in surrounding and downwind areas if required due to toxicity or flammability of the material. See Section 5 for fire fighting information. See the Hazard Identification Section for Significant Hazards. See Section 4 for First Aid Advice. See Section 8 for advice on the minimum requirements for personal protective equipment. Additional protective measures may be necessary, depending on the specific circumstances and/or the expert judgment of the emergency responders.

For emergency responders: Respiratory protection: respiratory protection will be necessary only in special cases, e.g., formation of mists. Half-face or full-face respirator with filter(s) for dust/organic vapor or Self Contained Breathing Apparatus (SCBA) can be used depending on the size of spill and potential level of exposure. If the exposure cannot be completely characterized or an oxygen deficient atmosphere is possible or anticipated, SCBA is recommended. Work gloves that are resistant to hydrocarbons are recommended. Gloves made of polyvinyl acetate (PVA) are not water-resistant and are not suitable for emergency use. Chemical goggles are recommended if splashes or contact with eyes is possible. Small spills: normal antistatic work clothes are usually adequate. Large spills: full body suit of chemical resistant, antistatic material is recommended.

SPILL MANAGEMENT

Land Spill: Stop leak if you can do it without risk. Recover by pumping or with suitable absorbent.

Water Spill: Stop leak if you can do it without risk. Confine the spill immediately with booms. Warn other shipping. Remove from the surface by skimming or with suitable absorbents. Seek the advice of a specialist before using dispersants.

Water spill and land spill recommendations are based on the most likely spill scenario for this material; however, geographic conditions, wind, temperature, (and in the case of a water spill) wave and current direction and speed may greatly influence the appropriate action to be taken. For this reason, local experts should be consulted. Note: Local regulations may prescribe or limit action to be taken.

ENVIRONMENTAL PRECAUTIONS

Large Spills: Dike far ahead of liquid spill for later recovery and disposal. Prevent entry into waterways, sewers, basements or confined areas.

SECTION 7 HANDLING AND STORAGE

HANDLING

Avoid contact with skin. Prevent small spills and leakage to avoid slip hazard. Material can accumulate static charges which may cause an electrical spark (ignition source). When the material is handled in bulk, an electrical spark could ignite any flammable vapors from liquids or residues that may be present (e.g., during switch-loading operations). Use proper bonding and/or ground procedures. However, bonding and grounds

may not eliminate the hazard from static accumulation. Consult local applicable standards for guidance. Additional references include American Petroleum Institute 2003 (Protection Against Ignitions Arising out of Static, Lightning and Stray Currents) or National Fire Protection Agency 77 (Recommended Practice on Static Electricity) or CENELEC CLC/TR 50404 (Electrostatics - Code of practice for the avoidance of hazards due to static electricity).

Static Accumulator: This material is a static accumulator.

STORAGE

The container choice, for example storage vessel, may effect static accumulation and dissipation. Do not store in open or unlabelled containers. Keep away from incompatible materials.

SECTION 8 EXPOSURE CONTROLS / PERSONAL PROTECTION

EXPOSURE LIMIT VALUES

Exposure limits/standards (Note: Exposure limits are not additive)

Source	Form	Limit / Standard			NOTE	Source
SOLVENT REFINED LIGHT PARAFFINIC DISTILLATE (PETROLEUM)	Mist.	TWA	5 mg/m3		N/A	OSHA Z1
SOLVENT REFINED LIGHT PARAFFINIC DISTILLATE (PETROLEUM)	Inhalable fraction.	TWA	5 mg/m3		N/A	ACGIH
SOLVENT REFINED LIGHT PARAFFINIC DISTILLATE (PETROLEUM)	Mist.	TWA	5 mg/m3		N/A	ACGIH
STRAIGHT-RUN MIDDLE DISTILLATES	Stable Aerosol.	TWA	5 mg/m3		N/A	ExxonMobil
STRAIGHT-RUN MIDDLE DISTILLATES	Vapor.	TWA	200 mg/m3		N/A	ExxonMobil

Exposure limits/standards for materials that can be formed when handling this product: When mists/aerosols can occur the following are recommended: 5 mg/m³ - ACGIH TLV (inhalable fraction), 5 mg/m³ - OSHA PEL.

NOTE: Limits/standards shown for guidance only. Follow applicable regulations.

ENGINEERING CONTROLS

The level of protection and types of controls necessary will vary depending upon potential exposure conditions. Control measures to consider:

No special requirements under ordinary conditions of use and with adequate ventilation.

PERSONAL PROTECTION

Personal protective equipment selections vary based on potential exposure conditions such as applications, handling practices, concentration and ventilation. Information on the selection of protective equipment for use with this material, as provided below, is based upon intended, normal usage.

Respiratory Protection: If engineering controls do not maintain airborne contaminant concentrations at a

level which is adequate to protect worker health, an approved respirator may be appropriate. Respirator selection, use, and maintenance must be in accordance with regulatory requirements, if applicable. Types of respirators to be considered for this material include:
No special requirements under ordinary conditions of use and with adequate ventilation.

For high airborne concentrations, use an approved supplied-air respirator, operated in positive pressure mode. Supplied air respirators with an escape bottle may be appropriate when oxygen levels are inadequate, gas/vapor warning properties are poor, or if air purifying filter capacity/rating may be exceeded.

Hand Protection: Any specific glove information provided is based on published literature and glove manufacturer data. Glove suitability and breakthrough time will differ depending on the specific use conditions. Contact the glove manufacturer for specific advice on glove selection and breakthrough times for your use conditions. Inspect and replace worn or damaged gloves. The types of gloves to be considered for this material include:
If prolonged or repeated contact is likely, chemical resistant gloves are recommended. If contact with forearms is likely, wear gauntlet style gloves.

Eye Protection: If contact is likely, safety glasses with side shields are recommended.

Skin and Body Protection: Any specific clothing information provided is based on published literature or manufacturer data. The types of clothing to be considered for this material include:
If prolonged or repeated contact is likely, chemical, and oil resistant clothing is recommended.

Specific Hygiene Measures: Always observe good personal hygiene measures, such as washing after handling the material and before eating, drinking, and/or smoking. Routinely wash work clothing and protective equipment to remove contaminants. Discard contaminated clothing and footwear that cannot be cleaned. Practice good housekeeping.

ENVIRONMENTAL CONTROLS
Comply with applicable environmental regulations limiting discharge to air, water and soil. Protect the environment by applying appropriate control measures to prevent or limit emissions.

SECTION 9 PHYSICAL AND CHEMICAL PROPERTIES

Note: Physical and chemical properties are provided for safety, health and environmental considerations only and may not fully represent product specifications. Contact the Supplier for additional information.

GENERAL INFORMATION
Physical State: Liquid
Color: Amber
Odor: Characteristic
Odor Threshold: N/D

IMPORTANT HEALTH, SAFETY, AND ENVIRONMENTAL INFORMATION
Relative Density (at 15 °C): 0.845
Flash Point [Method]: >166°C (331°F) [ASTM D-92]
Flammable Limits (Approximate volume % in air): LEL: 0.9 UEL: 7.0
Autoignition Temperature: N/D
Boiling Point / Range: > 232°C (450°F)
Vapor Density (Air = 1): > 2 at 101 kPa

Vapor Pressure: < 0.013 kPa (0.1 mm Hg) at 20 °C
Evaporation Rate (n-butyl acetate = 1): N/D
pH: N/A
Log Pow (n-Octanol/Water Partition Coefficient): > 3.5
Solubility in Water: Negligible
Viscosity: 9 cSt (9 mm2/sec) at 40 °C | 2.7 cSt (2.7 mm2/sec) at 100°C
Oxidizing Properties: See Hazards Identification Section.

OTHER INFORMATION

Freezing Point: N/D
Melting Point: N/A
Pour Point: -24°C (-11°F)
DMSO Extract (mineral oil only), IP-346: < 3 %wt

SECTION 10 STABILITY AND REACTIVITY

STABILITY: Material is stable under normal conditions.

CONDITIONS TO AVOID: Excessive heat. High energy sources of ignition.

MATERIALS TO AVOID: Strong oxidizers

HAZARDOUS DECOMPOSITION PRODUCTS: Material does not decompose at ambient temperatures.

HAZARDOUS POLYMERIZATION: Will not occur.

SECTION 11 TOXICOLOGICAL INFORMATION

ACUTE TOXICITY

Route of Exposure	Conclusion / Remarks
Inhalation	
Toxicity: No end point data for material.	Minimally Toxic. Based on assessment of the components.
Irritation: No end point data for material.	Elevated temperatures or mechanical action may form vapors, mist, or fumes which may be irritating to the eyes, nose, throat, or lungs. Based on assessment of the components.
Ingestion	
Toxicity: No end point data for material.	Minimally Toxic. Based on assessment of the components.
Skin	
Toxicity: No end point data for material.	Minimally Toxic. Based on assessment of the components.
Irritation: No end point data for material.	Negligible irritation to skin at ambient temperatures. Based on assessment of the components.
Eye	
Irritation: No end point data for material.	May cause mild, short-lasting discomfort to eyes. Based on assessment of the components.

CHRONIC/OTHER EFFECTS

For the product itself:

Repeated and/or prolonged exposure may cause irritation to the skin, eyes, or respiratory tract. Small amounts of liquid aspirated into the lungs during ingestion or from vomiting may cause chemical pneumonitis or

pulmonary edema.
Contains:
Base oil severely refined: Not carcinogenic in animal studies. Representative material passes IP-346, Modified Ames test, and/or other screening tests. Dermal and inhalation studies showed minimal effects; lung non-specific infiltration of immune cells, oil deposition and minimal granuloma formation. Not sensitizing in test animals.

Additional information is available by request.

The following ingredients are cited on the lists below: None.

--REGULATORY LISTS SEARCHED--

1 = NTP CARC	3 = IARC 1	5 = IARC 2B
2 = NTP SUS	4 = IARC 2A	6 = OSHA CARC

SECTION 12 ECOLOGICAL INFORMATION

The information given is based on data available for the material, the components of the material, and similar materials.

ECOTOXICITY
Material -- Not expected to be harmful to aquatic organisms.

MOBILITY
Base oil component -- Low solubility and floats and is expected to migrate from water to the land. Expected to partition to sediment and wastewater solids.

PERSISTENCE AND DEGRADABILITY
Biodegradation:
Base oil component -- Expected to be inherently biodegradable

BIOACCUMULATION POTENTIAL
Base oil component -- Has the potential to bioaccumulate, however metabolism or physical properties may reduce the bioconcentration or limit bioavailability.

OTHER ECOLOGICAL INFORMATION
VOC: 14 G/L [ASTM E1868-10]

SECTION 13 DISPOSAL CONSIDERATIONS

Disposal recommendations based on material as supplied. Disposal must be in accordance with current applicable laws and regulations, and material characteristics at time of disposal.

DISPOSAL RECOMMENDATIONS

ExxonMobil

Product Name: MOBIL DTE 21
Revision Date: 13 Dec 2012
Page 8 of 10

Product is suitable for burning in an enclosed controlled burner for fuel value or disposal by supervised incineration at very high temperatures to prevent formation of undesirable combustion products. Protect the environment. Dispose of used oil at designated sites. Minimize skin contact. Do not mix used oils with solvents, brake fluids or coolants.

REGULATORY DISPOSAL INFORMATION

RCRA Information: The unused product, in our opinion, is not specifically listed by the EPA as a hazardous waste (40 CFR, Part 261D), nor is it formulated to contain materials which are listed as hazardous wastes. It does not exhibit the hazardous characteristics of ignitability, corrositivity or reactivity and is not formulated with contaminants as determined by the Toxicity Characteristic Leaching Procedure (TCLP). However, used product may be regulated.

Empty Container Warning Empty Container Warning (where applicable): Empty containers may contain residue and can be dangerous. Do not attempt to refill or clean containers without proper instructions. Empty drums should be completely drained and safely stored until appropriately reconditioned or disposed. Empty containers should be taken for recycling, recovery, or disposal through suitably qualified or licensed contractor and in accordance with governmental regulations. DO NOT PRESSURISE, CUT, WELD, BRAZE, SOLDER, DRILL, GRIND, OR EXPOSE SUCH CONTAINERS TO HEAT, FLAME, SPARKS, STATIC ELECTRICITY, OR OTHER SOURCES OF IGNITION. THEY MAY EXPLODE AND CAUSE INJURY OR DEATH.

SECTION 14 TRANSPORT INFORMATION

LAND (DOT): Not Regulated for Land Transport

LAND (TDG): Not Regulated for Land Transport

SEA (IMDG): Not Regulated for Sea Transport according to IMDG-Code

AIR (IATA): Not Regulated for Air Transport

SECTION 15 REGULATORY INFORMATION

OSHA HAZARD COMMUNICATION STANDARD: When used for its intended purpose, this material is classified as hazardous in accordance with OSHA 29CFR 1910.1200.

Complies with the following national/regional chemical inventory requirements:: AICS, DSL, ENCS, IECSC, KECI, PICCS, TSCA

EPCRA SECTION 302: This material contains no extremely hazardous substances.

SARA (311/312) REPORTABLE HAZARD CATEGORIES: Delayed Health.

SARA (313) TOXIC RELEASE INVENTORY: This material contains no chemicals subject to the supplier notification requirements of the SARA 313 Toxic Release Program.

The following ingredients are cited on the lists below:

Chemical Name	CAS Number	List Citations
SOLVENT REFINED LIGHT PARAFFINIC DISTILLATE (PETROLEUM)	64741-89-5	1, 4, 17, 18, 19
ZINC ALKYL DITHIOPHOSPHATE	68649-42-3	15

--REGULATORY LISTS SEARCHED--

1 = ACGIH ALL	6 = TSCA 5a2	11 = CA P65 REPRO	16 = MN RTK
2 = ACGIH A1	7 = TSCA 5e	12 = CA RTK	17 = NJ RTK
3 = ACGIH A2	8 = TSCA 6	13 = IL RTK	18 = PA RTK
4 = OSHA Z	9 = TSCA 12b	14 = LA RTK	19 = RI RTK
5 = TSCA 4	10 = CA P65 CARC	15 = MI 293	

Code key: CARC=Carcinogen; REPRO=Reproductive

SECTION 16 OTHER INFORMATION

N/D = Not determined, N/A = Not applicable

THIS SAFETY DATA SHEET CONTAINS THE FOLLOWING REVISIONS:
No revision information is available.

PRECAUTIONARY LABEL TEXT:
Contains: SOLVENT REFINED LIGHT PARAFFINIC DISTILLATE (PETROLEUM); STRAIGHT-RUN MIDDLE DISTILLATES
CAUTION!
HEALTH HAZARDS
Repeated exposure may cause skin dryness or cracking. If swallowed, may be aspirated and cause lung damage.
Target Organs: Skin |

FIRST AID
Eye: Flush thoroughly with water. If irritation occurs, get medical assistance.

Oral: Seek immediate medical attention. Do not induce vomiting.

Skin: Wash contact areas with soap and water. Remove contaminated clothing. Launder contaminated clothing before reuse. If product is injected into or under the skin, or into any part of the body, regardless of the appearance of the wound or its size, the individual should be evaluated immediately by a physician as a surgical emergency. Even though initial symptoms from high pressure injection may be minimal or absent, early surgical treatment within the first few hours may significantly reduce the ultimate extent of injury.

FIRE FIGHTING MEDIA
Use water fog, foam, dry chemical or carbon dioxide (CO2) to extinguish flames.

SPILL/LEAK
Land Spill: Stop leak if you can do it without risk. Recover by pumping or with suitable absorbent.

Water Spill: Stop leak if you can do it without risk. Confine the spill immediately with booms. Warn other shipping.

Remove from the surface by skimming or with suitable absorbents. Report spills as required to appropriate authorities. Seek the advice of a specialist before using dispersants.

Use

Not intended or suitable for use in or around a household or dwelling.

The information and recommendations contained herein are, to the best of ExxonMobil's knowledge and belief, accurate and reliable as of the date issued. You can contact ExxonMobil to insure that this document is the most current available from ExxonMobil. The information and recommendations are offered for the user's consideration and examination. It is the user's responsibility to satisfy itself that the product is suitable for the intended use. If buyer repackages this product, it is the user's responsibility to insure proper health, safety and other necessary information is included with and/or on the container. Appropriate warnings and safe-handling procedures should be provided to handlers and users. Alteration of this document is strictly prohibited. Except to the extent required by law, re-publication or retransmission of this document, in whole or in part, is not permitted. The term, "ExxonMobil" is used for convenience, and may include any one or more of ExxonMobil Chemical Company, Exxon Mobil Corporation, or any affiliates in which they directly or indirectly hold any interest.

Internal Use Only

MHC: 2A, 0B, 0, 0, 0, 1 PPEC: C

DGN: 2025222XUS (547054)

Copyright 2002 Exxon Mobil Corporation, All rights reserved

11.5.7 MOBIL 600W CYLINDER OIL

Mobil

Mobil Cylinder Oils

Gear and Cylinder Oils

Product Description

Mobil Cylinder oils are extra high performance high viscosity oils designed for use in enclosed worm gears operating at moderate to high speeds and temperatures, and where heavy loads, slow speeds or high temperatures demand high viscosity oils. They are also intended for use in all steam engine applications They are formulated from high quality base stocks that are resistant to oxidation and thermal degradation, and the build-up of harmful deposits caused by the high operating temperatures of steam cylinders. They protect against rust and corrosion and provide good film strength and excellent lubricity and they are resistant to water washout.

Mobil 600W Cylinder Oil, Mobil 600W Super Cylinder Oil and Mobil Extra Hecla Super Cylinder Oil are additized to enhance their frictional and load-carrying properties. All four members of the product family are widely used in worm gear applications, couplings and bearings, with viscosity grade depending on operating conditions. In steam applications Mobil 600W Super Cylinder Oil is recommended for saturated and superheated steam up to a temperature of 260ºC. Mobil Extra Hecla Super Cylinder Oil and Mobil Extra Hecla Super Cylinder Oil Mineral may be used with superheated steam above 260ºC. Mobil Extra Hecla Super Cylinder Oil Mineral has good demulsibility. Mobil Cylinder Oils can be applied both by drip feed cups and force feed mechanical lubricating devices.

Mobil Cylinder Oils are the benchmark mineral product for worm gear OEMs and users, and are still recognised as leading products for steam cylinder applications.

Features and Benefits

The Mobil Cylinder Oil brand of lubricants represents the earliest lubricant product marketed by our Corporation's predecessor companies. 600W Cylinder Oil was produced by the Vacuum Oil Company in the second half of the 19th century and was a breakthrough product of its time. Continual upgrading and application of the latest base oil and additive technology has maintained this product series as a leader in its application areas. While steam cylinder applications are now less common, the reputation of Mobil Cylinder Oils in worm gear applications remains unmatched among mineral-based products. Mobil Cylinder Oils offer the following features and potential benefits:

Features	Advantages and Potential Benefits
Excellent film integrity at high temperatures	Excellent equipment protection at high temperatures occasioned by variable load conditions, avoiding unexpected downtime and equipment replacement
	Provision of good sealing film round rods and in glands in steam applications
Excellent resistance to deposit formation at high temperatures	Resistant to deposits on areas subject to high spot temperatures, maintaining cleaner systems, requiring less maintenance
Excellent anti-wear and low friction properties	Additized grades give reduced wear and high efficiency
Very good water separation in absence of additives	Non-additized grade gives ready separation from condensate
High quality and built in performance features	Results in fewer unplanned stoppages and reduced maintenance costs

Applications

Mobil 600W Cylinder Oil is recommended for the following applications:

- The splash lubrication of enclosed worm gears operating at moderate to high speeds and temperatures. (Mobil 600 W Cylinder Oil)
- Steam cylinders, couplings, bearings, and break-in of compressor cylinders (Mobil 600 W Cylinder Oil)
- Mobil 600W Super Cylinder Oil and Mobil Extra Hecla Super Cylinder Oil are recommended for the above applications but under higher temperature and load conditions
- Mobil Extra Hecla Super Cylinder Mineral is recommended where ready separation from condensate is essential, for example, where exhaust steam is used for process work
- Mobil Extra Hecla Super Cylinder Mineral may also be used as a tempering oil for bath temperatures up to 290C

Typical Properties

Mobil Cylinder Oils	Mobil 600 W Cylinder Oil	Mobil 600 W Super Cylinder Oil	Mobil Extra Hecla Super Cylinder Oil	Mobil Extra Hecla Super Cylinder Oil Mineral
ISO Viscosity Grade	--	460	680	1000
Viscosity, ASTM D 445				
cSt @ 40ºC	375	460	680	1000
cSt @ 100ºC	27.0	30.5	35.8	43.0
Viscosity Index, ASTM D 2270	95	95	85	80
Pour Point, ºC, ASTM D 97	-9	-6	0	3
Flash Point, ºC, ASTM D 92	282	282	282	288
Density,ASTM D4052 @15.6º C kg/l,	0.90	0.91	0.92	0.92
Copper Strip Corrosion, ASTM D 130,3 hrs @ 100º C	1B	1B	1B	1B

Health and Safety

Based on available information, this product is not expected to produce adverse effects on health when used for the intended application and the recommendations provided in the Material Safety Data Sheet (MSDS) are followed. MSDS's are available upon request through your sales contract office, or via the Internet. This product should not be used for purposes other than its intended use. If disposing of used product, take care to protect the environment.

The Mobil logotype, the Pegasus design are trademarks of Exxon Mobil Corporation, or one of its subsidiaries.

Exxon Mobil Corporation
3225 Gallows Road
Fairfax, VA 22037

1-800-ASK MOBIL (275-6624)

Typical Properties are typical of those obtained with normal production tolerance and do not constitute a specification. Variations that do not affect product performance are to be expected during normal manufacture and at different blending locations. The information contained herein is subject to change without notice. All products may not be available locally. For more information, contact your local ExxonMobil contact or visit www.exxonmobil.com
ExxonMobil is comprised of numerous affiliates and subsidiaries, many with names that include Esso, Mobil, or ExxonMobil. Nothing in this document is intended to override or supersede the corporate separateness of local entities. Responsibility for local action and accountability remains with the local ExxonMobil-affiliate entities.

Copyright © 2001-2013 Exxon Mobil Corporation. All rights reserved..

ExxonMobil

Product Name: MOBIL 600 W CYLINDER OIL
Revision Date: 12Sep2006
Page 1 of 8

MATERIAL SAFETY DATA SHEET

SECTION 1 PRODUCT AND COMPANY IDENTIFICATION

PRODUCT

Product Name: **MOBIL 600 W CYLINDER OIL**
Product Description: Base Oil and Additives
Product Code: 2015605D005, 601260-00, 970243
Intended Use: Cylinder oil

COMPANY IDENTIFICATION

Supplier: **EXXON MOBIL CORPORATION**
3225 GALLOWS RD.
FAIRFAX, VA. 22037 USA

24 Hour Health Emergency	609-737-4411
Transportation Emergency Phone	800-424-9300
ExxonMobil Transportation No.	281-834-3296
MSDS Requests	713-613-3661
Product Technical Information	800-662-4525, 800-947-9147
MSDS Internet Address	http://www.exxon.com, http://www.mobil.com

SECTION 2 COMPOSITION / INFORMATION ON INGREDIENTS

No Reportable Hazardous Substance(s) or Complex Substance(s).

SECTION 3 HAZARDS IDENTIFICATION

This material is not considered to be hazardous according to regulatory guidelines (see (M)SDS Section 15).

POTENTIAL HEALTH EFFECTS

Low order of toxicity. Excessive exposure may result in eye, skin, or respiratory irritation.

NFPA Hazard ID:	Health:	0	Flammability:	1	Reactivity:	0
HMIS Hazard ID:	Health:	0	Flammability:	1	Reactivity:	0

NOTE: This material should not be used for any other purpose than the intended use in Section 1 without expert advice. Health studies have shown that chemical exposure may cause potential human health risks which may vary from person to person.

SECTION 4 FIRST AID MEASURES

INHALATION

Remove from further exposure. For those providing assistance, avoid exposure to yourself or others. Use adequate respiratory protection. If respiratory irritation, dizziness, nausea, or unconsciousness occurs, seek immediate medical assistance. If breathing has stopped, assist ventilation with a mechanical device or use mouth-to-mouth resuscitation.

SKIN CONTACT
Wash contact areas with soap and water.

EYE CONTACT
Flush thoroughly with water. If irritation occurs, get medical assistance.

INGESTION
First aid is normally not required. Seek medical attention if discomfort occurs.

SECTION 5 FIRE FIGHTING MEASURES

EXTINGUISHING MEDIA
Appropriate Extinguishing Media: Use water fog, foam, dry chemical or carbon dioxide (CO2) to extinguish flames.

Inappropriate Extinguishing Media: Straight Streams of Water

FIRE FIGHTING
Fire Fighting Instructions: Evacuate area. Prevent runoff from fire control or dilution from entering streams, sewers, or drinking water supply. Firefighters should use standard protective equipment and in enclosed spaces, self-contained breathing apparatus (SCBA). Use water spray to cool fire exposed surfaces and to protect personnel.

Hazardous Combustion Products: Aldehydes, Oxides of carbon, Smoke, Fume, Sulfur oxides, Incomplete combustion products

FLAMMABILITY PROPERTIES
Flash Point [Method]: >282C (540F) [ASTM D-92]
Flammable Limits (Approximate volume % in air): LEL: 0.9 UEL: 7.0
Autoignition Temperature: N/D

SECTION 6 ACCIDENTAL RELEASE MEASURES

NOTIFICATION PROCEDURES
In the event of a spill or accidental release, notify relevant authorities in accordance with all applicable regulations. U.S. regulations require reporting releases of this material to the environment which exceed the reportable quantity or oil spills which could reach any waterway including intermittent dry creeks. The National Response Center can be reached at (800)424-8802.

SPILL MANAGEMENT
Land Spill: Stop leak if you can do it without risk. Recover by pumping or with suitable absorbent.

Water Spill: Stop leak if you can do it without risk. Confine the spill immediately with booms. Warn other shipping. Remove from the surface by skimming or with suitable absorbents. Seek the advice of a specialist before using dispersants.

Water spill and land spill recommendations are based on the most likely spill scenario for this material; however, geographic conditions, wind, temperature, (and in the case of a water spill) wave and current direction and speed may greatly influence the appropriate action to be taken. For this reason, local experts should be consulted. Note: Local regulations may prescribe or limit action to be taken.

ENVIRONMENTAL PRECAUTIONS

Large Spills: Dike far ahead of liquid spill for later recovery and disposal. Prevent entry into waterways, sewers, basements or confined areas.

SECTION 7 HANDLING AND STORAGE

HANDLING

Prevent small spills and leakage to avoid slip hazard.

Static Accumulator: This material is a static accumulator.

STORAGE

Do not store in open or unlabelled containers.

SECTION 8 EXPOSURE CONTROLS / PERSONAL PROTECTION

Exposure limits/standards for materials that can be formed when handling this product: When mists / aerosols can occur, the following are recommended: 5 mg/m³ - ACGIH TLV, 10 mg/m³ - ACGIH STEL, 5 mg/m³ - OSHA PEL.

NOTE: Limits/standards shown for guidance only. Follow applicable regulations.

ENGINEERING CONTROLS

The level of protection and types of controls necessary will vary depending upon potential exposure conditions. Control measures to consider:

No special requirements under ordinary conditions of use and with adequate ventilation.

PERSONAL PROTECTION

Personal protective equipment selections vary based on potential exposure conditions such as applications, handling practices, concentration and ventilation. Information on the selection of protective equipment for use with this material, as provided below, is based upon intended, normal usage.

Respiratory Protection: If engineering controls do not maintain airborne contaminant concentrations at a level which is adequate to protect worker health, an approved respirator may be appropriate. Respirator selection, use, and maintenance must be in accordance with regulatory requirements, if applicable. Types of respirators to be considered for this material include:

No special requirements under ordinary conditions of use and with adequate ventilation.

For high airborne concentrations, use an approved supplied-air respirator, operated in positive pressure mode. Supplied air respirators with an escape bottle may be appropriate when oxygen levels are inadequate,

gas/vapor warning properties are poor, or if air purifying filter capacity/rating may be exceeded.

Hand Protection: Any specific glove information provided is based on published literature and glove manufacturer data. Work conditions can greatly effect glove durability; inspect and replace worn or damaged gloves. The types of gloves to be considered for this material include:
No protection is ordinarily required under normal conditions of use.

Eye Protection: If contact is likely, safety glasses with side shields are recommended.

Skin and Body Protection: Any specific clothing information provided is based on published literature or manufacturer data. The types of clothing to be considered for this material include:
No skin protection is ordinarily required under normal conditions of use. In accordance with good industrial hygiene practices, precautions should be taken to avoid skin contact.

Specific Hygiene Measures: Always observe good personal hygiene measures, such as washing after handling the material and before eating, drinking, and/or smoking. Routinely wash work clothing and protective equipment to remove contaminants. Discard contaminated clothing and footwear that cannot be cleaned. Practice good housekeeping.

ENVIRONMENTAL CONTROLS
See Sections 6, 7, 12, 13.

SECTION 9 PHYSICAL AND CHEMICAL PROPERTIES

Typical physical and chemical properties are given below. Consult the Supplier in Section 1 for additional data.

GENERAL INFORMATION
Physical State: Liquid
Color: Brown
Odor: Characteristic
Odor Threshold: N/D

IMPORTANT HEALTH, SAFETY, AND ENVIRONMENTAL INFORMATION
Relative Density (at 15 C): 0.9
Flash Point [Method]: >282C (540F) [ASTM D-92]
Flammable Limits (Approximate volume % in air): LEL: 0.9 UEL: 7.0
Autoignition Temperature: N/D
Boiling Point / Range: > 316C (600F)
Vapor Density (Air = 1): > 2 at 101 kPa
Vapor Pressure: < 0.013 kPa (0.1 mm Hg) at 20 C
Evaporation Rate (n-butyl acetate = 1): N/D
pH: N/A
Log Pow (n-Octanol/Water Partition Coefficient): > 3.5
Solubility in Water: Negligible
Viscosity: 375 cSt (375 mm2/sec) at 40 C | 28 cSt (28 mm2/sec) at 100C
Oxidizing Properties: See Sections 3, 15, 16.

OTHER INFORMATION
Freezing Point: N/D
Melting Point: N/A

ExxonMobil

Product Name: MOBIL 600 W CYLINDER OIL
Revision Date: 12Sep2006
Page 5 of 8

Pour Point: -9°C (16°F)
DMSO Extract (mineral oil only), IP-346: < 3 %wt

SECTION 10 STABILITY AND REACTIVITY

STABILITY: Material is stable under normal conditions.

CONDITIONS TO AVOID: Excessive heat. High energy sources of ignition.

MATERIALS TO AVOID: Strong oxidizers

HAZARDOUS DECOMPOSITION PRODUCTS: Material does not decompose at ambient temperatures.

HAZARDOUS POLYMERIZATION: Will not occur.

SECTION 11 TOXICOLOGICAL INFORMATION

ACUTE TOXICITY

Route of Exposure	Conclusion / Remarks
Inhalation	
Toxicity (Rat): LC50 > 5000 mg/m3	Minimally Toxic. Based on test data for structurally similar materials.
Irritation: No end point data.	Negligible hazard at ambient/normal handling temperatures. Based on assessment of the components.
Ingestion	
Toxicity (Rat): LD50 > 2000 mg/kg	Minimally Toxic. Based on test data for structurally similar materials.
Skin	
Toxicity (Rabbit): LD50 > 2000 mg/kg	Minimally Toxic. Based on test data for structurally similar materials.
Irritation (Rabbit): Data available.	Negligible irritation to skin at ambient temperatures. Based on test data for structurally similar materials.
Eye	
Irritation (Rabbit): Data available.	May cause mild, short-lasting discomfort to eyes. Based on test data for structurally similar materials.

CHRONIC/OTHER EFFECTS

Contains:

Base oil severely refined: Not carcinogenic in animal studies. Representative material passes IP-346, Modified Ames test, and/or other screening tests. Dermal and inhalation studies showed minimal effects; lung non-specific infiltration of immune cells, oil deposition and minimal granuloma formation. Not sensitizing in test animals.

Additional information is available by request.

The following ingredients are cited on the lists below: None.

--REGULATORY LISTS SEARCHED--

1 = NTP CARC	3 = IARC 1	5 = IARC 2B
2 = NTP SUS	4 = IARC 2A	6 = OSHA CARC

SECTION 12 ECOLOGICAL INFORMATION

The information given is based on data available for the material, the components of the material, and similar materials.

ECOTOXICITY

Material -- Not expected to be harmful to aquatic organisms.

MOBILITY

Base oil component -- Low solubility and floats and is expected to migrate from water to the land. Expected to partition to sediment and wastewater solids.

PERSISTENCE AND DEGRADABILITY

Biodegradation:

Base oil component -- Expected to be inherently biodegradable

BIOACCUMULATION POTENTIAL

Base oil component -- Has the potential to bioaccumulate, however metabolism or physical properties may reduce the bioconcentration or limit bioavailability.

SECTION 13 DISPOSAL CONSIDERATIONS

Disposal recommendations based on material as supplied. Disposal must be in accordance with current applicable laws and regulations, and material characteristics at time of disposal.

DISPOSAL RECOMMENDATIONS

Product is suitable for burning in an enclosed controlled burner for fuel value or disposal by supervised incineration at very high temperatures to prevent formation of undesirable combustion products.

REGULATORY DISPOSAL INFORMATION

RCRA Information: The unused product, in our opinion, is not specifically listed by the EPA as a hazardous waste (40 CFR, Part 261D), nor is it formulated to contain materials which are listed as hazardous wastes. It does not exhibit the hazardous characteristics of ignitability, corrosivity or reactivity and is not formulated with contaminants as determined by the Toxicity Characteristic Leaching Procedure (TCLP). However, used product may be regulated.

Empty Container Warning PRECAUTIONARY LABEL TEXT: Empty containers may retain residue and can be dangerous. DO NOT PRESSURIZE, CUT, WELD, BRAZE, SOLDER, DRILL, GRIND OR EXPOSE SUCH CONTAINERS TO HEAT, FLAME, SPARKS, STATIC ELECTRICITY, OR OTHER SOURCES OF IGNITION; THEY MAY EXPLODE AND CAUSE INJURY OR DEATH. Do not attempt to refill or clean container since residue is difficult to remove. Empty drums should be completely drained, properly bunged and promptly returned to a drum reconditioner. All containers should be disposed of in an environmentally safe manner and in accordance with governmental regulations.

SECTION 14 TRANSPORT INFORMATION

LAND (DOT) : Not Regulated for Land Transport

LAND (TDG) : Not Regulated for Land Transport

SEA (IMDG) : Not Regulated for Sea Transport according to IMDG-Code

AIR (IATA) : Not Regulated for Air Transport

SECTION 15 REGULATORY INFORMATION

OSHA HAZARD COMMUNICATION STANDARD: When used for its intended purposes, this material is not classified as hazardous in accordance with OSHA 29 CFR 1910.1200.

NATIONAL CHEMICAL INVENTORY LISTING: AICS, DSL, EINECS, KECI, PICCS, TSCA

EPCRA: This material contains no extremely hazardous substances.

SARA (311/312) REPORTABLE HAZARD CATEGORIES: None.

SARA (313) TOXIC RELEASE INVENTORY: This material contains no chemicals subject to the supplier notification requirements of the SARA 313 Toxic Release Program.

The Following Ingredients are Cited on the Lists Below:

Chemical Name	CAS Number	List Citations
OILS, LARD	8016-28-2	18

--REGULATORY LISTS SEARCHED--

1 = ACGIH ALL	6 = TSCA 5a2	11 = CA P65 REPRO	16 = MN RTK
2 = ACGIH A1	7 = TSCA 5e	12 = CA RTK	17 = NJ RTK
3 = ACGIH A2	8 = TSCA 6	13 = IL RTK	18 = PA RTK
4 = OSHA Z	9 = TSCA 12b	14 = LA RTK	19 = RI RTK
5 = TSCA 4	10 = CA P65 CARC	15 = MI 293	

Code key: CARC=Carcinogen; REPRO=Reproductive

SECTION 16 OTHER INFORMATION

N/D = Not determined, N/A = Not applicable

THIS SAFETY DATA SHEET CONTAINS THE FOLLOWING REVISIONS:
No revision information is available.

The information and recommendations contained herein are, to the best of ExxonMobil's knowledge and belief, accurate and reliable as of the date issued. You can contact ExxonMobil to insure that this document is the most current

ExxonMobil

Product Name: MOBIL 600 W CYLINDER OIL
Revision Date: 12Sep2006
Page 8 of 8

available from ExxonMobil. The information and recommendations are offered for the user's consideration and examination. It is the user's responsibility to satisfy itself that the product is suitable for the intended use. If buyer repackages this product, it is the user's responsibility to insure proper health, safety and other necessary information is included with and/or on the container. Appropriate warnings and safe-handling procedures should be provided to handlers and users. Alteration of this document is strictly prohibited. Except to the extent required by law, re-publication or retransmission of this document, in whole or in part, is not permitted. The term, "ExxonMobil" is used for convenience, and may include any one or more of ExxonMobil Chemical Company, Exxon Mobil Corporation, or any affiliates in which they directly or indirectly hold any interest.

Internal Use Only
MHC: 0, 0, 0, 0, 0, 0 PPEC: A

DGN: 2007400XUS (547818)

Copyright 2002 Exxon Mobil Corporation, All rights reserved

11.5.8 CRC TAC 2 ADHESIVE CHAIN LUBRICANT

CRC Industries, Inc.
885 Louis Drive • Warminster PA • 18974

Technical Data Sheet

TAC 2™ Adhesive Chain Lubricant

I. Product Description

CRC TAC 2™ is an exceptional lubricant, with a tough adhesive quality, which will bond to chain/wear surfaces to keep them in peak operating condition by reducing friction and wear that cause metal fatigue. **CRC TAC 2™** contains a tackifier that enables the lubricant to cling tenaciously to metal surfaces without increasing the viscosity. Regular use of **CRC TAC 2™** will help inhibit corrosion, reduce load stress and help increase chain life.

II. Applications

Recommended for use as a lubricant and corrosion inhibitor on all types of drive chains, open gears, hoists, winches, pulleys, fork lifts, rollers, garage doors, bushings, seals, o-rings, and wire ropes.

III. Features & Benefits

- **Low Viscosity**. Provides the ability to penetrate and thoroughly coat vital chain pin and bushing areas.
- **Contains Molybdenum**. Provides cling ability to avoid sling-off or excess dripping.
- **High Temperature Stability**. Operates effectively in temperatures up to 350° F continuous, equivalent to many grease products. Covers wide range of applications.
- **Blue Color** allows easy identification of lubricated parts and equipment.
- **No Known Ozone Depleting Chemicals**. Offers effective performance while complying with the EPA regulations on the use of ozone depleting chemicals.
- **M.S.D.[L.]™-Material Safety Data Label**. Provides instant access to current safety information should an accident or OSHA inspection occur. Helps comply **with OSHA Hazard Communications Standard 29 CFR 1910.1200**.

IV. Physical Properties without propellant

Flash Point	<0ºF TCC	**Boiling Point**	140°F
Odor	Mild petroleum	**Solubility**	Negligible in water
Appearance	Blue liquid	**% Volatile**	81.3%
Vapor Density	>1 (air=1)	**Specific Gravity**	0.710
VOC Content (Fed)	577.2 g/L	**Temperature Range**	350°F (Continuous)
Shelf Life	2 years	**Propellant**	Hydrocarbon
Sara Title III, Sect. 313 Chemicals	Yes		
Prop 65	No		

V. Specifications and Approvals

- NSF Registration # 144243, Category Code (H2) for use in federally inspected meat and poultry plants.

TAC 2™ Adhesive Chain Lubricant

VI. Performance Characteristics

Type of Film	Non-drying
Base Type	Organic Molybdenum
ASTM D-3233 (Falex Load Test)	1,500 lbs.

VII. Directions

1. Do not apply while equipment is energized.
2. Shake well before use.
3. Spray upper edges of overlapping chain side plates and allow lubricant to set up before re-energizing.

VIII. Package Description

Part Number	Container Size
03076	16 oz Aerosol

IX. Disposal

Disposal requirements vary by state and local jurisdiction. All used and unused product should be disposed of in conformance with local, state and federal regulations.

X. Special Use Warnings

Aerosol Cans
Do not puncture, incinerate or store above 120°F. Exposure to high temperatures may cause can to burst. Do not place in direct sunlight or near any heat source. Use only in well ventilated area. Avoid continuous breathing of vapor and spray mist. Avoid contact with skin and eyes. If ventilation is not adequate, respiratory protection should be worn. Aerosol cans will conduct electricity. Keep away from all live electrical sources including battery terminals, solenoids, electrical panels and other electronic components. Failure to observe this warning may result in serious injury from flash fire and/or electrical shock.

Bulk
Product is extremely flammable and should be kept from all flames and other ignition sources. Vapors are heavier than air and can collect in low-lying areas.

General
Use only in well ventilated area. Ventilation may be improved by opening a window or door or providing mechanical assistance. Avoid continuous breathing of vapor and spray mist. Avoid contact with skin and eyes. If ventilation is not adequate, respiratory protection should be worn. For more information regarding short term and long term exposure, review this product's Material Safety Data Sheet.

DISCLAIMER: This information is accurate to the best of CRC Industries' knowledge or obtained from sources believed by CRC to be accurate. Before using any product, read all warnings and directions on the label. All products should be tested for suitability on a particular application prior to actual use. CRC Industries, Inc. makes no representations or warranties of any kind concerning this data.

CRC Industries, Inc. | *Industrial Products Division* | *Warminster, PA 18974*
Technical Service: (800)521-3168 | *Customer Service: (800)272-4620* | *CRC On-Line: (215)442-6260*

Literature Reorder #TDS343 | ***CRC On-Line # 343*** | ***REV. 9/11***

CRC MATERIAL SAFETY DATA SHEET

Section 1: Product & Company Identification

Product Name: **TAC 2™ Adhesive Chain Lube** (aerosol)

Product Number (s): **03076**

Product Use: industrial chain lubricant

Manufacturer / Supplier Contact Information:

In United States:
CRC Industries, Inc.
885 Louis Drive
Warminster, PA 18974
www.crcindustries.com
1-215-674-4300 (General)
(800) 521-3168 (Technical)
(800) 272-4620 (Customer Service)

In Canada:
CRC Canada Co.
2-1246 Lorimar Drive
Mississauga, Ontario L5S 1R2
www.crc-canada.ca
1-905-670-2291

In Mexico:
CRC Industries Mexico
Av. Benito Juárez 4055 G
Colonia Orquídea
San Luís Potosí, SLP CP 78394
www.crc-mexico.com
52-444-824-1666

24-Hr Emergency – CHEMTREC: (800) 424-9300 or (703) 527-3887

Section 2: Hazards Identification

Emergency Overview

DANGER: Extremely Flammable. Harmful or Fatal if Swallowed. Contents Under Pressure.
As defined by OSHA's Hazard Communication Standard, this product is hazardous.
Appearance & Odor: Blue liquid with mild petroleum odor

Potential Health Effects:

ACUTE EFFECTS:

EYE: May cause mild irritation including stinging and redness, but does not injure eye.

SKIN: Single, brief exposures may cause mild irritation. Frequent or prolonged contact may cause more severe irritation, defatting of the skin, and dermatitis.

INHALATION: High vapor concentrations are irritating to the respiratory tract and may cause headaches, dizziness, anesthesia, drowsiness, unconsciousness, and other central nervous system effects, including death. May cause peripheral nervous system disorder and/or damage.

INGESTION: Low order of toxicity by ingestion. Main hazard is aspiration into the lungs during swallowing or vomiting. Small amounts aspirated into the respiratory system may cause bronchopneumonia or pulmonary adema, possibly progressing to death.

CHRONIC EFFECTS: Overexposure to n-hexane may cause progressive and potentially irreversible damage to the peripheral nervous system, particularly in the arms and legs.

TARGET ORGANS: Central nervous system, peripheral nervous system, respiratory system

Medical Conditions Aggravated by Exposure: skin and respiratory conditions

See Section 11 for toxicology and carcinogenicity information on product ingredients.

Page 1 of 7

Product Name: TAC 2™ Adhesive Chain Lube (aerosol)
Product Number (s): 03076

Section 3: Composition/Information on Ingredients

COMPONENT	CAS NUMBER	% by Wt.
Hexane isomers	107-83-5 / 64742-49-0	50 - 60
Liquefied petroleum gas	68476-86-8	25 - 35
Acrylic copolymer	proprietary	5 - 15
Petrolatum	8009-03-8	5 - 10
n-Hexane	110-54-3	1.6

Section 4: First Aid Measures

Eye Contact: Immediately flush with plenty of water for 15 minutes. Call a physician if irritation persists.

Skin Contact: Remove contaminated clothing and wash affected area with soap and water. Call a physician if irritation persists. Wash contaminated clothing prior to re-use.

Inhalation: Remove person to fresh air. Keep person calm. If not breathing, give artificial respiration. If breathing is difficult give oxygen. Call a physician.

Ingestion: Do NOT induce vomiting. Contact a physician immediately.

Note to Physicians: Treat symptomatically. Gastric lavage using a cuffed endotracheal tube may be performed at your discretion.

Section 5: Fire-Fighting Measures

Flammable Properties: This product is extremely flammable in accordance with aerosol flammability definitions. (See 16 CFR 1500.3(c)(6)).

Flash Point: < 0°F (TCC) Upper Explosive Limit: 9.0
Autoignition Temperature: 489°F Lower Explosive Limit: 1.7

Fire and Explosion Data:

Suitable Extinguishing Media: Class B fire extinguishers, dry chemical, foam or CO_2

Products of Combustion: Fumes, smoke and carbon monoxide

Explosion Hazards: Aerosol containers, when exposed to heat from fire, may build pressure and explode. Vapors may accumulate in a confined space and create a flammable atmosphere.

Protection of Fire-Fighters: Firefighters should wear self-contained, NIOSH-approved breathing apparatus for protection against suffocation and possible toxic decomposition products. Proper eye and skin protection should be provided. Use water spray to keep fire-exposed containers cool and to knock down vapors which may result from product decomposition. Do not spray water directly on fire; product will float and could be reignited on surface of water.

Section 6: Accidental Release Measures

Personal Precautions: Use personal protection recommended in Section 8.

Product Name: TAC 2™ Adhesive Chain Lube (aerosol)
Product Number (s): 03076

Environmental Precautions: Take precautions to prevent contamination of ground and surface waters. Do not flush into sewers or storm drains.

Methods for Containment & Clean-up: Dike area to contain spill. Remove all sources of ignition. Ventilate the area with fresh air. If in confined space or limited air circulation area, clean-up workers should wear appropriate respiratory protection. Recover or absorb spilled material using an absorbent designed for chemical spills. Place used absorbents into proper waste containers.

Section 7: Handling and Storage

Handling Procedures: Use proper grounding and bonding procedures for transferring materials. Do not use product near any source of ignition. Avoid contact with eyes and skin. Avoid breathing vapors. Use caution around energized equipment. The metal container will conduct electricity if it contacts a live source. This may result in injury to the user from electrical shock and/or flash fire. For product use instructions, please see the product label.

Storage Procedures: Store in a cool dry area out of direct sunlight. Aerosol cans must be maintained below 120 F to prevent cans from rupturing.

Aerosol Storage Level: III

Section 8: Exposure Controls/Personal Protection

Exposure Guidelines:

	OSHA		ACGIH		OTHER		
COMPONENT	TWA	STEL	TWA	STEL	TWA	SOURCE	UNIT
Hexane isomers	500(v)	1000(v)	500	1000	NE		ppm
Liquefied petroleum gas	1000	NE	1000	NE	NE		ppm
Acrylic copolymer	NE	NE	NE	NE	NE		
Petrolatum	NE	NE	NE	NE	NE		
n-Hexane	500	NE	50(s)	NE	NE		ppm
N.E. – Not Established (c) – ceiling (s) – skin (v) – vacated							

Controls and Protection:

Engineering Controls: Area should have ventilation to provide fresh air. Local exhaust ventilation is generally preferred because it can control the emissions of the contaminant at the source, preventing dispersion into the general work area. Use mechanical means if necessary to maintain vapor levels below the exposure guidelines. If working in a confined space, follow applicable OSHA regulations.

Respiratory Protection: None required for normal work where adequate ventilation is provided. If engineering controls are not feasible or if exposure exceeds the applicable exposure limits, use a NIOSH-approved cartridge respirator with organic vapor cartridge. Air monitoring is needed to determine actual employee exposure levels. Use a self-contained breathing apparatus in confined spaces and for emergencies.

Eye/face Protection: For normal conditions, wear safety glasses. Where there is reasonable probability of liquid contact, wear splash-proof goggles.

Skin Protection: Use protective gloves such as nitrile, PVC or Viton. Also, use full protective clothing if there is prolonged or repeated contact of liquid with skin.

Product Name: TAC 2™ Adhesive Chain Lube (aerosol)
Product Number (s): 03076

Section 9: Physical and Chemical Properties

Physical State: liquid
Color: blue
Odor: mild petroleum
Odor Threshold: ND
Specific Gravity: 0.710
Initial Boiling Point: 140°F
Freezing Point: < -76°F
Vapor Pressure: 160 mmHg @ 68°F
Vapor Density: > 1 (air = 1)
Evaporation Rate: fast
Solubility: negligible in water
Coefficient of water/oil distribution: ND
pH: NA
Volatile Organic Compounds: wt %: 81.3 g/L: 577.2 lbs./gal: 4.8

Section 10: Stability and Reactivity

Stability: Stable

Conditions to Avoid: Sources of ignition, temperature extremes

Incompatible Materials: Strong oxidizers

Hazardous Decomposition Products: Oxides of carbon

Possibility of Hazardous Reactions: No

Section 11: Toxicological Information

Long-term toxicological studies have not been conducted for this product. The following information is available for components of this product.

Acute Toxicity:

Component	Oral LD50 (rat)	Dermal LD50 (rabbit)	Inhalation LC50 (rat)
Hexane isomers	No data	No data	No data
Liquefied petroleum gas	No data	No data	No data
Acrylic copolymer	No data	No data	No data
Petrolatum	> 5 g/kg	> 2 g/kg	No data
n-Hexane	28,710 mg/kg	3000 mg/kg	48,000 ppm/4H

Page 4 of 7

Product Name: TAC 2™ Adhesive Chain Lube (aerosol)
Product Number (s): 03076

Chronic Toxicity:

Component	OSHA Carcinogen	IARC Carcinogen	NTP Carcinogen	Irritant	Sensitizer
Hexane isomers	No	No	No	E & S (mild)	Unknown
Liquefied petroleum gas	No	No	No	No	No
Acrylic copolymer	No	No	No	E & S (mild)	Unknown
Petrolatum	No	No	No	No	Unknown
n-Hexane	No	No	No	E, S & R (moderate)	Unknown

E – Eye S – Skin R - Respiratory

Reproductive Toxicity: No information available
Teratogenicity: No information available
Mutagenicity: No information available
Synergistic Effects: No information available

Section 12: Ecological Information

Ecological studies have not been conducted for this product. The following information is available for components of this product.

Ecotoxicity: n-hexane - 48 Hr EC50 water flea: 3.87 mg/L
96 Hr LC50 Lepomis macrochirus: 4.12 mg/L
Persistence / Degradability: No information available
Bioaccumulation / Accumulation: No information available
Mobility in Environment: No information available

Section 13: Disposal Considerations

Waste Classification: The dispensed liquid product is a RCRA hazardous waste for the characteristic of ignitability with a waste code of D001. (See 40 CFR Part 261.20 – 261.33)
Aerosol should be fully emptied and depressurized before disposal. Empty containers may be recycled.

All disposal activities must comply with federal, state, provincial and local regulations. Local regulations may be more stringent than state, provincial or national requirements.

Section 14: Transport Information

US DOT (ground): Consumer Commodity, ORM-D

ICAO/IATA (air): Consumer Commodity, ID8000, 9

IMO/IMDG (water): Aerosols, UN1950, 2.1, Limited Quantity

Special Provisions: None

Section 15: Regulatory Information

Page 5 of 7

Product Name: TAC 2™ Adhesive Chain Lube (aerosol)
Product Number (s): 03076

U.S. Federal Regulations:

Toxic Substances Control Act (TSCA):
All ingredients are either listed on the TSCA inventory or are exempt.

Comprehensive Environmental Response, Compensation and Liability Act (CERCLA):
Reportable Quantities (RQ's) exist for the following ingredients: n-hexane (5000 lbs)

Spills or releases resulting in the loss of any ingredient at or above its RQ require immediate notification to the National Response Center (800-424-8802) and to your Local Emergency Planning Committee.

Superfund Amendments Reauthorization Act (SARA) Title III:
Section 302 Extremely Hazardous Substances (EHS): None

Section 311/312 Hazard Categories:

Fire Hazard	Yes
Reactive Hazard	No
Release of Pressure	Yes
Acute Health Hazard	Yes
Chronic Health Hazard	No

Section 313 Toxic Chemicals: This product contains the following substances subject to the reporting requirements of Section 313 of Title III of the Superfund Amendments and Reauthorization Act of 1986 and 40 CFR Part 372:
n-hexane (1.6%)

Clean Air Act:
Section 112 Hazardous Air Pollutants (HAPs): n-hexane

U.S. State Regulations:

California Safe Drinking Water and Toxic Enforcement Act (Prop 65):
This product may contain the following chemicals known to the state of California to cause cancer, birth defects or other reproductive harm: None

Consumer Products VOC Regulations: This product is not regulated.

State Right to Know:

New Jersey:	75-83-2, 110-54-3, 79-29-8, 68476-86-8
Pennsylvania:	107-83-5, 75-83-2, 110-54-3, 79-29-8, 68476-86-8
Massachusetts:	107-83-5, 75-83-2, 110-54-3, 79-29-8, 68476-86-8
Rhode Island :	110-54-3, 68476-86-8

Canadian Regulations:

Controlled Products Regulations:
This product has been classified in accordance with the hazard criteria of the Controlled Products Regulations and the MSDS contains all the information required by the Controlled Products Regulations.

WHMIS Hazard Class: A, B5

Canadian DSL Inventory: All ingredients are either listed on the DSL Inventory or are exempt.

European Union Regulations:

RoHS Compliance: This product is compliant with Directive 2002/95/EC of the European Parliament and of the Council of 27 January 2003. This product does not contain any of the restricted substances as listed in Article 4(1) of the RoHS Directive.

Additional Regulatory Information: None

Page 6 of 7

Product Name: TAC 2™ Adhesive Chain Lube (aerosol)
Product Number (s): 03076

Section 16: Other Information

HMIS® (II)	
Health:	2
Flammability:	3
Reactivity:	0
PPE:	B

NFPA

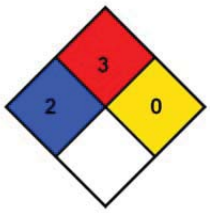

Ratings range from 0 (no hazard) to 4 (severe hazard)

Prepared By: Michelle Rudnick
CRC #: 932A/B
Revision Date: 11/11/2010

Changes since last revision: new product

The information contained in this document applies to this specific material as supplied. It may not be valid for this material if it is used in combination with any other materials. This information is accurate to the best of CRC Industries' knowledge or obtained from sources believed by CRC to be accurate. Before using any product, read all warnings and directions on the label. For further clarification of any information contained on this MSDS consult your supervisor, a health & safety professional, or CRC Industries.

ACGIH: American Conference of Governmental Industrial Hygienists
CAS: Chemical Abstract Service
CFR: Code of Federal Regulations
DOT: Department of Transportation
DSL: Domestic Substance List
g/L: grams per Liter
HMIS: Hazardous Materials Identification System
IARC: International Agency for Research on Cancer
IATA: International Air Transport Association
ICAO: International Civil Aviation Organization
IMDG: International Maritime Dangerous Goods
IMO: International Maritime Organization
lbs./gal: pounds per gallon
LC: Lethal Concentration
LD: Lethal Dose
NA: Not Applicable
ND: Not Determined
NIOSH: National Institute of Occupational Safety & Health
NFPA: National Fire Protection Association
NTP: National Toxicology Program
OSHA: Occupational Safety and Health Administration
PMCC: Pensky-Martens Closed Cup
PPE: Personal Protection Equipment
ppm: Parts per Million
RoHS: Restriction of Hazardous Substances
STEL: Short Term Exposure Limit
TCC: Tag Closed Cup
TWA: Time Weighted Average
WHMIS: Workplace Hazardous Materials Information System

Page 7 of 7

11.5.9 PERMATEX GEAR OIL RTV SEALANT

Toll Free: 87 PERMATEX
(877-376-2839)

10 Columbus Blvd., Hartford,
Connecticut 06106

6875 Parkland Boulevard, Solon
Ohio 44139

Technical Data Sheet

Permatex® Gear Oil RTV Sealant

AAM Revised 02/09

PRODUCT DESCRIPTION

Permatex® Gear Oil RTV Sealant is a single component, room temperature, vulcanizing, gasketing compound designed to provide reliable "formed-in-place" gaskets for mechanical assemblies. The product has been specially formulated to withstand the harsh gear oil environment found in many differentials and transfer cases that destroys normal RTV materials. Normal RTV's are broken down by friction modifiers found in many gear oils and causes leaks and seepage. This specialty RTV has been tested to stringent OEM specifications to ensure complete sealing as a gasket maker. It seeks and seals leak paths that cut and molded gaskets cannot. This product can be used to seal cut gaskets. This material cures on exposure to moisture in the air to form a tough, flexible, silicone rubber gasket. The product resists aging, weathering and thermal cycling without hardening, shrinking or cracking.

PRODUCT BENEFITS

- Maximum gear oil resistance
- Safe for use with friction modifiers
- Sensor safe, non-corrosive
- Good adhesion and flexibility
- Replaces most cut gaskets
- Can be used as a gasket maker or dressing
- Non-flammable
- Low odor

TYPICAL APPLICATIONS

- Specially designed and formulated for differentials and transfer cases

DIRECTIONS FOR USE

For assembly as a form-in-place gasket

1. Remove all previous material from mating surfaces. Permatex® Gasket Remover is recommended for most materials but not for plastics or painted surfaces.
2. For best results, clean and dry all surfaces with a residue-free solvent, such as Permatex® Brake and Parts Cleaner
3. Cut nozzle to desired bead size, 1/16" to 1/4" in diameter. A 1/8" bead is usually sufficient for most applications.
4. Remove cap, puncture tube seal and attach extension nozzle.
5. Apply a continuous and even bead of silicone to one surface, first tracing the internal areas of the gasket configuration, then all surrounding bolt holes.
6. Assemble parts immediately while silicone is still wet.
7. Finger tighten flange until material begins to seep out the sides of the flange.
8. Allow to set for at least one hour and re-torque one quarter to one half turn.
9. For best results, allow to cure overnight.

For assembly as a gasket dressing

1. Repeat steps 1 through 4 as in previous section.
2. Apply a thin film of silicone to one flange surface to be sealed.
3. Place the pre-cut gasket onto silicone film.
4. Apply a second thin film to pre-cut gasket surface.
5. Remove any excess and assemble parts immediately.
   Note: Product is not recommended for use as a cylinder head gasket or head gasket sealant.

Storage of Unused Product

1. Create a "Silicone Plug" by allowing excess material to extend beyond the extension nozzle or aerosol tip to cure, sealing and protecting the remaining product from moisture. For reuse, slowly pull the cured product from the tip.

For Cleanup

1. Remove uncured product from parts and hand-tools with Permatex® Fast Orange® Wipes or Fast Orange® Hand Cleaners. If skinned over, break film with a dry cloth to remove as much as possible. Remove the remaining material with Permatex® Gasket Remover.
2. Clean hands with a dry cloth or Permatex® Fast Orange® Hand Cleaner.

PROPERTIES OF UNCURED MATERIAL

	Typical Value
Chemical Type	Oxime silicone
Appearance	Grey metallic paste
Odor	Mild
Specific Gravity	1.45
Viscosity	Thixotropic paste
Flash Point °C (°F)	>93 (>200)

TYPICAL CURING PERFORMANCE

Permatex® Gear Oil RTV Sealant cures on exposure to moisture in the air. The product dries tack free in two hours and fully cures in 24 hours. Cure times will vary with temperature, humidity and gap.

PERFORMANCE OF CURED MATERIAL

After 7 days at 25°C (77°F). 50% Relative Humidity

	Typical Values	
Hardness (Shore A)	67	
Elongation, %*	200	
Tensile Strength, N/mm² (psi)**	1.7	(250)
Gap Fill, inch	0.25	

*Material will stretch 2 times its original length before breaking.

**Amount of force required to break material.

NOT FOR PRODUCT SPECIFICATIONS
THE TECHNICAL DATA CONTAINED HEREIN ARE INTENDED AS REFERENCE ONLY.
PLEASE CONTACT PERMATEX, INC., TECHNICAL SERVICE DEPARTMENT FOR ASSISTANCE AND RECOMMENDATIONS FOR YOUR SPECIFIC APPLICATION.
PERMATEX, INC., HARTFORD SQUARE NORTH, 10 COLUMBUS BOULEVARD, HARTFORD, CT 06106 PHONE – (1-87PERMATEX)

Technical Data Sheet Gear Oil RTV Sealant

TYPICAL ENVIRONMENTAL RESISTANCE

Temperature Resistance	Typical Values	
Continuous, °C (°F)	-54 to 232	(-65 to 450)
Intermittent, °C (°F)	-54 to 260	(-65 to 500)

Chemical / Solvent Resistance
The product retains effective properties in contact with gear oil fluids. Note: Not recommended for parts in contact with gasoline.

GENERAL INFORMATION
This product is not recommended for use in pure oxygen and/or oxygen rich systems and should not be selected as a sealant for chlorine or other strong oxidizing materials.

For safe handling information on this product, consult the Material Safety Data Sheet, (MSDS).

ORDERING INFORMATION

81182	3 oz. tube
81184	5 fl. oz. cartridge

STORAGE
Products shall be ideally stored in a cool, dry location in unopened containers at a temperature between 8° and 28°C (46° and 82°F) unless otherwise labeled. Optimal storage is at the lower half of this temperature range. To prevent contamination of unused product, do not return any material to its original container.

NOTE
The data contained herein are furnished for information only and are believed to be reliable. We cannot assume responsibility for the results obtained by others over whose methods we have no control. **ITW Permatex, Inc. specifically disclaims all warranties expressed or implied, including warranties of merchantability or fitness for a particular purpose, arising from sale or use of Permatex, Inc. products and disclaims any liability for consequential or incidental damages of any kind, including lost profits.** This product may be covered by one or more United States or foreign patents or patent applications.

Permatex and Fast Orange are trademarks of Illinois Tool Works, Inc. © Copyright 2009 Permatex. Inc. All rights reserved

ITW Permatex
10 Columbus Blvd.
Hartford, CT 06106 USA
Telephone: 1-87-Permatex
(877) 376-2839
Emergency: 800-255-3924 (ChemTel)
International Emergency: +01-813-248-0585

Material Safety Data Sheet

1. PRODUCT IDENTIFICATION

Product Name: RTV GEAR OIL SILICONE 3 OZ
Item No: 81182
Product Type: Elastomeric rubber

2. COMPOSITION/INFORMATION ON INGREDIENTS

Component	Weight%	ACGIH; TLV-TWA	OSHA PEL
POLY (DIMETHYLSILOXANE), HYDROXY TERMINATED 70131-67-8	30-50	Not listed	Not listed
CALCIUM CARBONATE 471-34-1	10-30	10 mg/m^3	Not listed
GARNET MINERAL 1302-62-1	10-30	Not listed	Not listed
VINYL OXIMINOSILANE 2224-33-1	<10	Not listed	Not listed
MODIFIED SILICON DIOXIDE 68611-44-9	<5	Not listed	Not listed
2-BUTANONE OXIME 96-29-7	0.5-2.0	Not listed	Not listed

3. HAZARDS IDENTIFICATION

Toxicity: May cause eye and skin irritation. May cause skin sensitization. May be harmful if swallowed. May irritate lips, gums, tongue, mouth, nose and throat. When this product if exposed to moisture, butanone oxime may be formed.
Primary Routes of Entry: Eye and skin contact, ingestion, inhalation
Signs and Symptoms of Exposure: Butanone oxime produced during curing is toxic and irritates eyes, nose and throat. Overexposure to the silane may cause coma and respiratory failure.
Aggravated Medical Condition: Preexisting skin disorders.

4. FIRST AID MEASURES

Ingestion: Rinse mouth. If swallowed, DO NOT induce vomiting. Keep individual calm. Obtain medical attention.
Inhalation: Move to fresh air in case of accidental inhalation of vapours. If not breathing, give artificial respiration. Obtain medical attention.
Skin Contact: Wipe off paste with paper towel or cloth. Wash exposed area with soap and water. Seek medical attention if irritation persists.
Eye Contact: In case of contact, immediately flush eyes with plenty of water for at least 15 minutes and get medical attention if irritation persists.

5. FIRE FIGHTING MEASURES

Flash Point °F(C°): >200°F TCC
Recommended Extinguishing Media: Carbon Dioxide, Dry Chemicals, Foam.
Special Fire-Fighting Procedures: Water spray may be ineffective on flames but should be used to keep fire-exposed containers cool.
Hazardous Products of Combustion: Oxides of carbon, Oxides of nitrogen, Methyl ethyl ketone, possibly methyl ethyl ketoxime, Silica fume, Aldehydes, Formaldehyde, Ammonia
Unusual Fire/Explosion Hazards: None.
Lower Explosive Limit: Not determined
Upper Explosive Limit: Not determined

Product Name: RTV GEAR OIL SILICONE 3 OZ **Item No.** 81182

6. ACCIDENTAL RELEASE MEASURES

Spill Procedures: Wipe or scrape up spill material. Maintain good ventilation for large spills. Place scrap material in a well-ventilated area and allow to cure to rubber. Clean up spills thoroughly as residue is slippery.

7. HANDLING AND STORAGE

Storage: Store in a dry area below 90 degrees F. Keep container closed when not in use.
Handling: Do not inhale vapors. Avoid contact with skin and eyes. Wash hands before eating and smoking.

8. EXPOSURE CONTROLS/PERSONAL PROTECTION

Eyes: Safety glasses. Avoid contact lenses.
Skin: Neoprene or nitrile gloves recommended.
Ventilation: General; local exhaust ventilation as necessary to control any air contaminants to within their exposure limits (or to the lowest feasible levels when limits have not been established) during the use of this product.
Respiratory Protection: Not normally necessary. In case of insufficient ventilation, wear suitable respiratory equipment.

Comments: When heated to temperatures above 300 degrees F. in the presence of air, this product can form formaldehyde vapors. Formaldehyde is a potential cancer hazard and a known skin and respiratory sensitizer. Safe handling conditions may be maintained by keeping vapor concentrations below the OSHA permissible limit for formaldehyde

9. PHYSICAL AND CHEMICAL PROPERTIES

Appearance: Gray paste
Odor: Mild
Boiling Point: Not applicable, polymeric material
pH: Does not apply
Solubility in Water: Polymerized
Specific Gravity: 1.45
VOC(Wt.%): <3%
Vapor Pressure: <5 mm Hg
Vapor Density (Air=1): Heavier than air
Evaporation Rate: Not Determined

10. STABILITY AND REACTIVITY

Chemical Stability: Stable at normal conditions
Hazardous Polymerization: Will not occur
Incompatabilities: Polymerized by contact with moisture., Strong oxidizers, Acids, Reactive metals (e.g. Na, Ca, zinc), Peroxides
Conditions to Avoid: Exposure to moisture.
Hazardous Products of Combustion: Oxides of carbon, Oxides of nitrogen, Methyl ethyl ketone, possibly methyl ethyl ketoxime, Silica fume, Aldehydes, Formaldehyde, Ammonia

11. TOXICOLOGICAL INFORMATION

See Section 3

12. ECOLOGICAL INFORMATION

No data available

13. DISPOSAL CONSIDERATIONS

Recommended Method of Disposal: Disposal should be made in accordance with federal, state and local regulations.
US EPA Waste Number: NH - Not a RCRA Hazardous Waste Material

14. TRANSPORTATION INFORMATION

DOT (49CFR 172)
U.S. Department of Transportation - DOT - 49 CFR (Ground)
DOT Shipping Name: Not regulated
Hazard Class: None
UN/ID Number: None
IATA (Air)
Proper Shipping Name: Not regulated
Class or Division: None
UN/ID Number: None

Product Name: RTV GEAR OIL SILICONE 3 OZ **Item No.** 81182

IMDG (Vessel)

Proper Shipping Name:	Not regulated
Hazard Class:	None
UN Number:	None
Marine Pollutant:	None

15. REGULATORY INFORMATION

SARA 313 Chemicals: The following component(s) is listed as a SARA Section 313 Toxic Chemical.

NONE

California Proposition 65: No California Prop 65 chemicals are known to be present at or above the No Significant Risk Level

TSCA Inventory Status: All components of this product are listed (or exempt) on the EPA TSCA inventory.

16. OTHER INFORMATION

Estimated NFPA Rating: HEALTH 2, FLAMMABILITY 1 , REACTIVITY 0.
Estimated HMIS Classification: HEALTH 2, FLAMMABILILTY 1, PHYSICAL HAZARD 0
(NFPA is a registered trademark of the National Fire Protection Association)
HMIS is a registered trademark of the National Paint and Coatings Association

Prepared By: Denise Boyd, Manager-Environmental, Health & Safety
Company: ITW Permatex 10 Columbus Blvd. Hartford, CT USA 06106
Telephone No.: 1-87-Permatex (877) 376-2839

Revision Date: April 03, 2012
Revision Number: 2

11.5.10 CRC QUICKCLEAN HEAVY DUTY DEGREASER

CRC Industries, Inc.
885 Louis Drive • Warminster PA • 18974

Technical Data Sheet
Quick Clean™
Heavy Duty Degreaser

I. Product Description

CRC Quick Clean™ is a non-flammable, chlorinated, non-ozone depleting degreaser for use on industrial equipment. It provides an economical and aggressive reduced VOC alternative to 1,1,1. It dissolves grease, oil and sludge quickly for more efficient operation of mechanical equipment. **Quick Clean™** is chemically stable, non-conductive and non-corrosive.

II. Applications

Recommended for the removal of grease, oil, grime, sludge and corrosion from motors, air tools, mechanical brakes, clutches, chains, wire rope, machinery, parts, bearings, generators, compressors, pumps, hoists, lifts, dies, molds and a wide variety of other industrial and electrical equipment. Safe for use on oxygen systems*.

III. Features & Benefits

- **Non-Flammable**. Significantly reduces the risk of fire caused by incidental contact of liquid with live equipment or solvents trapped by insulating materials.
- **Fast Evaporation**. Reduces down-time.
- **Leaves No Residue.** Prevents harmful build-up on equipment and eliminates wiping in most applications.
- **No Class I or II Ozone Depleting Chemicals**. Provides an alternative to 1,1,1-Trichloroethane products while complying with the EPA regulations on the use of ozone depleting chemicals.
- **M.S.D.[L.]™-Material Safety Data Label**. Provides instant access to current safety information should an accident or OSHA inspection occur. Helps comply **with OSHA Hazard Communications Standard 29 CFR 1910.1200**.

IV. Physical Properties without propellant

Flash Point	None	**Boiling Point**	250°F (initial)
Odor	Strong in high concentrations	**Solubility**	Slight in water
Appearance	Colorless liquid	**% Volatile**	100
Vapor Density	5.76 (air=1)	**Specific Gravity**	1.619 @ 25°C
VOC Content (Fed)	Exempt (0 g/L)	**Surface Tension**	32.32 dynes/cm
Sara Title III, Sect. 313 Chemicals	Yes	**Propellant**	CO_2
Prop 65	Yes		

V. Specifications and Approvals

- NSF K2 Registered for use in meat and poultry plants.

*Post-test and cleanliness inspection procedures should be followed before re-introduction of oxygen to the system.

Quick Clean™ Heavy Duty Degreaser

VI. Performance Characteristics

ASTM D-56 (Flash Point)	None
ASTM D-877 (Dielectric Strength)	37,500 volts
ASTM D-1130 (KB Value)	95
Surface Tension	32.32 dynes/CM

VII. Directions

- Do not use on polycarbonate plastics such as LEXAN®. If in doubt, call the manufacturer of the equipment. MAY ALSO BE HARMFUL TO OTHER PLASTICS.
- Protect all rubber parts, plastic parts, and painted surfaces from overspray. DO NOT spray directly on painted surfaces.
- Remove access plates to expose equipment interior. For hard to reach areas, use extension tube.
- Spray until clean.
- Air dry or dry with a clean, absorbent cloth.
- Heavy deposits may require scraping and repeated applications.
- **FOR PERSONAL SAFETY DO NOT APPLY WHILE EQUIPMENT IS ENERGIZED**.
- Not for use on sensitive electronic equipment such as tape decks, VCRs, computers, etc. Use a plastic safe CRC Precision Cleaner for those applications.
- Avoid contact with aluminum and its' alloys.

VIII. Package Description

Part Number	Container Size
03180	20 oz Aerosol
03183	5 Gallon Pail
03184	55 Gallon Drum

IX. Disposal

Disposal requirements vary by state and local jurisdiction. All used and unused product should be disposed of in conformance with local, state and federal regulations.

X. Special Use Warnings

Aerosol Cans
Do not puncture, incinerate or store above 120°F. Exposure to high temperatures may cause can to burst. Do not place in direct sunlight or near any heat source. Aerosol cans will conduct electricity. Keep away from all live electrical sources including battery terminals, solenoids, electrical panels and other electronic components. Failure to observe this warning may result in serious injury from flash fire and/or electrical shock.

General
Use only in well ventilated area. Ventilation may be improved by opening a window or door or providing mechanical assistance. Avoid continuous breathing of vapor and spray mist. Avoid contact with skin and eyes. If ventilation is not adequate, respiratory protection should be worn. For more information regarding short term and long term exposure, review this product's Material Safety Data Sheet.

DISCLAIMER: This information is accurate to the best of CRC Industries' knowledge or obtained from sources believed by CRC to be accurate. Before using any product, read all warnings and directions on the label. All products should be tested for suitability on a particular application prior to actual use. CRC Industries, Inc. makes no representations or warranties of any kind concerning this data.

CRC Industries, Inc. *Industrial Products Division* *Warminster, PA 18974*
Technical Service: (800)521-3168 *Customer Service: (800)272-4620* *CRC On-Line: (215)442-6260*

Literature Reorder #TDS186 ***CRC On-Line # 186*** ***REV. 11/11***

CRC MATERIAL SAFETY DATA SHEET

Section 1: Product & Company Identification

Product Name: **Quick Clean™** (aerosol)

Product Number (s): **03180**

Product Use: General purpose degreaser

Manufacturer / Supplier Contact Information:

In United States:
CRC Industries, Inc.
885 Louis Drive
Warminster, PA 18974
www.crcindustries.com
1-215-674-4300(General)
(800) 521-3168 (Technical)
(800) 272-4620 (Customer Service)

In Canada:
CRC Canada Co.
2-1246 Lorimar Drive
Mississauga, Ontario L5S 1R2
www.crc-canada.ca
1-905-670-2291

In Mexico:
CRC Industries Mexico
Av. Benito Juárez 4055 G
Colonia Orquídea
San Luís Potosí, SLP CP 78394
www.crc-mexico.com
52-444-824-1666

24-Hr Emergency – CHEMTREC: (800) 424-9300 or (703) 527-3887

Section 2: Hazards Identification

Emergency Overview

DANGER: Vapor Harmful. Contents Under Pressure.
Appearance & Odor: Colorless liquid, irritating odor at high concentrations.

Potential Health Effects:

ACUTE EFFECTS:

EYE: May cause slight temporary eye irritation. Vapors may irritate the eyes at concentrations of 100 ppm.

SKIN: Short single exposure may cause skin irritation. Prolonged exposure may cause severe skin irritation, even a burn. A single prolonged exposure is not likely to result in the material being absorbed through the skin in harmful amounts.

INHALATION: Dizziness may occur at concentrations of 200 ppm. Progressively higher levels may also cause nasal irritation, nausea, incoordination, and drunkenness. Very high levels or prolonged exposure could lead to unconsciousness and death.

INGESTION: Single dose oral toxicity is considered to be extremely low. Swallowing large amounts may cause injury if aspirated into the lungs. This may be rapidly absorbed through the lungs and result in injury to other body systems.

CHRONIC EFFECTS: Repeated contact with skin may cause drying or flaking of skin. Excessive or long term exposure to vapors may increase sensitivity to epinephrine and increase myocardial irritability.

TARGET ORGANS: Central nervous system, possibly liver and kidney

Medical Conditions Aggravated by Exposure: None known.

See Section 11 for toxicology and carcinogenicity information on product ingredients.

Page 1 of 7

Product Name: Quick Clean™ (aerosol)
Product Number (s): 03180

Section 3: Composition/Information on Ingredients

COMPONENT	CAS NUMBER	% by Wt.
Tetrachloroethylene (PERC)	127-18-4	> 95
Carbon Dioxide	124-38-9	< 5

Section 4: First Aid Measures

Eye Contact: Immediately flush with plenty of water for 15 minutes. Call a physician if irritation persists.

Skin Contact: Remove contaminated clothing and wash affected area with soap and water. Call a physician if irritation persists. Wash contaminated clothing prior to re-use.

Inhalation: Remove person to fresh air. Keep person calm. If not breathing, give artificial respiration. If breathing is difficult give oxygen. Call a physician.

Ingestion: Do NOT induce vomiting. Call a physician immediately.

Note to Physicians: Because rapid absorption may occur through lungs if aspirated and cause systemic effects, the decision of whether to induce vomiting or not should be made by a physician. If lavage is performed, suggest endotracheal and/or esophageal control. If burn is present, treat as any thermal burn, after decontamination. Exposure may increase myocardial irritability. Do not administer sympathomimetic drugs unless absolutely necessary. No specific antidote.

Section 5: Fire-Fighting Measures

Flammable Properties: This product is nonflammable in accordance with aerosol flammability definitions. (See 16 CFR 1500.3(c)(6))

Flash Point: None (TCC) Upper Explosive Limit: None
Autoignition Temperature: None Lower Explosive Limit: None

Fire and Explosion Data:

Suitable Extinguishing Media: This material does not burn. Use extinguishing agent suitable for surrounding fire.

Products of Combustion: Hydrogen chloride. Trace amounts of phosgene and chlorine.

Explosion Hazards: Aerosol containers, when exposed to heat from fire, may build pressure and explode.

Protection of Fire-Fighters: Firefighters should wear self-contained, NIOSH-approved breathing apparatus for protection against suffocation and possible toxic decomposition products. Proper eye and skin protection should be provided. Use water spray to keep fire-exposed containers cool and to knock down vapors which may result from product decomposition.

Section 6: Accidental Release Measures

Personal Precautions: Use personal protection recommended in Section 8. Do not breathe vapors.

Environmental Precautions: Take precautions to prevent contamination of ground and surface waters. Do not flush into sewers or storm drains.

Methods for Containment & Clean-up: Dike area to contain spill. Ventilate the area with fresh air. If in confined space or limited air circulation area, clean-up workers should wear appropriate

Product Name: Quick Clean™ (aerosol)
Product Number (s): 03180

respiratory protection. Recover or absorb spilled material using an absorbent designed for chemical spills. Place used absorbents into proper waste containers.

Section 7: Handling and Storage

Handling Procedures: Vapors of this product are heavier than air and will collect in low areas. Make sure ventilation removes vapors from low areas. Do not eat, drink or smoke while using this product. Use caution around energized equipment. The metal container will conduct electricity if it contacts a live source. This may result in injury to the user from electrical shock and/or flash fire. For product use instructions, please see the product label.

Storage Procedures: Store in a cool dry area out of direct sunlight. Aerosol cans must be maintained below 120°F / 49°C to prevent cans from rupturing.

Aerosol Storage Level: I

Section 8: Exposure Controls/Personal Protection

Exposure Guidelines:

	OSHA		ACGIH		OTHER		
COMPONENT	TWA	STEL	TWA	STEL	TWA	SOURCE	UNIT
Tetrachloroethylene	100	N.E.	25	100	N.E.		ppm
Carbon dioxide	5000	30000 v	5000	30,000	N.E.		ppm
N.E. – Not Established (c) – ceiling (s) – skin (v) – vacated							

Controls and Protection:

Engineering Controls: Area should have ventilation to provide fresh air. Local exhaust ventilation is generally preferred because it can control the emissions of the contaminant at the source, preventing dispersion into the general work area. Use mechanical means if necessary to maintain vapor levels below the exposure guidelines. If working in a confined space, follow applicable OSHA regulations.

Respiratory Protection: None required for normal work where adequate ventilation is provided. If engineering controls are not feasible or if exposure exceeds the applicable exposure limits, use a NIOSH-approved cartridge respirator with organic vapor cartridge. Air monitoring is needed to determine actual employee exposure levels. Use a self-contained breathing apparatus in confined spaces and for emergencies.

Eye/face Protection: For normal conditions, wear safety glasses. Where there is reasonable probability of liquid contact, wear splash-proof goggles.

Skin Protection: Use protective gloves such as PVA, Teflon, or Viton. Also, use full protective clothing if there is prolonged or repeated contact of liquid with skin.

Section 9: Physical and Chemical Properties

Physical State: liquid
Color: colorless
Odor: irritating odor
Odor Threshold: 50 ppm
Specific Gravity: 1.619

Product Name: Quick Clean™ (aerosol)
Product Number (s): 03180

Initial Boiling Point: 250°F / 121°C
Freezing Point: ND
Vapor Pressure: 13 mmHg @ 68°F / 20°C
Vapor Density: 5.76 (air = 1)
Evaporation Rate: very fast
Solubility: 0.015 g / 100 g @ 77°F / 25°C in water
Coefficient of water/oil distribution (log P_{ow}): 2.88
pH: NA
Volatile Organic Compounds: wt %: 0 g/L: 0 lbs./gal: 0

Section 10: Stability and Reactivity

Stability: Stable

Conditions to Avoid: Avoid direct sunlight or ultraviolet sources. Avoid open flames, welding arcs, and other high temperature sources which induce thermal decomposition.

Incompatible Materials: Avoid contact with metals such as: aluminum powders, magnesium powders, potassium, sodium, and zinc powder. Avoid unintended contact with amines. Avoid contact with strong bases and strong oxidizers.

Hazardous Decomposition Products: Hydrogen chloride, trace amounts of chlorine and phosgene

Possibility of Hazardous Reactions: No

Section 11: Toxicological Information

Long-term toxicological studies have not been conducted for this product. The following information is available for components of this product.

Acute Toxicity:

Component	Oral LD50 (rat)	Dermal LD50 (rabbit)	Inhalation LC50 (rat)
Tetrachloroethylene	2629 mg/kg	3228 mg/kg	5200 mg/kg/4H
Carbon dioxide	No data	No data	470,000 ppm/30M

Chronic Toxicity:

Component	OSHA Carcinogen	IARC Carcinogen	NTP Carcinogen	Irritant	Sensitizer
Tetrachloroethylene	No	Group 2A	Reasonably Anticipated to be a Carcinogen	Skin	No
Carbon dioxide	No	No	No	No	No

Reproductive Toxicity: No information available
Teratogenicity: No information available
Mutagenicity: Tetrachloroethylene: In vitro studies were negative
Animal studies were negative
Synergistic Effects: No information available

Section 12: Ecological Information

Ecological studies have not been conducted for this product. The following information is available for components of this product.

Page 4 of 7

Product Name: Quick Clean™ (aerosol)
Product Number (s): 03180

Ecotoxicity:	Tetrachloroethylene -- 96 Hr LC50 Rainbow Trout: 5.28 mg/L (static) 96 Hr LC50 Fathead minnow: 13.4 mg/L (flow-through)
Persistence / Degradability:	Biodegradation under aerobic conditions is below detectable limits. Biodegradation may occur under anaerobic conditions. Biodegradation rate may increase in soil and/or water with acclimation.
Bioaccumulation / Accumulation:	Bioconcentration potential is low (BCF less than 100).
Mobility in Environment:	Potential for mobility in soil is medium.

Section 13: Disposal Considerations

Waste Classification: The dispensed liquid product is a RCRA hazardous waste for toxicity with the following potential waste codes: U210, F001, F002, D039. (See 40 CFR Part 261.20 – 261.33)
Empty aerosol containers may be recycled. Any liquid product should be managed as a hazardous waste.

All disposal activities must comply with federal, state, provincial and local regulations. Local regulations may be more stringent than state, provincial or national requirements.

Section 14: Transport Information

US DOT (ground):	UN1950, Aerosols, non-flammable, 2.2 (6.1), Limited Quantity**
ICAO/IATA (air):	UN1950, Aerosols, non-flammable, containing substances in Division 6.1, Packing Group III, 2.2 (6.1), Limited Quantity
IMO/IMDG (water):	UN1950, Aerosols, 2.2 (6.1)
Special Provisions:	Marine Pollutant **This product can be classified and labeled as 'Consumer Commodity, ORM-D' for domestic ground shipping until January 1, 2014. If shipping as limited quantity by ground, note that shipping papers are not required.

Section 15: Regulatory Information

U.S. Federal Regulations:

Toxic Substances Control Act (TSCA):
All ingredients are either listed on the TSCA inventory or are exempt.

Comprehensive Environmental Response, Compensation and Liability Act (CERCLA):
Reportable Quantities (RQ's) exist for the following ingredients: Tetrachloroethylene (100 lbs)

Spills or releases resulting in the loss of any ingredient at or above its RQ require immediate notification to the National Response Center (800-424-8802) and to your Local Emergency Planning Committee.

Superfund Amendments Reauthorization Act (SARA) Title III:
Section 302 Extremely Hazardous Substances (EHS): None

Section 311/312 Hazard Categories:	Fire Hazard	No
	Reactive Hazard	No
	Release of Pressure	Yes
	Acute Health Hazard	Yes
	Chronic Health Hazard	Yes

Product Name: Quick Clean™ (aerosol)
Product Number (s): 03180

Section 313 Toxic Chemicals: This product contains the following substances subject to the reporting requirements of Section 313 of Title III of the Superfund Amendments and Reauthorization Act of 1986 and 40 CFR Part 372:
tetrachloroethylene (98%)

Clean Air Act:
Section 112 Hazardous Air Pollutants (HAPs): tetrachloroethylene

Occupational Safety and Health Administration:
This product is regulated by the Hazard Communications Standard.

U.S. State Regulations:

California Safe Drinking Water and Toxic Enforcement Act (Prop 65):
This product may contain the following chemicals known to the state of California to cause cancer, birth defects or other reproductive harm: tetrachloroethylene

Consumer Products VOC Regulations: This product is not compliant to be sold for use in California, Connecticut, Delaware, The District of Columbia, Illinois, Indiana, Maine, Maryland, Massachusetts, Michigan, New Jersey, New York, and Rhode Island. In other states with Consumer Products VOC regulations, this product is compliant as a General Purpose Degreaser.

State Right to Know:

New Jersey:	127-18-4, 124-38-9
Pennsylvania:	127-18-4, 124-38-9
Massachusetts:	127-18-4, 124-38-9
Rhode Island .	127-18-4, 124-38-9

Canadian Regulations:

Controlled Products Regulations:
This product has been classified in accordance with the hazard criteria of the Controlled Products Regulations and the MSDS contains all the information required by the Controlled Products Regulations.

WHMIS Hazard Class: A, D1B, D2A, D2B

Canadian DSL Inventory: All ingredients are either listed on the DSL Inventory or are exempt.

European Union Regulations:

RoHS Compliance: This product is compliant with Directive 2002/95/EC of the European Parliament and of the Council of 27 January 2003. This product does not contain any of the restricted substances as listed in Article 4(1) of the RoHS Directive.

Additional Regulatory Information: None

Page 6 of 7

Product Name: Quick Clean™ (aerosol)
Product Number (s): 03180

Section 16: Other Information

HMIS® (II)	
Health:	2
Flammability:	0
Reactivity:	0
PPE:	B

NFPA

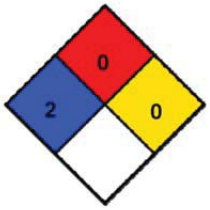

Ratings range from 0 (no hazard) to 4 (severe hazard)

Prepared By: Michelle Rudnick
CRC #: 491G
Revision Date: 07/24/2012

Changes since last revision: Section 14: Transport Information

The information contained in this document applies to this specific material as supplied. It may not be valid for this material if it is used in combination with any other materials. This information is accurate to the best of CRC Industries' knowledge or obtained from sources believed by CRC to be accurate. Before using any product, read all warnings and directions on the label. For further clarification of any information contained on this MSDS consult your supervisor, a health & safety professional, or CRC Industries.

ACGIH: American Conference of Governmental Industrial Hygienists
CAS: Chemical Abstract Service
CFR: Code of Federal Regulations
DOT: Department of Transportation
DSL: Domestic Substance List
g/L: grams per Liter
HMIS: Hazardous Materials Identification System
IARC: International Agency for Research on Cancer
IATA: International Air Transport Association
ICAO: International Civil Aviation Organization
IMDG: International Maritime Dangerous Goods
IMO: International Maritime Organization
lbs./gal: pounds per gallon
LC: Lethal Concentration
LD: Lethal Dose

NA: Not Applicable
ND: Not Determined
NIOSH: National Institute of Occupational Safety & Health
NFPA: National Fire Protection Association
NTP: National Toxicology Program
OSHA: Occupational Safety and Health Administration
PMCC: Pensky-Martens Closed Cup
PPE: Personal Protection Equipment
ppm: Parts per Million
RoHS: Restriction of Hazardous Substances
STEL: Short Term Exposure Limit
TCC: Tag Closed Cup
TWA: Time Weighted Average
WHMIS: Workplace Hazardous Materials Information System

Page 7 of 7

11.5.11 CAIG LABORATORIES DEOXIT D5 CONTACT CLEANER

Since 1956
CAIG LABORATORIES, INC.

DATA SHEET

Our products make your products perform!

DeoxIT® D5 Spray, D-Series
Contact Cleaner & Rejuvenator

Part No.: D5S-6

Container Size: 142 g, adjustable valve (L-M-H)

Product Description:

Unique contact cleaner, rejuvenator, conductivity enhancer and lubricant; dissolves oxidation and corrosion on metal surfaces, fills in microscopic gaps and reseals surface for better contact to enhance flow of electricity. Improves connector performance/reliability. Temperature range: -34 to +200°C.

Features/Benefits:

Spray, adjustable valve (L-M-H) - Flushing Action, and Safe on Plastics.
DeoxIT® D100L concentrate has approximately 20% chemical cleaning action.
Excellent cleaning/deoxidizing, good protection, no ozone depletion.
Improves conductivity and reduces intermittent connections.
Reduces arcing, RFI, wear and abrasion.
Cleaner Audio - Clearer Video - Reliable Data.

Formulation:

5%	DeoxIT® D100L
75%	odorless mineral spirits (64742-88-7)
20%	DIFLUOROETHANE (75-37-6)

VOC COMPLIANT RoHS COMPLIANT

DeoxIT® - Product Selection Guide

	DeoxIT®	DeoxIT® GOLD	DeoxIT® GOLD Gx1	DeoxIT® GOLD Gx2	DeoxIT® SHIELD	DeoxIT® FaderLube
New Surfaces		✔	✔	✔	✔	✔
* In Service / Used	✔					✔
Gold surfaces		✔	✔	✔		
Oxidation / corrosion visible	✔					
Conductive plastics						✔
** Outdoor / Severe environments	✔					✔
Deoxidizing / cleaning properties	20%	0.1%	0.1%	0.0%	0.0%	0.0%
Metal / Plastic surfaces	Yes	Yes	Yes	Yes	Yes	
Plastics compatibility	Excellent	Excellent	Excellent	Excellent	Excellent	Excellent
Temperature range (°C)	-34/200	-45/240	-45/310	-45/500	-34/210	-26/150
Stationary & moving surfaces	Yes	Yes	Yes	Yes	Yes	Yes
Seals & protects base metals	Good	Excellent	Excellent	Excellent	Good	No

✔ All products are Nonflammable and RoHs Compliant
* In Service: Clean with DeoxIT®. For added protection, follow with DeoxIT® GOLD (indoors), DeoxIT® SHIELD (outdoors) or DeoxIT® Grease (additional barrier).
** Severe environments: Pre-clean with DeoxIT®. Follow with DeoxIT® SHIELD or DeoxIT® Grease.

DeoxIT® - Spray Selection Guide

Product Series	FP	QD	NF	PC	VOC
Standard - 5% solution D5S-6, D5MS-15, G5S-6, G5MS-15, S5S-6, S5MS-15, F5S-6, F5MS-15	✔			✔	75
N Series - 5% solution DN5S-6N, DN5MS-15, GN5S-6N, GN5MS-15, SN5S-6, SN5MS-15		✔	✔	✔	20
X Series - 5% solution GX5S-6N		✔	✔	✔	20
100 Series - 100% solution D100S-2, G100S-2, F100S-2			✔	✔	0

FP = Flushing properties QD = Quick dry / non drip NF = Nonflammable
PC = Plastics compatibility VOC = VOC (%)

Page 1

Other Applicators:

D5MS-15	5%	mini-spray	14 g	flammable
DN5S-6N	5%	spray	163 g	nonflammable
DN5MS-15	5%	mini-spray	14 g	nonflammable
D100S-2	100%	spray	57g	nonflammable
D100P	100%	pen	6 mL	nonflammable
D50W	100%	wipes	50 count	nonflammable
D100L-2DB	100%	brush	7.4 mL	nonflammable
D100L-25C	100%	needle dispenser	25 mL	nonflammable
D100L (bulk)	100%	bottle/drum	assort.	nonflammable
D5L (bulk)	5%	bottle/drum	assort.	flammable

DeoxIT® Essential Reference:

DeoxIT® D-Series - *Brings old systems back to life!*
DeoxIT® Gold G-Series - *Maintains new system performance!*
DeoxIT® Shield S-Series - *Maintains new system performance for severe environments!*

Shipping and Additional Information:

Hazardous: ORMD
VOC (%): 75%

Other Information:

RoHS Compliant:	YES
D5S-6 MSDS Link:	http://store.caig.com/
DeoxIT® Product Sheet:	http://store.caig.com/
MentorCard Link:	http://store.caig.com/
WHY DeoxIT® is Different:	http://store.caig.com/

MANUFACTURER DISCLAIMER:

To the best of our knowledge, the information contained herein is accurate. However, neither CAIG Laboratories, Inc., or any of its subsidiaries assumes any liability whatsoever for the accuracy or completeness of the information contained herein. All materials may present unknown hazards and should be used with caution. In particular, improper use of our products and their inappropriate combination with other products and substances may produce harmful results which cannot be anticipated. Final determination of the suitability of any material is the sole responsibility of the user. Although certain hazards are described herein, we cannot guarantee that these are the only hazards that may exist. All service performed on internal parts and equipment should be provided by qualified technicians.

Contact Information:

Since 1956 CAIG LABORATORIES, INC.

North America
CAIG Laboratories, Inc.
12200 Thatcher Court
Poway, CA 92064 USA
Tel: (858) 486-8388
Fax: (858) 486-8398

Website
www.caig.com
www.deoxit.com

General email
info@caig.com

Technical email
tech@caig.com

Page 2

CAIG LABORATORIES, INC.

SAFETY DATA SHEET

Page 1 of 6
MSDS-E-D5S-A

Prepared to OSHA, ACC, ANSI, NOHSC, WHMIS, 2001/58/EC & 1272/2008/EC Standards | MSDS Revision: 3.0 | MSDS Revision Date: 08/22/2012

1. PRODUCT IDENTIFICATION

1.1	Product Name:	**DeoxIT® D-Series, 5% Spray, (P/N D5S-6), 142 g**
1.2	Chemical Name:	**See ingredients listed in section 3**
1.3	Synonyms:	**DeoxIT®, D5S-6, 5% Spray**
1.4	Trade Names:	**DeoxIT®, D5S-6, 5% Spray**
1.5	Product Use:	**Clean, deoxidize & improve electrical contacts & connectors**
1.6	Manufacturer's Name:	**CAIG Laboratories, Inc.**
1.7	Manufacturer's Address:	**12200 Thatcher Court, Poway, CA 92064-6876 USA**
1.8	Emergency Phone:	**CHEMTREC: +1 (703) 527-3887 / +1 (800) 424-3887**
1.9	Business Phone:	**+1 (800)-224-4123**
1.10	Other Product Names:	**DeoxIT®, D5MS-15, 5% Spray, 14 g**

2. HAZARD IDENTIFICATION

2.1 Hazard Identification:

This product is classified as a HAZARDOUS SUBSTANCE but not as DANGEROUS GOODS according to the classification criteria of NOHSC: 1008(2004) and ADG Code (Australia).
WARNING! Flammable aerosol. Colorless, volatile liquid with ethereal and faint sweetish odor. Overexposure may cause dizziness and loss of concentration. At higher levels, CNS depression and cardiac arrhythmia may result from exposure. Vapors displace air and can cause asphyxiation in confined spaces.
Hazard Statements (H): H223 – Flammable aerosol.
Precautionary Statements (P): P210 – Keep away from heat/sparks/open flames/hot surfaces. P211 – Do not spray on an open flame or other ignition source. P251 – Pressurized container. Do not pierce or burn, even after use. P280 – Wear protective gloves and eyewear. P302 + P352 – IF ON SKIN – Wash with plenty of soap and water. P312 – Call a Poison Control Center or doctor/physician if you feel unwell. P333 + P313 – If skin irritation or rash occurs, get medical advise/attention. P321 – Refer to section 4 of this Safety Data Sheet (First Aid). P305+P351+P338 – IF IN EYES - Rinse continuously with water for several minutes. Remove contact lenses if present and easy to do – continue rinsing. P501 – Dispose of contents/container through licensed treatment, storage or disposal facility.

2.2 Routes of Entry:	Inhalation:	YES	Absorption:	YES	Ingestion:	YES

2.3 Effects of Exposure:

EYES:	**Mild to moderate irritation.**
SKIN:	**Irritant and potential skin sensitizer. Prolonged or repeated contact may cause contact dermatitis (localized redness or rash).**
INGESTION:	**Gastrointestinal irritation and central nervous system depression.**
INHALATION:	**Central nervous system depressant. Irritating to the upper respiratory tract.**

2.4 Symptoms of Overexposure:

EYES:	**Mild irritation, redness, and watering.**
SKIN:	**Contact dermatitis, characterized by localized red or puffy dry skin and itching.**
INGESTION:	**Nausea, vomiting, and diarrhea.**
INHALATION:	**Mouth, nose, and throat irritation, dizziness, nausea, light-headedness, drunkenness, and loss of coordination.**

2.5 Acute Health Effects:

INGESTION:	**Gastrointestinal irritation and central nervous system depression.**
EYES:	**Mild to moderate irritation.**
SKIN:	**Irritant and potential skin sensitizer. Prolonged or repeated contact may cause contact dermatitis (e.g., localized redness and/or rash).**
INGESTION:	**Gastrointestinal irritation and central nervous system depression.**
INHALATION:	**Central nervous system depressant. Irritating to the upper respiratory tract.**

2.6 Chronic Health Effects:

EYES:	**Mild to moderate irritation.**
SKIN:	**Irritant and potential skin sensitizer. Prolonged or repeated contact may cause contact dermatitis (e.g., localized redness and/or rash).**
INGESTION:	**Gastrointestinal irritation and central nervous system depression.**
INHALATION:	**Central nervous system depressant. Irritating to the upper respiratory tract.**

2.7 Target Organs:
Eyes, skin and respiratory system.

NA = Not Available; ND = Not Determined; NE = Not Established; C = Ceiling Limit; See Section 16 for Additional Definitions of Terms Used
NOTE: all WHMIS required information is included. It is located in appropriate sections based on the ANSI Z400.1-2010 format.

CAIG LABORATORIES, INC.

SAFETY DATA SHEET

MSDS-E-D5S-A

Prepared to OSHA, ACC, ANSI, NOHSC, WHMIS, 2001/58/EC & 1272/2008/EC Standards | MSDS Revision: 3.0 | MSDS Revision Date: 08/22/2012

3. COMPOSITION & INGREDIENT INFORMATION

CHEMICAL NAME(S)	CAS No.	RTECS No.	EINECS No.	%	EXPOSURE LIMITS IN AIR (mg/m³) ACGIH ppm TLV	ACGIH ppm STEL	NOHSC ppm ES-TWA	NOHSC ppm ES-STEL	NOHSC ppm ES-PEAK	OSHA ppm PEL	OSHA ppm STEL	OSHA ppm IDLH	OTHER
PETROLEUM NAPHTHA	64742-88-7	XS5250000	265-191-7	40-70	100	NE	100	NE	NE	NA	NE	NE	
DIFLUOROETHANE (R-152a)	75-37-6	KI4100000	200-866-1	10-30	1000	NA	1000	NA	NA	NE	NA	NA	SKIN
DeoxIT® D-Series, D100L	TRADE SECRET			3-7	NA	NA	NA	NA	NA	15	NA	NA	

4. FIRST AID MEASURES

4.1 First Aid:

EYES: Flush eyes thoroughly with copious amounts of water for at least 15 minutes, holding eyelid(s) open to ensure complete flushing. If irritation persists, seek immediate medical attention.

SKIN: Remove contaminated clothing and wash affected areas with soap and water. If irritation persists, seek prompt medical attention. Do not wear contaminated clothing until after it has been properly cleaned.

INGESTION: Drink plenty of water. If irritation persists, contact a physician.

INHALATION: Remove victim to fresh air at once. If breathing is difficult, administer supplemental oxygen and seek immediate medical attention. If breathing stops, perform artificial respiration.

4.2 Medical Conditions Aggravated by Exposure:

None reported by the manufacturer.

HEALTH	1
FLAMMABILITY	2
PHYSICAL HAZARDS	0
PROTECTIVE EQUIPMENT	B
EYES	SKIN

5. FIREFIGHTING MEASURES

5.1 Flashpoint & Method:

48.8 °C - 54.4 °C (120 °F – 130 °F).

5.2 Autoignition Temperature:

NA

5.3 Flammability Limits: Lower Explosive Limit (LEL): NA Upper Explosive Limit (UEL): NA

5.4 Fire & Explosion Hazards:

Level 2 aerosol. Carbon dioxide, carbon monoxide, hydrocarbons.

5.5 Extinguishing Methods:

CO_2, Alcohol foam, Dry Chemical, Water Fog

5.6 Firefighting Procedures:

Wear NIOSH/MSHA approved self-contained breathing apparatus and protective clothing. Use a water spray to cool containers involved in fire. Do not use direct water stream. Container storage areas exposed to direct flame contact should be cooled with large quantities of water as needed to prevent weakening of container structure. Keep containers cool until well after the fire is out to prevent rupture. Prevent runoff from fire control or dilution from entering sewers, drains, drinking water supply, or any natural waterway.

6. ACCIDENTAL RELEASE MEASURES

6.1 Spills:

Secure spill area and deny entry to all unprotected individuals. Individuals involved in the cleanup should wear appropriate personal protective equipment. Area may become slippery. Absorb product onto porous material, such as sand, clay, diatomaceous earth or commercial absorbent material. Place into leak-proof, U.S. DOT-approved containers. If necessary, cover all drains and dike well ahead of the spill to prevent runoff into sewers, drains, and all waterways. Contact appropriate local or provincial authorities for assistance and/or reporting requirements.

CAIG LABORATORIES, INC.

SAFETY DATA SHEET

Page 3 of 6
MSDS-E-D5S-A

Prepared to OSHA, ACC, ANSI, NOHSC, WHMIS, 2001/58/EC & 1272/2008/EC Standards | MSDS Revision: 3.0 | MSDS Revision Date: 08/22/2012

7. HANDLING & STORAGE INFORMATION

7.1	Work & Hygiene Practices: **Wash hands thoroughly after using this product and before eating, drinking, or smoking. Remove soiled clothing to prevent prolonged skin contact.**
7.2	Storage & Handling: **Store at temperatures between 59 °F and 95 °F (15 °C and 35 °C) in a dry, well-ventilated location. Keep away from heat, sparks, open flame, and other sources of ignition. Normal shelf-life: 2-3 years.**
7.3	Special Precautions: **Empty containers can contain flammable vapors. Do not cut, drill, grind, weld or perform similar operations on or near containers.**

8. EXPOSURE CONTROLS & PERSONAL PROTECTION

8.1	Ventilation & Engineering Controls: **Use with adequate ventilation (e.g., open doors and windows, local exhaust ventilation). Ensure appropriate decontamination equipment is available (e.g., sink, safety shower, eye-wash station).**
8.2	Respiratory Protection: **None required, when used with adequate ventilation.**
8.3	Eye Protection: **Wear safety glasses with side shields (ANSI Z87) under normal use conditions.**
8.4	Hand Protection: **None required under normal conditions of use. However, may cause skin irritation in some sensitive individuals. In such cases, wear rubber or impervious plastic gloves.**
8.5	Body Protection: **Use as necessary to prevent skin contact.**

9. PHYSICAL & CHEMICAL PROPERTIES

9.1	Density:	0.75
9.2	Boiling Point:	171.1 °C – 204 °C @ 760 mmHg
9.3	Melting Point:	NA
9.4	Evaporation Rate:	0.11 (n-Butyl Acetate = 1.0)
9.5	Vapor Pressure:	35 psig @ 20 °C, 50 psig @ 50 °C
9.6	Molecular Weight:	NA
9.7	Appearance & Color:	Light red, aerosol
9.8	Odor Threshold:	Ethereal/hydrocarbon odor
9.9	Solubility:	Not soluble in water
9.10	pH	ND
9.11	Viscosity:	10.0 cps
9.12	VOC (grams/liters)	588 g/l
9.13	Other information:	Vapor Density = 4.9 (air = 1.0)

10. STABILITY & REACTIVITY

10.1	Stability: **Stable under normal conditions of use (see section 7).**
10.2	Hazardous Decomposition Products: **Change in color signifies exposure to ultraviolet light or exceeding shelf life. Will not degrade to unstable products. Discard solution.**
10.3	Hazardous Polymerization: **Will not occur.**
10.4	Conditions to Avoid: **Use or storage near open flames, sparks, high heat (>100 °F) or other heat sources, and proximity to incompatible substances and heavily trafficked areas.**
10.5	Incompatible Substances: **Strong oxidizers.**

CAIG LABORATORIES, INC.

SAFETY DATA SHEET

Page 4 of 6
MSDS-E-D5S-A

Prepared to OSHA, ACC, ANSI, NOHSC, WHMIS, 2001/58/EC & 1272/2008/EC Standards | MSDS Revision: 3.0 | MSDS Revision Date: 08/22/2012

11. TOXICOLOGICAL INFORMATION

11.1	Toxicity Data:	**This product has not been tested on animals to obtain toxicological data. There are toxicology data for the components of this product, which are found in the scientific literature. These data have not been presented in this document.**
11.2	Acute Toxicity:	**See section 3.5**
11.3	Chronic Toxicity:	**See section 3.6**
11.4	Suspected Carcinogen:	**NE**
11.5	**This product is not reported to produce reproductive toxicity in humans.**	
	Mutagenicity:	**This product is not reported to produce mutagenic effects in humans.**
	Embryotoxicity:	**This product is not reported to produce embryotoxic effects in humans.**
	Teratogenicity:	**This product is not reported to produce teratogenic effects in humans.**
	Reproductive Toxicity:	**This product is not reported to produce reproductive effects in humans.**
11.6	Irritancy of Product:	**See Section 2.3**
11.7	Biological Exposure Indices:	**NE**
11.8	Physician Recommendations:	**Treat symptomatically.**

12. ECOLOGICAL INFORMATION

12.1	Environmental Stability:	**This product will slowly volatile from soil. Components of this product will slowly decompose into organic compounds.**
12.2	Effects on Plants & Animals:	**There is no specific data available for this product.**
12.3	Effects on Aquatic Life:	**Releases of large volumes of this product are expected to be harmful or fatal to overexposed aquatic life.**
12.4	Environmental Impact (Percent by Weight):	**CFC: 0.0%** **HCFC: 0.0%** **HFC: 20.0%** **Chlorinated Solvent: 0.0%** **VOC: 75.0%** **ODP: 0.0%**

13. DISPOSAL CONSIDERATIONS

13.1	Waste Disposal:	**Dispose of in accordance with federal, state or local regulations.**
13.2	Special Considerations:	**EPA Waste Code: D001 (characteristic – ignitability)**

14. TRANSPORTATION INFORMATION

The basic description (ID Number, proper shipping name, hazard class & division, packing group) is shown for each mode of transportation. Additional descriptive information may be required by 49 CFR, IATA/ICAO, IMDG and the CTDGR.

14.1	49 CFR (GND):	**CONSUMER COMMODITY, ORM-D (until 12/31/2013)** **UN1950, AEROSOLS, 2.1, LTD QTY (IP VOL ≤ 1.0 L)**
14.2	IATA (AIR):	**CONSUMER COMMODITY, 9, ID8000 (≤ 500 ml)** **UN1950, AEROSOLS, 2.1 (> 500 ml)**
14.3	IMDG (OCN):	**UN1950, AEROSOLS, 2.1, LTD QTY (IP VOL ≤ 1.0 L)**
14.4	TDGR (Canadian GND):	**MARK PACKAGE "LIMITED QUANTITY" or "QUANTITÉ LIMITÉE" or "LTD QTY" or "QUANT LTÉE" (≤ 1.0 L)**
14.5	ADR/RID (EU):	**UN1950, AEROSOLS, 2.1, LTD QTY (IP VOL ≤ 1.0 L)**
14.6	SCT (Mexico):	**UN1950, AEROSOLES, 2.1, CANTIDAD LIMITADA (IP VOL ≤ 1.0 L)**
14.7	ADGR (Australia):	**UN1950, AEROSOLS, 2.1, LTD QTY (IP VOL ≤ 1.0 L)**

CAIG LABORATORIES, INC.

SAFETY DATA SHEET

Page 5 of 6
MSDS-E-D5S-A

Prepared to OSHA, ACC, ANSI, NOHSC, WHMIS, 2001/58/EC & 1272/2008/EC Standards | MSDS Revision: 3.0 | MSDS Revision Date: 08/22/2012

15. REGULATORY INFORMATION

15.1 SARA Reporting Requirements:
NA

15.2 SARA Threshold Planning Quantity:
NA

15.3 TSCA Inventory Status:
All chemical substances of this product are listed on the TSCA inventory or are otherwise exempt from inventory status.

15.4 CERCLA Reportable Quantity (RQ):
NA

15.5 Other Federal Requirements:
NA

15.6 Other Canadian Regulations
This product has been classified according to the hazard criteria of the Controlled Products Regulations (CPR) and the MSDS contains all of the information required by the CPR. The components of this product are listed on the DSL/NDSL. None of the components of this product are listed on the Priorities Substances List.

15.7 State Regulatory Information:
The primary component of this product is not listed on the following state lists: California OSHA; California Proposition 65; Massachusetts Right to Know List of Chemicals; New Jersey Right to Know List 8:59 Appendix A; Pennsylvania Hazardous Substances List 34 323 Appendix A; Wisconsin Hazardous Substances List NR 605.09; Minnesota Hazardous Substances List; and Florida Toxic Substances List.

15.8 67/548/EEC (European Union) Requirements:
The primary component of this product is listed in Annex I of EU Directive 67/548/EEC:
Petroleum Naphtha: Flammable, Harmful (F, Xn). Risk Phrases (R): 10-65 – Flammable. Harmful: may cause lung damage if swallowed. Safety Phrases (S): 2-23-24-62 – Keep away from children. Do not breathe gas, fumes, vapor or spray. Avoid contact with skin. If swallowed, do not induce vomiting: seek medical advice immediately and show this MSDS or the container label. WARNING! Flammable aerosol. Colorless, volatile liquid with ethereal and faint sweetish odor. Overexposure may cause dizziness and loss of concentration. At higher levels, CNS depression and cardiac arrhythmia may result from exposure. Vapors displace air and can cause asphyxiation in confined spaces.
Hazard Statements (H): H223 – Flammable aerosol.
Precautionary Statements (P): P210 – Keep away from heat/sparks/open flames/hot surfaces. P211 – Do not spray on an open flame or other ignition source. P251 – Pressurized container. Do not pierce or burn, even after use. P280 – Wear protective gloves and eyewear. P302 + P352 – IF ON SKIN – Wash with plenty of soap and water. P312 – Call a Poison Control Center or doctor/physician if you feel unwell. P333 + P313 – If skin irritation or rash occurs, get medical advise/attention. P321 – Refer to section 4 of this Safety Data Sheet (First Aid). P305+P351+P338 – IF IN EYES - Rinse continuously with water for several minutes. Remove contact lenses if present and easy to do – continue rinsing. P501 – Dispose of contents/container through licensed treatment, storage or disposal facility.

16. OTHER INFORMATION

16.1 Other Information:
NA

16.2 Terms & Definitions:
See last page of this MSDS.

16.3 Disclaimer:
This Material Safety Data Sheet is offered pursuant to OSHA's Hazard Communication Standard, 29 CFR §1910.1200. Other government regulations must be reviewed for applicability to this product. To the best of ShipMate's & CAIG Laboratories, Inc.'s knowledge, the information contained herein is reliable and accurate as of this date; however, accuracy, suitability or completeness are not guaranteed and no warranties of any type, either expressed or implied, are provided. The information contained herein relates only to the specific product(s). If this product(s) is combined with other materials, all component properties must be considered. Data may be changed from time to time. Be sure to consult the latest edition.

16.4 Prepared for:
CAIG Laboratories, Inc.
12200 Thatcher Court
Poway, CA 92064-6876
Tel: +1 (800) CAIG-123 (244-4123)
Fax: +1 (858) 486-8398 fax
http://www.caig.com/

CAIG LABORATORIES, INC.

16.5 Prepared by:
ShipMate, Inc.
P.O. Box 787
780 Buckaroo Trail Suite D
Sisters, OR 97759
Tel: +1 (310) 370-3600
Fax: +1 (310) 370-5700
http://www.shipmate.com

ShipMate
Dangerous Goods Training & Consulting

CAIG LABORATORIES, INC.

SAFETY DATA SHEET

Page 6 of 6
MSDS-E-D5S-A

Prepared to OSHA, ACC, ANSI, NOHSC, WHMIS, 2001/58/EC & 1272/2008/EC Standards | MSDS Revision: 3.0 | MSDS Revision Date: 08/22/2012

DEFINITION OF TERMS

A large number of abbreviations and acronyms appear on a MSDS. Some of these that are commonly used include the following:

GENERAL INFORMATION:

CAS No.	Chemical Abstract Service Number

EXPOSURE LIMITS IN AIR:

ACGIH	American Conference on Governmental Industrial Hygienists
TLV	Threshold Limit Value
OSHA	U.S. Occupational Safety and Health Administration
PEL	Permissible Exposure Limit
IDLH	Immediately Dangerous to Life and Health

FIRST AID MEASURES:

CPR	Cardiopulmonary resuscitation - method in which a person whose heart has stopped receives manual chest compressions and breathing to circulate blood and provide oxygen to the body.

HAZARDOUS MATERIALS IDENTIFICATION SYSTEM: HMIS

HEALTH, FLAMMABILITY & REACTIVITY RATINGS:

0	Minimal Hazard
1	Slight Hazard
2	Moderate Hazard
3	Severe Hazard
4	Extreme Hazard

HEALTH
FLAMMABILITY
PHYSICAL HAZARDS
PERSONAL PROTECTION

PERSONAL PROTECTION RATINGS:

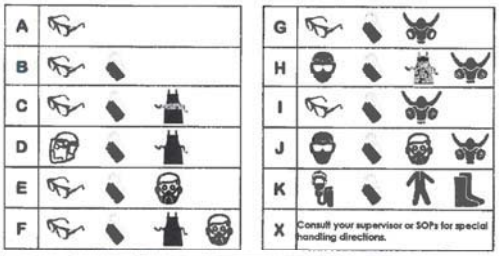

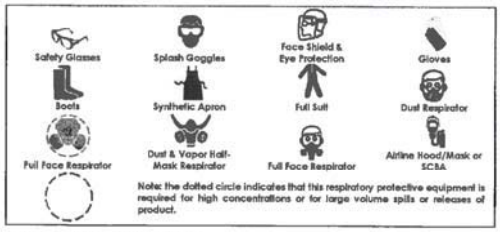

OTHER STANDARD ABBREVIATIONS:

NA	Not Available
NR	No Results
NE	Not Established
ND	Not Determined
ML	Maximum Limit
SCBA	Self-Contained Breathing Apparatus

NATIONAL FIRE PROTECTION ASSOCIATION: NFPA

FLAMMABILITY LIMITS IN AIR:	
Autoignition Temperature	Minimum temperature required to initiate combustion in air with no other source of ignition
LEL	Lower Explosive Limit - lowest percent of vapor in air, by volume, that will explode or ignite in the presence of an ignition source
UEL	Upper Explosive Limit - highest percent of vapor in air, by volume, that will explode or ignite in the presence of an ignition source

HAZARD RATINGS:

0	Minimal Hazard
1	Slight Hazard
2	Moderate Hazard
3	Severe Hazard
4	Extreme Hazard
ACID	Acidic
ALK	Alkaline
COR	Corrosive
W	Use No Water
OX	Oxidizer
TREFOIL	Radioactive

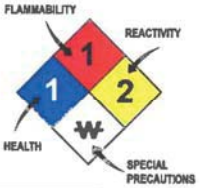

TOXICOLOGICAL INFORMATION:

LD_{50}	Lethal Dose (solids & liquids) which kills 50% of the exposed animals
LC_{50}	Lethal concentration (gases) which kills 50% of the exposed animal
ppm	Concentration expressed in parts of material per million parts
TD_{Lo}	Lowest dose to cause a symptom
TC_{Lo}	Lowest concentration to cause a symptom
TD_{Lo}, LD_{Lo}, & LD_{0} or TC, TC_{Lo}, LC_{50}, & LC_{0}	Lowest dose (or concentration) to cause lethal or toxic effects
IARC	International Agency for Research on Cancer
NTP	National Toxicology Program
RTECS	Registry of Toxic Effects of Chemical Substances
BCF	Bioconcentration Factor
TL_{m}	Median threshold limit
log K_{OW} or log K_{OC}	Coefficient of Oil/Water Distribution

REGULATORY INFORMATION:

WHMIS	Canadian Workplace Hazardous Material Information System
DOT	U.S. Department of Transportation
TC	Transport Canada
EPA	U.S. Environmental Protection Agency
DSL	Canadian Domestic Substance List
NDSL	Canadian Non-Domestic Substance List
PSL	Canadian Priority Substances List
TSCA	U.S. Toxic Substance Control Act
EU	European Union (European Union Directive 67/548/EEC)
WGK	Wassergefährdungsklassen (German Water Hazard Class)

WORKPLACE HAZARDOUS MATERIALS IDENTIFICATION (WHMIS) SYSTEM:

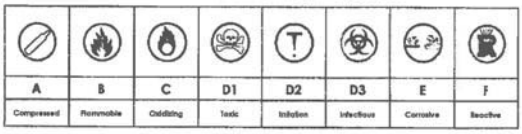

EC (67/548/EEC) INFORMATION:

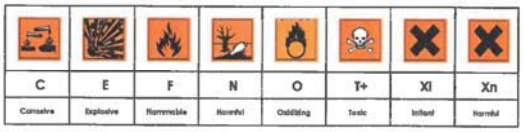

CLP/GHS (1272/2008/EC) PICTOGRAMS:

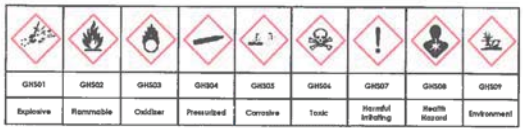

11.6 COMPONENT MANUFACTURER LIST

MECHANICAL COMPONENTS			
Span Drive Machinery			
Section	**Description**	**Model No.**	**Manufacturer**
11.7.1	Primary Reducer	Type S, Size 8 / M.O. D4226	Steward Machine Corp.
11.7.3	Motor Brake Frame	IC9516-465N	General Electric
11.7.4	Brake Thrustor	Eldro 80/12S	E.M.G.
	Main Leaf Motor	SMR6323CW1	General Electric
	Gear Couplings	Sizes 5A and 6A	Waldron
Span Lock Machinery			
Section	**Description**	**Model No.**	**Manufacturer**
	Span Lock Motor	0030C-1AAB-0163	Reuland
11.7.2	Span Lock Reducer	Model 6C4-02 / M.O. 5512-0702	Falk
11.7.5	Span Lock Motor Coupling	1030T10	Falk
	Span Lock Limit Switches (Driven/Pulled)	EA 780-20100	Namco

TRAFFIC CONTROL DEVICES			
Section	**Description**	**Model No.**	**Manufacturer**
	Fender Navigation Lights	PL	B&B Roadway
	Span Navigation Lights	BS	B&B Roadway
11.8.1	Warning Gate	VT-40	B&B Roadway
	Warning Gate Arm	***Contact Manufacturer***	B&B Roadway
	Warning Gate Arm Lights	L7 / L4	B&B Roadway
	Warning Gate Motor	C6T17NC167C	Leeson
	Warning Gate Motor Brake Assembly	***Contact Manufacturer***	B&B Roadway
	Warning Gate Transmission		Winsmith
	Warning Gate Door Switch	E20	Cherry Corp
	Warning Gate Limit Switch	LS	B&B Roadway
	Warning Gate Flasher	FL12	B&B Roadway
	Warning Gate Gongs	G12	B&B Roadway
	Main Disconnect Switch	7813P	Pass & Seymore/Legrand
	Arm light Fuse/ Gong Fuse	FMN5	Bussman

ELECTRICAL COMPONENTS			
Section	**Description**	**Model No./Description**	**Manufacturer**
	Pilot Lights	800TPTL16G / 800TPTL16A / 800TPTL16R /	Allen Bradley
	Pushbuttons and Selector Switches	800TJ91A / 800TH2A / 800TH2C/ 800TA2A / A11-A215-620 / C11-A011-600E	Allen Bradley
	Selsyn (Transmitter) Indicator	TYRA29T	Link Controls
	Control Desk Power Meter	Special Order	Elec Metering
	Current Meter	2830-1161-LSRL	Elec Metering
	Voltmeter	2830-1051-PZSJ	Elec Metering
	Motor Starter	509BOD / 505VBOD	Allen Bradley
	Relays	700-P400A1 / 700-P600A1 / 700-P1200A1	Allen Bradley
	Timing Relays	7012AC / 7022ACLL / 7012AE / 7022AC / 7012AC / 7014AE / 7022AF	Agastat
	Fuses	Varies - See as-built drawings	Bussman
	Circuit Breakers	Varies - See as-built drawings	Eaton
11.9.2	Drives (Secondary Thyristor Controller)	4922C	Hubbell
	Motor Brake Disconnect Switches	30A Fusible Nema 12 Safety Switch	Cutler Hammer
	Span Lock Disconnect Switches	30A Fusible Nema 4X Safety Switch	Cutler Hammer
	Span Motor Disconnect Switches	200A Fusible Nema 12 Safety Switch	Cutler Hammer
	Overspeed Tachometer	2210-262CC1-3FX83	Hubbell
11.9.1	Tachometer	601A100-1	Baldor
	Fully Seated Limit Switch	LSP-4	B&B Roadway
	Rotary Cam Limit Switch	1980-1207-Y-SP-TD1-S-200-R	Magnetek Gemco
	Brake Limit Switches	E50SB	Cutler Hammer
	Secondary Resistors	***Contact Manufacturer***	Hubbell
	Terminal Block	721	Buchanan

11.7 MECHANICAL EQUIPMENT MANUALS AND SPECIFICATIONS

11.7.1 PRIMARY – EARLE GEAR SPEED REDUCER TYPE S

STEWARD MACHINE CO., INC.

BIRMINGHAM, ALABAMA

MANUFACTURER OF

EARLE® GEAR REDUCERS

MEMBER OF AGMA

INSTALLATION, OPERATION,
LUBRICATION AND MAINTENANCE

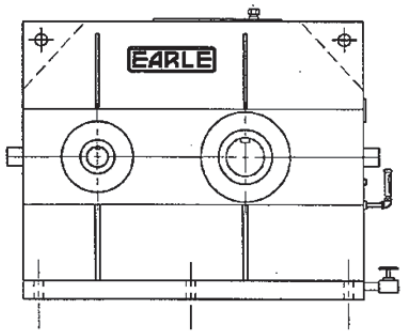

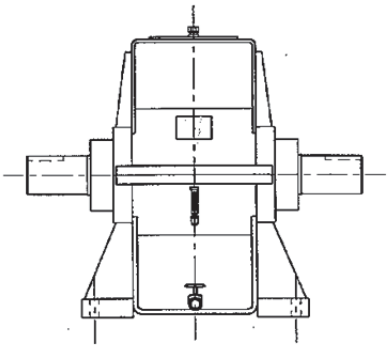

SEPTEMBER 1991

STEWARD MACHINE CO., INC.

INSTALLATION, OPERATION, LUBRICATION AND MAINTENANCE
FOR
EARLE SPEED REDUCERS

GENERAL

This manual has been prepared to assist the user of gear drives in the proper installation, operation, maintenance, and lubrication of such equipment. By carefully following these instructions you will obtain the maximum life expectancy and satisfactory operation which should be expected from the quality materials and workmanship built into the drive units.

Any damage which may have occurred to the gear unit during transit should be reported to the transport carrier.

All tags and bulletins wired to the unit should be carefully read and filed for future reference.

INSTALLATION

Foundation

The enclosed gear drive should be supported on a foundation that is rigid and substantial such as a supported concrete bed or a steel structure. After carefully leveling and lining up with the motor and driven equipment, it should be securely bolted in place. An inadequate foundation may result in misalignment or stresses in the gear housing that can cause undue noise and serious overloading of some part of the drive.

In the case of gear units and motors completely assembled and lined up on a base plate, the alignment should be rechecked after bolting down to make sure the base plate did not spring. The use of a base plate does not remove the necessity of an adequate foundation.

Do not mount any gear drive on the ceiling, wall, or an incline, or in any position other than horizontal unless the unit has been specially built for this use. Special lubrication arrangements must be provided for such cases. When the unit is to be mounted on an incline, check with Steward Machine Co. for special instructions.

Shaft Connections

The bores of connections such as couplings, pinions, sheaves, pulleys, sprockets or cranks should be of a size to permit a tapping or light driving fit (ANSI Standard). Never use heavy hammer blows to force a connector on the shaft as it may cause damage to bearings or other internal parts of the drive. Equipment which requires a tight fit should be heated to a suitable temperature making sure that excessive heat does not reach the shaft oil seal, and pressed onto the shaft extension.

An approved type of flexable coupling should be used to connect the prime mover shaft to the input shaft of the gear drive. Rigid type couplings should not be used. When the low speed shaft of a reducer is connected to the shaft of the driven equipment by a flexible coupling, an approved type should be used here also.

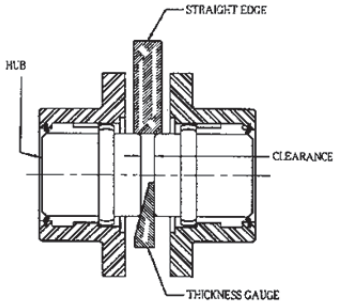

Figure 1

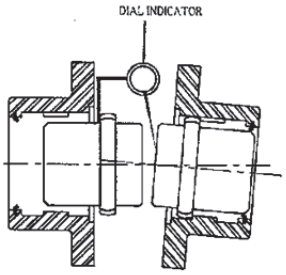

Figure 2

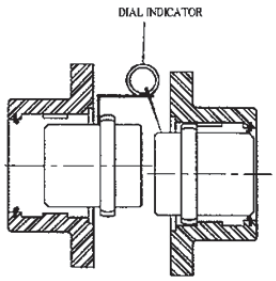

Figure 3

Proper clearance should be allowed between the motor shaft and the gear reducer shaft to permit end float. The shaft should be carefully aligned and the coupling properly adjusted for endwise clearance in the same manner as for the motor connection. See Figure 1.

Angular alignment should be checked by mounting a dial indicator on the coupling hub with the indicator pin on the coupling face of the mating coupling. Rotate the shaft with the indicator and record readings at every 90 degrees. Move the unit as necessary until the indicator shows within .003" T.I.R. Relocate indicator on opposite hub and re-check. See Figure 2.

Parallel alignment should be checked by placing the dial indicator pin on an O.D. of the coupling. Rotate shaft with indicator and record readings at every 90 degrees. Move unit as necessary until the indicator shows within .003" T.I.R. Relocate indicator on opposite coupling hub and re-check. See Figure 3.

Overhung pinions, sprockets, pulleys and sheaves should be mounted as close as possible to the gearing housing to minimize the bearing load and shaft deflection. Overhung loads should be avoided; howerver, if such loads are present advise Steward Machine Co. so that the unit may be checked for suitability.

2

START UP

IMPORTANT

All units are shipped without oil. Care must be taken not to operate the reducer until filled to the center of the oil level indicator with the prescribed grade of oil. Do not overfill as this can cause excess heating or oil leakage. On the other hand, do not allow the oil level to fall more than 1/4" below the center of the oil level indicator to assure adequate lubrication.

Make the initial starting operation under no load or light load conditions. Then check for any evidence of localized overheating, and whether there is any vibration due to loose foundation bolts, misalignment of couplings, pulleys, sprockets, etc. If any correction is necessary, it should be made before putting the gear unit into regular service under full load.

LUBRICATION

CAUTION

Units mounted at an angle difference from the conventional floor or horizontal position and units operating at speeds significantly above or below the nominal input speed should be referred to Steward Machine Co. as special oil level provisions may be required.

Lubricating oils should be high quality petroleum based oils and must not be corrosive to gears or bearings. They must be neutral in reaction, free from grit and abrasives, have good defoaming properties, and must have good resistance to oxidation.

Each gear unit comes with a nameplate that shows general lubrication instructions for use within certain ambient temperature ranges. In case the ambient temperature is other than shown. consult Steward Machine Co. for recommendations.

MAINTENANCE

After the first few days, tighten all bolts and cap screws to take up the stretch which frequently occurs during the initial operation. All units with stuffing boxes have been adjusted during test run to prevent oil leakage. A small amount of oil seepage during operation is desirable to prevent heating. If excessive leakage develops, tighten the two gland bolts evenly just enough to stop the leak. DO NOT TIGHTEN THESE GLANDS MORE THAN NECESSARY. Over tightening of these bolts will create increased friction causing premature failure of the seal.

To obtain long life from a gear unit, it is necessary that the oil be clean and free from foreign matter or sludge. Make frequant inspections of the static oil level and change the oil at regular intervals. About two weeks after the start of operation of a new unit, drain the oil and flush with a light flushing oil. The original oil may be reused, if filtered; otherwise, use new oil. For normal operating conditions, change oil about every 2500 hours or every six months, whichever occurs first. For extremely intermittent operation the oil change could be made at yearly intervals. For severe operating conditions, such as frequent rise and fall of gear case temperature, with resulting sludge formation, or when the installation is in a moist or dusty atmosphere, or in the presence of chemical fumes, it may be necessary to change oil at more frequent intervals. Only with existing conditions can determine frequency.

The life of the gear unit will be increased if the case can be opened and the unit thoroughly cleaned when making oil changes. If this is impractical, drain the old oil and use a light flushing oil to help remove any foreign matter or sediment that may have accumulated, then fill with the recommended lubricant.

STANDBY SERVICE AND STORAGE

Standby gear units which are operated very intermittently should be run briefly at least once a month to protect the gears and bearings by circulating the lubrication. When units are stored for future use, they should be completely filled with oil containing a rust preventative which is soluble in lubricating oil or they should be drained of oil and cleaned, and a rust preventative applied to the gears, bearings and shafts. When taken out of storage for use, the gear unit should be cleaned out and refilled with regular lubricating oil as prescribed.

4

STEWARD MACHINE CO., INC.

LUBRICATION SHEET L-1

UNIT TYPE	UNIT SIZE	AMBIENT TEMPERATURE RANGE	
		+15 TO +60 F	+50 TO +125 F
		AGMA LUBRICATION NUMBER	
S and SD	3 and 4	4	6
	5 thru 8	4	7
	9 thru 12	5	7
D and DD	3	4	6
	4 thru 8	5	7
	9 thru 12	5	7
T and TD	3 and 4	5	7
Q and QD	5 thru 12	6	7

For year-round, intermittent operation in an ambient temperature range of -10 to +120 degrees F use an AGMA viscosity grade 5.

5

STEWARD MACHINE CO., INC.
LUBRICATION SHEET L-2

Petroleum Based Oils For EARLE Speed Reducers Listed In Sheet L-1

AGMA GRADE	4	5	6	7
ISO VISCOSITY	150	220	320	460
MANUFACTURER	PRODUCT	PRODUCT	PRODUCT	PRODUCT
Amoco Oil Co.	Ind. Oil #150	Ind. Oil #220	Ind. Oil #320	Ind. Oil #460
BP Oil Co.	Turbinol T-150	Turbinol T-220	Turbinol T-320	Turbinol T-460
Chevron U.S.A., Inc.	Machine Oil AW 150	Machine Oil AW 220	Machine Oil AW 320	Machine Oil AW 460
Citgo Petroleum Corp.	Pacemaker 150	Pacemaker 220	Pacemaker 320	Pacemaker 460
Exxon Company, U.S.A.	Teresstic 150	Teresstic 220	Teresstic 320	Teresstic 460
Mobil Oil Corp.	Mobilgear 629	Mobilgear 630	Mobilgear 632	Mobilgear 634
Shell Oil Co.	Morlina 150	Morlina 220	Morlina 320	Morlina 460
Texaco Lubricants	Regal Oil R&O 150	Regal Oil R&O 220	Regal Oil R&O 320	Regal Oil R&O 460

NOTE: The lubricants listed above are provided for guidance only. Equivalent products of other manufacturers which meet the AGMA grade requirements are acceptable for use in EARLE units.

6

11.7.2 SPAN LOCK – FALK SPEED REDUCER TYPE C

REXNORD

Falk™ Enclosed Gear Drives • Installation and Maintenance

Types E & C • Sizes 1 thru 8 (Page 1 of 4)

Introduction

The following instructions apply to all standard Falk™ Type E Motoreducers and Type C Speed Reducers shown at right. If a drive is furnished with special features, refer to the supplementary instructions shipped with the drive.

Credit for long service and dependable operation of a gear drive is often given to the engineers who designed it, or the craftsmen who constructed it, or the sales engineer who recommended the type and size. Ultimate credit belongs to the mechanic on the job who worked to make the foundation rigid and level, who accurately aligned the shafts and carefully installed the accessories, and who made sure that the drive received regular lubrication. The details of this important job are the subject of this manual.

WARRANTY — Rexnord Industries (the "Company") warrants that, for a period of three years from the date of shipment, the product described herein will deliver successfully its rated output as indicated on the nameplate, provided, it is properly installed and maintained, correctly lubricated, and operated in the environment and within the limits of speed, torque or other load conditions for which it was sold. Such product is expressly not warranted against failure or unsatisfactory operation resulting from dynamic vibrations imposed upon it by the drive system in which it is installed unless the nature of such vibrations has been fully defined and expressly accepted in writing by the Company as a condition of operation.

CAUTION: *Consult applicable local and national safety codes for proper guarding of rotating members. Lock out power source and remove all external loads from drive before servicing drive or accessories.*

Installation Instructions

FOR SATISFACTORY PERFORMANCE, CAREFULLY FOLLOW THESE INSTRUCTIONS

WELDING — Do not weld the gear drive housing or accessories without prior approval from Rexnord Industries. Welding on the drive may cause distortion of the housing or damage to the bearings and gear teeth. Welding without prior approval could void the warranty.

NAMEPLATE — Operate drive only at horsepower, speed and ratio shown on nameplate. Before changing any one of these, submit complete nameplate data and new application conditions to the Factory for correct oil level, parts and application approval.

TIGHTENING TORQUES — Fasteners-See Page 2.

GREASE LUBRICATED BEARINGS — See Page 3.

STORED AND INACTIVE DRIVES — See Page 4.

MOUNT HORIZONTALLY — CAUTION: *Mount drive with base horizontal, unless it has been specifically ordered for mounting in another position. If it is necessary to mount the drive in a different position from that for which it was ordered, consult the Factory for changes necessary to provide proper lubrication.*

FOUNDATION, GENERAL —To facilitate oil drainage, elevate the drive foundation above the surrounding floor level as illustrated. If desired,replace the drive oil drain plug with a valve, but provide a guard to protect the valve from accidental breakage. When an outboard bearing is used, mount drive and outboard bearing on a continuous foundation or bedplate and dowel both in place.

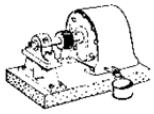

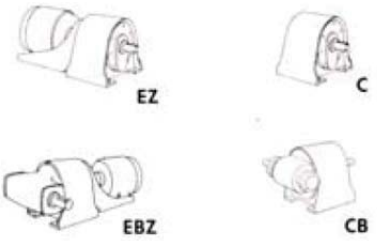

FOUNDATION, STEEL — When mounting drive on structural steel, it is recommended that an engineered design be utilized for a baseplate or bed to provide sufficient rigidity, to prevent induced loads from distorting the housing and causing gear misalignment. In the absence of an engineered design, it is recommended that a baseplate, with thickness equal to or greater than the thickness of the drive feet, be securely bolted to steel supports and extended under the entire drive as illustrated.

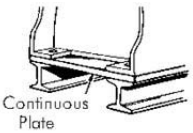

FOUNDATION, CONCRETE — If a concrete foundation is used, allow the concrete to set firmly before bolting down the drive. For the best type of mounting, grout structural steel mounting pads into the mounting base, as illustrated, rather than grouting the drive directly into the concrete.

Motors and other components (whether mounted on motor plates or motor brackets) may become misaligned during shipment. ALWAYS check alignment after installation. Refer to Page 2 for coupling alignment instructions.

DRIVE ALIGNMENT Align drive with driven equipment by placing broad, flat shims under all mounting pads. Start at the low speed shaft side and level across the length and then the width of the drive. Check with a feeler gauge to make certain that all pads are supported to prevent distortion of housing when drive is bolted down. After drive is aligned with driven machine and bolted down, align prime mover to drive input shaft. See Page 2 for coupling alignment.

If equipment is received from Rexnord mounted on a bedplate, the components were accurately aligned at Rexnord with the bedplate mounted on a large, flat assembly plate. Shim under the bedplate foot pads until the bedplate is level and all feet are in the same plane.

Check the high speed shaft coupling alignment. If the coupling is misaligned, the bedplate is shimmed incorrectly. Reshim bedplate and recheck high speed coupling alignment. If necessary, realign motor.

Rexnord Industries, LLC, Gear Group
3001 W. Canal St., Milwaukee, WI 53208-4200 USA Telephone: 414-342-3131
Fax: 414-937-4359 e-mail: info@rexnord.com web: www.rexnord.com

128-050
October 2006
Supersedes 8-86

Installation and Maintenance • Falk™ Enclosed Gear Drives

REXNORD

(Page 2 of 4) Sizes 1 thru 8 • Types E & C

MOTOR BRACKETS — The weight, location and starting torque of the motor will cause some brackets to deflect downward and to twist. This movement is within allowable engineered limits for drive-motor selections from the Falk™ selection guide. If the customer considers the movement excessive, jackscrew supports for the bracket extension are available from Rexnord whether the motor was mounted by Rexnord or the customer. To compensate for deflection caused by heavy motors AND to get CORRECT COUPLING ALIGNMENT, use more shims under the rear motor feet than the front feet.

Motors and other components (whether mounted on motor plates or motor brackets) may become misaligned during shipment. ALWAYS check alignment after installation. Refer to coupling alignment instructions below.

SHAFT CONNECTIONS

COUPLING CONNECTION — The performance and life of any coupling depends largely upon how well the coupling is installed and serviced. Refer to the coupling manufacturer's manual for specific instructions.

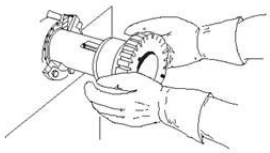

CORRECT METHOD

Heat interference fitted coupling hubs, pinions, sprockets or pulleys to a maximum of 275°F (135°C) and slide onto drive shaft.

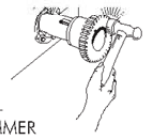

—CAUTION—
DO NOT HAMMER

INCORRECT METHOD

DO NOT drive coupling hub, pinion, sprocket or pulley onto the shaft. An endwise blow on the shaft may damage gears and bearings.

Provide suitable guards in accordance with OSHA standards.

BACKSTOP— To prevent damage to backstops due to incorrect motor shaft rotation at startup, couplings are NOT assembled when drives are furnished with backstops. After completing the electrical connection, check motor and drive shaft rotations. Then complete alignment and assembly of coupling.

FALK™ COUPLINGS — Detailed installation manuals are available from the Factory and your local Rexnord Account Executive or Distributor – just provide size and type designations stamped on the coupling. Refer to Manual 428-010 for Steelflex® couplings and Manual 458-010 for Gear couplings for lubricant requirements and a listing of typical lubricants meeting Rexnord specifications.

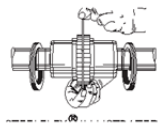

The following instructions apply to coupling alignment:

Gap and Angular Alignment — If possible, after mounting coupling hubs, position the driving and driven drives so that the distance between shaft ends is equal to the coupling gap. Align the shafts by placing a spacer block, equal in thickness to required gap, between hub faces, as shown above, and also at 90° intervals around the hub. Check with feelers.

Offset Alignment — Align shafts of driving and driven drives so that a straightedge will rest squarely on both coupling hubs as shown to the right and also at 90° intervals. Tighten foundation bolts of the connected equipment and recheck alignment and gap.

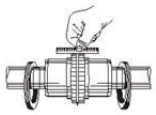

PINION MOUNTING — Mount the pinion as close to the drive as possible to avoid undue bearing load and shaft deflection. Refer to the Factory for pinion alignment instructions.

OUTBOARD BEARING — Mount the outboard bearing and drive on a common foundation so that they will shift as an assembly if settling should occur. Bring the outboard bearing to the correct horizontal position with broad flat shims under the mounting pad. Align accurately so that the load is equally divided between the two drive bearings and the outboard bearing. Mount a stop bar against the pillow block foot on the load side when large horizontal load components are exerted on the pillow block.

SPROCKET, PULLEY OR SHEAVE CONNECTION —Mount power take-offs as close to the gear drive housing as possible to avoid undue bearing load and shaft deflection.

Align the output shaft of the gear drive square and parallel with the driven shaft by placing a straightedge across the face of the sprockets or sheaves as illustrated. Check horizontal shaft alignment by placing one leg of a square against the face of the sheave or sprocket with the spirit level on the horizontal leg of the square.

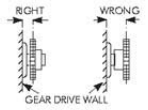

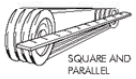

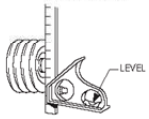

DO NOT over tighten belts or chains. Adjust chains to manufacturers' specifications. Adjust belts as follows:

The ideal tension is the lowest tension at which the belt will not slip under peak load conditions. Check the belt tension frequently during the first 24 to 48 hours of run-in operation. Over tightening belts shortens belt and bearing life. Keep belts free from foreign material which may cause slippage. Inspect the V–belt periodically; tighten the belts if they are slipping.

TIGHTENING TORQUES — Use the values specified in the table below for fastening motors and Falk™ drives and accessories to their mounting surfaces with SAE Grade 5 or ASTM A449 non-lubricated fasteners. DO NOT use these values for "torque locking" fasteners or for fastening components with aluminum feet or with soft gaskets or vibration dampers on the mounting surface. If the tightening torque exceeds the capacity of the torque wrench, use a torque multiplier.

Tightening Torques – lb-in – DO NOT LUBRICATE FASTENERS

Thread Dia-UNC	Metal to Metal	Metal to Concrete	Thread Dia-UNC	Metal to Meta	Metal to Concrete
.250-20	90	70	1.250-7	12600	10000
.3125-18	185	145	1.375-6	16500	13000
.375-16	330	255	1.500-6	22100	17500
.500-13	825	640	1.750-5	23700	18700
.625-11	1640	1280	2.000-4 1/2	37000	29000
.750-10	2940	2290	2.250-4 1/2	52000	41000
.875-9	4560	3750	2.500-4	72000	56000
1.000-8	6800	5600	2.750-4	98000	77000
1.125-7	8900	7000	3.000-4	125000	99000

128-050
October 2006
Supersedes 8-86

Rexnord Industries, LLC, Gear Group
3001 W. Canal St., Milwaukee, WI 53208-4200 USA Telephone: 414-342-3131
Fax: 414-937-4359 e-mail: info@rexnord.com web: www.rexnord.com

REXNORD

Falk™ Enclosed Gear Drives • Installation and Maintenance

Types E & C • Sizes 1 thru 8 (Page 3 of 4)

LUBRICATION

DRIVE LUBRICATION Read and carry out all instructions on lubrication plate and heed all warning tags. Determine minimum and maximum ambient temperatures in which the drive is to operate and read the SAE or AGMA lubricant number for those temperature conditions from the lubrication plate on the drive. Select a lubricant from Manual 128-010 corresponding to the SAE or AGMA lubricant number.

OPERATING TEMPERATURE — If the drive is operated in an area where the temperatures vary with the season, change the oil viscosity to suit the season. For cold weather operation, use a light oil that will circulate freely at all times. The pour point of the oil should be less than the minimum external temperature encountered. During hot weather, use a high viscosity oil that will not thin out and lose its lubricating qualities.

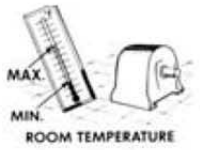

ROOM TEMPERATURE

If a drive operates in the sun at ambient temperatures over 100°F (38°C), then special measures should betaken to protect the drive from solar energy. This protection can consist of a canopy over the drive or reflective paint on the drive. If neither is possible, a heat exchanger or other cooling device may be required to prevent the sump temperature from exceeding the allowable maximum of 200°F (93°C).

EXTREME PRESSURE LUBRICANT — DO NOT use extreme pressure lubricant in drives equipped with an internal backstop. Drives sometimes are severely overloaded due to a change in design of the driven machine, or a change in the nature of the material that is being processed. This also occurs when power requirements are in excess of that originally estimated. As a result, the gear teeth may show signs of distress in the nature of scuffing, scoring or pitting. For applications of this nature, an extreme pressure lubricant is recommended. This gives added protection to the gear teeth and may retard scoring and scuffing. However, this is not a cure-all. Applications which are severely overloaded should be referred to the Factory for further study and recommendations. Extreme pressure lubricants are listed in Manual 128-010.

SYNTHETIC LUBRICANTS — Do not use synthetic lubricants in drives equipped with internal backstops. Synthetic lubricants of the polyalphaolefin type have been used successfully in gear drives to provide certain advantages beyond that available with Mineral Oil or Extreme Pressure Oil. Depending upon operating conditions, these advantages may include: longer service life between lubricant changes, elimination of need to change lubricant to suit the season, operating capabilities beyond the high and low temperature limits of Mineral or EP oils.

Select synthetic lubricants in accordance with specifications in Manual 128-010.

Splash Lubricated Drives — Standard Type E & C drives are splash lubricated. The lubricant is picked up by the revolving elements and distributed to all bearings and gear meshes.

OIL LEVELS — Fill the reducer with oil to the level indicated by the arrow on the side of the drive, on the vertical standpipe, or on the oil dipstick. Approximate oil capacities are shown at right.

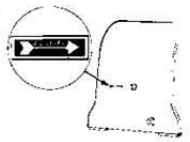

When an oil level standpipe is furnished and shipped separately, assemble the standpipe to the side of the drive so that the scribed line will be clearly visible for future service checks.

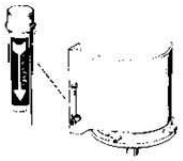

Before starting, if conditions permit, rotate the input shaft by hand to check for any obstruction. Then start the drive and allow it to run without a load for several minutes. **Shut down and recheck oil level. Add oil to compensate for cooler, filter, etc., oil capacities. If everything is satisfactory, the drive is ready for operation.**

GREASE LUBRICATED BEARINGS — When changing oil in the drive, grease bearings with a NLGI #2 bearing grease. Regrease these bearings as part of the standard maintenance program. Before installing a drive, note the location of all of the bearing grease fittings and grease labels for future maintenance reference. Note that some fittings may be ABOVE the oil level line and others BELOW. If a grease fitting will become inaccessible after the drive is installed, replace the fitting with a pipe extension (and the fitting) so that the grease fitting will be in an accessible location after the drive is installed.

DO NOT confuse the grease fittings for grease lubricated seals with those for grease lubricated bearings. If seal is inadvertently greased, grease will appear along the shaft at the shaft cover.

All right angle L.S.S. bearings are grease lubricated. Always remove the purge plug (when provided) when greasing bearings so that the old grease can escape. Wipe off purged grease and replace the plug after greasing bearings.

VERTICAL DRIVES — Fill the oil cup to a level slightly below the notch in the cup to lubricate the lower of the two low speed shaft seals.

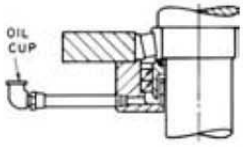

L.S.S. Seal for Vertical Units

The oil in the seal housing compartment is independent of the oil in the reducer housing; it is a lubricant reservoir for the lower seal and also a trap to protect the seals from direct contact with dust or dirt.

If both seals fail, oil from the reducer housing will pass into the oil compartment and then overflow through the notch in the oil cup

Rexnord Industries, LLC, Gear Group
3001 W. Canal St., Milwaukee, WI 53208-4200 USA Telephone: 414-342-3131
Fax: 414-937-4359 e-mail: info@rexnord.com web: www.rexnord.com

128-050
October 2006
Supersedes 8-86

Installation and Maintenance • Falk™ Enclosed Gear Drives

REXNORD

(Page 4 of 4) Sizes 1 thru 8 • Types E & C

OIL CAPACITIES — ADD OIL TO THE LEVEL MARKED ON THE DRIVE OR STANDPIPE.

MOTOREDUCERS AND SMALL SPEED REDUCERS — The table below lists approximate oil capacities for Type E & C drives. Always fill drive to oil level marked on housing or standpipe.

For Ordering Oil — Approximate Gallons

DRIVE SIZE	Standard Types E and C			Standard Types EB and CB		
	Double	Triple	Quad	Triple	Quad	Quint
1 & 15	1	1	...	1 3/4	1 7/8	2
2 & 25	1	1 7/8	1 7/8	1 7/4	1 7/4	2
3 & 35	1 1/2	2 7/8	2 7/8	2 7/8	2 7/8	3
4 & 45	2 5/8	4 3/8	4 3/8	5	5	5
5 & 55	4 7/8	7	7	8 7/8	8 7/8	8 7/8
6 & 65	7	10 1/2	10 1/2	11 7/4	11 7/4	11 7/4
7	12 1/4	12 1/4	14 1/2	17 7/4	17 7/4	17 7/4
75	12 1/4	12	12	21	21	21
8	12 †	12	12	...	...	...

† For double reductions drives with ratios LESS than 14.27:1 and input speeds MORE than 1400 rpm, use approximately 10 gallons and check low oil level plug indicated on drive housing.

PREVENTIVE MAINTENANCE

AFTER FIRST WEEK — Check alignment of the total system and realign where necessary. Also, tighten all external bolts and plugs where necessary. DO NOT readjust the internal gear or bearing settings in the reducer; these were permanently set at the Factory.

AFTER FIRST MONTH'S SERVICE — Proceed as follows:

1. Operate drive until old sump oil reaches normal operating temperature. Shut the drive down and drain immediately.
2. Immediately flush drive with an oil of the same type and viscosity grade as the original charge (warmed to approximately 100°F (38°C) in cold weather). Rapidly pour or pump a charge equal to 25-100% of the initial fill thru the drive or until clean oil flows thru the drain.
3. Close the drain and refill the drive to the correct level with new or reclaimed oil of the correct type and viscosity. If determined to be in good condition by the supplier, reclaimed oil may be reused if it is filtered thru a 40 micron or finer filter.

PERIODICALLY-Carefully check the oil level of the drive when it is stopped and at ambient temperature, add oil if needed. If the oil level is ABOVE the high level mark on the dipstick or the oil level plug, have the oil analyzed for water content. Moisture in the oil may indicate that the heat exchanger or a seal is leaking. If so, replace the defective part immediately and change the oil. DO NOT fill above mark indicated as leakage or undue heating may result. Also check coupling alignment to make certain that foundation settling has not caused excessive misalignment. If drive is equipped with a fan, periodically clean accumulated foreign matter from the fan, fan guard and deflector to allow adequate air flow.

OIL CHANGES — For normal operating conditions, change gear oils every b months or 2500 operating hours, whichever occurs first. Compounded oils may require more frequent changes. In dusty areas or where temperatures are high, more frequent changes may be required. Lubricant suppliers can test oil samples from the drive periodically and recommend economical change periods based on the rate of lubricant contamination and degradation.

If the drive is operated in an area where temperatures vary with the seasons, change the oil viscosity grade to suit the temperature.

Refer to Manual 128-010 for viscosity recommendations and typical lubricants meeting Rexnord specifications.

BEARINGS — Some drives have one or more grease lubricated bearings. See GREASE LUBRICATED BEARINGS, Page 3. When changing oil in the drive, grease bearings with a NLGI #2 grease.

COUPLINGS — Lubricate the Falk™ Steelflex® couplings in accordance with instructions in Manual 428-010 and Falk™ Gear couplings in accordance with instructions in Manual 458-010.

DISMANTLING — ***CAUTION: Lockout power source and remove all external loads from drive before servicing drive or accessories.***

Service manuals and parts guides are available from the Factory and Rexnord Account Executive. When writing, please give complete data from the nameplate on the drive; Model, M.O., Date, RPM, and Ratio.

SPARE AND REPAIR PARTS — When ordering parts, always give complete data from the nameplate on the Falk™ drive. This complete nameplate data will assure you of receiving the correct parts. If a new nameplate is received with the new parts (for example, when the drive ratio is changed), replace the old nameplate on the drive with the new nameplate for future reference.

STORED AND INACTIVE DRIVES

Each drive is spin-tested with rust preventive oil that will protect parts against rust for a period of 4 months in an outdoor shelter or 12 months in a dry building after shipment from the Factory.

If a drive is to be stored, or is inactive after installation beyond the above periods, drain oil from housing and spray all internal parts with a rust preventive oil that is soluble in lubricating oil or add "Motorstor"* vapor phase rust inhibitor in the amounts tabulated below. Before operating, drives which have been stored or inactive must be filled to the proper level with oil meeting the specifications given in Manual 128-010.

Periodically inspect stored or inactive drives and spray, or add rust inhibitor, every six months or more often, if necessary. Indoor dry storage is recommended.

Drives ordered for extended storage can be treated at the Factory with a special preservative and sealed to rust-proof parts for periods longer than those cited above, if specified on the order.

The vent is replaced with a plug (vent is then attached to the drive) so that the protective rust inhibiting atmosphere is sealed inside the drive. Replace plug with vent when preparing drive for operation.

MOTORSTOR★ — Add to Stored or Inactive Drives

DRIVE TYPE	DRIVE SIZE	MOTORSTOR OUNCES PER DRIVE
All E types C types	1 thru 45	1
	5 thru 65	2
	7 thru 8	3

★ Product of Daubert Chemical Company, Chicago, IL. (Formerly known as "Nucle Oil")

128-050
October 2006
Supersedes 8-86

Rexnord Industries, LLC, Gear Group
3001 W. Canal St., Milwaukee, WI 53208-4200 USA Telephone: 414-342-3131
Fax: 414-937-4359 e-mail: info@rexnord.com web: www.rexnord.com

11.7.3 MOTOR BRAKES – GENERAL ELECTRIC IC9516-465N

GEH-982G

INSTRUCTIONS

IC5388 AND IC9516 SPRING-SET BRAKES

THRUSTOR® MECHANISM TYPE

Before any adjustments, servicing, parts replacement or any other act is performed requiring physical contact with the electrical working components or wiring of this equipment, the POWER SUPPLY MUST BE DISCONNECTED.

These spring-set, shoe-type brakes are released through the action of a Thrustor mechanism. Figure 1 illustrates the IC5388 and IC9516-463 brake; Fig. 2 illustrates the IC5388 and IC9516-464, -465, -466, and -467 brakes.

INSTALLATION

These brakes have four holes in the base for holding down bolts located symmetrically with reference to both center lines so that they may be mounted with the Thrustor mechanism on either side of the brake wheel. In the standard mounting the Thrustor mechanism is located to the left of the wheel as shown in Fig. 1. In this position the nuts on the shoe bolts (18) are on the side next to the motor. In case the Thrustor mechanism is mounted on the right these bolts should be removed and replaced with the nut next to the motor to facilitate easy removal of the shoes in replacing linings.

The brake should be mounted in the horizontal position, since the tank of the Thrustor mechanism contains oil. The -463 brake may be tilted a maximum of 15 degrees either side of the vertical, and all other forms may be tilted 45 degrees either side of the vertical.

They have self-aligning shoes and the yoke and lever system are free to float on the hinge pins at the bottom so that the center of the wheel may be off a little in any direction from the theoretical center. This distance varies with different sizes of brakes and is limited by mechanical clearances of the brake mechanism.

In setting up any of these brakes, the shoe bolts (18) should be loose enough to allow the shoe to turn freely. When it is in the final position and the mounting bolts tight, set up spring (14) to rated torque (length is stamped on nameplate). When shoes conform to wheel face, then tighten bolts (18). No further adjustment of the shoes should be required during the life of the lining.

BRAKE WHEELS

The wheels have a taper bore or straight bore. When taper-bore wheels are used on a tapered shaft,

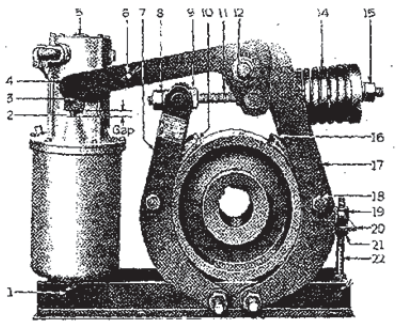

Fig. 1. IC5388- and IC9516-463 brake

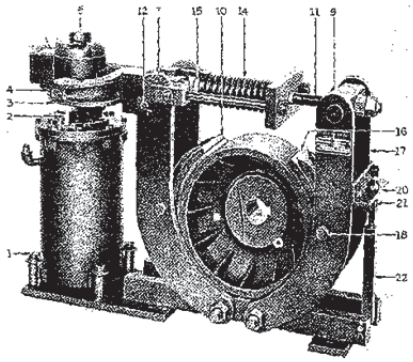

Fig. 2. IC5388- and IC9516-464 brake

These instructions do not purport to cover all details or variations in equipment nor to provide for every possible contingency to be met in connection with installation, operation or maintenance. Should further information be desired or should particular problems arise which are not covered sufficiently for the purchaser's purposes, the matter should be referred to the General Electric Company.

NOTE: GE THRUSTER HAS BEEN REPLACED BY EMG THRUSTER ED80/12S. RESERVE STROKE (GAP DISTANCE) LISTED DOES NOT PERTAIN TO EMG THRUSTER (SEE SECTION 11.7.4 FOR THRUSTER INFORMATION)

the nut on the end of the shaft should be locked so that it cannot come off. Usually there is a saw cut in the wheel hub, and the bent edge of the plate washer should be inserted in this cut; then, after the nut is set up tight, the washer is bent over against one side of the nut. Sometimes it is not possible to put a saw cut in the wheel hub; in such a case, a lip the width of the key can be made on the inside edge of the washer by two saw cuts. This lip should be bent into the end of the keyway. In other cases, there is a hole in the wheel hub, and the washer should be pushed into this hole with a punch.

If the shaft extension is straight, the wheel should be put on with a press fit.

REMOVING WHEEL HORIZONTALLY

Back off on nuts (8), (9), and (15), and the shoes will move away from the wheel, so that it can be removed horizontally. This applies to all brakes covered in these instructions.

REMOVING THRUSTOR MECHANISM

To remove the Thrustor mechanism, remove pin (1) as shown in Fig. 1 and bolts (1) for the arrangement shown in Fig. 2. Then, back out screws (3), and if the rods (2) do not drop far enough, back off on spring nut (15) so that lever (4) can be raised and the Thrustor mechanism taken out horizontally.

OPERATION AND ADJUSTMENT (SEE FIG. 1)

When the motor (5) of the Thrustor mechanism starts, it causes piston rods (2) and lever (4) to rise, and, through the lever system, causes yoke (17) and shoe (16) to move away from the wheel until angle (20) strikes nut (21). Then yoke (7) moves to the left, moving shoe (10) away from the wheel.

The length of stroke of the piston of the Thrustor mechanism, which is adjustable at nuts (8) and (9) should be sufficient to release the wheel properly. In adjusting the brake, the travel required of the push rods to release the shoes is determined by the dimensions marked "Gap" in Fig. 1, with the brake set. Values of this gap for the several brakes are given in Table 1. If the brake is lined up exactly with the center line of the wheel both horizontally and vertically, this travel may be somewhat reduced, the table giving an indication of travel required for the average set-up.

The clearance between the two shoes and the wheel is equalized by means of nuts (19) and (21). The braking effect due to spring (14) is adjusted by means of nut (15).

The travel of the piston rods (2) increases as the brake shoes wear. Therefore, at required intervals, nuts (8) and (9) should be taken up to shorten the travel, and nut (21) should be screwed up slightly on rod (22) to equalize the clearance between the two shoes and the wheel.

All brakes are shipped from the factory with the springs adjusted for rated torque braking. When the brake is installed, the spring should be set for approximately the torque required, usually the full-load torque of the motor with which it is used.

The torque of the motor may be calculated from the following formula:

$$\text{Torque in pounds at one-foot radius} = \frac{\text{HP} \times 5250}{\text{Full-load Speed (RPM)}}$$

Table 1 gives the torque rating and normal gap of the Thrustor mechanism. For spring lengths see Table 2.

TABLE 1

Brake IC5388 and IC9516	Torque in Lb-ft Cont.	Torque in Lb-ft Int.	Gap in Inches
-463	125	160	1 1/8
-464	325	400	1 1/8
-465	600	800	1 1/2
-466	1200	1600	1 7/8
-467	2400	3600	2 3/8

The gap of the push rods of the Thrustor mechanism is measured as follows: With the brake set up as described on previous pages, measure the distance between the top of the tank cover and the bottom of the clevis as shown in Fig. 1. To shorten the length of the gap, release nuts (8) and (9) drawing the two yokes (7) and (17) together. After obtaining the correct gap for releasing the shoes from the wheel, tighten up on nuts (8) and (9).

The curves, Fig. 4, 5, 6, 7, and 8, show the relation between spring length, torque, and spring pressure for the -463, -464, -465, -466 and -467 brakes respectively.

LUBRICATION

Oil should be applied to the bearing pins occasionally.

THRUSTOR MECHANISM

The Thrustor mechanism consists of a motor driving an impeller to provide oil pressure in the cylinder to raise the push rods and thereby perform

NOTE: GE THRUSTER HAS BEEN REPLACED BY EMG THRUSTER ED80/12S. RESERVE STROKE (GAP DISTANCE) LISTED DOES NOT PERTAIN TO EMG THRUSTER (SEE SECTION 11.7.4 FOR THRUSTER INFORMATION)

TABLE 2

Brake IC5388 and IC9516	Continuous		Intermittent	
	Torque in Lb-Ft	Spring Length in In.	Torque in Lb-Ft	Spring Length in In.
-463	125	4 3/32	160	3 7/8
-464	325	6 1/8	400	5 15/16
-465	600	6 15/16	800	6 19/32
-466	1200	6 31/32	1600	6 13/16
-467	2400	8 3/8	3600	8 5/32

its operating function. See Fig. 3, which shows the form having time delay "down" adjustment.

ADJUSTMENT

If it is desirable to disassemble the unit, be sure that no dirt drops in the tank or remains on the bottom of the piston or other parts when the unit is reassembled.

Try the movement of the assembled unit by raising the piston in the tank by means of the push rods, Fig. 3, to be sure that it moves freely.

When the unit has been completely reassembled, remove the oil-filler plug, Fig. 3, and the oil-level plug on opposite sides of the tank just below the tank cover. Fill the oil tank until the oil starts to flow out of the oil-level plug in the side of the tank. It is important to fill the assembled unit carefully so that the oil just starts to flow out the upper oil-level hole. This is the oil level that must be maintained to obtain correct operation. To make sure no air is trapped below the piston and in the pump move the piston up and down several times by means of lever (4) on brakes while pouring in the oil. Replace both the oil-level and oil-filler plugs after filling.

Use GE No. D6B11A2 oil for ambient temperatures within a range of +20 F to +100 F. Use GE No. 9621 oil for more extreme temperatures (range of -40 F to +150 F).

After the Thrustor mechanism has been operated under power a few times, the oil level should be checked and oil added to the proper level, if necessary.

When the occasion arises to drain the oil from the tank, it is only necessary to remove the drain plug at the bottom of the tank without disassembling the unit.

All motors have ball-bearing construction and are packed at the factory with grease sufficient for a considerable length of time, as determined by the local operating conditions. Under ideal conditions this initial grease should not require renewal for at least a year. However, under some conditions the grease may have to be renewed at more frequent intervals. When a new motor is placed in operation, the operator should inspect the bearings frequently in order to determine approximately the correct grease-renewal interval.

Electrical connections to the motor should be made through flexible metal conduit. Do not use rigid conduit.

CONNECTIONS

The Thrustor mechanism motors are three-phase, single voltage, with the exception of the 230/460-volt motors for -464, -465, -466, and -467 brakes.

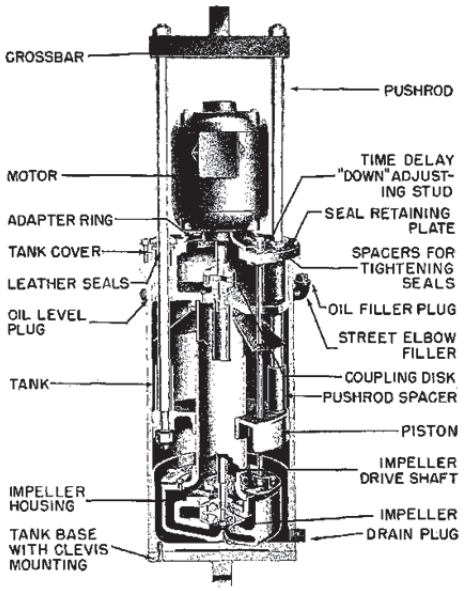

Fig. 3. IC9504 Thrustor Mechanism (quick return), with section cut away to show construction

3

NOTE: GE THRUSTER HAS BEEN REPLACED BY EMG THRUSTER ED80/12S. RESERVE STROKE (GAP DISTANCE) LISTED DOES NOT PERTAIN TO EMG THRUSTER (SEE SECTION 11.7.4 FOR THRUSTER INFORMATION)

NOTE: *If the brake is to be used on voltages higher than that stamped on the nameplate, a transformer must be used.*

TIME DELAY WHEN SETTING BRAKE

The Thrustor mechanisms on all brakes except -463 are equipped with time delay on down stroke. Under rated load the delay is approximately 5 seconds for full stroke, a longer time being obtained for less load. If there is no need for any time delay, it is made ineffective by turning the downstroke adjusting stud on the outside of the tank cover all the way up and locking in this position with the lock nut.

463 BRAKE WITH TIME DELAY FEATURES

To adjust the time delay, loosen the lock nut and turn the adjusting nut in the desired direction as indicated by the two arrows; (S) (slower) to increase the time; or (F) (faster) to decrease the time for the return stroke. After the time adjustment has been made, tighten the lock nut.

ADJUSTMENT OF QUICK-RETURN THRUSTOR MECHANISM

The "Quick-Return Thrustor Mechanism" is equipped with adjustments for both slower *down* and slower *up* stroke. The Thrustor mechanism is shipped with the adjustment screws ineffective; that is, the up stroke is normal and the down stroke is quick. In order to change the speed of operation proceed as follows:

Turn either adjusting screw in the direction of the respective arrow as shown on the indicating nameplate until the desired speed is obtained and then the lock nuts should be tightened.

It is suggested that the adjustment for the down stroke is made with the piston in the up position (with the Thrustor mechanism motor running) and the adjustment for the up stroke with the piston in the down position (motor de-energized). No undue strain should be put on the adjustment screws, which may cause damage to the internal interlocking mechanism. It is important that on account of the interlocking mechanism the adjusting screw for the up stroke be turned down first and this should be followed by turning the adjusting screw for the down stroke.

RENEWAL PARTS

See Table 3 for principal parts list of the brake itself. The quantities shown in parentheses are for one complete brake. For any other parts not listed in Table 3, refer to the nearest Sales Office of the General Electric Company, giving the complete nameplate rating of the brake and describing the parts in detail.

NOTE: GE THRUSTER HAS BEEN REPLACED BY EMG THRUSTER ED80/12S. RESERVE STROKE (GAP DISTANCE) LISTED DOES NOT PERTAIN TO EMG THRUSTER (SEE SECTION 11.7.4 FOR THRUSTER INFORMATION)

TABLE 3
TORQUE AND SPRING DATA

Brakes IC5388 and IC9516	Spring (1 Required) Cat. No.	Lining for Brake Shoe with Rivets (2 Required) Cat. No.
-463	2413980	21X465
-464	2412653	21X466
-465	2412654	21X467
-466	2415951	21X468
-467	2418389	21X469

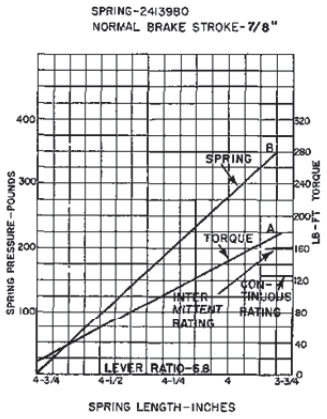

Fig. 4. For IC5388-, and IC9516-463 brakes

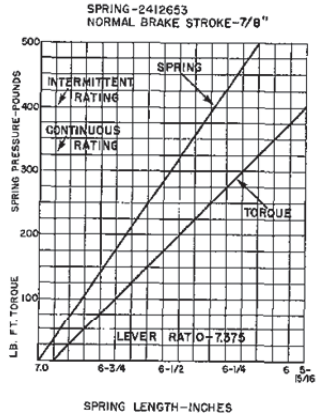

Fig. 5. For IC5388-, and IC9516-464 brakes

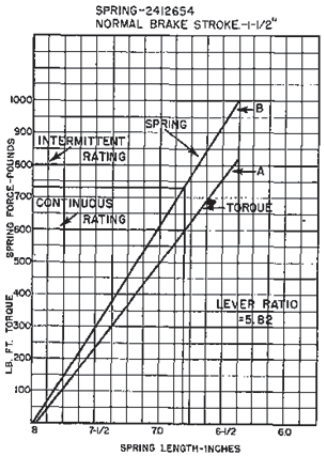

Fig. 6. For IC5388-, and IC9516-465 brakes

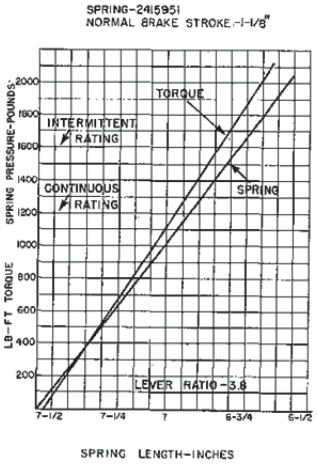

Fig. 7. For IC5388-, and IC9516-466 brakes

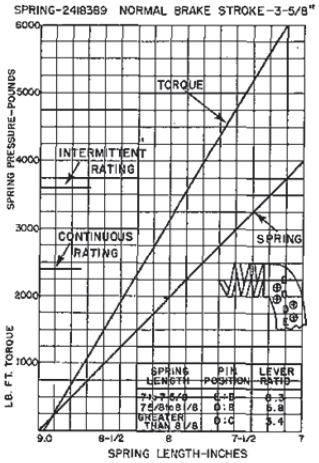

Fig. 8. For IC5388-, and IC9516-467 brakes

5

NOTE: GE THRUSTER HAS BEEN REPLACED BY EMG THRUSTER ED80/12S. RESERVE STROKE (GAP DISTANCE) LISTED DOES NOT PERTAIN TO EMG THRUSTER (SEE SECTION 11.7.4 FOR THRUSTER INFORMATION)

GENERAL ELECTRIC COMPANY
COMPONENT AND DEVICES SALES
DRIVE SYSTEMS DEPARTMENT
SALEM, VA 24153

GENERAL ELECTRIC

PI1–81

NOTE: GE THRUSTER HAS BEEN REPLACED BY EMG THRUSTER ED80/12S. RESERVE STROKE (GAP DISTANCE) LISTED DOES NOT PERTAIN TO EMG THRUSTER (SEE SECTION 11.7.4 FOR THRUSTER INFORMATION)

11.7.4 BRAKE THRUSTER – EMG ELDRO ED80/12S

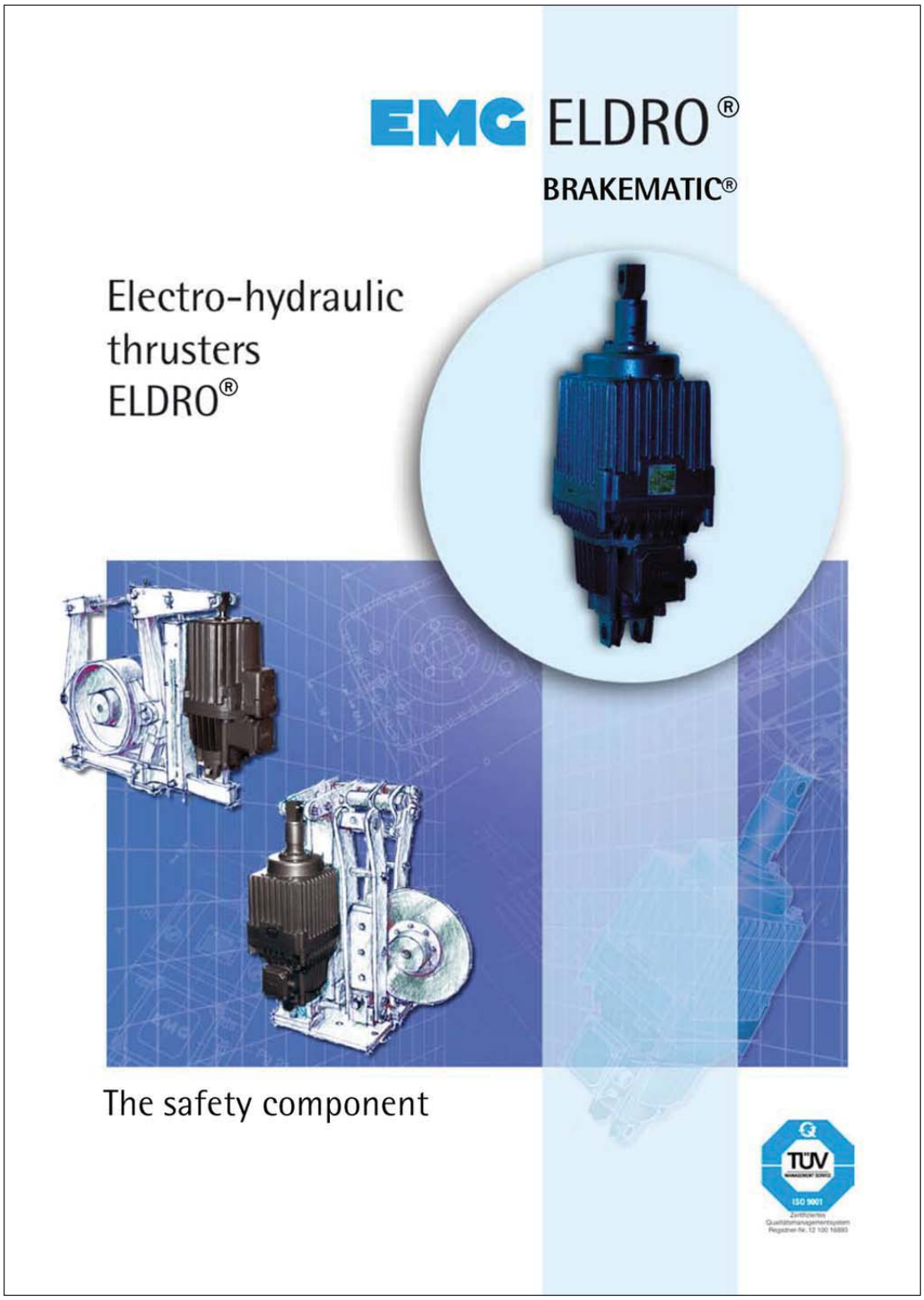

Electro-hydraulic Thrusters ELDRO®

Content

Applications 3
Range of types 4
Design and method of operation 5
Characteristic features 6
Standardization and worldwide application 6

ELDRO®-Standard range
Thruster Versions 7
Characteristics 9
Stroke-Time Diagrams 10
Dimension Drawings 12

ELDRO®-DC version
Thruster Versions 15
Characteristics 17
Dimension Drawings 18

ELDRO® Flame-, explosionproof version
Thruster Versions 20
Characteristics 22
Stroke-Time Diagrams 23
Dimension Drawings 24

BRAKEMATIC®
Method of Operation 26
Characteristics 28
Dimensions 28
Selection Table for all Applications 29
Order Example 29

Operating fluid maintenance for ELDRO® Thrusters 30
Ordering instructions for ELDRO® exchange units 31
Installation instructions 32
Notes 34
Other EMG products and system resolving 35

Electro-hydraulic Thrusters ELDRO®

Fields of application

In addition to a wide range of applications in the mechanical engineering industry, materials lifting and handling can be considered as the main uses of industrial brakes offered on the market. Drive and brake problems can be solved using a drum brake or a shoe brake which is still quite common or by using industrial type disk brakes.

As the requirements with respect to driving power, controllability and availability have clearly increased, advanced electrical engineering and electronics have become ever more important catering for these demands. Although most components of modern systems are electrical and electronic, the mechanical safety brake, with the electrohydraulic ELDRO® brake thruster, still has the most important role to play: as the last link in the chain, it ensures safety for man and machine in the event of power failure.

ELDRO® brake thrusters have been able to maintain their leading position in terms of functional reliability, service life and high availability for decades.

Precise manufacture and continuous control during the whole manufacturing cycle, improvements in structural design to cope with increasing requirements when used in regions with extreme climatic conditions as well as technical innovations introduced by sub-suppliers are the main elements which reinforce the high reputation which ELDRO® brake thrusters enjoy worldwide.

3

Electro-hydraulic Thrusters ELDRO®

Design and Method of Operation

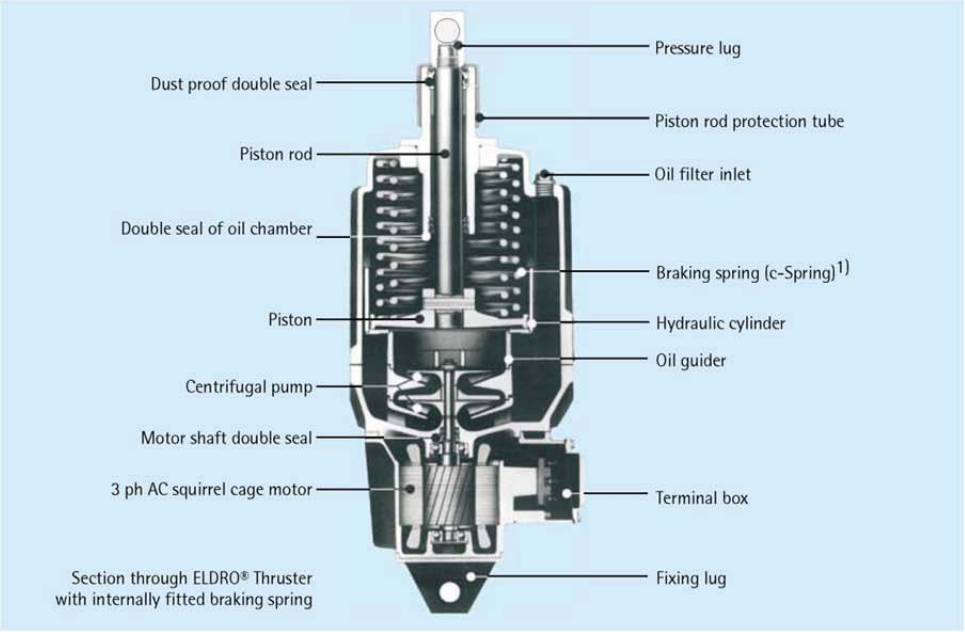

Section through ELDRO® Thruster with internally fitted braking spring

1) Accessories

Design
The basic components of the ELDRO® Thruster, i.e. electric motor and closed hydraulic system are coaxially assembled to form a functional unit. The working fluid of the hydraulic system serves as the operating medium for the generation of thrust.

Method of Operation
In the switched-off state (de-energised), the hydraulic piston with the piston rod is at its lower limit.
In the switched-on state, the centrifugal pump delivers the working fluid under the piston and produces there hydraulic pressure, i.e. the thrust of the ELDRO® unit. As a result of this pressure, the piston travels along its path against the internally fitted braking or re-setting spring or against an external load.
The work resulting from the product of 'force x distance' is transmitted via the piston rod and the pressure lug to the device to be operated. Thus, the piston can either travel the total stroke distance or the externally reduced stroke lengths.
In accordance with the hydraulic transmission principle, at each end position of the piston, motor power consumption decreases relative to power intake for lifting action. Simultaneously the pressure within the thruster reaches its maximum value. The driving motor is therefore less loaded when the piston is at rest. In that way the ELDRO® Thruster becomes insensitive to mechanical overloads e.g. blocking of the brake. The result of all these factors is that electrical thermal protection is unnecessary.
The thrusters are equipped with asynchronous motors. Mains voltage fluctuations therefore have minimum influence only on the function of the thrusters as the motor speed is primarily frequency dependent, and less voltage dependent.
When the thruster is in the isconnected state the piston returns to its original position under the impact of the external force (braking spring or weight). Except for the starting and running down phases of the motor, the lifting and lowering speeds are linear. The response times obtained depend on the magnitude of the load as well as on the viscosity of the working fluid injected, which in turn is effected by the ambient temperature.

4

Electro-hydraulic Thrusters ELDRO®

Range of Types

Type	Lifting force	Stroke	Standard version	DC version	Type „pressure-tight enclosure" flame-proof EEx I	Type „pressure-tight enclosure" explosion-proof EEx II	Braking spring (c-spring)	Damping spring (d-spring)	Lifting valve	Lowering valve	Mechanical limit switch	Inductive limit switch
	N	mm	kg*	kg*	kg*	kg*	N					
Ed 23/5	220	50	10	-	-	-	180	•	•	•	•	•
Ed 30/5	300	50	14	-	28	27	270	•	•	•	•	•
Ed 50/6	500	60	23	27	50	40	460	•	•	•	•	•
Ed 80/6	800	60	24	27	50	40	750	•	•	•	•	•
Ed 121/6	1250	60	39	43	84	58-	1200	•	•	•	•	•
Ed 185/6	1850	60	39	-	-	58	1900	•	•	•	•	•
Ed 201/6	2000	60	39	43	84	59	1900	•	•	•	•	•
Ed 301/6	3000	60	40	43	85	46	2700	•	•	•	•	•
Ed 50/12	500	120	26	31	57	46	-	-	•	•	•	•
Ed 80/12	800	120	27	31	57	58	-	-	•	•	•	•
Ed 121/12	1250	120	39	44	84	58	-	-	•	•	•	•
Ed 201/12	2000	120	39	44	84	60	-	-	•	•	•	•
Ed 301/12	3000	120	40	44	86	-	-	-	•	•	•	•
Ed 185/16	1850	155	40	-	-	-	-	-	•	•	•	•
Ed 301/15	3000	150	50	-	-	-	-	-	•	•	•	•
Ed 350/20	3500	200	50	-	-	-	-	-	•	•	•	•

The power consumption of the thrusters is between 165 W and 550 W.

*Approximate values.

Ed 30/5
with inductive
limit switch

Ed 30/5
explosionproof
version

Ed 50/6
with mechanical
limit switch

Ed 50/12
with two inductive
limit switches

Ed 201/6
with build-in c-spring
and damping spring

5

Electro-hydraulic Thrusters ELDRO®

Double shoe brake with ELDRO® Thruster

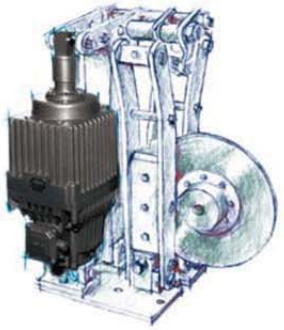

Disk brake with ELDRO® Thruster

ELDRO® and Quality

- Certified quality assurance system to DIN EN ISO 9001
- 100 % serial test including 16 hours endurance run and subsequent functional test with documentation of all technical data
- Acceptance certificate to DIN EN 10204
- Homologation of standard units in long-time test
- 24 months guarantee

Characteristic Features

ELDRO® Thrusters through their electrohydraulic mechanism, their suitability to integrate into brake systems and simple electrical commissioning procedure, offer for a wide range of applications the following advantages:

- High reliability.
- Long service life with minimum maintenance due to low wear operation under continuous self lubrication.
- Soft and smooth operation due to the hydraulic principle.
- Fast response (short regulating times).
- High switching frequency: up to 2000 cycles per hour.
- Reversing operation without restrictions.
- Simple installation and dismantling.
- No reversing contactors required as the motor may rotate in either direction.
- Overloading during operation not possible.
- Suitable for adjusting length of stroke from outside as required.
- Stepless prolongation of lifting and/or lowering times by the fitting of valves.
- Universal applications also in hazardous areas in which there is danger of occurrence of explosion.

Standardization and Worldwide Application

Physical dimensions, technical ratings and the specific characteristics of the ELDRO® Thruster are factors which have greatly influenced standards applicable to modern industrial brakes. In close cooperation with reputable brake manufacturers, with the industry and the standardization committee the ELDRO® type range was enlarged to the graduation available today and prescribed e.g. in the German standard DIN 15430 "Electrohydraulic Thrusters" as well as in the steel and iron working sheet of the "Union of German Ironworkers" (Verein Deutscher Eisenhüttenleute) SEB 602471 "ELDRO® Thrusters". This range of thrusters has been successful in the international market.
In order to remove trade barriers from the market, national standards and regulations have been adapted more and more to the international publications already known.
Design, production and testing of the ELDRO® Thrusters are carried out strictly to German regulations and standards (such as DIN and VDE) and thereby also according to the internationally approved IEC publications.
The harmonisation on the sector of 'low power 3 ph AC rotating electrical machines' has already lead to conformity of recommendations and regulations in the following countries:

Australia
Austria
Belgium
Germany
Denmark
Finland
France
Great Britain
Italy
Japan
Netherlands
Norway
South Africa
Sweden
Suisse
USA
etc.

6

ELDRO®-Standard range
3 phase AC design

Thruster Versions

Electrical Design

Motor

3 ph AC squirrel cage motor, contruction according to VDE 0530. For performance details refer to technical data.
Insulation class F.

Modes of Operation

Continuous operation S1 and intermittent service S3-60 % duty cycle.
>50 °C ambient temperature technical data change - please enquire.

Voltages and Frequencies

230/400 V, 50 Hz, 3 ph AC
290/500 V, 50 Hz, 3 ph AC
400/690 V, 50 Hz, 3 ph AC
All units are on principle star (Y) connected at delivery. Special windings 110 V - 690 V, 3 ph AC at extra charge.
60 Hz design at extra charge.
Single phase versions on request.

Terminal Box

6-pole terminal board, with heater 9-pole terminal board. Connection screws M4. Protective conductor terminal M4. Earthing screw M6 (outside on terminal box.)

Cable Gland

Cable gland M25 x 1.5 for conductor sizes up to 4 x 2.5 mm^2 (Ø 17-19 mm).

Motor Circuit Breakers

When protecting the units by motor circuit breakers the thermal trigger should be set at least on 1.5 times the rated current for all types.

Mechanical Design

Assembly Dimensions

Refer to dimension tables.

Mounting Positions

Vertical: piston rod uppermost.
Horizontal and intermediate positions: rating plate to be on top.
Types Ed 301/15 and 350/20 only vertical mounting position.

Mounting Options except units with limit switches

The base mounting is bolted and 90° rotatable. The base mounting with types Ed 23/5 and Ed 30/5 is available shifted in steps of 90° (indicate when ordering).
The top pressure lug is rotatable with all types.

Working fluid

Hydraulic oil HL 10 acc. to DIN 51524, part 1, filled at factory.

Safety Measures

Dust proof double seal.
Double seal to oil chamber.
Piston rod chromium plated to size.
Piston rod tube to protect against the ingress of foreign bodies with types Ed 121, Ed 201, Ed 301, Ed 350.

Standard Paint

Synthetic resin lacquer varnish, impact and scratch resistent.
Coating thickness ~ 40 µ.
Tint RAL 7022 (umbergrey), other colours and coating 'Increased Protection against Corrosion' at extra charge.

Enclosure

IP 65 to EN 60529, DIN VDE 0470 T1

7

ELDRO®-Standard range
3 phase AC design

Thruster Versions

Additional Equipment

Lifting or Lowering Valve (H, S, HS)

Built-in lifting (H) and/or lowering (S) valves for stepless prolongation of normal lifting or lowering times.
The adjustable minimum values obtain a level 10-20 times the standard values. Built-in valves in setting 'open' result in increased lifting and lowering times for short stroke units of approx. 0.1 to 0.2 seconds and for long stroke units of approx. 0.2 to 0.4 seconds. The valves are adjusted from the outside.

Braking Spring (c-Spring)

The c-spring generates the braking force. The specified force of the c-spring applies for 1/3 of the piston rod's rated lift stroke or 2/3 of the rated lower stroke.

Re-setting Spring

Operation similar to c-spring, re-setting force is, however, lower (on request).

Damping Spring (d-Spring)

For an aperiodic transient of the brake. This assists the brake to close smoothly. Only effective in conjunction with a built-in braking spring. No limit switch can be annexed in this case. There is no alteration in the mounting distance A. When determining the operating point of the brake the dimension 'z' is to be considered (see dimension drawing).
Main application: ELDRO®-regulated brake.

High-Speed Lowering Circuit

By means of motor capacitors, or by shortcircuiting the stator winding and inserting a contactor. The lowering times are reduced by approx. 15 %.

Heater

For operation below – 25 °C a heating element must be installed; also to be used as a stand-by heater. The customer has to provide a separate power supply and temperature regulator.

Increased Protection against Corrosion

Application: aggressive media and/or high relative humidity and the resulting danger of formation of condensate.
Motor: fully vacuum potted stator, applicable also instead of idling space heater (on request).
Special paint: Polyurethane lacquer (KOR).
Primer: one coat
Paintfinish: two coats polyurethane varnish.
Tint RAL 7022 (umbergrey).

Limit Switches

For electrical indication of the release or closing positions of the brake, mechanical or inductive limit switches can be fitted as standard.
The appropriate types of switches are listed in the technical data sheet 'Limit Switches'.
All additional equipment is to be ordered separately at extra charge.

Key to Types

Ed 121 / 6 . 1 c 230/400 V, 50 Hz

- Rated voltage
- Code for additional equipment
  - c Braking spring (c-spring)
  - d Damping spring (d-spring)
  - H Lifting valve
  - S Lowering valve
  - E Limit switch, mechanical
  - EB Limit switch, inductive
- Code for exchange unit
- Stroke in cm
- Lifting force x 10 in N
- Ed: ELDRO®, 3 ph AC version

8

ELDRO®-Standard range
3 phase AC design

Characteristics

Technical Data

Type	Lifting force	Stroke	Thrust	Braking spring force (c-spring)[1]	Power consumption[2]	Current consumption at 400 V/50 Hz[2]	Duty rating at S3 – 60 % duty cycle[3]	Weight
	N	mm	N cm	N	W	A	c/h	kg
Short-stroke units								
Ed 23/5	220	50	1100	180	165	0.5	2000	10
Ed 30/5	300	50	1500	270	200	0.5	2000	14
Ed 50/6	500	60	3000	460	210	0.5	2000	23
Ed 80/6	800	60	4800	750	330	1.2	2000	24
Ed 121/6	1250	60	7500	1200	330	1.2	2000	39
Ed 185/6[4]	1850	60	11100	1900	450	1.3	2000	39
Ed 201/6	2000	60	12000	1900	450	1.3	2000	39
Ed 301/6	3000	60	18000	2700	550	1.4	1500	40
Long-stroke units								
Ed 50/12	500	120	6000	–	210	0.5	1200	26
Ed 80/12	800	120	9600	–	330	1.2	1200	27
Ed 121/12	1250	120	15000	–	330	1.2	1200	39
Ed 201/12	2000	120	24000	–	450	1.3	1200	39
Ed 301/12	3000	120	36000	–	550	1.4	900	40
Ed 185/16	1850	155	29600	–	450	1.3	400	40
Ed 301/15	3000	150	45000	–	550	1.4	400	50
Ed 350/20	3500	200	70000	–	550	1.4	400	50

Units up to 6300 N lifting force 200 mm stroke on request.

All technical data are mean values related to + 20 °C operating temperature of unit.

1) Values of braking force apply to 1/3 of the rated stroke.

2) Values at end-position of piston. During lifting operation the specified values multiply. At – 25 °C operating temperature of unit the current consumption is approx. 1.5 times that of the current consumption at + 20 °C.

3) Continuous operation S1 and intermittent service S3 are permitted up to + 50 °C ambient temperature.

4) Only to be used as exchange thruster for Ed 5.

Approximate calculation for current consumption for non-standard voltages:

$$I_x = \frac{U_{(400\,V)}}{U_{(x)}} \cdot I_{(400\,V)}$$

Performance in Service depending on Ambient Temperatures

Temperature range	Hydraulic fluid	Performance in service
– 25 °C to + 50 °C	HL 10, DIN 51524, part 1	In the lower range of ambient temperatures the lifting times may increase up to four times the specified lifting times when the unit is operated the first time. The lowering times remain unaffected.
over + 50 °C	special fluid	Enquire.
– 35 °C to + 40 °C	special low temperature fluid	Space heater not required.
below – 25 °C[1]	HL 10, DIN 51524, part 1	Space heater required in unit. Connect up heater in terminal box using an additional Pg 16 cable gland. 230 or 115 volt connected voltage. Thermostatic control be provided by customer.

1) The details given apply for vertical positioning when temperatures drop below – 25 °C.

9

ELDRO®-Standard range
3 phase AC design

Stroke-Time Diagrams

Ed 23/5, Ed 30/5

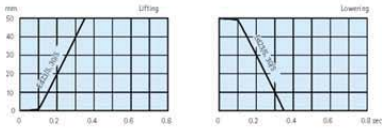

Ed 50/6, Ed 80/6

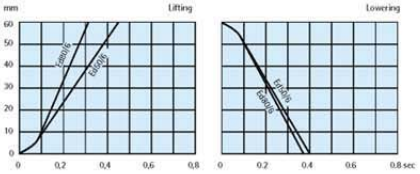

Ed 121/6, Ed 185/6

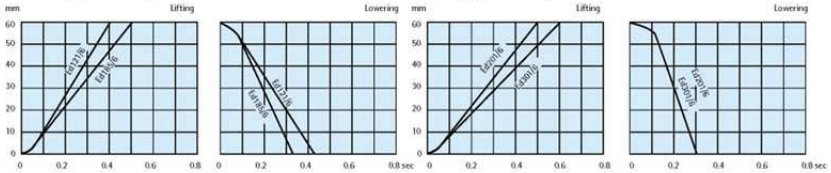

Ed 201/6, Ed 301/6

Ed 50/12, Ed 80/12

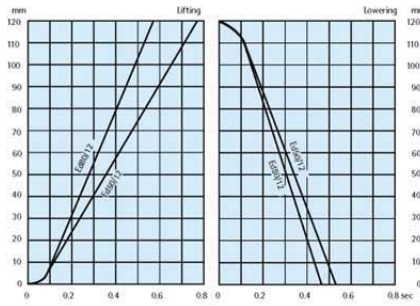

Ed 121/12, Ed 201/12, Ed 301/12

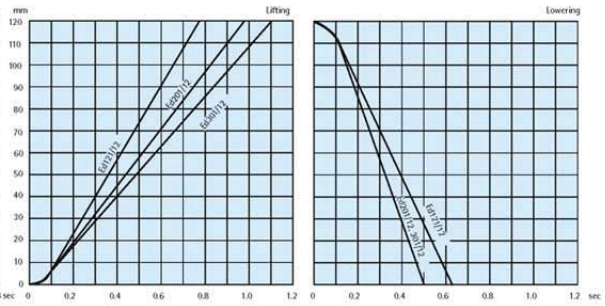

Ed 185/16

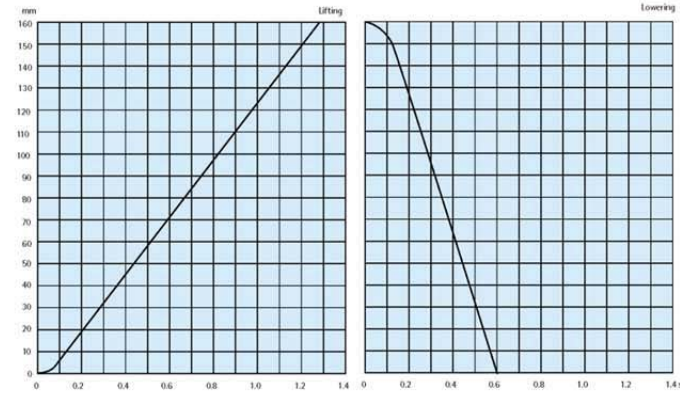

Diagrams taken under load at + 20 °C operating temperature of unit.

When applying the high-speed lowering circuit, the given lowering times are reduced by approx 15 %.

10

ELDRO®-Standard range
3 phase AC design

Dimension Drawings

Ed 30/5, Ed 50/6, Ed 80/6, Ed 50/12, Ed 80/12

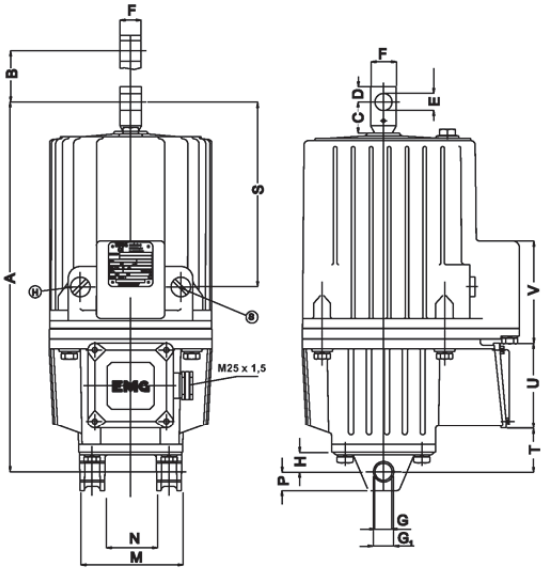

Ⓗ= Lifting Valve Ⓢ= Lowering Valve

The motor housing with terminal box can be rotated in steps of 90° (indicate when ordering).
Mounting options, except units with limit switches:
The base mounting with type Ed 30 is cast integral with the housing and can be supplied rotated by 90° (indicate when ordering), the base mounting with types Ed 50 and Ed 80 is bolted and 90° rotatable, the top pressure lug is rotatable on all units.

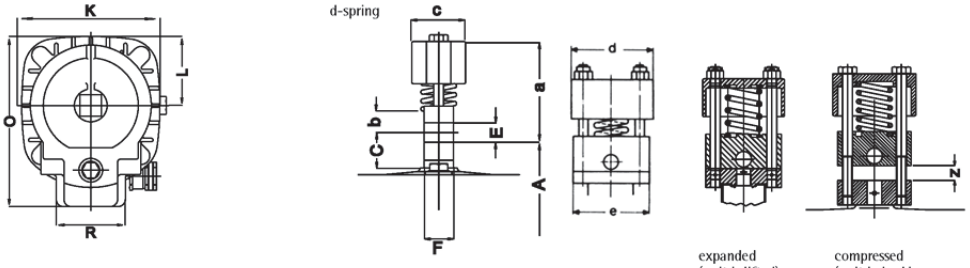

expanded (unit is lifted) compressed (unit in braking mode)

Dimension Table

Type	A	B	C	D	E[1]	F	G[2]	G_1[2]	H	K	L	M	N	O	P	R	S	T	U	V	a	b	c	d	e	z
Ed 30/5	370	50	34	15	16	25	16	–	18	160	80	80	40	197	16	80	175	34	100	77	100	20	55	85	75	15
Ed 50/6	435	60	36	18	20	30	20	24	23	195	97	120	60	254	22	90	217	52	100	120	100	22	55	85	75	15
Ed 80/6	450	60	36	18	20	30	20	24	23	195	97	120	60	254	22	90	217	67	100	120	100	22	55	85	75	15
Ed 50/12	515	120	36	18	20	30	20	24	23	195	97	120	60	254	22	90	297	52	100	176	–	–	–	–	–	–
Ed 80/12	530	120	36	18	20	30	20	24	23	195	97	120	60	254	22	90	297	67	100	176	–	–	–	–	–	–

1) tolerance $^{+0,1}$ 2) tolerance $^{+0,25}_{+0,15}$

G changeable to G_1 by removing of the clamping bush

All dimensions in millimeters

For exchanging ELDRO® Thrusters of the former design refer to "Ordering Instructions for Exchange Units" on page 31.

13

Electro-hydraulic Thrusters ELDRO®

Operating fluid maintenance for ELDRO® Thrusters

Oil quantity for ELDRO® Thrusters Ed 23 - Ed 350 Standard version

ELDRO® type	litres
Ed 23/5	1.6
Ed 30/5	1.9
Ed 50/6	4.2
Ed 80/6	4.2
Ed 50/12	5.5
Ed 80/12	5.5
Ed 121/6	9.4
Ed 201/6	9.4
Ed 301/6	9.2
Ed 121/12	9.4
Ed 201/12	9.4
Ed 301/12	9.2
Ed 185/16	9.2
Ed 301/15	12.1
Ed 350/20	12.1

Operating fluid maintenance

ELDRO® thrusters are supplied for a temperature range from -25 °C to +50 °C and filled with hydraulic oil Morlina 10 of class HL 10 DIN 51524. Different temperature ranges require special fluids. This "long life" filling is not subject to wear or contamination during operation, as long as the thruster is in perfect condition.

In case of refilling after repair, all other makes of class HL 10 DIN 51524 may be used. A list of equivalent hydraulic oil qualities of different makers is available through EMG.

All bearings in the ELDRO® thruster receive an original lubrication of grease with the "long life" grease K-L 3 n to DIN 51825 (for example Shell Alvania R 3).

Thus, ELDRO® thrusters are largely maintenance-free.

Important
In case of refilling in-situ, the thruster has to be filled in vertical position up to the overflow screw or to the filling limit of the charging connection, depending on the type of thruster.

In order to prevent possible inclusions of air, run the unit through several strokes. Then check oil level again and top up eventually. Finally, tighten charging connection and overflow screw.

30

Electro-hydraulic Thrusters ELDRO®

Ordering instructions for ELDRO® exchange units

Exchange units are manufactured as special thrusters. Their usage on new installations is not recommended.

ELDRO® thruster former design Typ	Assembly (A) dimension mm	Exchange unit new design Type	Assembly (A) dimension mm	Variation plus/minus mm	Equal assembly dimension is achieved by means of adapting pieces to the standard thruster
Ed 10 with baseplate Ed 20 with baseplate Ed 22/5 with baseplate	284	Ed 23/5	286	2	none
Ed 10 without baseplate Ed 20 without baseplate Ed 22/5 without baseplate	254	Ed 23/5.2 flange version	272	18	none
Ed 10 c Ed 20 c Ed 22/5 c	314	Ed 23/5.1 c baseplate version	314	-	none
Ed 11	433	Ed 30/5.1	433	-	adaptor E 30.U11
Ed 11 c	468	Ed 30/5.2 c	468	-	adaptor E 30.U12
Ed 21	433	Ed 50/6.2	435	2	pressure lug E 80.U 114 and 2 clamping sleeves 20x16x35 in fixing lugs
Ed 21 c	468	Ed 50/6.3 c	468	-	pressure lug E 80.162 and 2 clamping sleeves 20x16x35 in fixing lugs
Ed 2	509	Ed 50/6.1	511	2	housing base E 80.243 and
Ed 2 c	509	Ed 50/6.1 c	511	2	pressure lug E 80.U 114
Ed 3	509	Ed 80/6.1	509	-	housing base E 80.242 and
Ed 3 c	509	Ed 80/6.1 c	509	-	pressure lug E 80.U 114
Ed 4	609	Ed 80/12.1	606	3	housing base E 80.242 and pressure lug E 80.U 114
Ed 5	600	Ed 185/6	600	-	none
Ed 5 c	600	Ed 185/6 c	600	-	none
Ed 6	700	Ed 185/16	700	-	none
Ed 125/6	644	Ed 121/6	645	1	none
Ed 125/6 c	644	Ed 121/6 c	645	1	none
Ed 200/6	644	Ed 201/6	645	1	none
Ed 200/6 c	644	Ed 201/6 c	645	1	none
Ed 300/6	680	Ed 301/6	680	-	base plate E 301.U 10
Ed 300/6 c	680	Ed 301/6 c	680	-	base plate E 301.U 10
Ed 125/12	764	Ed 121/12.1	765	1	base plate E 121.U 11
Ed 200/12	764	Ed 201/12.1	765	1	base plate E 121.U 11
Ed 300/12	800	Ed 301/12.1	800	-	base plate E 301.U 11

When exchanging ELDRO Thrusters of the former design with ab-springs, use ELDRO Thrusters of the new design with d-springs. In this case, the interchangeability is not entirely given, since the fixing of the pressure lug is different.
The exchange units Ed 201/6 (5) and Ed 201/6 c (5) with an assembly dimension of 654 mm are available on request.
The exchange units for Ed 5 c have a c-spring resistance which is by 250 N higher with 1/3 of the stroke.
As to accessory equipment, refer to the main list.
The ELDRO Thrusters Ed 20 and Ed 21 are filled with hydraulic fluid Clophen T 241 (toxic oil).
These units are to be disposed of acc. to the statutory provisions.

31

Electro-hydraulic Thrusters ELDRO®

Installation Instructions

In General

See name plate for technical data (1).

The units delivered ready for operation are filled with the appropriate working fluid - for quality see plate (4).

Unauthorized opening of charging or overflow screws prohibited since oil loss will cause alteration of technical values or non-operatability.

For (Sch)-flameproof units to BVS, please refer to the regulation relating to the permissible hydraulic fluid - for quality see plate (4).

Mounting Positions

Vertical: pressure lug (2) uppermost.
Horizontal and intermediate positions: name plate (1) uppermost.
Other mounting positions are possible but further inquiries should be made.

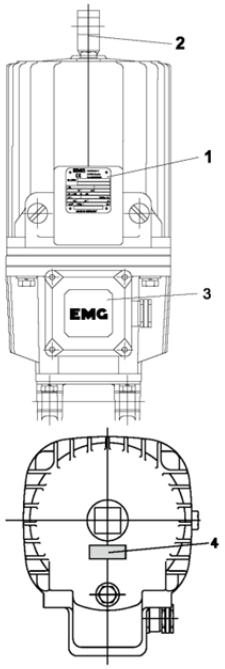

Base mounting of ELDRO®-types Ed 50 to Ed 301 is bolted and may be mounted by 90° offset each.

Slewability of unit must be guaranteed, transverse forces may not act upon piston rod.

Electrical connection

Connect according to terminal diagram in terminal box cover.
Motor voltage may be switched over to delta (Δ) or star (Y) connection.
At delivery, all units are star (Y) connected. Any phase-sequence permitted for connection.
Voltage of (Sch)- or (Ex)-thrusters may not be switched over.

In case of additional heating, please observe terminal diagram in terminal box over.

Keep the terminal box area clean. Ensure that the gasket is correctly positioned and undamaged. Close terminal box tightly. Tighten the cable entry clamping screw, if necessary seal it.

When protecting the units by motor circuit brakers the thermal trigger should be set on 1.5 times the holding current (see rating plate) for all types.

When connecting (Sch) or (Ex)-units, please take note of the appropriate regulations.

Valve Setting

Reference ‚H' = Lifting valve
‚S' = Lowering valve, see name plate (1).
Remove the screw plug marked either »H« (5) or »S« (6). Continuous prolongation of normal lifting and/or lowering times is achieved by adjusting setting screw (7) and (8) respectively. Turn to the right = increase setting time.
Turn to the left = decrease setting time.
Don't turn adjusting screw beyond edge of housing.
When fitted with valves, the units are adjusted at the works to have a setting time of 5 seconds.
Tighten the screw plugs.

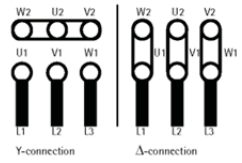

Braking Spring

Units with built-in brake spring are marked by a ‚c' on their name plate. In this case, the brake may not have its own brake spring or weights.

Painting

If you paint the unit after installation do not damage the piston rod by painting it. You risk leakage problems!

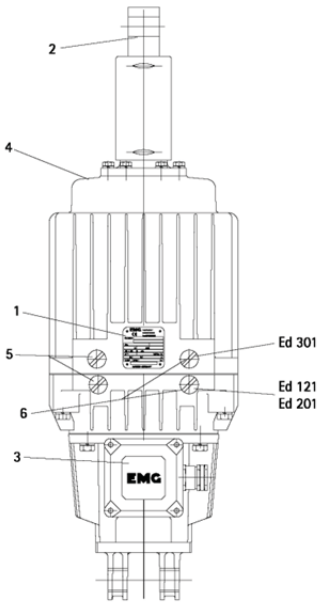

32

Electro-hydraulic Thrusters ELDRO®

Installation Instructions

Lifting marks of thrusters:
Ed 121/6, Ed 201/6, Ed 301/6,
Ed 121/12, Ed 201/12, Ed 301/12

For easier setting and checking of the brake the piston guide bush of the thruster is marked. These marks can be read at the bottom edge of the piston rod protection tube (see drawing).

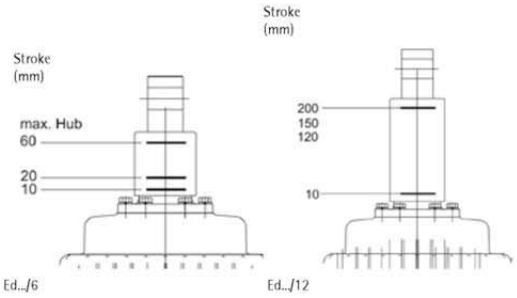

Declaration of Conformity

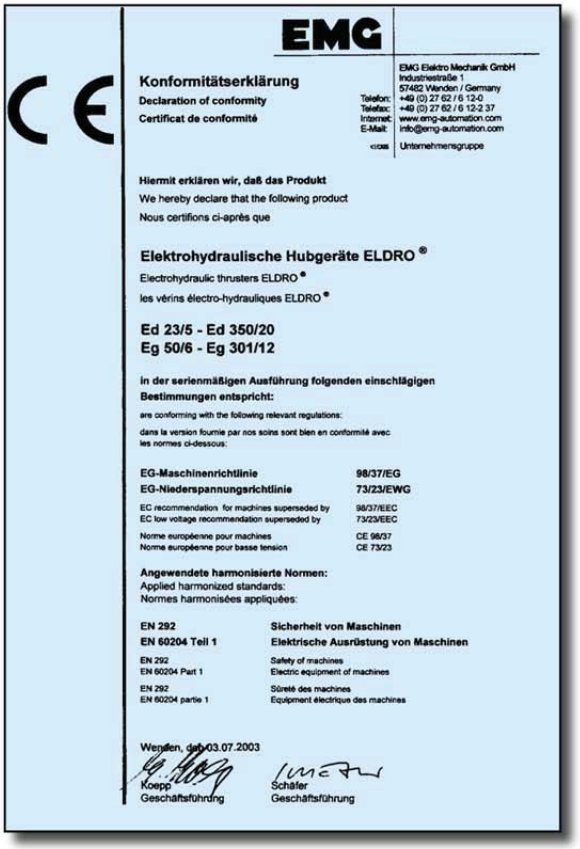

EMG

EMG Elektro Mechanik GmbH
Industriestraße 1
57482 Wenden / Germany
Telefon: +49 (0) 27 62 / 6 12-0
Telefax: +49 (0) 27 62 / 6 12-2 37
Internet: www.emg-automation.com
E-Mail: info@emg-automation.com
Unternehmensgruppe

Konformitätserklärung
Declaration of conformity
Certificat de conformité

Hiermit erklären wir, daß das Produkt
We hereby declare that the following product
Nous certifions ci-après que

Elektrohydraulische Hubgeräte ELDRO ®
Electrohydraulic thrusters ELDRO ®
les vérins électro-hydrauliques ELDRO ®

Ed 23/5 - Ed 350/20
Eg 50/6 - Eg 301/12

in der serienmäßigen Ausführung folgenden einschlägigen Bestimmungen entspricht:
are conforming with the following relevant regulations:
dans la version fournie par nos soins sont bien en conformité avec les normes ci-dessous:

EG-Maschinenrichtlinie	**98/37/EG**
EG-Niederspannungsrichtlinie	**73/23/EWG**
EC recommendation for machines superseded by	98/37/EEC
EC low voltage recommendation superseded by	73/23/EEC
Norme européenne pour machines	CE 98/37
Norme européenne pour basse tension	CE 73/23

Angewendete harmonisierte Normen:
Applied harmonized standards:
Normes harmonisées appliquées:

EN 292	**Sicherheit von Maschinen**
EN 60204 Teil 1	**Elektrische Ausrüstung von Maschinen**
EN 292	Safety of machines
EN 60204 Part 1	Electric equipment of machines
EN 292	Sûreté des machines
EN 60204 partie 1	Equipment électrique des machines

Wenden, den 03.07.2003

Koepp
Geschäftsführung

Schäfer
Geschäftsführung

33

Other EMG products and system resolving

- Servo-Technique/Strip guiding for the metals industry
- Quality assurance systems: IMPOC, SORM 3plus

Associated companies

BST, Bielefelder Servo-Technik GmbH
Web Guides for paper, foils, rubber, textiles
Web inspection system
Tire Control Systems for quality assurance in the production of tires

EMH, Electromecanica e Hidraulica, Belo Horizonte, Brazil
Electro-mechanical and hydraulic components

EMG Automation (Beijing) Ltd.

BST Pro Mark Technologies Inc., Elmhurst, IL USA
Web and strip guiding systems for metal, paper, foil, rubber, and textile industries, Web inspection systems

BST SAYONA AUTOMATIONS PRIVATE LTD., Mumbai, India
Web and strip guiding systems for metal, paper, foil, rubber, and textile industries, Web inspection systems

35

Electro-hydraulic Thrusters ELDRO®

EMG

Lubricant Chart

for temperature - 25 °C ..... + 50 °C

In case of temperatures outside this range, please enquire.

Oil Type	HL 10 DIN 51 524 Teil 1 (ISO VG 10)
Shell	Shell Morlina 10 **Original filling.**
Similar types of lubricants	
ARAL	Aral Vitam GF 10
bp	BP Energol HLP - D 10 BP Energol JS - P BP Energol JS - A
Castrol	CASTROL HYSPIN VG 10
Chevron	Chevron EP Hydraulic Oil 10 Chevron Spindle Oil 10
elf	SPINELF 10
Esso	SPINESSO 10
FUCHS	RENOLIN MR 3 RENOLIN B 3
Mobil	Mobil Velocite Oil No. 6 Mobil D.T.E. 21
TEXACO	Rando Oil 10 Spindura Oil 10

11.7.5 SPAN LOCK MOTOR COUPLING – FALK TYPE T10

REXNORD

Falk™ Steelflex® Couplings • Installation and Maintenance

Type T10 • Sizes 1020–1140 & 20–140 (Page 1of 6)

How To Use This Manual

This manual provides detailed instructions on maintenance, lubrication, installation, and parts identification. Use the table of contents below to locate required information.

Table of Contents

Introduction . . . . . Page 1
Lube Fittings . . . . . Page 1
Limited End Float . . . . . Page 1
Lubrication . . . . . Pages 1-2
Installation & Alignment Instructions. . . . . Pages 2-4
Annual Maintenance, Relube & Disassembly . . . . . Page 4
Installation & Alignment Data . . . . . Page 5
Parts Identification & Parts Interchangeability . . . . . Page 6

CAREFULLY FOLLOW THE INSTRUCTIONS IN THIS MANUAL FOR OPTIMUM PERFORMANCE AND TROUBLE FREE SERVICE.

INTRODUCTION

This manual applies to Sizes 1020T thru 1140T and 20T thru 140T10 Falk Steelflex Tapered Grid Couplings. Unless otherwise stated, information for Sizes 1020T thru 1140T applies to Sizes 20T thru 140T respectively, e.g. 1020T = 20T, 1100T = 100T, etc. These couplings are designed to operate in either the horizontal or vertical position without modification. Beginning in year 1994 through 2003, these couplings were being supplied with one set of inch series fasteners and one set of Metric fasteners. Beginning in year 2004 only Metric fasteners are being supplied. Refer to Page 6 for part interchangeability.

The performance and life of the couplings depend largely upon how you install and service them.

CAUTION: Consult applicable local and national safety codes for proper guarding of rotating members. Observe all safety rules when installing or servicing couplings.

WARNING: Lockout starting switch of prime mover and remove all external loads from drive before installing or servicing couplings.

LUBE FITTINGS

Cover halves have $^1/_8$ NPT lube holes. Use a standard grease gun and lube fitting as instructed on Page 4.

LIMITED END FLOAT

When electric motors, generators, engines, compressors and other machines are fitted with sleeve or straight roller bearings, limited axial end float kits are recommended for protecting the bearings. Falk Steelflex couplings are easily modified to limit end float; refer to Manual 428-820 for instructions.

LUBRICATION

Adequate lubrication is essential for satisfactory operation. Page 2 provides a list of typical lubricants and specifications for general purpose and long term greases. Because of its superior lubricating characteristics and low centrifuge properties, Falk Long Term Grease (LTG) is highly recommended. Sizes 1020T to 1090T10 are furnished with a pre-measured amount of grease for each coupling. The grease can be ordered for larger size couplings.

The use of general purpose grease requires re-lubrication of the coupling at least annually.

TYPE T10 STEELFLEX COUPLING

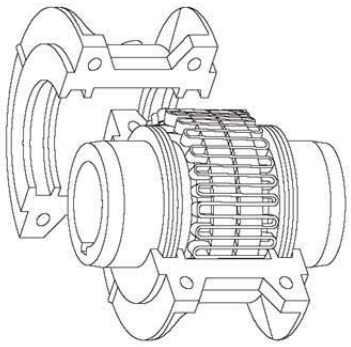

Long Term Grease (LTG)

The high centrifugal forces encountered in couplings separate the base oil and thickener of general purpose greases. Heavy thickener, which has no lubrication qualities, accumulates in the grid-groove area of Steelflex couplings resulting in premature hub or grid failure unless periodic lubrication cycles are maintained.

Falk Long Term Grease (LTG) was developed specifically for couplings. It resists separation of the oil and thickener. The consistency of Falk LTG changes with operating conditions. As manufactured it is an NLGI #1/2 grade. Working of the lubricant under actual service conditions causes it to become semifluid while the grease near the seals will set to a heavier grade, helping to prevent leakage.

LTG is highly resistant to separation, easily out performing all other lubricants tested. The resistance to separation allows the lubricant to be used for relatively long periods of time.

Steelflex couplings initially lubricated with LTG will not require re-lubrication until the connected equipment is stopped for servicing. If a coupling leaks grease, is exposed to extreme temperatures, excessive moisture, or experiences frequent reversals, more frequent lubrication may be required.

Although LTG grease is compatible with most other coupling greases, the mixing of greases may dilute the benefits of LTG.

USDA Approval

LTG has the United States Department of Agriculture Food Safety & Inspection Service approval for applications where there is no possibility of contact with edible products. (H-2 ratings).

CAUTION: Do not use LTG in bearings.

Rexnord Industries, LLC, Coupling Group
5555 S. Moorland Rd., New Berlin, WI 53151-7953 USA Telephone : 262-796-4060
Fax: 262-796-4064 e-mail: info@rexnord.com web: www.rexnord.com

428-110
May 2004
Supersedes 2-03

Installation and Maintenance • Falk™ Steelflex® Couplings

(Page 2 of 6) Type T10 • Sizes 1020–1140 & 20–140

REXNORD

Specifications — Falk LTG

The values shown are typical and slight variations are permissible.

AMBIENT TEMPERATURE RANGE — -20°F (-29°C) to 250°F (121°C). Min. Pump = 20° F (-7° C).

MINIMUM BASE OIL VISCOSITY — 3300SSU (715cST) @ 100°F (38°C).

THICKENER — Lithium & soap/polymer.

CENTRIFUGE SEPARATION CHARACTERISTICS — ASTM #D4425 (Centrifuge Test) — K36 = 2/24 max., very high resistance to centrifuging.

NLGI GRADE (ASTM D-217) — $^1/_2$

CONSISTENCY (ASTM D-217) — 60 stroke worked penetration value in the range of 315 to 360 measured at 77°F (25°C)

MINIMUM DROPPING POINT — 350°F (177°C) minimum

MINIMUM TIMKEN O.K. LOAD — 40 lbs.

ADDITIVES — Rust and oxidation inhibitors that do not corrode steel or swell or deteriorate synthetic seals.

Packaging

14 oz. (0,4 kg) CARTRIDGES — Individual or case lots of 10 or 30.

35 lb. (16 kg)PAIL, 120 lb. (54 kg) KEG & 400 lb. (181 kg) DRUMS.

General Purpose Grease

Annual Lubrication — The following specifications and lubricants for general purpose grease apply to Falk Steelflex couplings that are lubricated annually and operate within ambient temperatures of 0°F to 150°F (-18°C to 66°C). For temperatures beyond this range (see Table 1), consult the Factory.

If a coupling leaks grease, is exposed to extreme temperatures, excessive moisture or experiences frequent reversals, more frequent lubrication may be required.

Specifications — General Purpose Coupling Lubricants

The values shown are typical and slight variations are permissible.

DROPPING POINT — 300°F (149°C) or higher.

CONSISTENCY — NLGI No. 2 with 60 stroke worked penetration value in the range of 250 to 300.

SEPARATION AND RESISTANCE — Low oil separation rate and high resistance to separation from centrifuging.

LIQUID CONSTITUENT — Possess good lubricating properties equivalent to a high quality, well refined petroleum oil.

INACTIVE — Must not corrode steel or cause swelling or deterioration of synthetic seals.

CLEAN — Free from foreign inclusions.

General Purpose Greases Meeting Rexnord Specifications

Lubricants listed below are typical products only and should not be construed as exclusive recommendations.

TABLE 1 — General Purpose Greases ★

Ambient Temperature Range	0°F to 150°F (-18°C to 66°C)	-30°F to 100°F (-34°C to 38°C)
Manufacturer	**Lubricant †**	**Lubricant †**
Amoco Oil Co.	Amolith Grease #2	Amolith Grease #2
BP Oil Co.	Energrease LS-EP2	Energrease LS-EP1
Chevron U.S.A. Inc.	Dura-Lith EP2	Dura-Lith EP1
Citgo Petroleum Corp.	Premium Lithium Grease EP2	Premium Lithium Grease EP1
Conoco Inc.	EP Conolith Grease #2	EP Conolith Grease #2
Exxon Company, USA	Unirex EP2	Unirex EP2
E.F. Houghton & Co.	Cosmolube 2	Cosmolube 1
Imperial Oil Ltd.	Unirex EP2	Unirex EP2
Kendall Refining Co.	Lithium Grease L421	Lithium Grease L421
Keystone Div. (Pennwalt)	81 EP-2	81 EP-1
Lyondell Petrochemical (ARCO)	Litholine H EP 2 Grease	Litholine H EP 2 Grease
Mobil Oil Corp.	Mobilux EP111	Mobilith AW1
Petro-Canada Products	Multipurpose EP2	Multipurpose EP1
Phillips 66 Co.	Philube Blue EP	Philube Blue EP
Shell Oil Co.	Alvania Grease 2	Alvania Grease 2
Shell Canada Ltd.	Alvania Grease 2	Alvania Grease 2
Sun Oil Co.	Ultra Prestige 2EP	Ultra Prestige 2EP
Texaco Lubricants	Starplex HD2	Multifak EP2
Unocal 76 (East & West)	Unoba EP2	Unoba EP2
Valvoline Oil Co.	Multilube Lithium EP Grease	. . .

★ Grease application or re-lubrication should be done at temperatures above 20°F (-7°C). If grease must be applied below 20°F (-7°C), consult the Factory.

† Lubricants listed may not be suitable for use in the food processing industry; check with lube manufacturer for approved lubricants.

INSTALLATION OF TYPE T10 STEELFLEX TAPERED GRID COUPLINGS

Installation

Only standard mechanics tools, wrenches, a straight edge and feeler gauges are required to install Falk Steelflex couplings. Coupling Sizes 1020T thru 1090T are generally furnished for CLEARANCE FIT with setscrew over the keyway. Sizes 1100T and larger are furnished for an INTERFERENCE FIT without a setscrew.

CLEARANCE FIT HUBS — Clean all parts using a non-flammable solvent. Check hubs, shafts and keyways for burrs. Do not heat clearance fit hubs. Install keys, mount hubs with flange face flush with shaft ends or as otherwise specified and tighten setscrews.

INTERFERENCE FIT HUBS — Furnished without setscrews. Heat hubs to a maximum of 275°F (135°C) using an oven, torch, induction heater or an oil bath. To prevent seal damage, DO NOT heat hubs beyond a maximum temperature of 400°F (205°C).

When an oxy-acetylene or blow torch is used, use an excess acetylene mixture. Mark hubs near the center of their length in several places on hub body with a temperature sensitive crayon, 275°F (135°C) melt temperature. Direct flame towards hub bore using constant motion to avoid overheating an area.

428-110
May 2004
Supersedes 2-03

Rexnord Industries, LLC, Coupling Group
5555 S. Moorland Rd., New Berlin, WI 53151-7953 USA Telephone : 262-796-4060
Fax: 262-796-4064 e-mail: info@rexnord.com web: www.rexnord.com

REXNORD

Falk™ Steelflex® Couplings • Installation and Maintenance

Type T10 • Sizes 1020–1140 & 20–140 (Page 3of 6)

WARNING: If an oil bath is used, the oil must have a flash point of 350°F (177°C) or higher. Do not rest hubs on the bottom of the container. Do not use an open flame in a combustible atmosphere or near combustible materials.

Heat hubs as instructed above. Mount hubs as quickly as possible with hub face flush with shaft end. Allow hubs to cool before proceeding. Insert setscrews (if required) and tighten.

Maximize Performance And Life

The performance and life of couplings depend largely upon how you install and maintain them. Before installing couplings, make certain that foundations of equipment to be connected meet manufacturers' requirements. Check for soft foot. The use of stainless steel shims is recommended. Measuring misalignment and positioning equipment within alignment tolerances is simplified with an alignment computer. These calculations can also be done graphically or mathematically.

Alignment is shown using spacer bar and straight edge. This practice has proven to be adequate for many industrial applications. However, for superior final alignment, the use of dial indicators (see Manual 458-834 for instructions), lasers, alignment computers or graphical analysis is recommended.

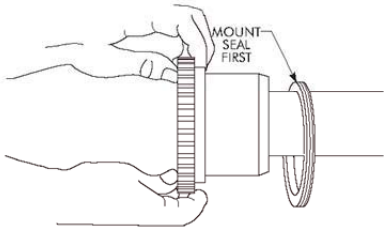

1— Mount Seals And Hubs

Lock out starting switch of prime mover. Clean all metal parts using a non-flammable solvent. Lightly coat seals with grease and place on shafts BEFORE mounting hubs. Heat interference fit hubs as previously instructed. Seal keyways to prevent leakage. Mount hubs on their respective shafts so the hub face is flush with the end of its shaft unless otherwise indicated. Tighten setscrews when furnished.

2 — Gap and Angular Alignment

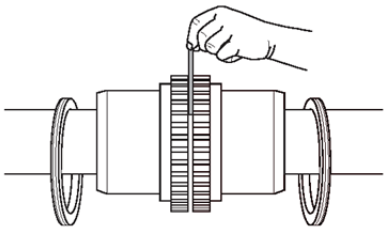

Use a spacer bar equal in thickness to the gap specified in Table 2, Page 5. Insert bar as shown below left, to same depth at 90° intervals and measure clearance between bar and hub face with feelers. The difference in minimum and maximum measurements must not exceed the ANGULAR installation limits specified in Table 2.

3 — Offset Alignment

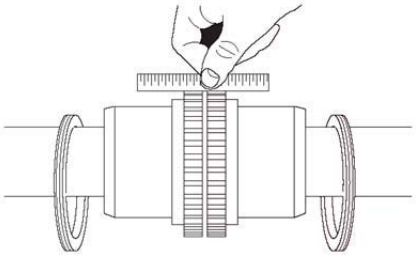

Align so that a straight edge rests squarely (or within the limits specified in Table 2) on both hubs as shown above and also at 90° intervals. Check with feelers. The clearance must not exceed the PARALLEL OFFSET installation limits specified in Table 2. Tighten all foundation bolts and repeat Steps 2 and 3. Realign coupling if necessary.

4 — Insert Grid

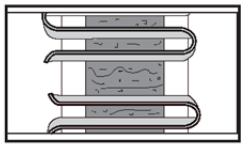

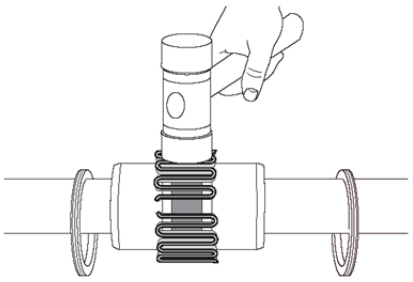

Pack gap and grooves with specified lubricant before inserting grid. When grids are furnished in two or more segments, install them so that all cut ends extend in the same direction (as detailed in the exploded view picture above); this will assure correct grid contact with non-rotating pin in cover halves. Spread the grid slightly to pass over the coupling teeth and seat with a soft mallet.

Rexnord Industries, LLC, Coupling Group
5555 S. Moorland Rd., New Berlin, WI 53151-7953 USA Telephone : 262-796-4060
Fax: 262-796-4064 e-mail: info@rexnord.com web: www.rexnord.com

428-110
May 2004
Supersedes 2-03

Installation and Maintenance • Falk™ Steelflex® Couplings

(Page 4 of 6) Type T10 • Sizes 1020–1140 & 20–140

REXNORD

5 — Pack With Grease And Assemble Covers

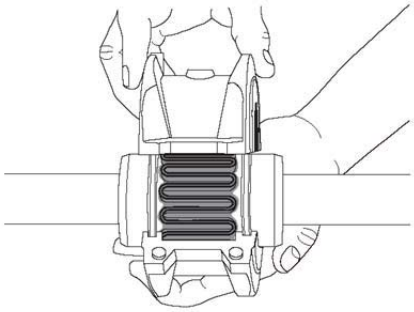

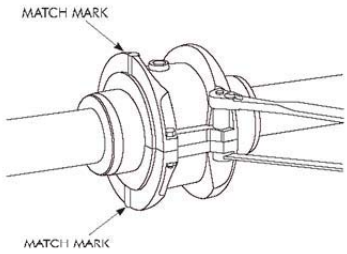

Pack the spaces between and around the grid with as much lubricant as possible and wipe off excess flush with top of grid. Position seals on hubs to line up with grooves in cover. Position gaskets on flange of lower cover half and assemble covers so that the match marks are on the same side (see above). If shafts are not level (horizontal) or coupling is to be used vertically, assemble cover halves with the lug and match

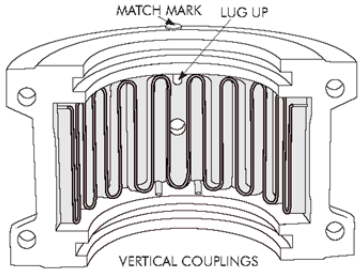

mark UP or on the high side. Push gaskets in until they stop against the seals and secure cover halves with fasteners, tighten to torque specified in Table 2. Make sure gaskets stay in position during tightening of fasteners. **CAUTION:** *Make certain lube plugs are installed before operating.*

ANNUAL MAINTENANCE

For extreme or unusual operating conditions, check coupling more frequently.

1. Check alignment per steps on Page 3. If the maximum operating misalignment limits are exceeded, realign the coupling to the recommended installation limits. See Table 2 for installation and operating alignment limits.
2. Check tightening torques of all fasteners.
3. Inspect seal ring and gasket to determine if replacement is required. If leaking grease, replace.
4. When connected equipment is serviced, disassemble the coupling and inspect for wear. Replace worn parts. Clean grease from coupling and repack with new grease. Install coupling using new gasket as instructed in this manual.

Periodic Lubrication

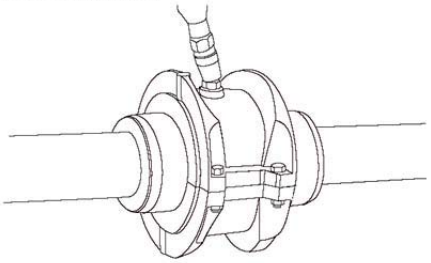

The required frequency of lubrication is directly related to the type of lubricant chosen, and the operating conditions. Steelflex couplings lubricated with common industrial lubricants, such as those shown in Table 1, should be relubed annually. The use of Falk Long Term Grease (LTG) will allow relube intervals to be extended to beyond five years. When relubing, remove both lube plugs and insert lube fitting. Fill with recommended lubricant until an excess appears at the opposite hole. **CAUTION:** Make certain all plugs have been inserted after lubricating.

Coupling Disassembly And Grid Removal

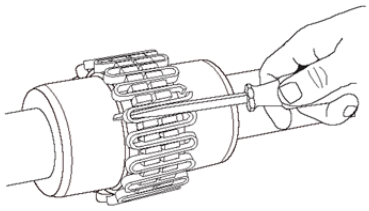

Whenever it is necessary to disconnect the coupling, remove the cover halves and grid. A round rod or screwdriver that will conveniently fit into the open loop ends of the grid is required. Begin at the open end of the grid section and insert the rod or screwdriver into the loop ends. Use the teeth adjacent to each loop as a fulcrum and pry the grid out radially in even, gradual stages, proceeding alternately from side to side.

428-110
May 2004
Supersedes 2-03

Rexnord Industries, LLC, Coupling Group
5555 S. Moorland Rd., New Berlin, WI 53151-7953 USA Telephone : 262-796-4060
Fax: 262-796-4064 e-mail: info@rexnord.com web: www.rexnord.com

REXNORD

Falk™ Steelflex® Couplings • Installation and Maintenance

Type T10 • Sizes 1020–1140 & 20–140 (Page 5of 6)

TYPE T COUPLING INSTALLATION & ALIGNMENT DATA

Maximum life and minimum maintenance for the coupling and connected machinery will result if couplings are accurately aligned. Coupling life expectancy between initial alignment and maximum operating limits is a function of load, speed and lubrication. Maximum operating values listed in Table 2 are based on cataloged allowable rpm.

Values listed are based upon the use of the gaps listed, standard coupling components, standard assemblies and cataloged allowable speeds.

Values may be combined for an installation or operating condition.

Example: 1060T max. operating misalignment is .016" parallel plus .018" angular.

NOTE: For applications requiring greater misalignment, refer application details to the Factory.

Angular misalignment is dimension X minus Y as illustrated below.

Parallel misalignment is distance P between the hub center lines as illustrated below.

End float (with zero angular and parallel misalignment) is the axial movement of the hubs(s) within the cover(s) measured from "0" gap.

ANGULAR MISALIGNMENT

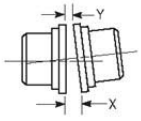

PARALLEL OFFSET MISALIGNMENT

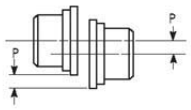

END FLOAT

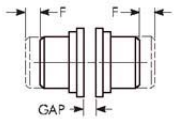

TABLE 2 — Misalignment & End Float

SIZE	Installation Limits						Operating Limits						Cover Fastener Tightening Torque Values Inch or Metric Series Fasteners		Allow Speed (rpm)	Lube Wt	
	Parallel Offset-P		Angular (x-y)		Hub Gap ± 10%		Parallel Offset-P		Angular (x-y)		End Float Physical Limit (Min) 2 x F						
	Max Inch	Max mm	Max Inch	Max mm	Inch	mm	Max Inch	Max mm	Max Inch	Max mm	Inch	mm	(lb-in)	(Nm)		lb	kg
1020T	.006	0,15	.003	0,08	.125	3	.012	0,30	.010	0,25	.210	5,33	100	11,3	4500	.06	0,03
1030T	.006	0,15	.003	0,08	.125	3	.012	0,30	.012	0,30	.198	5,03	100	11,3	4500	.09	0,04
1040T	.006	0,15	.003	0,08	.125	3	.012	0,30	.013	0,33	.211	5,36	100	11,3	4500	.12	0,05
1050T	.008	0,20	.004	0,10	.125	3	.016	0,41	.016	0,41	.212	5,38	200	22,6	4500	.15	0,07
1060T	.008	0,20	.005	0,13	.125	3	.016	0,41	.018	0,46	.256	6,55	200	22,6	4350	.19	0,09
1070T	.008	0,20	.005	0,13	.125	3	.016	0,41	.020	0,51	.259	6,58	200	22,6	4125	.25	0,11
1080T	.008	0,20	.006	0,15	.125	3	.016	0,41	.024	0,61	.288	7,32	200	22,6	3600	.38	0,17
1090T	.008	0,20	.007	0,18	.125	3	.016	0,41	.028	0,71	.286	7,26	200	22,6	3600	.56	0,25
1100T	.010	0,25	.008	0,20	.188	5	.020	0,51	.033	0,84	.429	10,90	312	35	2440	.94	0,43
1110T	.010	0,25	.009	0,23	.188	5	.020	0,51	.036	0,91	.427	10,90	312	35	2250	1.1	0,51
1120T	.011	0,28	.010	0,25	.250	6	.022	0,56	.040	1,02	.556	14,12	650	73	2025	1.6	0,74
1130T	.011	0,28	.012	0,30	.250	6	.022	0,56	.047	1,19	.551	14,00	650	73	1800	2.0	0,91
1140T	.011	0,28	.013	0,33	.250	6	.022	0,56	.053	1,35	.571	14,50	650	73	1650	2.5	1,14

TABLE 3 — Coupling Cover Fastener Identification

SIZE	Inch Series Fasteners				METRIC FASTENERS	
	Old Style		New Style			
1020-1070T10	SAE Grade 8 ★		SAE Grade 8		10.9	Property Class 10.9
1080-1090T10	SAE Grade 8		SAE Grade 8		10.9	Property Class 10.9
1100-1140T10	SAE Grade 5		SAE Grade 5		8.8	Property Class 8.8

★ Older style covers, Sizes 1020T10 thru 1070T10 must utilize socket head cap screws and locknuts held by the cover.

Rexnord Industries, LLC, Coupling Group
5555 S. Moorland Rd., New Berlin, WI 53151-7953 USA Telephone : 262-796-4060
Fax: 262-796-4064 e-mail: info@rexnord.com web: www.rexnord.com

428-110
May 2004
Supersedes 2-03

Installation and Maintenance • Falk™ Steelflex® Couplings

(Page 6 of 6) Type T10 • Sizes 1020–1140 & 20–140

REXNORD

PARTS IDENTIFICATION

All coupling parts have identifying part numbers as shown below. Parts 3 and 4 (Hubs and Grids), are the same for both Type T10 and T20 couplings. All other coupling parts are unique to Type T10. When ordering parts, always SPECIFY SIZE and TYPE shown on the COVER.

PARTS INTERCHANGEABILITY

Parts are interchangeable between Sizes 20T and 1020T, 30T and 1030T, etc. except as noted.

GRIDS — Size 1020T thru 1140T Steelflex couplings use blue or non-painted grids. Older models, 20T thru 140T, use orange grids.

***CAUTION:** Blue or non-painted grids may be used in all applications, but DO NOT substitute orange grids for blue or nonpainted.*

*COVERS — **CAUTION:** DO NOT mix cover halves of different designs. Sizes 1020T thru 1070T10 covers have been manufactured in several different two-rib designs and 80T thru 140T covers have been manufactured with two and three ribs.*

HARDWARE — Older style covers, Sizes 1020T10 thru 1070T10, utilized socket head cap screws with captured locknuts. The new style covers use hex head cap screws (either inch or metric from year 1994 through 2003 and only Metric beginning in 2004). Specify the style cover when ordering replacement parts.

PART NUMBER LOCATION

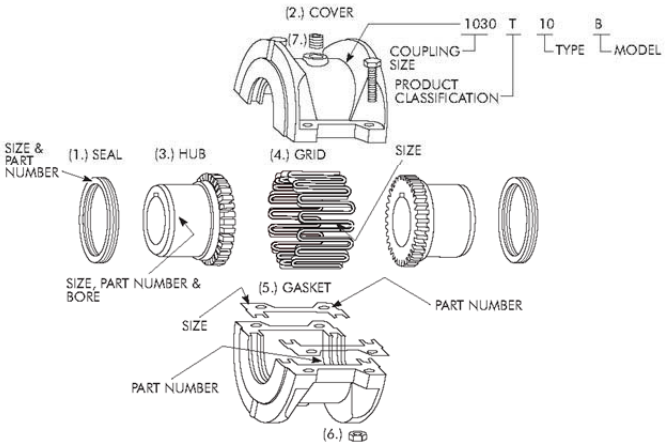

PART DESCRIPTION

1. Seal (T10)
2. Cover (T10)
3. Hub (Specify bore and keyway)
4. Grid
5. Gasket (T10)
6. Metric Fasteners (T10).
7. Lube Plug

ORDER INFORMATION

1. Identify part(s) required by name above.
2. Furnish the following information.

   EXAMPLE:
   Coupling Size: 1030
   Coupling Type: T10
   Model: B
   Bore: 1.375
   Keyway: .375 x .187
3. Contact your Rexnord Distributor or Rexnord for price and availability.

428-110
May 2004
Supersedes 2-03

Rexnord Industries, LLC, Coupling Group
5555 S. Moorland Rd., New Berlin, WI 53151-7953 USA Telephone : 262-796-4060
Fax: 262-796-4064 e-mail: info@rexnord.com web: www.rexnord.com

11.7.6 BRAKEWHEEL COUPLING – FALK 12BW

FALK
a good name in industry
THE FALK CORPORATION
MILWAUKEE

Instructions for Installation and Maintenance
SIZES 4 thru 210

STEELFLEX COUPLINGS
Horizontal and Vertical
Type BW
Subject to change without notice

438-310
SERVICE MANUAL
January 1986
Supersedes 8-82

PAGE 1

TYPE BW STEELFLEX COUPLINGS

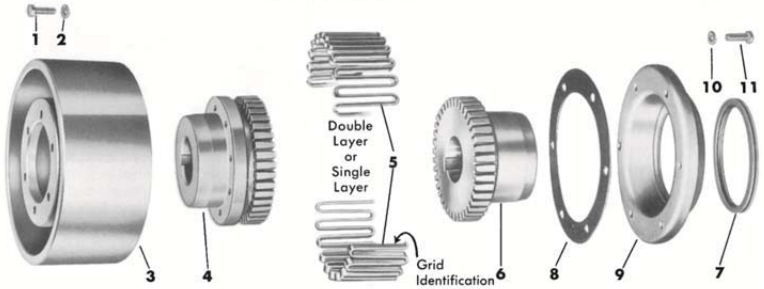

1. Special Cap Screw, Wheel
2. Lockwasher, Wheel
3. Brakewheel or Flywheel
4. A Hub
5. Grid
   INNER layer painted grey stamped "IN"
   OUTER layer painted yellow stamped "OUT"
6. B Hub
7. Seal Ring
8. Gasket
9. F Half Cover
10. Lockwasher, Cover
11. Cap Screw, Cover

When ordering spare parts, specify hub bores and keyways and state coupling size as stamped on coupling cover and hub.

INSTALLATION—For best results, assemble standard couplings with minimum misalignment and to the gap shown in Table 1. Heat small interference fit hubs in an oven or in oil. Be sure that oil flashpoint is 350°F (177°C) or higher. Apply flame heat evenly to large hubs, but DO NOT apply flame directly to the grid groove area. Also, DO NO heat hubs over 275°F (135°C).

LIMITED END FLOAT—When electric motors, generators, engines, compressors, and other machines are fitted with sleeve or straight roller bearings, limited axial end float kits are recommended for protecting the bearings. Refer to Manual 438-820.

GRID—DO NOT APPLY LOAD UNLESS complete grid is installed correctly. The number of segments and layers is listed in Table 1. Color coding is explained on Page 2 under "INSERT GRID." Grid identification is stamped at the end of the section as shown above.

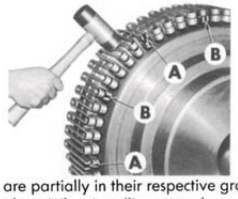

Installation—It is necessary to spread the grid slightly so that it will pass over the coupling teeth at the outside diameter. To accomplish this with a minimum amount of spreading, start the grid at either end and tap the rungs only part way into the grooves. After all of the rungs are partially in their respective grooves, tap the grid all the way into place. When installing a two-layer grid, center the sections of the outer ("OUT") layer over the free ends of the inner ("IN") layer, see A above, and extend all cut ends in the same direction, see A and B above.

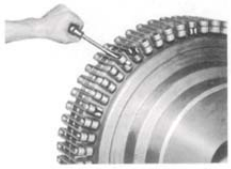

Removal—A round rod or screwdriver that will conveniently fit into the open loop ends of the grid is all that is required in the way of tools. Begin at the open end of the grid section and insert the rod or screwdriver into the loop ends. Use the teeth adjacent to each loop as a fulcrum and pry the grid out radially in even, gradual stages. Proceed alternately from side to side lifting the grid about half way out until the end of the grid is reached. By following the same procedure once again, the grid will clear the teeth.

LUBRICATION—Adequate lubrication is essential for proper operation of the coupling. Refer to Table 1 for the amount of lubricant required. It is recommended that the coupling be checked once a year and lubricant added if required. For extreme or unusual operating conditions, check more frequently.

LONG TERM GREASE (LTG)—Steelflex couplings initially lubricated with Falk LTG will not require re-lubrication until the connected equipment is stopped for servicing. Refer to Manual 428-010.

CAUTION

Consult applicable local and national safety codes for proper guarding of rotating members. Observe all safety rules when installing or servicing couplings. During assembly, seal keyways of oil lubricated couplings.

LUBRICANT SPECIFICATIONS—Refer to Manual 428-010 for recommended lubricants. The following specifications apply to lubricants for Falk couplings which are lubricated annually and operate within ambient temperatures of 0° to 150°F (−18° to +66°C). For temperatures beyond this range, consult the Factory.

Dropping Point—300°F (149°C) or higher.
Consistency—NLGI No. 2 with worked penetration value in the range of 250 to 300.
Separation and Resistance—Low oil separation rate and high resistance to separation from centrifuging.
Liquid Constituent—To possess good lubrication properties . . . equivalent to a high quality, well refined petroleum oil.
Inactive—Must not corrode steel or cause swelling or deterioration of synthetic seals.
Clean—Free from foreign inclusions.

TABLE 1 INSTALLATION DATA *

Coupling Size	Approx. Lubricant lb	Gap	Grid		Operating ■ Alignment Limits		Coupling Size
			No. of Layers	No. Segments Per Layer	Offset (Max)	Angular (Max)	
4	3/32	1/8	1	1	.005	.005	4
5	1/8	1/8	1	1	.005	.005	5
6	3/16	1/8	1	1	.005	.005	6
7	3/16	1/8	1	2	.005	.005	7
8	5/16	1/8	1	2	.010	.010	8
9	3/8	1/8	1	2	.010	.010	9
10	3/8	5/16	1	2	.010	.010	10
11	1/2	5/16	1	2	.010	.010	11
12	5/8	3/16	2	2	.012	.012	12
13	3/4	3/16	2	2	.012	.012	13
14	1 1/2	1/4	2	2	.012	.012	14
15	1 1/2	1/4	2	2	.012	.012	15
16	2	1/4	2	2	.012	.012	16
17	2 3/4	1/4	2	2	.012	.012	17
18	3 1/4	1/4	2	3	.012	.012	18
190	8	1/4	2	4	.015	.015	190
200	10	1/4	2	4	.015	.015	200
210	13	1/4	2	4	.015	.015	210

*Brakewheel must be balanced if peripheral speed exceeds 6000 fpm. Refer to Bulletin 431-110 for maximum bores and Engineering Sheet 427-108 for reboring instructions.
■ Align couplings within "Operating Alignment Limits" specified above. Exceeding these limits reduces coupling life.

Litho in U.S.A. The Falk Corporation, subsidiary of Sundstrand Corporation.
FALK, STEELFLEX and "a good name in industry" are registered trademarks.

INSTALLATION OF TYPE BW STEELFLEX COUPLINGS

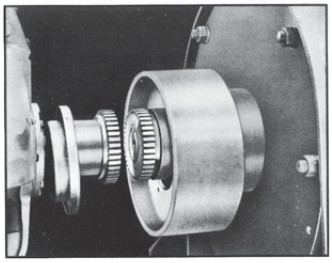

Lock out starting switch of prime mover. Clean all metal parts using a non-flammable solvent.

COUPLING GAP

Maintain the coupling gap shown on Page 1 whenever possible.

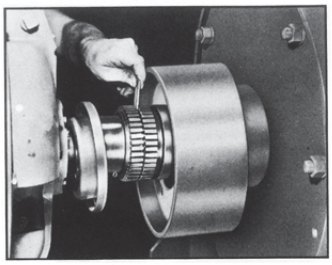

1 MOUNT COUPLING PARTS

Check wrench clearance as shown below. If inadequate, overhang "A" Hub, BUT have at least one shaft diameter of hub engagement. Before mounting hubs, place cover, seal ring and wheel on their respective shafts. Normally, mount hub face flush with end of shaft.

2 GAP & ANGULAR ALIGNMENT

Use a spacer bar equal in thickness to the gap specified in Table 1. Insert bar, as shown above, to same depth at 90° intervals and measure clearance between bar and hub face with feelers. The difference in minimum and maximum measurements should not exceed the ANGULAR limit specified in Table 1.

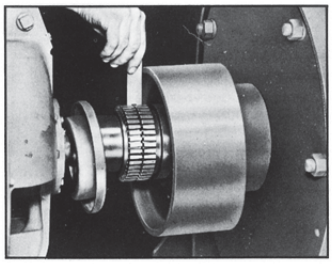

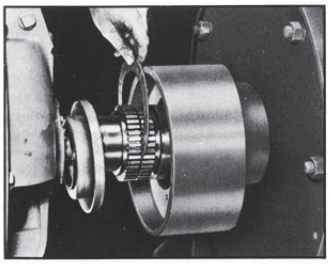

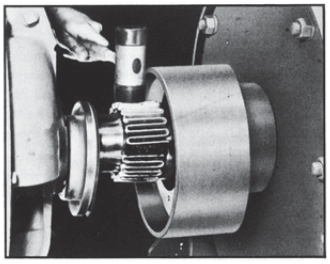

3 OFFSET ALIGNMENT

Align so that a straight edge rests squarely (or within the limits specified in Table 1) on both hubs as shown above and also at 90° intervals. Check with feelers. The clearance should not exceed the OFFSET limit specified in Table 1. Tighten all foundation bolts and repeat Steps 2 and 3.

4 INSERT GASKET AND LUBRICATE

After coupling is aligned, carefully insert the gasket between hubs and hang it on either hub. Do not damage gasket. Next force as much lubricant as possible into the gap and grid grooves. Refer to Page 1 for lubrication specifications.

5 INSERT GRID

Insert grid as instructed on Page 1. Coupling Sizes 4 thru 11 have a single layer grid which is painted grey. Sizes 12 thru 210 have a two layer grid; the inner layer is painted grey and stamped "IN"; the outer layer is painted yellow and stamped "OUT."

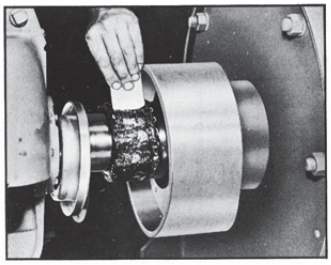

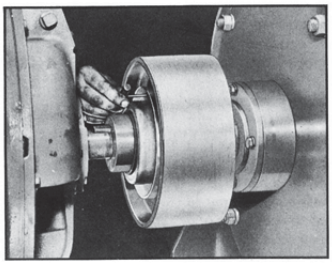

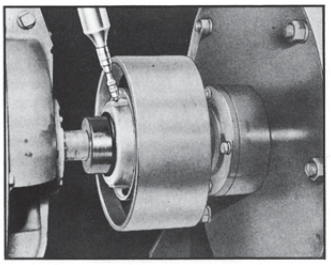

6 PACK WITH LUBRICANT

Pack the spaces between and around the grid with as much lubricant as possible. Scrape or wipe excess lubricant off flush with top of grid. Lightly oil seal ring to facilitate sliding of cover onto the hub.

7 POSITION WHEEL AND COVER

Mount wheel and then torque cap screws to values specified below. Bolt gasket and cover in place. Check seal for proper seating.

8 LUBRICATE EVERY 12 MONTHS

For couplings with a permanent lube fitting (use Alemite gun nozzle Z-737) insert a smooth feeler gauge (.010) under seal 180° from fitting to vent cover. For others, remove lube plug and insert your lube fitting. Lubricate couplings until grease flows through the vent. Then INSTALL LUBE PLUGS.

BRAKEWHEEL CAP SCREW TIGHTENING TORQUES—lb. in.

Cplg. Size	4-6	7	8-10	11-13	14 & 15	16-18	190	200 & 210
Torque *	120	250	440	825	1640	2940	6800	1430

* Bolt brakewheel to "A" hub and tighten cap screws, Part No. 1, to torque specified. Sizes 200 and 210 have dowels.

2 • SERVICE MANUAL 438-310

11.8 TRAFFIC CONTROL EQUIPMENT MANUALS AND SPECIFICATIONS

11.8.1 WARNING GATE SCHEMATIC – B&B ELECTROMATIC VT-40

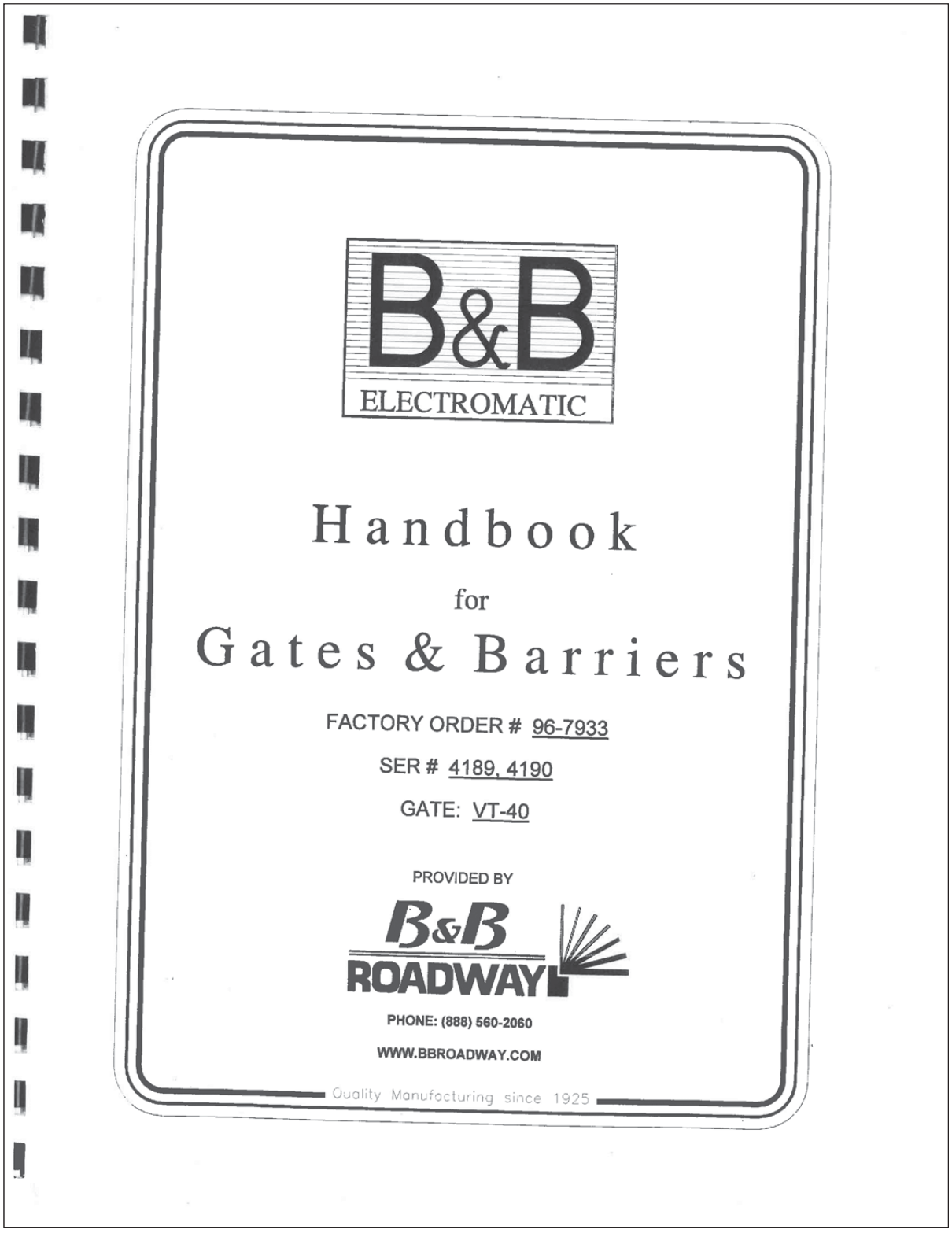

CONTENTS

Section 1: Installation, Adjustment, and Maintenance

Installation Instructions
VT-40 Field Adjustment Instructions
VT-40 Lubrication Instructions
Lubricant Chart
VT Gate Start-Up Instructions

Section 2: Specifications and Assembly

VT-40 Specifications
VT-40 Assembly
Basic Housing Dimensions

Section 3: Accessories and Components

Universal Brake Assembly
Shear Pin Data for Lift Gates
RDC Limit Switch Assembly
AL-7 (12V) Arm Light
AW25-400 (12V) Solid State Flasher
10" Warning Bell

Section 4: Drawings Pertaining to This Installation

VT- 40 Installation Drawing (Drawing # 0040DI02063, Rev. 1)
(Drawing # 0040DI02062, Rev. 1)
VT-6801 Wiring Diagram (Drawing # 0040DE02064, Rev. 1)

Notice: Failure to follow recommended installation, operation and maintenance procedures can result in damage to the gate and will void all warranties and responsibility for gates and related equipment. Please contact the factory for answers to any questions regarding the VT-6801 barrier gate.

Provided by

B&B ROADWAY

15191 Hwy 243, Russellville, Al 35654

Phone: (888) 560-2060

WWW.BBROADWAY.COM

Section 1

Installation, Adjustment, and Maintenance

VT GATE INSTALLATION INSTRUCTIONS

F.O. # 96-7933

SERIAL # 4189,4190

NOTE: FAILURE TO INSTALL YOUR GATE PROPERLY COULD CAUSE DAMAGE TO THE OPERATING MECHANISM. IF SIDEARM CHANNELS ARE INSTALLED FROM FACTORY, THEY NEED TO BE REMOVED BEFORE PROCEEDING WITH THE FOLLOWING INSTRUCTIONS.

1. READ THE INSTRUCTIONS AND REVIEW THE DRAWINGS THOROUGHLY. ANY PART OF THESE INSTRUCTIONS YOU DO NOT UNDERSTAND, CONTACT THE FACTORY.
2. CHECK THE ANCHOR BOLT LOCATIONS AND PREPARE THE FOUNDATION FOR THE GATE. SET THE GATE OPERATOR AND BE SURE TO SEAL THE BOTTOM WITH DUCT SEAL. HOUSING MUST BE LEVEL. ANCHOR BOLTS MUST BE TIGHTENED EVENTLY.
3. MAKE SURE THE LOCAL POWER SUPPLY FOR THE MOTOR AND CONTROL CIRCUIT ARE CORRECT.

IMPORTANT: ALL CONDUIT MUST BE SEALED AND THE HOUSING GROUNDED.

4. USING THE HANDCRANK, RAISE THE MAIN ARM SHAFT 45 DEGREES TO THE VERTICAL NOTING ROTATION ARROW ON BRAKE DRUM.
5. OPEN MAIN DISCONNECT SWITCH S1 AND CONNECT THE POWER. CONNECT THE CONTROL CIRCUIT IF SEPARATE. IF SUPPLIED FROM THE MOTOR CIRCUIT, CHECK CONNECTIONS AT THE TERMINALS.

NOTE: AT THIS POINT IN THE INSTALLATION, NO SIDEARM CHANNELS, COUNTERWEIGHTS OR ARMS SHOULD HAVE BEEN INSTALLED.

6. "BUMP" TEST GATE OPERATOR FOR CORRECT MOTOR ROTATION. MOTOR ROTATION SHOULD MATCH ROTATION ARROW ON BRAKE DRUM. REVERSE POWER LEADS IF NECESSARY TO GET PROPER MOTOR ROTATION.
7. RUN GATE OPERATOR (W/O SIDE ARM CHANNELS, ARMS OR COUNTERWEIGHTS) THROUGH SEVERAL COMPLETE CYCLES. LEAVE GATE OPERATOR IN DOWN POSITION AND OPEN MAIN DISCONNECT SWITCH.

NOTE: THIS GATE HAS BEEN COMPLETELY ASSEMBLED, LUBRICATED, AND TEST RUN THROUGH 24 COMPLETE CYCYLES UNDER FULL POWER AT THE FACTORY. IF SATISFACTORY OPERATION IS NOT DISPLAYED IN STEP 10 RECHECK ALL ELECTRICAL CONNECTIONS CAREFULLY. CONSULT FACTORY IF PROBLEM IS NOT FOUND.

8. NOW INSTALL THE SIDEARM CHANNELS, THE ARM AND THE COUNTERWEIGHTS. SUPPORT THE OUTER END OF THE ARM UNTIL COUNTERWEIGHTS ARE ALL INSTALLED. ATTACH ANY LIGHTS, SIGNS OR OTHER FIXTURES. INSTALL COUNTERWEIGHTS IN POSITION MARKED ON SIDE ARM CHANNELS.
9. MAKE SURE ROTATION OF MOTOR WITH HANDCRANK LOWERS OR RAISES ARM AS INDICATED ON BRAKE DRUM.
10. CLOSE THE MAIN DISCONNECT SWITCH S1 AND OPERATE THE CONTROL CIRCUIT. IF ALL CONNECTIONS HAVE BEEN MADE CORRECTLY, GATE ARM WILL OPERATE TO FULLY UP OR FULLY DOWN. THE LIMIT SWITCH WILL AUTOMATICALLY STOP THE MOTOR AT THE EXTREME 90 DEGREE MOVEMENT OF THE ARM.

IMPORTANT: IF THE POWER CONNECTIONS TO THE MOTOR ARE REVERSED, THE LIMIT SWITCH WILL AUTOMATICALLY DISCONNECT THE MOTOR WHEN IT REACHES ABOUT 93 DEGREES EITHER UP OR DOWN, DEPENDING ON THE POSITION OF THE CONTROLS, IE, UP OR DOWN. THE LIMIT SWITCH HAS BEEN SET AT THE FACTORY AND SHOULD NOT REQUIRE ADJUSTMENT. ARM SHOULD BE RAISED OR LOWERED BY LENGTHENING OR SHORTENING THE CONNECTING ROD, NOT BY ADJUSTMENT OF THE LIMIT SWITCH CAMS.

VT-40 WARNING GATE START-UP INSTRUCTIONS

NOTE: **These instructions assume installation has been completed. If necessary, refer to the enclosed installation instructions.**

1. Open the operator door.
2. Connect power by flipping the disconnect switch to the "ON" position.
3. Test operate the gate to be sure it is functioning properly.

VT-40 WARNING GATE SHUT-DOWN INSTRUCTIONS

1. Open the operator door.
2. Disconnect power by flipping the disconnect switch to the "OFF" position.

VT-40 WARNING GATE EMERGENCY OPERATION INSTRUCTIONS

1. Open the operator door.
2. Disconnect power by flipping the disconnect switch to the "OFF" position.
3. Locate the hand-crank mounted inside the housing.
4. Slip the hand-crank onto the shaft extending through the brake. The brake will automatically release.
5. Turn the hand-crank to raise or lower the gate, as needed. A tag on the brake indicates crank direction for opening or closing the gate.
6. Remove the hand-crank.
7. Flip the disconnect switch back to the "ON" position to resume powered operation.

VT-40 FIELD ADJUSTMENT INSTRUCTIONS

**WARNING: Operating mechanism can be damaged if gate is operated when:

1) Arm is installed and counterweights are not installed, or
2) Arm is not installed and counterweights are installed.

Please see installation instructions in handbook.

"Down" or "Closed Position Adjustment:

1. Break jam nuts loose at rod ends (items 8 and 9).
2. Shorten or lengthen connecting rod (item 6) by twisting it. Observe movement of arm.
3. Tighten jam nuts.

"Up" or "Open" Position Adjustment:

Note: "Open" position is 90 degrees from the "down" position and cannot be adjusted independently unless a special adjustable crank arm has been specified by the customer to accommodate nonstandard installation conditions.

If the gate is equipped with an adjustable crank (item 28), the "open" arm position can be adjusted between 60 and 90 degrees from the "down" position to clear overhead obstacles. The crank arm has been preset at the factory and verified by full test operation. The crank will not normally require field adjustment.

Limit Switch Adjustment:

The limit switch assembly (item 7) will not normally require field adjustment. Limit switch cams have been preset at the factory and verified by full test operation for each gate. It is recommended that the factory be consulted before adjusting the limit switch assembly. If it is determined that an adjustment is required, the cams can be adjusted using an allen wrench.

VT-40 LUBRICATION INSTRUCTIONS

Lubricate mechanism every 12 months as follows:

Transmission (Item 4 on Assembly drawing):

First gear drive box:

1. Open the back door of the housing (opposite roadway).
2. Check oil by removing the oil level plug located on the left hand vertical surface of the transmission (item 4) a few inches below the motor (item 5).
   a. If oil is visible, oil level is adequate - replace plug and go to next section.
   b. If oil is not visible, go to step 3.
3. Remove fill plug on top of first gear box.
4. Fill the case to the level plug (removed in step two) with oil chosen per lubrication chart on the following page.
5. Replace plugs.

Final drive gear box:

1. Check the oil level by removing the oil level plug located near the bottom of the transmission (item 4). The plug will be facing you when standing at the back door.
   a. If oil is visible, oil level is adequate - replace the plug and go to next section.
   b. If oil is not visible, go to step 2.
2. Remove oil fill plug on top of final gear box.
3. Fill the case to the level plug (removed in step one) with oil chosen per lubrication chart on following page.
4. Replace plugs.

Arm Shaft (Item 38):

1. Grease with Texaco Marfak 2 or equal.
2. Wipe off excess.

Connecting Rod Ends (Items 6, 8, and 9):

1. Grease threads with Texaco Marfak 2 or equal.
2. Wipe off excess.

RECOMMENDED LUBRICANTS

VT-40, VT-77, AND VT6801

WORM GEAR REDUCERS

AMBIENT TEMPERATURE	-30 TO 15°F	16 TO 50° F	51 TO 110° F	111 TO 165° F
MAX. OPERATING TEMP.	150° F	185° F	200° F	200° F
VISCOSITY @ 100° F, SUS		1919 TO 2346	2837 TO 3467	4171 TO 5098
COMPOUNDED WITH		3% TO 10% FATTY OR SYNTHETIC FATTY OILS OR MILD EP ADDITIVES		
AGMA LUBRICANT NO.		#7 COMPOUND	#8 COMPOUND	#8A COMPOUND
CITIES SERVICE CO.	CITGO EP COMP. 68	CITGO CYL. OIL 400-S	CITGO CYL. OIL 680-7	CITGO CYL. OIL 680-7
FISKE BROS. REFINING	APG-80	LUBRIPLATE CP GEAR OIL #7	LUBRIPLATE CP GEAR OIL #8	LUBRIPLATE CP GEAR OIL #8A
GULF OIL CORP.	SL-460 E.P.	TRANSGEAR EP 460	TRANSGEAR EP 680	TRANSGEAR EP 800
KEYSTONE DIV.	KSL-365	KSL-366	K-600	K-620
MOBIL OIL CORP.	SHC 634	MOBIL 600W	MOBIL 600W SUPER	MOBIL EXTRA HECIA
SHELL OIL CORP.	OMALA 68	OMALA 460	OMALA 680	OMALA 80
SUN OIL CORP.	SUNEP 1050	SUNEP 1110	SUNEP 1150	SUNOCO GEAR OIL 8 AC
TEXACO, INC.	MEROPA 68	VANGUARD CYL. OIL 460	HONOR CYL. OIL 680	650T CYL. OIL 1000
AMERICAN LUB., INC.		IND. GEAR OIL 140	AGMA #8 GEAR OIL	AGMA #8 GEAR OIL
CHEVRON	NL GEAR COMP. 100	NL GEAR COMP. 460	NL GEAR COMP. 680	NL GEAR COMPOUND 1500

FOR SPECIAL APPLICATIONS THAT INVOLVE SEVERE AMBIENT TEMPERATURE EXTREMES OR A SEASONAL OIL REQUIREMENT, USE MOBIL SCH. 626.

Section 2

Specifications and Assembly

SPECIFICATIONS COVERING MODEL VT-40 AUTOMATIC SAFETY GATE

GENERAL

The safety gate shall be B&B type VT-40 or an approved equal.

The gate shall be of the standard vertical to horizontal arm type, shall have a weatherproof housing and operating mechanism and shall include such controls, accessories and modifications as specified.

The gate and all related equipment except lamps and fuses shall be guaranteed against defective material and workmanship for a period of 5 years from date of shipment under B&B's standard warranty.

APPLICATIONS

The VT-40 automatic safety gate shall typically be used as a warning, traffic control and access control gate. Typical applications shall include moveable bridge traffic warning gate, parking lot access control gate and any medium to heavy duty traffic control or warning installation.

HOUSING

The housing shall be fabricated from .188" carbon steel and shall be hot dip galvanized after fabrication. Formed, channel-shaped side plates shall be used to produce a strong configuration without welded corners. The gate shall receive a finish coat of aluminum paint.

Front and rear access doors shall be hung on bronze, full-cross hinges with stainless steel hinge pins. Hinges shall be of the slip-off type. Padlockable doors (padlock by others) shall be held in place with two bronze wing nuts and stainless steel swing bolts and shall be sealed with neoprene strip gaskets. Top shall be held in place with corrosion resistant hex head bolts. Openings for arm shafts shall be equipped with "O" ring seals.

The housing base shall provide four 1.00" holes for mounting on the customer's foundation. Anchor bolts shall be not less than .75" diameter. Anchor bolts and template shall be furnished by the gate manufacturer.

ARM

The arm shall be aluminum / fiberglass combination – This lightweight, durable arm shall be fabricated from special high strength rectangular fiberglass and 6061-T6 rectangular aluminum tubing. Gate arms shall be covered on both sides with 16" alternating red and white engineering grade reflectorized sheeting. Stainless steel truss cables shall be furnished with all arms.

Roadway and sidewalk arm lengths (Dimensions "A" and "B") shall be measured from the centerline of the gate housing to the tip of the arm. For actual arm lengths, see drawing # 0040DI2062, Rev. 1 & 0040DI2063, Rev. 1

One gate shall be supplied with a sidewalk arm. See drawing # 0040DI2062, Rev. 1

ARM BASE

A break-away shear pin base is standard for aluminum / fiberglass arms. When excessive force is applied to gate arms equipped with a shear pin base, the pin shall shear. The arm shall then swing 45 degrees horizontally and drop free of the gate operator, minimizing damage to the vehicle and the gate.

The shear pin base and lightweight arm assembly shall be designed for easy, rapid reinstallation or replacement by one person.

ARM MOUNTING CHANNELS

Arm mounting channels shall be carbon steel, hot dip galvanized. The roadway arm shaft shall be 44" above the base line of the gate housing.

COUNTERWEIGHTS

Each gate shall be equipped with suitable hot dip galvanized steel counterweights of the sectional, bolt-on type. Counterweights shall have at least 10% adjustment.

ARM SHAFTS

The main arm shaft shall be mounted in heavy duty ball bearings and shall be lubricated from the inside. The main arm shaft shall be not less than 2.00" diameter. Shaft material shall be ASTM A311 Class B high strength, fatigue resistant steel.

The sidewalk shaft (see drawing # 0040DI2062, Rev. 1) shall be mounted in heavy duty ball bearings and shall be lubricated from the inside. It shall be connected to the roadway arm shaft with a linkage that will rotate the sidewalk arm through the same angle as the roadway arm. Shaft material shall be ASTM A311 Class B steel.

TRANSMISSION

The transmission shall be a fully enclosed, all gear, direct drive unit running in an oil bath. The drive train shall not use belts or chains and shall be connected to the arm shaft with an adjustable connecting rod having self-aligning ball ends. The connecting rod shall be constructed of ASTM A311 Class B high strength, fatigue resistant steel.

During the opening and closing cycles, the gate arm shall begin with zero velocity and accelerate smoothly reaching maximum velocity at mid stroke (45 degrees). The arm shall then decelerate smoothly to zero velocity at full stroke (90 degrees) preventing bounce or whip of the arm. Standard operating time to open or close the gate shall be 13 seconds.

The standard connecting rod assembly shall be designed to move the gate through a 90 degree travel.

MOTOR

The motor voltage and phase shall be 240V, 3PH. Horsepower shall be ½ HP. (For electrical information, refer to drawing # 0040DE2064, Rev. 1) The motor shall be of the flange mounted type, attached to the transmission case with not less than 4 bolts. To permit reversing movement of the arms at any point of travel, the motor shall be of the instant reversing type. Motor data shall appear in the manual.

BRAKING MECHANISM

A solenoid release, automatic motor brake shall be furnished as part of the gate drive mechanism. The brake shall automatically release when the handcrank is inserted to manually operate the gate.

HANDCRANK

A handcrank shall be included with each gate to operate the gate during power failure. Door safety switches shall automatically break the control circuit power when the door is opened for manual operation.

LIMIT SWITCH

The gate limit switch shall be a unit assembly containing 8 individual switches having one set of normally open and one set of normally closed contacts each. Contacts shall be totally enclosed and shall have UL rating of not less than 15 amperes at 220 volts AC. Limit switch shall be readily accessible and easily replaced with normal hand tools. Each individual switch shall be controlled by an independent cam, which shall be adjustable with a single set screw. Limit switch assemblies containing 10 or 12 circuits shall be supplied when specified. The limit switch body, shafts and cams shall be of corrosion resistant non-ferrous materials.

SAFETY SWITCHES, TERMINAL BLOCKS AND WIRING

To protect operating and maintenance personnel from injury during service or installation a manual disconnect switch shall be furnished, installed and fully wired in the main motor leads. Automatic disconnect switches shall be arranged to break the control circuit when either door is opened. Pressure type terminal blocks shall be provided and installed inside the housing on the roadway side. All control wires shall terminate on these blocks. Each terminal shall be clearly labeled and all conductors shall be color coded or numbered. The wiring diagram shall reflect such colors or numbers. No conductor shall be small then # 16 AWG stranded. All connections to screw type terminals shall have lugs. Conductors shall be encased in conduit wherever practical.

GATE MANUFACTURER REQUIREMENT

The manufacturer of safety gates and positive barriers shall have a minimum of 5 years experience in the manufacture of industrial gates and barriers and shall furnish replacement parts for a minimum of 10 years. Replacement parts shall normally be available within 24 hours.

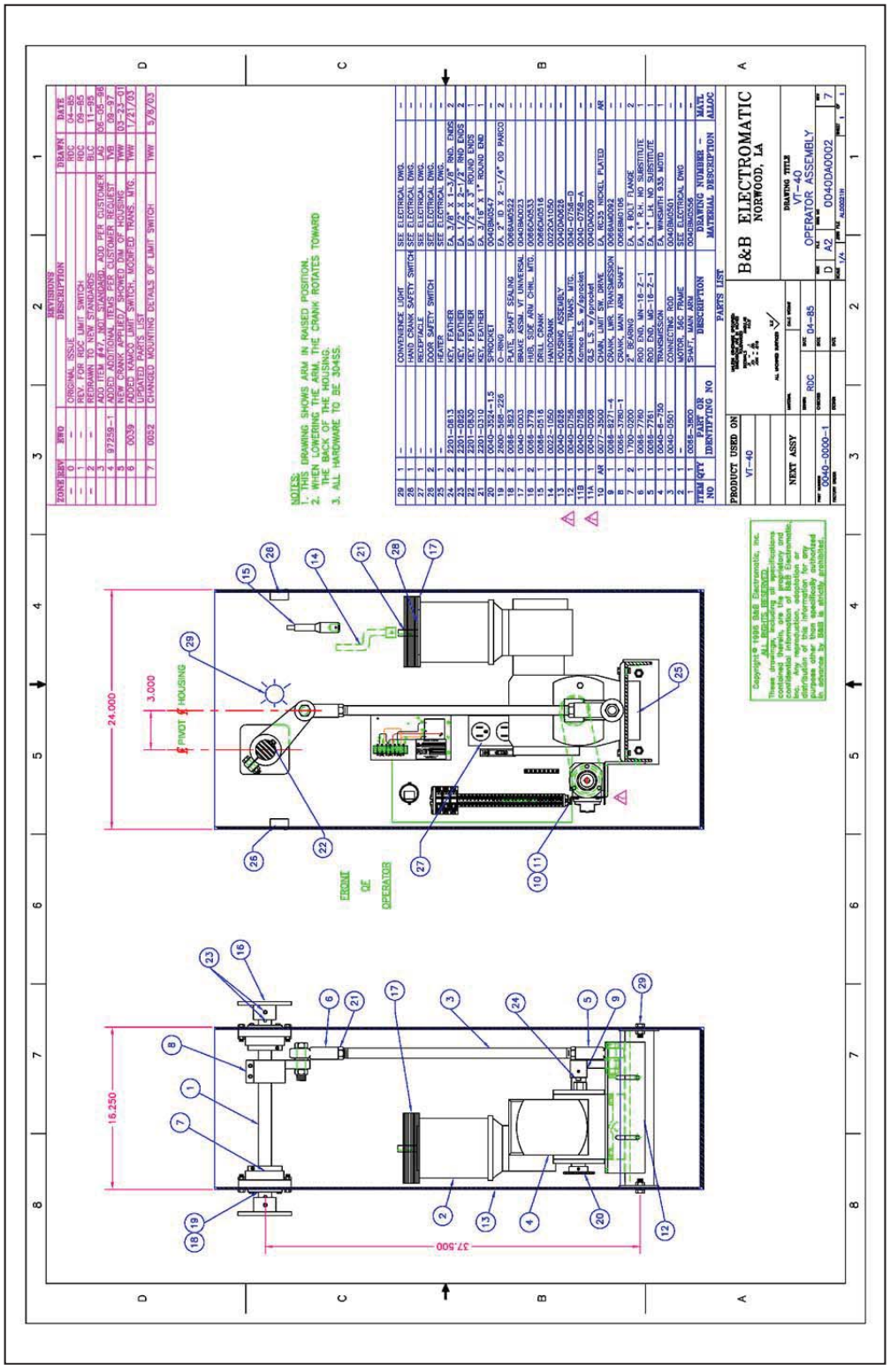

NOTE: DRAWING INCLUDES REVISIONS WHICH MAY NOT APPLY TO ACTUAL COMPONENT ON SITE. ACTUAL UNIT MAY VARY FROM SCHEMATIC

11.9 ELECTRICAL EQUIPMENT MANUALS AND SPECIFICATIONS

11.9.1 TACHOMETER/OVERSPEED SWITCH ASSEMBLY – HUBBELL

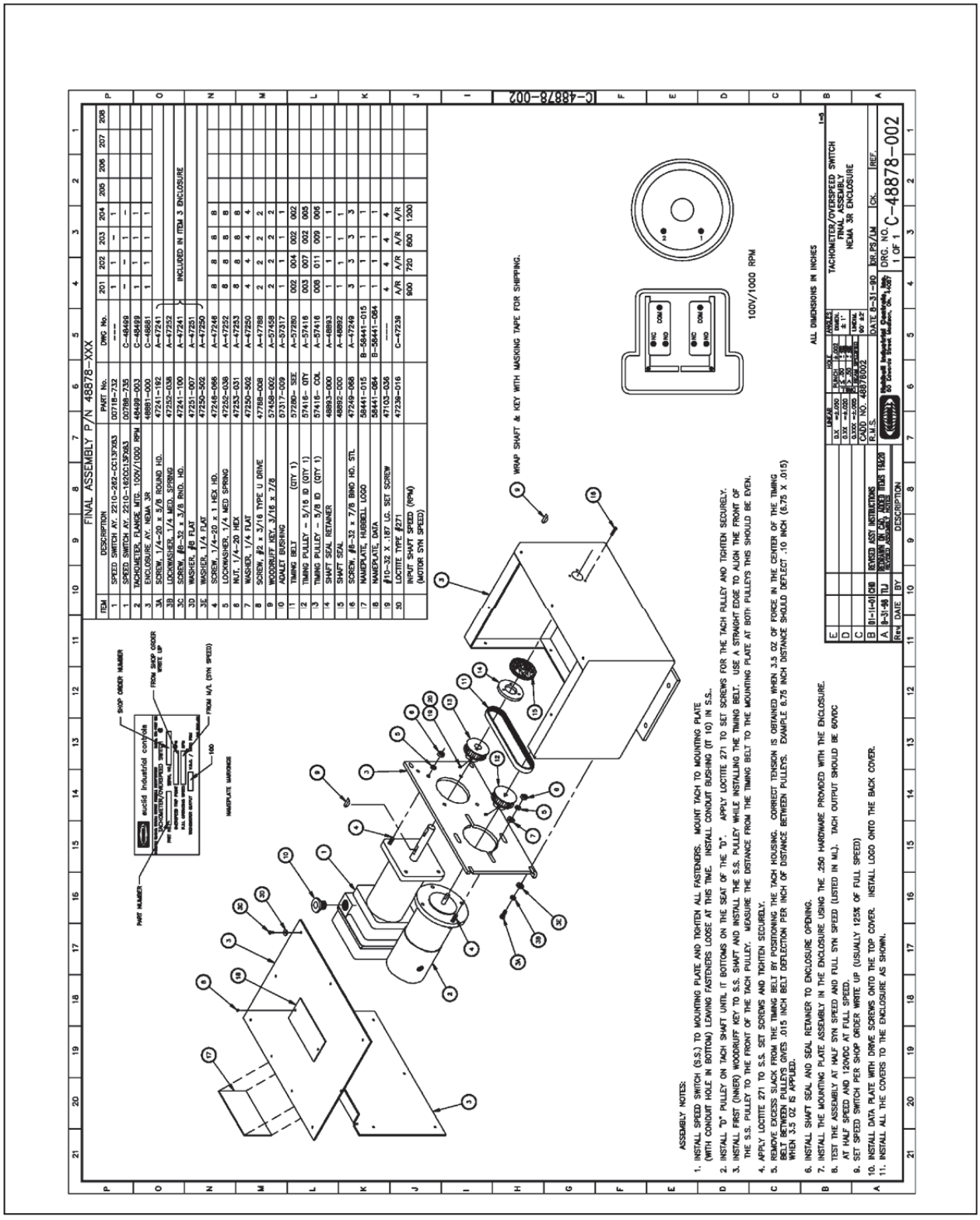

11.9.2 DRIVE (SECONDARY THYRISTOR CONTROLLER) – HUBBELL 4922C

Hubbell Industrial Controls, Inc.

S²MC Compact Static Reversing Controller **4922C**

For Hoists without Load Brakes

Instructions 4922C.A • Publication 189H • August 2003

TYPE 4922C INSTRUCTION MANUAL FOR CRANE HOISTS

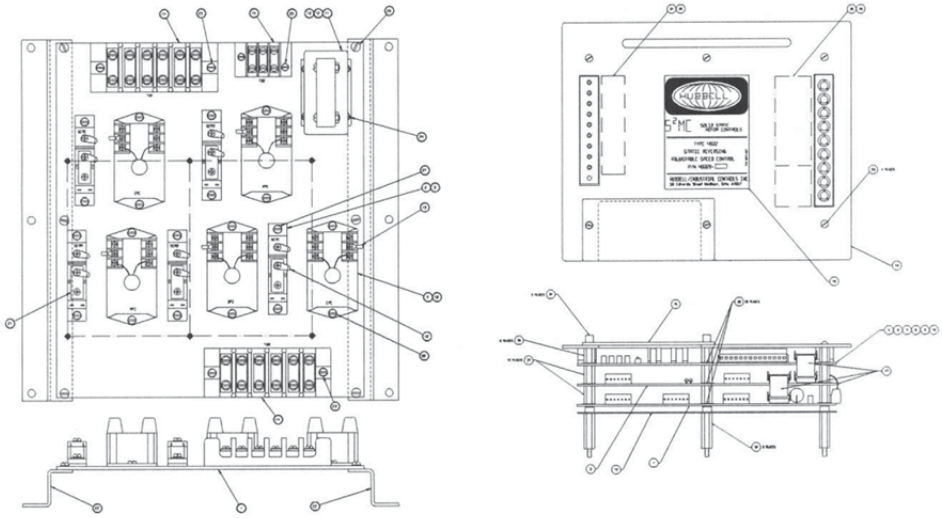

HUBBELL

Instruction Manual 4922C for Cranes

Table of Contents

1.0 General 3

2.0 Circuit Description 3

2.1.1 POWER CIRCUIT GENERAL 3

2.2.1 PRIMARY SCR BRIDGE 3

2.2.2 CONTROL CIRCUIT, STATIC CONTROL ASSEMBLY 4

3.0 Specifications 7

3.1 INITIAL SET-UP STATIC CONTROL ASSEMBLY. 8

3.2 SETUP ADJUSTMENTS 9

Note, drawings and spare parts refered to in this instruction manual are for reference only. Refer to controller nameplate or consult factory for specific drawings.

Serial Number: _____

Reference Drawing Number: _____

Instruction Manual 4922C for Cranes

1.0 General

The Type 4922C Static Reversing Controller is a solid state adjustable speed motor controller utilizing compact unitized construction and providing speed regulated control of wound rotor motors. The motor speed is controlled by varying the motor primary voltage via primary SCR bridges, and the direction of motor rotation is controlled by selecting the appropriate SCR bridges for the commanded function. The adjustable speed control unit varies the SCR bridge firing signals and the SCR bridge selection in response to a changing motor speed reference signal. The retarding torque during the reduced speed lowering operation is provided by motor counter torque. The retarding torque during full speed lowering can be provided by true motor and system regeneration. Motoring to counter torque transitions and vice versa are automatic and are controlled by the adjustable speed control unit in response to motor loading conditions.

2.0 Circuit Description

2.1.1 POWER CIRCUIT GENERAL

The incoming three phase power, L1, L2, L3 is connected to the main circuit breaker, MCB, and then to the main contactor, M. Power is supplied to the SCR bridges through the overload relays, 1OL, 2OL, and 3OL, when the power contacts of M are closed. Current limit resistors are connected in series with the power inputs of the Lowering SCR bridges. The current limit resistors control SCR fault currents should they occur. The SCR bridge outputs provide adjustable voltage power to the motor primary windings, T1, T2, T3, through the Power Limit Switch, LS. The limit switch transformer, LSXFMR, monitors one of the limit switch power contacts, and removes power from the brake panel should the monitored power contact open. See Fig. 2.1.1. and Fig. 2.1.2.

2.1.2 CONTROL CIRCUIT GENERAL

The three phase power from the main circuit breaker, MCB, is also connected to the control circuit breaker, CCB. The control circuit breaker supplies power to the synchronizing transformer, XFMR2, and the control power transformer, XFMR1. See Fig. 2.1.1. and Fig 2.1.2. Transformer XFMR2 supplies power and SCR synchronizing information to the Static Control Assembly, SCA, and the control power transformer XFMR1 supplies 120 volt power to the remaining control circuit.

The 120 volt control circuit power from the control transformer is controlled by the UV relay located on the tachometer continuity assembly, TCA. The function of the TCA is to verify continuity in the Tachometer / Overspeed Switch circuit. The UV relay will pickup when continuity is established through the tachometer circuit and the control circuit continuity loop composed of the normally closed overload contacts, 1OL, 2OL, and 3OL. The SCR bridge over temperature switch, mounted on the central common SCR bridge, is also included in the control circuit continuity loop along with 1CR and 2CR contacts which are present when the Float option is supplied.

The master switch or pendant station controls the Hoist and Lower Relays, HR and LR, the Off-Point Timing Relay, TR, and the Full Speed Contactor, FS. The brake relay, BR, supplies power to the brake panel and is controlled by HR, LR and the Limit Switch Transformer. HR and LR also operate the Main Contactor, M, through the controlling Master Switch or Pendant contacts. The M Contactor and the initiating directional relay will remain energized when the Master Switch or Pendant is returned to Off-Point to allow the motor to slow the load before removing power and setting the holding brake. The Off-Point Timing Relay, TR, and the Low Speed Relay, LSR, perform this function. Normally, LSR will open at minimum speed to set the brake and remove power. However, should a system problem prevent normal slowdown, the TR contact acts as a backup and removes power and sets the brake after a preset minimum time. See Figure 2.1.1.

The Master Switch or Pendant also provides a bipolar adjustable voltage DC speed reference signal from an internal potentiometer. A positive signal represents the hoisting direction, and a negative signal represents the lowering direction. In this way, the Master Switch handle or Pendant button determines the direction of motion and establishes a voltage reference level by which motor speed will be controlled.

Figure 2.1.2 shows the addition of the SC contactor which is used when the extended slow speed option is required. During normal speed hoisting operations, the Low Speed Relay, LSR, will be picked up, and the Counter-torque Relay, CTR, will remain de-energized. This causes the SC contactor to close and supply normal .1 E/I motor secondary impedance in the rotor circuit. During slow, minimum speed operations, when LSR is dropped out, or during counter-torque operations, when CTR is picked up, the SC contactor will remain open, and the extended .3 E/I secondary impedance will be in the rotor circuit to reduce slow speed and counter-torque motor currents.

Figure 2.1.2 also shows the addition of the Float option components which are, 1FR, 1CR, 2CR, FTR, and the Float Relay Assembly. The Float option is used when very slow or zero speed load position control is required. The Float mode is entered by depressing and holding the Master Switch thumb button while the Master Switch is in the Off position. This mode limits the full travel Master Switch speed value to +/- 10% with smooth load control through zero speed.

2.2.1 PRIMARY SCR BRIDGE

The primary SCR bridge is an SCR/Heat Sink assembly with the power SCRs connected in inverse parallel, See Fig.2.1.3.

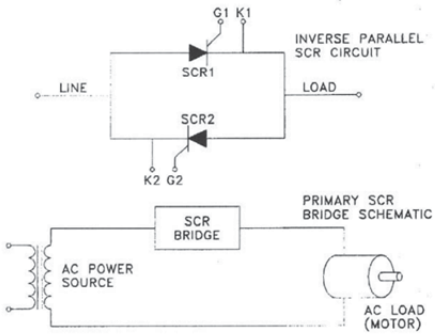

FIGURE 2.1.3

The function of the SCR bridge is to control the amount of voltage applied to the motor. The SCR, silicon controlled rectifier, is similar to standard rectifiers in that it will allow current to flow in one direction while blocking current in the reverse direction. However, SCRs will conduct current only when turned ON, or GATED ON. When two SCRs are connected as shown in Fig. 2.1.3, a controllable AC switch or contact is formed that will carry current in either direction but only when GATED ON. SCRs can react very quickly to gating signals, quickly enough to be able to control portions of half cycles of standard AC power. When the gating or firing signal is presented to the SCR very late in the half cycle, the SCR will block all of the cycle up to the time of firing. At the time the gating signal is applied, the SCR will turn ON and conduct the remaining portions of the half cycle to the load. See Fig. 2.1.4.

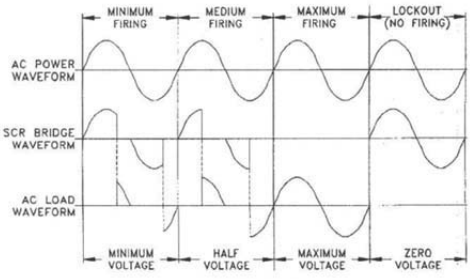

FIGURE 2.1.4

As the firing signal is presented earlier in the half cycle, the SCR will conduct more and more of the cycle on to the load. The extremes will be maximum firing when the SCR bridge passes all of the AC power on to the motor, and lock-out, zero firing, when the SCR bridge blocks all of the AC power.

In static reversing controllers, the SCR bridges also perform a directional control function as well. As can be seen in Figures 2.1.1 and 2.1.2, there are five SCR bridges, 2 Hoist bridges, 2 Lower bridges, and 1 Common bridge. When a Hoist operation is required, adjustable voltage three phase power is supplied to the motor via the two Hoist bridges and the Common bridge. The three phase relationship of the applied motor power determines the direction of developed motor torque and rotation.

A Lower operation will be performed in one of two ways depending upon mechanical losses and the weight of the suspended load. First, adjustable voltage power is supplied to the motor via the two Lower bridges and the Common bridge to produce a driving lower operation. If the loading is such as to continue to require a driving lower torque, the system will supply lowering adjustable voltage power to meet the commanded speed condition. If an overhauling condition exists, a counter-torque lowering operation will occur where the Hoist SCR bridges and the Common bridge provide motor power. True motor and power system regeneration can be used, if desired, to lower overhauling loads at full speed. For this condition, the system turns the Lower SCR bridges and the Common SCR bridge fully on to supply full lowering voltage to the motor.

The transition from driving lower to counter-torque lower is automatic and is determined by the mechanical loading presented to the motor. Full voltage regenerative lowering will produce lowering speeds 10% to 15% greater than full load hoisting speeds.

2.2.2 CONTROL CIRCUIT, STATIC CONTROL ASSEMBLY

The Static Control Assembly, SCA, contains all of the control system responsible for the speed regulation function of the Static Reversing Controller. The system also determines the motor's operating mode by controlling which set of SCR bridges is supplying the power. The Static Control Assembly receives its three phase power from the synchronizing transformer, XFMR2. See Figures. 2.1.1. and 2.1.2. This transformer provides low voltage AC power for the electronic power supply section and synchronizing information for the firing circuits. See Fig. 2.2.1.

The permissive circuit monitors the Permissive command input from the M contactor coil at the 120V AC control power level and converts this signal to an isolated low level signal compatible with the electronic system. The permissive circuit also monitors a tachometer continuity signal originating on the Tachometer Continuity Assembly. In order for the Static Control Assembly system to operate, the tachometer continuity signal must be present along with the control permissive signal from the M contactor circuit. The permissive circuit also monitors the Full Speed command input. This input will enable full speed regenerative lower operation.

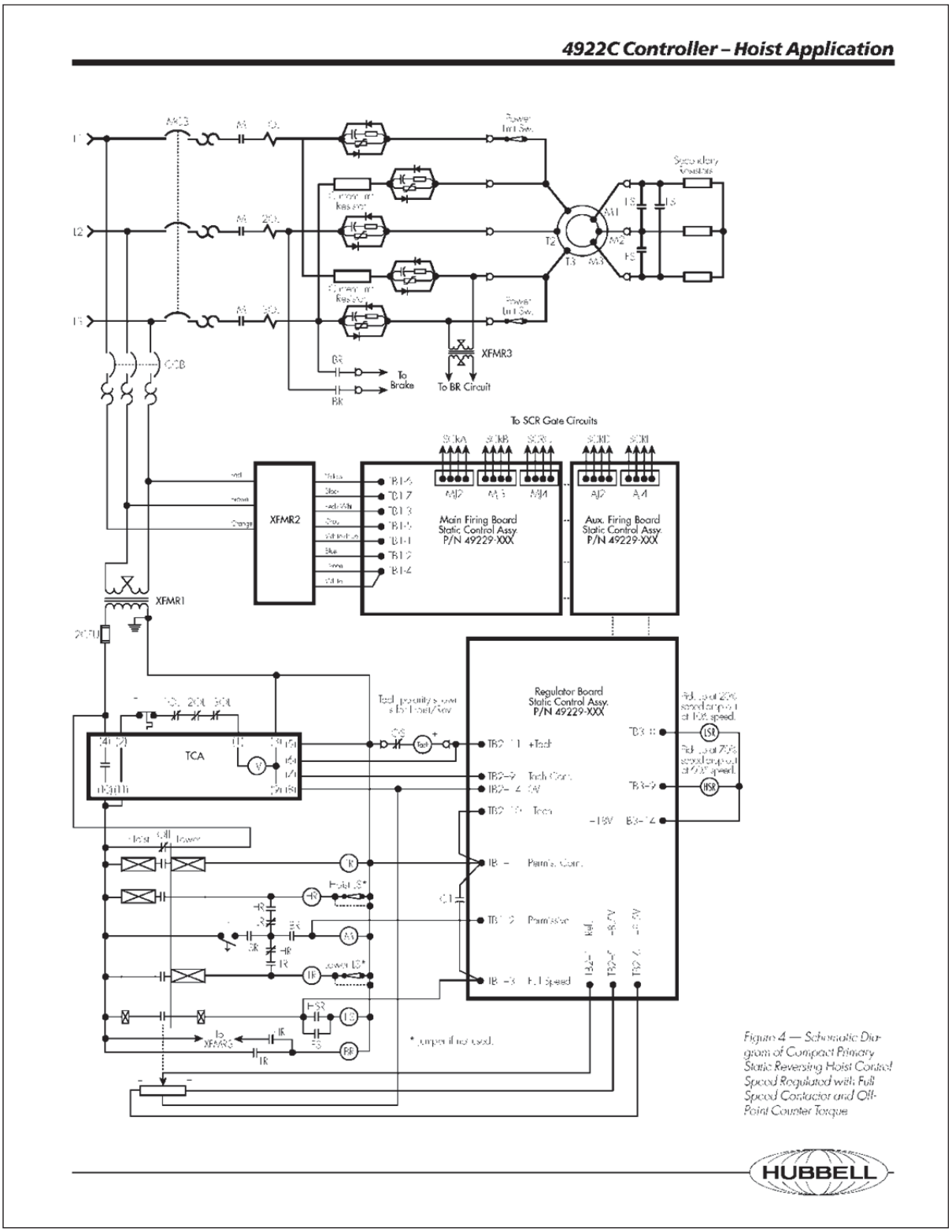

Figure 4 — Schematic Diagram of Compact Primary Static Reversing Hoist Control Speed Regulated with Full Speed Contactor and Off-Point Counter Torque

4922C Controller – Hoist Application

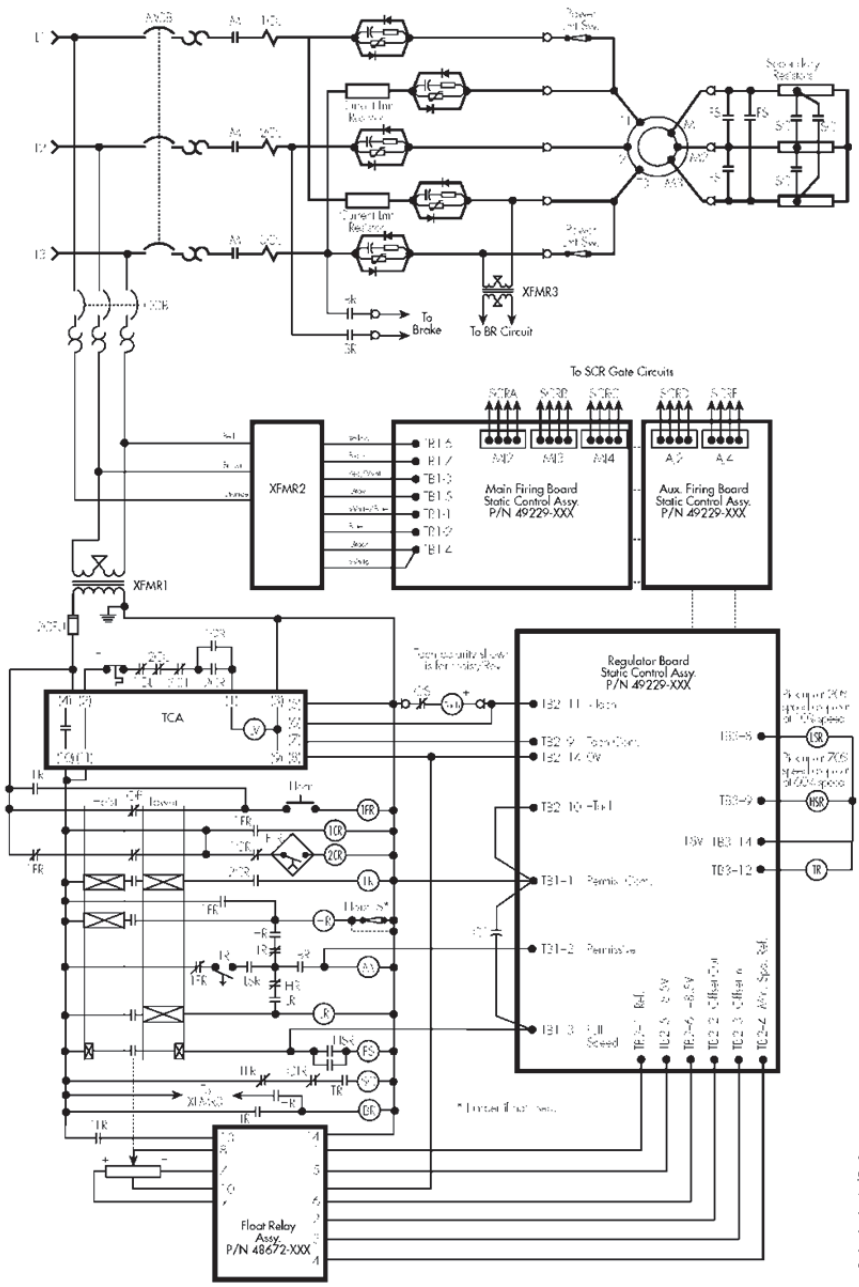

Figure 5 — Schematic Diagram of Compact Primary Static Reversing Hoist Control Speed Regulated with Full Speed Contactor, Extended Slow Speed, and Off-Point Counter Torque and Float

The ramp circuit receives the speed reference signal from the Master Switch or Pendant potentiometer and conditions the signal such that it is allowed to change only at a preset rate. This function provides for controlled acceleration and deceleration.

The speed regulator circuit receives the tachometer signal and compares it to the system speed reference signal from the ramp circuit. If the system speed is below the speed reference level, the output of the speed regulator circuit increases to provide more phase reference signal via the directional command circuit. This increased signal provides more voltage to the motor via the firing circuits and consequently more motor torque to increase system speed. If the system speed is above the speed reference level, the speed regulator output reverses polarity. This action causes the directional command circuit to issue a counter torque command to slow the motor. The resulting counter torque command signal causes the speed regulator circuit to provide a clamped or limited phase reference voltage to the firing circuits to control motor current and torque during the slow down interval.

The directional command circuit receives the bipolar speed error signal and a bipolar tachometer signal from the speed regulator circuit and compares these signals to determine the operational mode of the system motor. The directional command circuit issues a Hoist command signal to activate the Hoist and Common SCR bridges via the delayed directional permissive circuit, or a Lower command signal to activate the Lower and Common SCR bridges in a similar fashion.

The delayed directional permissive circuit receives the directional command signals from the directional command circuit and generates firing circuit permissive signals that are delayed by 4 1/2 cycles of the 60 Hz line. The delay is inserted in the permissive signals to prevent firing circuits that control the previously OFF SCR bridges from turning ON before the SCR bridges which are currently ON have stopped conducting. Shoot through faults are prevented by this delay.

The firing circuits receive the phase reference signal and, along with the synchronizing signals from the three phase synchronizing transformer and the delayed permissive signals from the delayed directional permissive circuit, produce the firing or gating signals required by the SCR bridges.

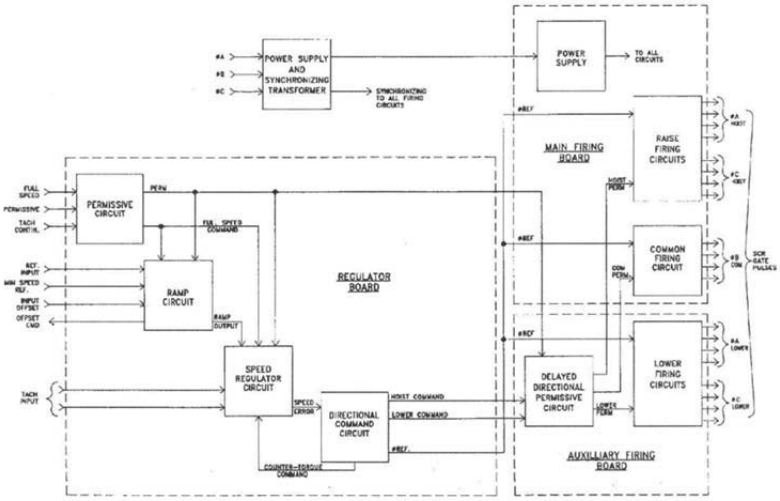

STATIC CONTROL ASSEMBLY
SYSTEM DIAGRAM
FIG. 2.2.1

August 2003 **Page 7**

Instruction Manual 4922C for Cranes

3.0 Specifications

I	**Input Power**	230V or 460V, 3 phase, 60 hz.,
II	**Horsepower Range (at 460V)**	5 - 40HP Compact Construction. 50 - 250 HP with external SCR's.
III	**Speed Range**	Typical 10 to 1 with full speed = 80% sync.
IV	**Speed Regulation**	Better than 1%.
V	**Control Configuration**	Static Reversing
VI	**Temperature Range**	- 40 C to + 55 degree C (typical) - 40 to + 70 degree C (electronics)

3.1 INITIAL SET-UP STATIC CONTROL ASSEMBLY.

The start-up adjustments of the Static Control Assembly involve the setting of the control potentiometers and jumper plugs. Following is a description of these adjustments and their functions. Refer to figure 3.1 for their respective locations.

Permissive Jumper

This jumper has two positions. The left position is the "Set-up" position and allows the ramp circuit adjustments to be made without operating the firing circuits. The right position is the normal "Run" position. In this position the firing circuit permissive signal is active and the firing circuits will operate. Note...with the jumper in the "Set-up" position, the remaining control circuit will be active and holding brakes may be released when direction control commands are issued. To prevent unintended motion, disable the brake control circuit by removing the brake circuit fuses.

Ramp Select Jumper

This jumper has two positions. The upper position, "Internal", is the most common position, and connects the internal ramp signal to the speed regulator circuit. The lower position, "External", is used when the speed regulator circuit is to operate with an outside reference signal such as when two or more drives are to be speed matched from a common ramp signal. Unless the application involves a speed matching function with two or more drives operating in a "Master / Slave" arrangement, place the Ramp Select jumper in the "Internal" position.

RPM Select Jumper

This jumper has five positions, and provides the correct scaling factor for the system tachometer based on the synchronous speed of the driven motor.

The jumper positions available are:

1800 RPM
1200 RPM
900 RPM
720 RPM
600 RPM

For systems not using a Tachometer / Overspeed Switch assembly, place the RPM Select jumper in the corresponding synchronous speed position for the motor used. If

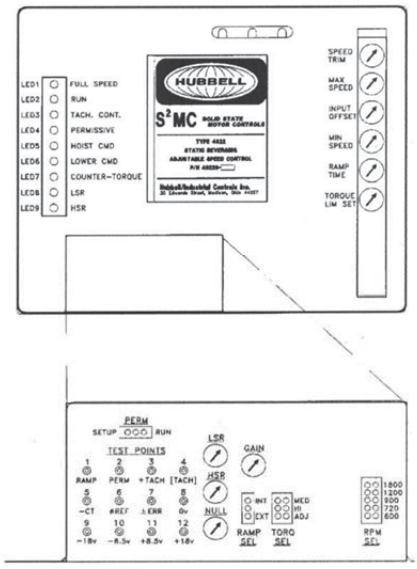

FIG. 3.1

a Tachometer / Overspeed Switch assembly is used, place the RPM Select jumper in the 1200 RPM position. This is necessary because the incorporated tachometer is geared for 1200 RPM operation at motor synchronous speed.

Torque Select Jumper

This jumper is used to select the limited torque value supplied by the motor during counter-torque and plugging operations. The "HI" position, recommended for hoisting applications, limits motor torque to 200% to 250% during counter-torque. The "MED" position limits torque to 150% torque, and the "ADJ" position provides an adjustable range of 50% to 150%. Initially place this jumper in the "HI" position.

Speed Trim Potentiometer

The Speed Trim Potentiometer is used to make fine adjustments in system speed. In typical single motor applications or in multi-motor applications where the motors operate independently, this adjustment should be set to the "50" position. In "Master / Slave" speed matching applications with the Master drive set to the "50" position, this adjustment allows the "Slave" drive to be trimmed to match the speed of the "Master" drive. Initially, set this pot to the "50" position.

Minimum Speed Potentiometer

The Minimum Speed Potentiometer sets the minimum speed signal level out of the ramp circuit. Initially, this potentiometer is set fully counterclockwise to the "0" position.

Maximum Speed Potentiometer

The Maximum Speed Potentiometer determines the amount of scaling that is applied to the input speed reference signal. After the minimum speed signal level has been set, this adjustment will set the full speed level of the input speed reference signal. Initially, this potentiometer is set fully clockwise to the "100" position.

Input Offset Potentiometer

This potentiometer is used to remove residual first point master switch or pendant speed reference signal arising from a speed reference potentiometer without an off-point shorting band. Set this potentiometer fully counterclockwise to the "0" position.

Ramp Time Potentiometer

The Ramp Time potentiometer sets the slope of the output ramp signal to the speed regulator circuit. The adjustment range is from 0.5 seconds at the full counterclockwise position to 10.0 seconds at the full clockwise "100" position. This adjustment determines how quickly the ramp output signal is allowed to increase or decrease. Initially, this potentiometer is set fully counterclockwise to the "0" position.

Torque Limit Set

This potentiometer sets the value of limited motor torque during counter-torque or plugging operations when the torque select jumper, described above, is placed in the "ADJ" position. The adjustment range is from 50% to 150%. Initially, set this potentiometer fully clockwise to the "100" position.

LSR Trim Potentiometer

This adjustment is located directly on the main regulator board and sets the motor speed value above which the "LSR" LED will light, and the LSR relay will pick up. The adjustment range is 5% at full counterclockwise to 25% when fully clockwise. Set this potentiometer mid range.

HSR Trim Potentiometer

This adjustment is located directly on the main regulator board and sets the motor speed value above which the "HSR" LED will light, and the HSR relay will pick up. The adjustment range is 75% at full counterclockwise to 95% when fully clockwise. Set this potentiometer fully counterclockwise.

Gain Potentiometer

This potentiometer is located on the main regulator board and is used to adjust system stability. Initially, set this potentiometer mid range.

Null Potentiometer

This potentiometer is located on the main regulator board and is used to adjust the speed regulator offset. This is a factory adjustment and needs no further attention. Should the setting of this potentiometer be disturbed, return the setting to a mid range position.

3.2 SETUP ADJUSTMENTS

Section 3.1 above described the system adjustments and the initial settings of these adjustments. This section describes the procedure by which the system can be setup. Refer to Figure 3.1 for control adjustment locations.

1. Using a digital voltmeter set to read 20 volts DC, place the black common meter probe tip into test point 8, 0V. The black common lead will remain in this test point for the remainder of the set up procedure.

Place the red meter probe tip into test point 1, Ramp output. For Hoist commands from the master switch or pendant, the output voltage should be positive. For Lower commands, the output should be negative. The following setup will use Lower commands, therefore, a negative voltage on the digital voltmeter is expected.

2. Move the Permissive Jumper from the "Run" position to the "Setup" position. The firing circuits are now disabled. Note.. holding brakes may be released during the remaining setup procedure. To prevent unintended movement, disable the brake control circuit by removing the brake circuit fuses.

3. Close the Control circuit breaker and apply 3 phase system power. The "Tach Continuity" LED should light on the SCA, and the LED on the tach continuity module, if present, should be lit.

4. A typical speed range is 10 to 1 with maximum stepless speed equal to 5.O volts, and minimum speed equal to 0.5 volts. Assuming a typical speed range, proceed as follows:

a. Move the master switch or depress the pendant button until first point lower is obtained. The "Run", "Perm", and "Lower" LEDs should light.

b. Rotate the Input Offset potentiometer clockwise until the digital voltmeter reads 0V.

Instruction Manual 4922C for Cranes

c. Move the master switch in the Lower direction or depress the Lower pendant button until the Full Speed LED lights. Back up from this position until the Full Speed LED just goes out and hold at this point. Adjust the Max Speed potentiometer counterclockwise until a reading of -4.5 volts is obtained on the digital voltmeter. Repeat steps b. and c. until no further adjustments are necessary. Typically, three iterations are required to obtain a 0V reading at first point, and a -4.5V setting at the maximum stepless position.

d. Move the master switch or depress the Lower pendant button until first point Lower is obtained. Rotate the Min Speed potentiometer clockwise until a -0.5V reading is obtained on the digital voltmeter.

e. Move the master switch or depress the Lower pendant button to the last stepless position. The digital voltmeter should read -5.0V.

f. Check the minimum speed and maximum stepless speed points in the Hoist direction. The "Lower" LED should go off and the "Hoist" LED should come on. The digital voltmeter should read +0.5V and +5.0V respectively.

g. Return the master switch or the pendant button to the Off position. The digital voltmeter should indicate 0.0 volts. Determine the required system speed ramp time. The Ramp can provide times to full output from 0.5 seconds to 10 seconds. Rotate the Ramp Time adjustment potentiometer clockwise to the desired time setting. Hoist applications typically use short acceleration times of 0.5 to 2.0 seconds for good response.

5. Determine the relative synchronous speed of the system tachometer. Move the RPM Select jumper to the RPM position corresponding to the tachometer synchronous speed value.

NOTE: When a Hubbell Tachometer/Overspeed Switch Assembly is used, the 1200 RPM range must be selected.

6. Open the Main and Control circuit breakers and remove system power. Move the Permissive Jumper on the regulator board from the "Setup" position to the "Run" position. Restore operation to the holding brake circuit by reinstalling the brake circuit fuses. Close the main and control circuit breakers. The motor control system will now be able to operate the motor.

7. Assuming that the hook is in the UP position, attempt to operate the motor at first point Lower by moving the master switch or by depressing the pendant Lower button. The hook should descend at minimum speed. If the motor appears to be running at full speed, stop the control and reverse the tachometer leads.

8. Observe the operation of the motor to changes in speed reference. This can be accomplished by moving the master switch or pendant button between minimum and mid speed positions. This causes the Ramp output to increase and then decrease. Watch the directional "Lower" and "Hoist" command LEDs for direction command changes and the incandescent lights on the Firing Circuit boards for relative performance and stability. One change in the directional command LEDs is normal indicating the slow down operation. If "back and forth" oscillation of the direction LEDs or repetitive flickering of the Firing Circuit Lights occurs, adjustment of the "Gain" potentiometer on the regulator board will be required. The best performance will be obtained when the Gain potentiometer is adjusted to provide smooth steady response to speed reference changes without repetitive flickering of the firing circuit lights or continued oscillation of the direction command LEDs.

9. Open the Control and Main circuit breakers. This completes the set up of the motor control system.

Hubbell Industrial Controls, Inc.
A subsidiary of Hubbell Incorporated
4301 Cheyenne Dr., Archdale, NC. 27262
Telephone (336) 434-2800 • FAX (336) 434-2803
http://www.hubbell-icd.com
Sales@hubbell-icd.com

CHAPTER 12 - CONTACTS, TELEPHONE NUMBERS AND EMERGENCY CALL OUTS

12.1 CONTACTS AND TELEPHONE NUMBERS

Delaware State Police.....302.739.5901

United States Coast Guard.....757.398.6390

Delaware Department of Transportation (Maintenance).....302.326.4460

Delaware Department of Transportation (General)..... 302.760.2080

Fire Department 302.576.3950

Walnut Street Bridge.....302.577.2663

NOAA (National Oceanic and Atmospheric Administration).....206.526.6317

DelDOT (Maintenance).....302.326.4460

DelDOT (General).....302.760.2080

12.2 EMERGENCY CALL OUT PROCEDURES

During emergency situations, the following procedures and protocols should be followed.

12.2.1 MALFUNCTION (FAILURE TO OPEN OR CLOSE)

During maintenance inspection or marine vessel openings, if the bridge cannot be opened or closed contact order should be as follows:

1) Area 23 Supervisor
2) Area 23 Foreman
3) Delaware State Police (only if traffic needs to be detoured)

12.2.2 DAMAGE TO BRIDGE FROM VESSEL OR VEHICLE

When damage to the bridge is observed or detected, contact order should be as follows:

12.2.2.1 MINOR DAMAGE

When damage will not hamper normal bridge operation, perform the following:

1) Log in log book
2) Notify Area 23 Supervisor or Foreman at earliest convenience.

12.2.2.2 MAJOR DAMAGE

When damage may hamper normal bridge operation, perform the following:

1) Notify Area 23 Supervisor or Foreman immediately.
2) Notify Delaware State Police
3) Log in log book

12.2.3 VEHICLE ACCIDENT OR DISABLED VEHICLE ON BRIDGE

When an accident occurs on the bridge or a disabled vehicle is observed, perform the following:

1) If accident, check about possible injuries, notify Delaware State Police.
2) DO NOT operate the bridge if an accident or disabled vehicle is within the operational area of the bridge.
3) If it is an injury accident before or after operational area of the bridge contact emergency services (911) at the scene before proceeding with an opening.
4) If unable to open the bridge due to an accident or disabled vehicle notify any waiting vessels and the Coast Guard.

12.2.4 MARINE RELATED EMERGENCIES

For a marine related accident or emergency contact the following:

1) US Coast Guard
2) Area 23 Supervisor or Foreman

12.2.5 WEATHER RELATED EMERGENCIES

For weather related accident or emergencies contact the following:

1) Delaware State Police and NOAA
2) Area 23 Supervisor or Foreman

Bridge #1-688

South Market Street Bridge
over Christina River

Prepared by:

Hardesty & Hanover

MAINTENANCE MANUAL – VOLUME II

DelDOT

Prepared for:

AECOM

Published: May 2013

Updated: July 2018 (Replacement Chapter 8)

TABLE OF CONTENTS

CHAPTER 6 - PURPOSE AND SCOPE OF MAINTENANCE MANUAL 6-1
6.1 PURPOSE OF MAINTENANCE MANUAL 6-1
6.2 LAYOUT OF MAINTENANCE MANUAL 6-1
6.3 REFERENCES 6-1

CHAPTER 7 - MAINTENANCE POLICIES 7-1
7.1 INTRODUCTION 7-1
7.2 MAINTENANCE TECHNICIAN TRAINING 7-1
7.2.1 BRIDGE LAYOUT 7-1
7.2.2 BRIDGE OPERATION 7-1
7.2.3 TROUBLESHOOTING AND EMERGENCY SITUATIONS 7-1
7.2.4 BRIDGE MAINTENANCE 7-1
7.3 LOCKOUT/TAGOUT PROCEDURE 7-1
7.4 PERSONAL PROTECTIVE EQUIPMENT 7-1
7.5 MAINTENANCE ACCESS 7-2
7.5.1 CONTROL ROOM 7-2
7.5.2 STORAGE ROOM 7-2
7.5.3 ELECTRICAL/MECHANICAL ROOMS 7-2
7.5.4 SPAN LOCK AND RECEIVING SOCKET PLATFORMS 7-2
7.5.5 SUMP PUMP PLATFORM 7-3
7.5.6 COUNTERWEIGHT PIT 7-3
7.5.7 COUNTERWEIGHT ACCESS PLATFORM 7-3
7.5.8 FENDERS 7-3
7.6 MAINTENANCE OPENINGS 7-3
7.7 MAINTENANCE AND BRIDGE OPERATORS DURING OPENINGS 7-3
7.8 MAINTENANCE FORMS 7-4
7.9 MAINTENANCE REPORTING PROCEDURES 7-4

CHAPTER 8 - ELECTRICAL AND MECHANICAL MAINTENANCE 8-1
8.1 LEAF SUPPORT SYSTEM AND COUNTERWEIGHTS 8-1
8.1.1 TRUNNION BEARINGS 8-1
8.1.2 LIVE LOAD BEARINGS 8-2
8.1.3 COUNTERWEIGHTS 8-3
8.2 SPAN DRIVE MACHINERY 8-3

8.2.1 MOTOR AND MACHINERY BRAKES 8-4
8.2.2 COUPLINGS 8-5
8.2.3 SPEED REDUCERS 8-7
8.2.4 BEARINGS 8-8
8.2.5 OPEN GEARING 8-9
8.2.6 INSTRUMENTATION GEAR BOX 8-11
8.3 SPAN LOCK MACHINERY AND CENTERING EQUIPMENT 8-11
8.3.1 LOCK BAR ACTUATORS, GUIDES AND RECEIVERS 8-11
8.4 TRAFFIC GATES 8-13
8.4.1 BARRIER GATES 8-13
8.4.2 WARNING GATES 8-14
8.5 ELECTRICAL POWER SYSTEMS 8-15
8.5.1 CONTROL ENCLOSURES 8-15
8.5.2 DRIVE CABINETS AND RESISTORS 8-17
8.5.3 PANELBOARDS 8-19
8.5.4 TRANSFORMERS 8-19
8.5.5 STANDBY EMERGENCY GENERATOR RECEPTACLE 8-20
8.5.6 SAFETY (MANUAL TRANSFER) AND DISCONNECT SWITCHES 8-20
8.5.7 ELECTRICAL CONDUCTORS 8-21
8.5.8 DROOP CABLES 8-22
8.5.9 SUBMARINE CABLES 8-23
8.6 LIGHTING SYSTEMS 8-24
8.6.1 NAVIGATION LIGHTS 8-24
8.6.2 INTERIOR/EXTERIOR LIGHTS 8-24
8.6.3 TRAFFIC SIGNALS 8-25
8.6.4 TRAFFIC GATE ARM LIGHTS 8-26
8.7 ELECTRIC MOTORS 8-26
8.7.1 LOCK MOTORS 8-26
8.7.2 MAIN LEAF (SPAN) MOTORS 8-27
8.7.3 AUXILIARY LEAF (SPAN) MOTORS 8-28
8.7.4 TRAFFIC GATE MOTORS 8-30
8.8 CONTROL SYSTEM 8-31
8.8.1 RELAY CABINETS 8-31
8.8.2 CONTROL CONSOLE 8-32
8.8.3 LIMIT SWITCHES & RESOLVERS 8-34

8.8.4 SPEED SWITCHES 8-35
8.9 MISCELLANEOUS EQUIPMENT 8-36
8.9.1 AIR HORN AND AIR COMPRESSORS 8-36
8.9.2 HEATING AND AIR CONDITIONING SYSTEMS 8-37
8.9.3 SUMP PUMPS 8-37
8.9.4 PITS, PLATFORMS, AND WALKWAYS 8-39
8.9.5 CONDUIT SYSTEMS 8-40

CHAPTER 9 - PHOTOS 9-1
9.1 LEAF SUPPORT SYSTEM AND COUNTERWEIGHTS 9-4
9.2 SPAN DRIVE MACHINERY 9-8
9.3 SPAN LOCK MACHINERY AND CENTERING EQUIPMENT 9-13
9.4 TRAFFIC CONTROL DEVICES AND NAVIGATION LIGHTS 9-16
9.5 POWER DISTRIBUTION EQUIPMENT 9-20
9.6 CONTROL EQUIPMENT 9-23
9.7 MISCELLANEOUS EQUIPMENT 9-30

CHAPTER 10 - MAINTENANCE FORMS 10-1
10.1 MECHANICAL AND ELECTRICAL MAINTENANCE CHECKLIST 10-1

CHAPTER 11 - SUPPLEMENTAL INFORMATION AND SPECIFICATIONS 11-1
11.1 COMPONENT IDENTIFICATION CHARTS AND DIAGRAMS 11-3
11.2 MACHINERY LUBRICATION SCHEMATICS 11-6
11.3 MACHINERY LUBRICATION SCHEDULE 11-9
11.4 BRIDGE MAINTENANCE PERFORMANCE STANDARDS (PLATES) 11-12
11.4.1 SLEEVE BEARING AND TRUNNION BEARING LUBRICATION 11-12
11.4.2 MOTOR BEARING LUBRICATION 11-14
11.4.3 MOTOR AND MACHINERY BRAKE MAINTENANCE 11-17
11.4.4 COUPLING LUBRICATION 11-19
11.4.5 SPEED REDUCER LUBRICATION 11-22
11.4.6 OPEN GEARING LUBRICATION 11-25
11.4.7 SPHERICAL ROLLER BEARING 11-27
11.4.8 SPAN LOCK MACHINERY LUBRICATION 11-29
11.5 MATERIAL DATA SHEETS 11-33
11.5.1 MOBIL MOBILUX EP-0, EP-2 11-33
11.5.2 MOBIL MOBILGREASE XHP 462 11-52
11.5.3 MOBIL MOBILTAC 325 NC 11-64

11.5.4 MOBIL UNIREX N2 11-78
11.5.5 MOBIL BEACON 325 11-88
11.5.6 MOBIL MOBILGEAR SHC 150 11-99
11.5.7 MOBIL MOBILGEAR 600 XP 220 11-110
11.5.8 DOW CORNING MOLYKOTE BR2-PLUS 11-122
11.5.9 MOBIL POLYREX EM 11-132
11.5.10 MOBIL DTE 21 11-143
11.5.11 MOBIL SHC 629 11-156
11.5.12 CRC TAC 2 ADHESIVE CHAIN LUBRICANT 11-169
11.5.13 WD-40 SPECIALIST MACHINE AND ENGINE DEGREASER 11-178
11.5.14 PERMATEX GEAR OIL RTV SEALANT 11-187
11.5.15 CAIG LABORATORIES DEOXIT D5 CONTACT CLEANER 11-192
11.6 COMPONENT MANUFACTURER LIST 11-201
11.7 MECHANICAL EQUIPMENT MANUALS AND SPECIFICATIONS 11-205
11.7.1 PRIMARY & FINAL ENCLOSED – FALK SPEED REDUCERS TYPES A & AB 11-205
11.7.2 ENCLOSED BEVEL – FALK SPEED REDUCER TYPE GHB 11-216
11.7.3 AUXILIARY – SUMITOMO GEARMOTOR 11-224
11.7.4 GEAR COUPLING – FALK COUPLING G32 & G52 11-231
11.7.5 GEAR COUPLING – FALK COUPLING GV52 11-239
11.7.6 DISCONNECT COUPLING – FALK COUPLING G72 11-243
11.7.7 MOTOR COUPLING – FALK COUPLING G20 11-251
11.7.8 MOTOR & MACHINERY BRAKE – MONDEL MBTE 11-259
11.7.9 SPAN LOCK ACTUATOR – EARLE GEAR EG-2B 11-293
11.8 TRAFFIC CONTROL EQUIPMENT MANUALS AND SPECIFICATIONS 11-324
11.8.1 BARRIER GATE – B&B ROADWAY VR-7 11-324
11.8.2 WARNING GATE – B&B ROADWAY VT-40A 11-345
11.9 ELECTRICAL EQUIPMENT MANUALS AND SPECIFICATIONS 11-367
11.9.1 DRIVE – HUBBELL 4922C 11-367

CHAPTER 12 - CONTACTS, TELEPHONE NUMBERS AND EMERGENCY CALL OUTS 12-1
12.1 CONTACTS AND TELEPHONE NUMBERS 12-1
12.2 EMERGENCY CALL OUT PROCEDURES 12-1
12.2.1 MALFUNCTION (FAILURE TO OPEN OR CLOSE) 12-1
12.2.2 DAMAGE TO BRIDGE FROM VESSEL OR VEHICLE 12-1
12.2.3 VEHICLE ACCIDENT OR DISABLED VEHICLE ON BRIDGE 12-2
12.2.4 MARINE RELATED EMERGENCIES 12-2

12.2.5 WEATHER RELATED EMERGENCIES..... 12-2

Refer to Volume 1 – Operations Manual for Chapters 1-5

Refer to Volume 3 – As-Built Drawings for Chapters 13-14

CHAPTER 6 - PURPOSE AND SCOPE OF MAINTENANCE MANUAL

6.1 PURPOSE OF MAINTENANCE MANUAL

Schedules and procedures are established for the inspection, replacement, cleaning, adjustment, and general maintenance of the mechanical and electrical equipment used to operate the bridge. The frequency of maintenance is based on recommendations by the manufacturers and guidelines established by AASHTO Movable Bridge Inspection, Evaluation and Maintenance Manual. All maintenance forms and activities are to be recorded and maintained by the Maintenance Supervisor.

6.2 LAYOUT OF MAINTENANCE MANUAL

The maintenance section is divided into subsections that group equipment by type. Each subsection describes an equipment item, the number of such items, location, the maintenance frequency, and describes maintenance procedures. Photo references are included where applicable. Chapter 10 Maintenance Forms are identified for the specific equipment.

6.3 REFERENCES

- AASHTO Movable Highway Bridge Design Specifications
- AASHTO Movable Bridge Inspection, Evaluation, and Maintenance Manual
- South Market Street Bridge Rehabilitation (2004-2006) Operation and Maintenance Manual (Binders 1 thru 3).
- Manual on Uniform Traffic Control Devises (MUTCD)
- Drawbridge Operation Regulations 33CFR Part 117
- National Electrical Code (NEC)
- National Fire Protection Association (NFPA) 70E - Standard for Electrical Safety in the Workplace

THIS PAGE INTENTIONALLY LEFT BLANK

CHAPTER 7 - MAINTENANCE POLICIES

7.1 INTRODUCTION

This chapter describes minimum qualifications for maintenance technicians and provides detailed information for maintenance personnel to properly maintain the bridge in accordance with AASHTO guidelines.

7.2 MAINTENANCE TECHNICIAN TRAINING

Trained maintenance technicians must be familiar with the layout of the bridge and all associated electrical and mechanical equipment and must be trained in the following areas. Training shall be scheduled and conducted by Delaware Department of Transportation.

7.2.1 BRIDGE LAYOUT

Each maintenance technician must be able to locate any piece of equipment of the bridge by name and designation (i.e. NW span lock motor). He or she must have an in-depth understanding of the electrical and mechanical systems and understand the functions of these systems.

7.2.2 BRIDGE OPERATION

Maintenance technicians must be able operate the bridge and all ancillary devices in a safe manner as described herein. Each maintenance technician must be trained on all modes of operation and have a basic understanding of operation of the bridge.

7.2.3 TROUBLESHOOTING AND EMERGENCY SITUATIONS

Maintenance personnel must be trained in emergency situations and be capable to perform troubleshooting as described in this manual. In the event of an emergency, the operator must have knowledge of proper procedures described herein.

7.2.4 BRIDGE MAINTENANCE

Maintenance technicians must be trained in bridge maintenance activities as specified herein.

7.3 LOCKOUT/TAGOUT PROCEDURE

No electrical apparatus or electrically driven apparatus should be worked on while energized. The appropriate circuit breakers and/or disconnect handles for the equipment being worked on shall be locked in the open (off) position and tagged. The appropriate, immediate upstream circuit breaker or protective device should always be used to electrically isolate the equipment. A sign should be posted on the control desk to identify that the devices are tagged out of service. A contact person shall be identified on the tag. All lock-out and tag-out procedure shall meet the requirements of NFPA 70E. Use a voltage meter to check for stray voltage prior to servicing electrical equipment.

7.4 PERSONAL PROTECTIVE EQUIPMENT

Appropriate Personal Protective Equipment (PPE) should be utilized when performing all maintenance tasks. Refer to Section 11.5 “Material Data Sheets” for material information (including MSDS sheets) which indicate recommended PPE when handling specific materials. Appropriate PPE should also be used when working on electrical components.

7.5 MAINTENANCE ACCESS

Maintenance personnel can access the bridge equipment by following the description provided below.

7.5.1 CONTROL ROOM

The control room is located on the upper level of the control house and is accessible from the north side of the approach.

A control desk is installed in the control room, and contains pilot devices and indicating lights to operate traffic signals, leaf motors, warning gates, barrier gates, brakes, and navigation lights.

An auxiliary control station is located adjacent to the control desk for operation of the auxiliary motors.

7.5.2 STORAGE ROOM

The storage room is located on the upper level of the storage house and is accessible from the south side of the approach. The storage room contains the south starter enclosure and maintenance lubricants.

7.5.3 ELECTRICAL/MECHANICAL ROOMS

The north and south electrical/mechanical rooms are respectively located on the lower level of the control house and storage house. A stairway in the control house leads from the control room down to the north electrical/mechanical room; and similarly a stair in the storage house leads down to the south electrical/mechanical room.

The following equipment is located in the north electrical/mechanical room:

- North leaf motors and brakes, rotary cam and brake limit switches and disconnect switches
- North starter cabinets, north relay control cabinet, north span drive cabinet, north submarine termination box
- North primary and secondary drive and motor resistors
- North lighting panelboard and transformer
- Incoming service panel, generator panel, and manual transfer switch.
- Comfort heaters, service lighting, and emergency lighting.

The following equipment is located in the south electrical/mechanical room:

- South leaf motors and brakes, rotary cam and brake limit switches and disconnect switches
- South starter cabinets, north relay control cabinet, north span drive cabinet, north submarine termination box
- South primary and secondary drive and motor resistors
- South lighting panelboard and transformer
- Comfort heaters, service lighting, and emergency lighting.

7.5.4 SPAN LOCK AND RECEIVING SOCKET PLATFORMS

Two span lock platforms are located underneath the east and west side of the north span, and can be accessed through a hatch on the pedestrian walkways. Each span lock platform contains a span lock motor, a span lock disconnect switch, a lock bar, a span lock actuator and electrical enclosure and conduits. The span lock platform also provides access to the span navigation lights.

Similarly, two receiving platforms are located on the east and west side of the south span, and can be accessed through a hatch on each pedestrian walkway. The receiving sockets can be accessed from the receiving platform.

7.5.5 SUMP PUMP PLATFORM

The sump pump platform is located adjacent to the electrical and machinery room located on the lower level of the control house. The following equipment can be accessed from the sump pump platform: Sump pump control panel, fully open limit switch, fully closed limit switch, droop cable terminal boxes, HVAC unit and disconnect switch.

7.5.6 COUNTERWEIGHT PIT

Counterweight pits are located on the lower level of the bascule piers and can be accessed by climbing down the ladder located just outside the electrical/mechanical rooms. Sump pumps are installed in the counterweight pit.

7.5.7 COUNTERWEIGHT ACCESS PLATFORM

The bascule pier access platform is located between the bascule girders, and continues on the non-span drive machinery side towards the counterweight. The bascule pier access platform is accessed via the electrical/mechanical rooms.

An elevated final enclosed reducer accessway is located above the enclosed bevel reducer and extends towards the open gearing that is located on the counterweight. A ladder connects the counterweight access platform to the final enclosed reducer accessway. The counterweight access platform provides access to the trunnion bearings and shafts, the enclosed bevel reducer, the live load bearings, and balance blocks and plates. The final enclosed reducer accessway provides access to the final enclosed reducer and open gearing.

7.5.8 FENDERS

Fenders can be accessed through an exit door in the electrical/mechanical rooms on the lower level of control house and storage house. Fenders provide access to the fender navigation lights.

7.6 MAINTENANCE OPENINGS

For the requirements on maintenance openings, see Chapter 2.

7.7 MAINTENANCE AND BRIDGE OPERATORS DURING OPENINGS

The bridge must be staffed with the following personnel unless otherwise noted during all maintenance openings:

(1) Trained Bridge Operator

(2) Maintenance Technicians (not required for vessel openings)

The bridge operators shall be stationed in the control room level of the operator house. During emergency situations where the bridge and/or ancillary devices malfunction, one of the trained operators shall be capable of relocating to one of the electrical/mechanical rooms as required.

The maintenance technicians shall be stationed in the vicinity of the electrical/mechanical rooms and capable of relocating as directed by the operator.

7.8 MAINTENANCE FORMS

Maintenance personnel are required to complete maintenance forms provided in Chapter 10.

7.9 MAINTENANCE REPORTING PROCEDURES

All Maintenance shall be conducted in accordance with procedures and protocols defined herein and in accordance with the latest edition of the AASHTO Movable Bridge Inspection, Evaluation and Maintenance Manual.

All maintenance activities shall be documented using forms provided in Chapter 10 of this manual. Record copies of maintenance forms shall be kept and filed by the supervisor.

CHAPTER 8 - ELECTRICAL AND MECHANICAL MAINTENANCE

Each section of Chapter 8 is to be used in conjunction with Chapter 11 providing additional details on each component to be maintained.

8.1 LEAF SUPPORT SYSTEM AND COUNTERWEIGHTS

The leaf support system consists of trunnion bearings, live load bearings and counterweights. The following outlines the basic maintenance of these items.

8.1.1 TRUNNION BEARINGS

8.1.1.1 DESCRIPTION

Each trunnion bearing assembly supports the bascule leaves and provides the rotational axis. The outboard trunnion bearings are supported by a trunnion column and the inboard bearings by a trunnion girder.

The trunnion bearings are split sleeve type journal bearings with split pillow blocks. The bearing cap and base are cast steel and the lower bushing is a phosphor bronze alloy. Brass liners of various thicknesses are located between the bearing cap and base for adjustment due to wear of the lower bushing.

Each trunnion bearing has four grease fittings, one in each cap and three in the trunnion shaft.

The pair of trunnion bearings closest to the span drive machinery has shafting, which connects the output of the primary reducer to the input of the enclosed bevel reducer, running through the bore of the trunnion shaft.

Refer to Photos numbered 9.1A and 9.1B.

Refer to Sections 11.1 for component identification and 11.2 for lubrication schematics.

8.1.1.2 NUMBER OF ITEMS AND LOCATION

There are eight trunnion bearings. Four are used to support each bascule leaf. The trunnion assemblies are located in the bascule piers just forward of the leaf counterweights.

8.1.1.3 MAINTENANCE AND SCHEDULE

!!! WARNING !!!

Use EXTREME CARE and ALWAYS REMOVE POWER from all pertinent electrical equipment, which includes multiple power sources, before beginning maintenance. Refer to Section 7.3, "Lockout/Tagout Procedure."

Document completed maintenance tasks on the maintenance checklists included in Appendix B of the Contract.

MONTHLY (Refer to Section 11.4.1 for Bridge Maintenance Performance Standard)	• Purge old grease by pumping new lubricant into the grease fittings. There are four grease fittings per trunnion bearing. Remove excess grease from the inboard and outboard sides of the trunnion bearings after lubricating. The lubricant should be Mobil Mobilux EP-2 grease or equivalent. • Remove any debris that has accumulated on and around the trunnion assemblies and the portions of the bascule girders near the trunnions.

ANNUALLY	• Check housing and supporting frame for signs of corrosion. Clean and spot paint areas of corrosion. • Check housing cap bolts and base bolts for tightness. Tighten loose fasteners. • Observe the trunnion bearings during opening and closing operations of the leaf. Note any unusual movements, binding, or abnormal sounds.

8.1.2 LIVE LOAD BEARINGS

8.1.2.1 DESCRIPTION

The live load bearings react against the live load from traffic. The live load bearing consists of an upper housing with an adjusting screw which contacts the live load bearing plate.

The upper housing is cast steel and the adjusting screw is forged steel. The housing and adjusting screw are mounted to the support beams which are mounted to the web of the trunnion girder and the bascule pier concrete. The bearing plate is mounted to the bascule girder.

The As-Built drawings from the 2003 rehab (Contract # 21-074-07) indicate that the adjusting screws are seized and all live load bearing adjustment are made by shimming the bearing plate.

Refer to Photos numbered 9.1C and 9.1D.

Refer to Sections 11.1 for component identification schematics.

8.1.2.2 NUMBER OF ITEMS AND LOCATION

There are four live load bearings, one located at each bascule girder upper flange behind the trunnion bearing. One live load bearing is accessible outside of the span drive electrical/mechanical room. The other live load bearing is located on the access walkway on the outboard side of the opposite bascule girder.

8.1.2.3 MAINTENANCE AND SCHEDULE

!!! WARNING !!!

Use EXTREME CARE and ALWAYS REMOVE POWER from all pertinent electrical equipment, which includes multiple power sources, before beginning maintenance. Refer to Section 7.3, "Lockout/Tagout Procedure."

Document completed maintenance tasks on the maintenance checklists included in Appendix B of the Contract.

THREE MONTHS	• Check that all live load bearings are in contact with their bearing plates when the span is closed and the span locks are driven. There should be no movement of the live load bearing plate when heavy traffic loads cross the span. • Clean debris from all supporting members and plates.

SIX MONTHS	• Remove debris from the area surrounding the connection of the live load anchor to concrete foundation. • Clean and spot paint areas of corrosion to the live load bearing assembly and support beam. The live load bearing components shall be painted using the paint system specified by the DelDOT Standard Specifications for painting existing structural steel.
ANNUALLY	• Check that all fasteners are tight. Tighten loose fasteners. • Check the contacting surfaces between the adjusting screw and bearing plate for deformations and wear. There should be no corrosion on the contact areas of the adjusting screw and plate. If corrosion is present, clean the bearing surfaces.

8.1.3 COUNTERWEIGHTS

8.1.3.1 DESCRIPTION

The counterweights are concrete masses that balance the weight of the bascule leaves forward of the trunnion center lines.

Each counterweight has two pockets located on the front face where balance blocks can be placed. Each counterweight also has anchor bolts on the outboard side of the bascule girders and bolts secured to the top flange of the bascule girders for balance block adjustments.

Refer to Photos numbered 9.1E, 9.1F, and 9.1G.

8.1.3.2 NUMBER OF ITEMS AND LOCATION

There are a total of two counterweights, one on each bascule leaf located behind the trunnion bearings.

8.1.3.3 MAINTENANCE AND SCHEDULE

!!! WARNING !!!

Use EXTREME CARE and ALWAYS REMOVE POWER from all pertinent electrical equipment, which includes multiple power sources, before beginning maintenance. Refer to Section 7.3, "Lockout/Tagout Procedure."

Document completed maintenance tasks on the maintenance checklists included in Appendix B of the Contract.

ANNUALLY	• Check counterweight balance block locations for proper drainage and clean out debris. • From the counterweight pit floor and platforms/walkways, visually check the counterweight concrete for spalling, cracks, and signs of structural distress. • Check for shifting of balance blocks. Neatly restack blocks or plates that have fallen over or shifted out of position.

8.2 SPAN DRIVE MACHINERY

The span drive machinery for each leaf is located in the span drive electrical/mechanical room on the bascule piers and within the bascule piers. Span drive machinery for each leaf consists of one 100 HP electric motor, one 15 HP auxiliary gear motor with a gear ratio of 11:1, three brakes, three speed reducers,

spur gear set, rack and pinion, shaft bearings, couplings and shafts. Each AC motor has a full load torque of 437 lb-ft at a speed of 1200 RPM, and full load current is 163 Amperes.

8.2.1 MOTOR AND MACHINERY BRAKES

8.2.1.1 DESCRIPTION

The motor brakes are used to brake the span for normal and emergency stopping of the span during bridge operations. The machinery brakes are used to hold the span in any position and in emergency stopping.

The motor and machinery brakes were manufactured by Mondel and are electric shoe brakes.

Both the motor and machinery brake model numbers are 10MBTE-ED30/5SH. The motor brake has a 10" diameter brake wheel with a braking torque of 225 ft-lbs. The machinery brake has a 10" diameter brake wheel with a braking torque of 280 ft-lbs. All motor and machinery brakes are spring set and electro-hydraulically released, as commanded by the bridge control system.

Refer to Photos numbered 9.2A, 9.2B, 9.2C, and 9.2D.

Refer to Sections 11.1 for component identification and 11.2 for lubrication schematics.

8.2.1.2 NUMBER OF ITEMS AND LOCATION

Each leaf is equipped with a total of three brakes, two motor brakes and one machinery brake.

One of the motor brakes is located between the main leaf motor coupling and the primary reducer housing. The other motor brake is located at the rear of the main leaf motor.

The machinery brake is located between the auxiliary motor disconnect coupling and the primary reducer.

8.2.1.3 MAINTENANCE AND SCHEDULE

!!! WARNING !!!

Use EXTREME CARE and ALWAYS REMOVE POWER from all pertinent electrical equipment, which includes multiple power sources, before beginning maintenance. Refer to Section 7.3, "Lockout/Tagout Procedure."

Document completed maintenance tasks on the maintenance checklists included in Appendix B of the Contract.

GENERAL	• In the event that brakes require the following items, refer to the Manufacturer's Operation and Maintenance Manuals for detailed instructions. • Brake actuator repairs shall be performed by a Mondel authorized specialist. The brake frames shall be adjusted by the Contractor.
MONTHLY	• Perform brake test. Refer to Section 4.11 for the brake test procedure.

ANNUALLY (Refer to Section 11.4.3 for Bridge Maintenance Performance Standard)	• Inspect brake shoes and brakewheel for wear, dust, dirt, grease and proper adjustment. Check the brake pad thickness. Notify the Engineer if the remaining thickness is less than 1/16 inch. • Check clearance between the brake shoes and brakewheel. The measured gap shall have a minimum of $^{1}/_{64}$ inch clearance between brake shoe and brakewheel when hand released. If the brake pads remain in contact with the brakewheel when hand released, observe the brake during operation of the span. A brakewheel that is warm or hot on the braking surface after bridge operation may indicate that the pads are not clear of the brakewheel when released. Check and adjust the reserve stroke and brake torque after any linkage adjustment. Refer to Section 11.7.7 for brake adjustment procedures. • Inspect mechanical linkages for wear, broken parts and tightness of nuts and bolts. Check for freedom of moving parts (no binding or sticking). • Check for excessive heating of parts evident by discoloration of metal parts. • Check operations of the brake during test operations of the bridge. Check for any unusual odor and excessive vibration. • Check the brake housing and linkages for evidence of water dripping on brake and corrosion. • Check adjustment of limit switches and hand release devices and adjust for proper operation. • Check for possible wear of the automatic adjustment mechanism. • Check brake actuator reserve stroke is approximately 0.6 inches $^{+}/_{-}$ $^{1}/_{16}$ inch. The automatic adjustment mechanism is designed to maintain the appropriate reserve stroke as the brake pads wear. If the minimum reserve stroke is not maintained, contact the manufacturer. • Check the brake torque setting. The brake torque is read by matching the top of the spring-block to the corresponding torque value on the scale. • Check for loose brake terminations. Tighten loose connections. • During winter months, verify that the brake pads are not frozen to the brakewheel.

8.2.2 COUPLINGS

8.2.2.1 DESCRIPTION

Each coupling transfers torque from one shaft to another.

Gear couplings, which are manufactured by Falk, are used to transmit the torque in the span drive machinery. Four of the gear couplings are type G52, two are type GV52, one is type G32, and one is type G72.

Falk gear couplings have one grease fitting and one purge plug located in the coupling cover.

Helical couplings, manufactured by Helical Products Company, are used to connect the instrumentation equipment to the span drive machinery. The helical couplings do not require lubrication.

Refer to Photos numbered 9.2A, 9.2B, 9.2C, 9.2D, 9.2E, 9.2F, 9.2G, 9.2I, and 9.2J.

Refer to Sections 11.1 for component identification and 11.2 for lubrication schematics.

8.2.2.2 NUMBER OF ITEMS AND LOCATION

The span drive machinery for each leaf has eight gear couplings. A double engagement gear coupling (type G20) connects the main leaf motor shaft to the primary reducer input shaft. The disconnect coupling (type G72) connects the auxiliary gear motor shaft to the primary reducer input shaft. There are three single engagement gear couplings (type G52) that connect shafts from the primary reducer to the enclosed bevel reducer with a spacer coupling (type G32) at the input shaft of the enclosed bevel reducer. There are also two single engagement gear couplings (type GV52) that connect a floating shaft to the output of the enclosed bevel reducer and the input of the final enclosed reducer.

Helical couplings are used to connect the main leaf motor rear output shaft to the limit switch gear box. The limit switch gear box connects the tachometer and the two overspeed switches to the rear of the main motor via helical couplings. A helical coupling is also used to connect the span position rotary cam limit switch to the output shaft of the primary reducer.

8.2.2.3 MAINTENANCE AND SCHEDULE

!!! WARNING !!!

Use EXTREME CARE and ALWAYS REMOVE POWER from all pertinent electrical equipment, which includes multiple power sources, before beginning maintenance. Refer to Section 7.3, "Lockout/Tagout Procedure."

!!! WARNING !!!

Do not disassemble couplings unless shafts are properly supported.

Document completed maintenance tasks on the maintenance checklists included in Appendix B of the Contract.

MONTHLY	• Inspect key and keyways at all couplings for grease leakage, tightness and cracking. Check coupling flange bolts for corrosion and tightness. Tighten loose fasteners. • Inspect for leaks at seals and gaskets. If the seal is leaking, inspect for damage. Notify the Engineer if the seal is damaged. • Inspect helical couplings for damage.
SIX MONTHS (Refer to Section 11.4.4 for Bridge Maintenance Performance Standard)	• For gear couplings, purge lubricant and replace with new Mobil Mobilux EP-0 or equivalent. • Visually inspect couplings for relative movement between coupling components during operation of the span drive machinery.
ANNUALLY (Refer to Section 11.4.4 for Bridge Maintenance Performance Standard)	• For manual disconnect couplings, lubricate the shifting collar with Dow Corning Molykote BR2-PLUS or equivalent. • Manually test the clutch to ensure it properly engages and disengages the auxiliary motor disconnect coupling.

8.2.3 SPEED REDUCERS

8.2.3.1 DESCRIPTION

Each primary, enclosed bevel and final enclosed speed reducer is operated to increase torque and reduce speed from the input shaft to the output shaft through internal gearing.

The primary, enclosed bevel and final enclosed reducers were designed and manufactured by Falk. The primary reducer is a parallel shaft reducer and has a gear ratio of 5.59:1. The enclosed bevel and final enclosed reducers are right angle reducers with gear ratios of 1.481:1 and 17.040:1, respectively. Name plates for each reducer have serial numbers specific to each particular unit that should be referenced if inquiries to the manufacturers are ever required (Refer to Section 11.6 "Component Manufacturer List" for recorded nameplate information).

The primary, enclosed bevel, final enclosed reducers are oil lubricated enclosed speed reducers. The input and output shaft bearings require grease lubrication from the grease fitting located at the top of the seal cage assembly.

The auxiliary gear motor was manufactured by Sumitomo and has a gear ratio of 11:1. Refer to Section 8.7.3 "Auxiliary Leaf (Span) Motors" for the auxiliary gear motor maintenance requirements.

Refer to Photos numbered 9.2A, 9.2B, 9.2C, 9.2E, 9.2G, 9.2H, and 9.2I.

Refer to Sections 11.1 for component identification and 11.2 for lubrication schematics.

8.2.3.2 NUMBER OF ITEMS AND LOCATION

There is one primary reducer, one enclosed bevel reducer, one final enclosed reducer, and one auxiliary gear motor on each leaf. The primary reducer and gear motors are located in the electrical/mechanical room. The enclosed bevel reducers are located adjacent to the fixed walkway in the bascule pier. The final enclosed reducer is located on the counterweight.

8.2.3.3 MAINTENANCE AND SCHEDULE

!!! WARNING !!!

Use EXTREME CARE and ALWAYS REMOVE POWER from all pertinent electrical equipment, which includes multiple power sources, before beginning maintenance. Refer to Section 7.3, "Lockout/Tagout Procedure."

Document completed maintenance tasks on the maintenance checklists included in Appendix B of the Contract.

MONTHLY (Refer to Section 11.4.5 for Bridge Maintenance Performance Standard)	• Listen for unusual noises during operation of the machinery. • Before operating the leaf, check the oil level using the dip stick at each speed reducer. Add make up oil if the oil level is below the low level mark on the dip stick. • Inspect breather for damage. Replace if damaged.

SIX MONTHS (Refer to Section 11.4.5 for Bridge Maintenance Performance Standard)	• Lubricate speed reducer bearings with Mobil Mobilux EP-2 or equivalent.
ANNUALLY	• Check for excessive leakage at the seals. • Check fasteners for tightness. Tighten loose fasteners.
TWO YEARS (Refer to Section 11.4.5 for Bridge Maintenance Performance Standard)	• Replace oil in the speed reducer housings with Mobil Mobilgear SHC 150 or equivalent. • Replace the speed reducer breathers. Write the installation date on the new breathers.

8.2.4 BEARINGS

8.2.4.1 DESCRIPTION

Each bearing supports the span drive machinery shafting throughout the mechanical system. Spherical roller bearings and sleeve type journal bearings support the span drive machinery shafting.

The spherical roller bearings were manufactured by SKF. A grease fitting is located in the bearing cap and six purge plugs are located in the housing base.

The sleeve bearing housings contains a bronze bushing secured to the cap and base. A grease fitting is located in the bearing cap and grease is purged through the shaft/bushing interface. Laminated brass liners are located between the bearing cap and base to accommodate or wear of the bronze bushing.

Refer to Photos numbered 9.2C, 9.2D, 9.2F, 9.2G, 9.2H, and 9.2I.

Refer to Sections 11.1 for component identification and 11.2 for lubrication schematics.

8.2.4.2 NUMBER OF ITEMS AND LOCATION

There are a total of five bearings used to support the various shafts in the span drive machinery. One spherical roller bearing supports the shaft exiting the final enclosed reducer on the counterweight. Two sleeve bearings support the main pinion shaft in the open gear frame, located on the counterweight, one sleeve bearing supports the output shaft of the primary reducer, located in the electrical/mechanical room, and one sleeve bearing supports the shaft located between the trunnion and enclosed bevel reducer, located adjacent to the fixed walkway in the bascule pier.

8.2.4.3 MAINTENANCE AND SCHEDULE

!!! WARNING !!!

Use EXTREME CARE and ALWAYS REMOVE POWER from all pertinent electrical equipment, which includes multiple power sources, before beginning maintenance. Refer to Section 7.3, "Lockout/Tagout Procedure."

Document completed maintenance tasks on the maintenance checklists included in Appendix B of the Contract.

MONTHLY (Refer to Section 11.4.1 for Bridge Maintenance Performance Standard)	Sleeve Bearings	• Fill with new grease to completely purge the bearing of the existing grease. Remove excess purged grease. Use Mobil Mobilux EP-2 or equivalent
THREE MONTHS (Refer to Section 11.4.7 for Bridge Maintenance Performance Standard)	Spherical Roller Bearings	• For the spherical roller bearings, add replenishment grease. Use Mobil Mobilgrease XHP-462 or equivalent.
ANNUALLY		• Check bearing cap and base fasteners for tightness. Tighten loose fasteners.
TWO YEARS (Refer to Section 11.4.7 for Bridge Maintenance Performance Standard)	Spherical Roller Bearings	• Replace spherical roller bearings lubricant. Use Mobil Mobilgrease XHP 462 or equivalent

8.2.5 OPEN GEARING

8.2.5.1 DESCRIPTION

Each open gear set increases torque and reduces rotational speed to operate the bridge.

A pinion located on the output shaft of the final enclosed reducer mates with a spur gear located on the main pinion shaft. The pinion on the output shaft of the final enclosed reducer is a 20 tooth spur gear with a 22.282 inch pitch diameter and 20° full depth involute tooth profile with a 13.5 inch face width. The mating

gear is a 48 tooth spur gear with a 53.476 inch pitch diameter and 20° full depth involute tooth profile with a 10 inch face width. The pinion and spur gear are made of American Society for Testing and Materials (ASTM) A291 Class 7 forged steel with a Brinell hardness of 320-370.

The main pinion is a 15 tooth spur gear with a 26.261 inch pitch diameter and 20° stub involute tooth profile with a face width of 17 inches. The mating rack is an 80 tooth rack with a 600 inch pitch diameter, and 20° stub involute tooth profile with a face width of 11 $^{15}/_{16}$". The main pinion is made of ASTM A291 Class 7 forged steel with a Brinell hardness of 320-370. The rack segments are made of ASTM A148 Class 160-145 steel casting with a Brinell hardness of 260-310.

All open gearing is lubricated with a grease that must be brushed onto the gear teeth manually.

Refer to Photos numbered 9.2G and 9.2H.

Refer to Sections 11.1 for component identification and 11.2 for lubrication schematics.

8.2.5.2 NUMBER OF ITEMS AND LOCATION

Each leaf has one main rack and pinion set and one spur gear and pinion set located on the counterweight.

The main pinion shaft is supported in sleeve bearings. The racks are fastened to structural steel which is partially embedded in the concrete bascule pier. The pinion shaft at the output of the final enclosed reducer is supported by the spherical roller bearing.

8.2.5.3 MAINTENANCE AND SCHEDULE

!!! WARNING !!!

Use EXTREME CARE and ALWAYS REMOVE POWER from all pertinent electrical equipment, which includes multiple power sources, before beginning maintenance. Refer to Section 7.3, "Lockout/Tagout Procedure."

Document completed maintenance tasks on the maintenance checklists included in Appendix B of the Contract.

MONTHLY (Refer to Section 11.4.6 for Bridge Maintenance Performance Standard)	• Lubricate teeth using Mobil Mobiltac 325 NC or equivalent grease.
ANNUALLY (Refer to Section 11.4.6 for Bridge Maintenance Performance Standard)	• Replace open gear lubricant using Mobil Mobiltac 325 NC or equivalent. • Verify that fasteners connecting the rack to the rack support are secure and free of corrosion. Tighten loose fasteners. Clean and spot paint areas of corrosion on the rack support and fasteners. • Inspect keys and keyways for tightness and cracking. • Observe the open gearing during raising and lowering operations. Note excessive vibrations, binding, and unusual noises.

8.2.6 INSTRUMENTATION GEAR BOX

8.2.6.1 DESCRIPTION

Each instrumentation gear box transfers the rotational speed from the main leaf motor to the instrumentation components via three output shafts.

The instrumentation gear box was manufactured by Hub City, Inc. The gear box model no. is M3 and type GG with a 1:1 gear ratio.

The gear box has four shafts with the input shaft connected to the rear output shaft of the main leaf motor and output shafts connected to a pair of overspeed switches and a tachometer.

The gear box is oil lubricated.

Refer to Photo numbered 9.2J.

Refer to Sections 11.1 for component identification and 11.2 for lubrication schematics.

8.2.6.2 NUMBER OF ITEMS AND LOCATION

There are two instrumentation gear boxes. One gear box is located on each leaf and connected to the main leaf motor rear output shaft.

8.2.6.3 MAINTENANCE AND SCHEDULE

!!! WARNING !!!

Use EXTREME CARE and ALWAYS REMOVE POWER from all pertinent electrical equipment, which includes multiple power sources, before beginning maintenance. Refer to Section 7.3, "Lockout/Tagout Procedure."

Document completed maintenance tasks on the maintenance checklists included in Appendix B of the Contract.

ANNUALLY	• Flush limit switch gear box oil and replace with Mobil Mobilgear 600 XP 220 or equivalent.

8.3 SPAN LOCK MACHINERY AND CENTERING EQUIPMENT

The span lock machinery is located at the toe of the north bascule leaf and provides a locking mechanism and transfers live loads (traffic loads) between the near and far leaves of the bridge's bascule span. There is one span lock system on both the east and west sides of the bridge. Each span lock system is comprised of an actuator, lock bar, guide, and receiving socket.

Refer to Photo numbered 9.3A for span lock machinery access identification.

8.3.1 LOCK BAR ACTUATORS, GUIDES AND RECEIVERS

8.3.1.1 DESCRIPTION

The span lock machinery electrically operates a lock bar that provides a locking mechanism and transfers live load between the two bascule leaves.

The span lock machinery consists of an Earle Gear actuator manufactured by Steward Machine Company. The actuator is a single unit that consists of an electric motor and internal gearing that converts electrical power into linear motion.

The lock bar actuator retracts and extends a lock bar through the guide and into and out of the receiving socket. The guide supports the lock bar when it is in the retracted position.

The receiving socket is a steel weldment which contains an upper and lower bronze bushing which is fastened to the receiving socket. The guide is a steel weldment with a steel guide to support the lock bar.

Each receiving socket and guide have one grease fitting in the top and bottom that supplies grease to the sliding surfaces of the socket and guide. The lock bar requires grease to be brushed onto the sliding surfaces of the lock bar.

The lock bar actuator contains a gear housing that has a fill plug located at the top of the housing and a drain plug located at the bottom of the housing. There is also a pipe for the actuator stem that requires lubrication.

Refer to Photos numbered 9.3A, 9.3B, 9.3C, 9.3D, and 9.3E.

Refer to Sections 11.1 for component identification and 11.2 for lubrication schematics.

8.3.1.2 NUMBER OF ITEMS AND LOCATION

There are two span lock systems on the bridge, with each one having a lock bar actuator, lock bar, receiving socket and guide. The lock bar actuators are mounted to the outboard side of the north leaf bascule girder web (one on the east side and one on the west). The guides are mounted to the north leaf sidewalk support and bascule girder web. The receiving sockets are mounted to the south leaf sidewalk support and bascule girder web.

8.3.1.3 MAINTENANCE AND SCHEDULE

!!! WARNING !!!

Use EXTREME CARE and ALWAYS REMOVE POWER from all pertinent electrical equipment, which includes multiple power sources, before beginning maintenance. Refer to Section 7.3, "Lockout/Tagout Procedure."

Document completed maintenance tasks on the maintenance checklists included in Appendix B of the Contract.

MONTHLY (Refer to Section 11.4.8.1 for Bridge Maintenance Performance Standard)	• Remove existing lubricant and brush or swab the lock bar sliding surfaces with Mobil Mobilux EP-2 or equivalent. • Apply grease to the grease fittings for all guides and receiving sockets. There are two fittings, one at the top and one at the bottom, at each guide and receiving socket for a total of eight grease ports. Wipe off excess grease. Use Mobil Mobilux EP-2 grease or equivalent. • Visually inspect guides and sockets, lock bars, fasteners and shims for damage. With traffic on the span, observe the lock bars, guides, and receiving sockets for relative vertical movement, resulting in the lock bars impacting the top or bottom of the guide or receiving socket sliding surfaces.

SIX MONTHS (Refer to Section 11.4.8.1 for Bridge Maintenance Performance Standard)	• Remove grease from stem guide pipe and replace with Mobil Beacon 325 grease or equivalent. Refer to Chapter 11 for the lubrication schematics and schedule for details. • Remove grease in the lock bar operator and replace with Mobil Beacon 325 grease or equivalent. Refer to Chapter 11 for the lubrication schematics and schedule for details.
ANNUALLY	• Check the guide, socket, and actuator fasteners for tightness. Tighten loose fasteners. • The socket and guide housings shall be checked for cracking (Refer to Photos 9.3C and 9.3D). Inspect the areas where the housing changes shape (flange radii). One way a crack is observed is a thin line of corrosion emanating from the stress concentrations (flange radii). • Check sockets, guides, and actuator housings for paint failure. Clean flaking paint from components and spot paint areas of corrosion.

8.4 TRAFFIC GATES

Traffic gates are comprised of barrier gates and warning gates located on the approaches and are used to stop traffic prior to a bridge opening.

8.4.1 BARRIER GATES

8.4.1.1 DESCRIPTION

Barrier gates signal oncoming traffic to stop for a bridge opening. The gate support stand is mounted adjacent to the roadway.

Refer to Photos numbered 9.4A, 9.4E, 9.4F, and 9.4G.

Refer to Section 11.1 for component identification, Section 11.2 for lubrication schematic, Section 11.6 for component manufacturers list, and Section 11.8.1 for the manufacturer's manual.

8.4.1.2 NUMBER OF ITEMS AND LOCATION

There are two barrier gates on the bridge, both located on the north side of the bridge.

8.4.1.3 MAINTENANCE AND SCHEDULE

!!! WARNING !!!

Use EXTREME CARE and ALWAYS REMOVE POWER from all pertinent electrical equipment, which includes multiple power sources, before beginning maintenance. Refer to Section 7.3, "Lockout/Tagout Procedure."

Document completed maintenance tasks on the maintenance checklists included in Appendix B of the Contract.

GENERAL	• The barrier gates are outfitted with a shear pin connecting the crank arm with the locking hook that is intended to fail if the gate is impacted by a vehicle. Spare pins should be available in the event of a failure. Additional pins can be obtained from the gate manufacturer. Replacement of a failed shear pin requires tightening a nut onto the shear pin. Use nylon insert lock nuts. Hand-tighten the nut with a small wrench; the nut should not be heavily tightened. The shear pin should be able to rotate when turned by hand or with a small wrench after tightening. The gate should not be operated with a failed pin, if not otherwise restrained. • Adjustment of the open and closed position limits is achieved through adjustment of the rotary cam limit switches.
SIX MONTHS	• Check the transmission oil level. If oil is low, check seals for evidence of leaks and refill. If oil is cloudy or dirty, purge from the drain port, flush, and refill. Use Mobil SHC 629. • Lubricate gate arm pivot shaft bearings, side latch pivot shaft bearings, and all rod ends until clean grease is purged from the bearing or rod end. Use Mobil Mobilux EP-2. • Lubricate the rotary cam limit switch roller chain with CRC TAC 2 Adhesive Chain Lubricant or equivalent. • Check the roller chain tension. The chain should not be slack. Tighten chain if it is loose.
ANNUALLY	• Check the clutch for slipping during operation of the barrier gate. • Check hardware for damage and corrosion. Replace damaged hardware. • Check electrical connections and tighten loose connections. • Remove excess grease, oil and debris from equipment. • Check barrier gate housing for corrosion. Clean and spot paint areas of corrosion on the housing. • Check condition of gaskets and replace if damaged.

8.4.2 WARNING GATES

8.4.2.1 DESCRIPTION

Warning gates signal on and off going traffic to stop for a bridge opening. The gate support stand is mounted adjacent to the roadway.

Refer to Photos numbered 9.4A, 9.4B, 9.4C, and 9.4D.

Refer to Section 11.1 for component identification, Section 11.2 for lubrication schematic, Section 11.6 for component manufacturers list and Section 11.8.2 for the manufacturer's manual.

8.4.2.2 NUMBER OF ITEMS AND LOCATION

There are four warning gates. Two are located on both the north and south sides of the bascule span.

8.4.2.3 MAINTENANCE AND SCHEDULE

!!! WARNING !!!

Use EXTREME CARE and ALWAYS REMOVE POWER from all pertinent electrical equipment, which includes multiple power sources, before beginning maintenance. Refer to Section 7.3, "Lockout/Tagout Procedure."

Document completed maintenance tasks on the maintenance checklists included in Appendix B of the Contract.

GENERAL	• The warning gates are outfitted with a shear pin that is intended to fail if the gate is impacted by a vehicle. Spare pins should be available in the event of a failure. Additional pins can be obtained from the gate manufacturer. Replacement of a failed shear pin requires tightening a nut onto the shear pin. Use a nylon insert lock nut. Hand-tighten the nut with a small wrench; the nut should not be heavily tightened. The shear pin should be able to rotate when turned by hand or with a small wrench after tightening. The gate should not be operated with a failed pin, if not otherwise restrained. • Adjustment of the open and closed position limits is achieved through adjustment of the rotary cam limit switches. When the gate is in its fully stowed position, the gate arm should rest within the saddle.
SIX MONTHS	• Visually inspect the MOV actuator for electrical / mechanical damage. • Lubricate shaft bearings and rod ends until clean grease is purged from the bearing or rod end. Use Mobil Mobilux EP-2 or equivalent.
ANNUALLY	• Check hardware for damage and corrosion. Replace damaged hardware. • Check electrical connections and tighten loose connections. • Remove excess grease, oil and debris from equipment. • Check gate housing for corrosion. Clean and spot paint areas of corrosion on the housing. • Check condition of gaskets and replace if damaged.

8.5 ELECTRICAL POWER SYSTEMS

8.5.1 CONTROL ENCLOSURES

8.5.1.1 DESCRIPTION

The control enclosures include starter cabinets, an incoming service panel, a generator panel, and heat trace enclosures. The starter cabinets house motor controllers, relays, over-current protection, and metering equipment.

Refer to Photos numbered 9.5A, 9.5B, 9.6A, 9.6B, and 9.7D.

8.5.1.2 NUMBER OF ITEMS AND LOCATION

There are two starter cabinets. The north starter cabinet is located in the north electrical/mechanical room. The south starter cabinet is located in storage room of the south house. One incoming service panel and one generator panel are located in the north electrical/mechanical room. One heat trace enclosure is located on each north barrier gate platform.

8.5.1.3 MAINTENANCE AND SCHEDULE

!!! WARNING !!!

Use EXTREME CARE and ALWAYS REMOVE POWER from all pertinent electrical equipment, which includes multiple power sources, before beginning maintenance. Refer to Section 7.3, Lockout/Tagout Procedure.

Document completed maintenance tasks on the maintenance checklists included in Appendix B of the Contract.

THREE MONTHS	• Open and clean with a vacuum cleaner. • Remove accumulation of dirt, grease, and gum with DeoxIT D5 contact cleaner or equivalent. • Check for corrosion and moisture. • Examine connections for poor or loose connections and evidence of overheating. • Lubricate door hinges and latches. • Check circuit breaker disconnects for proper operation. • Inspect terminal block screws and hand tighten loose connections. • Inspect wiring from unit terminal blocks for deterioration of insulation. • Inspect all circuit breakers. Verify with a meter that continuity is broken on trip or switch off conditions. With the circuit breaker in the OFF position, use a multimeter to measure the current and voltage on the load side conductors. The multimeter should read 0 amps and 0 volts. • Check all starter contacts. Note when nearly all the silver tip is gone and the contact tip support is exposed. Do not file the contacts. Filing or otherwise dressing the contacts only results in lost tip material and reduces starter life. • Inspect all fuses with a meter and verify continuity. For fuse replacement, always install the same type and rating fuses furnished with the motor control center. Evolution in fuse design has produced fuses that are mechanically equivalent but not electrically equivalent. They may not have the same short-circuit withstand ability and current limiting ability. • Inspect fuse clips for dirt and verify that the clips provide a tight fit. • Verify enclosure lights turn on when doors are open. Replace burned out bulbs. • Verify enclosure heaters are functioning properly. • Check the condition of gaskets and replace if damaged.

ANNUALLY	• Check for discolored connections on terminals, contact supports, bus bars, or connectors. Discoloration usually indicates that overheating has occurred, probably because of loose connections. Clean connection points that are discolored. Tighten all loose hardware. Check wires and connectors for damage. • Operate the motor controller/contactor without load (turn circuit breakers off) and observe contact operation to be sure it opens and closes cleanly and that the contacts are fully sealed in the closed position. In order to manually operate a motor controller/contactor without load, remove power to the MCC cabinet and with a non-conductive object, press the button the motor controller/contactor. The button is usually located on the front or bottom of the housing. • Operate the motor controller/contactor under load and check for loud noise and arcing, both on opening and on closing. A loud noise and arcing on closing is usually due to contact bounce. • Measure and record current draw on load side of contactor. An elevated reading may indicate poor connection. If the recorded current (excluding the current at startup) exceeds the full load current on the motor name plate, notify bridge management.

8.5.2 DRIVE CABINETS AND RESISTORS

8.5.2.1 DESCRIPTION

Drive Cabinets are free standing enclosures which house the leaf motor drive, control relays, contactors, circuit breakers, fuses, and terminal blocks.

Refer to Photo numbered 9.6C.

8.5.2.2 NUMBER OF ITEMS AND LOCATION

Each electrical/mechanical room contains a single drive. One primary resistor and one secondary resistor are located in each electrical/mechanical room.

8.5.2.3 MAINTENANCE AND SCHEDULE

!!! WARNING !!!

Use EXTREME CARE and ALWAYS REMOVE POWER from all pertinent electrical equipment, which includes multiple power sources, before beginning maintenance. Refer to Section 7.3, "Lockout/Tagout Procedure."

Document completed maintenance tasks on the maintenance checklists included in Appendix B of the Contract.

THREE MONTHS	• Open and clean with a vacuum cleaner. • Remove accumulation of dirt, grease, and gum with DeoxIT D5 contact cleaner or equivalent. • Check for corrosion and moisture. • Lubricate door hinges and latches. • Inspect terminal block screws and hand tighten loose connections. • Inspect wiring from unit terminal blocks for deterioration of insulation. • Inspect all circuit breakers. Verify with a meter that continuity is broken on trip or switch off conditions. With the circuit breaker in the OFF position, use a multimeter to measure the current and voltage on the load side conductors. The multimeter should read 0 amps and 0 volts. • Inspect all fuses with a meter and verify continuity. For fuse replacement, always install the same type and rating fuses furnished with the motor control center. Evolution in fuse design has produced fuses that are mechanically equivalent but not electrically equivalent. They may not have the same short-circuit withstand ability and current limiting ability. • Inspect all relays and tighten loose connections. • Verify enclosure heaters are functioning. • Verify enclosure lights turn on when doors are open. Replace burned out bulbs.
ANNUALLY	• Check the condition of filters. Replace dirty or damaged filters. • Verify enclosure fan is functioning. • Check for discolored connections on terminals, contact supports, bus bars, or connectors. Discoloration usually indicates that overheating has occurred, probably because of loose connections. Clean connection points that are discolored. Tighten all loose hardware. • Operate the motor controller/contactor without load (turn circuit breakers off) and observe contact operation to be sure it opens and closes cleanly and that the contacts are fully sealed in the closed position. In order to manually operate a motor controller/contactor without load, remove power to the MCC cabinet and with a non-conductive object, press the button the contact. The button is usually located on the front or bottom of the housing. • Operate the motor controller/contactor normally (under load) from the control desk during a vessel or maintenance opening and check for loud noise and arcing, both on opening and on closing. A loud noise and arcing on closing is usually due to contact bounce. • Measure and record current draw on load side of contactor. Elevated reading may indicate poor connection. If the recorded current (excluding the current at startup) exceeds the full load current on the motor name plate, notify bridge management. • Open and clean resistor enclosure with a vacuum cleaner. • Check hardware for corrosion. • Check condition of gaskets and replace if damaged.
FIVE YEARS	• Replace the general purpose plug-in ice cube style relays.

8.5.3 PANELBOARDS

8.5.3.1 DESCRIPTION

Lighting panels, also known as panelboards, are assemblies of bus bars and main/branch circuit breakers. The circuit breakers provide over-current protection as well as a means of turning on and off electrical distribution circuits.

Refer to Photo numbered 9.5F.

8.5.3.2 NUMBER OF ITEMS AND LOCATION

One lighting panelboard is located in each electrical/mechanical room.

8.5.3.3 MAINTENANCE AND SCHEDULE

!!! WARNING !!!

Use EXTREME CARE and ALWAYS REMOVE POWER from all pertinent electrical equipment, which includes multiple power sources, before beginning maintenance. Refer to Section 7.3, "Lockout/Tagout Procedure."

Document completed maintenance tasks on the maintenance checklists included in Appendix B of the Contract.

ANNUALLY	• Open and clean with a vacuum cleaner. • Remove accumulation of dirt, grease, and gum with DeoxIT D5 contact cleaner or equivalent • Check for moisture and corrosion. Replace corroded hardware. • Examine bus bar connections for poor or loose connections and evidence of overheating. If necessary, pop out, but do no disconnect the circuit breakers. • Lubricate door hinges and latches. • Inspect all circuit breakers. Verify with a meter that continuity is broken on trip or switch off conditions. With the circuit breaker in the OFF position, use a multimeter to measure the current and voltage on the load side conductors. The multimeter should read 0 amps and 0 volts. • Measure resistance to ground at each panelboard using a ground test kit. Verify resistance is 25 ohms or less.

8.5.4 TRANSFORMERS

8.5.4.1 DESCRIPTION

Transformers are electrical devices that change the electrical power source by either changing the voltage or improving the power distribution. The purpose of the lighting transformers is to change the voltage from 480V or 208V to 120V in order to provide single phase power to lights and other small electrical equipment.

Refer to Photos numbered 9.5E and 9.5F.

8.5.4.2 NUMBER OF ITEMS AND LOCATION

One lighting transformer is located in each electrical/mechanical room for lighting and heating circuits.

8.5.4.3 MAINTENANCE AND SCHEDULE

!!! WARNING !!!

Use EXTREME CARE and ALWAYS REMOVE POWER from all pertinent electrical equipment, which includes multiple power sources, before beginning maintenance. Refer to Section 7.3, "Lockout/Tagout Procedure."

Document completed maintenance tasks on the maintenance checklists included in Appendix B of the Contract.

ANNUALLY	• Open and clean with vacuum cleaner. • Check for corrosion and moisture. Replace corroded hardware. • Verify all hardware is secure. Tighten loose fasteners. • Check transformer components (terminals, insulation, etc.) for evidence of overheating.

8.5.5 STANDBY EMERGENCY GENERATOR RECEPTACLE

8.5.5.1 DESCRIPTION

A standby emergency generator receptacle is provided to supply to the bridge through a portable emergency generator in the event of a power failure.

Refer to Photo numbered 9.5D.

8.5.5.2 NUMBER OF ITEMS AND LOCATION

There is one generator receptacle located outside of the control house.

8.5.5.3 MAINTENANCE AND SCHEDULE

!!! WARNING !!!

Use EXTREME CARE and ALWAYS REMOVE POWER from all pertinent electrical equipment, which includes multiple power sources, before beginning maintenance. Refer to Section 7.3, "Lockout/Tagout Procedure."

Document completed maintenance tasks on the maintenance checklists included in Appendix B of the Contract.

ANNUALLY	• Using an off-site portable generator, start and run the bridge for one complete opening using the auxiliary gear motors. • Visually inspect the generator receptacle and associated equipment for wear or damage.

8.5.6 SAFETY (MANUAL TRANSFER) AND DISCONNECT SWITCHES

8.5.6.1 DESCRIPTION

Switches are devices for making, breaking, or changing connections in an electric circuit under the conditions of the load for which it is rated. There are various types of switches; some of the more common are main circuit breakers and motor disconnect switches.

Refer to Photos numbered 9.5C, 9.6D, and 9.6E.

8.5.6.2 NUMBER OF ITEMS AND LOCATION

Numerous switches are located throughout the bridge and are individually mounted as main circuit breakers, disconnect switches, and motor disconnect switches. One manual transfer switch is located in the north electrical / mechanical room adjacent to the incoming service panel.

8.5.6.3 MAINTENANCE AND SCHEDULE

!!! WARNING !!!

Use EXTREME CARE and ALWAYS REMOVE POWER from all pertinent electrical equipment, which includes multiple power sources, before beginning maintenance. Refer to Section 7.3, "Lockout/Tagout Procedure."

!!! WARNING !!!

Use proper personal protective equipment when working on energized equipment. Arc flash and other dangers are present and may result in injury or death.

Document completed maintenance tasks on the maintenance checklists included in Appendix B of the Contract.

GENERAL	• When replacing contacts or other current-carrying parts, clean surfaces that are to be bolted together.
ANNUALLY	• Remove accumulation of dirt, grease, and gum with DeoxIT D5 contact cleaner or equivalent. • Check for corrosion and moisture. Replace corroded hardware. • Examine for excessive heating of parts, discoloration of metal parts, charred insulation, odor, or blistering. • Check for freedom of moving parts. • Check for worn or broken mechanical parts. • Tighten loose mountings and connections. • Check contacts for wear and pitting. • Check for excessive arcing. • Check condition of gaskets (for dust-tight or watertight units). Replace damaged gaskets. • For fused units, inspect all circuit breakers. Verify with a meter that continuity is broken on trip or switch off conditions. With the circuit breaker in the OFF position, use a multimeter to measure the current and voltage on the load side conductors. The multimeter should read 0 amps and 0 volts. • Test the manual transfer switch with operation of the portable generator.

8.5.7 ELECTRICAL CONDUCTORS

8.5.7.1 DESCRIPTION

Conductors may be stranded single-conductor or multiple-conductor cable.

8.5.7.2 NUMBER OF ITEMS AND LOCATION

Numerous electrical conductors are located throughout the bridge.

8.5.7.3 MAINTENANCE AND SCHEDULE

!!! WARNING !!!

Use EXTREME CARE and ALWAYS REMOVE POWER from all pertinent electrical equipment, which includes multiple power sources, before beginning maintenance. Refer to Section 7.3, "Lockout/Tagout Procedure."

Document completed maintenance tasks on the maintenance checklists included in Appendix B of the Contract.

ANNUALLY	• Visually inspect terminations and splices for cracks, deterioration, corrosion, discoloring, or any other abnormalities. • Check tightness at each conductor termination at each terminal box. Tighten loose connections. • Check the strain relief fittings for signs of distress. • Inspect wires and electrical cables for grease and oil contamination, fraying, abrasions, sweating, cracked, melted or overheated blue tinted insulation. Clean the insulation of moisture, grease and oil after removing power sources if present.

8.5.8 DROOP CABLES

8.5.8.1 DESCRIPTION

Droop cables are flexible electrical conductors that are routed from the fixed portion of the bascule pier to the movable bascule span equipment.

These cables carry power and control conductors to equipment located on the span (navigation lights, service lighting, and span lock equipment).

Refer to Photos numbered 9.6F and 9.6G.

8.5.8.2 NUMBER OF ITEMS AND LOCATION

Droop cables and associated termination cabinets are located outside each electrical/mechanical room.

8.5.8.3 MAINTENANCE AND SCHEDULE

!!! WARNING !!!

Use EXTREME CARE and ALWAYS REMOVE POWER from all pertinent electrical equipment, which includes multiple power sources, before beginning maintenance. Refer to Section 7.3, "Lockout/Tagout Procedure."

Document completed maintenance tasks on the maintenance checklists included in Appendix B of the Contract.

ANNUALLY	• Visually inspect terminations and splices for cracks, deterioration, corrosion, discoloring, or any other abnormalities. • Check tightness of each conductor termination at each terminal box. Tighten loose connections. • Check the strain relief fittings for signs of distress. • Check cables for any wear or abrasions on the outer jacket. • Inspect wires and electrical cables for grease and oil contamination, fraying, abrasions, sweating, cracked, melted or overheated blue tinted insulation. Clean the insulation of moisture, grease and oil after removing power sources if present.

8.5.9 SUBMARINE CABLES

8.5.9.1 DESCRIPTION

Submarine cables are electrical conductors routed from the control house underneath the river to the storage house to distribute power and control to the various electrical/mechanical components. The submarine cable system consists of conduit and wire (single conductor wire and shielded signal cables) and multiple termination points located in the electrical/mechanical rooms.

Refer to Photo numbered 9.6H

8.5.9.2 NUMBER OF ITEMS AND LOCATION

The following submarine cables and associated termination cabinets on the bridge are located as follows:

- Bridge control submarine cables (1) – One located beneath the riverbed and into the bascule piers.
- Power submarine cables (1) – One located beneath the riverbed and into the bascule piers.
- Termination boxes/cabinets (2) – One located in each electrical/mechanical room.

8.5.9.3 MAINTENANCE AND SCHEDULE

!!! WARNING !!!

Use EXTREME CARE and ALWAYS REMOVE POWER from all pertinent electrical equipment, which includes multiple power sources, before beginning maintenance. Refer to Section 7.3, "Lockout/Tagout Procedure."

Document completed maintenance tasks on the maintenance checklists included in Appendix B of the Contract.

ANNUALLY	• Visually inspect terminations and splices for cracks, deterioration, corrosion, discoloring, or any other abnormalities. • Check tightness of each conductor termination at each terminal box. Tighten loose connections. • Check the strain relief fittings for signs of distress. • Visually inspect the submarine cable and watch for signs of cracks, deterioration and discoloration of the cable jacket.

8.6 LIGHTING SYSTEMS

8.6.1 NAVIGATION LIGHTS

8.6.1.1 DESCRIPTION

Pier lights are red lighting fixtures. Their function is to enhance visibility of the piers and locate the channel for marine vessels.

The red/green bascule span pendulum navigation lights are divided fixtures, with portions that are red and portions that are green. When both leafs are fully open, the four outboard lights located at the toes of each leaf turn from red to green. When either leaf is not fully open, all pendulum lights are red.

Refer to Photo numbered 9.4H.

8.6.1.2 NUMBER OF ITEMS AND LOCATION

Three red fender lights are located on each fender ring. There are four bascule span pendulum navigation lights.

8.6.1.3 MAINTENANCE AND SCHEDULE

!!! WARNING !!!

Use EXTREME CARE and ALWAYS REMOVE POWER from all pertinent electrical equipment, which includes multiple power sources, before beginning maintenance. Refer to Section 7.3, "Lockout/Tagout Procedure."

Document completed maintenance tasks on the maintenance checklists included in Appendix B of the Contract.

MONTHLY	• Check navigation lights for proper operation. • Replace lamps if damaged or nonfunctional.
ANNUALLY	• Check gaskets and replace if damaged. • Tighten loose connections. • Check for corrosion of metal parts. Replace corroded hardware. • Check for worn or broken mechanical parts. Check for cracked lenses. • Replace lamps

8.6.2 INTERIOR/EXTERIOR LIGHTS

8.6.2.1 DESCRIPTION

Various light fixtures are mounted throughout the bridge. Lighting panelboards are located in the electrical/mechanical rooms to feed the lights.

Refer to Photos numbered 9.7E, 9.7F, 9.7G, and 9.7H.

8.6.2.2 NUMBER OF ITEMS AND LOCATION

There are numerous lights located throughout the bridge in the enclosed rooms, platforms, ladders, and catwalks.

8.6.2.3 MAINTENANCE AND SCHEDULE

!!! WARNING !!!

Use EXTREME CARE and ALWAYS REMOVE POWER from all pertinent electrical equipment, which includes multiple power sources, before beginning maintenance. Refer to Section 7.3, Lockout/Tagout Procedure.

Document completed maintenance tasks on the maintenance checklists included in Appendix B of the Contract.

MONTHLY	• Check for burned-out lamps. Replace burned out bulbs. Verify light switches function properly.
ANNUALLY	• Clean luminaire lenses, interior surfaces, and weep holes (where applicable). • Check gaskets for damage and cracks. Replace damaged gaskets. • Tighten loose connections. • Inspect for corrosion of metal parts. Clean and spot paint corroded components. • Check parts for wear or damage.

8.6.3 TRAFFIC SIGNALS

8.6.3.1 DESCRIPTION

Traffic signals caution roadway and pedestrian traffic before and during periods of span operation.

Refer to Photo numbered 9.4A.

8.6.3.2 NUMBER OF ITEMS AND LOCATION

There are two three section-red traffic signals on each on-coming approach mounted to a signal pole ahead of the warning gates. The lights turn from off to red flashing before each opening.

8.6.3.3 MAINTENANCE AND SCHEDULE

!!! WARNING !!!

Use EXTREME CARE and ALWAYS REMOVE POWER from all pertinent electrical equipment, which includes multiple power sources, before beginning maintenance. Refer to Section 7.3, "Lockout/Tagout Procedure."

Document completed maintenance tasks on the maintenance checklists included in Appendix B of the Contract.

MONTHLY	• Check lights for proper illumination and replace burned out bulbs. • Verify proper operation during marine and maintenance openings.
ANNUALLY	• Clean all reflectors, lenses and spot paint heads.

8.6.4 TRAFFIC GATE ARM LIGHTS

8.6.4.1 DESCRIPTION

Gate arm lights caution roadway traffic before and during periods of span operation.

Refer to Photos numbered 9.4D and 9.4G.

8.6.4.2 NUMBER OF ITEMS AND LOCATION

There are red flashing gate arm lights mounted on the four warning gate arms and two barrier gate arms.

8.6.4.3 MAINTENANCE AND SCHEDULE

!!! WARNING !!!

Use EXTREME CARE and ALWAYS REMOVE POWER from all pertinent electrical equipment, which includes multiple power sources, before beginning maintenance. Refer to Section 7.3, "Lockout/Tagout Procedure."

Document completed maintenance tasks on the maintenance checklists included in Appendix B of the Contract.

MONTHLY	• Check traffic gate arm lights for proper operation. Replace burned out bulbs.
SIX MONTHS	• Check gate arm lights and wiring for damage.

8.7 ELECTRIC MOTORS

8.7.1 LOCK MOTORS

8.7.1.1 DESCRIPTION

The electric lock motors transform electric power to mechanical power to drive and pull the lock bars.

Refer to Photo numbered 9.3B.

Refer to Sections 11.1 for component identification and 11.2 for lubrication schematic.

8.7.1.2 NUMBER OF ITEMS AND LOCATION

The north leaf contains two 1 ½ HP span locks motors. One span lock motor is located on each span lock platform located at the toe of the north leaf.

8.7.1.3 MAINTENANCE AND SCHEDULE

!!! WARNING !!!

Use EXTREME CARE and ALWAYS REMOVE POWER from all pertinent electrical equipment, which includes multiple power sources, before beginning maintenance. Refer to Section 7.3, "Lockout/Tagout Procedure."

DO NOT USE WATER TO HOSE DOWN THE MOTOR HOUSING

Document completed maintenance tasks on the maintenance checklists included in Appendix B of the Contract.

ANNUALLY (Refer to Section 11.4.2 for Bridge Maintenance Performance Standard)	Motors	• Check for leakage around bearings. Clean off excess grease and dirt using a rag and WD-40 Specialist Machine and Engine Degreaser or equivalent. • Verify that shaft end-play is normal. • Inspect and tighten loose electrical connections on the motor. • Verify that all keys, bolts, and pins are in their proper position. Check all bolts for tightness. If loose, tighten. • During operation, examine motor for smooth running and absence of vibration. • During operation, check motor and bearings for overheating. • Lubricate span lock motor bearings with Mobil Polyrex EM or equivalent. • Check painted surface for signs of corrosion. Clean and spot paint areas of corrosion. Do not paint nameplates. • Check the phase currents flowing in motors under loaded conditions with a clamp-on ammeter for all motors. Utilize a true RMS ammeter. Compare the measured current with the nameplate data. Record values in the "Notes" sections of the maintenance checklist.
	Solenoid Brakes	• Check electrical connections. Tighten loose connections. • Check components for wear or damage. Check for loose fasteners. Tighten loose fasteners. Check for freedom of moving parts (parts are free of binding and sticking). • Check for excessive heating of parts evidenced by discoloration of metal parts, charred insulation, or odor. Check for collections of dirt or gum, evidence of water dripping, or corrosion. Clean the components of dirt, gum, water, and corrosion. • Observe the brake during operation of the span locks. Check for excessive vibration or unusual noise during operation.
FIVE YEARS		• Clean and paint the motors. Do not paint nameplates.

8.7.2 MAIN LEAF (SPAN) MOTORS

8.7.2.1 DESCRIPTION

The main leaf motors transform electric power to mechanical power to raise and lower each leaf.

Refer to Photos numbered 9.2A, 9.2C, and 9.2J.

Refer to Sections 11.1 for component identification and 11.2 for lubrication schematic.

8.7.2.2 NUMBER OF ITEMS AND LOCATION

Each electrical/mechanical room contains one main leaf motor.

8.7.2.3 MAINTENANCE AND SCHEDULE

!!! WARNING !!!

Use EXTREME CARE and ALWAYS REMOVE POWER from all pertinent electrical equipment, which includes multiple power sources, before beginning maintenance. Refer to Section 7.3, "Lockout/Tagout Procedure."

DO NOT USE WATER TO HOSE DOWN THE MOTOR HOUSING

Document completed maintenance tasks on the maintenance checklists included in Appendix B of the Contract.

ANNUALLY (Refer to Section 11.4.2 for Bridge Maintenance Performance Standard)	• Check for leakage around bearings. Clean of excess grease and dirt using a rag and WD-40 Specialist Machine and Engine Degreaser or equivalent. • Verify that shaft end-play is normal. • Inspect and tighten loose electrical connections on the motor. • Verify that all keys, bolts, and pins are in their proper position. Check all bolts for tightness. If loose, tighten. • During operation, examine motor for smooth running and absence of vibration. • During operation, check motor and bearings for overheating. • Lubricate main leaf motor bearings with Mobil Unirex N2 or equivalent. • Check painted surface for signs of corrosion. Clean and spot paint areas of corrosion. Do not paint nameplates. • Check the phase currents flowing in motors under loaded conditions with a clamp-on ammeter for all motors. Utilize a true RMS ammeter. Compare the measured current with the nameplate data. Record values in the "Notes" sections of the maintenance checklist.
FIVE YEARS	• Clean and paint the motors. Do not paint nameplates.

8.7.3 AUXILIARY LEAF (SPAN) MOTORS

8.7.3.1 DESCRIPTION

The auxiliary gear motors transform electric power to mechanical power to raise and lower each leaf at a reduced speed if failure of the main leaf motor occurs.

Refer to Photos numbered 9.2C, 9.2D, and 9.2I.

Refer to Sections 11.1 for component identification and 11.2 for lubrication schematic.

8.7.3.2 NUMBER OF ITEMS AND LOCATION

There are two auxiliary gear motors. One auxiliary gear motor is located in each electrical/mechanical room.

8.7.3.3 MAINTENANCE AND SCHEDULE

!!! WARNING !!!

Use EXTREME CARE and ALWAYS REMOVE POWER from all pertinent electrical equipment, which includes multiple power sources, before beginning maintenance. Refer to Section 7.3, "Lockout/Tagout Procedure."

DO NOT USE WATER TO HOSE DOWN THE MOTOR HOUSING

Document completed maintenance tasks on the maintenance checklists included in Appendix B of the Contract.

ANNUALLY	Gear Motors	• Check for leakage around bearings. Clean of excess grease and dirt using a rag and WD-40 Specialist Machine and Engine Degreaser or equivalent. • Verify that shaft end-play is normal. • Inspect and tighten loose electrical connections on the motor. • Verify that all keys, bolts, and pins are in their proper position. Check all bolts for tightness. If loose, tighten. • During operation, examine motor for smooth running and absence of vibration. • During operation, check motor and bearings for overheating. • Check painted surface for signs of corrosion. Clean and spot paint areas of corrosion. Do not paint nameplates. • Check the phase currents flowing in motors under loaded conditions with a clamp-on ammeter for all motors. Utilize a true RMS ammeter. Compare the measured current with the nameplate data. Record values in the "Notes" sections of the maintenance checklist.
	Solenoid Brakes	• Check electrical connections. Tighten loose connections. • Check components for wear or damage. Check for loose fasteners. Tighten loose fasteners. Check for freedom of moving parts (parts are free of binding and sticking). • Check for excessive heating of parts evidenced by discoloration of metal parts, charred insulation, or odor. Check for collections of dirt or gum, evidence of water dripping, or corrosion. Clean the components of dirt, gum, water, and corrosion. • Observe the brake during operation of the auxiliary gear motor. Check for excessive vibration or unusual noise during operation.
TWO YEARS		• Replace gear motor oil in reducer. Clean around fill hole located on top of the speed reducer portion of the gear motor. Speed reducer section is located at the front of the gear motor. Place basin below drain plug located at the bottom of the speed reducer. Remove drain plug to drain oil from the housing. Flush reducer housing to remove contaminants. Reinstall drain plug. Fill reducer housing with Mobil Mobilgear SHC 150 or equivalent to the proper level indicated on the sight glass. Reinstall fill cap.
FIVE YEARS		• Clean and paint the motors. Do not paint nameplates.

8.7.4 TRAFFIC GATE MOTORS

8.7.4.1 DESCRIPTION

The electric motors for the barrier gates and warning gates transform electric power to mechanical power to operate each traffic gate. Each gate motor is provided with a solenoid brake to provide holding torque on the specific device.

Refer to Photos numbered 9.4B, 9.4C, and 9.4F.

Refer to Sections 11.1 for component identification and 11.2 for lubrication schematic.

8.7.4.2 NUMBER OF ITEMS AND LOCATION

Traffic gates and their locations are as follows:

- $^1/_6$ HP warning gate motors (4) – One located inside each warning gate housing.
- 1 HP barrier gate motors (2) – One located inside each barrier gate housing.

8.7.4.3 MAINTENANCE AND SCHEDULE

!!! WARNING !!!

Use EXTREME CARE and ALWAYS REMOVE POWER from all pertinent electrical equipment, which includes multiple power sources, before beginning maintenance. Refer to Section 7.3, "Lockout/Tagout Procedure."

DO NOT USE WATER TO HOSE DOWN THE MOTOR HOUSING

Document completed maintenance tasks on the maintenance checklists included in Appendix B of the Contract.

ANNUALLY	Motors	• Check for leakage around bearings. Clean of excess grease and dirt using a rag and WD-40 Specialist Machine and Engine Degreaser or equivalent. • Verify that shaft end-play is normal. • Inspect and tighten loose electrical connections on the motor. • Verify that all keys, bolts, and pins are in their proper position. Check all bolts for tightness. If loose, tighten. • During operation, examine motor for smooth running and absence of vibration. • During operation, check motor and bearings for overheating. • Check painted surface for signs of corrosion. Clean and spot paint areas of corrosion. Do not paint nameplates. • Check the phase currents flowing in motors under loaded conditions with a clamp-on ammeter for all motors. Utilize a true RMS ammeter. Compare the measured current with the nameplate data. Record values in the "Notes" sections of the maintenance checklist.

	Solenoid Brakes	• Check electrical connections. Tighten loose connections. • Check components for wear or damage. Check for loose fasteners. Tighten loose fasteners. Check for freedom of moving parts (parts are free of binding and sticking). • Check for excessive heating of parts evidenced by discoloration of metal parts, charred insulation, or odor. Check for collections of dirt or gum, evidence of water dripping, or corrosion. Clean the components of dirt, gum, water, and corrosion. • Observe the brake during operation of the traffic gates. Check for excessive vibration or unusual noise during operation.

8.8 CONTROL SYSTEM

8.8.1 RELAY CABINETS

8.8.1.1 DESCRIPTION

Relay cabinets are free standing cabinets which house motor control relays, contactors, circuit breakers, fuses, power supplies and terminal blocks.

Refer to Photo numbered 9.6I

8.8.1.2 NUMBER OF ITEMS AND LOCATION

Each electrical/mechanical room contains two relay cabinets.

8.8.1.3 MAINTENANCE AND SCHEDULE

!!! WARNING !!!

Use EXTREME CARE and ALWAYS REMOVE POWER from all pertinent electrical equipment, which includes multiple power sources, before beginning maintenance. Refer to Section 7.3, "Lockout/Tagout Procedure."

Document completed maintenance tasks on the maintenance checklists included in Appendix B of the Contract.

THREE MONTHS	• Open and clean with a vacuum cleaner. • Remove accumulation of dirt, grease, and gum with DeoxIT D5 contact cleaner or equivalent. • Check for corrosion and moisture. • Lubricate door hinges and latches. • Inspect terminal block screws and tighten loose connections. • Inspect wiring from unit terminal blocks for deterioration of insulation. • Inspect all circuit breakers. Verify with a meter that continuity is broken on trip or switch off conditions. With the circuit breaker in the OFF position, use a multimeter to measure the current and voltage on the load side conductors. The multimeter should read 0 amps and 0 volts. • Inspect all fuses with a meter and verify continuity. For fuse replacement, always install the same type and rating fuses furnished with the relay control cabinet. Evolution in fuse design has produced fuses that are mechanically equivalent but not electrically equivalent. They may not have the same short-circuit withstand ability and current limiting ability. • Inspect all relays and tighten loose connections. • During operation, verify each relay lamp turns on. Replace non-operational bulbs. • Verify enclosure heaters are functioning. • Verify enclosure lights turn on when doors are open. Replace burned out bulbs. • Check the condition of gaskets and replace if damaged.
ANNUALLY	• Check for discolored connections on terminals, contact supports, bus bars, or connectors. Discoloration usually indicates that overheating has occurred, probably because of loose connections. Clean connection points that are discolored. Tighten all loose hardware. Check wires and connectors for heat damage. • Manually operate each relay and contactor with associated circuit breakers off and observe contact operation to be sure it opens and closes cleanly and that the contacts are fully sealed in the closed position. In order to manually operate a relay/contactor without load, remove power to the cabinet and with a non-conductive object, press the button the contact. The button is usually located on the front or bottom of the housing. • Monitor relay and contactor operation during normal operation and check for loud noise and arcing during opening and closing operations. A loud noise and arcing on closing is usually due to contact bounce.

8.8.2 CONTROL CONSOLE

8.8.2.1 DESCRIPTION

The control console is fabricated from an individual free standing cabinet which houses indicating lights, selector switches, pushbuttons, meters, control relays, contactors, circuit breakers, fuses, and terminal blocks.

Refer to Photos numbered 9.6J and 9.6K.

8.8.2.2 NUMBER OF ITEMS AND LOCATION

The main control console is located in the Control House (1st Floor). An auxiliary control panel is located adjacent to the main control desk.

!!! WARNING !!!

Use EXTREME CARE and ALWAYS REMOVE POWER from all pertinent electrical equipment, which includes multiple power sources, before beginning maintenance. Refer to Section 7.3, "Lockout/Tagout Procedure."

Document completed maintenance tasks on the maintenance checklists included in Appendix B of the Contract.

THREE MONTHS	• Open and clean with a vacuum cleaner. • Remove accumulation of dirt, grease, and gum with DeoxIT D5 contact cleaner or equivalent. • Check for corrosion and moisture. Replace corroded hardware. • Lubricate door hinges and latches. • Inspect terminal block screws and tighten all loose connections. • Inspect wiring from unit terminal blocks for deterioration of insulation • Inspect all circuit breakers. Verify with a meter that continuity is broken on trip or switch off conditions. With the circuit breaker in the OFF position, use a multimeter to measure the current on the load side conductors. The multimeter should read 0 amps and 0 volts. • Inspect all fuses with a meter and verify continuity. For fuse replacement, always install the same type and rating fuses furnished with the control console. Evolution in fuse design has produced fuses that are mechanically equivalent but not electrically equivalent. They may not have the same short-circuit withstand ability and current limiting ability. • Inspect all relays and tighten loose connections. • Check all pushbuttons, selector switches, and meters for damage and proper operation. • Check all indicating lights pushing the "Indicators Check" button located on the left side of the control console and verify each lamp illuminates. Replace burned out bulbs. • Verify the enclosure lights turn on when doors are open. Replace burned out bulbs. • Check condition of gaskets and replace if damaged. • Verify enclosure heaters are functioning properly.
ANNUALLY	• Check for discolored connections on terminals, contact supports, bus bars, or connectors. Discoloration usually indicates that overheating has occurred, probably because of loose connections. Clean connections points that are discolored. Tighten all loose hardware. Check wires and connectors for damage. • Manually operate each relay and contactor with associated circuit breakers off and observe contact operation to be sure it opens and closes cleanly and that the contacts are fully sealed in the closed position. In order to manually operate a relay/contactor without load, remove power to the console and with a non-conductive object, press the button the contact. The button is usually located on the front or bottom of the housing. • Monitor relay and contactor operation during normal operation and check for loud noise and arcing, during opening and closing operations. A loud noise and arcing on closing is usually due to contact bounce.

8.8.3 LIMIT SWITCHES & RESOLVERS

8.8.3.1 DESCRIPTION

A limit switch is a switching device that provides feedback in an electrical circuit. When actuated, this device will restrict or initiate an operation.

Refer to Photos numbered 9.2A, 9.2B, 9.2C, 9.2D, 9.2I, 9.2J, 9.3E, 9.4B, 9.4C, 9.4E, 9.6L, 9.6M, and 9.6N.

8.8.3.2 NUMBER OF ITEMS AND LOCATION

Limit switches and resolvers on the bridge are located as follows:

Span Control:

- Eight Circuit Span Position Rotary Cam Limit Switches (2) – One located in each electrical/mechanical room.
- Brake Limit Switches (18) – Three located on each brake frame
- Fully Seated (Closed) Limit Switch (2) – One located on each leaf near the live load bearing.
- Fully Open Limit Switch (2) – One located on each bascule pier, outside of the electrical/mechanical room.
- Clutch Limit Switch (2) – One located in each electrical/mechanical room.

Lock Control:

- Span Lock Interlocking Limit Switch (4) – Two located in each span lock actuator housing.

Traffic Control:

- Eight Circuit Barrier Gate Rotary Cam Limit Switch (2) – One located in each barrier gate housing.
- Barrier Gate Manual Operation Limit Switch (2) - One located in each barrier gate.
- Barrier Gate Door Switches (4) – Two located inside each barrier gate housing.
- Warning Gate Manual Operation Limit Switch (4) - One located in each warning gate housing.
- Warning Gate Door Switches (8) – Two located in each warning gate housing.

8.8.3.3 MAINTENANCE AND SCHEDULE

!!! WARNING !!!

Use EXTREME CARE and ALWAYS REMOVE POWER from all pertinent electrical equipment, which includes multiple power sources, before beginning maintenance. Refer to Section 7.3, "Lockout/Tagout Procedure."

Document completed maintenance tasks on the maintenance checklists included in Appendix B of the Contract.

ANNUALLY	All	• Inspect all limit switches for wear. • Remove accumulated dust, dirt, and moisture on housing. Use brush, soft cloth, or vacuum cleaner. • Inspect latches, mounting hardware and seals to ensure proper seal of housing. • Inspect all fasteners and tighten loose connections. Replace corroded hardware. • If accessible, remove the cover and visually inspect the condition of all internal parts. • Check for worn or broken mechanical parts.
	Rotary Cam Limit Switch	• Inspect the rollers and cams for wear.
	Fully Seated and Brake Limit Switches	• Inspect snap action contact blocks and all internal component connections. Tighten loose connections. • Inspect all wiring from snap action contact blocks for deterioration. • Cycle lever arm several times.

8.8.4 SPEED SWITCHES

8.8.4.1 DESCRIPTION

Electronic speed switches (high and low) are installed onto the output shafts of the instrumentation gear box which is connected to the rear output shaft of the main span motor to check operating speeds during normal operation. In the event the correct speed is not reached during deceleration or the running speed exceeds 1260 RPM, the control system will perform an emergency stop.

Refer to Photo numbered 9.2J.

8.8.4.2 NUMBER OF ITEMS AND LOCATION

There are four overspeed switches. One high speed switch and one medium/low speed switch are located in each electrical/mechanical room.

8.8.4.3 MAINTENANCE AND SCHEDULE

!!! WARNING !!!

Use EXTREME CARE and ALWAYS REMOVE POWER from all pertinent electrical equipment, which includes multiple power sources, before beginning maintenance. Refer to Section 7.3, "Lockout/Tagout Procedure."

Document completed maintenance tasks on the maintenance checklists included in Appendix B of the Contract.

ANNUALLY	• Remove accumulated dust, dirt, and moisture on housing. Use a brush, soft cloth, or vacuum cleaner. • Remove accumulated dust, dirt, and moisture from shafts, keeping them clean and free of galling. All bearings are sealed and permanently lubricated. • Inspect cover to ensure proper seal of housing. • Inspect all fasteners and tighten connections if loose. Replace corroded fasteners. • Check for worn or broken mechanical parts. • Check condition of gaskets and replace if damaged.

8.9 MISCELLANEOUS EQUIPMENT

8.9.1 AIR HORN AND AIR COMPRESSORS

8.9.1.1 DESCRIPTION

The air horn provides an audible signal to vessels for an upcoming operation. The air horn is activated manually by a pushbutton on the control desk. The air horn is connected to an air compressor that provides sufficient compressed air to sound the air horn.

Refer to Photo numbered 9.7I.

8.9.1.2 NUMBER OF ITEMS AND LOCATION

One double unit air horn is located on the control house.

8.9.1.3 MAINTENANCE AND SCHEDULE

!!! WARNING !!!

Use EXTREME CARE and ALWAYS REMOVE POWER from all pertinent electrical equipment, which includes multiple power sources, before beginning maintenance. Refer to Section 7.3, "Lockout/Tagout Procedure."

Document completed maintenance tasks on the maintenance checklists included in Appendix B of the Contract.

MONTHLY	• Perform a general visual inspection of the equipment and check for proper operation of the system.
ANNUALLY	• Check electrical connections and tighten loose connections. • Operate the compressor under load and check for excessive heating of parts evidenced by discoloration of metal parts, charred insulation, or odor. • Check and clean components of collections of dirt or gum, evidence of water dripping, or corrosion. • Check the air horn trumpets for debris inside the trumpets. • Inspect connecting piping, tubing or hoses for cracking or leaks. • Check the condition of the air filter. Replace filter if dirty or damaged. • Tighten loose hardware. Check hardware for corrosion.

8.9.2 HEATING AND AIR CONDITIONING SYSTEMS

8.9.2.1 DESCRIPTION

HVAC systems provide service for the control house. Comfort heaters serve the electrical/mechanical rooms and main entrance of the storage house. A heat pump condenser and heat pump evaporator serve the control room.

Refer to Photos numbered 9.7A and 9.7J.

8.9.2.2 NUMBER OF ITEMS AND LOCATION

One outdoor unit is located adjacent to the north sump pump panel. One indoor unit is located above the bathroom door in the control house. Two comfort heaters are located in each electrical/mechanical room and two comfort heaters are located in the main entrance to the storage house.

8.9.2.3 MAINTENANCE AND SCHEDULE

!!! WARNING !!!

Use EXTREME CARE and ALWAYS REMOVE POWER from all pertinent electrical equipment, which includes multiple power sources, before beginning maintenance. Refer to Section 7.3, "Lockout/Tagout Procedure."

Document completed maintenance tasks on the maintenance checklists included in Appendix B of the Contract.

MONTHLY	• Check all air filters. Replace dirty or damaged filters. Do not use chemicals to clean the unit. • Check all cooling coils, seals, fittings, ducting connections and pipelines for leaks. • Check surfaces of casing for signs of corrosion. Retreat or repaint areas of corrosion. • Inspect the condition of all safety devices for deterioration. • Check the performance of all equipment related to temperature and humidity control.

8.9.3 SUMP PUMPS

8.9.3.1 DESCRIPTION

A duplex sump pump system is used to remove water from the counterweight pit.

Refer to Photos numbered 9.7B and 9.7C.

8.9.3.2 NUMBER OF ITEMS AND LOCATION

Sump pump systems are located in each counterweight pit on the bridge. A sump pump control panel is located outside of each electrical/mechanical room.

8.9.3.3 MAINTENANCE AND SCHEDULE

!!! WARNING !!!

Use EXTREME CARE and ALWAYS REMOVE POWER from all pertinent electrical equipment, which includes multiple power sources, before beginning maintenance. Refer to Section 7.3, "Lockout/Tagout Procedure."

Document completed maintenance tasks on the maintenance checklists included in Appendix B of the Contract.

MONTHLY	Sump Pump Motors	• Test operation of each sump pump by turning the selector switch located on the sump pump control panel to hand operation • Dump buckets of water or run water from a hose into the sump to test the pump's response and look for leaks. Verify that water is pumped out from sump and there is no back-flow. Do not flood the surrounding floor or area. • Check that the motor is free of all debris • During operation, examine motor for smooth running and absence of excessive vibration. • Check the phase currents flowing in motors under loaded conditions with a clamp-on ammeter for all motors. Utilize a true Root Mean Square (RMS) ammeter. Compare the measured current with the nameplate data. Record values on maintenance checklist included in Appendix B of the Contract.

THREE MONTHS	Sump Pump Control Panels	• Open and clean with a vacuum cleaner. • Remove accumulation of dirt, grease, and gum with DeoxIT D5 contact cleaner or equivalent. • Check for corrosion and moisture. • Examine connections for poor or loose connections and evidence of overheating. • Lubricate door hinges and latches. • Check unit door interlocks and circuit breaker disconnects for proper operation. • Inspect terminal block screws and hand tighten loose connections. • Inspect wiring from unit terminal blocks for deterioration of insulation. • Inspect all circuit breakers. Verify with a meter that continuity is broken on trip or switch off conditions. With the circuit breaker in the OFF position, use a multimeter to measure the current and voltage on the load side conductors. The multimeter should read 0 amps and 0 volts. • Check all starter contacts. Replaced when nearly all the silver tip is gone and the contact tip support is exposed. Do not file the contacts. Filing or otherwise dressing the contacts only results in lost tip material and reduces starter life. • Inspect all fuses with a meter and verify continuity. For fuse replacement, always install the same type and rating fuses furnished with the motor control center. Evolution in fuse design has produced fuses that are mechanically equivalent but not electrically equivalent. They may not have the same short-circuit withstand ability and current limiting ability. • Inspect fuse clips for dirt and verify that the clips provide a tight fit.

8.9.4 PITS, PLATFORMS, AND WALKWAYS

8.9.4.1 DESCRIPTION

Each counterweight pit provides an area for the counterweight to travel during operation of the bridge. Platforms and walkways provide access to electrical and mechanical components throughout the bascule pier.

Refer to Photos numbered 9.1D, 9.1F, 9.2E, 9.2F, 9.2H, and 9.7K.

8.9.4.2 NUMBER OF ITEMS AND LOCATION

One counterweight pit is located at the bottom of each bascule pier. Platforms and walkways are located in the bascule pier.

8.9.4.3 MAINTENANCE AND SCHEDULE

!!! WARNING !!!

Use EXTREME CARE and ALWAYS REMOVE POWER from all pertinent electrical equipment, which includes multiple power sources, before beginning maintenance. Refer to Section 7.3, "Lockout/Tagout Procedure."

!!! WARNING !!!

Use EXTREME CARE and VERIFY that electrical components and enclosures do not get wet.

Document completed maintenance tasks on the maintenance checklists included in Appendix B of the Contract.

SIX MONTHS	• Clean and power wash the counterweight pits, platforms, and walkways of dirt and debris. Electrical equipment must be protected prior to power washing walkways to prevent water from entering any electrical component. Water intrusion may cause failure to components.

8.9.5 CONDUIT SYSTEMS

8.9.5.1 DESCRIPTION

Conduit, boxes, and supports are used throughout the bridge to route and protect the control and power cables.

8.9.5.2 NUMBER OF ITEMS AND LOCATION

Conduit, boxes, and supports are located throughout the bridge including in the control house, at the span lock platform, in the electrical/mechanical rooms, etc.

8.9.5.3 MAINTENANCE AND SCHEDULE

!!! WARNING !!!

Use EXTREME CARE and ALWAYS REMOVE POWER from all pertinent electrical equipment, which includes multiple power sources, before beginning maintenance. Refer to Section 7.3, "Lockout/Tagout Procedure."

Document completed maintenance tasks on the maintenance checklists included in Appendix B of the Contract.

ANNUALLY	• Open and clean boxes with a vacuum cleaner. • Remove accumulation of dirt, grease, and gum from conduit. • Check for corrosion and moisture. Check conduit for cracking or other damage. Replace corroded hardware. • Tighten loose mounting and connections. • Check condition of gaskets in boxes and replace gaskets if damaged. • Lubricate door hinges and latches, where provided, with 3-IN-ONE Multipurpose oil. • Check and clean all drain holes and fittings.

FIVE YEARS	• Clean and paint all corrosion and oxidation from steel conduit and supports. • Where PVC coated steel conduit is installed, apply touch up compound to cracks and/or cuts in coating.

CHAPTER 9 - PHOTOS

GUIDE TO PHOTOS

9.1 Leaf Support System and Counterweights

9.1A - Typical Trunnion Bearing (Non Span Drive Machinery Side) 9-4
9.1B - Typical Trunnion Bearing (Span Drive Machinery Side) 9-4
9.1C - Typical Live Load Bearing 9-5
9.1D - Typical Live Load Bearing Support Beam 9-5
9.1E - Typical Counterweight 9-6
9.1F - Typical Bascule Girder Top Flange Balance Blocks 9-6
9.1G - Typical Bascule Girder Outboard Location Balance Blocks 9-7

9.2 Span Drive Machinery

9.2A - Typical Motor Brake 9-8
9.2B - Typical Machinery Brake 9-8
9.2C - Typical Span Drive Machinery in Electrical/Mechanical Room…. 9-9
9.2D - Typical Span Drive Machinery at Auxiliary Motor Location 9-9
9.2E - Typical Machinery Configuration on Bascule Pier Walkway 9-10
9.2F - Typical Machinery Configuration on Bascule Pier Walkway 9-10
9.2G - Typical Machinery Configuration on the Counterweight 9-11
9.2H - Typical Open Gearing on the Counterweight 9-11
9.2I - Typical Primary Reducer Output Machinery 9-12
9.2J - Typical Instrumentation Machinery Configuration 9-12

9.3 Span Lock Machinery and Centering Equipment

9.3A - Typical Span Lock Platform 9-13
9.3B - Typical Span Lock Machinery 9-13
9.3C - Typical Span Lock Bar Guide 9-14
9.3D - Typical Span Lock Receiving Socket 9-14
9.3E - Typical Span Lock Actuator Internal Components 9-15

9.4 Traffic Control Devices and Navigation Lights

9.4A - Typical Traffic Control Equipment 9-16
9.4B - Typical Warning Gate Equipment (Front) 9-16
9.4C - Typical Warning Gate Equipment (Back) 9-17

9.4D - Typical Warning Gate Gong and Arm Lights 9-17
9.4E - Typical Barrier Gate Equipment (Front) 9-18
9.4F - Typical Barrier Gate Equipment (Back) 9-18
9.4G - Barrier Gate Arm Lights 9-19
9.4H- Typical Navigation Lights 9-19

9.5 Power Distribution Equipment
9.5A - Main Incoming Service Panel 9-20
9.5B - Generator Panel 9-20
9.5C - Manual Transfer Switch 9-21
9.5D - Generator Receptacle 9-21
9.5E - Typical Lighting Transformer 9-22
9.5F - Typical Distribution Panelboard 9-22

9.6 Control Equipment
9.6A - North Starter Cabinet 9-23
9.6B - South Starter Cabinet 9-23
9.6C - Typical Drive Cabinet 9-24
9.6D - Typical Span Drive Machinery Disconnect Switches 9-24
9.6E - Typical Span Lock Disconnect Switch 9-25
9.6F - Typical Fixed Droop Cable Termination Box 9-25
9.6G - Typical Movable Droop Cable Termination Box 9-26
9.6H- Typical Submarine Termination Box 9-26
9.6I - Relay Control Cabinet 9-27
9.6J - Control Console 9-27
9.6K - Auxiliary Control Station 9-28
9.6L - Typical Fully Open Limit Switch (Lever Style) 9-28
9.6M - Typical Fully Seated Limit Switch (Lever Style) 9-29
9.6N - Typical Span Position Rotary Cam Limit Switch (Cover Removed) 9-29

9.7 Miscellaneous Equipment
9.7A - Typical Heater 9-30
9.7B - Sump Pump Control Panel 9-30
9.7C - Typical Sump Pump 9-31
9.7D - Typical Heat Trace Enclosure 9-31

9.7E - Typical Service Light Fixture Type 1 9-32
9.7F - Typical Service Light Fixture Type 2 9-32
9.7G - Typical Emergency Light Fixture 9-33
9.7H - Typical Control and Storage House Architectural Lighting 9-33
9.7I - Air Horn and Flood Light 9-34
9.7J - HVAC Outboard Unit and Disconnect Switch 9-34
9.7K - Typical Counterweight Pit 9-35

9.1 LEAF SUPPORT SYSTEM AND COUNTERWEIGHTS

PHOTO 9.1A – TYPICAL TRUNNION BEARING (NON-SPAN DRIVE MACHINERY SIDE)

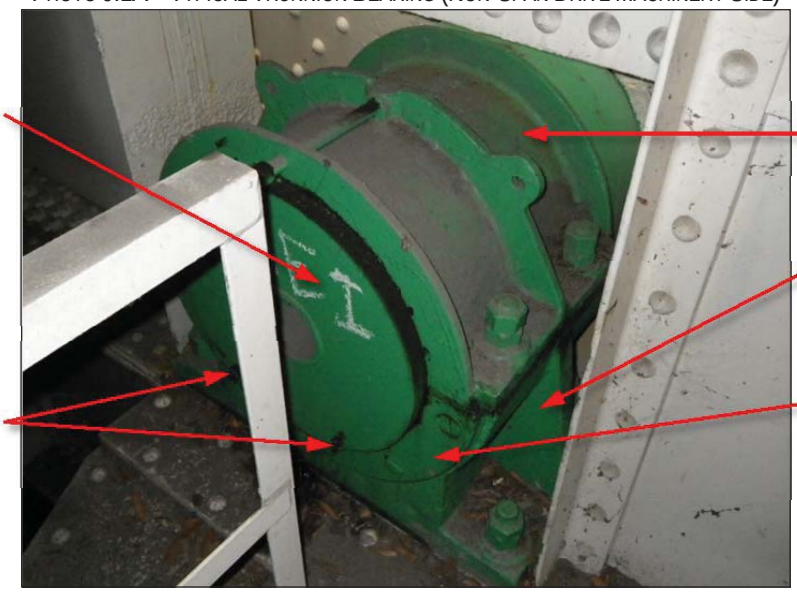

PHOTO 9.1B – TYPICAL TRUNNION BEARING (SPAN DRIVE MACHINERY SIDE)

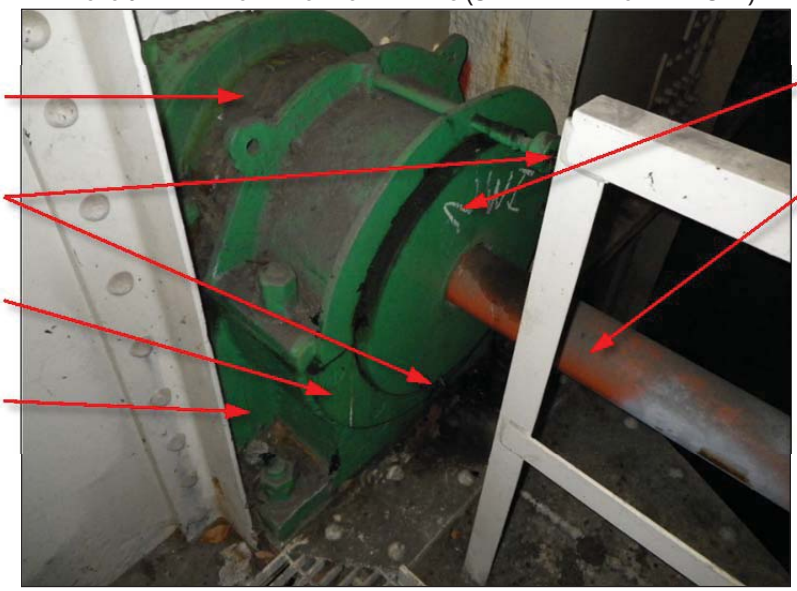

PHOTO 9.1C – TYPICAL LIVE LOAD BEARING

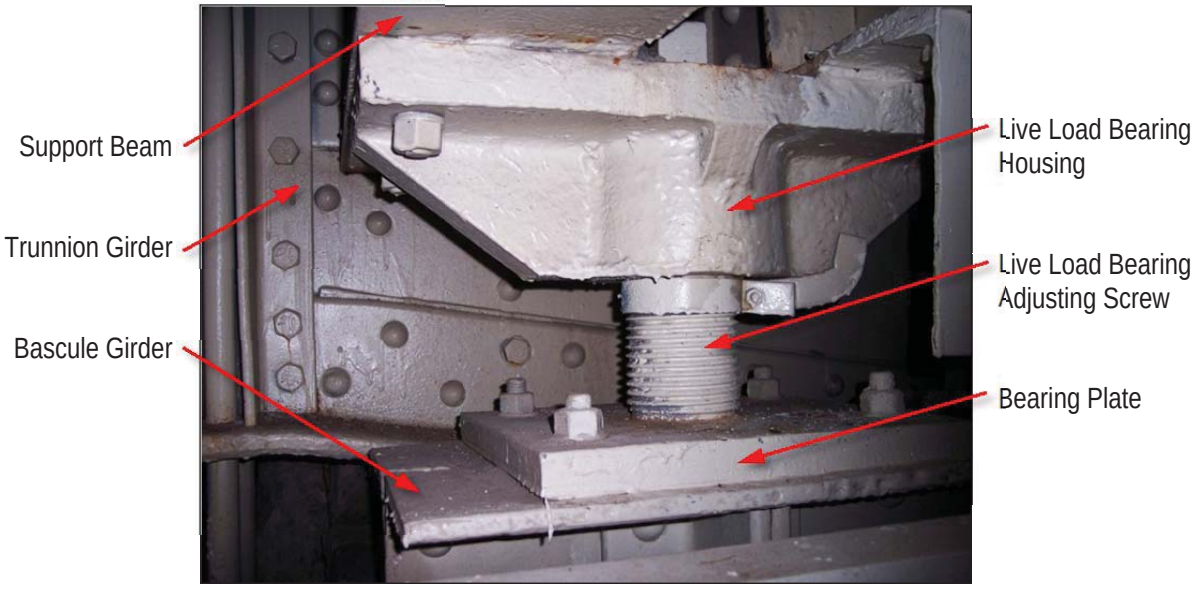

PHOTO 9.1D – TYPICAL LIVE LOAD BEARING SUPPORT BEAM

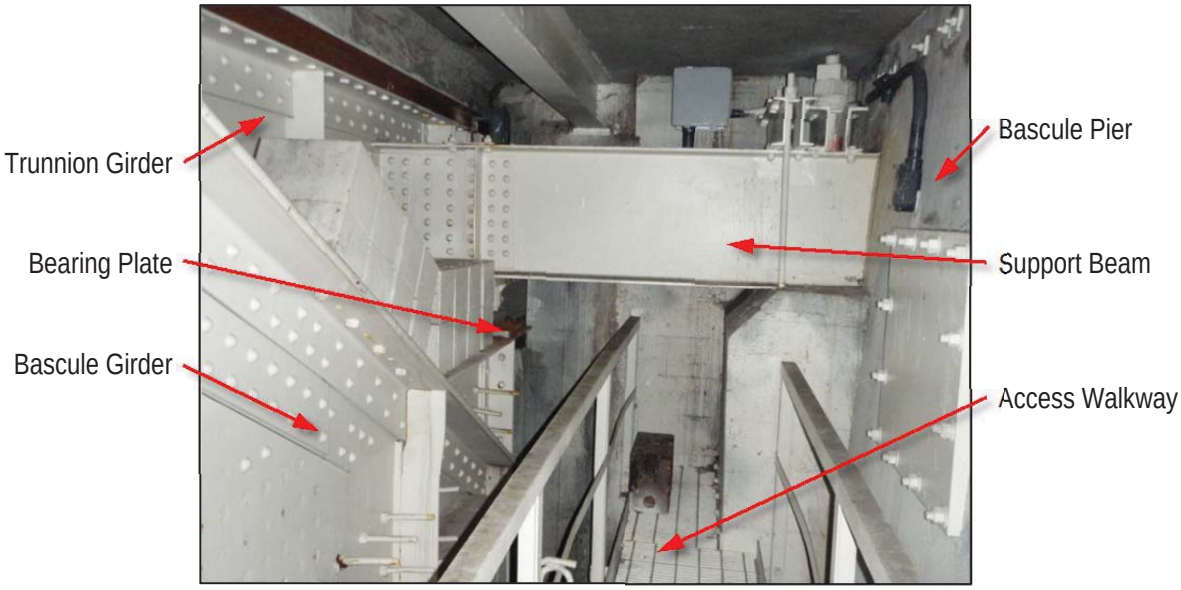

PHOTO 9.1E – TYPICAL COUNTERWEIGHT

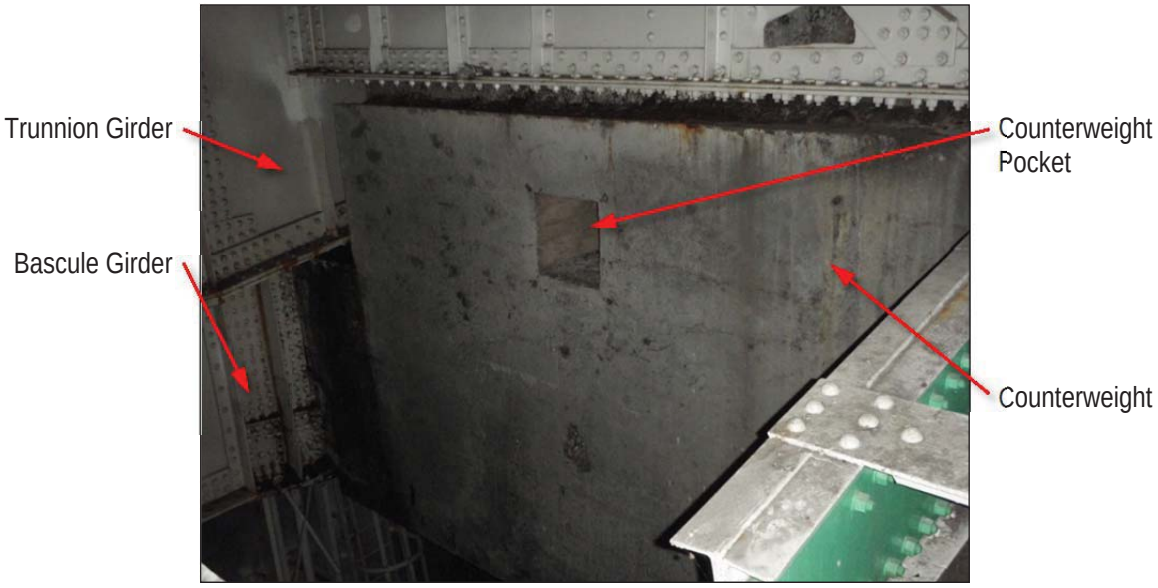

PHOTO 9.1F – TYPICAL BASCULE GIRDER TOP FLANGE BALANCE BLOCKS

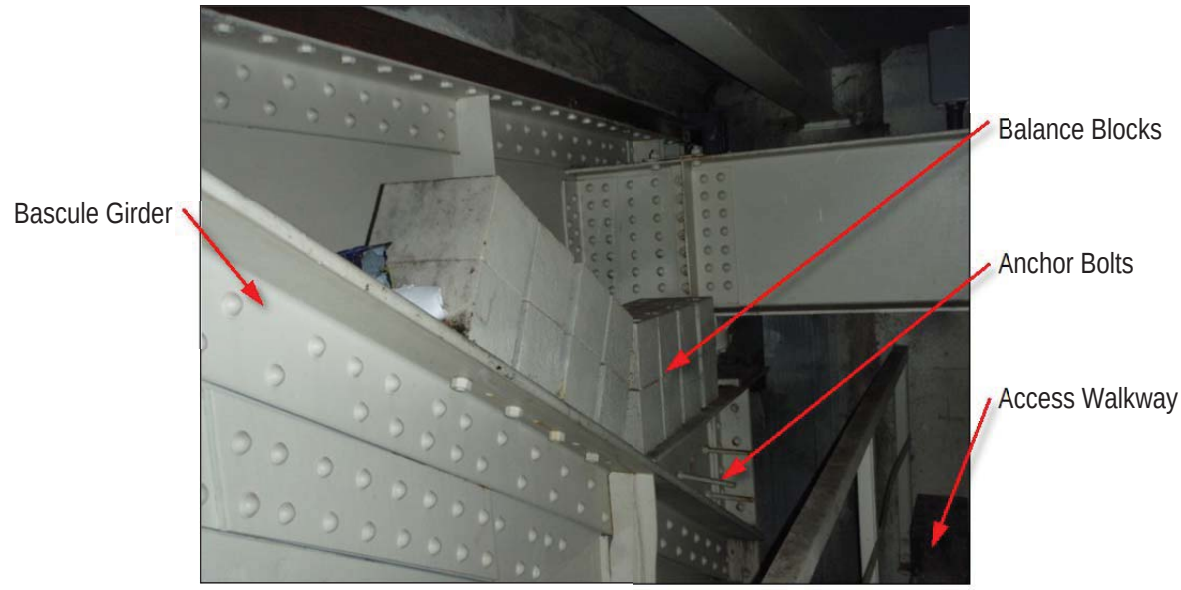

PHOTO 9.1G – TYPICAL BASCULE GIRDER OUTBOARD LOCATION BALANCE BLOCKSHT

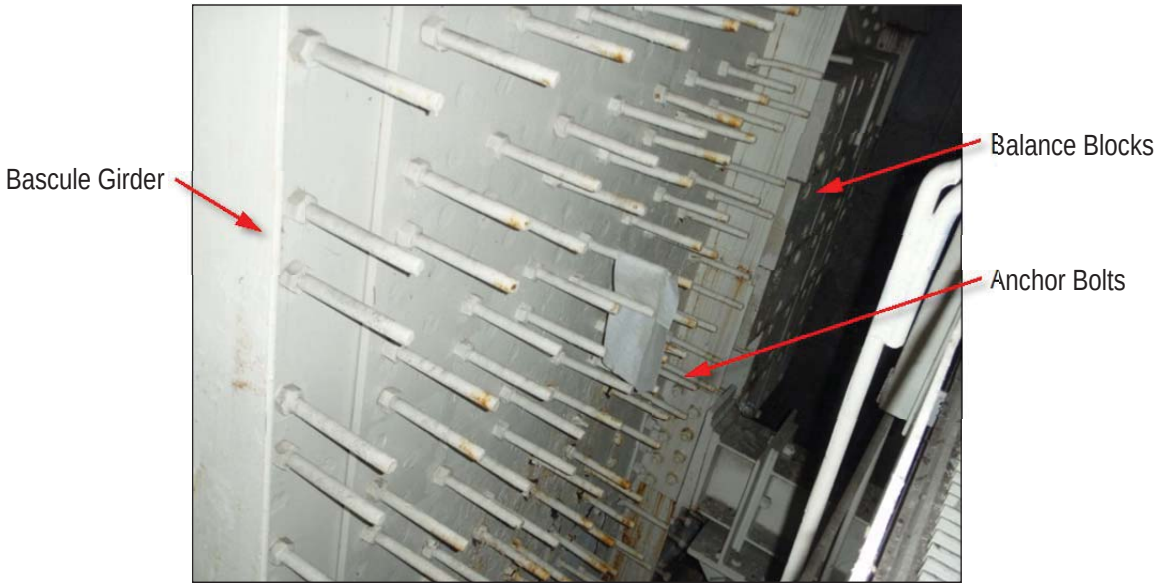

9.2 SPAN DRIVE MACHINERY

PHOTO 9.2A – TYPICAL MOTOR BRAKE

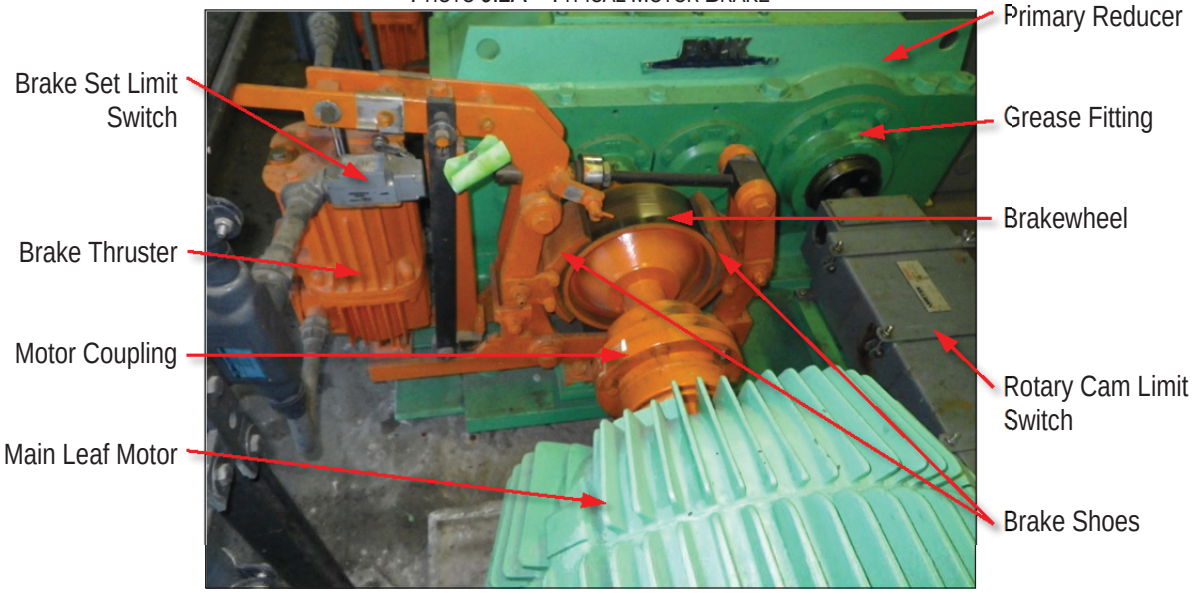

PHOTO 9.2B –TYPICAL MACHINERY BRAKE

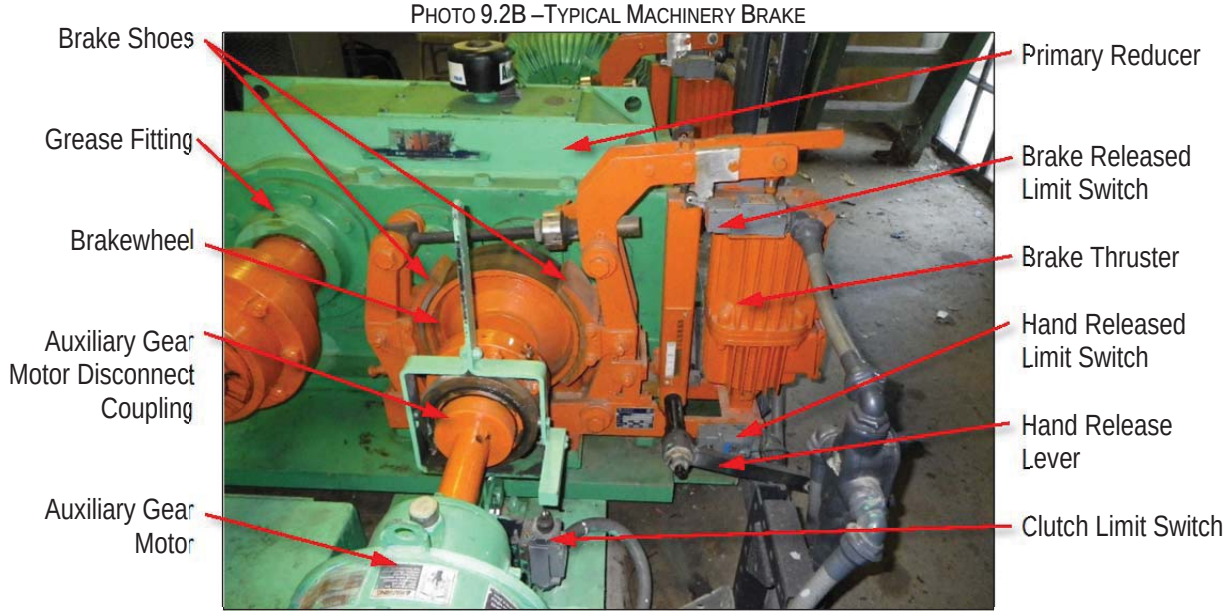

PHOTO 9.2C –TYPICAL SPAN DRIVE MACHINERY IN ELECTRICAL/MECHANICAL ROOM

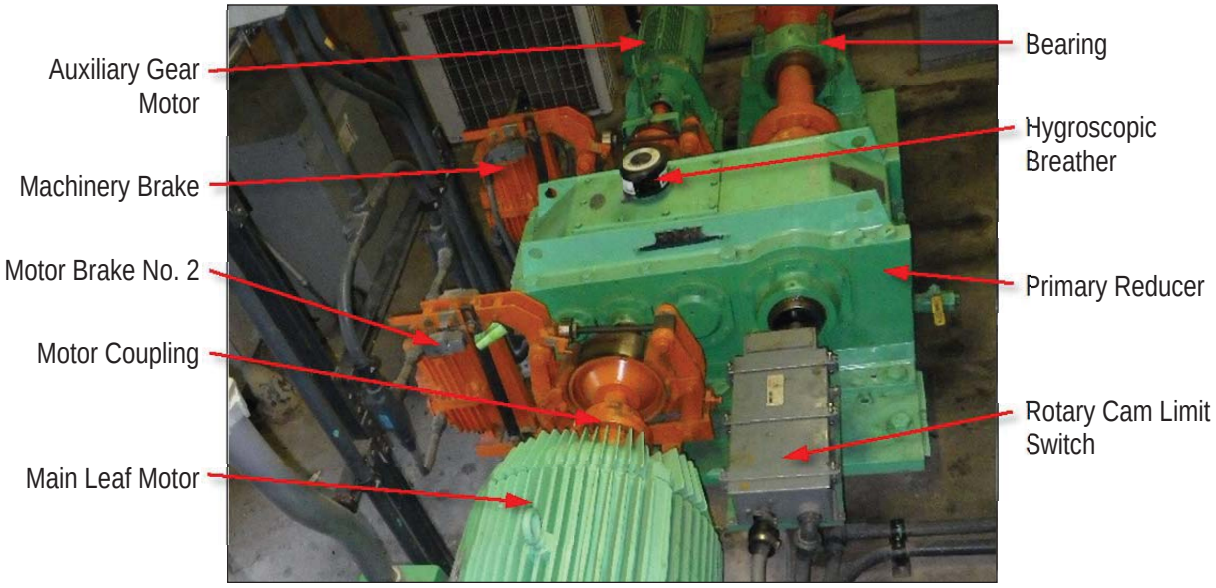

PHOTO 9.2D – TYPICAL SPAN DRIVE MACHINERY AT AUXILIARY MOTOR LOCATION

PHOTO 9.2E – TYPICAL MACHINERY CONFIGURATION ON BASCULE PIER WALKWAY

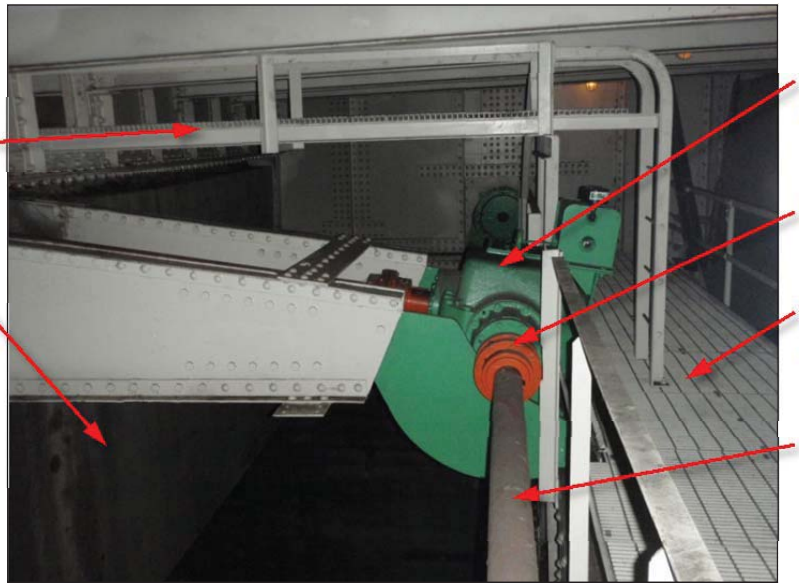

PHOTO 9.2F – TYPICAL MACHINERY CONFIGURATION ON BASCULE PIER WALKWAY

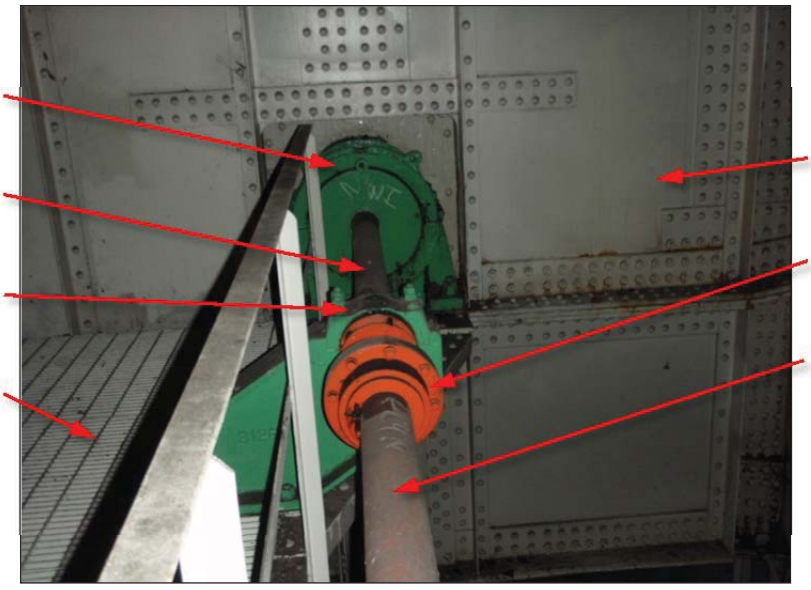

PHOTO 9.2G – TYPICAL MACHINERY CONFIGURATION ON THE COUNTERWEIGHT

PHOTO 9.2H – TYPICAL OPEN GEARING ON THE COUNTERWEIGHT

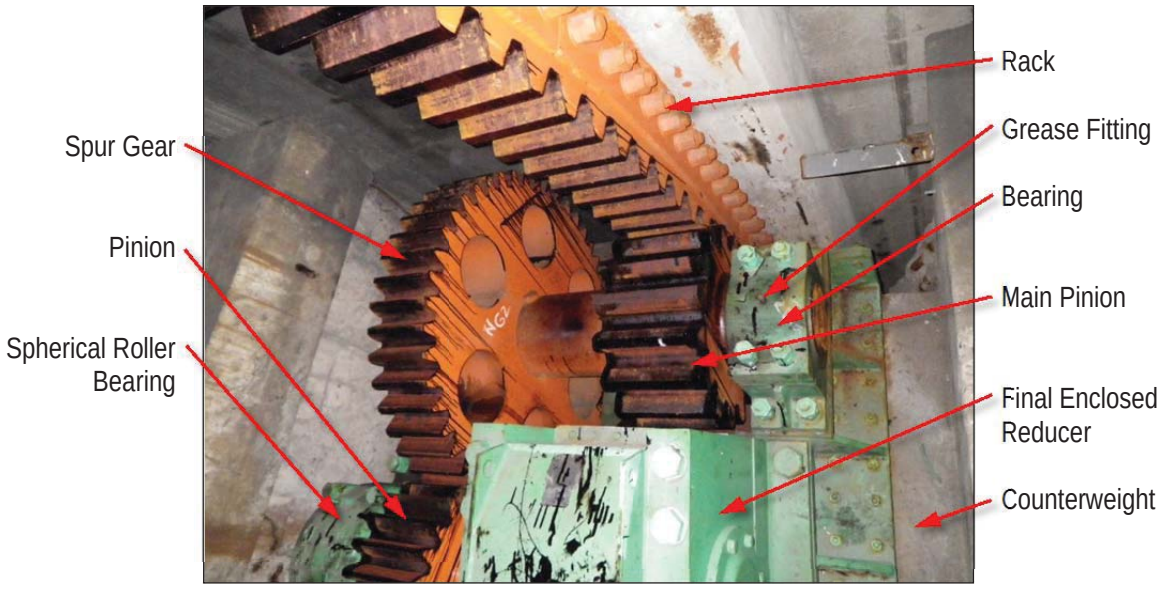

PHOTO 9.2I – TYPICAL PRIMARY REDUCER OUTPUT MACHINERY

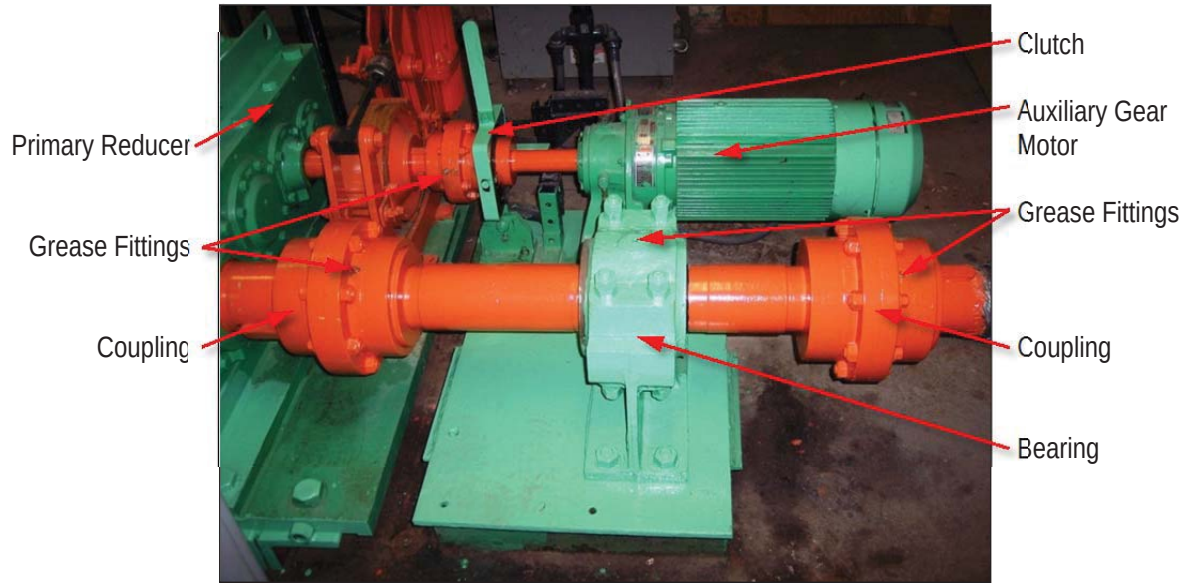

PHOTO 9.2J – TYPICAL INSTRUMENTATION MACHINERY CONFIGURATION

9.3 SPAN LOCK MACHINERY AND CENTERING EQUIPMENT

PHOTO 9.3A – TYPICAL SPAN LOCK PLATFORM

PHOTO 9.3B – TYPICAL SPAN LOCK MACHINERY

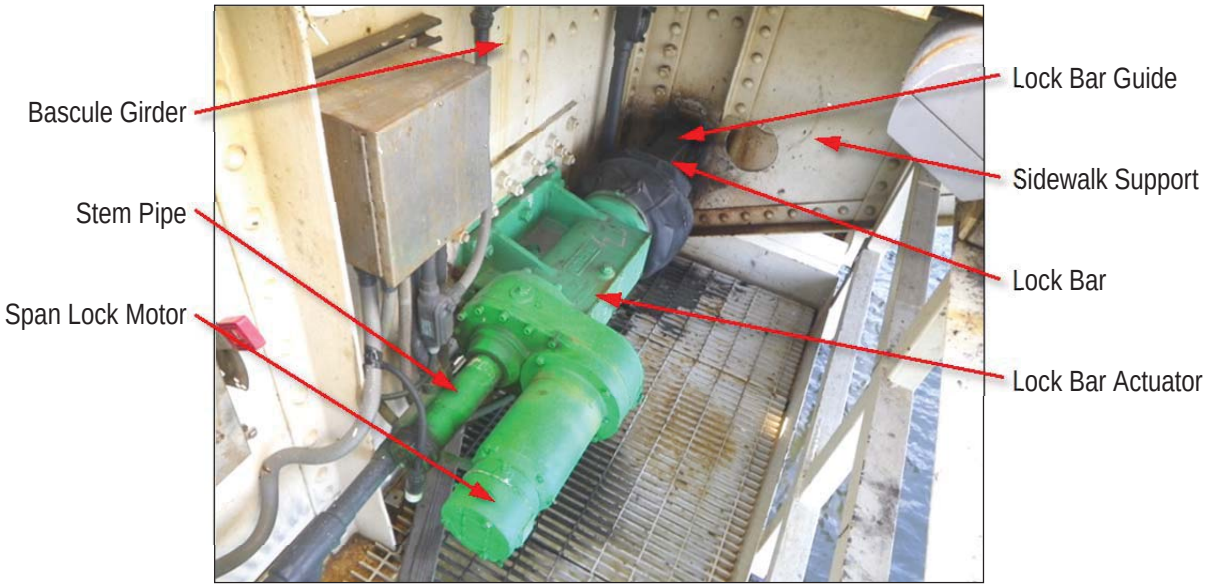

PHOTO 9.3C – TYPICAL SPAN LOCK BAR GUIDE

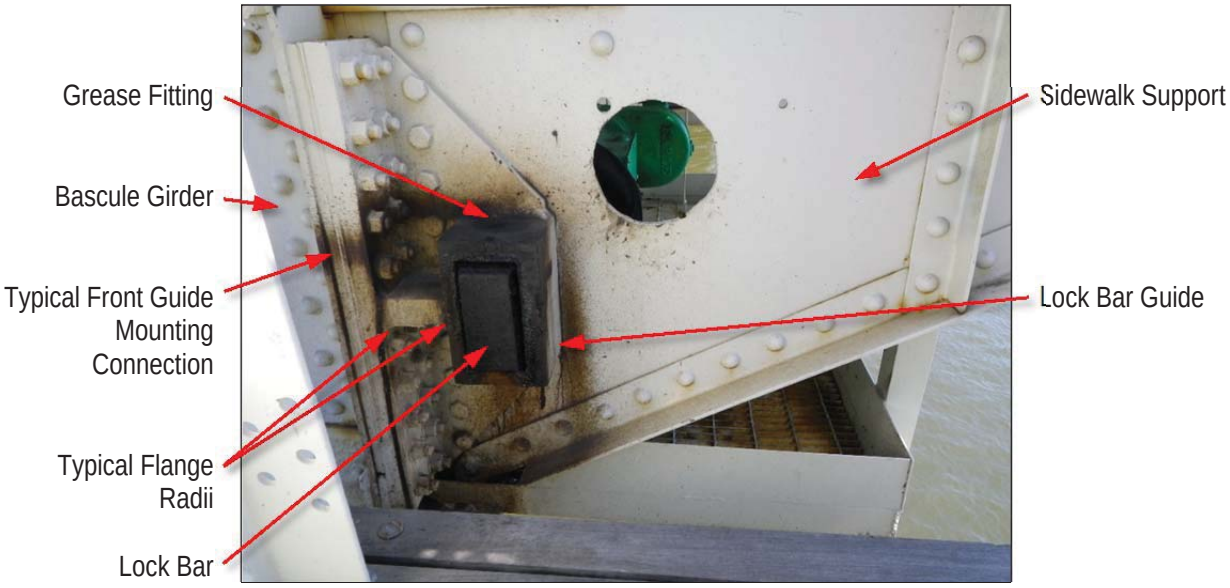

PHOTO 9.3D – TYPICAL SPAN LOCK RECEIVING SOCKET

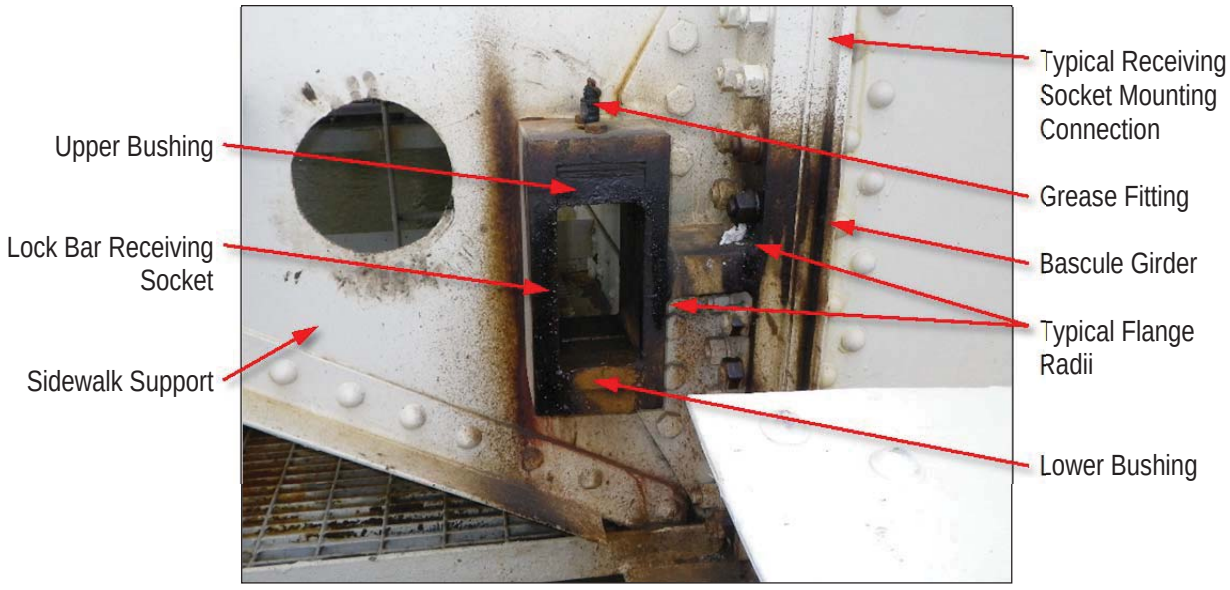

PHOTO 9.3E –TYPICAL SPAN LOCK ACTUATOR INTERNAL COMPONENTS

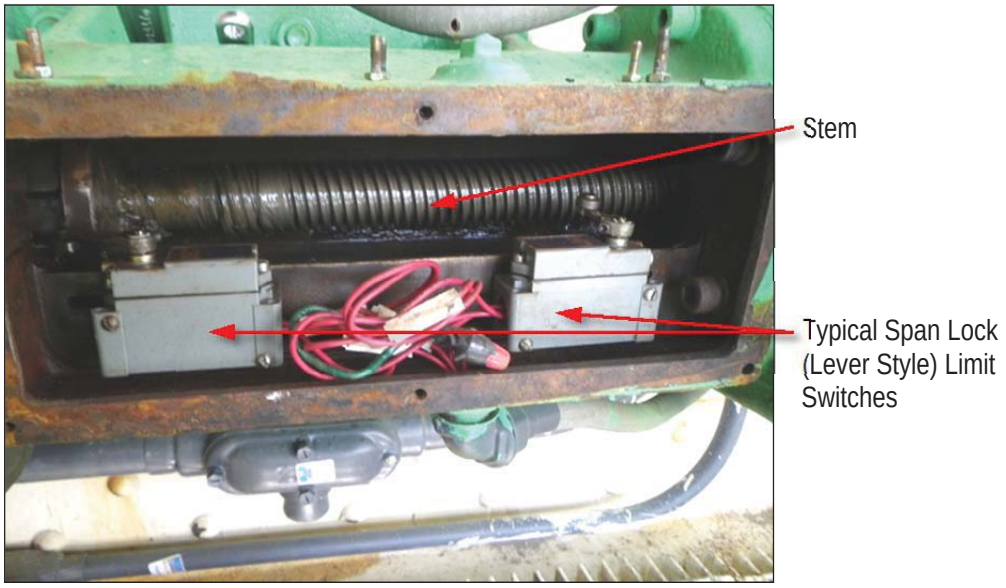

9.4 TRAFFIC CONTROL DEVICES AND NAVIGATION LIGHTS

PHOTO 9.4A – TYPIICAL TRAFFIC CONTROL EQUIPMENT

PHOTO 9.4B – WARNING GATE EQUIPMENT (FRONT)

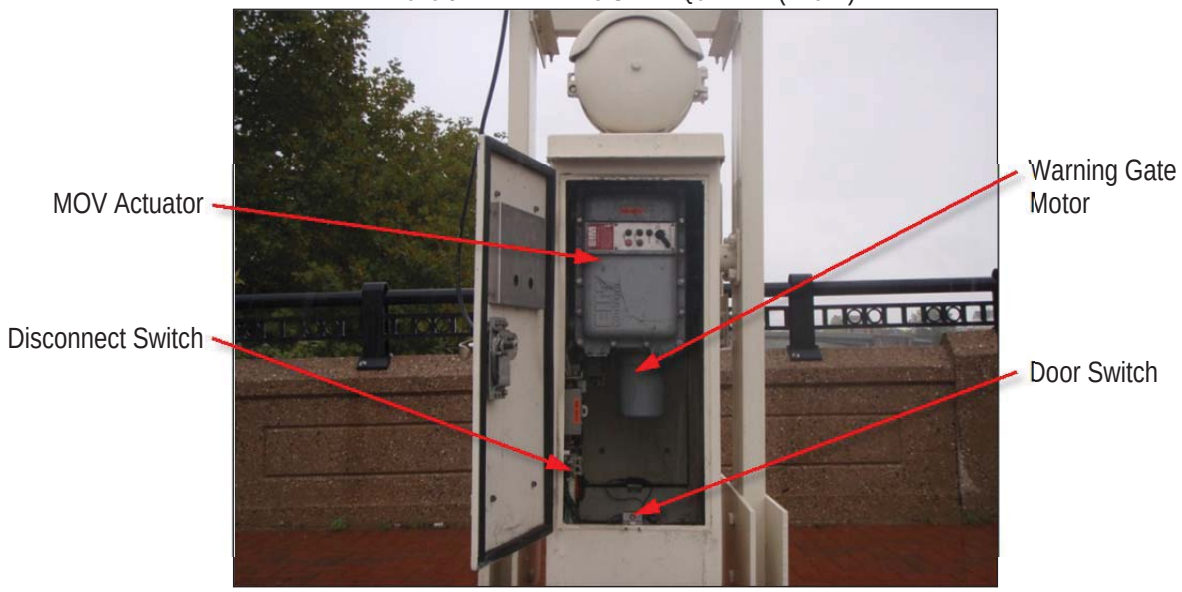

PHOTO 9.4C – TYPICAL WARNING GATE EQUIPMENT (BACK)

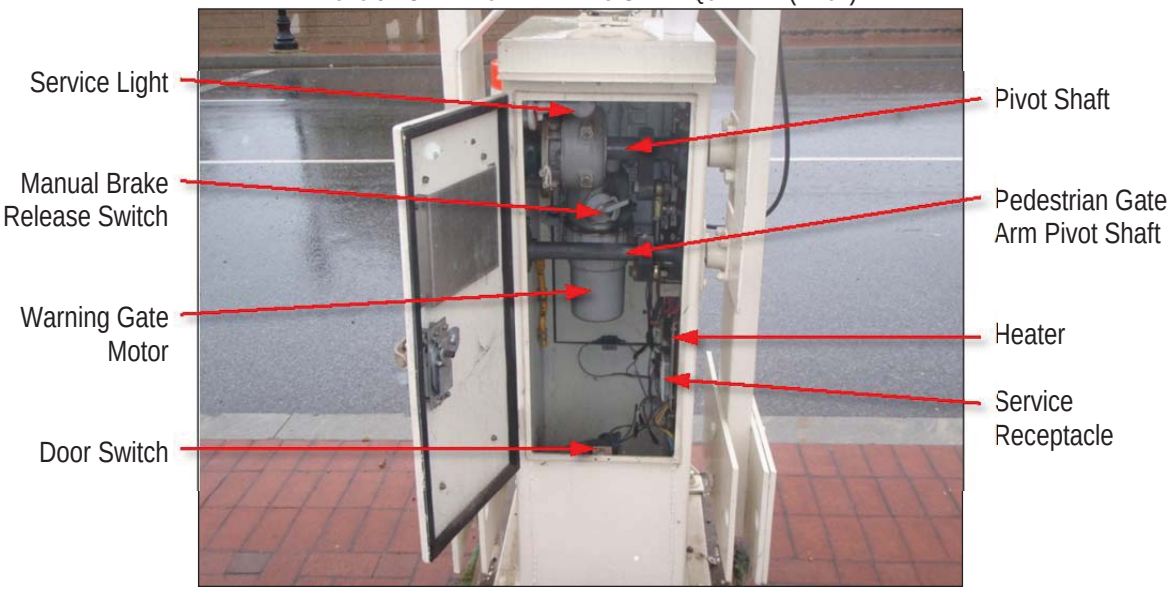

PHOTO 9.4D – TYPICAL WARNING GATE GONG AND ARM LIGHTS

PHOTO 9.4E – TYPICAL BARRIER GATE EQUIPMENT (FRONT)

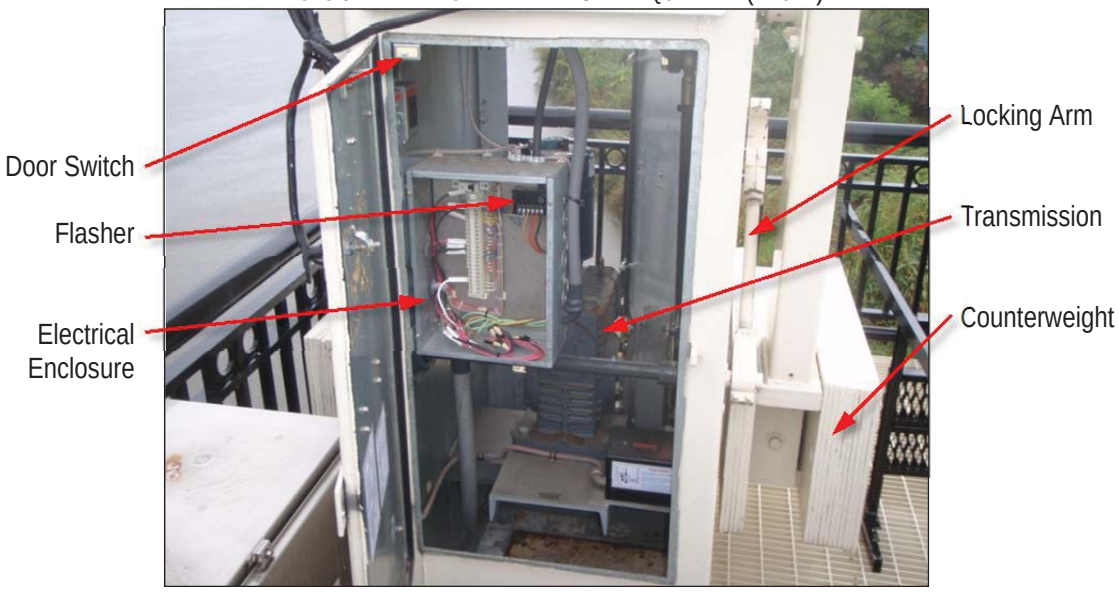

PHOTO 9.4F – TYPICAL BARRIER GATE EQUIPMENT (BACK)

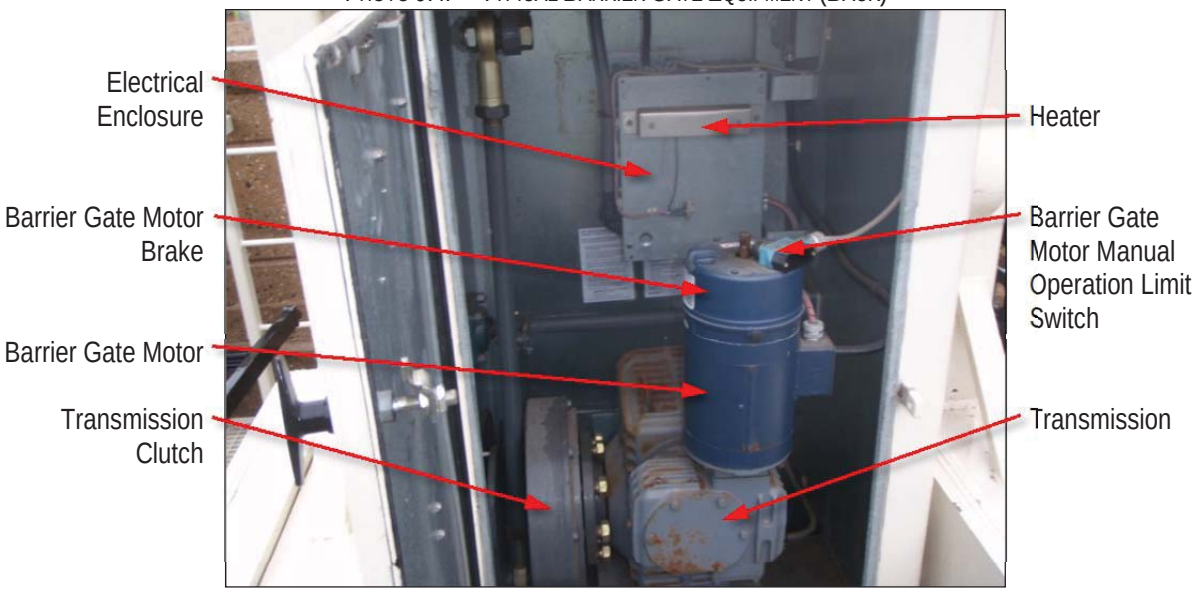

PHOTO 9.4G – TRAFFIC BARRIER GATE ARM LIGHTS

PHOTO 9.4H – TYPICAL NAVIGATION LIGHTS

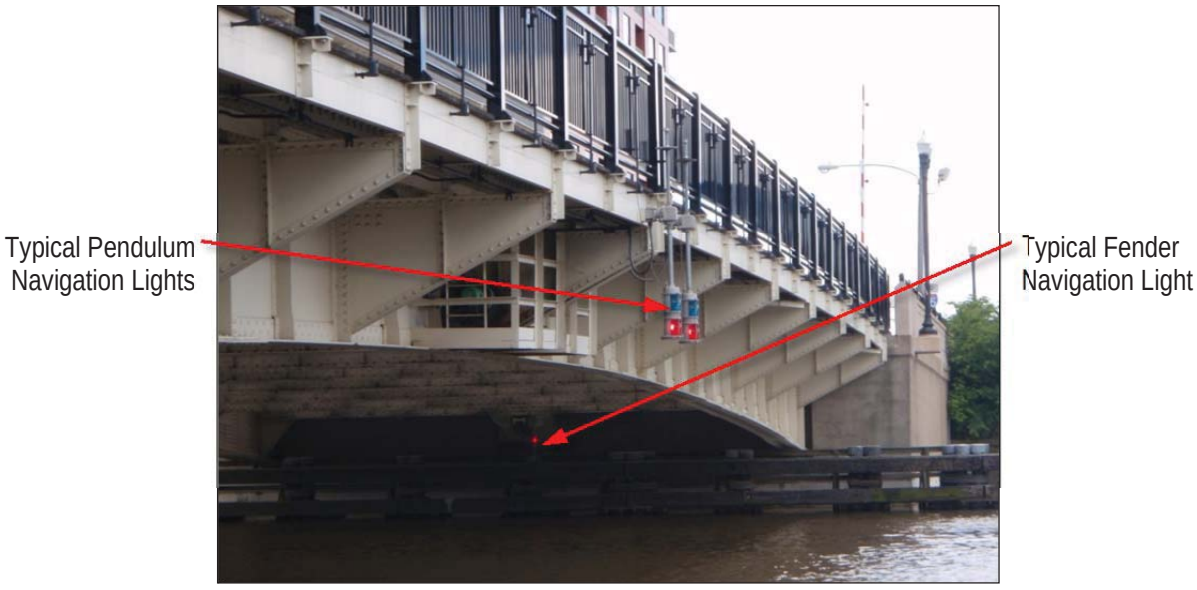

9.5 POWER DISTRIBUTION EQUIPMENT

PHOTO 9.5A – MAIN INCOMING SERVICE PANEL

PHOTO 9.5B – GENERATOR PANEL

PHOTO 9.5C – MANUAL TRANSFER SWITCH

PHOTO 9.5D – GENERATOR RECEPTACLE

PHOTO 9.5E – TYPICAL LIGHTING TRANSFORMER

PHOTO 9.5F – DISTRIBUTION PANEL BOARD

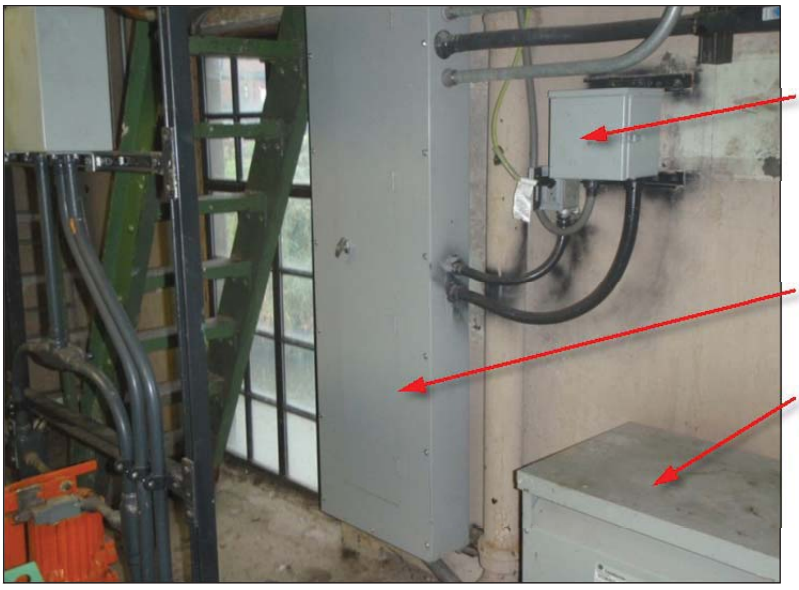

9.6 CONTROL EQUIPMENT

PHOTO 9.6A – NORTH STARTER CABINET

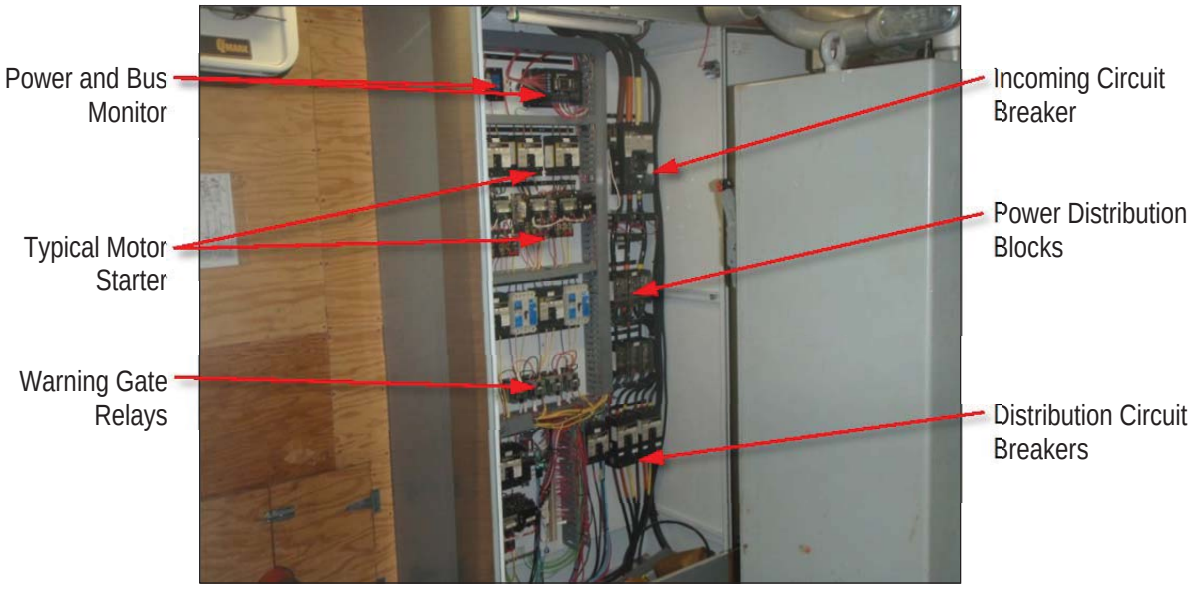

PHOTO 9.6B – SOUTH STARTER CABINET

PHOTO 9.6C – TYPICAL DRIVE CABINET

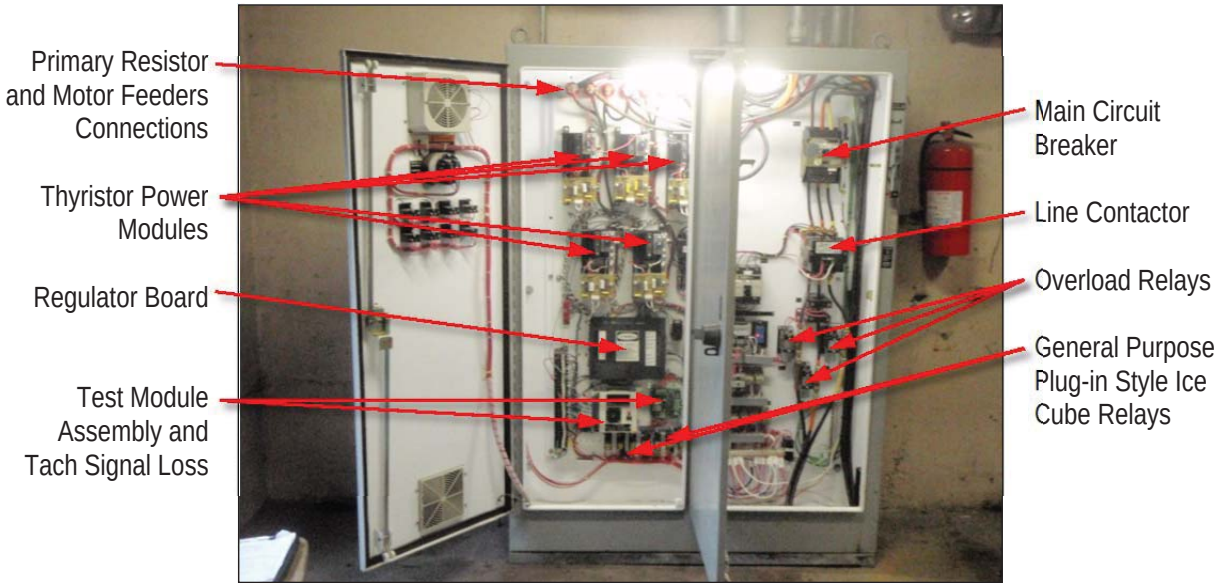

PHOTO 9.6D – TYPICAL SPAN DRIVE MACHINERY DISCONNECT SWITCHES

PHOTO 9.6E – TYPICAL SPAN LOCK DISCONNECT SWITCH

PHOTO 9.6F – TYPICAL FIXED DROOP CABLE TERMINATION BOX

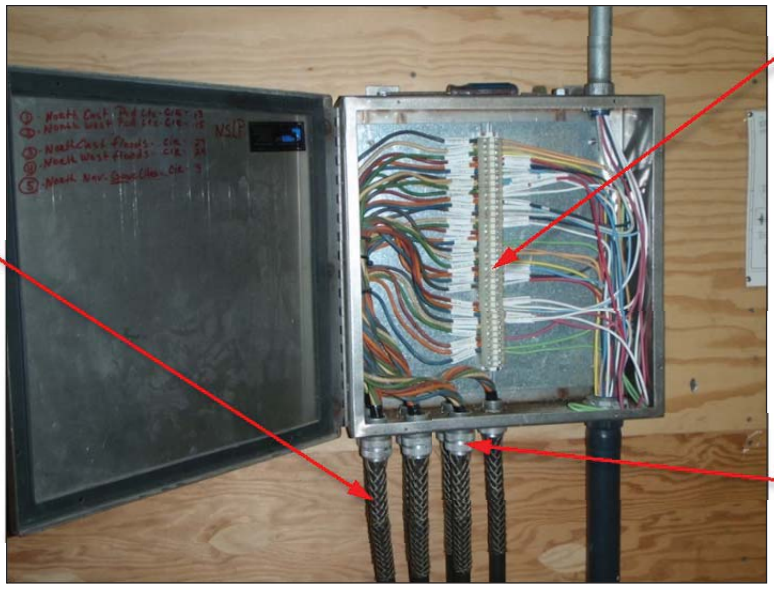

PHOTO 9.6G – TYPICAL MOVABLE DROOP CABLE TERMINATION BOX

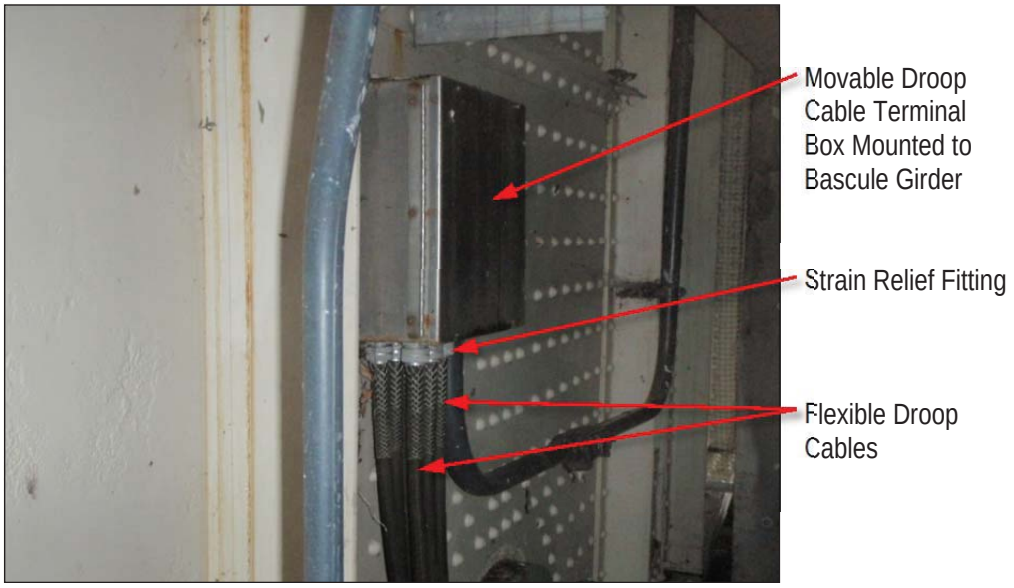

PHOTO 9.6H – TYPICAL SUBMARINE TERMINATION BOX

PHOTO 9.6I –RELAY CONTROL CABINET

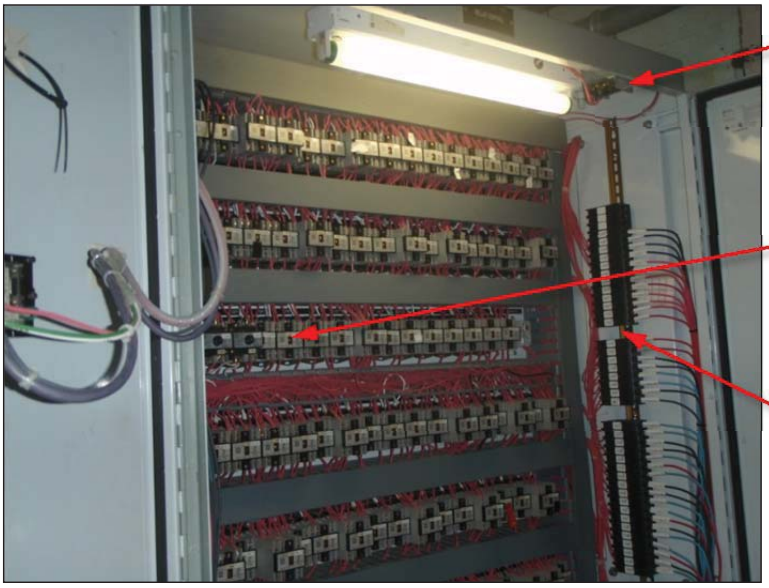

PHOTO 9.6J – CONTROL CONSOLE

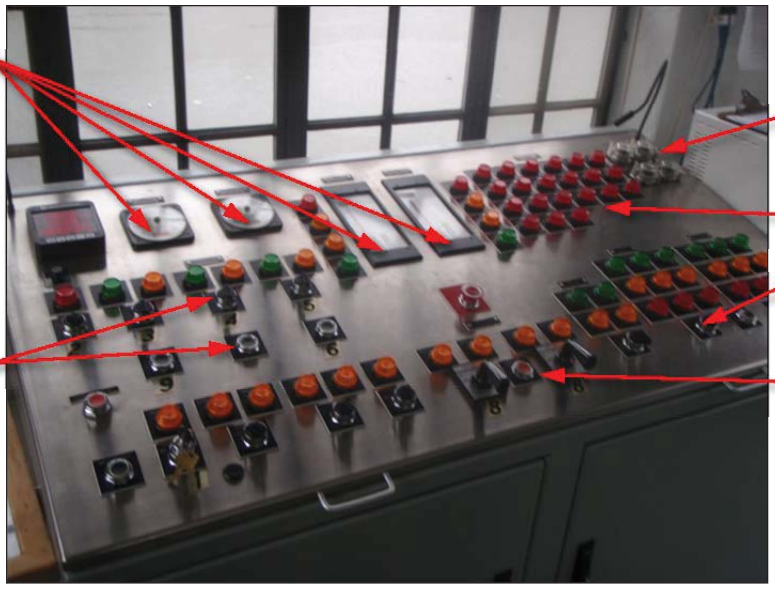

PHOTO 9.6K – AUXILIARY CONTROL STATION

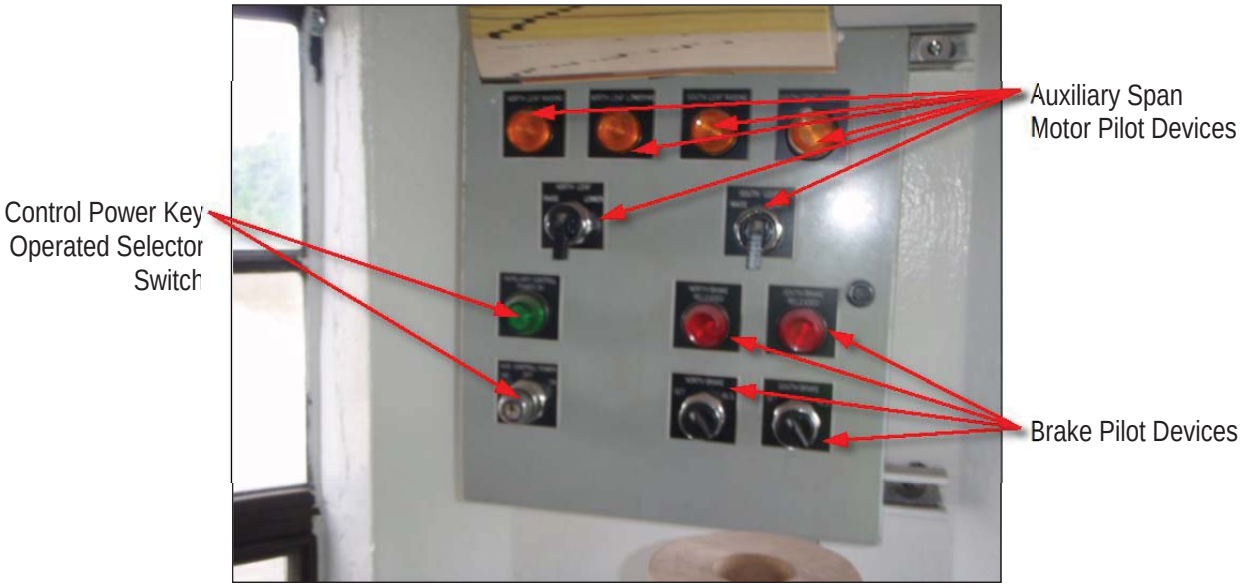

PHOTO 9.6L – TYPICAL FULLY OPEN LIMIT SWITCH (LEVER STYLE)

PHOTO 9.6M – TYPICAL FULLY SEATED LIMIT SWITCH (LEVER STYLE)

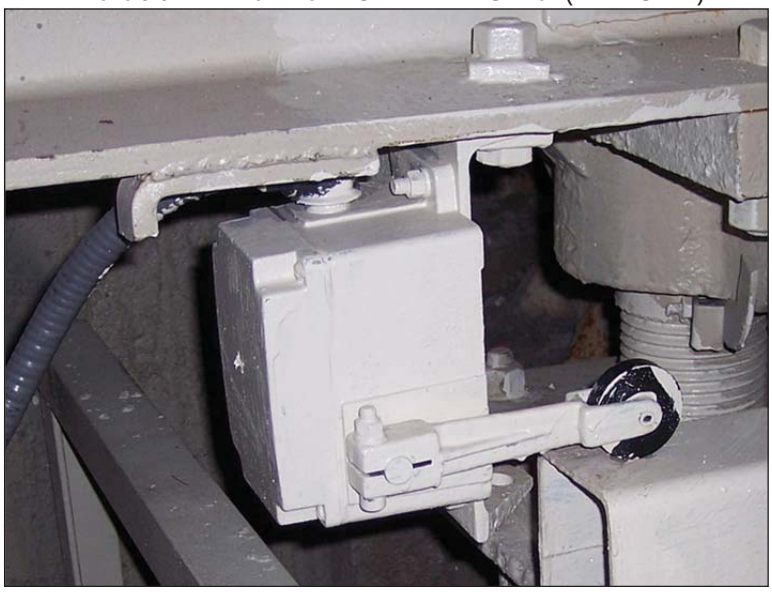

PHOTO 9.6N – TYPICAL SPAN POSITION ROTARY CAM LIMIT SWITCH (COVER REMOVED)

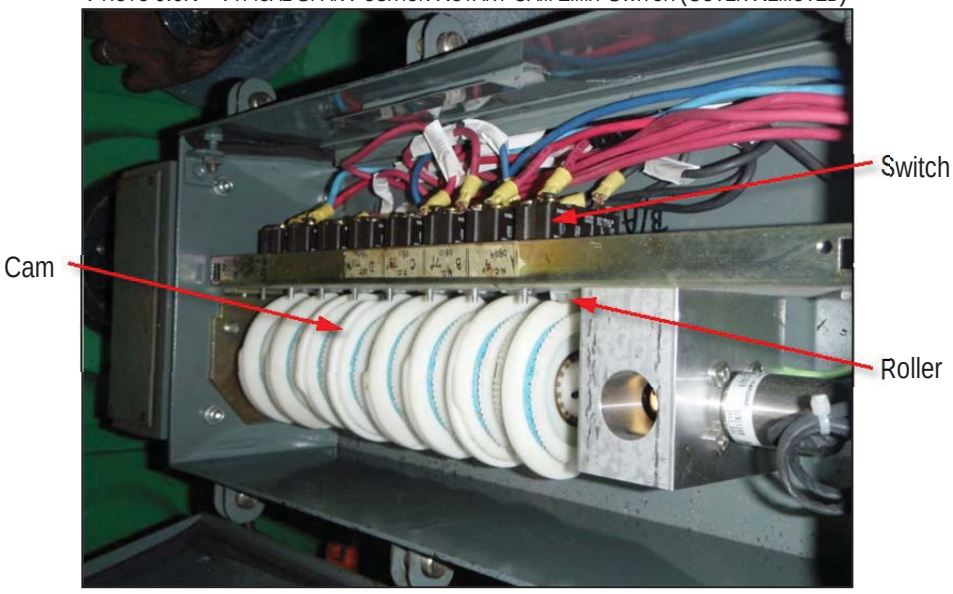

9.7 MISCELLANEOUS EQUIPMENT

PHOTO 9.7A –TYPICAL HEATER

PHOTO 9.7B – SUMP PUMP CONTROL PANEL

PHOTO 9.7C – TYPICAL SUMP PUMP

PHOTO 9.7D – TYPICAL HEAT TRACE

PHOTO 9.7E –TYPICAL SERVICE LIGHT FIXTURE TYPE 1

PHOTO 9.7F – TYPICAL SERVICE LIGHT FIXTURE TYPE 2

PHOTO 9.7G – TYPICAL EMERGENCY LIGHT FIXTURE

PHOTO 9.7H – TYPICAL CONTROL AND STORAGE HOUSE ARCHITECTURAL LIGHTING

PHOTO 9.7I – AIR HORN AND FLOOD LIGHT

PHOTO 9.7J – HVAC OUTDOOR UNIT AND DISCONNECT SWITCH

PHOTO 9.7K – TYPICAL COUNTERWEIGHT PIT

THIS PAGE INTENTIONALLY LEFT BLANK

CHAPTER 10 - MAINTENANCE FORMS

10.1 MECHANICAL AND ELECTRICAL MAINTENANCE CHECKLIST

Form 10-1 – Leaf Support System and Counterweight....10-2
Form 10-2 – Span Drive Machinery....10-3
Form 10-3 – Span Lock Machinery and Centering Equipment....10-5
Form 10-4 – Traffic Gates....10-6
Form 10-5 – Electrical Power Systems....10-7
Form 10-6 – Lighting Systems....10-10
Form 10-7 – Electric Motors....10-11
Form 10-8 – Control System....10-13
Form 10-9 – Miscellaneous Equipment....10-15

Mechanical Maintenance Checklist - Leaf Support System and Counterweight

Form 10-1
Page 1 of 1

Date: _____ Maintenance Personnel: _____	Maintenance Tasks to be Performed: Monthly	Three Month	Six Month	Annual
	☐	☐	☐	☐

Maintenance Tasks	Maintenance Tasks Completed: Monthly	Three Month	Six Month	Annual
Trunnion Bearings (Section 8.1.1) (Component ID # 18 & 19)				
Lubricate the trunnion bearings.	☐			
Check housing and support frame for corrosion. Spot paint as necessary.				☐
Check housing cap bolts and base bolts. Tighten as necessary.				☐
Observe the trunnion bearings during opening and closing operations.				☐
Live Load Bearings (Section 8.1.2) (Component ID # 41)				
Check live load bearing contact.		☐		
Clean debris from all supporting members and plates.		☐		
Clean the area around the live load support.			☐	
Remove dirt, debris, and corrosion build up from the live load support.			☐	
Pain the live load bearing steel.			☐	
Check that all fasteners are secure and corrosion free.				☐
Check the contacting surfaces between the adjusting screw and bearing plate for deformations, wear and corrosion				☐
If necessary, shim the live load bearing.				☐
Counterweight (Section 8.1.3)				
Check counterweight balance block locations for proper drainage and clean out debris.				☐
Check for concrete spalling, cracks, and signs of structural distress.				☐
Check for shifting of the balance blocks during leaf operation.				☐

Refer to Section 8.1 "Leaf Support System and Counterweight" for component locations, quantities, and additional maintenance information. Component ID # corresponds to components listed in Section 11.1.

Notes:

Mechanical Maintenance Checklist – Span Drive Machinery

Form 10-2
Page 1 of 2

	Maintenance Tasks to Be Performed:				
	Monthly	Three Month	Six Month	Annual	Two Year
Date: _____ Maintenance Personnel: _____	☐	☐	☐	☐	☐

Maintenance Tasks	Maintenance Tasks Completed				
	Monthly	**Three Month**	**Six Month**	**Annual**	**Two Year**
Motor and Machinery Brakes (Section 8.2.1) (Component ID # 5 & 11)					
Perform brake test.					
Check fluid level in hydraulic reservoir. Check for leakage of fluid and clean as necessary. Fill as needed. (EMG Technician)				☐	
Inspect brakes shoes and drums for wear, dust, dirt, grease, and proper adjustment. Inspect brake pad thickness. Replace as needed.				☐	
Check clearance between the brake shoes and brakewheel.				☐	
Inspect mechanical linkages for freedom of moving parts, wear, broken parts, and tightness of nuts and bolts.				☐	
Check for excessive heating of parts.				☐	
Check operations of the brake during test operations of the bridge.				☐	
Check the brake housing and linkages for evidence of water dripping on brake and corrosion.				☐	
Check adjustment of limit switches and hand release devices.				☐	
Check for possible wear of the automatic adjustment mechanism.				☐	
Check brake actuator reserve stroke.				☐	
Check the brake torque settings.				☐	
Couplings (Section 8.2.2) (Component ID # 4, 7, 10, 13, 14, 21, 23, & 25)					
Inspect key and keyways at all couplings for grease leakage, tightness and cracking. Check flange bolts for corrosion and tightness.	☐				
Inspect seals and gaskets for leaks. Replace as needed.	☐				
Inspect helical couplings for damage.	☐				
Replace gear coupling lubricant.			☐		
Visually inspect couplings for relative movement between coupling components during operation of the span drive machinery.			☐		
Lubricate manual disconnect coupling shifting collar.				☐	
Speed Reducers (Section 8.2.3) (Component ID # 8, 24, & 27)					
Listen for unusual noises during operation of the machinery.	☐				
Check the oil level using the dip stick at each speed reducer. Add oil as necessary.	☐				
Inspect hygroscopic breather. Replace as necessary.	☐				
Lubricate speed reducer bearings.			☐		
Check for excessive leakage at the seals.				☐	
Check fasteners for tightness.				☐	
Replace speed reducer oil.					☐

Mechanical Maintenance Checklist – Span Drive Machinery

Form 10-2
Page 2 of 2

Maintenance Tasks	Maintenance Tasks Completed				
	Monthly	Three Month	Six Month	Annual	Two Year
Bearings (Section 8.2.4) (Component ID # 16, 20, 29, & 30)					
Lubricate sleeve bearings.	□				
Replenish spherical roller lubricant.		□			
Check bearing cap and base fasteners for tightness. Tighten as necessary.				□	
Replace spherical roller bearings lubricant.					□
Open Gearing (Section 8.2.5) (Component ID # 28, 32, 33, & 34)					
Lubricate open gearing teeth.	□				
Replace open gear lubricant.				□	
Verify that fasteners connecting the rack to the rack to the rack support are secure and free of corrosion. Torque fasteners as needed. Spot paint as needed.				□	
Inspect keys and keyways for tightness and cracking.				□	
Observe the open gearing during raising and lower operations.				□	
Instrumentation Gear Box (Section 8.2.6) (Component ID # 3)					
Drain, flush and refill instrumentation gear box.				□	

Refer to Section 8.2 "Span Drive Machinery" for component locations, quantities, and additional maintenance information. Component ID # corresponds to components listed in Section 11.1.

Notes:

Mechanical Maintenance Checklist – Span Lock Machinery and Centering Equipment Form 10-3
Page 1 of 1

	Maintenance Tasks to Be Performed:		
	Monthly	Six Month	Annual
Date: _____ Maintenance Personnel: _____	☐	☐	☐

	Maintenance Tasks Completed		
Maintenance Tasks	**Monthly**	**Six Month**	**Annual**
Lock Bar Actuators, Guides and Receivers (Section 8.3.1) (Component ID # 36, 37, 38, & 39)			
Apply grease to the sliding surfaces of the lock bar.	☐		
Apply grease to the grease fittings for all guides and receiving sockets.	☐		
Visually inspect guides and sockets, lock bars, fasteners and shims for damage. Observe the lock bars, guides, and sockets for relative vertical movement with traffic on the span.	☐		
Replace stem guide pipe grease.		☐	
Replace lock bar operator grease.		☐	
Visually inspect all lock bar guides and receiver castings at flange radii and connections.			☐

Refer to Section 8.3 "Span Lock Machinery and Centering Equipment" for component locations, quantities, and additional maintenance information. Component ID # corresponds to components listed in Section 11.1.

Notes:

Electrical Maintenance Checklist – Traffic Gates

Form 10-4
Page 1 of 1

	Maintenance Tasks to Be Performed:	
	Six Month	Annual
Date: _____ Maintenance Personnel: _____	☐	☐

	Maintenance Tasks Completed	
Maintenance Tasks	**Six Month**	**Annual**
Barrier Gates (Section 8.4.1) (Component ID # 45, 46, 47, 49, 52, 56, & 60)		
Check the transmission oil level. Add or replace oil as needed.	☐	
Lubricate shaft bearings and rod ends.	☐	
Lubricate the rotary cam limit switch roller chain.	☐	
Check the roller chain tension and tighten as required.	☐	
Check the clutch operation and adjust as required.		☐
Check the transmission oil level. Add or replace oil as needed.	☐	
Warning Gates (Section 8.4.2) (Component ID # 66, 68, 70, 72, & 75)		
Visually inspect the MOV actuator for damage. Replace as necessary.	☐	
Lubricate shaft bearings and rod ends.	☐	

Refer to Section 8.4 "Traffic Gates" for component locations, quantities, and additional maintenance information. Component ID # corresponds to components listed in Section 11.1.

Notes:

Electrical Maintenance Checklist – Electrical Power Systems

Form 10-5
Page 1 of 3

Date: _____	Maintenance Personnel: _____	Maintenance Tasks to Be Performed: Three Month ☐	Annual ☐	Six Year ☐

Maintenance Tasks	Maintenance Tasks Completed		
	Three Month	**Annual**	**Six Year**
Control Enclosure (Section 8.5.1)			
Open and clean enclosures with a vacuum cleaner.	☐		
Remove accumulation of dirt, grease, and gum with contact cleaner.	☐		
Inspect enclosures for corrosion and moisture.	☐		
Examine for poor or loose connections and evidence of overheating.	☐		
Lubricate door hinges and latches.	☐		
Check circuit breaker disconnects for proper operation.	☐		
Inspect terminal block screws and tighten loose connections.	☐		
Inspect wiring from unit terminal blocks for deterioration of insulation.	☐		
Inspect all circuit breakers. Verify with meter that continuity is broken on trip or switch off conditions.	☐		
Check all starter contacts. Replace contacts when nearly all the silver tip is gone and contact tip support is exposed.	☐		
Inspect all fuses with meter and verify continuity.	☐		
Inspect fuse clips for dirt and verify that the clips provide a tight fit.	☐		
Verify enclosure lights turn on when doors are open. Replace bulbs as required.	☐		
Verify enclosure heaters are functioning.	☐		
Check for discolored connections on terminals, contact supports, bus bars, or connectors. Clean discolored connection points. Tighten loose hardware. Replace or repair heat-damaged wires and connectors as necessary.		☐	
Operate the motor controller/contactor without load and observe contact operation to be sure it opens and closes cleanly and that the contacts are fully sealed in the closed position.		☐	
Operate the motor controller/contactor under load and check for loud noise and arcing.		☐	
Measure and record current draw on load side of contactor.		☐	
Drive Cabinets and Resistors (Section 8.5.2)			
Open and clean enclosures with a vacuum cleaner.	☐		
Remove accumulation of dirt, grease, and gum with contact cleaner.	☐		
Inspect enclosures for corrosion and moisture.	☐		
Lubricate door hinges and latches.	☐		
Inspect terminal block screws and tighten loose connections.	☐		
Inspect wiring from unit terminal bocks for deterioration and/or overheating of insulation.	☐		
Inspect all circuit breakers. Verify with meter that continuity is broken on trip or switch off conditions.	☐		
Inspect all fuses with meter and verify continuity. Replace fuses if needed.	☐		
Inspect all relays and tighten connections as necessary.	☐		
Verify enclosure heaters are functioning.	☐		
Verify enclosure lights turn on when doors are open. Replace bulbs as required	☐		
Clean filters with vacuum or replace if necessary.		☐	
Verify enclosure fan is functioning.		☐	

Electrical Maintenance Checklist – Electrical Power Systems

Form 10-5
Page 2 of 3

Maintenance Tasks	Maintenance Tasks Completed		
	Three Month	Annual	Five Year
Drive Cabinets and Resistors (cont.)			
Check for discolored connections on terminals, contact supports, bus bars, or connectors. Clean discolored connection points. Tighten all hardware. Replace or repair heat-damaged wires and connectors as necessary.		☐	
Operate the motor controller/contactor without load and observe contact operation		☐	
Operate the motor controller/contactor normally from the control desk during a vessel or maintenance opening. Check for a loud noise and arcing.		☐	
Measure and record current draw on load side of contactor.		☐	
Replace general purpose plug in style ice cube relays.			☐
Panelboards (Section 8.5.3)			
Open and clean with a vacuum cleaner.		☐	
Remove accumulation of dirt, grease, and gum with contact cleaner.		☐	
Check for corrosion and moisture.		☐	
Examine bus bar connections for poor or loose connections and evidence of overheating.		☐	
Lubricate door hinges and latches.		☐	
Operate each circuit breaker to check for proper operation.		☐	
Measure resistance to ground at each panelboard using a ground test kit.		☐	
Transformers (Section 8.5.4)			
Open and clean with vacuum cleaner.		☐	
Check for corrosion and moisture.		☐	
Verify all hardware is secure. Tighten as needed.		☐	
Standby Emergency Generator Receptacle (Section 8.5.5)			
Using an off-site portable generator, start and run the bridge for one complete opening using the auxiliary gear motors.		☐	
Visually inspect the generator receptacle, cables, and associate equipment.		☐	
Safety and Disconnect Switches (Section 8.5.6)			
Remove accumulation of dirt, grease, and gum with contact cleaner.		☐	
Check for corrosion and moisture.		☐	
Examine for excessive heating of parts, discoloration of metal parts, charred insulation, odor, or blistering.		☐	
Check for freedom of moving parts.		☐	
Check for worn or broken mechanical parts.		☐	
Tighten loose mountings and connections.		☐	
Replace pitted or worn contacts or replace entire unit if needed.		☐	
Check for excessive arcing.		☐	
Check condition of gaskets (for dust-tight or watertight units).		☐	
Electrical Conductors (Section 8.5.7)			
Visually inspect terminations and splices for cracks, deterioration, corrosion, discoloring, or any other abnormalities.		☐	
Check tightness of each conductor termination at each terminal box.		☐	
Check the strain relief fittings for signs of distress.		☐	

Electrical Maintenance Checklist – Electrical Power Systems

Form 10-5
Page 3 of 3

Maintenance Tasks	Maintenance Tasks Completed		
	Three Month	Annual	Five Year
Electrical Conductors (cont.)			
Inspect wires and electrical cables for grease and oil contamination, fraying, abrasions, sweating, cracked, melted or overheated blue tinted insulation. Clean or replace in kind as needed.		□	
Droop Cables (Section 8.5.8)			
Visually inspect terminations and splices for cracks, deterioration, corrosion, discoloring, or any other abnormalities.		□	
Check tightness of each conductor termination at each terminal box. Tighten loose connections.		□	
Check the strain relief fittings for signs of distress.		□	
Check cables for any wear or abrasions on the outer jacket.		□	
Inspect wires and electrical cables for grease and oil contamination, fraying, abrasions, sweating, cracked, melted or overheated blue tinted insulation. Clean or replace in kind as needed.		□	
Submarine Cables (Section 8.5.9)			
Visually inspect terminations and splices for cracks, deterioration, corrosion, discoloring, or any other abnormalities.		□	
Check tightness of each conductor termination at each terminal box. Tighten loose connections.		□	
Check the strain relief fittings for signs of distress.		□	
Tighten loose connections.		□	
Visually inspect the submarine cable and watch for signs of cracks, deterioration and discoloration of the cable jackets.		□	

Refer to Section 8.5 "Electrical Power Systems" for component locations, quantities, and additional maintenance information.

Notes:

Electrical Maintenance Checklist – Lighting System

Form 10-6
Page 1 of 1

	Maintenance Tasks To Be Performed:							
	Week 1	Week 2	Week 3	Week 4	Week 5	Monthly	Six Month	Annual
Date: _____ Maintenance Personnel: _____	☐	☐	☐	☐	☐	☐	☐	☐
Date: _____ Maintenance Personnel: _____	☐	☐	☐	☐	☐	☐	☐	☐
Date: _____ Maintenance Personnel: _____	☐	☐	☐	☐	☐	☐	☐	☐
Date: _____ Maintenance Personnel: _____	☐	☐	☐	☐	☐	☐	☐	☐
Date: _____ Maintenance Personnel: _____	☐	☐	☐	☐	☐	☐	☐	☐

	Maintenance Tasks Completed							
Maintenance Tasks	**Week 1**	**Week 2**	**Week 3**	**Week 4**	**Week 5**	**Monthly**	**Six Month**	**Annual**
Navigation Lights (Section 8.6.1)								
Check navigation lights for proper operation.	☐	☐	☐	☐	☐			
Replace lamps or fixtures as needed.	☐	☐	☐	☐	☐			
Check gaskets.								☐
Tighten loose connections.								☐
Inspect for corrosion of metal parts.								☐
Replace worn or broken mechanical parts.								☐
Replace lamps.								☐
Interior/Exterior Lights (Section 8.6.2)								
Check for burned-out lamps. Replace lamp as needed.	☐	☐	☐	☐	☐			
Clean luminaire lenses, interior surfaces, and weep holes (where applicable).								☐
Check gaskets and replace as needed.								☐
Tighten loose connections.								☐
Inspect for corrosion of metal parts. Spot paint as necessary.								☐
Replace worn or broken parts.								☐
Traffic Signals (Section 8.6.3)								
Check lights for proper illumination. Replace bulbs as needed.						☐		
Verify proper operation of the traffic signals and gongs during openings.						☐		
Clean reflectors and lenses. Spot paint heads as needed.								☐
Traffic Gate Arm Lights (Section 8.6.4)								
Check gate arm lights for proper operation. Replace bulbs as needed.	☐	☐	☐	☐	☐			
Replace gate arm light lamps and wiring that is non-functional or damaged.							☐	

Refer to Section 8.6 "Lighting Systems" for component locations, quantities, and additional maintenance information.

Notes:

Electrical Maintenance Checklist – Electric Motors

Form 10-7
Page 1 of 2

Date: _____ Maintenance Personnel: _____	Maintenance Tasks To Be Completed: Annual	Two Year	Six Year
	☐	☐	☐

Maintenance Tasks	Maintenance Tasks Completed: Annual	Two Year	Six Year
Lock Motors (Section 8.7.1) (Component ID # 35)			
Check for leakage around bearings. Clean of excess grease and dirt.	☐		
Verify that shaft end-play is normal.	☐		
Inspect and tighten electrical connections on motor.	☐		
See that all keys, bolts, and pins are in their proper position. Check all bolts for tightness. Tighten as needed.	☐		
During operation, examine motor for smooth running and absence of vibration.	☐		
During operation, check motor and bearings for overheating.	☐		
Lubricate span lock motor bearings.	☐		
Check painted surfaces for corrosion. Spot paint as necessary.	☐		
Perform a general visual inspection of the solenoid brakes while stationary and during lock operation.	☐		
Check solenoid brakes electrical connections and tighten as necessary.	☐		
Inspect solenoid brakes mechanical components for wear, broken parts, and bolt and nut tightness. Check freedom of moving parts.	☐		
Check solenoid brakes for excessive heating of parts. Check for accumulation of dirt or gum. Clean as necessary.	☐		
Check solenoid brakes for excessive vibration or noise during operation.	☐		
Repaint motors.			☐
Main Leaf (Span) Motors (Section 8.7.2) (Component ID # 6)			
Verify that shaft is free of oil and grease.	☐		
Check for leakage around bearings. Clean of excess grease and dirt.	☐		
Verify that shaft end-play is normal.	☐		
Inspect and tighten electrical connections on motor.	☐		
See that all keys, bolts, and pins are in their proper position. Check all bolts for tightness. Tighten as needed.	☐		
During operation, examine motor for smooth running and absence of vibration.	☐		
During operation, check motor and bearings for overheating.	☐		
Lubricate main leaf motor bearings.	☐		
Check painted surfaces for signs of corrosion. Spot paint as necessary.	☐		
Check the phase currents flowing in motors under loaded conditions with a clamp-on ammeter for all motors.	☐		
Auxiliary Leaf (Span) Motors (Section 8.7.3) (Component ID # 9)			
Verify that shaft is free of oil and grease.	☐		
Check for leakage around bearings. Clean of excess grease and dirt.	☐		
Verify that shaft end-play is normal.	☐		
Inspect and tighten electrical connections on motor.	☐		
See that all keys, bolts, and pins are in their proper position. Check all bolts for tightness. Tighten as needed.	☐		

Electrical Maintenance Checklist – Electric Motors

Form 10-7
Page 2 of 2

Maintenance Tasks	Maintenance Tasks Completed		
	Annual	Two Year	Six Year
Auxiliary Leaf (Span) Motors (cont.)			
During operation, examine motor for smooth running and absence of vibration.	☐		
During operation, check motor and bearings for overheating.	☐		
Check painted surfaces for corrosion. Spot paint as necessary.	☐		
Check the phase currents flowing in motors under loaded conditions with a clamp-on ammeter for all motors.	☐		
Perform a general visual inspection of the Solenoid Brakes while stationary and during auxiliary gear motor operation.	☐		
Check solenoid brakes electrical connections and tighten as necessary.	☐		
Inspect solenoid brakes mechanical components for wear, broken parts, and bolt and nut tightness. Check freedom of moving part.	☐		
Check solenoid brakes for excessive heating of parts. Check for collections of dirt or gum. Clean as necessary.	☐		
Check solenoid brakes for excessive vibration or noise during operation.	☐		
Replace gear motor oil in reducer.		☐	
Repaint motors.			☐
Traffic Gate Motor (Section 8.7.4) (Component ID # 44 & 65)			
Check for leakage around bearings. Clean off excess grease and dirt.	☐		
Verify that shaft end-play is normal.	☐		
Inspect and tighten electrical connections on motor.	☐		
See that all keys, bolts, and pins are in their proper position. Check all bolts for tightness. Tighten as needed.	☐		
During operation, examine motor for smooth running and absence of vibration.	☐		
During operation, check motor and bearings for overheating.	☐		
Check painted surfaces for corrosion. Spot paint as necessary.	☐		
Visually inspect solenoid brake while stationary and during gate operation.	☐		
Check solenoid brake electrical connections and tighten as necessary.	☐		
Inspect solenoid brake for wear, damage, and bolt and nut tightness. Check freedom of moving parts.	☐		
Check solenoid brake components for evidence of excessive heating. Check for accumulation of dirt or gum, evidence of water .dripping, or corrosion. Clean as necessary.	☐		
Check solenoid brake for excessive vibration or noise during operation.	☐		

Refer to Section 8.7 "Electric Motors" for component locations, quantities, and additional maintenance information. Component ID # corresponds to components listed in Section 11.1

Notes:

Electrical Maintenance Checklist – Control Systems

Form 10-8
Page 1 of 2

	Maintenance Tasks To Be Completed:	
	Three Month	Annual
Date: _____ Maintenance Personnel: _____	☐	☐

	Maintenance Tasks Completed	
Maintenance Tasks	**Three Month**	**Annual**
Relay Cabinets (Section 8.8.1)		
Open and clean with a vacuum cleaner.	☐	
Remove accumulation of dirt, grease, and gum with contact cleaner.	☐	
Check for corrosion and moisture.	☐	
Lubricate door hinges and latches.	☐	
Inspect terminal block screws and tighten loose connections.	☐	
Inspect wiring from unit terminal blocks for deterioration of insulation.	☐	
Inspect all circuit breakers. Verify with meter than continuity is broken on trip or switch off conditions.	☐	
Inspect all fuses with meter and verify continuity. Replace fuses if needed.	☐	
Inspect all relays and tighten connections as necessary.	☐	
During operation, verify each relay lamp turns on. Replace bulbs as required.	☐	
Verify enclosure heaters are functioning.	☐	
Verify enclosure lights turn on when doors are open. Replace bulbs as required.	☐	
Check for discolored connections on terminals, contact supports, bus bars, or connectors. Clean connection points that are discolored. Tighten all loose hardware. Replace or repair heat damaged wires and connectors as necessary.		☐
Manually operate each relay and contactor with associated circuit breakers off and observe contact operation to be sure it opens and closes cleanly and that the contacts are sealed when in the closed position.		☐
Monitor relay and contactor operations during normal operation and check for loud noise and arcing during opening and closing operations.		☐
Control Console (Section 8.8.2)		
Open and clean with a vacuum cleaner.	☐	
Remove accumulation of dirt, grease, and gum with contact cleaner.	☐	
Check for corrosion and moisture.	☐	
Lubricate door hinges and latches.	☐	
Inspect terminal block screws and tighten all loose connections.	☐	
Inspect wiring from unit terminal blocks for deterioration of insulation.	☐	
Inspect all circuit breakers. Verify with meter than continuity is broken on trip or switch off conditions.	☐	
Inspect all fuses with meter and verify continuity. Replace fuses if needed.	☐	
Inspect all relays and tighten connections as necessary.	☐	
Check all pushbuttons, selector switches and meters. Replace as necessary.	☐	
Check all indicating lights by turning the pilot light test selector switch located behind the cabinet door and verify each lamp illuminates. Replace bulbs as required	☐	
Verify enclosure lights turn on when doors are open. Replace bulbs as required.	☐	

Electrical Maintenance Checklist – Control System

Form 10-8
Page 2 of 2

Maintenance Tasks	Maintenance Tasks Completed	
	Three Month	Annual
Control Console (cont.)		
Check for discolored connections on terminals, contact supports, bus bars, or connectors. Clean connection points that are discolored. Tighten all loose hardware. Replace or repair heat damaged wires and connectors as necessary.		☐
Manually operate each relay and contactor with associated circuit breakers off and observe contact operation to be sure it opens and closes cleanly and that the contacts are sealed when in the closed position.		☐
Monitor relay and contactor operation during normal operation and check for loud noise and arcing, during opening and on closing operations.		☐
Limit Switches and Resolvers (Section 8.8.3) (Component ID # 5, 11, 10, 12, 36, 42, 43, 55, 62, 63, 77 & 78)		
Inspect all limit switches for wear.		☐
Remove accumulated dust, dirt, and moisture on housing.		☐
Inspect latches, mounting hardware, and seals.		☐
Inspect all fasteners and tighten connections as necessary.		☐
Remove the cover and visually inspect the condition of all internal parts.		☐
Inspect rotary cam limit switch switches for wear.		☐
Inspect rotary cam limit switch rollers for wear.		☐
Inspect rotary cam limit switch cams for wear.		☐
Inspect fully open and fully closed limit switch snap action contact blocks and all internal component connections. Tighten as necessary.		☐
Inspect all fully open and fully closed limit switch wiring from snap action contact blocks for deterioration.		☐
Cycle fully open limit switch, fully closed limit switch, and brake limit switch lever arm several times.		☐
Speed Switches (Section 8.8.4) (Component ID # 2)		
Remove accumulated dust, dirt, and moisture on housing.		☐
Remove accumulated dust, dirt, and moisture from overspeed switch shafts.		☐
Inspect cover to ensure proper seal of housing.		☐
Inspect all screws and tighten connections as necessary.		☐

Refer to Section 8.8 "Control System" for component locations, quantities, and additional maintenance information. Component ID # corresponds to components listed in Section 11.1.

Notes:

Electrical Maintenance Checklist – Miscellaneous Equipment

Form 10-9
Page 1 of 2

	Maintenance Tasks To Be Performed:								
	Week 1	Week 2	Week 3	Week 4	Week 5	Monthly	Three Month	Six Month	Annual
Date: _____ Maintenance Personnel: _____	☐	☐	☐	☐	☐	☐	☐	☐	☐
Date: _____ Maintenance Personnel: _____	☐	☐	☐	☐	☐	☐	☐	☐	☐
Date: _____ Maintenance Personnel: _____	☐	☐	☐	☐	☐	☐	☐	☐	☐
Date: _____ Maintenance Personnel: _____	☐	☐	☐	☐	☐	☐	☐	☐	☐
Date: _____ Maintenance Personnel: _____	☐	☐	☐	☐	☐	☐	☐	☐	☐

	Maintenance Tasks Completed								
Maintenance Tasks	**Week 1**	**Week 2**	**Week 3**	**Week 4**	**Week 5**	**Monthly**	**Three Month**	**Six Month**	**Annual**
Air Horn and Air Compressors (Section 8.9.1)									
Perform a general visual inspection and check for proper operation. Correct as necessary.	☐	☐	☐	☐	☐				
Check electrical connections and tighten as necessary.									☐
Operate the compressor under load and check for excessive heating of parts									☐
Check for collections of dirt or gum, evidence of water dripping, or corrosion. Clean as necessary.									☐
Check the air horn trumpets for debris inside the trumpets.									☐
Inspect connecting piping, tubing or hoses for cracking or leaks.									☐
Heating and Air Conditioning Systems (Section 8.9.2)									
Check all air filters. Clean or replace as necessary.						☐			
Check all cooling coils, seals, fittings, ducting connections, and pipelines for leaks. Correct as necessary.						☐			
Check surfaces of casing for signs of corrosion and retreat or paint as necessary.						☐			
Inspect the condition of all safety devices for deterioration.						☐			
Check the performance of all equipment related to temperature, humidity and control.						☐			
Sump Pumps (Section 8.9.3)									
Test operation of each sump pump.						☐			
Check that the motor is free of debris.						☐			
During operation, examine motor for smooth running and absence of vibration.						☐			
Check the phase currents flowing in motors under loaded conditions.						☐			
Open and clean the control panel with a vacuum cleaner.							☐		
Remove accumulation of dirt, grease, and gum from the control panel with contact cleaner.							☐		
Check control panel for corrosion and moisture							☐		
Examine control panel connections for poor or loose connections and evidence of overheating.							☐		
Lubricate control panel door hinges and latches.							☐		
Check control panel unit door interlocks and circuit breaker disconnects for proper operation.							☐		
Inspect terminal block screws and hand tighten loose connections.							☐		

Electrical Maintenance Checklist – Control System

Form 10-9
Page 2 of 2

Maintenance Tasks	Maintenance Tasks Completed								
	Week 1	Week 2	Week 3	Week 4	Week 5	Monthly	Three Month	Six Month	Annual
Sump Pumps (cont.)									
Inspect wiring from unit terminal blocks for deterioration of insulation.							☐		
Inspect all circuit breakers. Verify with meter that continuity is broken on trip or switch off conditions.							☐		
Check all starter contacts. Replaced when nearly all the silver tip is gone and the contact tip support is exposed.							☐		
Inspect all fuses with meter and verify continuity. Replace fuses if needed.							☐		
Inspect fuse clips for dirt and verify that the clips provide a tight fit.							☐		
Pits, Platforms, and Walkways (Section 8.9.4)									
Clean and power wash the counterweight pits, platforms, and walkways of dirt and debris.								☐	

Refer to Section 8.8 "Control System" for component locations, quantities, and additional maintenance information. Component ID # corresponds to components listed in Section 11.1.

Notes:

CHAPTER 11 - SUPPLEMENTAL INFORMATION AND SPECIFICATIONS

CONTENTS

11.1 COMPONENT IDENTIFICATION CHARTS AND DIAGRAMS 11-3
11.2 MACHINERY LUBRICATION SCHEMATICS 11-7
11.3 MACHINERY LUBRICATION SCHEDULE 11-11
11.4 BRIDGE MAINTENANCE PERFORMANCE STANDARDS (PLATES) 11-14
11.4.1 SLEEVE BEARING AND TRUNNION BEARING LUBRICATION 11-14
11.4.2 MOTOR BEARING LUBRICATION 11-16
11.4.3 MOTOR AND MACHINERY BRAKE MAINTENANCE 11-18
11.4.4 COUPLING LUBRICATION 11-20
11.4.5 SPEED REDUCER LUBRICATION 11-23
11.4.6 OPEN GEARING LUBRICATION 11-26
11.4.7 SPHERICAL ROLLER BEARING LUBRICATION 11-28
11.4.8 SPAN LOCK MACHINERY LUBRICATION 11-30
11.4.8.1 SPAN LOCK ACTUATOR LUBRICATION 11-30
11.4.8.2 SPAN LOCK BAR, GUIDE, AND RECEIVING SOCKET LUBRICATION 11-32
11.5 MATERIAL DATA SHEETS 11-34
11.5.1 MOBIL MOBILUX EP-0, EP-2 11-34
11.5.2 MOBIL MOBILGREASE XHP 462 11-54
11.5.3 MOBIL MOBILTAC 325 NC 11-66
11.5.4 MOBIL UNIREX N2 11-80
11.5.5 MOBIL BEACON 325 11-91
11.5.6 MOBIL MOBILGEAR SHC 150 11-102
11.5.7 MOBIL MOBILGEAR 600 XP 220 11-113
11.5.8 DOW CORNING MOLYKOTE BR2-PLUS 11-125
11.5.9 MOBIL POLYREX EM 11-135
11.5.10 MOBIL DTE 21 11-146
11.5.10 MOBIL SHC 629 11-159
11.5.10 CRC TAC 2 ADHESIVE CHAIN LUBRICANT 11-172
11.5.10 CRC QUICKCLEAN HEAVY DUTY DEGREASER 11-181
11.5.10 PERMATEX GEAR OIL RTV SEALANT 11-190
11.6 COMPONENT MANUFACTURER LIST 11-195

11.7 MECHANICAL EQUIPMENT MANUALS AND SPECIFICATIONS 11-197
11.7.1 PRIMARY & FINAL ENCLOSED - FALK SPEED REDUCERS TYPES A & AB. 11-197
11.7.2 ENCLOSED BEVEL – FALK SPEED REDUCER TYPE GHB 11-208
11.7.3 AUXILIARY – SUMITOMO GEARMOTOR 11-216
11.7.4 GEAR COUPLING - FALK COUPLING G32 & G52 11-223
11.7.5 GEAR COUPLING - FALK COUPLING GV52 11-231
11.7.6 DISCONNECT COUPLING – FALK COUPLING G72 11-237
11.7.7 MOTOR COUPLING – FALK COUPLING G20 11-245
11.7.7 MOTOR & MACHINERY BRAKE – MONDEL MBTE 11-253
11.7.8 SPAN LOCK ACTUATOR – EARLE GEAR EG-2B 11-287
11.8 TRAFFIC CONTROL EQUIPMENT MANUALS AND SPECIFICATIONS 11-318
11.8.1 BARRIER GATE – B&B ROADWAY VR-7 11-318
11.8.2 WARNING GATE – B&B ROADWAY VT-40A 11-339
11.9 ELECTRICAL EQUIPMENT MANUALS AND SPECIFICATIONS 11-361
11.9.1 DRIVE – HUBBELL 4922C 11-361

11.1 COMPONENT IDENTIFICATION CHARTS AND DIAGRAMS

SPAN DRIVE MACHINERY			
ID NUMBER	MANUFACTURER	DESCRIPTION	SECTION
1	BALDOR	TACHOMETER	8.8.4
2	SPEEDETEX	OVERSPEED SWITCH	8.8.4
3	HUBI CITY	LIMIT SWITCH GEAR BOX	8.2.6
4	HELICAL PRODUCTS CO.	HELICAL COUPLING	8.2.2
5	MONDEL	MOTOR BRAKE, W/ 3 CUTLER HAMMER LEVER LIMIT SWITCHES	8.2.1 8.8.3
6	REULAND	MAIN LEAF MOTOR	8.7.2
7	FALK	MOTOR COUPLING	8.2.2
8	FALK	PRIMARY REDUCER	8.2.3
9	SUMITOMO	AUXILIARY GEAR MOTOR	8.7.3
10	FALK	AUXILIARY GEAR MOTOR DISCONNECT COUPLING, W/ SQUARE D PLUNGER LIMIT SWITCH	8.2.2 8.8.3
11	MONDEL	MACHINERY BRAKE, W/ 3 CUTLER HAMMER LEVER LIMIT SWITCHES	8.2.1 8.8.3
12	AMETEK-GEMCO	SPAN CONTROL ROTARY CAM LIMIT SWITCH	8.8.3
13	HELICAL PRODUCTS CO.	HELICAL COUPLING	8.2.2
14	FALK	COUPLING	8.2.2
15	-	SHAFT	-
16	-	SLEEVE BEARING	8.2.4
17	-	SHAFT	-
18	BETHLEHEM STEEL	TRUNNION BEARING	8.1.1
19	BETHLEHEM STEEL	TRUNNION SHAFT	8.1.1
20	-	SLEEVE BEARING	8.2.4
21	FALK	COUPLING	8.2.2
22	-	FLOATING SHAFT	-
23	FALK	SPACER COUPLING	8.2.2
24	FALK	BEVEL ENCLOSED REDUCER	8.2.3
25	FALK	COUPLING	8.2.2
26	-	FLOATING SHAFT	-
27	FALK	FINAL ENCLOSED REDUCER	8.2.3
28	-	PINION	8.2.5
29	SKF	SPHERICAL ROLLER BEARING	8.2.4
30	STEWARD MACHINE CORP.	SLEEVE BEARING	8.2.4
31	-	MAIN PINION SHAFT	-
32	-	GEAR	8.2.5
33	-	MAIN PINION	8.2.5
34	-	RACK	8.2.5
41	-	LIVE LOAD BEARING	8.1.2
42	GENERAL ELECTRIC	FULLY SEATED LIMIT SWITCH	8.8.3
43	GENERAL ELECTRIC	FULLY OPEN LIMIT SWITCH	8.8.3

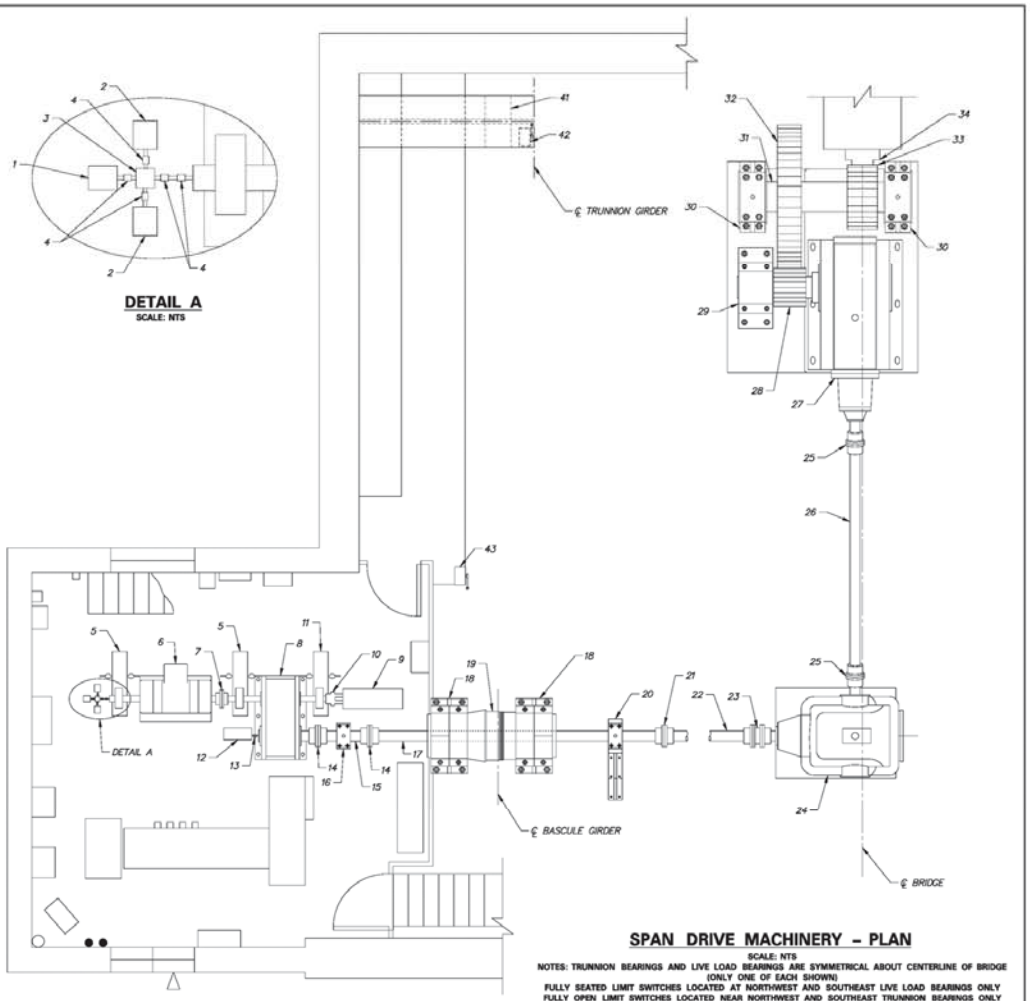

THIS PAGE INTENTIONALLY LEFT BLANK

SPAN LOCK MACHINERY			
ID NUMBER	MANUFACTURER	DESCRIPTION	SECTION
35	BALDOR	SPAN LOCK MOTOR	8.7.1
36	EARLE GEAR	SPAN LOCK ACTUATOR, W/ 2 SQUARE D LIMIT SWITCHES	8.3.1 8.8.3
37	EARLE GEAR	LOCKBAR	8.3.1
38	-	SPAN LOCK GUIDE	8.3.1
39	-	SPAN LOCK RECEIVING SOCKET	8.3.1
40	-	HAND CRANK	-

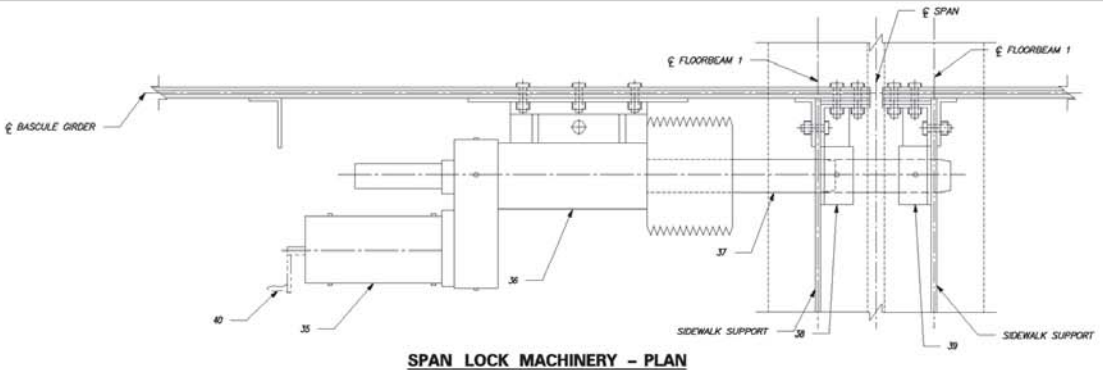

SPAN LOCK MACHINERY – PLAN
SCALE: NTS

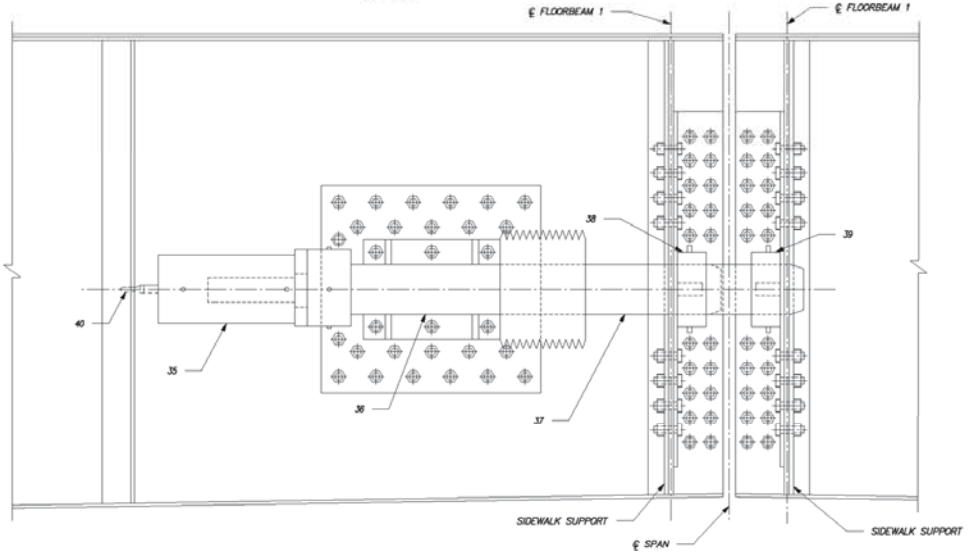

SPAN LOCK MACHINERY – ELEVATION
SCALE: NTS

DELAWARE
DEPARTMENT OF TRANSPORTATION

ADDENDUMS / REVISIONS

SOUTH MARKET STREET BRIDGE
OPERATIONS AND MAINTENANCE
MANUAL

CONTRACT: -
COUNTY: NEW CASTLE
BRIDGE NO.: 1-688
DRAWN BY: JAB
CHECKED BY: DJM

SPAN LOCK MACHINERY
COMPONENT IDENTIFICATION

SECTION No.: 11-10
PAGE No.: 11-4

THIS PAGE INTENTIONALLY LEFT BLANK

BARRIER GATE MACHINERY			
ID NUMBER	MANUFACTURER	DESCRIPTION	SECTION
44	LEESON	BARRIER GATE MOTOR	8.7.4
45	B&B ROADWAY	TRANSMISSION	8.4.1
46	B&B ROADWAY	TRANSMISSION CLUTCH	8.4.1
47	B&B ROADWAY	ROD END	8.4.1
48	B&B ROADWAY	CONNECTING ROD	8.4.1
49	B&B ROADWAY	ROD END	8.4.1
50	B&B ROADWAY	GATE ARM SHAFT CRANK	8.4.1
51	B&B ROADWAY	GATE ARM PIVOT SHAFT	8.4.1
52	B&B ROADWAY	GATE ARM PIVOT SHAFT BEARING	8.4.1
53	B&B ROADWAY	SPROCKET BEARING	8.4.1
54	B&B ROADWAY	SPROCKET	8.4.1
55	B&B ROADWAY	ROTARY CAM LIMIT SWITCH	8.8.3
56	B&B ROADWAY	ROLLER CHAIN	8.4.1
57	B&B ROADWAY	SIDE LATCH CONNECTOR	8.4.1
58	B&B ROADWAY	SIDE LATCH CONNECTING ROD	8.4.1
59	B&B ROADWAY	SIDE LATCH CRANK	8.4.1
60	B&B ROADWAY	SIDE LATCH BEARING	8.4.1
61	B&B ROADWAY	ELECTRICAL ENCLOSURE	8.4.1
62	B&B ROADWAY	GATE DOOR LIMIT SWITCH	8.8.3
63	B&B ROADWAY	MANUAL OPERATION LIMIT SWITCH	8.8.3
64	B&B ROADWAY	BARRIER GATE HAND CRANK	8.4.1

WARNING GATE MACHINERY			
ID NUMBER	MANUFACTURER	DESCRIPTION	SECTION
65	EIM CONTROLS	WARNING GATE MOTOR	8.7.4
66	EIM CONTROLS	WARNING GATE ACTUATOR	8.4.2
67	B&B ROADWAY	GATE ARM PIVOT SHAFT	8.4.2
68	B&B ROADWAY	GATE ARM PIVOT SHAFT BEARING	8.4.2
69	B&B ROADWAY	GATE ARM PIVOT SHAFT CRANK	8.4.2
70	B&B ROADWAY	ROD END	8.4.2
71	B&B ROADWAY	CONNECTING ROD	8.4.2
72	B&B ROADWAY	ROD END	8.4.2
73	B&B ROADWAY	PEDESTRIAN GATE ARM PIVOT SHAFT CRANK	8.4.2
74	B&B ROADWAY	PEDESTRIAN GATE ARM PIVOT SHAFT	8.4.2
75	B&B ROADWAY	PEDESTRIAN GATE ARM PIVOT SHAFT BEARING	8.4.2
76	B&B ROADWAY	ELECTRICAL ENCLOSURE	8.4.2
77	B&B ROADWAY	MANUAL OPERATION LIMIT SWITCH	8.8.3
78	B&B ROADWAY	DOOR LIMIT SWITCH	8.8.3
79	B&B ROADWAY	WARNING GATE HAND CRANK	8.4.2

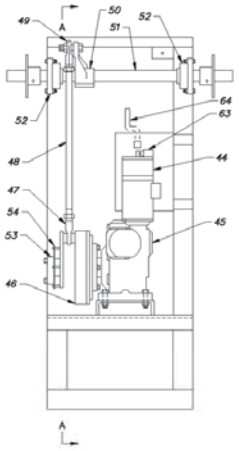

BARRIER GATE MACHINERY – ELEVATION
SCALE: NTS
NOTES: SIDE ARM LATCHES AND GATE ARM NOT SHOWN FOR CLARITY

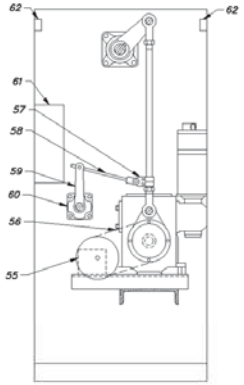

VIEW A–A
SCALE: NTS

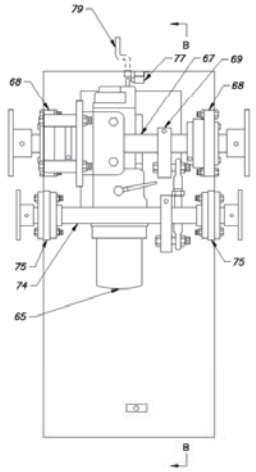

WARNING GATE MACHINERY – ELEVATION
SCALE: NTS
NOTE: GATE ARMS NOT SHOWN FOR CLARITY

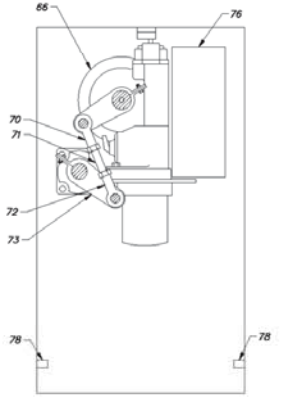

VIEW B–B
SCALE: NTS

DELAWARE
DEPARTMENT OF TRANSPORTATION

ADDENDUMS / REVISIONS

SOUTH MARKET STREET BRIDGE
OPERATIONS AND MAINTENANCE
MANUAL

CONTRACT -
COUNTY NEW CASTLE
BRIDGE NO. 1-688
DRAWN BY: JAB
CHECKED BY: DJM

TRAFFIC GATE MACHINERY
COMPONENT IDENTIFICATION

SECTION No. 11-10
PAGE No. 11-5

THIS PAGE INTENTIONALLY LEFT BLANK

11.2 MACHINERY LUBRICATION SCHEMATICS

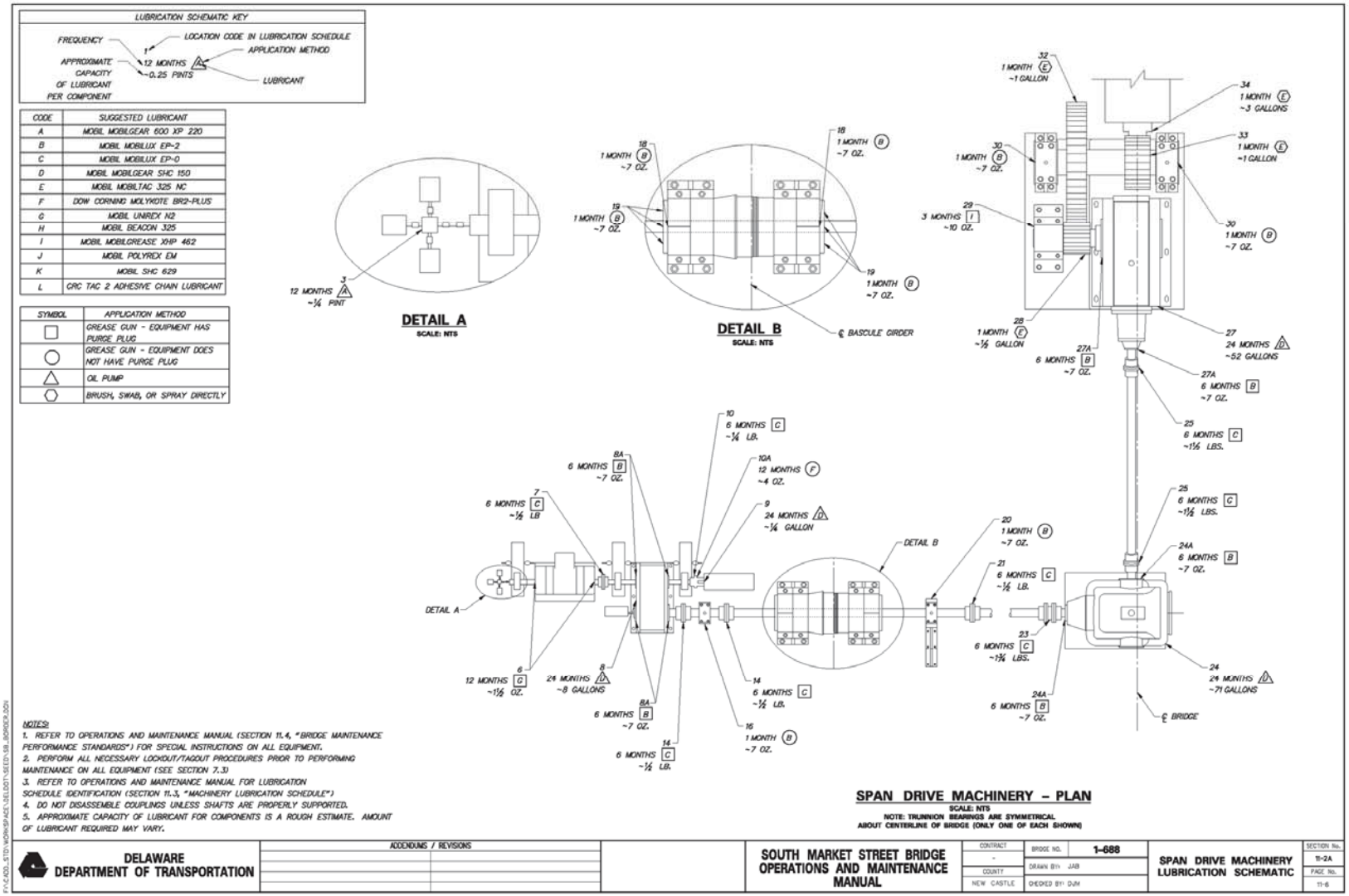

THIS PAGE INTENTIONALLY LEFT BLANK

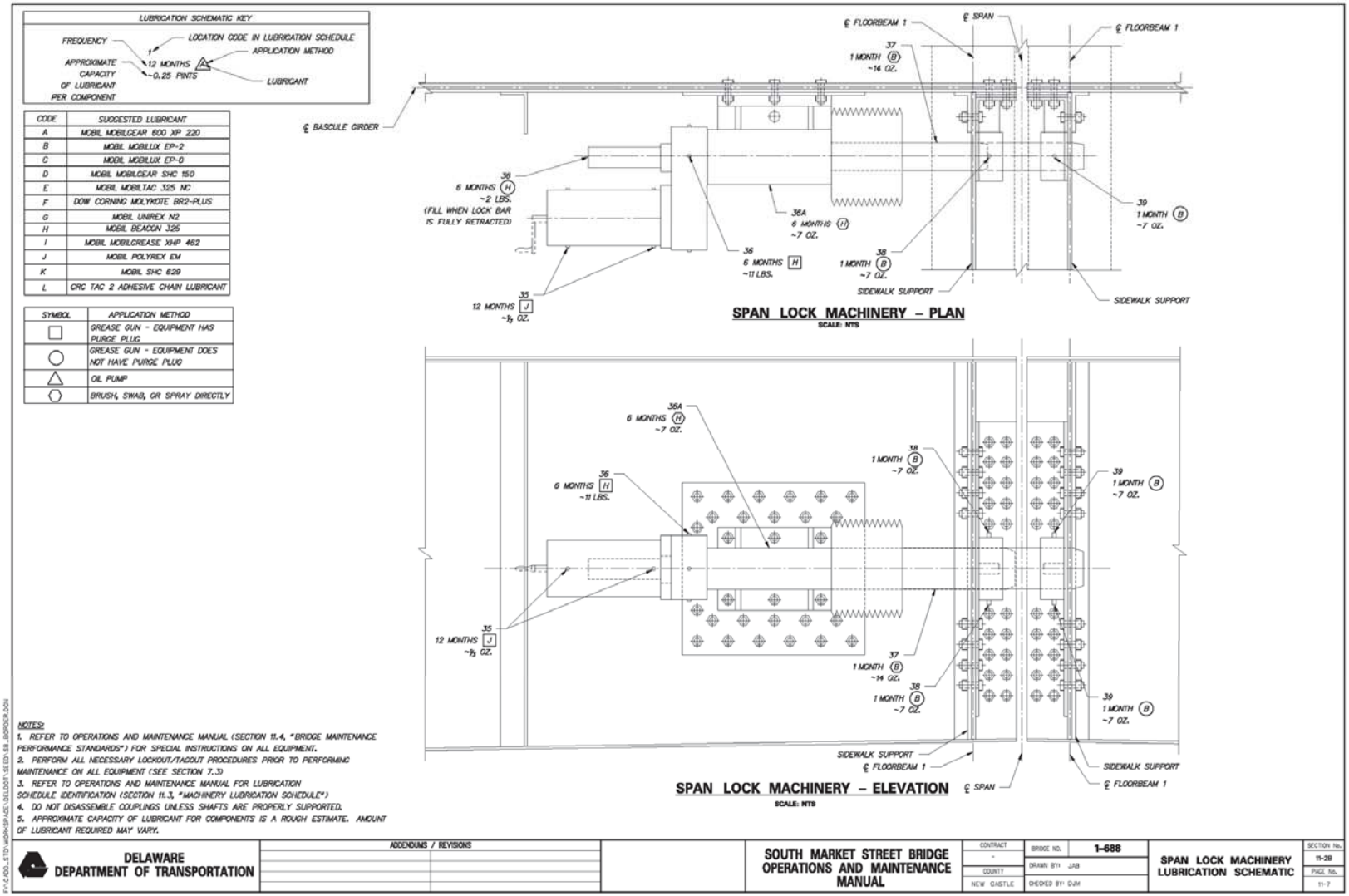
LUBRICATION SCHEMATIC KEY
FREQUENCY
LOCATION CODE IN LUBRICATION SCHEDULE
APPLICATION METHOD
APPROXIMATE CAPACITY OF LUBRICANT PER COMPONENT
12 MONTHS
~0.25 PINTS
LUBRICANT
CODE | SUGGESTED LUBRICANT
A | MOBIL MOBILGEAR 600 XP 220
B | MOBIL MOBILUX EP-2
C | MOBIL MOBILUX EP-0
D | MOBIL MOBILGEAR SHC 150
E | MOBIL MOBILTAC 325 NC
F | DOW CORNING MOLYKOTE BR2-PLUS
G | MOBIL UNIREX N2
H | MOBIL BEACON 325
I | MOBIL MOBILGREASE XHP 462
J | MOBIL POLYREX EM
K | MOBIL SHC 629
L | CRC TAC 2 ADHESIVE CHAIN LUBRICANT
SYMBOL | APPLICATION METHOD
GREASE GUN - EQUIPMENT HAS PURGE PLUG
GREASE GUN - EQUIPMENT DOES NOT HAVE PURGE PLUG
OIL PUMP
BRUSH, SWAB, OR SPRAY DIRECTLY
℄ BASCULE GIRDER
℄ FLOORBEAM 1
℄ SPAN
℄ FLOORBEAM 1
37 1 MONTH (B) ~14 OZ.
36 6 MONTHS (H) ~2 LBS. (FILL WHEN LOCK BAR IS FULLY RETRACTED)
36A 6 MONTHS (H) ~7 OZ.
36 6 MONTHS [H] ~11 LBS.
35 12 MONTHS [J] ~½ OZ.
38 1 MONTH (B) ~7 OZ.
39 1 MONTH (B) ~7 OZ.
SIDEWALK SUPPORT
SIDEWALK SUPPORT
SPAN LOCK MACHINERY – PLAN
SCALE: NTS
36A 6 MONTHS (H) ~7 OZ.
36 6 MONTHS [H] ~11 LBS.
35 12 MONTHS [J] ~½ OZ.
38 1 MONTH (B) ~7 OZ.
37 1 MONTH (B) ~14 OZ.
38 1 MONTH (B) ~7 OZ.
39 1 MONTH (B) ~7 OZ.
39 1 MONTH (B) ~7 OZ.
SIDEWALK SUPPORT
℄ FLOORBEAM 1
SIDEWALK SUPPORT
℄ SPAN
℄ FLOORBEAM 1
SPAN LOCK MACHINERY – ELEVATION
SCALE: NTS
NOTES:
1. REFER TO OPERATIONS AND MAINTENANCE MANUAL (SECTION 11.4, "BRIDGE MAINTENANCE PERFORMANCE STANDARDS") FOR SPECIAL INSTRUCTIONS ON ALL EQUIPMENT.
2. PERFORM ALL NECESSARY LOCKOUT/TAGOUT PROCEDURES PRIOR TO PERFORMING MAINTENANCE ON ALL EQUIPMENT (SEE SECTION 7.3)
3. REFER TO OPERATIONS AND MAINTENANCE MANUAL FOR LUBRICATION SCHEDULE IDENTIFICATION (SECTION 11.3, "MACHINERY LUBRICATION SCHEDULE")
4. DO NOT DISASSEMBLE COUPLINGS UNLESS SHAFTS ARE PROPERLY SUPPORTED.
5. APPROXIMATE CAPACITY OF LUBRICANT FOR COMPONENTS IS A ROUGH ESTIMATE. AMOUNT OF LUBRICANT REQUIRED MAY VARY.
DELAWARE DEPARTMENT OF TRANSPORTATION
ADDENDUMS / REVISIONS
SOUTH MARKET STREET BRIDGE OPERATIONS AND MAINTENANCE MANUAL
CONTRACT -
COUNTY NEW CASTLE
BRIDGE NO. 1-688
DRAWN BY: JAB
CHECKED BY: DJH
SPAN LOCK MACHINERY LUBRICATION SCHEMATIC
SECTION No. 11-28
PAGE No. 11-7

THIS PAGE INTENTIONALLY LEFT BLANK

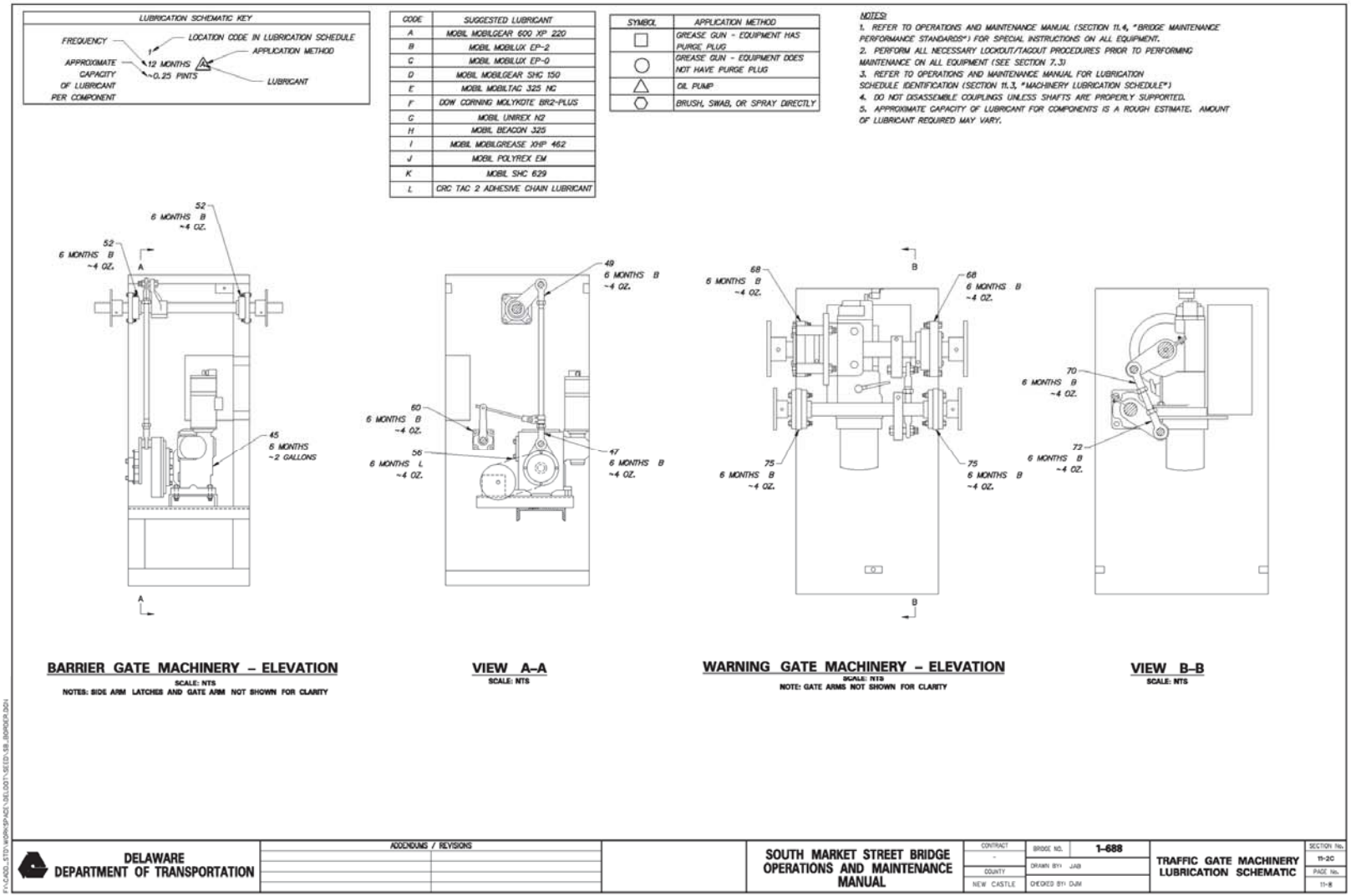
LUBRICATION SCHEMATIC KEY
FREQUENCY
LOCATION CODE IN LUBRICATION SCHEDULE
APPLICATION METHOD
APPROXIMATE CAPACITY OF LUBRICANT PER COMPONENT
12 MONTHS
~0.25 PINTS
LUBRICANT
CODE | SUGGESTED LUBRICANT
A | MOBIL MOBILGEAR 600 XP 220
B | MOBIL MOBILUX EP-2
C | MOBIL MOBILUX EP-0
D | MOBIL MOBILGEAR SHC 150
E | MOBIL MOBILTAC 325 NC
F | DOW CORNING MOLYKOTE BR2-PLUS
G | MOBIL UNIREX N2
H | MOBIL BEACON 325
I | MOBIL MOBILGREASE XHP 462
J | MOBIL POLYREX EM
K | MOBIL SHC 629
L | CRC TAC 2 ADHESIVE CHAIN LUBRICANT
SYMBOL | APPLICATION METHOD
GREASE GUN - EQUIPMENT HAS PURGE PLUG
GREASE GUN - EQUIPMENT DOES NOT HAVE PURGE PLUG
OIL PUMP
BRUSH, SWAB, OR SPRAY DIRECTLY
NOTES:
1. REFER TO OPERATIONS AND MAINTENANCE MANUAL (SECTION 11.4, "BRIDGE MAINTENANCE PERFORMANCE STANDARDS") FOR SPECIAL INSTRUCTIONS ON ALL EQUIPMENT.
2. PERFORM ALL NECESSARY LOCKOUT/TAGOUT PROCEDURES PRIOR TO PERFORMING MAINTENANCE ON ALL EQUIPMENT (SEE SECTION 7.3)
3. REFER TO OPERATIONS AND MAINTENANCE MANUAL FOR LUBRICATION SCHEDULE IDENTIFICATION (SECTION 11.3, "MACHINERY LUBRICATION SCHEDULE")
4. DO NOT DISASSEMBLE COUPLINGS UNLESS SHAFTS ARE PROPERLY SUPPORTED.
5. APPROXIMATE CAPACITY OF LUBRICANT FOR COMPONENTS IS A ROUGH ESTIMATE. AMOUNT OF LUBRICANT REQUIRED MAY VARY.
52
6 MONTHS B
~4 OZ.
52
6 MONTHS B
~4 OZ.
45
6 MONTHS
~2 GALLONS
A
A
BARRIER GATE MACHINERY – ELEVATION
SCALE: NTS
NOTES: SIDE ARM LATCHES AND GATE ARM NOT SHOWN FOR CLARITY
49
6 MONTHS B
~4 OZ.
60
6 MONTHS B
~4 OZ.
56
6 MONTHS L
~4 OZ.
47
6 MONTHS B
~4 OZ.
VIEW A–A
SCALE: NTS
68
6 MONTHS B
~4 OZ.
68
6 MONTHS B
~4 OZ.
75
6 MONTHS B
~4 OZ.
75
6 MONTHS B
~4 OZ.
B
B
WARNING GATE MACHINERY – ELEVATION
SCALE: NTS
NOTE: GATE ARMS NOT SHOWN FOR CLARITY
70
6 MONTHS B
~4 OZ.
72
6 MONTHS B
~4 OZ.
VIEW B–B
SCALE: NTS
DELAWARE
DEPARTMENT OF TRANSPORTATION
ADDENDUMS / REVISIONS
SOUTH MARKET STREET BRIDGE
OPERATIONS AND MAINTENANCE
MANUAL
CONTRACT
-
COUNTY
NEW CASTLE
BRIDGE NO. 1-688
DRAWN BY: JAB
CHECKED BY: DJM
TRAFFIC GATE MACHINERY
LUBRICATION SCHEMATIC
SECTION No. 11-2C
PAGE No. 11-8

THIS PAGE INTENTIONALLY LEFT BLANK

11.3 MACHINERY LUBRICATION SCHEDULE

SOUTH MARKET STREET BRIDGE MACHINERY - LUBRICATION SCHEDULE							
Location Code	**Section**	**Machinery**	**Applicator**	**Specified Grade**	**Lubrication Type**	**Mfr. Spec.**	**Frequency (Months)**
1	8.8.4	Tachometer	LUBRICATION NOT REQUIRED				
2	8.8.4	Overspeed Switch	LUBRICATION NOT REQUIRED				
3	8.2.6	Limit Switch Gear Box	OIL PUMP - REMOVE PLUG, FILL AND REPLACE PLUG	N/A	OIL	MOBIL MOBILGEAR 600 XP 220	12
4	8.2.2	Helical Coupling	LUBRICATION NOT REQUIRED				
5	8.2.1	Motor Brake	LUBRICATION NOT REQUIRED				
6	8.7.2	Main Leaf Motor	GREASE GUN, REMOVE PLUG, FILL WITH GREASE, REPLACE PLUG	NLGI #2	GREASE	EXXON UNIREX N2	12
7	8.2.2	Motor Coupling	GREASE GUN, REMOVE PLUG, FILL WITH GREASE, REPLACE PLUG	NLGI #0	GREASE	MOBIL MOBILUX EP-0	6
8	8.2.3	Primary Reducer	OIL PUMP - REMOVE PLUG, DRAIN OIL, REPLACE PLUG, AND FILL	AGMA #4EP	OIL	MOBIL MOBILGEAR SHC 150	24
8A	8.2.3	Bearing Grease Seals	GREASE GUN, REMOVE PLUG, FILL WITH GREASE, REPLACE PLUG	NLGI #2	GREASE	MOBIL MOBILUX EP-2	6
9	8.7.3	Auxiliary Gear Motor	OIL PUMP - REMOVE PLUG, DRAIN OIL, REPLACE PLUG, AND FILL	AGMA #4EP	OIL	MOBIL MOBILGEAR SHC 150	12
10	8.2.2	Manual Disconnect Coupling	GREASE GUN, REMOVE PLUG, FILL WITH GREASE, REPLACE PLUG	NLGI #0	GREASE	MOBIL MOBILUX EP-0	6
10A	8.2.2	Disconnect Coupling Linkage	GREASE GUN, GREASE FITTING	NLGI #2	DRY FILM LUBRICANT	DOW CORNING MOLYKOTE BR2-PLUS	12
11	8.2.1	Machinery Brake	LUBRICATION NOT REQUIRED				
12	8.8.3	Span Control Rotary Cam Limit Switch	LUBRICATION NOT REQUIRED				
13	8.2.2	Helical Coupling	LUBRICATION NOT REQUIRED				
14	8.2.2	Flexible Coupling	GREASE GUN, REMOVE PLUG, FILL WITH GREASE, REPLACE PLUG	NLGI #0	GREASE	MOBIL MOBILUX EP-0	6
15	-	Shaft	LUBRICATION NOT REQUIRED				
16	8.2.4	Sleeve Bearing	GREASE GUN, GREASE FITTING	NLGI #2	GREASE	MOBIL MOBILUX EP-2	1
17	-	Shaft	LUBRICATION NOT REQUIRED				
18	8.1.1	Trunnion Bearing	GREASE GUN, GREASE FITTING	NLGI #2	GREASE	MOBIL MOBILUX EP-2	1
19	8.1.1	Trunnion Shaft	GREASE GUN, GREASE FITTING	NLGI #2	GREASE	MOBIL MOBILUX EP-2	1
20	8.2.4	Sleeve Bearing	GREASE GUN, GREASE FITTING	NLGI #2	GREASE	MOBIL MOBILUX EP-2	1
21	8.2.2	Flexible Coupling	GREASE GUN, REMOVE PLUG, FILL WITH GREASE, REPLACE PLUG	NLGI #0	GREASE	MOBIL MOBILUX EP-0	6
22	-	Floating Shaft	LUBRICATION NOT REQUIRED				
23	8.2.2	Flex Spacer Coupling	GREASE GUN, REMOVE PLUG, FILL WITH GREASE, REPLACE PLUG	NLGI #0	GREASE	MOBIL MOBILUX EP-0	6

Location Code	Section	Machinery	Applicator	Specified Grade	Lubrication Type	Mfr. Spec.	Frequency (Months)
24	8.2.3	Enclosed Bevel Reducer	OIL PUMP - REMOVE PLUG, DRAIN OIL, REPLACE PLUG, AND FILL	AGMA #4EP	OIL	MOBIL MOBILGEAR SHC 150	24
24A	8.2.3	Bearing Grease Seals	GREASE GUN, REMOVE PLUG, FILL WITH GREASE, REPLACE PLUG	NLGI #2	GREASE	MOBIL MOBILUX EP-2	6
25	8.2.2	Flexible Coupling	GREASE GUN, REMOVE PLUG, FILL WITH GREASE, REPLACE PLUG	NLGI #0	GREASE	MOBIL MOBILUX EP-0	6
26	-	Floating Shaft	LUBRICATION NOT REQUIRED				
27	8.2.3	Final Enclosed Reducer	OIL PUMP - REMOVE PLUG, DRAIN OIL, REPLACE PLUG, AND FILL	AGMA #4EP	OIL	MOBIL MOBILGEAR SHC 150	24
27A	8.2.3	Bearing Grease Seals	GREASE GUN, REMOVE PLUG, FILL WITH GREASE, REPLACE PLUG	NLGI #2	GREASE	MOBIL MOBILUX EP-2	6
28	8.2.5	Pinion	BRUSH OR SWAB	N/A	GREASE	MOBIL MOBILTAC 325 NC	1
29	8.2.4	Spherical Roller Bearing	GREASE GUN, REMOVE PLUG, FILL, REPLACE PLUG	NLGI #2	GREASE	MOBIL MOBILGREASE XHP 462	3
30	8.2.4	Sleeve Bearing	GREASE GUN, GREASE FITTING	NLGI #2	GREASE	MOBIL MOBILUX EP-2	1
31	-	Main Pinion Shaft	LUBRICATION NOT REQUIRED				
32	8.2.5	Gear	BRUSH OR SWAB	N/A	GREASE	MOBIL MOBILTAC 325 NC	1
33	8.2.5	Main Pinion	BRUSH OR SWAB	N/A	GREASE	MOBIL MOBILTAC 325 NC	1
34	8.2.5	Rack	BRUSH OR SWAB	N/A	GREASE	MOBIL MOBILTAC 325 NC	1
35	8.7.1	Span Lock Motor	GREASE GUN, REMOVE PLUG, FILL WITH GREASE, REPLACE PLUG	NLGI #2	GREASE	MOBIL POLYREX EM	12
36	8.3.1	Lock Bar Actuator	GREASE GUN, REMOVE PLUG, FILL WITH GREASE, REPLACE PLUG	NLGI #2	GREASE	MOBIL BEACON 325	6
36A	8.3.1	Lock Bar Actuator Stem Guide	BRUSH OR SWAB	NLGI#2	GREASE	MOBIL BEACON 325	6
37	8.3.1	Lock Bar	BRUSH OR SWAB	NLGI #2	GREASE	MOBIL MOBILUX EP-2	1
38	8.3.1	Span Lock Bar Guides	GREASE GUN, GREASE FITTING	NLGI #2	GREASE	MOBIL MOBILUX EP-2	1
39	8.3.1	Span Lock Receiving Socket	GREASE GUN, GREASE FITTING	NLGI #2	GREASE	MOBIL MOBILUX EP-2	1
40	-	Hand Crank	LUBRICATION NOT REQUIRED				
41	8.1.2	Live Load Bearing	LUBRICATION NOT REQUIRED				
42	8.8.3	Fully Seated Limit Switch	LUBRICATION NOT REQUIRED				
43	8.8.3	Fully Open Limit Switch	LUBRICATION NOT REQUIRED				
44	8.7.4	Barrier Gate Motor	LUBRICATION NOT REQUIRED				
45	8.4.1	Barrier Gate Transmission	OIL PUMP - REMOVE PLUG, DRAIN OIL, REPLACE PLUG, AND FILL AS NEEDED	AGMA #4	OIL	MOBIL SHC 629	6
46	8.4.1	Barrier Gate Transmission Clutch	LUBRICATION NOT REQUIRED				
47	8.4.1	Barrier Gate Rod End	GREASE GUN, GREASE FITTING	NLGI #2	GREASE	MOBIL MOBILUX EP-2	6

Location Code	Section	Machinery	Applicator	Specified Grade	Lubrication Type	Mfr. Spec.	Frequency (Months)
48	8.4.1	Barrier Gate Connecting Rod	LUBRICATION NOT REQUIRED				
49	8.4.1	Barrier Gate Rod End	GREASE GUN, GREASE FITTING	NLGI #2	GREASE	MOBIL MOBILUX EP-2	6
50	8.4.1	Barrier Gate Arm Shaft Crank	LUBRICATION NOT REQUIRED				
51	8.4.1	Barrier Gate Arm Pivot Shaft	LUBRICATION NOT REQUIRED				
52	8.4.1	Barrier Gate Arm Pivot Shaft Bearing	LUBRICATION NOT REQUIRED	NLGI #2	GREASE	MOBIL MOBILUX EP-2	6
53	8.4.1	Barrier Gate Sprocket Bearing	LUBRICATION NOT REQUIRED				
54	8.4.1	Barrier Gate Sprocket	LUBRICATION NOT REQUIRED				
55	8.8.3	Barrier Gate Rotary Cam Limit Switch	LUBRICATION NOT REQUIRED				
56	8.4.1	Barrier Gate Roller Chain	SPRAY	N/A	GREASE	CRC TAC 2 ADHESIVE CHAIN LUBRICANT	6
57	8.4.1	Barrier Gate Side Latch Connector	LUBRICATION NOT REQUIRED				
58	8.4.1	Barrier Gate Side Latch Connecting Rod	LUBRICATION NOT REQUIRED				
59	8.4.1	Barrier Gate Side Latch Crank	LUBRICATION NOT REQUIRED				
60	8.4.1	Barrier Gate Side Latch Bearing	GREASE GUN, GREASE FITTING	NLGI #2	GREASE	MOBIL MOBILUX EP-2	6
61	-	Barrier Gate Electrical Enclosure	LUBRICATION NOT REQUIRED				
62	8.8.3	Barrier Gate Door Limit Switch	LUBRICATION NOT REQUIRED				
63	8.8.3	Barrier Gate Manual Operation Limit Switch	LUBRICATION NOT REQUIRED				
64	-	Barrier Gate Hand Crank	LUBRICATION NOT REQUIRED				
65	8.7.4	Warning Gate Motor	LUBRICATION NOT REQUIRED				
66	8.4.2	Warning Gate Actuator	LUBRICATION NOT REQUIRED				
67	8.4.2	Warning Gate Arm Pivot Shaft	LUBRICATION NOT REQUIRED				
68	8.4.2	Warning Gate Arm Pivot Shaft Bearing	GREASE GUN, GREASE FITTING	NLGI #2	GREASE	MOBIL MOBILUX EP-2	6
69	8.4.2	Warning Gate Arm Pivot Shaft Crank	LUBRICATION NOT REQUIRED				
70	8.4.2	Warning Gate Rod End	GREASE GUN, GREASE FITTING	NLGI #2	GREASE	MOBIL MOBILUX EP-2	6
71	8.4.2	Warning Gate Connecting Rod	LUBRICATION NOT REQUIRED				
72	8.4.2	Warning Gate Rod End	GREASE GUN, GREASE FITTING	NLGI #2	GREASE	MOBIL MOBILUX EP-2	6
73	8.4.2	Pedestrian Gate Arm Pivot Shaft Crank	LUBRICATION NOT REQUIRED				
74	8.4.2	Pedestrian Gate Arm Pivot Shaft	LUBRICATION NOT REQUIRED				
75	8.4.2	Pedestrian Gate Arm Pivot Shaft Bearing	GREASE GUN, GREASE FITTING	NLGI #2	GREASE	MOBIL MOBILUX EP-2	6
76	-	Warning Gate Electrical Enclosure	LUBRICATION NOT REQUIRED				
77	8.8.3	Warning Gate Manual Operation Limit Switch	LUBRICATION NOT REQUIRED				
78	8.8.3	Warning Gate Door Limit Switch	LUBRICATION NOT REQUIRED				
79	-	Warning Gate Hand Crank	LUBRICATION NOT REQUIRED				

11.4 BRIDGE MAINTENANCE PERFORMANCE STANDARDS (PLATES)

11.4.1 SLEEVE BEARING AND TRUNNION BEARING LUBRICATION

DELAWARE DEPARTMENT OF TRANSPORTATION BRIDGE MANAGEMENT SECTION BRIDGE MAINTENANCE PERFORMANCE STANDARD	BRIDGE NUMBER 1-688
	BMS ACTIVITY CODE B065-S2J
	EFFECTIVE DATE

ACTIVITY TITLE:	UNIT OF MEASUREMENT:
Sleeve Bearing and Trunnion Bearing Lubrication	Number of Sleeve Bearings and Trunnion Bearings

PROCEDURE DESCRIPTION:

WARNING

Use EXTREME CARE and ALWAYS REMOVE POWER from all pertinent electrical equipment, which includes multiple power sources, before beginning maintenance. Refer to Section 7.3, "Lockout/Tagout Procedure" in the Operations and Maintenance Manual.

Monthly

1. Clean bearings and grease fittings of dirt, debris, old grease, and any other potential contaminants with a rag and CRC Quick Clean or equivalent.
2. Inspect the grease fittings and replace any cracked or broken grease fittings. The sleeve bearings have a single grease fitting in the bearing cap. Each trunnion bearing has a single grease fitting in the bearing cap and three grease fittings in the trunnion shaft.
3. Insert grease gun tip onto grease fitting and pump Mobil Mobilux EP-2 or equivalent into the bearing until fresh grease appears along the bearing shaft. Catch old grease in a catch basin. For trunnion bearings, repeat for all four grease fittings.
4. Wipe excess grease from the bearing with a rag and solvent cleaner.
5. Inspect bearings for any unusual defects that may have occurred.

Refer to Sections 8.1.1, 8.2.4, 11.5.1, and 11.5.13 for additional component and material information. For lubrication coding details below, refer to Section 11.2 "Machinery Lubrication Schematics" in the Operations and Maintenance Manual.

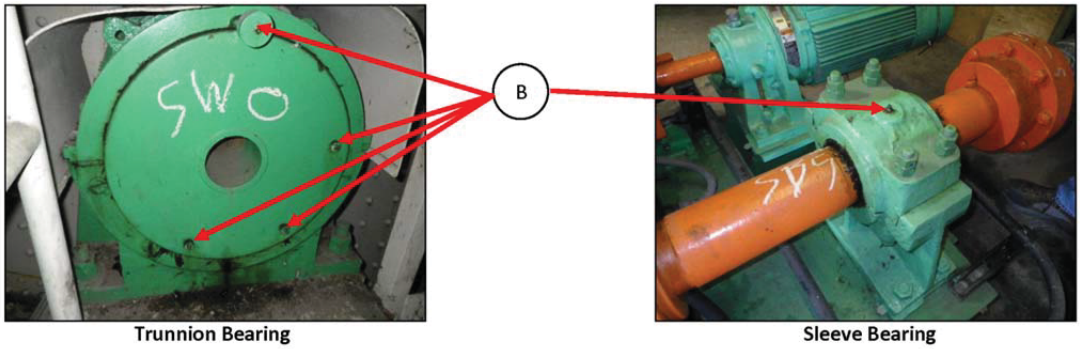

Trunnion Bearing Sleeve Bearing

SCHEDULING CONSIDERATIONS:

Sleeve bearings and trunnion bearings should be lubricated every month.

Also, inspect and lubricate sleeve bearings and trunnion bearings after an overstress situation such as a pinched span.

WORK AREA, ACTIVITY DESCRIPTION & REQUIREMENTS:

Sleeve bearings are located in the electrical/mechanical room, adjacent to the fixed walkway in the bascule pier, and on the open gearing frame on top of the counterweight on both spans of the bridge. Trunnion bearings are located on the bascule pier on both sides of the bascule girders on each span of the bridge. Tasks include locating, inspecting, and lubricating all trunnion bearings and sleeve bearings on the bridge. Lockout/Tagout is required prior to performing any maintenance on this equipment. Report any significant defects to bridge management.

DELAWARE DEPARTMENT OF TRANSPORTATION BRIDGE MANAGEMENT SECTION BRIDGE MAINTENANCE PERFORMANCE STANDARD	BRIDGE NUMBER 1-688
	BMS ACTIVITY CODE B065-S2J Page 2 of 2
	EFFECTIVE DATE

ACTIVITY TITLE: Sleeve Bearing and Trunnion Bearing Lubrication	UNIT OF MEASUREMENT: Number of Sleeve Bearings and Trunnion Bearings

Qty	EQUIPMENT	Qty	EQUIPMENT	Qty	MATERIAL
1	Grease gun	1/Person	Set of chemical resistant Viton gloves	~20 – 14 oz. Tubes	Mobil Mobilux EP-2 or equivalent
32	Trunnion bearing grease fittings				
8	Sleeve bearing grease fittings	1/Person	Tyvek suit		
1	Catch basin	1/Person	Eye protection	~10 – 20 oz. Cans	CRC Quick Clean Heavy Duty Degreaser or equivalent
1	Bag of rags	1/Person	Chemical respirator		

11.4.2 MOTOR BEARING LUBRICATION

DELAWARE DEPARTMENT OF TRANSPORTATION BRIDGE MANAGEMENT SECTION BRIDGE MAINTENANCE PERFORMANCE STANDARD	BRIDGE NUMBER 1-688
	BMS ACTIVITY CODE B066-S2J Page 1 of 2
	EFFECTIVE DATE

ACTIVITY TITLE:	UNIT OF MEASUREMENT:
Motor Bearing Lubrication	Number of Motors

PROCEDURE DESCRIPTION:

WARNING

Use EXTREME CARE and ALWAYS REMOVE POWER from all pertinent electrical equipment, which includes multiple power sources, before beginning maintenance. Refer to Section 7.3, "Lockout/Tagout Procedure" in the Operations and Maintenance Manual.

Annually

1. Clean the grease fitting of dirt, debris, and any other potential contaminants with a rag.
2. Remove the purge plug opposite the grease fitting. Place a catch basin below the purge plug to catch old grease.
3. Purge old grease from the bearing by slowly pumping in fresh grease into the bearing until fresh grease flows out along the shaft or through the lower port. For the main leaf motor bearings use Exxon Unirex N2 or equivalent lubricant. For the span lock motor bearings use Mobil Polyrex EM or equivalent lubricant. **PUMPING GREASE INTO THE MOTOR BEARINGS WITHOUT REMOVING THE PURGE PLUG WILL RESULT IN DAMAGE TO THE SEAL AND GREASE ENTERING THE MOTOR WINDINGS.**
4. Repeat for the bearing at the other end of the motor.
5. Operate the span once (with the purge plugs still removed) to allow for excess grease to be expelled from the bearing cavity.
6. Reinstall the purge plug and wipe excess grease from motor housing with a rag.
7. Run the main leaf motor for three consecutive cycles. Run the span lock motor for six consecutive cycles.

Refer to Sections 8.7.1, 8.7.2, 11.5.4, and 11.5.9 for additional component and material information. For lubrication coding details below, refer to Section 11.2, "Machinery Lubrication Schematics" in the Operations and Maintenance Manual.

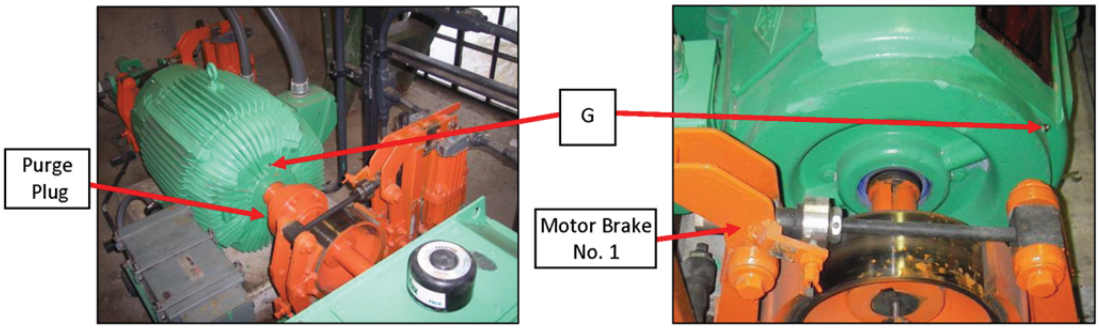

Front of Main Leaf Motor

Rear of Main Leaf Motor

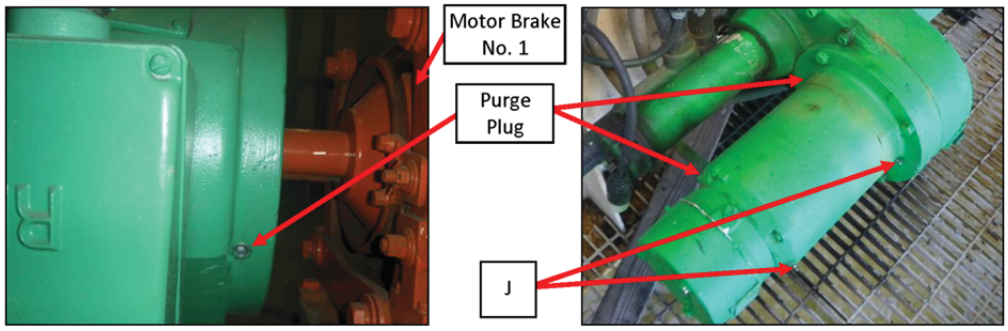

Rear of Main Leaf Motor

Span Lock Motor

DELAWARE DEPARTMENT OF TRANSPORTATION BRIDGE MANAGEMENT SECTION BRIDGE MAINTENANCE PERFORMANCE STANDARD	BRIDGE NUMBER 1-688
	BMS ACTIVITY CODE B066-S2J Page 2 of 2
	EFFECTIVE DATE

ACTIVITY TITLE:	UNIT OF MEASUREMENT:
Motor Bearing Lubrication	Number of Motors

SCHEDULING CONSIDERATIONS:

Motor bearings should be lubricated annually.

Also, inspect and lubricate motors bearings when the bridge opens more than 150 times between Spring and Fall maintenance routines or after an overstress situation such as a pinched span.

WORK AREA, ACTIVITY DESCRIPTION & REQUIREMENTS:

Main leaf motor bearings are located at the front and rear ends of the main motor in the electrical/mechanical room of each span. The span lock motors on the east and west span lock access platforms located at the toe of the north bascule leaf. Each span lock motor has motor bearing at the front of rear of the span lock motor. Task includes locating, inspecting, and lubricating all motor bearings on the bridge. Lockout/Tagout is required prior to performing any maintenance on this equipment. Report any significant defects to bridge management.

Qty	EQUIPMENT	Qty	EQUIPMENT	Qty	Material
1	Grease gun	1	Adjustable wrench	~1/8 – 14 oz. Tube / Bearing	Mobil Unirex N2 or equivalent (Main leaf motor)
4	Main leaf motor grease fittings		Miscellaneous small tools		
4	Span lock motor grease fittings	1/Person	Tyvek suit		
1	Bag of rags	1/Person	Set of chemical resistant nitrile gloves	~1/8 – 14 oz. Tube / Bearing	Mobil Polyrex EM or equivalent (Span lock motor)
1	Catch basin	1/Person	Eye protection		

DELAWARE
DEPARTMENT OF TRANSPORTATION
BRIDGE MANAGEMENT SECTION
BRIDGE MAINTENANCE PERFORMANCE STANDARD

BRIDGE NUMBER
1-687

BMS ACTIVITY CODE
B067-S2J Page 3 of 3

EFFECTIVE DATE

ACTIVITY TITLE:
Motor Brake Maintenance

UNIT OF MEASUREMENT:
Number of Brakes

SCHEDULING CONSIDERATIONS:

Motor brakes should be inspected annually.

Also, inspect brakes when the bridge opens more than 150 times between Spring and Fall maintenance routines.

WORK AREA, ACTIVITY DESCRIPTION & REQUIREMENTS:

The motor brakes are located in the electrical/mechanical room. One motor brake is located between each main leaf motor and the primary reducer input shaft. The third motor brake is located at the rear of the main leaf motor #1. Tasks include locating and inspecting all brakes on the bridge. Lockout/Tagout is required prior to performing any maintenance on this equipment. Report any significant defects to bridge management.

Qty	EQUIPMENT	QTY	EQUIPMENT	Qty	MATERIAL
1	Feeler gauge set		Misc. small tools	~2-3 drops at each bearing pin	Mobil Mobilgear 600 XP 220 or equivalent (for bearing pins)
2	Adjustable wrenches	1/Person	Tyvek suit		
1	Ruler (with graduations of $^1/_{16}$")	1/Person	Set of chemical resistant Viton gloves	~1.5 gallons per thruster	Mobil DTE 21 or equivalent (for thruster if oil needs to be replaced)
1	Oil Can	1/Person	Eye protection		

11.4.3 MOTOR AND MACHINERY BRAKE MAINTENANCE

DELAWARE **DEPARTMENT OF TRANSPORTATION** **BRIDGE MANAGEMENT SECTION** **BRIDGE MAINTENANCE PERFORMANCE STANDARD**	**BRIDGE NUMBER** 1-688
	BMS ACTIVITY CODE B067-S2J Page 1 of 2
	EFFECTIVE DATE

ACTIVITY TITLE:	**UNIT OF MEASUREMENT:**
Motor and Machinery Brake Maintenance	Number of Brakes

PROCEDURE DESCRIPTION:

WARNING

Use EXTREME CARE and ALWAYS REMOVE POWER from all pertinent electrical equipment, which includes multiple power sources, before beginning maintenance. Refer to Section 7.3, "Lockout/Tagout Procedure" in the Operations and Maintenance Manual.

Annually

1. Brake actuator maintenance and checks shall be performed by a Mondel authorized technician. Brake frames shall be adjusted by district or electrical/mechanical inspection team. Actuator oil used in the actuator shall be Mobil DTE21 unless otherwise specified by the Mondel specialist. The brake thruster oil does not need to be replaced unless there is suspicion of oil contamination of the brake thruster is malfunctioning. A sticker shall be placed on the thrustor indicating the oil type along with the date of replacement to ensure that non-compatible oils are not mixed. The district shall schedule the Mondel technician to be assisted by the electrical/mechanical inspection teams, simultaneously, so that brakes are adjusted at all times.
2. Inspect the brake shoes and brakewheel for wear, dust, dirt, grease, and proper adjustment. Check the brake pad thickness. Replace pads when the remaining thickness is less than $1/16$".
3. Check clearance between the brake shoe and brakewheel. The measured gap shall have a minimum of $1/64$" clearance between the brake shoe and brakewheel when hand released. If the brake pads remain in contact with the brakewheel when hand released, observe the brake during operation of the span. A brakewheel that is warm or hot on the braking surface after bridge operation may indicate that the pads are not clear of the brakewheel when released and linkage adjustment may be necessary. If adjustments are made to the linkages, the reserve stroke and brake torque should be verified and adjusted as well. Adjustment procedures are located in Section 11.7.7. After adjusting the brake, if the pads remain in contact with the brakewheel during operation, contact the manufacturer.
4. Inspect the mechanical linkages for wear, broken parts, and tightness of nuts and bolts. Check for freedom of moving parts (no binding or sticking).
5. Check for excessive heating of brake components evident by discoloration of metal parts.
6. Check operations of the brake during test operations of the bridge. Check for any unusual odor and excessive vibrations.
7. Check the brake housing and linkages for evidence of water dripping on the brake and corrosion.
8. Check adjustment of limit switches and hand release devices.
9. Check for possible wear of the automatic adjustment for lining wear.
10. Check brake reserve stroke height. The reserve stroke height of each brake should be 0.6" $+/-$ $1/16$". The motor and machinery brakes are equipped with an automatic adjustment mechanism designed to adjust the reserve stroke height as needed without operator adjustment. If the automatic adjustment mechanism is not providing the appropriate reserve stroke height, contact the manufacturer.
11. Check the motor brake spring tension via the brake torque gauge located near the brake thruster. The motor brake should be set to provide a braking torque of 225 ft-lbs. The torque is read by matching the top of the spring-block to the corresponding torque value on the scale. To adjust the braking torque, turn the torque adjustment screw until the top of the spring-block is at 225 ft-lbs on the scale. Perform Item 6 to confirm proper operation of the motor brakes after adjustment.
12. Check each machinery brake spring tension via the brake torque gauge located near the brake thruster. Each machinery brake should be set to provide a braking torque of 280 ft-lbs. The torque is read by matching the top of the spring-block to the corresponding torque value on the scale. To adjust the braking torque, turn the torque adjustment screw until the top of the spring-block is at 280 ft-lbs on the scale. Perform Item 6 to confirm proper operation of the motor brakes after adjustment.

DELAWARE
DEPARTMENT OF TRANSPORTATION
BRIDGE MANAGEMENT SECTION
BRIDGE MAINTENANCE PERFORMANCE STANDARD

BRIDGE NUMBER
1-688

BMS ACTIVITY CODE
B067-S2J Page 2 of 2

EFFECTIVE DATE

ACTIVITY TITLE:
Motor and Machinery Brake Maintenance

UNIT OF MEASUREMENT:
Number of Brakes

Machinery Brake

Motor Brake

Automatic Adjustment Mechanism
Torque Adjustment Screw
Limit Switch
Brake Torque Gauge
Limit Switch
Brake Thruster
Hand Release Lever

Brake Thruster and Lever Arm

Torque Adjustment Screw
Spring-Block
Reserve Stroke
Brake Thruster
Filler Plug

Brake Torque Gage

SCHEDULING CONSIDERATIONS:

Motor and machinery brakes should be inspected annually.

Also, inspect brakes when the bridge opens more than 150 times between Spring and Fall maintenance routines or after an overstress situation such as a pinched span.

WORK AREA, ACTIVITY DESCRIPTION & REQUIREMENTS:

The motor and machinery brakes are located in the electrical/mechanical room. One motor brake is located between the main leaf motor coupling and the primary reducer housing. The second motor brake is located at the rear of the main leaf motor. The machinery brake is located between the auxiliary motor disconnect coupling and the primary reducer. Tasks include locating and inspecting all brakes on the bridge. Lockout/Tagout is required prior to performing any maintenance on this equipment. Report any significant defects to bridge management.

Qty	EQUIPMENT	Qty	EQUIPMENT	Qty	MATERIAL
1	Feeler gauge set		Misc. small tools	~1/2 Gallon per Thruster	Mobil DTE 21 or equivalent (for thruster if oil needs to be replaced)
2	Adjustable wrenches	1/Person	Tyvek suit		
1	Ruler (with graduations of 1/16")	1/Person	Set of chemical resistant Viton gloves		
		1/Person	Eye protection		

11.4.4 COUPLING LUBRICATION

DELAWARE DEPARTMENT OF TRANSPORTATION BRIDGE MANAGEMENT SECTION BRIDGE MAINTENANCE PERFORMANCE STANDARD	BRIDGE NUMBER 1-688
	BMS ACTIVITY CODE B068-S2J Page 1 of 3
	EFFECTIVE DATE

ACTIVITY TITLE:	UNIT OF MEASUREMENT:
Coupling Lubrication	Number of Couplings (with Grease Fittings)

PROCEDURE DESCRIPTION:

WARNING

Use EXTREME CARE and ALWAYS REMOVE POWER from all pertinent electrical equipment, which includes multiple power sources, before beginning maintenance. Refer to Section 7.3, "Lockout/Tagout Procedure" in the Operations and Maintenance Manual.

WARNING

Do not disassemble couplings until shafts are properly supported.

Six Months

1. Clean the coupling of dirt, debris, old grease, and any other potential contaminants with a rag.
2. Inspect coupling seals for leaks. Replace leaking seals according to manufacturer specifications.
3. Remove both lubrication plugs and insert a grease fitting into the uppermost port.
4. Fill with Mobil Mobilux EP-0 or equivalent until fresh grease appears at the lower port. Catch old grease in a catch basin.
5. Reinstall plugs into coupling. Wipe off excess grease. **MAKE CERTAIN ALL PLUGS HAVE BEEN INSERTED AFTER LUBRICATION**.
6. Visually inspect gear couplings for relative movement between coupling components during operation of the span drive machinery. Inspect the condition and tightness of the coupling fasteners.

Annually

1. Clean the disconnect coupling shifting collar and grease fitting of dirt, old grease, and any other contaminants with a rag.
2. Using a grease gun, pump the appropriate amount of fresh Dow Corning Molykote BR2-PLUS into the disconnect coupling shifting collar grease fitting to completely purge the existing grease. Rotate the manual disconnect coupling by manually turning the auxiliary gear motor output shaft to distribute the grease around the sliding surface between the shifting collar and the long sleeve of the coupling. To rotate the auxiliary gear motor output shaft, the brake at the back of the auxiliary gear motor will need to be manually released. To manually release the auxiliary motor brake, pull the brake release lever from its holder and then pull the lever towards the manual disconnect coupling. Release the brake release lever to set the brake.
3. Wipe off excess grease with a rag.
4. Manually test the clutch to ensure it properly engages and disengages the auxiliary motor disconnect coupling. Verify that the disconnect switch for the main motor and the auxiliary gear motor are in the OFF position.
5. Remove the lock pin fastener below the pivot fastener on the clutch handle base. Manually release the auxiliary motor gear brake located at the rear of the auxiliary gear motor. Pull the clutch handle towards the auxiliary gear motor to engage the coupling. The auxiliary gear motor output shaft may have to be manually rotated to allow the gear teeth within the coupling to fully engage.
6. Release the brake release lever to set the brake. Reinstall the lock pin to secure the clutch into the engaged position. If the lock pin can not be reinstalled, the gear teeth are not fully engaged.
7. To disengage the manual disconnect coupling, verify that the disconnect switch for both the main motor and auxiliary gear motor are switched to the off position.
8. Remove the lock pin and push the clutch towards the manual disconnect coupling. Reinstall the lock pin when the handle is in the vertical position.
9. Turn the main motor and auxiliary motor disconnect switches to the ON position.

Refer to Sections 8.2.2, 11.5.1, 11.5.8, 11.7.4, 11.7.5, and 11.7.6 for additional component and material information. For lubrication coding details below, refer to Section 11.2, "Machinery Lubrication Schematics" in the Operations and Maintenance Manual.

DELAWARE
DEPARTMENT OF TRANSPORTATION
BRIDGE MANAGEMENT SECTION
BRIDGE MAINTENANCE PERFORMANCE STANDARD

BRIDGE NUMBER
1-688

BMS ACTIVITY CODE
B068-S2J Page 2 of 3

EFFECTIVE DATE

ACTIVITY TITLE:
Coupling Lubrication

UNIT OF MEASUREMENT:
Number of Couplings (with Grease Fittings)

Coupling

Manual Disconnect Coupling Linkage

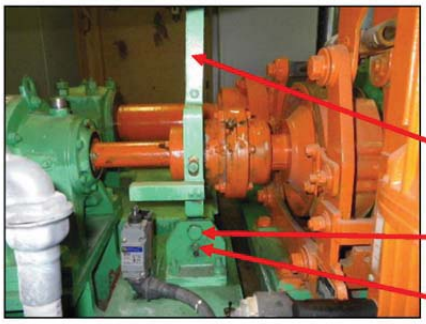

Clutch Handle

Auxiliary Motor

SCHEDULING CONSIDERATIONS:

Couplings should be lubricated every six months. The manual disconnect coupling, linkages, and sliding surfaces should be lubricated annually.

Also, inspect and lubricate couplings with grease fittings and manual disconnect coupling linkages when the bridge opens more than 150 times between Spring and Fall maintenance routines or after an overstress situation such as a pinched span.

WORK AREA, ACTIVITY DESCRIPTION & REQUIREMENTS:

Couplings with grease fittings are located in the electrical/mechanical room, adjacent to the fixed walkway in the bascule pier, and connecting the enclosed bevel reducer to the final enclosed reducer located forward of the counterweight. Tasks include locating, inspecting, and lubricating all couplings and manual disconnect coupling linkages on the bridge with the appropriate lubricant. Lockout/Tagout is required prior to performing any maintenance on this equipment. Report any significant defects to bridge management.

DELAWARE
DEPARTMENT OF TRANSPORTATION
BRIDGE MANAGEMENT SECTION
BRIDGE MAINTENANCE PERFORMANCE STANDARD

BRIDGE NUMBER
1-688

BMS ACTIVITY CODE
B068-S2J Page 3 of 3

EFFECTIVE DATE

ACTIVITY TITLE:
Coupling Lubrication

UNIT OF MEASUREMENT:
Number of Couplings (with Grease Fittings)

Qty	EQUIPMENT	Qty	MATERIAL
1	Grease gun	~16 – 14 oz. Tubes	Mobil Mobilux EP-0 or equivalent (for all gear couplings)
16	Grease fittings		
1	Bag of rags	~1/2 – 14 oz. Tube	Dow Corning Molykote BR2-PLUS or equivalent (for manual disconnect shifting collars)
1	Catch basin		
1	Ratchet set	2	Gasket and Seal Kit for Falk 1025G20 Gear Coupling
	Miscellaneous small tools	2	Gasket and Seal Kit for Falk 1020G72 Gear Coupling
1/Person	Coveralls	4	Gasket and Seal Kit for Falk 1035G52 Gear Coupling
1/Person	Set of nitrile gloves	2	Gasket and Seal Kit for Falk 1035G32 Gear Coupling
1/Person	Eye protection	4	Gasket and Seal Kit for Falk 1040GV52 Gear Coupling

11.4.5 SPEED REDUCER LUBRICATION

DELAWARE DEPARTMENT OF TRANSPORTATION BRIDGE MANAGEMENT SECTION BRIDGE MAINTENANCE PERFORMANCE STANDARD	BRIDGE NUMBER 1-688
	BMS ACTIVITY CODE B069-S2J Page 1 of 3
	EFFECTIVE DATE

ACTIVITY TITLE:	UNIT OF MEASUREMENT:
Speed Reducer Lubrication	Number of Speed Reducers

PROCEDURE DESCRIPTION:

WARNING

Use EXTREME CARE and ALWAYS REMOVE POWER from all pertinent electrical equipment, which includes multiple power sources, before beginning maintenance. Refer to Section 7.3, "Lockout/Tagout Procedure" in the Operations and Maintenance Manual.

Monthly:

1. Check the speed reducer oil level. Remove the dipstick from the speed reducer and wipe the oil from it with a clean rag. Reinsert the dipstick and remove it again. The oil level should be between the low and full marks on the dipstick.
2. If oil level is below the low mark on the dipstick, clean the speed reducer housing around the inspection cover. Remove the inspection cover.
3. Pour Mobil Mobilgear SHC 150 into the speed reducer reservoir. Check the fluid level with the dipstick, and repeat until the fluid level is between the low and full mark. **DO NOT OVERFILL THE UNITS AS LEAKAGE OR OVERHEATING MAY OCCUR.**
4. Reinstall the inspection cover with new sealant between the cover and housing.
5. Wipe up any spilled oil on the housing or surround area.

Six Months:

1. Clean the speed reducer bearing grease fittings of dirt, debris, and any other potential contaminants with a rag.
2. Remove purge plug at the bottom of the bearing.
3. Purge old grease from the bearing by slowly pumping in fresh Mobil Mobilux EP-2 into the bearing until fresh grease flows out along the shaft or through the lower port. Catch old grease in a catch basin.
4. Reinstall purge plug and wipe bearing of excess grease. Repeat for each of the speed reducer input and output shaft bearings.

Two Years:

1. Clean the speed reducer housing around the inspection cover of dirt, debris, etc.
2. Place oil absorbent pads on the floor followed by the oil catch basin under the drain plug. Remove inspection cover.
3. Remove drain plug and open the drain valve to drain oil from the speed reducer. If the catch basin is not large enough to collect the oil, intermittently close the drain valve and dump the oil into a larger container.
4. Flush reducer with Mobil Mobilgear SHC 150 or equivalent compatible oil with permanent oil used in the reducer to remove contaminants in the reducer housing.
5. Close the drain valve. Reinstall drain plug and tighten.
6. Inspect internal components of the reducer for unusual wear on the gear teeth and bearings.
7. Fill reservoir with Mobil Mobilgear SHC 150 to the appropriate fill level as indicated by the dipstick. **DO NOT OVERFILL THE UNITS AS LEAKAGE OR OVERHEATING MAY OCCUR.**
8. Reinstall the inspection cover with new sealant between the cover and housing.
9. Wipe up any spilled oil on the housing or surrounding area.

Refer to Sections 8.2.3, 11.5.1, 11.5.6, 11.5.14, 11.7.1, and 11.7.2 for additional component and material information. For lubrication coding details, refer to Section 11.2, "Machinery Lubrication Schematics" in the Operations and Maintenance Manual.

DELAWARE
DEPARTMENT OF TRANSPORTATION
BRIDGE MANAGEMENT SECTION
BRIDGE MAINTENANCE PERFORMANCE STANDARD

BRIDGE NUMBER
1-688
BMS ACTIVITY CODE
B069-S2J Page 2 of 3
EFFECTIVE DATE

ACTIVITY TITLE:	**UNIT OF MEASUREMENT:**
Speed Reducer Lubrication	Number of Speed Reducers

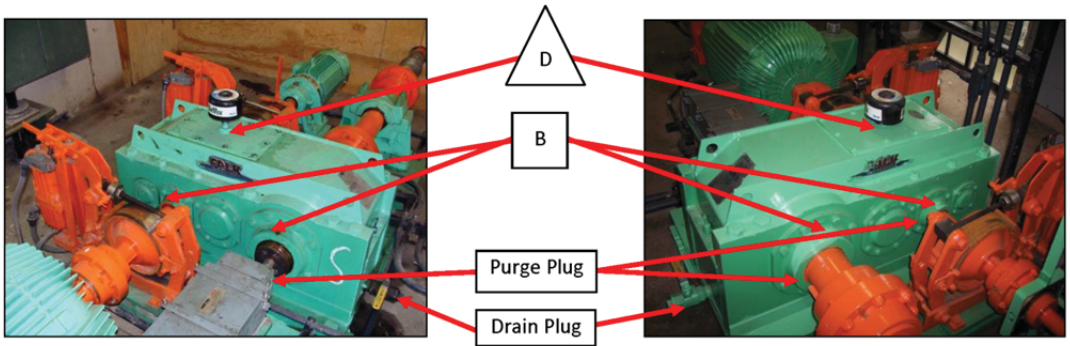

Primary Speed Reducer - Front

Primary Speed Reducer - Back

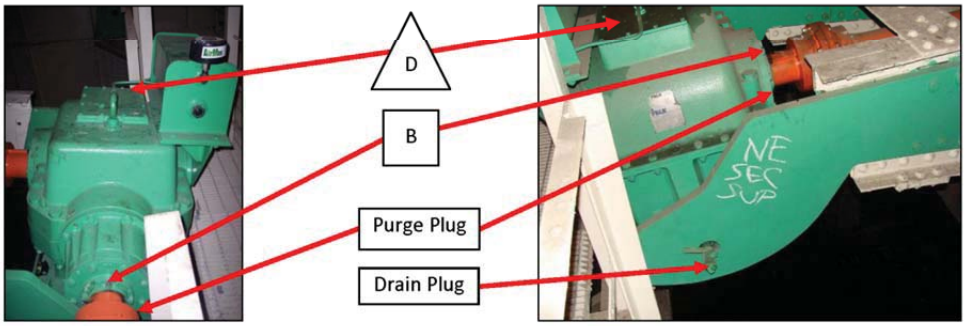

Enclosed Bevel Speed Reducer - Front

Enclosed Bevel Speed Reducer - Back

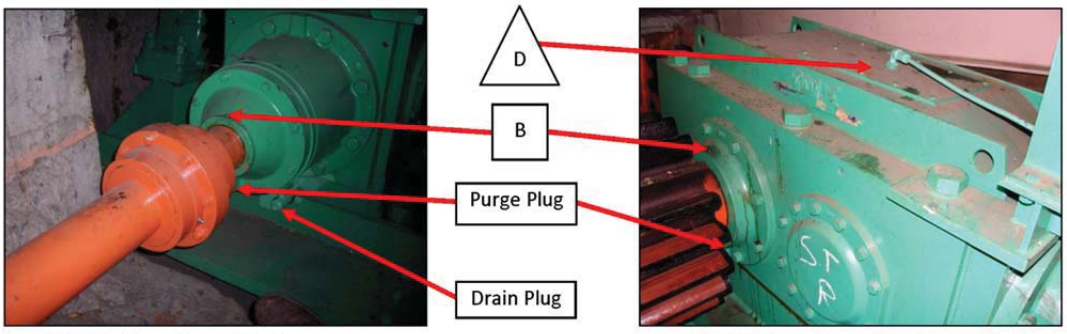

Final Enclosed Speed Reducer - Front

Final Enclosed Speed Reducer - Side

DELAWARE DEPARTMENT OF TRANSPORTATION BRIDGE MANAGEMENT SECTION BRIDGE MAINTENANCE PERFORMANCE STANDARD	BRIDGE NUMBER 1-688
	BMS ACTIVITY CODE B069-S2J Page 3 of 3
	EFFECTIVE DATE

ACTIVITY TITLE:	UNIT OF MEASUREMENT:
Speed Reducer Lubrication	Number of Speed Reducers

SCHEDULING CONSIDERATIONS:

Oil levels should be inspected monthly, with oil added as needed to maintain the proper oil level. The speed reducers should be drained, inspected, and refilled replaced every two years. Speed reducer bearings should be lubricated every six months.

Also, inspect and lubricate speed reducer bearings when the bridge opens more than 150 times between Spring and Fall maintenance routines or after an overstress situation such as a pinched span.

WORK AREA, ACTIVITY DESCRIPTION & REQUIREMENTS:

Speed reducers are located in the electrical/mechanical room, adjacent to the fixed walkway in the bascule pier, and on top of the counterweight of each span. Task includes locating, inspecting, and lubricating all speed reducers on the bridge. Lockout/Tagout is required prior to performing any maintenance on this equipment. Report any significant defects to bridge management.

Qty	EQUIPMENT	Qty	MATERIAL
1	Grease gun	~65 – 5 Gallon Buckets	Mobil Mobilgear SHC 150 or equivalent
16	Grease fittings		
1	Oil pump		
1	Bag of rags		
1	Shallow catch basin (~2" high)		
4	Empty 5 gallon bucket or container	~8 – 14 oz. Tubes	Mobil Mobilux EP-2 or equivalent
18	Oil absorbent pads		
1	Holding/storage tank for transportation of used oil (400 gallon capacity)		
1	Scraper	~6 – 5 oz. Tubes	Permatex Gear Oil RTV Sealant or equivalent
1	Ratchet set		
1	Adjustable wrench		
	Miscellaneous small tools		
1/Person	Coveralls	1	Roll of Teflon tape
1/Person	Set of nitrile gloves		
1/Person	Eye protection		
1/Person	Chemical respirator		

11.4.6 OPEN GEARING LUBRICATION

DELAWARE DEPARTMENT OF TRANSPORTATION BRIDGE MANAGEMENT SECTION BRIDGE MAINTENANCE PERFORMANCE STANDARD	BRIDGE NUMBER 1-688
	BMS ACTIVITY CODE B070-S2J Page 1 of 2
	EFFECTIVE DATE

ACTIVITY TITLE:	UNIT OF MEASUREMENT:
Open Gearing Lubrication	Number of Open Gears

PROCEDURE DESCRIPTION:

WARNING

Use EXTREME CARE and ALWAYS REMOVE POWER from all pertinent electrical equipment, which includes multiple power sources, before beginning maintenance. Refer to Section 7.3, "Lockout/Tagout Procedure" in the Operations and Maintenance Manual.

Monthly

1. Using a brush, evenly coat all gear tooth surfaces with Mobil Mobiltac 325 NC or equivalent lubricant.

Annually

1. Observe displacement patterns in open gearing lubricant for evidence of misalignment.
2. Remove old lubricant and debris by scraping the gear tooth surfaces and disposing of the lubricant in a tray or pan.
3. Apply CRC Quick Clean Heavy Duty Degreaser or equivalent to remove existing lubrication on the gear teeth.
4. With the use of a scraper and rags, remove the remaining grease and solvent and properly dispose of materials.
5. Re-inspect the gears for signs of abnormal wear or misalignment. Report abnormal wear or misalignment to bridge management.
6. Using a brush, evenly coat all gear tooth surfaces with Mobil Mobiltac 325 NC or equivalent lubricant.

Refer to Sections 8.2.5, 11.5.3, and 11.5.13 for additional component and material information. For lubrication coding details below, refer to Section 11.2, "Machinery Lubrication Schematics" in the Operations and Maintenance Manual.

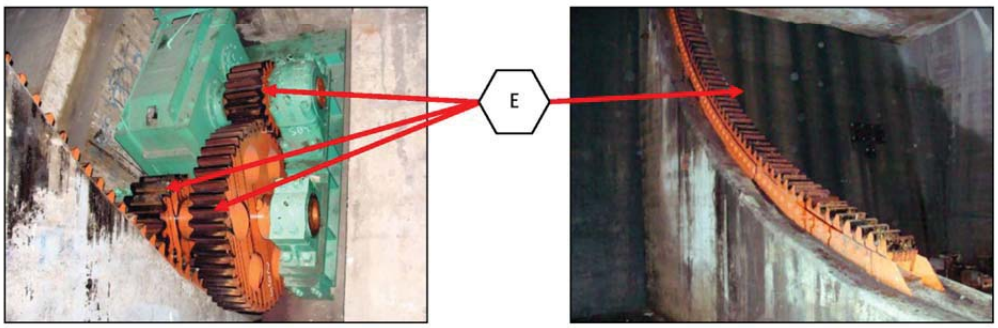

Open Gearing Rack

SCHEDULING CONSIDERATIONS:

Fresh grease should be applied to all open gearing monthly. Open gearing should be cleaned, inspected, and lubricated annually.

Inspect and lubricate open gearing when the bridge opens more than 150 times between Spring and Fall maintenance routines or after an overstress situation such as a pinched span.

WORK AREA, ACTIVITY DESCRIPTION & REQUIREMENTS:

Open gearing is located on top of the counterweight and into counterweight pit of both spans. Tasks include locating, inspecting and lubricating all open gearing on the bridge. Lockout/Tagout is required prior to performing any maintenance on this equipment. Report any significant defects to bridge management.

DELAWARE **DEPARTMENT OF TRANSPORTATION** **BRIDGE MANAGEMENT SECTION** **BRIDGE MAINTENANCE PERFORMANCE STANDARD**	**BRIDGE NUMBER** 1-688
	BMS ACTIVITY CODE B070-S2J Page 2 of 2
	EFFECTIVE DATE

ACTIVITY TITLE: Open Gearing Lubrication		**UNIT OF MEASUREMENT:** Number of Open Gears	
Qty	**EQUIPMENT**	**Qty**	**MATERIAL**
2	Bag of rags	~2 – 5 Gallon Buckets	Mobil Mobiltac 325 NC or equivalent
2	Scrapers		
2	Brushes		
2	Trays or pans		
1/Person	Tyvek Suit	~5 – 20 oz. Cans	CRC Quick Clean Heavy Duty Degreaser or equivalent
1/Person	Set of chemical resistant Viton gloves		
1/Person	Chemical goggles and face shield		
1/Person	Chemical respirator		

11.4.7 SPHERICAL ROLLER BEARING

DELAWARE DEPARTMENT OF TRANSPORTATION BRIDGE MANAGEMENT SECTION BRIDGE MAINTENANCE PERFORMANCE STANDARD	BRIDGE NUMBER 1-688
	BMS ACTIVITY CODE B076-S2J Page 1 of 2
	EFFECTIVE DATE

ACTIVITY TITLE:	UNIT OF MEASUREMENT:
Spherical Roller Bearing Lubrication	Number of Spherical Roller Bearings

PROCEDURE DESCRIPTION:

WARNING

Use EXTREME CARE and ALWAYS REMOVE POWER from all pertinent electrical equipment, which includes multiple power sources, before beginning maintenance. Refer to Section 7.3, "Lockout/Tagout Procedure" in the Operations and Maintenance Manual.

Three Months

1. Clean the spherical roller bearings of dirt, debris, old grease, and any other potential contaminants with a rag.
2. Remove the purge plugs located on the base of the bearing and the top of the cap. Install a grease fitting into the port at the top of the cap.
3. Pump fresh Mobil Mobilgrease XHP 462 into the grease fitting in the bearing cap until grease begins to purge from the bearing. Catch old grease in a catch basin.
4. Remove the grease fitting and reinstall the purge plugs. For purge plug and grease fitting locations, see photos below.

Two Years

1. Every two years, the bearing cap should be removed and old lubricant cleaned from the bearings. Lock out all span drive machinery prior to removing the bearing cap. Prior to removing bearing cap, hand release both motor brakes and the machinery brake all at once to remove any residual torque in the span drive machinery. Set the brakes after the torque is released.
2. To remove the cap, unscrew the four cap fasteners located at the top of the cap. Lift the cap from the bearing housing carefully, using a chain fall secured to beams above the bearing and the eye bolts attached to the bearing cap. Rigging required to remove cap shall have a minimum of 1 ton capacity.
3. Carefully remove the old grease from the bearings using a plastic scrapper, clean rags, and CRC Quick Clean Heavy Duty Degreaser. **Extreme caution is required to protect the bearing from contaminants from entering the bearing.** Do not use metal tools to remove grease, as they may damage the rollers.
4. The bearings rollers and races should be inspected for wear and damage after all lubricant has been removed.
5. Measure and record bearing clearances between the rollers and outer race with feeler gauges. If the maximum clearance is larger than 0.008", notify bridge management.
6. Replace bearing cap, making sure that no debris gets into the bearing. Torque each cap bolt to 1950 ft-lbs.
7. Remove the purge plugs located on the base of the bearing and the top of the cap. Install grease fitting into the port at the top of the cap. Pump fresh Mobil Mobilgrease XHP 462 into bearing until fresh grease is visible on the interface between the bearing and the shaft or through the purge plug ports. Remove the grease fitting and reinstall the purge plugs at the top and base of the bearing. Set the span drive machinery disconnect switches to the ON position.

Refer to Sections 11.8.4, 11.5.2, and 11.5.13 for additional component and material information. For lubrication coding details below, refer to Section 11.2, "Machinery Lubrication Schematics" in the Operations and Maintenance Manual.

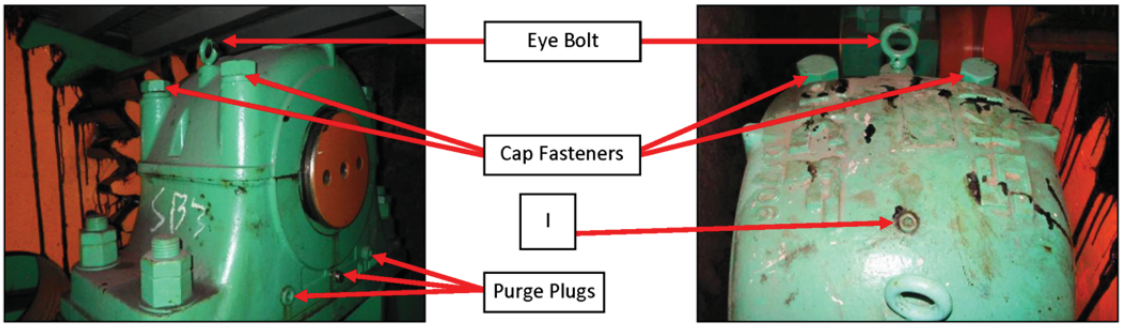

Spherical Roller Bearing Spherical Roller Bearing

DELAWARE
DEPARTMENT OF TRANSPORTATION
BRIDGE MANAGEMENT SECTION
BRIDGE MAINTENANCE PERFORMANCE STANDARD

BRIDGE NUMBER
1-688

BMS ACTIVITY CODE
B076-S2J Page 2 of 2

EFFECTIVE DATE

ACTIVITY TITLE:
Spherical Roller Bearing Lubrication

UNIT OF MEASUREMENT:
Number of Spherical Roller Bearings

SCHEDULING CONSIDERATIONS:

Spherical roller bearings should be lubricated every three months. Every two years the spherical roller bearing cap should be removed to allow for the removal of old lubricant and inspection of the rollers and races.

Also, inspect and lubricate spherical roller bearings when the bridge opens more than 150 times between Spring and Fall maintenance routines or after an overstress situation such as a pinched span.

WORK AREA, ACTIVITY DESCRIPTION & REQUIREMENTS:

Spherical roller bearings are located on the open gearing frame on top of the counterweight. Tasks include locating, inspecting, and lubricating all spherical roller bearings on the bridge with the appropriate lubricant. Lockout/Tagout is required prior to removing the bearing cap. Report any significant defects to bridge management.

Qty	EQUIPMENT	Qty	EQUIPMENT	Qty	MATERIAL
1	Grease gun	1	Large wrench	~2 – 14 oz. Tubes (Replenishment quantity) ~58 – 14 oz. Tubes (Replacement quantity)	Mobil Mobilgrease XHP 462 or equivalent
2	Grease fittings		Miscellaneous small tools		
1	Bag of rags				
1	Catch basin	1	Torque wrench		
1	Feeler gauges	1/Person	Coveralls	~2 – 20 oz. Cans	CRC Quick Clean Heavy Duty Degreaser or equivalent
1	Plastic scrapper	1/Person	Set of nitrile gloves		
1	Chain fall	1/Person	Eye protection		

11.4.8 SPAN LOCK MACHINERY LUBRICATION

11.4.8.1 SPAN LOCK COUPLING LUBRICATION

DELAWARE **DEPARTMENT OF TRANSPORTATION** **BRIDGE MANAGEMENT SECTION** **BRIDGE MAINTENANCE PERFORMANCE STANDARD**	**BRIDGE NUMBER** 1-688 **BMS ACTIVITY CODE** B077-S2J Page 1 of 2 **EFFECTIVE DATE**

ACTIVITY TITLE:	**UNIT OF MEASUREMENT:**
Span Lock Actuator Lubrication	Number of Span Lock Actuators

PROCEDURE DESCRIPTION:

WARNING

Use EXTREME CARE and ALWAYS REMOVE POWER from all pertinent electrical equipment, which includes multiple power sources, before beginning maintenance. Refer to Section 7.3, "Lockout/Tagout Procedure" in the Operations and Maintenance Manual.

Six Months

1. Clean span lock actuator housing around grease plugs located on the top and bottom of the main housing.
2. Remove the top and bottom pipe plugs. Each actuator has one grease plug on the top, bottom, front and rear of the actuator housing. Install a grease fitting into the top port. Place a catch basin below the bottom to catch the purged grease from the actuator.
3. Use a grease gun to purge the old grease from the main housing with fresh Mobil Beacon 325 or equivalent lubricant.
4. Remove the grease fitting and reinstall grease plugs and tighten.
5. Remove the stem guide pipe cap. Remove the grease from within the stem guide pipe. With the lock bar fully retracted, fill the pipe with fresh Mobil Beacon 325 or equivalent lubricant. Reinstall the stem guide pipe cap.
6. Remove the main housing cover at the front of the actuator.
7. Remove grease from the stem guide.
8. Use a brush or swab to coat the stem guide threads with Mobil Beacon 325 or equivalent lubricant.
9. Reinstall the main housing cover with new sealant between the cover and housing.
10. Wipe the actuator clean of excess grease.

Refer to Sections 8.3.1, 11.5.5, 11.5.13, and 11.7.8 for additional component and material information. For lubrication coding details, refer to Section 11.2, "Machinery Lubrication Schematics" in the Operations and Maintenance Manual.

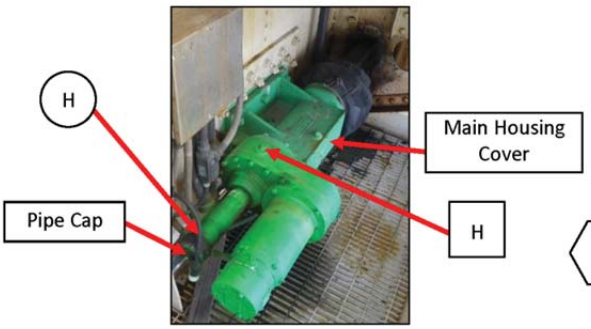

Span Lock Actuator

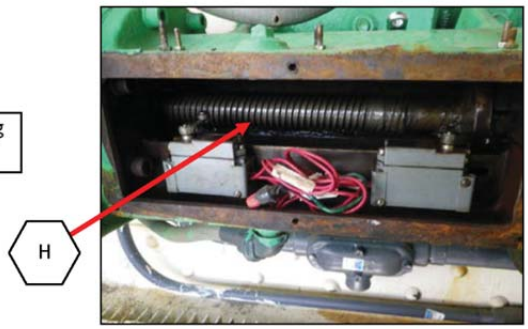

Stem Guide Threads

SCHEDULING CONSIDERATIONS:

Every six months, the old grease in the stem guide pipe cap and the span lock operator should be purged with fresh grease. The stem guide threads should also be coated with fresh grease at this time.

Inspect and lubricate span lock actuator when the bridge opens more than 150 times between Spring and Fall maintenance routines or after an overstress situation such as a pinched span.

Contact TMC to coordinate temporary closure of the bridge for maintenance.

DELAWARE **DEPARTMENT OF TRANSPORTATION** **BRIDGE MANAGEMENT SECTION** **BRIDGE MAINTENANCE PERFORMANCE STANDARD**	**BRIDGE NUMBER** 1-688 **BMS ACTIVITY CODE** B077-S2J Page 2 of 2 **EFFECTIVE DATE**

ACTIVITY TITLE:	**UNIT OF MEASUREMENT:**
Span Lock Actuator Lubrication	Number of Span Lock Actuators

WORK AREA, ACTIVITY DESCRIPTION & REQUIREMENTS:

The span lock actuators are located on the outboard side of the bascule girders on the north leaf. Tasks include locating, inspecting and lubricating both span lock actuators on the bridge. Lockout/Tagout is required prior to performing any maintenance on this equipment. Report any significant defects to bridge management.

Qty	EQUIPMENT	Qty	EQUIPMENT	Qty	MATERIAL
1	Grease gun	1	Pipe wrench	~32 – 14 oz. Tubes	Mobil Beacon 325 or equivalent
2	Grease fittings	1	Ratchet set		
1	Bag of rags		Miscellaneous small tools	~2 – 20 oz. Cans	CRC Quick Clean Heavy Duty Degreaser or equivalent
1	Brush or swab	1/Person	Coveralls		
1	Scraper	1/Person	Set of nitrile gloves	~2 – 5 oz. Tubes	Permatex Gear Oil RTV Sealant or equivalent
1	Catch basin	1/Person	Eye protection		

11.4.8.2 SPAN LOCK SPEED REDUCER LUBRICATION

DELAWARE DEPARTMENT OF TRANSPORTATION BRIDGE MANAGEMENT SECTION BRIDGE MAINTENANCE PERFORMANCE STANDARD	BRIDGE NUMBER 1-688
	BMS ACTIVITY CODE B078-S2J Page 1 of 2
	EFFECTIVE DATE

ACTIVITY TITLE:	UNIT OF MEASUREMENT:
Span Lock Bar, Guide, and Receiving Socket Lubrication	Number of Span Lock Bars, Guides, and Receiving Sockets

PROCEDURE DESCRIPTION:

WARNING

Use EXTREME CARE and ALWAYS REMOVE POWER from all pertinent electrical equipment, which includes multiple power sources, before beginning maintenance. Refer to Section 7.3, "Lockout/Tagout Procedure" in the Operations and Maintenance Manual.

Monthly

1. With the lock bar fully retracted, remove the existing lubricant from the lock bar and receiving socket.
2. Brush or swab the sliding surfaces of the lock bar with Mobil Mobilux EP-2 or equivalent lubricant.
3. With the lock bar fully driven, pump fresh Mobil Mobilux EP-2 or equivalent lubricant into the grease fittings on the front guide and receiving socket. Two grease fittings are located on the channel side of each front guide and receiving socket. Access holes located adjacent to the front guide and receiving socket through the sidewalk support provide access to the grease fittings.
4. Visually inspect the lock bar, front guides, sockets, and fasteners for excessive wear or damage.

Refer to Sections 8.3.1, 11.5.1, and 11.5.13. For lubrication coding details below, refer to Section 11.2, "Machinery Lubrication Schematics" in the Operations and Maintenance Manual.

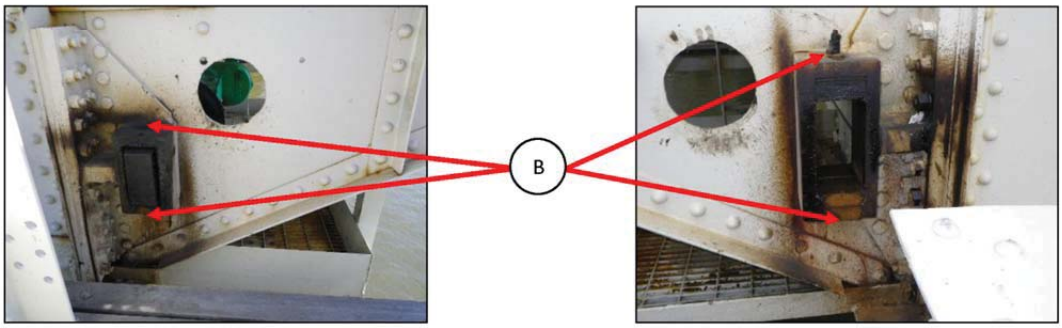

Front Guide

Receiving Socket

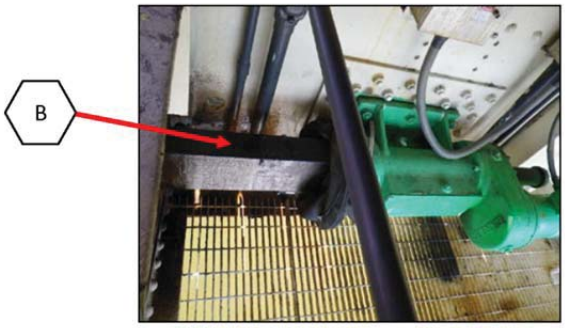

Lock Bar

DELAWARE
DEPARTMENT OF TRANSPORTATION
BRIDGE MANAGEMENT SECTION
BRIDGE MAINTENANCE PERFORMANCE STANDARD

BRIDGE NUMBER
1-688

BMS ACTIVITY CODE
B078-S2J Page 2 of 2

EFFECTIVE DATE

ACTIVITY TITLE:
Span Lock Bar, Guide, and Receiving Socket Lubrication

UNIT OF MEASUREMENT:
Number of Span Lock Bars, Guides, and Receiving Sockets

SCHEDULING CONSIDERATIONS:

The lock bar, front guides, and receiving sockets should be lubricated on a monthly basis.

Inspect and lubricate span lock components when the bridge opens more than 150 times between Spring and Fall maintenance routines or after an overstress situation.

Contact TMC to coordinate temporary closure of the bridge for maintenance.

WORK AREA, ACTIVITY DESCRIPTION & REQUIREMENTS:

The front guides and receiving sockets are located on the outboard side of each bascule girder. The front guides are mounted to the north leaf sidewalk support and bascule girder web. The receiving sockets are mounted to the south leaf sidewalk support and bascule girder web. Tasks include locating, inspecting and lubricating the lock bars, front guides and receiving sockets on the bridge. Lockout/Tagout is required prior to performing any maintenance on this equipment. Report any significant defects to bridge management.

Qty	EQUIPMENT	Qty	EQUIPMENT	Qty	MATERIAL
1	Grease gun	1	Brush or swab	~4 – 14 oz. Tubes	Mobil Mobilux EP-2 or equivalent
8	Grease fittings	1/Person	Tyvek Suit		
1	Bag of Rags	1/Person	Set of chemical resistant Viton gloves		
1	Scraper	1/Person	Eye protection	~2 – 20 oz. Cans	CRC Quick Clean Heavy Duty Degreaser or equivalent.
1	Catch basin	1/Person	Chemical respirator		

11.5 MATERIAL DATA SHEETS

11.5.1 MOBIL MOBILUX EP-0, EP-2

Mobil

Mobilux EP 0, 1, 2, 3, 460, 004 and 023

Grease

Product Description

Mobilux EP 0, 1, 2, 3, 460, 004 and 023 products are a high performance family of five general-purpose industrial greases and two special-duty semi-fluid greases. These lithium hydroxystearate greases are formulated to provide extra protection against wear, rusting and water washout. They are available in NLGI grades ranging from 00 to 3, with base oil viscosities ISO VG 150, 320 and 460.

Mobilux EP 0, 1, 2, 3 and 460 greases are recommended for most types of industrial applications including heavy-duty applications where high unit pressures or shock loads are present. These greases provide excellent protection against rust and corrosion and resist water wash-out which makes them particularly suitable for equipment where moist or wet conditions are common. Mobilux EP 0 and 1 are suitable for centralised systems. Mobilux EP 2 and 3 are general-purpose greases and Mobilux EP 460 is used in heavy-duty applications such as the wet ends of paper machines. The recommended operating temperature range is from -20°C to 130°C (0°C to 130°C for Mobilux EP 460) but they may be used at higher temperatures if the lubrication frequency is increased accordingly.

Mobilux EP 004 and Mobilux EP 023 are particularly suitable for the lubrication of enclosed gears and bearings in poorly sealed gear cases they can also be used in many other industrial applications where conventional gear oils cannot be retained in gear cases, chain cases, etc. because of leakage due to worn or missing seals. The recommended operating temperature range is -25 to 120°C for Mobilux EP 004 and -15 to 120°C for Mobilux EP 023.

Features and Benefits

Mobilux EP greases have a long history of proven performance and have demonstrated superior performance versus competitive products in the areas of corrosion protection, low temperature pumpability and high temperature service life. A Timken OK load of 40 lb illustrates their load carrying and extreme pressure capability.

- Reduced wear under heavy or shock loading and vibration for good equipment reliability and availability
- Protection against rust and corrosion and resistance to water washout for equipment protection and good lubrication even in presence of water
- Extended bearing life potential in wet environments for reduced bearing costs and unanticipated downtime
- Good pumpability in centralised systems (Mobilux EP 0 and 1)
- Effective leakage control (Mobilux EP 004 and Mobilux EP 023)

Applications

- Mobilux EP 0 and EP 1 provide good low temperature pumpability and are suitable for centralised lubrication systems and other applications where low temperature performance is required.
- Mobilux EP 2 is recommended for multipurpose applications in antifriction and plain bearings, bushings and pins under normal operating conditions.
- Mobilux EP 3 is a stiffer NLGI grade 3 grease recommended for applications where maximum protection against penetration of water or solid contaminants is required.

- Mobilux EP 460 is recommended for the lubrication of low to moderate speed, heavily loaded bearings including those subject to high unit pressures or shock loads. These include steel and paper mills, underground mining, tunnelling, ore crushing plants and other heavy-duty applications where moist or wet conditions are common.
- Mobilux EP 004 and Mobilux EP 023 are particularly suitable for the lubrication of enclosed gears and bearings in poorly sealed gear cases on most underground mining machinery with the exception of electric motor gearings. Mobilux EP 004 and Mobilux EP 023 can also be used in many other industrial applications where conventional gear oils cannot be retained in equipment such as gear cases, chain cases, because of leakage due to worn or missing seals. Mobilux EP 004 passes the SEW 1008 hour gear test requirement DR.EM.203 mod.

Specifications and Approvals

Mobilux EP meets or exceeds the requirements of:	Mobilux EP 0	Mobilux EP 1	Mobilux EP 2	Mobilux EP 3	Mobilux EP 460	Mobilux EP 004	Mobilux EP 023
DIN 51825: (2004-06)		KP1K-30	KP2K-30	KP3K-20	KP2K-20		
DIN 51826: (2005-01)	GP0G-20					GP00G-20	GP000G-20

Mobilux EP has the following builder approvals	Mobilux EP 0	Mobilux EP 1	Mobilux EP 2	Mobilux EP 3	Mobilux EP 460	Mobilux EP 004	Mobilux EP 023
SEW R32/302						X	

Typical Properties

	Mobilux EP 0	Mobilux EP 1	Mobilux EP 2	Mobilux EP 3	Mobilux EP 460	Mobilux EP 004	Mobilux EP 023
NLGI Grade	0	1	2	3	2	00	000
Thickener Type	Lithium	Lithium	Lithium	Lithium	Lithium	Lithium	Lithium
Color, Visual	Brown	Brown	Brown	Brown	Brown	Brown	Brown
Penetration, Worked, 25°C, ASTM D 217	370	325	280	235	280	415	460
Viscosity of Oil, ASTM D 445							
cSt @ 40°C	160	160	160	160	460	160	320
Timken OK Load, ASTM D 2509, lb	40	40	40	40	40	40	40
4-Ball Wear, ASTM D 2266, Scar, mm	0.4	0.4	0.4	0.4	0.4	0.5	0.4
4-Ball Weld Load, ASTM D 2596, Kg	250	250	250	250	250	250	250
Dropping Point, D 2265, C	190	190	190	190	190		
Rust Protection, ASTM D 6138, Distilled Water	0-0	0-0	0-0	0-0	0-0	0-0	0-0

Health and Safety

Based on available information, this product is not expected to produce adverse effects on health when used for the intended application and the recommendations provided in the Material Safety Data Sheet (MSDS) are followed. MSDS's are available upon request through your sales contract office, or via the Internet. This product should not be used for purposes other than its intended use. If disposing of used product, take care to protect the environment.

ExxonMobil

Product Name: MOBILUX EP 0
Revision Date: 30May2007
Page 1 of 8

MATERIAL SAFETY DATA SHEET

SECTION 1 PRODUCT AND COMPANY IDENTIFICATION

PRODUCT

Product Name: **MOBILUX EP 0**
Product Description: Base Oil and Additives
Product Code: 2015A0208030, 641290-00, 971553
Intended Use: Grease

COMPANY IDENTIFICATION

Supplier: **EXXON MOBIL CORPORATION**
3225 GALLOWS RD.
FAIRFAX, VA. 22037 USA

24 Hour Health Emergency	609-737-4411
Transportation Emergency Phone	800-424-9300
ExxonMobil Transportation No.	281-834-3296
MSDS Requests	713-613-3661
Product Technical Information	800-662-4525, 800-947-9147
MSDS Internet Address	http://www.exxon.com, http://www.mobil.com

SECTION 2 COMPOSITION / INFORMATION ON INGREDIENTS

Reportable Hazardous Substance(s) or Complex Substance(s)

Name	CAS#	Concentration*
ZINC DITHIOPHOSPHATE	68649-42-3	< 2.5%

* All concentrations are percent by weight unless material is a gas. Gas concentrations are in percent by volume.

SECTION 3 HAZARDS IDENTIFICATION

This material is not considered to be hazardous according to regulatory guidelines (see (M)SDS Section 15).

POTENTIAL HEALTH EFFECTS

Low order of toxicity. Excessive exposure may result in eye, skin, or respiratory irritation. High-pressure injection under skin may cause serious damage.

NFPA Hazard ID:	Health:	0	Flammability:	1	Reactivity:	0
HMIS Hazard ID:	Health:	0	Flammability:	1	Reactivity:	0

NOTE: This material should not be used for any other purpose than the intended use in Section 1 without expert advice. Health studies have shown that chemical exposure may cause potential human health risks which may vary from person to person.

SECTION 4 FIRST AID MEASURES

INHALATION

Under normal conditions of intended use, this material is not expected to be an inhalation hazard.

SKIN CONTACT

Wash contact areas with soap and water. If product is injected into or under the skin, or into any part of the body, regardless of the appearance of the wound or its size, the individual should be evaluated immediately by a physician as a surgical emergency. Even though initial symptoms from high pressure injection may be minimal or absent, early surgical treatment within the first few hours may significantly reduce the ultimate extent of injury.

EYE CONTACT

Flush thoroughly with water. If irritation occurs, get medical assistance.

INGESTION

First aid is normally not required. Seek medical attention if discomfort occurs.

SECTION 5 FIRE FIGHTING MEASURES

EXTINGUISHING MEDIA

Appropriate Extinguishing Media: Use water fog, foam, dry chemical or carbon dioxide (CO2) to extinguish flames.

Inappropriate Extinguishing Media: Straight Streams of Water

FIRE FIGHTING

Fire Fighting Instructions: Evacuate area. Prevent runoff from fire control or dilution from entering streams, sewers, or drinking water supply. Firefighters should use standard protective equipment and in enclosed spaces, self-contained breathing apparatus (SCBA). Use water spray to cool fire exposed surfaces and to protect personnel.

Hazardous Combustion Products: Aldehydes, Oxides of carbon, Smoke, Fume, Sulfur oxides, Incomplete combustion products

FLAMMABILITY PROPERTIES

Flash Point [Method]: >204C (400F) [EST. FOR OIL, ASTM D-92 (COC)]
Flammable Limits (Approximate volume % in air): LEL: N/D UEL: N/D
Autoignition Temperature: N/D

SECTION 6 ACCIDENTAL RELEASE MEASURES

NOTIFICATION PROCEDURES

In the event of a spill or accidental release, notify relevant authorities in accordance with all applicable regulations. In the event of a spill or accidental release, notify relevant authorities in accordance with all applicable regulations. US regulations require reporting releases of this material to the environment which exceed the applicable reportable quantity or oil spills which could reach any waterway including intermittent dry creeks. The National Response Center can be reached at (800)424-8802.

SPILL MANAGEMENT

Land Spill: Allow spilled material to solidify and scrape up with shovels into a suitable container for recycle or disposal. Scrape up spilled material with shovels into a suitable container for recycle or disposal.

Water Spill: Stop leak if you can do it without risk. Confine the spill immediately with booms. Warn other shipping. Skim from surface.

Water spill and land spill recommendations are based on the most likely spill scenario for this material; however, geographic conditions, wind, temperature, (and in the case of a water spill) wave and current direction and speed may greatly influence the appropriate action to be taken. For this reason, local experts should be consulted. Note: Local regulations may prescribe or limit action to be taken.

ENVIRONMENTAL PRECAUTIONS

Prevent entry into waterways, sewers, basements or confined areas.

SECTION 7 HANDLING AND STORAGE

HANDLING

Prevent small spills and leakage to avoid slip hazard.

Static Accumulator: This material is not a static accumulator.

STORAGE

Do not store in open or unlabelled containers.

SECTION 8 EXPOSURE CONTROLS / PERSONAL PROTECTION

EXPOSURE LIMIT VALUES

NOTE: Limits/standards shown for guidance only. Follow applicable regulations.

ENGINEERING CONTROLS

The level of protection and types of controls necessary will vary depending upon potential exposure conditions. Control measures to consider:

No special requirements under ordinary conditions of use and with adequate ventilation.

PERSONAL PROTECTION

Personal protective equipment selections vary based on potential exposure conditions such as applications, handling practices, concentration and ventilation. Information on the selection of protective equipment for use with this material, as provided below, is based upon intended, normal usage.

Respiratory Protection: If engineering controls do not maintain airborne contaminant concentrations at a level which is adequate to protect worker health, an approved respirator may be appropriate. Respirator selection, use, and maintenance must be in accordance with regulatory requirements, if applicable. Types of

respirators to be considered for this material include:
No protection is ordinarily required under normal conditions of use and with adequate ventilation.

For high airborne concentrations, use an approved supplied-air respirator, operated in positive pressure mode. Supplied air respirators with an escape bottle may be appropriate when oxygen levels are inadequate, gas/vapor warning properties are poor, or if air purifying filter capacity/rating may be exceeded.

Hand Protection: Any specific glove information provided is based on published literature and glove manufacturer data. Work conditions can greatly affect glove durability; inspect and replace worn or damaged gloves. The types of gloves to be considered for this material include:
No protection is ordinarily required under normal conditions of use.

Eye Protection: If contact is likely, safety glasses with side shields are recommended.

Skin and Body Protection: Any specific clothing information provided is based on published literature or manufacturer data. The types of clothing to be considered for this material include:
No skin protection is ordinarily required under normal conditions of use. In accordance with good industrial hygiene practices, precautions should be taken to avoid skin contact.

Specific Hygiene Measures: Always observe good personal hygiene measures, such as washing after handling the material and before eating, drinking, and/or smoking. Routinely wash work clothing and protective equipment to remove contaminants. Discard contaminated clothing and footwear that cannot be cleaned. Practice good housekeeping.

ENVIRONMENTAL CONTROLS
See Sections 6, 7, 12, 13.

SECTION 9 PHYSICAL AND CHEMICAL PROPERTIES

Typical physical and chemical properties are given below. Consult the Supplier in Section 1 for additional data.

GENERAL INFORMATION
Physical State: Solid
Form: Semi-fluid
Color: Brown
Odor: Characteristic
Odor Threshold: N/D

IMPORTANT HEALTH, SAFETY, AND ENVIRONMENTAL INFORMATION
Relative Density (at 15 C): 0.918
Flash Point [Method]: >204C (400F) [EST. FOR OIL, ASTM D-92 (COC)]
Flammable Limits (Approximate volume % in air): LEL: N/D UEL: N/D
Autoignition Temperature: N/D
Boiling Point / Range: > 316C (600F)
Vapor Density (Air = 1): N/D
Vapor Pressure: < 0.013 kPa (0.1 mm Hg) at 20 C
Evaporation Rate (n-butyl acetate = 1): N/D
pH: N/A
Log Pow (n-Octanol/Water Partition Coefficient): > 3.5
Solubility in Water: Negligible

Viscosity: 150 cSt (150 mm2/sec) at 40 C
Oxidizing Properties: See Sections 3, 15, 16.

OTHER INFORMATION
Freezing Point: N/D
Melting Point: N/D
DMSO Extract (mineral oil only), IP-346: < 3 %wt

NOTE: Most physical properties above are for the oil component in the material.

SECTION 10 STABILITY AND REACTIVITY

STABILITY: Material is stable under normal conditions.

CONDITIONS TO AVOID: Excessive heat. High energy sources of ignition.

MATERIALS TO AVOID: Strong oxidizers

HAZARDOUS DECOMPOSITION PRODUCTS: Material does not decompose at ambient temperatures.

HAZARDOUS POLYMERIZATION: Will not occur.

SECTION 11 TOXICOLOGICAL INFORMATION

ACUTE TOXICITY

Route of Exposure	Conclusion / Remarks
Inhalation	
Toxicity (Rat): LC50 > 5000 mg/m3	Minimally Toxic. Based on assessment of the components.
Irritation: No end point data.	Negligible hazard at ambient/normal handling temperatures. Based on assessment of the components.
Ingestion	
Toxicity (Rat): LD50 > 2000 mg/kg	Minimally Toxic. Based on test data for structurally similar materials.
Skin	
Toxicity (Rabbit): LD50 > 2000 mg/kg	Minimally Toxic. Based on test data for structurally similar materials.
Irritation (Rabbit): Data available.	Negligible irritation to skin at ambient temperatures. Based on assessment of the components.
Eye	
Irritation (Rabbit): Data available.	May cause mild, short-lasting discomfort to eyes. Based on assessment of the components.

CHRONIC/OTHER EFFECTS
Contains:
Base oil severely refined: Not carcinogenic in animal studies. Representative material passes IP-346, Modified Ames test, and/or other screening tests. Dermal and inhalation studies showed minimal effects; lung non-specific infiltration of immune cells, oil deposition and minimal granuloma formation. Not sensitizing in test animals.

Additional information is available by request.

The following ingredients are cited on the lists below: None.

--REGULATORY LISTS SEARCHED--

1 = NTP CARC	3 = IARC 1	5 = IARC 2B
2 = NTP SUS	4 = IARC 2A	6 = OSHA CARC

SECTION 12 ECOLOGICAL INFORMATION

The information given is based on data available for the material, the components of the material, and similar materials.

ECOTOXICITY

Material -- Not expected to be harmful to aquatic organisms.

MOBILITY

Base oil component -- Low solubility and floats and is expected to migrate from water to the land. Expected to partition to sediment and wastewater solids.

PERSISTENCE AND DEGRADABILITY

Biodegradation:

Base oil component -- Expected to be inherently biodegradable

BIOACCUMULATION POTENTIAL

Base oil component -- Has the potential to bioaccumulate, however metabolism or physical properties may reduce the bioconcentration or limit bioavailability.

SECTION 13 DISPOSAL CONSIDERATIONS

Disposal recommendations based on material as supplied. Disposal must be in accordance with current applicable laws and regulations, and material characteristics at time of disposal.

DISPOSAL RECOMMENDATIONS

Product is suitable for burning in an enclosed controlled burner for fuel value or disposal by supervised incineration at very high temperatures to prevent formation of undesirable combustion products.

REGULATORY DISPOSAL INFORMATION

RCRA Information: The unused product, in our opinion, is not specifically listed by the EPA as a hazardous waste (40 CFR, Part 261D), nor is it formulated to contain materials which are listed as hazardous wastes. It does not exhibit the hazardous characteristics of ignitability, corrosivity or reactivity and is not formulated with contaminants as determined by the Toxicity Characteristic Leaching Procedure (TCLP). However, used product may be regulated.

Empty Container Warning Empty Container Warning (where applicable): Empty containers may contain residue and can be dangerous. Do not attempt to refill or clean containers without proper instructions. Empty drums should be completely drained and safely stored until appropriately reconditioned or disposed. Empty containers should be taken

for recycling, recovery, or disposal through suitably qualified or licensed contractor and in accordance with governmental regulations. DO NOT PRESSURISE, CUT, WELD, BRAZE, SOLDER, DRILL, GRIND, OR EXPOSE SUCH CONTAINERS TO HEAT, FLAME, SPARKS, STATIC ELECTRICITY, OR OTHER SOURCES OF IGNITION. THEY MAY EXPLODE AND CAUSE INJURY OR DEATH.

SECTION 14 TRANSPORT INFORMATION

LAND (DOT) : Not Regulated for Land Transport

LAND (TDG) : Not Regulated for Land Transport

SEA (IMDG) : Not Regulated for Sea Transport according to IMDG-Code

AIR (IATA) : Not Regulated for Air Transport

SECTION 15 REGULATORY INFORMATION

OSHA HAZARD COMMUNICATION STANDARD: When used for its intended purposes, this material is not classified as hazardous in accordance with OSHA 29 CFR 1910.1200.

NATIONAL CHEMICAL INVENTORY LISTING: DSL, EINECS, KECI, PICCS, TSCA

Special Cases:

Inventory	Status
AICS	Restrictions Apply

EPCRA: This material contains no extremely hazardous substances.

SARA (311/312) REPORTABLE HAZARD CATEGORIES: None.

SARA (313) TOXIC RELEASE INVENTORY:

Chemical Name	CAS Number	Typical Value
ZINC DITHIOPHOSPHATE	68649-42-3	< 2.5%

The Following Ingredients are Cited on the Lists Below:*

Chemical Name	CAS Number	List Citations
DIPHENYLAMINE	122-39-4	5, 9, 18
PHOSPHORUS	7723-14-0	1, 4
ZINC DITHIOPHOSPHATE	68649-42-3	13, 15, 17

--REGULATORY LISTS SEARCHED--

1 = ACGIH ALL	6 = TSCA 5a2	11 = CA P65 REPRO	16 = MN RTK
2 = ACGIH A1	7 = TSCA 5e	12 = CA RTK	17 = NJ RTK
3 = ACGIH A2	8 = TSCA 6	13 = IL RTK	18 = PA RTK
4 = OSHA Z	9 = TSCA 12b	14 = LA RTK	19 = RI RTK

5 = TSCA 4 10 = CA P65 CARC 15 = MI 293

Code key: CARC=Carcinogen; REPRO=Reproductive

* EPA recently added new chemical substances to its TSCA Section 4 test rules. Please contact the supplier to confirm whether the ingredients in this product currently appear on a TSCA 4 or TSCA 12b list.

SECTION 16 OTHER INFORMATION

N/D = Not determined, N/A = Not applicable

THIS SAFETY DATA SHEET CONTAINS THE FOLLOWING REVISIONS:

Revision Changes:
Section 13: Empty Container Warning was modified.
Section 08: Hand Protection was modified.
Section 06: Notification Procedures was modified.
Section 02: Primary Ingredient Name was deleted.
Section 02: CAS Number was deleted.
Section 02: Concentration - Header was deleted.
Section 02: Constituents Table - Header was deleted.
Section 02: Component table was deleted.
Section 08: Exposure Limits Table was deleted.
Section 08: OEL Table - Form Column - Header was deleted.
Section 08: OEL Table - Limit Column - Header was deleted.
Section 08: OEL Table - Notation Column - Header was deleted.
Section 08: OEL Table - Source Column - Header was deleted.
Section 08: Exposure Limit Values - Header was deleted.

The information and recommendations contained herein are, to the best of ExxonMobil's knowledge and belief, accurate and reliable as of the date issued. You can contact ExxonMobil to insure that this document is the most current available from ExxonMobil. The information and recommendations are offered for the user's consideration and examination. It is the user's responsibility to satisfy itself that the product is suitable for the intended use. If buyer repackages this product, it is the user's responsibility to insure proper health, safety and other necessary information is included with and/or on the container. Appropriate warnings and safe-handling procedures should be provided to handlers and users. Alteration of this document is strictly prohibited. Except to the extent required by law, re-publication or retransmission of this document, in whole or in part, is not permitted. The term, "ExxonMobil" is used for convenience, and may include any one or more of ExxonMobil Chemical Company, Exxon Mobil Corporation, or any affiliates in which they directly or indirectly hold any interest.

Internal Use Only
MHC: 0, 0, 0, 0, 0, 0 PPEC: A

DGN: 2009904XUS (553448)

Copyright 2002 Exxon Mobil Corporation, All rights reserved

ExxonMobil

Product Name: MOBILUX EP 2
Revision Date: 21 Jul 2009
Page 1 of 9

MATERIAL SAFETY DATA SHEET

SECTION 1 PRODUCT AND COMPANY IDENTIFICATION

PRODUCT

Product Name: **MOBILUX EP 2**
Product Description: Base Oil and Additives
Product Code: 641274-00, 970717
Intended Use: Grease

COMPANY IDENTIFICATION

Supplier: **EXXON MOBIL CORPORATION**
3225 GALLOWS RD.
FAIRFAX, VA. 22037 USA

24 Hour Health Emergency	609-737-4411
Transportation Emergency Phone	800-424-9300
ExxonMobil Transportation No.	281-834-3296
Product Technical Information	800-662-4525, 800-947-9147
MSDS Internet Address	http://www.exxon.com, http://www.mobil.com

SECTION 2 COMPOSITION / INFORMATION ON INGREDIENTS

Reportable Hazardous Substance(s) or Complex Substance(s)

Name	CAS#	Concentration*
ZINC DITHIOPHOSPHATE	68649-42-3	< 2.5%

* All concentrations are percent by weight unless material is a gas. Gas concentrations are in percent by volume.

SECTION 3 HAZARDS IDENTIFICATION

This material is not considered to be hazardous according to regulatory guidelines (see (M)SDS Section 15).

POTENTIAL HEALTH EFFECTS

Low order of toxicity. Excessive exposure may result in eye, skin, or respiratory irritation. High-pressure injection under skin may cause serious damage.

NFPA Hazard ID:	Health:	0	Flammability:	1	Reactivity:	0
HMIS Hazard ID:	Health:	0	Flammability:	1	Reactivity:	0

NOTE: This material should not be used for any other purpose than the intended use in Section 1 without expert advice. Health studies have shown that chemical exposure may cause potential human health risks which may vary from person to person.

SECTION 4 FIRST AID MEASURES

Inhalation

Under normal conditions of intended use, this material is not expected to be an inhalation hazard.

SKIN CONTACT

Wash contact areas with soap and water. If product is injected into or under the skin, or into any part of the body, regardless of the appearance of the wound or its size, the individual should be evaluated immediately by a physician as a surgical emergency. Even though initial symptoms from high pressure injection may be minimal or absent, early surgical treatment within the first few hours may significantly reduce the ultimate extent of injury.

EYE CONTACT

Flush thoroughly with water. If irritation occurs, get medical assistance.

Ingestion

First aid is normally not required. Seek medical attention if discomfort occurs.

SECTION 5 FIRE FIGHTING MEASURES

EXTINGUISHING MEDIA

Appropriate Extinguishing Media: Use water fog, foam, dry chemical or carbon dioxide (CO2) to extinguish flames.

Inappropriate Extinguishing Media: Straight Streams of Water

FIRE FIGHTING

Fire Fighting Instructions: Evacuate area. Prevent runoff from fire control or dilution from entering streams, sewers, or drinking water supply. Firefighters should use standard protective equipment and in enclosed spaces, self-contained breathing apparatus (SCBA). Use water spray to cool fire exposed surfaces and to protect personnel.

Hazardous Combustion Products: Smoke, Fume, Aldehydes, Sulfur Oxides, Incomplete combustion products, Oxides of carbon

FLAMMABILITY PROPERTIES

Flash Point [Method]: >204C (400F) [EST. FOR OIL, ASTM D-92 (COC)]
Flammable Limits (Approximate volume % in air): LEL: N/D UEL: N/D
Autoignition Temperature: N/D

SECTION 6 ACCIDENTAL RELEASE MEASURES

NOTIFICATION PROCEDURES

In the event of a spill or accidental release, notify relevant authorities in accordance with all applicable regulations. US regulations require reporting releases of this material to the environment which exceed the applicable reportable quantity or oil spills which could reach any waterway including intermittent dry creeks. The National Response Center can be reached at (800)424-8802.

SPILL MANAGEMENT

Land Spill: Allow spilled material to solidify and scrape up with shovels into a suitable container for recycle or disposal. Scrape up spilled material with shovels into a suitable container for recycle or disposal.

Water Spill: Stop leak if you can do it without risk. Confine the spill immediately with booms. Warn other shipping. Skim from surface.

Water spill and land spill recommendations are based on the most likely spill scenario for this material; however, geographic conditions, wind, temperature, (and in the case of a water spill) wave and current direction and speed may greatly influence the appropriate action to be taken. For this reason, local experts should be consulted. Note: Local regulations may prescribe or limit action to be taken.

ENVIRONMENTAL PRECAUTIONS

Prevent entry into waterways, sewers, basements or confined areas.

SECTION 7 HANDLING AND STORAGE

HANDLING

Prevent small spills and leakage to avoid slip hazard.

Static Accumulator: This material is not a static accumulator.

STORAGE

Do not store in open or unlabelled containers.

SECTION 8 EXPOSURE CONTROLS / PERSONAL PROTECTION

EXPOSURE LIMIT VALUES

NOTE: Limits/standards shown for guidance only. Follow applicable regulations.

ENGINEERING CONTROLS

The level of protection and types of controls necessary will vary depending upon potential exposure conditions. Control measures to consider:

No special requirements under ordinary conditions of use and with adequate ventilation.

PERSONAL PROTECTION

Personal protective equipment selections vary based on potential exposure conditions such as applications, handling practices, concentration and ventilation. Information on the selection of protective equipment for use with this material, as provided below, is based upon intended, normal usage.

Respiratory Protection: If engineering controls do not maintain airborne contaminant concentrations at a level which is adequate to protect worker health, an approved respirator may be appropriate. Respirator selection, use, and maintenance must be in accordance with regulatory requirements, if applicable. Types of respirators to be considered for this material include:

No protection is ordinarily required under normal conditions of use and with adequate ventilation.

For high airborne concentrations, use an approved supplied-air respirator, operated in positive pressure mode. Supplied air respirators with an escape bottle may be appropriate when oxygen levels are inadequate, gas/vapor warning properties are poor, or if air purifying filter capacity/rating may be exceeded.

Hand Protection: Any specific glove information provided is based on published literature and glove manufacturer data. Glove suitability and breakthrough time will differ depending on the specific use conditions. Contact the glove manufacturer for specific advice on glove selection and breakthrough times for your use conditions. Inspect and replace worn or damaged gloves. The types of gloves to be considered for this material include:

No protection is ordinarily required under normal conditions of use.

Eye Protection: If contact is likely, safety glasses with side shields are recommended.

Skin and Body Protection: Any specific clothing information provided is based on published literature or manufacturer data. The types of clothing to be considered for this material include:

No skin protection is ordinarily required under normal conditions of use. In accordance with good industrial hygiene practices, precautions should be taken to avoid skin contact.

Specific Hygiene Measures: Always observe good personal hygiene measures, such as washing after handling the material and before eating, drinking, and/or smoking. Routinely wash work clothing and protective equipment to remove contaminants. Discard contaminated clothing and footwear that cannot be cleaned. Practice good housekeeping.

ENVIRONMENTAL CONTROLS

See Sections 6, 7, 12, 13.

SECTION 9 PHYSICAL AND CHEMICAL PROPERTIES

Typical physical and chemical properties are given below. Consult the Supplier in Section 1 for additional data.

GENERAL INFORMATION

Physical State: Solid
Form: semi-fluid
Color: brown
Odor: Characteristic
Odor Threshold: N/D

IMPORTANT HEALTH, SAFETY, AND ENVIRONMENTAL INFORMATION

Relative Density (at 15 C): 0.92
Flash Point [Method]: >204C (400F) [EST. FOR OIL, ASTM D-92 (COC)]
Flammable Limits (Approximate volume % in air): LEL: N/D UEL: N/D
Autoignition Temperature: N/D
Boiling Point / Range: > 316C (600F)
Vapor Density (Air = 1): N/D
Vapor Pressure: < 0.013 kPa (0.1 mm Hg) at 20 C
Evaporation Rate (N-Butyl Acetate = 1): N/D
pH: N/A
Log Pow (n-Octanol/Water Partition Coefficient): > 3.5

Solubility in Water: Negligible
Viscosity: 150 cSt (150 mm²/sec) at 40 C
Oxidizing Properties: See Sections 3, 15, 16.

OTHER INFORMATION
Freezing Point: N/D
Melting Point: N/D
DMSO Extract (mineral oil only), IP-346: < 3 %wt

NOTE: Most physical properties above are for the oil component in the material.

SECTION 10 STABILITY AND REACTIVITY

STABILITY: Material is stable under normal conditions.

CONDITIONS TO AVOID: Excessive heat. High energy sources of ignition.

MATERIALS TO AVOID: Strong oxidizers

HAZARDOUS DECOMPOSITION PRODUCTS: Material does not decompose at ambient temperatures.

HAZARDOUS POLYMERIZATION: Will not occur.

SECTION 11 TOXICOLOGICAL INFORMATION

ACUTE TOXICITY

Route of Exposure	Conclusion / Remarks
Inhalation	
Toxicity: No end point data.	Minimally Toxic. Based on assessment of the components.
Irritation: No end point data.	Negligible hazard at ambient/normal handling temperatures. Based on assessment of the components.
Ingestion	
Toxicity (Rat): LD50 > 5000 mg/kg	Minimally Toxic. Based on test data for structurally similar materials.
Skin	
Toxicity (Rabbit): LD50 > 5000 mg/kg	Minimally Toxic. Based on test data for structurally similar materials.
Irritation (Rabbit): Data available.	Negligible irritation to skin at ambient temperatures. Based on assessment of the components.
Eye	
Irritation (Rabbit): Data available.	May cause mild, short-lasting discomfort to eyes. Based on assessment of the components.

CHRONIC/OTHER EFFECTS
Contains:
Base oil severely refined: Not carcinogenic in animal studies. Representative material passes IP-346, Modified Ames test, and/or other screening tests. Dermal and inhalation studies showed minimal effects; lung non-specific infiltration of immune cells, oil deposition and minimal granuloma formation. Not sensitizing in test animals.

Additional information is available by request.

The following ingredients are cited on the lists below: None.

--REGULATORY LISTS SEARCHED--

1 = NTP CARC	3 = IARC 1	5 = IARC 2B
2 = NTP SUS	4 = IARC 2A	6 = OSHA CARC

SECTION 12 ECOLOGICAL INFORMATION

The information given is based on data available for the material, the components of the material, and similar materials.

ECOTOXICITY

Material -- Not expected to be harmful to aquatic organisms.

MOBILITY

Base oil component -- Low solubility and floats and is expected to migrate from water to the land. Expected to partition to sediment and wastewater solids.

PERSISTENCE AND DEGRADABILITY

Biodegradation:

Base oil component -- Expected to be inherently biodegradable

BIOACCUMULATION POTENTIAL

Base oil component -- Has the potential to bioaccumulate, however metabolism or physical properties may reduce the bioconcentration or limit bioavailability.

SECTION 13 DISPOSAL CONSIDERATIONS

Disposal recommendations based on material as supplied. Disposal must be in accordance with current applicable laws and regulations, and material characteristics at time of disposal.

DISPOSAL RECOMMENDATIONS

Product is suitable for burning in an enclosed controlled burner for fuel value or disposal by supervised incineration at very high temperatures to prevent formation of undesirable combustion products.

REGULATORY DISPOSAL INFORMATION

RCRA Information: The unused product, in our opinion, is not specifically listed by the EPA as a hazardous waste (40 CFR, Part 261D), nor is it formulated to contain materials which are listed as hazardous wastes. It does not exhibit the hazardous characteristics of ignitability, corrositivity or reactivity and is not formulated with contaminants as determined by the Toxicity Characteristic Leaching Procedure (TCLP). However, used product may be regulated.

Empty Container Warning Empty Container Warning (where applicable): Empty containers may contain residue and can be dangerous. Do not attempt to refill or clean containers without proper instructions. Empty drums should be

completely drained and safely stored until appropriately reconditioned or disposed. Empty containers should be taken for recycling, recovery, or disposal through suitably qualified or licensed contractor and in accordance with governmental regulations. DO NOT PRESSURISE, CUT, WELD, BRAZE, SOLDER, DRILL, GRIND, OR EXPOSE SUCH CONTAINERS TO HEAT, FLAME, SPARKS, STATIC ELECTRICITY, OR OTHER SOURCES OF IGNITION. THEY MAY EXPLODE AND CAUSE INJURY OR DEATH.

SECTION 14 TRANSPORT INFORMATION

LAND (DOT) : Not Regulated for Land Transport

LAND (TDG) : Not Regulated for Land Transport

SEA (IMDG) : Not Regulated for Sea Transport according to IMDG-Code

AIR (IATA) : Not Regulated for Air Transport

SECTION 15 REGULATORY INFORMATION

OSHA HAZARD COMMUNICATION STANDARD: When used for its intended purposes, this material is not classified as hazardous in accordance with OSHA 29 CFR 1910.1200.

NATIONAL CHEMICAL INVENTORY LISTING: AICS, IECSC, DSL, EINECS, KECI, PICCS, TSCA

EPCRA: This material contains no extremely hazardous substances.

SARA (311/312) REPORTABLE HAZARD CATEGORIES: None.

SARA (313) TOXIC RELEASE INVENTORY:

Chemical Name	CAS Number	Typical Value
ZINC DITHIOPHOSPHATE	68649-42-3	< 2.5%

The following ingredients are cited on the lists below:

Chemical Name	CAS Number	List Citations
DIPHENYLAMINE	122-39-4	5, 18
ZINC DITHIOPHOSPHATE	68649-42-3	13, 15, 17

--REGULATORY LISTS SEARCHED--

1 = ACGIH ALL	6 = TSCA 5a2	11 = CA P65 REPRO	16 = MN RTK
2 = ACGIH A1	7 = TSCA 5e	12 = CA RTK	17 = NJ RTK
3 = ACGIH A2	8 = TSCA 6	13 = IL RTK	18 = PA RTK
4 = OSHA Z	9 = TSCA 12b	14 = LA RTK	19 = RI RTK
5 = TSCA 4	10 = CA P65 CARC	15 = MI 293	

Code key: CARC=Carcinogen; REPRO=Reproductive

SECTION 16 OTHER INFORMATION

N/D = Not determined, N/A = Not applicable

THIS SAFETY DATA SHEET CONTAINS THE FOLLOWING REVISIONS:

Revision Changes:
Section 04: First Aid Inhalation - Header was modified.
Section 04: First Aid Ingestion - Header was modified.
Section 04: First Aid Inhalation was modified.
Section 06: Notification Procedures - Header was modified.
Section 10 Stability and Reactivity - Header was modified.
Section 13: Disposal Recommendations - Note was modified.
Section 13: Empty Container Warning was modified.
Section 09: Physical State was modified.
Section 09: Color was modified.
Section 09: Boiling Point C(F) was modified.
Section 09: Evaporation Rate - Header was modified.
Section 08: Personal Protection was modified.
Section 08: Hand Protection was modified.
Section 09: Vapor Pressure was modified.
Section 07: Handling and Storage - Handling was modified.
Hazard Identification: Health Hazards was modified.
Section 11: Dermal Lethality Test Data was modified.
Section 11: Oral Lethality Test Data was modified.
Section 11: Inhalation Lethality Test Data was modified.
Section 05: Hazardous Combustion Products was modified.
Section 06: Accidental Release - Spill Management - Land was modified.
Section 06: Accidental Release - Spill Management - Water was modified.
Section 09: Relative Density - Header was modified.
Section 09: Flash Point C(F) was modified.
Section 09: Viscosity was modified.
Section 15: List Citations Table was modified.
Section 15: List Citation Table - Header was modified.
Section 11: Skin Irritation Conclusion was modified.
Section 11: Inhalation Lethality Test Comment was modified.
Section 15: National Chemical Inventory Listing was modified.
Section 16: Code to MHCs was modified.
Section 15: OSHA Hazard Communication Standard was modified.
Hazard Identification: OSHA - May be Hazardous Statement was modified.
Section 06: Notification Procedures was modified.
Section 01: Company Contact Methods Sorted by Priority was modified.
Section 08: Exposure Limit Values - Header was added.
Section 08: Exposure limits/standards was deleted.
Section 15: Special Cases - Header was deleted.
Section 15: Special Cases Table was deleted.
Section 15: Inventory - Header was deleted.
Section 15: Status - Header was deleted.

ExxonMobil

Product Name: MOBILUX EP 2
Revision Date: 21 Jul 2009
Page 9 of 9

The information and recommendations contained herein are, to the best of ExxonMobil's knowledge and belief, accurate and reliable as of the date issued. You can contact ExxonMobil to insure that this document is the most current available from ExxonMobil. The information and recommendations are offered for the user's consideration and examination. It is the user's responsibility to satisfy itself that the product is suitable for the intended use. If buyer repackages this product, it is the user's responsibility to insure proper health, safety and other necessary information is included with and/or on the container. Appropriate warnings and safe-handling procedures should be provided to handlers and users. Alteration of this document is strictly prohibited. Except to the extent required by law, re-publication or retransmission of this document, in whole or in part, is not permitted. The term, "ExxonMobil" is used for convenience, and may include any one or more of ExxonMobil Chemical Company, Exxon Mobil Corporation, or any affiliates in which they directly or indirectly hold any interest.

Internal Use Only
MHC: 0B, 0B, 0, 0, 0, 0 PPEC: A

DGN: 2009877XUS (539035)

Copyright 2002 Exxon Mobil Corporation, All rights reserved

11.5.2 MOBIL MOBILGREASE XHP 462

Mobil

Mobilgrease XHP 460 Series

Product Description

Mobilgrease XHP 460 greases are extended service lithium complex greases intended for a wide variety of heavy duty applications and operating conditions. These greases were designed to outperform conventional products by applying cutting edge, proprietary, lithium complex manufacturing technology. They are formulated to provide excellent high temperature performance with superb adhesion, structural stability and resistance to water contamination. These greases have a high level of chemical stability and offer excellent protection against rust and corrosion. These greases feature high dropping points and maximum recommended operating temperature of 140° C (284°F). Mobilgrease XHP 460 greases are formulated with an ISO VG 460 base oil viscosity and are available in NLGI grades 1 and 2. Mobilgrease XHP 462 Moly is fortified with 3% molybdenum disulfide to provide enhanced EP and AW protection in heavily loaded and high sliding applications.

Mobilgrease XHP 460 greases are designed for a wide range of applications including the industrial, automotive, construction and marine sectors. Their performance features make them ideal choices for operating conditions including high temperature, water contamination, shock loading and extended re-lubrication operations. Mobilgrease XHP 462 Moly is an extreme pressure grease containing 3% molybdenum disulfide that provides protection from wear under pivoting and other heavily loaded sliding conditions that lead to lose of oil film.

Features and Benefits

Mobilgrease XHP 460 greases are leading members of the Mobilgrease brand of products, which have gained a reputation world-wide for innovation and performance excellence. Mobilgrease XHP 460 greases are state-of-the-art products designed by our formulation technologists and backed by our world-wide technical support staff.

A key factor in the excellent adhesion and cohesion properties and mechanical stability of the thickener of Mobilgrease XHP 460 greases is the proprietary manufacturing technology developed at our research facilities and adopted by our modern manufacturing facilities. These products use specially selected additives to provide excellent oxidation stability, rust and corrosion control, resistance to water contamination as well as anti-wear and EP protection. Mobilgrease XHP 460 Series products offer the following features and potential benefits:

Features	Advantages and Potential Benefits
Superb resistance to water washout and spray-off	Helps assure proper lubrication and protection even in the most severe water exposure conditions
Highly adhesive and cohesive structure	Excellent grease tenacity, helps reduce leakage and extend re-lubrication intervals to help reduce maintenance requirements.
Excellent rust and corrosion resistance	Protection of lubricated parts even in hostile aqueous environments.
Very good resistance to thermal, oxidative and structural degradation at high temperature	Helps extend grease life and enhance bearing protection in high temperature applications offers reduced maintenance and replacement cost benefits.
Very good anti-wear and EP performance	Reliable protection of lubricated equipment, even under conditions of high sliding with potential for extended equipment life and reduced unanticipated downtime
Broad multi-purpose application	Provides potential for inventory rationalization and reduced inventory costs

Applications

Mobilgrease XHP 460 greases are used in a wide range of equipment including industrial, automotive, construction and marine applications. The blue color of Mobilgrease XHP 461 and 462 enables easy verification of application. With its high, ISO VG 460 base oil viscosity, these greases are recommended for high load applications at slow-to-moderate speeds, including most bearing applications in the paper, construction, and mining industries, as well as off-highway vehicles.

Specific applications:

- Mobilgrease XHP 461 is recommended by ExxonMobil for use in industrial and marine applications, chassis components and farm equipment. It provides excellent low temperature performance. It is a satisfactory grease for low speed flexible gear-type couplings.
- Mobilgrease XHP 462 Series has been shown to provide excellent lubrication of felt roll bearings, wet end bearings, and press section bearings. It is also an outstanding multi-purpose grease for general mill applications and industrial and marine applications, chassis components and farm equipment.
- Mobilgrease XHP 462 Moly is fortified with 3% molybdenum disulfide and is particularly recommended by ExxonMobil for applications such as bucket pins and fifth wheels, where vibrating or oscillating movement do not build a protective oil film, relying on molybdenum disulfide to prevent excessive wear.

Specifications and Approvals

Mobilgrease XHP 460 Series meets or exceeds the requirements of	461	462	462 Moly
DIN 51825: (2004-06)	KP1N-20L	KP2N-20L	--

Typical Properties

Mobilgrease XHP	461	462	462 Moly
NLGI Grade	1	2	2
Thickener Type	Li-Complex	Li-Complex	Li-Complex
Color, Visual	Dark Blue	Dark Blue	Grey
Molybdenum Disulfide, wt%,	--	--	3%
Penetration, Worked, 25° C, ASTM D 217	325	280	280
Dropping Point, °C, ASTM D 2265	280	280	280
Viscosity of Oil, ASTM D 445			
cSt @ 40° C	460	460	460
4-Ball Wear Test, ASTM D 2266, scar, mm	0.50	0.50	0.50
4-Ball Weld Load, ASTM D 2509, Kg	315	315	315
Timken OK Load, ASTM D 2509, lb	50	50	50
Bomb Oxidation, ASTM D 942, Pressure drop at 100 hrs, kPa (psig)	13.8 (2)	13.8 (2)	--
Corrosion Prevention, ASTM D 1743	Pass	Pass	Pass
Rust Protection (EMCOR), IP 220-mod/ASTM D 6138., Distilled Water	0,0	0,0	0,0
Copper Strip Corrosion, ASTM D 4048	1a	1a	1a

Health and Safety

Based on available information, this product is not expected to produce adverse effects on health when used for the intended application and the recommendations provided in the Material Safety Data Sheet (MSDS) are followed. MSDS's are available upon request through your sales contract office, or via the Internet. This product should not be used for purposes other than its intended use. If disposing of used product, take care to protect the environment.

All trademarks used herein are trademarks or registered trademarks of Exxon Mobil Corporation or one of its subsidiaries unless indicated otherwise.

12-2011

Exxon Mobil Corporation
3225 Gallows Road
Fairfax, VA 22037

1-800-ASK MOBIL (275-6624)

Typical Properties are typical of those obtained with normal production tolerance and do not constitute a specification. Variations that do not affect product performance are to be expected during normal manufacture and at different blending locations. The information contained herein is subject to change without notice. All products may not be available locally. For more information, contact your local ExxonMobil contact or visit www.exxonmobil.com
ExxonMobil is comprised of numerous affiliates and subsidiaries, many with names that include Esso, Mobil, or ExxonMobil. Nothing in this document is intended to override or supersede the corporate separateness of local entities. Responsibility for local action and accountability remains with the local ExxonMobil-affiliate entities.

Copyright © 2001-2013 Exxon Mobil Corporation. All rights reserved..

ExxonMobil

Product Name: MOBILGREASE XHP 462
Revision Date: 19 Aug 2011
Page 1 of 9

MATERIAL SAFETY DATA SHEET

SECTION 1 PRODUCT AND COMPANY IDENTIFICATION

PRODUCT

Product Name: **MOBILGREASE XHP 462**
Product Description: Base Oil and Additives
Product Code: 2015A0202527, 642538-00, 97AB14
Intended Use: Grease

COMPANY IDENTIFICATION

Supplier: EXXON MOBIL CORPORATION
3225 GALLOWS RD.
FAIRFAX, VA. 22037 USA

24 Hour Health Emergency	609-737-4411
Transportation Emergency Phone	800-424-9300
ExxonMobil Transportation No.	281-834-3296
Product Technical Information	800-662-4525, 800-947-9147
MSDS Internet Address	http://www.exxon.com, http://www.mobil.com

SECTION 2 COMPOSITION / INFORMATION ON INGREDIENTS

Reportable Hazardous Substance(s) or Complex Substance(s)

Name	CAS#	Concentration*
ZINC DITHIOPHOSPHATE	68649-42-3	1 - 2.5%

* All concentrations are percent by weight unless material is a gas. Gas concentrations are in percent by volume.

SECTION 3 HAZARDS IDENTIFICATION

This material is not considered to be hazardous according to regulatory guidelines (see (M)SDS Section 15).

POTENTIAL HEALTH EFFECTS

Low order of toxicity. Excessive exposure may result in eye, skin, or respiratory irritation. High-pressure injection under skin may cause serious damage.

NFPA Hazard ID:	Health:	0	Flammability:	1	Reactivity:	0
HMIS Hazard ID:	Health:	0	Flammability:	1	Reactivity:	0

NOTE: This material should not be used for any other purpose than the intended use in Section 1 without expert advice. Health studies have shown that chemical exposure may cause potential human health risks which may vary from person to person.

ExxonMobil

Product Name: MOBILGREASE XHP 462
Revision Date: 19 Aug 2011
Page 2 of 9

SECTION 4 FIRST AID MEASURES

INHALATION

Under normal conditions of intended use, this material is not expected to be an inhalation hazard.

SKIN CONTACT

Wash contact areas with soap and water. If product is injected into or under the skin, or into any part of the body, regardless of the appearance of the wound or its size, the individual should be evaluated immediately by a physician as a surgical emergency. Even though initial symptoms from high pressure injection may be minimal or absent, early surgical treatment within the first few hours may significantly reduce the ultimate extent of injury.

EYE CONTACT

Flush thoroughly with water. If irritation occurs, get medical assistance.

INGESTION

First aid is normally not required. Seek medical attention if discomfort occurs.

SECTION 5 FIRE FIGHTING MEASURES

EXTINGUISHING MEDIA

Appropriate Extinguishing Media: Use water fog, foam, dry chemical or carbon dioxide (CO2) to extinguish flames.

Inappropriate Extinguishing Media: Straight Streams of Water

FIRE FIGHTING

Fire Fighting Instructions: Evacuate area. Prevent runoff from fire control or dilution from entering streams, sewers, or drinking water supply. Firefighters should use standard protective equipment and in enclosed spaces, self-contained breathing apparatus (SCBA). Use water spray to cool fire exposed surfaces and to protect personnel.

Hazardous Combustion Products: Smoke, Fume, Aldehydes, Sulfur oxides, Incomplete combustion products, Oxides of carbon

FLAMMABILITY PROPERTIES

Flash Point [Method]: >294C (561F) [EST. FOR OIL, ASTM D-92 (COC)]
Flammable Limits (Approximate volume % in air): LEL: N/D UEL: N/D
Autoignition Temperature: N/D

SECTION 6 ACCIDENTAL RELEASE MEASURES

NOTIFICATION PROCEDURES

In the event of a spill or accidental release, notify relevant authorities in accordance with all applicable regulations. US regulations require reporting releases of this material to the environment which exceed the applicable reportable quantity or oil spills which could reach any waterway including intermittent dry creeks. The National Response Center can be reached at (800)424-8802.

PROTECTIVE MEASURES

Avoid contact with spilled material. See Section 5 for fire fighting information. See the Hazard Identification Section for Significant Hazards. See Section 4 for First Aid Advice. See Section 8 for advice on the minimum requirements for personal protective equipment. Additional protective measures may be necessary, depending on the specific circumstances and/or the expert judgment of the emergency responders. For emergency responders: Respiratory protection: respiratory protection will be necessary only in special cases, e.g., formation of mists. Half-face or full-face respirator with filter(s) for dust/organic vapor or Self Contained Breathing Apparatus (SCBA) can be used depending on the size of spill and potential level of exposure. If the exposure cannot be completely characterized or an oxygen deficient atmosphere is possible or anticipated, SCBA is recommended. Work gloves that are resistant to hydrocarbons are recommended. Gloves made of polyvinyl acetate (PVA) are not water-resistant and are not suitable for emergency use. Chemical goggles are recommended if splashes or contact with eyes is possible. Small spills: normal antistatic work clothes are usually adequate. Large spills: full body suit of chemical resistant, antistatic material is recommended.

SPILL MANAGEMENT

Land Spill: Scrape up spilled material with shovels into a suitable container for recycle or disposal.

Water Spill: Stop leak if you can do it without risk. Confine the spill immediately with booms. Warn other shipping. Skim from surface.

Water spill and land spill recommendations are based on the most likely spill scenario for this material; however, geographic conditions, wind, temperature, (and in the case of a water spill) wave and current direction and speed may greatly influence the appropriate action to be taken. For this reason, local experts should be consulted. Note: Local regulations may prescribe or limit action to be taken.

ENVIRONMENTAL PRECAUTIONS

Prevent entry into waterways, sewers, basements or confined areas.

SECTION 7 HANDLING AND STORAGE

HANDLING

Prevent small spills and leakage to avoid slip hazard.

Static Accumulator: This material is not a static accumulator.

STORAGE

Do not store in open or unlabelled containers.

SECTION 8 EXPOSURE CONTROLS / PERSONAL PROTECTION

EXPOSURE LIMIT VALUES

NOTE: Limits/standards shown for guidance only. Follow applicable regulations.

ENGINEERING CONTROLS

The level of protection and types of controls necessary will vary depending upon potential exposure conditions. Control measures to consider:
No special requirements under ordinary conditions of use and with adequate ventilation.

PERSONAL PROTECTION

Personal protective equipment selections vary based on potential exposure conditions such as applications, handling practices, concentration and ventilation. Information on the selection of protective equipment for use with this material, as provided below, is based upon intended, normal usage.

Respiratory Protection: If engineering controls do not maintain airborne contaminant concentrations at a level which is adequate to protect worker health, an approved respirator may be appropriate. Respirator selection, use, and maintenance must be in accordance with regulatory requirements, if applicable. Types of respirators to be considered for this material include:
No protection is ordinarily required under normal conditions of use and with adequate ventilation.

For high airborne concentrations, use an approved supplied-air respirator, operated in positive pressure mode. Supplied air respirators with an escape bottle may be appropriate when oxygen levels are inadequate, gas/vapor warning properties are poor, or if air purifying filter capacity/rating may be exceeded.

Hand Protection: Any specific glove information provided is based on published literature and glove manufacturer data. Glove suitability and breakthrough time will differ depending on the specific use conditions. Contact the glove manufacturer for specific advice on glove selection and breakthrough times for your use conditions. Inspect and replace worn or damaged gloves. The types of gloves to be considered for this material include:
No protection is ordinarily required under normal conditions of use.

Eye Protection: If contact is likely, safety glasses with side shields are recommended.

Skin and Body Protection: Any specific clothing information provided is based on published literature or manufacturer data. The types of clothing to be considered for this material include:
No skin protection is ordinarily required under normal conditions of use. In accordance with good industrial hygiene practices, precautions should be taken to avoid skin contact.

Specific Hygiene Measures: Always observe good personal hygiene measures, such as washing after handling the material and before eating, drinking, and/or smoking. Routinely wash work clothing and protective equipment to remove contaminants. Discard contaminated clothing and footwear that cannot be cleaned. Practice good housekeeping.

ENVIRONMENTAL CONTROLS
See Sections 6, 7, 12, 13.

SECTION 9 PHYSICAL AND CHEMICAL PROPERTIES

Note: Physical and chemical properties are provided for safety, health and environmental considerations only and may not fully represent product specifications. Contact the Supplier for additional information.

GENERAL INFORMATION
Physical State: Solid
Form: Semi-fluid
Color: Blue

Odor: Characteristic
Odor Threshold: N/D

IMPORTANT HEALTH, SAFETY, AND ENVIRONMENTAL INFORMATION

Relative Density (at 15 C): 0.9
Flash Point [Method]: >294C (561F) [EST. FOR OIL, ASTM D-92 (COC)]
Flammable Limits (Approximate volume % in air): LEL: N/D UEL: N/D
Autoignition Temperature: N/D
Boiling Point / Range: > 316C (600F) [Estimated]
Vapor Density (Air = 1): N/D
Vapor Pressure: < 0.013 kPa (0.1 mm Hg) at 20 C [Estimated]
Evaporation Rate (n-butyl acetate = 1): N/D
pH: N/A
Log Pow (n-Octanol/Water Partition Coefficient): > 3.5 [Estimated]
Solubility in Water: Negligible
Viscosity: 460 cSt (460 mm2/sec) at 40 C
Oxidizing Properties: See Hazards Identification Section.

OTHER INFORMATION

Freezing Point: N/D
Melting Point: N/D
DMSO Extract (mineral oil only), IP-346: < 3 %wt
Decomposition Temperature: N/D

NOTE: Most physical properties above are for the oil component in the material.

SECTION 10 STABILITY AND REACTIVITY

STABILITY: Material is stable under normal conditions.

CONDITIONS TO AVOID: Excessive heat. High energy sources of ignition.

MATERIALS TO AVOID: Strong oxidizers

HAZARDOUS DECOMPOSITION PRODUCTS: Material does not decompose at ambient temperatures.

HAZARDOUS POLYMERIZATION: Will not occur.

SECTION 11 TOXICOLOGICAL INFORMATION

ACUTE TOXICITY

Route of Exposure	Conclusion / Remarks
Inhalation	
Toxicity: No end point data.	Minimally Toxic. Based on assessment of the components.
Irritation: No end point data.	Negligible hazard at ambient/normal handling temperatures. Based on assessment of the components.
Ingestion	
Toxicity (Rat): LD50 > 5000 mg/kg	Minimally Toxic. Based on test data for structurally similar materials.

Skin	
Toxicity (Rabbit): LD50 > 5000 mg/kg	Minimally Toxic. Based on test data for structurally similar materials.
Irritation (Rabbit): Data available.	Negligible irritation to skin at ambient temperatures. Based on assessment of the components.
Eye	
Irritation (Rabbit): Data available.	May cause mild, short-lasting discomfort to eyes. Based on assessment of the components.

CHRONIC/OTHER EFFECTS

Contains:

Base oil severely refined: Not carcinogenic in animal studies. Representative material passes IP-346, Modified Ames test, and/or other screening tests. Dermal and inhalation studies showed minimal effects; lung non-specific infiltration of immune cells, oil deposition and minimal granuloma formation. Not sensitizing in test animals.

Additional information is available by request.

The following ingredients are cited on the lists below: None.

--REGULATORY LISTS SEARCHED--

1 = NTP CARC	3 = IARC 1	5 = IARC 2B
2 = NTP SUS	4 = IARC 2A	6 = OSHA CARC

SECTION 12 ECOLOGICAL INFORMATION

The information given is based on data available for the material, the components of the material, and similar materials.

ECOTOXICITY

Material -- Not expected to be harmful to aquatic organisms.

MOBILITY

Base oil component -- Low solubility and floats and is expected to migrate from water to the land. Expected to partition to sediment and wastewater solids.

PERSISTENCE AND DEGRADABILITY

Biodegradation:

Base oil component -- Expected to be inherently biodegradable

BIOACCUMULATION POTENTIAL

Base oil component -- Has the potential to bioaccumulate, however metabolism or physical properties may reduce the bioconcentration or limit bioavailability.

SECTION 13 DISPOSAL CONSIDERATIONS

Disposal recommendations based on material as supplied. Disposal must be in accordance with current applicable laws and regulations, and material characteristics at time of disposal.

DISPOSAL RECOMMENDATIONS

Product is suitable for burning in an enclosed controlled burner for fuel value or disposal by supervised incineration at very high temperatures to prevent formation of undesirable combustion products.

REGULATORY DISPOSAL INFORMATION

RCRA Information: The unused product, in our opinion, is not specifically listed by the EPA as a hazardous waste (40 CFR, Part 261D), nor is it formulated to contain materials which are listed as hazardous wastes. It does not exhibit the hazardous characteristics of ignitability, corrosivity or reactivity and is not formulated with contaminants as determined by the Toxicity Characteristic Leaching Procedure (TCLP). However, used product may be regulated.

Empty Container Warning Empty Container Warning (where applicable): Empty containers may contain residue and can be dangerous. Do not attempt to refill or clean containers without proper instructions. Empty drums should be completely drained and safely stored until appropriately reconditioned or disposed. Empty containers should be taken for recycling, recovery, or disposal through suitably qualified or licensed contractor and in accordance with governmental regulations. DO NOT PRESSURISE, CUT, WELD, BRAZE, SOLDER, DRILL, GRIND, OR EXPOSE SUCH CONTAINERS TO HEAT, FLAME, SPARKS, STATIC ELECTRICITY, OR OTHER SOURCES OF IGNITION. THEY MAY EXPLODE AND CAUSE INJURY OR DEATH.

SECTION 14 TRANSPORT INFORMATION

LAND (DOT): Not Regulated for Land Transport

LAND (TDG): Not Regulated for Land Transport

SEA (IMDG): Not Regulated for Sea Transport according to IMDG-Code

AIR (IATA): Not Regulated for Air Transport

SECTION 15 REGULATORY INFORMATION

OSHA HAZARD COMMUNICATION STANDARD: When used for its intended purposes, this material is not classified as hazardous in accordance with OSHA 29 CFR 1910.1200.

Complies with the following national/regional chemical inventory requirements:: PICCS, KECI, TSCA, AICS, EINECS, IECSC

Special Cases:

Inventory	Status
ENCS	Restrictions Apply
NDSL	Restrictions Apply

EPCRA: This material contains no extremely hazardous substances.

SARA (311/312) REPORTABLE HAZARD CATEGORIES: None.

SARA (313) TOXIC RELEASE INVENTORY:

Chemical Name	CAS Number	Typical Value
ZINC DITHIOPHOSPHATE	68649-42-3	1 - 2.5%

The following ingredients are cited on the lists below:

Chemical Name	CAS Number	List Citations
NAPHTHENIC ACIDS, ZINC SALTS	12001-85-3	15
ZINC DITHIOPHOSPHATE	68649-42-3	13, 15, 17
ZINC NEODECANOATE	27253-29-8	15

--REGULATORY LISTS SEARCHED--

1 = ACGIH ALL	6 = TSCA 5a2	11 = CA P65 REPRO	16 = MN RTK
2 = ACGIH A1	7 = TSCA 5e	12 = CA RTK	17 = NJ RTK
3 = ACGIH A2	8 = TSCA 6	13 = IL RTK	18 = PA RTK
4 = OSHA Z	9 = TSCA 12b	14 = LA RTK	19 = RI RTK
5 = TSCA 4	10 = CA P65 CARC	15 = MI 293	

Code key: CARC=Carcinogen; REPRO=Reproductive

SECTION 16 OTHER INFORMATION

N/D = Not determined, N/A = Not applicable

THIS SAFETY DATA SHEET CONTAINS THE FOLLOWING REVISIONS:

Revision Changes:
Section 06: Notification Procedures - Header was modified.
Section 01: Product Code was modified.
Section 10 Stability and Reactivity - Header was modified.
Section 13: Disposal Recommendations - Note was modified.
Section 09: Phys/Chem Properties Note was modified.
Section 09: Boiling Point C(F) was modified.
Section 09: n-Octanol/Water Partition Coefficient was modified.
Section 08: Personal Protection was modified.
Section 07: Handling and Storage - Handling was modified.
Section 11: Dermal Lethality Test Data was modified.
Section 11: Oral Lethality Test Data was modified.
Section 11: Inhalation Lethality Test Data was modified.
Section 05: Hazardous Combustion Products was modified.
Section 06: Accidental Release - Spill Management - Water was modified.
Section 09: Relative Density - Header was modified.
Section 09: Flash Point C(F) was modified.

Section 09: Viscosity was modified.
Section 14: Sea (IMDG) - Header was modified.
Section 14: Air (IATA) - Header was modified.
Section 14: LAND (TDG) - Header was modified.
Section 14: LAND (DOT) - Header was modified.
Composition: Component table was modified.
Section 15: List Citations Table was modified.
Section 15: List Citation Table - Header was modified.
Section 14: LAND (DOT) - Default was modified.
Section 14: LAND (TDG) Default was modified.
Section 14: Sea (IMDG) - Default was modified.
Section 14: Air (IATA) - Default was modified.
Section 15: National Chemical Inventory Listing - Header was modified.
Section 15: SARA (313) TOXIC RELEASE INVENTORY - Table was modified.
Section 15: National Chemical Inventory Listing was modified.
Section 16: Code to MHCs was modified.
Section 08: Exposure limits/standards was modified.
Section 15: OSHA Hazard Communication Standard was modified.
Section 15: Special Cases Table was modified.
Hazard Identification: OSHA - May be Hazardous Statement was modified.
Section 06: Notification Procedures was modified.
Section 09: Oxidizing Properties was modified.
Section 01: Company Contact Methods Sorted by Priority was modified.
Section 06: Protective Measures was added.
Section 06: Accidental Release - Protective Measures - Header was added.
Section 09: Decomposition Temperature was added.
Section 09: Decomposition Temp - Header was added.
Section 09: Vapor Pressure was added.

The information and recommendations contained herein are, to the best of ExxonMobil's knowledge and belief, accurate and reliable as of the date issued. You can contact ExxonMobil to insure that this document is the most current available from ExxonMobil. The information and recommendations are offered for the user's consideration and examination. It is the user's responsibility to satisfy itself that the product is suitable for the intended use. If buyer repackages this product, it is the user's responsibility to insure proper health, safety and other necessary information is included with and/or on the container. Appropriate warnings and safe-handling procedures should be provided to handlers and users. Alteration of this document is strictly prohibited. Except to the extent required by law, re-publication or retransmission of this document, in whole or in part, is not permitted. The term, "ExxonMobil" is used for convenience, and may include any one or more of ExxonMobil Chemical Company, Exxon Mobil Corporation, or any affiliates in which they directly or indirectly hold any interest.

Internal Use Only
MHC: 0B, 0B, 0, 0, 0, 0 PPEC: A

DGN: 7049658XUS (1009426)

Copyright 2002 Exxon Mobil Corporation, All rights reserved

11.5.3 MOBIL MOBILTAC 325 NC

Mobil

Mobiltac 375 NC, 325 NC and 275 NC

Gear Oils

Product Description

Mobiltac 375 NC, 325 NC and 275 NC extra high performance non-leaded, diluent-type, heavy-bodied open gear lubricants designed for a wide variety of open gear and mining applications. They contain a non-chlorinated, volatile solvent that ensures fluidity during application, even at low temperatures. Once applied, the diluent evaporates and the lubricants take on a flexible, adhesive, high-strength consistency that is maintained throughout their service life. Mobiltac 375 NC, 325 NC and 275NC adhere strongly to gear teeth and other machine elements to resist excessive throw-off, thereby providing a wear-resistant, viscous, continuous film that lubricates well under boundary conditions. Mobiltac 275 NC also contains solid phase EP/anti-wear additive for added equipment protection

Mobiltac 375 NC, 325 NC and Mobiltac 275NC will not harden, chip, or flake in cold weather, are self-healing, and do not form a hard-packed buildup in gear-tooth roots. Dripping and throw-off are minimal, and the lubricants are easily cleaned up with a solvent-soaked rag. The lubricants provide resistance to rain, snow, and process water washing. Their flash points minimise the risk of fire. These new generation gear and mining lubricants are applied easily by hand or by automatic dispensers. Mobiltac NC technology has rapidly become a firm favourite among many open gear users and mine operators around the world

Features and Benefits

The Mobiltac NC Series of products are the most recent technology advance for the Mobiltac brand of products that have been used with great success in open gear and other mining applications for several decades. These new technology products provide significantly improved environmental and performance benefits over older diluent-type technologies. They offer the following features and potential benefits:

Features	Advantages and Potential Benefits
Excellent protection of gear teeth and other machine elements under boundary lubrication conditions	Less equipment wear and breakdown; lower replacement, downtime and maintenance costs
Excellent low-temperature pumpability	Easy start-up at low ambient and avoids cost of preheating
Excellent resistance to water washing	Maintains superb protection in wet environments; less unanticipated downtime
Minimal throw-off and dripping	Less product waste and new product cost
No chipping or flaking at low temperatures	Maintains protective lubricating film at low temperatures
Easy to clean up with rags and conventional solvents or cleaning fluids	Improved safety and reduced maintenance costs

Applications

Mobiltac 375 NC, 325 NC and Mobiltac 275NC are designed for use in a wide variety of open gear and mining applications:

- Mobiltac 375 NC, containing a high-viscosity base oil, is recommended for the lubrication of highly loaded open gears, including those that operate at high temperature, for example, ring gears on cement kilns and large gears on ore-processing mills
- Mobiltac 325 NC is recommended for the same applications as Mobiltac 375 NC. It contains more diluent and has a lower viscosity for ease of application at cooler temperatures
- Mobiltac 275 NC is designed for service as a lubricant for mine and quarry shovels, draglines, and related equipment; also open gears, racks and pinions, swing gears, booms and sticks

- Minimum operating temperature for Mobiltac 325 NC is -18 C, 375 NC is -1 C and 275 NC is -9 C

Typical Properties

Mobiltac NC	Mobiltac375 NC	Mobiltac325 NC	Mobiltac275 NC
Appearance	Viscous, semi-fluid, black	Viscous, semi-fluid, black	Viscous, semi-fluid, black
Viscosity, ASTM D 445			
cSt @ 40° C, with diluent	5000	1500	-
cSt @ 100° C, without diluent	1260	1000	-
Flash Point, °C, ASTM D 92	135	110	150
Specific Gravity, °C kg/l, ASTM D 1298	0.96	0.95	0.99
Maximum Temperature Use, °C	121	93	-

Health and Safety

Based on available information, this product is not expected to produce adverse effects on health when used for the intended application and the recommendations provided in the Material Safety Data Sheet (MSDS) are followed. MSDS's are available upon request through your sales contract office, or via the Internet. This product should not be used for purposes other than its intended use. If disposing of used product, take care to protect the environment.

The Mobil logotype, the Pegasus design are trademarks of Exxon Mobil Corporation, or one of its subsidiaries.

Exxon Mobil Corporation
3225 Gallows Road
Fairfax, VA 22037

1-800-ASK MOBIL (275-6624)

Typical Properties are typical of those obtained with normal production tolerance and do not constitute a specification. Variations that do not affect product performance are to be expected during normal manufacture and at different blending locations. The information contained herein is subject to change without notice. All products may not be available locally. For more information, contact your local ExxonMobil contact or visit www.exxonmobil.com
ExxonMobil is comprised of numerous affiliates and subsidiaries, many with names that include Esso, Mobil, or ExxonMobil. Nothing in this document is intended to override or supersede the corporate separateness of local entities. Responsibility for local action and accountability remains with the local ExxonMobil-affiliate entities.

© 2001-2011 Exxon Mobil Corporation. All rights reserved..

ExxonMobil

Product Name: MOBILTAC 325 NC
Revision Date: 27 Feb 2013
Page 1 of 12

MATERIAL SAFETY DATA SHEET

SECTION 1 PRODUCT AND COMPANY IDENTIFICATION

PRODUCT

Product Name: **MOBILTAC 325 NC**
Product Description: Hydrocarbons and Additives
Product Code: 201560404010, 611160-00, 976359
Intended Use: Gear oil

COMPANY IDENTIFICATION

Supplier: **EXXON MOBIL CORPORATION**
3225 GALLOWS RD.
FAIRFAX, VA. 22037 USA

24 Hour Health Emergency	609-737-4411
Transportation Emergency Phone	800-424-9300
ExxonMobil Transportation No.	281-834-3296
Product Technical Information	800-662-4525, 800-947-9147
MSDS Internet Address	http://www.exxon.com, http://www.mobil.com

SECTION 2 COMPOSITION / INFORMATION ON INGREDIENTS

Reportable Hazardous Substance(s) or Complex Substance(s)

Name	CAS#	Concentration*
ASPHALT (PETROLEUM)	8052-42-4	15 - 50%
HYDROTREATED LIGHT DISTILLATE	64742-47-8	8 - 14%
NAPHTHENIC ACIDS, ZINC SALTS	12001-85-3	3 - 6%
STRAIGHT-RUN MIDDLE DISTILLATES	64741-44-2	5 - 10%

* All concentrations are percent by weight unless material is a gas. Gas concentrations are in percent by volume.

SECTION 3 HAZARDS IDENTIFICATION

This material is considered to be hazardous according to regulatory guidelines (see (M)SDS Section 15).

POTENTIAL HEALTH EFFECTS

Irritating to eyes. Irritating to skin. Excessive exposure may result in eye, skin, or respiratory irritation. Under conditions of poor personal hygiene and prolonged repeated contact, some polycyclic aromatic compounds (PACs) have been suspected as a cause of skin cancer in humans. High-pressure injection under skin may cause serious damage.

Target Organs: Skin | Eye |

ENVIRONMENTAL HAZARDS

Harmful to aquatic organisms, may cause long-term adverse effects in the aquatic environment.

NFPA Hazard ID:	Health:	1	Flammability:	1	Reactivity:	0
HMIS Hazard ID:	Health:	1	Flammability:	1	Reactivity:	0

NOTE: This material should not be used for any other purpose than the intended use in Section 1 without expert advice. Health studies have shown that chemical exposure may cause potential human health risks which may vary from person to person.

SECTION 4 FIRST AID MEASURES

INHALATION

Remove from further exposure. For those providing assistance, avoid exposure to yourself or others. Use adequate respiratory protection. If respiratory irritation, dizziness, nausea, or unconsciousness occurs, seek immediate medical assistance. If breathing has stopped, assist ventilation with a mechanical device or use mouth-to-mouth resuscitation.

SKIN CONTACT

Wash contact areas with soap and water. Remove contaminated clothing. Launder contaminated clothing before reuse. If product is injected into or under the skin, or into any part of the body, regardless of the appearance of the wound or its size, the individual should be evaluated immediately by a physician as a surgical emergency. Even though initial symptoms from high pressure injection may be minimal or absent, early surgical treatment within the first few hours may significantly reduce the ultimate extent of injury.

EYE CONTACT

Flush thoroughly with water for at least 15 minutes. Get medical assistance.

INGESTION

First aid is normally not required. Seek medical attention if discomfort occurs.

SECTION 5 FIRE FIGHTING MEASURES

EXTINGUISHING MEDIA

Appropriate Extinguishing Media: Use water fog, foam, dry chemical or carbon dioxide (CO2) to extinguish flames.

Inappropriate Extinguishing Media: Straight Streams of Water

FIRE FIGHTING

Fire Fighting Instructions: Evacuate area. Prevent runoff from fire control or dilution from entering streams, sewers, or drinking water supply. Firefighters should use standard protective equipment and in enclosed spaces, self-contained breathing apparatus (SCBA). Use water spray to cool fire exposed surfaces and to protect personnel.

Unusual Fire Hazards: Hazardous material. Firefighters should consider protective equipment indicated in Section 8.

Hazardous Combustion Products: Hydrogen sulfide, Smoke, Fume, Aldehydes, Sulfur oxides, Incomplete combustion products, Oxides of carbon

FLAMMABILITY PROPERTIES

Flash Point [Method]: >97°C (207°F) [ASTM D-92]
Flammable Limits (Approximate volume % in air): LEL: N/D UEL: N/D
Autoignition Temperature: N/D

SECTION 6 ACCIDENTAL RELEASE MEASURES

NOTIFICATION PROCEDURES

In the event of a spill or accidental release, notify relevant authorities in accordance with all applicable regulations. US regulations require reporting releases of this material to the environment which exceed the applicable reportable quantity or oil spills which could reach any waterway including intermittent dry creeks. The National Response Center can be reached at (800)424-8802.

PROTECTIVE MEASURES

Avoid contact with spilled material. Warn or evacuate occupants in surrounding and downwind areas if required due to toxicity or flammability of the material. See Section 5 for fire fighting information. See the Hazard Identification Section for Significant Hazards. See Section 4 for First Aid Advice. See Section 8 for advice on the minimum requirements for personal protective equipment. Additional protective measures may be necessary, depending on the specific circumstances and/or the expert judgment of the emergency responders.

SPILL MANAGEMENT

Land Spill: Stop leak if you can do it without risk. Recover by pumping or with suitable absorbent.

Water Spill: Stop leak if you can do it without risk. Confine the spill immediately with booms. Warn other shipping. Remove from the surface by skimming or with suitable absorbents. Seek the advice of a specialist before using dispersants.

Water spill and land spill recommendations are based on the most likely spill scenario for this material; however, geographic conditions, wind, temperature, (and in the case of a water spill) wave and current direction and speed may greatly influence the appropriate action to be taken. For this reason, local experts should be consulted. Note: Local regulations may prescribe or limit action to be taken.

ENVIRONMENTAL PRECAUTIONS

Large Spills: Dike far ahead of liquid spill for later recovery and disposal. Prevent entry into waterways, sewers, basements or confined areas.

SECTION 7 HANDLING AND STORAGE

HANDLING

Avoid contact with skin. Avoid contact with eyes. Hydrogen sulfide (H2S) may be given off when this material is heated. Do not depend on sense of smell for warning. Prevent small spills and leakage to avoid slip hazard. Material can accumulate static charges which may cause an electrical spark (ignition source). When the material is handled in bulk, an electrical spark could ignite any flammable vapors from liquids or residues that may be present (e.g., during switch-loading operations). Use proper bonding and/or ground procedures. However, bonding and grounds may not eliminate the hazard from static accumulation. Consult local applicable standards for guidance. Additional references include American Petroleum Institute 2003 (Protection Against Ignitions Arising out of Static, Lightning and Stray Currents) or National Fire Protection

Agency 77 (Recommended Practice on Static Electricity) or CENELEC CLC/TR 50404 (Electrostatics - Code of practice for the avoidance of hazards due to static electricity).

Static Accumulator: This material is a static accumulator.

STORAGE

The container choice, for example storage vessel, may effect static accumulation and dissipation. Do not store in open or unlabelled containers.

SECTION 8 EXPOSURE CONTROLS / PERSONAL PROTECTION

EXPOSURE LIMIT VALUES

Exposure limits/standards (Note: Exposure limits are not additive)

Source	Form	Limit / Standard			NOTE	Source
ASPHALT (PETROLEUM) [benzene solubles]	Inhalable fraction.	TWA	0.5 mg/m3		N/A	ACGIH
HYDROTREATED LIGHT DISTILLATE [total hydrocarbon vapor]	Non-Aerosol	TWA	200 mg/m3		Skin	ACGIH
STRAIGHT-RUN MIDDLE DISTILLATES	Stable Aerosol.	TWA	5 mg/m3		N/A	ExxonMobil
STRAIGHT-RUN MIDDLE DISTILLATES	Vapor.	TWA	200 mg/m3		N/A	ExxonMobil
Hydrogen sulfide		Ceiling	20 ppm		N/A	OSHA Z2
Hydrogen sulfide		Maximum concentration	50 ppm		N/A	OSHA Z2
Hydrogen sulfide		STEL	14 mg/m3	10 ppm	N/A	ExxonMobil
Hydrogen sulfide		TWA	7 mg/m3	5 ppm	N/A	ExxonMobil
Hydrogen sulfide		STEL	5 ppm		N/A	ACGIH
Hydrogen sulfide		TWA	1 ppm		N/A	ACGIH

Exposure limits/standards for materials that can be formed when handling this product: When mists/aerosols can occur the following are recommended: 5 mg/m³ - ACGIH TLV (inhalable fraction), 5 mg/m³ - OSHA PEL.

NOTE: Limits/standards shown for guidance only. Follow applicable regulations.

ENGINEERING CONTROLS

The level of protection and types of controls necessary will vary depending upon potential exposure conditions. Control measures to consider:

No special requirements under ordinary conditions of use and with adequate ventilation.

PERSONAL PROTECTION

Personal protective equipment selections vary based on potential exposure conditions such as applications, handling practices, concentration and ventilation. Information on the selection of protective equipment for use with this material, as provided below, is based upon intended, normal usage.

Respiratory Protection: If engineering controls do not maintain airborne contaminant concentrations at a

level which is adequate to protect worker health, an approved respirator may be appropriate. Respirator selection, use, and maintenance must be in accordance with regulatory requirements, if applicable. Types of respirators to be considered for this material include:
No special requirements under ordinary conditions of use and with adequate ventilation.

For high airborne concentrations, use an approved supplied-air respirator, operated in positive pressure mode. Supplied air respirators with an escape bottle may be appropriate when oxygen levels are inadequate, gas/vapor warning properties are poor, or if air purifying filter capacity/rating may be exceeded.

Hand Protection: Any specific glove information provided is based on published literature and glove manufacturer data. Glove suitability and breakthrough time will differ depending on the specific use conditions. Contact the glove manufacturer for specific advice on glove selection and breakthrough times for your use conditions. Inspect and replace worn or damaged gloves. The types of gloves to be considered for this material include:
Chemical resistant gloves are recommended.

Eye Protection: Chemical goggles and face shield are recommended.

Skin and Body Protection: Any specific clothing information provided is based on published literature or manufacturer data. The types of clothing to be considered for this material include:
Chemical/oil resistant clothing is recommended.

Specific Hygiene Measures: Always observe good personal hygiene measures, such as washing after handling the material and before eating, drinking, and/or smoking. Routinely wash work clothing and protective equipment to remove contaminants. Discard contaminated clothing and footwear that cannot be cleaned. Practice good housekeeping.

ENVIRONMENTAL CONTROLS

Comply with applicable environmental regulations limiting discharge to air, water and soil. Protect the environment by applying appropriate control measures to prevent or limit emissions.

SECTION 9 PHYSICAL AND CHEMICAL PROPERTIES

Note: Physical and chemical properties are provided for safety, health and environmental considerations only and may not fully represent product specifications. Contact the Supplier for additional information.

GENERAL INFORMATION

Physical State: Liquid
Form: Semi-fluid
Color: Black
Odor: Characteristic
Odor Threshold: N/D

IMPORTANT HEALTH, SAFETY, AND ENVIRONMENTAL INFORMATION

Relative Density (at 15 °C): 0.96 [ASTM D1298]
Flash Point [Method]: >97°C (207°F) [ASTM D-92]
Flammable Limits (Approximate volume % in air): LEL: N/D UEL: N/D
Autoignition Temperature: N/D
Boiling Point / Range: > 174°C (345°F) [Estimated]
Vapor Density (Air = 1): > 2 at 101 kPa [Estimated]

Vapor Pressure: [N/D at 20 °C]
Evaporation Rate (n-butyl acetate = 1): N/D
pH: N/A
Log Pow (n-Octanol/Water Partition Coefficient): > 3.5 [Estimated]
Solubility in Water: Negligible
Viscosity: 1200 cSt (1200 mm2/sec) at 40 °C
Oxidizing Properties: See Hazards Identification Section.

OTHER INFORMATION
Freezing Point: N/D
Melting Point: N/A
Decomposition Temperature: N/D

SECTION 10 STABILITY AND REACTIVITY

STABILITY: Material is stable under normal conditions.

CONDITIONS TO AVOID: Excessive heat. High energy sources of ignition.

MATERIALS TO AVOID: Strong oxidizers

HAZARDOUS DECOMPOSITION PRODUCTS: Material does not decompose at ambient temperatures.

HAZARDOUS POLYMERIZATION: Will not occur.

SECTION 11 TOXICOLOGICAL INFORMATION

ACUTE TOXICITY

Route of Exposure	Conclusion / Remarks
Inhalation	
Toxicity: No end point data for material.	Minimally Toxic. Based on assessment of the components.
Irritation: No end point data for material.	Negligible hazard at ambient/normal handling temperatures. Based on assessment of the components.
Ingestion	
Toxicity: No end point data for material.	Minimally Toxic. Based on assessment of the components.
Skin	
Toxicity: No end point data for material.	Minimally Toxic. Based on assessment of the components.
Irritation: No end point data for material.	Irritating to the skin. Based on assessment of the components.
Eye	
Irritation: No end point data for material.	Irritating and will injure eye tissue. Based on assessment of the components.

CHRONIC/OTHER EFFECTS
For the product itself:
Repeated and/or prolonged exposure may cause irritation to the skin, eyes, or respiratory tract.
Contains:
Asphalt (bitumen): May contain low levels of polycyclic aromatic compounds (PACs), some of which are suspected of causing cancer under conditions of poor industrial hygiene and prolonged repeated contact.

These PACs may also be inhaled. Inhalation studies at high concentrations of fumes resulted in bronchitis, pneumonitis, fibrosis and cell damage. Avoid contact with the asphalt emissions.

The following ingredients are cited on the lists below: None.

--REGULATORY LISTS SEARCHED--

1 = NTP CARC	3 = IARC 1	5 = IARC 2B
2 = NTP SUS	4 = IARC 2A	6 = OSHA CARC

SECTION 12 ECOLOGICAL INFORMATION

The information given is based on data available for the material, the components of the material, and similar materials.

ECOTOXICITY

Material -- Expected to be harmful to aquatic organisms. May cause long-term adverse effects in the aquatic environment.

MOBILITY

More volatile component -- Highly volatile, will partition rapidly to air. Not expected to partition to sediment and wastewater solids.

High molecular wt. component -- Low solubility and floats and is expected to migrate from water to the land. Expected to partition to sediment and wastewater solids.

PERSISTENCE AND DEGRADABILITY

Biodegradation:

Low molecular wt. component -- Expected to be inherently biodegradable

High molecular wt. component -- Expected to be persistent.

Atmospheric Oxidation:

More volatile component -- Expected to degrade rapidly in air

BIOACCUMULATION POTENTIAL

Majority of components -- Has the potential to bioaccumulate, however metabolism or physical properties may reduce the bioconcentration or limit bioavailability.

SECTION 13 DISPOSAL CONSIDERATIONS

Disposal recommendations based on material as supplied. Disposal must be in accordance with current applicable laws and regulations, and material characteristics at time of disposal.

DISPOSAL RECOMMENDATIONS

Product is suitable for burning in an enclosed controlled burner for fuel value or disposal by supervised incineration at very high temperatures to prevent formation of undesirable combustion products. Protect the environment. Dispose of used oil at designated sites. Minimize skin contact. Do not mix used oils with solvents, brake fluids or coolants.

REGULATORY DISPOSAL INFORMATION

RCRA Information: The unused product, in our opinion, is not specifically listed by the EPA as a hazardous waste (40 CFR, Part 261D), nor is it formulated to contain materials which are listed as hazardous wastes. It does not exhibit the hazardous characteristics of ignitability, corrosivity or reactivity and is not formulated with contaminants as determined by the Toxicity Characteristic Leaching Procedure (TCLP). However, used product may be regulated.

Empty Container Warning Empty Container Warning (where applicable): Empty containers may contain residue and can be dangerous. Do not attempt to refill or clean containers without proper instructions. Empty drums should be completely drained and safely stored until appropriately reconditioned or disposed. Empty containers should be taken for recycling, recovery, or disposal through suitably qualified or licensed contractor and in accordance with governmental regulations. DO NOT PRESSURISE, CUT, WELD, BRAZE, SOLDER, DRILL, GRIND, OR EXPOSE SUCH CONTAINERS TO HEAT, FLAME, SPARKS, STATIC ELECTRICITY, OR OTHER SOURCES OF IGNITION. THEY MAY EXPLODE AND CAUSE INJURY OR DEATH.

SECTION 14 TRANSPORT INFORMATION

LAND (DOT): Not Regulated for Land Transport

LAND (TDG): Not Regulated for Land Transport

SEA (IMDG): Not Regulated for Sea Transport according to IMDG-Code

AIR (IATA): Not Regulated for Air Transport

SECTION 15 REGULATORY INFORMATION

OSHA HAZARD COMMUNICATION STANDARD: When used for its intended purpose, this material is classified as hazardous in accordance with OSHA 29CFR 1910.1200.

Complies with the following national/regional chemical inventory requirements:: AICS, DSL, ENCS, IECSC, KECI, PICCS, TSCA

EPCRA SECTION 302: This material contains no extremely hazardous substances.

SARA (311/312) REPORTABLE HAZARD CATEGORIES: Immediate Health.

SARA (313) TOXIC RELEASE INVENTORY:

Chemical Name	CAS Number	Typical Value

NAPHTHENIC ACIDS, ZINC SALTS	12001-85-3	3 - 6%

The following ingredients are cited on the lists below:

Chemical Name	CAS Number	List Citations
ASPHALT (PETROLEUM)	8052-42-4	1, 13, 16, 17, 18, 19
HYDROTREATED LIGHT DISTILLATE	64742-47-8	1, 17, 18, 19
NAPHTHENIC ACIDS, ZINC SALTS	12001-85-3	13, 15, 17

--REGULATORY LISTS SEARCHED--

1 = ACGIH ALL	6 = TSCA 5a2	11 = CA P65 REPRO	16 = MN RTK
2 = ACGIH A1	7 = TSCA 5e	12 = CA RTK	17 = NJ RTK
3 = ACGIH A2	8 = TSCA 6	13 = IL RTK	18 = PA RTK
4 = OSHA Z	9 = TSCA 12b	14 = LA RTK	19 = RI RTK
5 = TSCA 4	10 = CA P65 CARC	15 = MI 293	

Code key: CARC=Carcinogen; REPRO=Reproductive

SECTION 16 OTHER INFORMATION

N/D = Not determined, N/A = Not applicable

THIS SAFETY DATA SHEET CONTAINS THE FOLLOWING REVISIONS:

Revision Changes:
Section 04: First Aid Skin was modified.
Section 04: First Aid Eye was modified.
Section 06: Notification Procedures - Header was modified.
Section 11: Eye Irritation Conclusion was modified.
Section 11: Skin Irritation Conclusion was modified.
Section 13: Disposal Considerations - Disposal Recommendations was modified.
Section 10 Stability and Reactivity - Header was modified.
Section 13: Disposal Recommendations - Note was modified.
Section 13: Empty Container Warning was modified.
Section 09: Phys/Chem Properties Note was modified.
Section 09: Boiling Point C(F) was modified.
Section 09: Flash Point C(F) was modified.
Section 09: n-Octanol/Water Partition Coefficient was modified.
Section 08: Comply with applicable regulations phrase was modified.
Section 08: Personal Protection was modified.
Section 08: Hand Protection was modified.
Section 09: Vapor Pressure was modified.
Section 07: Handling and Storage - Handling was modified.
Section 07: Handling and Storage - Storage Phrases was modified.
Hazard Identification: Health Hazards was modified.
Section 11: Dermal Lethality Test Data was modified.
Section 11: Dermal Lethality Test Comment was modified.
Section 11: Oral Lethality Test Data was modified.

ExxonMobil

Product Name: MOBILTAC 325 NC
Revision Date: 27 Feb 2013
Page 10 of 12

Section 11: Inhalation Lethality Test Data was modified.
Section 11: Dermal Irritation Test Data was modified.
Section 11: Eye Irritation Test Data was modified.
Section 11: Oral Lethality Test Comment was modified.
Section 11: Inhalation Irritation Test Data was modified.
Section 05: Hazardous Combustion Products was modified.
Section 06: Accidental Release - Spill Management - Water was modified.
Section 09: Relative Density - Header was modified.
Section 09: Flash Point C(F) was modified.
Section 09: Viscosity was modified.
Section 08: Hand Protection was modified.
Section 08: Eye Protection was modified.
Section 08: Skin and Body Protection was modified.
Section 14: Sea (IMDG) - Header was modified.
Section 14: Air (IATA) - Header was modified.
Section 14: LAND (TDG) - Header was modified.
Section 14: LAND (DOT) - Header was modified.
Composition: Component table was modified.
Section 15: List Citations Table was modified.
Section 15: List Citation Table - Header was modified.
Section 14: LAND (DOT) - Default was modified.
Section 14: LAND (TDG) Default was modified.
Section 14: Sea (IMDG) - Default was modified.
Section 14: Air (IATA) - Default was modified.
Section 15: SARA (311/312) REPORTABLE HAZARD CATEGORIES was modified.
Section 15: National Chemical Inventory Listing - Header was modified.
Section 15: SARA (313) TOXIC RELEASE INVENTORY - Table was modified.
Section 15: National Chemical Inventory Listing was modified.
Section 16: Code to MHCs was modified.
Section 09: Relative Density was modified.
Section 15: Community RTK - Header was modified.
Section 11: Additional Health Information was modified.
Section 16: Code to PPEs was modified.
Section 08: Exposure limits/standards was modified.
Section 15: OSHA Hazard Communication Standard was modified.
Section 06: Notification Procedures was modified.
Section 08: Exposure Limits Table was modified.
Section 11: Chronic Tox - Component was modified.
Section 09: Oxidizing Properties was modified.
Section 08: OEL Table - Notation Column - Header was modified.
Section 08: Exposure Limit Values - Header was modified.
Section 01: Company Contact Methods Sorted by Priority was modified.
Section 05: Fire Fighting Measures - Unusual Fire Hazards was added.
Section 05: Fire Fighting Measures - Unusual Fire Hazards - Header was added.
Section 06: Protective Measures was added.
Section 06: Accidental Release - Protective Measures - Header was added.
Section 09: Form - Header was added.
Section 09: Physical State was added.
Hazard Identification: Health Hazards was added.
Hazard Identification: Emergency Overview Target Organs was added.
Hazard Identification: Emergency Overview Target Organ - Header was added.
Section 16: Precautionary Label Text - Header was added.

Section 16: Signal Word was added.
Section 16: Health Hazards was added.
Section 16: Health Hazards - Header was added.
Section 16: Precautions was added.
Section 16: Precautions - Header was added.
Section 16: First Aid - Header was added.
Section 16: First Aid Eye - Header was added.
Section 16: First Aid Eye was added.
Section 16: First Aid Skin was added.
Section 16: First Aid Skin - Header was added.
Section 16: Fire Fighting Media - Header was added.
Section 16: Fire Fighting Media - Header was added.
Section 16: Spill - Header was added.
Section 16: Water Spill - Header was added.
Section 16: Water Spill was added.
Section 16: Land Spill was added.
Section 16: Land Spill - Header was added.
Section 16: Labeling Use was added.
Section 16: Labeling Use - Header was added.
Section 16: Target Organs was added.
Section 16: Target Organ - Header was added.
Section 16: NA Contains was added.
Section 16: NA Contains - Header was added.
Section 09: Decomposition Temperature was added.
Section 09: Decomposition Temp - Header was added.
Hazard Identification: OSHA - Hazards Statement was added.
Hazard Identification: OSHA - May be Hazardous Statement was deleted.
Hazard Identification: OSHA - Not Hazardous Statement was deleted.
Section 15: TSCA Class 2 Statement was deleted.

PRECAUTIONARY LABEL TEXT:
Contains: HYDROTREATED LIGHT DISTILLATE; STRAIGHT-RUN MIDDLE DISTILLATES
WARNING!
HEALTH HAZARDS
Irritating to eyes. Irritating to skin.
Target Organs: Skin | Eye |

PRECAUTIONS
Avoid contact with skin. Avoid contact with eyes.

FIRST AID
Eye: Flush thoroughly with water for at least 15 minutes. Get medical assistance.

Skin: Wash contact areas with soap and water. Remove contaminated clothing. Launder contaminated clothing before reuse. If product is injected into or under the skin, or into any part of the body, regardless of the appearance of the wound or its size, the individual should be evaluated immediately by a physician as a surgical emergency. Even though initial symptoms from high pressure injection may be minimal or absent, early surgical treatment within the first few hours may significantly reduce the ultimate extent of injury.

FIRE FIGHTING MEDIA
Use water fog, foam, dry chemical or carbon dioxide (CO2) to extinguish flames.

SPILL/LEAK
Land Spill: Stop leak if you can do it without risk. Small Spills: Absorb with earth, sand or other non-combustible material and transfer to containers for later disposal. Recover by pumping or with suitable absorbent.

Water Spill: Stop leak if you can do it without risk. Confine the spill immediately with booms. Warn other shipping. Remove from the surface by skimming or with suitable absorbents. Report spills as required to appropriate authorities. Seek the advice of a specialist before using dispersants.
Use
Not intended or suitable for use in or around a household or dwelling.

The information and recommendations contained herein are, to the best of ExxonMobil's knowledge and belief, accurate and reliable as of the date issued. You can contact ExxonMobil to insure that this document is the most current available from ExxonMobil. The information and recommendations are offered for the user's consideration and examination. It is the user's responsibility to satisfy itself that the product is suitable for the intended use. If buyer repackages this product, it is the user's responsibility to insure proper health, safety and other necessary information is included with and/or on the container. Appropriate warnings and safe-handling procedures should be provided to handlers and users. Alteration of this document is strictly prohibited. Except to the extent required by law, re-publication or retransmission of this document, in whole or in part, is not permitted. The term, "ExxonMobil" is used for convenience, and may include any one or more of ExxonMobil Chemical Company, Exxon Mobil Corporation, or any affiliates in which they directly or indirectly hold any interest.

Internal Use Only
MHC: 0, 0, 0, 2, 4, 0 PPEC: D

DGN: 2009222XUS (1012316)

Copyright 2002 Exxon Mobil Corporation, All rights reserved

11.5.4 MOBIL UNIREX N2

Mobil

UNIREX N

High Temperature Bearing Grease

Product Description

UNIREX N greases are premium-quality, lithium-complex products suitable for high-temperature service in rolling-element bearings. These versatile greases can be used in a wide range of industrial applications and are particularly recommended for electric-motor lubrication.

Unirex N 2 in an NLGI No. 2 grade and is preferred in most cases for application by hand packing or by grease gun. UNIREX N 3 is an NLGI No. 3 grade often used for special applications such as sealed-for-life electric motor bearings, vertically mounted bearings, and higher-speed applications. UNIREX N greases are not intended to be used under extreme pressure conditions where extra anti-welding properties are required.

UNIREX N 2 meets the requirements of Lubricating Grease DIN 51825 - K2N - 30L and ISO L-XBDHA 2.

UNIREX N 3 meets the requirements of Lubricating Grease DIN 51825 - K3N - 20 and ISO L-XBDHA 3.

Features and Benefits

Unirex N greases exhibit excellent high and low temperature performance, resistance to water and corrosion, and long service life in a range of bearing applications.

Features	Advantages and Potential Benefits
Excellent high-temperature performance	Lithium-complex thickener resists softening / running out of bearings at temperatures up to 190°C
Outstanding grease life	Laboratory bearing rig tests show outstanding continuous lubrication performance at bearing temperatures of up to 140°C
Very good low-temperature characteristics	Start-up power requirements are low at temperatures down to at least -20°C and may be suitable at temperatures down to -30°C in those applications where torque is not limiting. Meets DIN 51825 low temperature torque requirements at -20°C.
Excellent mechanical stability	Exhibits excellent resistance to softening due to mechanical working
Excellent water and corrosion resistance	Resists water washout and protects bearings against corrosion
Excellent performance in high-speed applications	Channelling characteristics provide excellent performance in high-speed deep-groove ball bearings. Unirex N3 is recommended where DmN (mean bearing diameter X rpm) exceeds 360,000.

Applications

Because of their outstanding oxidation stability and resistance to softening at high temperatures, UNIREX N greases may be used in many applications such as oven-conveyor bearings, dryer-roller bearings, rotary steam joints, kiln-car bearings, induced-draft fan bearings, and equipment adjacent to high radiant heat such as ovens, soaking pits, etc.

UNIREX N 2 is an NLGI No. 2 grade and is preferred in most cases for application by hand-packing or by grease gun. UNIREX N 2 is recommended for the lubrication of electric motors. It is suitable for NEMA (National Electric Manufacturer's Association) Insulation Class A, B, and F motors.

UNIREX N 3 is an NLGI No. 3 grade and is used for special applications such as sealed-for-life bearings, vertically-mounted bearings, and higher-speed bearings.

Most of the uses for UNIREX N involve manual methods of application. Although UNIREX N 2 is suitable for use in automatic centralized systems, equipment served by these systems would normally not require the long-life properties of UNIREX N, since one of the functions of automatic systems is to replenish the lubricant at relatively short time intervals. UNIREX N 3 should not be used in such systems.

Regardless of the level of oxidation stability of a grease, an increase in temperature will affect the rate of oxidation and thermal deterioration. Consequently, more frequent relubrication is required at higher temperatures. For UNIREX N greases, it is recommended that relubrication intervals not exceed one week of continuous service at 175°C. As temperatures approach 190°C, relubrication intervals should be daily or every shift. Relubrication intervals will, of course, vary widely with the type of service and should be based primarily on the recommendations of the motor manufacturer.

Specifications and Approvals

Unirex N Series meets or exceeds the requirements of:	2	3
DIN 51825: (2004-06)	K2N-30L	K3N-20

Typical Properties

UNIREX N	2	3
Thickener Type	Lithium-complex	Lithium-complex
NLGI Grade	2	3
Color, Visual	Green	Green
Texture	Smooth, Buttery	Smooth, Buttery
Dropping Point, ASTM D 2265, °C	230	230
Base Oil Viscosity, ASTM D 445, cSt @ 40°C	115	115
Base Oil Viscosity Index, ASTM D 2270	95	95
Penetration, worked 60 stokes, ASTM D 217, mm/10	280	235
Penetration change after 100,000 strokes, ASTM D 217, mm/10	25	30
Oil Separation, ASTM D 6184, mass % @100°C / 30 hrs	1.5	0.6
EMCOR Corrosion , ASTM D 6138 (Distilled Water), rating	0,1	0,1
Water Washout @ 79°C, ASTM D 1264, mass %	3.7	3.5
Grease life, DIN 51821 (FE-9), L50 hrs @ 140°C	283	448

Health and Safety

Based on available information, this product is not expected to produce adverse effects on health when used for the intended application and the recommendations provided in the Material Safety Data Sheet (MSDS) are followed. MSDS's are available upon request through your sales contract office, or via the Internet. This product should not be used for purposes other than its intended use. If disposing of used product, take care to protect the environment.

Mobil, the Mobil logotype and the Pegasus design are registered trademarks of Exxon Mobil Corporation, or one of its subsidiaries.

12-2010

Exxon Mobil Corporation

MATERIAL SAFETY DATA SHEET

SECTION 1 PRODUCT AND COMPANY IDENTIFICATION

PRODUCT

Product Name: **UNIREX N 2**
Product Description: Base Oil and Additives
Product Code: 2015A0207220, 644351-00, 97N713
Intended Use: Grease

COMPANY IDENTIFICATION

Supplier: **EXXON MOBIL CORPORATION**
3225 GALLOWS RD.
FAIRFAX, VA. 22037 USA

24 Hour Health Emergency	609-737-4411
Transportation Emergency Phone	800-424-9300
ExxonMobil Transportation No.	281-834-3296
Product Technical Information	800-662-4525, 800-947-9147
MSDS Internet Address	http://www.exxon.com, http://www.mobil.com

SECTION 2 COMPOSITION / INFORMATION ON INGREDIENTS

No Reportable Hazardous Substance(s) or Complex Substance(s).

SECTION 3 HAZARDS IDENTIFICATION

This material is not considered to be hazardous according to regulatory guidelines (see (M)SDS Section 15).

POTENTIAL HEALTH EFFECTS

Low order of toxicity. Excessive exposure may result in eye, skin, or respiratory irritation. High-pressure injection under skin may cause serious damage.

NFPA Hazard ID:	Health:	0	Flammability:	1	Reactivity:	0
HMIS Hazard ID:	Health:	0	Flammability:	1	Reactivity:	0

NOTE: This material should not be used for any other purpose than the intended use in Section 1 without expert advice. Health studies have shown that chemical exposure may cause potential human health risks which may vary from person to person.

SECTION 4 FIRST AID MEASURES

Inhalation

Under normal conditions of intended use, this material is not expected to be an inhalation hazard.

SKIN CONTACT

Wash contact areas with soap and water. If product is injected into or under the skin, or into any part of the body, regardless of the appearance of the wound or its size, the individual should be evaluated immediately by a physician as a surgical emergency. Even though initial symptoms from high pressure injection may be minimal or absent, early surgical treatment within the first few hours may significantly reduce the ultimate extent of injury.

EYE CONTACT

Flush thoroughly with water. If irritation occurs, get medical assistance.

Ingestion

First aid is normally not required. Seek medical attention if discomfort occurs.

SECTION 5 FIRE FIGHTING MEASURES

EXTINGUISHING MEDIA

Appropriate Extinguishing Media: Use water fog, foam, dry chemical or carbon dioxide (CO2) to extinguish flames.

Inappropriate Extinguishing Media: Straight Streams of Water

FIRE FIGHTING

Fire Fighting Instructions: Evacuate area. Prevent runoff from fire control or dilution from entering streams, sewers, or drinking water supply. Firefighters should use standard protective equipment and in enclosed spaces, self-contained breathing apparatus (SCBA). Use water spray to cool fire exposed surfaces and to protect personnel.

Hazardous Combustion Products: Smoke, Fume, Aldehydes, Sulfur Oxides, Incomplete combustion products, Oxides of carbon

FLAMMABILITY PROPERTIES

Flash Point [Method]: >200C (392F) [EST. FOR OIL, ASTM D-92 (COC)]
Flammable Limits (Approximate volume % in air): LEL: N/D UEL: N/D
Autoignition Temperature: N/D

SECTION 6 ACCIDENTAL RELEASE MEASURES

NOTIFICATION PROCEDURES

In the event of a spill or accidental release, notify relevant authorities in accordance with all applicable regulations. US regulations require reporting releases of this material to the environment which exceed the applicable reportable quantity or oil spills which could reach any waterway including intermittent dry creeks. The National Response Center can be reached at (800)424-8802.

SPILL MANAGEMENT

Land Spill: Scrape up spilled material with shovels into a suitable container for recycle or disposal.

Water Spill: Stop leak if you can do it without risk. Confine the spill immediately with booms. Warn other

shipping. Skim from surface.

Water spill and land spill recommendations are based on the most likely spill scenario for this material; however, geographic conditions, wind, temperature, (and in the case of a water spill) wave and current direction and speed may greatly influence the appropriate action to be taken. For this reason, local experts should be consulted. Note: Local regulations may prescribe or limit action to be taken.

ENVIRONMENTAL PRECAUTIONS

Prevent entry into waterways, sewers, basements or confined areas.

SECTION 7 HANDLING AND STORAGE

HANDLING

Prevent small spills and leakage to avoid slip hazard.

Static Accumulator: This material is not a static accumulator.

STORAGE

Do not store in open or unlabelled containers.

SECTION 8 EXPOSURE CONTROLS / PERSONAL PROTECTION

NOTE: Limits/standards shown for guidance only. Follow applicable regulations.

ENGINEERING CONTROLS

The level of protection and types of controls necessary will vary depending upon potential exposure conditions. Control measures to consider:

No special requirements under ordinary conditions of use and with adequate ventilation.

PERSONAL PROTECTION

Personal protective equipment selections vary based on potential exposure conditions such as applications, handling practices, concentration and ventilation. Information on the selection of protective equipment for use with this material, as provided below, is based upon intended, normal usage.

Respiratory Protection: If engineering controls do not maintain airborne contaminant concentrations at a level which is adequate to protect worker health, an approved respirator may be appropriate. Respirator selection, use, and maintenance must be in accordance with regulatory requirements, if applicable. Types of respirators to be considered for this material include:

No protection is ordinarily required under normal conditions of use and with adequate ventilation.

For high airborne concentrations, use an approved supplied-air respirator, operated in positive pressure mode. Supplied air respirators with an escape bottle may be appropriate when oxygen levels are inadequate, gas/vapor warning properties are poor, or if air purifying filter capacity/rating may be exceeded.

Hand Protection: Any specific glove information provided is based on published literature and glove manufacturer data. Glove suitability and breakthrough time will differ depending on the specific use conditions. Contact the glove manufacturer for specific advice on glove selection and breakthrough times for your use conditions. Inspect and replace worn or damaged gloves. The types of gloves to be considered for this material include:

No protection is ordinarily required under normal conditions of use.

Eye Protection: If contact is likely, safety glasses with side shields are recommended.

Skin and Body Protection: Any specific clothing information provided is based on published literature or manufacturer data. The types of clothing to be considered for this material include:

No skin protection is ordinarily required under normal conditions of use. In accordance with good industrial hygiene practices, precautions should be taken to avoid skin contact.

Specific Hygiene Measures: Always observe good personal hygiene measures, such as washing after handling the material and before eating, drinking, and/or smoking. Routinely wash work clothing and protective equipment to remove contaminants. Discard contaminated clothing and footwear that cannot be cleaned. Practice good housekeeping.

ENVIRONMENTAL CONTROLS

See Sections 6, 7, 12, 13.

SECTION 9 PHYSICAL AND CHEMICAL PROPERTIES

Typical physical and chemical properties are given below. Consult the Supplier in Section 1 for additional data.

GENERAL INFORMATION

Physical State: Solid
Form: semi-fluid
Color: green
Odor: Characteristic
Odor Threshold: N/D

IMPORTANT HEALTH, SAFETY, AND ENVIRONMENTAL INFORMATION

Relative Density (at 15 C): 0.93
Flash Point [Method]: >200C (392F) [EST. FOR OIL, ASTM D-92 (COC)]
Flammable Limits (Approximate volume % in air): LEL: N/D UEL: N/D
Autoignition Temperature: N/D
Boiling Point / Range: N/D
Vapor Density (Air = 1): N/D
Vapor Pressure: < 0.013 kPa (0.1 mm Hg) at 20 C
Evaporation Rate (N-Butyl Acetate = 1): N/D
pH: N/A
Log Pow (n-Octanol/Water Partition Coefficient): N/D
Solubility in Water: Negligible
Viscosity: 113 cSt (113 mm²/sec) at 40 C [Base oil]
Oxidizing Properties: See Sections 3, 15, 16.

OTHER INFORMATION

Freezing Point: N/D
Melting Point: >219°C (426°F)
DMSO Extract (mineral oil only), IP-346: < 3 %wt

NOTE: Most physical properties above are for the oil component in the material.

SECTION 10 STABILITY AND REACTIVITY

STABILITY: Material is stable under normal conditions.

CONDITIONS TO AVOID: Excessive heat. High energy sources of ignition.

MATERIALS TO AVOID: Strong oxidizers

HAZARDOUS DECOMPOSITION PRODUCTS: Material does not decompose at ambient temperatures.

HAZARDOUS POLYMERIZATION: Will not occur.

SECTION 11 TOXICOLOGICAL INFORMATION

ACUTE TOXICITY

Route of Exposure	Conclusion / Remarks
Inhalation	
Toxicity: No end point data.	Minimally Toxic. Based on assessment of the components.
Irritation: No end point data.	Negligible hazard at ambient/normal handling temperatures. Based on assessment of the components.
Ingestion	
Toxicity (Rat): LD50 > 5000 mg/kg	Minimally Toxic. Based on test data for structurally similar materials.
Skin	
Toxicity (Rabbit): LD50 > 5000 mg/kg	Minimally Toxic. Based on test data for structurally similar materials.
Irritation (Rabbit): Data available.	Negligible irritation to skin at ambient temperatures. Based on assessment of the components.
Eye	
Irritation (Rabbit): Data available.	May cause mild, short-lasting discomfort to eyes. Based on assessment of the components.

CHRONIC/OTHER EFFECTS

For the product itself:

Component concentrations in this formulation would not be expected to cause skin sensitization, based on tests of the components or similar formulations.

Contains:

Base oil severely refined: Not carcinogenic in animal studies. Representative material passes IP-346, Modified Ames test, and/or other screening tests. Dermal and inhalation studies showed minimal effects; lung non-specific infiltration of immune cells, oil deposition and minimal granuloma formation. Not sensitizing in test animals.

Additional information is available by request.

The following ingredients are cited on the lists below: None.

--REGULATORY LISTS SEARCHED--

1 = NTP CARC	3 = IARC 1	5 = IARC 2B
2 = NTP SUS	4 = IARC 2A	6 = OSHA CARC

SECTION 12 ECOLOGICAL INFORMATION

The information given is based on data available for the material, the components of the material, and similar materials.

ECOTOXICITY

Material -- Not expected to be harmful to aquatic organisms.

MOBILITY

Base oil component -- Low solubility and floats and is expected to migrate from water to the land. Expected to partition to sediment and wastewater solids.

PERSISTENCE AND DEGRADABILITY

Biodegradation:

Base oil component -- Expected to be inherently biodegradable

BIOACCUMULATION POTENTIAL

Base oil component -- Has the potential to bioaccumulate, however metabolism or physical properties may reduce the bioconcentration or limit bioavailability.

SECTION 13 DISPOSAL CONSIDERATIONS

Disposal recommendations based on material as supplied. Disposal must be in accordance with current applicable laws and regulations, and material characteristics at time of disposal.

DISPOSAL RECOMMENDATIONS

Product is suitable for burning in an enclosed controlled burner for fuel value or disposal by supervised incineration at very high temperatures to prevent formation of undesirable combustion products.

REGULATORY DISPOSAL INFORMATION

RCRA Information: Disposal of unused product may be subject to RCRA regulations (40 CFR 261). Disposal of the used product may also be regulated due to ignitability, corrosivity, reactivity or toxicity as determined by the Toxicity Characteristic Leaching Procedure (TCLP). Potential RCRA characteristics:
TCLP (BARIUM)

Empty Container Warning Empty Container Warning (where applicable): Empty containers may contain residue and can be dangerous. Do not attempt to refill or clean containers without proper instructions. Empty drums should be completely drained and safely stored until appropriately reconditioned or disposed. Empty containers should be taken for recycling, recovery, or disposal through suitably qualified or licensed contractor and in accordance with governmental regulations. DO NOT PRESSURISE, CUT, WELD, BRAZE, SOLDER, DRILL, GRIND, OR EXPOSE

SUCH CONTAINERS TO HEAT, FLAME, SPARKS, STATIC ELECTRICITY, OR OTHER SOURCES OF IGNITION. THEY MAY EXPLODE AND CAUSE INJURY OR DEATH.

SECTION 14 TRANSPORT INFORMATION

LAND (DOT) : Not Regulated for Land Transport

LAND (TDG) : Not Regulated for Land Transport

SEA (IMDG) : Not Regulated for Sea Transport according to IMDG-Code

AIR (IATA) : Not Regulated for Air Transport

SECTION 15 REGULATORY INFORMATION

OSHA HAZARD COMMUNICATION STANDARD: When used for its intended purposes, this material is not classified as hazardous in accordance with OSHA 29 CFR 1910.1200.

NATIONAL CHEMICAL INVENTORY LISTING: IECSC, DSL, EINECS, TSCA
Special Cases:

Inventory	Status
KECI	Restrictions Apply

EPCRA: This material contains no extremely hazardous substances.

SARA (311/312) REPORTABLE HAZARD CATEGORIES: None.

SARA (313) TOXIC RELEASE INVENTORY: This material contains no chemicals subject to the supplier notification requirements of the SARA 313 Toxic Release Program.

The following ingredients are cited on the lists below:

Chemical Name	CAS Number	List Citations
DIPHENYLAMINE	122-39-4	5

--REGULATORY LISTS SEARCHED--

1 = ACGIH ALL	6 = TSCA 5a2	11 = CA P65 REPRO	16 = MN RTK
2 = ACGIH A1	7 = TSCA 5e	12 = CA RTK	17 = NJ RTK
3 = ACGIH A2	8 = TSCA 6	13 = IL RTK	18 = PA RTK
4 = OSHA Z	9 = TSCA 12b	14 = LA RTK	19 = RI RTK
5 = TSCA 4	10 = CA P65 CARC	15 = MI 293	

Code key: CARC=Carcinogen; REPRO=Reproductive

SECTION 16 OTHER INFORMATION

N/D = Not determined, N/A = Not applicable

THIS SAFETY DATA SHEET CONTAINS THE FOLLOWING REVISIONS:

Revision Changes:
Section 04: First Aid Inhalation - Header was modified.
Section 04: First Aid Ingestion - Header was modified.
Section 10 Stability and Reactivity - Header was modified.
Section 13: Disposal Recommendations - Note was modified.
Section 09: Physical State was modified.
Section 09: Color was modified.
Section 09: Evaporation Rate - Header was modified.
Section 08: Personal Protection was modified.
Section 07: Handling and Storage - Handling was modified.
Section 05: Hazardous Combustion Products was modified.
Section 09: Relative Density - Header was modified.
Section 09: Viscosity was modified.
Section 15: List Citation Table - Header was modified.
Section 15: National Chemical Inventory Listing was modified.
Section 15: OSHA Hazard Communication Standard was modified.
Hazard Identification: OSHA - May be Hazardous Statement was modified.
Section 08: Exposure limits/standards was deleted.

The information and recommendations contained herein are, to the best of ExxonMobil's knowledge and belief, accurate and reliable as of the date issued. You can contact ExxonMobil to insure that this document is the most current available from ExxonMobil. The information and recommendations are offered for the user's consideration and examination. It is the user's responsibility to satisfy itself that the product is suitable for the intended use. If buyer repackages this product, it is the user's responsibility to insure proper health, safety and other necessary information is included with and/or on the container. Appropriate warnings and safe-handling procedures should be provided to handlers and users. Alteration of this document is strictly prohibited. Except to the extent required by law, re-publication or retransmission of this document, in whole or in part, is not permitted. The term, "ExxonMobil" is used for convenience, and may include any one or more of ExxonMobil Chemical Company, Exxon Mobil Corporation, or any affiliates in which they directly or indirectly hold any interest.

Internal Use Only
MHC: 0B, 0B, 0, 0, 0, 0 PPEC: A

DGN: 2031341XUS (553418)

Copyright 2002 Exxon Mobil Corporation, All rights reserved

11.5.5 MOBIL BEACON 325

Mobil

BEACON 325

Grease

Product Description

Mobil BEACON 325 is a high performance grease specifically formulated for the lubrication of precision equipment operating at moderate and low temperatures. It is made with a synthetic base oil of extremely low viscosity and low volatility plus a lithium soap. BEACON 325 is characterised by good mechanical stability, a high degree of resistance to water and extremely high oxidation stability. As its base oil viscosity is low and the viscosity index of the fluid is high, the grease has excellent low temperature properties including low starting and running torque at very cold temperatures and good pumpability.

BEACON 325 provides excellent service in a wide variety of small bearings and small, lightly loaded gears that operate over a wide temperature range. Its long lubrication life and excellent oxidation stability well suit it for use as a bearing lubricant in sealed-for-life units in automotive, aircraft and industrial applications. The recommended application temperature range for continuous operation for BEACON 325 is -50° C to120° C.

Features and Benefits

BEACON 325 is a member of the Mobil brand of lubricating products recognized for their high quality and reliability, as well as performance capabilities. As with other Mobil greases, this product is manufactured to the strictest quality standards. A key feature of BEACON 325 is its use of a synthetic fluid to provide optimum performance for low temperature precision applications. BEACON 325 offers the following quality features:

- Special synthetic base oil provides excellent low-torque and low temperature properties
- Excellent oxidation stability for extended grease life needed for filled for life applications
- Very good water resistance ensures proper lubrication even in the presence of incidental water contamination
- Low volatility base oil permits operation at moderate to high temperature without fluid evaporation

Applications

Application notes: BEACON 325 is formulated with an organic ester synthetic oil. This synthetic oil may cause a softening or swelling of certain plastics, elastomers, paints, or varnishes. How serious the softening or swelling tendency may be depends also on the temperature and the period of contact. Contact your local Mobil representative for further information on materials compatibility.

BEACON 325 provides excellent service in a wide variety of small bearings and lightly loaded gears that operate over a wide temperature range, including such applications as:

- Naval, marine, and aircraft instruments and control mechanisms
- Geared limit switches in Limitorque valve actuators
- Commercial and military electronic equipment
- Sealed for life motors, generators, and similar equipment in automotive, aviation and industrial applications

Specifications and Approvals

Beacon 325 meets or exceeds the requirements of:	
DIN 51825: (2004-06)	KE2G-60

Typical Properties

Beacon 325	
NLGI Grade	2
Thickener Type	Lithium
Color, Visual	Tan
Penetration, Worked, 25° C, ASTM D 217	285
Dropping Point, °C, ASTM D 2265	180
Viscosity of Oil, ASTM D 445 cSt @ 40° C	12
Apparent Viscosity, ASTM D 1092	
@ 20sec-1 and -40° C, Poise	7,000
@ 50sec-1 and -40° C, Poise	3,500
Oil Separation, FTMS 791B321.3, 30 hrs @ 100° C, mass %	4
Corrosion Prevention, ASTM D 1743	Pass

Health and Safety

Based on available information, this product is not expected to produce adverse effects on health when used for the intended application and the recommendations provided in the Material Safety Data Sheet (MSDS) are followed. MSDS's are available upon request through your sales contract office, or via the Internet. This product should not be used for purposes other than its intended use. If disposing of used product, take care to protect the environment.

The Mobil logotype, the Pegasus design are trademarks of Exxon Mobil Corporation, or one of its subsidiaries.

5-2011

Exxon Mobil Corporation
3225 Gallows Road
Fairfax, VA 22037

1-800-ASK MOBIL (275-6624)

Typical Properties are typical of those obtained with normal production tolerance and do not constitute a specification. Variations that do not affect product performance are to be expected during normal manufacture and at different blending locations. The information contained herein is subject to change without notice. All products may not be available locally. For more information, contact your local ExxonMobil contact or visit www.exxonmobil.com
ExxonMobil is comprised of numerous affiliates and subsidiaries, many with names that include Esso, Mobil, or ExxonMobil. Nothing in this document is intended to override or supersede the corporate separateness of local entities. Responsibility for local action and accountability remains with the local ExxonMobil-affiliate entities.

© 2001-2011 Exxon Mobil Corporation. All rights reserved..

ExxonMobil

Product Name: BEACON 325
Revision Date: 24 Sep 2010
Page 1 of 9

MATERIAL SAFETY DATA SHEET

SECTION 1 PRODUCT AND COMPANY IDENTIFICATION

PRODUCT

Product Name: **BEACON 325**
Product Description: Base Oil and Additives
Product Code: 2015A0203110, 641878-00, 97R014
Intended Use: Grease

COMPANY IDENTIFICATION

Supplier: EXXON MOBIL CORPORATION
3225 GALLOWS RD.
FAIRFAX, VA. 22037 USA

24 Hour Health Emergency	609-737-4411
Transportation Emergency Phone	800-424-9300
ExxonMobil Transportation No.	281-834-3296
Product Technical Information	800-662-4525, 800-947-9147
MSDS Internet Address	http://www.exxon.com, http://www.mobil.com

SECTION 2 COMPOSITION / INFORMATION ON INGREDIENTS

Reportable Hazardous Substance(s) or Complex Substance(s)

Name	CAS#	Concentration*
LITHIUM STEARATE	4485-12-5	20 - 30%

* All concentrations are percent by weight unless material is a gas. Gas concentrations are in percent by volume.

SECTION 3 HAZARDS IDENTIFICATION

This material is not considered to be hazardous according to regulatory guidelines (see (M)SDS Section 15).

POTENTIAL HEALTH EFFECTS

Low order of toxicity. Excessive exposure may result in eye, skin, or respiratory irritation. High-pressure injection under skin may cause serious damage.

NFPA Hazard ID:	Health:	0	Flammability:	1	Reactivity:	0
HMIS Hazard ID:	Health:	0	Flammability:	1	Reactivity:	0

NOTE: This material should not be used for any other purpose than the intended use in Section 1 without expert advice. Health studies have shown that chemical exposure may cause potential human health risks which may vary from person to person.

ExxonMobil

Product Name: BEACON 325
Revision Date: 24 Sep 2010
Page 2 of 9

SECTION 4 FIRST AID MEASURES

INHALATION

Under normal conditions of intended use, this material is not expected to be an inhalation hazard.

SKIN CONTACT

Wash contact areas with soap and water. If product is injected into or under the skin, or into any part of the body, regardless of the appearance of the wound or its size, the individual should be evaluated immediately by a physician as a surgical emergency. Even though initial symptoms from high pressure injection may be minimal or absent, early surgical treatment within the first few hours may significantly reduce the ultimate extent of injury.

EYE CONTACT

Flush thoroughly with water. If irritation occurs, get medical assistance.

INGESTION

First aid is normally not required. Seek medical attention if discomfort occurs.

SECTION 5 FIRE FIGHTING MEASURES

EXTINGUISHING MEDIA

Appropriate Extinguishing Media: Use water fog, foam, dry chemical or carbon dioxide (CO2) to extinguish flames.

Inappropriate Extinguishing Media: Straight Streams of Water

FIRE FIGHTING

Fire Fighting Instructions: Evacuate area. Prevent runoff from fire control or dilution from entering streams, sewers, or drinking water supply. Firefighters should use standard protective equipment and in enclosed spaces, self-contained breathing apparatus (SCBA). Use water spray to cool fire exposed surfaces and to protect personnel.

Hazardous Combustion Products: Smoke, Fume, Aldehydes, Sulfur oxides, Incomplete combustion products, Oxides of carbon

FLAMMABILITY PROPERTIES

Flash Point [Method]: >213C (415F) [EST. FOR OIL, ASTM D-92 (COC)]
Flammable Limits (Approximate volume % in air): LEL: N/D UEL: N/D
Autoignition Temperature: N/D

SECTION 6 ACCIDENTAL RELEASE MEASURES

NOTIFICATION PROCEDURES

In the event of a spill or accidental release, notify relevant authorities in accordance with all applicable regulations. US regulations require reporting releases of this material to the environment which exceed the applicable reportable quantity or oil spills which could reach any waterway including intermittent dry creeks. The National Response Center can be reached at (800)424-8802.

PROTECTIVE MEASURES

Avoid contact with spilled material. See Section 5 for fire fighting information. See the Hazard Identification Section for Significant Hazards. See Section 4 for First Aid Advice. See Section 8 for advice on the minimum requirements for personal protective equipment. Additional protective measures may be necessary, depending on the specific circumstances and/or the expert judgment of the emergency responders.

SPILL MANAGEMENT

Land Spill: Scrape up spilled material with shovels into a suitable container for recycle or disposal.

Water Spill: Stop leak if you can do it without risk. Confine the spill immediately with booms. Warn other shipping. Skim from surface.

Water spill and land spill recommendations are based on the most likely spill scenario for this material; however, geographic conditions, wind, temperature, (and in the case of a water spill) wave and current direction and speed may greatly influence the appropriate action to be taken. For this reason, local experts should be consulted. Note: Local regulations may prescribe or limit action to be taken.

ENVIRONMENTAL PRECAUTIONS

Prevent entry into waterways, sewers, basements or confined areas.

SECTION 7 HANDLING AND STORAGE

HANDLING

Prevent small spills and leakage to avoid slip hazard.

Static Accumulator: This material is not a static accumulator.

STORAGE

Do not store in open or unlabelled containers.

SECTION 8 EXPOSURE CONTROLS / PERSONAL PROTECTION

EXPOSURE LIMIT VALUES

Exposure limits/standards (Note: Exposure limits are not additive)

Source	Form	Limit / Standard			NOTE	Source
LITHIUM STEARATE		TWA	10 mg/m3		N/A	ACGIH

NOTE: Limits/standards shown for guidance only. Follow applicable regulations.

ENGINEERING CONTROLS

The level of protection and types of controls necessary will vary depending upon potential exposure conditions. Control measures to consider:

No special requirements under ordinary conditions of use and with adequate ventilation.

PERSONAL PROTECTION

Personal protective equipment selections vary based on potential exposure conditions such as applications, handling practices, concentration and ventilation. Information on the selection of protective equipment for use with this material, as provided below, is based upon intended, normal usage.

Respiratory Protection: If engineering controls do not maintain airborne contaminant concentrations at a level which is adequate to protect worker health, an approved respirator may be appropriate. Respirator selection, use, and maintenance must be in accordance with regulatory requirements, if applicable. Types of respirators to be considered for this material include:

No protection is ordinarily required under normal conditions of use and with adequate ventilation.

For high airborne concentrations, use an approved supplied-air respirator, operated in positive pressure mode. Supplied air respirators with an escape bottle may be appropriate when oxygen levels are inadequate, gas/vapor warning properties are poor, or if air purifying filter capacity/rating may be exceeded.

Hand Protection: Any specific glove information provided is based on published literature and glove manufacturer data. Glove suitability and breakthrough time will differ depending on the specific use conditions. Contact the glove manufacturer for specific advice on glove selection and breakthrough times for your use conditions. Inspect and replace worn or damaged gloves. The types of gloves to be considered for this material include:

No protection is ordinarily required under normal conditions of use.

Eye Protection: If contact is likely, safety glasses with side shields are recommended.

Skin and Body Protection: Any specific clothing information provided is based on published literature or manufacturer data. The types of clothing to be considered for this material include:

No skin protection is ordinarily required under normal conditions of use. In accordance with good industrial hygiene practices, precautions should be taken to avoid skin contact.

Specific Hygiene Measures: Always observe good personal hygiene measures, such as washing after handling the material and before eating, drinking, and/or smoking. Routinely wash work clothing and protective equipment to remove contaminants. Discard contaminated clothing and footwear that cannot be cleaned. Practice good housekeeping.

ENVIRONMENTAL CONTROLS

See Sections 6, 7, 12, 13.

SECTION 9 PHYSICAL AND CHEMICAL PROPERTIES

Typical physical and chemical properties are given below. Consult the Supplier in Section 1 for additional data.

GENERAL INFORMATION

Physical State: Solid
Form: Semi-fluid
Color: Tan
Odor: Characteristic
Odor Threshold: N/D

IMPORTANT HEALTH, SAFETY, AND ENVIRONMENTAL INFORMATION

ExxonMobil

Product Name: BEACON 325
Revision Date: 24 Sep 2010
Page 5 of 9

Relative Density (at 15 C): 0.94
Flash Point [Method]: >213C (415F) [EST. FOR OIL, ASTM D-92 (COC)]
Flammable Limits (Approximate volume % in air): LEL: N/D UEL: N/D
Autoignition Temperature: N/D
Boiling Point / Range: > 260C (500F)
Vapor Density (Air = 1): N/D
Vapor Pressure: < 0.013 kPa (0.1 mm Hg) at 20 C
Evaporation Rate (n-butyl acetate = 1): N/D
pH: N/A
Log Pow (n-Octanol/Water Partition Coefficient): > 3.5
Solubility in Water: Negligible
Viscosity: >150 cSt (150 mm2/sec) at 40 C | >16 cSt (16 mm2/sec) at 100C
Oxidizing Properties: See Hazards Identification Section.

OTHER INFORMATION
Freezing Point: N/D
Melting Point: >163°C (325°F)
DMSO Extract (mineral oil only), IP-346: < 3 %wt

NOTE: Most physical properties above are for the oil component in the material.

SECTION 10 STABILITY AND REACTIVITY

STABILITY: Material is stable under normal conditions.

CONDITIONS TO AVOID: Excessive heat. High energy sources of ignition.

MATERIALS TO AVOID: Strong oxidizers

HAZARDOUS DECOMPOSITION PRODUCTS: Material does not decompose at ambient temperatures.

HAZARDOUS POLYMERIZATION: Will not occur.

SECTION 11 TOXICOLOGICAL INFORMATION

ACUTE TOXICITY

Route of Exposure	Conclusion / Remarks
Inhalation	
Toxicity: No end point data.	Minimally Toxic. Based on assessment of the components.
Irritation: No end point data.	Negligible hazard at ambient/normal handling temperatures. Based on assessment of the components.
Ingestion	
Toxicity (Rat): LD50 > 5000 mg/kg	Minimally Toxic. Based on test data for structurally similar materials.
Skin	
Toxicity (Rabbit): LD50 > 5000 mg/kg	Minimally Toxic. Based on test data for structurally similar materials.
Irritation (Rabbit): Data available.	Negligible irritation to skin at ambient temperatures. Based on assessment of the components.

Eye	
Irritation (Rabbit): Data available.	May cause mild, short-lasting discomfort to eyes. Based on assessment of the components.

CHRONIC/OTHER EFFECTS

Contains:

Base oil severely refined: Not carcinogenic in animal studies. Representative material passes IP-346, Modified Ames test, and/or other screening tests. Dermal and inhalation studies showed minimal effects; lung non-specific infiltration of immune cells, oil deposition and minimal granuloma formation. Not sensitizing in test animals.

Additional information is available by request.

The following ingredients are cited on the lists below: None.

--REGULATORY LISTS SEARCHED--

1 = NTP CARC	3 = IARC 1	5 = IARC 2B
2 = NTP SUS	4 = IARC 2A	6 = OSHA CARC

SECTION 12 ECOLOGICAL INFORMATION

The information given is based on data available for the material, the components of the material, and similar materials.

ECOTOXICITY

Material -- Not expected to be harmful to aquatic organisms.

MOBILITY

Base oil component -- Low solubility and floats and is expected to migrate from water to the land. Expected to partition to sediment and wastewater solids.

PERSISTENCE AND DEGRADABILITY

Biodegradation:

Base oil component -- Expected to be inherently biodegradable

BIOACCUMULATION POTENTIAL

Base oil component -- Has the potential to bioaccumulate, however metabolism or physical properties may reduce the bioconcentration or limit bioavailability.

SECTION 13 DISPOSAL CONSIDERATIONS

Disposal recommendations based on material as supplied. Disposal must be in accordance with current applicable laws and regulations, and material characteristics at time of disposal.

DISPOSAL RECOMMENDATIONS

Product is suitable for burning in an enclosed controlled burner for fuel value or disposal by supervised incineration at very high temperatures to prevent formation of undesirable combustion products.

REGULATORY DISPOSAL INFORMATION

RCRA Information: The unused product, in our opinion, is not specifically listed by the EPA as a hazardous waste (40 CFR, Part 261D), nor is it formulated to contain materials which are listed as hazardous wastes. It does not exhibit the hazardous characteristics of ignitability, corrositivity or reactivity and is not formulated with contaminants as determined by the Toxicity Characteristic Leaching Procedure (TCLP). However, used product may be regulated.

Empty Container Warning Empty Container Warning (where applicable): Empty containers may contain residue and can be dangerous. Do not attempt to refill or clean containers without proper instructions. Empty drums should be completely drained and safely stored until appropriately reconditioned or disposed. Empty containers should be taken for recycling, recovery, or disposal through suitably qualified or licensed contractor and in accordance with governmental regulations. DO NOT PRESSURISE, CUT, WELD, BRAZE, SOLDER, DRILL, GRIND, OR EXPOSE SUCH CONTAINERS TO HEAT, FLAME, SPARKS, STATIC ELECTRICITY, OR OTHER SOURCES OF IGNITION. THEY MAY EXPLODE AND CAUSE INJURY OR DEATH.

SECTION 14 TRANSPORT INFORMATION

LAND (DOT): Not Regulated for Land Transport

LAND (TDG): Not Regulated for Land Transport

SEA (IMDG): Not Regulated for Sea Transport according to IMDG-Code

AIR (IATA): Not Regulated for Air Transport

SECTION 15 REGULATORY INFORMATION

OSHA HAZARD COMMUNICATION STANDARD: When used for its intended purposes, this material is not classified as hazardous in accordance with OSHA 29 CFR 1910.1200.

Complies with the following national/regional chemical inventory requirements:: AICS, IECSC, DSL, EINECS, ENCS, KECI, PICCS, TSCA

EPCRA: This material contains no extremely hazardous substances.

SARA (311/312) REPORTABLE HAZARD CATEGORIES: None.

SARA (313) TOXIC RELEASE INVENTORY: This material contains no chemicals subject to the supplier notification requirements of the SARA 313 Toxic Release Program.

The following ingredients are cited on the lists below:

Chemical Name	CAS Number	List Citations
DIPHENYLAMINE	122-39-4	5

ExxonMobil

Product Name: BEACON 325
Revision Date: 24 Sep 2010
Page 8 of 9

LITHIUM STEARATE	4485-12-5	1, 16
NAPHTHENIC ACIDS, ZINC SALTS	12001-85-3	15
ZINC NEODECANOATE	27253-29-8	15

--REGULATORY LISTS SEARCHED--

1 = ACGIH ALL	6 = TSCA 5a2	11 = CA P65 REPRO	16 = MN RTK
2 = ACGIH A1	7 = TSCA 5e	12 = CA RTK	17 = NJ RTK
3 = ACGIH A2	8 = TSCA 6	13 = IL RTK	18 = PA RTK
4 = OSHA Z	9 = TSCA 12b	14 = LA RTK	19 = RI RTK
5 = TSCA 4	10 = CA P65 CARC	15 = MI 293	

Code key: CARC=Carcinogen; REPRO=Reproductive

SECTION 16 OTHER INFORMATION

N/D = Not determined, N/A = Not applicable

THIS SAFETY DATA SHEET CONTAINS THE FOLLOWING REVISIONS:

Revision Changes:
Section 10 Stability and Reactivity - Header was modified.
Section 13: Disposal Recommendations - Note was modified.
Section 08: Personal Protection was modified.
Section 07: Handling and Storage - Handling was modified.
Section 05: Hazardous Combustion Products was modified.
Section 06: Accidental Release - Spill Management - Water was modified.
Section 09: Relative Density - Header was modified.
Section 09: Flash Point C(F) was modified.
Section 09: Viscosity was modified.
Section 14: Sea (IMDG) - Header was modified.
Section 14: Air (IATA) - Header was modified.
Section 14: LAND (TDG) - Header was modified.
Section 14: LAND (DOT) - Header was modified.
Section 15: List Citations Table was modified.
Section 15: List Citation Table - Header was modified.
Section 14: LAND (DOT) - Default was modified.
Section 14: LAND (TDG) Default was modified.
Section 14: Sea (IMDG) - Default was modified.
Section 14: Air (IATA) - Default was modified.
Section 15: National Chemical Inventory Listing - Header was modified.
Section 15: National Chemical Inventory Listing was modified.
Section 08: Exposure limits/standards was modified.
Section 15: OSHA Hazard Communication Standard was modified.
Hazard Identification: OSHA - May be Hazardous Statement was modified.
Section 09: Oxidizing Properties was modified.
Section 08: OEL Table - Notation Column - Header was modified.
Section 08: Exposure Limit Values - Header was modified.
Section 06: Protective Measures was added.
Section 06: Accidental Release - Protective Measures - Header was added.

ExxonMobil

Product Name: BEACON 325
Revision Date: 24 Sep 2010
Page 9 of 9

The information and recommendations contained herein are, to the best of ExxonMobil's knowledge and belief, accurate and reliable as of the date issued. You can contact ExxonMobil to insure that this document is the most current available from ExxonMobil. The information and recommendations are offered for the user's consideration and examination. It is the user's responsibility to satisfy itself that the product is suitable for the intended use. If buyer repackages this product, it is the user's responsibility to insure proper health, safety and other necessary information is included with and/or on the container. Appropriate warnings and safe-handling procedures should be provided to handlers and users. Alteration of this document is strictly prohibited. Except to the extent required by law, re-publication or retransmission of this document, in whole or in part, is not permitted. The term, "ExxonMobil" is used for convenience, and may include any one or more of ExxonMobil Chemical Company, Exxon Mobil Corporation, or any affiliates in which they directly or indirectly hold any interest.

Internal Use Only
MHC: 0B, 0B, 0, 0, 0, 0 PPEC: A

DGN: 2026015XUS (550399)

Copyright 2002 Exxon Mobil Corporation, All rights reserved

11.5.6 MOBIL MOBILGEAR SHC 150

Mobil

Mobilgear SHC Series

Gear Oils

Product Description

The Mobilgear SHC Series lubricants are supreme performance heavy-duty gear oils primarily designed for all kinds of enclosed gearing as well as plain and rolling element bearings. They are designed to provide outstanding service in terms of equipment protection, oil life, and problem-free operation enabling increased customer productivity. These scientifically engineered synthetic lubricants are formulated from synthetic base fluids that have exceptional oxidation and thermal properties and excellent low temperature fluidity. The combination of a naturally high viscosity index and a unique additive system enables these products to provide outstanding performance under severe high and low temperature operating conditions. The nature of the synthetic base fluids also contributes to the products' excellent low temperature performance. They have outstanding EP properties and resistance to shock loading. The synthetic base stocks have inherently low traction properties that result in low fluid friction in the load zone of non-conforming surfaces such as gears and rolling element bearings. Reduced fluid friction produces lower operating temperatures and improved gear efficiency.

The Mobilgear SHC Series covers a very wide viscosity range, from ISO VG 150 to 6800. Accordingly, they find application in a wide range of enclosed gear applications, as well as plain and rolling element bearings. Because of the very high viscosities available, this family can meet the lubrication needs of very slow speed and high load/high temperature gears and bearings; they are ideal for situations in which conventional products operate in the boundary regime. They may be situations where a lubricant bath or recirulation system is used to apply the oil.

Mobilgear SHC Series lubricants are the products of choice for many OEMs and customers world-wide based on their wide application range and superb performance in tough situations.

Features and Benefits

The Mobilgear SHC Series of lubricants is a leading member of the Mobil SHC brand of products that are world-renowned for their innovation and performance. These scientifically engineered synthetic lubricants symbolize the continuing commitment to using advanced technology to provide outstanding lubricant products. The Mobilgear SHC Series of lubricants provide benefits not possible with mineral stocks, particularly under extreme high and low temperature operating conditions,and deliver performance features and customer benefits.

Our formulation scientists have used a proprietary additive combination that fortifies the base fluids to provide excellent EP and anti-wear performance, even in shock load situations. The resulting finished products have shown exceptional performance in OEM evaluations, customer field tests and commercial use. The higher viscosity grades are particularly effective in low-speed, high load, high temperature situations and provide excellent gear and bearing protection, longer oil life and excellent all-round service compared with conventional products.

Specific features and potential benefits for the Mobilgear SHC Series of lubricants include:

Features	Advantages and Potential Benefits
Outstanding load-carrying and antiwear properties	Extended gear life and reduced maintenance costs
Very high viscosity grades available, without reduction of properties or performance capability	Provides excellent EHL film protection of gears and bearings even at slow speeds, high loads and high temperatures
	Can be used to convert all-loss systems to circulation
	Can replace grease in some applications resulting in plant product consolidation
High viscosity index	Trouble-free operation over a wide temperature range particularly at extremely low temperatures.

Features	Advantages and Potential Benefits
Low traction properties	Improved gear efficiency and lower operating temperatures lead to lower operating costs
Outstanding thermal/oxidation resistance and long product life	Reduced lubricant consumption, reduced product and change -out costs
Light colour	Minimises need for gear cleaning prior to inspections, reducing maintenance costs

Applications

Application Considerations: While the Mobilgear SHC Series are compatible with mineral oil based products, admixture may detract from their performance. Consequently it is recommended that before changing a system to one of the Mobilgear SHC Series, it should be thoroughly cleaned out and flushed to achieve the maximum performance benefits.

Mobilgear SHC Series oils are recommended for all types of enclosed steel-on-steel gear drives. They are suitable for both circulation and splash lubrication systems. The range of viscosity choices in the Mobilgear SHC Series from ISO 150 to ISO 6800, provides the right lubrication option for low temperature applications where pour points of -46ºC are required to high temperature applications where operating temperatures of 121ºC are encountered. They are particularly recommended for gear sets operating under heavy or shock loads and low speeds where boundary lubrication may prevail. For clarity, applications for this product family are described for two viscosity ranges, as follows:

- Mobilgear SHC 150 to 1500 - Industrial enclosed spur, helical and bevel gear drives, especially heavy-duty applications especially those found in mining, chemical processing, metals and paper sectors.
- Mobilgear SHC 150 to 1500 - Industrial gearing for conveyers, agitators, dryers, fans, mixers, presses, pulpers, pumps (including oil well pumps), screens, extruders and other heavy duty applications
- Mobilgear SHC 150 to 1500 - Marine gearing including main propulsion, centrifuges, deck machinery such as winches, windlasses, cranes, turning gears, pumps, elevators and rudder carriers
- Mobilgear SHC 3200 and 6800 - Industrial enclosed spur, helical and bevel gears, especially slow speed, and/or high load units
- Mobilgear SHC 3200 and 6800 - Plain and rolling element bearings, especially in slow speed, and/or high load applications
- Mobilgear SHC 3200 and 6800 - Railroad DC Traction Motor drives
- Mobilgear SHC 3200 and 6800 - Certain open gear applications such as oiling pinions or specially designed circulation systems

Typical Properties

Mobilgear SHC	150	220	320	460	680	1000	1500	3200	6800
ISO Viscosity Grade	150	220	320	460	680	1000	1500	3200	--
Viscosity, ASTM D 445									
cSt @ 40° C	150	220	320	460	680	1000	1500	3025	8100
cSt @ 100° C	19.5	26	35	46	62	81	106	171	350
Viscosity Index, ASTM D 2270	150	150	155	155	160	160	160	160	170
Pour Point, °C, ASTM D 97	-45	-36	-33	-27	-27	-24	-18	-9	-6
Density @15.6° C kg/l, ASTM D 4052	0.86	0.87	0.88	0.87	0.89	0.87	0.88	0.89	0.90
Flash Point, °C, ASTM D 92	222	232	238	245	256	-	-	-	-

Mobilgear SHC	150	220	320	460	680	1000	1500	3200	6800
Timken OK Load	60	60	60	60	60	60	60	60	60
4-Ball EP Teat, ASTM D 2783:									
Weld load, Kg	250	250	250	250	250	250	250	250	250
Load Wear Index, Kgf	48	48	48	48	48	48	48	48	48
FZG test, DIN 51354, Failure Stage	13+	13+	13+	13+	13+	13+	13+	13+	13+
Copper Corrosion, ASTM D130, 3 hrs @ 100° C	1B	1B	1B	1B	1B	1B	1B	1B	1B
Demulsibility, EP Oils, ASTM D 2711-2,Free water, ml	85	85	85	85	85	85	85	85	85
Foaming Characteristics, ASTM D 892,Seq. I, II, III, Tendency/Stability, ml/ml	0/0, 0/0, 0/0	0/0, 0/0, 0/0	0/0, 0/0, 0/0	0/0, 0/0, 0/0	0/0, 0/0, 0/0	0/0, 0/0, 0/0	0/0, 0/0, 0/0	0/0, 0/0, 0/0	0/0, 0/0, 0/0
Rust Protection, ASTM D 665, Sea Water	Pass	Pass	Pass	Pass	Pass	Pass	Pass	Pass	Pass

Health and Safety

Based on available information, this product is not expected to produce adverse effects on health when used for the intended application and the recommendations provided in the Material Safety Data Sheet (MSDS) are followed. MSDS's are available upon request through your sales contract office, or via the Internet. This product should not be used for purposes other than its intended use. If disposing of used product, take care to protect the environment.

The Mobil logotype, the Pegasus design and Mobilgear SHC are trademarks of Exxon Mobil Corporation, or one of its subsidiaries.

9-2010

Exxon Mobil Corporation
3225 Gallows Road
Fairfax, VA 22037

1-800-ASK MOBIL (275-6624)

Typical Properties are typical of those obtained with normal production tolerance and do not constitute a specification. Variations that do not affect product performance are to be expected during normal manufacture and at different blending locations. The information contained herein is subject to change without notice. All products may not be available locally. For more information, contact your local ExxonMobil contact or visit www.exxonmobil.com
ExxonMobil is comprised of numerous affiliates and subsidiaries, many with names that include Esso, Mobil, or ExxonMobil. Nothing in this document is intended to override or supersede the corporate separateness of local entities. Responsibility for local action and accountability remains with the local ExxonMobil-affiliate entities.

© 2001-2011 Exxon Mobil Corporation. All rights reserved..

MATERIAL SAFETY DATA SHEET

SECTION 1 PRODUCT AND COMPANY IDENTIFICATION

PRODUCT

Product Name: **MOBILGEAR SHC 150**
Product Description: Synthetic Base Stocks and Additives
Product Code: 201560402510, 610782-00, 971483
Intended Use: Gear oil

COMPANY IDENTIFICATION

Supplier: **EXXON MOBIL CORPORATION**
3225 GALLOWS RD.
FAIRFAX, VA. 22037 USA

24 Hour Health Emergency	609-737-4411
Transportation Emergency Phone	800-424-9300
ExxonMobil Transportation No.	281-834-3296
Product Technical Information	800-662-4525, 800-947-9147
MSDS Internet Address	http://www.exxon.com, http://www.mobil.com

SECTION 2 COMPOSITION / INFORMATION ON INGREDIENTS

Reportable Hazardous Substance(s) or Complex Substance(s)

Name	CAS#	Concentration*
DITRIDECYL ADIPATE	16958-92-2	20 - 30%

* All concentrations are percent by weight unless material is a gas. Gas concentrations are in percent by volume.

SECTION 3 HAZARDS IDENTIFICATION

This material is not considered to be hazardous according to regulatory guidelines (see (M)SDS Section 15).

POTENTIAL HEALTH EFFECTS

Low order of toxicity. Excessive exposure may result in eye, skin, or respiratory irritation. High-pressure injection under skin may cause serious damage.

NFPA Hazard ID:	Health:	0	Flammability:	1	Reactivity:	0
HMIS Hazard ID:	Health:	0	Flammability:	1	Reactivity:	0

NOTE: This material should not be used for any other purpose than the intended use in Section 1 without expert advice. Health studies have shown that chemical exposure may cause potential human health risks which may vary from person to person.

SECTION 4 FIRST AID MEASURES

INHALATION

Remove from further exposure. For those providing assistance, avoid exposure to yourself or others. Use adequate respiratory protection. If respiratory irritation, dizziness, nausea, or unconsciousness occurs, seek immediate medical assistance. If breathing has stopped, assist ventilation with a mechanical device or use mouth-to-mouth resuscitation.

SKIN CONTACT

Wash contact areas with soap and water. If product is injected into or under the skin, or into any part of the body, regardless of the appearance of the wound or its size, the individual should be evaluated immediately by a physician as a surgical emergency. Even though initial symptoms from high pressure injection may be minimal or absent, early surgical treatment within the first few hours may significantly reduce the ultimate extent of injury.

EYE CONTACT

Flush thoroughly with water. If irritation occurs, get medical assistance.

INGESTION

First aid is normally not required. Seek medical attention if discomfort occurs.

SECTION 5 FIRE FIGHTING MEASURES

EXTINGUISHING MEDIA

Appropriate Extinguishing Media: Use water fog, foam, dry chemical or carbon dioxide (CO2) to extinguish flames.

Inappropriate Extinguishing Media: Straight Streams of Water

FIRE FIGHTING

Fire Fighting Instructions: Evacuate area. Prevent runoff from fire control or dilution from entering streams, sewers, or drinking water supply. Firefighters should use standard protective equipment and in enclosed spaces, self-contained breathing apparatus (SCBA). Use water spray to cool fire exposed surfaces and to protect personnel.

Hazardous Combustion Products: Smoke, Fume, Aldehydes, Sulfur oxides, Incomplete combustion products, Oxides of carbon

FLAMMABILITY PROPERTIES

Flash Point [Method]: >210C (410F) [ASTM D-92]
Flammable Limits (Approximate volume % in air): LEL: 0.9 UEL: 7.0
Autoignition Temperature: N/D

SECTION 6 ACCIDENTAL RELEASE MEASURES

NOTIFICATION PROCEDURES

In the event of a spill or accidental release, notify relevant authorities in accordance with all applicable regulations. US regulations require reporting releases of this material to the environment which exceed the applicable reportable quantity or oil spills which could reach any waterway including intermittent dry creeks. The

National Response Center can be reached at (800)424-8802.

SPILL MANAGEMENT

Land Spill: Stop leak if you can do it without risk. Recover by pumping or with suitable absorbent.

Water Spill: Stop leak if you can do it without risk. Confine the spill immediately with booms. Warn other shipping. Remove from the surface by skimming or with suitable absorbents. Seek the advice of a specialist before using dispersants.

Water spill and land spill recommendations are based on the most likely spill scenario for this material; however, geographic conditions, wind, temperature, (and in the case of a water spill) wave and current direction and speed may greatly influence the appropriate action to be taken. For this reason, local experts should be consulted. Note: Local regulations may prescribe or limit action to be taken.

ENVIRONMENTAL PRECAUTIONS

Large Spills: Dike far ahead of liquid spill for later recovery and disposal. Prevent entry into waterways, sewers, basements or confined areas.

SECTION 7 HANDLING AND STORAGE

HANDLING

Prevent small spills and leakage to avoid slip hazard.

Static Accumulator: This material is a static accumulator.

STORAGE

Do not store in open or unlabelled containers.

SECTION 8 EXPOSURE CONTROLS / PERSONAL PROTECTION

Exposure limits/standards for materials that can be formed when handling this product: When mists / aerosols can occur, the following are recommended: 5 mg/m³ - ACGIH TLV, 10 mg/m³ - ACGIH STEL, 5 mg/m³ - OSHA PEL.

NOTE: Limits/standards shown for guidance only. Follow applicable regulations.

ENGINEERING CONTROLS

The level of protection and types of controls necessary will vary depending upon potential exposure conditions. Control measures to consider:

No special requirements under ordinary conditions of use and with adequate ventilation.

PERSONAL PROTECTION

Personal protective equipment selections vary based on potential exposure conditions such as applications, handling practices, concentration and ventilation. Information on the selection of protective equipment for use

with this material, as provided below, is based upon intended, normal usage.

Respiratory Protection: If engineering controls do not maintain airborne contaminant concentrations at a level which is adequate to protect worker health, an approved respirator may be appropriate. Respirator selection, use, and maintenance must be in accordance with regulatory requirements, if applicable. Types of respirators to be considered for this material include:

No special requirements under ordinary conditions of use and with adequate ventilation.

For high airborne concentrations, use an approved supplied-air respirator, operated in positive pressure mode. Supplied air respirators with an escape bottle may be appropriate when oxygen levels are inadequate, gas/vapor warning properties are poor, or if air purifying filter capacity/rating may be exceeded.

Hand Protection: Any specific glove information provided is based on published literature and glove manufacturer data. Glove suitability and breakthrough time will differ depending on the specific use conditions. Contact the glove manufacturer for specific advice on glove selection and breakthrough times for your use conditions. Inspect and replace worn or damaged gloves. The types of gloves to be considered for this material include:

No protection is ordinarily required under normal conditions of use.

Eye Protection: If contact is likely, safety glasses with side shields are recommended.

Skin and Body Protection: Any specific clothing information provided is based on published literature or manufacturer data. The types of clothing to be considered for this material include:

No skin protection is ordinarily required under normal conditions of use. In accordance with good industrial hygiene practices, precautions should be taken to avoid skin contact.

Specific Hygiene Measures: Always observe good personal hygiene measures, such as washing after handling the material and before eating, drinking, and/or smoking. Routinely wash work clothing and protective equipment to remove contaminants. Discard contaminated clothing and footwear that cannot be cleaned. Practice good housekeeping.

ENVIRONMENTAL CONTROLS

See Sections 6, 7, 12, 13.

SECTION 9 PHYSICAL AND CHEMICAL PROPERTIES

Typical physical and chemical properties are given below. Consult the Supplier in Section 1 for additional data.

GENERAL INFORMATION

Physical State: Liquid
Color: Pale Yellow
Odor: Characteristic
Odor Threshold: N/D

IMPORTANT HEALTH, SAFETY, AND ENVIRONMENTAL INFORMATION

Relative Density (at 15 C): 0.855
Flash Point [Method]: >210C (410F) [ASTM D-92]
Flammable Limits (Approximate volume % in air): LEL: 0.9 UEL: 7.0
Autoignition Temperature: N/D
Boiling Point / Range: > 316C (600F)

Vapor Density (Air = 1): > 2 at 101 kPa
Vapor Pressure: < 0.013 kPa (0.1 mm Hg) at 20 C
Evaporation Rate (n-butyl acetate = 1): N/D
pH: N/A
Log Pow (n-Octanol/Water Partition Coefficient): > 3.5
Solubility in Water: Negligible
Viscosity: 150 cSt (150 mm2/sec) at 40 C | 18.7 cSt (18.7 mm2/sec) at 100C
Oxidizing Properties: See Sections 3, 15, 16.

OTHER INFORMATION
Freezing Point: N/D
Melting Point: N/A
Pour Point: -45°C (-49°F)
DMSO Extract (mineral oil only), IP-346: < 3 %wt

SECTION 10 STABILITY AND REACTIVITY

STABILITY: Material is stable under normal conditions.

CONDITIONS TO AVOID: Excessive heat. High energy sources of ignition.

MATERIALS TO AVOID: Strong oxidizers

HAZARDOUS DECOMPOSITION PRODUCTS: Material does not decompose at ambient temperatures.

HAZARDOUS POLYMERIZATION: Will not occur.

SECTION 11 TOXICOLOGICAL INFORMATION

ACUTE TOXICITY

Route of Exposure	Conclusion / Remarks
Inhalation	
Toxicity (Rat): LC50 > 5000 mg/m3	Minimally Toxic. Based on test data for structurally similar materials.
Irritation: No end point data.	Negligible hazard at ambient/normal handling temperatures. Based on assessment of the components.
Ingestion	
Toxicity (Rat): LD50 > 5000 mg/kg	Minimally Toxic. Based on test data for structurally similar materials.
Skin	
Toxicity (Rabbit): LD50 > 5000 mg/kg	Minimally Toxic. Based on test data for structurally similar materials.
Irritation (Rabbit): Data available.	Negligible irritation to skin at ambient temperatures. Based on test data for structurally similar materials.
Eye	
Irritation (Rabbit): Data available.	May cause mild, short-lasting discomfort to eyes. Based on test data for structurally similar materials.

CHRONIC/OTHER EFFECTS
For the product itself:

Repeated and/or prolonged exposure may cause irritation to the skin, eyes, or respiratory tract.

Contains:

Synthetic base oils: Not expected to cause significant health effects under conditions of normal use, based on laboratory studies with the same or similar materials. Not mutagenic or genotoxic. Not sensitizing in test animals and humans.

Additional information is available by request.

The following ingredients are cited on the lists below: None.

--REGULATORY LISTS SEARCHED--

1 = NTP CARC	3 = IARC 1	5 = IARC 2B
2 = NTP SUS	4 = IARC 2A	6 = OSHA CARC

SECTION 12 ECOLOGICAL INFORMATION

The information given is based on data available for the material, the components of the material, and similar materials.

ECOTOXICITY

Material -- Not expected to be harmful to aquatic organisms.

MOBILITY

Base oil component -- Low solubility and floats and is expected to migrate from water to the land. Expected to partition to sediment and wastewater solids.

SECTION 13 DISPOSAL CONSIDERATIONS

Disposal recommendations based on material as supplied. Disposal must be in accordance with current applicable laws and regulations, and material characteristics at time of disposal.

DISPOSAL RECOMMENDATIONS

Product is suitable for burning in an enclosed controlled burner for fuel value or disposal by supervised incineration at very high temperatures to prevent formation of undesirable combustion products.

REGULATORY DISPOSAL INFORMATION

RCRA Information: The unused product, in our opinion, is not specifically listed by the EPA as a hazardous waste (40 CFR, Part 261D), nor is it formulated to contain materials which are listed as hazardous wastes. It does not exhibit the hazardous characteristics of ignitability, corrosivity or reactivity and is not formulated with contaminants as determined by the Toxicity Characteristic Leaching Procedure (TCLP). However, used product may be regulated.

Empty Container Warning Empty Container Warning (where applicable): Empty containers may contain residue and can be dangerous. Do not attempt to refill or clean containers without proper instructions. Empty drums should be completely drained and safely stored until appropriately reconditioned or disposed. Empty containers should be taken

for recycling, recovery, or disposal through suitably qualified or licensed contractor and in accordance with governmental regulations. DO NOT PRESSURISE, CUT, WELD, BRAZE, SOLDER, DRILL, GRIND, OR EXPOSE SUCH CONTAINERS TO HEAT, FLAME, SPARKS, STATIC ELECTRICITY, OR OTHER SOURCES OF IGNITION. THEY MAY EXPLODE AND CAUSE INJURY OR DEATH.

SECTION 14 TRANSPORT INFORMATION

LAND (DOT) : Not Regulated for Land Transport

LAND (TDG) : Not Regulated for Land Transport

SEA (IMDG) : Not Regulated for Sea Transport according to IMDG-Code

AIR (IATA) : Not Regulated for Air Transport

SECTION 15 REGULATORY INFORMATION

OSHA HAZARD COMMUNICATION STANDARD: When used for its intended purposes, this material is not classified as hazardous in accordance with OSHA 29 CFR 1910.1200.

NATIONAL CHEMICAL INVENTORY LISTING: IECSC, DSL, EINECS, ENCS, KECI, TSCA

EPCRA: This material contains no extremely hazardous substances.

SARA (311/312) REPORTABLE HAZARD CATEGORIES: None.

SARA (313) TOXIC RELEASE INVENTORY: This material contains no chemicals subject to the supplier notification requirements of the SARA 313 Toxic Release Program.

The Following Ingredients are Cited on the Lists Below:

Chemical Name	CAS Number	List Citations
DIPHENYLAMINE	122-39-4	5

--REGULATORY LISTS SEARCHED--

1 = ACGIH ALL	6 = TSCA 5a2	11 = CA P65 REPRO	16 = MN RTK
2 = ACGIH A1	7 = TSCA 5e	12 = CA RTK	17 = NJ RTK
3 = ACGIH A2	8 = TSCA 6	13 = IL RTK	18 = PA RTK
4 = OSHA Z	9 = TSCA 12b	14 = LA RTK	19 = RI RTK
5 = TSCA 4	10 = CA P65 CARC	15 = MI 293	

Code key: CARC=Carcinogen; REPRO=Reproductive

SECTION 16 OTHER INFORMATION

N/D = Not determined, N/A = Not applicable

THIS SAFETY DATA SHEET CONTAINS THE FOLLOWING REVISIONS:
No revision information is available.

The information and recommendations contained herein are, to the best of ExxonMobil's knowledge and belief, accurate and reliable as of the date issued. You can contact ExxonMobil to insure that this document is the most current available from ExxonMobil. The information and recommendations are offered for the user's consideration and examination. It is the user's responsibility to satisfy itself that the product is suitable for the intended use. If buyer repackages this product, it is the user's responsibility to insure proper health, safety and other necessary information is included with and/or on the container. Appropriate warnings and safe-handling procedures should be provided to handlers and users. Alteration of this document is strictly prohibited. Except to the extent required by law, re-publication or retransmission of this document, in whole or in part, is not permitted. The term, "ExxonMobil" is used for convenience, and may include any one or more of ExxonMobil Chemical Company, Exxon Mobil Corporation, or any affiliates in which they directly or indirectly hold any interest.

Internal Use Only
MHC: 0B, 0B, 0, 0, 0, 0 PPEC: A

DGN: 2009042XUS (548993)

Copyright 2002 Exxon Mobil Corporation, All rights reserved

11.5.7 MOBIL MOBILGEAR 600 XP 220

Mobil

Mobilgear 600 XP Series

Gear Oil

Product Description

The Mobilgear 600 XP Series are extra high performance gear oils having outstanding extreme pressure characteristics and load-carrying properties, intended for use in all types of enclosed gear drives with circulation or splash lubrication systems. Mobilgear 600 XP Series is designed to stay ahead of the changing needs of gearbox technology. Gearbox technology design trends are towards smaller units with similar power throughput. This increase in power density places increased demands on gear oils. Mobilgear 600 XP Series oils are formulated to meet the stress by providing extra protection for gears, bearings and seals.

Mobilgear 600 XP Series is formulated to protect gear teeth from wear at its earliest stages. Microscopic wear, called micropitting, can lead to significant gear tooth damage. Mobilgear 600 XP Series exceeds the industry requirement for bearing wear protection. In fact, Mobilgear 600 XP Series provides up to 15 times the wear protection as measured by the industry standard FAG FE 8 test. Mobilgear 600 XP Series' balanced formulation is able to provide maximum wear and corrosion protection while maintaining compatibility with common gearbox seal materials. Mobilgear 600 XP helps to maintain gearbox seal integrity thereby preventing oil leaks and keeping contamination out. By protecting the gears, bearings and seals, Mobilgear 600 XP can improve equipment reliability and increase productivity.

Mobilgear 600 XP Series oils are recommended for industrial spur, helical and bevel enclosed gears with circulation or splash lubrication, operating at bulk oil temperatures up to 100ºC. They are particularly suitable for gear sets working under heavy or shock loads. Mobilgear 600 XP oils also find broad application in marine gearing applications. They may also be used in non-gear applications include highly loaded and slow speed plain and rolling contact bearings.

Features and Benefits

Mobilgear 600 XP Series products are a leading member of the Mobil brand of industrial lubricants that enjoy a reputation for innovation and high performance capability. These mineral-based products are designed to provide high quality industrial gear oils, meeting the latest industry standards and with high versatility to lubricate a broad range of industrial and marine equipment.

Mobilgear 600 XP Series products offer the following features and potential benefits:

Features	Advantages and Potential Benefits
Enhanced gear wear protection from micropitting	Less gear and bearing wear resulting in less unexpected downtime
Reduced debris denting from generated wear particles	Up to 22% improvement in bearing life reducing bearing replacement costs and improving productivity
Improved bearing wear protection	Improved bearing life resulting in higher productivity
Outstanding compatibility with a range of seal materials	Reduced leakage, oil consumption and contamination ingress helping to reduce maintenance, extend gearbox reliability and higher productivity
Excellent resistance to oil oxidation and thermal degradation	Helps extend lubricant life with lower lubricant and lubrication costs and reduced scheduled downtime.
High resistance to sludge and deposit formation	Cleaner systems and reduced maintenance
Wide range of applications	Fewer grades of lubricant required because of wide range of application, leading to lower purchase and

Features	Advantages and Potential Benefits
	storage costs and less danger of using wrong lubricant
Optimised resistance to rust and corrosion of steel and corrosion of copper and soft metal alloys	Excellent protection of machine parts, with reduced maintenance and repair costs
Resistance to foaming and emulsion formation	Effective lubrication and problem free operation in the presence of water contamination or in equipment prone to oil foaming

Applications

Mobilgear 600 XP lubricants are used in a wide range of industrial and marine applications, especially spur, helical, bevel and worm gearing. Specific applications include:

- Industrial gearing for conveyers, agitators, dryers, extruders, fans, mixers, presses, pulpers, pumps (including oil well pumps), screens, extruders and other heavy duty applications
- Marine gearing including main propulsion, centrifuges, deck machinery such as winches, windlasses, cranes, turning gears, pumps, elevators and rudder carriers
- Non-gear applications include shaft couplings, screws and heavily loaded plain and rolling contact bearings operating at slow speeds.
- Mobilgear 600 XP 100, 150, 220, 320, 460, and 680 are approved by Siemens for use in Flender gearboxes

Specifications and Approvals

Mobilgear 600 XP meets or exceeds the requirements of:	Mobilgear 600 XP 68	Mobilgear 600 XP 100	Mobilgear 600 XP 150	Mobilgear 600 XP 220	Mobilgear 600 XP 320	Mobilgear 600 XP 460	Mobilgear 600 XP 680
AGMA 9005-E02	2 EP	3 EP	4 EP	5 EP	6 EP	7 EP	-
DIN 51517-3: 2009-06	X	X	X	X	X	X	X
ISO 12925-1 Typ	CKD 68	CKD 100	CKD 150	CKD 220	CKD 320	CKC 460	CKC 680

Mobilgear 600 XP has the following builder approvals:	Mobilgear 600 XP 68	Mobilgear 600 XP 100	Mobilgear 600 XP 150	Mobilgear 600 XP 220	Mobilgear 600 XP 320	Mobilgear 600 XP 460	Mobilgear 600 XP 680
Siemens T 7300, Table A-1, Revision 13, FLENDER Code No.:	-	A17	A16	A15	A14	A13	A12
Mueller Weingarten DT 55 005		CLP 100	CLP 150	CLP 220	CLP 320	CLP 460	

Typical Properties

Mobilgear 600 XP	68	100	150	220	320	460	680
ISO Viscosity Grade	68	100	150	220	320	460	680
Viscosity, ASTM D 445							
mm²/s @ 40ºC	68	100	150	220	320	460	680
mm²/s @ 100ºC	8.8	11.2	14.7	19.0	24.1	30.6	39.2
Viscosity Index, ASTM D 2270	101	97	97	97	97	96	90
Pour Point, ºC, ASTM D 97	-27	-24	-24	-24	-24	-15	-9
Flash Point, ºC, ASTM D 92	230	230	230	240	240	240	285
Density @15.6 ºC, ASTM D 4052, kg/l	0.88	0.88	0.89	0.89	0.90	0.90	0.91

Mobilgear 600 XP	68	100	150	220	320	460	680
FZG Micropitting, FVA 54, Fail Stage / Rating		10 / High	10 / High	10 / High	10 / High	10 / High	10 / High
FE 8 wear test, DIN 51819-3, D7,5/80-80. Roller wear, mg	2	2	2	2	2	2	2
Timken OK Load, ASTM D 2782, lb	65	65	65	65	65	65	65
4-Ball EP test, ASTM D 2783,							
Weld Load, kg	200	200	250	250	250	250	250
Load Wear Index, kgf	47	47	47	48	48	48	48
FZG Scuffing, Fail Stage							
A/8.3/90	12+	12+	12+	12+	12+	12+	12+
A/16.6/90		12+	12+	12+	12+	12+	12+
Rust protection, ASTM D 665, Sea Water	Pass	Pass	Pass	Pass	Pass	Pass	Pass
Copper Strip Corrosion, ASTM D 130, 3 hrs @ 100ºC	1B	1B	1B	1B	1B	1B	1B
Demulsibility, ASTM D 1401, Time to 3ml emulsion, minutes @ 82ºC	30	30	30	30	30	30	30
Foam Test, ASTM D 892, Tendency/Stability, ml/ml Sequence 1	0/0	0/0	0/0	0/0	0/0	0/0	0/0
Sequence 2	30/0	30/0	30/0	30/0	30/0	30/0	30/0

Health and Safety

Based on available information, this product is not expected to produce adverse effects on health when used for the intended application, following the recommendations provided in the Material Safety Data Sheet (MSDS). MSDSs are available upon request through your sales contract office, or via the Internet on http://www.exxonmobil.com. This product should not be used for purposes other than its intended use. If disposing of used product, take care to protect the environment.

All trademarks used herein are trademarks or registered trademarks of Exxon Mobil Corporation or one of its subsidiaries unless indicated otherwise.

7-2011

Exxon Mobil Corporation
3225 Gallows Road
Fairfax, VA 22037

1-800-ASK MOBIL (275-6624)

Typical Properties are typical of those obtained with normal production tolerance and do not constitute a specification. Variations that do not affect product performance are to be expected during normal manufacture and at different blending locations. The information contained herein is subject to change without notice. All products may not be available locally. For more information, contact your local ExxonMobil contact or visit www.exxonmobil.com
ExxonMobil is comprised of numerous affiliates and subsidiaries, many with names that include Esso, Mobil, or ExxonMobil. Nothing in this document is intended to override or supersede the corporate separateness of local entities. Responsibility for local action and accountability remains with the local ExxonMobil-affiliate entities.

© 2001-2011 Exxon Mobil Corporation. All rights reserved..

MATERIAL SAFETY DATA SHEET

SECTION 1 PRODUCT AND COMPANY IDENTIFICATION

PRODUCT

Product Name: **MOBILGEAR 600 XP 220**
Product Description: Base Oil and Additives
Product Code: 201560401220, 613638-00, 97AE99
Intended Use: Gear oil

COMPANY IDENTIFICATION

Supplier: EXXON MOBIL CORPORATION
3225 GALLOWS RD.
FAIRFAX, VA. 22037 USA

24 Hour Health Emergency	609-737-4411
Transportation Emergency Phone	800-424-9300
ExxonMobil Transportation No.	281-834-3296
Product Technical Information	800-662-4525, 800-947-9147
MSDS Internet Address	http://www.exxon.com, http://www.mobil.com

SECTION 2 COMPOSITION / INFORMATION ON INGREDIENTS

No Reportable Hazardous Substance(s) or Complex Substance(s).

SECTION 3 HAZARDS IDENTIFICATION

This material is not considered to be hazardous according to regulatory guidelines (see (M)SDS Section 15).

POTENTIAL HEALTH EFFECTS

Low order of toxicity. Excessive exposure may result in eye, skin, or respiratory irritation. High-pressure injection under skin may cause serious damage.

NFPA Hazard ID:	Health:	0	Flammability:	1	Reactivity:	0
HMIS Hazard ID:	Health:	0	Flammability:	1	Reactivity:	0

NOTE: This material should not be used for any other purpose than the intended use in Section 1 without expert advice. Health studies have shown that chemical exposure may cause potential human health risks which may vary from person to person.

SECTION 4 FIRST AID MEASURES

INHALATION

Remove from further exposure. For those providing assistance, avoid exposure to yourself or others. Use

adequate respiratory protection. If respiratory irritation, dizziness, nausea, or unconsciousness occurs, seek immediate medical assistance. If breathing has stopped, assist ventilation with a mechanical device or use mouth-to-mouth resuscitation.

SKIN CONTACT

Wash contact areas with soap and water. If product is injected into or under the skin, or into any part of the body, regardless of the appearance of the wound or its size, the individual should be evaluated immediately by a physician as a surgical emergency. Even though initial symptoms from high pressure injection may be minimal or absent, early surgical treatment within the first few hours may significantly reduce the ultimate extent of injury.

EYE CONTACT

Flush thoroughly with water. If irritation occurs, get medical assistance.

INGESTION

First aid is normally not required. Seek medical attention if discomfort occurs.

SECTION 5 FIRE FIGHTING MEASURES

EXTINGUISHING MEDIA

Appropriate Extinguishing Media: Use water fog, foam, dry chemical or carbon dioxide (CO2) to extinguish flames.

Inappropriate Extinguishing Media: Straight Streams of Water

FIRE FIGHTING

Fire Fighting Instructions: Evacuate area. Prevent runoff from fire control or dilution from entering streams, sewers, or drinking water supply. Firefighters should use standard protective equipment and in enclosed spaces, self-contained breathing apparatus (SCBA). Use water spray to cool fire exposed surfaces and to protect personnel.

Hazardous Combustion Products: Smoke, Fume, Aldehydes, Sulfur oxides, Incomplete combustion products, Oxides of carbon

FLAMMABILITY PROPERTIES

Flash Point [Method]: >200C (392F) [ASTM D-92]
Flammable Limits (Approximate volume % in air): LEL: 0.9 UEL: 7.0
Autoignition Temperature: N/D

SECTION 6 ACCIDENTAL RELEASE MEASURES

NOTIFICATION PROCEDURES

In the event of a spill or accidental release, notify relevant authorities in accordance with all applicable regulations. US regulations require reporting releases of this material to the environment which exceed the applicable reportable quantity or oil spills which could reach any waterway including intermittent dry creeks. The National Response Center can be reached at (800)424-8802.

SPILL MANAGEMENT

Land Spill: Stop leak if you can do it without risk. Recover by pumping or with suitable absorbent.

Water Spill: Stop leak if you can do it without risk. Confine the spill immediately with booms. Warn other shipping. Remove from the surface by skimming or with suitable absorbents. Seek the advice of a specialist before using dispersants.

Water spill and land spill recommendations are based on the most likely spill scenario for this material; however, geographic conditions, wind, temperature, (and in the case of a water spill) wave and current direction and speed may greatly influence the appropriate action to be taken. For this reason, local experts should be consulted. Note: Local regulations may prescribe or limit action to be taken.

ENVIRONMENTAL PRECAUTIONS

Large Spills: Dike far ahead of liquid spill for later recovery and disposal. Prevent entry into waterways, sewers, basements or confined areas.

SECTION 7 HANDLING AND STORAGE

HANDLING

Prevent small spills and leakage to avoid slip hazard. Material can accumulate static charges which may cause an electrical spark (ignition source). When the material is handled in bulk, an electrical spark could ignite any flammable vapors from liquids or residues that may be present (e.g., during switch-loading operations). Use proper bonding and/or ground procedures. However, bonding and grounds may not eliminate the hazard from static accumulation. Consult local applicable standards for guidance. Additional references include American Petroleum Institute 2003 (Protection Against Ignitions Arising out of Static, Lightning and Stray Currents) or National Fire Protection Agency 77 (Recommended Practice on Static Electricity) or CENELEC CLC/TR 50404 (Electrostatics - Code of practice for the avoidance of hazards due to static electricity).

Static Accumulator: This material is a static accumulator.

STORAGE

The container choice, for example storage vessel, may effect static accumulation and dissipation. Do not store in open or unlabelled containers. Keep away from incompatible materials.

SECTION 8 EXPOSURE CONTROLS / PERSONAL PROTECTION

Exposure limits/standards for materials that can be formed when handling this product: When mists / aerosols can occur, the following are recommended: 5 mg/m³ - ACGIH TLV, 10 mg/m³ - ACGIH STEL, 5 mg/m³ - OSHA PEL.

NOTE: Limits/standards shown for guidance only. Follow applicable regulations.

ENGINEERING CONTROLS

The level of protection and types of controls necessary will vary depending upon potential exposure conditions.

Control measures to consider:
No special requirements under ordinary conditions of use and with adequate ventilation.

PERSONAL PROTECTION

Personal protective equipment selections vary based on potential exposure conditions such as applications, handling practices, concentration and ventilation. Information on the selection of protective equipment for use with this material, as provided below, is based upon intended, normal usage.

Respiratory Protection: If engineering controls do not maintain airborne contaminant concentrations at a level which is adequate to protect worker health, an approved respirator may be appropriate. Respirator selection, use, and maintenance must be in accordance with regulatory requirements, if applicable. Types of respirators to be considered for this material include:
No special requirements under ordinary conditions of use and with adequate ventilation.

For high airborne concentrations, use an approved supplied-air respirator, operated in positive pressure mode. Supplied air respirators with an escape bottle may be appropriate when oxygen levels are inadequate, gas/vapor warning properties are poor, or if air purifying filter capacity/rating may be exceeded.

Hand Protection: Any specific glove information provided is based on published literature and glove manufacturer data. Glove suitability and breakthrough time will differ depending on the specific use conditions. Contact the glove manufacturer for specific advice on glove selection and breakthrough times for your use conditions. Inspect and replace worn or damaged gloves. The types of gloves to be considered for this material include:
No protection is ordinarily required under normal conditions of use.

Eye Protection: If contact is likely, safety glasses with side shields are recommended.

Skin and Body Protection: Any specific clothing information provided is based on published literature or manufacturer data. The types of clothing to be considered for this material include:
No skin protection is ordinarily required under normal conditions of use. In accordance with good industrial hygiene practices, precautions should be taken to avoid skin contact.

Specific Hygiene Measures: Always observe good personal hygiene measures, such as washing after handling the material and before eating, drinking, and/or smoking. Routinely wash work clothing and protective equipment to remove contaminants. Discard contaminated clothing and footwear that cannot be cleaned. Practice good housekeeping.

ENVIRONMENTAL CONTROLS
See Sections 6, 7, 12, 13.

SECTION 9 PHYSICAL AND CHEMICAL PROPERTIES

Typical physical and chemical properties are given below. Consult the Supplier in Section 1 for additional data.

GENERAL INFORMATION
Physical State: Liquid
Color: Amber
Odor: Characteristic
Odor Threshold: N/D

ExxonMobil

Product Name: MOBILGEAR 600 XP 220
Revision Date: 05 Nov 2010
Page 5 of 9

IMPORTANT HEALTH, SAFETY, AND ENVIRONMENTAL INFORMATION

Relative Density (at 15 C): 0.894
Flash Point [Method]: >200C (392F) [ASTM D-92]
Flammable Limits (Approximate volume % in air): LEL: 0.9 UEL: 7.0
Autoignition Temperature: N/D
Boiling Point / Range: > 316C (600F)
Vapor Density (Air = 1): > 2 at 101 kPa
Vapor Pressure: < 0.013 kPa (0.1 mm Hg) at 20 C
Evaporation Rate (n-butyl acetate = 1): N/D
pH: N/A
Log Pow (n-Octanol/Water Partition Coefficient): > 3.5
Solubility in Water: Negligible
Viscosity: 220 cSt (220 mm2/sec) at 40 C | 19 cSt (19 mm2/sec) at 100C
Oxidizing Properties: See Hazards Identification Section.

OTHER INFORMATION

Freezing Point: N/D
Melting Point: N/A
Pour Point: -9°C (16°F)
DMSO Extract (mineral oil only), IP-346: < 3 %wt

SECTION 10 STABILITY AND REACTIVITY

STABILITY: Material is stable under normal conditions.

CONDITIONS TO AVOID: Excessive heat. High energy sources of ignition.

MATERIALS TO AVOID: Strong oxidizers

HAZARDOUS DECOMPOSITION PRODUCTS: Material does not decompose at ambient temperatures.

HAZARDOUS POLYMERIZATION: Will not occur.

SECTION 11 TOXICOLOGICAL INFORMATION

ACUTE TOXICITY

Route of Exposure	Conclusion / Remarks
Inhalation	
Toxicity (Rat): LC50 > 5000 mg/m3	Minimally Toxic. Based on test data for structurally similar materials.
Irritation: No end point data.	Negligible hazard at ambient/normal handling temperatures. Based on assessment of the components.
Ingestion	
Toxicity (Rat): LD50 > 5000 mg/kg	Minimally Toxic. Based on test data for structurally similar materials.
Skin	
Toxicity (Rabbit): LD50 > 5000 mg/kg	Minimally Toxic. Based on test data for structurally similar materials.
Irritation (Rabbit): Data available.	Negligible irritation to skin at ambient temperatures. Based on test data for structurally similar materials.

Eye	
Irritation (Rabbit): Data available.	May cause mild, short-lasting discomfort to eyes. Based on test data for structurally similar materials.

CHRONIC/OTHER EFFECTS

For the product itself:

Repeated and/or prolonged exposure may cause irritation to the skin, eyes, or respiratory tract.

Contains:

Base oil severely refined: Not carcinogenic in animal studies. Representative material passes IP-346, Modified Ames test, and/or other screening tests. Dermal and inhalation studies showed minimal effects; lung non-specific infiltration of immune cells, oil deposition and minimal granuloma formation. Not sensitizing in test animals.

Additional information is available by request.

The following ingredients are cited on the lists below: None.

--REGULATORY LISTS SEARCHED--

1 = NTP CARC	3 = IARC 1	5 = IARC 2B
2 = NTP SUS	4 = IARC 2A	6 = OSHA CARC

SECTION 12 ECOLOGICAL INFORMATION

The information given is based on data available for the material, the components of the material, and similar materials.

ECOTOXICITY

Material -- Not expected to be harmful to aquatic organisms.

MOBILITY

Base oil component -- Low solubility and floats and is expected to migrate from water to the land. Expected to partition to sediment and wastewater solids.

PERSISTENCE AND DEGRADABILITY

Biodegradation:

Base oil component -- Expected to be inherently biodegradable

BIOACCUMULATION POTENTIAL

Base oil component -- Has the potential to bioaccumulate, however metabolism or physical properties may reduce the bioconcentration or limit bioavailability.

SECTION 13 DISPOSAL CONSIDERATIONS

Disposal recommendations based on material as supplied. Disposal must be in accordance with current applicable laws and regulations, and material characteristics at time of disposal.

DISPOSAL RECOMMENDATIONS

Product is suitable for burning in an enclosed controlled burner for fuel value or disposal by supervised incineration at very high temperatures to prevent formation of undesirable combustion products.

REGULATORY DISPOSAL INFORMATION

RCRA Information: The unused product, in our opinion, is not specifically listed by the EPA as a hazardous waste (40 CFR, Part 261D), nor is it formulated to contain materials which are listed as hazardous wastes. It does not exhibit the hazardous characteristics of ignitability, corrosivity or reactivity and is not formulated with contaminants as determined by the Toxicity Characteristic Leaching Procedure (TCLP). However, used product may be regulated.

Empty Container Warning Empty Container Warning (where applicable): Empty containers may contain residue and can be dangerous. Do not attempt to refill or clean containers without proper instructions. Empty drums should be completely drained and safely stored until appropriately reconditioned or disposed. Empty containers should be taken for recycling, recovery, or disposal through suitably qualified or licensed contractor and in accordance with governmental regulations. DO NOT PRESSURISE, CUT, WELD, BRAZE, SOLDER, DRILL, GRIND, OR EXPOSE SUCH CONTAINERS TO HEAT, FLAME, SPARKS, STATIC ELECTRICITY, OR OTHER SOURCES OF IGNITION. THEY MAY EXPLODE AND CAUSE INJURY OR DEATH.

SECTION 14 TRANSPORT INFORMATION

LAND (DOT): Not Regulated for Land Transport

LAND (TDG): Not Regulated for Land Transport

SEA (IMDG): Not Regulated for Sea Transport according to IMDG-Code

AIR (IATA): Not Regulated for Air Transport

SECTION 15 REGULATORY INFORMATION

OSHA HAZARD COMMUNICATION STANDARD: When used for its intended purposes, this material is not classified as hazardous in accordance with OSHA 29 CFR 1910.1200.

Complies with the following national/regional chemical inventory requirements:: EINECS, KECI, PICCS, TSCA
Special Cases:

Inventory	Status
NDSL	Restrictions Apply

EPCRA: This material contains no extremely hazardous substances.

SARA (311/312) REPORTABLE HAZARD CATEGORIES: None.

SARA (313) TOXIC RELEASE INVENTORY: This material contains no chemicals subject to the supplier notification requirements of the SARA 313 Toxic Release Program.

The following ingredients are cited on the lists below: None.

--REGULATORY LISTS SEARCHED--

1 = ACGIH ALL	6 = TSCA 5a2	11 = CA P65 REPRO	16 = MN RTK
2 = ACGIH A1	7 = TSCA 5e	12 = CA RTK	17 = NJ RTK
3 = ACGIH A2	8 = TSCA 6	13 = IL RTK	18 = PA RTK
4 = OSHA Z	9 = TSCA 12b	14 = LA RTK	19 = RI RTK
5 = TSCA 4	10 = CA P65 CARC	15 = MI 293	

Code key: CARC=Carcinogen; REPRO=Reproductive

SECTION 16 OTHER INFORMATION

N/D = Not determined, N/A = Not applicable

THIS SAFETY DATA SHEET CONTAINS THE FOLLOWING REVISIONS:

Revision Changes:
Section 06: Notification Procedures - Header was modified.
Section 10 Stability and Reactivity - Header was modified.
Section 13: Disposal Recommendations - Note was modified.
Section 08: Personal Protection was modified.
Section 08: Hand Protection was modified.
Section 07: Handling and Storage - Handling was modified.
Section 07: Handling and Storage - Storage Phrases was modified.
Section 11: Dermal Lethality Test Data was modified.
Section 11: Oral Lethality Test Data was modified.
Section 11: Inhalation Irritation Test Data was modified.
Section 05: Hazardous Combustion Products was modified.
Section 06: Accidental Release - Spill Management - Water was modified.
Section 09: Relative Density - Header was modified.
Section 09: Viscosity was modified.
Section 14: Sea (IMDG) - Header was modified.
Section 14: Air (IATA) - Header was modified.
Section 14: LAND (TDG) - Header was modified.
Section 14: LAND (DOT) - Header was modified.
Section 15: List Citation Table - Header was modified.
Section 14: LAND (DOT) - Default was modified.
Section 14: LAND (TDG) Default was modified.
Section 14: Sea (IMDG) - Default was modified.
Section 14: Air (IATA) - Default was modified.
Section 15: National Chemical Inventory Listing - Header was modified.
Section 16: Code to MHCs was modified.
Section 08: Exposure limits/standards was modified.
Hazard Identification: OSHA - May be Hazardous Statement was modified.
Section 06: Notification Procedures was modified.
Section 09: Oxidizing Properties was modified.
Section 01: Company Contact Methods Sorted by Priority was modified.

The information and recommendations contained herein are, to the best of ExxonMobil's knowledge and belief, accurate and reliable as of the date issued. You can contact ExxonMobil to insure that this document is the most current available from ExxonMobil. The information and recommendations are offered for the user's consideration and examination. It is the user's responsibility to satisfy itself that the product is suitable for the intended use. If buyer repackages this product, it is the user's responsibility to insure proper health, safety and other necessary information is included with and/or on the container. Appropriate warnings and safe-handling procedures should be provided to handlers and users. Alteration of this document is strictly prohibited. Except to the extent required by law, re-publication or retransmission of this document, in whole or in part, is not permitted. The term, "ExxonMobil" is used for convenience, and may include any one or more of ExxonMobil Chemical Company, Exxon Mobil Corporation, or any affiliates in which they directly or indirectly hold any interest.

Internal Use Only
MHC: 0B, 0B, 0, 0, 0, 0 PPEC: A

DGN: 7077874XUS (1012017)

Copyright 2002 Exxon Mobil Corporation, All rights reserved

11.5.8 DOW CORNING MOLYKOTE BR2-PLUS

Product Information

Specialty Lubricants

MOLYKOTE® BR 2 plus High Performance Grease

FEATURES

- High load carrying capacity
- Suitable for long-term lubrication
- Good oxidation resistance
- Emergency running properties, i.e. in the case of mixed friction providing of wear protection by solid lubricants and EP additives
- Good protection against scaring (false Brinelling)
- Good water washout resistance
- Good corrosion protection
- Good protection against fretting corrosion

COMPOSITION

- Mineral oil
- Lithium soap
- Solid lubricants
- EP additive
- Corrosion inhibitor

High performance grease with solid lubricants for metal/metal combinations involving slow to fast movements, particularly with medium to high loads

APPLICATION

- Used successfully on roller bearings, plain bearings, sliding guides, roller guides, ball-and-socket joints, splined shafts and threaded spindles.

TYPICAL PROPERTIES

Specification writers: These values are not intended for use in preparing specifications. Please contact your local Dow Corning sales representative prior to writing specifications on this product.

Standard	Test	Unit	Result
	Color		Black
	Consistency, density, viscosity		
DIN 51 818	NLGI consistency class		2
ISO 2137	Worked penetration	mm/10	265-295
ISO 2811	Density at 20°C	g/ml	0.89
DIN 51 562	Base oil viscosity at 40°C[1]	mm²/s	114
	Temperature		
	Service temperature	°C	-30 to +130, +150 for short periods
ISO 2176	Drop point	°C	>=175
ASTM-D-1478-80	Low temperature torque test at -20°C		
	Initial break-away torque	Nm	151
	Torque after 20 minutes running time	Nm	59
	Load-carrying capacity, wear protection, service life		
	Four-ball tester (VKA)		
DIN 51 350 pt.4	Weld load	N	3600
DIN 51 350 pt.5	Wear scar under 800N load	mm	0.8
	Almen-Wieland machine		
	OK load	N	15,500
	Frictional force with OK load	N	3150
DIN 51821-02-A	FAG rolling element bearing tester equipment, FE 9, 4500/6000-130, F‡}	h	40
	Speed		
	DN value[2]	mm/min	450,000
	Resistance		
DIN 51 808	Oxidation resistance, pressure drop 100h, 99°C	bar	0.1
	Corrosion protection		
DIN 51 802	SKF-Emcor method		0

TYPICAL PROPERTIES (continued)

Standard	Test	Unit	Result
	Oil separation - evaporation		
DIN 51 817	Oil separation, 7 days, 40°C	%	3.8

1. Calculated viscosity value of base oil mixture.
2. DN values are calculated approximations and will vary widely with temperature, load and bearing type.

HOW TO USE

How to apply

Clean points of contact. Apply in same way as lubricating greases, using brush, spatula, grease-gun or automatic lubricating device. Suitable for delivery by central lubricating system.

HANDLING PRECAUTIONS

PRODUCT SAFETY INFORMATION REQUIRED FOR SAFE USE IS NOT INCLUDED. BEFORE HANDLING, READ PRODUCT AND SAFETY DATA SHEETS AND CONTAINER LABELS FOR SAFE USE, PHYSICAL AND HEALTH HAZARD INFORMATION. THE SAFETY DATA SHEET IS AVAILABLE FROM YOUR LOCAL DOW CORNING SALES REPRESENTATIVE.

USABLE LIFE AND STORAGE

When stored at or below 20°C in the original unopened containers, this product has a usable life of 60 months from the date of production.

PACKAGING

This product is available in different standard container sizes. Detailed container size information should be obtained from your nearest Dow Corning sales office or Dow Corning distributor.

LIMITATIONS

This product is neither tested nor represented as suitable for medical or pharmaceutical uses.

HEALTH AND ENVIRONMENTAL INFORMATION

To support customers in their product safety needs, Dow Corning has an extensive Product Stewardship organization and a team of Health, Environment and Regulatory Affairs specialists available in each area.

For further information, please consult your local Dow Corning representative.

WARRANTY INFORMATION - PLEASE READ CAREFULLY

The information contained herein is offered in good faith and is believed to be accurate. However, because conditions and methods of use of our products are beyond our control, this information should not be used in substitution for customer's tests to ensure that Dow Corning's products are safe, effective, and fully satisfactory for the intended end use. Dow Corning's sole warranty is that the product will meet the Dow Corning sales specifications in effect at the time of shipment. Your exclusive remedy for breach of such warranty is limited to refund of purchase price or replacement of any product shown to be other than as warranted. Dow Corning specifically disclaims any other express or implied warranty of fitness for a particular purpose or merchantability. Unless Dow Corning provides you with a specific, duly signed endorsement of fitness for use, Dow Corning disclaims liability for any incidental or consequential damages. Suggestions of use shall not be taken as inducements to infringe any patent.

® MOLYKOTE is a registered trademark of Dow Corning Corporation
©1997-2001 Dow Corning Corporation. All rights reserved

DOW CORNING

DOW CORNING CORPORATION
Material Safety Data Sheet

Page: 1 of 8
Version: 3.0
Revision Date: 2012/07/31

MOLYKOTE(R) BR-2 PLUS HIGH PERFORMANCE GREASE

1. PRODUCT AND COMPANY IDENTIFICATION

Dow Corning Corporation
South Saginaw Road
Midland, Michigan 48686

24 Hour Emergency Telephone: (989) 496-5900
Customer Service: (989) 496-6000
Product Disposal Information: (989) 496-6315
CHEMTREC: (800) 424-9300

MSDS No.: 01512854 Revision Date: 2012/07/31

Generic Description: Molybdenum disulfide grease
Physical Form: Grease
Color: Black
Odor: Slight odor

NFPA Profile: Health 2 Flammability 1 Instability/Reactivity 0

Note: NFPA = National Fire Protection Association

2. HAZARDS IDENTIFICATION

POTENTIAL HEALTH EFFECTS

Acute Effects

Eye: Direct contact may cause severe irritation.

Skin: No significant irritation expected from a single short-term exposure.

Inhalation: Material is not likely to present an inhalation hazard at ambient conditions. However, if material is heated or high vapor concentration is attained, central nervous system depression may occur, which is characterized by drowsiness, dizziness, confusion or loss of coordination.

Oral: Low ingestion hazard in normal use.

Prolonged/Repeated Exposure Effects

Skin: Repeated or prolonged contact may cause defatting and drying of skin which may result in skin irritation and dermatitis.

Inhalation: No known applicable information.

Oral: Repeated ingestion or swallowing large amounts may injure internally.

Signs and Symptoms of Overexposure

No known applicable information.

DOW CORNING

DOW CORNING CORPORATION
Material Safety Data Sheet

MOLYKOTE(R) BR-2 PLUS HIGH PERFORMANCE GREASE

Medical Conditions Aggravated by Exposure

No known applicable information.

The above listed potential effects of overexposure are based on actual data, results of studies performed upon similar compositions, component data and/or expert review of the product. Please refer to Section 11 for the detailed toxicology information.

3. COMPOSITION/INFORMATION ON INGREDIENTS

CAS Number	Wt %	Component Name
68649-42-3	3.0 - 7.0	Zinc (C1-C14) Dialkyldithiophosphate

The above components are hazardous as defined in 29 CFR 1910.1200.

4. FIRST AID MEASURES

Eye:	Immediately flush the contaminated eye(s) with lukewarm, gently flowing water for 15 - 20 minutes while holding the eyelid(s) open. If contact lens is present, DO NOT delay irrigation or attempt to remove the lens. Take care not to rinse contaminated water into the unaffected eye or onto the face. Immediately obtain medical attention.
Skin:	Remove contaminated clothing, shoes and leather goods (e.g. watchbands, belts). Quickly and gently blot or brush away excess chemical. Flush with lukewarm gently flowing water for 15 minutes. If irritation persists, repeat flushing. If irritation persists, obtain medical advice.
Inhalation:	If symptoms are experienced remove source of contamination or move victim to fresh air. If irritation persists, obtain medical advice.
Oral:	If irritation or discomfort occur, obtain medical advice.
Notes to Physician:	Treat according to person's condition and specifics of exposure.

5. FIRE FIGHTING MEASURES

Flash Point:	Not applicable.
Autoignition Temperature:	Not determined.
Flammability Limits in Air:	Not determined.
Extinguishing Media:	On large fires use dry chemical, foam or water spray. On small fires use carbon dioxide (CO2), dry chemical or water spray. Water can be used to cool fire exposed containers.

DOW CORNING

DOW CORNING CORPORATION
Material Safety Data Sheet

MOLYKOTE(R) BR-2 PLUS HIGH PERFORMANCE GREASE

Fire Fighting Measures:	Self-contained breathing apparatus and protective clothing should be worn in fighting large fires involving chemicals. Determine the need to evacuate or isolate the area according to your local emergency plan. Use water spray to keep fire exposed containers cool.
Unusual Fire Hazards:	None.

6. ACCIDENTAL RELEASE MEASURES

Containment/Clean up:	Observe all personal protection equipment recommendations described in Sections 5 and 8. Wipe up or scrape up and contain for salvage or disposal. Clean area as appropriate since spilled materials, even in small quantities, may present a slip hazard. Final cleaning may require use of steam, solvents or detergents. Dispose of saturated absorbant or cleaning materials appropriately, since spontaneous heating may occur. Local, state and federal laws and regulations may apply to releases and disposal of this material, as well as those materials and items employed in the cleanup of releases. You will need to determine which federal, state and local laws and regulations are applicable. Sections 13 and 15 of this MSDS provide information regarding certain federal and state requirements.

Note: See Section 8 for Personal Protective Equipment for Spills. Call (989) 496-5900, if additional information is required.

7. HANDLING AND STORAGE

Use with adequate ventilation. Avoid eye contact. Avoid skin contact. Avoid breathing vapor. Keep container closed. Do not take internally.

Use reasonable care and store away from oxidizing materials. This material in its finely divided form presents an explosion hazard. Follow NFPA 654 (for chemical dusts) or 484 (for metal dusts) as appropriate for managing dust hazards to minimize secondary explosion potential.

8. EXPOSURE CONTROLS / PERSONAL PROTECTION

Component Exposure Limits

There are no components with workplace exposure limits.

Engineering Controls

Local Ventilation:	Recommended.
General Ventilation:	Recommended.

Personal Protective Equipment for Routine Handling

DOW CORNING

DOW CORNING CORPORATION
Material Safety Data Sheet

MOLYKOTE(R) BR-2 PLUS HIGH PERFORMANCE GREASE

Eyes:	Use chemical worker's goggles.
Skin:	Wash at mealtime and end of shift. Contaminated clothing and shoes should be removed as soon as practical and thoroughly cleaned before reuse. Chemical protective gloves are recommended.
Suitable Gloves:	Avoid skin contact by implementing good industrial hygiene practices and procedures. Select and use gloves and/or protective clothing to further minimize the potential for skin contact. Consult with your glove and/or personnel protective equipment manufacturer for selection of appropriate compatible materials.
Inhalation:	Use respiratory protection unless adequate local exhaust ventilation is provided or exposure assessment demonstrates that exposures are within recommended exposure guidelines. IH personnel can assist in judging the adequacy of existing engineering controls.
Suitable Respirator:	Respiratory protection is not needed under ambient conditions. If vapor is generated when material is heated or handled, the following is advised. General and local exhaust ventilation is recommended to maintain vapor exposures below recommended limits. Where concentrations are above recommended limits or are unknown, appropriate respiratory protection should be worn. Follow OSHA respirator regulations (29 CFR 1910.134) and use NIOSH/MSHA approved respirators.

Personal Protective Equipment for Spills

Eyes:	Use full face respirator.
Skin:	Wash at mealtime and end of shift. Contaminated clothing and shoes should be removed as soon as practical and thoroughly cleaned before reuse. Chemical protective gloves are recommended.
Inhalation/Suitable Respirator:	Respiratory protection recommended. Follow OSHA Respirator Regulations (29 CFR 1910.134) and use NIOSH/MHSA approved respirators. Protection provided by air purifying respirators against exposure to any hazardous chemical is limited. Use a positive pressure air supplied respirator if there is any potential for uncontrolled release, exposure levels are unknown, or any other circumstance where air purifying respirators may not provide adequate protection.
Precautionary Measures:	Avoid eye contact. Avoid skin contact. Avoid breathing vapor. Keep container closed. Do not take internally. Use reasonable care.

Note: These precautions are for room temperature handling. Use at elevated temperature or aerosol/spray applications may require added precautions.

9. PHYSICAL AND CHEMICAL PROPERTIES

Physical Form:	Grease
Color:	Black
Odor:	Slight odor
Specific Gravity @ 25°C:	0.89

DOW CORNING

DOW CORNING CORPORATION
Material Safety Data Sheet

MOLYKOTE(R) BR-2 PLUS HIGH PERFORMANCE GREASE

Viscosity:	Not determined.
Freezing/Melting Point:	Not determined.
Boiling Point:	Not determined.
Vapor Pressure @ 25°C:	Not determined.
Vapor Density:	Not determined.
Solubility in Water:	Not determined.
pH:	Not determined.
Volatile Content:	Not determined.
Flash Point:	Not applicable.
Autoignition Temperature:	Not determined.
Flammability Limits in Air:	Not determined.

Note: The above information is not intended for use in preparing product specifications. Contact Dow Corning before writing specifications.

10. STABILITY AND REACTIVITY

Chemical Stability:	Stable.
Hazardous Polymerization:	Hazardous polymerization will not occur.
Conditions to Avoid:	None.
Materials to Avoid:	Oxidizing material can cause a reaction.

Hazardous Decomposition Products

Thermal breakdown of this product during fire or very high heat conditions may evolve the following decomposition products: Carbon oxides and traces of incompletely burned carbon compounds. Metal oxides. Phosphorous oxides. Sulfur oxides. Fluorine compounds. Formaldehyde.

11. TOXICOLOGICAL INFORMATION

Special Hazard Information on Components

No known applicable information.

12. ECOLOGICAL INFORMATION

Environmental Fate and Distribution

Complete information is not yet available.

Environmental Effects

Complete information is not yet available.

DOW CORNING

DOW CORNING CORPORATION
Material Safety Data Sheet

MOLYKOTE(R) BR-2 PLUS HIGH PERFORMANCE GREASE

Fate and Effects in Waste Water Treatment Plants

Complete information is not yet available.

Ecotoxicity Classification Criteria

Hazard Parameters (LC50 or EC50)	High	Medium	Low
Acute Aquatic Toxicity (mg/L)	<=1	>1 and <=100	>100
Acute Terrestrial Toxicity	<=100	>100 and <= 2000	>2000

This table is adapted from "Environmental Toxicology and Risk Assessment", ASTM STP 1179, p.34, 1993.

This table can be used to classify the ecotoxicity of this product when ecotoxicity data is listed above. Please read the other information presented in the section concerning the overall ecological safety of this material.

13. DISPOSAL CONSIDERATIONS

RCRA Hazard Class (40 CFR 261)

When a decision is made to discard this material, as received, is it classified as a hazardous waste? No

State or local laws may impose additional regulatory requirements regarding disposal. Call (989) 496-6315, if additional information is required.

14. TRANSPORT INFORMATION

DOT Road Shipment Information (49 CFR 172.101)

Not subject to DOT.

Ocean Shipment (IMDG)

Not subject to IMDG code.

Air Shipment (IATA)

Not subject to IATA regulations.

Call Dow Corning Transportation, (989) 496-8577, if additional information is required.

15. REGULATORY INFORMATION

Contents of this MSDS comply with the OSHA Hazard Communication Standard 29 CFR 1910.1200.

TSCA Status: All chemical substances in this material are included on or exempted from listing on the TSCA Inventory of Chemical Substances.

EPA SARA Title III Chemical Listings

DOW CORNING

DOW CORNING CORPORATION
Material Safety Data Sheet

MOLYKOTE(R) BR-2 PLUS HIGH PERFORMANCE GREASE

Section 302 Extremely Hazardous Substances (40 CFR 355):
None.

Section 304 CERCLA Hazardous Substances (40 CFR 302):
None.

Section 311/312 Hazard Class (40 CFR 370):
Acute: Yes
Chronic: No
Fire: No
Pressure: No
Reactive: No

Section 313 Toxic Chemicals (40 CFR 372):

CAS Number	Wt %	Component Name
68649-42-3	3.4	Zinc (C1-C14) Dialkyldithiophosphate

Note: Chemicals are listed under the 313 Toxic Chemicals section only if they meet or exceed a reporting threshold.

Supplemental State Compliance Information

California

Warning: This product contains the following chemical(s) listed by the State of California under the Safe Drinking Water and Toxic Enforcement Act of 1986 (Proposition 65) as being known to cause cancer, birth defects or other reproductive harm.

None known.

Massachusetts

CAS Number	Wt %	Component Name
7620-77-1	7.0 - 13.0	12-Hydroxy lithium stearate
7782-42-5	1.0 - 5.0	Graphite

New Jersey

CAS Number	Wt %	Component Name
64742-52-5	40.0 - 60.0	Hydrotreated heavy naphthenic petroleum distillate

DOW CORNING

DOW CORNING CORPORATION
Material Safety Data Sheet

MOLYKOTE(R) BR-2 PLUS HIGH PERFORMANCE GREASE

64742-65-0	30.0 - 50.0	Solvent dewaxed heavy paraffinic petroleum distillate
7620-77-1	7.0 - 13.0	12-Hydroxy lithium stearate
64742-62-7	3.0 - 7.0	Residual oils (petroleum), solvent-dewaxed
68649-42-3	3.0 - 7.0	Zinc (C1-C14) Dialkyldithiophosphate

Pennsylvania

CAS Number	Wt %	Component Name
64742-52-5	40.0 - 60.0	Hydrotreated heavy naphthenic petroleum distillate
64742-65-0	30.0 - 50.0	Solvent dewaxed heavy paraffinic petroleum distillate
7620-77-1	7.0 - 13.0	12-Hydroxy lithium stearate
64742-62-7	3.0 - 7.0	Residual oils (petroleum), solvent-dewaxed
68649-42-3	3.0 - 7.0	Zinc (C1-C14) Dialkyldithiophosphate
7782-42-5	1.0 - 5.0	Graphite

16. OTHER INFORMATION

Prepared by: Dow Corning Corporation

These data are offered in good faith as typical values and not as product specifications. No warranty, either expressed or implied, is hereby made. The recommended industrial hygiene and safe handling procedures are believed to be generally applicable. However, each user should review these recommendations in the specific context of the intended use and determine whether they are appropriate.

(R) indicates Registered Trademark

11.5.9 MOBIL POLYREX EM

Mobil

Mobil Polyrex EM

Electric Motor Bearing Grease

Product Description

Super-premium Mobil Polyrex EM Series grease is specially formulated for electric-motor bearings. The advanced thickener formulation and proprietary manufacturing techniques provide improved bearing performance and protection for long electric motor life.

Features and Benefits

Mobil Polyrex EM and Mobil Polyrex EM 103 offer the following features and benefits:

Features	Advantages and Potential Benefits
Outstanding grease life	Outstanding long-life, high-temperature lubrication of ball and roller bearings, particularly in sealed-for-life applications
Advanced polyurea thickener	Increased durability versus conventional polyurea greases when subjected to mechanical shear forces
Excellent corrosion resistance	Mobil Polyrex EM and Mobil Polyrex EM 103 provide protection against rust and corrosion. Mobil Polyrex EM provides additional protection under mild salt-water wash conditions versus Polyrex EM 103
Low-noise properties	Mobil Polyrex EM is suitable for lubrication of ball bearings in many noise-sensitive applications

Applications

Mobil Polyrex EM greases are recommended by many major bearing and electric motor manufacturers for long-life lubrication of electric motor ball and roller bearings.

Mobil Polyrex EM 103 is more specifically recommended for applications such as vertically mounted bearings, or very large motors where a stiffer grease consistency may be required by the OEM, and low noise properties are not required.

Mobil Polyrex EM greases have been shown to be compatible with a number of ExxonMobil lithium complex greases, as well as competitive electric motor mineral polyurea products, as determined by the methodology of ASTM D6185. For specific questions about grease compatibility, contact your Mobil representative.

Key applications include:

- Electric motor bearings
- Fin fan bearings
- High-temperature pump bearings
- Factory-filled, sealed-for-life ball bearings
- Ball or roller bearings operating at high temperatures where low oil separation is required
- Polyrex EM for ball or roller bearings operating in noise sensitive environments

Specifications and Approvals

Mobil Polyrex EM meets or exceeds the requirements of:	Mobil Polyrex EM	Mobil Polyrex EM 103
DIN 51825: (2004-06)	KP2P-20	

Typical Properties

	Mobil Polyrex EM	Mobil Polyrex EM 103
NLGI Grade	2	3
Color	Blue	Blue
Base Oil Viscosity, ASTM D 445		
cSt @ 40°C	115	115
cSt @ 100°C	12.2	12.2
Mineral Oil Viscosity Index, ASTM D 2270	95	95
Penetration, ASTM D217 worked, 60x, mm/10	285	250
Penetration Change after 100.000 strokes, ASTM D217, mm/10	40	40
Dropping Point, ASTM D 2265, °C (°F)	260	270
Oil separation test, ASTM D 1742, %	0.5	0.1
High Temperature Grease Life, ASTM D 3336, Hours @ 177°C	750+	750+
4-Ball Wear Scar, ASTM D 2266, @ 40kg, 1200 rpm, 75°C, 1 hr, mm	0.41	0.6
Low Temperature Torque, ASTM D 1478, g-cm @ -29°C		
Starting	7500	9300
Running	800	1000
EMCOR Corrosion Performance, 10% Synthetic Sea Water ASTM D 6138 (Prepared As Per ASTM D 665B)	0, 1 (No Rust)	
Rust Protection, ASTM D 1743, Distilled Water	Pass	Pass
Copper Corrosion Resistance, ASTM D 4048	1A	1A
Water Washout, ASTM D 1264, %	1.9	0.8

Health and Safety

Based on available information, this product is not expected to produce adverse effects on health when used for the intended application and when the recommendations provided in the Material Safety Data Sheet (MSDS) are followed. This product should not be used for purposes other than its intended use. If disposing of used product, take care to protect the environment.

The Mobil logotype, the Pegasus design, and Polyrex EM are trademarks of Exxon Mobil Corporation, or one of its subsidiaries

12-2010

Exxon Mobil Corporation
3225 Gallows Road
Fairfax, VA 22037

1-800-ASK MOBIL (275-6624)

Typical Properties are typical of those obtained with normal production tolerance and do not constitute a specification. Variations that do not affect product performance are to be expected during normal manufacture and at different blending locations. The information contained herein is subject to change without notice. All products may not be available locally. For more information,

ExxonMobil

Product Name: MOBIL POLYREX EM
Revision Date: 10 Feb 2011
Page 1 of 9

MATERIAL SAFETY DATA SHEET

SECTION 1 PRODUCT AND COMPANY IDENTIFICATION

PRODUCT

Product Name: **MOBIL POLYREX EM**
Product Description: Base Oil and Additives
Product Code: 2015A020G010, 641688-00, 97Y278
Intended Use: Grease

COMPANY IDENTIFICATION

Supplier: **EXXON MOBIL CORPORATION**
3225 GALLOWS RD.
FAIRFAX, VA. 22037 USA

24 Hour Health Emergency	609-737-4411
Transportation Emergency Phone	800-424-9300
ExxonMobil Transportation No.	281-834-3296
Product Technical Information	800-662-4525, 800-947-9147
MSDS Internet Address	http://www.exxon.com, http://www.mobil.com

SECTION 2 COMPOSITION / INFORMATION ON INGREDIENTS

Reportable Hazardous Substance(s) or Complex Substance(s)

Name	CAS#	Concentration*
AMINES, C12-14-ALKYL, ISOOCTYL PHOSPHATES	68187-67-7	1 - 5%

* All concentrations are percent by weight unless material is a gas. Gas concentrations are in percent by volume.

SECTION 3 HAZARDS IDENTIFICATION

This material is not considered to be hazardous according to regulatory guidelines (see (M)SDS Section 15).

POTENTIAL HEALTH EFFECTS

Low order of toxicity. Excessive exposure may result in eye, skin, or respiratory irritation. High-pressure injection under skin may cause serious damage.

NFPA Hazard ID:	Health:	0	Flammability:	1	Reactivity:	0
HMIS Hazard ID:	Health:	0	Flammability:	1	Reactivity:	0

NOTE: This material should not be used for any other purpose than the intended use in Section 1 without expert advice. Health studies have shown that chemical exposure may cause potential human health risks which may vary from person to person.

SECTION 4 FIRST AID MEASURES

INHALATION

Under normal conditions of intended use, this material is not expected to be an inhalation hazard.

SKIN CONTACT

Wash contact areas with soap and water. Remove contaminated clothing. Launder contaminated clothing before reuse. If product is injected into or under the skin, or into any part of the body, regardless of the appearance of the wound or its size, the individual should be evaluated immediately by a physician as a surgical emergency. Even though initial symptoms from high pressure injection may be minimal or absent, early surgical treatment within the first few hours may significantly reduce the ultimate extent of injury.

EYE CONTACT

Flush thoroughly with water. If irritation occurs, get medical assistance.

INGESTION

First aid is normally not required. Seek medical attention if discomfort occurs.

SECTION 5 FIRE FIGHTING MEASURES

EXTINGUISHING MEDIA

Appropriate Extinguishing Media: Use water fog, foam, dry chemical or carbon dioxide (CO2) to extinguish flames.

Inappropriate Extinguishing Media: Straight Streams of Water

FIRE FIGHTING

Fire Fighting Instructions: Evacuate area. Prevent runoff from fire control or dilution from entering streams, sewers, or drinking water supply. Firefighters should use standard protective equipment and in enclosed spaces, self-contained breathing apparatus (SCBA). Use water spray to cool fire exposed surfaces and to protect personnel.

Hazardous Combustion Products: Smoke, Fume, Aldehydes, Sulfur oxides, Incomplete combustion products, Oxides of carbon

FLAMMABILITY PROPERTIES

Flash Point [Method]: >204C (399F) [EST. FOR OIL, ASTM D-92 (COC)]
Flammable Limits (Approximate volume % in air): LEL: N/D UEL: N/D
Autoignition Temperature: N/D

SECTION 6 ACCIDENTAL RELEASE MEASURES

NOTIFICATION PROCEDURES

In the event of a spill or accidental release, notify relevant authorities in accordance with all applicable regulations. US regulations require reporting releases of this material to the environment which exceed the applicable reportable quantity or oil spills which could reach any waterway including intermittent dry creeks. The National Response Center can be reached at (800)424-8802.

PROTECTIVE MEASURES

Avoid contact with spilled material. Warn or evacuate occupants in surrounding and downwind areas if required due to toxicity or flammability of the material. See Section 5 for fire fighting information. See the Hazard Identification Section for Significant Hazards. See Section 4 for First Aid Advice. See Section 8 for advice on the minimum requirements for personal protective equipment. Additional protective measures may be necessary, depending on the specific circumstances and/or the expert judgment of the emergency responders. For emergency responders: Respiratory protection: respiratory protection will be necessary only in special cases, e.g., formation of mists. Half-face or full-face respirator with filter(s) for dust/organic vapor or Self Contained Breathing Apparatus (SCBA) can be used depending on the size of spill and potential level of exposure. If the exposure cannot be completely characterized or an oxygen deficient atmosphere is possible or anticipated, SCBA is recommended. Work gloves that are resistant to hydrocarbons are recommended. Gloves made of polyvinyl acetate (PVA) are not water-resistant and are not suitable for emergency use. Chemical goggles are recommended if splashes or contact with eyes is possible. Small spills: normal antistatic work clothes are usually adequate. Large spills: full body suit of chemical resistant, antistatic material is recommended.

SPILL MANAGEMENT

Land Spill: Scrape up spilled material with shovels into a suitable container for recycle or disposal.

Water Spill: Stop leak if you can do it without risk. Confine the spill immediately with booms. Warn other shipping. Skim from surface.

Water spill and land spill recommendations are based on the most likely spill scenario for this material; however, geographic conditions, wind, temperature, (and in the case of a water spill) wave and current direction and speed may greatly influence the appropriate action to be taken. For this reason, local experts should be consulted. Note: Local regulations may prescribe or limit action to be taken.

ENVIRONMENTAL PRECAUTIONS

Prevent entry into waterways, sewers, basements or confined areas.

SECTION 7 HANDLING AND STORAGE

HANDLING

Avoid contact with skin. Prevent small spills and leakage to avoid slip hazard.

Static Accumulator: This material is not a static accumulator.

STORAGE

Do not store in open or unlabelled containers.

SECTION 8 EXPOSURE CONTROLS / PERSONAL PROTECTION

NOTE: Limits/standards shown for guidance only. Follow applicable regulations.

ENGINEERING CONTROLS

The level of protection and types of controls necessary will vary depending upon potential exposure conditions. Control measures to consider:
No special requirements under ordinary conditions of use and with adequate ventilation.

PERSONAL PROTECTION

Personal protective equipment selections vary based on potential exposure conditions such as applications, handling practices, concentration and ventilation. Information on the selection of protective equipment for use with this material, as provided below, is based upon intended, normal usage.

Respiratory Protection: If engineering controls do not maintain airborne contaminant concentrations at a level which is adequate to protect worker health, an approved respirator may be appropriate. Respirator selection, use, and maintenance must be in accordance with regulatory requirements, if applicable. Types of respirators to be considered for this material include:
No protection is ordinarily required under normal conditions of use and with adequate ventilation.

For high airborne concentrations, use an approved supplied-air respirator, operated in positive pressure mode. Supplied air respirators with an escape bottle may be appropriate when oxygen levels are inadequate, gas/vapor warning properties are poor, or if air purifying filter capacity/rating may be exceeded.

Hand Protection: Any specific glove information provided is based on published literature and glove manufacturer data. Glove suitability and breakthrough time will differ depending on the specific use conditions. Contact the glove manufacturer for specific advice on glove selection and breakthrough times for your use conditions. Inspect and replace worn or damaged gloves. The types of gloves to be considered for this material include:
Chemical resistant gloves are recommended. If contact with forearms is likely wear gauntlet style gloves.

Eye Protection: If contact is likely, safety glasses with side shields are recommended.

Skin and Body Protection: Any specific clothing information provided is based on published literature or manufacturer data. The types of clothing to be considered for this material include:
Chemical/oil resistant clothing is recommended.

Specific Hygiene Measures: Always observe good personal hygiene measures, such as washing after handling the material and before eating, drinking, and/or smoking. Routinely wash work clothing and protective equipment to remove contaminants. Discard contaminated clothing and footwear that cannot be cleaned. Practice good housekeeping.

ENVIRONMENTAL CONTROLS
See Sections 6, 7, 12, 13.

SECTION 9 PHYSICAL AND CHEMICAL PROPERTIES

Typical physical and chemical properties are given below. Consult the Supplier in Section 1 for additional data.

GENERAL INFORMATION
Physical State: Solid

Form: Semi-fluid
Color: Blue
Odor: Characteristic
Odor Threshold: N/D

IMPORTANT HEALTH, SAFETY, AND ENVIRONMENTAL INFORMATION

Relative Density (at 15 C): 0.884
Flash Point [Method]: >204C (399F) [EST. FOR OIL, ASTM D-92 (COC)]
Flammable Limits (Approximate volume % in air): LEL: N/D UEL: N/D
Autoignition Temperature: N/D
Boiling Point / Range: > 330C (626F) [Estimated]
Vapor Density (Air = 1): N/D
Vapor Pressure: < 0.013 kPa (0.1 mm Hg) at 20 C [Estimated]
Evaporation Rate (n-butyl acetate = 1): N/D
pH: N/A
Log Pow (n-Octanol/Water Partition Coefficient): > 3.5 [Estimated]
Solubility in Water: Negligible
Viscosity: 95 cSt (95 mm2/sec) at 40 C
Oxidizing Properties: See Hazards Identification Section.

OTHER INFORMATION

Freezing Point: N/D
Melting Point: >250°C (482°F)
DMSO Extract (mineral oil only), IP-346: < 3 %wt
Decomposition Temperature: N/D

NOTE: Most physical properties above are for the oil component in the material.

SECTION 10 STABILITY AND REACTIVITY

STABILITY: Material is stable under normal conditions.

CONDITIONS TO AVOID: Excessive heat. High energy sources of ignition.

MATERIALS TO AVOID: Strong oxidizers

HAZARDOUS DECOMPOSITION PRODUCTS: Material does not decompose at ambient temperatures.

HAZARDOUS POLYMERIZATION: Will not occur.

SECTION 11 TOXICOLOGICAL INFORMATION

ACUTE TOXICITY

Route of Exposure	Conclusion / Remarks
Inhalation	
Toxicity: No end point data.	Minimally Toxic. Based on assessment of the components.
Irritation: No end point data.	Negligible hazard at ambient/normal handling temperatures. Based on assessment of the components.
Ingestion	
Toxicity (Rat): LD50 > 5000 mg/kg	Minimally Toxic. Based on test data for structurally similar

	materials.
Skin	
Toxicity (Rabbit): LD50 > 5000 mg/kg	Minimally Toxic. Based on test data for structurally similar materials.
Irritation (Rabbit): Data available.	Mildly irritating to skin with prolonged exposure. Based on assessment of the components.
Eye	
Irritation (Rabbit): Data available.	May cause mild, short-lasting discomfort to eyes. Based on assessment of the components.

CHRONIC/OTHER EFFECTS

Contains:

Base oil severely refined: Not carcinogenic in animal studies. Representative material passes IP-346, Modified Ames test, and/or other screening tests. Dermal and inhalation studies showed minimal effects; lung non-specific infiltration of immune cells, oil deposition and minimal granuloma formation. Not sensitizing in test animals.

Additional information is available by request.

The following ingredients are cited on the lists below: None.

--REGULATORY LISTS SEARCHED--

1 = NTP CARC	3 = IARC 1	5 = IARC 2B
2 = NTP SUS	4 = IARC 2A	6 = OSHA CARC

SECTION 12 ECOLOGICAL INFORMATION

The information given is based on data available for the material, the components of the material, and similar materials.

ECOTOXICITY

Material -- Not expected to be harmful to aquatic organisms.

MOBILITY

Base oil component -- Low solubility and floats and is expected to migrate from water to the land. Expected to partition to sediment and wastewater solids.

PERSISTENCE AND DEGRADABILITY

Biodegradation:

Base oil component -- Expected to be inherently biodegradable

BIOACCUMULATION POTENTIAL

Base oil component -- Has the potential to bioaccumulate, however metabolism or physical properties may reduce the bioconcentration or limit bioavailability.

SECTION 13 DISPOSAL CONSIDERATIONS

Disposal recommendations based on material as supplied. Disposal must be in accordance with current applicable laws and regulations, and material characteristics at time of disposal.

DISPOSAL RECOMMENDATIONS

Product is suitable for burning in an enclosed controlled burner for fuel value or disposal by supervised incineration at very high temperatures to prevent formation of undesirable combustion products.

REGULATORY DISPOSAL INFORMATION

RCRA Information: The unused product, in our opinion, is not specifically listed by the EPA as a hazardous waste (40 CFR, Part 261D), nor is it formulated to contain materials which are listed as hazardous wastes. It does not exhibit the hazardous characteristics of ignitability, corrosivity or reactivity and is not formulated with contaminants as determined by the Toxicity Characteristic Leaching Procedure (TCLP). However, used product may be regulated.

Empty Container Warning Empty Container Warning (where applicable): Empty containers may contain residue and can be dangerous. Do not attempt to refill or clean containers without proper instructions. Empty drums should be completely drained and safely stored until appropriately reconditioned or disposed. Empty containers should be taken for recycling, recovery, or disposal through suitably qualified or licensed contractor and in accordance with governmental regulations. DO NOT PRESSURISE, CUT, WELD, BRAZE, SOLDER, DRILL, GRIND, OR EXPOSE SUCH CONTAINERS TO HEAT, FLAME, SPARKS, STATIC ELECTRICITY, OR OTHER SOURCES OF IGNITION. THEY MAY EXPLODE AND CAUSE INJURY OR DEATH.

SECTION 14 TRANSPORT INFORMATION

LAND (DOT): Not Regulated for Land Transport

LAND (TDG): Not Regulated for Land Transport

SEA (IMDG): Not Regulated for Sea Transport according to IMDG-Code

AIR (IATA): Not Regulated for Air Transport

SECTION 15 REGULATORY INFORMATION

OSHA HAZARD COMMUNICATION STANDARD: When used for its intended purposes, this material is not classified as hazardous in accordance with OSHA 29 CFR 1910.1200.

Complies with the following national/regional chemical inventory requirements:: TSCA, KECI, AICS, IECSC
Special Cases:

Inventory	Status
ELINCS	Restrictions Apply
NDSL	Restrictions Apply

EPCRA: This material contains no extremely hazardous substances.

SARA (311/312) REPORTABLE HAZARD CATEGORIES: None.

SARA (313) TOXIC RELEASE INVENTORY: This material contains no chemicals subject to the supplier notification requirements of the SARA 313 Toxic Release Program.

The following ingredients are cited on the lists below:

Chemical Name	CAS Number	List Citations
DIPHENYLAMINE	122-39-4	5, 18

--REGULATORY LISTS SEARCHED--

1 = ACGIH ALL	6 = TSCA 5a2	11 = CA P65 REPRO	16 = MN RTK
2 = ACGIH A1	7 = TSCA 5e	12 = CA RTK	17 = NJ RTK
3 = ACGIH A2	8 = TSCA 6	13 = IL RTK	18 = PA RTK
4 = OSHA Z	9 = TSCA 12b	14 = LA RTK	19 = RI RTK
5 = TSCA 4	10 = CA P65 CARC	15 = MI 293	

Code key: CARC=Carcinogen; REPRO=Reproductive

SECTION 16 OTHER INFORMATION

N/D = Not determined, N/A = Not applicable

THIS SAFETY DATA SHEET CONTAINS THE FOLLOWING REVISIONS:

Revision Changes:
Section 04: First Aid Skin was modified.
Section 06: Notification Procedures - Header was modified.
Section 11: Skin Irritation Conclusion was modified.
Section 01: Product Code was modified.
Section 10 Stability and Reactivity - Header was modified.
Section 13: Disposal Recommendations - Note was modified.
Section 09: Boiling Point C(F) was modified.
Section 09: n-Octanol/Water Partition Coefficient was modified.
Section 08: Personal Protection was modified.
Section 08: Hand Protection was modified.
Section 09: Vapor Pressure was modified.
Section 07: Handling and Storage - Handling was modified.
Section 11: Dermal Lethality Test Data was modified.
Section 11: Oral Lethality Test Data was modified.
Section 11: Inhalation Lethality Test Data was modified.
Section 05: Hazardous Combustion Products was modified.
Section 06: Accidental Release - Spill Management - Water was modified.
Section 09: Relative Density - Header was modified.
Section 09: Flash Point C(F) was modified.
Section 09: Viscosity was modified.
Section 08: Hand Protection was modified.

Section 08: Skin and Body Protection was modified.
Section 14: Sea (IMDG) - Header was modified.
Section 14: Air (IATA) - Header was modified.
Section 14: LAND (TDG) - Header was modified.
Section 14: LAND (DOT) - Header was modified.
Section 15: List Citation Table - Header was modified.
Section 14: LAND (DOT) - Default was modified.
Section 14: LAND (TDG) Default was modified.
Section 14: Sea (IMDG) - Default was modified.
Section 14: Air (IATA) - Default was modified.
Section 15: National Chemical Inventory Listing - Header was modified.
Section 15: National Chemical Inventory Listing was modified.
Section 16: Code to MHCs was modified.
Section 08: Exposure limits/standards was modified.
Section 15: OSHA Hazard Communication Standard was modified.
Section 15: Special Cases Table was modified.
Hazard Identification: OSHA - May be Hazardous Statement was modified.
Section 06: Notification Procedures was modified.
Section 09: Oxidizing Properties was modified.
Section 01: Company Contact Methods Sorted by Priority was modified.
Section 06: Protective Measures was added.
Section 06: Accidental Release - Protective Measures - Header was added.
Section 09: Decomposition Temperature was added.
Section 09: Decomposition Temp - Header was added.

The information and recommendations contained herein are, to the best of ExxonMobil's knowledge and belief, accurate and reliable as of the date issued. You can contact ExxonMobil to insure that this document is the most current available from ExxonMobil. The information and recommendations are offered for the user's consideration and examination. It is the user's responsibility to satisfy itself that the product is suitable for the intended use. If buyer repackages this product, it is the user's responsibility to insure proper health, safety and other necessary information is included with and/or on the container. Appropriate warnings and safe-handling procedures should be provided to handlers and users. Alteration of this document is strictly prohibited. Except to the extent required by law, re-publication or retransmission of this document, in whole or in part, is not permitted. The term, "ExxonMobil" is used for convenience, and may include any one or more of ExxonMobil Chemical Company, Exxon Mobil Corporation, or any affiliates in which they directly or indirectly hold any interest.

Internal Use Only
MHC: 0B, 0B, 0, 0, 2, 0 PPEC: A

DGN: 2031547XUS (1008419)

Copyright 2002 Exxon Mobil Corporation, All rights reserved

11.5.10 MOBIL DTE 21

Mobil

Mobil DTE 20 Series

Hydraulic Oils

Product Description

Mobil DTE 20 Series oils are supreme performance anti-wear hydraulic oils designed to satisfy a wide range of hydraulic equipment requirements. They provide long oil/filter life and optimum equipment protection reducing both maintenance costs and product disposal costs. They were developed in conjunction with the major builders to meet the stringent requirements of severe hydraulic systems using high pressure, high output pumps as well as handling the critical requirements of other hydraulic system components such as close clearance servo-valves and the high accuracy numerically controlled (NC) machine tools. These products meet the most rigorous performance requirements of a wide range of hydraulic system and component manufacturers using various multi-metallurgy designs allowing a single product with outstanding performance characteristics.

The DTE 20 Series oils are formulated with high quality base oils and a super-stabilised additive system that neutralises the formation of corrosive materials. They are designed to work with systems operating under severe conditions where high levels of antiwear and film strength protection are needed, yet they are formulated to work where non-antiwear hydraulic oils are generally recommended.

Features and Benefits

The Mobil DTE 20 Series hydraulic oils provide outstanding oxidation resistance allowing extension of oil and filter change intervals. Their high level of anti-wear properties and excellent film strength characteristics result in exceptional equipment performance that not only results in fewer breakdowns but helps improve production capacity. Their detergency and keep clean properties offer service over a wide range of system cleanlinesses while their controlled demulsibility permits the oils to work well in systems contaminated with small amounts of water yet readily separate large amounts of water.

Features	Advantages and Potential Benefits
Anti-wear	Helps reduce wear Protects systems using various metallurgy
Quality Reserve	Maintains performance features even under severe service conditions and extended drain intervals Helps improve system cleanliness
Oxidation Stability	Provides long oil and equipment life Helps extend filter life
Corrosion Protection	Prevents internal hydraulic system corrosion Helps reduce the negative effects of moisture in systems Provides corrosion protection of multi-metallurgy component designs
Meets a Wide Range of equipment requirements	One product can replace several products, minimizing inventory requirements Helps reduce potential for product misapplication
Air Separation Characteristics	Reduces foaming potential and it's negative effects
Water Separation	Protects systems where small quantities of moisture are present Readily separates larger quantities of water
Keep Clean Properties	Helps reduce system deposits and sludging helping to reduce maintenance costs Protects critical components such as servo-valves helping to

Features	Advantages and Potential Benefits
	extend equipment life
	Helps improve total system performance

Applications

- Hydraulic systems critical to deposit build-up such as sophisticated Numerically Controlled (NC) machines, particularly where close clearance servo-valves are used
- Where small amounts of water are unavoidable
- Applications where sludges and deposits form with conventional products
- In systems containing gears and bearings
- Systems requiring a high degree of load-carrying capability and anti-wear protection
- Applications where thin oil-film corrosion protection is an asset such as systems where small amounts of water are unavoidable
- Machines employing a wide range of components using various metallurgy

Specifications and Approvals

Mobil DTE 20 Series meets or exceeds the requirements of:	21	22	24	25	26	27	28
DIN 51524-2 2006-09	X	X	X	X	X		

Mobil DTE 20 Series has the following builder approvals	21	22	24	25	26	27	28
Cincinnati Machine							
P-68			X				
P-69					X		
P-70				X			
Vickers I-286-S			X	X	X		
Vickers M-2950-S			X	X	X		
Denison HF-0			X	X	X		

Typical Properties

Mobil DTE 20 Series	21	22	24	25	26	27	28
ISO Grade	10	22	32	46	68	100	150
Viscosity, ASTM D 445							
cSt @ 40° C	10.0	21.0	31.5	44.2	71.2	95.3	142.8
cSt @ 100° C	2.74	4.5	5.29	6.65	8.53	10.9	14.28
Viscosity Index, ASTM D 2270	98	98	98	98	98	98	98
Specific Gravity @ 15.6° C/15.6° C, ASTM D 1298	0.845	0.860	0.871	0.876	0.881	0.887	0.895
Copper Strip Corrosion, ASTM D 130, 3 hrs @ 100° C	1B	1B	1B	1B	1B	1B	1B
Rust Characteristics Proc B, ASTM D 665	Pass	Pass	Pass	Pass	Pass	Pass	Pass
Pour Point, °C, ASTM D 97	-30	-30	-27	-27	-21	-21	-15
Flash Point, °C, ASTM D 92	174	200	220	232	236	248	276

Mobil DTE 20 Series	21	22	24	25	26	27	28
FZG 4-Square Load Support, DIN 51354, Fail Stage	-	-	12	12	12	12	12
Foam Sequence I, II, III, ASTM D 892 , ml	20/0	20/0	20/0	20/0	20/0	20/0	20/0

Health and Safety

Based on available information, this product is not expected to produce adverse effects on health when used for the intended application and the recommendations provided in the Material Safety Data Sheet (MSDS) are followed. MSDS's are available upon request through your sales contract office, or via the Internet. This product should not be used for purposes other than its intended use. If disposing of used product, take care to protect the environment.

The Mobil logotype, the Pegasus design and DTE are trademarks of Exxon Mobil Corporation, or one of its subsidiaries.

11-2011

Exxon Mobil Corporation
3225 Gallows Road
Fairfax, VA 22037

1-800-ASK MOBIL (275-6624)

Typical Properties are typical of those obtained with normal production tolerance and do not constitute a specification. Variations that do not affect product performance are to be expected during normal manufacture and at different blending locations. The information contained herein is subject to change without notice. All products may not be available locally. For more information, contact your local ExxonMobil contact or visit www.exxonmobil.com
ExxonMobil is comprised of numerous affiliates and subsidiaries, many with names that include Esso, Mobil, or ExxonMobil. Nothing in this document is intended to override or supersede the corporate separateness of local entities. Responsibility for local action and accountability remains with the local ExxonMobil-affiliate entities.

© 2001-2011 Exxon Mobil Corporation. All rights reserved..

Product Name: MOBIL DTE 21
Revision Date: 13 Dec 2012
Page 1 of 10

MATERIAL SAFETY DATA SHEET

SECTION 1 PRODUCT AND COMPANY IDENTIFICATION

PRODUCT

Product Name: **MOBIL DTE 21**
Product Description: Base Oil and Additives
Product Code: 201560102005, 602599-00, 970840
Intended Use: Hydraulic fluid

COMPANY IDENTIFICATION

Supplier: EXXON MOBIL CORPORATION
3225 GALLOWS RD.
FAIRFAX, VA. 22037 USA

24 Hour Health Emergency	609-737-4411
Transportation Emergency Phone	800-424-9300
ExxonMobil Transportation No.	281-834-3296
Product Technical Information	800-662-4525, 800-947-9147
MSDS Internet Address	http://www.exxon.com, http://www.mobil.com

SECTION 2 COMPOSITION / INFORMATION ON INGREDIENTS

Reportable Hazardous Substance(s) or Complex Substance(s)

Name	CAS#	Concentration*
SOLVENT REFINED LIGHT PARAFFINIC DISTILLATE (PETROLEUM)	64741-89-5	80 - 90%
STRAIGHT-RUN MIDDLE DISTILLATES	64741-44-2	10 - 20%

* All concentrations are percent by weight unless material is a gas. Gas concentrations are in percent by volume.

SECTION 3 HAZARDS IDENTIFICATION

This material is considered to be hazardous according to regulatory guidelines (see (M)SDS Section 15).

POTENTIAL HEALTH EFFECTS

If swallowed, may be aspirated and cause lung damage. Frequent or prolonged contact may defat and dry the skin, leading to discomfort and dermatitis. May be irritating to the eyes, nose, throat, and lungs. High-pressure injection under skin may cause serious damage.

Target Organs: Skin |

NFPA Hazard ID:	Health:	0	Flammability:	1	Reactivity:	0
HMIS Hazard ID:	Health:	0*	Flammability:	1	Reactivity:	0

NOTE: This material should not be used for any other purpose than the intended use in Section 1 without expert advice. Health studies have shown that chemical exposure may cause potential human health risks which may vary from person to person.

SECTION 4 FIRST AID MEASURES

INHALATION

Remove from further exposure. For those providing assistance, avoid exposure to yourself or others. Use adequate respiratory protection. If respiratory irritation, dizziness, nausea, or unconsciousness occurs, seek immediate medical assistance. If breathing has stopped, assist ventilation with a mechanical device or use mouth-to-mouth resuscitation.

SKIN CONTACT

Wash contact areas with soap and water. Remove contaminated clothing. Launder contaminated clothing before reuse. If product is injected into or under the skin, or into any part of the body, regardless of the appearance of the wound or its size, the individual should be evaluated immediately by a physician as a surgical emergency. Even though initial symptoms from high pressure injection may be minimal or absent, early surgical treatment within the first few hours may significantly reduce the ultimate extent of injury.

EYE CONTACT

Flush thoroughly with water. If irritation occurs, get medical assistance.

INGESTION

Seek immediate medical attention. Do not induce vomiting.

NOTE TO PHYSICIAN

If ingested, material may be aspirated into the lungs and cause chemical pneumonitis. Treat appropriately.

SECTION 5 FIRE FIGHTING MEASURES

EXTINGUISHING MEDIA

Appropriate Extinguishing Media: Use water fog, foam, dry chemical or carbon dioxide (CO2) to extinguish flames.

Inappropriate Extinguishing Media: Straight Streams of Water

FIRE FIGHTING

Fire Fighting Instructions: Evacuate area. Prevent runoff from fire control or dilution from entering streams, sewers, or drinking water supply. Firefighters should use standard protective equipment and in enclosed spaces, self-contained breathing apparatus (SCBA). Use water spray to cool fire exposed surfaces and to protect personnel.

Unusual Fire Hazards: Pressurized mists may form a flammable mixture.

Hazardous Combustion Products: Smoke, Fume, Aldehydes, Sulfur oxides, Incomplete combustion products, Oxides of carbon

FLAMMABILITY PROPERTIES

Flash Point [Method]: >166°C (331°F) [ASTM D-92]
Flammable Limits (Approximate volume % in air): LEL: 0.9 UEL: 7.0

Autoignition Temperature: N/D

SECTION 6 ACCIDENTAL RELEASE MEASURES

NOTIFICATION PROCEDURES

In the event of a spill or accidental release, notify relevant authorities in accordance with all applicable regulations. US regulations require reporting releases of this material to the environment which exceed the applicable reportable quantity or oil spills which could reach any waterway including intermittent dry creeks. The National Response Center can be reached at (800)424-8802.

PROTECTIVE MEASURES

Avoid contact with spilled material. Warn or evacuate occupants in surrounding and downwind areas if required due to toxicity or flammability of the material. See Section 5 for fire fighting information. See the Hazard Identification Section for Significant Hazards. See Section 4 for First Aid Advice. See Section 8 for advice on the minimum requirements for personal protective equipment. Additional protective measures may be necessary, depending on the specific circumstances and/or the expert judgment of the emergency responders.

For emergency responders: Respiratory protection: respiratory protection will be necessary only in special cases, e.g., formation of mists. Half-face or full-face respirator with filter(s) for dust/organic vapor or Self Contained Breathing Apparatus (SCBA) can be used depending on the size of spill and potential level of exposure. If the exposure cannot be completely characterized or an oxygen deficient atmosphere is possible or anticipated, SCBA is recommended. Work gloves that are resistant to hydrocarbons are recommended. Gloves made of polyvinyl acetate (PVA) are not water-resistant and are not suitable for emergency use. Chemical goggles are recommended if splashes or contact with eyes is possible. Small spills: normal antistatic work clothes are usually adequate. Large spills: full body suit of chemical resistant, antistatic material is recommended.

SPILL MANAGEMENT

Land Spill: Stop leak if you can do it without risk. Recover by pumping or with suitable absorbent.

Water Spill: Stop leak if you can do it without risk. Confine the spill immediately with booms. Warn other shipping. Remove from the surface by skimming or with suitable absorbents. Seek the advice of a specialist before using dispersants.

Water spill and land spill recommendations are based on the most likely spill scenario for this material; however, geographic conditions, wind, temperature, (and in the case of a water spill) wave and current direction and speed may greatly influence the appropriate action to be taken. For this reason, local experts should be consulted. Note: Local regulations may prescribe or limit action to be taken.

ENVIRONMENTAL PRECAUTIONS

Large Spills: Dike far ahead of liquid spill for later recovery and disposal. Prevent entry into waterways, sewers, basements or confined areas.

SECTION 7 HANDLING AND STORAGE

HANDLING

Avoid contact with skin. Prevent small spills and leakage to avoid slip hazard. Material can accumulate static charges which may cause an electrical spark (ignition source). When the material is handled in bulk, an electrical spark could ignite any flammable vapors from liquids or residues that may be present (e.g., during switch-loading operations). Use proper bonding and/or ground procedures. However, bonding and grounds

may not eliminate the hazard from static accumulation. Consult local applicable standards for guidance. Additional references include American Petroleum Institute 2003 (Protection Against Ignitions Arising out of Static, Lightning and Stray Currents) or National Fire Protection Agency 77 (Recommended Practice on Static Electricity) or CENELEC CLC/TR 50404 (Electrostatics - Code of practice for the avoidance of hazards due to static electricity).

Static Accumulator: This material is a static accumulator.

STORAGE

The container choice, for example storage vessel, may effect static accumulation and dissipation. Do not store in open or unlabelled containers. Keep away from incompatible materials.

SECTION 8 EXPOSURE CONTROLS / PERSONAL PROTECTION

EXPOSURE LIMIT VALUES

Exposure limits/standards (Note: Exposure limits are not additive)

Source	Form	Limit / Standard			NOTE	Source
SOLVENT REFINED LIGHT PARAFFINIC DISTILLATE (PETROLEUM)	Mist.	TWA	5 mg/m3		N/A	OSHA Z1
SOLVENT REFINED LIGHT PARAFFINIC DISTILLATE (PETROLEUM)	Inhalable fraction.	TWA	5 mg/m3		N/A	ACGIH
SOLVENT REFINED LIGHT PARAFFINIC DISTILLATE (PETROLEUM)	Mist.	TWA	5 mg/m3		N/A	ACGIH
STRAIGHT-RUN MIDDLE DISTILLATES	Stable Aerosol.	TWA	5 mg/m3		N/A	ExxonMobil
STRAIGHT-RUN MIDDLE DISTILLATES	Vapor.	TWA	200 mg/m3		N/A	ExxonMobil

Exposure limits/standards for materials that can be formed when handling this product: When mists/aerosols can occur the following are recommended: 5 mg/m³ - ACGIH TLV (inhalable fraction), 5 mg/m³ - OSHA PEL.

NOTE: Limits/standards shown for guidance only. Follow applicable regulations.

ENGINEERING CONTROLS

The level of protection and types of controls necessary will vary depending upon potential exposure conditions. Control measures to consider:

No special requirements under ordinary conditions of use and with adequate ventilation.

PERSONAL PROTECTION

Personal protective equipment selections vary based on potential exposure conditions such as applications, handling practices, concentration and ventilation. Information on the selection of protective equipment for use with this material, as provided below, is based upon intended, normal usage.

Respiratory Protection: If engineering controls do not maintain airborne contaminant concentrations at a

level which is adequate to protect worker health, an approved respirator may be appropriate. Respirator selection, use, and maintenance must be in accordance with regulatory requirements, if applicable. Types of respirators to be considered for this material include:
No special requirements under ordinary conditions of use and with adequate ventilation.

For high airborne concentrations, use an approved supplied-air respirator, operated in positive pressure mode. Supplied air respirators with an escape bottle may be appropriate when oxygen levels are inadequate, gas/vapor warning properties are poor, or if air purifying filter capacity/rating may be exceeded.

Hand Protection: Any specific glove information provided is based on published literature and glove manufacturer data. Glove suitability and breakthrough time will differ depending on the specific use conditions. Contact the glove manufacturer for specific advice on glove selection and breakthrough times for your use conditions. Inspect and replace worn or damaged gloves. The types of gloves to be considered for this material include:
If prolonged or repeated contact is likely, chemical resistant gloves are recommended. If contact with forearms is likely, wear gauntlet style gloves.

Eye Protection: If contact is likely, safety glasses with side shields are recommended.

Skin and Body Protection: Any specific clothing information provided is based on published literature or manufacturer data. The types of clothing to be considered for this material include:
If prolonged or repeated contact is likely, chemical, and oil resistant clothing is recommended.

Specific Hygiene Measures: Always observe good personal hygiene measures, such as washing after handling the material and before eating, drinking, and/or smoking. Routinely wash work clothing and protective equipment to remove contaminants. Discard contaminated clothing and footwear that cannot be cleaned. Practice good housekeeping.

ENVIRONMENTAL CONTROLS
Comply with applicable environmental regulations limiting discharge to air, water and soil. Protect the environment by applying appropriate control measures to prevent or limit emissions.

SECTION 9 PHYSICAL AND CHEMICAL PROPERTIES

Note: Physical and chemical properties are provided for safety, health and environmental considerations only and may not fully represent product specifications. Contact the Supplier for additional information.

GENERAL INFORMATION
Physical State: Liquid
Color: Amber
Odor: Characteristic
Odor Threshold: N/D

IMPORTANT HEALTH, SAFETY, AND ENVIRONMENTAL INFORMATION
Relative Density (at 15 °C): 0.845
Flash Point [Method]: >166°C (331°F) [ASTM D-92]
Flammable Limits (Approximate volume % in air): LEL: 0.9 UEL: 7.0
Autoignition Temperature: N/D
Boiling Point / Range: > 232°C (450°F)
Vapor Density (Air = 1): > 2 at 101 kPa

Vapor Pressure: < 0.013 kPa (0.1 mm Hg) at 20 °C
Evaporation Rate (n-butyl acetate = 1): N/D
pH: N/A
Log Pow (n-Octanol/Water Partition Coefficient): > 3.5
Solubility in Water: Negligible
Viscosity: 9 cSt (9 mm2/sec) at 40 °C | 2.7 cSt (2.7 mm2/sec) at 100°C
Oxidizing Properties: See Hazards Identification Section.

OTHER INFORMATION

Freezing Point: N/D
Melting Point: N/A
Pour Point: -24°C (-11°F)
DMSO Extract (mineral oil only), IP-346: < 3 %wt

SECTION 10 STABILITY AND REACTIVITY

STABILITY: Material is stable under normal conditions.

CONDITIONS TO AVOID: Excessive heat. High energy sources of ignition.

MATERIALS TO AVOID: Strong oxidizers

HAZARDOUS DECOMPOSITION PRODUCTS: Material does not decompose at ambient temperatures.

HAZARDOUS POLYMERIZATION: Will not occur.

SECTION 11 TOXICOLOGICAL INFORMATION

ACUTE TOXICITY

Route of Exposure	Conclusion / Remarks
Inhalation	
Toxicity: No end point data for material.	Minimally Toxic. Based on assessment of the components.
Irritation: No end point data for material.	Elevated temperatures or mechanical action may form vapors, mist, or fumes which may be irritating to the eyes, nose, throat, or lungs. Based on assessment of the components.
Ingestion	
Toxicity: No end point data for material.	Minimally Toxic. Based on assessment of the components.
Skin	
Toxicity: No end point data for material.	Minimally Toxic. Based on assessment of the components.
Irritation: No end point data for material.	Negligible irritation to skin at ambient temperatures. Based on assessment of the components.
Eye	
Irritation: No end point data for material.	May cause mild, short-lasting discomfort to eyes. Based on assessment of the components.

CHRONIC/OTHER EFFECTS

For the product itself:

Repeated and/or prolonged exposure may cause irritation to the skin, eyes, or respiratory tract. Small amounts of liquid aspirated into the lungs during ingestion or from vomiting may cause chemical pneumonitis or

pulmonary edema.
Contains:
Base oil severely refined: Not carcinogenic in animal studies. Representative material passes IP-346, Modified Ames test, and/or other screening tests. Dermal and inhalation studies showed minimal effects; lung non-specific infiltration of immune cells, oil deposition and minimal granuloma formation. Not sensitizing in test animals.

Additional information is available by request.

The following ingredients are cited on the lists below: None.

--REGULATORY LISTS SEARCHED--

1 = NTP CARC	3 = IARC 1	5 = IARC 2B
2 = NTP SUS	4 = IARC 2A	6 = OSHA CARC

SECTION 12 ECOLOGICAL INFORMATION

The information given is based on data available for the material, the components of the material, and similar materials.

ECOTOXICITY
Material -- Not expected to be harmful to aquatic organisms.

MOBILITY
Base oil component -- Low solubility and floats and is expected to migrate from water to the land. Expected to partition to sediment and wastewater solids.

PERSISTENCE AND DEGRADABILITY
Biodegradation:
Base oil component -- Expected to be inherently biodegradable

BIOACCUMULATION POTENTIAL
Base oil component -- Has the potential to bioaccumulate, however metabolism or physical properties may reduce the bioconcentration or limit bioavailability.

OTHER ECOLOGICAL INFORMATION
VOC: 14 G/L [ASTM E1868-10]

SECTION 13 DISPOSAL CONSIDERATIONS

Disposal recommendations based on material as supplied. Disposal must be in accordance with current applicable laws and regulations, and material characteristics at time of disposal.

DISPOSAL RECOMMENDATIONS

Product is suitable for burning in an enclosed controlled burner for fuel value or disposal by supervised incineration at very high temperatures to prevent formation of undesirable combustion products. Protect the environment. Dispose of used oil at designated sites. Minimize skin contact. Do not mix used oils with solvents, brake fluids or coolants.

REGULATORY DISPOSAL INFORMATION

RCRA Information: The unused product, in our opinion, is not specifically listed by the EPA as a hazardous waste (40 CFR, Part 261D), nor is it formulated to contain materials which are listed as hazardous wastes. It does not exhibit the hazardous characteristics of ignitability, corrosivity or reactivity and is not formulated with contaminants as determined by the Toxicity Characteristic Leaching Procedure (TCLP). However, used product may be regulated.

Empty Container Warning Empty Container Warning (where applicable): Empty containers may contain residue and can be dangerous. Do not attempt to refill or clean containers without proper instructions. Empty drums should be completely drained and safely stored until appropriately reconditioned or disposed. Empty containers should be taken for recycling, recovery, or disposal through suitably qualified or licensed contractor and in accordance with governmental regulations. DO NOT PRESSURISE, CUT, WELD, BRAZE, SOLDER, DRILL, GRIND, OR EXPOSE SUCH CONTAINERS TO HEAT, FLAME, SPARKS, STATIC ELECTRICITY, OR OTHER SOURCES OF IGNITION. THEY MAY EXPLODE AND CAUSE INJURY OR DEATH.

SECTION 14 TRANSPORT INFORMATION

LAND (DOT): Not Regulated for Land Transport

LAND (TDG): Not Regulated for Land Transport

SEA (IMDG): Not Regulated for Sea Transport according to IMDG-Code

AIR (IATA): Not Regulated for Air Transport

SECTION 15 REGULATORY INFORMATION

OSHA HAZARD COMMUNICATION STANDARD: When used for its intended purpose, this material is classified as hazardous in accordance with OSHA 29CFR 1910.1200.

Complies with the following national/regional chemical inventory requirements:: AICS, DSL, ENCS, IECSC, KECI, PICCS, TSCA

EPCRA SECTION 302: This material contains no extremely hazardous substances.

SARA (311/312) REPORTABLE HAZARD CATEGORIES: Delayed Health.

SARA (313) TOXIC RELEASE INVENTORY: This material contains no chemicals subject to the supplier notification requirements of the SARA 313 Toxic Release Program.

The following ingredients are cited on the lists below:

Chemical Name	CAS Number	List Citations
SOLVENT REFINED LIGHT PARAFFINIC DISTILLATE (PETROLEUM)	64741-89-5	1, 4, 17, 18, 19
ZINC ALKYL DITHIOPHOSPHATE	68649-42-3	15

--REGULATORY LISTS SEARCHED--

1 = ACGIH ALL	6 = TSCA 5a2	11 = CA P65 REPRO	16 = MN RTK
2 = ACGIH A1	7 = TSCA 5e	12 = CA RTK	17 = NJ RTK
3 = ACGIH A2	8 = TSCA 6	13 = IL RTK	18 = PA RTK
4 = OSHA Z	9 = TSCA 12b	14 = LA RTK	19 = RI RTK
5 = TSCA 4	10 = CA P65 CARC	15 = MI 293	

Code key: CARC=Carcinogen; REPRO=Reproductive

SECTION 16 OTHER INFORMATION

N/D = Not determined, N/A = Not applicable

THIS SAFETY DATA SHEET CONTAINS THE FOLLOWING REVISIONS:
No revision information is available.

PRECAUTIONARY LABEL TEXT:
Contains: SOLVENT REFINED LIGHT PARAFFINIC DISTILLATE (PETROLEUM); STRAIGHT-RUN MIDDLE DISTILLATES
CAUTION!
HEALTH HAZARDS
Repeated exposure may cause skin dryness or cracking. If swallowed, may be aspirated and cause lung damage.
Target Organs: Skin |

FIRST AID
Eye: Flush thoroughly with water. If irritation occurs, get medical assistance.

Oral: Seek immediate medical attention. Do not induce vomiting.

Skin: Wash contact areas with soap and water. Remove contaminated clothing. Launder contaminated clothing before reuse. If product is injected into or under the skin, or into any part of the body, regardless of the appearance of the wound or its size, the individual should be evaluated immediately by a physician as a surgical emergency. Even though initial symptoms from high pressure injection may be minimal or absent, early surgical treatment within the first few hours may significantly reduce the ultimate extent of injury.

FIRE FIGHTING MEDIA
Use water fog, foam, dry chemical or carbon dioxide (CO2) to extinguish flames.

SPILL/LEAK
Land Spill: Stop leak if you can do it without risk. Recover by pumping or with suitable absorbent.

Water Spill: Stop leak if you can do it without risk. Confine the spill immediately with booms. Warn other shipping.

Remove from the surface by skimming or with suitable absorbents. Report spills as required to appropriate authorities. Seek the advice of a specialist before using dispersants.

Use

Not intended or suitable for use in or around a household or dwelling.

The information and recommendations contained herein are, to the best of ExxonMobil's knowledge and belief, accurate and reliable as of the date issued. You can contact ExxonMobil to insure that this document is the most current available from ExxonMobil. The information and recommendations are offered for the user's consideration and examination. It is the user's responsibility to satisfy itself that the product is suitable for the intended use. If buyer repackages this product, it is the user's responsibility to insure proper health, safety and other necessary information is included with and/or on the container. Appropriate warnings and safe-handling procedures should be provided to handlers and users. Alteration of this document is strictly prohibited. Except to the extent required by law, re-publication or retransmission of this document, in whole or in part, is not permitted. The term, "ExxonMobil" is used for convenience, and may include any one or more of ExxonMobil Chemical Company, Exxon Mobil Corporation, or any affiliates in which they directly or indirectly hold any interest.

Internal Use Only

MHC: 2A, 0B, 0, 0, 0, 1 PPEC: C

DGN: 2025222XUS (547054)

Copyright 2002 Exxon Mobil Corporation, All rights reserved

11.5.11 MOBIL SHC 629

Mobil

Mobil SHC 600 Series

Supreme Performance Gear and Bearing Oils

Product Description

Mobil SHC 600 Series lubricants are supreme performance gear and bearing oils designed to provide outstanding service in terms of equipment protection, oil life and problem-free operation enabling increased customer productivity. These scientifically engineered oils are formulated from base fluids with an inherently high viscosity index and a unique, proprietary, additive system which enables these products to provide outstanding performance in extreme service applications at high and low temperatures, well beyond the capabilities of mineral oils. These products are resistant to mechanical shear, even in heavily loaded gear and high shear bearing applications, so that there is virtually no loss of viscosity.

The Mobil SHC 600 Series products have low traction coefficients, which derive from the molecular structure of the base stocks used. This results in low fluid friction in the load zone of non-conforming surfaces such as gears and rolling contact bearings. Low fluid friction produces lower operating temperatures and improved gear efficiency, which translates into reduced power consumption. It also results in extended parts life and allows for more economical equipment design. The base oils used in the Mobil SHC 600 Series have outstanding response to antioxidant additives resulting in superior resistance to oxidation and sludging, especially at high temperatures. The additive combination used in these oils also provides exceptional resistance to rusting and corrosion, very good antiwear, demulsibility, foam control and air release properties, as well as multimetal compatibility. The Mobil SHC 600 Series oils are also compatible with the same seal and other construction materials used in equipment normally lubricated with mineral oils.

The leading edge technology on which Mobil SHC 600 Series lubricants have always been based has made these the products of choice for operators of a wide range of equipment, worldwide. While initially recognized as a high temperature problem solver, these products are now used in many industrial applications because of the range of benefits they offer.

Features and Benefits

The Mobil SHC brand of lubricants are recognized and appreciated around the world for their innovation and outstanding performance. These molecular designed synthetic products, pioneered by our research scientists, symbolize the continuing commitment to using advanced technology to provide outstanding lubricant products. A key factor in the development of Mobil SHC 600 Series were the close contacts between our scientists and application specialists with key OEMs to ensure that our product offerings will provide exceptional performance in the continually evolving industrial equipment designs.

Our work with equipment builders has helped confirm the results from our own laboratory tests showing the exceptional performance of the Mobil SHC 600 Series lubricants. Not least among the benefits, shown in work with OEMs, is the potential for significant efficiency improvements in changing from mineral oil. These benefits are particularly evident in equipment which, by design, cannot avoid low overall efficiency, such as high ratio worm gears.

To combat high thermal exposure of the oil, our product formulation scientists chose select base oils for Mobil SHC 600 Series oils because of their exceptional thermal/oxidative resistance potential. Our formulators chose specific additives which would maximize the benefits of the base oils to provide excellent oil life and deposit control and resistance to thermal/oxidative and chemical degradation. This formulation approach provides low temperature fluidity characteristics unmatched by mineral products and is a key benefit for remote, low ambient temperature applications. The Mobil SHC 600 Series oils offer the following features and potential benefits:

Features	Advantages and Potential Benefits
Superb high temperature thermal/oxidation resistance	Extends equipment high temperature operating capability
	Long oil life, reduced need and costs for oil change outs
	Minimizes sludge and deposits for trouble-free operation and long filter life
High Viscosity Index and absence of wax	Maintains viscosity and film thickness at high temperatures

High viscosity index and absence of wax	Maintains viscosity and film thickness at high temperatures
	Exceptional low temperature performance, including start-up
Low traction coefficient	Reduces overall friction and can increase efficiency in sliding mechanisms such as gearing, with potential for reduced power consumption and lower steady-state operating temperatures.
	Minimizes effects of micro slip in rolling contact bearings for longer rolling-element life potential
High load carrying capability	Protects equipment and extends life; minimizes unexpected downtime and extends service periods
Balanced additive combination	Provides excellent performance in terms of rust and corrosion prevention, water separability, foam control, air release performance ensuring problem-free operation in a wide range of industrial applications and reduced operating costs

Applications

While Mobil SHC 600 Series are compatible with mineral oil based products, admixture may detract from their performance. Consequently it is recommended that before changing a system to one of the Mobil SHC 600 Series, it should be thoroughly cleaned out and flushed to achieve the maximum performance benefits. The Mobil SHC 600 Series oils are compatible with the following seal materials: fluorocarbon, polyacrylate, polyurethane ether, some silicone, ethylene/acrylic, chlorinated polyethylene, polysulfide, and some nitrile rubbers. There is the potential for substantial variations in the elastomers being used today. For best results, consult your equipment supplier, seal manufacturer, or your local Mobil representative to verify compatibility.

Mobil SHC 600 Series lubricants are recommended for use in a wide variety of gear and bearing applications where high or low temperatures are encountered or where operating temperatures or bulk oil temperatures are such that conventional lubricants give unsatisfactory life, or where improved efficiency is needed. They are particularly effective in applications where the maintenance costs of component replacement, system cleaning and lubricant changes are high. Specific applications include:

- Filled for life gearboxes, especially high ratio/ low-efficiency worm gears
- Remotely located gearboxes, where oil change-out is difficult
- Low temperature applications, such as ski lifts where seasonal oil changes can be avoided
- Mixer roll bearings and roll neck bearings where high temperatures are encountered
- Plastic calendars
- Severe centrifuge applications, including marine centrifuges
- Railroad A/C Traction Drives
- Mobil SHC 625*, 627, 629 and 630 are suitable for Oil Flooded Rotary Screw Compressors compressing natural gas, field gas gathering, CO2 and other process gasses used in the natural gas industry

Specifications and Approvals

Mobil SHC 600 Series has the following builder approvals:	**624**	**625**	**626**	**627**	**629**	**630**	**632**	**634**	**636**	**639**
ABB TURBO HZTL 90572			X							
ABB TURBO HZTL 90617			X							
CINCINNATI MACHINE P-34									X	
CINCINNATI MACHINE P-35								X		
CINCINNATI MACHINE P-59							X			

P-59						X				
CINCINNATI MACHINE P-74					X					
CINCINNATI MACHINE P-78										X
CINCINNATI MACHINE P-80			X							
FLENDER BA 7300 table A				X						X
FLENDER BA 7300 table A and C					X	X	X			

Typical Properties

Mobil SHC 600 Series	624	625 (1)	626	627	629	630	632	634	636	639
ISO Viscosity Grade	32	46	68	100	150	220	320	460	680	1000
Viscosity, ASTM D 445										
cSt @ 40° C	31.0	46.0	66.0	97.0	149	222	320	454	652	968
cSt @ 100° C	5.8	7.7	10.3	13.7	19.0	25.7	35.0	46.5	61.2	78.5
Viscosity Index, ASTM D 2270	133	136	144	144	144	147	154	161	163	159
Pour Point, °C, ASTM D 97	-51	-48	-48	-45	-45	-42	-40	-40	-39	-33
Flash Point, °C, ASTM D 92	237	242	231	228	235	240	236	234	240	235
Specific Gravity, ASTM D 4052, 15° C/15° C	0.85	0.85	0.86	0.86	0.86	0.87	0.87	0.87	0.87	0.87
Appearance, visual	Orange	Orange	Orange	Orange	Orange	Orange	Orange	Orange	Orange	Orange
TOST, ASTM D 943, Hours to 2 NN	10,000+	10,000+	10,000+	10,000+	10,000+	10,000+	10,000+	10,000+	10,000+	10,000+
RBOT, ASTM D 2272, min.	1750	1750	1750	1750	1750	1750	1750	1750	1750	1750
Rust protection, ASTM D665, Sea Water	Pass	Pass	Pass	Pass	Pass	Pass	Pass	Pass	Pass	Pass
Water Seperability, ASTM D 1401,Min. to 37 ml water @ 54° C	20	20	20	-	-	-	-	-	-	-
Water Seperability, ASTM D 1401,Min. to 37 ml water @ 82° C	-	-	-	15	15	15	25	25	30	40
Copper Corrosion, ASTM D130, 24 hrs @ 121° C	1B	1B	1B	1B	1B	1B	1B	1B	1B	1B
Foam Test, ASTM D 892, Seq I,II,IIITendency / Stability, ml/ml	0/0, 20/0, 0/0	0/0, 0/0, 0/0	0/0, 0/0, 0/0	0/0, 0/0,0/0	0/0, 0/0,0/0	0/0, 0/0,0/0	0/0,0/0,0/0	0/0, 20/0,0/0	0/0,0/0,0/0	0/0, 0/0, 0/0
FZG scuffing test, DIN 51534 (mod), A/16.6/90, Failure Stage	10	11	11	13	13	13+	13+	13+	13+	13+

(1) 625 is available only in the USA

Health and Safety

Based on available information, this product is not expected to produce adverse effects on health when used for the intended application and the recommendations provided in the Material Safety Data Sheet (MSDS) are followed. MSDS's are available upon request through your sales contract office, or via the Internet. This product should not be used for purposes other than its intended use. If disposing of used product, take care to protect the environment.

All products may not be available locally.

Note for Canadian users: Mobil SHC 600 Series is not controlled under Canadian WHMIS legislation.

The Mobil logotype, the Pegasus design and SHC are trademarks of ExxonMobil Corporation, or one of its subsidiaries.

11-2010

Exxon Mobil Corporation
3225 Gallows Road
Fairfax, VA 22037

1-800-ASK MOBIL (275-6624)

Typical Properties are typical of those obtained with normal production tolerance and do not constitute a specification. Variations that do not affect product performance are to be expected during normal manufacture and at different blending locations. The information contained herein is subject to change without notice. All products may not be available locally. For more information, contact your local ExxonMobil contact or visit www.exxonmobil.com
ExxonMobil is comprised of numerous affiliates and subsidiaries, many with names that include Esso, Mobil, or ExxonMobil. Nothing in this document is intended to override or supersede the corporate separateness of local entities. Responsibility for local action and accountability remains with the local ExxonMobil-affiliate entities.

Copyright © 2001-2013 Exxon Mobil Corporation. All rights reserved..

ExxonMobil

Product Name: MOBIL SHC 629
Revision Date: 11 May 2012
Page 1 of 9

MATERIAL SAFETY DATA SHEET

SECTION 1 PRODUCT AND COMPANY IDENTIFICATION

PRODUCT

Product Name: **MOBIL SHC 629**
Product Description: Synthetic Base Stocks and Additives
Product Code: 201560500540, 602946-00, 970114
Intended Use: Circulating/gear oil

COMPANY IDENTIFICATION

Supplier: **EXXON MOBIL CORPORATION**
3225 GALLOWS RD.
FAIRFAX, VA. 22037 USA

24 Hour Health Emergency	609-737-4411
Transportation Emergency Phone	800-424-9300
ExxonMobil Transportation No.	281-834-3296
Product Technical Information	800-662-4525, 800-947-9147
MSDS Internet Address	http://www.exxon.com, http://www.mobil.com

SECTION 2 COMPOSITION / INFORMATION ON INGREDIENTS

No Reportable Hazardous Substance(s) or Complex Substance(s).

SECTION 3 HAZARDS IDENTIFICATION

This material is not considered to be hazardous according to regulatory guidelines (see (M)SDS Section 15).

POTENTIAL HEALTH EFFECTS

Low order of toxicity. Excessive exposure may result in eye, skin, or respiratory irritation. High-pressure injection under skin may cause serious damage.

NFPA Hazard ID:	Health:	0	Flammability:	1	Reactivity:	0
HMIS Hazard ID:	Health:	0	Flammability:	1	Reactivity:	0

NOTE: This material should not be used for any other purpose than the intended use in Section 1 without expert advice. Health studies have shown that chemical exposure may cause potential human health risks which may vary from person to person.

SECTION 4 FIRST AID MEASURES

INHALATION

Remove from further exposure. For those providing assistance, avoid exposure to yourself or others. Use

adequate respiratory protection. If respiratory irritation, dizziness, nausea, or unconsciousness occurs, seek immediate medical assistance. If breathing has stopped, assist ventilation with a mechanical device or use mouth-to-mouth resuscitation.

SKIN CONTACT

Wash contact areas with soap and water. If product is injected into or under the skin, or into any part of the body, regardless of the appearance of the wound or its size, the individual should be evaluated immediately by a physician as a surgical emergency. Even though initial symptoms from high pressure injection may be minimal or absent, early surgical treatment within the first few hours may significantly reduce the ultimate extent of injury.

EYE CONTACT

Flush thoroughly with water. If irritation occurs, get medical assistance.

INGESTION

First aid is normally not required. Seek medical attention if discomfort occurs.

SECTION 5 FIRE FIGHTING MEASURES

EXTINGUISHING MEDIA

Appropriate Extinguishing Media: Use water fog, foam, dry chemical or carbon dioxide (CO2) to extinguish flames.

Inappropriate Extinguishing Media: Straight Streams of Water

FIRE FIGHTING

Fire Fighting Instructions: Evacuate area. Prevent runoff from fire control or dilution from entering streams, sewers, or drinking water supply. Firefighters should use standard protective equipment and in enclosed spaces, self-contained breathing apparatus (SCBA). Use water spray to cool fire exposed surfaces and to protect personnel.

Hazardous Combustion Products: Smoke, Fume, Aldehydes, Sulfur oxides, Incomplete combustion products, Oxides of carbon

FLAMMABILITY PROPERTIES

Flash Point [Method]: >210°C (410°F) [ASTM D-92]
Flammable Limits (Approximate volume % in air): LEL: 0.9 UEL: 7.0
Autoignition Temperature: N/D

SECTION 6 ACCIDENTAL RELEASE MEASURES

NOTIFICATION PROCEDURES

In the event of a spill or accidental release, notify relevant authorities in accordance with all applicable regulations. US regulations require reporting releases of this material to the environment which exceed the applicable reportable quantity or oil spills which could reach any waterway including intermittent dry creeks. The National Response Center can be reached at (800)424-8802.

PROTECTIVE MEASURES

Avoid contact with spilled material. See Section 5 for fire fighting information. See the Hazard Identification Section for Significant Hazards. See Section 4 for First Aid Advice. See Section 8 for advice on the minimum requirements for personal protective equipment. Additional protective measures may be necessary, depending on the specific circumstances and/or the expert judgment of the emergency responders.

SPILL MANAGEMENT

Land Spill: Stop leak if you can do it without risk. Recover by pumping or with suitable absorbent.

Water Spill: Stop leak if you can do it without risk. Confine the spill immediately with booms. Warn other shipping. Remove from the surface by skimming or with suitable absorbents. Seek the advice of a specialist before using dispersants.

Water spill and land spill recommendations are based on the most likely spill scenario for this material; however, geographic conditions, wind, temperature, (and in the case of a water spill) wave and current direction and speed may greatly influence the appropriate action to be taken. For this reason, local experts should be consulted. Note: Local regulations may prescribe or limit action to be taken.

ENVIRONMENTAL PRECAUTIONS

Large Spills: Dike far ahead of liquid spill for later recovery and disposal. Prevent entry into waterways, sewers, basements or confined areas.

SECTION 7 HANDLING AND STORAGE

HANDLING

Prevent small spills and leakage to avoid slip hazard. Material can accumulate static charges which may cause an electrical spark (ignition source). When the material is handled in bulk, an electrical spark could ignite any flammable vapors from liquids or residues that may be present (e.g., during switch-loading operations). Use proper bonding and/or ground procedures. However, bonding and grounds may not eliminate the hazard from static accumulation. Consult local applicable standards for guidance. Additional references include American Petroleum Institute 2003 (Protection Against Ignitions Arising out of Static, Lightning and Stray Currents) or National Fire Protection Agency 77 (Recommended Practice on Static Electricity) or CENELEC CLC/TR 50404 (Electrostatics - Code of practice for the avoidance of hazards due to static electricity).

Static Accumulator: This material is a static accumulator.

STORAGE

The container choice, for example storage vessel, may effect static accumulation and dissipation. Do not store in open or unlabelled containers.

SECTION 8 EXPOSURE CONTROLS / PERSONAL PROTECTION

Exposure limits/standards for materials that can be formed when handling this product: When mists/aerosols can occur the following are recommended: 5 mg/m³ - ACGIH TLV (inhalable fraction), 5 mg/m³ - OSHA PEL.

NOTE: Limits/standards shown for guidance only. Follow applicable regulations.

ENGINEERING CONTROLS

The level of protection and types of controls necessary will vary depending upon potential exposure conditions. Control measures to consider:
No special requirements under ordinary conditions of use and with adequate ventilation.

PERSONAL PROTECTION

Personal protective equipment selections vary based on potential exposure conditions such as applications, handling practices, concentration and ventilation. Information on the selection of protective equipment for use with this material, as provided below, is based upon intended, normal usage.

Respiratory Protection: If engineering controls do not maintain airborne contaminant concentrations at a level which is adequate to protect worker health, an approved respirator may be appropriate. Respirator selection, use, and maintenance must be in accordance with regulatory requirements, if applicable. Types of respirators to be considered for this material include:
No special requirements under ordinary conditions of use and with adequate ventilation.

For high airborne concentrations, use an approved supplied-air respirator, operated in positive pressure mode. Supplied air respirators with an escape bottle may be appropriate when oxygen levels are inadequate, gas/vapor warning properties are poor, or if air purifying filter capacity/rating may be exceeded.

Hand Protection: Any specific glove information provided is based on published literature and glove manufacturer data. Glove suitability and breakthrough time will differ depending on the specific use conditions. Contact the glove manufacturer for specific advice on glove selection and breakthrough times for your use conditions. Inspect and replace worn or damaged gloves. The types of gloves to be considered for this material include:
No protection is ordinarily required under normal conditions of use.

Eye Protection: If contact is likely, safety glasses with side shields are recommended.

Skin and Body Protection: Any specific clothing information provided is based on published literature or manufacturer data. The types of clothing to be considered for this material include:
No skin protection is ordinarily required under normal conditions of use. In accordance with good industrial hygiene practices, precautions should be taken to avoid skin contact.

Specific Hygiene Measures: Always observe good personal hygiene measures, such as washing after handling the material and before eating, drinking, and/or smoking. Routinely wash work clothing and protective equipment to remove contaminants. Discard contaminated clothing and footwear that cannot be cleaned. Practice good housekeeping.

ENVIRONMENTAL CONTROLS

Comply with applicable environmental regulations limiting discharge to air, water and soil. Protect the environment by applying appropriate control measures to prevent or limit emissions.

SECTION 9 PHYSICAL AND CHEMICAL PROPERTIES

Note: Physical and chemical properties are provided for safety, health and environmental considerations only

and may not fully represent product specifications. Contact the Supplier for additional information.

GENERAL INFORMATION

Physical State: Liquid
Color: Orange
Odor: Characteristic
Odor Threshold: N/D

IMPORTANT HEALTH, SAFETY, AND ENVIRONMENTAL INFORMATION

Relative Density (at 15 °C): 0.864
Flash Point [Method]: >210°C (410°F) [ASTM D-92]
Flammable Limits (Approximate volume % in air): LEL: 0.9 UEL: 7.0
Autoignition Temperature: N/D
Boiling Point / Range: > 316°C (600°F)
Vapor Density (Air = 1): > 2 at 101 kPa
Vapor Pressure: < 0.013 kPa (0.1 mm Hg) at 20 °C
Evaporation Rate (n-butyl acetate = 1): N/D
pH: N/A
Log Pow (n-Octanol/Water Partition Coefficient): > 3.5
Solubility in Water: Negligible
Viscosity: 150 cSt (150 mm2/sec) at 40 °C | 20.8 cSt (20.8 mm2/sec) at 100°C
Oxidizing Properties: See Hazards Identification Section.

OTHER INFORMATION

Freezing Point: N/D
Melting Point: N/A
Pour Point: -39°C (-38°F)

SECTION 10 STABILITY AND REACTIVITY

STABILITY: Material is stable under normal conditions.

CONDITIONS TO AVOID: Excessive heat. High energy sources of ignition.

MATERIALS TO AVOID: Strong oxidizers

HAZARDOUS DECOMPOSITION PRODUCTS: Material does not decompose at ambient temperatures.

HAZARDOUS POLYMERIZATION: Will not occur.

SECTION 11 TOXICOLOGICAL INFORMATION

ACUTE TOXICITY

Route of Exposure	Conclusion / Remarks
Inhalation	
Toxicity (Rat): LC50 > 5000 mg/m3	Minimally Toxic. Based on test data for structurally similar materials.
Irritation: No end point data.	Negligible hazard at ambient/normal handling temperatures. Based on assessment of the components.
Ingestion	

Toxicity (Rat): LD50 > 5000 mg/kg	Minimally Toxic. Based on test data for structurally similar materials.
Skin	
Toxicity (Rabbit): LD50 > 5000 mg/kg	Minimally Toxic. Based on test data for structurally similar materials.
Irritation (Rabbit): Data available.	Negligible irritation to skin at ambient temperatures. Based on test data for structurally similar materials.
Eye	
Irritation (Rabbit): Data available.	May cause mild, short-lasting discomfort to eyes. Based on test data for structurally similar materials.

CHRONIC/OTHER EFFECTS

Contains:

Synthetic base oils: Not expected to cause significant health effects under conditions of normal use, based on laboratory studies with the same or similar materials. Not mutagenic or genotoxic. Not sensitizing in test animals and humans.

Additional information is available by request.

The following ingredients are cited on the lists below: None.

--REGULATORY LISTS SEARCHED--

1 = NTP CARC	3 = IARC 1	5 = IARC 2B
2 = NTP SUS	4 = IARC 2A	6 = OSHA CARC

SECTION 12 ECOLOGICAL INFORMATION

The information given is based on data available for the material, the components of the material, and similar materials.

ECOTOXICITY

Material -- Not expected to be harmful to aquatic organisms.
Material -- Not expected to demonstrate chronic toxicity to aquatic organisms.

MOBILITY

Base oil component -- Low solubility and floats and is expected to migrate from water to the land. Expected to partition to sediment and wastewater solids.

SECTION 13 DISPOSAL CONSIDERATIONS

Disposal recommendations based on material as supplied. Disposal must be in accordance with current applicable laws and regulations, and material characteristics at time of disposal.

DISPOSAL RECOMMENDATIONS

Product is suitable for burning in an enclosed controlled burner for fuel value or disposal by supervised incineration at very high temperatures to prevent formation of undesirable combustion products. Protect the environment. Dispose of used oil at designated sites. Minimize skin contact. Do not mix used oils with solvents, brake fluids or coolants.

REGULATORY DISPOSAL INFORMATION

RCRA Information: The unused product, in our opinion, is not specifically listed by the EPA as a hazardous waste (40 CFR, Part 261D), nor is it formulated to contain materials which are listed as hazardous wastes. It does not exhibit the hazardous characteristics of ignitability, corrosivity or reactivity and is not formulated with contaminants as determined by the Toxicity Characteristic Leaching Procedure (TCLP). However, used product may be regulated.

Empty Container Warning Empty Container Warning (where applicable): Empty containers may contain residue and can be dangerous. Do not attempt to refill or clean containers without proper instructions. Empty drums should be completely drained and safely stored until appropriately reconditioned or disposed. Empty containers should be taken for recycling, recovery, or disposal through suitably qualified or licensed contractor and in accordance with governmental regulations. DO NOT PRESSURISE, CUT, WELD, BRAZE, SOLDER, DRILL, GRIND, OR EXPOSE SUCH CONTAINERS TO HEAT, FLAME, SPARKS, STATIC ELECTRICITY, OR OTHER SOURCES OF IGNITION. THEY MAY EXPLODE AND CAUSE INJURY OR DEATH.

SECTION 14 TRANSPORT INFORMATION

LAND (DOT): Not Regulated for Land Transport

LAND (TDG): Not Regulated for Land Transport

SEA (IMDG): Not Regulated for Sea Transport according to IMDG-Code

AIR (IATA): Not Regulated for Air Transport

SECTION 15 REGULATORY INFORMATION

OSHA HAZARD COMMUNICATION STANDARD: When used for its intended purposes, this material is not classified as hazardous in accordance with OSHA 29 CFR 1910.1200.

Complies with the following national/regional chemical inventory requirements:: TSCA
Special Cases:

Inventory	Status
AICS	Restrictions Apply
ELINCS	Restrictions Apply
KECI	Restrictions Apply

EPCRA: This material contains no extremely hazardous substances.

SARA (311/312) REPORTABLE HAZARD CATEGORIES: None.

SARA (313) TOXIC RELEASE INVENTORY: This material contains no chemicals subject to the supplier notification requirements of the SARA 313 Toxic Release Program.

The following ingredients are cited on the lists below:

Chemical Name	CAS Number	List Citations
PHENOL, 4,4-METHYLENEBIS(2,6-BIS(1,1-DIMETHYLETHYL)-	118-82-1	5

--REGULATORY LISTS SEARCHED--

1 = ACGIH ALL	6 = TSCA 5a2	11 = CA P65 REPRO	16 = MN RTK
2 = ACGIH A1	7 = TSCA 5e	12 = CA RTK	17 = NJ RTK
3 = ACGIH A2	8 = TSCA 6	13 = IL RTK	18 = PA RTK
4 = OSHA Z	9 = TSCA 12b	14 = LA RTK	19 = RI RTK
5 = TSCA 4	10 = CA P65 CARC	15 = MI 293	

Code key: CARC=Carcinogen; REPRO=Reproductive

SECTION 16 OTHER INFORMATION

N/D = Not determined, N/A = Not applicable

THIS SAFETY DATA SHEET CONTAINS THE FOLLOWING REVISIONS:

Revision Changes:
Section 13: Disposal Considerations - Disposal Recommendations was modified.
Section 10 Stability and Reactivity - Header was modified.
Section 13: Disposal Recommendations - Note was modified.
Section 09: Phys/Chem Properties Note was modified.
Section 09: Boiling Point C(F) was modified.
Section 08: Comply with applicable regulations phrase was modified.
Section 08: Personal Protection was modified.
Section 01: Product Intended Use was modified.
Section 09: Vapor Pressure was modified.
Section 07: Handling and Storage - Handling was modified.
Section 07: Handling and Storage - Storage Phrases was modified.
Section 06: Accidental Release - Spill Management - Water was modified.
Section 09: Relative Density - Header was modified.
Section 09: Flash Point C(F) was modified.
Section 09: Viscosity was modified.
Section 14: Sea (IMDG) - Header was modified.
Section 14: Air (IATA) - Header was modified.
Section 14: LAND (TDG) - Header was modified.
Section 14: LAND (DOT) - Header was modified.

Section 15: List Citation Table - Header was modified.
Section 14: LAND (DOT) - Default was modified.
Section 14: LAND (TDG) Default was modified.
Section 14: Sea (IMDG) - Default was modified.
Section 14: Air (IATA) - Default was modified.
Section 15: National Chemical Inventory Listing - Header was modified.
Section 15: National Chemical Inventory Listing was modified.
Section 08: Exposure limits/standards was modified.
Section 15: Special Cases Table was modified.
Hazard Identification: OSHA - May be Hazardous Statement was modified.
Section 09: Oxidizing Properties was modified.
Section 06: Protective Measures was added.
Section 06: Accidental Release - Protective Measures - Header was added.
Section 09: Viscosity was added.
Section 09: DMSO IP was deleted.
Section 09: DMSO IP - Header was deleted.

The information and recommendations contained herein are, to the best of ExxonMobil's knowledge and belief, accurate and reliable as of the date issued. You can contact ExxonMobil to insure that this document is the most current available from ExxonMobil. The information and recommendations are offered for the user's consideration and examination. It is the user's responsibility to satisfy itself that the product is suitable for the intended use. If buyer repackages this product, it is the user's responsibility to insure proper health, safety and other necessary information is included with and/or on the container. Appropriate warnings and safe-handling procedures should be provided to handlers and users. Alteration of this document is strictly prohibited. Except to the extent required by law, re-publication or retransmission of this document, in whole or in part, is not permitted. The term, "ExxonMobil" is used for convenience, and may include any one or more of ExxonMobil Chemical Company, Exxon Mobil Corporation, or any affiliates in which they directly or indirectly hold any interest.

Internal Use Only
MHC: 0B, 0B, 0, 0, 0, 0 PPEC: A

DGN: 2007961XUS (1013314)

Copyright 2002 Exxon Mobil Corporation, All rights reserved

11.5.12 CRC TAC 2 ADHESIVE CHAIN LUBRICANT

CRC Industries, Inc.
885 Louis Drive • Warminster PA • 18974

Technical Data Sheet

TAC 2™ Adhesive Chain Lubricant

I. Product Description

CRC TAC 2™ is an exceptional lubricant, with a tough adhesive quality, which will bond to chain/wear surfaces to keep them in peak operating condition by reducing friction and wear that cause metal fatigue. **CRC TAC 2™** contains a tackifier that enables the lubricant to cling tenaciously to metal surfaces without increasing the viscosity. Regular use of **CRC TAC 2™** will help inhibit corrosion, reduce load stress and help increase chain life.

II. Applications

Recommended for use as a lubricant and corrosion inhibitor on all types of drive chains, open gears, hoists, winches, pulleys, fork lifts, rollers, garage doors, bushings, seals, o-rings, and wire ropes.

III. Features & Benefits

- **Low Viscosity**. Provides the ability to penetrate and thoroughly coat vital chain pin and bushing areas.
- **Contains Molybdenum**. Provides cling ability to avoid sling-off or excess dripping.
- **High Temperature Stability**. Operates effectively in temperatures up to 350° F continuous, equivalent to many grease products. Covers wide range of applications.
- **Blue Color** allows easy identification of lubricated parts and equipment.
- **No Known Ozone Depleting Chemicals**. Offers effective performance while complying with the EPA regulations on the use of ozone depleting chemicals.
- **M.S.D.[L.]™-Material Safety Data Label**. Provides instant access to current safety information should an accident or OSHA inspection occur. Helps comply **with OSHA Hazard Communications Standard 29 CFR 1910.1200**.

IV. Physical Properties without propellant

Flash Point	<0ºF TCC	**Boiling Point**	140°F
Odor	Mild petroleum	**Solubility**	Negligible in water
Appearance	Blue liquid	**% Volatile**	81.3%
Vapor Density	>1 (air=1)	**Specific Gravity**	0.710
VOC Content (Fed)	577.2 g/L	**Temperature Range**	350°F (Continuous)
Shelf Life	2 years	**Propellant**	Hydrocarbon
Sara Title III, Sect. 313 Chemicals	Yes		
Prop 65	No		

V. Specifications and Approvals

- NSF Registration # 144243, Category Code (H2) for use in federally inspected meat and poultry plants.

TAC 2™ Adhesive Chain Lubricant

VI. Performance Characteristics

Type of Film	Non-drying
Base Type	Organic Molybdenum
ASTM D-3233 (Falex Load Test)	1,500 lbs.

VII. Directions

1. Do not apply while equipment is energized.
2. Shake well before use.
3. Spray upper edges of overlapping chain side plates and allow lubricant to set up before re-energizing.

VIII. Package Description

Part Number	Container Size
03076	16 oz Aerosol

IX. Disposal

Disposal requirements vary by state and local jurisdiction. All used and unused product should be disposed of in conformance with local, state and federal regulations.

X. Special Use Warnings

Aerosol Cans
Do not puncture, incinerate or store above 120°F. Exposure to high temperatures may cause can to burst. Do not place in direct sunlight or near any heat source. Use only in well ventilated area. Avoid continuous breathing of vapor and spray mist. Avoid contact with skin and eyes. If ventilation is not adequate, respiratory protection should be worn. Aerosol cans will conduct electricity. Keep away from all live electrical sources including battery terminals, solenoids, electrical panels and other electronic components. Failure to observe this warning may result in serious injury from flash fire and/or electrical shock.

Bulk
Product is extremely flammable and should be kept from all flames and other ignition sources. Vapors are heavier than air and can collect in low-lying areas.

General
Use only in well ventilated area. Ventilation may be improved by opening a window or door or providing mechanical assistance. Avoid continuous breathing of vapor and spray mist. Avoid contact with skin and eyes. If ventilation is not adequate, respiratory protection should be worn. For more information regarding short term and long term exposure, review this product's Material Safety Data Sheet.

DISCLAIMER: This information is accurate to the best of CRC Industries' knowledge or obtained from sources believed by CRC to be accurate. Before using any product, read all warnings and directions on the label. All products should be tested for suitability on a particular application prior to actual use. CRC Industries, Inc. makes no representations or warranties of any kind concerning this data.

CRC Industries, Inc. *Industrial Products Division* *Warminster, PA 18974*
Technical Service: (800)521-3168 *Customer Service: (800)272-4620* *CRC On-Line: (215)442-6260*

Literature Reorder #TDS343 ***CRC On-Line # 343*** ***REV. 9/11***

CRC MATERIAL SAFETY DATA SHEET

Section 1: Product & Company Identification

Product Name: **TAC 2™ Adhesive Chain Lube** (aerosol)

Product Number (s): **03076**

Product Use: industrial chain lubricant

Manufacturer / Supplier Contact Information:

In United States:
CRC Industries, Inc.
885 Louis Drive
Warminster, PA 18974
www.crcindustries.com
1-215-674-4300 (General)
(800) 521-3168 (Technical)
(800) 272-4620 (Customer Service)

In Canada:
CRC Canada Co.
2-1246 Lorimar Drive
Mississauga, Ontario L5S 1R2
www.crc-canada.ca
1-905-670-2291

In Mexico:
CRC Industries Mexico
Av. Benito Juárez 4055 G
Colonia Orquídea
San Luís Potosí, SLP CP 78394
www.crc-mexico.com
52-444-824-1666

24-Hr Emergency – CHEMTREC: (800) 424-9300 or (703) 527-3887

Section 2: Hazards Identification

Emergency Overview

DANGER: Extremely Flammable. Harmful or Fatal if Swallowed. Contents Under Pressure.
As defined by OSHA's Hazard Communication Standard, this product is hazardous.
Appearance & Odor: Blue liquid with mild petroleum odor

Potential Health Effects:

ACUTE EFFECTS:

EYE: May cause mild irritation including stinging and redness, but does not injure eye.

SKIN: Single, brief exposures may cause mild irritation. Frequent or prolonged contact may cause more severe irritation, defatting of the skin, and dermatitis.

INHALATION: High vapor concentrations are irritating to the respiratory tract and may cause headaches, dizziness, anesthesia, drowsiness, unconsciousness, and other central nervous system effects, including death. May cause peripheral nervous system disorder and/or damage.

INGESTION: Low order of toxicity by ingestion. Main hazard is aspiration into the lungs during swallowing or vomiting. Small amounts aspirated into the respiratory system may cause bronchopneumonia or pulmonary adema, possibly progressing to death.

CHRONIC EFFECTS: Overexposure to n-hexane may cause progressive and potentially irreversible damage to the peripheral nervous system, particularly in the arms and legs.

TARGET ORGANS: Central nervous system, peripheral nervous system, respiratory system

Medical Conditions Aggravated by Exposure: skin and respiratory conditions

See Section 11 for toxicology and carcinogenicity information on product ingredients.

Page 1 of 7

Product Name: TAC 2™ Adhesive Chain Lube (aerosol)
Product Number (s): 03076

Section 3: Composition/Information on Ingredients

COMPONENT	CAS NUMBER	% by Wt.
Hexane isomers	107-83-5 / 64742-49-0	50 - 60
Liquefied petroleum gas	68476-86-8	25 - 35
Acrylic copolymer	proprietary	5 - 15
Petrolatum	8009-03-8	5 - 10
n-Hexane	110-54-3	1.6

Section 4: First Aid Measures

Eye Contact: Immediately flush with plenty of water for 15 minutes. Call a physician if irritation persists.

Skin Contact: Remove contaminated clothing and wash affected area with soap and water. Call a physician if irritation persists. Wash contaminated clothing prior to re-use.

Inhalation: Remove person to fresh air. Keep person calm. If not breathing, give artificial respiration. If breathing is difficult give oxygen. Call a physician.

Ingestion: Do NOT induce vomiting. Contact a physician immediately.

Note to Physicians: Treat symptomatically. Gastric lavage using a cuffed endotracheal tube may be performed at your discretion.

Section 5: Fire-Fighting Measures

Flammable Properties: This product is extremely flammable in accordance with aerosol flammability definitions. (See 16 CFR 1500.3(c)(6)).

Flash Point: < 0°F (TCC) Upper Explosive Limit: 9.0
Autoignition Temperature: 489°F Lower Explosive Limit: 1.7

Fire and Explosion Data:

Suitable Extinguishing Media: Class B fire extinguishers, dry chemical, foam or CO_2

Products of Combustion: Fumes, smoke and carbon monoxide

Explosion Hazards: Aerosol containers, when exposed to heat from fire, may build pressure and explode. Vapors may accumulate in a confined space and create a flammable atmosphere.

Protection of Fire-Fighters: Firefighters should wear self-contained, NIOSH-approved breathing apparatus for protection against suffocation and possible toxic decomposition products. Proper eye and skin protection should be provided. Use water spray to keep fire-exposed containers cool and to knock down vapors which may result from product decomposition. Do not spray water directly on fire; product will float and could be reignited on surface of water.

Section 6: Accidental Release Measures

Personal Precautions: Use personal protection recommended in Section 8.

Product Name: TAC 2™ Adhesive Chain Lube (aerosol)
Product Number (s): 03076

Environmental Precautions: Take precautions to prevent contamination of ground and surface waters. Do not flush into sewers or storm drains.

Methods for Containment & Clean-up: Dike area to contain spill. Remove all sources of ignition. Ventilate the area with fresh air. If in confined space or limited air circulation area, clean-up workers should wear appropriate respiratory protection. Recover or absorb spilled material using an absorbent designed for chemical spills. Place used absorbents into proper waste containers.

Section 7: Handling and Storage

Handling Procedures: Use proper grounding and bonding procedures for transferring materials. Do not use product near any source of ignition. Avoid contact with eyes and skin. Avoid breathing vapors. Use caution around energized equipment. The metal container will conduct electricity if it contacts a live source. This may result in injury to the user from electrical shock and/or flash fire. For product use instructions, please see the product label.

Storage Procedures: Store in a cool dry area out of direct sunlight. Aerosol cans must be maintained below 120 F to prevent cans from rupturing.

Aerosol Storage Level: III

Section 8: Exposure Controls/Personal Protection

Exposure Guidelines:

	OSHA		ACGIH		OTHER		
COMPONENT	TWA	STEL	TWA	STEL	TWA	SOURCE	UNIT
Hexane isomers	500(v)	1000(v)	500	1000	NE		ppm
Liquefied petroleum gas	1000	NE	1000	NE	NE		ppm
Acrylic copolymer	NE	NE	NE	NE	NE		
Petrolatum	NE	NE	NE	NE	NE		
n-Hexane	500	NE	50(s)	NE	NE		ppm
N.E. – Not Established (c) – ceiling (s) – skin (v) – vacated							

Controls and Protection:

Engineering Controls: Area should have ventilation to provide fresh air. Local exhaust ventilation is generally preferred because it can control the emissions of the contaminant at the source, preventing dispersion into the general work area. Use mechanical means if necessary to maintain vapor levels below the exposure guidelines. If working in a confined space, follow applicable OSHA regulations.

Respiratory Protection: None required for normal work where adequate ventilation is provided. If engineering controls are not feasible or if exposure exceeds the applicable exposure limits, use a NIOSH-approved cartridge respirator with organic vapor cartridge. Air monitoring is needed to determine actual employee exposure levels. Use a self-contained breathing apparatus in confined spaces and for emergencies.

Eye/face Protection: For normal conditions, wear safety glasses. Where there is reasonable probability of liquid contact, wear splash-proof goggles.

Skin Protection: Use protective gloves such as nitrile, PVC or Viton. Also, use full protective clothing if there is prolonged or repeated contact of liquid with skin.

Product Name: TAC 2™ Adhesive Chain Lube (aerosol)
Product Number (s): 03076

Section 9: Physical and Chemical Properties

Physical State: liquid
Color: blue
Odor: mild petroleum
Odor Threshold: ND
Specific Gravity: 0.710
Initial Boiling Point: 140°F
Freezing Point: < -76°F
Vapor Pressure: 160 mmHg @ 68°F
Vapor Density: > 1 (air = 1)
Evaporation Rate: fast
Solubility: negligible in water
Coefficient of water/oil distribution: ND
pH: NA
Volatile Organic Compounds: wt %: 81.3 g/L: 577.2 lbs./gal: 4.8

Section 10: Stability and Reactivity

Stability: Stable

Conditions to Avoid: Sources of ignition, temperature extremes

Incompatible Materials: Strong oxidizers

Hazardous Decomposition Products: Oxides of carbon

Possibility of Hazardous Reactions: No

Section 11: Toxicological Information

Long-term toxicological studies have not been conducted for this product. The following information is available for components of this product.

Acute Toxicity:

Component	Oral LD50 (rat)	Dermal LD50 (rabbit)	Inhalation LC50 (rat)
Hexane isomers	No data	No data	No data
Liquefied petroleum gas	No data	No data	No data
Acrylic copolymer	No data	No data	No data
Petrolatum	> 5 g/kg	> 2 g/kg	No data
n-Hexane	28,710 mg/kg	3000 mg/kg	48,000 ppm/4H

Page 4 of 7

Product Name: TAC 2™ Adhesive Chain Lube (aerosol)
Product Number (s): 03076

Chronic Toxicity:

Component	OSHA Carcinogen	IARC Carcinogen	NTP Carcinogen	Irritant	Sensitizer
Hexane isomers	No	No	No	E & S (mild)	Unknown
Liquefied petroleum gas	No	No	No	No	No
Acrylic copolymer	No	No	No	E & S (mild)	Unknown
Petrolatum	No	No	No	No	Unknown
n-Hexane	No	No	No	E, S & R (moderate)	Unknown

E – Eye S – Skin R - Respiratory

Reproductive Toxicity: No information available
Teratogenicity: No information available
Mutagenicity: No information available
Synergistic Effects: No information available

Section 12: Ecological Information

Ecological studies have not been conducted for this product. The following information is available for components of this product.

Ecotoxicity: n-hexane - 48 Hr EC50 water flea: 3.87 mg/L
96 Hr LC50 Lepomis macrochirus: 4.12 mg/L
Persistence / Degradability: No information available
Bioaccumulation / Accumulation: No information available
Mobility in Environment: No information available

Section 13: Disposal Considerations

Waste Classification: The dispensed liquid product is a RCRA hazardous waste for the characteristic of ignitability with a waste code of D001. (See 40 CFR Part 261.20 – 261.33)
Aerosol should be fully emptied and depressurized before disposal. Empty containers may be recycled.

All disposal activities must comply with federal, state, provincial and local regulations. Local regulations may be more stringent than state, provincial or national requirements.

Section 14: Transport Information

US DOT (ground): Consumer Commodity, ORM-D

ICAO/IATA (air): Consumer Commodity, ID8000, 9

IMO/IMDG (water): Aerosols, UN1950, 2.1, Limited Quantity

Special Provisions: None

Section 15: Regulatory Information

Product Name: TAC 2™ Adhesive Chain Lube (aerosol)
Product Number (s): 03076

U.S. Federal Regulations:

Toxic Substances Control Act (TSCA):
All ingredients are either listed on the TSCA inventory or are exempt.

Comprehensive Environmental Response, Compensation and Liability Act (CERCLA):
Reportable Quantities (RQ's) exist for the following ingredients: n-hexane (5000 lbs)

Spills or releases resulting in the loss of any ingredient at or above its RQ require immediate notification to the National Response Center (800-424-8802) and to your Local Emergency Planning Committee.

Superfund Amendments Reauthorization Act (SARA) Title III:
Section 302 Extremely Hazardous Substances (EHS): None

Section 311/312 Hazard Categories:		
	Fire Hazard	Yes
	Reactive Hazard	No
	Release of Pressure	Yes
	Acute Health Hazard	Yes
	Chronic Health Hazard	No

Section 313 Toxic Chemicals: This product contains the following substances subject to the reporting requirements of Section 313 of Title III of the Superfund Amendments and Reauthorization Act of 1986 and 40 CFR Part 372:
n-hexane (1.6%)

Clean Air Act:
Section 112 Hazardous Air Pollutants (HAPs): n-hexane

U.S. State Regulations:

California Safe Drinking Water and Toxic Enforcement Act (Prop 65):
This product may contain the following chemicals known to the state of California to cause cancer, birth defects or other reproductive harm: None

Consumer Products VOC Regulations: This product is not regulated.

State Right to Know:

New Jersey:	75-83-2, 110-54-3, 79-29-8, 68476-86-8
Pennsylvania:	107-83-5, 75-83-2, 110-54-3, 79-29-8, 68476-86-8
Massachusetts:	107-83-5, 75-83-2, 110-54-3, 79-29-8, 68476-86-8
Rhode Island :	110-54-3, 68476-86-8

Canadian Regulations:

Controlled Products Regulations:
This product has been classified in accordance with the hazard criteria of the Controlled Products Regulations and the MSDS contains all the information required by the Controlled Products Regulations.

WHMIS Hazard Class: A, B5

Canadian DSL Inventory: All ingredients are either listed on the DSL Inventory or are exempt.

European Union Regulations:

RoHS Compliance: This product is compliant with Directive 2002/95/EC of the European Parliament and of the Council of 27 January 2003. This product does not contain any of the restricted substances as listed in Article 4(1) of the RoHS Directive.

Additional Regulatory Information: None

Page 6 of 7

Product Name: TAC 2™ Adhesive Chain Lube (aerosol)
Product Number (s): 03076

Section 16: Other Information

HMIS® (II)	
Health:	2
Flammability:	3
Reactivity:	0
PPE:	B

NFPA

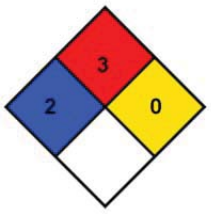

Ratings range from 0 (no hazard) to 4 (severe hazard)

Prepared By: Michelle Rudnick
CRC #: 932A/B
Revision Date: 11/11/2010

Changes since last revision: new product

The information contained in this document applies to this specific material as supplied. It may not be valid for this material if it is used in combination with any other materials. This information is accurate to the best of CRC Industries' knowledge or obtained from sources believed by CRC to be accurate. Before using any product, read all warnings and directions on the label. For further clarification of any information contained on this MSDS consult your supervisor, a health & safety professional, or CRC Industries.

ACGIH: American Conference of Governmental Industrial Hygienists
CAS: Chemical Abstract Service
CFR: Code of Federal Regulations
DOT: Department of Transportation
DSL: Domestic Substance List
g/L: grams per Liter
HMIS: Hazardous Materials Identification System
IARC: International Agency for Research on Cancer
IATA: International Air Transport Association
ICAO: International Civil Aviation Organization
IMDG: International Maritime Dangerous Goods
IMO: International Maritime Organization
lbs./gal: pounds per gallon
LC: Lethal Concentration
LD: Lethal Dose
NA: Not Applicable
ND: Not Determined
NIOSH: National Institute of Occupational Safety & Health
NFPA: National Fire Protection Association
NTP: National Toxicology Program
OSHA: Occupational Safety and Health Administration
PMCC: Pensky-Martens Closed Cup
PPE: Personal Protection Equipment
ppm: Parts per Million
RoHS: Restriction of Hazardous Substances
STEL: Short Term Exposure Limit
TCC: Tag Closed Cup
TWA: Time Weighted Average
WHMIS: Workplace Hazardous Materials Information System

Page 7 of 7

11.5.13 CRC QUICKCLEAN HEAVY DUTY DEGREASER

CRC Industries, Inc.
885 Louis Drive • Warminster PA • 18974

Technical Data Sheet
Quick Clean™
Heavy Duty Degreaser

I. Product Description

CRC Quick Clean™ is a non-flammable, chlorinated, non-ozone depleting degreaser for use on industrial equipment. It provides an economical and aggressive reduced VOC alternative to 1,1,1. It dissolves grease, oil and sludge quickly for more efficient operation of mechanical equipment. **Quick Clean™** is chemically stable, non-conductive and non-corrosive.

II. Applications

Recommended for the removal of grease, oil, grime, sludge and corrosion from motors, air tools, mechanical brakes, clutches, chains, wire rope, machinery, parts, bearings, generators, compressors, pumps, hoists, lifts, dies, molds and a wide variety of other industrial and electrical equipment. Safe for use on oxygen systems*.

III. Features & Benefits

- **Non-Flammable**. Significantly reduces the risk of fire caused by incidental contact of liquid with live equipment or solvents trapped by insulating materials.
- **Fast Evaporation**. Reduces down-time.
- **Leaves No Residue.** Prevents harmful build-up on equipment and eliminates wiping in most applications.
- **No Class I or II Ozone Depleting Chemicals**. Provides an alternative to 1,1,1-Trichloroethane products while complying with the EPA regulations on the use of ozone depleting chemicals.
- **M.S.D.[L.]™-Material Safety Data Label**. Provides instant access to current safety information should an accident or OSHA inspection occur. Helps comply **with OSHA Hazard Communications Standard 29 CFR 1910.1200**.

IV. Physical Properties without propellant

Flash Point	None	**Boiling Point**	250°F (initial)
Odor	Strong in high concentrations	**Solubility**	Slight in water
Appearance	Colorless liquid	**% Volatile**	100
Vapor Density	5.76 (air=1)	**Specific Gravity**	1.619 @ 25°C
VOC Content (Fed)	Exempt (0 g/L)	**Surface Tension**	32.32 dynes/cm
Sara Title III, Sect. 313 Chemicals	Yes	**Propellant**	CO_2
Prop 65	Yes		

V. Specifications and Approvals

- NSF K2 Registered for use in meat and poultry plants.

*Post-test and cleanliness inspection procedures should be followed before re-introduction of oxygen to the system.

Quick Clean™ Heavy Duty Degreaser

VI. Performance Characteristics

ASTM D-56 (Flash Point)	None
ASTM D-877 (Dielectric Strength)	37,500 volts
ASTM D-1130 (KB Value)	95
Surface Tension	32.32 dynes/CM

VII. Directions

- Do not use on polycarbonate plastics such as LEXAN®. If in doubt, call the manufacturer of the equipment. MAY ALSO BE HARMFUL TO OTHER PLASTICS.
- Protect all rubber parts, plastic parts, and painted surfaces from overspray. DO NOT spray directly on painted surfaces.
- Remove access plates to expose equipment interior. For hard to reach areas, use extension tube.
- Spray until clean.
- Air dry or dry with a clean, absorbent cloth.
- Heavy deposits may require scraping and repeated applications.
- **FOR PERSONAL SAFETY DO NOT APPLY WHILE EQUIPMENT IS ENERGIZED**.
- Not for use on sensitive electronic equipment such as tape decks, VCRs, computers, etc. Use a plastic safe CRC Precision Cleaner for those applications.
- Avoid contact with aluminum and its' alloys.

VIII. Package Description

Part Number	Container Size
03180	20 oz Aerosol
03183	5 Gallon Pail
03184	55 Gallon Drum

IX. Disposal

Disposal requirements vary by state and local jurisdiction. All used and unused product should be disposed of in conformance with local, state and federal regulations.

X. Special Use Warnings

Aerosol Cans
Do not puncture, incinerate or store above 120°F. Exposure to high temperatures may cause can to burst. Do not place in direct sunlight or near any heat source. Aerosol cans will conduct electricity. Keep away from all live electrical sources including battery terminals, solenoids, electrical panels and other electronic components. Failure to observe this warning may result in serious injury from flash fire and/or electrical shock.

General
Use only in well ventilated area. Ventilation may be improved by opening a window or door or providing mechanical assistance. Avoid continuous breathing of vapor and spray mist. Avoid contact with skin and eyes. If ventilation is not adequate, respiratory protection should be worn. For more information regarding short term and long term exposure, review this product's Material Safety Data Sheet.

DISCLAIMER: This information is accurate to the best of CRC Industries' knowledge or obtained from sources believed by CRC to be accurate. Before using any product, read all warnings and directions on the label. All products should be tested for suitability on a particular application prior to actual use. CRC Industries, Inc. makes no representations or warranties of any kind concerning this data.

CRC Industries, Inc. *Industrial Products Division* *Warminster, PA 18974*
Technical Service: (800)521-3168 *Customer Service: (800)272-4620* *CRC On-Line: (215)442-6260*

Literature Reorder #TDS186 ***CRC On-Line # 186*** ***REV. 11/11***

CRC MATERIAL SAFETY DATA SHEET

Section 1: Product & Company Identification

Product Name: **Quick Clean™** (aerosol)

Product Number (s): **03180**

Product Use: General purpose degreaser

Manufacturer / Supplier Contact Information:

In United States:
CRC Industries, Inc.
885 Louis Drive
Warminster, PA 18974
www.crcindustries.com
1-215-674-4300(General)
(800) 521-3168 (Technical)
(800) 272-4620 (Customer Service)

In Canada:
CRC Canada Co.
2-1246 Lorimar Drive
Mississauga, Ontario L5S 1R2
www.crc-canada.ca
1-905-670-2291

In Mexico:
CRC Industries Mexico
Av. Benito Juárez 4055 G
Colonia Orquídea
San Luís Potosí, SLP CP 78394
www.crc-mexico.com
52-444-824-1666

24-Hr Emergency – CHEMTREC: (800) 424-9300 or (703) 527-3887

Section 2: Hazards Identification

Emergency Overview

DANGER: Vapor Harmful. Contents Under Pressure.
Appearance & Odor: Colorless liquid, irritating odor at high concentrations.

Potential Health Effects:

ACUTE EFFECTS:

EYE: May cause slight temporary eye irritation. Vapors may irritate the eyes at concentrations of 100 ppm.

SKIN: Short single exposure may cause skin irritation. Prolonged exposure may cause severe skin irritation, even a burn. A single prolonged exposure is not likely to result in the material being absorbed through the skin in harmful amounts.

INHALATION: Dizziness may occur at concentrations of 200 ppm. Progressively higher levels may also cause nasal irritation, nausea, incoordination, and drunkenness. Very high levels or prolonged exposure could lead to unconsciousness and death.

INGESTION: Single dose oral toxicity is considered to be extremely low. Swallowing large amounts may cause injury if aspirated into the lungs. This may be rapidly absorbed through the lungs and result in injury to other body systems.

CHRONIC EFFECTS: Repeated contact with skin may cause drying or flaking of skin. Excessive or long term exposure to vapors may increase sensitivity to epinephrine and increase myocardial irritability.

TARGET ORGANS: Central nervous system, possibly liver and kidney

Medical Conditions Aggravated by Exposure: None known.

See Section 11 for toxicology and carcinogenicity information on product ingredients.

Page 1 of 7

Product Name: Quick Clean™ (aerosol)
Product Number (s): 03180

Section 3: Composition/Information on Ingredients

COMPONENT	CAS NUMBER	% by Wt.
Tetrachloroethylene (PERC)	127-18-4	> 95
Carbon Dioxide	124-38-9	< 5

Section 4: First Aid Measures

Eye Contact: Immediately flush with plenty of water for 15 minutes. Call a physician if irritation persists.

Skin Contact: Remove contaminated clothing and wash affected area with soap and water. Call a physician if irritation persists. Wash contaminated clothing prior to re-use.

Inhalation: Remove person to fresh air. Keep person calm. If not breathing, give artificial respiration. If breathing is difficult give oxygen. Call a physician.

Ingestion: Do NOT induce vomiting. Call a physician immediately.

Note to Physicians: Because rapid absorption may occur through lungs if aspirated and cause systemic effects, the decision of whether to induce vomiting or not should be made by a physician. If lavage is performed, suggest endotracheal and/or esophageal control. If burn is present, treat as any thermal burn, after decontamination. Exposure may increase myocardial irritability. Do not administer sympathomimetic drugs unless absolutely necessary. No specific antidote.

Section 5: Fire-Fighting Measures

Flammable Properties: This product is nonflammable in accordance with aerosol flammability definitions. (See 16 CFR 1500.3(c)(6))

Flash Point: None (TCC) Upper Explosive Limit: None
Autoignition Temperature: None Lower Explosive Limit: None

Fire and Explosion Data:

Suitable Extinguishing Media: This material does not burn. Use extinguishing agent suitable for surrounding fire.

Products of Combustion: Hydrogen chloride. Trace amounts of phosgene and chlorine.

Explosion Hazards: Aerosol containers, when exposed to heat from fire, may build pressure and explode.

Protection of Fire-Fighters: Firefighters should wear self-contained, NIOSH-approved breathing apparatus for protection against suffocation and possible toxic decomposition products. Proper eye and skin protection should be provided. Use water spray to keep fire-exposed containers cool and to knock down vapors which may result from product decomposition.

Section 6: Accidental Release Measures

Personal Precautions: Use personal protection recommended in Section 8. Do not breathe vapors.

Environmental Precautions: Take precautions to prevent contamination of ground and surface waters. Do not flush into sewers or storm drains.

Methods for Containment & Clean-up: Dike area to contain spill. Ventilate the area with fresh air. If in confined space or limited air circulation area, clean-up workers should wear appropriate

Product Name: Quick Clean™ (aerosol)
Product Number (s): 03180

respiratory protection. Recover or absorb spilled material using an absorbent designed for chemical spills. Place used absorbents into proper waste containers.

Section 7: Handling and Storage

Handling Procedures: Vapors of this product are heavier than air and will collect in low areas. Make sure ventilation removes vapors from low areas. Do not eat, drink or smoke while using this product. Use caution around energized equipment. The metal container will conduct electricity if it contacts a live source. This may result in injury to the user from electrical shock and/or flash fire. For product use instructions, please see the product label.

Storage Procedures: Store in a cool dry area out of direct sunlight. Aerosol cans must be maintained below 120°F / 49°C to prevent cans from rupturing.

Aerosol Storage Level: I

Section 8: Exposure Controls/Personal Protection

Exposure Guidelines:

	OSHA		ACGIH		OTHER		
COMPONENT	TWA	STEL	TWA	STEL	TWA	SOURCE	UNIT
Tetrachloroethylene	100	N.E.	25	100	N.E.		ppm
Carbon dioxide	5000	30000 v	5000	30,000	N.E.		ppm
N.E. – Not Established (c) – ceiling (s) – skin (v) – vacated							

Controls and Protection:

Engineering Controls: Area should have ventilation to provide fresh air. Local exhaust ventilation is generally preferred because it can control the emissions of the contaminant at the source, preventing dispersion into the general work area. Use mechanical means if necessary to maintain vapor levels below the exposure guidelines. If working in a confined space, follow applicable OSHA regulations.

Respiratory Protection: None required for normal work where adequate ventilation is provided. If engineering controls are not feasible or if exposure exceeds the applicable exposure limits, use a NIOSH-approved cartridge respirator with organic vapor cartridge. Air monitoring is needed to determine actual employee exposure levels. Use a self-contained breathing apparatus in confined spaces and for emergencies.

Eye/face Protection: For normal conditions, wear safety glasses. Where there is reasonable probability of liquid contact, wear splash-proof goggles.

Skin Protection: Use protective gloves such as PVA, Teflon, or Viton. Also, use full protective clothing if there is prolonged or repeated contact of liquid with skin.

Section 9: Physical and Chemical Properties

Physical State: liquid
Color: colorless
Odor: irritating odor
Odor Threshold: 50 ppm
Specific Gravity: 1.619

Product Name: Quick Clean™ (aerosol)
Product Number (s): 03180

Initial Boiling Point: 250°F / 121°C
Freezing Point: ND
Vapor Pressure: 13 mmHg @ 68°F / 20°C
Vapor Density: 5.76 (air = 1)
Evaporation Rate: very fast
Solubility: 0.015 g / 100 g @ 77°F / 25°C in water
Coefficient of water/oil distribution (log P_{ow}): 2.88
pH: NA
Volatile Organic Compounds: wt %: 0 g/L: 0 lbs./gal: 0

Section 10: Stability and Reactivity

Stability: Stable

Conditions to Avoid: Avoid direct sunlight or ultraviolet sources. Avoid open flames, welding arcs, and other high temperature sources which induce thermal decomposition.

Incompatible Materials: Avoid contact with metals such as: aluminum powders, magnesium powders, potassium, sodium, and zinc powder. Avoid unintended contact with amines. Avoid contact with strong bases and strong oxidizers.

Hazardous Decomposition Products: Hydrogen chloride, trace amounts of chlorine and phosgene

Possibility of Hazardous Reactions: No

Section 11: Toxicological Information

Long-term toxicological studies have not been conducted for this product. The following information is available for components of this product.

Acute Toxicity:

Component	Oral LD50 (rat)	Dermal LD50 (rabbit)	Inhalation LC50 (rat)
Tetrachloroethylene	2629 mg/kg	3228 mg/kg	5200 mg/kg/4H
Carbon dioxide	No data	No data	470,000 ppm/30M

Chronic Toxicity:

Component	OSHA Carcinogen	IARC Carcinogen	NTP Carcinogen	Irritant	Sensitizer
Tetrachloroethylene	No	Group 2A	Reasonably Anticipated to be a Carcinogen	Skin	No
Carbon dioxide	No	No	No	No	No

Reproductive Toxicity: No information available
Teratogenicity: No information available
Mutagenicity: Tetrachloroethylene: In vitro studies were negative
Animal studies were negative
Synergistic Effects: No information available

Section 12: Ecological Information

Ecological studies have not been conducted for this product. The following information is available for components of this product.

Product Name: Quick Clean™ (aerosol)
Product Number (s): 03180

Ecotoxicity:	Tetrachloroethylene -- 96 Hr LC50 Rainbow Trout: 5.28 mg/L (static) 96 Hr LC50 Fathead minnow: 13.4 mg/L (flow-through)
Persistence / Degradability:	Biodegradation under aerobic conditions is below detectable limits. Biodegradation may occur under anaerobic conditions. Biodegradation rate may increase in soil and/or water with acclimation.
Bioaccumulation / Accumulation:	Bioconcentration potential is low (BCF less than 100).
Mobility in Environment:	Potential for mobility in soil is medium.

Section 13: Disposal Considerations

Waste Classification: The dispensed liquid product is a RCRA hazardous waste for toxicity with the following potential waste codes: U210, F001, F002, D039. (See 40 CFR Part 261.20 – 261.33)
Empty aerosol containers may be recycled. Any liquid product should be managed as a hazardous waste.

All disposal activities must comply with federal, state, provincial and local regulations. Local regulations may be more stringent than state, provincial or national requirements.

Section 14: Transport Information

US DOT (ground):	UN1950, Aerosols, non-flammable, 2.2 (6.1), Limited Quantity**
ICAO/IATA (air):	UN1950, Aerosols, non-flammable, containing substances in Division 6.1, Packing Group III, 2.2 (6.1), Limited Quantity
IMO/IMDG (water):	UN1950, Aerosols, 2.2 (6.1)
Special Provisions:	Marine Pollutant **This product can be classified and labeled as 'Consumer Commodity, ORM-D' for domestic ground shipping until January 1, 2014. If shipping as limited quantity by ground, note that shipping papers are not required.

Section 15: Regulatory Information

U.S. Federal Regulations:

Toxic Substances Control Act (TSCA):
All ingredients are either listed on the TSCA inventory or are exempt.

Comprehensive Environmental Response, Compensation and Liability Act (CERCLA):
Reportable Quantities (RQ's) exist for the following ingredients: Tetrachloroethylene (100 lbs)

Spills or releases resulting in the loss of any ingredient at or above its RQ require immediate notification to the National Response Center (800-424-8802) and to your Local Emergency Planning Committee.

Superfund Amendments Reauthorization Act (SARA) Title III:
Section 302 Extremely Hazardous Substances (EHS): None

Section 311/312 Hazard Categories:	Fire Hazard	No
	Reactive Hazard	No
	Release of Pressure	Yes
	Acute Health Hazard	Yes
	Chronic Health Hazard	Yes

Page 5 of 7

Product Name: Quick Clean™ (aerosol)
Product Number (s): 03180

Section 313 Toxic Chemicals: This product contains the following substances subject to the reporting requirements of Section 313 of Title III of the Superfund Amendments and Reauthorization Act of 1986 and 40 CFR Part 372:
tetrachloroethylene (98%)

Clean Air Act:
Section 112 Hazardous Air Pollutants (HAPs): tetrachloroethylene

Occupational Safety and Health Administration:
This product is regulated by the Hazard Communications Standard.

U.S. State Regulations:

California Safe Drinking Water and Toxic Enforcement Act (Prop 65):
This product may contain the following chemicals known to the state of California to cause cancer, birth defects or other reproductive harm: tetrachloroethylene

Consumer Products VOC Regulations: This product is not compliant to be sold for use in California, Connecticut, Delaware, The District of Columbia, Illinois, Indiana, Maine, Maryland, Massachusetts, Michigan, New Jersey, New York, and Rhode Island. In other states with Consumer Products VOC regulations, this product is compliant as a General Purpose Degreaser.

State Right to Know:

New Jersey:	127-18-4, 124-38-9
Pennsylvania:	127-18-4, 124-38-9
Massachusetts:	127-18-4, 124-38-9
Rhode Island :	127-18-4, 124-38-9

Canadian Regulations:

Controlled Products Regulations:
This product has been classified in accordance with the hazard criteria of the Controlled Products Regulations and the MSDS contains all the information required by the Controlled Products Regulations.

WHMIS Hazard Class: A, D1B, D2A, D2B

Canadian DSL Inventory: All ingredients are either listed on the DSL Inventory or are exempt.

European Union Regulations:

RoHS Compliance: This product is compliant with Directive 2002/95/EC of the European Parliament and of the Council of 27 January 2003. This product does not contain any of the restricted substances as listed in Article 4(1) of the RoHS Directive.

Additional Regulatory Information: None

Page 6 of 7

Product Name: Quick Clean™ (aerosol)
Product Number (s): 03180

Section 16: Other Information

HMIS® (II)	
Health:	2
Flammability:	0
Reactivity:	0
PPE:	B

NFPA

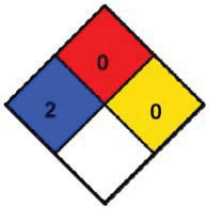

Ratings range from 0 (no hazard) to 4 (severe hazard)

Prepared By: Michelle Rudnick
CRC #: 491G
Revision Date: 07/24/2012

Changes since last revision: Section 14: Transport Information

The information contained in this document applies to this specific material as supplied. It may not be valid for this material if it is used in combination with any other materials. This information is accurate to the best of CRC Industries' knowledge or obtained from sources believed by CRC to be accurate. Before using any product, read all warnings and directions on the label. For further clarification of any information contained on this MSDS consult your supervisor, a health & safety professional, or CRC Industries.

ACGIH: American Conference of Governmental Industrial Hygienists
CAS: Chemical Abstract Service
CFR: Code of Federal Regulations
DOT: Department of Transportation
DSL: Domestic Substance List
g/L: grams per Liter
HMIS: Hazardous Materials Identification System
IARC: International Agency for Research on Cancer
IATA: International Air Transport Association
ICAO: International Civil Aviation Organization
IMDG: International Maritime Dangerous Goods
IMO: International Maritime Organization
lbs./gal: pounds per gallon
LC: Lethal Concentration
LD: Lethal Dose
NA: Not Applicable
ND: Not Determined
NIOSH: National Institute of Occupational Safety & Health
NFPA: National Fire Protection Association
NTP: National Toxicology Program
OSHA: Occupational Safety and Health Administration
PMCC: Pensky-Martens Closed Cup
PPE: Personal Protection Equipment
ppm: Parts per Million
RoHS: Restriction of Hazardous Substances
STEL: Short Term Exposure Limit
TCC: Tag Closed Cup
TWA: Time Weighted Average
WHMIS: Workplace Hazardous Materials Information System

Page 7 of 7

11.5.14 PERMATEX GEAR OIL RTV SEALANT

Toll Free: 87 PERMATEX
(877-376-2839)

10 Columbus Blvd., Hartford,
Connecticut 06106

6875 Parkland Boulevard, Solon
Ohio 44139

Technical Data Sheet

Permatex® Gear Oil RTV Sealant

AAM Revised 02/09

PRODUCT DESCRIPTION

Permatex® Gear Oil RTV Sealant is a single component, room temperature, vulcanizing, gasketing compound designed to provide reliable "formed-in-place" gaskets for mechanical assemblies. The product has been specially formulated to withstand the harsh gear oil environment found in many differentials and transfer cases that destroys normal RTV materials. Normal RTV's are broken down by friction modifiers found in many gear oils and causes leaks and seepage. This specialty RTV has been tested to stringent OEM specifications to ensure complete sealing as a gasket maker. It seeks and seals leak paths that cut and molded gaskets cannot. This product can be used to seal cut gaskets. This material cures on exposure to moisture in the air to form a tough, flexible, silicone rubber gasket. The product resists aging, weathering and thermal cycling without hardening, shrinking or cracking.

PRODUCT BENEFITS

- Maximum gear oil resistance
- Safe for use with friction modifiers
- Sensor safe, non-corrosive
- Good adhesion and flexibility
- Replaces most cut gaskets
- Can be used as a gasket maker or dressing
- Non-flammable
- Low odor

TYPICAL APPLICATIONS

- Specially designed and formulated for differentials and transfer cases

DIRECTIONS FOR USE

For assembly as a form-in-place gasket

1. Remove all previous material from mating surfaces. Permatex® Gasket Remover is recommended for most materials but not for plastics or painted surfaces.
2. For best results, clean and dry all surfaces with a residue-free solvent, such as Permatex® Brake and Parts Cleaner
3. Cut nozzle to desired bead size, 1/16" to 1/4" in diameter. A 1/8" bead is usually sufficient for most applications.
4. Remove cap, puncture tube seal and attach extension nozzle.
5. Apply a continuous and even bead of silicone to one surface, first tracing the internal areas of the gasket configuration, then all surrounding bolt holes.
6. Assemble parts immediately while silicone is still wet.
7. Finger tighten flange until material begins to seep out the sides of the flange.
8. Allow to set for at least one hour and re-torque one quarter to one half turn.
9. For best results, allow to cure overnight.

For assembly as a gasket dressing

1. Repeat steps 1 through 4 as in previous section.
2. Apply a thin film of silicone to one flange surface to be sealed.
3. Place the pre-cut gasket onto silicone film.
4. Apply a second thin film to pre-cut gasket surface.
5. Remove any excess and assemble parts immediately.
   Note: Product is not recommended for use as a cylinder head gasket or head gasket sealant.

Storage of Unused Product

1. Create a "Silicone Plug" by allowing excess material to extend beyond the extension nozzle or aerosol tip to cure, sealing and protecting the remaining product from moisture. For reuse, slowly pull the cured product from the tip.

For Cleanup

1. Remove uncured product from parts and hand-tools with Permatex® Fast Orange® Wipes or Fast Orange® Hand Cleaners. If skinned over, break film with a dry cloth to remove as much as possible. Remove the remaining material with Permatex® Gasket Remover.
2. Clean hands with a dry cloth or Permatex® Fast Orange® Hand Cleaner.

PROPERTIES OF UNCURED MATERIAL

	Typical Value
Chemical Type	Oxime silicone
Appearance	Grey metallic paste
Odor	Mild
Specific Gravity	1.45
Viscosity	Thixotropic paste
Flash Point °C (°F)	>93 (>200)

TYPICAL CURING PERFORMANCE

Permatex® Gear Oil RTV Sealant cures on exposure to moisture in the air. The product dries tack free in two hours and fully cures in 24 hours. Cure times will vary with temperature, humidity and gap.

PERFORMANCE OF CURED MATERIAL

After 7 days at 25°C (77°F). 50% Relative Humidity

	Typical Values	
Hardness (Shore A)	67	
Elongation, %*	200	
Tensile Strength, N/mm² (psi)**	1.7	(250)
Gap Fill, inch	0.25	

*Material will stretch 2 times its original length before breaking.

**Amount of force required to break material.

NOT FOR PRODUCT SPECIFICATIONS
THE TECHNICAL DATA CONTAINED HEREIN ARE INTENDED AS REFERENCE ONLY.
PLEASE CONTACT PERMATEX, INC., TECHNICAL SERVICE DEPARTMENT FOR ASSISTANCE AND RECOMMENDATIONS FOR YOUR SPECIFIC APPLICATION.
PERMATEX, INC., HARTFORD SQUARE NORTH, 10 COLUMBUS BOULEVARD, HARTFORD, CT 06106 PHONE – (1-87PERMATEX)

TYPICAL ENVIRONMENTAL RESISTANCE

Temperature Resistance	Typical Values	
Continuous, °C (°F)	-54 to 232	(-65 to 450)
Intermittent, °C (°F)	-54 to 260	(-65 to 500)

Chemical / Solvent Resistance
The product retains effective properties in contact with gear oil fluids. Note: Not recommended for parts in contact with gasoline.

GENERAL INFORMATION
This product is not recommended for use in pure oxygen and/or oxygen rich systems and should not be selected as a sealant for chlorine or other strong oxidizing materials.

For safe handling information on this product, consult the Material Safety Data Sheet, (MSDS).

ORDERING INFORMATION

81182	3 oz. tube
81184	5 fl. oz. cartridge

STORAGE
Products shall be ideally stored in a cool, dry location in unopened containers at a temperature between 8° and 28°C (46° and 82°F) unless otherwise labeled. Optimal storage is at the lower half of this temperature range. To prevent contamination of unused product, do not return any material to its original container.

NOTE
The data contained herein are furnished for information only and are believed to be reliable. We cannot assume responsibility for the results obtained by others over whose methods we have no control. **ITW Permatex, Inc. specifically disclaims all warranties expressed or implied, including warranties of merchantability or fitness for a particular purpose, arising from sale or use of Permatex, Inc. products and disclaims any liability for consequential or incidental damages of any kind, including lost profits.** This product may be covered by one or more United States or foreign patents or patent applications.

Permatex and Fast Orange are trademarks of Illinois Tool Works, Inc. © Copyright 2009 Permatex. Inc. All rights reserved

ITW Permatex
10 Columbus Blvd.
Hartford, CT 06106 USA
Telephone: 1-87-Permatex
(877) 376-2839
Emergency: 800-255-3924 (ChemTel)
International Emergency: +01-813-248-0585

Material Safety Data Sheet

1. PRODUCT IDENTIFICATION

Product Name: **RTV GEAR OIL SILICONE 3 OZ**
Item No: **81182**
Product Type: **Elastomeric rubber**

2. COMPOSITION/INFORMATION ON INGREDIENTS

Component	Weight%	ACGIH; TLV-TWA	OSHA PEL
POLY (DIMETHYLSILOXANE), HYDROXY TERMINATED 70131-67-8	30-50	Not listed	Not listed
CALCIUM CARBONATE 471-34-1	10-30	10 mg/m^3	Not listed
GARNET MINERAL 1302-62-1	10-30	Not listed	Not listed
VINYL OXIMINOSILANE 2224-33-1	<10	Not listed	Not listed
MODIFIED SILICON DIOXIDE 68611-44-9	<5	Not listed	Not listed
2-BUTANONE OXIME 96-29-7	0.5-2.0	Not listed	Not listed

3. HAZARDS IDENTIFICATION

Toxicity: May cause eye and skin irritation. May cause skin sensitization. May be harmful if swallowed. May irritate lips, gums, tongue, mouth, nose and throat. When this product if exposed to moisture, butanone oxime may be formed.
Primary Routes of Entry: Eye and skin contact, ingestion, inhalation
Signs and Symptoms of Exposure: Butanone oxime produced during curing is toxic and irritates eyes, nose and throat. Overexposure to the silane may cause coma and respiratory failure.
Aggravated Medical Condition: Preexisting skin disorders.

4. FIRST AID MEASURES

Ingestion: Rinse mouth. If swallowed, DO NOT induce vomiting. Keep individual calm. Obtain medical attention.
Inhalation: Move to fresh air in case of accidental inhalation of vapours. If not breathing, give artificial respiration. Obtain medical attention.
Skin Contact: Wipe off paste with paper towel or cloth. Wash exposed area with soap and water. Seek medical attention if irritation persists.
Eye Contact: In case of contact, immediately flush eyes with plenty of water for at least 15 minutes and get medical attention if irritation persists.

5. FIRE FIGHTING MEASURES

Flash Point °F(C°): >200°F TCC
Recommended Extinguishing Media: Carbon Dioxide, Dry Chemicals, Foam.
Special Fire-Fighting Procedures: Water spray may be ineffective on flames but should be used to keep fire-exposed containers cool.
Hazardous Products of Combustion: Oxides of carbon, Oxides of nitrogen, Methyl ethyl ketone, possibly methyl ethyl ketoxime, Silica fume, Aldehydes, Formaldehyde, Ammonia
Unusual Fire/Explosion Hazards: None.
Lower Explosive Limit: Not determined
Upper Explosive Limit: Not determined

Product Name: RTV GEAR OIL SILICONE 3 OZ **Item No.** 81182

6. ACCIDENTAL RELEASE MEASURES

Spill Procedures: Wipe or scrape up spill material. Maintain good ventilation for large spills. Place scrap material in a well-ventilated area and allow to cure to rubber. Clean up spills thoroughly as residue is slippery.

7. HANDLING AND STORAGE

Storage: Store in a dry area below 90 degrees F. Keep container closed when not in use.
Handling: Do not inhale vapors. Avoid contact with skin and eyes. Wash hands before eating and smoking.

8. EXPOSURE CONTROLS/PERSONAL PROTECTION

Eyes: Safety glasses. Avoid contact lenses.
Skin: Neoprene or nitrile gloves recommended.
Ventilation: General; local exhaust ventilation as necessary to control any air contaminants to within their exposure limits (or to the lowest feasible levels when limits have not been established) during the use of this product.
Respiratory Protection: Not normally necessary. In case of insufficient ventilation, wear suitable respiratory equipment.

Comments: When heated to temperatures above 300 degrees F. in the presence of air, this product can form formaldehyde vapors. Formaldehyde is a potential cancer hazard and a known skin and respiratory sensitizer. Safe handling conditions may be maintained by keeping vapor concentrations below the OSHA permissible limit for formaldehyde

9. PHYSICAL AND CHEMICAL PROPERTIES

Appearance: Gray paste
Odor: Mild
Boiling Point: Not applicable, polymeric material
pH: Does not apply
Solubility in Water: Polymerized
Specific Gravity: 1.45
VOC(Wt.%): <3%
Vapor Pressure: <5 mm Hg
Vapor Density (Air=1): Heavier than air
Evaporation Rate: Not Determined

10. STABILITY AND REACTIVITY

Chemical Stability: Stable at normal conditions
Hazardous Polymerization: Will not occur
Incompatabilities: Polymerized by contact with moisture., Strong oxidizers, Acids, Reactive metals (e.g. Na, Ca, zinc), Peroxides
Conditions to Avoid: Exposure to moisture.
Hazardous Products of Combustion: Oxides of carbon, Oxides of nitrogen, Methyl ethyl ketone, possibly methyl ethyl ketoxime, Silica fume, Aldehydes, Formaldehyde, Ammonia

11. TOXICOLOGICAL INFORMATION

See Section 3

12. ECOLOGICAL INFORMATION

No data available

13. DISPOSAL CONSIDERATIONS

Recommended Method of Disposal: Disposal should be made in accordance with federal, state and local regulations.
US EPA Waste Number: NH - Not a RCRA Hazardous Waste Material

14. TRANSPORTATION INFORMATION

DOT (49CFR 172)
U.S. Department of Transportation - DOT - 49 CFR (Ground)
DOT Shipping Name: Not regulated
Hazard Class: None
UN/ID Number: None
IATA (Air)
Proper Shipping Name: Not regulated
Class or Division: None
UN/ID Number: None

Product Name: RTV GEAR OIL SILICONE 3 OZ **Item No.** 81182

IMDG (Vessel)

Proper Shipping Name:	Not regulated
Hazard Class:	None
UN Number:	None
Marine Pollutant:	None

15. REGULATORY INFORMATION

SARA 313 Chemicals: The following component(s) is listed as a SARA Section 313 Toxic Chemical.

NONE

California Proposition 65: No California Prop 65 chemicals are known to be present at or above the No Significant Risk Level

TSCA Inventory Status: All components of this product are listed (or exempt) on the EPA TSCA inventory.

16. OTHER INFORMATION

Estimated NFPA Rating: HEALTH 2, FLAMMABILITY 1 , REACTIVITY 0.
Estimated HMIS Classification: HEALTH 2, FLAMMABILILTY 1, PHYSICAL HAZARD 0
(NFPA is a registered trademark of the National Fire Protection Association)
HMIS is a registered trademark of the National Paint and Coatings Association

Prepared By: Denise Boyd, Manager-Environmental, Health & Safety
Company: ITW Permatex 10 Columbus Blvd. Hartford, CT USA 06106
Telephone No.: 1-87-Permatex (877) 376-2839

Revision Date: April 03, 2012
Revision Number: 2

11.5.15 CAIG LABORATORIES DEOXIT D5 CONTACT CLEANER

Since 1956
CAIG LABORATORIES, INC.

DATA SHEET

Our products make your products perform!

DeoxIT® D5 Spray, D-Series
Contact Cleaner & Rejuvenator

Part No.: D5S-6

Container Size: 142 g, adjustable valve (L-M-H)

Product Description:

Unique contact cleaner, rejuvenator, conductivity enhancer and lubricant; dissolves oxidation and corrosion on metal surfaces, fills in microscopic gaps and reseals surface for better contact to enhance flow of electricity. Improves connector performance/reliability. Temperature range: -34 to +200°C.

Features/Benefits:

Spray, adjustable valve (L-M-H) - Flushing Action, and Safe on Plastics.
DeoxIT® D100L concentrate has approximately 20% chemical cleaning action.
Excellent cleaning/deoxidizing, good protection, no ozone depletion.
Improves conductivity and reduces intermittent connections.
Reduces arcing, RFI, wear and abrasion.
Cleaner Audio - Clearer Video - Reliable Data.

Formulation:

5%	DeoxIT® D100L
75%	odorless mineral spirits (64742-88-7)
20%	DIFLUOROETHANE (75-37-6)

VOC COMPLIANT RoHS COMPLIANT

DeoxIT® - Product Selection Guide

	DeoxIT®	DeoxIT® GOLD	DeoxIT® GOLD Gx1	DeoxIT® GOLD Gx2	DeoxIT® SHIELD	DeoxIT® FaderLube
New Surfaces		✔	✔	✔	✔	✔
* In Service / Used	✔					✔
Gold surfaces		✔	✔	✔		
Oxidation / corrosion visible	✔					
Conductive plastics						✔
** Outdoor / Severe environments	✔					✔
Deoxidizing / cleaning properties	20%	0.1%	0.1%	0.0%	0.0%	0.0%
Metal / Plastic surfaces	Yes	Yes	Yes	Yes	Yes	
Plastics compatibility	Excellent	Excellent	Excellent	Excellent	Excellent	Excellent
Temperature range (°C)	-34/200	-45/240	-45/310	-45/500	-34/210	-26/150
Stationary & moving surfaces	Yes	Yes	Yes	Yes	Yes	Yes
Seals & protects base metals	Good	Excellent	Excellent	Excellent	Good	No

✔ All products are Nonflammable and RoHs Compliant
* In Service: Clean with DeoxIT®. For added protection, follow with DeoxIT® GOLD (indoors), DeoxIT® SHIELD (outdoors) or DeoxIT® Grease (additional barrier).
** Severe environments: Pre-clean with DeoxIT®. Follow with DeoxIT® SHIELD or DeoxIT® Grease.

DeoxIT® - Spray Selection Guide

Product Series	FP	QD	NF	PC	VOC
Standard - 5% solution D5S-6, D5MS-15, G5S-6, G5MS-15, S5S-6, S5MS-15, F5S-6, F5MS-15	✔			✔	75
N Series - 5% solution DN5S-6N, DN5MS-15, GN5S-6N, GN5MS-15, SN5S-6, SN5MS-15		✔	✔	✔	20
X Series - 5% solution GX5S-6N		✔	✔	✔	20
100 Series - 100% solution D100S-2, G100S-2, F100S-2			✔	✔	0

FP = Flushing properties QD = Quick dry / non drip NF = Nonflammable
PC = Plastics compatibility VOC = VOC (%)

Page 1

Other Applicators:

D5MS-15	5%	mini-spray	14 g	flammable
DN5S-6N	5%	spray	163 g	nonflammable
DN5MS-15	5%	mini-spray	14 g	nonflammable
D100S-2	100%	spray	57g	nonflammable
D100P	100%	pen	6 mL	nonflammable
D50W	100%	wipes	50 count	nonflammable
D100L-2DB	100%	brush	7.4 mL	nonflammable
D100L-25C	100%	needle dispenser	25 mL	nonflammable
D100L (bulk)	100%	bottle/drum	assort.	nonflammable
D5L (bulk)	5%	bottle/drum	assort.	flammable

DeoxIT® Essential Reference:

DeoxIT® D-Series - *Brings old systems back to life!*
DeoxIT® Gold G-Series - *Maintains new system performance!*
DeoxIT® Shield S-Series - *Maintains new system performance for severe environments!*

Shipping and Additional Information:

Hazardous: ORMD
VOC (%): 75%

Other Information:

RoHS Compliant:	YES
D5S-6 MSDS Link:	http://store.caig.com/
DeoxIT® Product Sheet:	http://store.caig.com/
MentorCard Link:	http://store.caig.com/
WHY DeoxIT® is Different:	http://store.caig.com/

MANUFACTURER DISCLAIMER:

To the best of our knowledge, the information contained herein is accurate. However, neither CAIG Laboratories, Inc., or any of its subsidiaries assumes any liability whatsoever for the accuracy or completeness of the information contained herein. All materials may present unknown hazards and should be used with caution. In particular, improper use of our products and their inappropriate combination with other products and substances may produce harmful results which cannot be anticipated. Final determination of the suitability of any material is the sole responsibility of the user. Although certain hazards are described herein, we cannot guarantee that these are the only hazards that may exist. All service performed on internal parts and equipment should be provided by qualified technicians.

Contact Information:

Since 1956 CAIG LABORATORIES, INC.

North America
CAIG Laboratories, Inc.
12200 Thatcher Court
Poway, CA 92064 USA
Tel: (858) 486-8388
Fax: (858) 486-8398

Website
www.caig.com
www.deoxit.com

General email
info@caig.com

Technical email
tech@caig.com

Page 2

CAIG LABORATORIES, INC.

SAFETY DATA SHEET

Page 1 of 6
MSDS-E-D5S-A

Prepared to OSHA, ACC, ANSI, NOHSC, WHMIS, 2001/58/EC & 1272/2008/EC Standards | MSDS Revision: 3.0 | MSDS Revision Date: 08/22/2012

1. PRODUCT IDENTIFICATION

1.1	Product Name: **DeoxIT® D-Series, 5% Spray, (P/N D5S-6), 142 g**
1.2	Chemical Name: **See ingredients listed in section 3**
1.3	Synonyms: **DeoxIT®, D5S-6, 5% Spray**
1.4	Trade Names: **DeoxIT®, D5S-6, 5% Spray**
1.5	Product Use: **Clean, deoxidize & improve electrical contacts & connectors**
1.6	Manufacturer's Name: **CAIG Laboratories, Inc.**
1.7	Manufacturer's Address: **12200 Thatcher Court, Poway, CA 92064-6876 USA**
1.8	Emergency Phone: **CHEMTREC: +1 (703) 527-3887 / +1 (800) 424-3887**
1.9	Business Phone: **+1 (800)-224-4123**
1.10	Other Product Names: **DeoxIT®, D5MS-15, 5% Spray, 14 g**

2. HAZARD IDENTIFICATION

2.1 Hazard Identification:

This product is classified as a HAZARDOUS SUBSTANCE but not as DANGEROUS GOODS according to the classification criteria of NOHSC: 1008(2004) and ADG Code (Australia).
WARNING! Flammable aerosol. Colorless, volatile liquid with ethereal and faint sweetish odor. Overexposure may cause dizziness and loss of concentration. At higher levels, CNS depression and cardiac arrhythmia may result from exposure. Vapors displace air and can cause asphyxiation in confined spaces.
Hazard Statements (H): H223 – Flammable aerosol.
Precautionary Statements (P): P210 – Keep away from heat/sparks/open flames/hot surfaces. P211 – Do not spray on an open flame or other ignition source. P251 – Pressurized container. Do not pierce or burn, even after use. P280 – Wear protective gloves and eyewear. P302 + P352 – IF ON SKIN – Wash with plenty of soap and water. P312 – Call a Poison Control Center or doctor/physician if you feel unwell. P333 + P313 – If skin irritation or rash occurs, get medical advise/attention. P321 – Refer to section 4 of this Safety Data Sheet (First Aid). P305+P351+P338 – IF IN EYES - Rinse continuously with water for several minutes. Remove contact lenses if present and easy to do – continue rinsing. P501 – Dispose of contents/container through licensed treatment, storage or disposal facility.

2.2 Routes of Entry:	Inhalation:	YES	Absorption:	YES	Ingestion:	YES

2.3 Effects of Exposure:

EYES:	**Mild to moderate irritation.**
SKIN:	**Irritant and potential skin sensitizer. Prolonged or repeated contact may cause contact dermatitis (localized redness or rash).**
INGESTION:	**Gastrointestinal irritation and central nervous system depression.**
INHALATION:	**Central nervous system depressant. Irritating to the upper respiratory tract.**

2.4 Symptoms of Overexposure:

EYES:	**Mild irritation, redness, and watering.**
SKIN:	**Contact dermatitis, characterized by localized red or puffy dry skin and itching.**
INGESTION:	**Nausea, vomiting, and diarrhea.**
INHALATION:	**Mouth, nose, and throat irritation, dizziness, nausea, light-headedness, drunkenness, and loss of coordination.**

2.5 Acute Health Effects:

INGESTION:	**Gastrointestinal irritation and central nervous system depression.**
EYES:	**Mild to moderate irritation.**
SKIN:	**Irritant and potential skin sensitizer. Prolonged or repeated contact may cause contact dermatitis (e.g., localized redness and/or rash).**
INGESTION:	**Gastrointestinal irritation and central nervous system depression.**
INHALATION:	**Central nervous system depressant. Irritating to the upper respiratory tract.**

2.6 Chronic Health Effects:

EYES:	**Mild to moderate irritation.**
SKIN:	**Irritant and potential skin sensitizer. Prolonged or repeated contact may cause contact dermatitis (e.g., localized redness and/or rash).**
INGESTION:	**Gastrointestinal irritation and central nervous system depression.**
INHALATION:	**Central nervous system depressant. Irritating to the upper respiratory tract.**

2.7 Target Organs:
Eyes, skin and respiratory system.

NA = Not Available; ND = Not Determined; NE = Not Established; C = Ceiling Limit; See Section 16 for Additional Definitions of Terms Used
NOTE: all WHMIS required information is included. It is located in appropriate sections based on the ANSI Z400.1-2010 format.

CAIG LABORATORIES, INC.

SAFETY DATA SHEET

Page 2 of 6
MSDS-E-D5S-A

Prepared to OSHA, ACC, ANSI, NOHSC, WHMIS, 2001/58/EC & 1272/2008/EC Standards | MSDS Revision: 3.0 | MSDS Revision Date: 08/22/2012

3. COMPOSITION & INGREDIENT INFORMATION

CHEMICAL NAME(S)	CAS No.	RTECS No.	EINECS No.	%	EXPOSURE LIMITS IN AIR (mg/m³) ACGIH ppm TLV	ACGIH ppm STEL	NOHSC ppm ES-TWA	NOHSC ppm ES-STEL	NOHSC ppm ES-PEAK	OSHA ppm PEL	OSHA ppm STEL	OSHA ppm IDLH	OTHER
PETROLEUM NAPHTHA	64742-88-7	XS5250000	265-191-7	40-70	100	NE	100	NE	NE	NA	NE	NE	
DIFLUOROETHANE (R-152a)	75-37-6	KI4100000	200-866-1	10-30	1000	NA	1000	NA	NA	NE	NA	NA	SKIN
DeoxIT® D-Series, D100L	TRADE SECRET			3-7	NA	NA	NA	NA	NA	15	NA	NA	

4. FIRST AID MEASURES

4.1 First Aid:

EYES: Flush eyes thoroughly with copious amounts of water for at least 15 minutes, holding eyelid(s) open to ensure complete flushing. If irritation persists, seek immediate medical attention.

SKIN: Remove contaminated clothing and wash affected areas with soap and water. If irritation persists, seek prompt medical attention. Do not wear contaminated clothing until after it has been properly cleaned.

INGESTION: Drink plenty of water. If irritation persists, contact a physician.

INHALATION: Remove victim to fresh air at once. If breathing is difficult, administer supplemental oxygen and seek immediate medical attention. If breathing stops, perform artificial respiration.

4.2 Medical Conditions Aggravated by Exposure:
None reported by the manufacturer.

HEALTH	1
FLAMMABILITY	2
PHYSICAL HAZARDS	0
PROTECTIVE EQUIPMENT	B

EYES | SKIN

5. FIREFIGHTING MEASURES

5.1 Flashpoint & Method:
48.8 °C - 54.4 °C (120 °F – 130 °F).

5.2 Autoignition Temperature:
NA

5.3 Flammability Limits: Lower Explosive Limit (LEL): NA Upper Explosive Limit (UEL): NA

5.4 Fire & Explosion Hazards:
Level 2 aerosol. Carbon dioxide, carbon monoxide, hydrocarbons.

5.5 Extinguishing Methods:
CO_2, Alcohol foam, Dry Chemical, Water Fog

5.6 Firefighting Procedures:
Wear NIOSH/MSHA approved self-contained breathing apparatus and protective clothing. Use a water spray to cool containers involved in fire. Do not use direct water stream. Container storage areas exposed to direct flame contact should be cooled with large quantities of water as needed to prevent weakening of container structure. Keep containers cool until well after the fire is out to prevent rupture. Prevent runoff from fire control or dilution from entering sewers, drains, drinking water supply, or any natural waterway.

6. ACCIDENTAL RELEASE MEASURES

6.1 Spills:
Secure spill area and deny entry to all unprotected individuals. Individuals involved in the cleanup should wear appropriate personal protective equipment. Area may become slippery. Absorb product onto porous material, such as sand, clay, diatomaceous earth or commercial absorbent material. Place into leak-proof, U.S. DOT-approved containers. If necessary, cover all drains and dike well ahead of the spill to prevent runoff into sewers, drains, and all waterways. Contact appropriate local or provincial authorities for assistance and/or reporting requirements.

CAIG LABORATORIES, INC.

SAFETY DATA SHEET

Page 3 of 6
MSDS-E-D5S-A

Prepared to OSHA, ACC, ANSI, NOHSC, WHMIS, 2001/58/EC & 1272/2008/EC Standards | MSDS Revision: 3.0 | MSDS Revision Date: 08/22/2012

7. HANDLING & STORAGE INFORMATION

7.1	Work & Hygiene Practices:	**Wash hands thoroughly after using this product and before eating, drinking, or smoking. Remove soiled clothing to prevent prolonged skin contact.**
7.2	Storage & Handling:	**Store at temperatures between 59 °F and 95 °F (15 °C and 35 °C) in a dry, well-ventilated location. Keep away from heat, sparks, open flame, and other sources of ignition. Normal shelf-life: 2-3 years.**
7.3	Special Precautions:	**Empty containers can contain flammable vapors. Do not cut, drill, grind, weld or perform similar operations on or near containers.**

8. EXPOSURE CONTROLS & PERSONAL PROTECTION

8.1	Ventilation & Engineering Controls:	**Use with adequate ventilation (e.g., open doors and windows, local exhaust ventilation). Ensure appropriate decontamination equipment is available (e.g., sink, safety shower, eye-wash station).**
8.2	Respiratory Protection:	**None required, when used with adequate ventilation.**
8.3	Eye Protection:	**Wear safety glasses with side shields (ANSI Z87) under normal use conditions.**
8.4	Hand Protection:	**None required under normal conditions of use. However, may cause skin irritation in some sensitive individuals. In such cases, wear rubber or impervious plastic gloves.**
8.5	Body Protection:	**Use as necessary to prevent skin contact.**

9. PHYSICAL & CHEMICAL PROPERTIES

9.1	Density:	0.75
9.2	Boiling Point:	171.1 °C – 204 °C @ 760 mmHg
9.3	Melting Point:	NA
9.4	Evaporation Rate:	0.11 (n-Butyl Acetate = 1.0)
9.5	Vapor Pressure:	35 psig @ 20 °C, 50 psig @ 50 °C
9.6	Molecular Weight:	NA
9.7	Appearance & Color:	Light red, aerosol
9.8	Odor Threshold:	Ethereal/hydrocarbon odor
9.9	Solubility:	Not soluble in water
9.10	pH	ND
9.11	Viscosity:	10.0 cps
9.12	VOC (grams/liters)	588 g/l
9.13	Other information:	Vapor Density = 4.9 (air = 1.0)

10. STABILITY & REACTIVITY

10.1	Stability:	**Stable under normal conditions of use (see section 7).**
10.2	Hazardous Decomposition Products:	**Change in color signifies exposure to ultraviolet light or exceeding shelf life. Will not degrade to unstable products. Discard solution.**
10.3	Hazardous Polymerization:	**Will not occur.**
10.4	Conditions to Avoid:	**Use or storage near open flames, sparks, high heat (>100 °F) or other heat sources, and proximity to incompatible substances and heavily trafficked areas.**
10.5	Incompatible Substances:	**Strong oxidizers.**

CAIG LABORATORIES, INC.

SAFETY DATA SHEET

Page 4 of 6
MSDS-E-D5S-A

Prepared to OSHA, ACC, ANSI, NOHSC, WHMIS, 2001/58/EC & 1272/2008/EC Standards | MSDS Revision: 3.0 | MSDS Revision Date: 08/22/2012

11. TOXICOLOGICAL INFORMATION

11.1	Toxicity Data:	**This product has not been tested on animals to obtain toxicological data. There are toxicology data for the components of this product, which are found in the scientific literature. These data have not been presented in this document.**
11.2	Acute Toxicity:	**See section 3.5**
11.3	Chronic Toxicity:	**See section 3.6**
11.4	Suspected Carcinogen:	**NE**
11.5	**This product is not reported to produce reproductive toxicity in humans.**	
	Mutagenicity:	**This product is not reported to produce mutagenic effects in humans.**
	Embryotoxicity:	**This product is not reported to produce embryotoxic effects in humans.**
	Teratogenicity:	**This product is not reported to produce teratogenic effects in humans.**
	Reproductive Toxicity:	**This product is not reported to produce reproductive effects in humans.**
11.6	Irritancy of Product:	**See Section 2.3**
11.7	Biological Exposure Indices:	**NE**
11.8	Physician Recommendations:	**Treat symptomatically.**

12. ECOLOGICAL INFORMATION

12.1	Environmental Stability:	**This product will slowly volatile from soil. Components of this product will slowly decompose into organic compounds.**
12.2	Effects on Plants & Animals:	**There is no specific data available for this product.**
12.3	Effects on Aquatic Life:	**Releases of large volumes of this product are expected to be harmful or fatal to overexposed aquatic life.**
12.4	Environmental Impact (Percent by Weight):	**CFC: 0.0%** **HCFC: 0.0%** **HFC: 20.0%** **Chlorinated Solvent: 0.0%** **VOC: 75.0%** **ODP: 0.0%**

13. DISPOSAL CONSIDERATIONS

13.1	Waste Disposal:	**Dispose of in accordance with federal, state or local regulations.**
13.2	Special Considerations:	**EPA Waste Code: D001 (characteristic – ignitability)**

14. TRANSPORTATION INFORMATION

The basic description (ID Number, proper shipping name, hazard class & division, packing group) is shown for each mode of transportation. Additional descriptive information may be required by 49 CFR, IATA/ICAO, IMDG and the CTDGR.

14.1	49 CFR (GND):	**CONSUMER COMMODITY, ORM-D (until 12/31/2013)** **UN1950, AEROSOLS, 2.1, LTD QTY (IP VOL ≤ 1.0 L)**
14.2	IATA (AIR):	**CONSUMER COMMODITY, 9, ID8000 (≤ 500 ml)** **UN1950, AEROSOLS, 2.1 (> 500 ml)**
14.3	IMDG (OCN):	**UN1950, AEROSOLS, 2.1, LTD QTY (IP VOL ≤ 1.0 L)**
14.4	TDGR (Canadian GND):	**MARK PACKAGE "LIMITED QUANTITY" or "QUANTITÉ LIMITÉE" or "LTD QTY" or "QUANT LTÉE" (≤ 1.0 L)**
14.5	ADR/RID (EU):	**UN1950, AEROSOLS, 2.1, LTD QTY (IP VOL ≤ 1.0 L)**
14.6	SCT (Mexico):	**UN1950, AEROSOLES, 2.1, CANTIDAD LIMITADA (IP VOL ≤ 1.0 L)**
14.7	ADGR (Australia):	**UN1950, AEROSOLS, 2.1, LTD QTY (IP VOL ≤ 1.0 L)**

CAIG LABORATORIES, INC.

SAFETY DATA SHEET

Page 5 of 6
MSDS-E-D5S-A

Prepared to OSHA, ACC, ANSI, NOHSC, WHMIS, 2001/58/EC & 1272/2008/EC Standards | MSDS Revision: 3.0 | MSDS Revision Date: 08/22/2012

15. REGULATORY INFORMATION

15.1 SARA Reporting Requirements:
NA

15.2 SARA Threshold Planning Quantity:
NA

15.3 TSCA Inventory Status:
All chemical substances of this product are listed on the TSCA inventory or are otherwise exempt from inventory status.

15.4 CERCLA Reportable Quantity (RQ):
NA

15.5 Other Federal Requirements:
NA

15.6 Other Canadian Regulations
This product has been classified according to the hazard criteria of the Controlled Products Regulations (CPR) and the MSDS contains all of the information required by the CPR. The components of this product are listed on the DSL/NDSL. None of the components of this product are listed on the Priorities Substances List.

15.7 State Regulatory Information:
The primary component of this product is not listed on the following state lists: California OSHA; California Proposition 65; Massachusetts Right to Know List of Chemicals; New Jersey Right to Know List 8:59 Appendix A; Pennsylvania Hazardous Substances List 34 323 Appendix A; Wisconsin Hazardous Substances List NR 605.09; Minnesota Hazardous Substances List; and Florida Toxic Substances List.

15.8 67/548/EEC (European Union) Requirements:
The primary component of this product is listed in Annex I of EU Directive 67/548/EEC:
Petroleum Naphtha: Flammable, Harmful (F, Xn). Risk Phrases (R): 10-65 – Flammable. Harmful: may cause lung damage if swallowed. Safety Phrases (S): 2-23-24-62 – Keep away from children. Do not breathe gas, fumes, vapor or spray. Avoid contact with skin. If swallowed, do not induce vomiting: seek medical advice immediately and show this MSDS or the container label. WARNING! Flammable aerosol. Colorless, volatile liquid with ethereal and faint sweetish odor. Overexposure may cause dizziness and loss of concentration. At higher levels, CNS depression and cardiac arrhythmia may result from exposure. Vapors displace air and can cause asphyxiation in confined spaces.
Hazard Statements (H): H223 – Flammable aerosol.
Precautionary Statements (P): P210 – Keep away from heat/sparks/open flames/hot surfaces. P211 – Do not spray on an open flame or other ignition source. P251 – Pressurized container. Do not pierce or burn, even after use. P280 – Wear protective gloves and eyewear. P302 + P352 – IF ON SKIN – Wash with plenty of soap and water. P312 – Call a Poison Control Center or doctor/physician if you feel unwell. P333 + P313 – If skin irritation or rash occurs, get medical advise/attention. P321 – Refer to section 4 of this Safety Data Sheet (First Aid). P305+P351+P338 – IF IN EYES - Rinse continuously with water for several minutes. Remove contact lenses if present and easy to do – continue rinsing. P501 – Dispose of contents/container through licensed treatment, storage or disposal facility.

16. OTHER INFORMATION

16.1 Other Information:
NA

16.2 Terms & Definitions:
See last page of this MSDS.

16.3 Disclaimer:
This Material Safety Data Sheet is offered pursuant to OSHA's Hazard Communication Standard, 29 CFR §1910.1200. Other government regulations must be reviewed for applicability to this product. To the best of ShipMate's & CAIG Laboratories, Inc.'s knowledge, the information contained herein is reliable and accurate as of this date; however, accuracy, suitability or completeness are not guaranteed and no warranties of any type, either expressed or implied, are provided. The information contained herein relates only to the specific product(s). If this product(s) is combined with other materials, all component properties must be considered. Data may be changed from time to time. Be sure to consult the latest edition.

16.4 Prepared for:
CAIG Laboratories, Inc.
12200 Thatcher Court
Poway, CA 92064-6876
Tel: +1 (800) CAIG-123 (244-4123)
Fax: +1 (858) 486-8398 fax
http://www.caig.com/

CAIG LABORATORIES, INC.

16.5 Prepared by:
ShipMate, Inc.
P.O. Box 787
780 Buckaroo Trail Suite D
Sisters, OR 97759
Tel: +1 (310) 370-3600
Fax: +1 (310) 370-5700
http://www.shipmate.com

ShipMate
Dangerous Goods Training & Consulting

CAIG LABORATORIES, INC.

SAFETY DATA SHEET

Page 6 of 6
MSDS-E-DSS-A

Prepared to OSHA, ACC, ANSI, NOHSC, WHMIS, 2001/58/EC & 1272/2008/EC Standards | MSDS Revision: 3.0 | MSDS Revision Date: 08/22/2012

DEFINITION OF TERMS

A large number of abbreviations and acronyms appear on a MSDS. Some of these that are commonly used include the following:

GENERAL INFORMATION:

CAS No.	Chemical Abstract Service Number

EXPOSURE LIMITS IN AIR:

ACGIH	American Conference on Governmental Industrial Hygienists
TLV	Threshold Limit Value
OSHA	U.S. Occupational Safety and Health Administration
PEL	Permissible Exposure Limit
IDLH	Immediately Dangerous to Life and Health

FIRST AID MEASURES:

CPR	Cardiopulmonary resuscitation - method in which a person whose heart has stopped receives manual chest compressions and breathing to circulate blood and provide oxygen to the body.

HAZARDOUS MATERIALS IDENTIFICATION SYSTEM: HMIS

HEALTH, FLAMMABILITY & REACTIVITY RATINGS:

0	Minimal Hazard
1	Slight Hazard
2	Moderate Hazard
3	Severe Hazard
4	Extreme Hazard

HEALTH
FLAMMABILITY
PHYSICAL HAZARDS
PERSONAL PROTECTION

PERSONAL PROTECTION RATINGS:

A	
B	
C	
D	
E	
F	
G	
H	
I	
J	
K	
X	Consult your supervisor or SOPs for special handling directions.

Safety Glasses
Splash Goggles
Face Shield & Eye Protection
Gloves
Boots
Synthetic Apron
Full Suit
Dust Respirator
Full Face Respirator
Dust & Vapor Half-Mask Respirator
Full Face Respirator
Airline Hood/Mask or SCBA

Note: the dotted circle indicates that this respiratory protective equipment is required for high concentrations or for large volume spills or releases of product.

OTHER STANDARD ABBREVIATIONS:

NA	Not Available
NR	No Results
NE	Not Established
ND	Not Determined
ML	Maximum Limit
SCBA	Self-Contained Breathing Apparatus

NATIONAL FIRE PROTECTION ASSOCIATION: NFPA

FLAMMABILITY LIMITS IN AIR:	
Autoignition Temperature	Minimum temperature required to initiate combustion in air with no other source of ignition
LEL	Lower Explosive Limit - lowest percent of vapor in air, by volume, that will explode or ignite in the presence of an ignition source
UEL	Upper Explosive Limit - highest percent of vapor in air, by volume, that will explode or ignite in the presence of an ignition source

HAZARD RATINGS:

0	Minimal Hazard
1	Slight Hazard
2	Moderate Hazard
3	Severe Hazard
4	Extreme Hazard
ACD	Acidic
ALK	Alkaline
COR	Corrosive
W	Use No Water
OX	Oxidizer
TREFOIL	Radioactive

TOXICOLOGICAL INFORMATION:

LD_{50}	Lethal Dose (solids & liquids) which kills 50% of the exposed animals s
LC_{50}	Lethal concentration (gases) which kills 50% of the exposed animal
ppm	Concentration expressed in parts of material per million parts
TD_{Lo}	Lowest dose to cause a symptom
TCLo	Lowest concentration to cause a symptom
TD_{Lo}, LD_{Lo}, & LD_0 or TC, TC_{Lo}, LC_{Lo}, & LC_0	Lowest dose (or concentration) to cause lethal or toxic effects
IARC	International Agency for Research on Cancer
NTP	National Toxicology Program
RTECS	Registry of Toxic Effects of Chemical Substances
BCF	Bioconcentration Factor
TL_m	Median threshold limit
log K_{ow} or log K_{oc}	Coefficient of Oil/Water Distribution

REGULATORY INFORMATION:

WHMIS	Canadian Workplace Hazardous Material Information System
DOT	U.S. Department of Transportation
TC	Transport Canada
EPA	U.S. Environmental Protection Agency
DSL	Canadian Domestic Substance List
NDSL	Canadian Non-Domestic Substance List
PSL	Canadian Priority Substances List
TSCA	U.S. Toxic Substance Control Act
EU	European Union (European Union Directive 67/548/EEC)
WGK	Wassergefährdungsklassen (German Water Hazard Class)

WORKPLACE HAZARDOUS MATERIALS IDENTIFICATION (WHMIS) SYSTEM:

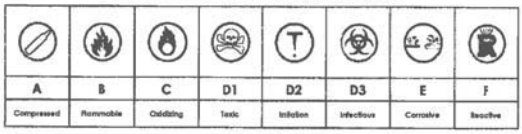

A	B	C	D1	D2	D3	E	F
Compressed	Flammable	Oxidizing	Toxic	Infection	Infectious	Corrosive	Reactive

EC (67/548/EEC) INFORMATION:

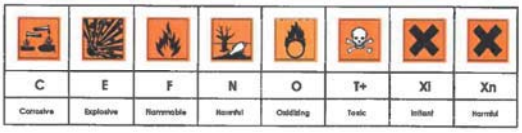

C	E	F	N	O	T+	Xi	Xn
Corrosive	Explosive	Flammable	Harmful	Oxidizing	Toxic	Irritant	Harmful

CLP/GHS (1272/2008/EC) PICTOGRAMS:

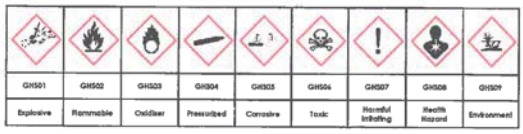

GHS01	GHS02	GHS03	GHS04	GHS05	GHS06	GHS07	GHS08	GHS09
Explosive	Flammable	Oxidizer	Pressurized	Corrosive	Toxic	Harmful Irritating	Health Hazard	Environment

11.6 COMPONENT MANUFACTURER LIST

MECHANICAL COMPONENTS

Span Drive Machinery

Section	Description	Model No.	Manufacturer
	Limit Switch Gear Box	M3	Hub City
11.7.1	Primary Reducer	405A2-CS / M.O. 04-065985	Falk
11.7.1	Enclosed Bevel Reducer	2110GHB-2110 / M.O. 04-065986	Falk
11.7.2	Final Enclosed Reducer	505AB2-CS / M.O. 04-065987	Falk
	Helical Coupling	MC7C125-20-20	Helical Products Co.
11.7.7	Motor Coupling	1025G20	Falk
11.7.6	Auxiliary Gear Motor Disconnect Coupling	1020G72	Falk
	Helical Coupling	MC7C150-16-16	Helical Products Co.
11.7.4	Coupling	1035G52	Falk
11.7.4	Spacer Coupling	1035G32	Falk
11.7.5	Coupling	1040GV52	Falk
11.7.8	Motor Brake	10MBTE-ED30/5SH	Mondel
11.7.8	Machinery Brake	10MBTE-ED30/5SH	Mondel
11.7.3	Auxiliary Gear Motor	Gearbox - CHH-M515-614HYB-B11 Motor - TK-F/FB-15B	Sumitomo
	Main Leaf Motor	1000E-7AAN-0043	Reuland
	Spherical Roller Bearing	SDAF 23152	SKF
	Sleeve Bearing	EPB-100	Steward Machine Corp.

Span Lock Machinery

Section	Description	Model No.	Manufacturer
11.7.9	Motor	36J507-3127G1	Baldor
1.7.9	Span Lock Actuator	EG-2B	Earle Gear

TRAFFIC CONTROL DEVICES

Navigation Lights

Section	Description	Model No.	Manufacturer
	Fender Navigation Lights	MS53-PM-BS-LED-JB-A-R180	B&B Armr
		0177-BBL5040102	B&B Armr
	Span Navigation Lights	BS / PLP-LED 120R	B&B Roadway
		BS / PLP-LED 120BG	B&B Roadway
		BS/PLP-LED 120R/S	B&B Roadway

TRAFFIC CONTROL DEVICES (cont.)

Barrier Gates

Section	Description	Model No.	Manufacturer
	Barrier Gate Arm	VR-7	B&B Roadway
	Barrier Gate Arm Lights	L4 / 0122-BM122-120V	B&B Roadway
	Barrier Gate Door Switch	XSWI-E19-00M	B&B Roadway
	Barrier Gate Arm Light Flasher	XFLSHR-120V/ XFUSE-5AMP	B&B Roadway
11.8.1	Barrier Gate Motor and Brake	C6T17NC199A	Leeson
	Barrier Gate Motor Manual Operation Limit Switch	XSWI - DTE62RN	B&B Roadway
	Barrier Gate Rotary Cam Limit Switch	0040-0008	B&B Roadway
	Barrier Gate Circuit Breaker	XBRKR-QOU220	B&B Roadway
	Barrier Fuse	XFUSE-9080GF6B	-
	Heater Fuse	XFUSE-5AMP	-
	Main Disconnect Switch	XSWI-KG2	B&B Roadway

Warning Gates

Section	Description	Model No.	Manufacturer
	Warning Gate Arm	BS/PLP-LED 120BG/S	B&B Roadway
	Warning Gate Arm Lights	L4 / 0122-AL4R-LED	B&B Roadway
11.8.2	Warning Gate MOV Actuator	R7RK-3	EIM Controls
	Warning Gate Door Switch	XSWI-E19-OOM	B&B Roadway
	Warning Gate Flasher and Fuses	XFLSHR-12V / XFUSE-5AMP	B&B Roadway
	Warning Gate Gongs	G12 / 0555-0000/B	B&B Roadway
	Circuit Breaker	XBRK-QOU220	B&B Roadway
	Main Disconnect Switch	XSWI-KG2	-

Navigation Lights

Section	Description	Model No.	Manufacturer
	Fender Navigation Lights	MS53-PM-BS-LED-JB-A-R180	B&B Armr
		0177-BBL5040102	B&B Armr
	Span Navigation Lights	BS / PLP-LED 120R	B&B Roadway
		BS / PLP-LED 120BG	B&B Roadway
		BS/PLP-LED 120R/S	B&B Roadway

ELECTRICAL COMPONENTS

Power Distribution

Section	Description	Model No./Description	Manufacturer
	Lighting Transformer	9T23B3872	General Electric
	Lighting Contactors	CN35DN3	Cutler Hammer
	Manual Transfer Switch		
	Panelboard Circuit Breakers	-	Cutler Hammer
	Multifunctional Display	-	Electro Industries

Control Equipment

Section	Description	Model No.	Manufacturer
	Indication Lamps	-	-
	Pushbuttons and Selector Switches	RTLU	-
	Span Position Meter	-	Weschler
	Control Desk Power meter	-	Electro Industries
	Current Meter	077-DI	Crompton Instruments
	Circuit Breakers	-	Square D
	Contactors	Class 9999/8502	Square D
	Motor Starter	-	-
	Terminal Blocks	9080	Square D
	Relays	8501 XO40	Square D
	Timing Relays	7000	Agastat
	Time-Delay Fuses	PNQ-R-3	CC-Tron
	Fast-Acting Fuses	1/10 TO 30A	Limitron
11.9.1	Drives	4922C S2MC	Hubbell Industrial Controls
	Disconnect Switches	-	General Electric
	Fully Open Limit Switch	-	-
	Fully Seated Limit Switch	-	-
	Rotary Cam Limit Switch	19804456	Amtek Gemco
	Brake Limit Switches	-	Cutler Hammer
	Span Lock Limit Switches (Driven/Pulled)	-	Square D
	Tachometer	601A100-1500	Baldor
	Overspeed Switch	ESS-14EB	Speedetex
	Secondary Resistors	-	Post Glover

ELECTRICAL COMPONENTS (cont.)			
Miscellaneous Equipment			
Section	**Description**	**Model No.**	**Manufacturer**
	Sump Pump	WS2038D3/3888D3	Gould Pumps
	Sump Pump Control Panel	D208-3	KA Systems
	Heater	-	Q-Mark
	Service Light lamp	VDA15GP	Vaporgard
		DMS 2 32120 GEB AL	-
	Emergency Unit	ELUX 3X H	Lithonia Lighting
	Emergency Sign	DSW 1R 20	Lithonia Lighting
	Flood Light	MRS 40/500	Phoenix

11.7 MECHANICAL EQUIPMENT MANUALS AND SPECIFICATIONS

11.7.1 PRIMARY & FINAL ENCLOSED – FALK SPEED REDUCERS TYPES A & AB

REXNORD

Falk™ Enclosed Gear Drives • Installation and Maintenance

Type A Series • Sizes 305 thru 585 (Page 1 of 11)

How to Use This Manual

This manual provides detailed instructions on installation and maintenance of parallel shaft Types A, AR, AXV and right angle Types AB, ABR, ABX, and ABRC gear drives. Use the table of contents below to locate required information.

CAREFULLY FOLLOW THE INSTRUCTIONS IN THIS MANUAL FOR OPTIMUM PERFORMANCE AND TROUBLE FREE SERVICE OF YOUR FALK™ GEAR DRIVE.

Table of Contents

Installation Instructions . . . . . Pages 1-3
Shaft Connections . . . . . Pages 3-4
Tightening Torques . . . . . Page 5
Lubrication Recommendations . . . . . Pages 5-8
Preventive Maintenance . . . . . Page 9
Stored and Inactive Gear Drives . . . . . Page 11

Introduction

Credit for long service and dependable operation of a gear drive is often given to the engineers who designed it, or the craftsmen who constructed it, or the sales engineer who recommended the type and size. Ultimate credit belongs to the mechanic on the job who worked to make the foundation rigid and level, who accurately aligned the shafts and carefully installed the accessories, and who made sure that the drive received regular lubrication. The details of this important job are the subject of this manual.

NAMEPLATE — Operate Falk™ gear drives only at power, speed and ratio shown on the nameplate. Before changing any one of these, submit complete nameplate data and new application conditions to the Factory for correct oil level, parts, and application approval.

DISASSEMBLY AND ASSEMBLY — Disassembly & assembly instructions and parts guides are available from the Factory or Rexnord Account Executive. When requesting information, please give complete data from the nameplate on the gear drive; Model, M.O.Number, Date, RPM, and Ratio.

***WARNING**: Consult applicable local and national safety codes for proper guarding of rotating members. Lock out power source and remove all external loads from drive before servicing drive or accessories.*

Warranty

WARRANTY — Rexnord Industries (the "Company") warrants that, for a period of three years from the date of shipment, the product described herein will deliver successfully its rated output as indicated on the nameplate, provided, it is properly installed and maintained, correctly lubricated, and operated in the environment and within the limits of speed, torque or other load conditions for which it was sold. Such product is expressly not warranted against failure or unsatisfactory operation resulting from dynamic vibrations imposed upon it by the drive system in which it is installed unless the nature of such vibrations has been fully defined and expressly accepted in writing by the Company as a condition of operation.

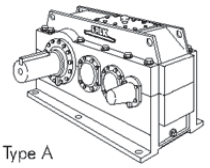
Type A

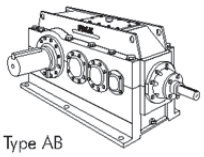
Type AB

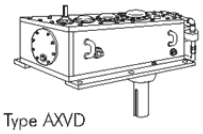
Type AXVD

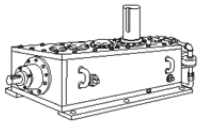
Type ABXU

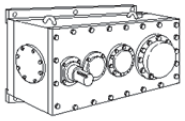
Type AR

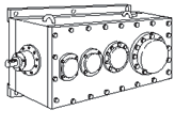
Type ABR

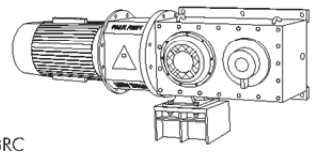
Type ABRC

Installation Instructions

The following instructions apply to standard Falk™ Type A, AB, AXV, ABX, AR, ABR, & ABRC (Alignment Free) drives. If a drive is furnished with special features, refer to the supplementary instructions shipped with the drive.

NOTE: Quadruple Reduction Type "A" Gear Drives: Removal of backstop and mounting bracket may be required for adequate clearance when installing foundation fasteners. Removal of fan assemblies may be required for adequate clearance when installing foundation fasteners.

WELDING — Do not weld on the gear drive or accessories without prior approval from Rexnord Industries, LLC. Welding on the drive may cause distortion of the housing or damage to the bearings and gear teeth. Welding without prior approval could void the warranty.

EFFECTS OF SOLAR ENERGY — If the gear drive operates in the sun at ambient temperatures over 100°F(38°C), then special measures should be taken to protect the drive from solar energy. This protection can consist of a canopy over the drive or reflective paint on the drive. If neither is possible, a heat exchanger or other cooling device may be required to prevent the sump temperature from exceeding the allowable maximum.

Rexnord Industries, LLC, 3001 W. Canal St., Milwaukee, WI 53208-4200
Telephone: 414-342-3131 Fax: 414-937-4359
e-mail: info@rexnord.com web: www.rexnord.com

138-050
January 2010
Supersedes 11-09

Installation and Maintenance • Falk™ Enclosed Gear Drives

(Page 2 of 11) Sizes 305 thru 585 • Type A Series

MOUNTING POSITION — Standard mounting positions for types A, AB, , and ABX are with the base horizontal, and for types AR, ABR, and ABRC with the input and output shafts horizontal. If a gear drive is ordered for non-standard mounting positions, refer to the instructions provided with the drive for oil levels and bearing lubrication. If it is necessary to mount the gear drive in a different position from which it was ordered, refer to Falk for required changes to provide proper lubrication.

FOUNDATION, GENERAL — To facilitate oil drainage, elevate the gear drive foundation above the surrounding floor level. If desired, replace the drive oil drain plug with a valve, but provide a guard to protect the valve from accidental opening or breakage.

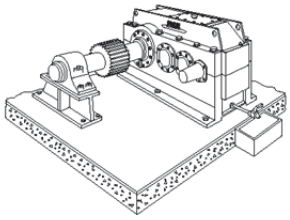

When an outboard bearing is used, mount drive and outboard bearing on a continuous foundation or bedplate, and dowel both in place.

FOUNDATION, STEEL — When mounting gear drive on structural steel, it is recommended that an engineered design be utilized for a pedestal, adapter base or bed to provide sufficient rigidity, to prevent induced loads from distorting the housing and causing gear misalignment. In the absence of an engineered design, it is recommended that a base plate, with thickness equal to or greater than the thickness of the drive feet, be securely bolted to steel supports and extend under the entire drive as illustrated.

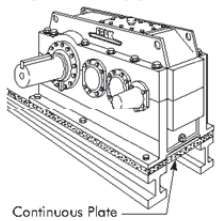

FOUNDATION, CONCRETE — If a concrete foundation is used, allow the concrete to set firmly before bolting down the gear drive. For the best type of mounting, grout structural steel mounting pads into the mounting base, as illustrated, rather than grouting the drive directly into the concrete.

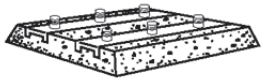

Motors and other components mounted on motor plates or motor brackets may become misaligned during shipment. ALWAYS check alignment after installation. Refer to Page 4 for coupling alignment instructions.

MOTOR BRACKETS — Falk™ motor brackets provide an economical "soft mounting" for standard NEMA and IEC foot mounted AC induction electric motors. The weight, location, and starting torque of the motor will cause cantilevered motor brackets to deflect downward or to twist to varying degrees.

The motor bracket/motor selections are engineered to be within acceptable deflection limits as determined by Rexnord.. Because the bracket is a "soft motor support", deflection and vibration magnitude of the bracket may exceed levels normally considered acceptable for rigidly mounted machinery.

For applications using other than standard selections, use of a motor plate is recommended. If a motor bracket is to be used, it becomes the customer's responsibility to support the rear of the motor bracket to limit deflection and vibration to within satisfactory levels as determined by the customer.

Gear Drive Alignment

FOOT MOUNTED DRIVES – Align drive with driven equipment by placing brood, flat shims under all mounting pads. Start at the low speed shaft end and level across the length and then the width of the drive. Check with a feeler gauge to make certain that all pads are supported to prevent distortion of housing when drive is bolted down. After drive is aligned with driven equipment and bolted down, align prime mover to drive input shaft. Refer to Page 4 for coupling alignment.

If equipment is received from Rexnord mounted on a bedplate, the components were accurately aligned at the Factory with the bedplate mounted on a large, flat assembly plate. Shim under the bedplate foot pads until the gear drive is level and all feet are in the same plane.

Check high speed shaft coupling alignment. If the coupling is misaligned, the bedplate is shimmed incorrectly. Re-shim bedplate and recheck high speed coupling alignment. If necessary, realign motor.

SHAFT MOUNTED DRIVES — Shaft mounted drive alignment occurs when the gear drive is attached to the driven shaft. The standard hollow low speed shaft is connected to the driven shaft with a shrink disc connection. Solid low speed shafts are typically connected with an MCF moment type coupling. Refer to the Shaft Connection section for coupling installation.

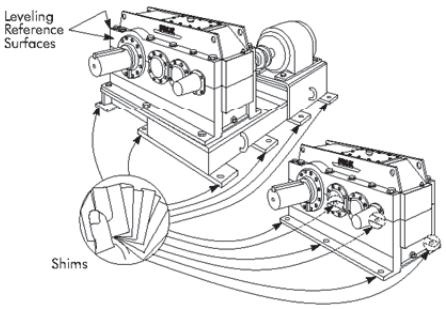

There may be some visible movement of the drive while operating due to shaft and coupling . Torque arm assemblies must be aligned such that the gear drive movement is not restricted during operation. Refer to torque arm instructions on Page 3.

The Alignment Free drive flange motor adapter provides registration for the motor which eliminates the adjustments normally required for high speed coupling alignment.

Torque Arms

The torque arm connects a shaft mounted gearbox to the foundation. In static condition, it helps to support the weight of the gearbox/motor assembly. In the dynamic condition, it supports the weight and also transmits the torque reaction to the foundation. The torque arm may be loaded in compression or tension. Maximum torque arm loads should be considered when designing the foundation for the torque arm anchor.

138-050
January 2010
Supersedes 11-09

Rexnord Industries, LLC, 3001 W. Canal St., Milwaukee, WI 53208-4200
Telephone: 414-342-3131 Fax: 414-937-4359
e-mail: info@rexnord.com web: www.rexnord.com

REXNORD

Falk™ Enclosed Gear Drives • Installation and Maintenance

Type A Series • Sizes 305 thru 585 (Page 3 of 11)

TORQUE ARM ASSEMBLY — The torque arm components are to be assembled according to the following illustration. A plain spherical bearing is fitted into the gearbox housing or bedplate. A pin engages the spherical bearing and connects it to the torque arm. Spacers center the bearing on the pin. The pin is retained by a snap ring. A similar connection is made between the torque arm and anchor bracket. In operation, the torque arm is to be perpendicular to the edge of the gear drive.

Warning: *Angular misalignment of the torque arm may restrict gear drive gear drive movement and cause excessive loading on the low speed shaft and driven equipment.*

TORQUE ARM MOVEMENT — Movement of the gear drive while operating is natural. The movement is due to shaft and coupling runouts. The standard torque arm is designed to accommodate this movement. It allows the gearbox to move

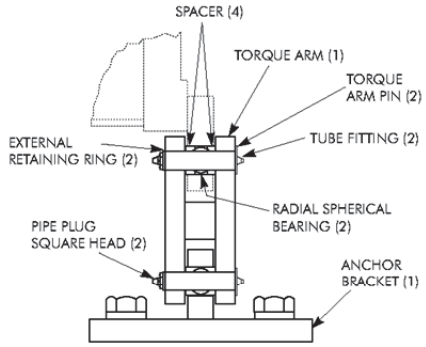

slightly with the driven shaft. This prevents transmitting unnecessary additional loads to the driven shaft through the gearbox. DO NOT restrain free movement of the gear drive, to do so will adversely load the low speed shaft and driven shaft and may result in shaft or hub failure. Recheck torque arm movement during regular maintenance intervals.

Shaft Connections

WARNING*: Provide suitable guards in accordance with local and national standards.*

SHRINK DISC CONNECTIONS — Shrink disc assemblies used on hollow low speed shafts and on some MCF coupling hubs require special installation procedures. Refer to the following Falk™ bulletins for detailed instructions:

Shrink Discs 138-850
MCF couplings 458-862

COUPLING CONNECTIONS — The performance and life of any coupling depends largely upon how well the coupling is installed and serviced. Refer to the coupling manufacturer's manual for specific instructions.

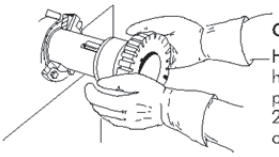

CORRECT METHOD
Heat interference fitted hubs, pinions, sprockets or pulleys to a maximum of 275°F (135°C) and slide onto gear drive shaft.

INCORRECT METHOD
DO NOT drive coupling hub, pinion, sprocket or pulley onto the shaft. An endwise blow on the shaft/coupling may damage gears and bearings.

FLANGED MOTOR ADAPTERS — Accurate axial positioning of the coupling hub on the motor shaft is required to ensure proper coupling gap. To establish the correct overhang on the motor shaft, measurements are required. Refer to Figure 1 below. First measure the distance from the motor mounting face of the motor to the end of the motor shaft (A). Then measure the distance from the motor mounting face of the motor adapter to the face of the gear drive hub (B). Refer to the coupling installation and maintenance instructions to determine the desired coupling gap. The coupling overhang is determined from the following equation:

$$\text{Overhang} = A + \text{Gap} - B$$

If the calculated overhang is a positive value, the motor shaft extends beyond the hub by that amount.

NOTE: For couplings where the coupling gap does not occur at the end of the motor hub, an additional adjustment must be made. See dimension C in Figure 1 below.

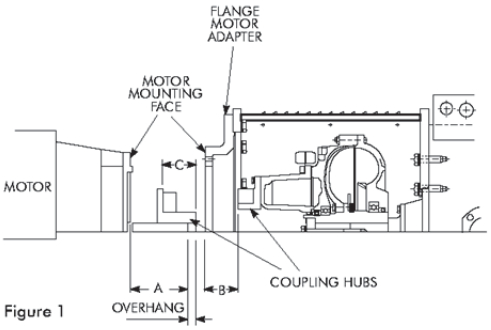

Figure 1

FALK™ COUPLINGS — (Except fluid type) Detailed installation manuals are available from Rexnord, your local Rexnord Account Executive or Distributor—just provide size and type designations stamped on the coupling. For lubricant requirements and a list of typical lubricants meeting Rexnord specifications, refer to appropriate coupling service manual.

Flanged Type Rigid Couplings are typically used on drives with vertical output shafts. The low speed shaft extension ends of the solid vertical shaft drives are drilled and tapped to accommodate coupling keeper plates. Tightening torques for fasteners, including keeper plate fasteners are listed in Table 1, Page 5.

Rexnord Industries, LLC, 3001 W. Canal St., Milwaukee, WI 53208-4200
Telephone: 414-342-3131 Fax: 414-937-4359
e-mail: info@rexnord.com web: www.rexnord.com

138-050
January 2010
Supersedes 11-09

Installation and Maintenance • Falk™ Enclosed Gear Drives

REXNORD

(Page 4 of 11) Sizes 305 thru 585 • Type A Series

FALK ™FLUID COUPLINGS — Refer to the installation manual furnished with the Falk fluid coupling for installation and startup instructions.

Type ABRC — The Alignment Free flange motor adapter has two side inspection openings. On solid shaft gear drives, the opening opposite the low speed shaft extension has been marked to indicate the vertical midpoint of the adapter. On hollow shaft gear drives, the opening on the shrink disk side of the gear drive has been marked to indicate the vertical midpoint of the adapter. These marks are used to establish the proper fill angle for the fluid coupling.

The fluid coupling outside diameter has been marked with two separate match marks. The recommended fill can be obtained by lining up the correct match mark on the fluid coupling with the mark in the inspection opening and filling the fluid coupling until fluid appears at the lip of the fill hole. To determine the correct mark on the fluid coupling begin by aligning the fill hole with the match mark in the inspection opening. For fill angles less than 90°, rotate the fill plug upward till the match marks line up. For fill angles greater than 90°, rotate the fill plug downward till the match marks line up.

GAP AND ANGULAR ALIGNMENT — If possible, after mounting coupling hubs, position the driving and driven equipment so that the distance between shaft ends is equal to the coupling gap. Align the shafts by placing a spacer block, equal in thickness to required gap, between hub faces, as shown at right, and also at 90° intervals around the hub. Check with feelers.

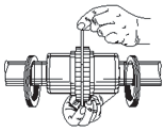

Steelflex® Illustrated

OFFSET ALIGNMENT — Align driving and driven shafts so that a straight edge will rest squarely on both couplings hubs as shown to the right and also at 90° intervals. Tighten foundation bolts of the connected equipment and recheck alignment and gap.

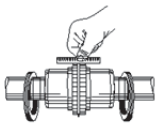

Steelflex Illustrated

SPROCKETS, PULLEYS OR SHEAVES — Mount power take-offs as close to the gear drive housing as possible to avoid undue bearing load and shaft deflection.

Align the output shaft of the gear drive square and parallel with the driven shaft by placing a straightedge across the face of the sprockets or sheaves as illustrated. Check horizontal shaft alignment by placing one leg of a square against the face of the sheave or sprocket with the spirit level on the horizontal leg of the square.

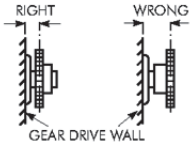

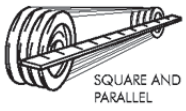

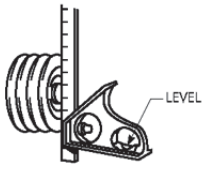

DO NOT over tighten belts or chains. Adjust chains to manufacturers' specifications. Adjust belts as follows:

The ideal tension is the lowest tension at which the belt will not slip under peak load conditions. Check the belt tension frequently during the first 24 to 48 hours of run-in operation. Over tightening belts shortens belt and bearing life. Keep belts free from foreign material which may cause slippage. Inspect the V–belt periodically; tighten the belts if they are slipping.

OUTBOARD BEARING — Mount the outboard bearing and gear drive on a common foundation so that they will shift as an assembly if settling should occur. Bring the outboard bearing to the correct horizontal position with broad flat shims under the mounting pad. Align accurately so that the load is equally divided between the two drive bearings and the outboard bearing. Mount a stop bar against the pillow block foot on the load side when large horizontal load components are exerted on the pillow block.

PINION MOUNTING — Mount pinion as close to the drive as possible to avoid undue bearing load and shaft deflection. Refer to Factory for pinion alignment instructions.

Non Falk™ Couplings — Refer to manufacturer's installation and maintenance instructions.

BACKSTOPS — To prevent damage to backstops due to incorrect motor shaft rotation at start up, couplings are NOT assembled when gear drives are furnished with backstops for all types except ABRC. For type ABRC drives, remove the backstop before electrically connecting the motor. AB, ABR, and ABRC backstops are held in place by a retaining ring on the intermediate shaft.

After completing electrical connections, check motor and gear drive shaft rotations. If rotations are correct, complete alignment and assembly of coupling or re-install the backstop.

138-050
January 2010
Supersedes 11-09

Rexnord Industries, LLC, 3001 W. Canal St., Milwaukee, WI 53208-4200
Telephone: 414-342-3131 Fax: 414-937-4359
e-mail: info@rexnord.com web: www.rexnord.com

REXNORD

Falk™ Enclosed Gear Drives • Installation and Maintenance

Type A Series • Sizes 305 thru 585 (Page 5 of 11)

Fastener Tightening Torques

Use the tightening torque values specified in Table 1 for fastening Falk™ gear drives, motors and accessories to their mounting surfaces with un-lubricated fasteners. DO NOT use these values for "torque locking" fasteners or for fastening components with aluminum feet or soft gaskets or vibration dampeners on the mounting surface. If the tightening torque exceeds the capacity of the torque wrench, use a torque multiplier. For inch fasteners, use Grade 5 for diameters though 1.500 inch and ASTM A 354 grade BC for larger diameter fasteners. Use ISO property class 8.8 for metric fasteners.

TABLE 1 — Tightening Torques: +/-5%
DO NOT Lubricate Fasteners

Inch Fasteners – Grade 5				
Fastener Size	Metal to Metal		Metal to Concrete	
	lb-ft	Nm	lb-ft	Nm
.250-20	7	10	6	8
.3125-18	15	21	12	16
.375-16	27	37	22	30
.500-13	67	91	54	73
.625-11	134	184	108	146
.750-10	242	330	194	265
.875-9	395	530	315	425
1.000-8	590	800	475	640
1.125-7	740	1000	590	800
1.250-7	1060	1420	840	1140
1.375-6	1360	1860	1100	1480
1.500-6	1840	2480	1460	1980
1.750-5	3900	5300	2700	4240
2.000-4.5	5900	7900	4100	6300
2.250-4.5	8600	11800	6000	9400
2.500-4	11800	16000	8300	12800
2.750-4	14600	19800	10200	15800
3.000-4	19400	26400	13600	21100

TABLE 1A — Tightening Torques: +/-5%
DO NOT Lubricate Fasteners

Metric Fasteners – Property Class 8.8				
Fastener Size	Metal to Metal		Metal to Concrete	
	lb-ft	Nm	lb-ft	Nm
M4 x .7	2	3	1.5	2
M5 x .8	4.5	6	3.5	5
M6 x 1.0	7.5	10	6	8
M8 x 1.25	18	24	14	19
M10 x 1.5	36	50	29	39
M12 x 1.75	62	84	50	68
M16 x 2	56	210	126	170
M20 x 2.5	305	415	246	330
M30 x 3.5	1060	1 440	850	1 150
M36 x 4	1680	2 520	1500	2 030
M42 x 4.5	3000	4 050	2400	3 250
M48 x 5	4500	6 100	3600	4 880
M56 x 5.5	7300	9 850	5800	7 860

Water Cooling

WATER COOLED HEAT EXCHANGERS — Install a shut-off or control valve in the water line to the heat exchanger to regulate the water flow through the exchanger. Also install a water flow gauge between the control valve and the exchanger to determine actual flow rate. Discharge water to an OPEN DRAIN to prevent back pressure.

INTERNAL COOLING TUBES — Refer to Manual 138-310 for installation, operation, and maintenance of internal cooling tubes.

Lubrication Systems

SPLASH LUBRICATED DRIVES — Standard type A, AR, AB, ABR, and ABRC drives are splash lubricated. The lubricant is picked up by the revolving elements and distributed to the bearings and gear meshes.

OIL PUMP LUBRICATED DRIVES — Types AXV and ABX are equipped with an external oil pump to provide oil to the upper bearings and gear meshes. The system is composed of an electric motor driven gear pump, oil filter, flow indicator with switch, and an internal distribution network with relief valve (set at 30 psi). The pump system may be furnished with a 50 or 60Hz, 3 phase electrical motors based on the selection. Refer to the pump motor nameplate and Table 2 for electrical requirements. Wire the motor for correct rotation as indicated by the rotation arrow. The flow indicator has a single pole, double throw switch rated at 15A, 125V/7A, 250V maximum. Connect the flow indicator switch with the prime mover control circuitry to prevent drive operation without the lubrication system.

TABLE 2 — Oil Pump Electrical Specifications

DRIVE SIZE	405 & 425		445-485		505-585	
HP	1		2		3	
Cycles, Hz	50	60	50	60	50	60
RPM	1425	1725	1425	1725	1425	1725
Voltage	220/380/440	208-230/460	220/380/440	208-230/460	220/380/440	208-230/460

Other types of gear drives may also be equipped with oil pumps for special lubrication considerations or external cooling.

Caution: *Refer to Factory for drives that use pumps to distribute lubricants with temperatures below 30°F (-1°C).*

Lubrication Recommendations

Carefully follow lubrication instructions on the gear drive nameplate, warning tags, and installation manuals furnished with the gear drive.

Lubricants listed in this manual are typical ONLY and should not be construed as exclusive recommendations. Industrial type petroleum based rust and oxidation inhibited (R & O) gear lubricants or industrial type sulfur-phosphorus extreme pressure (EP) gear lubricants are the recommended lubricants for ambient temperatures of 15°F to 125°F(-9°C to +50°C).

For drives operating outside the above temperature range refer to "Synthetic Lubricants" paragraphs, Page 7. Synthetic lubricants can also be used in normal climates.

Rexnord Industries, LLC, 3001 W. Canal St., Milwaukee, WI 53208-4200
Telephone: 414-342-3131 Fax: 414-937-4359
e-mail: info@rexnord.com web: www.rexnord.com

138-050
January 2010
Supersedes 11-09

Installation and Maintenance • Falk™ Enclosed Gear Drives

REXNORD

(Page 6 of 11) Sizes 305 thru 585 • Type A Series

VISCOSITY (IMPORTANT) — The proper grade for R & O and EP lubricants is found in Table 3. For cold climate conditions refer to Table 6, Page 7 and the "Synthetic Lubricant" paragraphs.

If a gear drive operates in a typical indoor environment where the ambient temperature is within 70°F to 125°F (21°C to 52°C), the oil viscosity should be increased one AGMA grade above that shown for the 50°F to 125°F(10°C to 52°C) range. That is, an AGMA Number 6 or 7 should be substituted for a 5 or 6 respectively, under these ambient conditions.

OIL PUMPS — When selecting a lubricant for a gear drive equipped with an oil pump, cold temperature oil viscosity is important. Lubricant viscosity at start-up generally should not exceed 1725 cSt (8,000 SSU). When exceeding this viscosity, pump cavitation is possible, reducing oil circulation and possibly damaging the pump. A sump heater may be required or it may be possible to use a lower viscosity oil to minimize pump cavitation, refer to Factory.

TABLE 3 — Viscosity Grade Recommendations for Petroleum Based R & O or EP Lubricants

Output RPM	Normal Climates			
	15° to 60°F (-9° to +16°C)		50° to 125°F (10° to 52°C)	
	ISO-VG	AGMA	ISO-VG	AGMA
Output RPM Below 80	150	4	320	6
Output RPM 80 & Above	150	4	220	5

Petroleum Based Lubricants

R & O GEAR LUBRICANTS (Table 4) — Industrial type petroleum based rust and oxidation inhibited (R & O) gear lubricants are the most common and readily available general purpose gear lubricants.

EXTREME PRESSURE (EP) LUBRICANTS (Table 5) — For highly loaded gear drives or drives loaded in excess of original estimates, industrial type petroleum extreme pressure lubricants are preferred. The EP lubricants currently recommended are of the sulfur-phosphorus type.

TABLE 5 — Extreme Pressure Lubricants †

Maximum Operating Temperature 200°F(93°C)

Manufacturer	Lubricant
Amoco Oil Co. BP Oil Co. Chevron U.S.A. Inc. Citgo Petroleum Corp.	Permagear/Amogear EP Energear EP Gear Compounds EP Citgo EP Compound
Conoco Inc. Exxon Co. U.S.A. E.F. Houghton & Co. Imperial Oil Ltd.	Gear Oil Spartan EP MP Gear Oil Spartan EP
Kendall Refining Co. Keystone Div. Pennwalt Corp. Lyondell Petrochemical (ARCO) Mobil Oil Corp. Petro–Canada Products	Kendall NS-MP Keygear Pennant NL Mobilgear Ultima EP
Phillips 66 Co. Shell Oil Co. Shell Canada Limited Sun Oil Co. Texaco Lubricants	Philgear Omala Oil Omala Oil Sunep Meropa
Valvoline Oil Co.	AGMA EP

† Minimum viscosity index of 90.

TABLE 4 — Petroleum Based R & O Gear Oils † Maximum operating temperature of lubricants 200°F (93°C)

AGMA Viscosity Grade	4	5	6	7
ISO Viscosity Grade	150	220	320	460
Viscosity SSU @ 100°F	626-765	918-1122	1335-1632	1919-2346
Viscosity cSt @ 40°C	135-165	198-242	288-352	414-506
Manufacturer	**Lubricant**	**Lubricant**	**Lubricant**	**Lubricant**
Amoco Oil Co.	Amer.Ind. Oil 150	Amer.Ind. Oil 220	Amer. Ind. Oil 320	Amer. Ind. Oil 460
BP Oil Co.	. . . . .	Energol HLP-HD 220		
Chevron U.S.A., Inc.	Machine Oil AW 150	Machine Oil AW 220	Machine Oil AW 320	
Citgo Petroleum Corp.	Citgo Pacemaker 150	Citgo Pacemaker 220	Citgo Pacemaker 320	Citgo Pacemaker 460
Conoco Inc.	Dectol R&O Oil 150	Dectol R&O Oil 220	Dectol R&O Oil 320	Dectol R&O Oil 460
Exxon Company, U.S.A.	Teresstic 150	Teresstic 220	Teresstic 320	Teresstic 460
Houghton International, Inc.	Hydro–Drive HP 750	Hydro–Drive HP 1000		
Imperial Oil Ltd.	Teresso 150	Teresso 220	Teresso 320	
Kendall Refining Co.	Four Seasons AW 150			
Keystone Lubricants	KLC–40	KLC-50		
Lyondell Petrochemical (ARCO)	Duro 150	Duro 220	Duro 32	
Mobil Oil Corp.	DTE Oil Extra Heavy	DTE Oil BB	DTE Oil AA	DTE Oil HH
Pennzoil Products company	Pennzbell AW Oil 150	Pennzbell AW Oil 220	Pennzbell AW Oil 320	Pennzbell AW Oil 460
Petro–Canada Products	Premium R & O 150	Premium R & O 220	Premium R & O 320	
Phillips 66 Co.	Magnus Oil 150	Magnus Oil 220	Magnus Oil 320	
Shell Oil Co.	Morlina 150	Morlina 220	Morlina 320	Morlina 460
Shell Canada Limited	Tellus 150	Tellus 220	Tellus 320	
Sun Oil Co.	Sunvis 9150	Sunvis 9220		
Texaco Lubricants	Regal Oil R&O 150	Regal Oil R&O 220	Regal Oil R&O 320	Regal Oil R&O 460
Unocal 76 (East)	Unax RX 150	Unax RX 220	Unax AW 320	Turbine Oil 460
Unocal 76 (West)	Turbine Oil 150	Turbine Oil 220	Turbine Oil 320	Turbine Oil 460
Valvoline Oil Co	Valvoline AW ISO 150	Valvoline AW ISO 220	Valvoline AW ISO 320	

† Minimum viscosity index of 90.

138-050
January 2010
Supersedes 11-09

Rexnord Industries, LLC, 3001 W. Canal St., Milwaukee, WI 53208-4200
Telephone: 414-342-3131 Fax: 414-937-4359
e-mail: info@rexnord.com web: www.rexnord.com

REXNORD

Falk™ Enclosed Gear Drives • Installation and Maintenance

Type A Series • Sizes 305 thru 585 (Page 7 of 11)

WARNING: EP LUBRICANTS IN FOOD PROCESSING INDUSTRY — EP lubricants may contain toxic substances and should not be used in the food processing industry without the lubricant manufacturers' approval. Lubricants which meet USDA "H1" classification are suitable for food processing applications.

Synthetic Lubricants

Synthetic lubricants of the polyalphaolefin type are recommended for cold climate operation, high temperature applications, extended temperature range (all season) operation, and/or extended lubricant change intervals. The proper viscosity grade of synthetic lubricant is given in Table 6 Refer to Table 7 for Synthetic lubricants.

TABLE 6 — Viscosity Grade Recommendations for Synthetic Lubricants ★

Output RPM	Cold Climates				Normal Climates					
	–30° to +10°F (–34° to –12°C)		–15° to +50°F (–26° to +10°C)		0° to +80°F (–18° to +27°C)		+10° to +125°F (–12° to +52°C)		+20° to +125°F (–7° to +52°C)	
	ISO-VG	AGMA	ISO-VG	AGMA	ISO-VG	AGMA	ISO-VG	AGMA	ISO-VG	AGMA
Below 80	32	0S	68	2S	150	4S	320	6S	320	6S
80 & Above	32	0S	68	2S	150	4S	220	5S	320	6S

★ Refer to Falk for viscosity recommendations when ambient temperatures are below –30°F (–34°C) or above 125°F (52°C).

TABLE 7 — Synthetic Lubricants – Polyalphaolefin Type ★

AGMA Viscosity Grade	0S	2S	4S	5S	6S
ISO Viscosity Grade	32	68	150	220	320
Viscosity SSU @ 100°F	134–164	284–347	626–765	918–1122	1335–1632
Viscosity cSt @ 40°C	28.8–35.2	61.2–74.8	135–165	198–242	288–352
Manufacturer	Lubricant				
Chevron U.S.A., Inc.	...	...	...	Clarity Synthetic PM Oil 220	...
	...	...	...	Syn. Gear Lube Tegra 220 ‡	...
Conoco, Inc.	Syncon 32	Syncon 68	...	...	...
	...	Syncon EP 68 ‡	...	Syncon EP 220 ‡	...
Dryden Oil Co.	Drydene SHL Lubricant 32	Drydene SHL Lubricant 68	Drydene SHL Lubricant 150	Drydene SHL Lubricant 220	Drydene SHL Lubricant 320
Exxon Co. U.S.A.	Teresstic SHP 32	Teresstic SHP 68	Teresstic SHP 150	Teresstic SHP 220	Teresstic SHP 320
	...	...	Spartan Synthetic EP 150 ‡	Spartan Synthetic EP 220 ‡	Spartan Synthetic EP 320 ‡
Mobil Oil Corp.	SHC 624	SHC 626	SHC 629	SHC 630	SHC 632
	...	...	Mobilgear SHC 150 ‡	Mobilgear SHC 220 ‡	Mobilgear SHC 320 ‡
Pennzoil Products Co.	Pennzgear SHD 32	Pennzgear SHD 68	Pennzgear SHD 150	Pennzgear SHD 220	Pennzgear SHD 320
	...	Super Maxol "S" 68 ‡	Super Maxol "S" 150 ‡	Super Maxol "S" 220 ‡	Super Maxol "S" 320 ‡
Petro-Canada Products	...	...	Super Gear Fluid 150EP ‡	Super Gear Fluid 220EP ‡	Super Gear Fluid 320EP ‡
Shell Oil Co.	...	...	...	Hyperia 220	Hyperia 320
	...	...	...	Hyperia S220 ‡	Hyperia S320 ‡
Sun Co.	...	...	...	Sunoco Challenge 220	Sunoco Challenge 320
	...	...	...	Sunoco Challenge EP 220 ‡	Sunoco Challenge EP 220 ‡
Texaco Lubricants Co.	Pinnacle 32	Pinnacle 68	Pinnacle 150	Pinnacle 220	Pinnacle 320
	...	...	Pinnacle EP 150 ‡	Pinnacle EP 220 ‡	...
Whitmore Mfg. Co.	...	...	Decathlon 4EP ‡	Decathlon 5EP ‡	Decathlon 6EP ‡

★ Minimum viscosity index of 130. Consult lubricant supplier/manufacturer for maximum operating temperature.
‡ Extreme Pressure EP lubricant (contains sulphur phosphorus).

WARNING: SYNTHETIC LUBRICANTS IN FOOD PROCESSING INDUSTRY — Synthetic lubricants may contain toxic substances and should not be used in the food processing industry without the lubricant manufacturers' approval. Lubricants which meet USDA "H1" classification are suitable for food processing applications.

Bearing and Seal Greases

All drives and some backstops have grease lubricated seals. Some vertical shaft and specially mounted drives have grease lubricated bearings. Drives are shipped with NLG1 or #2 grease in the seal housing cavities unless otherwise specified. Refer to Table 8 for grease recommendations.

TABLE 8 — Greases for Bearings and Seals

(0° to 200°F(-18° to +93°C)

Manufacturer	Lubricant
Amoco Oil Co. BP Oil Co. Chevron U.S.A., Inc. Citgo Petroleum Corp.	Amolith Grease No. 2 Energrease LS–EP2 Industrial Grease Medium Premium Lithium Grease No. 2
Conoco Inc. Exxon Company, U.S.A. E.F. Houghton & Co. Imperial Oil Ltd.	EP Conolith Grease No. 2 Unirex N2 Cosmolube 2 Unirex N2L
Kendall Refining Co. Keystone Div. Pennwalt Corp. Lyondell Petrochemical (ARCO) Mobil Oil Corp. Mobil Oil Corp Petro–Canada Products	Multi–Purpose Lithium Grease L421 Zeniplex 2 Litholine H EP 2 Grease Mobilith 22 Mobilith SHC 460 ★ Multipurpose EP2
Phillips 66 Co. Shell Oil Co. Shell Canada Limited Sun Oil Co. Texaco Lubricants	Philube Blue EP Alvania Grease 2 Alvania Grease 2 Ultra Prestige EP2 Premium RB Grease
Unocal 76 (East & West) Valvoline Oil Co.	Unoba EP2 Multilube Lithium EP Grease

★ High performance synthetic alternate.

Rexnord Industries, LLC, 3001 W. Canal St., Milwaukee, WI 53208-4200
Telephone: 414-342-3131 Fax: 414-937-4359
e-mail: info@rexnord.com web: www.rexnord.com

138-050
January 2010
Supersedes 11-09

Installation and Maintenance • Falk™ Enclosed Gear Drives

(Page 8 of 11) Sizes 305 thru 585 • Type A Series

REXNORD

GREASE LUBRICATED SEALS — Most gear drives and backstops are furnished with grease purged seals which minimize the entry of contaminants into the drive or backstop. Gear drives and backstops are shipped with #2 grease in the seal housing cavities unless otherwise specified. If grease could contaminate the product, as in the food and drug industries, it should be removed. A grease that meets USDA "H1" classification is suitable for food processing applications.

TYPICAL SEAL ASSEMBLIES

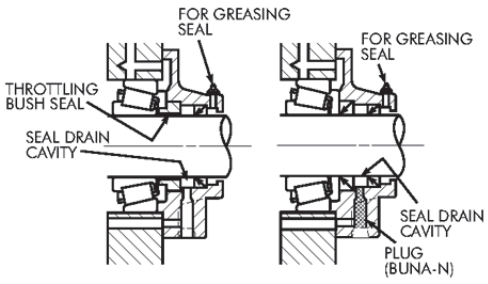

LOW OIL LEVEL
Sizes 385 & 405 thru 585
Inner Bush Seal and Outer Lip Type Seal

HIGH OIL LEVEL
Sizes 385 & 405 thru 585
Two Lip Type Oil Seals

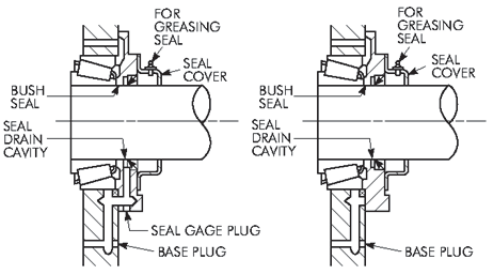

LOW OIL LEVEL
Sizes 305 thru 365 & 395
Inner Bush Seal and Outer Lip Type Seal

HIGH OIL LEVEL
Sizes 305 thru 365 & 395
Inner Bush Seal and Outer Lip Type Seal

GREASE LUBRICATED BEARINGS — Vertical shaft drives with hollow shafts or with drywells have grease lubricated lower low speed bearings. These bearings are lubricated at the Factory with an NLGI#2 grease. Refer to the preventive maintenance instructions for greasing instructions.

BACKSTOPS — For types AB, ABR, and ABX model C and later, backstops are furnished filled with oil. Remove plug from top of backstop and replace with vent wired to torque arm. Earlier models had backstops that are grease lubricated, do not use greases with molybdenum disulfide or other EP additives.

Type "A" and "AR" drives may have a Falk™ pawl type backstop or a **Falk™ PRT** wedge ramp type backstop. Falk pawl backstops are prelubricated and sealed at assembly and require no future lubrication. These backstops also contain grease purgeable seals (see paragraph above for grease lubricated seals).

Falk™ PRT backstops are shipped filled with oil. Remove plug from top of backstop and replace with vent wired to torque arm.

Oil Levels

Types A & AB Prior to filling gear drive or after storage/inactivity of the drive for greater than 1 month, remove the inspection cover and flood the oil troughs with oil. The oil troughs sit directly beneath the inspection cover and can be filled to flooding, typically with a volume of approximately 10% of the sump lube. This will provide oil to the bearings. Fill the drive with oil to the level indicated on the oil dipstick. The approximate oil capacity is given on the gear drive nameplate. For reference, approximate capacities are also given in Table 9. These quantities are for high oil levels. Actual capacities can be more or less depending on the type of cooling, total ratio and input speed. Always fill to proper level indicated on the dipstick.

Types ABR, ABRC, and AR Fill the drive with oil to the level indicted on the oil dipstick. Approximate oil capacities are given on the nameplate and in Table 10.

Drives with Oil Pumps Types , AXV, and occasionally other types of gear drives will be equipped with oil pumps for cooling or special lubrication considerations. If a drive is equipped with an oil pump, fill the drive to the level marked on the dipstick. Run the lubrication system for several minutes to fill the system components. Verify that the pump is circulating oil properly, then recheck oil level. If necessary, add oil to compensate for filter and/or cooler.

Before starting the gear drive, rotate the input shaft to check for obstructions. Then start the drive and allow it to run without load for several minutes. Shut down and recheck oil level. If everything is satisfactory, the drive is ready for operation.

138-050
January 2010
Supersedes 11-09

Rexnord Industries, LLC, 3001 W. Canal St., Milwaukee, WI 53208-4200
Telephone: 414-342-3131 Fax: 414-937-4359
e-mail: info@rexnord.com web: www.rexnord.com

REXNORD

Falk™ Enclosed Gear Drives • Installation and Maintenance

Type A Series • Sizes 305 thru 585 (Page 9 of 11)

Preventive Maintenance

AFTER FIRST WEEK — Check alignment of total system and realign where necessary. Also tighten all external bolts and plugs where necessary. DO NOT readjust the internal gear or bearing settings in the drive, these were permanently set at the Factory.

AFTER FIRST MONTH — Proceed as follows:

1. Operate drive until old sump oil reaches normal operating temperature. Shut down drive and drain immediately.
2. Immediately flush drive with an oil of the same type and viscosity grade as the original charge (warmed to approximately 100°F (38°C) in cold weather) by rapidly pouring or pumping a charge equal to 25 - 100% of the initial fill volume or until clean oil flows through the drain.
3. Close the drain and refill the drive to the correct level with new oil of the correct type and viscosity.

PERIODICALLY —

1. Check the oil level of the drive when it is stopped and at ambient temperature. Add oil if needed. If the oil level is ABOVE the high oil level mark on the dipstick, have the oil analyzed for water content. Moisture in the oil may indicate that a seal or the heat exchanger is leaking. If so, replace the defective part immediately and change the oil. DO NOT fill above the mark indicated as leakage or undue heating may result.
2. Check coupling alignment to make certain that foundation settling has not caused excessive misalignment.
3. If drive is equipped with a fan, periodically clean accumulated foreign matter from the fan, guard, and deflector.
4. If drive is equipped with a torque arm, check for free movement.

Lubricant Changes

OIL ANALYSIS REPORT— Checking oil condition at regular intervals is recommended. In the absence of more specific limits, the guidelines listed below may be used to indicate when to change oil:

1. Water content is greater than 0.05% (500 ppm).
2. Iron content exceeds 150 ppm.
3. Silicon (dust/dirt) exceeds 25 ppm.
4. Viscosity changes more than 15%.

PETROLEUM LUBRICANTS — For normal operating conditions, change gear oils every 6 months or 2500 operating hours, whichever occurs first. Change oil more frequently when gear drives operate in extremely humid, chemical or dust laden atmospheres. In these cases, R & O and EP lubricants should be changed every 3 to 4 months or 1500 to 2000 hours. If the drive is operated in an area where the temperatures vary with seasons, change oil viscosity grade to suit temperature. Lubricant suppliers can test oil periodically and recommend economical change intervals.

SYNTHETIC LUBRICANTS — Synthetic lube change intervals can be extended to 8000 - 10,000 hours depending upon operating temperatures and lubricant contamination. Change oil more frequently when gear drives operate in extremely humid, chemical or dust laden atmospheres. In these cases, synthetic lubricants should be changed every 4 to 6 months or 4000 to 6000 hours. Laboratory analysis is recommended for optimum lubricant life and gear drive performance. Change lube with change in ambient temperature, if required. Refer to Table 6 for synthetic lubricant viscosity recommendations.

GREASE LUBRICATED SEALS — Depending on the frequency and degree of contamination (at least every six months), purge contaminated grease from seals by slowly pumping fresh bearing grease , WITH A HAND GREASE GUN, through the seal until fresh grease flows out along the shaft. Wipe off purged grease. Refer to Table 8 for NLGI #2 greases. Some of these greases are of the EP type and may contain toxic substances not allowed in the food processing industry. A grease that meets the USDA "H1" classification is suitable for food processing applications.

CAUTION: *Rapid greasing with a power grease gun can force grease inward past the seals and plug the oil drainback system causing seal leaks.*

GREASE LUBRICATED BEARINGS (TYPES AXV AND ABX) — All hollow and most solid vertical low speed shaft drives have a grease lubricated lower low speed bearing. Grease bearings during oil changes or at intervals of every 6 months or 2500 hours of operation whichever is less. Table 11 contains low speed bearing grease capacities.

HOLLOW SHAFT DRIVES — Remove the pressure relief plug before greasing. Pump grease into bearing cage until fresh grease appears at the plug. Replace the pressure relief plug when finished. See Figure 2 below.

Refer to Table 8 for NLGI #2 greases. Some of these greases are of the EP type and may contain toxic substances not allowed in the food processing industry. A grease that meets the USDA "H1" classification is suitable for food processing applications.

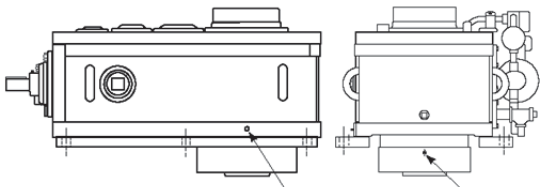

Figure 2

BACKSTOPS — For types AB, , and ABX refer to the supplemental backstop installation and maintenance instructions provided with the drive for recommended lubricants. It is recommended to lubricate backstops during regular drive lubrication intervals. If backstops are grease lubricated, do not use greases with molybdenum disulfide or other EP additives.

Type "A" and "AR" drives may have a Falk™ pawl type backstop or a **Falk™ PRT** wedge ramp type backstop. Falk™ pawl backstops are prelubricated and sealed at assembly and require no future lubrication. These backstops also contain grease purgeable seals (see paragraph above for grease lubricated seals).

Falk™ PRT backstops are a wedge ramp type and are oil lubricated. Follow lubrication recommendations as outlined in the supplemental backstop instructions furnished with the drive.

Rexnord Industries, LLC, 3001 W. Canal St., Milwaukee, WI 53208-4200
Telephone: 414-342-3131 Fax: 414-937-4359
e-mail: info@rexnord.com web: www.rexnord.com

138-050
January 2010
Supersedes 11-09

Installation and Maintenance • Falk™ Enclosed Gear Drives

REXNORD

(Page 10 of 11) Sizes 305 thru 585 • Type A Series

TABLE 9 — Types A & AB Approximate Oil Capacities ‡

DRIVE SIZE	Type A								Type AB						DRIVE SIZE
	A1		A2		A3		A4		AB2		AB3		AB4		
	Gallons	Liters	Gallons	Liters	Gallons	Liters	Gallons	Liters	Gallons	Liters	Gallons	Liters	Gallons	Liters	
305	3	11	4	15	4	15									305
325	5	19	6	23	6	23									325
345	6	23	8	30	9	34									345
365	10	38	13	49	13	49									365
385	10	38	10	38	10	38	10	38	11	42	11	42	11	42	385
395	12	45	16	61	17	64									395
405	10	38	15	57	15	57	14	53	11	42	15	57	15	57	405
425	14	53	20	76	21	79	20	76	14	53	20	76	22	83	425
445	22	83	22	83	29	110	28	106	22	83	29	110	30	114	445
465	29	110	30	114	39	148	38	144	30	114	39	148	39	148	465
485	32	121	38	144	57	216	56	212	31	117	52	197	58	220	485
505	42	159	50	189	78	295	77	291	39	148	70	265	80	303	505
525	53	201	59	223	95	360	93	352	48	182	87	329	100	379	525
545	...	...	115	435	135	511	...	...	...	...	111	420	138	522	545
565	...	...	130	492	160	606	...	...	...	...	142	538	170	644	565
585	...	...	215	814	250	946	...	...	...	...	220	833	275	1 041	585

‡ Capacities vary with ratio, speed and type of cooling. Follow values on the gear drive nameplate. Always fill to proper level indicated on the dipstick.

TABLE 10 — Types AR, AVX, ABR, and ABX Approximate Oil Capacities

DRIVE SIZE	Vertical Output				Horizontal Output				DRIVE SIZE
	ABX3 & AXV2		ABX4, AXV3, & AXV4		ABR3 & AR2		ABR4, AR3, & AR4 ★		
	Gallons	Liters	Gallons	Liters	Gallons	Liters	Gallons	Liters	
405	10	38	10	38	14	53	14/18	53/68	405
425	15	57	15	57	19	72	19/27	72/102	425
445	25	95	25	95	35	132	35/50	132/189	445
465	30	114	30	114	40	151	40/55	151/208	465
485	40	151	45	170	50	189	60/80	227/303	485
505	50	189	60	227	65	246	80/100	303/379	505
535	70	265	80	303	95	360	110/140	416/530	535
555	100	379	120	454	130	492	160/220	606/833	555

★ Values to right of slash mark are for type AR4 drives when HS Shaft is above drive center line.

TABLE 11 — Types AXV and ABX – LS Shaft Lower Bearing Grease Capacity

DRIVE SIZE	Solid Shaft				Hollow Shaft		DRIVE SIZE
	Down		Up		oz	mL	
	oz	mL	oz	mL			
405	8	237	12	355	12	355	405
425	12	355	18	532	12	355	425
445	12	355	18	532	24	710	445
465	30	890	40	1180	30	890	465
485	30	890	40	1180	60	1770	485
505	40	1180	50	1480	60	1770	505
535	50	1480	50	1480	80	2370	535
555	50	1480	60	1770	80	2370	555

138-050
January 2010
Supersedes 11-09

Rexnord Industries, LLC, 3001 W. Canal St., Milwaukee, WI 53208-4200
Telephone: 414-342-3131 Fax: 414-937-4359
e-mail: info@rexnord.com web: www.rexnord.com

Stored & Inactive Gear Drives

Each gear drive is protected with a rust preventative that will protect parts against rust for a period of 4 months in an outdoor shelter or 12 months in a dry building after shipment from the Factory. **CAUTION:** *Drives are not to be stored outdoors without shelter. Standing water on drives significantly increases risk of water ingression and rust. Installer assumes risk.*

If a gear drive is to be stored or inactive after installation for 1 to 6 months, prepare the drive for storage according to the "Customer Preparation for Storage" instructions in the "Customer Intermittent Storage" section of Manual 128-014. Refer to Table 12 for Motorstor quantities if required. Rotate the shafts several times by hand. Before operating, drives which have been stored or inactive must be filled to the proper level with oil meeting the specifications given in this manual. Refer to Manual 128-014 for "Start-up after Storage" instructions.

Periodically inspect stored or inactive gear drives and spray or add rust inhibitor every six months, or more often if necessary. Indoor dry storage is recommended.

Gear drives ordered for extended storage can be treated at the Factory with a special preservative and sealed to rust-proof parts for periods longer than those cited previously.

The vented dipstick should be replaced with a plug (vented dipstick should be attached to gear drive for future use) so that the protective rust inhibiting atmosphere is sealed inside the drive. Install vented dipstick when preparing drive for operation.

TABLE 12 — Motorstor/VCI–10★

(Add to stored or inactive drives)

DRIVE SIZE	Motorstor	
	Ounces Per Drive	Milliliters Per Drive
305 thru 425	2	60
445 thru 485	6	180
505 thru 535	10	300
545 thru 585	30	890

★ Product of Daubert Chemical Company, Chicago, IL.

Rexnord Industries, LLC, 3001 W. Canal St., Milwaukee, WI 53208-4200
Telephone: 414-342-3131 Fax: 414-937-4359
e-mail: info@rexnord.com web: www.rexnord.com

138-050
January 2010
Supersedes 11-09

11.7.2 ENCLOSED BEVEL – FALK SPEED REDUCER TYPE GHB

REXNORD

Falk™ Enclosed Gear Drives • Installation & Maintenance Instructions

Types GHB, Y, YB, & YBX • Sizes 1080-1195 & 2050-2235 (Page 1 of 8)

How to Use This Manual

This manual provides detailed instructions on installation and maintenance of gear drives and couplings. Use the table of contents below to locate required information.

CAREFULLY FOLLOW THE INSTRUCTIONS IN THIS MANUAL FOR OPTIMUM PERFORMANCE AND TROUBLE FREE SERVICE.

Table of Contents

Installation Instructions . . . . . Pages 1 & 2
Shaft Connections . . . . . Pages 2 & 3
Tightening Torques . . . . . Page 3
Lubrication Recommendations . . . . . Pages 3 thru 7
Preventive Maintenance . . . . . Page 8
Stored and Inactive Gear Drives . . . . . Page 8

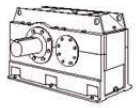

Type Y

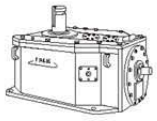

Type YBX

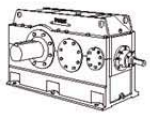

Type YB

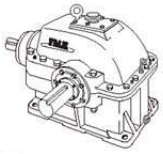

Type GHB

Introduction

Credit for long service and dependable operation of a gear drive is often given to the engineers who designed it, or the craftsmen who constructed it, or the sales engineer who recommended the type and size. Ultimate credit belongs to the mechanic on the job who worked to make the foundation rigid and level, who accurately aligned the shafts and carefully installed the accessories, and who made sure that the drive received regular lubrication. The details of this important job are the subject of this manual.

NAMEPLATE — Operate Falk™ gear drives only at horsepower, speed and ratio shown on nameplate. Before changing any one of these, submit complete nameplate data and new application conditions to the Factory for correct oil level, parts and application approval.

DISASSEMBLY AND ASSEMBLY — Disassembly & assembly instructions and parts guides are available from the Factory or Rexnord Account Executives. When requesting information, please give complete data from the nameplate on the gear drive; Model, M.O.Number, Date, RPM, and Ratio.

***WARNING**: Consult applicable local and national safety codes for proper guarding of rotating members. Lock out power source and remove all external loads from drive before servicing drive or accessories.*

Warranty

Rexnord Industries (the "Company") warrants that, for a period of three years from the date of shipment, the product described herein will deliver successfully its rated output as indicated on the nameplate, provided, it is properly installed and maintained, correctly lubricated, and operated in the environment and within the limits of speed, torque or other load conditions for which it was sold. Such product is expressly not warranted against failure or unsatisfactory operation resulting from dynamic vibrations imposed upon it by the drive system in which it is installed unless the nature of such vibrations has been fully defined and expressly accepted in writing by the Company as a condition of operation.

Installation Instructions

The following instructions apply to standard Falk™ Type GHB, Y, YB & YBX drives shown above. If a drive is furnished with special features, refer to the supplementary instructions shipped with the drive.

WELDING — Do not weld on the gear drive or accessories without prior approval from Rexnord Industries, LLC. Welding on the drive may cause distortion of the housing or damage to the bearings and gear teeth. Welding without prior approval could void the warranty.

EFFECTS OF SOLAR ENERGY — If the gear drive operates in the sun at ambient temperatures over 100°F(38°C), then special measures should be taken to protect the drive from solar energy. This protection can consist of a canopy over the drive or reflective paint on the drive. If neither is possible, a heat exchanger or other cooling device may be required to prevent the sump temperature from exceeding the allowable maximum.

HORIZONTAL MOUNTING — Mount gear drive with base horizontal, unless it has been specifically ordered for mounting in another position. If it is necessary to mount the drive in a different position from that for which it was ordered, consult Rexnord for changes necessary to provide proper lubrication.

NON-HORIZONTAL MOUNTING — For gear drives with non-horizontal mounting, including tilted, vertical and wall mounted, refer to instructions provided with the drive for oil levels and bearing lubrication.

Rexnord Industries, LLC, Gear Group
3001 W. Canal St., Milwaukee, WI 53208-4200 USA Telephone: 414-342-3131
Fax: 414-937-4359 e-mail: info@rexnord.com web: www.rexnord.com

148-050
November 2006
Supersedes 4-99

Installation & Maintenance Instructions • Falk™ Enclosed Gear Drives

REXNORD

(Page 2 of 8) Sizes 1080-1195 & 2050-2235 • Types GHB, Y, YB, & YBX

FOUNDATION, GENERAL — To facilitate oil drainage, elevate the gear drive foundation above the surrounding floor level. If desired, replace the drive oil drain plug with a valve, but provide a guard to protect the valve from accidental opening or breakage.

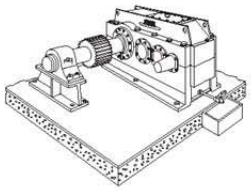

When an outboard bearing is used, mount drive and outboard bearing on a continuous foundation or bedplate and dowel both in place.

FOUNDATION, STEEL — When mounting gear drive on structural steel, it is recommended that an engineered design be utilized for a pedestal, adapter base or bed to provide sufficient rigidity, to prevent induced loads from distorting the housing and causing gear misalignment. In the absence of an engineered design, it is recommended that a base plate, with thickness equal to or greater than the thickness of the drive feet, be securely bolted to steel supports and extend under the entire drive as illustrated.

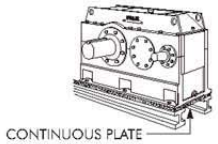

FOUNDATION, CONCRETE — If a concrete foundation is used, allow the concrete to set firmly before bolting down the gear drive. For the best type of mounting, grout structural steel mounting pads into the mounting base, as illustrated, rather than grouting the drive directly into the concrete.

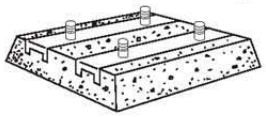

Motors and other components mounted on motor plates or motor brackets may become misaligned during shipment. ALWAYS check alignment after installation. Refer to Page 3 for coupling alignment instructions.

MOTOR BRACKETS — The weight, location and starting torque of the motor will cause some brackets to deflect downward and to twist. This movement is within allowable engineered limits for motor-drive selections from the Falk™ selection guide. If the customer considers the movement excessive, jackscrew supports for the bracket extension are available from Rexnord. To compensate for deflection caused by heavy motors AND to get CORRECT COUPLING ALIGNMENT, use more shims under the rear motor feet than the front feet.

GEAR DRIVE ALIGNMENT — Align drive with driven equipment by placing broad, flat shims under all mounting pads. Start at the low speed shaft end and level across the length and then the width of the drive. Check with a feeler gauge to make certain that all pads are supported to prevent distortion of housing when drive is bolted down. After drive is aligned with driven equipment and bolted down, align prime mover to drive input shaft. Refer to Page 3 for coupling alignment.

If equipment is received from Rexnord mounted on a bedplate, the components were accurately aligned at Rexnord with the bedplate mounted on a large, flat assembly plate. Shim under the bedplate foot pads until the gear drive is level and all feet are in the same plane.

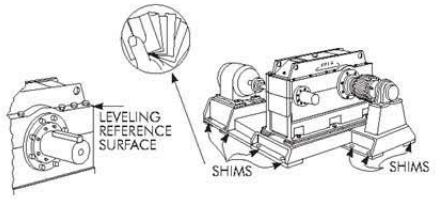

Check high speed shaft coupling alignment. If the coupling is misaligned, the bedplate is shimmed incorrectly. Re-shim bedplate and recheck high speed coupling alignment. If necessary, realign motor.

Shaft Connections

WARNING: Provide suitable guards in accordance with OSHA standards.

COUPLING CONNECTIONS — The performance and life of any coupling depends largely upon how well the coupling is installed and serviced. Refer to the coupling manufacturer's manual for specific instructions.

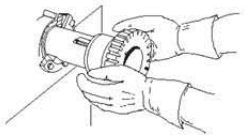

CORRECT METHOD

Heat interference fitted coupling hubs, pinions, sprockets or pulleys to a maximum of 275°F (135°C) and slide onto gear drive shaft.

— CAUTION —
DO NOT HAMMER

INCORRECT METHOD

DO NOT drive coupling hub, pinion, sprocket or pulley onto the shaft. An endwise blow on the shaft/coupling may damage gears and bearings.

FALK COUPLINGS™ — (Except fluid type) Detailed installation manuals are available from the Factory, your local Rexnord Account Executive or Distributor—just provide size and type designations stamped on the coupling. For lubricant requirements and a list of typical lubricants meeting Rexnord specifications, refer to appropriate coupling service manual.

Flanged Type Rigid Couplings are typically used on drives with vertical output shafts. The low speed shaft extension ends of the solid vertical shaft drives are drilled and tapped to accommodate coupling keeper plates. Tightening torques for fasteners, including keeper plate fasteners are listed in Table 1, Page 3.

148-050
November 2006
Supersedes 4-99

Rexnord Industries, LLC, Gear Group
3001 W. Canal St., Milwaukee, WI 53208-4200 USA Telephone: 414-342-3131
Fax: 414-937-4359 e-mail: info@rexnord.com web: www.rexnord.com

REXNORD

Falk™ Enclosed Gear Drives • Installation & Maintenance Instructions

Types GHB, Y, YB, & YBX • Sizes 1080-1195 & 2050-2235 (Page 3 of 8)

FALK™ FLUID COUPLINGS — Refer to the installation manual furnished with the fluid coupling for installation, alignment and startup instructions.

GAP AND ANGULAR ALIGNMENT — If possible, after mounting coupling hubs, position the driving and driven equipment so that the distance between shaft ends is equal to the coupling gap. Align the shafts by placing a spacer block, equal in thickness to required gap, between hub faces, as shown above, and also at 90° intervals around the hub. Check with feelers.

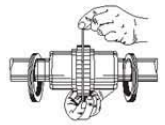

STEELFLEX® ILLUSTRATED

OFFSET ALIGNMENT — Align driving and driven shafts so that a straight edge will rest squarely on both couplings hubs as shown to the right and also at 90° intervals. Tighten foundation bolts of the connected equipment and recheck alignment and gap.

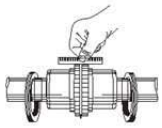

STEELFLEX ILLUSTRATED

SPROCKETS, PULLEYS OR SHEAVES — Mount power take-offs as close to the gear drive housing as possible to avoid undue bearing load and shaft deflection.

Align the output shaft of the gear drive square and parallel with the driven shaft by placing a straightedge across the face of the sprockets or sheaves as illustrated. Check horizontal shaft alignment by placing one leg of a square against the face of the sheave or sprocket with the spirit level on the horizontal leg of the square.

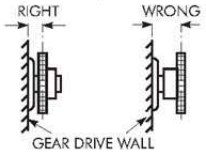

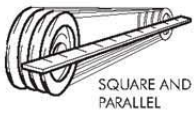

SQUARE AND PARALLEL

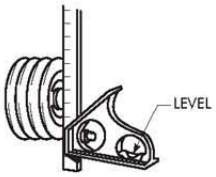

DO NOT over tighten belts or chains. Adjust chains to manufacturers' specifications. Adjust belts as follows:

The ideal tension is the lowest tension at which the belt will not slip under peak load conditions. Check the belt tension frequently during the first 24 to 48 hours of run-in operation. Over tightening belts shortens belt and bearing life. Keep belts free from foreign material which may cause slippage. Inspect the V–belt periodically; tighten the belts if they are slipping.

OUTBOARD BEARING — Mount the outboard bearing and gear drive on a common foundation so that they will shift as an assembly if settling should occur. Bring the outboard bearing to the correct horizontal position with broad flat shims under the mounting pad. Align accurately so that the load is equally divided between the two drive bearings and the outboard bearing. Mount a stop bar against the pillow block foot on the load side when large horizontal load components are exerted on the pillow block.

PINION MOUNTING — Mount pinion as close to the unit as possible to avoid undue bearing load and shaft deflection. Refer to the Factory for pinion alignment instructions.

BACKSTOPS — To prevent damage to backstops due to incorrect motor shaft rotation at start up, couplings are NOT assembled when gear drives are furnished with backstops. After completing the electrical connection, check motor and gear drive shaft rotations. Then complete alignment and assembly of coupling.

Fastener Tightening Torques

Use the tightening torque values specified in Table 1, for fastening Falk™ gear drives, motors, keeper plates and accessories to their mounting surfaces with non-lubricated fasteners. DO NOT use these values for "torque locking" fasteners or for fastening components with aluminum feet or with soft gaskets or vibration dampers on the mounting surface. If the tightening torque exceeds the capacity of the torque wrench, use a torque multiplier. Use Grade 5 fasteners for diameters through 1.50", for larger diameter fasteners, use ASTM A-354 Grade BC.

TABLE 1 — Tightening Torques – lb-in

DO NOT LUBRICATE FASTENERS

Thread Dia-UNC	Metal to Metal	Metal to Concrete	Thread Dia-UNC	Metal to Metal	Metal to Concrete
.250-20	90	70	1.250-7	12600	10000
.3125-18	185	145	1.375-6	16500	13000
.375-16	330	255	1.500-6	22100	17500
.500-13	825	640	1.750-5	23700	18700
.625-11	1640	1280	2.000-4.5	37000	29000
.750-10	2940	2290	2.250-4.5	52000	41000
.875-9	4560	3750	2.500-4	72000	56000
1.000-8	6800	5600	2.750-4	98000	77000
1.125-7	8900	7000	3.000-4	125000	99000

Water Cooling

WATER COOLED HEAT EXCHANGERS — Install a shut-off or control valve in the water line to the heat exchanger to regulate the water flow through the exchanger. Also install a water flow gauge between the control valve and the exchanger to determine actual flow rate. Discharge water to an OPEN DRAIN to prevent back pressure.

Lubrication Recommendations

Carefully follow lubrication instructions on the gear drive nameplate, warning tags and installation manuals furnished with the gear drive.

Lubricants listed in this manual are typical ONLY and should not be construed as exclusive recommendations. Industrial type petroleum based rust and oxidation inhibited (R & O) gear lubricants or industrial type sulfur-phosphorus extreme pressure (EP) gear lubricants are the recommended lubricants for ambient temperatures of 15°F to 125°F(-9°C to +52°C).

For drives operating outside the above temperature range refer to "Synthetic Lubricants" paragraphs, Page 4. Synthetic lubricants can also be used in normal climates.

Rexnord Industries, LLC, Gear Group
3001 W. Canal St., Milwaukee, WI 53208-4200 USA Telephone: 414-342-3131
Fax: 414-937-4359 e-mail: info@rexnord.com web: www.rexnord.com

148-050
November 2006
Supersedes 4-99

Installation & Maintenance Instructions • Falk™ Enclosed Gear Drives

REXNORD

(Page 4 of 8) Sizes 1080-1195 & 2050-2235 • Types GHB, Y, YB, & YBX

VISCOSITY (IMPORTANT) — The proper grade for R & O and EP lubricants is found in Table 2. For cold climate conditions refer to Table 4, Page 5 and the "Synthetic Lubricant" paragraphs. Select a lubricant which has a pour point at least 10°F (5.5°C) below the expected minimum ambient starting temperature. Usable temperature ranges can sometimes be widened if specific application conditions are known.

If a gear drive operates in a typical indoor environment where the ambient temperature is within 70°F to 125°F (21°C to 52°C), the oil viscosity should be increased one AGMA grade above that shown for the 50°F to 125°F(10°C to 52°C) range. That is, an AGMA Number 6 or 7 should be substituted for a 5 or 6 respectively, under this ambient condition.

TABLE 2 — Viscosity Grade Recommendations for R & O or EP Lubricants

Output RPM	Normal Climates			
	15° to 60°F (-9° to +16°C)		50° to 125°F (10° to 52°C)	
	ISO-VG	AGMA	ISO-VG	AGMA
Output RPM Below 80	150	4	320	6
Output RPM 80 & Above	150	4	220	5

OIL PUMPS — When selecting a lubricant for a gear drive equipped with an oil pump, cold temperature oil viscosity is important. Lubricant viscosity at start-up generally should not exceed 1725 cSt (8,000 SSU). When exceeding this viscosity, pump cavitation is possible, preventing oil circulation. A sump heater may be required or it may be possible to use a lower viscosity oil to minimize pump cavitation, consult the Factory.

Petroleum Based Lubricants

R & O GEAR LUBRICANTS (Table 5) — Industrial type petroleum based rust and oxidation inhibited (R & O) gear lubricants are the most common and readily available general purpose gear lubricants.

EXTREME PRESSURE (EP) LUBRICANTS (Table 3) — For highly loaded gear drives or drives loaded in excess of original estimates, industrial type petroleum extreme pressure lubricants are preferred. The EP lubricants currently recommended are of the sulphur-phosphorus type.

WARNING: EP LUBRICANTS IN FOOD PROCESSING INDUSTRY — EP lubricants may contain toxic substances and should not be used in the food processing industry without the lubricant manufacturers' approval. Lubricants which meet USDA "H1" classification are suitable for food processing applications.

CAUTION: EP LUBRICANTS & INTERNAL BACKSTOPS — Do not use EP lubricants or lubricants with anti-wear additives or lubricant formulations including sulfur, phosphorus, chlorine, lead derivatives, graphite or molybdenum disulfides in units equipped with internal cartridge type backstops. Some lubricants in Table 5 may contain anti-wear additives. Lubricants in Table 3 do contain several of these additives.

Synthetic Lubricants

Synthetic lubricants of the polyalphaolefin type are recommended for cold climate operation, high temperature applications, extended temperature range (all season) operation and/or extended lubricant change intervals. The proper viscosity grade of synthetic lubricant is given in Table 4.

WARNING: SYNTHETIC LUBRICANTS IN FOOD PROCESSING INDUSTRY — Synthetic lubricants may contain toxic substances and should not be used in the food processing industry without the lubricant manufacturers' approval. Lubricants which meet USDA "H1" classification are suitable for food processing applications.

CAUTION: SYNTHETIC LUBRICANTS & INTERNAL BACKSTOPS — Synthetic lubricants may be used in gear drives with internal backstops operating only in cold temperatures -30° to +50°F (-34° to +10°C). Mobil SHC 624 and SHC 626 provide proper backstop action under these conditions. Other synthetic lubricants may also be acceptable. DO NOT use synthetic lubricants in units with backstops operating in ambient temperatures above 50°F (10°C).

Oil Levels

Prior to filling gear drives, remove the inspection cover and flood the oil troughs with a generous flow of oil to the bearings. Fill the drive with oil to the level indicated on the oil dipstick. Approximate oil capacities are given on the drive nameplate.

Lubricant Changes

OIL ANALYSIS REPORT— Checking oil condition at regular intervals is recommended. In the absence of more specific limits, the guidelines listed below may be used to indicate when to change oil:

1. Water content is greater than 0.05% (500 ppm).
2. Iron content exceeds 150 ppm.
3. Silicon (dust/dirt) exceeds 25 ppm.
4. Viscosity changes more than 15%.

PETROLEUM LUBRICANTS — For normal operating conditions, change gear oils every 6 months or 2500 operating hours, whichever occurs first. If the drive is operated in an area where temperatures vary with the seasons, change the oil viscosity grade to suit the temperature, refer to Table 2. Lubricant suppliers can test oil from the drive periodically and recommend economical change schedules.

SYNTHETIC LUBRICANTS — Synthetic lube change intervals can be extended to 8000-10,000 hours depending upon operating temperatures and lubricant contamination. Laboratory analysis is recommended for optimum lubricant life and gear drive performance. Change lube with change in ambient temperature, if required. Refer to Table 4.

148-050
November 2006
Supersedes 4-99

Rexnord Industries, LLC, Gear Group
3001 W. Canal St., Milwaukee, WI 53208-4200 USA Telephone: 414-342-3131
Fax: 414-937-4359 e-mail: info@rexnord.com web: www.rexnord.com

REXNORD

Falk™ Enclosed Gear Drives • Installation & Maintenance Instructions

Types GHB, Y, YB, & YBX • Sizes 1080-1195 & 2050-2235 (Page 5 of 8)

TABLE 3 — Extreme Pressure Lubricants

Maximum Operating Temperature 200°F (93°C)

Manufacturer	Lubricant
Amoco Oil Co. BP Oil Co. Chevron U.S.A. Inc. Citgo Petroleum Corp.	Permagear/Amogear EP Energear EP Gear Compounds EP Citgo EP Compound
Conoco Inc. Exxon Co. U.S.A. E.F. Houghton & Co. Imperial Oil Ltd.	Gear Oil Spartan EP MP Gear Oil Spartan EP
Kendall Refining Co. Keystone Div., Pennwalt Corp. Lyondell Petrochemical (ARCO) Mobil Oil Corp.	Kendall NS-MP Keygear Pennant NL Mobilgear
Petro-Canada Products Phillips 66 Co. Shell Oil Co. Shell Canada Limited	Ultima EP Philgear Omala Oil Omala Oil
Sun Oil Co. Texaco Lubricants Unocal 76 (East & West) Valvoline Oil Co.	Sunep Meropa Extra Duty NL Gear Lube AGMA EP

TABLE 4 — Polyalphaolefin Type Synthetic Lubricants †

AGMA Viscosity Grade		...	2	4	5	6
ISO Viscosity Grade		32	68	150	220	320
Viscosity	cSt @ 40°C	28.8–35.2	61.2–74.8	135–165	198–242	288–352
	SSU @ 100°F	135–164	284–347	626–765	918–1122	1335–1632
Ambient Temperature Range° F ‡		– 30 to +10	– 15 to + 50	0 to + 80	+10 to +125	+ 20 to +125
Manufacturer		Lubricant				
Chevron U.S.A., Inc.		...	...	...	Syn. Gear Lube Tegra 220 •	...
Conoco, Inc.		Syncon 32	Syncon 68	...	...	...
CPI Engineering Services, Inc.		CP–4620–32	CP–4620–68	CP–4620–150	CP–4620–220	...
		CP–4630–32 •	CP–4630–68 •	CP–4630–150 •	CP–4630–220 •	...
Exxon Co. U.S.A.		...	...	Spartan Synthetic EP 150 •	Spartan Synthetic EP 220 •	Spartan Synthetic EP 320 •
Mobil Oil Corp.		SHC 624	SHC 626	SHC 629	SHC 630	SHC 632
		...	...	Mobilgear SHC 150	Mobilgear SHC 220 •	Mobilgear SHC 320 •

† Minimum viscosity index of 130 (consult lubricant supplier/manufacturer for maximum operating temperature). Viscosity grade selections are not applicable to semi-high speed and high speed drives.
‡ With complete application information, temperature range can sometimes be extended, consult Factory.
• Extreme pressure EP lubricants (contains sulphur phosphorus).

TABLE 5 — Petroleum Based R & O Gear Oils (Maximum operating temperature of lubricants 200°F (93°C)

AGMA Viscosity Grade		1	2	3	4	5	6	7
ISO Viscosity Grade		46	68	100	150	220	320	460
Viscosity	cSt @ 40°C	41.4-50.6	61.2-74.8	90-110	135-165	198-242	288-352	414-506
	SSU @ 100°F	193-235	284-347	417-510	626-765	918-1122	1335-1632	1919-2346
Manufacturer		Lubricant	Lubricant	Lubricant	Lubricant	Lubricant	Lubricant	Lubricant
Amoco Oil Co. BP Oil Co. Chevron U.S.A., Inc. Citgo Petroleum Corp.		Amer. Ind. Oil 46 Turbinol T-46 Hydraulic Oil AW 46 Citgo Pacemaker 46	Amer. Ind. Oil 68 Turbinol T-68 Hydraulic Oil AW 68 Citgo Pacemaker 68	Amer. Ind. Oil 100 Turbinol T-100 Machine Oil AW 100 Citgo Pacemaker 100	Amer. Ind. Oil 150 .... Machine Oil AW 150 Citgo Pacemaker 150	Amer. Ind. Oil 220 Energol HLP-HD 220 Machine Oil AW 220 Citgo Pacemaker 220	Amer. Ind. Oil 320 .... Machine Oil AW 320 Citgo Pacemaker 320	Amer. Ind. Oil 460 .... Citgo Pacemaker 460
Conoco Inc. Exxon Co., U.S.A. Houghton International Inc. Imperial Oil Ltd.		Dectol R & O Oil 46 Teresstic 46 Hydro-Drive HP-200 Teresso 46	Dectol R & O Oil 68 Teresstic 68 Hydro-Drive HP-300 Teresso 68	Dectol R & O Oil 100 Teresstic 100 Hydro-Drive HP-500 Teresso 100	Dectol R & O Oil 150 Teresstic 150 Hydro-Drive HP-750 Teresso 150	Dectol R & O Oil 220 Teresstic 220 Hydro-Drive HP-1000 Teresso 220	Dectol R & O Oil 320 Teresstic 320 .... Teresso 320	Dectol R & O Oil 460 Teresstic 460 ....
Kendall Refining Co. Keystone Lubricants Lyondell Petrochemical (ARCO) Mobil Oil Corp.		Kenoil R & O AW 46 KLC-15 Duro 46 DTE Oil Medium	Kenoil R & O AW 68 KLC-20 Duro 68 DTE Oil Heavy Medium	Kenoil R & O AW 100 KLC-30 Duro 100 DTE Oil Heavy	Four Seasons AW 150 KLC-40 Duro 150 DTE Oil Extra Heavy	.... KLC-50 Duro 220 DTE Oil BB	.... Duro 320 DTE Oil AA	.... DTE Oil HH
Petro-Canada Prod. Phillips 66 Co. Shell Oil Co. Shell Canada Ltd.		Harmony 46 Magnus Oil 46 Turbo T46 Tellus 46	Harmony 68 Magnus Oil 68 Turbo T68 Tellus 68	Harmony 100 Magnus Oil 100 Morlina 100 Tellus 100	Harmony 150 or1500 Magnus Oil 150 Morlina 150 Tellus 150	Harmony 220 Magnus Oil 220 Morlina 220 Tellus 220	Harmony 320 Magnus Oil 320 Morlina 320 Tellus 320	.... Morlina 460 ....
Texaco Lubricants Unocal 76 (East) Unocal 76 (West) Valvoline Oil Co.		Regal Oil R & O 46 Unax RX 46 Turbine Oil 46 Valvoline AW ISO 46	Regal Oil R & O 68 Unax RX 68 Turbine Oil 68 Valvoline AW ISO 68	Regal Oil R & O 100 Unax RX 100 Turbine Oil 100 Valvoline AW ISO 100	Regal Oil R & O 150 Unax RX 150 Turbine Oil 150 Valvoline AW ISO 150	Regal Oil R & O 220 Unax RX 220 Turbine Oil 220 Valvoline AW ISO 220	Regal Oil R & O 320 Unax AW 320 Turbine Oil 320 Valvoline AW ISO 320	Regal Oil R & O 460 Turbine Oil 460 Turbine Oil 460 ....

Rexnord Industries, LLC, Gear Group
3001 W. Canal St., Milwaukee, WI 53208-4200 USA Telephone: 414-342-3131
Fax: 414-937-4359 e-mail: info@rexnord.com web: www.rexnord.com

148-050
November 2006
Supersedes 4-99

Installation & Maintenance Instructions • Falk™ Enclosed Gear Drives

REXNORD

(Page 6 of 8) Sizes 1080-1195 & 2050-2235 • Types GHB, Y, YB, & YBX

TABLE 6 — Greases for Grease Lubricated Bearings & Grease Purged Seals
(0° to 200°F (–18° to +93°C)

Manufacturer	Lubricant
Amoco Oil Co. BP Oil Co. Chevron U.S.A., Inc. Citgo Petroleum Corp.	Amolith Grease No. 2 Energrease LS-EP2 Industrial Grease Medium Premium Lithium Grease No. 2
Conoco Inc. Exxon Company, U.S.A. E.F. Houghton & Co. Imperial Oil Ltd.	EP Conolith Grease No. 2 Unirex N2 Cosmolube 2 Unirex N2L
Kendall Refining Co. Keystone Div., Penwalt Corp. Lyondell Petrochemical (ARCO) Mobil Oil Corp.	Multi-Purpose Lithium Grease L421 Zeniplex 2 Litholine H EP 2 Grease Mobilith 22
Mobil Oil Corp. Petro-Canada Products Phillips 66 Co. Shell Oil Co.	Mobilith SHC 460 H Multipurpose EP2 Philube Blue EP Alvania Grease 2
Shell Canada Limited Sun Oil Co. Texaco Lubricants	Alvania Grease 2 Ultra Prestige EP2 Premium RB Grease
Unocal 76 (East & West) Valvoline Oil Co.	Unoba EP2 Multilube Lithium EP Grease

★ High performance synthetic alternate.

Lubrication Systems

SPLASH LUBRICATED UNITS — Standard Type GHB, Y, YB & YBX drives are splash lubricated. The lubricant is picked up by the revolving elements and distributed to all bearings and gear meshes.

OIL PUMPS — Occasionally gear drives are equipped with oil pumps, either for special lubrication considerations or for external cooling. When so equipped, run the lubrication system for several minutes to fill the system components. Verify that the pump is circulating oil properly then recheck the oil level.

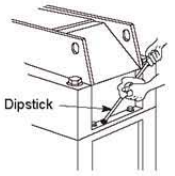

Before starting the gear drive, rotate the input shaft by hand to check for any obstruction. Then start the drive and allow it to run without a load for several minutes. Shut down and recheck oil level. Add oil to compensate for cooler, filter, etc., oil capacities. If everything is satisfactory, the drive is ready for operation.

CAUTION: *Consult the Factory for drives that use pumps to distribute lubricants with temperatures below 30°F(-1°C).*

Bearing & Seal Greases

Some gear drives have one or more grease lubricated bearings and grease purged seals. Whenever changing oil in the drive, grease the bearings and purge the seals with one of the NLGI #2 greases listed in Table 6.

Some of these greases are of the EP type and may contain toxic substances not allowed in the food processing industry. A grease that meets the USDA "H1" classification is suitable for food processing applications.

GREASE LUBRICATED BEARINGS — Remove pressure relief plug when greasing bearing on vertical hollow shaft drives. Pump grease into bearing cage until it appears at the plug. Replace pressure relief plug.

GREASE LUBRICATED SEALS — Most gear drives and backstops are furnished with grease purged seals which minimize the entry of contaminants and abrasive dusts into the drive or backstop. Gear drives and backstops are shipped with NLGI #2 grease in the seal housing cavities unless otherwise specified. If grease could contaminate the product, as in the food and drug industries, it should be removed. A grease that meets USDA "H1" classification is suitable for food processing applications.

Periodically (at least every six months) depending upon the frequency and degree of contamination, purge contaminated grease from seals by slowly pumping fresh bearing grease thru the seal, **WITH A HAND GREASE GUN**, until fresh grease flows out along the shaft. Wipe off purged grease.

CAUTION: *Rapid regreasing with a power grease gun can force grease inward past the seals and plug the oil drain back system causing seal leaks.*

BACKSTOP EQUIPPED DRIVES — Type "Y", gear drives, use a self contained, pawl type, backstop externally mounted on an intermediate shaft. The backstop is furnished filled with grease suitable for operation in an ambient temperature range of -20°F to +125°F(-29°C to +52°C). Relubricate the backstop every 3 months (2 weeks in severe operating condition). To relubricate, select and clean one grease fitting and pump grease into the backstop until fresh grease appears at both seals. Refer to the backstop manufacturer's service manual (supplied with the drive) for detailed maintenance instructions and recommended greases. DO NOT use greases with molybdenum disulfide or other EP additives.

TYPICAL SEAL ASSEMBLIES

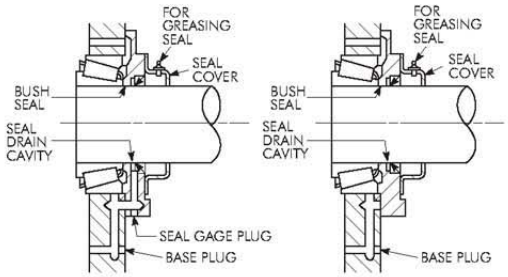

148-050
November 2006
Supersedes 4-99

Rexnord Industries, LLC, Gear Group
3001 W. Canal St., Milwaukee, WI 53208-4200 USA Telephone: 414-342-3131
Fax: 414-937-4359 e-mail: info@rexnord.com web: www.rexnord.com

REXNORD

Falk™ Enclosed Gear Drives • Installation & Maintenance Instructions

Types GHB, Y, YB, & YBX • Sizes 1080-1195 & 2050-2235 (Page 7 of 8)

TABLE 7 — Viscosity Recommendations ★

Drive Description	Classification Symbol (Drive Type)	Drive Size	Synthetic Lubricants – Cold Climates –30° to +10°F (–34° to –12°C) ISO-VG	AGMA	Synthetic Lubricants – Cold Climates –15° to +50°F (–26° to +10°C) ISO-VG	AGMA	R & O Petroleum Oils – Normal Climates 15° to 60°F (–9° to +16°C) ISO-VG	AGMA	R & O Petroleum Oils – Normal Climates 50° to 125°F (10° to 52°C) ISO-VG	AGMA
Parallel Shaft and Horizontal Right Angle • Roller Bearings Fabricated Steel Housings	Y1	50-135, 2050-2135	32	...	68	2	100	3	220	5
	YF1	1080-1135	32	...	68	2	100	3	220	5
	Y1	140-195, 2140-2165	32	...	68	2	150	4	220	5
	YF1	1140-1195	32	...	68	2	150	4	220	5
	Y2 & Y8Z	50-195	32	...	68	2	150	4	220	5
	Y2 & Y8Z	2050-2245	32	...	68	2	150	4	220	5
	Y3, Y83 & 4	50-135, 2050-2135	32	...	68	2	150	4	220	5
	Y3, Y83 & 4	140-195, 2140-2245	32	...	68	2	220	5	320	6
Vertical Right Angle • Fabricated Steel Housings	Y8X2	50-135, 2070-2135	32	...	68	2	100	3	220	5
	Y8X3	50-135, 2070-2135	32	...	68	2	150	4	220	5
	Y8X2	140-195, 2140-2195	32	...	68	2	150	4	220	5
	Y8X3	140-195, 2140-2195	32	...	68	2	220	5	320	6
Parallel Shaft • Sleeve and Roller Bearings Cast Iron Housings	GHC, GHF	5	32	...	68	2	100	3	220	5
	GDA, GDF	6-9	32	...	68	2	150	4	220	5
	GRA, GRF	10-13	32	...	68	2	150	4	220	5
Right Angle • Horizontal and Vertical Cast Iron Housings	2000 GHB1	2050-2120	32	...	68	2	100	3	220	5
	GHB	3-5	32	...	68	2	100	3	220	5
	GDB	6-9	32	...	68	2	150	4	220	5
	GRB	10-12	32	...	68	2	150	4	220	5
	GBX	4, 5	32	...	68	2	100	3	220	5
	GBX, GRX	6-12	32	...	68	2	150	4	220	5
Parallel Shaft Semi-High Speed ‡ • Sleeve, Roller and Ball Bearings	YHF1	1080-1135	32	...	68	2	100	3	220	5
	YH1	2050-2125	32	...	68	2	150	3	220	5
	YH2	2050-2175	32	...	68	2	150	4	220	5
	GHCH	5	32	...	68	2	68	2	100	3
	GHCH	6-13	32	...	68	2	100	3	150	4
Parallel Shaft High Speed ‡ • Sleeve Bearings	YQA, YPA	All Sizes	32	...	68	2	46†	1†	68	2

★ Consult Factory for viscosity recommendations when ambient temperatures are higher than 125°F(52°C), or when drives are operating in extremely humid, chemical, or dust laden atmospheres.

† Lubricant inlet temperature to gear drive must not exceed 100°F(38°C) when using an AGMA No. 1 oil (193 to 235 SSU at 104°F; 41.5-50.6 cSt at 40°C) in a pressure lubrication system.

‡ Consult Factory before substituting higher viscosity grades from those indicated in Table 7 above.

Rexnord Industries, LLC, Gear Group
3001 W. Canal St., Milwaukee, WI 53208-4200 USA Telephone: 414-342-3131
Fax: 414-937-4359 e-mail: info@rexnord.com web: www.rexnord.com

148-050
November 2006
Supersedes 4-99

Installation & Maintenance Instructions • Falk™ Enclosed Gear Drives

REXNORD

(Page 8 of 8) Sizes 1080-1195 & 2050-2235 • Types GHB, Y, YB, & YBX

Preventive Maintenance

AFTER FIRST WEEK — Check alignment of the total system and realign where necessary. Also, tighten all external bolts and plugs where necessary. DO NOT readjust the internal gear or bearing settings in the drive, these were permanently set at the Factory.

OIL FILTER SERVICE — Record oil pressure at oil filter indicating gauge with drive at operating temperature, with fresh oil. Replace oil filter when oil pressure INCREASE reaches 10 psi with drive at operating temperature. Replacement filter elements (Falk™ Part No. 2906540, Gresen K-22002 or equivalent 30 micron) are available from the Factory.

AFTER FIRST MONTH'S SERVICE — Proceed as follows:

1. Operate drive until old sump oil reaches normal operating temperature. Shut the drive down and drain immediately.
2. Immediately flush drive with an oil of the same type and viscosity grade as the original charge (warmed to approximately 100°F (38°C) in cold weather). Rapidly pour or pump a charge equal to 25-100% of the initial fill volume through the drive or until clean oil flows through the drain.
3. Close the drain and refill the drive to the correct level with new or reclaimed oil of the correct type and viscosity. If determined to be in good condition by the supplier, reclaimed oil may be reused if it is filtered through a 40 micron or finer filter.

PERIODICALLY — Carefully check the oil level of the drive when it is stopped and at ambient temperature, add oil if needed. If the oil level is ABOVE the high level mark on the dipstick, have the oil analyzed for water content. Moisture in the oil may indicate that the heat exchanger or a seal is leaking. If so, replace the defective part immediately and change the oil. DO NOT fill above mark indicated as leakage or undue heating may result. Also check coupling alignment to make certain that foundation settling has not caused excessive misalignment. If drive is equipped with a fan, periodically clean accumulated foreign matter from the fan, fan guard and deflector to allow adequate air flow.

LUBRICANT CHANGES — Refer to Page 4.

BEARING & SEAL GREASES — Refer to Page 6.

Stored & Inactive Gear Drives

Each gear drive is protected with rust preventive that will protect parts against rust for a period of 4 months in an outdoor shelter or 12 months in a dry building after shipment from the Factory.

If a gear drive is to be stored, or is inactive after installation beyond the above periods, drain oil from housing and spray all internal parts with a rust preventive oil that is soluble in lubricating oil or add "Motorstor" ™vapor phase rust inhibitor at the rate of one ounce per cubic foot of internal drive space (or 5% of sump capacity) and rotate the shafts several times by hand. Before operating, drives which have been stored or inactive must be filled to the proper level with oil meeting the specifications given in this manual. Refer to Manual 128-014 for "Start-up after Storage" instructions.

Periodically inspect stored or inactive gear drives and spray or add rust inhibitor every six months, or more often if necessary. Indoor dry storage is recommended.

Gear drives ordered for extended storage can be treated at the Factory with a special preservative and sealed to rust-proof parts for periods longer than those cited previously.

The vent cap and vented dipstick should be replaced with a plug (vented dipstick and vent cap assembly should be attached to gear drive for future use) so that the protective rust inhibiting atmosphere is sealed inside the drive. Install vent cap and vented dipstick when preparing drive for operation.

Motorstor ™/VCI–10 (Add to Stored or Inactive Units)

Drive Type	Drive Size	Motorstor™ Ounces Per Drive
All Types and 2000 GHB	1080-1090, 2050-2090	2
	1100-1135, 2100-2135	6
	1140-1145, 2140-2145	10
	1150-1165, 2150-2165	20
	1170-1195, 2170-2195	45
	2200-2235	130

Product of Daubert Chemical Company, Chicago, IL .

148-050
November 2006
Supersedes 4-99

Rexnord Industries, LLC, Gear Group
3001 W. Canal St., Milwaukee, WI 53208-4200 USA Telephone: 414-342-3131
Fax: 414-937-4359 e-mail: info@rexnord.com web: www.rexnord.com

11.7.3 AUXILIARY – SUMITOMO GEARMOTOR

GENERAL CONSTRUCTION

Fig. B-1 Single Reduction (Horizontal Foot Mount)

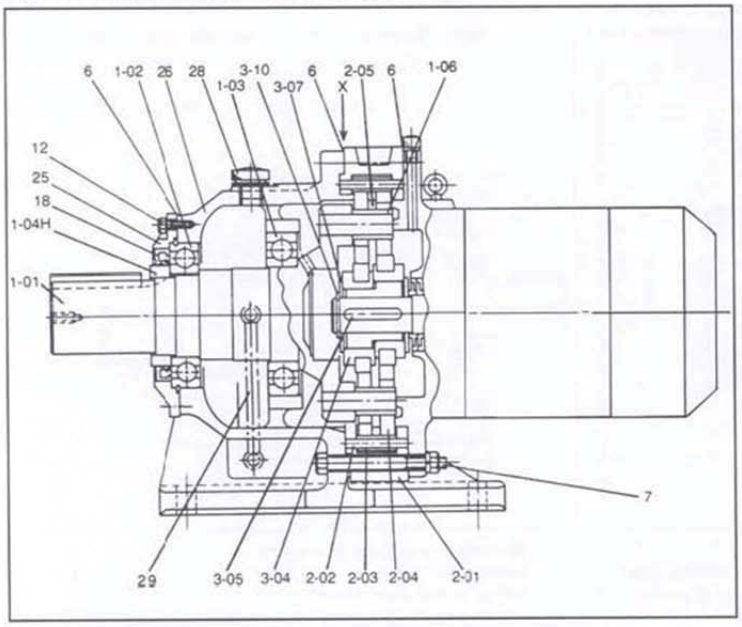

Fig. B-2 Single Reduction (Vertical Base Mount)

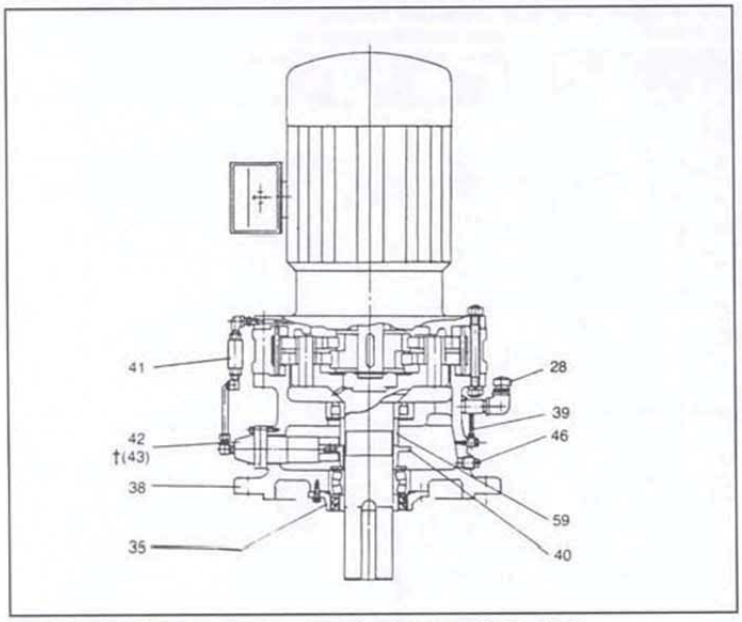

Note: For details of oil seals, bearings or gaskets, refer to pages B-10 and B-11.
†Refer to Table B-13 on Pg. B-9 for units that require a positive displacement pump.

Table B-1 Main Parts

Part No.	Part Name
1-01	Slow Speed Shaft w/pins
1-02	Bearing A
1-03	Bearing B
1-04H	Oil Seal Collar—Horizontal
1-06	Slow Speed Shaft Rollers
2-01	Ring Gear Housing
2-02	Ring Gear Pins
2-03	Ring Gear Rollers
2-04	Cyclo Disc
2-05	Spacer Ring
3-04	Eccentric Bearing Assembly
3-05	Eccentric Key
**3-06	Balance Weight
3-07	Spacer
3-10	Retaining Ring
‡5-01	Intermediate Shaft w/Pins
‡5-02	Bearing F
‡5-03	Bearing G
‡5-04	Eccentric Bearing Assembly
6	Gasket Set
7	Casing Nuts & Bolts
12	Bolts For SS Oil Seal Housing
‡15	Grease Nipple
18	Slow Speed Output Oil Seal
25	Horizontal Oil Seal Housing
26	Horizontal Case
28	Oil Fill Plug
29	Oil Gauge—Horizontal Unit
35	Vertical Oil Seal Housing
38	Vertical Case (Integral V Type)
39	Oil Gauge—Vertical Unit
40	Cam
41	Piping Set & Oil Signal
42	Plunger Pump
†43	Positive Displacement Pump
46	Drain Plug
‡55	Intermediate Cover
‡57	Eye Bolt
*59	Spacer

* Pt. No. 59 — frame sizes 6205-6275 only.
** See Fig. B-3, Page B-4.
‡ See Fig. B-4, Page B-4.

B-3

GENERAL CONSTRUCTION

Fig. B-3 Gearmotor/Single Disc Type (Frame Size 6060-6095)

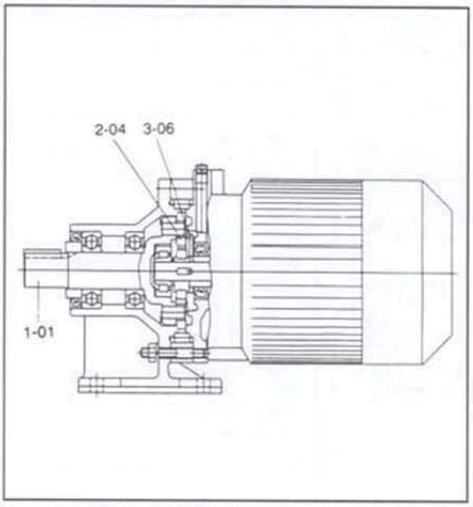

Fig. B-4 Gearmotor/Double Reduction

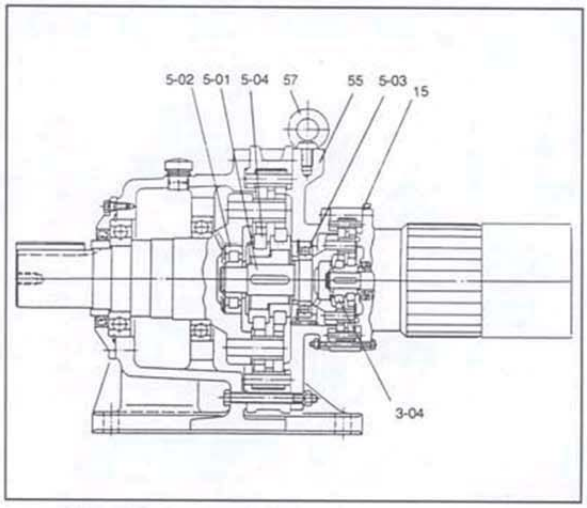

Speed Reducer — Single Disc
SM-CYCLO single reduction, Models No. 6060-6095 employ the use of a single planetary gear (Cycloid Disc) and a balance weight.

Multiple Reduction Reducers
Multiple reduction SM-CYCLO Reducers are a combination of standard reduction mechanism assemblies connected using an intermediate shaft (Part No. 5-01) and intermediate cover (Part No. 55) between them.

Table B-2. Frame Sizes and Ratio Combination of Double Reduction Models

Frame Size Combination

Frame Size	Second Stage	First Stage
6060DA	6060	6060
6065DA	6065	6065
6070DA	6070	6065
6075DA	6075	6065
6090DA	6090	6075
6095DA	6095	6075
6100DA	6100	6075
6105DA	6105	6075
6120DA	6120	6075
6120DB	6120	6095
6125DA	6125	6075
6125DB	6125	6095
6130DA	6130	6075
6130DB	6130	6095
6130DC	6130	6105
6135DA	6135	6075
6135DB	6135	6095
6135DC	6135	6105
6140DA	6140	6075
6140DB	6140	6095
6140DC	6140	6105
6145DA	6145	6075
6145DB	6145	6095
6145DC	6145	6105
6160DA	6160	6095
6160DB	6160	6105
6160DC	6160	6125
6165DA	6165	6095
6165DB	6165	6105

Frame Size	Second Stage	First Stage
6165DC	6165	6125
6170DA	6170	6095
6170DB	6170	6105
6170DC	6170	6125
6175DA	6175	6095
6175DB	6175	6105
6175DC	6175	6125
6180DA	6180	6105
6180DB	6180	6135
6185DA	6185	6105
6185DB	6185	6135
6190DA	6190	6125
6190DB	6190	6135
6195DA	6195	6125
6195DB	6195	6135
6205DA	6205	6125
6205DB	6205	6135
6215DA	6215	6135
6215DB	6215	6165
6225DA	6225	6135
6225DB	6225	6175
6235DA	6235	6165
6235DB	6235	6185
6245DA	6245	6165
6245DB	6245	6185
6255DA	6255	6175
6255DB	6255	6195
6265DA	6265	6195
6275DA	6275	6195

Reduction Ratio Combination

Total Ratio	Second Stage Ratio	First Stage Ratio
104	13	8
121	11	11
143	13	11
165	15	11
195	15	13
231	21	11
273	21	13
319	29	11
377	29	13
473	43	11
559	43	13
649	59	11
731	43	17
841	29	29
1003	59	17
1247	43	29
1479	87	17
1849	43	43
2065	59	35
2537	59	43
3045	87	35
3481	59	59
4437	87	51
5133[1]	87	59
6177	87	71
7569	87	87

Note: [1] For frame sizes 6205DA, DB or DC ~ 6265DA, DB or DC, second stage ratio is 59 and first stage ratio is 87.

B-4

DISASSEMBLY/ASSEMBLY OF GEARMOTOR

Disassembly:

SM-CYCLO® Gearmotors are designed to provide maximum ease in disassembly and reassembly; they require no special maintenance skills.

The following procedures and precautions are recommended at time of disassembly and assembly:

- Perform work in a dust-free, humidity-free area.
- Use a soft or plastic hammer when required.
- Take care not to damage parts, i.e., coil, bearings, seals, etc.
- Inspect all components and replace as necessary.
- Be extremely careful when handling bearings.

1. Remove the complete SM-CYCLO® Gearmotor from the driven machine.

2. Place the gearmotor vertically with the output shaft upward.

3. Remove the through bolts from the motor flange, ring gear housing, and lift the slow speed side, thus separating the unit into two parts so that the inner mechanism can be removed (Fig. B-19 ~ B-24).

4. If the unit will not separate easily, gently drive a wedge at the line X shown in Fig. B-1 on page B-3 (if this produces a burr, be sure to remove it before reassembly).

5. To lift the slow speed side, attach an eyebolt to the tapped hole on the end of the slow speed shaft and use a hoist or chain block (Fig. B-19).

6. Take out the slow speed shaft rollers, item 1-06, page B-3 (Fig. B-20). Check the slow speed shaft pins (1-01) to see whether any rollers have adhered to them.

7. Using both hands, lift out the top cycloid disc (2-04) on the slow speed side (Fig. B-21).

8. Remove the spacer ring (2-05).

9. The eccentric bearing assembly (3-04) can be removed from the motor shaft after taking out the retaining ring (3-10), or the bearings (3-02), figures B-22, B-23.

Note: In certain sizes, the eccentric bearings are roller bearings without a retainer. Remove rollers of the top disc and the second disc on the motor side before removing the eccentric.

10. Take out the second disc located on the motor side.

11. Remove the ring gear housing (2-01) from the motor.

12. Follow these steps to remove the slow speed shaft (1-01) with its bearings from the casing (26): (a) Remove the horizontal oil seal housing (25). (b) With a wooden or hard rubber mallet, rap the inner end of the slow speed shaft to expose the retaining ring* from the outer raceway of the bearing. (c) Remove the retaining ring. (d) Rap the outer end of the slow speed shaft with a wooden or hard rubber mallet, and remove it from the casing.

13. The cycloid disc is made from heat treated bearing steel and the spacer ring is cast iron. Take care not to strike them together while handling.

***Note 1:** Retaining ring is part of bearing A. (See Part 1-02)

2: If motor is in need of repair, please send to any authorized EASA shop.

Assembly

SM-CYCLO® Gearmotors are reassembled by reversing the disassembly procedure. Care must be taken to exclude dust or foreign matter from the moving parts, and to see that gaskets are properly placed to make the assembly oil-tight.

Following are some helpful points to remember when assembling SM-CYCLO® Gearmotors.

1. Set the ring gear housing and insert the ring gear pins and rollers; then test-rotate the pins and rollers by hand. (Apply grease liberally to the ring gear pins and rollers before they are inserted in grease lubricated SM-CYCLO® Gearmotors).

2. Cycloid discs are a matched pair. Each carries the same number stamped on one side of the disc.

3. Set the cycloid disc with the stamped number face up as shown in figure B-24.

4. Insert the eccentric bearing by rapping with a wooden or hard rubber mallet (Fig. B-23).

5. Insert the spacer and the inner bearing raceway. Secure them with the retaining ring (Fig. B-22).

6. Set the spacer ring in place.

7. Insert top disc in such a way that the mark is 180° opposed to the mark on the bottom disc (Fig. 20).

8. Insert slow speed shaft rollers (Fig. B-20).

9. Put the slow speed shaft pins into the rollers (Fig. B-19). The above instructions are for **eccentric bearings with retainer.** Following are the instructions suggested for **roller bearings without retainer:**

a. First insert the eccentric with inner raceways of bearings by rapping with a wooden or hard rubber mallet.

B-20

Fig. B-19

Fig. B-20

Fig. B-23

Fig. B-21

Note: Insert second disc with number facing slow speed side, exactly 180° opposed to number on first disc.

Note: Set disc with number facing slow speed side.

Fig. B-22

Fig. B-24

b. Apply grease to the raceway of the eccentric on the disc. Fix the rollers and set disc in place.

c. Insert the spacer ring and set second disc in such a way that mark is 180° opposed to mark on the bottom disc.

Eccentric Bearing Replacement Precautions

The eccentric bearings are specially designed for installation on SM-CYCLO® Reducers. They are special roller bearings without outer raceways (refer to the list of bearings on page B-12 ~ B-13).

It is necessary to insert replacement bearings with numbered surfaces of the inner raceways facing outward. Note that incorrect insertion of the bearings (i.e., insertion of bearings with numbered surfaces inside) causes trouble.

Disassembly and Assembly of Sizes 6060-6095 SM-CYCLO® Reducers

Small sizes 6060-6095 have a single disc system, so they differ in construction from larger sizes in the following ways:

1. A balance weight is provided in lieu of the two-disc system. Refer to figure B-25.

2. The balance weight keyway must be in line with the eccentric keyway.

3. There are no end plates on either side of the eccentric. In all other respects, they have exactly the same construction as the larger sizes. Follow the instructions given under "Disassembly and Assembly".

Disassembly Of Output Side (6060-612H)

1. With casing supported, tap output shaft until it is disengaged from casing.

2. Remove bearing "A" by using pulling tool.

3. Replace all bearings, gaskets and seals when reassembling (Pages B-11 ~ B-13).

Assembly Of Output Side (6060-612H)

1. Assemble the "B" Bearing (Part No. 1-03) on the slow speed shaft (Part No. 1-01). Heating of "B" bearing is recommended for easier assembly.

Note: Do not exceed temperature of 200°F.

2. Assemble the casing (Part No. 26) over the slow speed shaft (Part No. 1-01), being sure to maintain "x" (Fig. B-25).

3. Carefully tap bearing "A" (Part No. 1-02) onto the slow speed shaft (Part No. 1-01) until the bearing is flush with the shoulder of the casing.

4. Place the collar (Part No. 1-04H) onto the slow speed shaft (Part No. 1-01). Heating the collar is recommended for easier assembly.

5. Insert the oil seal (Part No. 18), lip in, into the casing (Part No. 26).

Note: Measure for dimension "x" preferably in 3 places to insure proper spacing.

Fig. B-25

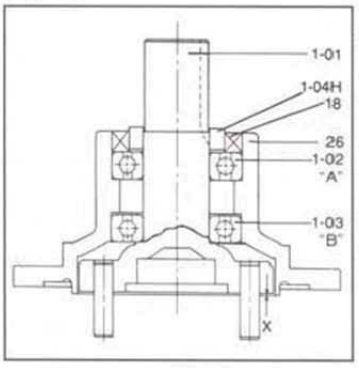

"X" Dimension (inches)

Frame Size	Dimension
6060/65	0.046 ± 0.007
6070/75 6080/85	0.042 ± 0.007
6090/95	0.046 ± 0.007
6100/05 610H	0.046 ± 0.007
6110/15/20/ 25, 612H	0.042 ± 0.007

B-21

SM-CYCLO® Reducer Troubleshooting and Repair

This troubleshooting guide is to help you identify and overcome common problems of reducers and motors. If you have a problem not listed below, please consult factory.

PROBLEM WITH THE REDUCER		POSSIBLE CAUSES	SUGGESTED REMEDY
Runs Hot	Overloading	Load exceeds the capacity of the reducer	Check rated capacity of reducer, replace with unit of sufficient capacity or reduce load.
	Improper Lubrication	Insufficient lubrication	Check lubricant level and adjust up to recommended levels.
		Excessive lubrication	Check lubricant level and adjust down to recommended level.
		Wrong lubricant	Flush out and refill with correct lubricant as recommended.
Vibration or Noise	Loose Foundation Bolts	Weak mounting structure	Inspect mounting of reducer. Tighten loose bolts and/or reinforce mounting & structure.
		Loose hold down bolts	Tighten bolts.
	Worn Disc	Overloading unit may result in damage to disc	Disassemble and replace disc. Re-check rated capacity of reducer.
	Failure of Bearings	May be due to lack of lubricant	Replace bearing. Clean and flush reducer and fill with recommended lubricant.
		Overload	Check rated capacity of reducer, replace with unit of sufficient capacity or reduce load.
	Insufficient Lubricant	Level of lubricant in the reducer not properly maintained	Check lubricant level and adjust to factory-recommended level.
	Damaged Pins & Rollers	Overloading of reducer	Disassemble and replace ring gear pins and rollers. Check load on reducer.
Output Shaft Does Not Turn	Motor Shaft Broken	Overloading of reducer can cause damage	Replace broken shaft. Check rated capacity of reducer.
		Key missing or sheared off on input shaft	Replace key.
	Eccentric Bearing Broken	Lack of lubricant	Replace eccentric bearing. Flush and refill with recommended lubricant.
	Motor Doesn't Turn	Motor	Refer to page B-23.
Oil Leakage	Worn Seals	Caused by dirt or grit entering seal	Replace seals. Breather filter may be clogged. Replace or clean filter.
	Leakage Into Motor	Overfilled reducer	Check lubricant level and adjust to recommended level.
		Vent clogged	Clean or replace element, being sure to prevent any dirt from falling into the reducer.
		Improper mounting position, such as wall or ceiling mount of horizontal reducer	Mount horizontally or rework reducer to wall or ceiling mount.

B-22

SM-CYCLO® Motor Troubleshooting and Repair

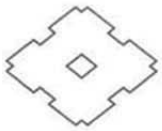

PROBLEM WITH THE MOTOR		POSSIBLE CAUSES	SUGGESTED REMEDY
Load is disconnected but motor doesn't rotate	Makes a groaning sound	Faulty switch contact	Adjust the contact.
		Blown fuse	Replace.
		One phase wire of the power supply open	Replace.
		Stator coil open	Repair by rewinding or replacing stator assembly.
		Stator and rotor touching due to bearing housing wear	Replace the bearing and bracket.
	Starts in either direction when turned by hand	Three-phase is operating as single-phase	Check the power source with a voltmeter.
	Doesn't make any noise	Stator coil open	Repair by rewinding or replacing stator assembly.
		Outside the motor: Power failure Open connection wire Faulty switch contact Faulty starter contact	Contact the power company. Check the source wiring. Adjust the contact.
Rotates with the load disconnected, but:	Rotates in the wrong direction	Connection error	Change any two of the three phase source.
	Fuse blows	Shorted lead wire	Replace.
	Speed doesn't increase	Faulty starter contact	Adjust.
	Groans	Overcurrent/ Overheating — Rotor and stator touching.	Repair by rewinding or replacing stator assembly.
		Over-current — One phase of stator coil shorted.	Replace the stator winding.
	Makes a high-pitched metallic noise	Faulty bearing	Replace the bearing.
Rotates when the load is disconnected but when the load is connected it:	Switch overheated	Insufficient switch capacity	Replace with one having the rated capacity.
		Overload	Drop to the rated load.
	Fuse blows	Insufficient fuse capacity	Replace with one having the rated capacity.
	Overheats	Overload	Drop to the rated load.
		Voltage drop	Consult with the power company.
	Speed suddenly drops	Voltage drop	Consult with the power company.
		Overload	Drop to the rated load.
	Stops	Bearing damaged by overheat	Replace the bearing.

B-23

MAINTENANCE AND INSPECTION

To insure long life and trouble-free operation, periodic inspection and maintenance of your gearmotor is recommended.

Daily Inspection:

1. Check for loose nuts and bolts.

2. Check for cooling fan air obstruction.

3. Listen for abnormal sounds.

4. Check for abnormal temperature and vibration by carefully placing hand on unit (caution: be extremely careful when making direct contact with the unit to avoid burns from abnormal temperatures).

5. Visually check the oil level gauge on the vertical unit, forced-lubricated type. Check lubrication flow by viewing piping set and oil signal (Part No. 41). Faulty operation is caused by a lack of lubrication oil, damage to the plunger pump (Part No. 42) or the positive displacement pump (Part No. 43) or the clogging of pipes, etc. In case of faulty operation, stop and inspect the unit immediately.

6. A temperature rise of approximately 105°F (40.6°C) above ambient on the surface of the ring gear housing (Part No. 2-01) is allowable if the temperature fluctuation is small. If temperature rises rapidly from stable condition, add the recommended oil or grease (Tables B-7 and B-11). A rapid temperature rise may be caused from a lack of lubrication. If after lubricating unit, the problem persists, stop operation and consult factory.

7. When an abnormal sound is heard from inside the unit, stop operation and inspect the unit.

8. If the lubrication oil leaks, replace the damaged or worn part with a new one. (Refer to Part No. 1-04H, Page B-3.)

Periodic Inspection:

1. Replenish grease in the motor bearings; for quantities, refer to Table B-27, Page B-17.

2. Check installation resistance in accordance with instructions as shown on Page B-16, Step 3.

Ordering Correct Replacement Units Or Parts

The SM-CYCLO® Gearmotor is fully standardized to offer maximum part interchangeability among models of the same frame size. However there are many frame sizes, models, and types in the production range of SM-CYCLO®. Therefore to get correct replacement units or parts, proper information to identify the speed reducer in question is essential. The name plate, which is secured to the body of the drive, provides this identifying data.

Please give the full description shown on the name plate to your distributor. Be sure to include the *SERIAL NUMBER* and *MODEL NUMBER*. This information, along with our production records, will enable us to provide you with the correct replacement unit or parts.

Name Plate on SM-CYCLO® Gearmotor

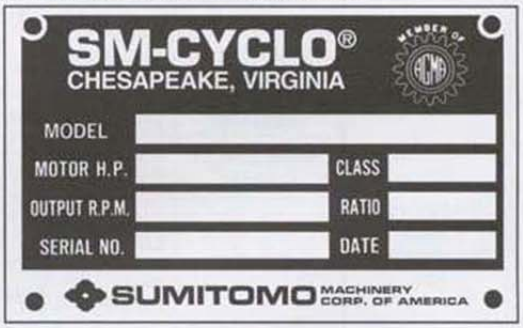

Storage and Operation After Storage

Storage 6 Months–1 Year

Oil-Lubricated

1. Fill unit(s) with 20% of the recommended quantity as shown in Table B-12, Page B-9 with a rust preventive oil (NP20 or equivalent) or a circulating oil (Shell VSI No. 100 or equivalent).

2. At approximately 3 months interval, change oil as described in No. 1.

Grease-Lubricated

Grease lubricated models do not require any special attention during storage. (Inspect unit before operation.)

Note: For both the Oil-Lubricated and Grease-Lubricated models, if units are to be stored for a period exceeding 1 year, consult factory.

Operation After Storage of 6 Months–1 Year

Oil-Lubricated

1. Completely drain the rust preventive, or circulating oil from unit.

2. Flush unit with the recommended operating oil as shown in Table B-11.

3. After flushing, fill the unit to the proper oil level with the recommended lubricating oil.

Grease-Lubricated

Add ½ of the recommended quantity of new grease as shown in Table B-10.

Note: Consult the factory before operating units stored for periods greater than 1 year.

B-24

11.7.4 GEAR COUPLING – FALK COUPLING G32 & G52

REXNORD

Falk™ Double & Single Engagement Gear Couplings • Install. & Maint.

Sizes 1010 thru 1070G & GP & Sizes 1 thru 7GF (Page 1 of 8)

How To Use This Manual

This manual provides detailed instructions on installation, maintenance, and parts identification for Falk Lifelign ® gear couplings, Types G & GF10, 20, 31, 32, 51, 52, & GP20 & GP52. Use the table of contents below to locate required information.

Table of Contents

Introduction . . . . . Page 1
Lube Fittings. . . . . Page 1
Limited End Float . . . . . Page 1
Lubrication . . . . . Pages 1-2
Balanced Couplings . . . . . Page 3
Bi-Annual & Annual Maintenance . . . . . Page 3
Installation & Alignment Instructions . . . . . Pages 3-6 & 7
Installation & Alignment Data . . . . . Page 6
Parts Identification & Parts Interchangeability. . . . . Page 7-8

CAREFULLY FOLLOW THE INSTRUCTIONS IN THIS MANUAL FOR OPTIMUM PERFORMANCE AND TROUBLE FREE SERVICE.

INTRODUCTION

This manual applies to standard coupling Types G & GF10, 31 and 51 with shrouded bolts, and G & GF20, 32, 52, and GP20 & GP52 with exposed bolts. For couplings furnished with special features, refer to assembly drawing furnished with coupling for proper assembly arrangement and any additional installation or maintenance requirements. Refer to the specific manuals for GV vertical gear couplings installation and maintenance.

IMPORTANT: Use G/GF51 & 52 couplings for floating shaft assemblies or as the fourth bearing in three bearing systems. When gear couplings are mounted on a horizontal floating shaft, use a gap disc in each coupling. Where limited end float is required or where sleeve bearing motors are used, consult the Factory. Type GP52 couplings are recommended for horizontal application only. Refer Type GP52 floating shaft applications to the Factory.

CAUTION: Consult applicable local and national safety codes for proper guarding of rotating members. Observe all safety rules when installing or servicing couplings.

WARNING: Lockout starting switch of prime mover and remove all external loads from drive before installing or servicing couplings.

LUBE FITTINGS

Sleeves have ⅛" NPT lube holes for sizes 1010G20 - 1035G20, 1GF20 - 7GF20, 1025G10 - 1035G10, and 2½ GF10 - 5½ GF10. (Sizes 1010G10 - 1020G10 and 1GF10 - 2GF10 use ¼"-28 SAE LT automotive plugs and fittings.) Sizes 1040G thru 1070G have ¼" NPT holes. Use a standard grease gun and lube fittings.

LIMITED END FLOAT

Where limited end float is required or where sleeve bearing motors are used, consult the Factory.

LUBRICATION

Adequate lubrication is essential for satisfactory operation. Because of its superior lubricating characteristics and low centrifuge properties, Falk Long Term Grease (LTG) is highly recommended.

Type G/GP/GF20 Type G/GF32 Type G/GP/GF52

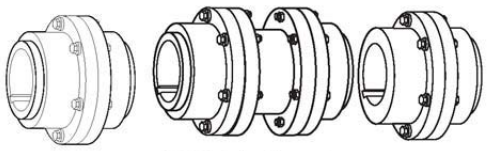

1000G Series Pictured

Gear couplings initially lubricated with Falk Long Term Grease (LTG) will not require re-lubrication for up to three years.

The use of general purpose grease requires re-lubrication of the coupling at least once every six months. If coupling leaks grease, is exposed to extreme temperatures, excessive moisture, experiences frequent reversals or axial movements; more frequent lubrication may be required.

USDA Approval

LTG has the United States Department of Agriculture Food Safety & Inspection Service approval for applications where there is no possibility of contact with edible products. (H-2 ratings.)

Long Term Grease (LTG)

The high centrifugal forces encountered in couplings separate the base oil and thickener of general purpose greases. Heavy thickener, which has no lubrication qualities, accumulates in the tooth mesh area of gear couplings resulting in premature mesh failure unless periodic lubrication cycles are maintained.

Falk Long Term Grease (LTG) was developed specifically for couplings. It resists separation of the oil and thickener. The consistency of Falk LTG changes with operating conditions. As manufactured, it is an NLGI #1/2 grade. Working of the lubricant under actual service conditions causes it to become semifluid, while the grease near the seals will set to a heavier grade, helping to prevent leakage.

LTG is highly resistant to separation, easily out performing all other lubricants tested. The resistance to separation allows the lubricant to be used for relatively long periods of time.

Although LTG grease is compatible with most other coupling greases, the mixing of greases may dilute the benefits of LTG.

CAUTION: Do not use LTG in bearings. Do not use LTG for low speed applications. Refer to Table 4, Page 6 for coupling speed range of LTG grease.

Packaging

14 oz. (0,4 Kg) CARTRIDGES — Individual or case lots of 10 or 30.

35 lb. (16 Kg) PAILS, 120 lb. (54 Kg) KEG & 400 lb. DRUMS.

Specifications — Falk LTG (Long Term Grease)

TEMPERATURE RANGE — –20°F (–29°C) to 250°F (121°C). Minimum pump = 20°F (–7°C).

MINIMUM BASE OIL VISCOSITY — 3300SSU (715cSt) @ 100°F (38°C).

THICKENER — Lithium soap/polymer.

Rexnord Industries, LLC, Coupling Group
5555 S. Moorland Rd., New Berlin, WI 53151-7953 USA Telephone : 262-796-4060
Fax: 262-796-4064 e-mail: info@rexnord.com web: www.rexnord.com

458-110
April 2005
Supersedes 6-02

Install. & Maint. • Falk™ Double & Single Engagement Gear Couplings

(Page 2 of 8) Sizes 1010 thru 1070G & GP & Sizes 1 thru 7GF

REXNORD

CENTRIFUGE SEPARATION CHARACTERISTICS — ASTM #D4425–84 (Centrifuge Test) — K36 = 2/24 max., very high resistance to centrifuging.

NLGI GRADE (ASTM D-217) — 1/2

CONSISTENCY (ASTM D-217) — 60 stroke worked penetration value in the range of 315 to 360 measured @ 77°F (25°C).

DROPPING POINT — 350°F (177°C) minimum.

MINIMUM TIMKEN EP O.K. LOAD — 40 lb. (18 kg).

ADDITIVES — Rust and oxidation inhibitors that do not corrode steel or swell or deteriorate synthetic seals.

General Purpose Grease

Bi-annual Lubrication — The following specifications and lubricants for general purpose grease apply to gear couplings that are lubricated bi-annually and operate within ambient temperatures of –30°F (–34°C) to 200°F (93°C). For temperatures beyond this range, consult Factory. For normal service, use a NLGI #1 extreme pressure (EP) grease EXCEPT when the coupling speed is less than the minimum specified in Table 4, Page 6. At these lower speeds, use a NLGI #0 extreme pressure (EP) grease. When one or more gear couplings in an application require NLGI #0 grease, the same grease may be used in all of the couplings. DO NOT use cup grease.

If coupling leaks grease, is exposed to extreme temperatures, excessive moisture or experiences frequent reversals or axial movements; more frequent lubrication may be required.

Lubricants listed in Tables 1, 2 & 3 are typical products only and should not be construed as exclusive recommendations.

Specifications — General Purpose Coupling Lubricants

COUPLING SPEED RANGE — See Table 4, Page 6.

TEMPERATURE RANGE — –30°F to +200°F(–34°C to +93°C)

WORKED PENETRATION AT 77°F(25°C) —
NLGI #1 . . . . . 310-340 (See Table 1)
NLGI #0 . . . . . 355-385 (See Table 2)

DROPPING POINT — 300°F(149°C) or higher

TEXTURE — Smooth or fibrous

MINIMUM TIMKEN O.K. LOAD — 30 lb.

SEPARATION AND RESISTANCE — Low oil separation rate and high resistance to separation from centrifuging.

LIQUID CONSTITUENT — Possess good lubricating properties . . . equivalent to a high quality, well refined petroleum oil with EP additives.

INACTIVE — Must not corrode steel or cause swelling or deterioration of synthetic seals.

Oil Lubrication

EP oils may be a more effective lubricant than grease when the required coupling speed is one half of the minimum speed range of NLGI #1 grease listed in Table 4, Page 6 (Minimum rpm ÷ 2). Oil lubricated couplings must be sealed to prevent leakage, i.e. keyways, etc. Couplings must be drained and refilled with new oil every six months for operating temperatures up to 160°F (71°C) and every three months for couplings operating at temperatures of 160°F (71°C) up to 200°F (93°C). For temperatures beyond this range, consult Facotyr. The minimum operating temperature must not be lower than the pour point of the oil. The specified amount of grease listed in Table 4, Page 6, is in pounds and also applies to the volume of oil in pints.

Specifications

Type: Mild EP gear oil that meets AGMA Specifications 250.04.

Grade: AGMA #8EP (ISO VG 680).

Viscosity: 612-748 cSt @ 104°F (40°C).

Pour Point: 20°F (–7°C) Maximum.

Must not corrode steel or swell or deteriorate synthetic seals.

TABLE 1 — NLGI #1 Grease

Manufacturer	Lubricant ★
Amoco Oil Co.	Rykon Grease #1 EP
BP Oil Co.	Energrease LS-EP1
Chevron U.S.A., Inc.	Dura-Lith EP1
Citgo Petroleum Corp	Premium Lithium Grease EP1
Conoco Inc.	EP Conolith Grease #1
Exxon Company, U.S.A..	Lidok EP1
Imperial Oil Ltd.	Ronex EP1
Kendall Refining Co.	Lithium Grease L-416
Keystone Div., Pennwalt Corp.	Zeniplex-1
Lyondell Lubricants	Litholine Complex EP1
Mobil Oil Corp..	Mobilux EP1
Petro-Canada Products	Multipurpose EP1
Phillips 66 Co.	Philube Blue EP
Shell Oil Co.	Alvania EP Grease 1
Shell Canada Ltd.	Alvania Grease EP1
Sun Oil Co.	Sun Prestige 741 EP
Texaco Lubricants	Multifak EP1
Unocal 76 (East & West)	Unoba EP1

TABLE 2 — NLGI #0 EP Grease

Manufacturer	Lubricant ★
Amoco Oil Co.	Rykon Premium Grease 0 EP
BP Oil Co.	Energrease LS-EP 0
Chevron U.S.A., Inc.	Dura-Lith EP 0
Citgo Petroleum Corp	Premium Lithium Grease EP 0
Conoco Inc.	EP Conolith Grease #0
Imperial Oil Ltd.	Unirex EP0
Exxon Company, U.S.A..	Lidok EP 0
Kendall Refining Co.	Lithium Grease L-406
Keystone Div., Pennwalt Corp.	Zeniplex-0
Mobil Oil Corp..	Mobilux EP 0
Petro-Canada Products	Multipurpose Lotemp EP Grease
Phillips 66 Co.	Philube Blue EP
Shell Oil Co.	Alvania EP Grease RO
Shell Canada Ltd.	Alvania Grease EPW
Sun Oil Co.	Sun Prestige 740 EP
Texaco Lubricants	Multifak EP 0
Unocal 76 (East & West)	Unoba EP 0

TABLE 3 — Oil Lubricants

Manufacturer	Lubricant ★
Amoco	Permagear EP 160
Chevron, U.S.A.	NL Gear Compound 680
Exxon Co., U.S.A.	Spartan EP680
Gulf Oil Co.	EP Lubricant HD 680
Mobil Oil Co.	Mobilgear 636
Shell Oil Co.	Omala Oil 680
Texaco Inc.	Meropa 680
Union Oil Co. of Calif.	Extra Duty NL Gear Lube 8EP

★ Lubricants listed may not be suitable for use in the food processing industry; check with lube manufacturer for approved lubricants.

458-110
April 2005
Supersedes 6-02

Rexnord Industries, LLC, Coupling Group
5555 S. Moorland Rd., New Berlin, WI 53151-7953 USA Telephone : 262-796-4060
Fax: 262-796-4064 e-mail: info@rexnord.com web: www.rexnord.com

HORIZONTAL COUPLING INSTALLATION, ALL TYPES

Only standard mechanics tools, torque wrenches, inside micrometer, dial indicator, straight edge, spacer bar, and feeler gauges are required to install gear couplings. Clean all parts using a non-flammable solvent. Check hubs, shafts, and keyways for burrs. DO NOT heat clearance fit hubs. Use a lubricant that meets the specifications on Page 2. Pack sleeve teeth with grease and lightly coat seals with grease BEFORE assembly. The required amount of grease is listed in Table 4. Make certain flange fasteners are tightened to the required torque listed in Table 4.

Interference Fit Hubs — Unless otherwise specified, gear couplings are furnished for an interference fit without setscrews. Heat hubs to 275°F(135°C) using an oven, torch, induction heater, or an oil bath.

CAUTION: To prevent seal damage DO NOT heat hubs beyond a maximum temperature of 400°F (205°C) for Type G and 500°F (260°C) for Type GF.

When an oxy-acetylene or blow torch is used, use an excess acetylene mixture. Mark hubs near the center of their length in several places on hub body with a temperature sensitive crayon, 275°F (135°C) melt temperature. Direct flame towards hub bore using constant motion to avoid overheating an area.

WARNING: If an oil bath is used, the oil must have a flash point of 350°F (177°C) or higher. Do not rest hubs on the bottom of the container. Do not use an open flame in a combustible atmosphere or near combustible materials.

Maximize Performance & Life

The performance and life of couplings depend largely upon how you install and maintain them. Before installing couplings, make certain that foundations of equipment to be connected meet manufacturers' requirements. Check for soft foot. The use of stainless steel shims is recommended. Measuring misalignment and positioning equipment within alignment tolerances is simplified with an alignment computer. These calculations can also be done graphically or mathematically, and allow the incorporation of "cold offsets", which will compensate for shaft position changes due to thermal growth.

Balanced Couplings

The fasteners provided are matched sets and must not be mixed or substituted. Assembly balanced couplings are match marked and must be assembled with mating match marks aligned. In some sizes, the flanges are not match marked. Coupling flanges must be assembled with O.D.'s aligned to within .002" (0,05 mm). Component parts of assembly balanced couplings must not be replaced without re-balancing the complete assembly.

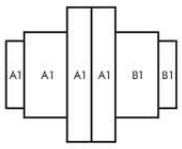

BI-ANNUAL MAINTENANCE

Re-lubricate coupling if using general purpose grease. If coupling leaks grease, is exposed to extreme temperatures, excessive moisture or frequent reversals; more frequent lubrication may be required.

ANNUAL MAINTENANCE

For extreme or unusual operating conditions, check coupling more frequently.

1. Check alignment per Step 7, Page 7. If the maximum operating misalignment values are exceeded, realign the coupling to the recommended installation values. See Table 4, for installation and maximum operating misalignment values.
2. Check tightening torques of all fasteners.
3. Inspect seal ring and gasket to determine if replacement is required.
4. Re-lubricate coupling if using general purpose grease.

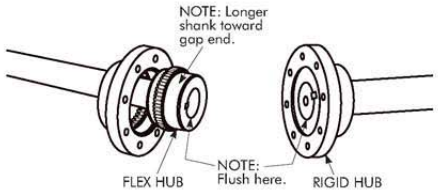

ALL TYPES G/GF/GP HORIZONTAL COUPLING INSTALLATION

1 — Mount Flanged Sleeves, Seals & Hubs

Place the flanged sleeves WITH seal rings on shafts BEFORE mounting flex hubs. Mount flex or rigid hubs on their respective shafts, as shown above, so that each face is flush with the end of its shaft. Allow hubs to cool before proceeding. Seal keyways to prevent leakage. Insert setscrews (if required) and tighten. Position equipment in approximate alignment with approximate hub gap.

For Type G/GF10 & 20 and GP20, position equipment in approximate alignment with gap equal to that given in Table 4.

For Type G/GF31 & 32 spacer and G/GF/GP51 & 52 floating shaft, with rigid hubs on floating shaft, position equipment in approximate alignment with approximate distance between shafts per Step 4A, Figure 2 on Page 5.

For G/GF/GP51 & 52 with flex hubs on the floating shaft, refer to Step 4A, Figure 1 on Page 5, to determine distance between shafts.

Rexnord Industries, LLC, Coupling Group
5555 S. Moorland Rd., New Berlin, WI 53151-7953 USA Telephone : 262-796-4060
Fax: 262-796-4064 e-mail: info@rexnord.com web: www.rexnord.com

458-110
April 2005
Supersedes 6-02

Install. & Maint. • Falk™ Double & Single Engagement Gear Couplings

REXNORD

(Page 4 of 8) Sizes 1010 thru 1070G & GP & Sizes 1 thru 7GF

2 — Gap & Angular Alignment for Close Coupled, Spacer, Short Floating Shaft, and Insulated Couplings

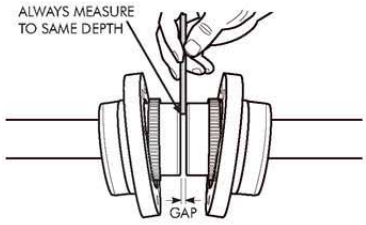

2A — Type G/GF10 & 20 & GP20

Use a spacer bar equal in thickness to gap specified in Table 4. Insert bar, as shown above, to same depth at 90° intervals and measure clearance between bar and hub face with feelers. The difference in minimum and maximum measurements must not exceed the INSTALLATION ANGULAR limit specified in Table 4.

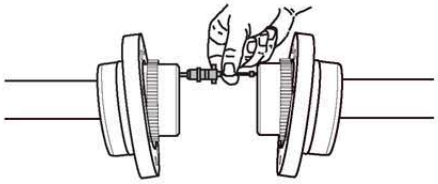

2B — G/GF31 & 32 (Spacer), and Type G/GF51 & 52 (Short Floating Shaft, See Step 4 for Long Floating Shaft)

Use an inside micrometer as shown above and at 90° intervals to measure the distance between hubs. The difference in minimum and maximum measurements should not exceed the INSTALLATION ANGULAR limit specified in Table 4.

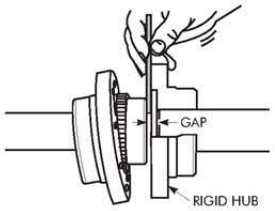

2C — G/GF51 & 52 & GP52 (As Fourth Bearing in Three Bearing System)

Use a spacer bar equal in thickness to the "X" dimension specified in Table 4. Insert bar, as shown above to same depth at 90° intervals and measure clearance between bar and hub face with feelers. The difference in minimum and maximum measurements must not exceed the INSTALLATION ANGULAR limit specified in Table 4.

3 — Offset Alignment for Close Coupled, Spacer, Short Floating Shaft, and Insulated Couplings

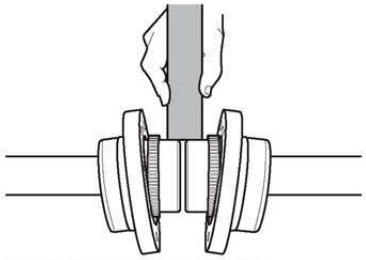

3A — Type G/GF10 & 20 & GP20

Align so that a straight edge rests squarely on both hubs as shown above and also at 90° intervals. Check with feelers. The clearance should not exceed the INSTALLATION OFFSET limit specified in Table 4. Tighten foundation bolts and repeat Steps 2A and 3A. Realign coupling if necessary. Use a dial indicator if hub extension is too short for accurate use of a straight edge.

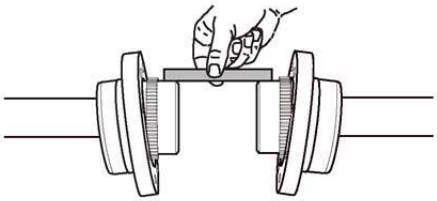

3B — Type G/GF31 & 32 (Spacer), and Type G/GF51 & 52 (Short Floating Shaft, See Step 4 for Long Floating Shaft)

Align so that a straight edge rests squarely (or within the limits specified in Table 4) on both hubs as shown above and also at 90° intervals. Check with feelers. The clearance should not exceed the INSTALLATION OFFSET limit specified. Tighten all foundation bolts and repeat Steps 2B and 3B. Realign coupling if necessary.

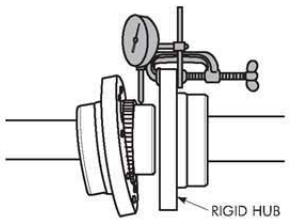

3C — Type G/GF51 & 52 & GP52 (As Fourth Bearing in Three Bearing System)

Clamp a dial indicator to the rigid hub as shown and rotate the rigid hub one complete turn. The total indicator reading DIVIDED by two must not exceed the INSTALLATION OFFSET limit specified in Table 4. Tighten all foundation bolts and repeat

458-110
April 2005
Supersedes 6-02

Rexnord Industries, LLC, Coupling Group
5555 S. Moorland Rd., New Berlin, WI 53151-7953 USA Telephone : 262-796-4060
Fax: 262-796-4064 e-mail: info@rexnord.com web: www.rexnord.com

REXNORD

Falk™ Double & Single Engagement Gear Couplings • Install. & Maint.

Sizes 1010 thru 1070G & GP & Sizes 1 thru 7GF (Page 5 of 8)

Steps 2C and 3C. Realign coupling if necessary.

4 — Type G/GF/GP51 & 52 With Long Floating

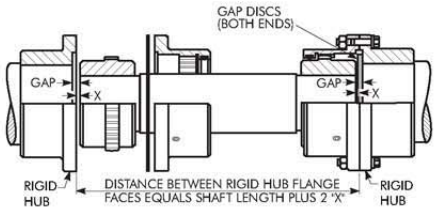

Figure 1

Shaft

4A — Determine Distance Between Shafts

For Figure 1 above, measure the length of the floating shaft and add 2 times the gap dimension from Table 4 to get the distance between the shafts to be coupled.

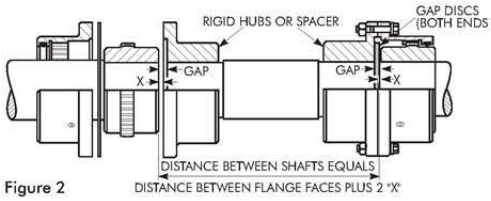

Figure 2

For Figure 2 above, measure the overall floating shaft or spacer assembly length from flange to flange and add 2 times the "X" dimension from Table 4 to get the distance between the shafts to be coupled.

4B — Position First Drive & Floating Shaft

Set the drive most difficult to move to true level and bolt it in place. Set the floating shaft on V-blocks. Then align coupling on fixed drive as follows:

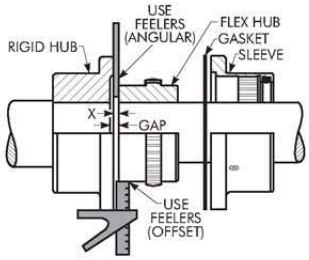

Figure 3

4B1 — Refer to Figure 3

Use a spacer bar equal in thickness to the "X" dimension specified in Table 4. Insert the bar to the same depth at 90° intervals and measure the clearance between the bar and hub face with feelers as shown. The difference in minimum and maximum measurements should not exceed the INSTALLATION ANGULAR limit specified in Table 4.

4B2 — Refer to Figure 3

Align coupling & floating shaft so that, with the square head (or depth micrometer) resting squarely on the flange, equal clearance measurements are obtained between flange and the hub O.D. in four places 90° apart. The difference between minimum and maximum feeler readings should not exceed the INSTALLATION OFFSET limit in Table 4 divided by 2. The above measurement is TIR.

4C — Position Second Drive

Position second drive for the correct "X" dimension and align per Steps 4B1 & 4B2. DO NOT move the floating shaft. Bolt drive in place and recheck alignment and gap. Realign if necessary. For greater accuracy, check alignment with a depth micrometer or dial indicator.

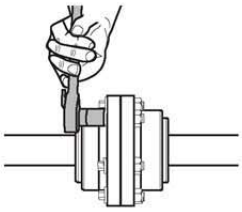

5 —Assemble Coupling — G and GF Only

Insert gasket between flanges and gap disc into counterbore of each rigid hub for floating shaft assemblies and bolt flanges together. Use only the fasteners furnished with the coupling. IMPORTANT: Tighten fasteners to torque specified in Table 4.

5A — Assemble Coupling – Insert Insulator Parts and Join Flanged Sleeves (GP20 & GP52)

Clean flange faces and coat with Permatex #2 or equivalent. DO NOT install gaskets. Insert insulator bushings into flanged holes. Draw one sleeve onto hub and position insulator center plate on flange face. Draw other sleeve onto hub and assemble fasteners with insulator washers. Use only fasteners furnished with coupling. IMPORTANT: Tighten fasteners to torque specified in Table 4.

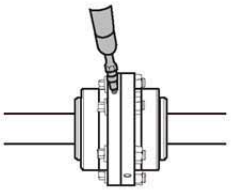

6 — Lubricate

Remove all grease plugs and fill with recommended grease until an excess appears at an open hole; then insert plug. Continue procedure until all plugs have been inserted.
CAUTION: *Remove grease fitting and make certain all plugs are inserted after lubricating.*

Rexnord Industries, LLC, Coupling Group
5555 S. Moorland Rd., New Berlin, WI 53151-7953 USA Telephone : 262-796-4060
Fax: 262-796-4064 e-mail: info@rexnord.com web: www.rexnord.com

458-110
April 2005
Supersedes 6-02

Install. & Maint. • Falk™ Double & Single Engagement Gear Couplings

REXNORD

(Page 6 of 8) Sizes 1010 thru 1070G & GP & Sizes 1 thru 7GF

TABLE 4 — Installation & Alignment Data For Types G/GF10, 20, 31, 32, 51, 52 & GP20 & GP52 ★ — Dimensions – Inches (Metric – mm)

COUPLING SIZE				1010G 1GF	1015G 1-½GF	1020G 2GF	1025G 2-½GF	1030G 3GF	1035G 3-½GF	1040G 4GF	1045G 4-½GF	1050G 5GF	1055G 5-½GF	1060G 6GF	1070G 7GF
Gap		G/GF10 & 20		.125 (3)	.125 (3)	.125 (3)	.188 (5)	.188 (5)	.250 (6)	.250 (6)	.312 (8)	.312 (8)	.312 (8)	.312 (8)	.375 (10)
		GP20		...	...	...	.325 (8)	.325 (8)	.385 (10)	.385 (10)	.450 (11)	.450 (11)	.450 (11)	.450 (11)	.510 (13)
		G/GF51 & 52		.156 (4)	.156 (4)	.156 (4)	.188 (5)	.188 (5)	.218 (6)	.281 (7)	.312 (8)	.344 (9)	.344 (9)	.406 (10)	.500 (13)
		GP52		...	...	...	.325 (8)	.325 (8)	.350 (9)	.420 (11)	.450 (11)	.480 (12)	.480 (12)	.540 (14)	.635 (16)
"X" Dimension		G/GF51 & 52		.056 (1)	.056 (1)	.056 (1)	.088 (2)	.088 (2)	.118 (3)	.121 (3)	.152 (4)	.144 (4)	.144 (4)	.146 (4)	.170 (4)
		GP52		...	...	...	.215 (5)	.215 (5)	.245 (6)	.246 (6)	.280 (7)	.270 (7)	.270 (7)	.270 (7)	.295 (8)
Installation Limits	G/GF10, 20, 31, 32, 51 & 52 & GP20 & GP52		Angular	.006 (0,15)	.007 (0,19)	.009 (0,23)	.011 (0,28)	.013 (0,33)	.015 (0,39)	.018 (0,46)	.020 (0,51)	.022 (0,55)	.024 (0,61)	.026 (0,66)	.031 (0,78)
	G/GF10 & 20 & GP20		Offset	.002 (0,05)	.003 (0,07)	.003 (0,8)	.004 (0,10)	.005 (0,13)	.006 (0,15)	.007 (0,18)	.008 (0,20)	.009 (0,23)	.010 (0,26)	.011 (0,28)	.013 (0,33)
	G/GF51 & 52 & GP52		Offset	.001 (0,03)	.001 (0,03)	.001 (0,03)	.002 (0,04)	.002 (0,05)	.002 (0,05)	.003 (0,06)	.003 (0,08)	.003 (0,08)	.003 (0,08)	.004 (0,10)	.005 (0,11)
	G/GF31 & 32		Offset	.006 (0,14)	.006 (0,16)	.007 (0,17)	.008 (0,20)	.009 (0,23)	.011 (0,28)	.012 (0,30)	.013 (0,32)	.015 (0,38)	.016 (0,41)	.017 (0,43)	.017 (0,44)
"W"†	Installation Check		All Types	.006 (0,15)	.007 (0,19)	.009 (0,23)	.011 (0,28)	.013 (0,33)	.015 (0,39)	.018 (0,46)	.020 (0,51)	.022 (0,55)	.024 (0,61)	.026 (0,66)	.031 (0,78)
	Operating Limit Check		All Types	.035 (0,90)	.045 (1,13)	.054 (1,38)	.067 (1,71)	.079 (2,00)	.092 (2,33)	.108 (2,74)	.121 (3,08)	.131 (3,33)	.144 (3,66)	.157 (3,99)	.183 (4,66)
Coupling Speed Range (rpm)	G10, 20, 51, 52 & GP20 & GP52	NLGI #0 Grease-Max. ‡		7000	6000	5000	4750	4400	3900	3600	3200	2900	2650	2450	2150
		Falk LTG or NLGI #1 Grease	Min.	1030	700	550	460	380	330	290	250	230	210	190	160
			Allow.	8000	6500	5600	5000	4400	3900	3600	3200	2900	2650	2450	2150
	G31 & 32	NLGI #0 Grease-Max. ‡		7000	5500	4600	4000	3600	3100	2800	2600	2400	2200	2100	1800
		Falk LTG or NLGI #1 Grease	Min.	1030	700	550	460	380	330	290	250	230	210	190	160
			Allow.	7000	5500	4600	4000	3600	3100	2800	2600	2400	2200	2100	1800
Grease - pounds (kg)	G10 & 20			.09 (0,041)	.16 (0,073)	.25 (0,11)	.50 (0,23)	.80 (0,36)	1.20 (0,54)	2.00 (0,91)	2.30 (1,0)	3.90 (1,8)	4.90 (2,2)	7.00 (3,2)	9.60 (4,4)
	G51 & 52			.05 (0,023)	.09 (0,041)	.15 (0,068)	.26 (0,12)	.40 (0,18)	.60 (0,27)	1.03 (0,47)	1.25 (0,57)	2.00 (0,91)	2.50 (1,1)	3.75 (1,7)	5.00 (2,3)
	G31 & 32 per in. Spacer Length			....	....	.03 (0,014)	.06 (0,027)	.06 (0,027)	.12 (0,054)	.20 (0,091)	.20 (0,091)	.20 (0,091)	.20 (0,091)	.20 (0,091)	.20 (0,091)
	G31 & 32 Less Spacer			.09 (0,041)	.16 (0,073)	.25 (0,11)	.50 (0,23)	.80 (0,36)	1.20 (0,54)	2.00 (0,91)	2.30 (1,0)	3.90 (1,8)	4.90 (2,2)	7.00 (3,2)	9.60 (4,4)
	GF10 & 20			.09 (0,039)	.15 (0,068)	.27 (0,12)	.47 (0,21)	.74 (0,33)	.88 (0,40)	1.48 (0,67)	2.62 (1,2)	2.87 (1,3)	4.44 (2,0)	4.95 (2,2)	6.79 (3,1)
	GP20			...	...	...	.50 (0,227)	.80 (0,363)	1.20 (0,544)	2.00 (0,907)	2.30 (1,04)	3.90 (1,77)	4.90 (2,22)	7.00 (3,18)	9.60 (4,35)
	GF51 & 52			.06 (0,025)	.09 (0,042)	.15 (0,070)	.27 (0,12)	.41 (0,19)	.50 (0,23)	.87 (0,40)	1.46 (0,66)	1.66 (0,75)	2.47 (1,1)	2.93 (1,3)	4.27 (1,9)
	GP52			...	...	...	.26 (0,118)	.40 (0,181)	.60 (0,272)	1.03 (0,467)	1.25 (0,567)	2.00 (0,907)	2.50 (1,13)	3.75 (1,70)	5.00 (2,27)
	GF31 & 32 per in. Spacer Length			.06 (0,027)	.07 (0,032	.07 (0,032	.08 (0,037)	.02 (0,009)	.16 (0,072)	.21 (0,095)	.12 (0,053)	.13 (0,059)	.14 (0,065)	.71 (0,322)	.91 (0,413)
	GF31 & 32 Less Spacer			.09 (0,039)	.15 (0,068)	.27 (0,12)	.47 (0,21)	.74 (0,33)	.88 (0,40)	1.48 (0,67)	2.62 (10,2)	2.87 (1,3)	4.44 (2,0)	4.95 (2,2)	6.97 (3,2)
Flange Bolt Torque - lb-in (Nm)	G/GF10, 31 & 51			108 (12)	372 (42)	372 (42)	900 (102)	900 (102)	1800 (203)	1800 (203)	1800 (203)	3000 (339)	3000 (339)	....	....
	G/GF20, 32 & 52			108 (12)	372 (42)	900 (102)	1800 (203)	1800 (203)	3000 (339)	3000 (339)	3000 (339)	3000 (339)	3000 (339)	3000 (339)	3000 (339)
	GP20 & GP52			...	...	...	420 (47,5)	420 47.5)	840 (94,9)	840 (94,9)	840 (94,9)	1440 (162,7)	1440 (162,7)	1440 (162,7)	1800 (203,4)

★ Refer to Selection Guide for maximum bores and Manual 427-108 for reboring instructions.

† Flexible couplings are designed to accommodate changes in operating conditions. Coupling life expectancy between initial alignment and maximum operating limits is a function of load, speed and lubrication. Application requirements in excess of 3/4° misalignment per flex half coupling should be referred to the Factory for review.

‡ Couplings with NLGI #0 grease may be operated at any speed between zero and the maximum shown.

458-110
April 2005
Supersedes 6-02

Rexnord Industries, LLC, Coupling Group
5555 S. Moorland Rd., New Berlin, WI 53151-7953 USA Telephone : 262-796-4060
Fax: 262-796-4064 e-mail: info@rexnord.com web: www.rexnord.com

REXNORD

Falk™ Double & Single Engagement Gear Couplings • Install. & Maint.

Sizes 1010 thru 1070G & GP & Sizes 1 thru 7GF (Page 7 of 8)

7 — Assembled Coupling Alignment Check – All Styles

The alignment can be checked without disassembling the coupling as shown at left. Determine "W" by measuring distances "W"max. and "W"min. between flex hub and sleeve using a depth micrometer or feeler gauges. The difference between "W"max. and "W"min. must not exceed the "W" value given in Table 4. Check "W" at each coupling end.

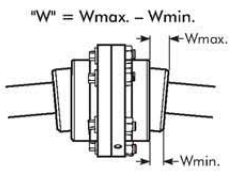

Check "W" at each flexible hub.

PARTS IDENTIFICATION AND PART NUMBER LOCATION

Coupling parts have identifying size and part numbers as illustrated below. When ordering parts, always SPECIFY SIZE, TYPE, HUB BORE, KEYWAY, and PART NUMBER found on each item.

Contact your Rexnord Distributor or Rexnord for price and availability.

EXAMPLE:
Complete 1050G20 Gear Coupling
Consisting of:
2 – 1050G20 Sleeves
(Includes: Gasket & Seal)
2 – 1050G Flex Hubs
Bore: 6.750 Keyway: 1.750 x .750
Bore: 7.375 Keyway: 1.750 x .750
1 – Fastener Set

TYPE G/GF10 & 20

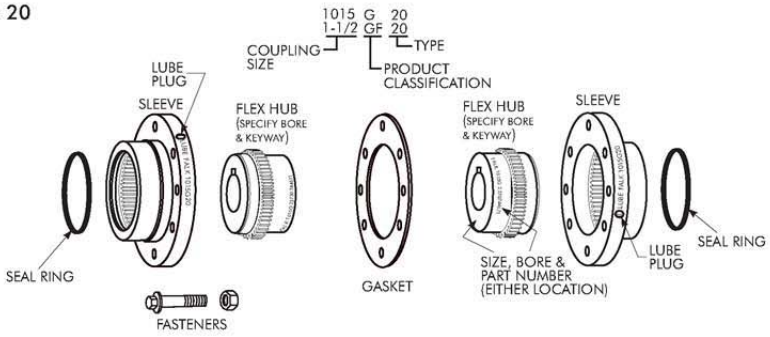

TYPE G/GF31 & 32

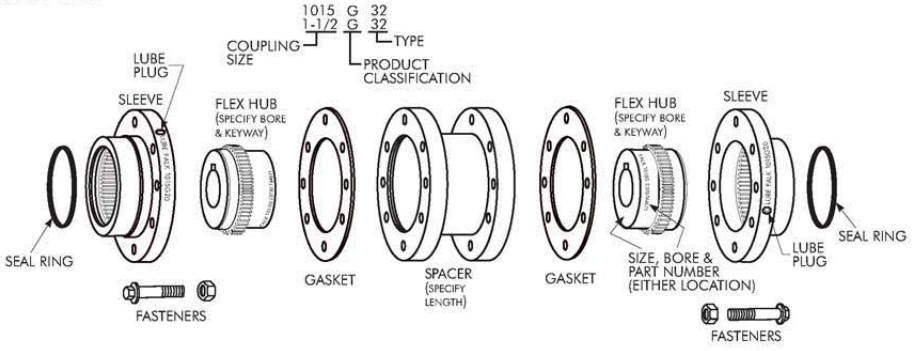

Rexnord Industries, LLC, Coupling Group
5555 S. Moorland Rd., New Berlin, WI 53151-7953 USA Telephone : 262-796-4060
Fax: 262-796-4064 e-mail: info@rexnord.com web: www.rexnord.com

458-110
April 2005
Supersedes 6-02

Install. & Maint. • Falk™ Double & Single Engagement Gear Couplings

REXNORD

(Page 8 of 8) Sizes 1010 thru 1070G & GP & Sizes 1 thru 7GF

TYPE G/GF51 & 52

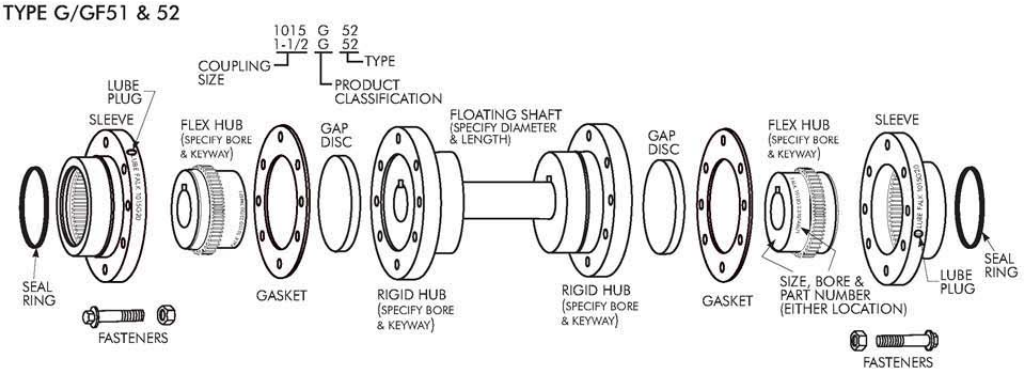

TYPE GP20

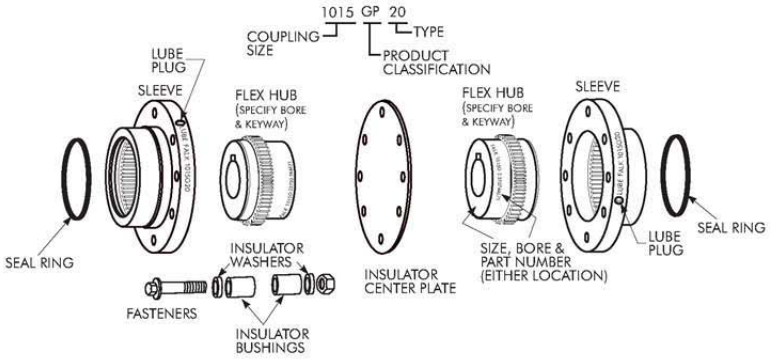

TYPE GP52

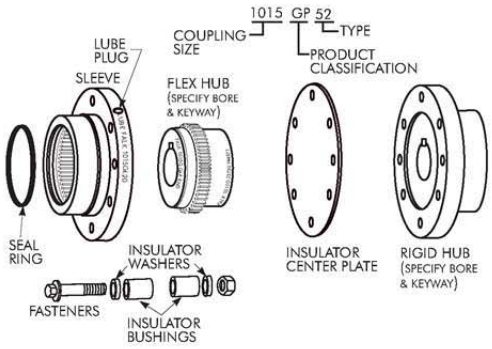

458-110
April 2005
Supersedes 6-02

Rexnord Industries, LLC, Coupling Group
5555 S. Moorland Rd., New Berlin, WI 53151-7953 USA Telephone : 262-796-4060
Fax: 262-796-4064 e-mail: info@rexnord.com web: www.rexnord.com

11.7.5 GEAR COUPLING – FALK COUPLING GV52

REXNORD

Falk™ Double & Single Engagement Gear Couplings • Install. & Maint.

Vertical Types GV10/20 & GV51/52 • Sizes 1010 thru 1070 Page 1 of 4)

Type GV20

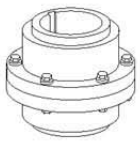

Type GV52

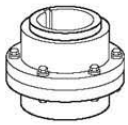

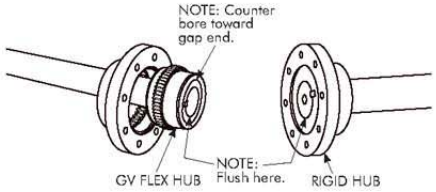

How To Use This Manual

This manual, in conjunction with manual 458-110, provides detailed instructions on installation, maintenance and parts identification for Falk Lifelign® double and single engagement gear couplings, Types GV10/20 & GV51/52. Use the table of contents below to locate required information.

Table of Contents

Introduction . . . . . Page 1
Lube Fittings. . . . . Page 1
Installation & Alignment Instructions . . . . . Pages 1 & 2
Installation & Alignment Data . . . . . Page 3
Parts Identification & Parts Interchangeability . . . . . Page 4
Lubrication . . . . . See 458-110, Pages 1 & 2
Balanced Couplings . . . . . See 458-110, Page 3
Maintenance . . . . . See 458-110, Page 3

CAREFULLY FOLLOW THE INSTRUCTIONS IN THIS MANUAL FOR OPTIMUM PERFORMANCE AND TROUBLE FREE SERVICE.

INTRODUCTION

This manual applies to standard coupling Types GV10 and GV51 with shrouded bolts, and GV20 and GV52 with exposed bolts. For couplings furnished with special features, refer to assembly drawing furnished with coupling for proper assembly arrangement and any additional installation or maintenance requirements.

Type GV couplings are recommended for vertical applications or for inclinations over 10° from horizontal. Do not use GV10/20 couplings for thrust applications — refer to Factory. Use type GV51/52 couplings for the lower coupling in vertical floating shaft assemblies and downward thrust applications.

CAUTION: Consult applicable local and national safety codes for proper guarding of rotating members. Observe all safety rules when installing or servicing couplings.

WARNING: Lockout starting switch of prime mover and remove all external loads from drive before installing or servicing couplings.

LUBE FITTINGS

Sleeves have ⅛" NPT lube holes for Sizes 1010GV20 - 1035GV20, and 1025GV10 - 1035GV10. (Sizes 1010GV10 - 1020GV10 use ¼"-28 SAE LT automotive plugs and fittings.) Sizes 1040GV thru 1070GV have ¼" NPT holes. Use a standard grease gun and lube fittings.

VERTICAL COUPLING INSTALLATION

Refer to TYPE G HORIZONTAL COUPLING INSTALLATION and MAXIMIZE PERFORMANCE & LIFE sections on Page 3 of 458-110.

1 — Mount Flanged Sleeve(s), Seals & Hubs

Place the flanged sleeves WITH seal rings on shafts BEFORE mounting the hubs. Mount flex or rigid hubs on their respective shafts, as shown above, so that the counterbore face is flush with the end of its shaft. Allow hubs to cool before proceeding. Seal keyways to prevent leakage. Insert set screws (if required) and tighten.

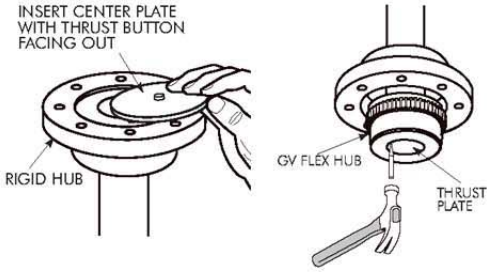

2A — Type GV51/52, Install Plates

Set the CENTERPLATE with thrust button in the RIGID hub and the THRUST plate in the FLEX hub counter bores. Stake to lock thrust plate in place. Note the direction shown for the thrust button. Place gasket on rigid hub flange face. Position the moveable unit and align per steps 3 and 4A.

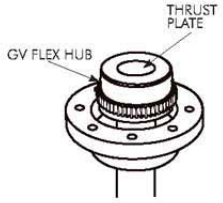

2B — Type GV10/20, Install Thrust Plate

Install THRUST plate in the LOWER hub counterbore. Position equipment and align per Steps 3 and 4B.

Rexnord Industries, LLC, Coupling Group
5555 S. Moorland Rd., New Berlin, WI 53151-7953 USA Telephone : 262-796-4060
Fax: 262-796-4064 e-mail: info@rexnord.com web: www.rexnord.com

458-116
October 1997
NEW

Install. & Maint. • Falk™ Double & Single Engagement Gear Couplings

(Page 2 of 4) Sizes 1010 thru 1070 • Vertical Types GV10/20 & GV51/52

REXNORD

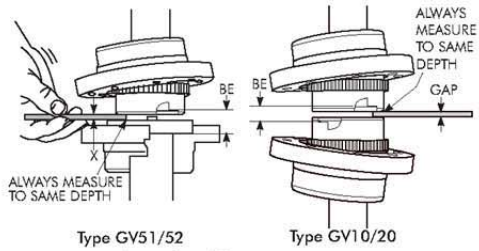

3 — Gap & Angular Alignment

For Types GV51/52 use a spacer bar equal in thickness to the "X" dimension specified in Table 1, Page 3. For Types GV10/20 use a spacer bar equal in thickness to gap specified in Table 1, Page 3. Insert bar, as shown above, to same depth at 90° intervals and measure clearance between bar and hub face with feelers. The difference in minimum and maximum measurements must not exceed the INSTALLATION ANGULAR limit specified in Table 1, Page 3.

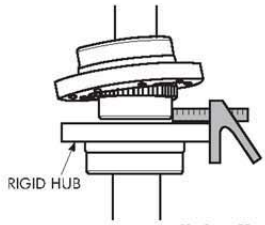

4A — Type GV51/52, Parallel Offset Alignment

Align coupling so that, with the square (or depth micrometer) resting squarely on the flange, equal clearance measurements are obtained between flange and the hub O.D. In four places 90° apart. The difference between minimum and maximum feeler readings should not exceed the INSTALLATION PARALLEL OFFSET limit in Table 1 divided by two. The above measurement is TIR. Tighten all foundation bolts and repeat steps 3 and 4A. Realign coupling if necessary.

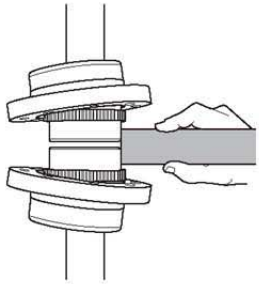

4B — Type GV10/20, Parallel Offset Alignment

Align so that a straight edge rests squarely (or within the limits specified in Table 1) on both hubs as shown above and also at 90° intervals. Check with feelers. The clearance should not exceed the INSTALLATION PARALLEL OFFSET limit specified in Table 1. Tighten all foundation bolts and repeat Steps 3 and 4B. Realign coupling if necessary.

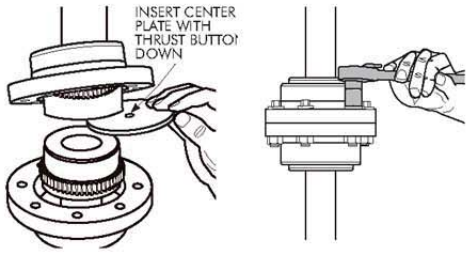

5 — Insert Gasket, Center Plate & Join Flanges

IMPORTANT: Generously pack flanged sleeve(s) with recommended grease. For Type GV10/20, insert gasket, then insert the centerplate with the thrust button down. Center the plate in the counterbore of the lower flanged sleeve. Draw flanged sleeve(s) into position. Use only the fasteners furnished with the coupling. IMPORTANT: Tighten fasteners to torque specified in Table 1, Page 3.

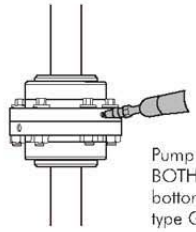

Pump grease into BOTH top and bottom sleeves of type GV10/20

6 — Lubricate

Remove all grease plugs and fill with recommended grease until an excess appears at the open hole; then insert plug. **CAUTION:** *Remove grease fitting and make certain all plugs are inserted after lubricating.*

458-116
October 1997
NEW

Rexnord Industries, LLC, Coupling Group
5555 S. Moorland Rd., New Berlin, WI 53151-7953 USA Telephone : 262-796-4060
Fax: 262-796-4064 e-mail: info@rexnord.com web: www.rexnord.com

REXNORD

Falk™ Double & Single Engagement Gear Couplings • Install. & Maint.

Vertical Types GV10/20 & GV51/52 • Sizes 1010 thru 1070 Page 3 of 4)

TABLE 1 — Installation & Alignment Data ■ Dimensions – Inches (Metric – mm)

COUPLING SIZE			1010	1015	1020	1025	1030	1035	1040	1045	1050	1055	1060	1070
TYPE GV51/52														
"X" Dimension			.140 (3,5)	.140 (3,5)	.140 (3,5)	.200 (5,0)	.200 (5,0)	.260 (6,6)	.300 (7,6)	.360 (9,1)	.315 (8,0)	.315 (8,0)	.315 (8,0)	.380 (9,6)
BE			.580 (14,7)	.580 (14,7)	.580 (14,7)	.640 (16,3)	.640 (16,3)	.710 (18,0)	.865 (22,0)	1.050 (26,7)	1.090 (27,7)	1.090 (27,7)	1.215 (30,9)	1.540 (39,1)
Installation Limits	Angular		.006 (0,15)	.007 (0,18)	.009 (0,23)	.011 (0,28)	.013 (0,33)	.015 (0,38)	.018 (0,46)	.020 (0,51)	.022 (0,56)	.024 (0,61)	.026 (0,66)	.031 (0,79)
	Parallel Offset		.001 (0,03)	.001 (0,03)	.001 (0,03)	.002 (0,05)	.002 (0,05)	.002 (0,05)	.003 (0,08)	.003 (0,08)	.003 (0,08)	.003 (0,08)	.004 (0,10)	.005 (0,13)
"W"	Operating Limits Check †		.035 (0,89)	.045 (1,14)	.054 (1,37)	.067 (1,70)	.079 (2,01)	.092 (2,34)	.108 (2,74)	.121 (3,07)	.131 (3,33)	.144 (3,66)	.157 (3,99)	.183 (4,65)
Coupling Speed Range (rpm)	NLGI #0 Grease – Max. ‡		7000	6000	5000	4750	4400	3900	3600	3200	2900	2650	2450	2150
	Falk LTG or NLGI #1 Grease	Min.	1030	700	550	460	380	330	290	250	230	210	190	160
		Allow.	8000	6500	5600	5000	4400	3900	3600	3200	2900	2650	2450	2150
Grease – lbs. (kg)			.08 (0,036)	.12 (0,054)	.20 (0,091)	.40 (0,181)	.60 (0,272)	1.00 (0,454)	1.50 (0,680)	2.00 (0,907)	3.00 (1,36)	3.70 (1,68)	5.00 (2,27)	7.20 (3,27)
Flange Bolt Torque lb-in. (Nm)	GV51		108 (12,2)	372 (42)	372 (42)	900 (102)	900 (102)	1800 (203)	1800 (203)	1800 (203)	3000 (339)	3000 (339)	. . .	. . .
	GV52		108 (12,2)	372 (42)	900 (102)	1800 (203)	1800 (203)	3000 (339)	3000 (339)	3000 (339)	3000 (339)	3000 (339)	3000 (339)	3000 (339)
TYPE GV10/20														
Gap-Hub Separation			.438 (11)	.438 (11)	.438 (11)	.562 (14)	.562 (14)	.688 (17)	.875 (22)	1.000 (25)	1.000 (25)	1.000 (25)	1.125 (29)	1.375 (35)
Gap Tolerance			.012 (0,30)	.012 (0,30)	.012 (0,30)	.018 (0,46)	.018 (0,46)	.025 (0,64)	.025 (0,64)	.031 (0,79)	.031 (0,79)	.031 (0,79)	.031 (0,79)	.037 (0,94)
BE (Between Shaft Ends)			.94 (23,7)	.94 (23,7)	.94 (23,7)	1.06 (26,7)	1.06 (26,7)	1.19 (29,7)	1.38 (34,7)	1.74 (44,0)	1.74 (44,0)	1.74 (44,0)	1.88 (48,0)	2.40 (60,4)
Installation Limits	Angular		.006 (0,15)	.007 (0,18)	.009 (0,23)	.011 (0,28)	.013 (0,33)	.015 (0,38)	.018 (0,46)	.020 (0,51)	.022 (0,56)	.024 (0,61)	.026 (0,66)	.031 (0,79)
	Parallel Offset		.002 (0,05)	.003 (0,08)	.003 (0,08)	.004 (0,10)	.005 (0,13)	.006 (0,15)	.007 (0,18)	.008 (0,20)	.009 (0,23)	.010 (0,25)	.011 (0,28)	.013 (0,33)
"W"	Operating Limits Check †		.035 (0,89)	.045 (1,14)	.054 (1,37)	.067 (1,70)	.079 (2,01)	.092 (2,34)	.108 (2,74)	.121 (3,07)	.131 (3,33)	.144 (3,66)	.157 (3,99)	.183 (4,65)
Coupling Speed Range (rpm)	NLGI #0 Grease – Max. ‡		7000	6000	5000	4750	4400	3900	3600	3200	2900	2650	2450	2150
	Falk LTG or NLGI #1 Grease	Min.	1030	700	550	460	380	330	290	250	230	210	190	160
		Allow.	8000	6500	5600	5000	4400	3900	3600	3200	2900	2650	2450	2150
Grease – lbs. (kg)			.18 (0,082)	.30 (0,136)	.50 (0,227)	.90 (0,408)	1.40 (0,635)	2.20 (0,998)	3.20 (1,45)	4.40 (2,00)	6.30 (2,86)	8.00 (3,63)	10.60 (4,81)	15.60 (7,08)
Flange Bolt Torque lb-in. (Nm)	GV10		108 (12,2)	372 (42)	372 (42)	900 (102)	900 (102)	1800 (203)	1800 (203)	1800 (203)	3000 (339)	3000 (339)	. . .	. . .
	GV20		108 (12,2)	372 (42)	900 (102)	1800 (203)	1800 (203)	3000 (339)	3000 (339)	3000 (339)	3000 (339)	3000 (339)	3000 (339)	3000 (339)

■ Refer to selection guide for maximum bores and Engineering 427-108 for reboring instructions.
† Refer to ANNUAL MAINTENANCE on Page 3 of 458-110.
‡ Couplings with NLGI #0 grease may be operated at any speed between zero and the maximum shown.

Rexnord Industries, LLC, Coupling Group
5555 S. Moorland Rd., New Berlin, WI 53151-7953 USA Telephone : 262-796-4060
Fax: 262-796-4064 e-mail: info@rexnord.com web: www.rexnord.com

458-116
October 1997
NEW

Install. & Maint. • Falk™ Double & Single Engagement Gear Couplings

(Page 4 of 4) Sizes 1010 thru 1070 • Vertical Types GV10/20 & GV51/52

REXNORD

PARTS IDENTIFICATION & PART NUMBER LOCATION

Coupling parts have identifying size and part numbers as illustrated below. When ordering parts, always SPECIFY SIZE, TYPE, HUB BORE, KEYWAY and PART NUMBER found on each item.

Contact your Rexnord Distributor or Rexnord for price and availability.

EXAMPLE:

Complete 1050GV20 Gear Coupling
Consisting of:
2 – 1050GV20 Sleeves
(Includes: Gasket & Seal)
2 – 1050G Flex Hubs
Bore: 6.750 Keyway: 1.750 x .750
Bore: 7.375 Keyway: 1.750 x .750
1 – Fastener Set
1 – Centering Component Kit
(Includes: Thrust Plate, Center Plate & Thrust Button)

TYPE GV51/52

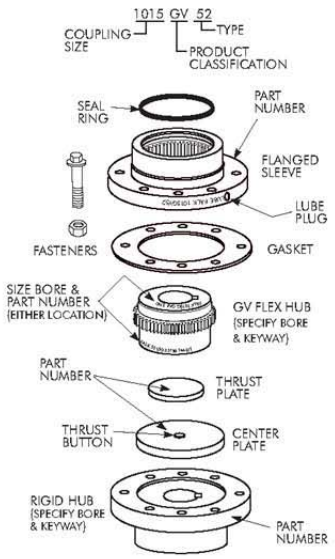

TYPE GV10/20

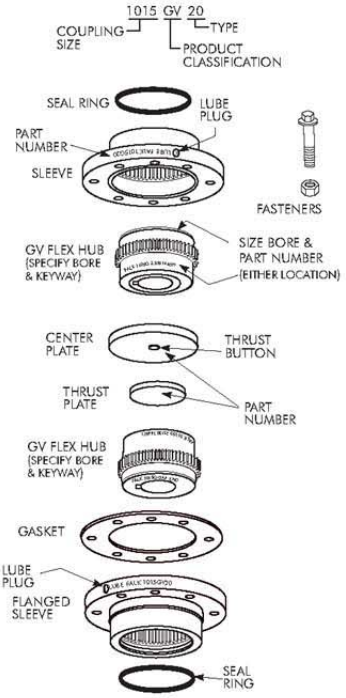

458-116
October 1997
NEW

Rexnord Industries, LLC, Coupling Group
5555 S. Moorland Rd., New Berlin, WI 53151-7953 USA Telephone : 262-796-4060
Fax: 262-796-4064 e-mail: info@rexnord.com web: www.rexnord.com

11.7.6 DISCONNECT COUPLING – FALK COUPLING G72

REXNORD

Falk™ Disconnect Gear Couplings • Installation and Maintenance

Type G72 • Sizes 1010 thru 1070 (Page 1 of 8)

How To Use This Manual

This manual provides detailed instructions on installation, maintenance and parts identification. Use the table of contents below to locate required information.

Table of Contents

Introduction . . . . . Page 1
Lube Fittings . . . . . Page 1
Lubrication (Coupling) . . . . . Pages 1-3
Lubrication (Shifting Collar) . . . . . Page 3-4
Installation & Alignment Instructions . . . . . Pages 3-6
Maintenance . . . . . Page 5
Parts Identification . . . . . Page 7
Part Number Location & Order Information . . . . . Page 8

Type G72

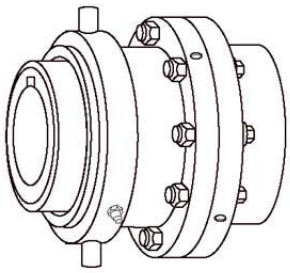

CAREFULLY FOLLOW THE INSTRUCTIONS IN THIS MANUAL FOR OPTIMUM PERFORMANCE AND TROUBLE FREE SERVICE.

INTRODUCTION

This manual applies to standard Falk Type G72 disconnect couplings with exposed bolts. For couplings furnished with special features, refer to assembly drawing furnished with coupling for proper assembly arrangement and any additional installation or maintenance requirements. Type G72 couplings are recommended for horizontal application only. For vertical applications, refer to the Factory.

Use Type G72 couplings for applications requiring a quick connect and disconnect function. Changeover must be performed under NO LOAD, STANDSTILL condition. Also covered in this manual is the optional hand operated shifter mechanism, used to shift and secure the proper position of the sleeve assembly. A shifting lever assembly drawing is required for assembly and should be found packaged with the lever components.

CAUTION: Consult applicable local and national safety codes for proper guarding of rotating members. Observe all safety rules when installing or servicing couplings.

WARNING: Lockout starting switch of prime mover and remove all external loads from drive before installing or servicing couplings.

LUBE FITTINGS

Sleeves have 1/8 NPT lube holes for Sizes 1010G thru 1035G and 1/4 NPT for Sizes 1040G thru 1070G. Use a standard grease gun and lube fittings. Shifting collars have 1/8 NPT lube fittings.

LUBRICATION

Adequate lubrication is essential for satisfactory operation. Because of its superior lubricating characteristics and low centrifuge properties, Falk Long Term Grease (LTG) is highly recommended.

The use of general purpose grease requires re-lubrication of the coupling at least every six months. If coupling leaks grease, is exposed to extreme temperatures, excessive moisture, experiences frequent reversals or axial movements; more frequent lubrication may be required.

USDA Approval

LTG has the United States Department of Agriculture Food Safety & Inspection Service approval for applications where there is no possibility of contact with edible products. (H-2 ratings).

Long Term Grease (LTG)

The high centrifugal forces encountered in couplings separate the base oil and thickener of general purpose greases. Heavy thickener, which has no lubrication qualities, accumulates in the tooth mesh area of gear couplings resulting in premature mesh failure unless periodic lubrication cycles are maintained.

Falk Long Term Grease (LTG) was developed specifically for couplings. It resists separation of the oil and thickener. The consistency of Falk LTG changes with operating conditions. As manufactured it is an NLGI #1/2 grade. Working of the lubricant under actual service conditions causes it to become semifluid while the grease near the seals will set to a heavier grade, helping to prevent leakage.

LTG is highly resistant to separation, easily out performing all other lubricants tested. The resistance to separation allows the lubricant to be used for relatively long periods of time.

Gear couplings initially lubricated with Falk Long Term Grease (LTG) will not require re-lubrication for up to three years.

Although LTG grease is compatible with most other coupling greases, the mixing of greases may dilute the benefits of LTG.

CAUTION: Do not use LTG in bearings. Do not use LTG for low speed applications. Refer to Table 3 for coupling speed range of LTG grease.

Rexnord Industries, LLC, Coupling Group
5555 S. Moorland Rd., New Berlin, WI 53151-7953 USA Telephone : 262-796-4060
Fax: 262-796-4064 e-mail: info@rexnord.com web: www.rexnord.com

458-760
August 1999 (PDF Revision)
Supersedes 8-96

Installation and Maintenance • Falk™ Disconnect Gear Couplings

(Page 2 of 8) Type G72 • Sizes 1010 thru 1070

REXNORD

Specifications — Falk LTG

The values shown are typical and slight variations are permissible.

AMBIENT TEMPERATURE RANGE — –20°F {–29°C} to 250°F {121°C}. Minimum Pump = 20°F {–7°C}

MINIMUM BASE OIL VISCOSITY — 3300SSU {715cSt} @ 100°F {38°C}.

THICKENER — Lithium soap/polymer.

CENTRIFUGE SEPARATION CHARACTERISTICS — ASTM #D4425-84 {Centrifuge Test} — K36 = 2/24 max., very high resistance to centrifuging.

NLGI GRADE {ASTM D–217} — 1/2.

CONSISTENCY {ASTM D–217} – 60 stroke worked penetration value in the range of 315 to 360 measured @ 77°F {25°C}.

MINIMUM DROPPING POINT — 350°F {177°C} minimum.

MINIMUM TIMKEN EP O.K. LOAD — 40 lbs. {18 kg}

ADDITIVES — Rust and oxidation inhibitors that do not corrode steel or swell or deteriorate synthetic seals.

Packaging

14 oz {0,4 kg} CARTRIDGES — For use in standard grease guns.

CASE LOTS OF ten 14 oz {0,4 kg} or sixty 14 oz CARTRIDGES.

35 lb {16 kg} PAIL — Ideal for larger size couplings or many smaller sizes.

120 lb {54 kg} KEG & 400 lb {181 kg} DRUM — For plants with central storage areas. A pump with a pressurized follower plate is required for dispensing grease.

General Purpose Grease

Bi-annual Lubrication — The following specifications and lubricants for general purpose grease apply to gear couplings that are lubricated bi-annually and operate within ambient temperatures of –30°F {–34°C} to 200°F {93°C}. For temperatures beyond this range, refer to the Factory. For normal service, use a NLGI #1 extreme pressure {EP} grease EXCEPT when the coupling speed is less than the minimum specified in Table 3, Page 6. At these lower speeds, use a NLGI #0 extreme pressure {EP} grease. When one or more gear couplings in an application require NLGI #0 grease, the same grease may be used in all of the couplings. DO NOT use cup grease.

If coupling leaks grease, is exposed to extreme temperatures, excessive moisture or experiences frequent reversals or axial movements, more frequent lubrication may be required.

Lubricants listed in Tables 1 and 2 on Pages 2 and 3 are typical products only and should not be construed as exclusive recommendations.

Specifications — General Purpose Coupling Lubricants

The values shown are typical and slight variations are permissible.

DROPPING POINT — 300°F {149°C} or higher.

CONSISTENCY — See Tables 1 or 2 on Pages 2 and 3.

SEPARATION AND RESISTANCE — Low oil separation rate and high resistance to separation from centrifuging.

LIQUID CONSTITUENT — Possess good lubricating properties . . . equivalent to a high quality, well refined petroleum oil with EP additives..

INACTIVE — Must not corrode steel or cause swelling or deterioration of synthetic seals.

CLEAN — Free from foreign inclusions.

TABLE 1 — NLGI #1 EP Grease

Coupling speed range . . . . . See Table 3
Temperature range . . . . . –30°F to +200°F {–34°C to 93°C}
Worked penetration at 77°F {25°C} 310-340
Dropping point . . . . . 300°F {149°C} or higher
Texture . . . . . Smooth or fibrous
Minimum Timken EP O.K. load . . . . . 30 lbs. {14 kg}
Does not corrode steel or swell or deteriorate synthetic seals.

Manufacturer	Lubricant ★
Amoco Oil Co.	Rykon Grease 1 EP
BP Oil Co.	Energrease LS-EP1
Chevron U.S.A. Inc.	Dura-Lith EP1
Citgo Petroleum Corp.	Premium Lithium Grease EP 1
Conoco Inc.	EP Conolith Grease #1
Exxon Company, U.S.A.	Lidok EP 1
Imperial Oil Limited	Ronek EP 1
Kendall Refining Co.	Lithium Grease L-416
Keystone Div. Pennwalt Corp.	Zeniplex #1
Lyondell Lubricants	Litholine Complex EP1
Mobil Oil Corp.	Mobilux EP 1
Petro-Canada Products	Multipurpose EP1
Phillips 66 Co.	Philube Blue EP
Shell Oil Co.	Alvania EP Grease #1
Shell Canada Ltd.	Alvania Grease EP1
Sun Oil Co.	Sun Prestige 741 EP
Texaco Lubricants	Multifak EP 1
Unocal 76 {East & West}	Unoba EP1

★ Lubricants listed may not be suitable for use in the food processing industry; check with lube manufacturer for approved lubricants.

458-760
August 1999 {PDF Revision}
Supersedes 8-96

Rexnord Industries, LLC, Coupling Group
5555 S. Moorland Rd., New Berlin, WI 53151-7953 USA Telephone : 262-796-4060
Fax: 262-796-4064 e-mail: info@rexnord.com web: www.rexnord.com

REXNORD

Falk™ Disconnect Gear Couplings • Installation and Maintenance

Type G72 • Sizes 1010 thru 1070 (Page 3 of 8)

TABLE 2 — NLGI #0 EP Grease

Coupling speed range . . . . . See Table 3
Temperature range. . . . . –30°F to +200°F (–34°C to +93°C)
Worked penetration at 77°F (25°C) 355-385
Dropping point . . . . . 300°F (149°C) or higher
Texture. . . . . Smooth or fibrous
Minimum Timken EP O.K. load. . . . . 30 lbs. (14 kg)
Does not corrode steel or swell or deteriorate synthetic seals.

Manufacturer	Lubricant ★
Amoco Oil Company	Rykon Premium Grease 0 EP
BP Oil Co.	Energrease LS-EPO
Chevron U.S.A. Inc.	Dura-Lith Grease EPO
Citgo Petroleum Corp.	Premium Lithium Grease EP 0
Conoco Inc.	EP Conolith Grease # 0
Exxon Company, U.S. A.	Lidok EP 0
Kendall Refining Co.	Lithium Grease L-406
Keystone Div. Pennwalt Corp.	Zeniplex #0
Mobil Oil Company	Mobilux EP 0
Petro-Canada Products	Multipurpose Lotemp EP Grease
Shell Oil Company	Alvania EP Grease RO
Shell Canada Ltd.	Alvania Grease EPW
Sun Oil Co.	Sun Prestige 740 EP
Texaco Lubricants	Multifak EP O
Union 76 (East & West)	Unoba EPO

★ Lubricants listed may not be suitable for use in the food processing industry; check with lube manufacturer for approved lubricants.

INSTALLATION

Only standard mechanics tools, torque wrenches, dial indicator and feeler gauges are required to install gear couplings. Clean all parts using a non-flammable solvent. Check hubs, shafts, and keyways for burrs. DO NOT heat clearance fit hubs. Use a lubricant that meets the specifications on Pages 2 and 3. Pack sleeve teeth with grease and lightly coat seals with grease BEFORE assembly. The required amount of grease is listed in Table 3, Page 6. Make certain flange fasteners are tightened to the required torque listed in Table 3, Page 6.

Interference Fit Hubs — Unless otherwise specified, gear couplings are furnished for an interference fit without setscrew. Heat hubs to a maximum 275°F(135°C) using an oven, torch, induction heater or an oil bath.

When an oxy-acetylene or blow torch is used, use an excess acetylene mixture. Mark hubs near the center of their length in several places on hub body with a temperature sensitive crayon, 275°F(135°C) melt temperature. Direct flame towards hub bore using constant motion to avoid overheating an area.

WARNING: If an oil bath is used, the oil must have a flash point of 350°F(177°C) or higher. Do not rest hubs on the bottom of the container. Do not use an open flame in a combustible atmosphere or near combustible materials.

Maximize Performance & Life

The performance and life of couplings depend largely upon how you install and maintain them. Before installing couplings, make certain that foundations of equipment to be connected meet manufacturers' requirements. Check for soft foot. The use of stainless steel shims is recommended. Measuring misalignment and positioning equipment within alignment tolerances is simplified with an alignment computer. These calculations can also be done graphically or mathematically.

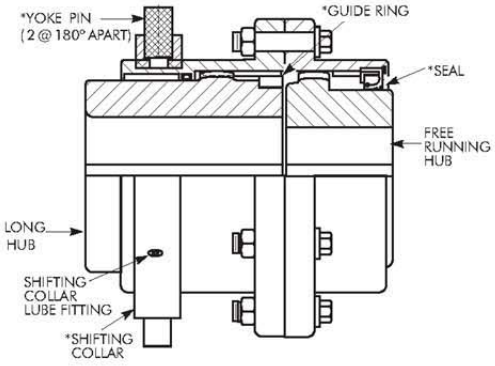

* Indicates components pre-assembled by Falk.

1 — Determine Correct Sleeve & Hub Assembly

Coupling sleeves must be assembled with proper mating hub as illustrated above.

2 — Mount Flanged Sleeve, Seal & Hubs

Place the flanged sleeve WITH seal ring on the shaft BEFORE mounting the hubs.

IMPORTANT: Mount hubs as shown above with SHORT shank toward gap.

Mount hubs so that each face is flush with the end of its shaft. Allow hubs to cool before proceeding. Seal keyways to prevent leakage. Insert setscrews (if required) and tighten.

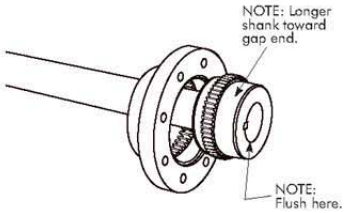

3 — Lubricate Shifting Collar

Lube shifting collar thru lube fitting in collar using Dow Corning (Molykote) BR2-PLUS or equivalent. Lube and rotate collar around sleeve to distribute grease. Continue to add lube until an excess forms around sleeve groove surfaces.

NOTE: If coupling was not supplied with an optional shifting lever, assemble shifting lever (furnished by others) as required, and proceed to Step 5.

Rexnord Industries, LLC, Coupling Group
5555 S. Moorland Rd., New Berlin, WI 53151-7953 USA Telephone : 262-796-4060
Fax: 262-796-4064 e-mail: info@rexnord.com web: www.rexnord.com

458-760
August 1999 (PDF Revision)
Supersedes 8-96

Installation and Maintenance • Falk™ Disconnect Gear Couplings

REXNORD

(Page 4 of 8) Type G72 • Sizes 1010 thru 1070

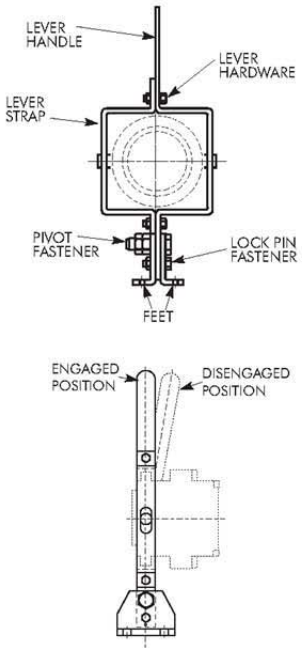

TYPICAL SHIFTING LEVER ASSEMBLY. DESIGNS MAY VARY.

4 — Assemble Factory Supplied Shifter Lever

Use the assembly drawing packaged with lever along with the following instructions. Assemble lever handle to feet with pivot fastener. Tighten pivot fastener so lever can freely pivot inside of feet. Position lever handle at right angle to feet and install lock pin fastener thru lined-up holes, and tighten. Assemble lever handle and strap around coupling so shifter yoke pins are positioned thru lever slots. Line up edges of lever strap and handle; then tighten lever hardware.

Locate lever in proper position in relation to long hub. Refer to shifter lever assembly drawing for dimensions. Shifter lever must also be positioned so that shifter yoke pin diameters are parallel to lever slot faces, with equal clearance around shifting collar. Fasten lever to foundation on structure. (Foundation fasteners are not normally furnished with lever.) Remove lever lock pin fastener and slide sleeve back from coupling gap.

5 — Gap and Angular Alignment

Position equipment in approximate alignment with approximate gap specified in Table 3, Page 6.

Use a spacer bar equal in thickness to gap specified in Table 3. Insert bar, as shown above right to same depth at 90° intervals and measure clearance between bar and hub face with feelers. The difference in minimum and maximum measurements must not

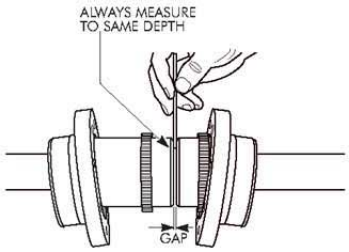

exceed the INSTALLATION ANGULAR limit specified in Table 3.

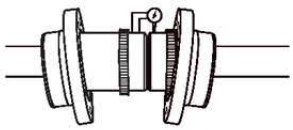

6 — Offset Alignment

Attach a dial indicator to the hub most easily rotated. Rotate hub with dial indicator one complete turn while indicating barrel diameter of other hub. The total indicator reading DIVIDED by two must not exceed the INSTALLATION OFFSET limit specified in Table 3, Page 6. Tighten all foundation bolts and repeat Steps 5 and 6. Realign coupling if necessary. Grease the hub teeth.

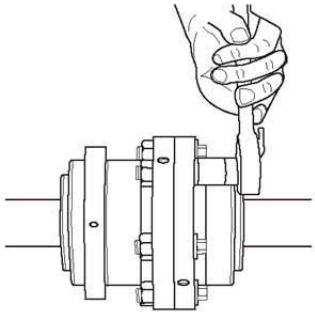

7 — Insert Gasket and Join Flanged Sleeves

Insert gasket between flanges. Position flanged sleeves with lube holes at about 90° and draw flanged sleeves into position. Use only the fasteners furnished with the coupling. IMPORTANT: Tighten fasteners to torques specified in Table 3 on Page 6.

458-760
August 1999 (PDF Revision)
Supersedes 8-96

Rexnord Industries, LLC, Coupling Group
5555 S. Moorland Rd., New Berlin, WI 53151-7953 USA Telephone : 262-796-4060
Fax: 262-796-4064 e-mail: info@rexnord.com web: www.rexnord.com

REXNORD

Falk™ Disconnect Gear Couplings • Installation and Maintenance

Type G72 • Sizes 1010 thru 1070 (Page 5 of 8)

8 — Lubricate Coupling

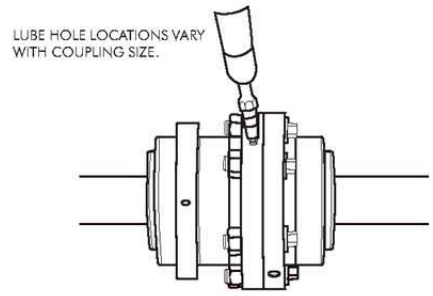

Remove all lube plugs and pump recommended grease into the coupling until an excess flows through an open lube hole and then plug that hole. Continue this procedure until lubricant has flowed through last open lube hole. Remove lube fitting and lube plug. Shift coupling sleeves back and forth thru full travel to purge excess grease from coupling. Some indexing of connecting shafts may be necessary to align coupling teeth for meshing. Insert all lube plugs before operating.

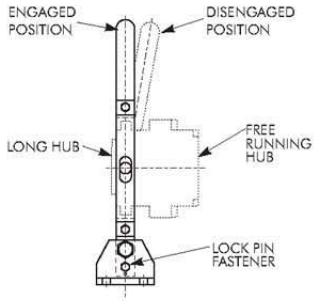

9 — To Engage Coupling:

With coupling at rest and lock pin fastener removed, slide sleeve toward long hub to engage coupling. When engaging, some indexing of connecting shafts may be necessary to align coupling teeth for meshing. Excessive force to slide coupling sleeve may indicate poor coupling alignment, coupling tooth mismatch, improper coupling gap or incorrect assembly of coupling or shifter lever. Correct problem before operating coupling. Lock sleeve assembly into engaged position with shifting lever lock pin fastener.

10 — To Disengage Coupling:

With coupling at rest and all external loads removed from drive, remove shifting lever lock pin fastener, slide sleeve toward free running hub to disengage coupling. Lock sleeve assembly into disengaged position using lock pin fastener.

MAINTENANCE

Frequency of lubricating shifting collar varies with service duty of coupling. Lubricate as required per Step 3, Page 3.

BI-ANNUAL MAINTENANCE

Re-lubricate coupling if using general purpose greases. If coupling leaks grease, is exposed to extreme temperatures, excessive moisture or frequent reversals, frequent lubrication may be required.

ANNUAL MAINTENANCE

For extreme or unusual operating conditions, check coupling more frequently.

1. Check alignment per Steps 5 and 6, Page 4. If the maximum operating misalignment values are exceeded, realign the coupling to the recommended installation values. See Table 3, Page 6 for installation and maximum operating misalignment.
2. Check tightening torques of all fasteners.
3. Inspect seal ring and gasket to determine if replacement is required.
4. Re-lubricate coupling if using general purpose grease.

Rexnord Industries, LLC, Coupling Group
5555 S. Moorland Rd., New Berlin, WI 53151-7953 USA Telephone : 262-796-4060
Fax: 262-796-4064 e-mail: info@rexnord.com web: www.rexnord.com

458-760
August 1999 (PDF Revision)
Supersedes 8-96

Installation and Maintenance • Falk™ Disconnect Gear Couplings

REXNORD

(Page 6 of 8) Type G72 • Sizes 1010 thru 1070

Table 3 — Installation & Alignment Data ★

DIMENSIONS — INCHES

SIZE			1010	1015	1020	1025	1030	1035	1040	1045	1050	1055	1060	1070
Gap-Hub Separation		G ±10%	.125	.125	.125	.188	.188	.250	.250	.312	.312	.312	.312	.375
Installation Limits		Offset Max	.002	.002	.002	.003	.003	.004	.005	.005	.006	.007	.008	.008
		Angular Max	.006	.007	.009	.011	.013	.015	.018	.020	.022	.024	.026	.031
Operating Limits †		Offset Max	.005	.007	.009	.012	.014	.017	.020	.020	.026	.027	.032	.033
		Angular Max	.024	.030	.036	.045	.052	.061	.072	.081	.087	.096	.105	.122
Coupling Speed Range (rpm)	Falk LTG or NLGI #1 Grease	Min ‡	1030	700	550	460	380	330	290	250	230	210	190	160
		Allow	4200	3200	2450	2000	1650	1530	1200	1060	950	860	830	680
Grease-lb	G72		.07	.12	.20	.38	.60	.90	1.50	1.70	3.00	3.70	5.25	7.20
Flange Bolt Wrench Size			.250	.375	.500	.625	.625	.750	.750	.750	.875	.875	.875	1.000
Flange Bolt Torque lb-in			108	372	900	1800	1800	3000	3000	3000	3000	3000	3000	3000

DIMENSIONS — MILLIMETERS

Gap-Hub Separation		G ±10%	3,18	3,18	3,18	4,78	4,78	6,35	6,35	7,92	7,92	7,92	7,92	9,53
Installation Limits		Offset Max	0,05	0,05	0,05	0,08	0,08	0,10	0,13	0,13	0,15	0,18	0,20	0,20
		Angular Max	0,15	0,18	0,23	0,28	0,33	0,38	0,46	0,51	0,56	0,61	0,66	0,79
Operating Limits †		Offset Max	0,13	0,18	0,23	0,30	0,36	0,43	0,51	0,51	0,66	0,69	0,81	0,84
		Angular Max	0,61	0,76	0,91	1,14	1,32	1,55	1,83	2,06	2,21	2,44	2,67	3,10
Coupling Speed Range (rpm)	Falk LTG or NLGI #1 Grease	Min ‡	1030	700	550	460	380	330	290	250	230	210	190	160
		Allow	4200	3200	2450	2000	1650	1530	1200	1060	950	860	830	680
Grease-kg	G72		0,0318	0,0544	0,0907	0,172	0,272	0,408	0,680	0,771	1,36	1,68	2,38	3,27
Flange Bolt Wrench Size			6,35	9,53	12,70	15,88	15,88	19,05	19,05	19,05	22,23	22,23	22,23	25,40
Flange Bolt Torque Nm			12,2	42,0	102	203	203	339	339	339	339	339	339	339

★ Refer to Selection Guide for maximum bores and Engineering 427-108 for reboring instructions.

† Flexible couplings are designed to accommodate changes in operating conditions. Coupling life expectancy between initial alignment and maximum operating limits is a function of load, speed and lubrication. Limits shown are extremes and should not be combined. Application requirements in excess of 3/4° misalignment per flex-half coupling should be referred to the Factory for review.

‡ Couplings with NLGI #0 grease may be operated at any speed between zero and the allowable shown.

458-760
August 1999 (PDF Revision)
Supersedes 8-96

Rexnord Industries, LLC, Coupling Group
5555 S. Moorland Rd., New Berlin, WI 53151-7953 USA Telephone : 262-796-4060
Fax: 262-796-4064 e-mail: info@rexnord.com web: www.rexnord.com

REXNORD

Falk™ Disconnect Gear Couplings • Installation and Maintenance

Type G72 • Sizes 1010 thru 1070 (Page 7 of 8)

PARTS IDENTIFICATION

All coupling parts have identifying size and part numbers as illustrated below.

When ordering parts, always SPECIFY SIZE, TYPE, HUB BORE, KEYWAY, and PART NUMBER found on each item.

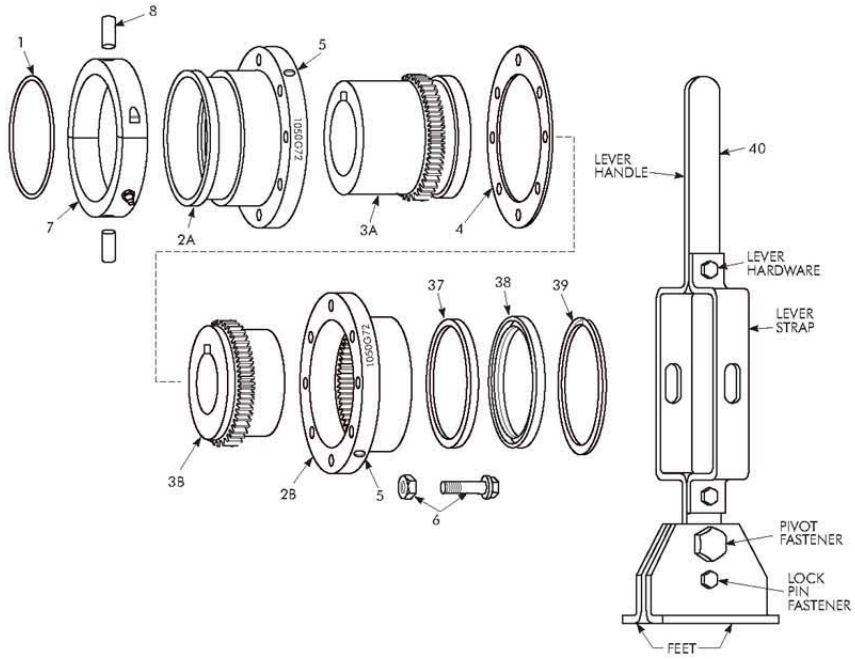

PART IDENTIFICATION

1. Seal Ring
2A. Sleeve – Long
2B. Sleeve – Free Running
3A. Hub – Long
3B. Hub – Free Running
4. Gasket
5. Lube Plug
6. Fasteners
7. Shifting Collar
8. Yoke Pin (2 @ 180° apart)
37. Seal Guard (Size 1070 only)
38. Lip Seal
39. Seal Retaining Ring (not required for Sizes 1010, 1020 & 1070)
40. Shifting Lever (not available by components)

Rexnord Industries, LLC, Coupling Group
5555 S. Moorland Rd., New Berlin, WI 53151-7953 USA Telephone : 262-796-4060
Fax: 262-796-4064 e-mail: info@rexnord.com web: www.rexnord.com

458-760
August 1999 (PDF Revision)
Supersedes 8-96

Installation and Maintenance • Falk™ Disconnect Gear Couplings

(Page 8 of 8) Type G72 • Sizes 1010 thru 1070

REXNORD

PART NUMBER LOCATION

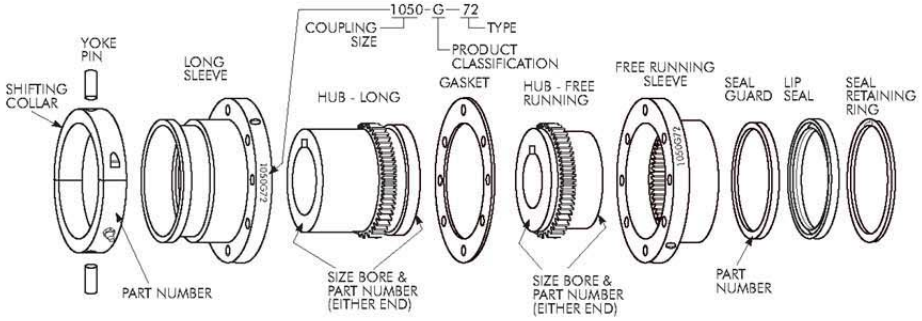

ORDER INFORMATION

1. Identify part(s) required by name on Page 7.
2. Furnish the following information.
   EXAMPLE:
   Coupling Size: 1050
   Coupling Type: G72
   Hub — Long
   Bore: 6.750
   Keyway: 1.750 x .750
   Hub — Free Running
   Bore: 7.000
   Keyway: 1.750 x .750
   Shifting Lever
3. Price parts from appropriate price list and discount sheet.

458-760
August 1999 (PDF Revision)
Supersedes 8-96

Rexnord Industries, LLC, Coupling Group
5555 S. Moorland Rd., New Berlin, WI 53151-7953 USA Telephone : 262-796-4060
Fax: 262-796-4064 e-mail: info@rexnord.com web: www.rexnord.com

11.7.7 MOTOR COUPLING – FALK COUPLING G20

REXNORD

Falk™ Double & Single Engagement Gear Couplings • Install. & Maint.

Sizes 1010 thru 1070G & GP & Sizes 1 thru 7GF (Page 1 of 8)

How To Use This Manual

This manual provides detailed instructions on installation, maintenance, and parts identification for Falk Lifelign ® gear couplings, Types G & GF10, 20, 31, 32, 51, 52, & GP20 & GP52. Use the table of contents below to locate required information.

Table of Contents

Introduction . . . . . Page 1
Lube Fittings. . . . . Page 1
Limited End Float . . . . . Page 1
Lubrication . . . . . Pages 1-2
Balanced Couplings . . . . . Page 3
Bi-Annual & Annual Maintenance . . . . . Page 3
Installation & Alignment Instructions . . . . . Pages 3-6 & 7
Installation & Alignment Data . . . . . Page 6
Parts Identification & Parts Interchangeability. . . . . Page 7-8

CAREFULLY FOLLOW THE INSTRUCTIONS IN THIS MANUAL FOR OPTIMUM PERFORMANCE AND TROUBLE FREE SERVICE.

INTRODUCTION

This manual applies to standard coupling Types G & GF10, 31 and 51 with shrouded bolts, and G & GF20, 32, 52, and GP20 & GP52 with exposed bolts. For couplings furnished with special features, refer to assembly drawing furnished with coupling for proper assembly arrangement and any additional installation or maintenance requirements. Refer to the specific manuals for GV vertical gear couplings installation and maintenance.

IMPORTANT: Use G/GF51 & 52 couplings for floating shaft assemblies or as the fourth bearing in three bearing systems. When gear couplings are mounted on a horizontal floating shaft, use a gap disc in each coupling. Where limited end float is required or where sleeve bearing motors are used, consult the Factory. Type GP52 couplings are recommended for horizontal application only. Refer Type GP52 floating shaft applications to the Factory.

CAUTION: *Consult applicable local and national safety codes for proper guarding of rotating members. Observe all safety rules when installing or servicing couplings.*

WARNING: *Lockout starting switch of prime mover and remove all external loads from drive before installing or servicing couplings.*

LUBE FITTINGS

Sleeves have ⅛" NPT lube holes for sizes 1010G20 - 1035G20, 1GF20 - 7GF20, 1025G10 - 1035G10, and 2½ GF10 - 5½ GF10. (Sizes 1010G10 - 1020G10 and 1GF10 - 2GF10 use ¼"-28 SAE LT automotive plugs and fittings.) Sizes 1040G thru 1070G have ¼" NPT holes. Use a standard grease gun and lube fittings.

LIMITED END FLOAT

Where limited end float is required or where sleeve bearing motors are used, consult the Factory.

LUBRICATION

Adequate lubrication is essential for satisfactory operation. Because of its superior lubricating characteristics and low centrifuge properties, Falk Long Term Grease (LTG) is highly recommended.

Type G/GP/GF20 Type G/GF32 Type G/GP/GF52

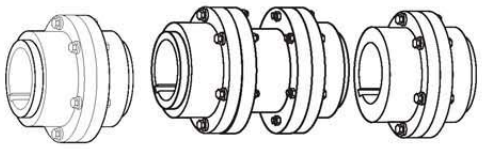

1000G Series Pictured

Gear couplings initially lubricated with Falk Long Term Grease (LTG) will not require re-lubrication for up to three years.

The use of general purpose grease requires re-lubrication of the coupling at least once every six months. If coupling leaks grease, is exposed to extreme temperatures, excessive moisture, experiences frequent reversals or axial movements; more frequent lubrication may be required.

USDA Approval

LTG has the United States Department of Agriculture Food Safety & Inspection Service approval for applications where there is no possibility of contact with edible products. (H-2 ratings.)

Long Term Grease (LTG)

The high centrifugal forces encountered in couplings separate the base oil and thickener of general purpose greases. Heavy thickener, which has no lubrication qualities, accumulates in the tooth mesh area of gear couplings resulting in premature mesh failure unless periodic lubrication cycles are maintained.

Falk Long Term Grease (LTG) was developed specifically for couplings. It resists separation of the oil and thickener. The consistency of Falk LTG changes with operating conditions. As manufactured, it is an NLGI #1/2 grade. Working of the lubricant under actual service conditions causes it to become semifluid, while the grease near the seals will set to a heavier grade, helping to prevent leakage.

LTG is highly resistant to separation, easily out performing all other lubricants tested. The resistance to separation allows the lubricant to be used for relatively long periods of time.

Although LTG grease is compatible with most other coupling greases, the mixing of greases may dilute the benefits of LTG.

CAUTION: *Do not use LTG in bearings.* Do not use LTG for low speed applications. Refer to Table 4, Page 6 for coupling speed range of LTG grease.

Packaging

14 oz. (0,4 Kg) CARTRIDGES — Individual or case lots of 10 or 30.

35 lb. (16 Kg) PAILS, 120 lb. (54 Kg) KEG & 400 lb. DRUMS.

Specifications — Falk LTG (Long Term Grease)

TEMPERATURE RANGE — –20°F (–29°C) to 250°F (121°C). Minimum pump = 20°F (–7°C).

MINIMUM BASE OIL VISCOSITY — 3300SSU (715cSt) @ 100°F (38°C).

THICKENER — Lithium soap/polymer.

Rexnord Industries, LLC, Coupling Group
5555 S. Moorland Rd., New Berlin, WI 53151-7953 USA Telephone : 262-796-4060
Fax: 262-796-4064 e-mail: info@rexnord.com web: www.rexnord.com

458-110
April 2005
Supersedes 6-02

Install. & Maint. • Falk™ Double & Single Engagement Gear Couplings

REXNORD

(Page 2 of 8) Sizes 1010 thru 1070G & GP & Sizes 1 thru 7GF

CENTRIFUGE SEPARATION CHARACTERISTICS — ASTM #D4425–84 (Centrifuge Test) — K36 = 2/24 max., very high resistance to centrifuging.

NLGI GRADE (ASTM D-217) — 1/2

CONSISTENCY (ASTM D-217) — 60 stroke worked penetration value in the range of 315 to 360 measured @ 77°F (25°C).

DROPPING POINT — 350°F (177°C) minimum.

MINIMUM TIMKEN EP O.K. LOAD — 40 lb. (18 kg).

ADDITIVES — Rust and oxidation inhibitors that do not corrode steel or swell or deteriorate synthetic seals.

General Purpose Grease

Bi-annual Lubrication — The following specifications and lubricants for general purpose grease apply to gear couplings that are lubricated bi-annually and operate within ambient temperatures of –30°F (–34°C) to 200°F (93°C). For temperatures beyond this range, consult Factory. For normal service, use a NLGI #1 extreme pressure (EP) grease EXCEPT when the coupling speed is less than the minimum specified in Table 4, Page 6. At these lower speeds, use a NLGI #0 extreme pressure (EP) grease. When one or more gear couplings in an application require NLGI #0 grease, the same grease may be used in all of the couplings. DO NOT use cup grease.

If coupling leaks grease, is exposed to extreme temperatures, excessive moisture or experiences frequent reversals or axial movements; more frequent lubrication may be required.

Lubricants listed in Tables 1, 2 & 3 are typical products only and should not be construed as exclusive recommendations.

Specifications — General Purpose Coupling Lubricants

COUPLING SPEED RANGE — See Table 4, Page 6.

TEMPERATURE RANGE — –30°F to +200°F(–34°C to +93°C)

WORKED PENETRATION AT 77°F(25°C) —
NLGI #1 . . . . . 310-340 (See Table 1)
NLGI #0 . . . . . 355-385 (See Table 2)

DROPPING POINT — 300°F(149°C) or higher

TEXTURE — Smooth or fibrous

MINIMUM TIMKEN O.K. LOAD — 30 lb.

SEPARATION AND RESISTANCE — Low oil separation rate and high resistance to separation from centrifuging.

LIQUID CONSTITUENT — Possess good lubricating properties . . . equivalent to a high quality, well refined petroleum oil with EP additives.

INACTIVE — Must not corrode steel or cause swelling or deterioration of synthetic seals.

Oil Lubrication

EP oils may be a more effective lubricant than grease when the required coupling speed is one half of the minimum speed range of NLGI #1 grease listed in Table 4, Page 6 (Minimum rpm ÷ 2). Oil lubricated couplings must be sealed to prevent leakage, i.e. keyways, etc. Couplings must be drained and refilled with new oil every six months for operating temperatures up to 160°F (71°C) and every three months for couplings operating at temperatures of 160°F (71°C) up to 200°F (93°C).

For temperatures beyond this range, consult Facotyr. The minimum operating temperature must not be lower than the pour point of the oil. The specified amount of grease listed in Table 4, Page 6, is in pounds and also applies to the volume of oil in pints.

Specifications

Type: Mild EP gear oil that meets AGMA Specifications 250.04.

Grade: AGMA #8EP (ISO VG 680).

Viscosity: 612-748 cSt @ 104°F (40°C).

Pour Point: 20°F (–7°C) Maximum.

Must not corrode steel or swell or deteriorate synthetic seals.

TABLE 1 — NLGI #1 Grease

Manufacturer	Lubricant ★
Amoco Oil Co. BP Oil Co. Chevron U.S.A., Inc. Citgo Petroleum Corp Conoco Inc.	Rykon Grease #1 EP Energrease LS-EP1 Dura-Lith EP1 Premium Lithium Grease EP1 EP Conolith Grease #1
Exxon Company, U.S.A.. Imperial Oil Ltd. Kendall Refining Co. Keystone Div., Pennwalt Corp. Lyondell Lubricants	Lidok EP1 Ronex EP1 Lithium Grease L-416 Zeniplex-1 Litholine Complex EP1
Mobil Oil Corp.. Petro-Canada Products Phillips 66 Co. Shell Oil Co. Shell Canada Ltd.	Mobilux EP1 Multipurpose EP1 Philube Blue EP Alvania EP Grease 1 Alvania Grease EP1
Sun Oil Co. Texaco Lubricants Unocal 76 (East & West)	Sun Prestige 741 EP Multifak EP1 Unoba EP1

TABLE 2 — NLGI #0 EP Grease

Manufacturer	Lubricant ★
Amoco Oil Co. BP Oil Co. Chevron U.S.A., Inc. Citgo Petroleum Corp Conoco Inc.	Rykon Premium Grease 0 EP Energrease LS-EP 0 Dura-Lith EP 0 Premium Lithium Grease EP 0 EP Conolith Grease #0
Imperial Oil Ltd. Exxon Company, U.S.A.. Kendall Refining Co. Keystone Div., Pennwalt Corp. Mobil Oil Corp..	Unirex EP0 Lidok EP 0 Lithium Grease L-406 Zeniplex-0 Mobilux EP 0
Petro-Canada Products Phillips 66 Co. Shell Oil Co. Shell Canada Ltd.	Multipurpose Lotemp EP Grease Philube Blue EP Alvania EP Grease RO Alvania Grease EPW
Sun Oil Co. Texaco Lubricants Unocal 76 (East & West)	Sun Prestige 740 EP Multifak EP 0 Unoba EP 0

TABLE 3 — Oil Lubricants

Manufacturer	Lubricant ★
Amoco Chevron, U.S.A. Exxon Co., U.S.A. Gulf Oil Co.	Permagear EP 160 NL Gear Compound 680 Spartan EP680 EP Lubricant HD 680
Mobil Oil Co. Shell Oil Co. Texaco Inc. Union Oil Co. of Calif.	Mobilgear 636 Omala Oil 680 Meropa 680 Extra Duty NL Gear Lube 8EP

★ Lubricants listed may not be suitable for use in the food processing industry; check with lube manufacturer for approved lubricants.

458-110
April 2005
Supersedes 6-02

Rexnord Industries, LLC, Coupling Group
5555 S. Moorland Rd., New Berlin, WI 53151-7953 USA Telephone : 262-796-4060
Fax: 262-796-4064 e-mail: info@rexnord.com web: www.rexnord.com

HORIZONTAL COUPLING INSTALLATION, ALL TYPES

Only standard mechanics tools, torque wrenches, inside micrometer, dial indicator, straight edge, spacer bar, and feeler gauges are required to install gear couplings. Clean all parts using a non-flammable solvent. Check hubs, shafts, and keyways for burrs. DO NOT heat clearance fit hubs. Use a lubricant that meets the specifications on Page 2. Pack sleeve teeth with grease and lightly coat seals with grease BEFORE assembly. The required amount of grease is listed in Table 4. Make certain flange fasteners are tightened to the required torque listed in Table 4.

Interference Fit Hubs — Unless otherwise specified, gear couplings are furnished for an interference fit without setscrews. Heat hubs to 275°F(135°C) using an oven, torch, induction heater, or an oil bath.

CAUTION: *To prevent seal damage DO NOT heat hubs beyond a maximum temperature of 400°F (205°C) for Type G and 500°F (260°C) for Type GF.*

When an oxy-acetylene or blow torch is used, use an excess acetylene mixture. Mark hubs near the center of their length in several places on hub body with a temperature sensitive crayon, 275°F (135°C) melt temperature. Direct flame towards hub bore using constant motion to avoid overheating an area.

WARNING: *If an oil bath is used, the oil must have a flash point of 350°F (177°C) or higher. Do not rest hubs on the bottom of the container. Do not use an open flame in a combustible atmosphere or near combustible materials.*

Maximize Performance & Life

The performance and life of couplings depend largely upon how you install and maintain them. Before installing couplings, make certain that foundations of equipment to be connected meet manufacturers' requirements. Check for soft foot. The use of stainless steel shims is recommended. Measuring misalignment and positioning equipment within alignment tolerances is simplified with an alignment computer. These calculations can also be done graphically or mathematically, and allow the incorporation of "cold offsets", which will compensate for shaft position changes due to thermal growth.

Balanced Couplings

The fasteners provided are matched sets and must not be mixed or substituted. Assembly balanced couplings are match marked and must be assembled with mating match marks aligned. In some sizes, the flanges are not match marked. Coupling flanges must be assembled with O.D.'s aligned to within .002" (0,05 mm). Component parts of assembly balanced couplings must not be replaced without re-balancing the complete assembly.

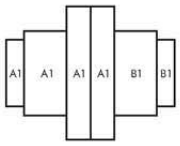

BI-ANNUAL MAINTENANCE

Re-lubricate coupling if using general purpose grease. If coupling leaks grease, is exposed to extreme temperatures, excessive moisture or frequent reversals; more frequent lubrication may be required.

ANNUAL MAINTENANCE

For extreme or unusual operating conditions, check coupling more frequently.

1. Check alignment per Step 7, Page 7. If the maximum operating misalignment values are exceeded, realign the coupling to the recommended installation values. See Table 4, for installation and maximum operating misalignment values.
2. Check tightening torques of all fasteners.
3. Inspect seal ring and gasket to determine if replacement is required.
4. Re-lubricate coupling if using general purpose grease.

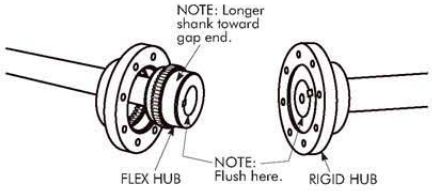

ALL TYPES G/GF/GP HORIZONTAL COUPLING INSTALLATION

1 — Mount Flanged Sleeves, Seals & Hubs

Place the flanged sleeves WITH seal rings on shafts BEFORE mounting flex hubs. Mount flex or rigid hubs on their respective shafts, as shown above, so that each face is flush with the end of its shaft. Allow hubs to cool before proceeding. Seal keyways to prevent leakage. Insert setscrews (if required) and tighten. Position equipment in approximate alignment with approximate hub gap.

For Type G/GF10 & 20 and GP20, position equipment in approximate alignment with gap equal to that given in Table 4.

For Type G/GF31 & 32 spacer and G/GF/GP51 & 52 floating shaft, with rigid hubs on floating shaft, position equipment in approximate alignment with approximate distance between shafts per Step 4A, Figure 2 on Page 5.

For G/GF/GP51 & 52 with flex hubs on the floating shaft, refer to Step 4A, Figure 1 on Page 5, to determine distance between shafts.

Rexnord Industries, LLC, Coupling Group
5555 S. Moorland Rd., New Berlin, WI 53151-7953 USA Telephone : 262-796-4060
Fax: 262-796-4064 e-mail: info@rexnord.com web: www.rexnord.com

458-110
April 2005
Supersedes 6-02

Install. & Maint. • Falk™ Double & Single Engagement Gear Couplings

REXNORD

(Page 4 of 8) Sizes 1010 thru 1070G & GP & Sizes 1 thru 7GF

2 — Gap & Angular Alignment for Close Coupled, Spacer, Short Floating Shaft, and Insulated Couplings

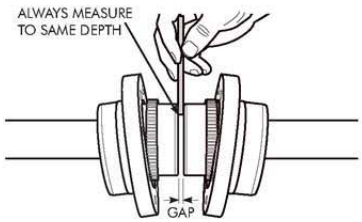

2A — Type G/GF10 & 20 & GP20

Use a spacer bar equal in thickness to gap specified in Table 4. Insert bar, as shown above, to same depth at 90° intervals and measure clearance between bar and hub face with feelers. The difference in minimum and maximum measurements must not exceed the INSTALLATION ANGULAR limit specified in Table 4.

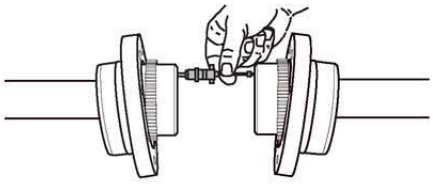

2B — G/GF31 & 32 (Spacer), and Type G/GF51 & 52 (Short Floating Shaft, See Step 4 for Long Floating Shaft)

Use an inside micrometer as shown above and at 90° intervals to measure the distance between hubs. The difference in minimum and maximum measurements should not exceed the INSTALLATION ANGULAR limit specified in Table 4.

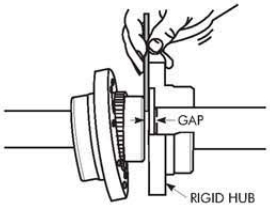

2C — G/GF51 & 52 & GP52 (As Fourth Bearing in Three Bearing System)

Use a spacer bar equal in thickness to the "X" dimension specified in Table 4. Insert bar, as shown above to same depth at 90° intervals and measure clearance between bar and hub face with feelers. The difference in minimum and maximum measurements must not exceed the INSTALLATION ANGULAR limit specified in Table 4.

3 — Offset Alignment for Close Coupled, Spacer, Short Floating Shaft, and Insulated Couplings

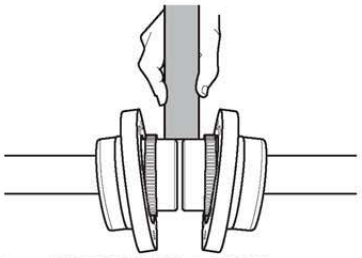

3A — Type G/GF10 & 20 & GP20

Align so that a straight edge rests squarely on both hubs as shown above and also at 90° intervals. Check with feelers. The clearance should not exceed the INSTALLATION OFFSET limit specified in Table 4. Tighten foundation bolts and repeat Steps 2A and 3A. Realign coupling if necessary. Use a dial indicator if hub extension is too short for accurate use of a straight edge.

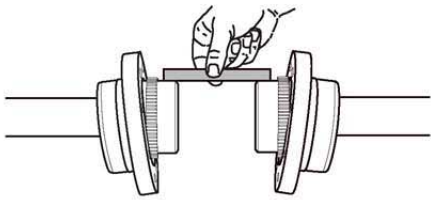

3B — Type G/GF31 & 32 (Spacer), and Type G/GF51 & 52 (Short Floating Shaft, See Step 4 for Long Floating Shaft)

Align so that a straight edge rests squarely (or within the limits specified in Table 4) on both hubs as shown above and also at 90° intervals. Check with feelers. The clearance should not exceed the INSTALLATION OFFSET limit specified. Tighten all foundation bolts and repeat Steps 2B and 3B. Realign coupling if necessary.

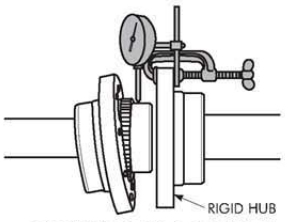

3C — Type G/GF51 & 52 & GP52 (As Fourth Bearing in Three Bearing System)

Clamp a dial indicator to the rigid hub as shown and rotate the rigid hub one complete turn. The total indicator reading DIVIDED by two must not exceed the INSTALLATION OFFSET limit specified in Table 4. Tighten all foundation bolts and repeat

458-110
April 2005
Supersedes 6-02

Rexnord Industries, LLC, Coupling Group
5555 S. Moorland Rd., New Berlin, WI 53151-7953 USA Telephone : 262-796-4060
Fax: 262-796-4064 e-mail: info@rexnord.com web: www.rexnord.com

REXNORD

Falk™ Double & Single Engagement Gear Couplings • Install. & Maint.

Sizes 1010 thru 1070G & GP & Sizes 1 thru 7GF (Page 5 of 8)

Steps 2C and 3C. Realign coupling if necessary.

4 — Type G/GF/GP51 & 52 With Long Floating

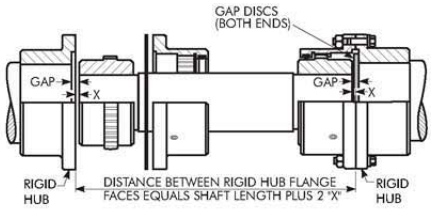

Figure 1

Shaft

4A — Determine Distance Between Shafts

For Figure 1 above, measure the length of the floating shaft and add 2 times the gap dimension from Table 4 to get the distance between the shafts to be coupled.

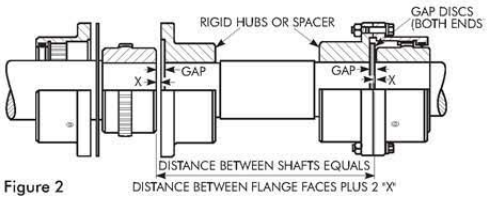

Figure 2

For Figure 2 above, measure the overall floating shaft or spacer assembly length from flange to flange and add 2 times the "X" dimension from Table 4 to get the distance between the shafts to be coupled.

4B — Position First Drive & Floating Shaft

Set the drive most difficult to move to true level and bolt it in place. Set the floating shaft on V-blocks. Then align coupling on fixed drive as follows:

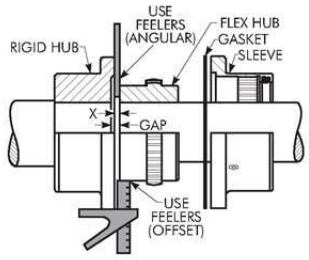

Figure 3

4B1 — Refer to Figure 3

Use a spacer bar equal in thickness to the "X" dimension specified in Table 4. Insert the bar to the same depth at 90° intervals and measure the clearance between the bar and hub face with feelers as shown. The difference in minimum and maximum measurements should not exceed the INSTALLATION ANGULAR limit specified in Table 4.

4B2 — Refer to Figure 3

Align coupling & floating shaft so that, with the square head (or depth micrometer) resting squarely on the flange, equal clearance measurements are obtained between flange and the hub O.D. in four places 90° apart. The difference between minimum and maximum feeler readings should not exceed the INSTALLATION OFFSET limit in Table 4 divided by 2. The above measurement is TIR.

4C — Position Second Drive

Position second drive for the correct "X" dimension and align per Steps 4B1 & 4B2. DO NOT move the floating shaft. Bolt drive in place and recheck alignment and gap. Realign if necessary. For greater accuracy, check alignment with a depth micrometer or dial indicator.

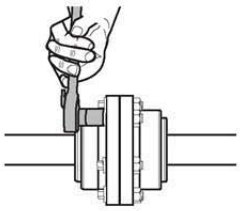

5 —Assemble Coupling — G and GF Only

Insert gasket between flanges and gap disc into counterbore of each rigid hub for floating shaft assemblies and bolt flanges together. Use only the fasteners furnished with the coupling. IMPORTANT: Tighten fasteners to torque specified in Table 4.

5A — Assemble Coupling – Insert Insulator Parts and Join Flanged Sleeves (GP20 & GP52)

Clean flange faces and coat with Permatex #2 or equivalent. DO NOT install gaskets. Insert insulator bushings into flanged holes. Draw one sleeve onto hub and position insulator center plate on flange face. Draw other sleeve onto hub and assemble fasteners with insulator washers. Use only fasteners furnished with coupling. IMPORTANT: Tighten fasteners to torque specified in Table 4.

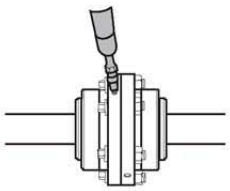

6 — Lubricate

Remove all grease plugs and fill with recommended grease until an excess appears at an open hole; then insert plug. Continue procedure until all plugs have been inserted.
CAUTION: *Remove grease fitting and make certain all plugs are inserted after lubricating.*

Rexnord Industries, LLC, Coupling Group
5555 S. Moorland Rd., New Berlin, WI 53151-7953 USA Telephone : 262-796-4060
Fax: 262-796-4064 e-mail: info@rexnord.com web: www.rexnord.com

458-110
April 2005
Supersedes 6-02

Install. & Maint. • Falk™ Double & Single Engagement Gear Couplings

REXNORD

(Page 6 of 8) Sizes 1010 thru 1070G & GP & Sizes 1 thru 7GF

TABLE 4 — Installation & Alignment Data For Types G/GF10, 20, 31, 32, 51, 52 & GP20 & GP52 ★ — Dimensions – Inches (Metric – mm)

COUPLING SIZE				1010G 1GF	1015G 1-½GF	1020G 2GF	1025G 2-½GF	1030G 3GF	1035G 3-½GF	1040G 4GF	1045G 4-½GF	1050G 5GF	1055G 5-½GF	1060G 6GF	1070G 7GF
Gap		G/GF10 & 20		.125 (3)	.125 (3)	.125 (3)	.188 (5)	.188 (5)	.250 (6)	.250 (6)	.312 (8)	.312 (8)	.312 (8)	.312 (8)	.375 (10)
		GP20		...	...	...	.325 (8)	.325 (8)	.385 (10)	.385 (10)	.450 (11)	.450 (11)	.450 (11)	.450 (11)	.510 (13)
		G/GF51 & 52		.156 (4)	.156 (4)	.156 (4)	.188 (5)	.188 (5)	.218 (6)	.281 (7)	.312 (8)	.344 (9)	.344 (9)	.406 (10)	.500 (13)
		GP52		...	...	...	.325 (8)	.325 (8)	.350 (9)	.420 (11)	.450 (11)	.480 (12)	.480 (12)	.540 (14)	.635 (16)
"X" Dimension		G/GF51 & 52		.056 (1)	.056 (1)	.056 (1)	.088 (2)	.088 (2)	.118 (3)	.121 (3)	.152 (4)	.144 (4)	.144 (4)	.146 (4)	.170 (4)
		GP52		...	...	...	.215 (5)	.215 (5)	.245 (6)	.246 (6)	.280 (7)	.270 (7)	.270 (7)	.270 (7)	.295 (8)
Installation Limits	G/GF10, 20, 31, 32, 51 & 52 & GP20 & GP52		Angular	.006 (0,15)	.007 (0,19)	.009 (0,23)	.011 (0,28)	.013 (0,33)	.015 (0,39)	.018 (0,46)	.020 (0,51)	.022 (0,55)	.024 (0,61)	.026 (0,66)	.031 (0,78)
	G/GF10 & 20 & GP20		Offset	.002 (0,05)	.003 (0,07)	.003 (0,8)	.004 (0,10)	.005 (0,13)	.006 (0,15)	.007 (0,18)	.008 (0,20)	.009 (0,23)	.010 (0,26)	.011 (0,28)	.013 (0,33)
	G/GF51 & 52 & GP52		Offset	.001 (0,03)	.001 (0,03)	.001 (0,03)	.002 (0,04)	.002 (0,05)	.002 (0,05)	.003 (0,06)	.003 (0,08)	.003 (0,08)	.003 (0,08)	.004 (0,10)	.005 (0,11)
	G/GF31 & 32		Offset	.006 (0,14)	.006 (0,16)	.007 (0,17)	.008 (0,20)	.009 (0,23)	.011 (0,28)	.012 (0,30)	.013 (0,32)	.015 (0,38)	.016 (0,41)	.017 (0,43)	.017 (0,44)
"W"†	Installation Check		All Types	.006 (0,15)	.007 (0,19)	.009 (0,23)	.011 (0,28)	.013 (0,33)	.015 (0,39)	.018 (0,46)	.020 (0,51)	.022 (0,55)	.024 (0,61)	.026 (0,66)	.031 (0,78)
	Operating Limit Check		All Types	.035 (0,90)	.045 (1,13)	.054 (1,38)	.067 (1,71)	.079 (2,00)	.092 (2,33)	.108 (2,74)	.121 (3,08)	.131 (3,33)	.144 (3,66)	.157 (3,99)	.183 (4,66)
Coupling Speed Range (rpm)	G10, 20, 51, 52 & GP20 & GP52	NLGI #0 Grease-Max. ‡		7000	6000	5000	4750	4400	3900	3600	3200	2900	2650	2450	2150
		Falk LTG or NLGI #1 Grease	Min.	1030	700	550	460	380	330	290	250	230	210	190	160
			Allow.	8000	6500	5600	5000	4400	3900	3600	3200	2900	2650	2450	2150
	G31 & 32	NLGI #0 Grease-Max. ‡		7000	5500	4600	4000	3600	3100	2800	2600	2400	2200	2100	1800
		Falk LTG or NLGI #1 Grease	Min.	1030	700	550	460	380	330	290	250	230	210	190	160
			Allow.	7000	5500	4600	4000	3600	3100	2800	2600	2400	2200	2100	1800
Grease - pounds (kg)	G10 & 20			.09 (0,041)	.16 (0,073)	.25 (0,11)	.50 (0,23)	.80 (0,36)	1.20 (0,54)	2.00 (0,91)	2.30 (1,0)	3.90 (1,8)	4.90 (2,2)	7.00 (3,2)	9.60 (4,4)
	G51 & 52			.05 (0,023)	.09 (0,041)	.15 (0,068)	.26 (0,12)	.40 (0,18)	.60 (0,27)	1.03 (0,47)	1.25 (0,57)	2.00 (0,91)	2.50 (1,1)	3.75 (1,7)	5.00 (2,3)
	G31 & 32 per in. Spacer Length			....	....	.03 (0,014)	.06 (0,027)	.06 (0,027)	.12 (0,054)	.20 (0,091)	.20 (0,091)	.20 (0,091)	.20 (0,091)	.20 (0,091)	.20 (0,091)
	G31 & 32 Less Spacer			.09 (0,041)	.16 (0,073)	.25 (0,11)	.50 (0,23)	.80 (0,36)	1.20 (0,54)	2.00 (0,91)	2.30 (1,0)	3.90 (1,8)	4.90 (2,2)	7.00 (3,2)	9.60 (4,4)
	GF10 & 20			.09 (0,039)	.15 (0,068)	.27 (0,12)	.47 (0,21)	.74 (0,33)	.88 (0,40)	1.48 (0,67)	2.62 (1,2)	2.87 (1,3)	4.44 (2,0)	4.95 (2,2)	6.79 (3,1)
	GP20			...	...	...	.50 (0,227)	.80 (0,363)	1.20 (0,544)	2.00 (0,907)	2.30 (1,04)	3.90 (1,77)	4.90 (2,22)	7.00 (3,18)	9.60 (4,35)
	GF51 & 52			.06 (0,025)	.09 (0,042)	.15 (0,070)	.27 (0,12)	.41 (0,19)	.50 (0,23)	.87 (0,40)	1.46 (0,66)	1.66 (0,75)	2.47 (1,1)	2.93 (1,3)	4.27 (1,9)
	GP52			...	...	...	.26 (0,118)	.40 (0,181)	.60 (0,272)	1.03 (0,467)	1.25 (0,567)	2.00 (0,907)	2.50 (1,13)	3.75 (1,70)	5.00 (2,27)
	GF31 & 32 per in. Spacer Length			.06 (0,027)	.07 (0,032	.07 (0,032	.08 (0,037)	.02 (0,009)	.16 0,072)	.21 (0,095)	.12 0,053)	.13 (0,059)	.14 (0,065)	.71 (0,322)	.91 (0,413)
	GF31 & 32 Less Spacer			.09 (0,039)	.15 (0,068)	.27 (0,12)	.47 (0,21)	.74 (0,33)	.88 (0,40)	1.48 (0,67)	2.62 (10,2)	2.87 (1,3)	4.44 (2,0)	4.95 (2,2)	6.97 (3,2)
Flange Bolt Torque - lb-in (Nm)	G/GF10, 31 & 51			108 (12)	372 (42)	372 (42)	900 (102)	900 (102)	1800 (203)	1800 (203)	1800 (203)	3000 (339)	3000 (339)	....	....
	G/GF20, 32 & 52			108 (12)	372 (42)	900 (102)	1800 (203)	1800 (203)	3000 (339)	3000 (339)	3000 (339)	3000 (339)	3000 (339)	3000 (339)	3000 (339)
	GP20 & GP52			...	...	...	420 (47,5)	420 47.5)	840 (94,9)	840 (94,9)	840 (94,9)	1440 (162,7)	1440 (162,7)	1440 (162,7)	1800 (203,4)

★ Refer to Selection Guide for maximum bores and Manual 427-108 for reboring instructions.

† Flexible couplings are designed to accommodate changes in operating conditions. Coupling life expectancy between initial alignment and maximum operating limits is a function of load, speed and lubrication. Application requirements in excess of 3/4° misalignment per flex half coupling should be referred to the Factory for review.

‡ Couplings with NLGI #0 grease may be operated at any speed between zero and the maximum shown.

458-110
April 2005
Supersedes 6-02

Rexnord Industries, LLC, Coupling Group
5555 S. Moorland Rd., New Berlin, WI 53151-7953 USA Telephone : 262-796-4060
Fax: 262-796-4064 e-mail: info@rexnord.com web: www.rexnord.com

REXNORD

Falk™ Double & Single Engagement Gear Couplings • Install. & Maint.

Sizes 1010 thru 1070G & GP & Sizes 1 thru 7GF (Page 7 of 8)

7 — Assembled Coupling Alignment Check – All Styles

The alignment can be checked without disassembling the coupling as shown at left. Determine "W" by measuring distances "W"max. and "W"min. between flex hub and sleeve using a depth micrometer or feeler gauges. The difference between "W"max. and "W"min. must not exceed the "W" value given in Table 4. Check "W" at each coupling end.

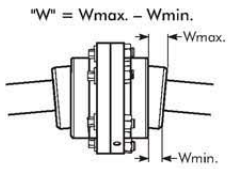

Check "W" at each flexible hub.

PARTS IDENTIFICATION AND PART NUMBER LOCATION

Coupling parts have identifying size and part numbers as illustrated below. When ordering parts, always SPECIFY SIZE, TYPE, HUB BORE, KEYWAY, and PART NUMBER found on each item.

Contact your Rexnord Distributor or Rexnord for price and availability.

EXAMPLE:
Complete 1050G20 Gear Coupling
Consisting of:
2 – 1050G20 Sleeves
(Includes: Gasket & Seal)
2 – 1050G Flex Hubs
Bore: 6.750 Keyway: 1.750 x .750
Bore: 7.375 Keyway: 1.750 x .750
1 – Fastener Set

TYPE G/GF10 & 20

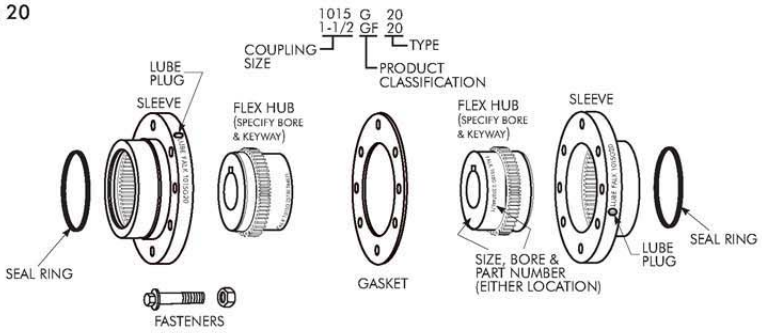

TYPE G/GF31 & 32

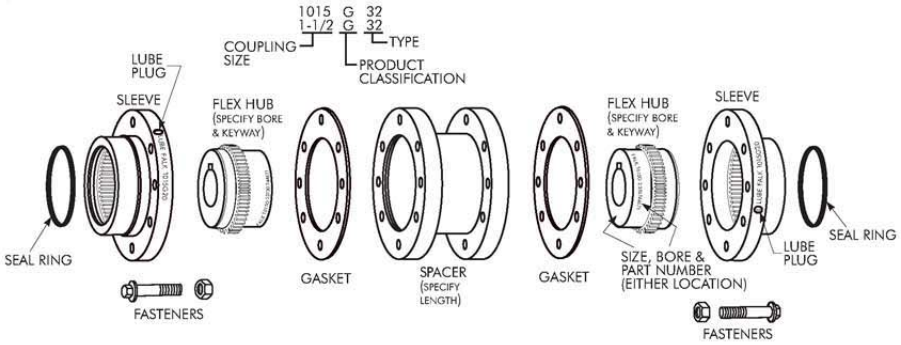

Rexnord Industries, LLC, Coupling Group
5555 S. Moorland Rd., New Berlin, WI 53151-7953 USA Telephone : 262-796-4060
Fax: 262-796-4064 e-mail: info@rexnord.com web: www.rexnord.com

458-110
April 2005
Supersedes 6-02

Install. & Maint. • Falk™ Double & Single Engagement Gear Couplings

REXNORD

(Page 8 of 8) Sizes 1010 thru 1070G & GP & Sizes 1 thru 7GF

TYPE G/GF51 & 52

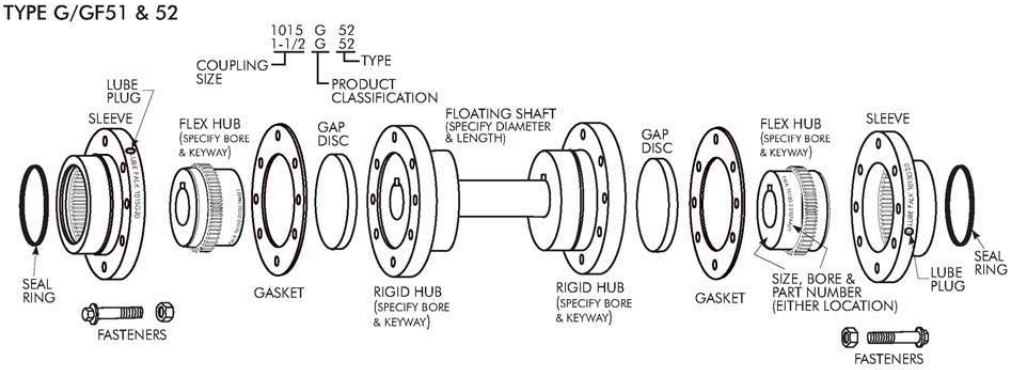

TYPE GP20

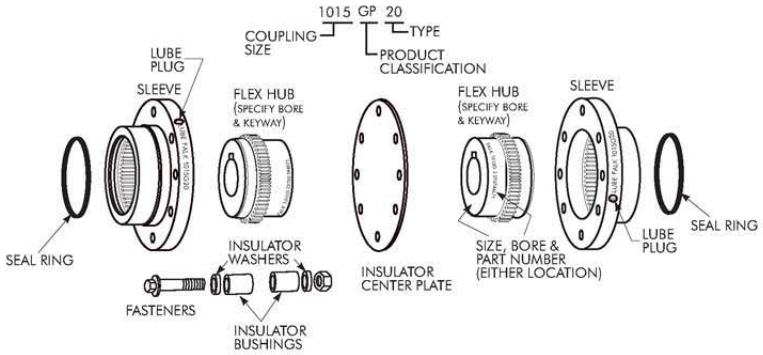

TYPE GP52

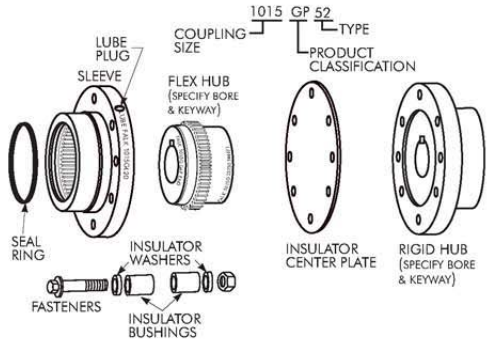

458-110
April 2005
Supersedes 6-02

Rexnord Industries, LLC, Coupling Group
5555 S. Moorland Rd., New Berlin, WI 53151-7953 USA Telephone : 262-796-4060
Fax: 262-796-4064 e-mail: info@rexnord.com web: www.rexnord.com

11.7.8 MOTOR & MACHINERY BRAKE – MONDEL MBTE

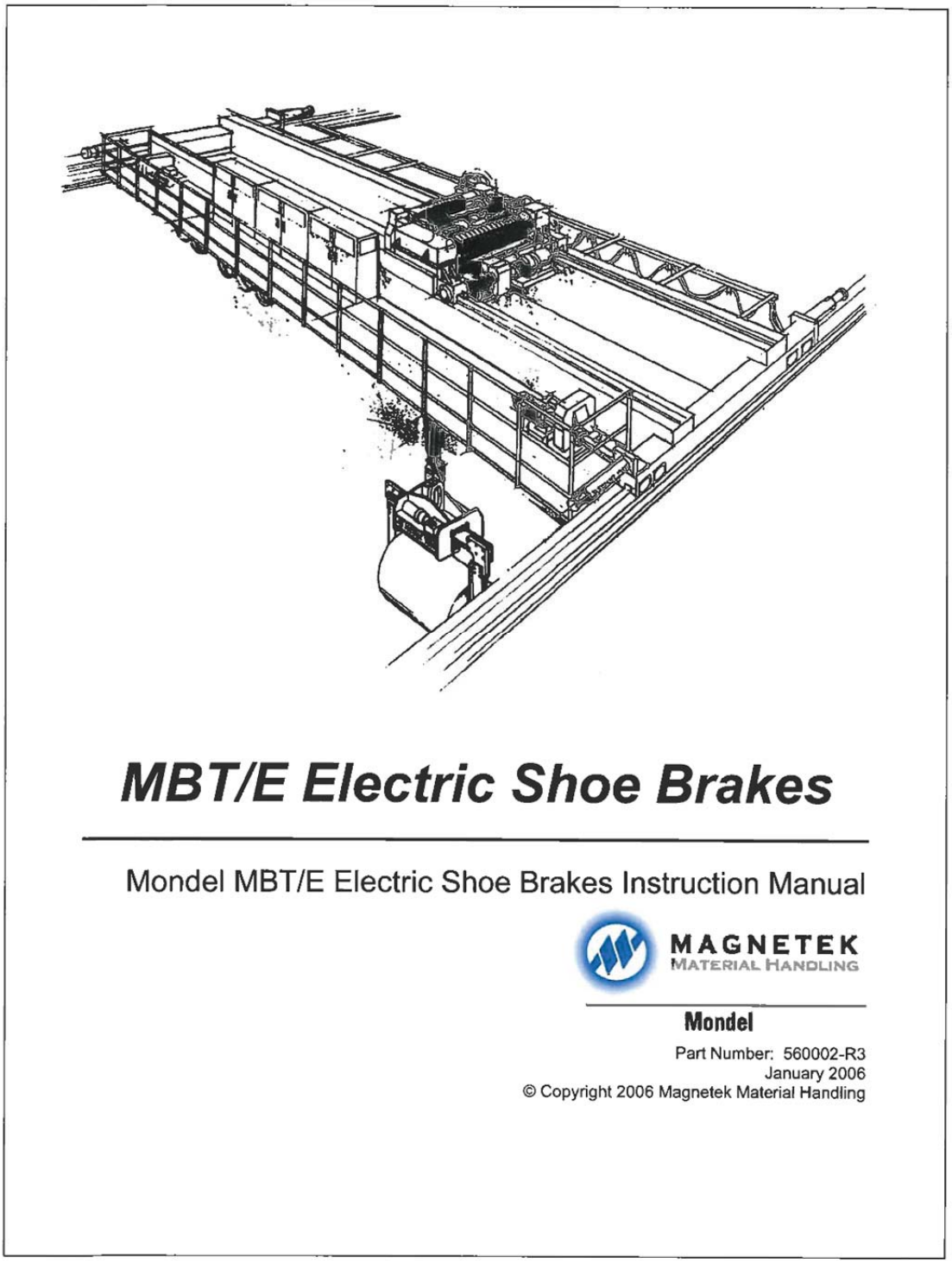

MAGNETEK
MATERIAL HANDLING

Mondel

Installation and Maintenance Instructions

MBT/E Electric Shoe Brakes

SUPPLEMENTS FORMING PART OF THIS MANUAL:

DATE OF MANUFACTURE:	
APPLICABLE DIMENSION PRINT:	
EXPLODED VIEW:	
PARTS LIST:	

Table of Contents

Chapter 1.0: MBT/E Electric Shoe Brakes Warnings and Cautions 4
Chapter 2.0: General Description 7
Chapter 3.0: Application 9
Chapter 4.0: Description of Operation 10
Chapter 5.0: Installation 13
Chapter 6.0: Adjustment 15
Chapter 7.0: Electrical Detail 22
Chapter 8.0: Operational Test 23
Chapter 9.0: Maintenance and Repair 25
Chapter 10.0: Replacement Parts 32
Chapter 11.0: Long Term Storage 33

Chapter 1.0: MBT/E Electric Shoe Brakes Warnings and Cautions

Read and Understand All Warnings And Cautions Printed In This Manual Before Commencing Installation, Adjustment Or Repair.

Chapter 5: INSTALLATION – Warnings and Cautions

Anyone involved in the installation or service of this brake must have:

- **Received specific training.**
- **Had experience on similar equipment.**
- **Knowledge of the equipment on which the brake is installed.**
- **The ability to understand the terminology.**
- **The ability to understand the diagrams.**

Do not proceed unless technically qualified for the work involved.

Never lift the brake assembly by the brake rod. The weight of the brake can irreversibly damage the rod leading to fracture and total loss of braking torque.

The integrity of the brake may be compromised or replacement parts may not fit if alterations are made to the brake to achieve required alignment.

If the alterations to the brake supporting structure are required, they must be done under the direction of a competent authority.

On a hoist, chock the drum to prevent any rotation due to the effect of gravity on the hook block etc.

Competent personnel must disconnect all electrical power to this equipment. Consult specific wiring diagrams to identify and isolate all live power inputs to the equipment.

Unexpected movement or hazardous voltage can cause injury or death. Disconnect, lock out, and tag out the power source that feeds this device to prevent power from being applied while inspection and repairs are being performed. Before beginning repairs, try the operational controls to verify that the intended power source is disconnected.

Disconnect, lock out, and tag out the disconnect switch which feeds the brake and related equipment to prevent power from being applied while service is being performed.

On the travel motion subject to the effect of wind or camber gradient, apply the wind anchors or otherwise secure the equipment against inadvertent movement when the brake is being worked on or is removed entirely.

Failure to properly install the brake wheel will result in the brake wheel working its way off the motor shaft, resulting in total loss of braking. Do not operate this brake unless the wheel has been secured to the motor shaft.

Failure to properly center the brake and obtain uniform lining contact results in localized heating and, ultimately, reduced torque, which can cause injury or death.

Chapter 6: ADJUSTMENT – Warnings and Cautions

Protect against the possibility of movement due to the effects of gravity, wind or other source of energy, which has the potential to create a hazard when the brake is being worked on or is removed entirely.

If the brake is arranged to operate in manual mode, the actuator "reserve stroke" must be monitored and adjusted to be within the range of 30 to 35% of full stroke with the brake applied.

An actuator reserve stroke of zero will result in total loss of brake torque.

Under no circumstances should the brake be allowed to function with zero reserve stroke. Such operation results in loss of load control, which can result in injury or death.

Always replace the caps on the actuator once adjustments are complete. This will prevent entry of contaminants.

The optional automatic adjustment mechanism uses a one-way clutch to adjust brake shoe clearance. It is located inside the clutch ring (R) shown in Fig.2A. Never disassemble this clutch. Incorrect reassembly will render the auto-adjust feature inoperative. This can lead to loss of load control and result in damage, injury or death.

If it is necessary to use a wrench to adjust the reserve stroke of a brake with auto-adjust, first withdraw the drive pin (E) shown in Fig.2A and rotate the mechanism in the required direction. Do not disturb the factory set pre-load, which is secured by set screws in nut (F). Releasing the brake will take the load off of the brake rod thread and make it easier to turn.

The two setscrews used to lock nut (F), see Fig. 2A, to the clutch drive shaft, are factory set. Do not loosen these setscrews or change the position of nut (F) with respect to the assembly. Failure to observe this warning can cause the automatic adjustment feature to become inoperative. This can lead to loss of load control and result in damage, injury or death.

Chapter 7: ELECTRICAL DETAIL – Warnings and Cautions

The actuator motor must be connected to its electrical supply through a flexible cable or sealed flexible conduit. This will allow the actuator to move during brake operation and prevent contaminant entry.

To avoid contact with live terminals and to prevent contaminant entry, replace the terminal box cover as soon as connections are complete.

Chapter 8: OPERATIONAL TEST – Warnings and Cautions

Always perform an operational test of the brake after any replacement, adjustment, or repair. Read and understand the intent of the warnings published in this document – if in doubt, ask.

Before conducting an operational test, remove all tools, chocks and other equipment, which may create a hazard when the machine is operated.

Following any repair or adjustment, and before conducting an operational test, verify that all brake adjustments are complete in accordance with Chapter 6.

In a hoist application, post observers to monitor the position of the hook if it travels out of sight of the operator.

Before attempting to operate any motion in any application, advise and account for the location and security of all personnel involved.

Chapter 9: MAINTENANCE AND REPAIR – Warnings and Cautions

When replacing a brake wheel or associated drive line components on an existing installation, verify that the brake is centered with uniform lining contact as described under the topic "Brake Installation". Incorrect repair or replacement can result in death or injury to personnel.

During operation, the actuator's internal temperature and pressure will increase. This is normal but presents a risk of burns and scalds if the filler plug is removed while the actuator is hot. Switch off power to the actuator and allow it to cool to ambient temperature before checking, topping off, or draining hydraulic fluid.

Improper brake operation and loss of load control due to incorrect brake adjustment can result in death or injury to personnel. Do not allow the actuator to bottom out when it retracts as this will lead to total loss of brake torque.

Chapter 2.0: General Description

2.1: Mondel type MBT/E spring applied, Hy-Thrust actuated brakes are designed for use on cranes and other severe braking applications in heavy industry. They can be used in conjunction with any drive type applied to hoisting or horizontal travel motions.

2.2: There are two basic models of this versatile, high-speed, AC operated brake: Type MBT with a fixed value internal torque spring, and type MBT/E with an adjustable external torque spring.

2.3: Construction and operation of both models is similar; they are available in all Association of Iron and Steel Engineers, (AISE) ratings and dimensions. A limited range of shunt-wound DC motor actuators is available.

2.4: A wide range of options is available.

2.5: The type MBT and MBT/E brakes are manufactured in accordance with AISE and NEMA standards. Electrical components have both CSA and UL approvals.

2.6: When the load cycle requires a larger than normal size, as is frequently the case with crane bridge drives, type MBT and MBT/E brakes can be provided with torque ratings lower than traditional for a given wheel size.

Except when specifically engineered and used in conjunction with Mondel Braketronic Controllers, type MBT/E are more suited to crane bridge brakes.

2.7: The type MBT and MBT/E brakes can be supplied as "drop-ins", with footprints and shaft heights, to replace a wide range of competitor's brakes, including some metric sizes.

2.8: Major pivot points use self-lubricated composite bearings. Periodic lubrication is not required.

2.9: The standard actuator is weatherproof and dust proof. The electric motor is TENV construction, and the hydraulic section is fully sealed and self-contained. Electric motors for certain hazardous areas are available as options.

2.10: An optional breather valve can be installed to replace the standard filler plug for environments, which experience large temperature swings. The breather prevents pressure build-up within the actuator.

2.11: For highly corrosive applications, special hardware, enclosures, and surface treatments are available.

IF YOU HAVE AN UNUSUAL APPLICATION, OR REQUIRE A RECOMMENDATION FOR A BRAKE SIZE AND TYPE, CONTACT MAGNETEK.

Figure 1

General Arrangement
MBT/E Electric Shoe Brake

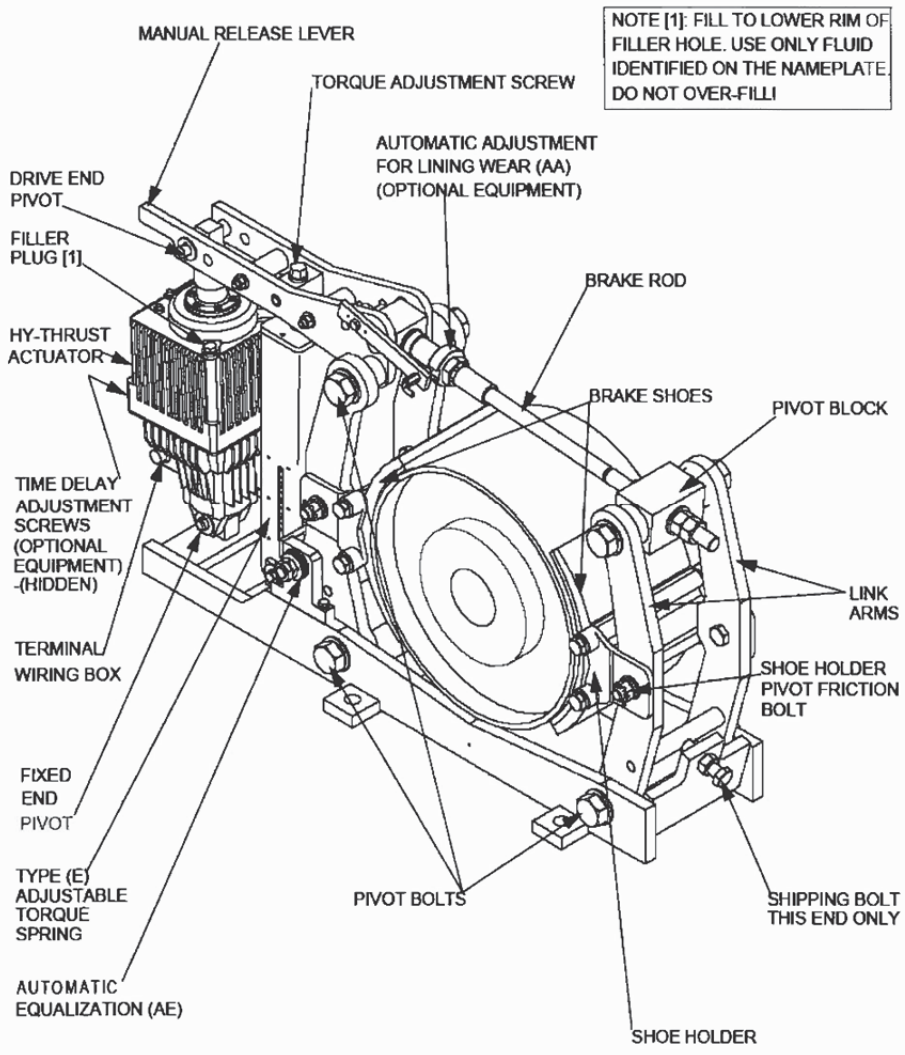

Chapter 3.0: Application

3.1: The brake covered by this manual is type MBT/E. This brake has an adjustable external torque spring and is generally applied on installations where the required torque cannot be pre-determined within well-defined limits.

3.2: For a given wheel diameter, the Association of Iron and Steel Engineers (AISE) determines the prescribed torque when applied to 30 and 60 minute rated motors in steel mill applications.

3.3: When applied to four quadrant drives or other applications where wheel heating can be accurately predicted, type MBT/E brakes can be provided with torque values in excess of the AISE standard.

3.4: When the load cycle requires a larger than normal wheel size, as is frequently the case on crane bridge drives, MBT/E brakes can be provided with torques lower than AISE standard for a given wheel size.

3.5: For applications where larger than normal running clearance is required, a larger actuator can be applied to a given brake. Typical would be severe applications where wheel expansion can be considerable or where excessive wheel run-out can be expected.

Chapter 4.0: Description of Operation

4.1: The brake is spring applied and actuator released. A heavy-duty compression spring, external to the actuator, pulls down on the brake lever and forces the shoes against the wheel.

4.2: The actuator piston rod extends when power is applied, the brake-shoe pressure removed, and running shoe clearance established.

4.3: Subject to the effect of brake geometry, braking torque depends upon three major factors:

4.3.(a): The diameter of the wheel.

4.3.(b): The coefficient of friction of the lining material.

4.3.(c): The force with which the linings are applied to the wheel.

4.4: Power applied to the actuator cancels the brakes ability to apply torque.

4.5: The force with which the linings are applied to the wheel depends on the spring length and characteristics. Spring length increases as linings wear (unless automatic adjustment is used).

4.6: When the brake is released, Automatic Equalization of shoe clearance ensures equal clearance between each shoe and the wheel.

4.7: Because the applied brake shoe force is proportional to the compressed length of the torque spring, a slight decrease in brake torque occurs as linings wear (unless automatic adjustment is used).

4.8: Re-adjustment of the reserve stroke to its specified setting restores the required spring force and torque.

NEMA states: "The torque ratings apply at a worn lining condition defined as the point where re-adjustment is required as recommended by the manufacturer".

4.9: Automatic Equalization (AE) is standard on all brakes of this class.

4.10: To understand how the automatic equalization works, it is important to recognize that the total available shoe clearance is directly related to the length of active stroke and that the actuators "Fully Released" position is the only consistent value for actuator stroke. The "Brake Applied" position varies as the linings wear, resulting in a reduced "Reserve Stroke". The "Brake Applied" position also varies due to wheel expansion caused by temperature increase; this results in an increased "Reserve Stroke".

4.11: On brakes without Automatic Adjustment, after some significant lining wear and the brake wheel close to ambient temperature, a reduction in the "Reserve Stroke" and a corresponding increase in the "Active Stroke", will be noticed. Corrective action will be necessary to ensure the minimum reserve stroke. (See Chapter 6: "Actuator Stroke Adjustment / Brakes without Automatic Adjustment).

4.12: On brakes equipped with the Automatic Adjustment (AA) option, the reserve stroke is maintained by a one-way clutch mechanism arranged to shorten the effective brake rod length – but only when adjustment is required – as follows:

4.12.(a): A retractable pin mounted on the brake lever, oscillates within a slot in the (AA) clutch ring. (See Fig. 2A).

4.12.(b): When the angle, through which the pin moves within the slot, does not allow contact with the sides of the slot, nothing happens!

4.12.(c): When the brake applies, after some minimal amount of lining wear, the pin will contact the side of the slot in the collar, which will advance the ratcheting mechanism and prepare for adjustment the next time the brake is released.

4.12.(d): When the brake is next released and the load on the thread is minimal, the free wheel set-up referred to in the previous paragraph will result in an advance on the thread when the pin engages the other side of the slot in the collar.

4.12.(e): The ratcheting advancement will continue, a little at a time, until the pre-determined reserve stroke is reached.

4.13: When the brake is released, the shoes are moved apart to provide running clearance from the wheel. The actuator's active stroke establishes the total clearance available for both shoes.

4.13.(a): As the brake releases, the shoe nearest to the actuator has been biased to open first. This is done during manufacture, by inclining the actuator away from the nearest shoe (See Fig. 2).

4.13.(b): Clearance provided to the nearest shoe is restricted by the (AE) mechanism – located on the base – which transfers the remaining clearance to the other shoe.

4.13.(c): As shoe wear occurs the friction bolt in the (AE) mechanism relocates to provide a new reference point for the brake shoe on the actuator side of the brake.

4.13.(c).(i): The total available shoe clearance is determined by the active stroke.

4.13.(c).(ii): The clearance between the friction bolt and holes in the actuator links through which it passes, determines the "actuator side" shoe clearance.

4.14: Various optional features are available, including latching hand release mechanisms, limit switches, hydraulic and pneumatic overrides, etc. If the brake covered by this manual has any of the optional features, they will be listed on the front page of this manual and covered by supplementary instructions.

4.15: The actuator for this series of Mondel Brakes can be supplied with optional, factory installed time delays.

Figure 2

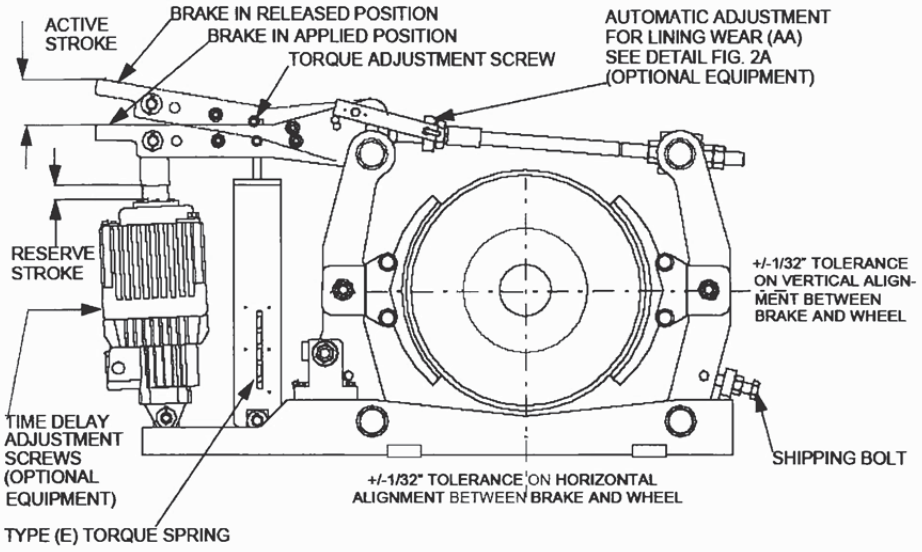

Figure 2A

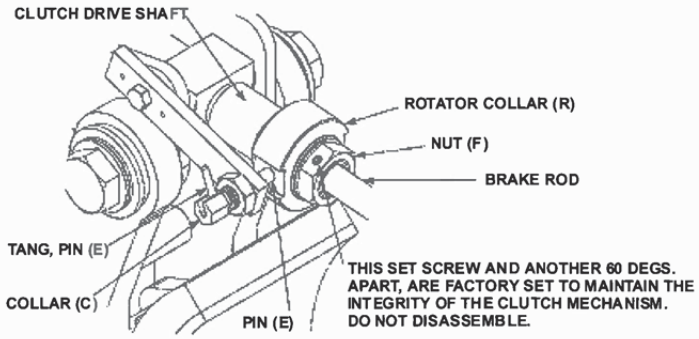

NOTE: TABLE 5 LISTS THE NEMA MINIMUM RECOMMENDED LINING THICKNESS.

6/7/2006 Page 12 of 33 MBT/E Electric Shoe Brakes Manual 560002-R3

Chapter 5.0: Installation

5.1: After unpacking, visually inspect the brake assembly to ensure that damage has not occurred during shipment and that there are no loose or missing parts.

5.2: Remove and discard any shipping bolts (See Fig. 2 for location) or wedges used to secure the brake against vibration during transportation.

5.3: Prepare the brake support structure and install the brake assembly subject to the following:

5.3.(a): Allow adequate clearance to adjacent obstructions. This will ensure the minimum practical access for adjustments and maintenance.

5.3.(b): Whether mounting a brake in a new or existing installation, the base mounting bolts need a reasonable clearance in the base mounting holes, to allow the brake to be aligned for full contact between the brake linings and the wheel.

5.3.(c): Circumstances may determine the best order of installation for the brake and the wheel. This may be due to the available space or handling facilities on site; generally the wheel is installed first.

5.3.(d): Center the brake shoes across the width of the brake wheel. This avoids ridge formation and the possible creation of a dangerous situation as the linings wear.

5.4: Alternatively, it may be necessary to introduce the brake to the brake wheel from one side of the wheel. In this case partial dismantling of the brake may be required depending on the circumstances. Refer to the general arrangement and exploded view drawings in this manual to evaluate the options.

5.4.(a): After installing the brake and wheel, make preliminary adjustments to apply sufficient shoe pressure to raise the actuator piston rod ½" above its fully retracted position.

5.4.(b): This will apply the brake at approximately rated torque, causing the brake to square itself to the wheel if the mounting bolts are loose and the bolt hole clearance will permit. This will maximize the shoe contact area.

5.4.(c): When the brake assembly is correctly aligned and clamped to the wheel, remove each of the securing bolts in turn and verify clearance in the base mounting holes. This will ensure tolerance to allow minor adjustment to the brake alignment to accommodate future relined shoes.

5.4.(d): Magnetek does not recommend "Dowelling" or "Keeper Plates" to maintain alignment.

5.5: Type MBT/E brakes are generally installed with the base horizontal and the brake wheel shaft horizontal.

5.6: In most applications the brake can be installed from one side of the brake wheel. Alternatively it may be necessary to partially dismantle the brake.

5.7: Type MBT/E brakes can also be wall mounted, with the brake wheel shaft horizontal. This is only possible if the actuator pump suction is flooded, which will be the case if the actuator hydraulic section filler plug is at the highest point possible with the actuator horizontal. For this mounting arrangement the actuator is best located above the wheel.

5.8: Type MBT/E brakes can also be wall mounted with the brake wheel shaft vertical. Again this requires the actuator hydraulic section filler plug to be at the highest point possible with the

actuator horizontal. For this mounting arrangement factory modifications are necessary to ensure equal shoe clearance.

5.9: For any other mounting arrangements consult factory.

5.10: The brake assembly must always be square and aligned to the brake wheel within a maximum of ± 1/32 inch, in all three axes (horizontal, vertical, and longitudinal).

5.11: Adjust the brake support bracket to achieve the specified horizontal and longitudinal alignment. For best performance, the brake base should be flat and parallel to the wheel rim or motor shaft. It may be necessary to release and re-apply the brake pressure several times to achieve optimum alignment. Shim under the brake base for the vertical alignment.

5.11.(a): When the brake assembly is correctly aligned and clamped to the wheel, check the securing bolt clearance in each of the brake base holes. There must be clearance in the base and through the brake support bracket to allow minor adjustments. Be sure that the brake shoes are still aligned parallel to the face of the brake and that each brake shoe is fully secured to its link arm.

5.11.(b): With the brake fully applied, verify that the shoes are centered on the wheel face and that lining contact is within adequate bedding range.

5.12: When the brake is correctly aligned in all three axes, tighten the brake mounting bolts and re-check the alignment.

5.13: Connect the actuator to the electrical supply using a flexible, sealed conductor, suitable for the rated temperature. Use type "S0", or higher temperature, cable. The actuator must be allowed few degrees of movement without the risk of dirt or moisture entering the terminal box. Chapter 7 provides all necessary electrical details.

Chapter 6.0: Adjustment

6.1: Following any adjustment or repair of the brake, test operation of the brake as described under "Operational test", Chapter 8.

6.2: Complete adjustment is required following any rework where any settings were disturbed.

Table 1

BRAKE WHEEL SIZES (Inches)	TYPICAL RUNNING CLEARANCE BETWEEN LINING AND BRAKE WHEEL (Inches)	MAXIMUM FULL SPEED BRAKE WHEEL run-out (Inches)
6	0.014	0.006
8	0.016	0.008
10	0.020	0.010
13	0.026	0.013
16	0.032	0.016
19	0.038	0.019
23	0.046	0.023
30	0.060	0.030

Notes:
1. Refer to "Brake Installation" and "Replacing the Brake Shoes" for adjustment instructions.
2. Evaluate brake wheel run-out at full speed. It must not exceed value shown in this table.

6.3: Manual Operation

6.3.(a): Brake installation, shoe replacement, and actuator replacement, described elsewhere, require the brake to be released and reapplied without energizing the actuator. When type "S" Latching Hand Release is fitted, it can be used; or it can be manually over-ridden as follows:

6.3.(b): Brakes without Automatic Adjustment:

6.3.(b).(i): To manually release the brake: Adjust the brake rod hex-nuts – to increase the brake rod length – reducing the "reserve stroke" until the piston rod is no longer visible. Continue adjustment until there is sufficient lining to brake wheel clearance.

6.3.(c): To manually apply the brake: Adjust the brake rod hex-nuts – to decrease the brake rod length – increasing the "reserve stroke" until the linings contact the brake wheel. Continue until the brake release lever begins to rise. Proceed to "Actuator Stroke Adjustment".

6.3.(d): Brakes with Automatic Adjustment:

6.3.(e): To manually release the brake: Refer to Fig. 2A, withdraw drive pin (E), then carefully rotate the mechanism by hand to increase the brake rod length and, at the same time, reduce the reserve stroke until the piston rod is no longer visible. Continue adjustment until there is sufficient shoe/wheel clearance.

6.3.(f): To manually apply the brake: Refer to Fig. 2A and withdraw drive pin (E), then rotate the mechanism by hand to decrease the effective brake rod length until the linings contact the wheel and the brake lever begins to rise. Proceed to "Actuator Stroke Adjustment".

6.4: Actuator Stroke Adjustment

6.4.(a): When power is applied to the actuator the piston will be caused to extend. This will compress the external spring and raise the brake lever to provide operating clearance between the shoes and the wheel.

6.4.(b): When power is removed from the actuator, the spring will retract the lever until the shoe pressure on the wheel prevents any further lever movement as the reserve stroke setting is attained and the intended brake torque achieved.

6.4.(c): Brakes without Automatic Adjustment:

6.4.(d): Adjust the brake rod nuts until the brake release lever raises the piston rod to the specified reserve stroke, (Table 2). Re-secure the brake rod nuts against the pivot block.

6.4.(e): Brakes with Automatic Adjustment:

6.4.(f): To make initial adjustment before engaging the auto adjust (AA), refer to Fig. 2A and withdraw pin (E). Rotate the mechanism by hand to decrease the brake rod length until the linings contact the wheel and the brake lever begins to rise. Continue adjustment until the required reserve stroke is about 1/8" less than specified. Re-engage pin (E) allowing the (AA) mechanism to complete the final stage of the adjustment process. This will verify that the mechanism is operating correctly.

6.4.(g): Energize the actuator several times until the rotating collar (R) is no longer turned by the (AA) drive pin (E). Verify that the reserve stroke is still at the desired value per Table 2.

6.5: Torque Adjustment

6.5.(a): Torque adjustment for Mondel MBT/E brakes is adjustable on site. Tighten or loosen torque adjustment screw, see Fig. 2, to set the torque within the prescribed range shown on the scale. The torque setting is obtained by matching the top of the spring-block to a line on the spring scale.

Table 2

Stroke Length Setting In Inches

ACTUATOR	MAX STROKE (inches)	ACTIVE STROKE (inches) Without Auto Adjust	DESIRED RESERVE STROKE (inches)	
			WITHOUT AUTO ADJUST	WITH AUTO ADJUST
Ed23/5	1.97	1.27	0.7	0.6
Ed30/5	1.97	1.27	0.7	0.6
Ed50/6	2.36	1.56	0.8	0.7
Ed80/6	2.36	1.56	0.8	0.7
Ed121/6	2.36	1.56	0.8	0.7

The rated torque will be developed when the following conditions are met:

6.5.(a).(i): The brake is applied and aligned properly.

6.5.(a).(ii): The actuator stroke is correct.

6.5.(a).(iii): The correct linings are fitted.

6.5.(a).(iv): The linings are in good condition and bedding is completed.

6.5.(a).(v): The brake wheel is aligned and in good condition.

6.6: Automatic Equalization Assembly

6.6.(a): The total available shoe clearance is determined by the active stroke of the actuator. Distribution of the resulting clearance is determined by two factors.

6.6.(a).(i): As the brake releases under power, the shoe nearest to the actuator has been biased to open first. This is done during manufacture by inclining the actuator away from the nearest shoe. (Fig. 2).

6.6.(a).(ii): Clearance provided to the nearest shoe is restricted by the (AE) mechanism located on the base. The clearance between the friction bolt and holes in the actuator links, through which it passes, determines the "actuator side" shoe clearance.

6.6.(b): When the predetermined "actuator side" shoe clearance has been established, the remaining clearance is transferred to the "non-actuator side" shoe.

6.6.(c): As lining wear occurs, the friction bolt in the (AE) mechanism is dragged to a new location, to provide the reference point for the shoe clearance on the "actuator side" of the brake.

6.6.(d): The (AE) friction bolt mechanism is self-compensating after initial adjustments are completed as follows:

6.6.(d).(i): Release the brake and, using a soft-faced mallet if necessary, force the actuator side link away from the wheel. This will set the actuator side (inner) shoe to the maximum available clearance.

6.6.(e): The actual clearance which will be allowed to the "actuator side" shoe is determined by the difference in diameter between the friction bolt shank and the holes in the links, through which it passes.

6.6.(f): The friction bolt assembly is pre-tensioned at the factory. If the friction bolt assembly is disturbed for any reason it can be retensioned as follows:

6.6.(g): Refer to Fig. 3A: Install a castellated hex-nut, secured by a cotter pin, on one end of the friction bolt. Add a stack of three Belleville washers in series, (inner rim against the nut), followed by a plain washer.

6.6.(g).(i): Insert the partially assembled friction bolt into the (AE) assembly on the brake.

6.6.(g).(ii): Assemble one plain washer and a Belleville washer (outer rim against the washer), on the free end of the friction bolt. Follow with a castellated hex-nut. Tighten the nut until the Belleville washers just flatten out; do not over tighten. From that position loosen the hex nut three flats (one-half turn). Then loosen or tighten the nut only enough to align the nearest cotter pin slot and hole. Install the cotter pin. This completes the assembly.

Figure 3A

Type AE Automatic Equalization Mechanism Assembly

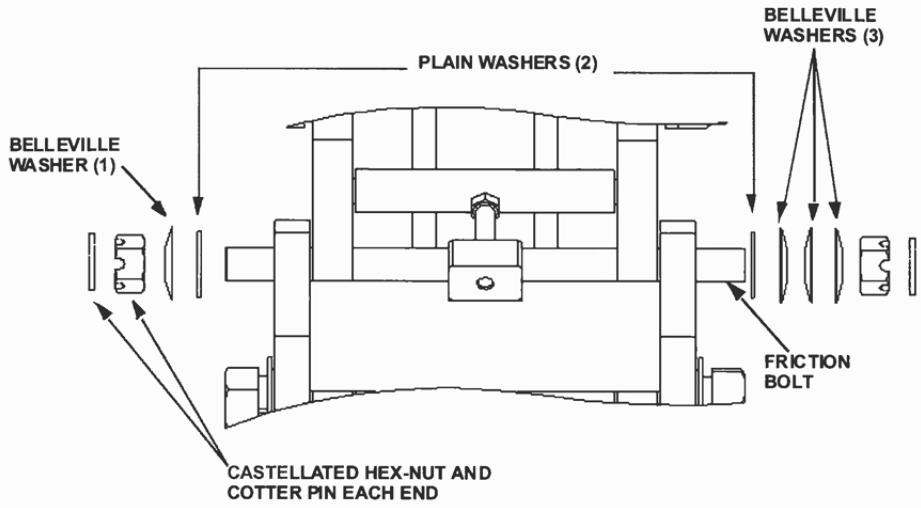

6.7: Parallel Shoe Gap Adjustment

6.7.(a): For optimum lining wear distribution, brake shoes have controlled freedom to align with the wheel contour as the linings wear.

6.7.(b): Each brake shoe holder pivots on its link arm. Its freedom to rotate under gravity is controlled by a shoe holder friction mechanism, similar to the one in the (AE) mechanism.

6.7.(c): To align shoes to the wheel, apply the brake at the applied torque and make the following initial adjustments:

6.7.(c).(i): Release the brake manually or under power.

6.7.(c).(ii): With the brake released, use a soft-faced mallet to tap the upper edge of each brake shoe in, towards the wheel, in the direction it would rotate under gravity. The friction bolt mechanism will be forced to follow the arc the shoe holder describes as it is forced down.

6.7.(c).(iii): Re-apply the brake and the shoes will be forced to align with the wheel and will force the friction bolt back to optimize parallel clearance with the wheel.

6.7.(d): If the shoe holder pivot tension adjustment is lost, it can be re-established as follows:

6.7.(d).(i): Install a Belleville washer on the friction bolt hex cap screw, (inner rim against the head of the cap screw), followed by a plain washer. (Fig. 3B).

6.7.(d).(ii): Insert the partially assembled friction bolt through the shoe holder into the link arm.

6.7.(d).(iii): Place a plain washer on the free end of the friction bolt. Follow with a castellated hex-nut. Tighten the nut until the Belleville washers just flatten out; do not over-tighten. From that position loosen the hex-nut three flats (one-half turn). Then loosen or tighten the nut only enough to align the nearest cotter pin slot and hole. Install the cotter pin. This completes the assembly. Repeat for each friction bolt.

Figure 3B

Shoe Holder Pivot Tension Mechanism Assembly

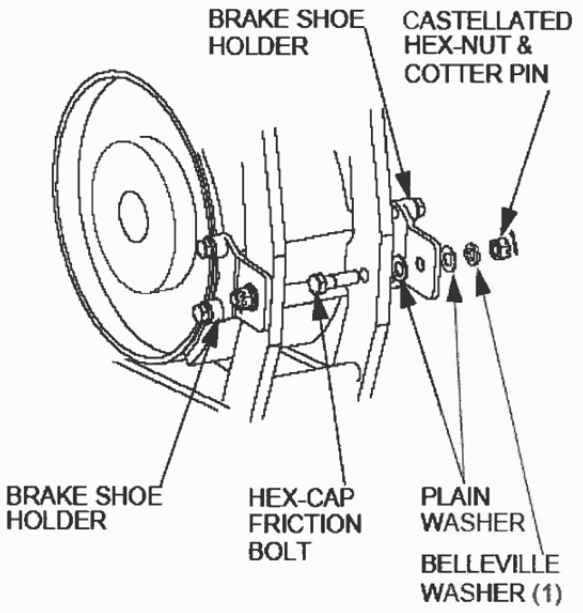

6/7/2006 Page 20 of 33 MBT/E Electric Shoe Brakes Manual 560002-R3

6.8: Time Delay Adjustment

6.8.(a): The actuator nameplate will indicate when optional time delay valves are installed.

6.8.(a).(i): Letter **"S"** indicates an adjustable piston retract, (brake application), time delay.

6.8.(a).(ii): Letter **"H"** indicates an adjustable piston extend, (brake release), time delay.

6.8.(a).(iii): If both letters **"S"** and **"H"** are present, then the actuator is equipped with adjustable time delay valves independently controlling both the piston extend and retract times.

6.8.(a).(iv): When time delay valves are not fitted, the actuator response time to extend or retract, is between 0.4 and 0.8 seconds depending on actuator size.

6.8.(a).(v): With time delay valve(s) installed, the extend and/or retract times are adjustable between approximately 0.5 and 10 seconds depending on actuator size.

6.8.(b): Remove the delay valve protective cap to expose the adjustment screw. For minimum delay, set the screw head flush with the housing. Figs. 1 and 2 show valve location.

6.8.(c): Turn the screw clockwise to increase and counter clockwise to decrease the delay.

Note: The standard actuator has the shortest response time. An actuator fitted with delay(s) provides longer response times, even when the delay(s) are adjusted for minimum effect.

Chapter 7.0: Electrical Detail

7.1: Operation of the actuator is not dependant on the direction of motor rotation. The cable leads can be connected to the U1, V1 and W1 (T1, T2, T3) terminals, in any phase sequence.

7.2: The motor leaves the factory already arranged for the specified voltage, which is also shown on the nameplate.

7.3: If the motor was specified for a nominal 460 volts supply, it will be connected with nine terminals and the links arranged as shown in Fig. 4. If at some future date the motor is required to operate from a 230 volts supply, re-arrangement of the links is required as shown.

Figure 4

Electrical Connections

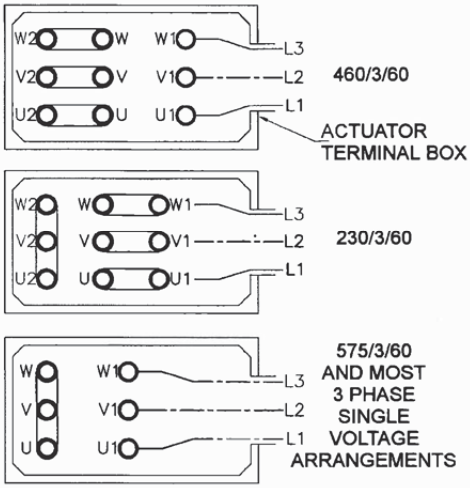

7.4: When specified for operation on 575 volts or other single voltage, it will be connected with six terminals, and the links arranged as shown in Fig. 4. The winding will not be capable of re-connection for any other voltage.

7.5: Explosion proof actuators are only arranged for the terminal voltage shown on the nameplate. Three terminal posts will be visible when the cover plate is removed under the required conditions. No provision is made for external re-connection to any other voltage.

7.6: A wiring diagram showing the possible terminal link arrangements is fastened inside the actuator terminal box cover.

Chapter 8.0: Operational Test

8.1: Heed all warnings and cautions in addition to the owners' safety procedures.

8.2: Follow all standards and local statutes.

8.3: Remove any drum chocks on a hoist application.

8.4: As a preliminary test of the brake without load, energize the actuator for one short jog. If the brake fails to stop and hold the motion stationary, repair or re-adjust the brake as necessary. Visually inspect the brake during operation to ensure all adjustments are correct. If successful, continue with longer duration jogs until confident that the brake is operating satisfactorily.

8.5: A minimum of 60% contact between lining and wheel on each shoe is required before subjecting the brake to its rated capacity.

8.6: If re-lined shoes have been fitted, or the brake alignment has been altered or is otherwise suspect, you may have to realign the brake. This will minimize the bedding needed to obtain the necessary 60% of brake lining to wheel contact.

8.7: The required lining contact is seldom achieved without "bedding", but time spent to achieve satisfactory bedding will be rewarded with a considerably longer life for the lining.

8.8: Modern linings, although hard wearing, are difficult to "bed" when the area in contact with the wheel cannot support the heat energy transferred to the brake. As a result the linings will become "glazed" where in contact with the wheel. "Glazing" is the name applied to a condition where the lining has been heated beyond its working temperature range and is no longer capable of its designed coefficient of friction. "Glazing" will seldom be removed by further braking operations as any increase in area of lining contact will immediately be glazed.

8.9: "Glazing" can be prevented by ensuring a minimum of 60% contact area before placing the brake in service.

8.10: On hoists, well-spaced, short bursts of energy, such as an E.Stop at high speed with no load are best to achieve initial "bedding". This will limit the energy input while the wheel is monitored for temperature.

8.11: A distinct advantage of the type MBT/E brakes is that the actuator can be easily over-ridden while the drive is operating. This can be accomplished with a short length of pipe fitted over the "manual release lever extension". See Fig. 1. When circumstances permit, pressure can be applied to force the shoes against the wheel while the drive is operating. Care must be taken to achieve the minimum 60% contact between lining and wheel on each shoe without exceeding the maximum of 150° C.

8.12: Bedding is just as important when the brake is applied with a four-quadrant drive and not subjected to dynamic loading, except under emergency conditions.

8.13: The following are the key steps to satisfactory "bedding" to extend lining life.

8.13.(a): Use only genuine Mondel lined brake shoes. This will maintain specified brake performance and ensure that the braking torque is neither more nor less than the specified rating.

8.13.(a).(i): Linings thicker than the original equipment may result in contact with the wheel only at the tips.

8.13.(a).(ii): Linings thinner than the original equipment may result in contact with the wheel only across the middle and cause vibration during stops.

8.13.(b): Do not use re-lined shoes where the castings are damaged, worn or distorted.

8.13.(c): Square the brake to the wheel for optimum contact between the linings and the wheel.

8.13.(d): Type **MBT and MBT/E** brakes incorporate a mechanism to equalize brake shoe clearance; ensure that it is correctly adjusted in accordance with Chapter 6.

8.13.(e): Type **MBT and MBT/E** brakes incorporate a mechanism to keep brake shoe clearance parallel to the wheel; ensure that it is correctly adjusted in accordance with Chapter 6.

8.14: Wheel run-out must be within the allowable tolerance; see Table 1. Any unnecessary lining drag will result in excessive heat in the wheel and lining deterioration.

8.15: Every operational test should include verification of brake wheel run-out as follows:

8.15.(a): At all speeds, verify that the linings are clear of the wheel. Take steps to correct wheel run-out, imbalance, or the effects of critical speed.

8.15.(b): If necessary, check low speed brake wheel run-out as follows:

8.15.(b).(i): Using a run-out gauge, verify that radial run-out does not exceed 0.001" per inch of brake wheel diameter. Refer to Table 1 for brake wheel run-out allowance. Lifting the brake wheel with a suitable lever while observing the dial gauge is another way to check bearing play.

Chapter 9.0: Maintenance and Repair

NEMA recommends that brakes be fitted with new or re-lined shoes before the lining material is worn excessively. Refer to Table 5 for minimum thickness.

9.1: Replacing the Brake Shoes

9.1.(a): Remove and install the brake shoes as follows:

9.1.(a).(i): On a hoist, lower the load to the floor and disconnect the load from the bottom block.

9.1.(a).(ii): Reset the bottom block on the floor or on a suitable support. Chock drum to prevent rotation of the drum.

9.1.(b): Refer to Chapter 6 and manually release the brake to provide sufficient clearance between the brake linings and the brake wheel.

9.1.(b).(i): Loosen and back-out shoe holder screws (J) until free of the clearance holes. See Fig. 5.

9.1.(b).(ii): Rotate one shoe holder out of the way from the "horizontal" position to the "up" or "down" position. Remove the shoe from this side.

9.1.(b).(iii): Additional clearance will be required to insert the new shoes. Adjust brake rod as required. (See Chapter 6 "Manually Releasing The Brake").

9.1.(b).(iv): Before starting shoe installation, check that the brake surface of the wheel is clean and free from oil and grease.

9.1.(b).(v): Next, verify that the lining surface will be true to the wheel when the shoe is installed. Carefully check lining contact with the wheel. Remove any high spots with emery paper to ensure 60% contact between the lining and the wheel.

9.1.(c): Ensure adequate clearance will be available and install the replacement shoe assemblies in the reverse order.

9.1.(d): Rotate the shoe holder back into the "up" position and turn the shoe holder screws in until seated in the clearance holes in the side of the brake shoe.

9.1.(e): Ensure that the brake shoe is fully seated and the clearance holes in both sides engage the shoe holder screws. Finally, secure the screws tight against the holder.

9.1.(f): Whenever brake service requires loosening of the pivot bolts, ensure that the reinstalled pivot bolts are tightened to the torque values listed in Table 3.

Table 3: Recommended Pivot Bolt Torque

Brake Dia. Inches)	5	8	10	13	16	19	23	30
Torque (ft-lb)	25	80	90	130	230	400	500	600

9.1.(g): The braking surface of the wheel must be clean and free from any oil or grease contamination, which may have occurred during servicing.

9.1.(h): Re-apply the brake and make all adjustments covered in Chapter 6.

NOTE: The brake can be damaged if the brake shoes are not properly aligned. Do not operate the brake unless the brake shoes are in their correct position and all shoe holder-mounting screws are fully tightened.

9.1.(i): Newly lined shoes seldom fit perfectly with the contour of an existing brake wheel, particularly if the wheel is worn or undersized. If the brake has been moved, realignment of the brake with the wheel may be necessary. Refer to the topic "Brake Installation" for the correct alignment and bedding procedure.

9.1.(j): Refer to Chapter 6 and adjust the reserve stroke as required. Observe instructions for adjusting the optional (AA) feature when provided.

9.1.(k): Refer to Chapter 6 and adjust the torque as required.

9.1.(l): Refer to Chapter 6 and adjust the brake shoe clearance as required.

9.1.(m): Refer to Chapter 6 and adjust the (AE) mechanism as required.

9.1.(n): Refer to Chapter 8; bed and test the brake as described.

Figure 5

Brake Shoe Removal/Replacement

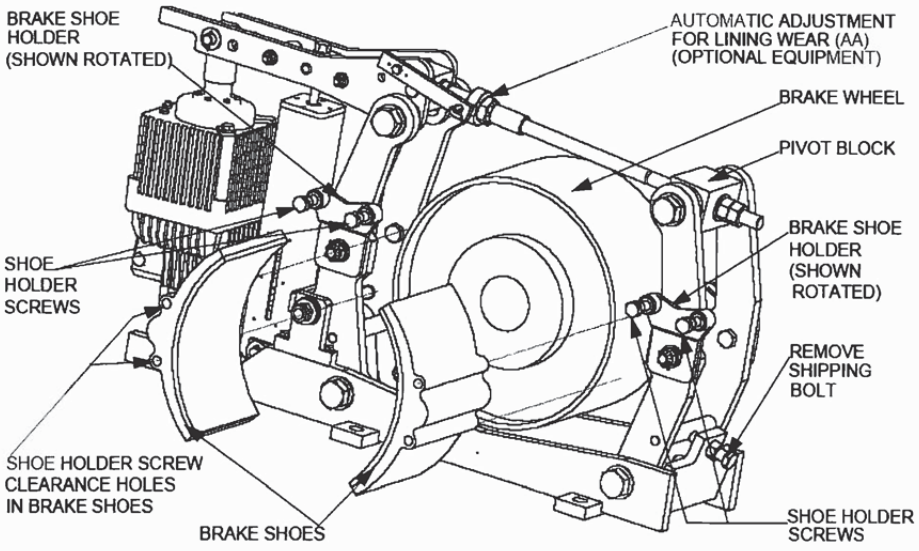

9.2: Removing The Actuator

9.2.(a): Secure against any possibility of an unexpected movement when the actuator is removed.

9.2.(b): Lower the load to the floor and disconnect the load from the bottom block.

9.2.(c): Reset the bottom block on the floor or on a suitable support. Chock the drum to prevent rotation.

9.2.(d): Disconnect and remove electrical wiring and conduit to the actuator.

9.2.(e): Before attempting to remove the actuator, release the brake. See Chapter 6: "Manually Releasing the Brake".

9.2.(f): Secure or support the actuator before attempting to remove the pivot pins.

9.2.(g): Refer to Fig. 6: remove the cotter pins etc., which secure the actuator to the brake assembly.

9.2.(h): Remove the complete actuator using appropriate lifting devices.

9.2.(i): Should service be required, return the actuator to Magnetek for repairs or service. Identify the actuator with the original brake serial number.

9.3: Re-Installing The Actuator

9.3.(a): Verify adequate means are still in place to protect unexpected movement when the actuator is replaced.

9.3.(b): Position the actuator within the lever and attach to the base. Use a lifting device as necessary.

9.3.(c): Attach and secure the actuator using the correct pivot pins, etc. Check for wear prior to re-fitting.

9.3.(d): Refer to Chapter 6 and adjust the reserve stroke as required. Observe instructions for adjusting the optional (AA) feature when provided.

9.3.(e): Refer to Chapter 6 and adjust the torque as required.

9.3.(f): Refer to Chapter 6 and adjust the brake shoe clearance as required.

9.3.(g): Refer to Chapter 6 and adjust the (AE) mechanism as required.

9.3.(h): Refer to Chapter 8; bed and test the brake as described.

Figure 6

Actuator Removal and/or Replacement

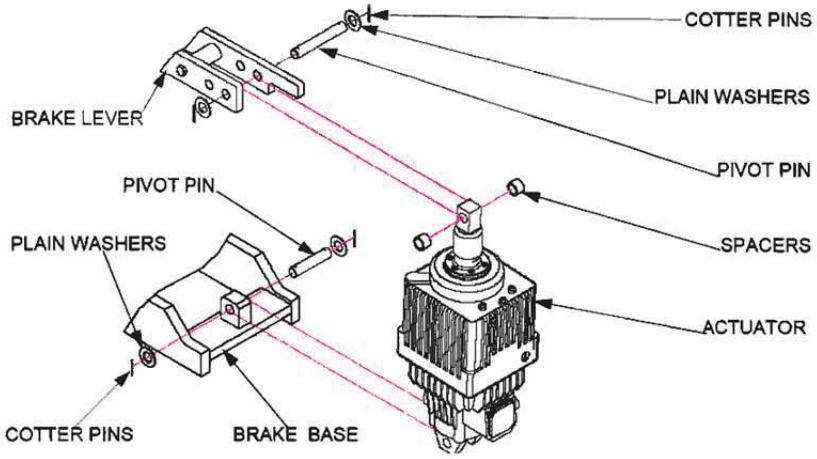

9.4: Fitting Relined Brake Shoes

It is not recommended that shoes be relined in the field. New bonded shoe assemblies can be ordered as repair parts. Factory rebuilt shoes are also available from Magnetek. Under this program, credit will be allowed for old shoes in usable condition.

9.5: Removal and Installation of Motor and Brake Wheel as an Assembly

9.5.(a): Quick replacement of the drive motor and brake wheel, as an assembly, can be accomplished with minimum disturbance to the brake.

9.5.(b): Disconnect, lock out, and tag out the disconnect switch that feeds this equipment to prevent power from being applied while service is being performed.

9.5.(c): Remove both shoe assemblies as described under the topic, "Replacing the Brake Shoes". If the shoes will not be replaced as part of this work order, identify the shoes in order that they can be re-fitted without having to be re-bedded.

9.5.(d): Disconnect the brake rod from the brake lever.

9.5.(e): Swing the entire brake rod assembly clear to permit unobstructed vertical withdrawal of the brake wheel without damage.

9.5.(f): Remove the motor and brake wheel by lifting straight up until the wheel clears the brake.

9.5.(g): Do not disturb the position of the brake rod by turning it into or out of the pivot link. Doing so will alter the brake rod adjustment.

9.5.(h): Install the motor, with brake wheel installed, by lowering it into place.

9.5.(i): Reinstall the shoe assemblies as described under the topic "Replacing the Brake Shoes".

9.5.(j): Re-attach the brake rod to the brake lever.

9.5.(k): Ensure that all shoe holder mounting screws are correctly tightened (Fig. 5).

9.5.(l): Test the operation of the brake as described under the topic "Operational Test".

9.5.(m): Install the brake wheel as described elsewhere.

9.5.(n): Verify the brake is still properly centered over the wheel. Make any adjustments as required. See Chapter 5, "Brake Installation".

9.5.(o): Maintenance and inspection periods depend on operating conditions. High duty cycle applications obviously require more frequent inspections than brakes operating on low duty cycle applications. In either case, Magnetek recommends a general inspection every 100 operating hours or every month as a minimum.

9.6: Inspection

9.6.(a): Electrical connections and mechanical fasteners should be checked for tightness. Inspect the brake wheel to ensure that it is neither damaged nor loose. Inspect the brake mounting bolts for tightness, and that brake shoe clearance settings are within specifications.

9.6.(b): Inspect the brake wheel for unusual scoring, signs of over-heating, cracking or wear. Replace any damaged, cracked or excessively worn brake wheels.

9.6.(c): Inspect the condition of the bearings and bushings as well as the electrical and mechanical integrity of the complete braking system. Make any repairs or adjustments that may be required to ensure proper brake system operation.

9.6.(d): Check the brake wheel run-out at all speeds. See Chapter 8 "Operational Test".

9.6.(e): Correct operation of the motor can be determined by measuring its operating current. Refer to Motor Nameplate for rated value.

9.7: Lubrication

9.7.(a): Periodic lubrication is not required on these brakes. Major pivot points are equipped with bearings, which do not require lubrication. Oil or any other lubricant applied to any part of the brake may trap airborne contaminants.

9.8: Actuator Working Fluid

9.8.(a): The actuator leaves the factory correctly filled with the fluid and seals for the specified operating temperature range.

9.8.(b): The fluid will not deteriorate in service, and if there are no tell-tale signs of leakage, no additional fluid will be required.

9.8.(c): The actuator working fluid should be checked periodically, but must not be over-filled to ensure an adequate air space is retained to allow for fluid expansion. See Fig. 1 for plug location and proper fluid level.

9.8.(d): If additional fluid is necessary for any reason, use only the fluid identified on the nameplate to ensure compatibility with the installed seals and the specified operating temperature range. **DO NOT OVER-FILL.**

9.8.(e): Table 4 specifies Hydraulic Fluid types for a range of ambient temperatures.

9.9: Brake Adjustments

9.9.(a): Wear will be more rapid when the linings are new, while the high spots are wearing down as the bedding process takes place. Adjustment will be required soon after the brake has been put into service.

9.9.(b): On units without automatic adjustment, brake release lever travel increases with lining wear. This decreases the reserve stroke. Carry out periodic maintenance to reset the reserve stroke as described in Chapter 6 "Actuator Stroke Adjustment".

9.9.(c): Brake torque decreases as the brake lever drops. On critical applications, such as hoists, brake adjustment should be performed frequently enough so that the torque loss does not result in loss of load control. In no event should the actuator or lever be allowed to "bottom out". This results in total loss of braking torque and could result in death or injury to personnel.

Following any adjustment, maintenance, or repair on the brake, fully test its operation as described under topic "Operational Test".

Table 4: Recommended Hydraulic Fluids

Ambient Temperature				Hydraulic Fluid
Lower Limit ^0F	Upper Limit ^0F	Lower Limit ^0C	Upper Limit ^0C	
-13	+122	-25	+50	C-10 (1)
+32	+176	0	+80	C-46 (1)
-31	+104	-35	+40	Aero 41 (2)
-76	+140	-60	+60	M-20 (3)

(1) C-10 and C-46 are Shell Morlina® products.
(2) Aero 41 is a Shell® product.
(3) M-20 is a Bayer® Baysilone product.
All hydraulic fluids are obtainable from Magnetek.

Chapter 10.0: Replacement Parts

10.1: Brake Lining Replacement

10.1.(a): As a general guide, Magnetek recommends that brake linings be replaced when the linings wear down to 1/16" minimum thickness. Table 5, shows NEMA's recommended range of minimum lining thickness for bonded and riveted linings on brake wheels from 8" to 30" diameter…

Table 5

Wheel Diameter (Inches)	Maximum RPM Ductile Iron	Minimum Wheel Dia. (Inches) (1)	Lining Thickness (Inches) (2)	
			Riveted (3)	Bonded
8	5000	7.94	0.010	0.016
10	4000	9.92	0.010	0.020
13	3300	12.90	0.010	0.026
16	2600	15.87	0.015	0.032
19	2300	18.87	0.015	0.038
23	1900	22.87	0.015	0.046
30	1340	29.87	0.015	0.060

(1) Minimum after re-machining.
(2) Minimum permissible prior to replacement.
(3) Above rivet head at maximum wear point.

10.2: Detailed procedures for brake shoe replacement and actuator removal and installation are covered earlier in this manual.

10.3: For other parts replacement or complete disassembly and rebuild, refer to the exploded view attached to this manual.

10.4: Before returning a brake to service after major repairs or overhaul, carry out all adjustments outlined in this manual followed by a complete operational test.

10.5: Ordering Parts

10.5.(a): For part number and identification refer to the Exploded View and Bill of Material forming part of this manual.

10.5.(b): Always quote the Magnetek Serial Number when ordering parts.

10.5.(c): For optimum brake life and performance use only genuine Mondel parts.

Chapter 11.0: Long Term Storage

11.1: If a brake assembly will not be installed immediately, it can be stored indoors, in a dry location indefinitely, or outdoors for a reasonable time if adequately protected from moisture and corrosive atmosphere. The brake assembly must always be protected from direct exposure to the elements unless specifically treated at the factory for use in that environment. Covering with plastic sheeting is not acceptable unless provision is made to prevent condensation under the plastic.

11.2: During storage, rust may form on the surface of the brake wheel. This is not usually a problem with ductile iron wheels nor is it necessary to clean the wheel before placing the wheel in service. The first few brake applications will polish the wheel.

11.3: Steel wheels may form scale when corroded, and the braking surface may have to be re-machined to remove the scale. See Table 5 for machining limits. Dynamic balance may be affected.

11.4: Before painting a brake, protect all pivot points, self-adjusting mechanism, pull-rod, actuator piston, brake drum and linings, etc.

11.4.(a): Data plates and labels must not be removed or painted over.

Electro-hydraulic Thrusters ELDRO®

EMG

Lubricant Chart

for temperature - 25 °C ..... + 50 °C

In case of temperatures outside this range, please enquire.

Oil Type	HL 10 DIN 51 524 Teil 1 (ISO VG 10)
Shell	Shell Morlina 10 **Original filling.**
Similar types of lubricants	
ARAL	Aral Vitam GF 10
bp	BP Energol HLP - D 10 BP Energol JS - P BP Energol JS - A
Castrol	CASTROL HYSPIN VG 10
Chevron	Chevron EP Hydraulic Oil 10 Chevron Spindle Oil 10
elf	SPINELF 10
Esso	SPINESSO 10
FUCHS	RENOLIN MR 3 RENOLIN B 3
Mobil	Mobil Velocite Oil No. 6 Mobil D.T.E. 21
TEXACO	Rando Oil 10 Spindura Oil 10

11.7.9 SPAN LOCK ACTUATOR – EARLE GEAR EG-2B

STEWARD MACHINE CO., INC.

MANUFACTURER OF
EARLE® GEAR REDUCERS

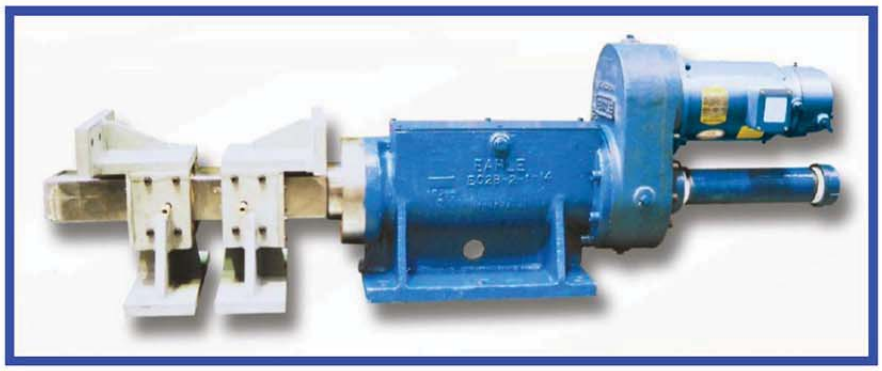

EARLE® EG-2B LOCKBAR OPERATOR

INSTALLATION, OPERATION AND
LUBRICATION INSTRUCTIONS

1 1/2 H.P. BALDOR MOTOR
WITH STEARNS BRAKE

JANUARY 2008

STEWARD MACHINE CO., INC.

BIRMINGHAM, ALABAMA
(205) 841-6461

Table of Contents

Operation 1

Installation 1- 4

Adjustment 4-6

Lubrication 6-7

Limit Switch Diagram 8

Wiring Diagram for Lock Bar Operator 9

Baldor Electric Motor Information ..... Appendix A

Stearns Brake Information ..... Appendix B

Earle® Assembly Drawing EG2B-1B ..... Appendix C

EARLE® EG-2B LOCK BAR OPERATOR

OPERATION, INSTALLATION AND LUBRICATION INSTRUCTIONS

1. OPERATION

A. ELECTRICAL

The Lock Bar Operator is electrically powered and equipped with lever type Switches to limit the Lock Bar travel. The travel is preset at the factory, but field adjustment is possible if necessary.

B. MANUAL

To operate the Lock Bar manually, remove the Cover from the rear end of the motor. Place the Hand Crank (7-4) hub on the square end of the Motor shaft (for piece numbers refer to assembly drawing number EG2B-1B). When the Cover is removed, a plunger is released and opens the circuit to prevent electrical operation while the Hand Crank is used. **DO NOT DEPRESS THE PLUNGER OF THE CUT-OUT SWITCH WHEN THE HAND CRANK IS BEING USED.** Replace the Cover to permit the unit to operate electrically.

2. INSTALLATION

A. MECHANICAL

1. Close the span and make certain the ends of the leaf(s) are at the proper elevation and aligned with the adjacent leaf or approaches with the live load shoes in firm contact. If the proper alignment does not exist the live load shoes should be adjusted accordingly.

2. Position the Lock Bar Operator, Lock Bar, guide and socket (receiver) on the supporting structures so that no interference exists when the Bar is fully extended (except for

Cushionloks® system). Shims may be required to achieve proper alignment as detailed in the Plans and Specifications.

3. Drill and ream mounting bolt holes using the Operator, guide and socket as templates. Install the bolts.

4. Remove the Cover at the rear end of the Motor, release the Brake and manually operate the unit several times through the full length of the stroke. No binding should occur.

5. If the leaf has more than one Lock Bar Operator assembly, install the other Lock Bar Operators in a similar manner.

6. With all Lock Bars fully extended and engaged, check the elevation alignment as described in **2.A.1.** If correct alignment is not present, adjust the live load shoes and/or guides and sockets as required. When properly installed, the live load shoes will be in firm contact, the leaf ends correctly aligned and the Lock Bar will function with no binding or interference.

7. Reinstall the Cover Plate on the rear of the Motor.

8. Install lubrication lines and fittings and lubricate.

If Lock Bar has not been previously assembled to the Lock Bar Operator, the following procedures apply (refer to the Lock Bar Operator assembly drawing number EG2B-1B).

1. Remove Cover at the end of Motor.

2. Loosen the protective rubber Bellows (7-5) Collar Clamp at the Bar Guide (5-1) end only and slide Bellows onto the Lock Bar.

3. Remove the Bar Guide and slide Bar Guide onto the Lock Bar.

4. Remove inspection Cover (6-5).

5. Remove tripping arms on Limit Switches.

6. Release Motor Brake on Operator manually.

7. Turn the Hand Crank (7-4) on the Operator until the pin hole on the end of the Lock Bar Stem (5-2) just clears the end of the Stem Guide (2-1). The Lock Bar Stem must be held to prevent it from rotating while turning the hand crank. Dowel Pin (7-28) is used to prevent rotation of the Lock Bar stem (5-2) inside the Stem Guide.

8. Line up pin hole in end of the Lock Bar with pin hole in Lock Bar Stem. The flat area machined on the 7" diameter of the Lock Bar Stem must be on the same side of the operator as the limit switches so that only the Lock Bar will trip the Limit Switch (7-6) arms.

9. Install Pin (5-6) and Set Screw (7-15).

10. Turn Hand Crank in opposite direction as in Step 7 to pull the Stem and Lock Bar into the Stem Guide. Align Dowel Pin (7-28) with slot in Stem Guide. When the Lock Bar has entered the Stem Guide far enough reinstall the Bar Guide and Bellows.

11. Reinstall Limit Switch trip arms.

12. Reinstall inspection Cover (6-5).

13. Reinstall Cover on end of Motor.

If Lock Bar travel is not correct, follow instructions in **Adjustment, Paragraph A - Limit Switches**.

B. ELECTRICAL

Combination motor starter, across line reversing type, shall be furnished by the electrical contractor. The following shall be selected to suit conditions:

a. Air circuit breaker shall be sized for continuous load as well as short circuit capability.

b. Contactor size shall be based on horse power rating.

c. Overloads shall be sized for motor in installed condition including load for holding brake open.

d. Control power transformer shall have 120V secondary.

e. Push-buttons shall be installed in control desk.

f. Starter enclosure type shall suit location.

Operation:

1. Press forward push-button (momentary contact) energizing coil "F", contact "F" seals around forward push-button. Motor will run until limit switch opens which de-energizes coil "F" opening contact "F".

2. Same as above for reverse travel.

3. To stop, press "STOP" push button.

4. Power shut off switch will open if and when the cover is removed for the crank to be inserted in the motor for manual operation.

3. ADJUSTMENT

A. LIMIT SWITCHES

To field adjust the Lock Bar travel, the following procedures apply (for piece numbers refer to assembly drawing number EG2B-1B).

1. Remove Cover from the rear end of the Motor.

2. Remove inspection Cover (6-5).

Page 4 of 9

3. Release the Motor Brake on the Lock Bar Operator manually.

4. Turn Hand Crank (7-4) in direction that will pull the Lock Bar into the Stem Guide (2-1) until the Lock Bar is in the desired, fully retracted position. This should provide a minimum of 1/2" travel remaining for over travel during operation.

   CAUTION: Do not decrease the distance of the rear Limit Switch (7-6) toward the housing. If the distance is decreased, the Lock Bar may contact the Lock Bar Housing during operation.

5. Move the rear Limit Switch (7-6) forward if required in order to properly locate the Lock Bar so that the limit switch will trip when the Lock Bar is retracted to this position.

6. Turn the Hand Crank to drive the Lock Bar into the fully engaged position. Again, this should provide a minimum of 1/2" travel remaining in reserve for over travel during operation.

7. Adjust the front position Limit Switch (7-6) so that it will trip when Lock Bar is extended to this position.

8. Reinstall inspection Cover (6-5).

9. Reinstall Cover on end of Motor.

B. GUIDES AND SOCKETS

1. Close bridge, check the end of the leavesfor proper elevation and alignment and verify that all live load shoes are in firm contact.

2. Adjust Lock Bar guide and receivers in accordance with shop drawings provided with the guides and receivers.

C. REMOVAL OF LOCK BAR

Refer to Lock Bar assembly drawing number EG2B-1B.

1. Remove Cover at the end of the Motor.
2. Loosen the protective rubber Bellows (7-5) Collar Clamp at the Bar Guide (5-1) end only and slide Bellows onto the Lock Bar.
3. Remove the Bar Guide (5-1) and slide Bar Guide onto the Lock Bar.
4. Remove inspection Cover (6-5).
5. Remove tripping arms on Limit Switches (7-6).
6. Release Motor Brake on Operator manually.
7. Turn the Hand Crank (7-4) on the Operator until the Pin (5-6) on the end of the Lock Bar Stem (5-2) just clears the end of the Stem Guide (2-1).
8. Remove Set Screw (7-15) and Pin (5-6).
9. Turn Hand Crank in opposite direction as in Step 7 to pull the Stem into the Stem Guide. Realign Dowel Pin (7-28) with slot in Stem Guide (2-1). Reinstall the Bar Guide.
10. Remove rubber Bellows (7-5) from Lock Bar and install on Bar Guide.
11. Remove Lock Bar.
12. Reinstall Limit Switch trip arms.
13. Reinstall inspection Cover (6-5).
14. Reinstall Cover on end of Motor.

Page 6 of 9

4. LUBRICATION

The Earle® Lock Bar Operator Housing contains grease when shipped. Check housing lubricant once a year and add lubricant as required through pipe plug in housing.

BEFORE INITIAL OPEATION AND SEMI-ANNUALLY THEREAFTER, THE FOLLOWING PROCEDURE IS REQUIRED:

1. Remove inspection Cover (6-5).
2. Extend Lock Bar fully.
3. Lightly lubricate Lock Bar with brush.
4. Lightly lubricate machined inside walls of Stem Guide (2-1) and threads on Stem (5-2).
5. Replace inspection Cover (6-5).
6. Lubricate Lock Bar guides and sockets.

Lubricant in housing is Exxon Beacon 325. Other compatible lubricants of equal quality may be used.

Page 7 of 9

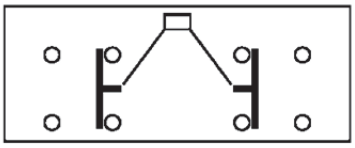

BASIC CONTACT MECHANISM - TWO POLE

LIMIT SWITCH IS EQUIPPED WITH TWO POLE SNAP ACTION SWITCH WHICH PROVIDES TWO NORMALLY OPEN AND TWO NORMALLY CLOSED CONTACTS. EACH POLE IS ELECTRICALLY SEPARATE FROM THE OTHER AND CAN BE USED ON OPPOSITE POLARITIES. THE CONTACTS OF EACH POLE ARE SINGLE POLE DOUBLE THROW. THESE CIRCUITS ARE ELECTRICALLY SEPARATE BUT CANNOT BE USED ON OPPOSITE POLARITIES.

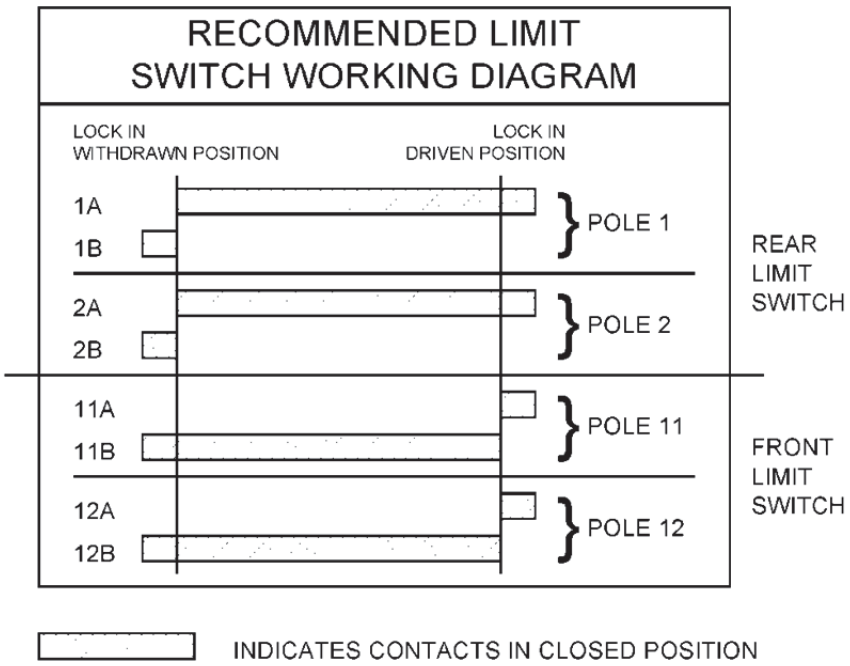

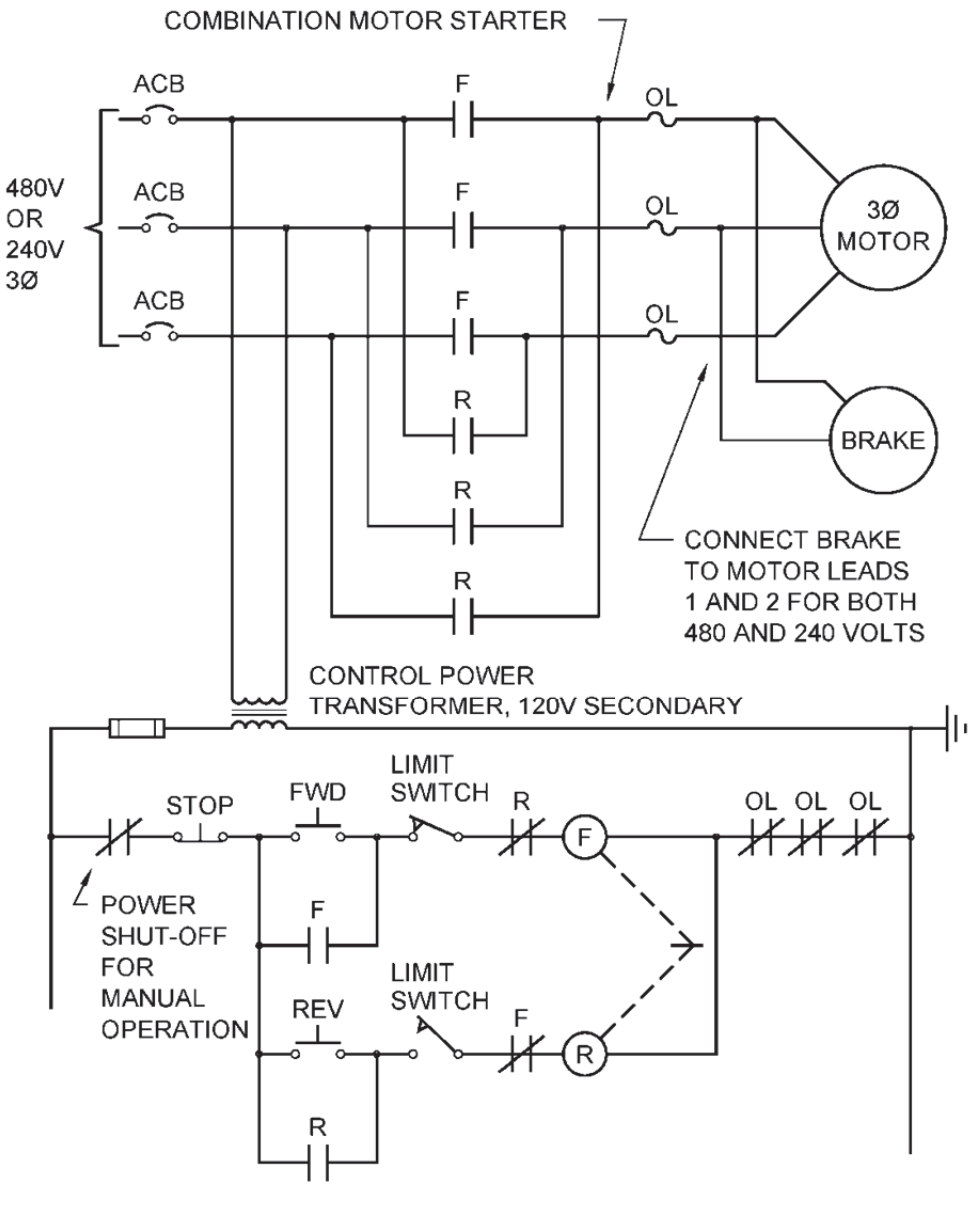

WIRING DIAGRAM FOR LOCKBAR OPERATOR

(BALDOR MOTOR)

Page 9 of 9

Appendix A

Baldor Electric Motor Information

BALDOR · DODGE · RELIANCE

BALDOR · RELIANCE

Product Information Packet

KAMAN INDUSTRIAL TECH CORP

1.5HP,1675RPM,3PH,60HZ,145TDZ,3617M,TENV

Copyright © All product information within this document is subject to Baldor Electric Company copyright © protection, unless otherwise noted.

BALDOR • RELIANCE Product Information Packet: - 1.5HP,1675RPM,3PH,60HZ,145TDZ,3617M,TENV

Product Detail							
Revision:	K	Status:	PRD/A	Change #:		Proprietary:	No
Type:	AC	Prod Type:	3617M	Elec. Spec:	36WG3127	CD Diagram:	CD0005
Enclosure	TENV	Mfg Plant:		Mech Spec:	36J507	Layout:	36LYJ507
Frame:	145TDZ	Mounting:	F1	Poles:	04	Created Date:	
Base:	N	Rotation:	R	Insulation:	F	Eff. Date:	07-06-2007
Leads:	9#16					Replaced By:	

Nameplate NP1261L							
CAT.NO.							
SPEC.	36J507-3127G1						
HP	1.5						
VOLTS	208-230/460						
AMP	4.7-4.4/2.2						
RPM	1675						
FRAME	145TDZ	HZ	60	PH	3		
SER.F.	1.15	CODE	J	DES	D	CLASS	F
NEMA-NOM-EFF	80	PF	72				
RATING	40C AMB-15 MIN						
CC		USABLE AT 208V	4.7				
DE	6206	ODE	6205				
ENCL	TENV	SN					
	IEEE 45						

Page 2 of 8

BALDOR • RELIANCE Product Information Packet: - 1.5HP,1675RPM,3PH,60HZ,145TDZ,3617M,TENV

Parts List

Product ID	Description	Quantity	List Price
SA053509	SA 36J507-3127G1	1.000	1,042.00
RA048228	RA 36J507-3127G1	1.000	868.00
36CB3005A03	36 CB .75 NPT @ 6	1.000	27.00
36GS1000SP	GASKET-CONDUIT BOX, .06 THICK #SV-330 LE	1.000	5.00
51XB1016A08	10-16X 1/2HXWSSLD SERTYB	2.000	2.00
11XW1032G06	10-32 X .38, TAPTITE II, HEX WSHR SLTD U	1.000	2.00
36EP1303A76	FR EP 182-4C ENCL 205 BRG W/GRSR W/2 BK	1.000	183.00
HW4500A01	1641B(ALEMITE)400 UNIV, GREASE FITT	1.000	2.00
HW5100A05	WVY WSHR F/205 & 304 BRGS	1.000	2.00
36EP1304A01	FLANGE MTD ENDPLATE 182-4TD -ENCL	1.000	212.00
HW4500A01	1641B(ALEMITE)400 UNIV, GREASE FITT	1.000	2.00
10XN2520A24	1/4-20X 1 1/2 HEX HD X	4.000	2.00
HW2501D10	KEY, 3/16 SQ X 1.000	1.000	2.00
36CB4516	36 LIPPED CB LID	1.000	2.00
37GS1001SP	GASKET, CONDUIT BOX LID, .06 THICK LEXID	1.000	3.00
51XW0832A07	8-32 X .44, TAPTITE II, HEX WSHR SLTD SE	4.000	2.00
HA1005A02SP	SLINGER--06 BEARING, 1.14 I.D., 2.00 O.D	1.000	3.00
HW2501D10	KEY, 3/16 SQ X 1.000	1.000	2.00
HA7000A11	KEY RETAINER 0.750 DIA SHAFTS	1.000	2.00
MJ5001A01	46-665 RED SEALER	0.001	54.00
10XF0440S02	04-40 X 1/8 TYPE F HEX HD STAINLESS STIC	2.000	2.00
MJ1000A02	GREASE, POLYREX EM EXXON	0.050	9.00
84XN3816J36	3/8-16X2-1/4 SOCK HD, BK OX	2.000	2.00
MG1000G27	PAINT- S9282E CHARCOAL GREY	0.022	4,000.00

Page 3 of 8

BALDOR • RELIANCE Product Information Packet: - 1.5HP,1675RPM,3PH,60HZ,145TDZ,3617M,TENV

Parts List (continued)

Product ID	Description	Quantity	List Price
LB1002	LABEL,MARINE DUTY (ON ROLLS)	1.000	2.00
HA3101A46	THRUBOLT- 1/4-20 X 10.00 X	4.000	2.00
78BK2429DQF	1-056-224-29-DQF W/ACCESS COVER & INTERL	1.000	1,889.00
LB1172A01	CUSTOM MTR CARTON LABEL LASER PRINTER	1.000	2.00
LC0005E01	CONN.DIA./WARNING LABEL (LC0005/LB1119)	1.000	2.00
NP1261L	NP LASER ENGRAVED,UL CSA CC,W/O THERM,SS	1.000	
G0PA1000	PACKAGING GROUP	1.000	36.00
PK3082	STYROFOAB CRADLE	1.000	2.00

Page 4 of 8

BALDOR • RELIANCE Product Information Packet: - 1.5HP,1675RPM,3PH,60HZ,145TDZ,3617M,TENV

Performance Data at 460V, 60Hz, 1.5HP (Typical performance - Not guaranteed values)							
General Characteristics							
Full Load Torque:	4.62 LB-FT			**Start Configuration:**		DOL	
No-Load Current:	1.62 Amps			**Break-Down Torque:**		17.8 LB-FT	
Line-line Res. @ 25°C.:	11.6 Ohms A Ph / 0.0 Ohms B Ph			**Pull-Up Torque:**		12.0 LB-FT	
Temp. Rise @ Rated Load:	0°C			**Locked-Rotor Torque:**		15.9 LB-FT	
Temp. Rise @ S.F. Load:	0°C			**Starting Current:**		13.9 Amps	
Load Characteristics							
% of Rated Load:	**25**	**50**	**75**	**100**	**125**	**150**	**S.F.**
Power Factor:	35.0	53.0	66.0	75.0	81.0	85.0	79.0
Efficiency:	59.9	72.4	76.7	77.8	77.5	76.1	77.6
Speed:	1776.0	1754.0	1731.0	1705.0	1677.0	1644.0	1688.0
Line Amperes:	1.69	1.85	2.09	2.4	2.8	3.26	2.64

Page 5 of 8

BALDOR • RELIANCE Product Information Packet: - 1.5HP,1675RPM,3PH,60HZ,145TDZ,3617M,TENV

Performance Graph at 460V, 60Hz, 1.5HP (Typical performance - Not guaranteed values)

Page 6 of 8

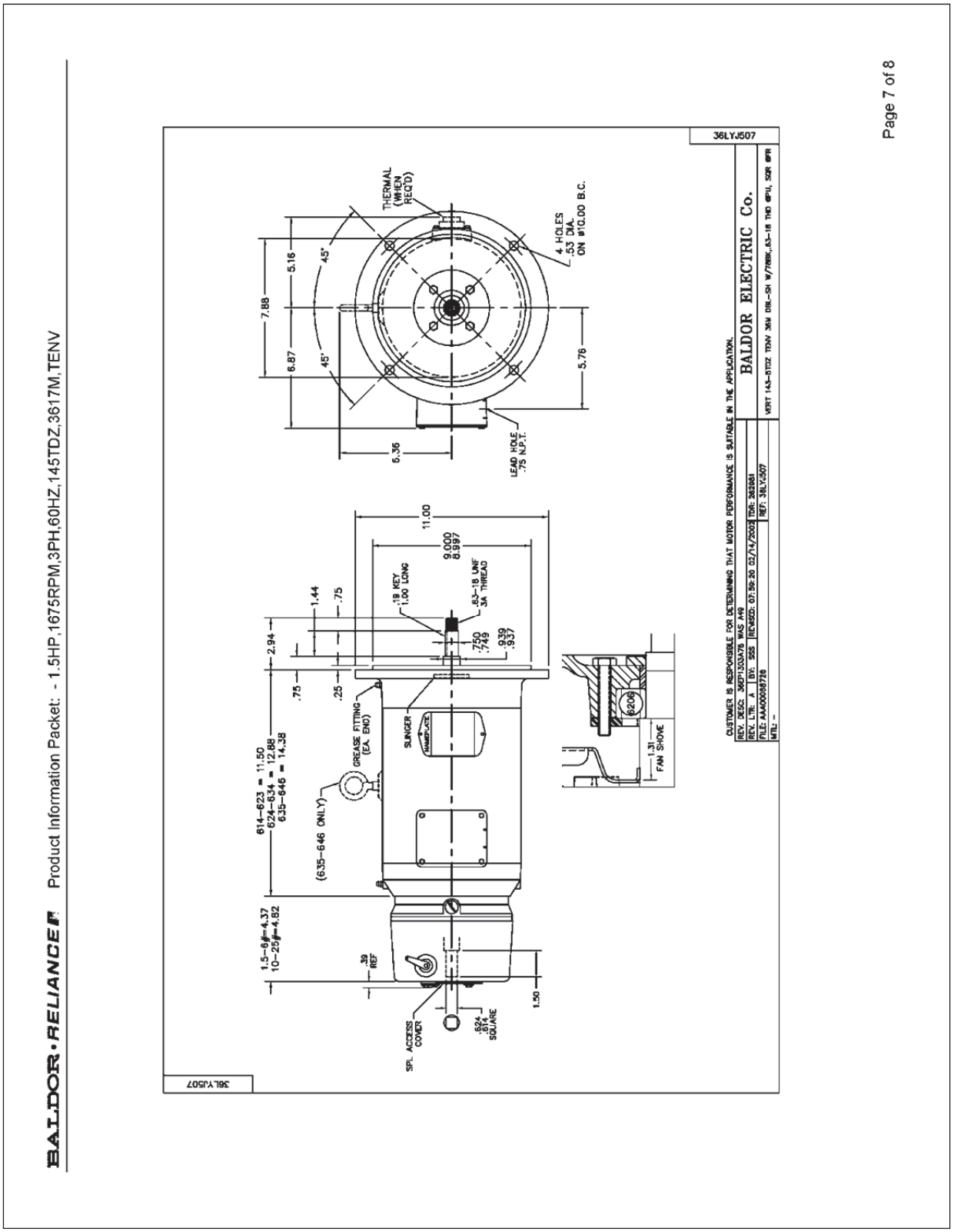
BALDOR • RELIANCE Product Information Packet: - 1.5HP,1675RPM,3PH,60HZ,145TDZ,3617M,TENV
36LYJ507
BALDOR ELECTRIC Co.
CUSTOMER IS RESPONSIBLE FOR DETERMINING THAT MOTOR PERFORMANCE IS SUITABLE IN THE APPLICATION.
THERMAL (WHEN REQ'D)
4 HOLES .53 DIA. ON Ø10.00 B.C.
LEAD HOLE .75 N.P.T.
7.88
6.87
5.16
45°
5.36
5.76
11.00
9.000
8.997
.18 KEY 1.00 LONG
.63–18 UNF 3A THREAD
1.44
.75
.25
2.94
.750
.749
.939
.937
614–623 = 11.50
624–634 = 12.88
635–646 = 14.38
(635–646 ONLY)
GREASE FITTING (EA END)
SLINGER
6206
1.31
FAN SHOVE
1.5–6 = 4.37
10–25 = 4.82
.39 REF
1.50
SPL ACCESS COVER
.624 .614 SQUARE
Page 7 of 8

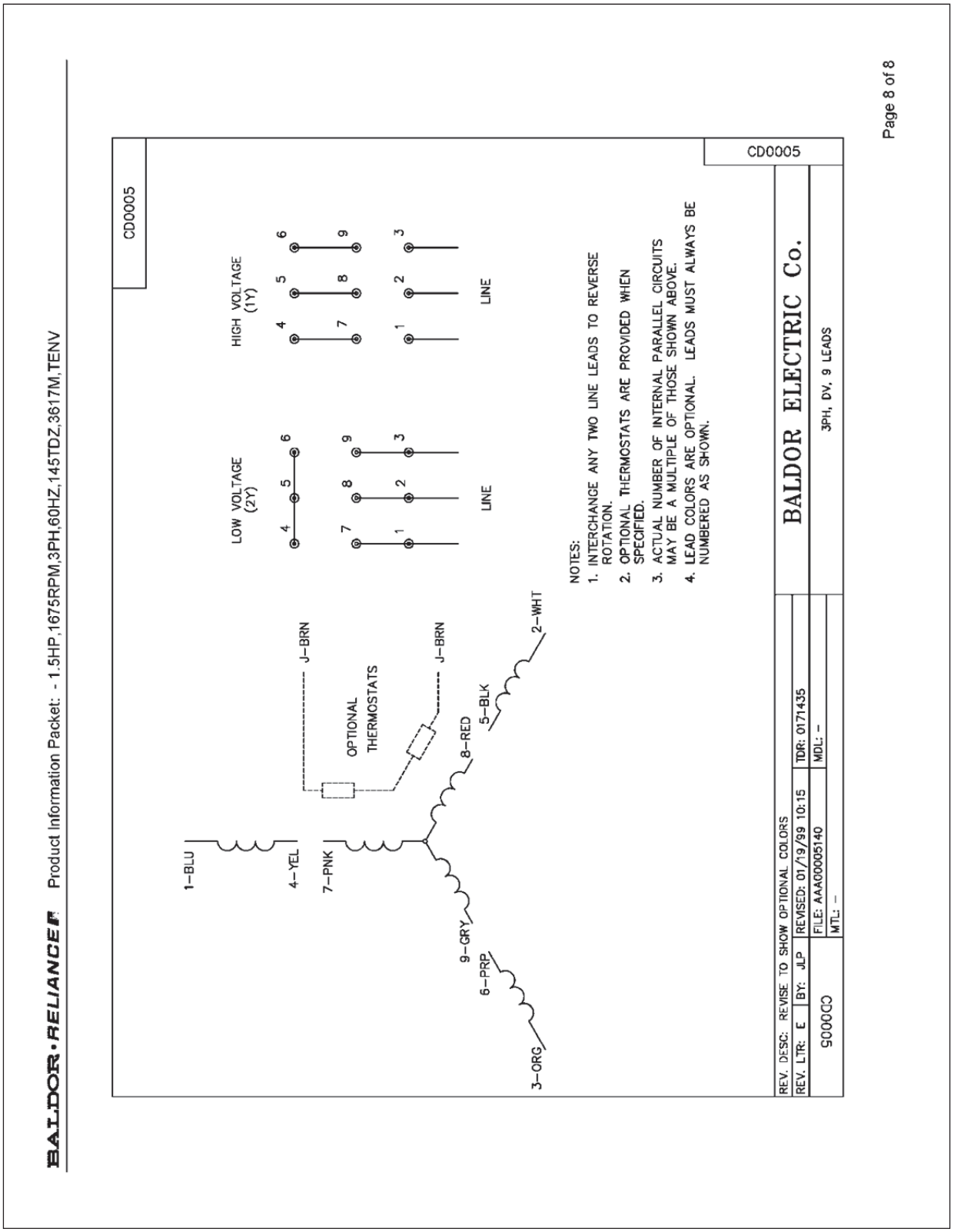
BALDOR • RELIANCE
Product Information Packet: - 1.5HP,1675RPM,3PH,60HZ,145TDZ,3617M,TENV
CD0005
LOW VOLTAGE (2Y)
HIGH VOLTAGE (1Y)
LINE
LINE
1–BLU
4–YEL
7–PNK
J–BRN
OPTIONAL THERMOSTATS
J–BRN
8–RED
5–BLK
2–WHT
9–GRY
6–PRP
3–ORG
NOTES:
1. INTERCHANGE ANY TWO LINE LEADS TO REVERSE ROTATION.
2. OPTIONAL THERMOSTATS ARE PROVIDED WHEN SPECIFIED.
3. ACTUAL NUMBER OF INTERNAL PARALLEL CIRCUITS MAY BE A MULTIPLE OF THOSE SHOWN ABOVE.
4. LEAD COLORS ARE OPTIONAL. LEADS MUST ALWAYS BE NUMBERED AS SHOWN.
REV. DESC: REVISE TO SHOW OPTIONAL COLORS
REV. LTR: E | BY: JLP | REVISED: 01/19/99 10:15 | TDR: 0171435
S000CO | FILE: AAA00005140 | MDL: –
MTL: –
BALDOR ELECTRIC Co.
3PH, DV, 9 LEADS
CD0005
Page 8 of 8

Appendix B

Stearns Brake Information

Stearns® *Spring-Set Disc Brakes*

P/N 8-078-905-60
effective 08/27/07

Installation and Service Instructions for 1-056-X00* Series (all revisions) Manual Adjust Brakes

*This sheet includes Series 1-056,000; 1-056,100; 1-056,200; 1-056,300; 1-056,400; 1-056,500; 1-056,600 and 1-056,900. For other series consult factory.

For replacement parts refer to sheets:

Series	Sheet Part No.
1-056-000	8-078-906-00
1-056-100	8-078-906-01
1-056-200	8-078-906-02
1-056-300	8-078-906-03
1-056-400	8-078-906-04
1-056-500	8-078-906-05
1-056-600	8-078-906-06
1-056-900	8-078-906-09

Also available at **www.rexnord.com**

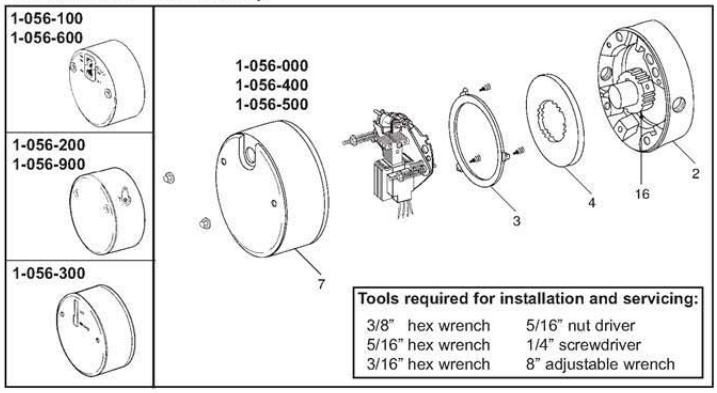

Tools required for installation and servicing:

3/8" hex wrench	5/16" nut driver
5/16" hex wrench	1/4" screwdriver
3/16" hex wrench	8" adjustable wrench

Typical Nameplate

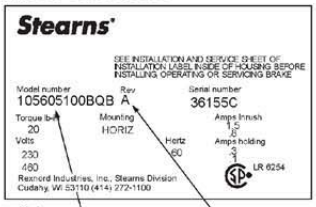

Note:

MODEL NUMBER will appear on brake nameplate.

REVISION CONTROL (if applicable) and brake serial number

Important

Please read these instructions carefully before installing, operating, or servicing your Stearns Brake. Failure to comply with these instructions could cause injury to personnel and/or damage to property if the brake is installed or operated incorrectly. For definition of limited warranty/liability, contact Rexnord Industries, LLC, Stearns Division,5150 S. International Dr., Cudahy, WI 53110, (414) 272-1100.

Caution

1. Installation and servicing must be made in compliance with all local safety codes including Occupational Safety and Health Act (OSHA). All wiring and electrical connections must comply with the National Electric Code (NEC) and local electric codes in effect.
2. Do not operate the brake in atmospheres containing explosive gases or dusts.
3. To prevent an electrical hazard, disconnect power source before working on the brake. If power disconnect point is out of sight, lock disconnect in the *off* position and tag to prevent accidental application of power.
4. Make certain power source conforms to the requirements specified on the brake nameplate.
5. Be careful when touching the exterior of an operating brake. Allow sufficient time for brake to cool before disassembly. Surfaces may be hot enough to be painful or cause injury.
6. Do not operate brake with housing removed. All moving parts should be guarded.
7. Installation and servicing should be performed only by qualified personnel familiar with the construction and operation of the brake.
8. For proper performance and operation, only genuine Stearns parts should be used for repairs and replacements.
9. After usage, the brake interior will contain burnt and degraded friction material dust. This dust must be removed before servicing or adjusting the brake.

   DO NOT BLOW OFF DUST using an air hose. It is important to avoid dispersing dust into the air or inhaling it, as this may be dangerous to your health.

   a) Wear a filtered mask or a respirator while removing dust from the inside of a brake.

   b) Use a vacuum cleaner or a soft brush to remove dust from the brake. When brushing, avoid causing the dust to become airborne. Collect the dust in a container, such as a bag, which can be sealed off.
10. **Caution!** While the brake is equipped with a manual release to allow manual shaft rotation, the motor should not be run with the manual release engaged, to avoid overheating the friction disc(s).

General Description

These series of brakes are spring-set, electrically released. They contain one or more rotating friction discs (4) driven by a hub (16) mounted on the motor or other shaft.

Operating Principle

These series contain one or more friction discs (4) assembled alternately between the endplate (2) friction surface, stationary disc(s) (3) and pressure plate (also called stationary disc) (3). The stationary disc(s) are restrained from rotating by being keyed into the endplate. With the brake released, all disc pack components are free to slide axially and the friction disc(s) to rotate.

Brake release occurs when the solenoid coil is electrically energized, causing the solenoid plunger to travel a specified distance and through a lever system, overcoming the pressure spring force. This action releases the clamping force on the disc pack, thereby allowing the friction disc(s) and brake hub to rotate.

Brake *sets* and torque is produced when electric current to the solenoid coil is interrupted, thereby collapsing the solenoid magnetic field. The solenoid plunger returns to its original de-energized position allowing the lever arm to move forward by virtue of the compressed torque springs. This action compresses the disc pack components which applies a retarding torque to the brake hub and ultimately restores the brake to a spring-set static condition.

BRAKE MOUNTING (Manual Adjust) 1-056-X00

1 Place hub on motor shaft.

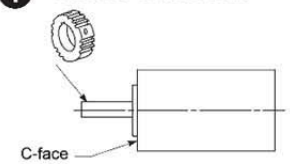

2 Position hub on shaft as shown.

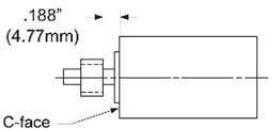

3 Tighten set screws to motor shaft.

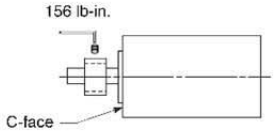

4 Remove brake housing.

Housings vary by series number.
See page 1.

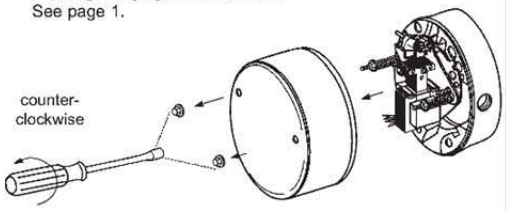

5 Slide endplate over hub noting position of stabilizer clips, if used. (Refer to Friction Disc Replacement, view 3 and 3A.) Tighten mounting screws.

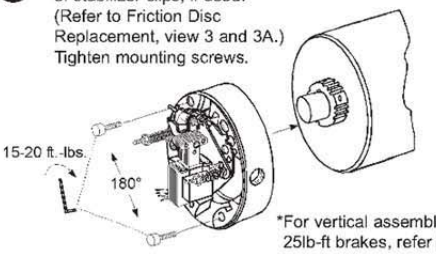

*For vertical assembly of 20 & 25lb-ft brakes, refer to page 3.

6 AC coils are 50/60 Hz, single phase rated. Power supply to coil must not have current or frequency limiting output that is less then the coil requirement.

- Connect leadwires to power source. Verify voltage rating* per nametag on coil.
- Keep wiring away from pinch points and moving components.

* For DC voltages see sheet 8-078-950-00.

Coil Wiring

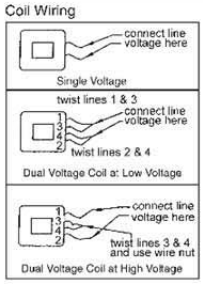

7 Replace brake housing and tighten to torque specified below:

Brake series		Torque
1-056-000	1-056-300	8 lb-in
1-056-400	1-056-500	
1-056-100	1-056-200	12 lb-in
1-056-600	1-056-900	

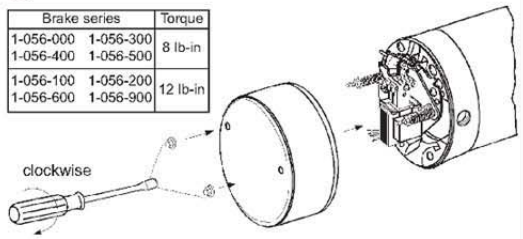

FRICTION DISC REPLACEMENT SERIES 1-056-X00

1 Remove support plate screws and lift support from brake

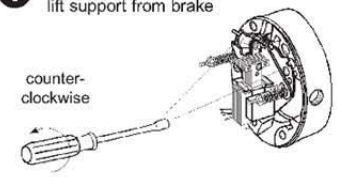

2 Remove and discard old friction disc.

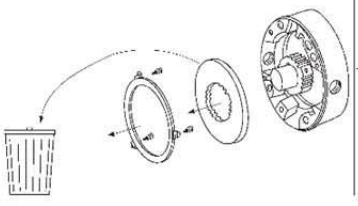

3 Install new friction disc(s) and stationary disc(s) as shown.

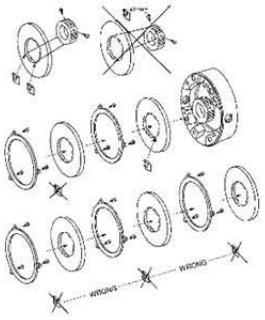

Note: Stabilizer clips should never be located over the set screws of the hub.

Single disc brakes always use two stabilizer clips, locate at 90° from each other.

Double disc brakes typically will not require stabilizer clips, however there are some special modifications that will use them.

Rev A & B may have these clips may have these clips located 1 per disc, and should never be positioned in line with each other.

Rev C will have only one clip, used on the inner-most disc. No clip will be used on the outer-most disc.

Three disc brakes will never use stabilizer clips on friction discs.

4 Reposition support plate on endplate and tighten mounting screws to 55 lb-in.

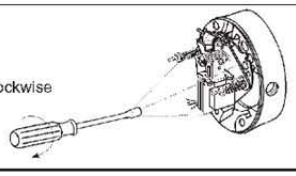

Note: Friction discs can wear to 1/2 their original thicknes, or .093"

2

AIR GAP ADJUSTMENT 1-056-X00

As friction disc wear the air gap will increase. When plunger gets to the reset position, the air gap must be adjusted.

1 To **increase** air gap, turn both adjusting screws (10) counterclockwise. Use 3/16 hex wrench, or flat screwdriver on older models.

56,X00 Series Air Gap (REV A & B)

Disc	Torque	Min/Max
1	1.5, 3 & 6	.38" - .69"
2	10 & 15	.45" - .69"
3	20 & 25	.50" - .69"

56,X00 Series Air Gap (REV C)

Disc	Torque	Min/Max
2	3, 6, 10 & 15	.45" - .69"
3	20 & 25	.50" - .69"

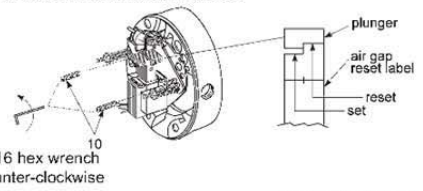

2 To **decrease** air gap, turn both adjusting screws (10) clockwise.

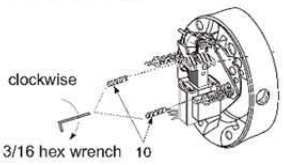

Maximum gap should not exceed .69"

COIL REPLACEMENT SERIES 1-056-X00

Remove housing and disconnect power and wiring to coil.

1 Insert screwdriver between support plate and lever arm and pry forward.

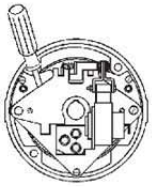

2 Lift plunger/solenoid lever assembly out of coil.

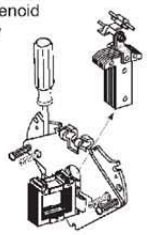

3 Remove plunger guide.

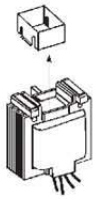

4 Discard coil.

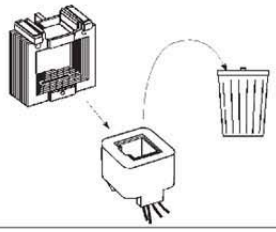

5 A) Insert new coil. (Lead wires in same position as old coil.)
B) Insert plunger guide.

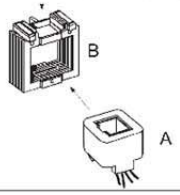

6 A) Re-insert plunger into coil; drop pivot pin into cradle of support plate.
B) Remove screwdriver.

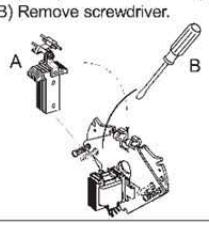

Reconnect coil and replace housing per installation instructions, page 2.

VERTICAL SPRING ASSEMBLY 1-056-X00

Vertical Brake Assembly

Single disc brakes are universal mount and do not require separator springs. Double disc brakes are universal mount but require separator springs which are preassembled to the stationary disc. These discs are inserted spring first into the brake. Refer to figure 5A below.

2 Friction Disc

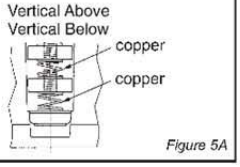

Figure 5A

Installation Procedure for 20 and 25 lb-ft brakes if mounted vertical to motor shaft

(These brakes are factory assembled for horizontal operation.)

Remove support plate by loosening the three mounting screws.

Remove stationary discs and friction discs.

Using the spring kit provided with this brake, insert three springs of identical color into each stationary disc hole. Springs are inserted from the side opposite the indent mark (see Figure 5B). Stationary disc should be placed on a clean flat surface with a clearance hole to allow the tip of the spring to extend through the bottom side of the stationary plate. Using the 1/8" pin provided and a hammer, drive the spring until the large coil diameter bottoms out against the disc.

Reassemble the disc pack with the stationary discs in the proper arrangement shown in Figure 5C.

Mount support plate and torque screws evenly to 55 lb-in.

20, 25 lb-ft Horizontal

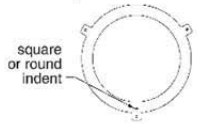

Figure 5B

3 Friction Disc

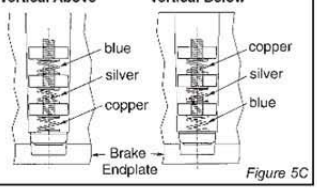

Figure 5C

TORQUE ADJUSTMENT

Torque Adjustment

Brake is factory set for nominal rated static torque which is maximum torque. Torque may be decreased up to 50% for increased stopping times up to 2 second stop time.

The torque on the 1-1/2 lb-ft brake may not be reduced.

Turn both spring adjustment screws (11), Figure 6, equal amounts counterclockwise to decrease torque. See Table A for torque reduction permissible amounts.

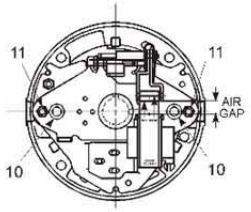

Figure 6

TABLE A

Nominal Static Torque (lb-ft)	Original Spring Height (inches)	Maximum Counter-clockwise Turns	% Torque Reduction per Turn
1-1/2	1.56"	-	-
3	1.50"	5-1/2	9%
6	1.47"		
10	1.53"		
15	1.53"		
20	1.53"		
25	1.47"		

TROUBLESHOOTING

COIL FAILURE

SUPPLY VOLTAGE CAUSE	SUPPLY VOLTAGE CORRECTION
Line voltage >110% of coil rating	Reduce voltage or replace with proper rated coil
AC input on a DC coil	Replace rectifier or replace with proper rated coil.
Excessive voltage drop during inrush time	Increase current rating of power supply.
WIRING CAUSE	**WIRING CORRECTION**
Leadwires interfering with plunger pull-in	Reroute wiring away from plunger and other moving components.
Excessive voltage drop during inrush time	Increase leadwires size from power supply
Coil leadwire shorted to ground	Replace coil or leadwire and protect with wire sleeving
SOLENOID ASSEMBLY CAUSE	**SOLENOID ASSEMBLY CORRECTION**
Plunger not seating flush against solenoid frame	Loosen solenoid mounting screws and reposition frame to allow full face contact
Plunger cocked in coil preventing pull-in	Realign solenoid frame
Excessive solenoid/plunger wear at mating surface	Replace solenoid assembly
Broken shading coils	Replace solenoid assembly
WORN PARTS CAUSE	**WORN PARTS CORRECTION**
Excessive wear of solenoid link arm and/or shoulder bolt	Replace link arm and link bolt; also inspect plunger thru-hole for elongation
Plunger guides worn down and interfering with plunger movement	Replace guides
APPLICATION CAUSE	**APPLICATION CORRECTION**
Machinery cycle rate is exceeding brake rating	Reduce brake cycle rate or use alternate control method
High ambient temperature (>110%) and thermal load exceeding coil insulation rating	Use Class H rated coil and /or find alternate method of cooling brake
Brake coil wired with windings of an Inverter motor or other voltage/current limiting device	Wire coil to dedicated power source with instantaneous coil rated voltage
MISCELLANEOUS CAUSE	**MISCELLANEOUS CORRECTION**
Wrong or over tightened torque	Replace with proper spring or refer to Installation section for proper spring height
Excessive air gap	Reset, refer to Installation Section 4

EXCESSIVE WEAR / OVERHEATING

AIR GAP CAUSE	AIR GAP CORRECTION
Low solenoid air gap	Reset air gap (refer to Air Gap Adjustment)
Disc pack dragging	Inspect endplate, hub and discs for dirt, burrs, wiring and other sources of interference preventing disc "float"
CYCLE RATE CAUSE	**CYCLE RATE CORRECTION**
Brake "jogging" exceeding coil cycle rate	Reduce cycle rate or consider alternate control method
Thermal capacity is being exceeded	Reduce cycle rate, use alternate control method or increase brake size
ALIGNMENT CAUSE	**ALIGNMENT CORRECTION**
Broke endplate not concentric to motor C-Face	Motor register must be within .004" on concentricity.
Motor shaft runout is excessive	Must be within .002"; runout; consult motor manufacturer
Brake is being operated on a incline greater than 15° above or below horizontal	Vertical separator springs must be used to prevent discs from becoming cocked
WORN PARTS CAUSE	**WORN PARTS CORRECTION**
Friction disc excessively worn (disc can wear to 1/2 original thickness or .093")	Replace friction discs.
Endplate, stationary disc or pressure plate warped	Replace warped or worn component
Linkages and/or pivot pins worn	Replace all worn components
Motor shaft endfloat excessive	Endfloat must not exceed .020"; consult motor manufacturer
HUB CAUSE	**HUB CORRECTION**
Burr on hub interfering with disc "float"	File off burr
Set screw backed out and interfering with disc	Retighten set screw; use Loctite® 242 to help secure
MISCELLANEOUS	**MISCELLANEOUS**
Solenoid plunger not pulling completely	Check line voltage (±10% of nameplate rating) or replace worn solenoid assembly
Wiring is restricting disc pack movement	Reroute wiring
Excessive stop time (2 seconds or greater)	Increase brake size/torque or use alternate control method
High Ambient temperature (in excess of 110°F)	Reduce cycle rate or use alternate method of cooling

Rexnord Industries, LLC, Stearns Division, 5150 S. International Dr., Cudahy, WI 53110, (414) 272-1100 Fax: (414) 277-4364 www.stearns.rexnord.com

Stearns® *Spring-Set Disc Brakes*

P/N 8-078-906-02
effective 09/20/06

Parts List for 1-056-200 Series (rev. A & B) Manual Adjust Brakes

For Installation and Service Instructions refer to sheet part number 8-078-905-60. Instructions and parts list also available at **www.rexnord.com.**

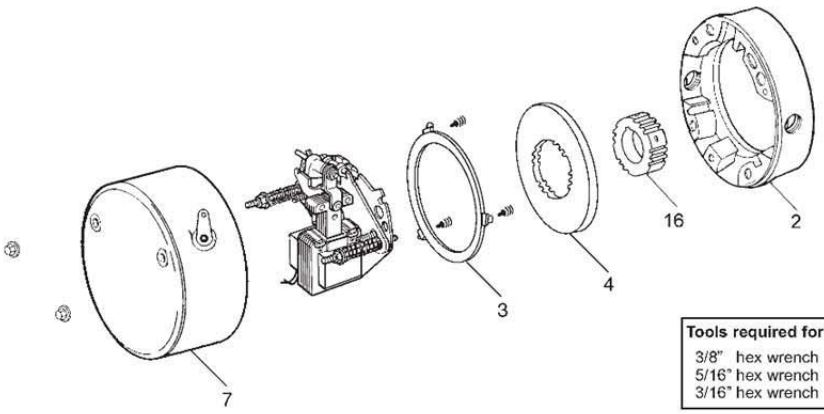

Tools required for installation and servicing:

3/8" hex wrench	5/16" nut driver
5/16" hex wrench	1/4" screwdriver
3/16" hex wrench	8" adjustable wrench

Typical Nameplate

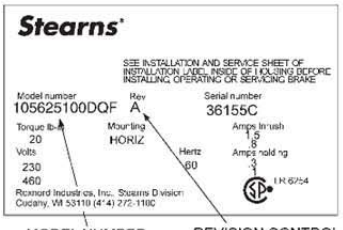

MODEL NUMBER will appear on brake nameplate.

REVISION CONTROL

IMPORTANT

Please read these instructions carefully before installing, operating, or servicing your Stearns Brake. Failure to comply with these instructions could cause injury to personnel and/or damage to property if the brake is installed or operated incorrectly. For definition of limited warranty/liability, contact Rexnord Industries, Inc., Stearns Division, 5150 S. International Dr., Cudahy, WI 53110, (414) 272-1100.

Caution

1. Installation and servicing must be made in compliance with all local safety codes including Occupational Safety and Health Act (OSHA). All wiring and electrical connections must comply with the National Electric Code (NEC) and local electric codes in effect.
2. Do not operate the brake in atmospheres containing explosive gases or dusts.
3. To prevent an electrical hazard, disconnect power source before working on the brake. If power disconnect point is out of sight, lock disconnect in the *off* position and tag to prevent accidental application of power.
4. Make certain power source conforms to the requirements specified on the brake nameplate.
5. Be careful when touching the exterior of an operating brake. Allow sufficient time for brake to cool before disassembly. Surfaces may be hot enough to be painful or cause injury.
6. Do not operate brake with housing removed. All moving parts should be guarded.
7. Installation and servicing should be performed only by qualified personnel familiar with the construction and operation of the brake.
8. For proper performance and operation, only genuine Stearns parts should be used for repairs and replacements.
9. After usage, the brake interior will contain burnt and degraded friction material dust. This dust must be removed before servicing or adjusting the brake.

DO NOT BLOW OFF DUST using an air hose. It is important to avoid dispersing dust into the air or inhaling it, as this may be dangerous to your health.

a) Wear a filtered mask or a respirator while removing dust from the inside of a brake.

b) Use a vacuum cleaner or a soft brush to remove dust from the brake. When brushing, avoid causing the dust to become airborne. Collect the dust in a container, such as a bag, which can be sealed off.

1

Information required when ordering replacement parts:

- Give Part Number of parts or kits needed, Brake Model Number, and Brake Serial Number. The Brake Model and Serial Number may identify special brakes not covered by this parts list
- When ordering hubs, specify shaft diameter (hub bore) and keyway.

•Enclosure is specified as follows:

NEMA 2 *(formerly referred to as standard)*
NEMA 4 *(formerly referred to as DTWP dust-tight waterproof)*
NEMA 4X *(formerly referred to as BISSC washdown)*

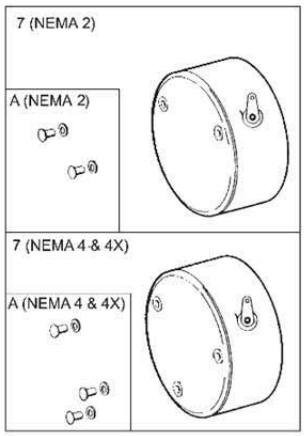

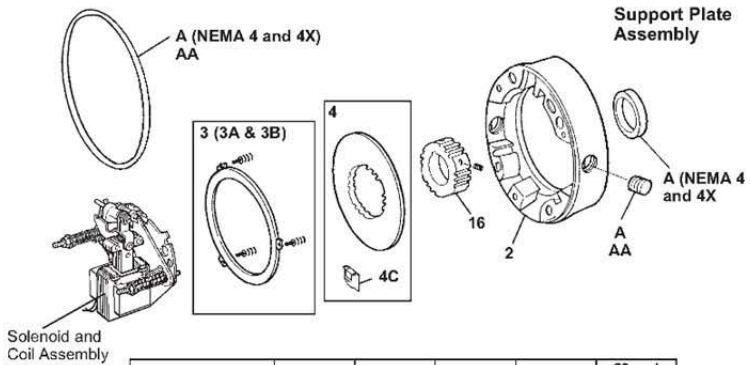

TABLE 1
Components of Standard AC or DC Brake

Item	Description		Part Number ↓	Torque (lb-ft)	1.5 and 3			6			10			15			20 and 25		
				NEMA Enclosure	2	4	4X	2	4	4X	2	4	4X	2	4	4X	2	4	4X
				Brake Model Number→	1-056-201-00 & -211-00	1-056-202-00 & -212-00	1-056-204-00 & 214-00	1-056-221-00	1-056-222-00	1-056-224-00	1-056-231-00	1-056-232-00	1-056-234-00	1-056-241-00	1-056-242-00	1-056-244-00	1-056-251-00 & -261-00	1-056-252-00 & -262-00	1-056-254-00 & -264-00
A	Hardware kit - NEMA 2		5-66-1014-00		1			1			1			1			1		
	Hardware kit - NEMA 4		5-66-1015-00			1			1			1			1			1	
	Hardware kit - NEMA 4X		5-66-1016-00				1			1			1			1			1
AA	Plug/Gasket kit	— NEMA 4	5-63-0532-00			1			1			1			1				
	** Close couple	— NEMA 4X	5-63-0533-00				1			1			1			1			1
		— NEMA 4 3 disc	5-63-0534-00															1	
		— NEMA 4X 3 disc	5-63-0537-00																1
7	Housing & release kit — NEMA 2		5-07-5040-00		1			1			1			1			1		
	Housing & release kit — NEMA 4		5-07-5041-00			1			1			1			1			1	
	Housing & release kit — NEMA 4X		5-07-5043-00				1			1			1			1			1
3	Stationary disc kit (1 disc universal 3 disc horizontal)		5-66-8354-00		1	1	1	1	1	1							3	3	3
3A	Stationary disc kit (2 disc universal)		5-66-8355-00								1	1	1	1	1	1			
3B	Stationary disc kit (3 disc universal)		5-66-8356-00														1	1	1
Not Shown	Vertical spring kit (3 disc)		5-63-0525-00														1	1	1
4	Friction disc kit		5-66-8462-00		1	1	1	1	1	1	2	2	2	2	2	2	3	3	3
4C	Stabilizing clip (part of 5-66-8462-00)				2	2	2	2	2	2	*	*	*	*	*	*	*	*	*
DP	Disc pack kit — 1 disc		5-66-8601-00		1	1	1	1	1	1									
	Disc pack kit — 2 disc		5-66-8602-00								1	1	1	1	1	1			
	Disc pack kit — 3 disc		5-66-8603-00														1	1	1
16	Hub and set screw assembly 1 & 2 disc (NEMA 2)	5/8 bore	5-16-5150-00-01B		1			1			1			1					
		7/8 bore	5-16-5150-00-01D		1			1			1			1					
		1-1/8 bore	5-16-5150-00-01E		1			1			1			1					
	Hub and set screw assembly 1 disc (NEMA 4 & 4X)	5/8 bore	5-16-5151-00-01B			1	1		1	1									
		7/8 bore	5-16-5151-00-01D			1	1		1	1									
		1-1/8 bore	5-16-5151-00-01E			1	1		1	1									
	Hub and set screw assembly 3 disc (NEMA 2) and 2 & 3 disc (NEMA 4 & 4X)	5/8 bore	5-16-5153-00-01B									1	1		1	1	1	1	1
		7/8 bore	5-16-5153-00-01D									1	1		1	1	1	1	1
		1-1/8 bore	5-16-5153-00-01E									1	1		1	1	1	1	1
2	Endplate	1 disc (NEMA 2)	8-002-580-01-30F		1			1											
	Endplate	2 & 3 disc (NEMA 2)	8-002-582-01-30F								1			1			1		
	Endplate & Seal Assy.	1 disc (NEMA 4)	5-02-5043-00			1			1										
		2 & 3 disc (NEMA 4)	5-02-5044-00									1			1			1	
	Endplate & Seal Assy.	1 disc (NEMA 4X)	5-02-5045-00				1			1									
		2 & 3 disc (NEMA 4X)	5-02-5046-00										1			1			1

* Certain multiple friction disc model numbers require a single stabilizer clip (D1) added to each friction disc. If your brake has these clips, they must be replaced when the friction disc is replaced. This clip is included as part of the friction disc kit 5-66-8462-00.

** Close coupled brakes identified by 8 in the 8th digit. example: 1-056-XXX-8X.

2

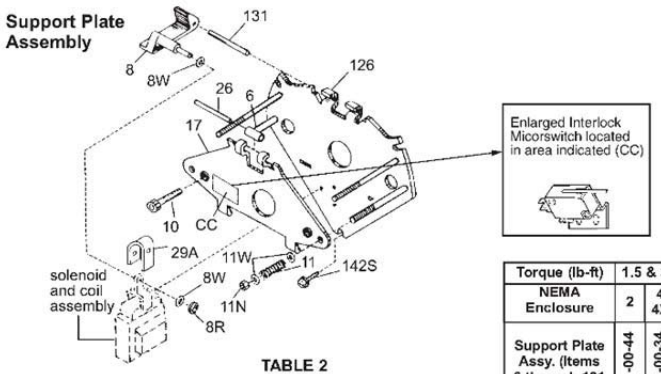

TABLE 2
Components of Support Plate and Coil Assembly

Item	Description		Part Number ↓	Torque (lb-ft)	1.5 & 3		6		10		15		20		25	
				NEMA Enclosure	2	4 4X	2	4 4X	2	4 4X	2	4 4X	2	4 4X	2	4 4X
				Support Plate Assy. (Items 6 through 131 and Z) →	5-42-5601-00-44	5-42-5601-00-34	5-42-5605-00-44	5-42-5605-00-34	5-42-5607-00-44	5-42-5607-00-34	5-42-5609-00-44	5-42-5609-00-34	5-42-5611-00-44	5-42-5611-00-34	5-42-5611-00-44	5-42-5611-00-34
6	Bearing		8-006-501-00		1	1	1	1	1	1	1	1	1	1	1	1
8	Solenoid lever		8-008-504-05		1	1	1	1	1	1	1	1	1	1	1	1
8R	Retaining ring		9-03-0057-00		1	1	1	1	1	1	1	1	1	1	1	1
8W	Spacer		9-45-0168-00		2	2	2	2	2	2	2	2	2	2	2	2
11N	Torque adjustment nut		9-40-3928-00		2	2	2	2	2	2	2	2	2	2	2	2
10	Wear adjustment screw		9-17-8420-00		2	2	2	2	2	2	2	2	2	2	2	2
11	Pressure spring		9-70-1215-00		2	2										
	Pressure spring		9-70-1523-00				2	2	2	2						
	Pressure spring		9-70-1524-00								2	2	2	2	2	2
11W	Spring washer		9-46-0010-00				4	4	4	4	4	4	4	4	4	4
17	Lever arm and stop nut assy.		5-17-5011-00		1	1	1	1	1	1	1	1	1	1	1	1
26	Bearing pin		9-29-4826-00		1	1	1	1	1	1	1	1	1	1	1	1
29A	Plunger stop		8-094-503-00		1	1	1	1	1	1	1	1	1	1	1	1
126	Support plate and spring stud assembly (2 housing studs)		5-26-5019-00		1		1		1		1		1		1	
	Support plate and spring stud assembly (3 housing studs)		5-26-5020-00			1		1		1		1		1		1
131	Pivot pin		9-29-4836-00		1	1	1	1	1	1	1	1	1	1	1	1
142S	Mounting screws		9-25-9013-00		3	3	3	3	3	3	3	3	3	3	3	3
AC Brakes																
Z	No. 4 solenoid kit (rev A & B)		5-66-5047-00		1		1		1		1		1		1	
	(rev B only)		5-96-5047-01		1		1		1		1		1		1	
AC	No. 4 coil kit 60 Hz	115/230 Vac	5-66-6407-33		1											
		230/460 Vac	5-66-6409-33		1											
		115 Vac	5-66-6401-33		1											
		230 Vac	5-66-6402-33		1											
		460 Vac	5-66-6404-33		1											
		575 Vac	5-66-6405-33		1											
	No. K4 coil kit 60 Hz	115/230 Vac	5-66-6457-33				1		1							
		230/460 Vac	5-66-6459-33				1		1							
		115 Vac	5-66-6451-33				1		1							
		230 Vac	5-66-6452-33				1		1							
		460 Vac	5-66-6454-33				1		1							
		575 Vac	5-66-6455-33				1		1							
	No. K4+ coil kit 60 Hz	115/230 Vac	5-66-6407-23								1		1			
		230/460 Vac	5-66-6409-23								1		1			
		115 Vac	5-66-6401-23								1		1			
		230 Vac	5-66-6402-23								1		1			
		460 Vac	5-66-6404-23								1		1			
		575 Vac	5-66-6405-23								1		1			
	No. M4+ coil kit 60 Hz	115/230 Vac	5-66-6457-23												1	
		230/460 Vac	5-66-6459-23												1	
		115 Vac	5-66-6451-23												1	
		230 Vac	5-66-6452-23												1	
		460 Vac	5-66-6454-23												1	
		575 Vac	5-66-6455-23												1	
CC	Brake release interlock switch (optional)		5-57-5526-00		1		1		1		1		1		1	
DC Brakes																
AD	No. 4 + coil assembly	115 Vdc	5-96-6416-43		1											
		230 Vdc	5-96-6417-43		1											
	No. K4 + coil assembly	115 Vdc	5-96-6416-23				1		1							
		230 Vdc	5-96-6417-23				1		1							
	No. M4 + coil assembly	115 Vdc	5-96-6466-23								1		1			
		230 Vdc	5-96-6467-23								1		1			
	No. P4 + coil assembly	115 Vdc	5-96-6446-43												1	
		230 Vdc	5-96-6447-43												1	
BD	Electronic DC switch kit	24/28 Vdc	5-57-5712-15		1		1		1		1		1		1	
		115 Vdc	5-57-5716-15		1		1		1		1		1		1	
		230 Vdc	5-57-5717-15		1		1		1		1		1		1	

3

Solenoid and Coil Assembly

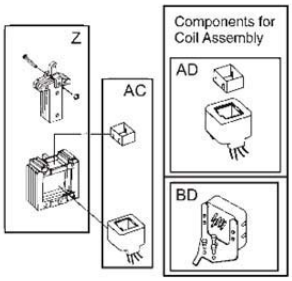

TABLE 3
Contents of Kits and Assemblies

Item	Kit Description
A	Hardware kit – NEMA 2 (5-66-1014-00) 2 – Housing acorn nuts 2 – Conduit plugs
	Hardware kit – NEMA 4 (5-66-1015-00) Hardware kit – NEMA 4X (5-66-1016-00) 3 – Housing nuts 3 – Housing nut gaskets 1 – Endplate oil seal 2 – Endplate hole plugs 1 – Housing to endplate gasket 2 – Endplate conduit pipe plugs
3	Stationary disc kit (5-66-8354-00) 1 – Stationary disc
3A	Stationary disc kit (5-66-8355-00) 2 – Stationary discs with springs
3B	Stationary disc kit (5-66-8356-00) 3 – Stationary discs with springs
4	Friction disc kit (5-66-8462-00) 1 – Friction disc 2 – Stabilizing clips
DP	Disc pack kit (5-66-860X-00) 1, 2 or 3 – Friction disc(s) 1, 2 or 3 – Stationary disc(s) 2 – Stabilizing clips (5-66-8601-00 only) 3, 6 or 9 – Stationary disc separator springs
16	Hub and screw assembly – all types, all bores (5-16-515X-00) 1 – Brake hub 2 – Set screws
Z	No. 4 solenoid kit (5-66-5047-00) (5-96-5047-01) 1 – Plunger 1 – Solenoid link 1 – Frame (including mounting bracket) 1 – Solenoid link cap screw 1 – Solenoid link nut 3 – Solenoid mounting screws
AC AD	No. 4 AC coil kit (5-66-64-XX-X3) and DC coil assembly (5-96-64XX-X3) Coil / Top Plunger guide / Wire nut
BD	DC switch kit (5-57-571X-15) 1 – Electronic switch 1 – Mounting bracket 3 – Bracket mounting screws 4 – Switch moutning screws 4 – nuts 4 – Lock washers 5 – Crimp connectors
CC	Brake release interlock switch (5-57-5526-00) 1 – Microswitch 1 – Mounting bracket 2 – Bracket mounting screws 2 – Switch mounting screws 2 – Lock washers 2 – Nuts 2 – Lead wire assembly

Optional Modification Kits

TABLE 4

Catalog Mod Number	Description	Part Number ↓	Torque (lb-ft) 1.5, 3 & 6 Brake Model Number → 1-056-20X 1-056-21X 1-056-22X	10 & 15 1-056-23X 1-056-24X	20 & 25 1-056-25X 1-056-26X
M4	Brass Stationary Disc	8-003-513-02	1	2	3
M13	Space Heater 115 Vac 230 Vac	5-27-2004-00 5-27-2005-00	1 1	1 1	1 1
M17	Terminal Strip	5-63-0524-00	1	1	1
M21	Vertical Spring Kit (2 disc) (3 disc)	5-63-0539-00 5-63-0525-00		1	 1

Catalog Mod Number	Description		Part Number ↓	Torque (lb-ft) 1.5 & 3 Brake Model Number→ 1-056-201-00 1-056-211-00	6 & 10 1-056-221-00 1-056-231-00	15 & 20 1-056-241-00 1-056-251-00	25 1-056-261-00
M6	No. 4 Class 'H' coil kit 60 Hz	115/230 Vac	5-96-6407-05	1			
		230/460 Vac	5-96-6409-05	1			
		115 Vac	5-96-6401-05	1			
		230 Vac	5-96-6402-05	1			
		460 Vac	5-96-6404-05	1			
		575 Vac	5-96-6405-05	1			
	No. K4 Class 'H' coil kit 60 Hz	115/230 Vac	5-96-6457-05		1		
		230/460 Vac	5-96-6459-05		1		
		115 Vac	5-96-6451-05		1		
		230 Vac	5-96-6452-05		1		
		460 Vac	5-96-6454-05		1		
		575 Vac	5-96-6455-05		1		
	No. K4+ Class 'H' coil kit 60 Hz	115/230 Vac	5-96-6407-25			1	
		230/460 Vac	5-96-6409-25			1	
		115 Vac	5-96-6401-25			1	
		230 Vac	5-96-6402-25			1	
		460 Vac	5-96-6404-25			1	
		575 Vac	5-96-6405-25			1	
	No. M4+ Class 'H' coil kit 60 Hz	115/230 Vac	5-96-6457-25				1
		230/460 Vac	5-96-6459-25				1
		115 Vac	5-96-6451-25				1
		230 Vac	5-96-6452-25				1
		460 Vac	5-96-6454-25				1
		575 Vac	5-96-6455-25				1

Rexnord Industries, LLC
Stearns Division
5150 S. International Drive
Cudahy, Wisconsin 53110
(414) 272-1100 Fax: (414) 277-4364 www.rexnord.com

Copyright© 2001-2006 by Rexnord Industries, LLC

4

Appendix C

Earle® Assembly Drawing EG3-1B

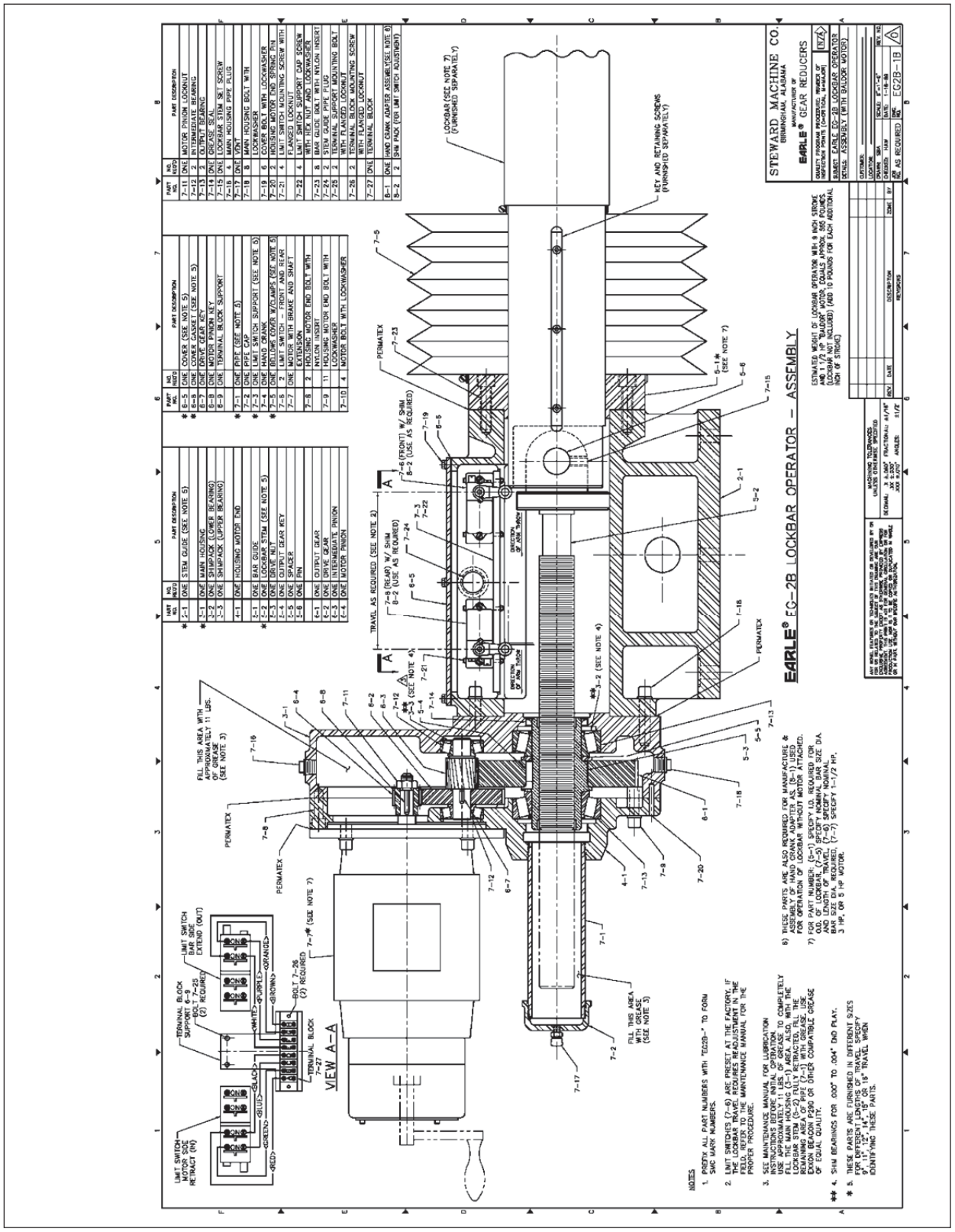
EARLE® EG-2B LOCKBAR OPERATOR – ASSEMBLY
STEWARD MACHINE CO.
BIRMINGHAM, ALABAMA
MANUFACTURERS OF
EARLE® GEAR REDUCERS
VIEW A–A
NOTES
1. PREFIX ALL PART NUMBERS WITH "EG2B-" TO FORM SMC MARK NUMBERS.
2. LIMIT SWITCHES (7-6) ARE PRESET AT THE FACTORY. IF THE LOCKBAR TRAVEL REQUIRES READJUSTMENT IN THE FIELD, REFER TO THE MAINTENANCE MANUAL FOR THE PROPER PROCEDURE.
3. SEE MAINTENANCE MANUAL FOR LUBRICATION INSTRUCTIONS. INITIAL LUBRICATION: USE APPROXIMATELY 11 LBS. OF GREASE TO COMPLETELY FILL THE MAIN HOUSING (3-1) AREA. ALSO, WITH THE LOCKBAR STEM (5-1) IN ITS RETRACTED POSITION, REMAINING AREA (5-7) PIPE (7-4) WITH GREASE. USE EXXON BEACON P290 OR OTHER COMPATIBLE GREASE OF EQUAL QUALITY.
** 4. SHIM BEARINGS FOR .000" TO .004" END PLAY.
* 5. THESE PARTS ARE FURNISHED IN DIFFERENT SIZES FOR DIFFERENT LENGTHS OF TRAVEL SPECIFY 9", 11", 12", 14", 15" OR 16" TRAVEL WHEN IDENTIFYING THESE PARTS.
6) THESE PARTS ARE ALSO REQUIRED FOR MANUFACTURE & ASSEMBLY OF HAND CRANK ADAPTER AS. (8-1) USED FOR OPERATION OF LOCKBAR WITHOUT MOTOR ATTACHED.
7) FOR PART NUMBER, (5-1) SPECIFY LG. REQUIRED FOR ADD. OF LOCKBAR, (7-5) SPECIFY NOMINAL BAR SIZE DIA. AND LOCKBAR TRAVEL REQUIRED, (7-6) SELECT NEMA 4X.
(7-7) SPECIFY 1-1/2 HP, OR 5 HP MOTOR.
ESTIMATED WEIGHT OF LOCKBAR OPERATOR WITH 9 INCH STROKE AND 1 1/2 HP "BALDOR" MOTOR EQUALS APPROX. 565 POUNDS. (LOCKBAR NOT INCLUDED) (ADD 10 POUNDS FOR EACH ADDITIONAL INCH OF STROKE)
EG2B-1B
DETAIL ASSEMBLY (WITH BALDOR MOTOR)
TERMINAL BLOCK SUPPORT 7-25 (2) REQUIRED
LIMIT SWITCH BAR SIDE EXTEND (OUT)
BOLT 7-26 (2) REQUIRED
TERMINAL BLOCK 7-27
LIMIT SWITCH MOTOR SIDE RETRACT (IN)
FILL THIS AREA WITH APPROXIMATELY 11 LBS. OF GREASE (SEE NOTE 3)
FILL THIS AREA WITH GREASE (SEE NOTE 3)
PERMATEX
TRAVEL AS REQUIRED (SEE NOTE 2)
DIRECTION OF ARM TRAVEL
LOCKBAR (SEE NOTE 7) (FURNISHED SEPARATELY)
KEY AND RETAINING SCREWS (FURNISHED SEPARATELY)

11.8 TRAFFIC CONTROL EQUIPMENT MANUALS AND SPECIFICATIONS

11.8.1 BARRIER GATE – B&B ROADWAY VR-7

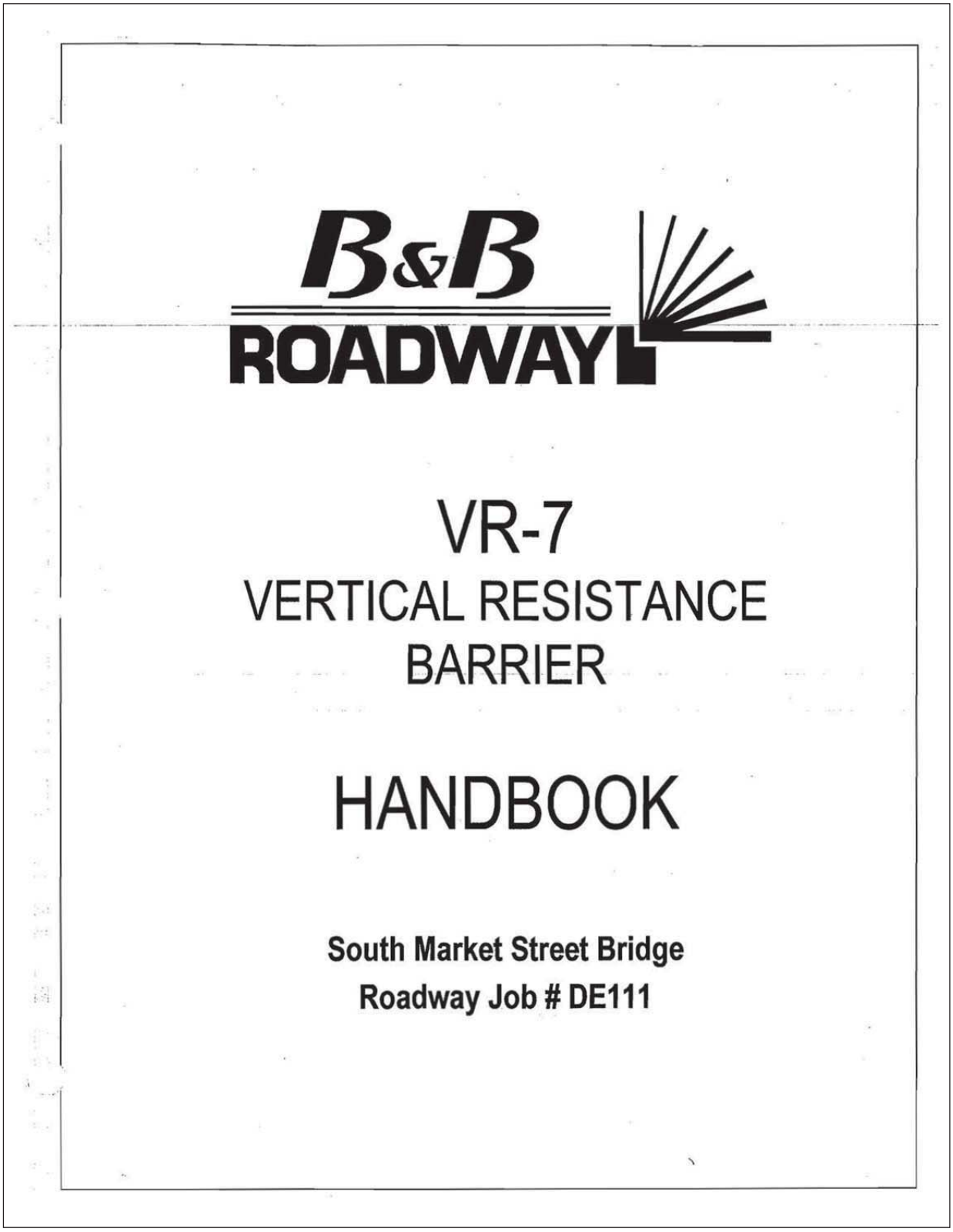

VR-7 VERTICAL RESISTANCE BARRIER HANDBOOK

TABLE OF CONTENTS

Roadway Job #: DE111

Location: South Market Street Bridge

Section 1: Installation Instructions

Section 2: Manual Operation Instructions

Section 3: Maintenance Guidelines

Section 4: Basic Assembly Drawings
BR6-A002 VR7 Barrier Operator Assembly
ALS-A006 8-Circuit Limit Switch Assembly

Section 5: Accessories Specifications
Arm Lights
Flasher
Limit Switch

Section 6: Drawings and Specifications Pertaining to This Installation
VR-7 Specifications for Job DE111
BE8915C1 Wiring Diagram
BI8915D2 Installation Drawing

Section 7: Warranty

PLEASE NOTE: You will *save time* and prevent potential damage to the resistance barrier by reading all pertinent instructions before beginning a task. If you do not understand an instruction, require spare parts, or need technical assistance on a detail not covered by the handbook, please contact the factory.

Roadway Manufacturing
15191 Hwy 243
Russellville, AL 35654

(888) 560-2060 toll free
(256) 332-4036 fax

VR-7 Handbook Table of Contents

Section 1

Installation Instructions

VR-7 VERTICAL RESISTANCE BARRIER HANDBOOK

INSTALLATION INSTRUCTIONS

BEFORE YOU BEGIN: You will *save time* and prevent potential damage to the barrier by reading all instructions before beginning installation. Follow instructions carefully and in order. You can obtain technical assistance by calling the factory toll free at (888) 560-2060.

PLEASE NOTE THAT INSTALLATION STEPS FOR BARRIERS FOLLOW A SLIGHTLY DIFFERENT SUGGESTED ORDER FROM THE STEPS FOR INSTALLING A WARNING GATE. PLEASE READ CAREFULLY!

Preparation:

1. **Prepare the barrier foundation** according to the plans prepared by the project engineer. If installing as a replacement using the existing foundation, double check the anchor bolt size and pattern to be sure they will work with the new equipment. (See installation drawing following for dimensions.)
2. **Arrange to have necessary equipment available during installation**. A crane, forklift, hoist or other lifting equipment will be required. You will also need standard tools (wrenches, screw drivers, etc.) and some apparatus to prop or hold the arm up at the correct height (closed to traffic position) until the counterweights are installed. A *reversible*, electric (if power will be available) or battery-powered drill is very useful for manually operating the barrier and is recommended.

Installation:

1. Carefully **set the operator housing over the anchor bolts**. The housing can be lifted by arranging straps under each end of the main arm shaft where extends from the sides of the housing. When the housing is set in place over the anchor bolts, add flat washers and tighten the nuts. Seal between the base and the foundation with silicon caulking.

   NOTE: Be sure the operator is turned with the roadway side toward the roadway.

2. **IMPORTANT! Prop or support the side arm tubes** both in front of the housing and behind the housing (counterweight area) to prevent the side arm tubes from swinging unexpectedly during mounting of the arm and counterweights. If your barrier was shipped with any type of shipping strap to secure the side arms, do not remove these until the side arm tubes are well-supported.

VR-7 Installation Instructions Page 1-1

3. **Remove the bolt connecting the main arm crank to the upper rod end.** See below.

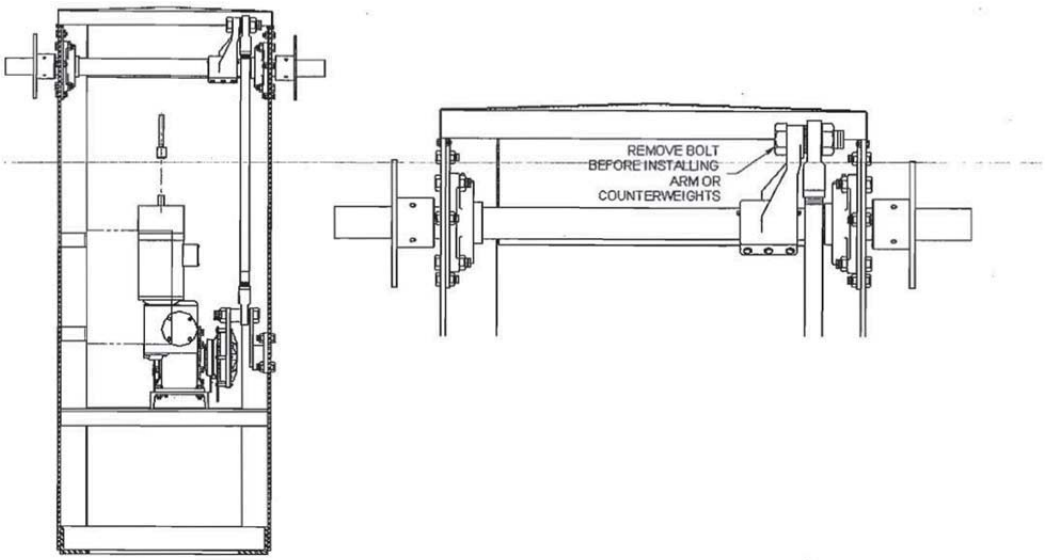

4. **Install the barrier arm.** *IMPORTANT: Keep the arm supported until the counterweights are installed.* Fasten the arm to the base with the bolts provided. Refer back to the arm assembly and/or general installation drawing in this handbook. If your arm uses truss cables, attach the cables using the turnbuckles and tighten to remove slack. Do not leave slack, allowing the arm to droop, and do not tighten excessively, flexing the arm upward. Do NOT unfasten the bumper rod yet (if provided).
5. **Install the counterweights.** The counterweights are balanced and drilled for permanent location at the factory. Be sure to orient the counterweights according to the drawings and/or markings provided to ensure proper balance. Refer to the drawing or photo following to determine the correct arrangement for your barrier.
6. **Manually rotate the barrier to the raised and lowered positions** to check balance. Do this by manually pulling the arm or counterweights. Arm should balance closely with the counterweights in both positions, but may not balance exactly at some points in-between. If you installed the counterweights correctly, to match the factory-balanced position, the arm should balance or at least be very nearly balanced in both the raised and lowered positions. Adjust counterweight position slightly if necessary.
7. **Replace and tighten the bolt to connect the crank and rod end.**
8. Test the barrier's basic operation. The barrier has not been wired and power should not be connected at this point. **Manually operate the barrier** with the hand crank or drill adapter included (mounted inside the housing). Refer to MANUAL OPERATION PROCEDURE in

VR-7 Installation Instructions Page 1-2

this handbook if you are not certain of the procedure. If your barrier is equipped with side arm latches, see ADDENDUM #1 (page 1-5).

IMPORTANT: The limit switch has been pre-set during testing at the factory and the barrier is shipped with the mechanism in the OPEN-TO-TRAFFIC (i.e. RAISED) position. Be sure to crank in the proper direction ("lower / close" direction first) to avoid getting the mechanism out of synchronization with the limit switch settings. If you do inadvertently crank the mechanism the wrong way, simply reverse the cranking direction (manually) until you get back to the correct synchronization.

9. **Wire the barrier** according to the wiring diagram. A copy of the wiring diagram for this barrier is included in this installation handbook. The wiring diagram is also mounted inside the access door of the barrier. **This must be done by a qualified electrician!** *Do not run the barrier yet*!

10. **DISCONNECT POWER**. (Flip disconnect switch to OFF position.)

11. **Initially test** the barrier electrically as follows.

    A) First, **manually crank the barrier to an intermediate position** between full open and full close.

    B) **Reconnect power**. Be ready to break the circuit (issue a "stop" signal or disconnect power) in case the barrier functions differently than expected.

    C) **Give the barrier a signal to "open"** (i.e. raise the arm).

    NOTE: If your barrier has a crank safety switch, the circuit is disabled whenever the hand crank or drill crank adapter is in place on the shaft extending through the motor brake. Or, if your barrier has door safety switches, opening either access door disables the control circuit, preventing automatic operation. The door safety switches have a "pull-to-override" feature for testing purposes. Pull the plunger on the switch to enable the circuit.

    HINT: If the barrier operates opposite of that expected (i.e. it "closes/lowers" when it is supposed to "open/raise" or the reverse) check the following:

    a - If your barrier uses three phase power, reverse any two of the three incoming power leads to the motor.

    b - Manually operate the barrier to see if the barrier was cranked backwards in step 2 above - if it was, it will also appear to have incorrect limit switch settings (i.e. not stopping at the correct positions automatically, refusing to operate, etc.). Correct this by manually operating the barrier until the transmission crank is again positioned within the correct range of rotation. *See drawing following*, illustrating the correct rotation range.

    NOTE: Each barrier is fully tested through a minimum of 20 complete cycles at the factory before shipping. The limit switch cams were preset during factory testing and should not require significant adjustment, if any adjustment at all! *Please contact the factory before adjusting limit switch cams at (888) 560-2060.*

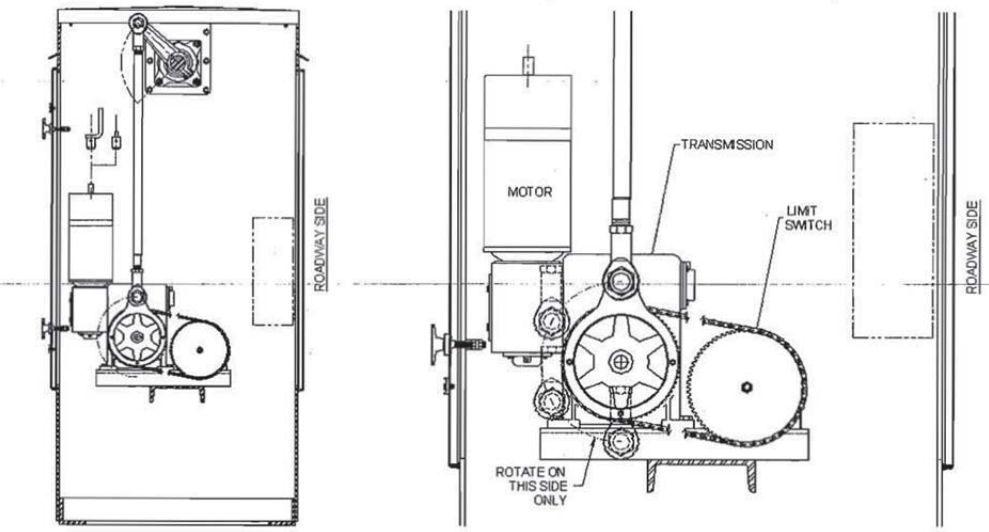

12. **Continue testing** by issuing a "close/lower" signal and continuing through all other operation sequences, including emergency reverse (i.e. issue an "open/raise" signal while the barrier is closing).
13. **Operate the barrier to the fully "closed" (down) position**, allowing it to stop automatically.
14. **Disconnect power.** (Flip disconnect switch to OFF position.)
15. The total swing angle of the arm is 90 degrees. This total swing angle can not be adjusted unless your barrier was ordered with a special swing angle. However, the positions of the extreme ends of travel can be adjusted (cocked a few degrees from vertical and horizontal). This may be desirable if you wish to have the lowered position of the arm parallel to a sloping roadway, for example. First, operate the barrier to the position you wish to align (i.e. raised or lowered). Loosen the nuts at each end of the connecting rod where it screws into the rod ends. Twist the connecting rod, observing the change in arm position. The new raised and lowered positions of the arm will be approximately 90 degrees apart.

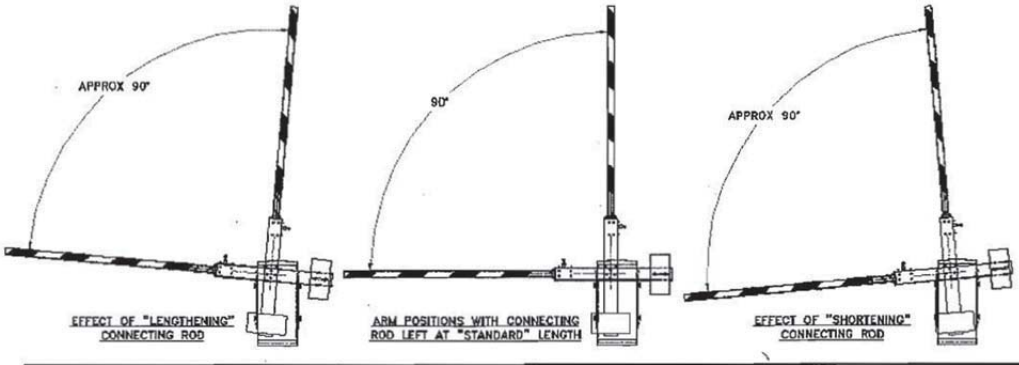

VR-7 Installation Instructions Page 1-4

16. Check to be sure that power is still disconnected. **Then connect wiring for the arm lights**.

17. Install or wire any additional optional equipment.

18. **Retest the operator under power** with all equipment installed.

19. With the barrier in the lowered position, **unfasten bumper rod (if your barrier has one). Shorten or lengthen as required by loosening the jam nuts and turning the threaded portion**. Retighten the jam nuts after adjustment. The arm should rest lightly on the bumper rod, but not prevent the arm from traveling to the fully closed position, thereby jarring the arm and possibly even causing damage to the bumper rod.

Roadway Manufacturing
15191 Hwy 243
Russellville, AL 35654

(888) 560-2060 toll free
(256) 332-4036 fax

VR-7 VERTICAL RESISTANCE BARRIER

SUMMARY OF INSTALLATION INSTRUCTIONS

TO AVOID POSSIBILITY OF DAMAGING THE OPERATOR, PLEASE READ MORE DETAILED INSTRUCTIONS FOUND IN HANDBOOK BEFORE INSTALLATION! Trouble shooting information is also in the handbook.

CAUTION: Do NOT install the arm or counterweights until *Step 9*!

1. **Set the cable anchorage base (if provided) and operator housing over the anchor bolts**. Tighten bolts. Seal with silicon caulking. *Be sure the operator is turned with the roadway side toward the roadway.*
2. **Manually operate the gate** to test function (without arm or counterweights).
3. **Wire the gate. This must be done by a qualified electrician!** *Do not run the gate yet*!
4. **Initially test** the gate as follows.
   A) **Manually crank the gate to an intermediate position.**
   B) **Reconnect power.**
   C) **Give the gate a signal to "open / raise".**
5. **Continue testing** by issuing all other operation sequences.
6. **Operate the gate to the fully "closed" (down) position.**
7. **DISCONNECT POWER.**
8. **Remove the bolt connecting the main arm crank to the upper rod end.**
9. **Install the gate arm**. Secure all cables. *IMPORTANT: Keep the arm propped up until the counterweights are installed.*
10. **Install the counterweights**. Refer to instructions and markings on counterweights to set counterweights in correct, balanced position.
11. **Replace and tighten the bolt to connect the crank and rod end.**
12. The positions of the extreme ends of travel can be adjusted (cocked a few degrees from vertical and horizontal), if needed. Loosen nuts at each end of the connecting rod where it screws into the rod ends. Twist the connecting rod to adjust.
13. **Connect wiring for the arm lights.**
14. Install or wire any additional optional equipment.
15. Retest manually, watching carefully for proper clearance and fit at cable anchorage or sidearm latch (if provided) and arm tips of paired barriers.
16. **Retest the operator under power** with all equipment installed.
17. **Unfasten bumper rod (if your gate has one). Shorten or lengthen as required by loosening jam nuts and turning threaded portion.**

Section 2

Manual Operation Instructions

VR-7 VERTICAL RESISTANCE BARRIER HANDBOOK

MANUAL OPERATION PROCEDURES

NOTE: Follow instructions carefully and in order. If you do not understand an instruction, you can obtain assistance by calling the factory toll free at (888) 560-2060.

SUGGESTION: It is recommended that a fully charged, battery powered drill be kept in the control house for the purpose of more quickly and easily manually operating the gates. Also, if the gates have lockable doors, a key will be required to gain access to the mechanism for manual operation.

Manual or Emergency Operation:

1. As a precaution, **DISCONNECT POWER** (flip power switch off) to prevent any possible unexpected automatic operation during manual operation.

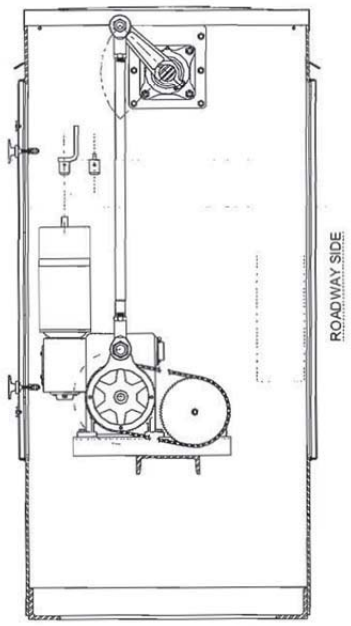

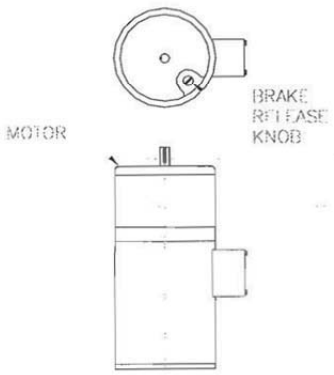

2. **Release the motor brake.** The brake is on top of the electric motor. It is released by rotating the knob on top of the cover about 90 degrees.

3. **Locate the drill crank adapter or hand crank.** These accessories are mounted on the wall inside each gate housing.

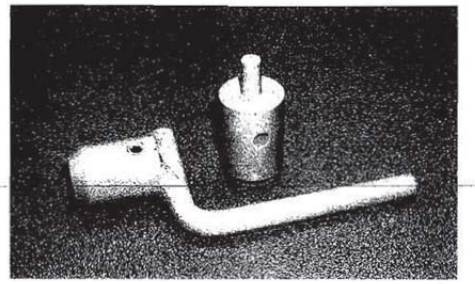

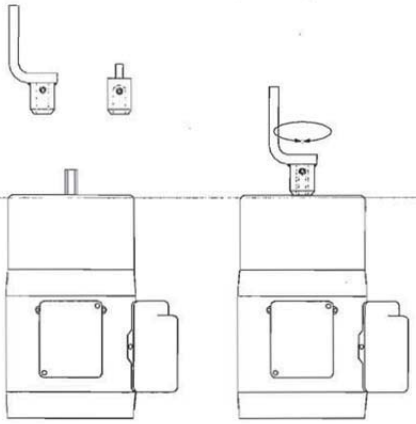

4. **Place the drill crank adapter or hand crank over the shaft** extending through the brake on top of the electric motor.

5. **Check the label on the brake cover to determine the correct cranking rotation** to operate the gate in the desired direction.

   IMPORTANT: Be sure to crank in the proper direction. Cranking in the wrong direction will appear to operate the gate correctly, but the transmission crank will be in the wrong rotation range, causing the mechanism to be out of synchronization with the limit switch. (See sketch on next page.) If you do inadvertently crank the mechanism the wrong way, simply reverse the cranking direction until the transmission crank is again operating in the correct rotation range and the mechanism is again synchronized with the limit switch. DO NOT ATTEMPT TO CORRECT BY ADJUSTING LIMIT SWITCHES!

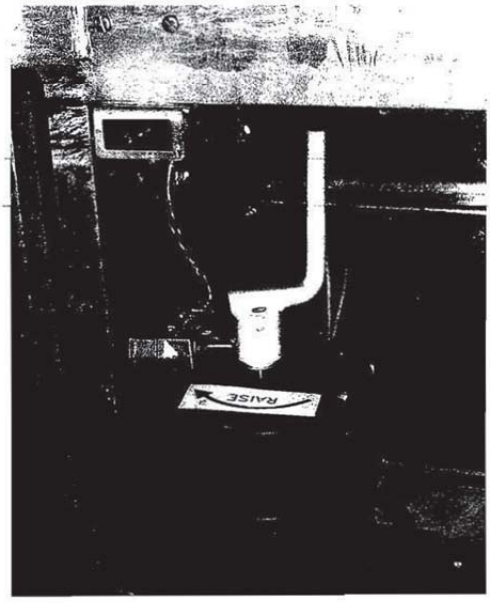

6. **Crank the gate** to the desired position.

   HINT: If you anticipate a need to manually operate the gate several times and your gate does not have a gong or other equipment mounted directly to the top cover, manual operation will be more convenient with the top cover of the housing removed.

VR-7Manual Operation Procedure Page 2-2

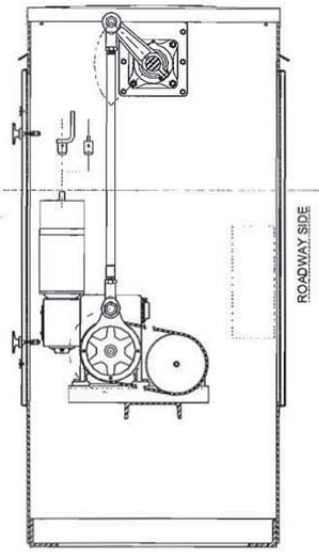

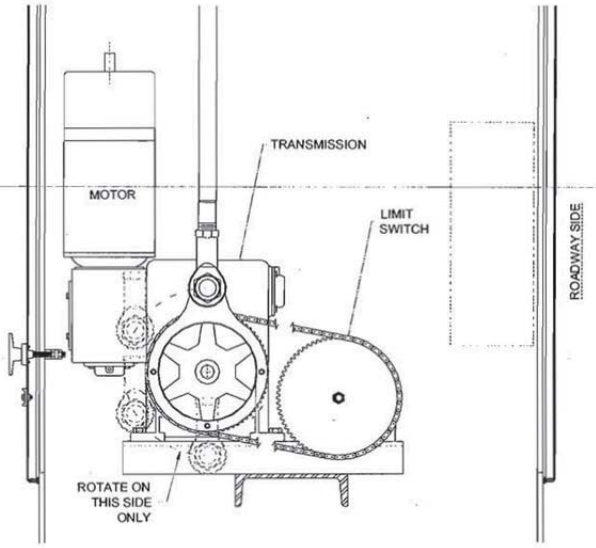

7. **Reset the brake.**
8. **Remove the hand crank or drill crank adapter.**
9. **Reconnect power** (flip power switch on).
10. **Close (and lock) the gate.** Never leave the gate unsecured and/or the mechanism exposed to the weather.

Roadway Manufacturing
15191 Hwy 243
Russellville, AL 35654

(888) 560-2060 toll free
(256) 332-4036 fax

VR-7 Manual Operation Procedures Page 2-3

Section 3

Maintenance Guidelines

VR-7 VERTICAL RESISTANCE BARRIER HANDBOOK

MAINTENANCE GUIDELINES

If you have questions regarding maintenance procedures or recommendations, you can obtain assistance by calling the factory toll free at (888) 560-2060.

CAUTION: ALWAYS DISCONNECT POWER BEFORE SERVICING EQUIPMENT!

NOTE: Automatic operation is disabled any time the drill crank adapter or the hand crank is in place on the shaft through the brake, if your gate has a crank safety switch. You must remove the hand crank or drill crank adapter to allow normal automatic operation. Also, if your gate was ordered with optional door safety switches, when either access door is opened for service, the gate is disabled from automatic operation. The door safety switch is a white, plunger-type switch mounted at the top of each door. These switches have a pull-to-override feature if you find it necessary to operate the gate under power during service. The door switches will reset automatically when the doors are closed.

NOTE: For typical applications, perform the following maintenance procedures *after the first month of service and at 6 month intervals thereafter*.

Transmission:

GENERAL: The double reduction worm gear transmission used on the VR-7 has two compartments. The objective of the maintenance procedure and schedule is to monitor and maintain the oil level in each compartment to ensure smooth operation and long life.

IMPORTANT*: *Use a multi-viscosity synthetic oil with an EP additive (such as Mobil SHC 629). The transmission is shipped filled with Mobil SHC 629 in both cases. If you intend to change to a different oil, you should drain all old oil first and flush with a light flushing oil to avoid mixing the oils unless the lubricant manufacturer has specifically given other instructions.

1. **Open the access door on the roadway side and DISCONNECT POWER** using the disconnect switch.
2. **Check the oil level** in each case section through the oil level plugs.
3. **If the oil has become discolored, milky, or dirty, change the oil.** Drain the old oil, flush with a light flushing oil and refill to the oil level. Cycle the operator a few times and recheck the level before leaving. Do not overfill. *Be sure to use the correct oil in each case (see above).*
4. **If the oil level is low, remove the fill plugs and add oil** to bring it to the proper level at the level plugs. (Note: Very little, if any, oil will normally be required to top off the level. If the oil level is very low, check for leaks.) Do NOT overfill (higher than level plugs) - this can cause overheating. *Be sure to use the correct oil in each case (see above).*
5. **Reconnect power**.

Arm Shaft Bearings and Rod Ends:

GENERAL: The main purpose of this procedure is to keep the operating mechanism well lubricated to ensure smooth operation. Ball bearings and rod ends have zerk type grease fittings for relubrication. Use a grease lubricant such as Texaco Marfak 2.

1. **Open the access door on the roadway side and DISCONNECT POWER** using the disconnect switch.
2. **Grease the shaft bearings**. The main arm shaft is mounted in a pair of ball bearings and, if your unit has a sidewalk arm, the sidewalk arm shaft is also mounted in a pair of bearings. The bearings are inside the housing, mounted on the side walls near the top of the operator.

   NOTE: The 3-bolt-mounted bronze spherical bearing used for the auxiliary crank is permanently lubricated and does not require routine lubrication.
3. **Grease the rod ends**. The rod ends used on each end of the connecting rod must also be greased. The connecting rod is the vertical round rod inside the housing, which connects the main arm crank (upper) and transmission crank plate (lower).
4. **Reconnect power**.

Limit Switch:

GENERAL: The objective of this maintenance procedure is to prevent corrosion and seizing of the limit switch chain and to prevent excessive slack in the chain (possibly resulting in the limit switch becoming out of sync with the mechanism, causing poor operation).

1. **Open the access door on the roadway side and DISCONNECT POWER** using the disconnect switch.
2. **Lubricate the roller chain.**
   IMPORTANT: Use a lubricant intended for roller chain.

   NOTE: Chain lubricant is available in spray cans and is convenient for this procedure.
3. **Check the roller chain tension**. Roller chain stretches over time. There should be no slack in the chain. **If the chain is loose, tighten it** by moving the limit switch as follows. The limit switch is mounted to the cross channel with 4 bolts. The mounting holes are

VR-7 Maintenance Guidelines Page 3-2

slotted. Loosen the nuts on these bolts slightly and pull the limit switch toward you to tighten the chain. Retighten the nuts. Be sure to tighten the nuts enough to prevent slipping.

4. **If you can not pull the limit switch toward you far enough to tighten the chain, you have probably reached the end of the slot. In this case, you will need to shorten the chain.** First, locate the master link in the chain. Using a chain breaking tool, remove one or two regular links next to the master link. Reconnect the chain with the master link. Then tighten the chain as described above. Cycle the gate manually to check the limit switch settings (be sure the gate arm stop and start positions are accurate, etc.).

   NOTES: Manually operate the gate using the drill crank adapter (recommended if you have a drill) or the hand crank. **If you are not fully familiar with the procedure for manual operation, refer to MANUAL OPERATION PROCEDURE in this handbook.** *Be sure to remove the drill crank adapter or hand crank when you are done or the gate will not operate automatically.*

5. **Reconnect power.**

Clutch:

GENERAL: The objective of this procedure is to adjust the pressure applied by the clutch to prevent slipping during ***normal*** operating conditions. This is not a routine maintenance procedure. ONLY use this procedure to correct slippage problems occurring during normal operating conditions.

If the gate appears to hesitate or will not move under NORMAL OPERATING CONDITIONS, perform the following.

1. **Carefully open either access door partway (no more than 90 degrees)** or remove the door. Opening the door further can result in the sidearms crushing the door as the gate moves.
2. **Locate the stop button and/or disconnect switch and be prepared to disable the barrier.**
3. **Put the safety switch in the "test" position** by pulling the white (or black) plunger out to the extended position. NOTE: If your gate has this device, it is located at the top of the door opening. If your gate has this device and you do not put the switch in the "test" position, the gate will not operate.

VR-7 Maintenance Guidelines Page 3-3

4. Operate the gate and **observe whether the teardrop-shaped crank plate slips significantly during operation** (i.e. does not turn or hesitates intermittently when the transmission operates).
5. **If the clutch is slipping, tighten the 4 bolts**, which adjust the clutch tension to increase the pressure and "hold" of the clutch. Tighten bolts evenly, a fraction of a turn at a time.
6. **Rerun gate after each adjustment until satisfactory operation is achieved.**
7. **Close and lock doors.** Safety switches will reset automatically.

Roadway Manufacturing
15191 Highway 243
Russellville, AL 35654

(888) 560-2060 toll free
(256) 332-4036 fax

Section 4

Basic Assembly Drawings

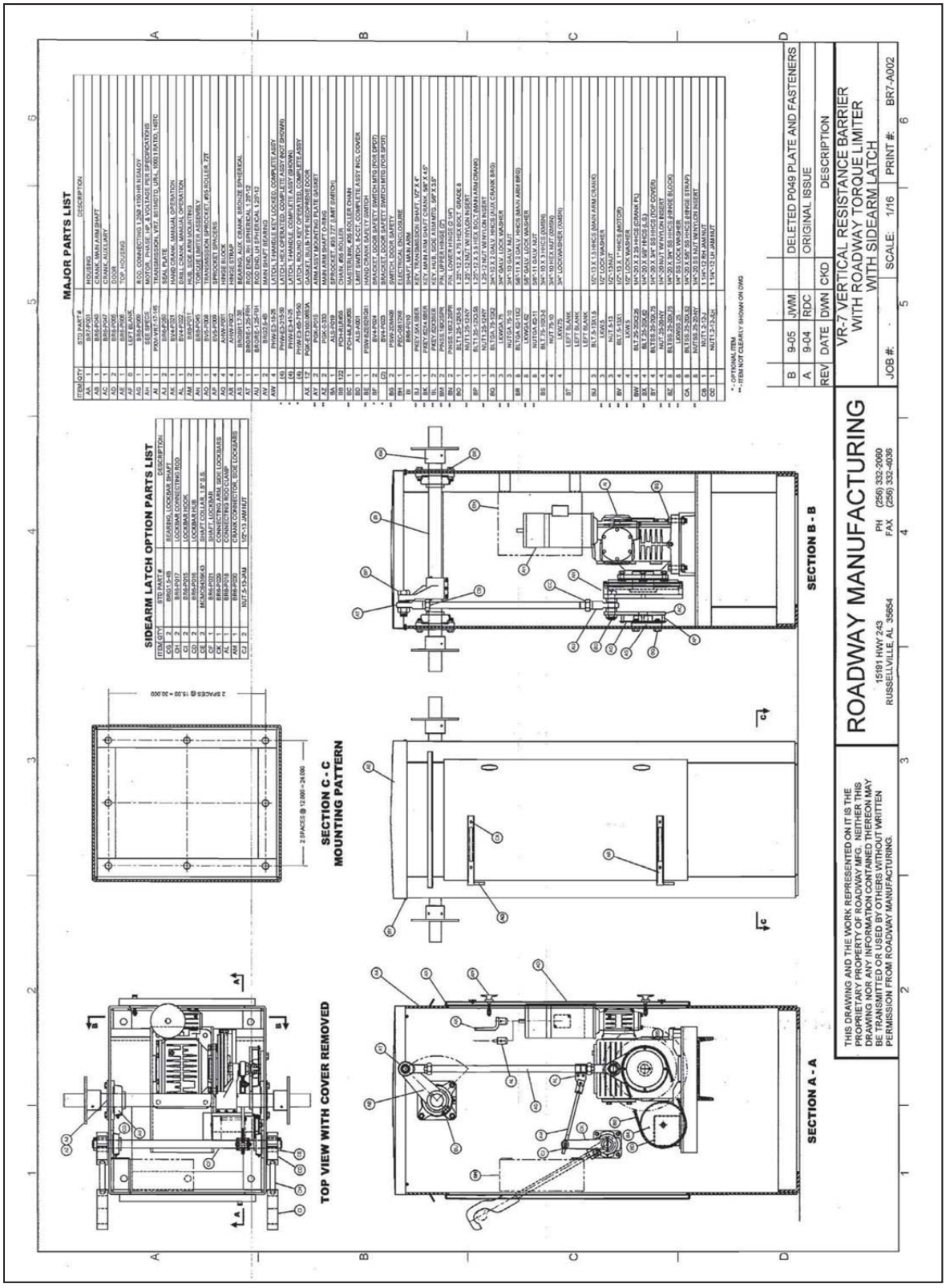
MAJOR PARTS LIST
SIDEARM LATCH OPTION PARTS LIST
SECTION A - A
SECTION B - B
SECTION C - C
MOUNTING PATTERN
TOP VIEW WITH COVER REMOVED
ROADWAY MANUFACTURING
15191 HWY 243
RUSSELLVILLE, AL 35654
PH (256) 332-2060
FAX (256) 332-4036
VR-7 VERTICAL RESISTANCE BARRIER
WITH ROADWAY TORQUE LIMITER
WITH SIDEARM LATCH
JOB #:
SCALE: 1/16
PRINT #: BR7-A002
DELETED P049 PLATE AND FASTENERS
ORIGINAL ISSUE
DESCRIPTION
THIS DRAWING AND THE WORK REPRESENTED ON IT IS THE PROPRIETARY PROPERTY OF ROADWAY MFG. NEITHER THIS DRAWING NOR ANY INFORMATION CONTAINED THEREON MAY BE TRANSMITTED OR USED BY OTHERS WITHOUT WRITTEN PERMISSION FROM ROADWAY MANUFACTURING.

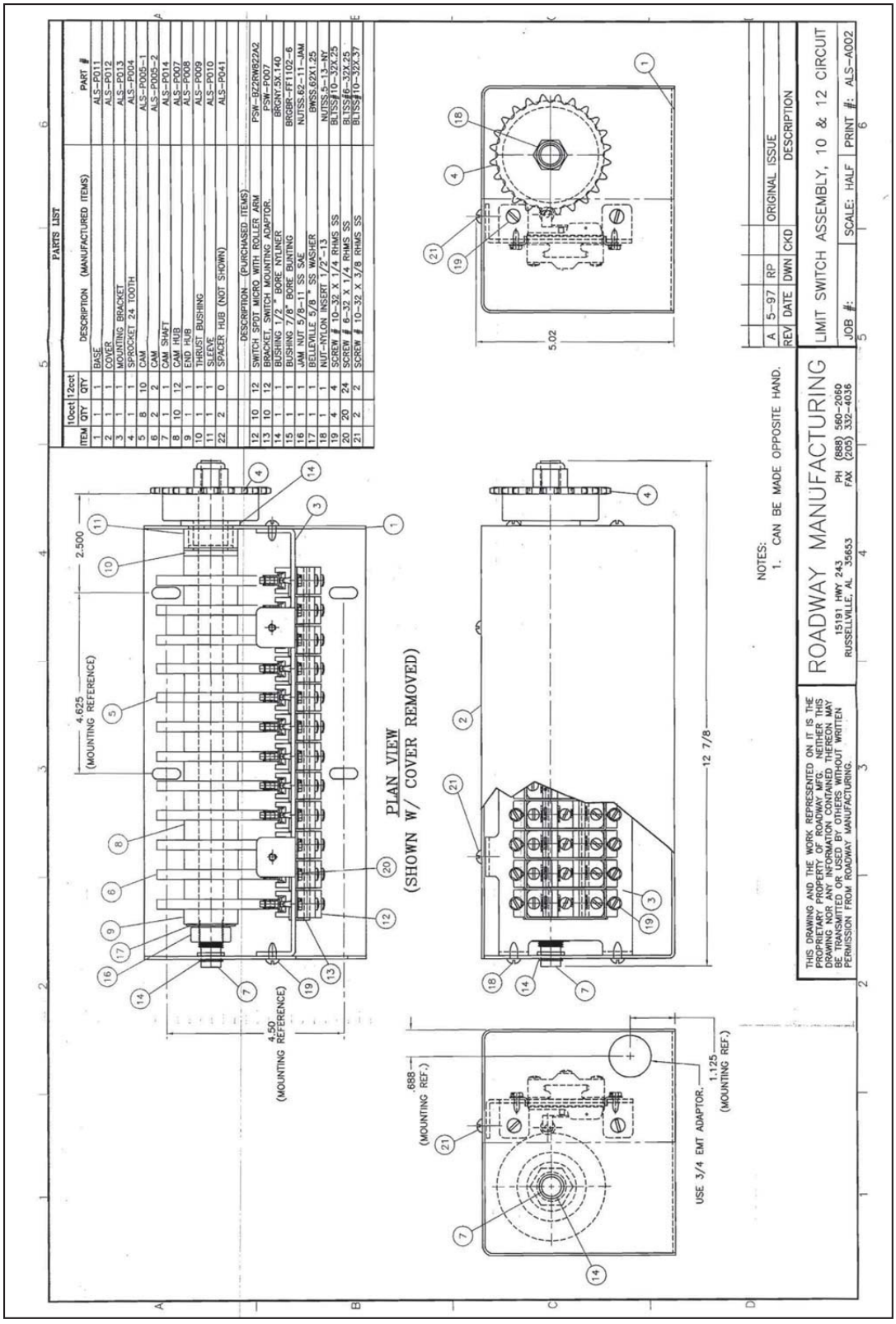
PARTS LIST
ITEM | 10ckt QTY | 12ckt QTY | DESCRIPTION (MANUFACTURED ITEMS) | PART #
1 | 1 | 1 | BASE | ALS-P011
2 | 1 | 1 | COVER | ALS-P012
3 | 1 | 1 | MOUNTING BRACKET | ALS-P013
4 | 1 | 1 | SPROCKET 24 TOOTH | ALS-P004
5 | 8 | 10 | CAM | ALS-P005-1
6 | 2 | 2 | CAM | ALS-P005-2
7 | 1 | 1 | CAM SHAFT | ALS-P014
8 | 10 | 12 | CAM HUB | ALS-P007
9 | 1 | 1 | END HUB | ALS-P008
10 | 1 | 1 | THRUST BUSHING | ALS-P009
11 | 1 | 1 | SLEEVE | ALS-P010
22 | 2 | 0 | SPACER HUB (NOT SHOWN) | ALS-P041
DESCRIPTION (PURCHASED ITEMS)
12 | 10 | 12 | SWITCH SPDT MICRO WITH ROLLER ARM | PSW-B22RWB22A2
13 | 10 | 12 | BRACKET, SWITCH MOUNTING ADAPTOR. | PSW-P007
14 | 1 | 1 | BUSHING 1/2" BORE NYLINER | BRGNY-5X.140
15 | 1 | 1 | BUSHING 7/8" BORE BUNTING | BRGBR-FF1102-6
16 | 1 | 1 | JAM NUT 5/8-11 SS SAE | NUTSS.62-11-JAM
17 | 1 | 1 | BELLEVILLE 5/8" SS WASHER | BWSS.62X1.25
18 | 1 | 1 | NUT-NYLON INSERT 1/2"-13 | NUTSS.5-13-NY
19 | 4 | 4 | SCREW # 10-32 X 1/4 RHMS SS | BUTSS#10-32X.25
20 | 20 | 24 | SCREW # 6-32 X 1/4 RHMS SS | BUTSS#6-32X.25
21 | 2 | 2 | SCREW # 10-32 X 3/8 RHMS SS | BUTSS#10-32X.37
PLAN VIEW
(SHOWN W/ COVER REMOVED)
2.500
4.625
(MOUNTING REFERENCE)
4.50
(MOUNTING REFERENCE)
12 7/8
5.02
.688
(MOUNTING REF.)
1.125
(MOUNTING REF.)
USE 3/4 EMT ADAPTOR.
NOTES:
1. CAN BE MADE OPPOSITE HAND.
REV | DATE | DWN | CKD | DESCRIPTION
A | 5-97 | RP | | ORIGINAL ISSUE
LIMIT SWITCH ASSEMBLY, 10 & 12 CIRCUIT
JOB #: | SCALE: HALF | PRINT #: ALS-A002
ROADWAY MANUFACTURING
15191 HWY 243
RUSSELLVILLE, AL 35653
PH (888) 560-2050
FAX (205) 332-4038
THIS DRAWING AND THE WORK REPRESENTED ON IT IS THE PROPRIETARY PROPERTY OF ROADWAY MFG. NEITHER THIS DRAWING NOR ANY INFORMATION CONTAINED THEREON MAY BE TRANSMITTED OR USED BY OTHERS WITHOUT WRITTEN PERMISSION FROM ROADWAY MANUFACTURING.

11.8.2 WARNING GATE – B&B ROADWAY VT-40A

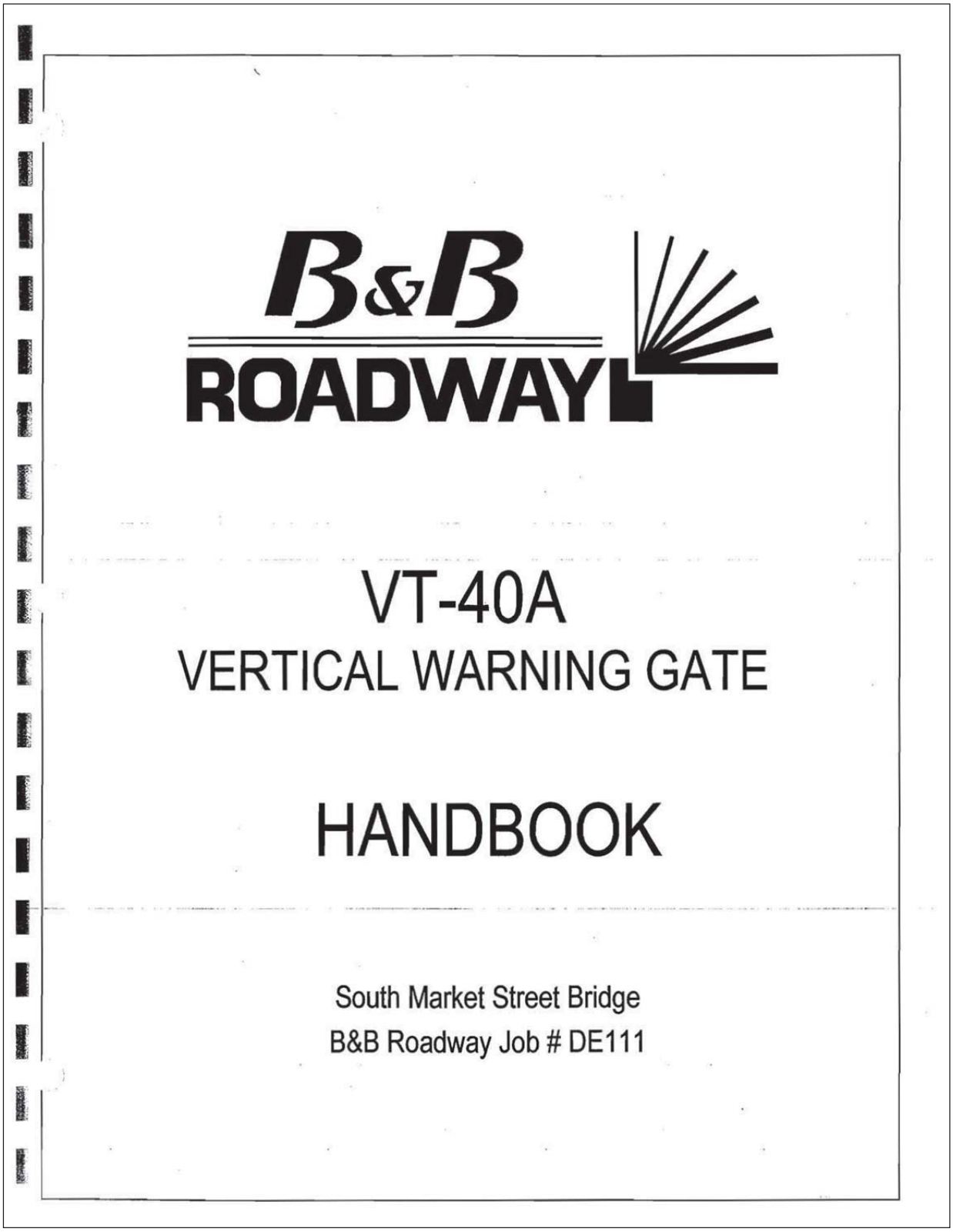

VT-40A VERTICAL WARNING GATE HANDBOOK

Table of Contents

Roadway Job #: DE111

Location: South Market Street Bridge

Section 1: Installation Instructions
VT-40A Specifications for Job # DE111
WE8915E1 Wiring Diagram
WI8915E1 Installation Drawing

Section 2: M.O.V. Unit Specifications & Wiring Diagram
R-0003/16T M2CP Actuator Assembly Drawing
2000 M2CP Actuator Manual
M2CP-109 Actuator Wiring Diagram

Section 3: Shear Pin Assembly Drawing
AAW-A001 Shear Pin Base Assembly

Section 4: Accessory Specifications
L4 Arm Lights
Arm Light Flasher
Gong

Section 5: Warranty

PLEASE NOTE:: *Save time* and prevent potential damage to your gate. Read all pertinent instructions before beginning a task. If you do not understand an instruction, require spare parts, or need technical assistance on a detail not covered by the handbook, please contact us.

B&B Roadway LLC
15191 Hwy 243
Russellville, AL 35654

(888) 560-2060 toll free
(256) 332-4036 fax

Section 1

Drawings & Specifications

B&B ROADWAY

VT-40A VERTICAL WARNING GATE
Specifications for South Market Street Bridge
B&B Roadway Job # DE111

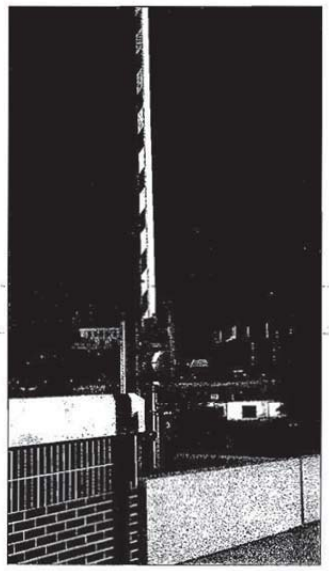

GENERAL: The warning gate shall be Model VT-40A, as manufactured by B&B Roadway, LLC, (888) 560-2060.

APPLICATIONS: The gate shall be designed for use as a warning, traffic control and access control gate. The gate shall be explicitly designed for traffic control on movable bridges, HOV and reversible lanes and similar applications.

HOUSING: The operating mechanism and main control components shall be contained in a weatherproof housing. The housing shall be constructed of .188" (4.8mm) aluminum. Exterior surfaces shall be painted aluminum. All fasteners shall be corrosion resistant.

Housing design shall allow for easy removal of the arm shaft assembly as a unit, including bearings and main arm crank, for ease of service. Arm assembly mounting design shall be fully gasketted and shaft openings shall incorporate O-ring seals.

Front and rear access doors shall be mounted on full cross bronze straps. Hinges shall be of the slip-off type and shall have stainless steel pins. Door handles, two per door, shall use a vise action to compress a neoprene bulb-type gasket to seal the door openings. A padlockable strap shall be provided suitable for heavy duty standard padlocks or shackleless padlocks, provided by others.

MOUNTING: The gate shall be fixed to a suitable foundation, as specified by the project engineer, using four 3/4" (20mm) diameter minimum anchor bolts. The gate housing base shall provide four 1.00" (25mm) holes on a 20 1/4" (514mm) square pattern. (Mounting holes in standard base shall be slotted to allow for a 19 1/2" x 20 1/4" (495mm x 514mm) mounting pattern to accommodate some existing bolt patterns.)

ARM: The gate arm shall be 4" (102mm) square, 6005-T5 aluminum extruded tubing with 3" square end section of high-strength UV-resistant fiberglass. Maximum arm length shall be 40' (12m) from the centerline of the housing. Stainless steel truss cables and a damping type bumper rod shall be furnished with longer arms at the discretion of the manufacturer. Front and rear arm surfaces shall be covered with alternating red and white pre-striped engineering grade reflective sheeting. Stripes shall be 6" (152mm) wide, and shall slope at 45 degrees down toward the arm tip. Remaining exposed surfaces shall be painted white.

ARM BASE: The arm base shall be designed with a shear pin mechanism to minimize damage to the gate and vehicle in the event of a collision. In the event of an impact, the shear pin shall break, allowing the arm to swing approximately 75 to 80 degrees. At the full open position, a spring-loaded latch shall engage, preventing the arm from swinging back into traffic. Arm shall be easily reset by manually releasing the latch, rotating the arm back into position and replacing the shear pin.

ARM MOUNTING CHANNELS: A pair of carbon steel channels, hot dip galvanized, painted aluminum, shall be rigidly affixed to the ends of the main arm shaft. The channels and a steel crossmember shall provide a sturdy mount for the arm, arm base assembly and counterweights.

COUNTERWEIGHTS: At the rear end of the side arm channels, hot dip galvanized counterweights shall be mounted to balance the arm. Counterweights shall be sectional and shall permit at least 10% adjustment.

ARM SHAFT: The main arm shaft shall be of 2" (51mm) diameter AISI 4150 with a minimum tensile strength of 140,000 psi. The shaft shall be mounted in heavy duty relubricable ball bearings.

TOLL FREE 888-560-2060 VT-40A Specifications WARNING GATES

MOV UNIT: The MOV Unit (480V, 3 PH, 60 Hz, 1/6 HP, 15 min duty, 1800 rpm) will be attached to the housing with six bolts. The MOV will be of the instant reversing type to permit reversing movement of the arms at any point of travel. The MOV's housing will be a NEMA 4X enclosure. See "Section 2: M.O.V. Unit Specifications & Wiring Diagram" for more information.

HANDCRANK: A handcrank shall be provided with each gate to facilitate manual operation of the gate.

SAFETY SWITCHES, TERMINAL BLOCKS AND WIRING: A manual disconnect switch shall be provided, pre-wired at the factory to break the main motor leads, to protect personnel during service. A handcrank safety switch shall be provided to prevent powered actuation of the gate during manual operation. Safety switches shall be installed and set at the factory to break the control circuit when either access door is opened. Door safety switches shall have a pull-to-override feature for test operation and shall automatically reset when doors are closed. Control components and terminal blocks shall be mounted inside an electrical enclosure mounted facing the roadway side access opening, except where custom components required by the customer prevent this arrangement. Pressure-type, modular terminal blocks shall be fully labeled and clearly coded to wiring diagrams. All control wiring shall be clearly coded to wiring diagrams and shall terminate at the terminal block. Connections to screw-type terminals shall have lugs. Conductors shall be #16 AWG stranded, minimum. Wiring shall be run in conduit where practical.

ACCESSORIES AND MODIFICATIONS: All common accessories and modifications shall be available. Custom modifications and accessories shall be available through coordination with manufacturer.

WARRANTY: A 2 year warranty shall cover the gate and related equipment against defective material and components. Manufacturer shall furnish replacement parts for a minimum of 5 years. Replacement parts for standard components shall normally be available within 1 working day. Lamps, fuses and other components designed for a life less than 2 years shall be covered for the rated life of the component or the warranty period of the component manufacturer.

PARTIAL LIST OF INCLUDED OPTIONS:

Aluminum Housing & SAC
Anchor Bolts (provided by manufacturer)
Mounting Template
Fiberglass Arm Section (at end of arm)
Arm Lights
Flasher
Gong
Sidewalk Arm

Revised 3/06 for DE111

TOLL FREE 888-560-2060 VT-40A Specifications WARNING GATES

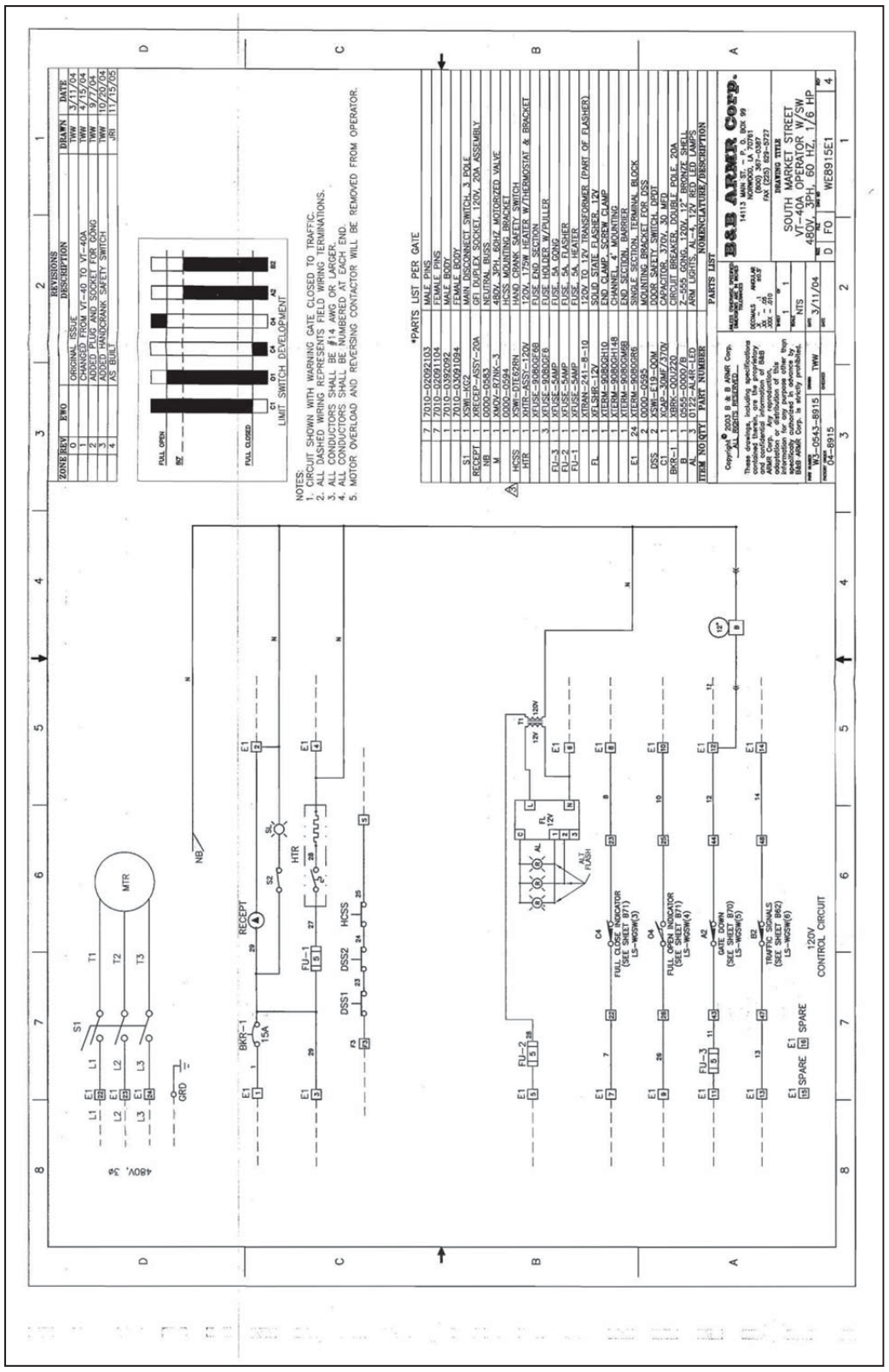
B&B ARMR Corp.
SOUTH MARKET STREET
VF-40A OPERATOR W/SW
480V, 3PH, 60 HZ, 1/6 HP
WE8915E1
*PARTS LIST PER GATE
PARTS LIST
NOTES:
1. CIRCUIT SHOWN WITH WARNING GATE CLOSED TO TRAFFIC.
2. ALL DASHED WIRING REPRESENTS FIELD WIRING TERMINATIONS.
3. ALL CONDUCTORS SHALL BE #14 AWG OR LARGER.
4. ALL CONDUCTORS SHALL BE NUMBERED AT EACH END.
5. MOTOR OVERLOAD AND REVERSING CONTACTOR WILL BE REMOVED FROM OPERATOR.
LIMIT SWITCH DEVELOPMENT
FULL OPEN
FULL CLOSED
REVISIONS
ORIGINAL ISSUE
ADDED "PLUG AND SOCKET FOR CORD"
ADDED HANDCRANK SAFETY SWITCH
AS BUILT
480V, 3Φ
CONTROL CIRCUIT
MTR
RECEPT
HTR
HCSS
DSS1
DSS2
SPARE
GATE DOWN
TRAFFIC SIGNALS
FULL CLOSE INDICATOR
FULL OPEN INDICATOR
ALT FLASH

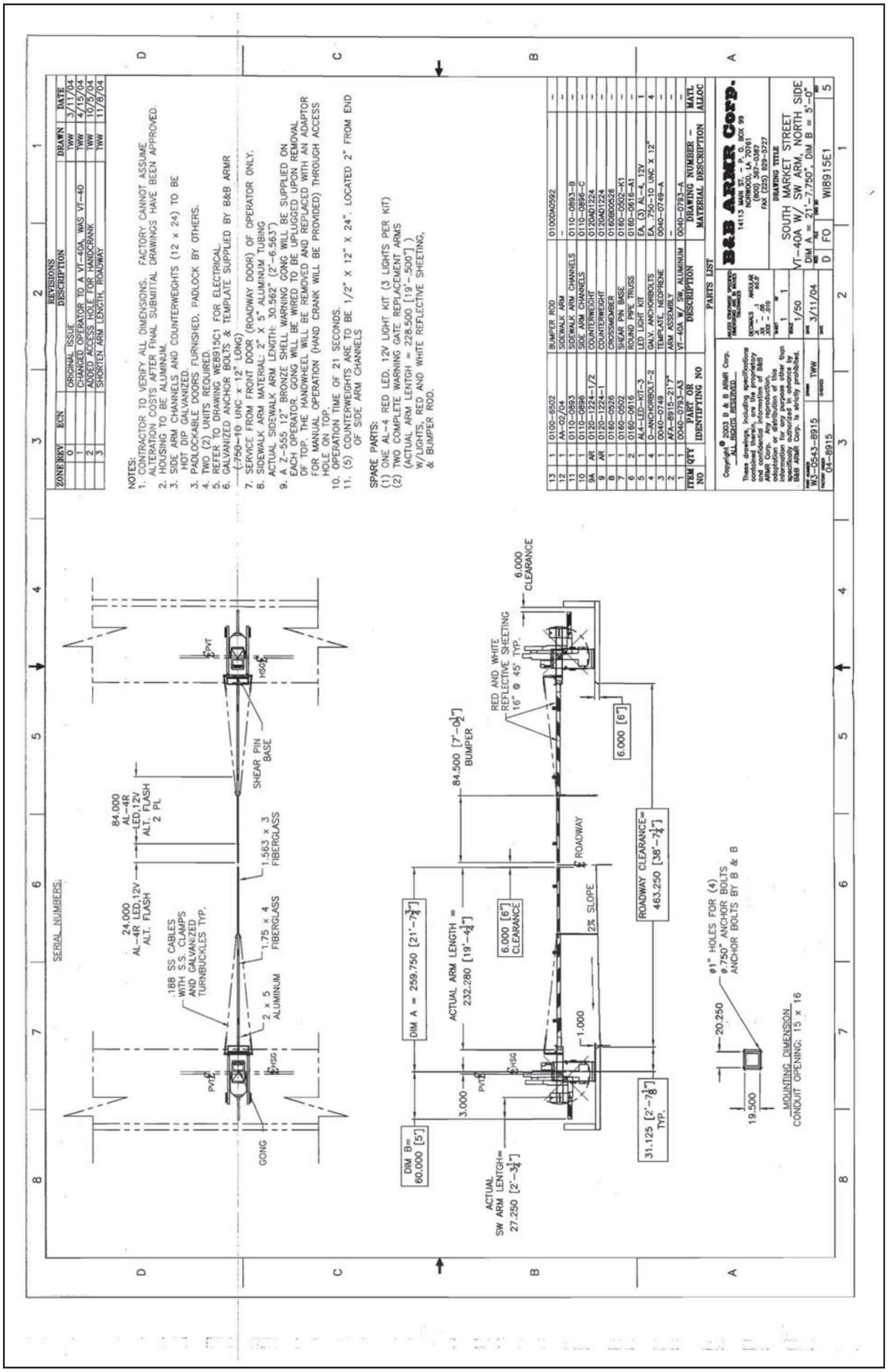
SERIAL NUMBERS:
REVISIONS
ZONE | REV | ECN | DESCRIPTION | DRAWN | DATE
0 | ORIGINAL ISSUE | TWW | 3/11/04
1 | CHANGED OPERATOR TO A VT-40A, WAS VT-40 | TWW | 4/15/04
2 | ADDED ACCESS HOLE FOR HANDCRANK | TWW | 10/5/04
3 | SHORTEN ARM LENGTH, ROADWAY | TWW | 11/8/04
NOTES:
1. CONTRACTOR TO VERIFY ALL DIMENSIONS. FACTORY CANNOT ASSUME ALTERATION COSTS AFTER FINAL SUBMITTAL DRAWINGS HAVE BEEN APPROVED.
2. HOUSING TO BE ALUMINUM.
3. SIDE ARM CHANNELS AND COUNTERWEIGHTS (12 x 24) TO BE HOT DIP GALVANIZED.
3. PADLOCKABLE DOORS FURNISHED, PADLOCK BY OTHERS.
4. TWO (2) UNITS REQUIRED.
5. REFER TO DRAWING WE8915C1 FOR ELECTRICAL.
6. GALVANIZED ANCHOR BOLTS & TEMPLATE SUPPLIED BY B&B ARMR (.750-10 UNC x 12" LONG)
7. SERVICE FROM FRONT DOOR (ROADWAY DOOR) OF OPERATOR ONLY.
8. SIDEWALK ARM MATERIAL: 2" X 5" ALUMINUM TUBING ACTUAL SIDEWALK ARM LENGTH: 30.562" (2'-6.563")
9. A Z-555 12" BRONZE SHELL WARNING GONG WILL BE SUPPLIED ON EACH OPERATOR. GONG WILL BE WIRED TO BE UPLUGGED UPON REMOVAL OF TOP. THE HANDWHEEL WILL BE REMOVED AND REPLACED WITH AN ADAPTOR FOR MANUAL OPERATION (HAND CRANK WILL BE PROVIDED) THROUGH ACCESS HOLE ON TOP.
10. OPERATION TIME OF 21 SECONDS.
11. (5) COUNTERWEIGHTS ARE TO BE 1/2" X 12" X 24". LOCATED 2" FROM END OF SIDE ARM CHANNELS
SPARE PARTS:
(1) ONE AL-4 RED LED, 12V LIGHT KIT (3 LIGHTS PER KIT)
(2) TWO COMPLETE WARNING GATE REPLACEMENT ARMS (ACTUAL ARM LENTGH = 228.500 [19'-.500"]) W/LIGHTS, RED AND WHITE REFLECTIVE SHEETING, & BUMPER ROD.
24.000 AL-4R LED,12V ALT. FLASH
84.000 AL-4R LED,12V ALT. FLASH 2 PL
.188 SS CABLES WITH S.S. CLAMPS AND GALVANIZED TURNBUCKLES TYP.
GONG
2 x 5 ALUMINUM
1.75 x 4 FIBERGLASS
1.563 x 3 FIBERGLASS
SHEAR PIN BASE
DIM B= 60.000 [5']
DIM A = 259.750 [21'-7¾"]
ACTUAL ARM LENGTH = 232.280 [19'-4¼"]
84.500 [7'-0½"] BUMPER
3.000
ACTUAL SW ARM LENTGH= 27.250 [2'-3¼"]
6.000 [6"] CLEARANCE
RED AND WHITE REFLECTIVE SHEETING 16" @ 45° TYP.
6.000 CLEARANCE
1.000
2% SLOPE
ROADWAY
6.000 [6"]
31.125 [2'-7⅛"] TYP.
ROADWAY CLEARANCE= 463.250 [38'-7¼"]
20.250
19.500
ø1" HOLES FOR (4) ø.750" ANCHOR BOLTS ANCHOR BOLTS BY B & B
MOUNTING DIMENSION
CONDUIT OPENING: 15 x 16
13 | 1 | 0100-6502 | BUMPER ROD | 0100DA0592 | -
12 | 1 | AA-02/04 | SIDEWALK ARM | - | -
11 | 1 | 0110-0893 | SIDEWALK ARM CHANNELS | 0110-0893-B | -
10 | 1 | 0110-0896 | SIDE ARM CHANNELS | 0110-0896-C | -
9A | AR | 0120-1224-1/2 | COUNTERWEIGHT | 0120AD1224 | -
9 | AR | 0120-1224-1 | COUNTERWEIGHT | 0120AD1224 | -
8 | 1 | 0160-0526 | CROSSMEMBER | 0160B00526 | -
7 | 1 | 0160-0502 | SHEAR PIN BASE | 0160-0502-K1 | -
6 | 2 | 0160-0616 | ROUND PIPE TRUSS | 0160-0616-A1 | -
5 | 1 | AL4-LED-KIT-3 | LED LIGHT KIT | EA. (3) AL-4, 12V | 1
4 | 4 | O-ANCHORBOLT-2 | GALV. ANCHORBOLTS | EA. .750-10 UNC X 12" | 4
3 | 1 | 0040-0749 | TEMPLATE, NEOPRENE | 0040-0749-A | -
2 | 1 | AFA-8915-21'7" | ARM ASSEMBLY | - | -
1 | 1 | 0040-0793-A3 | VT-40A W/ SW, ALUMINUM | 0040-0793-A | -
ITEM NO | QTY | PART OR IDENTIFYING NO | DESCRIPTION | DRAWING NUMBER – MATERIAL DESCRIPTION | MATL ALLOC
PARTS LIST
Copyright © 2003 B & B ARMR Corp. ALL RIGHTS RESERVED
These drawings, including specifications contained therein, are the proprietary and confidential information of B&B ARMR Corp. Any reproduction, adaptation or distribution of this information for any purpose other than specifically authorized in advance by B&B ARMR Corp. is strictly prohibited.
B&B ARMR Corp.
14113 MAIN ST. - P. O. BOX 99
NORWOOD, LA 70761
(800) 367-0387
FAX (225) 629-5727
DRAWING TITLE
SOUTH MARKET STREET
VT-40A W/ SW ARM, NORTH SIDE
DIM A = 21'-7.750", DIM B = 5'-0"
1/50
W3-0543-8915
04-8915
TWW
3/11/04
D | FO | WI8915E1 | 5

Section 2

M.O.V. Unit Specifications
&
Wiring Diagram

EIM CONTROLS

Model R7RK-3 General Specifications

STANDARD FEATURES:

- 460 VAC, 3 PH, 1/6 HP, 60 HZ
  15 min duty, 1800 RPM motor.
- 2-train gear limit switch (LSC & LSO 2NO, 2NC contacts each).
- Open and closed torque limit switch (TSC & TSO, 1NO).
- Space Heater
- Auto-declutch handwheel.
- Blank stem nut or drive bushing
- TGIC – Polyester Powder Coat
- Submittal Package to Include:
  1 copy – outline, parts list, job spec sheet, wiring diagram and maintenance manual.

CONSTRUCTION:

- Weatherproof (NEMA 4X)

MECHANICAL OPTIONS:

- None

ELECTRICAL OPTIONS:

- Reversing contactor
- Transformer
- 4-train geared limit
- 3 Push buttons
- 2 Lights
- Selector switch

EIM COMPANY, INC. • 13840 PIKE ROAD • MISSOURI CITY, TEXAS 77489 • (281) 499-1561 • FAX: (281) 499-8445

Manual E796

2000 M2CP

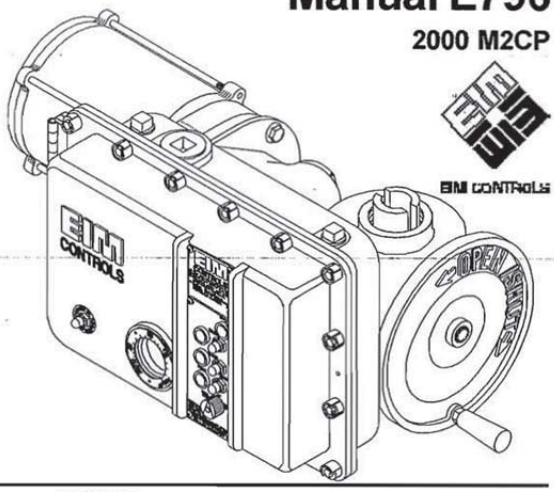

When communicating with EIM for replacement parts or for technical questions, we MUST have actuator nameplate information, including Job, Serial, and Model numbers. This allows us to check EIM records of your actuator.

When ordering parts, specify repair part by EIM part number and description from drawings furnished with actuator.

EIM Parts Department Fax (281) 261-3834

TABLE OF CONTENTS

	Page
Storage Instructions	2
M2CP Electrical Hook Up	2
Assembly to Valves	3
Limit Switch Setting Instructions	4
Torque Switch Setting Instructions	5
MDPI & Potentiometer Gear Box	5
Futronic II 83957 Calibration	6
Trouble Shooting & Wiring Diagram Symbols	7

DO

1. **DO follow proper storage procedures.** Improper storage will void warranty.
2. ***DANGER*: DO check for proper motor rotation.** If valve goes wrong direction when button is pushed, you have no torque or limit protection. 3-Phase incoming power voltage must have 2 wires reversed.
3. **DO read and follow procedures** before attempting to energize actuator.
4. **DO cut off electric power before opening switch compartment.**
5. **DO install relief vent in highest point of gearbox.**
6. **DO use valve stem covers** of sufficient length.
7. **DO clean electrical enclosure flange** thoroughly & lightly grease before closing.
8. **DO secure electrical enclosure bolts** (10-12 ft-lbs).
9. **DO follow an annual maintenance procedure.**
10. **DO use caution** when working on, with, or around valves and actuators. You can be dealing with high pressures, forces, voltages and flammable media.

DON'T

1. **Don't Start-up** without reading this manual.
2. **Don't stack actuators.**
3. **Don't store actuator on the ground unprotected.**
4. **Don't lift the unit** by clutch lever or handwheel.
5. **Don't lift a valve assembly** by electrical actuator.
6. **Don't operate electrically without first** checking proper phase rotation, torque and position limit switch adjustments (follow instructions on pgs 2, 4 and 5).
7. **Don't plug actuator motor** by starting and stopping repeatedly to move a too stiff valve. Check for cause.
8. **Don't jumper torque switches** except as recommended by Wiring Diagram or Valve Manufacturer.
9. **Don't use oversize thermal motor overloads** to eliminate tripping problem. Find cause and correct.
10. **Don't use a cheater** to force the handwheel. You can damage gearing and shafts. Find cause and correct.
11. **Don't torque seat valve,** sluice gate or damper unless the valve manufacturer recommends.

LUBRICATION

EIM Actuators are factory filled with a high quality lubricant carefully selected to insure actuator performance under specified operating conditions. Refer to EIM JOB SPEC SHEET to identify the lubricant provided. Normal operation *may not* require lubricant replacement.

MAINTENANCE

At least once a year a check should be made of your EIM actuator.

a) Disconnect ***all*** electrical power to actuator.

b) Open electrical enclosure. Inspect & tighten all electrical connections.

c) Visually inspect for any electrical or mechanical damage. Replace worn or damaged components.

d) Check lubrication consistency and level. Fill or replace if required.

PRESSURE RELIEF

During operation of electric actuator, the gear temperature increase in combination with variations of outdoor temperature will cause a small pressure build-up within actuator gear box. EIM furnishes Pressure Relief Vent Fitting Part No. 83385. Placement on Actuator can be determined only after field location and position of valve has been determined. Select the highest 1/2 NPT vent location on actuator gear box; remove 1/2 NPT plug and replace with 83385. The possible locations of vent are shown on EIM Outline Drawing.

EIM COMPANY, INC. • 13840 PIKE ROAD • MISSOURI CITY, TX 77489 • (281) 499-1561 • FAX (281) 499-8445

EIM E796

SHORT TERM STORAGE

(Stored at Job Site less than one year from shipment)

1. Actuator should be stored with motor shaft in horizontal position and electrical enclosure in either the horizontal or vertical position.
2. Actuator should be stored indoors free from job site dirt, mud, moisture and temperature changes.
3. If indoor storage is not possible, the actuator must be stored off the ground above possible water or snow level. Remove M2CP and store with other electrical and electronic equipment in protected warehouse. If M2CP is not removed, Space heater MUST be energized to protect electrical controls.
4. EIM supplies NPT plugs in each conduit entry. Do not remove until electrical hook-up. The customer conduit should be routed to enter electrical enclosure at 1-1/2 (1.50) NPT located at lowest point, so condensation does not drain into enclosure and damage parts.
5. Cover units loosely with a plastic sheet. This serves as partial protection from rain.

LONG TERM STORAGE

(Stored more than one year from shipment)

1. Store indoors or M2CP should be removed and stored in a protected area. Follow procedures of short term storage.

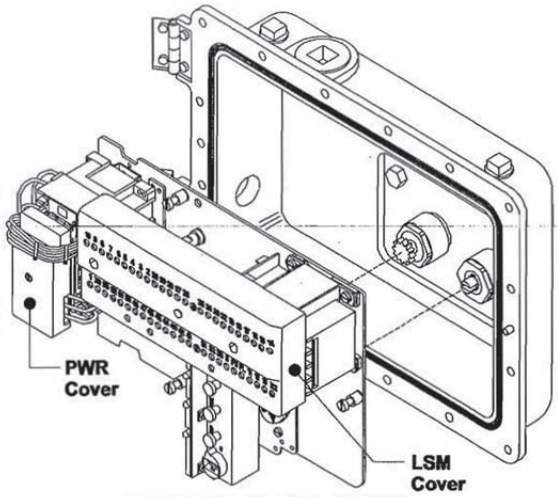

FAILURE TO STORE ACTUATOR PROPERLY WILL VOID WARRANTY OF ELECTRICAL & ELECTRONIC COMPONENTS

M2CP ELECTRICAL HOOK-UP

Remove PWR and TBM covers to expose terminals for customer wiring.

EIM Modular Modular Control Package (M2CP) is available configured in many combinations of electrical and electronic parts. Refer to **WIRING DIAGRAM** and **EIM JOB SPEC SHEET** for components provided by EIM. Connect control wires to TBM and Power (motor) Voltage to PWR terminals. If optional M2CP mounted circuit breaker was specified, connect power voltage leads to circuit breaker. EIM terminal blocks are furnished with wire binding screw connectors with rising captive plates, allowing field connection by several methods: 1) strip and connect bare wire, 2) strip and install wire ferrule, 3) strip and install crimp-on insulated or non-insulated ring tongue or similar terminal. Circuit Breaker accepts 1) bare wire strip, or 2) wire ferrule.

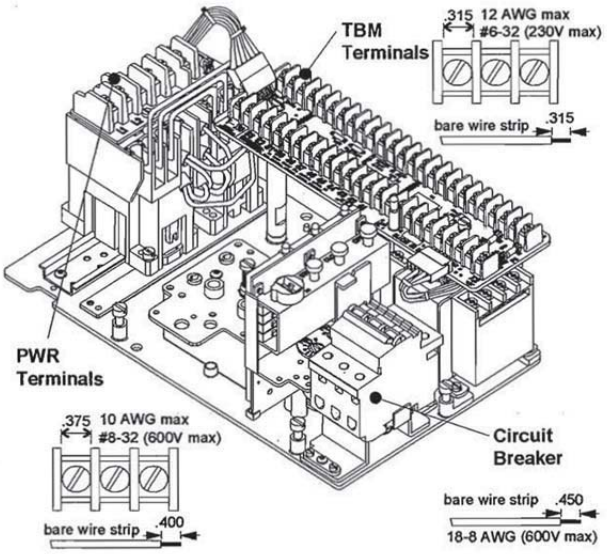

Electrical Hook-up

STEP 1. Move valve to mid-position by handwheel. This will allow sufficient time to stop actuator in case of improper hook-up or reversed incoming power voltage phases.

STEP 2. Identify a means of removing power from actuator during check out. Be sure no erroneous remote control signal can be received causing actuator to energize.

STEP 3. Energize Open control to check operation of contactor and pushbuttons. Open controls must move valve in Open direction. If valve Closes, actuator must be stopped and any (2) two power voltage leads reversed to correct voltage phasing.

CAUTION: If voltage is improperly phased, Torque and Position Limit Switches are not in circuit to protect valve.

STEP 4. Seal all field conduit entries in accordance with National Electric Code.

2 EIM COMPANY, INC. • 13840 PIKE ROAD • MISSOURI CITY, TX 77489 • (281) 499-1561 • FAX (281) 499-8445

EIM E796

ASSEMBLY TO VALVES - Threaded Valve Stem

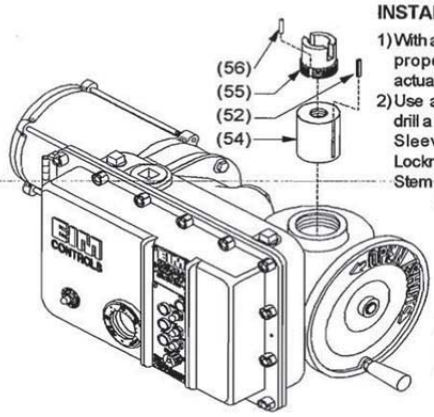

LOCKNUT LOCKPIN INSTALLATION

1) With actuator in place on valve, ensure proper flange mating and valve actuator orientation.
2) Use a number 30 (.1285) drill bit to drill a hole 3/4 inch deep into the Drive Sleeve assembly threads for the Locknut Lockpin (56) using groove in Stem Nut Locknut as drill guide.
3) Install Locknut Lockpin (56) into drilled hole to prevent Stem Nut Locknut from working loose and turning.

Note: When installing, the Locknut Lockpin - it should extend 1/4 inch above the Drive Sleeve assembly to allow for future removal.

STEM NUT INSTALLATION (MULTI-TURN)

1) Unscrew Locknut (55) holding Bronze Stem Nut (54) and remove the Stem Nut and Key (52).
2) Lubricate Stem and run Stem Nut down Stem to check acme thread fit, then remove Stem Nut and set aside.
3) Lower actuator over Stem onto valve flange. The screws thru valve flange into actuator must engage a minimum of one full screw diameter deep into bottom base and be tightened to a preload. See assembly drawing for screw size and torque to tighten properly.

MOUNTING SCREWS

If EIM supplied adaptation, the mounting screws are included. If adaptation to valve was the responsibility of others, the mounting screws *are not* furnished by EIM. Screws thru adapter MUST engage a minimum of one screw diameter deep into EIM actuator base.

4) Screw Stem Nut on Stem until it enters Drive Sleeve. Line (52) Key and (54) Drive Sleeve keyway and insert (52) Key.
5) Turn handwheel in Open direction, pulling Stem Nut into Drive Sleeve until it bottoms out (valve will begin to open).

CAUTION: LOCKNUT MUST BE TIGHT AGAINST STEM NUT.

6) Lower Locknut (55) over Valve Stem and screw into place firmly against top of Stem Nut. Tap Locknut ears using brass drift until tight.

THRUST SPOOL (Model 4000 & 5000)

1) Locate Thrust Mounting bolts.
2) Remove eight mounting bolts and separate Spool from actuator.
3) Position Spool over Valve Stem. Thread Spool onto Valve Stem until it meets valve plate.
4) Bolt and secure Spool onto valve.
5) Position actuator above Spool. Lower actuator onto Spool while manually rotating the unit until ears on Stem Nut and ears on main Drive Sleeve mesh.
6) Grease flange face before securing unit to Spool.
7) Re-install thrust plate mounting bolts. Tighten to proper torque.

NOTE: Reverse procedure if Stem Nut needs to be replaced. Actuator does not need to be returned to factory for this procedure.

(Quarter-Turn) SPLINE BUSHING

EIM removable Spline Bushing allows easy adaptation to valve shaft diameter and Key. Actuator may be rotated with respect to valve shaft for unexpected or awkward field installations.

1) Move valve to full Open or Close.
2) Place Spline Bushing on valve shaft with Key and tighten set screw.
3) Using handwheel on actuator, move gear position indicator arrow to full Open or Close (the position in Step 1)
4) Position actuator so Spline Bore is correctly aligned with the Spline Bushing on stem shaft.
5) Move actuator onto shaft until flange faces properly mate. Secure with screws thru the adapter flange into base of actuator.

Quarter-Turn Valve

STOP SETTING PROCEDURE

Built-in mechanical stops are provided to prevent handwheel operation beyond total valve travel (90 ± 6°). End of travel stops are independently adjusted, locked in place and sealed.

Type P, Q & R
(top mount)

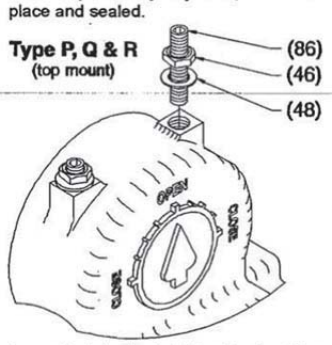

Loosen both Locknuts (46) and back out two Stopbolts (86) to allow valve to close and open fully. Insure Electrical Travel Limit Switches have been adjusted (see pg. 4).

1) Run actuator electrically to full Close.
2) Screw Close (86) Stopbolt in until it seats, then back off 1/2 turn. Install (48) Washer and tighten (46) Locknut.
3) Run actuator electrically to full Open.
4) Screw Open (86) Stopbolt in until it seats, then back off 1/2 turn. Install (48) Washer and tighten (46) Locknut.

Type M/MG
(side mount)

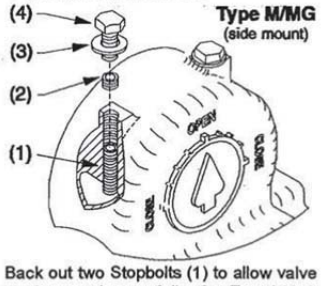

Back out two Stopbolts (1) to allow valve to close and open fully. Set Travel Limit Switches (see pg. 4).

1) Run actuator electrically to full Close.
2) Screw Close (1) Stopbolt in until it seats, then back off 1/2 turn. Tighten (2) Lockscrew.
3) Run actuator electrically to full Open.
4) Screw Open (1) Stopbolt in until it seats; back off 1/2 turn. Tighten Locknut.
5) Install (3) & (4) Seal Washer & Screw.

CAUTION: Do not set actuator position Limit Switches to drive into mechanical stops. Damage can occur if unit is repeatedly stalled into end stops.

EIM COMPANY, INC. • 13840 PIKE ROAD • MISSOURI CITY, TX 77489 • (281) 499-1561 • FAX (281) 499-8445 **3**

EIM E796

LIMIT SWITCH SETTING INSTRUCTIONS

BEFORE MAKING LIMIT SWITCH SETTING:

1. Move valve to mid-position (use handwheel).
2. Phase the power (motor) voltage and make sure that open contactor moves valve Open and close contactor moves valve Closed.

DANGER: Improper power voltage phasing eliminates protection of both position limit switch and torque switches, risking valve damage.

TO SET OPEN LIMIT SWITCH (LSO)

1. **Open valve** during handwheel operation note rotation direction of screwdriver (fig. 1) in LSO Adjusting Shaft. After valve is fully Open, Close it three handwheel turns to allow for coasting when motor is actuated.
2. **Disengage spring loaded gear:** Push Disengage Shaft in (fig. 2a) down, then rotate 90° so shaft is captured down. This will disengage limit switch gears from spring loaded drive gear.

TIP: many turns may be required to set limit switches; it may be convenient to use a reversible variable speed drill to rotate the adjusting shafts instead of a screwdriver.

3. **Line up LSO indicator:** If switch rotor arrow does not line with round holes (within ± 15°) on plate as shown in fig. 3a, rotate screwdriver in same direction noted in Step 1 until switch just rotates. If arrows line up as shown in fig. 3b, rotate screwdriver in the opposite direction until switch just rotates.
4. **Re-engage** the spring-loaded drive gear by rotating disengage shaft in fig. 2a. Spring loaded disengage shaft will rise.
5. **IMPORTANT: to insure limit switch gears have re-engaged properly with spring loaded drive gear, firmly *"jiggle"* (rotate) all adjusting shafts with screwdriver back and forth. Proper engagement has been made if all shafts (LSC, LSO, LSA & LSB) will not turn with screwdriver.**

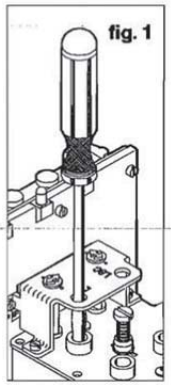

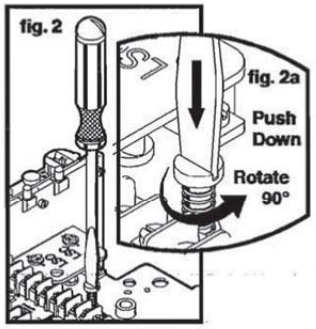

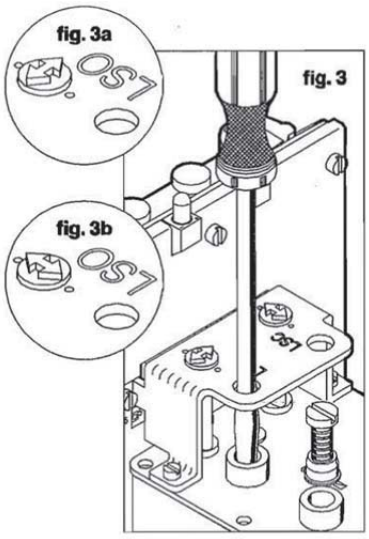

SET (LSC) CLOSE LIMIT SWITCH

1. **Close valve**, using handwheel. During handwheel operation note rotation direction of screwdriver in LSC adjusting shaft. After valve is fully Closed, Open it three handwheel turns to allow for coast.
2. Repeat steps 2 through 5 of LSO setting instructions with screwdriver in LSC cavity.

Important: *"jiggle"* adjusting shafts.

TO SET INTERMEDIATE SWITCH (LSA OR LSB), if included.

1. Open Valve to desired position, then repeat steps 2 thru 5 of LSO.

Important: *"jiggle"* adjusting shafts.

TORQUE SEATED VALVES

If valve is a torque seated valve, and the geared limit contacts are used for indication only, the LSC switch should be set several handwheel turns ahead of torque switch contact action. This gives proper valve position Lamp indication in spite of minor position variations which might occur due to torque seating.

4 EIM COMPANY, INC. • 13840 PIKE ROAD • MISSOURI CITY, TX 77489 • (281) 499-1561 • FAX (281) 499-8445

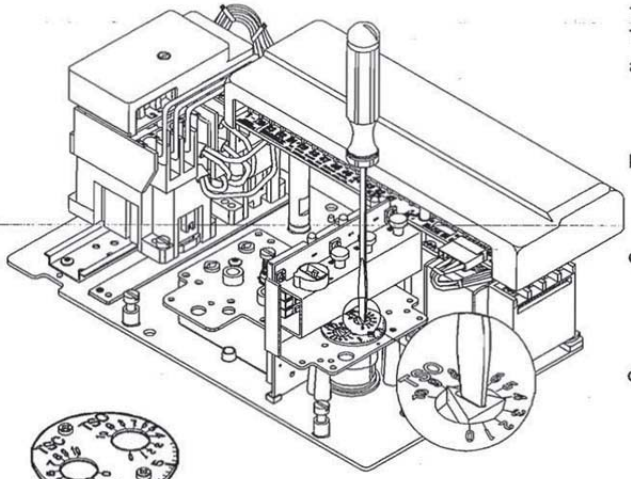

Torque Switch Rotation Limit

Adjustment rotation may be limited, Remove dial to expose anti-rotation pins. Remove pins from position 10 and insert into the desired hole.

TORQUE SWITCH CALIBRATION
To set Close Torque Switch (TSC)

a) Close valve using handwheel. Set valve to the desired torque. Observe rotating dial for number that corresponds to desired Close Torque.

b) Insert screwdriver in TSC slot. Press down to disengage and turn arrow to setting determined in a). Release at this point and it will re-engage and remain set.

c) Back the valve away from Close position and reseat by handwheel to verify torque trip point is at desired setting. The trip point of switch is a distinctive click as it breaks contact.

d) **DANGER:**

REVERSE POWER VOLTAGE PHAS ING REMOVES TORQUE SWITCH PROTECTION FROM THE REVERSING CONTACTOR COIL CIRCUITS. VALVE DAMAGE COULD OCCUR. If phasing has not been checked, do so before proceeding. Back valve away from Close position with handwheel and test torque electrically, using Close controls. Readjust as required.

To Set Open Torque Switch (TSO)

a) Follow procedure as for TSC at TSO dial.

Multi-turn Actuators

Multi-turn top-mounted and side-mount bevel gear actuators require use of Gear Reduction Assembly part no. 84055-0000 for Mechanical Dial Position Indication MDPI *and* 1-turn Pot. N-number replaces -0000 to complete part no. For 1-turn Pot only *without* Dial Indication part no. is 84117-0000. Refer to EIM JOB SPEC SHEET for MDPI furnished.

MDPI *Mechanical Dial Position Indication* is a gear reduction assembly to convert multi-turn valve stem nut turns to 270 degrees (.75 turn) for viewing position indication arrow thru glass window on actuator electric switch compartment cover. Point of rotation reference has been designated as **N-number**. N is the total number of electric actuator 12-tooth gear limit spring-load pinion rotations for full valve stroke.

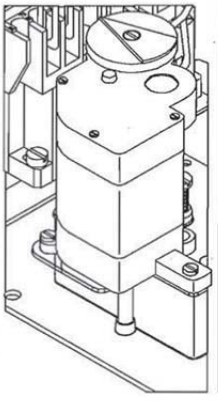

Calibration

MDPI & POT Drive is calibrated after LSC and LSO are properly set (Pg. 4). Move valve to Close position. Manually rotate MDPI arrow to indicate Close. Calibration is now complete. Open valve to check that MDPI arrow goes to Open, indicating that N is correct for full valve travel. Potentiometer, if included, has been calibrated. Mechanical dial travel is 270°. Approximately 5% of total Pot resistance is left on each end for total valve travel.

Quarter-Turn Model P, Q, R & M

Top-mount P, Q and R and several models of M/MG's side-mount do not require MDPI gear reduction assembly for 1-turn Pot. If multi-turn Pot is required, EIM JOB SPEC SHEET will list 84131-0000 or the correct assembly. Spec Sheet will list,(1) Pot clutch gear, (2) Pot input gear and (3) potentiometer.

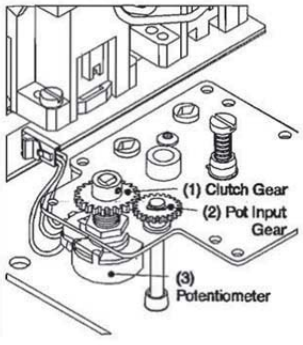

EIM COMPANY, INC. • 13840 PIKE ROAD • MISSOURI CITY, TX 77489 • (281) 499-1561 • FAX (281) 499-8445 **5**

EIM E796

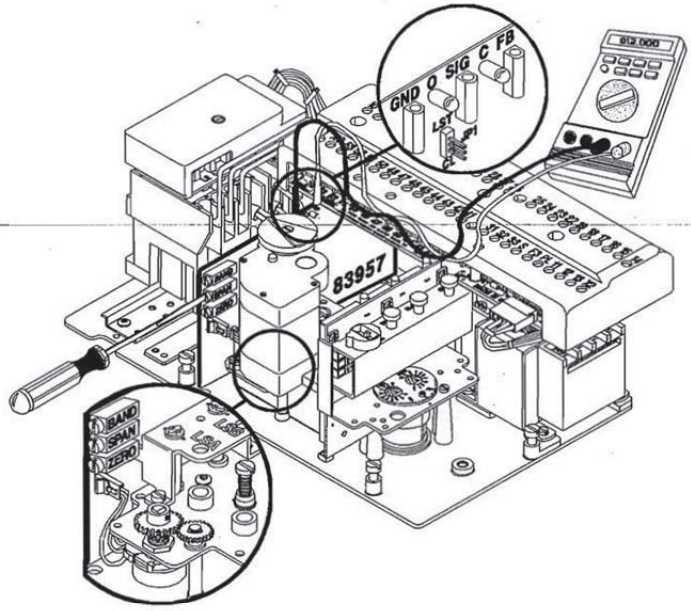

Futronic II 83957

83957-1 (600 starts per hour maximum) or 83957-2 (100 starts per hour) module controls valve by comparing two inputs (the desired position from process controller or computer and actual valve feedback position). If the two are within BAND, valve will not move. When the setpoint moves outside the BAND, valve moves in the direction to make control signal and valve feedback position inputs balance.

Calibration

After field wiring is complete, position limit switches have been set (Pg 4) and Pot adjustment on (Pg 5); proceed.

1. Voltmeter probes (+) in *Red* **(FB)** test point and (-) in *Black* **(GND)** test point.
2. Close valve: Meter should read **1 volt DC.** If it does not adjust **ZERO.**
3. Open valve: Meter should read **5 volts DC.** If it does not adjust **SPAN.**
4. Repeat steps 2 and 3 until no re-adjustment is necessary.
5. After a command signal has been connected, adjust **BAND** so valve moves to desired setpoint. **Delay:** 83957-1 has a six (6)* second fixed delay preventing actuator from instantaneously responding to another signal. This allows reversing contactor to respond at 600 starts per hour maximum.

Note: Jumper **JP1** is factory set: See Job Spec Sheet for **JPI** position. Loss of 4-20 mA control signal will cause valve to (1) **LST** (last position will not move) or 2) **CL** valve will close. **JPI** jumper plug may be field changed.

TIP: To measure **BAND**, place Voltmeter (-) Probe in ***Green*** (SIG) test point and (+) probe in ***Red*** (FB) test point. Move valve using Handwheel. Observe reading when valve repositions. (**BAND** adjustment is ±1% to 7%.)

* 83957-2 has a thirty (30) second delay for 100 starts per hour maximum.

Note 1) Feedback Pot may be mounted on MDPI (Multi-turn valves) or mounted on gear cover (1/4 Turn valves).

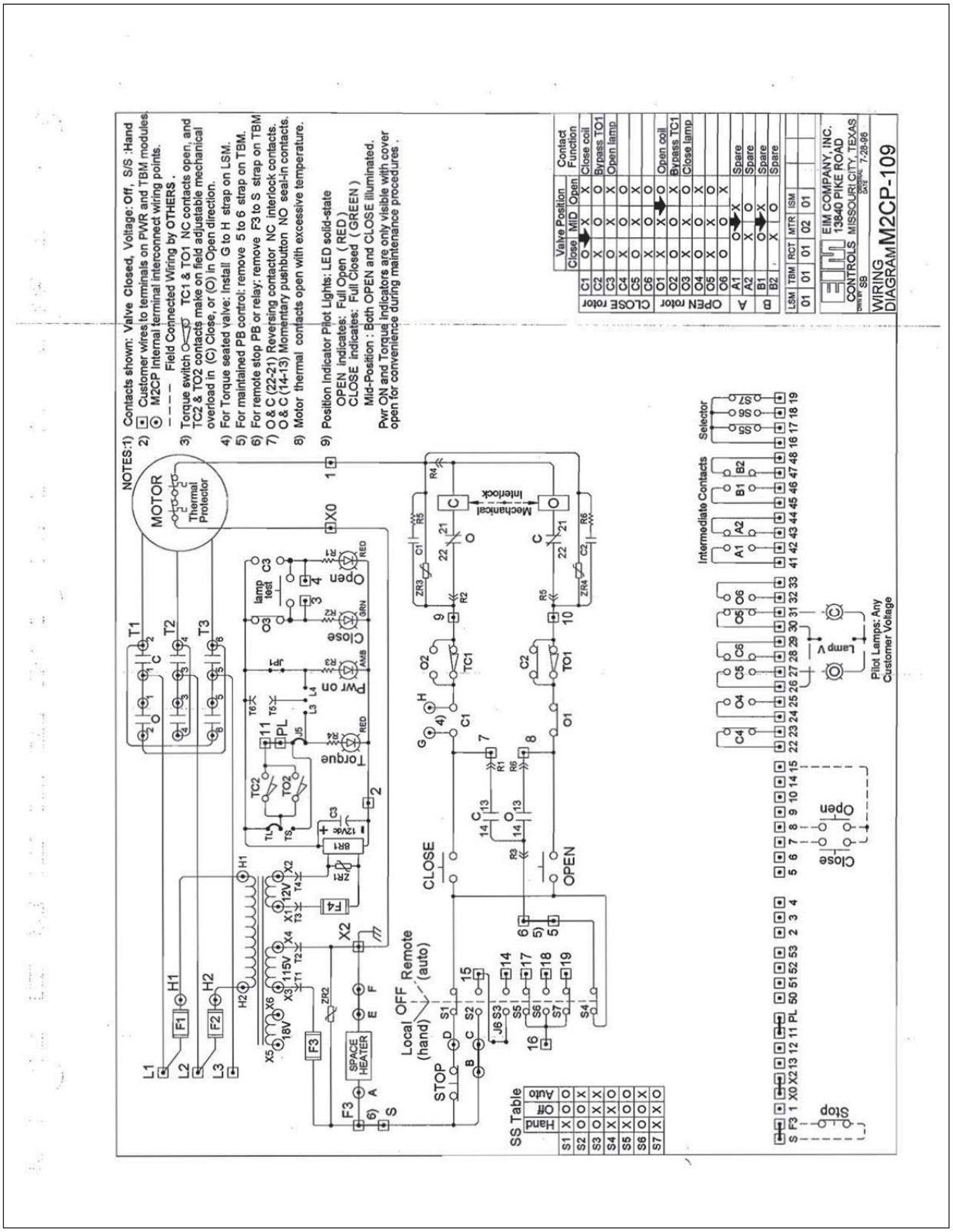
NOTES:1) Contacts shown: Valve Closed, Voltage: Off, S/S :Hand
2) ⊡ Customer wires to terminals on PWR and TBM modules.
⊙ M2CP internal terminal interconnect wiring points.
– – – – Field Connected Wiring by OTHERS .
3) Torque switch TC1 & TO1 NC contacts open, and TC2 & TO2 contacts make on field adjustable mechanical overload in (C) Close, or (O) in Open direction.
4) For Torque seated valve: Install G to H strap on LSM.
5) For maintained PB control: remove 5 to 6 strap on TBM.
6) For remote stop PB or relay: remove F3 to S strap on TBM
7) O & C (22-21) Reversing contactor NC interlock contacts.
O & C (14-13) Momentary pushbutton NO seal-in contacts.
8) Motor thermal contacts open with excessive temperature.
9) Position Indicator Pilot Lights: LED solid-state
OPEN indicates: Full Open (RED)
CLOSE indicates: Full Closed (GREEN)
Mid-Position : Both OPEN and CLOSE illuminated.
Pwr ON and Torque Indicators are only visible with cover open for convenience during maintenance procedures .
MOTOR
Thermal Protector
Mechanical Interlock
Intermediate Contacts
Selector
Local OFF Remote (auto)
STOP
CLOSE
OPEN
Open
Close
Stop
Lamp V
Pilot Lamps: Any Customer Voltage
SS Table
Hand
Off
Auto
Valve Position
Close MID Open
Contact Function
CLOSE rotor
OPEN rotor
Close coil
Bypass TO1
Open lamp
Open coil
Bypass TC1
Close lamp
Spare
EIM COMPANY, INC.
13840 PIKE ROAD
CONTROLS MISSOURI CITY, TEXAS
WIRING DIAGRAM M2CP-109

Section 3

Shear Pin Assembly Drawing

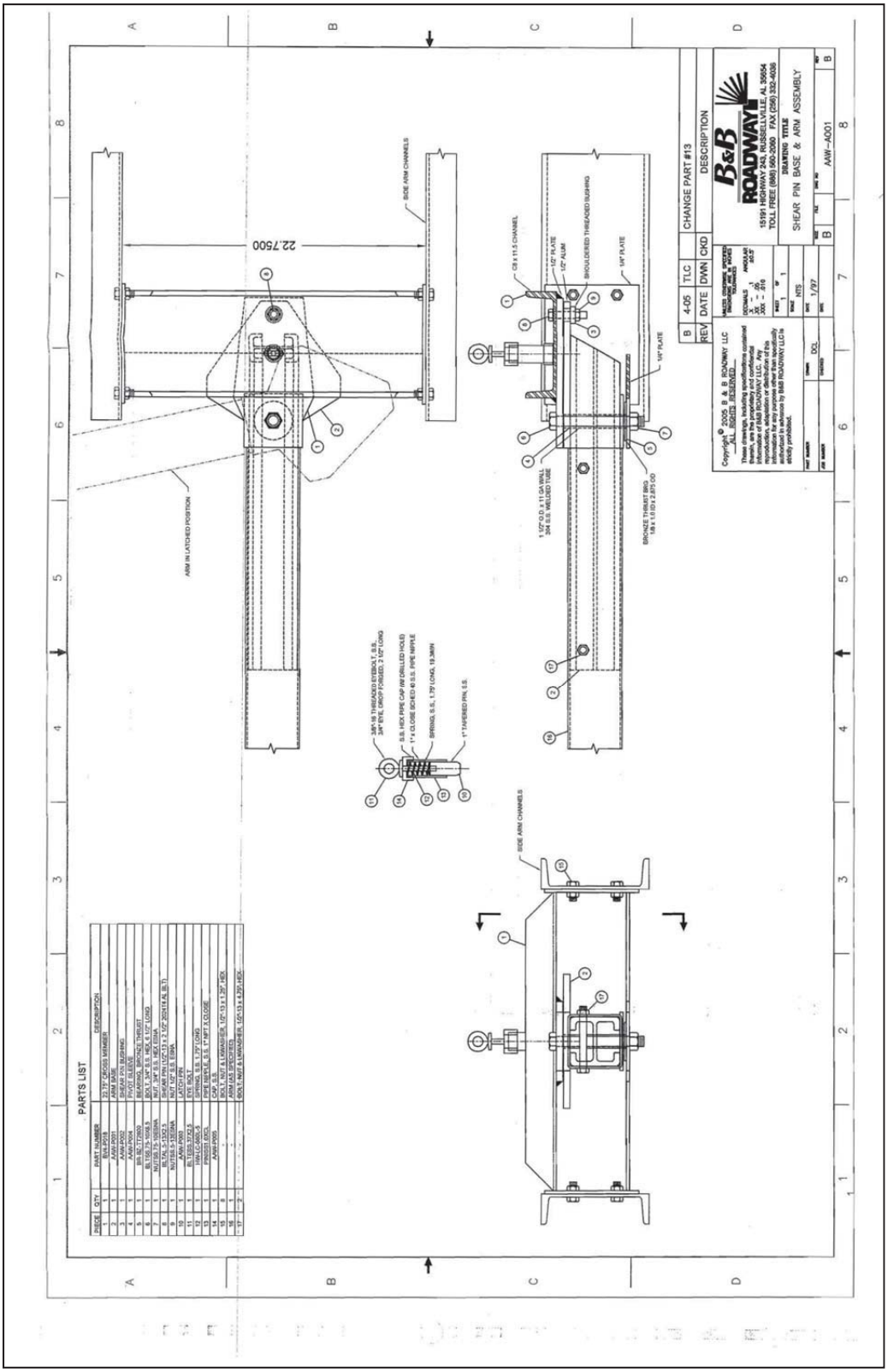
PARTS LIST
ITEM QTY PART NUMBER DESCRIPTION
1 1 AAW-A001 ASSY
2 1 AAW-A001 ARM BASE
3 1 AAW-P002 SHEAR PIN BUSHING
4 1 AAW-P003 PIVOT PIN, 6.5"
5 1 BB-THD-1000 3/4"-10 UNC THRUST
6 1 BL150.75-1008.5 BOLT, 3/4" S.S. HEX, 8 1/2" LONG
7 1 NUT.750-1000HA NUT, 3/4" S.S. HEX, 1.000A
8 1 BB-PIN-1000-2.5 PIN, 1" DIA. X 2.50" LONG (4.5LB.)
9 1 NUT.500-1000HA NUT, 1/2" S.S. 1000A
10 1 AAW-P004 LATCH PIN
11 1 BB-TUBE-2.5 TUBE, 2.5"
12 1 WHA-C-050-S SPRING, S.S., 1.25" LONG
13 1 PIPE-RIPPLE PIPE RIPPLE, S.S. 1" NPT X CLOSE
14 6 AAW-HW0 CAP SCREW & WASHER, 1/2"-13 X 1.25" HEX
15 - - NUT, 1/2" S.S. LOCKWASHER, 1/2"-13 X 4.25" HEX
16 1 - ARM AS SPECIFIED
17 2 - BOLT, NUT & WASHER, 1/2"-13 X 4.25" HEX
22.7500
SIDE ARM CHANNELS
ARM IN LATCHED POSITION
CB 9 X 11.5 CHANNEL
1/2" PLATE
1/2" ALUM
BROULDERED THREADED BUSHING
1/4" PLATE
1.127" O.D. x 11 GA WALL 304 S.S. WELDED TUBE
BRONZE STRAIGHT BSH 1.00 I.D x 2.25"LGD
3/8"-16 THREADED EYEBOLT, S.S. 3/4" BTM. DROP FORGED, 3 1/2" LONG
S.S. HEX PIPE CAP (NO DRILLED HOLE)
1" x CLOSE SCHED 40 S.S. PIPE NIPPLE
SPRING, S.S., 1.75" LONG, 19.3#/IN
1" TAPERED PIN, S.S.
SIDE ARM CHANNELS
REV DATE DWN CKD DESCRIPTION
B 4-05 TLC CHANGE PART #13
B&B ROADWAYS
15191 HIGHWAY 243, RUSSELLVILLE, AL 35654
TOLL FREE (866) 960-2060 FAX (256) 332-4088
DRAWING TITLE
SHEAR PIN BASE & ARM ASSEMBLY
SIZE B
AAW-A001
REV B
SCALE NTS
WT. 1797
Copyright © 2005 B & B ROADWAYS LLC ALL RIGHTS RESERVED

Section 4

Accessory Specifications

B&B ROADWAY

L-4 WARNING LIGHT
Specifications

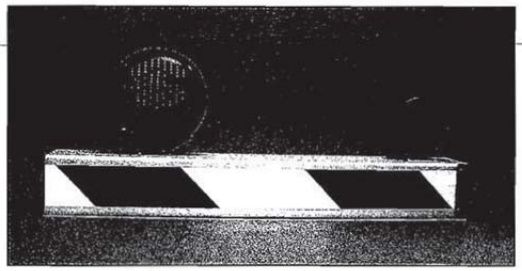

Typical Use Notes: *Both lights shown here are typically used on warning gate arms or vertical barrier arms, spaced 4' to 7' apart. The 4" light is used more commonly because of the reduced wind profile. Often, the end light is wired to burn continuously and the remaining lights flash alternately (see separate specs for arm light flasher). Lights are normally controlled by the limit switch (see separate specification) to be off when the gate is open to traffic and on at all other times.*

L7 (left) and L4 (right) Arm Warning Lights

L-4 ARM WARNING LIGHT

GENERAL: The warning light shall be B&B Roadway, LLC, Model L4, (888) 560-2060.

APPLICATIONS: The warning light shall be used as a traffic signaling light to mark and draw attention to the warning gate or traffic barrier.

HOUSING and GENERAL CONSTRUCTION: The housing shall be of high impact plastic. Assembly shall be double-faced. Light assembly shall be mounted to warning gate arm or barrier using an aluminum adapter plate.

LENSES: Lenses shall be red fresnel plastic, approximately 4" diameter.

LAMP and RECEPTACLE: Lamp shall be a 12V LED with a rated life of 100,000 hours, and with a double contact bayonet base.

Revised 3/06

TOLL FREE 888-560-2060 L-4 and L-7 Specifications GATE AND BARRIER ACCESSORIES

B&B ROADWAY

ARM LIGHT FLASHER
Specifications

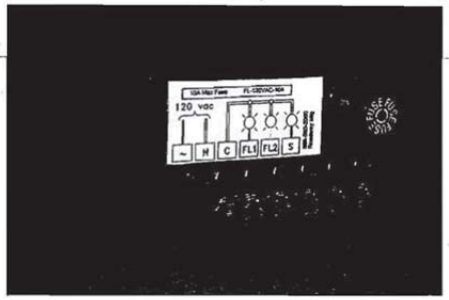

12 VAC FLASHER

GENERAL: The flasher shall be moisture and corrosion resistant and shall be capable of dissipating heat sufficient for continuous duty.

FLASH RATE: The flasher shall have two alternately flashing circuits. Each circuit shall flash .50 seconds on and .50 seconds off.

INPUT VOLTAGE: Standard input voltage shall be 12VAC. The flasher shall operate properly for input voltages within 10% of nominal.

OUTPUT VOLTAGE AND AMPERAGE: The circuits shall be rated at 10 amps at 12VAC each (10 amps total load). A voltage drop of up to .5 volts to the output terminals shall be acceptable.

FUSE: Fuse shall be 10 amp, 250 Volt, fast-acting, cartridge-type, ¼" diameter, 1 ¼" long, UL and/or CSA approved.

TERMINALS: Terminals shall be clearly labeled and shall be compression type screw terminals.

Revised 11/00

TOLL FREE 888-560-2060 ARM LIGHT FLASHER Specifications GATE AND BARRIER ACCESSORIES

B&B ROADWAY

G-12 WARNING GONG Specifications

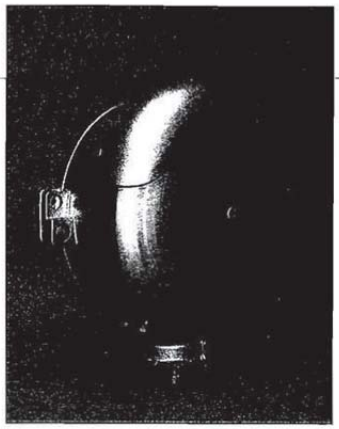

G-12 Warning Gong, shown with housing mounting adapter

GENERAL: The warning gong shall be Model G-12, by B&B Roadway, LLC, (888) 560-2060, or an approved equal meeting all specifications defined herein.

APPLICATIONS: The warning gong shall be used as an audible traffic signaling device to draw attention to the warning gate or traffic barrier and, thereby, to the bridge status.

HOUSING and GENERAL CONSTRUCTION: The housing shall be of heavy duty, cast aluminum construction. Gong assembly shall be equipped with an aluminum mounting adapter for mounting to the top of warning gate housing. Mounting shall be designed to enclose all wiring. A hinged and gasketed rear door shall provide service access. A cast aluminum guard above the shell shall provide weather protection.

OPERATING VOLTAGE: Gong shall operate on 120V power. Current draw is .45 FLA.

GONG SHELL: Gong shell shall be spun silicon bronze.

AVAILABLE OPTIONS:

4" Slip Fitter: 4" slip fitter for mounting on 4" pipe shall be provided when specified.
Side Pole Mounting Bracket: adjustable.

Revised 5/05

TOLL FREE 888-560-2060 G-12 Specifications GATE AND BARRIER ACCESSORIES

11.9 ELECTRICAL EQUIPMENT MANUALS AND SPECIFICATIONS

11.9.1 DRIVE – HUBBELL 4922C

Hubbell Industrial Controls, Inc.

S²MC Compact Static Reversing Controller **4922C**

For Hoists without Load Brakes

Instructions 4922C.A • Publication 189H • August 2003

TYPE 4922C INSTRUCTION MANUAL FOR CRANE HOISTS

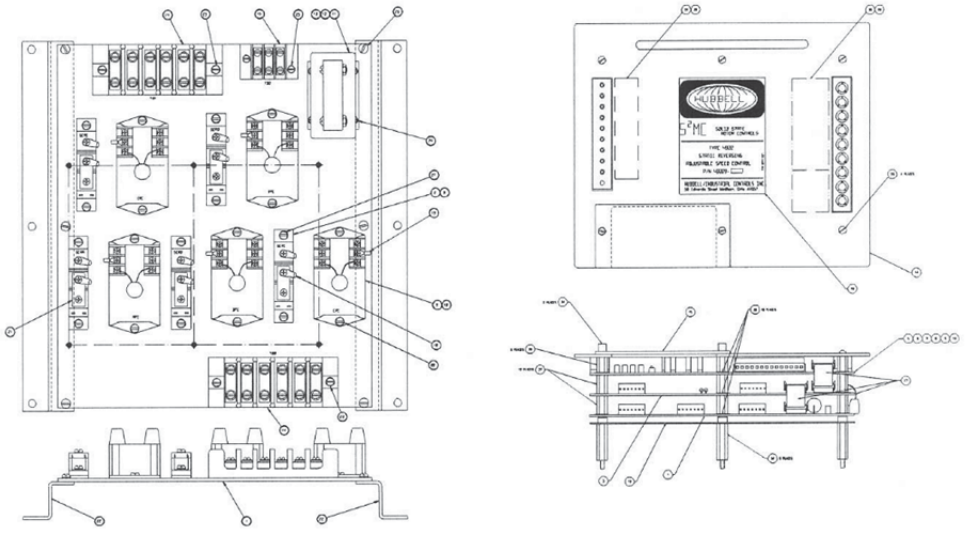

HUBBELL

HUBBELL

Instruction Manual 4922C for Cranes

Table of Contents

1.0 General 3

2.0 Circuit Description 3

2.1.1 POWER CIRCUIT GENERAL 3

2.2.1 PRIMARY SCR BRIDGE 3

2.2.2 CONTROL CIRCUIT, STATIC CONTROL ASSEMBLY 4

3.0 Specifications 7

3.1 INITIAL SET-UP STATIC CONTROL ASSEMBLY. 8

3.2 SETUP ADJUSTMENTS 9

Note, drawings and spare parts refered to in this instruction manual are for reference only. Refer to controller nameplate or consult factory for specific drawings.

Serial Number: _____

Reference Drawing Number: _____

1.0 General

The Type 4922C Static Reversing Controller is a solid state adjustable speed motor controller utilizing compact unitized construction and providing speed regulated control of wound rotor motors. The motor speed is controlled by varying the motor primary voltage via primary SCR bridges, and the direction of motor rotation is controlled by selecting the appropriate SCR bridges for the commanded function. The adjustable speed control unit varies the SCR bridge firing signals and the SCR bridge selection in response to a changing motor speed reference signal. The retarding torque during the reduced speed lowering operation is provided by motor counter torque. The retarding torque during full speed lowering can be provided by true motor and system regeneration. Motoring to counter torque transitions and vice versa are automatic and are controlled by the adjustable speed control unit in response to motor loading conditions.

2.0 Circuit Description

2.1.1 POWER CIRCUIT GENERAL

The incoming three phase power, L1, L2, L3 is connected to the main circuit breaker, MCB, and then to the main contactor, M. Power is supplied to the SCR bridges through the overload relays, 1OL, 2OL, and 3OL, when the power contacts of M are closed. Current limit resistors are connected in series with the power inputs of the Lowering SCR bridges. The current limit resistors control SCR fault currents should they occur. The SCR bridge outputs provide adjustable voltage power to the motor primary windings, T1, T2, T3, through the Power Limit Switch, LS. The limit switch transformer, LSXFMR, monitors one of the limit switch power contacts, and removes power from the brake panel should the monitored power contact open. See Fig. 2.1.1. and Fig. 2.1.2.

2.1.2 CONTROL CIRCUIT GENERAL

The three phase power from the main circuit breaker, MCB, is also connected to the control circuit breaker, CCB. The control circuit breaker supplies power to the synchronizing transformer, XFMR2, and the control power transformer, XFMR1. See Fig. 2.1.1. and Fig 2.1.2. Transformer XFMR2 supplies power and SCR synchronizing information to the Static Control Assembly, SCA, and the control power transformer XFMR1 supplies 120 volt power to the remaining control circuit.

The 120 volt control circuit power from the control transformer is controlled by the UV relay located on the tachometer continuity assembly, TCA. The function of the TCA is to verify continuity in the Tachometer / Overspeed Switch circuit. The UV relay will pickup when continuity is established through the tachometer circuit and the control circuit continuity loop composed of the normally closed overload contacts, 1OL, 2OL, and 3OL. The SCR bridge over temperature switch, mounted on the central common SCR bridge, is also included in the control circuit continuity loop along with 1CR and 2CR contacts which are present when the Float option is supplied.

The master switch or pendant station controls the Hoist and Lower Relays, HR and LR, the Off-Point Timing Relay, TR, and the Full Speed Contactor, FS. The brake relay, BR, supplies power to the brake panel and is controlled by HR, LR and the Limit Switch Transformer. HR and LR also operate the Main Contactor, M, through the controlling Master Switch or Pendant contacts. The M Contactor and the initiating directional relay will remain energized when the Master Switch or Pendant is returned to Off-Point to allow the motor to slow the load before removing power and setting the holding brake. The Off-Point Timing Relay, TR, and the Low Speed Relay, LSR, perform this function. Normally, LSR will open at minimum speed to set the brake and remove power. However, should a system problem prevent normal slowdown, the TR contact acts as a backup and removes power and sets the brake after a preset minimum time. See Figure 2.1.1.

The Master Switch or Pendant also provides a bipolar adjustable voltage DC speed reference signal from an internal potentiometer. A positive signal represents the hoisting direction, and a negative signal represents the lowering direction. In this way, the Master Switch handle or Pendant button determines the direction of motion and establishes a voltage reference level by which motor speed will be controlled.

Figure 2.1.2 shows the addition of the SC contactor which is used when the extended slow speed option is required. During normal speed hoisting operations, the Low Speed Relay, LSR, will be picked up, and the Counter-torque Relay, CTR, will remain de-energized. This causes the SC contactor to close and supply normal .1 E/I motor secondary impedance in the rotor circuit. During slow, minimum speed operations, when LSR is dropped out, or during counter-torque operations, when CTR is picked up, the SC contactor will remain open, and the extended .3 E/I secondary impedance will be in the rotor circuit to reduce slow speed and counter-torque motor currents.

Figure 2.1.2 also shows the addition of the Float option components which are, 1FR, 1CR, 2CR, FTR, and the Float Relay Assembly. The Float option is used when very slow or zero speed load position control is required. The Float mode is entered by depressing and holding the Master Switch thumb button while the Master Switch is in the Off position. This mode limits the full travel Master Switch speed value to +/- 10% with smooth load control through zero speed.

2.2.1 PRIMARY SCR BRIDGE

The primary SCR bridge is an SCR/Heat Sink assembly with the power SCRs connected in inverse parallel, See Fig.2.1.3.

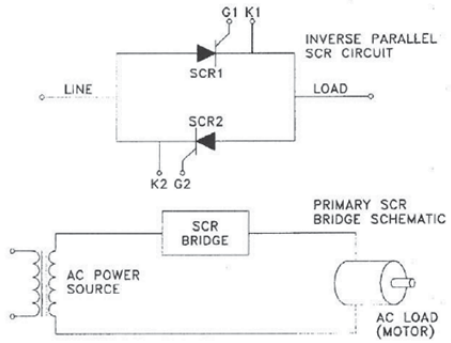

FIGURE 2.1.3

The function of the SCR bridge is to control the amount of voltage applied to the motor. The SCR, silicon controlled rectifier, is similar to standard rectifiers in that it will allow current to flow in one direction while blocking current in the reverse direction. However, SCRs will conduct current only when turned ON, or GATED ON. When two SCRs are connected as shown in Fig. 2.1.3, a controllable AC switch or contact is formed that will carry current in either direction but only when GATED ON. SCRs can react very quickly to gating signals, quickly enough to be able to control portions of half cycles of standard AC power. When the gating or firing signal is presented to the SCR very late in the half cycle, the SCR will block all of the cycle up to the time of firing. At the time the gating signal is applied, the SCR will turn ON and conduct the remaining portions of the half cycle to the load. See Fig. 2.1.4.

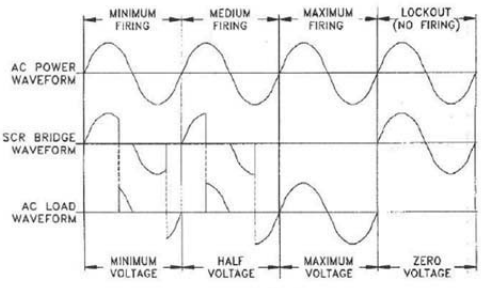

FIGURE 2.1.4

As the firing signal is presented earlier in the half cycle, the SCR will conduct more and more of the cycle on to the load. The extremes will be maximum firing when the SCR bridge passes all of the AC power on to the motor, and lock-out, zero firing, when the SCR bridge blocks all of the AC power.

In static reversing controllers, the SCR bridges also perform a directional control function as well. As can be seen in Figures 2.1.1 and 2.1.2, there are five SCR bridges, 2 Hoist bridges, 2 Lower bridges, and 1 Common bridge. When a Hoist operation is required, adjustable voltage three phase power is supplied to the motor via the two Hoist bridges and the Common bridge. The three phase relationship of the applied motor power determines the direction of developed motor torque and rotation.

A Lower operation will be performed in one of two ways depending upon mechanical losses and the weight of the suspended load. First, adjustable voltage power is supplied to the motor via the two Lower bridges and the Common bridge to produce a driving lower operation. If the loading is such as to continue to require a driving lower torque, the system will supply lowering adjustable voltage power to meet the commanded speed condition. If an overhauling condition exists, a counter-torque lowering operation will occur where the Hoist SCR bridges and the Common bridge provide motor power. True motor and power system regeneration can be used, if desired, to lower overhauling loads at full speed. For this condition, the system turns the Lower SCR bridges and the Common SCR bridge fully on to supply full lowering voltage to the motor.

The transition from driving lower to counter-torque lower is automatic and is determined by the mechanical loading presented to the motor. Full voltage regenerative lowering will produce lowering speeds 10% to 15% greater than full load hoisting speeds.

2.2.2 CONTROL CIRCUIT, STATIC CONTROL ASSEMBLY

The Static Control Assembly, SCA, contains all of the control system responsible for the speed regulation function of the Static Reversing Controller. The system also determines the motor's operating mode by controlling which set of SCR bridges is supplying the power. The Static Control Assembly receives its three phase power from the synchronizing transformer, XFMR2. See Figures. 2.1.1. and 2.1.2. This transformer provides low voltage AC power for the electronic power supply section and synchronizing information for the firing circuits. See Fig. 2.2.1.

The permissive circuit monitors the Permissive command input from the M contactor coil at the 120V AC control power level and converts this signal to an isolated low level signal compatible with the electronic system. The permissive circuit also monitors a tachometer continuity signal originating on the Tachometer Continuity Assembly. In order for the Static Control Assembly system to operate, the tachometer continuity signal must be present along with the control permissive signal from the M contactor circuit. The permissive circuit also monitors the Full Speed command input. This input will enable full speed regenerative lower operation.

4922C Controller – Hoist Application

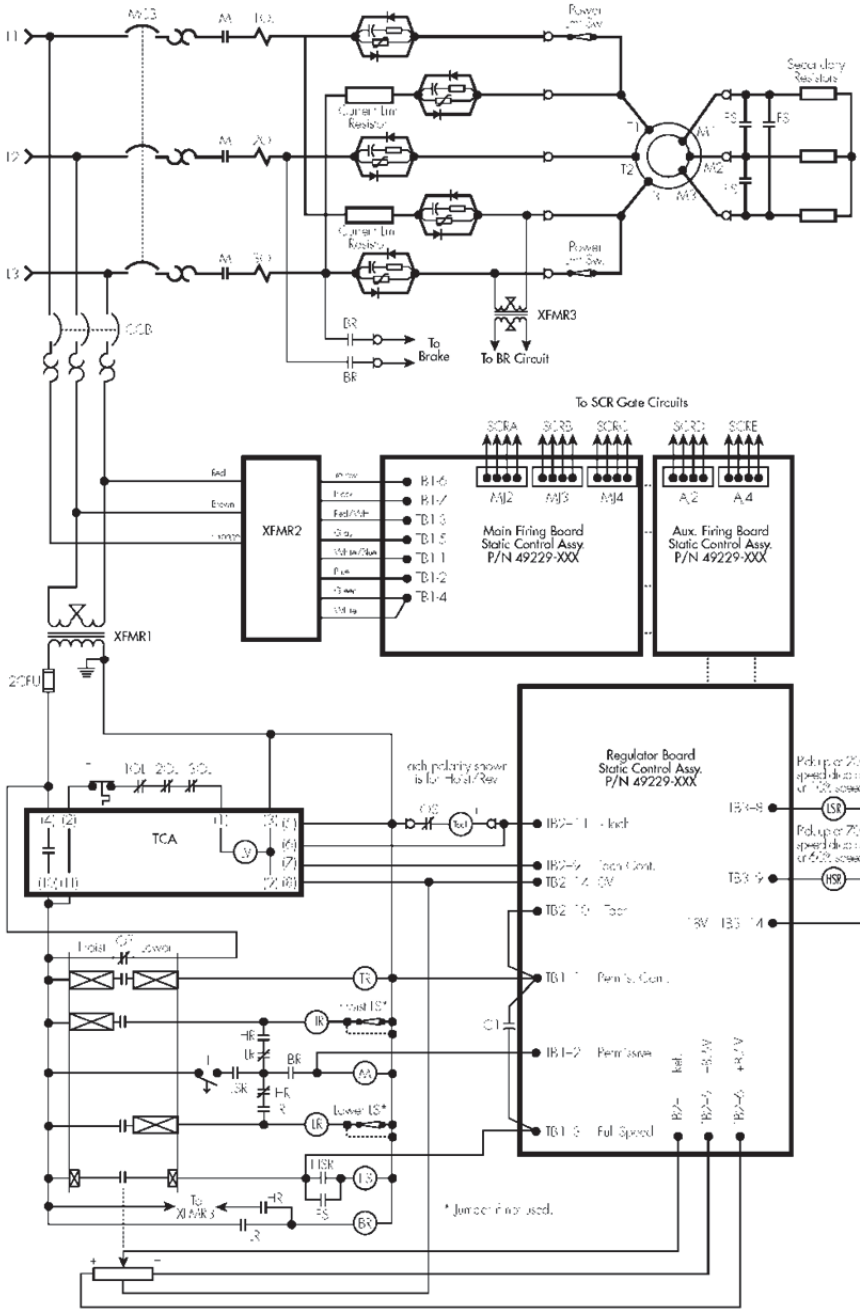

Figure 4 — Schematic Diagram of Compact Primary Static Reversing Hoist Control Speed Regulated with Full Speed Contactor and Off-Point Counter Torque

4922C Controller – Hoist Application

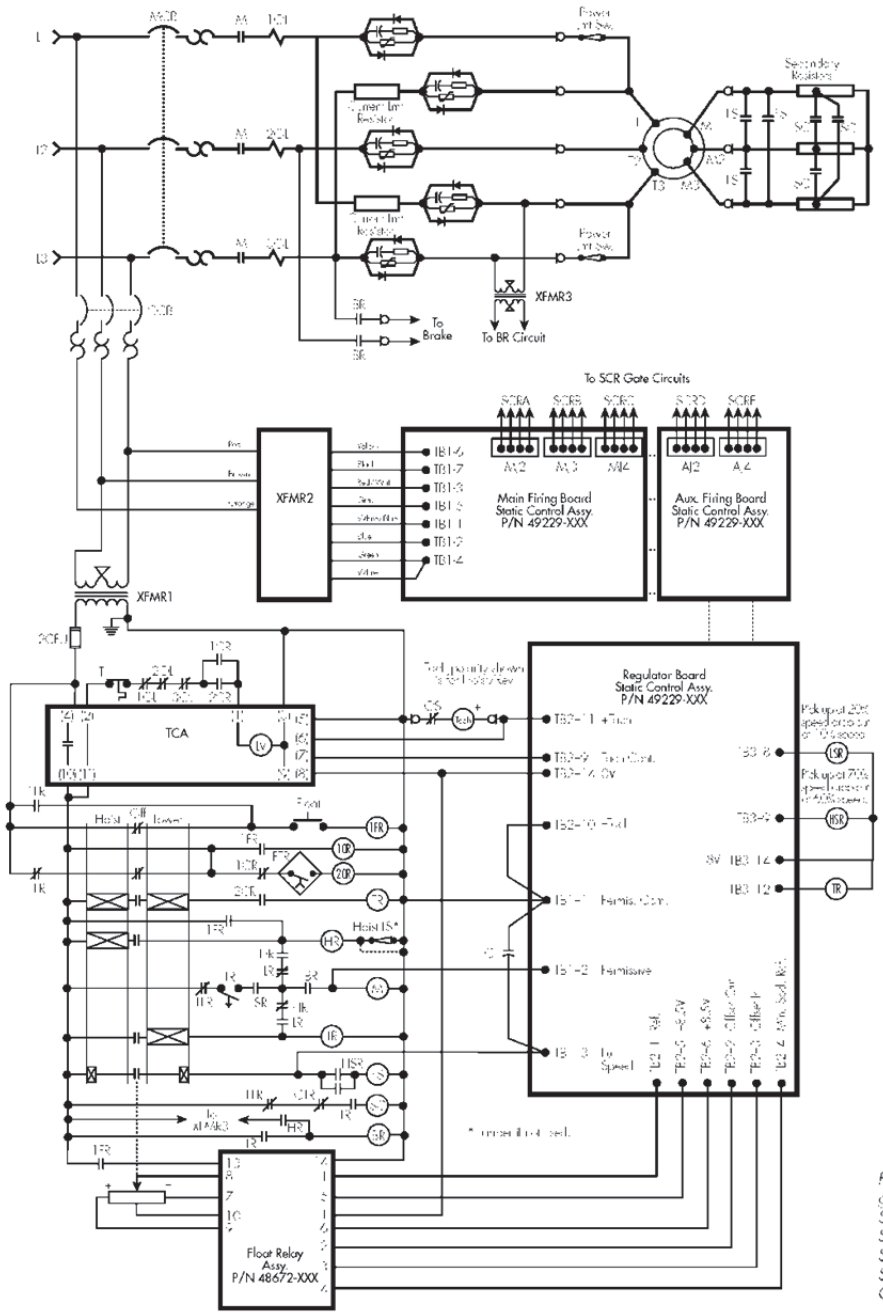

Figure 5 — Schematic Diagram of Compact Primary Static Reversing Hoist Control Speed Regulated with Full Speed Contactor, Extended Slow Speed, and Off-Point Counter Torque and Float

The ramp circuit receives the speed reference signal from the Master Switch or Pendant potentiometer and conditions the signal such that it is allowed to change only at a preset rate. This function provides for controlled acceleration and deceleration.

The speed regulator circuit receives the tachometer signal and compares it to the system speed reference signal from the ramp circuit. If the system speed is below the speed reference level, the output of the speed regulator circuit increases to provide more phase reference signal via the directional command circuit. This increased signal provides more voltage to the motor via the firing circuits and consequently more motor torque to increase system speed. If the system speed is above the speed reference level, the speed regulator output reverses polarity. This action causes the directional command circuit to issue a counter torque command to slow the motor. The resulting counter torque command signal causes the speed regulator circuit to provide a clamped or limited phase reference voltage to the firing circuits to control motor current and torque during the slow down interval.

The directional command circuit receives the bipolar speed error signal and a bipolar tachometer signal from the speed regulator circuit and compares these signals to determine the operational mode of the system motor. The directional command circuit issues a Hoist command signal to activate the Hoist and Common SCR bridges via the delayed directional permissive circuit, or a Lower command signal to activate the Lower and Common SCR bridges in a similar fashion.

The delayed directional permissive circuit receives the directional command signals from the directional command circuit and generates firing circuit permissive signals that are delayed by 4 1/2 cycles of the 60 Hz line. The delay is inserted in the permissive signals to prevent firing circuits that control the previously OFF SCR bridges from turning ON before the SCR bridges which are currently ON have stopped conducting. Shoot through faults are prevented by this delay.

The firing circuits receive the phase reference signal and, along with the synchronizing signals from the three phase synchronizing transformer and the delayed permissive signals from the delayed directional permissive circuit, produce the firing or gating signals required by the SCR bridges.

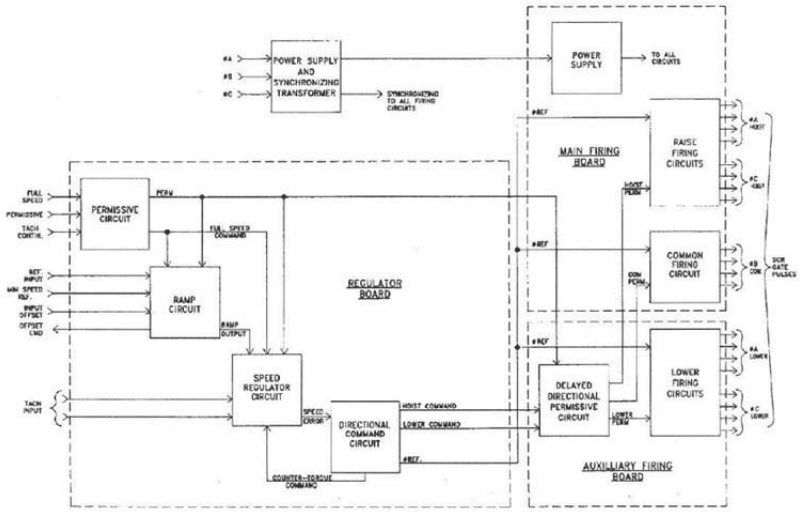

STATIC CONTROL ASSEMBLY
SYSTEM DIAGRAM
FIG. 2.2.1

August 2003 **Page 7**

Instruction Manual 4922C for Cranes

3.0 Specifications

I	**Input Power**	230V or 460V, 3 phase, 60 hz.,
II	**Horsepower Range (at 460V)**	5 - 40HP Compact Construction. 50 - 250 HP with external SCR's.
III	**Speed Range**	Typical 10 to 1 with full speed = 80% sync.
IV	**Speed Regulation**	Better than 1%.
V	**Control Configuration**	Static Reversing
VI	**Temperature Range**	- 40 C to + 55 degree C (typical) - 40 to + 70 degree C (electronics)

3.1 INITIAL SET-UP STATIC CONTROL ASSEMBLY.

The start-up adjustments of the Static Control Assembly involve the setting of the control potentiometers and jumper plugs. Following is a description of these adjustments and their functions. Refer to figure 3.1 for their respective locations.

Permissive Jumper

This jumper has two positions. The left position is the "Set-up" position and allows the ramp circuit adjustments to be made without operating the firing circuits. The right position is the normal "Run" position. In this position the firing circuit permissive signal is active and the firing circuits will operate. Note...with the jumper in the "Set-up" position, the remaining control circuit will be active and holding brakes may be released when direction control commands are issued. To prevent unintended motion, disable the brake control circuit by removing the brake circuit fuses.

Ramp Select Jumper

This jumper has two positions. The upper position, "Internal", is the most common position, and connects the internal ramp signal to the speed regulator circuit. The lower position, "External", is used when the speed regulator circuit is to operate with an outside reference signal such as when two or more drives are to be speed matched from a common ramp signal. Unless the application involves a speed matching function with two or more drives operating in a "Master / Slave" arrangement, place the Ramp Select jumper in the "Internal" position.

RPM Select Jumper

This jumper has five positions, and provides the correct scaling factor for the system tachometer based on the synchronous speed of the driven motor.

The jumper positions available are:

1800 RPM
1200 RPM
900 RPM
720 RPM
600 RPM

For systems not using a Tachometer / Overspeed Switch assembly, place the RPM Select jumper in the corresponding synchronous speed position for the motor used. If

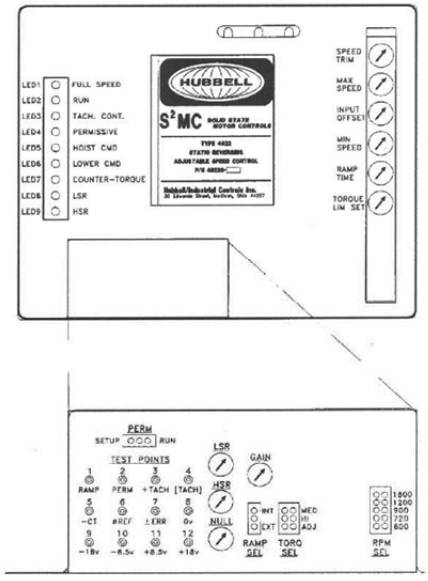

FIG. 3.1

a Tachometer / Overspeed Switch assembly is used, place the RPM Select jumper in the 1200 RPM position. This is necessary because the incorporated tachometer is geared for 1200 RPM operation at motor synchronous speed.

Torque Select Jumper

This jumper is used to select the limited torque value supplied by the motor during counter-torque and plugging operations. The "HI" position, recommended for hoisting applications, limits motor torque to 200% to 250% during counter-torque. The "MED" position limits torque to 150% torque, and the "ADJ" position provides an adjustable range of 50% to 150%. Initially place this jumper in the "HI" position.

Speed Trim Potentiometer

The Speed Trim Potentiometer is used to make fine adjustments in system speed. In typical single motor applications or in multi-motor applications where the motors operate independently, this adjustment should be set to the "50" position. In "Master / Slave" speed matching applications with the Master drive set to the "50" position, this adjustment allows the "Slave" drive to be trimmed to match the speed of the "Master" drive. Initially, set this pot to the "50" position.

Minimum Speed Potentiometer

The Minimum Speed Potentiometer sets the minimum speed signal level out of the ramp circuit. Initially, this potentiometer is set fully counterclockwise to the "0" position.

Maximum Speed Potentiometer

The Maximum Speed Potentiometer determines the amount of scaling that is applied to the input speed reference signal. After the minimum speed signal level has been set, this adjustment will set the full speed level of the input speed reference signal. Initially, this potentiometer is set fully clockwise to the "100" position.

Input Offset Potentiometer

This potentiometer is used to remove residual first point master switch or pendant speed reference signal arising from a speed reference potentiometer without an off-point shorting band. Set this potentiometer fully counterclockwise to the "0" position.

Ramp Time Potentiometer

The Ramp Time potentiometer sets the slope of the output ramp signal to the speed regulator circuit. The adjustment range is from 0.5 seconds at the full counterclockwise position to 10.0 seconds at the full clockwise "100" position. This adjustment determines how quickly the ramp output signal is allowed to increase or decrease. Initially, this potentiometer is set fully counterclockwise to the "0" position.

Torque Limit Set

This potentiometer sets the value of limited motor torque during counter-torque or plugging operations when the torque select jumper, described above, is placed in the "ADJ" position. The adjustment range is from 50% to 150%. Initially, set this potentiometer fully clockwise to the "100" position.

LSR Trim Potentiometer

This adjustment is located directly on the main regulator board and sets the motor speed value above which the "LSR" LED will light, and the LSR relay will pick up. The adjustment range is 5% at full counterclockwise to 25% when fully clockwise. Set this potentiometer mid range.

HSR Trim Potentiometer

This adjustment is located directly on the main regulator board and sets the motor speed value above which the "HSR" LED will light, and the HSR relay will pick up. The adjustment range is 75% at full counterclockwise to 95% when fully clockwise. Set this potentiometer fully counterclockwise.

Gain Potentiometer

This potentiometer is located on the main regulator board and is used to adjust system stability. Initially, set this potentiometer mid range.

Null Potentiometer

This potentiometer is located on the main regulator board and is used to adjust the speed regulator offset. This is a factory adjustment and needs no further attention. Should the setting of this potentiometer be disturbed, return the setting to a mid range position.

3.2 SETUP ADJUSTMENTS

Section 3.1 above described the system adjustments and the initial settings of these adjustments. This section describes the procedure by which the system can be setup. Refer to Figure 3.1 for control adjustment locations.

1. Using a digital voltmeter set to read 20 volts DC, place the black common meter probe tip into test point 8, 0V. The black common lead will remain in this test point for the remainder of the set up procedure.

Place the red meter probe tip into test point 1, Ramp output. For Hoist commands from the master switch or pendant, the output voltage should be positive. For Lower commands, the output should be negative. The following setup will use Lower commands, therefore, a negative voltage on the digital voltmeter is expected.

2. Move the Permissive Jumper from the "Run" position to the "Setup" position. The firing circuits are now disabled. Note.. holding brakes may be released during the remaining setup procedure. To prevent unintended movement, disable the brake control circuit by removing the brake circuit fuses.

3. Close the Control circuit breaker and apply 3 phase system power. The "Tach Continuity" LED should light on the SCA, and the LED on the tach continuity module, if present, should be lit.

4. A typical speed range is 10 to 1 with maximum stepless speed equal to 5.O volts, and minimum speed equal to 0.5 volts. Assuming a typical speed range, proceed as follows:

a. Move the master switch or depress the pendant button until first point lower is obtained. The "Run", "Perm", and "Lower" LEDs should light.

b. Rotate the Input Offset potentiometer clockwise until the digital voltmeter reads 0V.

Instruction Manual 4922C for Cranes

c. Move the master switch in the Lower direction or depress the Lower pendant button until the Full Speed LED lights. Back up from this position until the Full Speed LED just goes out and hold at this point. Adjust the Max Speed potentiometer counterclockwise until a reading of -4.5 volts is obtained on the digital voltmeter. Repeat steps b. and c. until no further adjustments are necessary. Typically, three iterations are required to obtain a 0V reading at first point, and a -4.5V setting at the maximum stepless position.

d. Move the master switch or depress the Lower pendant button until first point Lower is obtained. Rotate the Min Speed potentiometer clockwise until a -0.5V reading is obtained on the digital voltmeter.

e. Move the master switch or depress the Lower pendant button to the last stepless position. The digital voltmeter should read -5.0V.

f. Check the minimum speed and maximum stepless speed points in the Hoist direction. The "Lower" LED should go off and the "Hoist" LED should come on. The digital voltmeter should read +0.5V and +5.0V respectively.

g. Return the master switch or the pendant button to the Off position. The digital voltmeter should indicate 0.0 volts. Determine the required system speed ramp time. The Ramp can provide times to full output from 0.5 seconds to 10 seconds. Rotate the Ramp Time adjustment potentiometer clockwise to the desired time setting. Hoist applications typically use short acceleration times of 0.5 to 2.0 seconds for good response.

5. Determine the relative synchronous speed of the system tachometer. Move the RPM Select jumper to the RPM position corresponding to the tachometer synchronous speed value.

NOTE: When a Hubbell Tachometer/Overspeed Switch Assembly is used, the 1200 RPM range must be selected.

6. Open the Main and Control circuit breakers and remove system power. Move the Permissive Jumper on the regulator board from the "Setup" position to the "Run" position. Restore operation to the holding brake circuit by reinstalling the brake circuit fuses. Close the main and control circuit breakers. The motor control system will now be able to operate the motor.

7. Assuming that the hook is in the UP position, attempt to operate the motor at first point Lower by moving the master switch or by depressing the pendant Lower button. The hook should descend at minimum speed. If the motor appears to be running at full speed, stop the control and reverse the tachometer leads.

8. Observe the operation of the motor to changes in speed reference. This can be accomplished by moving the master switch or pendant button between minimum and mid speed positions. This causes the Ramp output to increase and then decrease. Watch the directional "Lower" and "Hoist" command LEDs for direction command changes and the incandescent lights on the Firing Circuit boards for relative performance and stability. One change in the directional command LEDs is normal indicating the slow down operation. If "back and forth" oscillation of the direction LEDs or repetitive flickering of the Firing Circuit Lights occurs, adjustment of the "Gain" potentiometer on the regulator board will be required. The best performance will be obtained when the Gain potentiometer is adjusted to provide smooth steady response to speed reference changes without repetitive flickering of the firing circuit lights or continued oscillation of the direction command LEDs.

9. Open the Control and Main circuit breakers. This completes the set up of the motor control system.

Hubbell Industrial Controls, Inc.
A subsidiary of Hubbell Incorporated
4301 Cheyenne Dr., Archdale, NC. 27262
Telephone (336) 434-2800 • FAX (336) 434-2803
http://www.hubbell-icd.com
Sales@hubbell-icd.com

THIS PAGE INTENTIONALLY LEFT BLANK

CHAPTER 12 - CONTACTS, TELEPHONE NUMBERS AND EMERGENCY CALL OUTS

12.1 CONTACTS AND TELEPHONE NUMBERS

Delaware State Police.....302.739.5901

United States Coast Guard.....757.398.6390

Delaware Department of Transportation (Maintenance).....302.326.4460

Delaware Department of Transportation (General)..... 302.760.2080

Fire Department 302.576.3950

South Market Street Bridge.....302.577.2665

NOAA (National Oceanic and Atmospheric Administration).....206.526.6317

DelDOT (Maintenance).....302.326.4460

DelDOT (General).....302.760.2080

12.2 EMERGENCY CALL OUT PROCEDURES

During emergency situations, the following procedures and protocols should be followed.

12.2.1 MALFUNCTION (FAILURE TO OPEN OR CLOSE)

During maintenance inspection or marine vessel openings, if the bridge cannot be opened or closed contact order should be as follows:

1) Area 23 Supervisor
2) Area 23 Foreman
3) Delaware State Police (only if traffic needs to be detoured)

12.2.2 DAMAGE TO BRIDGE FROM VESSEL OR VEHICLE

When damage to the bridge is observed or detected, contact order should be as follows:

12.2.2.1 MINOR DAMAGE

When damage will not hamper normal bridge operation, perform the following:

1) Log in log book
2) Notify Area 23 Supervisor or Foreman at earliest convenience.

12.2.2.2 MAJOR DAMAGE

When damage may hamper normal bridge operation, perform the following:

1) Notify Area 23 Supervisor or Foreman immediately.
2) Notify Delaware State Police
3) Log in log book

12.2.3 VEHICLE ACCIDENT OR DISABLED VEHICLE ON BRIDGE

When an accident occurs on the bridge or a disabled vehicle is observed, perform the following:

1) If accident, check about possible injuries, notify Delaware State Police.
2) DO NOT operate the bridge if an accident or disabled vehicle is within the operational area of the bridge.
3) If it is an injury accident before or after operational area of the bridge contact emergency services (911) at the scene before proceeding with an opening.
4) If unable to open the bridge due to an accident or disabled vehicle notify any waiting vessels and the Coast Guard.

12.2.4 MARINE RELATED EMERGENCIES

For a marine related accident or emergency contact the following:

1) US Coast Guard
2) Area 23 Supervisor or Foreman

12.2.5 WEATHER RELATED EMERGENCIES

For weather related accident or emergencies contact the following:

1) Delaware State Police and NOAA
2) Area 23 Supervisor or Foreman

Bridge #1-693

Third Street Bridge
over Christina River

Prepared by:

Hardesty & Hanover

MAINTENACE MANUAL – VOLUME II

DelDOT

Published: May 2013

Updated: September 2013

Updated: July 2018 (Replacement Chapter 8)

Prepared for:

AECOM

TABLE OF CONTENTS

CHAPTER 6 - PURPOSE AND SCOPE OF MAINTENANCE MANUAL 6-1
6.1 PURPOSE OF MAINTENANCE MANUAL 6-1
6.2 LAYOUT OF MAINTENANCE MANUAL 6-1
6.3 REFERENCES 6-1

CHAPTER 7 - MAINTENANCE POLICIES 7-1
7.1 INTRODUCTION 7-1
7.2 MAINTENANCE TECHNICIAN TRAINING 7-1
7.2.1 BRIDGE LAYOUT 7-1
7.2.2 BRIDGE OPERATION 7-1
7.2.3 TROUBLESHOOTING AND EMERGENCY SITUATIONS 7-1
7.2.4 BRIDGE MAINTENANCE 7-1
7.3 LOCKOUT/TAGOUT PROCEDURE 7-1
7.4 PERSONAL PROTECTIVE EQUIPMENT 7-1
7.5 MAINTENANCE ACCESS 7-1
7.5.1 CONTROL ROOM 7-2
7.5.2 STORAGE ROOM 7-2
7.5.3 ELECTRICAL/MECHANICAL ROOMS 7-2
7.5.4 GENERATOR ROOM 7-2
7.5.5 SPAN LOCK PLATFORMS 7-2
7.5.6 COUNTERWEIGHT PIT 7-3
7.5.7 COUNTERWEIGHT ACCESS PLATFORM 7-3
7.5.8 FENDERS 7-3
7.6 STAND-BY GENERATOR MAINTENANCE 7-3
7.7 MAINTENANCE OPENINGS 7-3
7.8 MAINTENANCE AND BRIDGE OPERATORS DURING OPENINGS 7-3
7.9 MAINTENANCE FORMS 7-4
7.10 MAINTENANCE REPORTING PROCEDURES 7-4

CHAPTER 8 - ELECTRICAL AND MECHANICAL MAINTENANCE 8-1
8.1 LEAF SUPPORT SYSTEM AND COUNTERWEIGHTS 8-1
8.1.1 TRUNNION BEARINGS 8-1
8.1.2 LIVE LOAD BEARINGS 8-2

8.1.3 COUNTERWEIGHTS 8-3
8.2 SPAN DRIVE MACHINERY 8-3
8.2.1 MOTOR AND MACHINERY BRAKES 8-4
8.2.2 COUPLINGS 8-5
8.2.3 PRIMARY REDUCERS 8-7
8.2.4 BEARINGS 8-8
8.2.5 OPEN GEARING 8-9
8.2.6 SPAN POSITION INSTRUMENTATION DRIVE EQUIPMENT 8-10
8.2.7 AUXILIARY DRIVE SYSTEM 8-11
8.3 SPAN LOCK MACHINERY AND CENTERING EQUIPMENT 8-12
8.3.1 LOCK BARS, GUIDES AND RECEIVERS 8-12
8.3.2 SPAN LOCK REDUCER 8-13
8.3.3 SPAN LOCK MOTOR COUPLING 8-14
8.3.4 SPAN LOCK RACK AND PINION 8-15
8.3.5 CENTERING DEVICE AND CENTERING GUIDE 8-16
8.4 TRAFFIC GATES 8-17
8.4.1 WARNING GATES 8-17
8.5 ELECTRICAL POWER SYSTEMS 8-19
8.5.1 MOTOR CONTROL CABINETS 8-19
8.5.2 DRIVE CABINETS AND RESISTORS 8-21
8.5.3 PANELBOARDS 8-23
8.5.4 TRANSFORMERS 8-23
8.5.5 STANDBY EMERGENCY GENERATOR 8-24
8.5.6 AUTOMATIC TRANSFER SWITCH 8-25
8.5.7 SAFETY AND DISCONNECT SWITCHES 8-26
8.5.8 ELECTRICAL CONDUCTORS 8-27
8.5.9 DROOP CABLES 8-28
8.5.10 SUBMARINE CABLES 8-28
8.6 LIGHTING SYSTEMS 8-29
8.6.1 NAVIGATION LIGHTS 8-29
8.6.2 INTERIOR/EXTERIOR LIGHTS 8-30
8.6.3 TRAFFIC SIGNALS 8-31
8.6.4 TRAFFIC GATE ARM LIGHTS 8-31
8.7 ELECTRIC MOTORS 8-32

8.7.1 LOCK MOTORS 8-32
8.7.2 MAIN LEAF (SPAN) MOTORS 8-33
8.7.3 TRAFFIC GATE MOTORS 8-34
8.7.4 AUXILIARY LEAF (SPAN) GEAR MOTORS 8-35
8.8 CONTROL SYSTEM 8-37
8.8.1 CONTROL CONSOLES 8-37
8.8.2 LIMIT SWITCHES 8-38
8.8.3 SPEED SWITCHES AND TACHOMETER ASSEMBLY 8-40
8.9 MISCELLANEOUS EQUIPMENT 8-41
8.9.1 ELECTRIC HORN, AIR HORN AND AIR COMPRESSORS 8-41
8.9.2 HEATING AND AIR CONDITIONING SYSTEMS 8-42
8.9.3 SUMP PUMPS 8-43
8.9.4 EXHAUST FANS 8-43
8.9.5 MOTORIZED DAMPERS 8-44
8.9.6 WATER HEATER 8-44
8.9.7 HEAT TRACE 8-45
8.9.8 PITS, PLATFORMS, AND WALKWAYS 8-45
8.9.9 CONDUIT SYSTEMS 8-46

CHAPTER 9 - PHOTOS 9-1
9.1 LEAF SUPPORT SYSTEM AND COUNTERWEIGHTS 9-4
9.2 SPAN DRIVE MACHINERY 9-7
9.3 SPAN DRIVE MACHINERY 9-15
9.4 TRAFFIC CONTROL DEVICES AND NAVIGATION LIGHTS 9-19
9.5 POWER DISTRIBUTION EQUIPMENT 9-23
9.6 CONTROL EQUIPMENT 9-26
9.7 MISCELLANEOUS EQUIPMENT 9-37

CHAPTER 10 - MAINTENANCE FORMS 10-1
10.1 MECHANICAL AND ELECTRICAL MAINTENANCE CHECKLIST 10-1

CHAPTER 11 - SUPPLEMENTAL INFORMATION AND SPECIFICATIONS 11-1
11.1 COMPONENT IDENTIFICATION CHARTS AND DIAGRAMS 11-3
11.2 MACHINERY LUBRICATION SCHEMATICS 11-6
11.3 MACHINERY LUBRICATION SCHEDULE 11-9
11.4 BRIDGE MAINTENANCE PERFORMANCE STANDARDS (PLATES) 11-13
11.4.1 SLEEVE BEARING AND TRUNNION BEARING LUBRICATION 11-13

11.4.2 MOTOR AND MACHINERY BRAKE MAINTENANCE 11-14
11.4.3 COUPLING LUBRICATION 11-17
11.4.4 SPEED REDUCER LUBRICATION 11-20
11.4.5 OPEN GEARING LUBRICATION 11-22
11.4.6 MOTOR BEARING LUBRICATION 11-24
11.4.7 SPAN LOCK MACHINERY LUBRICATION 11-26
11.4.8 CENTERING GUIDE AND CENTERING DEVICE LUBRICATION 11-34
11.5 MATERIAL DATA SHEETS 11-35
11.5.1 MOBIL MOBILUX EP-0, EP-2 11-35
11.5.2 FALK LONG TERM GREASE 11-54
11.5.3 MOBIL MOBILTAC 325 NC 11-62
11.5.4 MOBIL MOBILGEAR 600 XP 100, 220 11-76
11.5.5 MOBIL UNIREX N2 11-97
11.5.6 CHEVRON HYDRAULIC OIL 5606A 11-107
11.5.7 MOBIL SHC 629, 634 11-116
11.5.8 CRC TAC 2 ADHESIVE CHAIN LUBRICANT 11-129
11.5.9 WD-40 SPECIALIST MACHINE AND ENGINE DEGREASER 11-138
11.5.10 PERMATEX GEAR OIL RTV SEALANT 11-147
11.5.11 CAIG LABORATORIES DEOXIT D5 CONTACT CLEANER 11-152
11.6 COMPONENT MANUFACTURER LIST 11-160
11.7 MECHANICAL EQUIPMENT MANUALS AND SPECIFICATIONS 11-163
11.7.1 PRIMARY – HORSBURGH & SCOTT REDUCER TYPE 170-S 11-163
11.7.2 MOTOR AND MACHINERY BRAKES - GENERAL ELECTRIC IC9516-465N 11-200
11.7.3 SPAN LOCK MOTOR COUPLING – FALK TYPE T10 11-206
11.7.4 SPAN LOCK SPEED REDUCER – FOOTE JONES 11-212
11.7.5 AUXILIARY GEAR MOTOR - SEW-EURODRIVE K87DRE132M4 11-221
11.8 TRAFFIC CONTROL EQUIPMENT MANUALS AND SPECIFICATIONS 11-222
11.8.1 WARNING GATE SCHEMATIC – B&B ROADWAY VT-66 11-222
11.9 ELECTRICAL EQUIPMENT MANUALS AND SPECIFICATIONS 11-253
11.9.1 TACHOMETER/OVERSPEED SWITCH ASSEMBLY – HUBBELL 11-253
11.9.2 DRIVE – HUBBELL 4922C 11-254

CHAPTER 12 - CONTACTS, TELEPHONE NUMBERS AND EMERGENCY CALL OUTS 12-1
12.1 CONTACTS AND TELEPHONE NUMBERS 12-1
12.2 EMERGENCY CALL OUT PROCEDURES 12-1

12.2.1 MALFUNCTION (FAILURE TO OPEN OR CLOSE) 12-1
12.2.2 DAMAGE TO BRIDGE FROM VESSEL OR VEHICLE 12-1
12.2.3 VEHICLE ACCIDENT OR DISABLED VEHICLE ON BRIDGE 12-1
12.2.4 MARINE RELATED EMERGENCIES..... 12-2
12.2.5 WEATHER RELATED EMERGENCIES..... 12-2

Refer to Volume 1 – Operations Manual for Chapters 1-5

Refer to Volume 3 – As-Built Drawings for Chapters 13-14

CHAPTER 6 - PURPOSE AND SCOPE OF MAINTENANCE MANUAL

6.1 PURPOSE OF MAINTENANCE MANUAL

Schedules and procedures are established for the inspection, replacement, cleaning, adjustment, and general maintenance of the mechanical and electrical equipment used to operate the bridge. The frequency of maintenance is based on recommendations by the manufacturers and guidelines established by AASHTO Movable Bridge Inspection, Evaluation and Maintenance Manual. All maintenance forms and activities are to be recorded and maintained by the Maintenance Supervisor.

6.2 LAYOUT OF MAINTENANCE MANUAL

The maintenance section is divided into subsections that group equipment by type. Each subsection describes an equipment item, the number of such items, location, the maintenance frequency, and describes maintenance procedures. Photo references are included where applicable. Chapter 10 Maintenance Forms are identified for the specific equipment.

6.3 REFERENCES

- AASHTO Movable Highway Bridge Design Specifications
- AASHTO Movable Bridge Inspection, Evaluation, and Maintenance Manual
- Manual on Uniform Traffic Control Devises (MUTCD)
- Drawbridge Operation Regulations 33CFR Part 117
- National Electrical Code (NEC)
- National Fire Protection Association (NFPA) 70E - Standard for Electrical Safety in the Workplace

THIS PAGE INTENTIONALLY LEFT BLANK

CHAPTER 7 - MAINTENANCE POLICIES

7.1 INTRODUCTION

This chapter describes minimum qualifications for maintenance technicians and provides detailed information for maintenance personnel to properly maintain the bridge in accordance with AASHTO guidelines.

7.2 MAINTENANCE TECHNICIAN TRAINING

Maintenance technicians must be familiar with the layout of the bridge and all associated electrical and mechanical equipment and must be trained in the following areas. Training shall be scheduled and conducted by Delaware Department of Transportation.

7.2.1 BRIDGE LAYOUT

Each maintenance technician must be able to locate any piece of equipment of the bridge by name and designation (i.e. SW span lock motor). He or she must have an in-depth understanding of the electrical and mechanical systems and understand the functions of these systems.

7.2.2 BRIDGE OPERATION

Maintenance technicians must be able to operate the bridge and all ancillary devices in a safe manner as described herein. Each maintenance technician must be trained on all modes of operation and have a basic understanding of operation of the bridge.

7.2.3 TROUBLESHOOTING AND EMERGENCY SITUATIONS

Maintenance personnel must be trained in emergency situations and be capable to perform troubleshooting as described in this manual. In the event of an emergency, the operator must have knowledge of proper procedures described herein.

7.2.4 BRIDGE MAINTENANCE

Maintenance technicians must be trained in bridge maintenance activities as specified herein.

7.3 LOCKOUT/TAGOUT PROCEDURE

No electrical apparatus or electrically driven apparatus should be worked on while energized. The appropriate circuit breakers and/or disconnect handles for the equipment being worked on shall be locked in the open (off) position and tagged. The appropriate, immediate upstream circuit breaker or protective device should always be used to electrically isolate the equipment. A sign should be posted on the control desk to identify that the devices are tagged out of service. A contact person shall be identified on the tag. All lock-out and tag-out procedures shall meet the requirements of NFPA 70E. Use a voltage meter to check for stray voltage prior to servicing electrical equipment.

7.4 PERSONAL PROTECTIVE EQUIPMENT

Appropriate Personal Protective Equipment (PPE) should be utilized when performing all maintenance tasks. Refer to Section 11.5 “Material Data Sheets” for material information (including MSDS sheets) which indicate recommended PPE when handling specific materials. Appropriate PPE should also be used when working on electrical components.

7.5 MAINTENANCE ACCESS

Maintenance personnel can access the bridge equipment by following the description provided below.

7.5.1 CONTROL ROOM

The control room is located on the upper level of the control house and is accessible from the north side of the approach.

A control desk is installed in the control room, and contains pilot devices and indicating lights to operate the generator, traffic signals, leaf motors, traffic gates, brakes, and navigation lights.

7.5.2 STORAGE ROOM

The storage room is located on the bridge deck level of the storage house and is accessible from the south side of the approach. The storage room contains a work bench and some spare parts for the mechanical and electrical systems.

7.5.3 ELECTRICAL/MECHANICAL ROOMS

The north and south leaf electrical/mechanical rooms are located on the lower level of the control house and storage house, respectively. Stairs in the control house lead from the control room down to the north electrical/mechanical room; and similarly stairs in the storage house lead down to the south electrical/mechanical room.

The following equipment is located in the north electrical/mechanical room:

- North leaf motors, brakes, primary reducer, rotary cam and brake limit switches and disconnect switches
- North motor control cabinets, north and south span drive cabinets, north submarine cables termination box
- North and South primary resistors and north secondary drive resistors
- North power panelboard
- Comfort heaters and service lighting

The following equipment is located in the south electrical/mechanical room:

- South leaf motors, brakes, primary reducer, rotary cam and brake limit switches and disconnect switches
- South motor control cabinet and south submarine cable termination box
- South secondary resistors
- South lighting transformer, south power panelboard and south lighting panelboard.
- Comfort heaters and service lighting.

7.5.4 GENERATOR ROOM

The generator room is located on the bridge deck level of the control house and is accessible from the north side of the approach. The generator room contains the stand-by generator, automatic transfer switch, north lighting transformer, north lighting panelboard, diesel fuel pump, generator batteries and dampers.

7.5.5 SPAN LOCK PLATFORMS

Two span lock platforms are located underneath the east and west side of the north leaf, and can be accessed through a hatch on the pedestrian walkways. Each span lock platform contains a span lock motor, span lock disconnect switch, lock bar, front and rear guides, rack and pinion, motor coupling, span

lock speed reducer, lock bar position limit switches, and electrical enclosure and conduits. The span lock platform also provides access to the span navigation lights.

The south leaf does not have a platform to access the receiving sockets. The sockets can be accessed from the roadway by partially raising the south leaf.

7.5.6 COUNTERWEIGHT PIT

Counterweight pits are located on the lower level of the bascule piers and can be accessed by descending down the ladder located just outside the electrical/mechanical rooms. Sump pumps are installed in the counterweight pit. The rack is mounted to the rack girder which is encased into the bascule pier concrete.

7.5.7 COUNTERWEIGHT ACCESS PLATFORM

The counterweight access platform is located between the bascule girders and connects the east and west sides of the bascule pier. The bascule pier is accessed via one of two doors in the electrical/mechanical room.

The bascule pier provides access to the trunnion bearings and shafts, the live load bearings, fully seated limit switch, and spare balance blocks. The counterweight access platform provides access to the counterweight pockets and span drive machinery components. An opening in the trunnion girder is accessible from the counterweight access platform. The secondary open gearing and one of the sleeve bearings are located within the trunnion girder. Ladders connecting the counterweight access platform to the top of the counterweight provide access to the primary open gear frame.

7.5.8 FENDERS

Fenders can be accessed through an exit door outside the electrical/mechanical rooms adjacent to the trunnions. Fenders provide access to the fender navigation lights.

7.6 STAND-BY GENERATOR MAINTENANCE

Each generator must follow a yearly maintenance program offered by a generator repair and maintenance service similar to any of the following:

- Alban Caterpillar – (866) 993-6446
- Fidelity Power Systems – (800) 787-6000
- Cummins Power Systems – (800) 783-7061

Maintenance technicians as specified above are not permitted to directly perform maintenance on this equipment.

7.7 MAINTENANCE OPENINGS

For the requirements on maintenance openings, refer to Chapter 2.

7.8 MAINTENANCE AND BRIDGE OPERATORS DURING OPENINGS

The bridge must be staffed with the following personnel unless otherwise noted during all maintenance openings:

- Trained Bridge Operator
- Maintenance Technicians (not required for vessel openings)

The bridge operator shall be stationed in the control room level of the operator house. During emergency situations where the bridge and/or ancillary devices malfunction, one of the trained technicians shall be capable of relocating to one of the electrical/mechanical rooms as required.

The maintenance technicians shall be stationed in the vicinity of the electrical/mechanical rooms and capable of relocating as directed by the operator.

7.9 MAINTENANCE FORMS

Maintenance personnel are required to complete maintenance forms provided in Chapter 10.

7.10 MAINTENANCE REPORTING PROCEDURES

All maintenance shall be conducted in accordance with procedures and protocols defined herein and in accordance with the latest edition of the AASHTO Movable Bridge Inspection, Evaluation and Maintenance Manual.

All maintenance activities shall be documented using forms provided in Chapter 10 of this manual. Record copies of maintenance forms shall be kept and filed by the supervisor.

CHAPTER 8 - ELECTRICAL AND MECHANICAL MAINTENANCE

Each section of Chapter 8 is to be used in conjunction with Chapter 11 providing additional details on each component to be maintained.

8.1 LEAF SUPPORT SYSTEM AND COUNTERWEIGHTS

The leaf support system consists of trunnion bearings, live load bearings and counterweights. The following outlines the basic maintenance of these items.

8.1.1 TRUNNION BEARINGS

8.1.1.1 DESCRIPTION

Each trunnion bearing assembly supports the bascule leaves and provides the rotational axis through the trunnion shaft. The trunnion bearings are supported by a trunnion column and a trunnion girder. Each trunnion bearing is supported by a trunnion tower encased in the bascule pier concrete. The trunnion girder connects the two bascule girders while supporting the inboard end of each trunnion shaft.

The trunnion bearings are split sleeve type journal bearings with split pillow blocks. The bearing base is cast steel and the lower bushing and bearing cap are a bronze alloy. Brass liners of various thicknesses are located between the bearing cap and base for adjustment to accommodate wear of the lower bushing.

Each trunnion bearing has four grease fittings, two in the cap and two in the base. Grease is purged through the trunnion shaft and bushing interface.

The trunnion bearings closest to the span drive machinery has shafting, which connects the output of the primary reducer to the input of the secondary open gearing, running through the bore of the trunnion shaft. The span position instrumentation crank is mounted to the outboard face of the trunnion shaft adjacent to the electrical/mechanical room.

Refer to Photos numbered 9.1A and 9.1B.

Refer to Sections 11.1 for component identification and 11.2 for lubrication schematics.

8.1.1.2 NUMBER OF ITEMS AND LOCATION

There are four trunnion bearings. Two are used to support each bascule leaf. The trunnion assemblies are located in the bascule piers just forward of the leaf counterweights.

8.1.1.3 MAINTENANCE AND SCHEDULE

!!! WARNING !!!

Use EXTREME CARE and ALWAYS REMOVE POWER from all pertinent electrical equipment, which includes multiple power sources, before beginning maintenance. Refer to Section 7.3, "Lockout/Tagout Procedure."

Document completed maintenance tasks on the maintenance checklists included in Appendix B of the Contract.

MONTHLY (Refer to Section 11.4.1 for Bridge Maintenance Performance Standard)	• Purge old grease by pumping new lubricant into the grease fittings. There are four grease fittings per trunnion bearing. Remove excess grease from the inboard and outboard sides of the trunnion bearings after lubricating. The lubricant should be Mobil Mobilux EP-2 grease or equivalent. • Remove any debris that has accumulated on and around the trunnion assemblies and the portions of the bascule girders near the trunnions.
ANNUALLY	• Check housing and supporting frame for signs of corrosion. Clean and spot paint areas of corrosion. • Check housing cap bolts and base bolts. Tighten loose fasteners. • Observe the trunnion bearings during opening and closing operations of the leaf. Note any unusual movements, binding, or abnormal sounds.

8.1.2 LIVE LOAD BEARINGS

8.1.2.1 DESCRIPTION

The live load bearings react against the live load from traffic. The live load bearing consists of a strike plate which is in contact with the sole plate.

The sole and strike plates are made of steel. The sole plates are mounted to the bottom flange of the horizontal live load anchorage beam, supported by two vertical steel columns encased in the bascule pier concrete. The strike plates are mounted to the bascule girder.

The live load bearings are adjusted by adding or removing shims below the strike plate.

Refer to Photos numbered 9.1C and 9.1D.

Refer to Sections 11.1 for component identification.

8.1.2.2 NUMBER OF ITEMS AND LOCATION

There are four live load bearings, one located at the rear of each bascule girder behind each trunnion bearing. One live load bearing on each leaf is accessible outside of the electrical/mechanical room. The other live load bearing on each leaf is located on the access walkway on the outboard side of the opposite bascule girder.

8.1.2.3 MAINTENANCE AND SCHEDULE

!!! WARNING !!!

Use EXTREME CARE and ALWAYS REMOVE POWER from all pertinent electrical equipment, which includes multiple power sources, before beginning maintenance. Refer to Section 7.3, "Lockout/Tagout Procedure."

Document completed maintenance tasks on the maintenance checklists included in Appendix B of the Contract.

THREE MONTHS	• Check that all live load bearings are in contact with their strike plates when the span is closed and the span locks are driven. There should be no movement of the sole plate when heavy traffic loads cross the span. • Clean debris from all supporting members and plates.

SIX MONTHS	• Remove debris from the area surrounding the connection of the live load anchor to concrete foundation. • Clean and spot paint areas of corrosion to the live load bearing assembly and anchorage. The live load bearing components shall be painted using the paint system specifies by the DelDOT standard Specifications for painting existing structural steel.
ANNUALLY	• Check that all fasteners are tight. Tighten loose fasteners. • Check the contacting surfaces between the sole plate and strike plate for deformations and wear. There should be no corrosion on the contact areas of either plate. If corrosion is present, clean the bearing surfaces.

8.1.3 COUNTERWEIGHTS

8.1.3.1 DESCRIPTION

The counterweights are concrete masses that counterbalance the weight of the forward portion of the bascule leaves.

Each counterweight has four pockets located on the front face where balance blocks can be placed.

Refer to Photos numbered 9.1E and 9.1F.

8.1.3.2 NUMBER OF ITEMS AND LOCATION

There are a total of two counterweights, one on each bascule leaf located behind the trunnion bearings.

8.1.3.3 MAINTENANCE AND SCHEDULE

!!! WARNING !!!

Use EXTREME CARE and ALWAYS REMOVE POWER from all pertinent electrical equipment, which includes multiple power sources, before beginning maintenance. Refer to Section 7.3, "Lockout/Tagout Procedure."

Document completed maintenance tasks on the maintenance checklists included in Appendix B of the Contract.

ANNUALLY	• Check counterweight balance block locations for proper drainage and clean out debris. • From the counterweight pit floor and platforms/walkways, visually check the counterweight concrete for spalling, cracks, and signs of structural distress. • Check for shifting of balance blocks. Neatly restack blocks or plates that have fallen over or shifted out of position.

8.2 SPAN DRIVE MACHINERY

The span drive machinery for each leaf is located in the electrical/mechanical room on the bascule piers and within the bascule piers. Span drive machinery for each leaf consists of two 50 HP electric motors, three brakes, one primary enclosed speed reducer, two bevel gear sets, one intermediate spur gear set, rack and pinion, shaft bearings, couplings and shafts. Each AC motor has a full load torque of 303 lb-ft at a speed of 865 RPM, and full load current of 70 Amperes.

8.2.1 MOTOR AND MACHINERY BRAKES

8.2.1.1 DESCRIPTION

The motor brakes are used to brake the span for normal and emergency stopping of the span during bridge operations. The machinery brakes are used to hold the span in any position and in emergency stopping.

The motor and machinery brakes were manufactured by General Electric (GE) and are electric shoe brakes.

Both the motor and machinery brake model numbers are IC9516-465K. The brake thrustors are model number IC9504-N74. Each motor brake has a 14 inch diameter brake wheel mounted to the coupling. North leaf motor brakes No. 1 and 2 have a spring length of 7 $^{1}/_{8}$ inches and 6 $^{9}/_{16}$ inches, respectively. South leaf motor brakes No. 1 and 2 have a spring length of 6 $^{5}/_{8}$ inches and 7 $^{1}/_{8}$ inches, respectively. Each machinery brake has a 14 inch diameter brake wheel coupling. The north and south machinery brakes are set to a spring length of 6 $^{5}/_{8}$ inches and 6 ½ inches, respectively. All motor and machinery brakes are spring set and electro-hydraulically released, as commanded by the bridge control system.

Refer to Photos numbered 9.2A, 9.2B, 9.2C, 9.2Q, and 9.2R.

Refer to Sections 11.1 for component identification and 11.2 for lubrication schematics.

8.2.1.2 NUMBER OF ITEMS AND LOCATION

Each leaf is equipped with a total of three brakes, two motor brakes and one machinery brake.

One motor brake is located between each main leaf motor and the primary reducer.

The machinery brake is located at the primary reducer output shaft.

8.2.1.3 MAINTENANCE AND SCHEDULE

!!! WARNING !!!

Use EXTREME CARE and ALWAYS REMOVE POWER from all pertinent electrical equipment, which includes multiple power sources, before beginning maintenance. Refer to Section 7.3, "Lockout/Tagout Procedure."

Document completed maintenance tasks on the maintenance checklists included in Appendix B of the Contract.

GENERAL	• In the event that brakes require the following items, refer to the Manufacturer's Operation and Maintenance Manuals for detailed instructions. • Brake actuator repairs shall be performed by qualified technician with experience in the installation and maintenance of hydraulic brake systems. Replacement thruster oil shall be provided by the brake technician. The brake frames shall be adjusted by the Contractor.
ANNUALLY (Refer to Section 11.4.2 for Bridge Maintenance Performance Standard)	• Inspect brake shoes and drums for wear, dust, dirt, grease and proper adjustment. Check the brake pad thickness. Notify the Engineer if the remaining thickness is less than 1/16 inch. • Check clearance between the brake shoe and brakewheel. The measured gap shall have a minimum of $^{1}/_{64}$ inch clearance between the brake shoe and brakewheel when hand released. If clearances need to be adjusted,

	the linkage shall be adjusted in accordance with Section 11.7.2. If adjustments are made to the linkages, the reserve stroke and spring length should be verified and adjusted as well. Adjustment procedures are located within Section 11.7.2. • Inspect mechanical linkages for wear, broken parts and tightness of nuts and bolts. Check for freedom of moving parts (no binding or sticking). • Check for excessive heating of parts evident by discoloration of metal parts. • Check operations of the brake during test operations of the bridge. Check for any unusual odor and excessive vibration. • Check the brake housing and linkages for evidence of water dripping on the brake and corrosion. • Check adjustment of limit switches and hand release devices and adjust for proper operation. • Check brake actuator reserve stroke is 1 ½ inches +/- 1/16 inch. As the brake pads wear, the reserve stroke becomes shorter. If the reserve stroke requires adjustment, adjust linkages as specified in Section 11.7.2. • Check the brake spring length. Use a tape measure to measure the length of the spring. Adjustment procedures for adjusting the spring length as well as corresponding brake torque data graphs are located in Section 11.7.2. The spring length shall be adjusted to within 1/16 inch. At the time this Manual was created, the motor and machinery brake spring lengths were measured to be 6 7/8 +/- 5/16 inch and 6 9/16 +/- 1/16 inch, respectively. Table 3 in Section 11.7.2 shows the existing motor brake torque range is 425 ft-lbs to 725 ft-lbs. Table 3 shows the existing machinery brake torque range is 675 ft-lbs to 750 ft-lbs. • Lubricate bearing pins using Mobil Mobilgear 600 XP 220 or equivalent lubricant. Lubricate pins using an oil can and applying a couple of drops to each of the brake pins. Cycle brakes manually using the hand release lever while applying the lubricating oil. Do not allow oil to drip onto the brake wheel. Remove any oil residue that drips from the brake pins. • Check for loose brake terminations. Tighten loose connections. • During winter months, verify that the brake pads are not frozen to the brakewheel.

!!! WARNING !!!

Use EXTREME CARE and VERIFY that no oil gets on the brakewheel surface as this may cause the brakewheel to slip within the brake shoes which may decrease the overall braking capacity.

8.2.2 COUPLINGS

8.2.2.1 DESCRIPTION

Each coupling transfers torque from one shaft to another.

Gear couplings and brakewheel couplings are used to transmit the torque in the span drive machinery.

The gear couplings have one grease fitting and one purge plug located in the coupling cover.

Brakewheel couplings are used to transmit torque from the main leaf motors to the primary reducer input shaft and from the primary speed reducer output shaft to the span drive machinery shafting. The

brakewheels are mounted to the couplings to provide a braking surface for the brakes. The motor brakewheel couplings have a grease fitting and three lube plugs in the coupling cover. The machinery brakewheel couplings have two grease fittings in the coupling cover.

Jaw couplings are used to connect the instrumentation equipment to the span drive machinery. The jaw couplings do not require lubrication.

Refer to Photos numbered 9.2B, 9.2C, 9.2D, 9.2E, 9.2G, 9.2O, and 9.2P.

Refer to Sections 11.1 for component identification and 11.2 for lubrication schematics.

8.2.2.2 NUMBER OF ITEMS AND LOCATION

The span drive machinery for each leaf has four gear couplings. A pair of single engagement gear couplings connects a floating shaft to the span drive machinery shafting and the secondary open gear frame input shaft. Two single engagement gear couplings connect a floating shaft to the secondary open gear frame output shaft and the primary open gear frame input shaft.

Each machinery brake has one brakewheel coupling. The brakewheel coupling connects the primary reducer output shaft to the span drive machinery shafting.

Each motor brake has one brakewheel coupling. The brakewheel coupling connects each main leaf motor front output shaft to the primary reducer input shaft.

The span drive machinery on each leaf has two jaw couplings. One jaw coupling is used to connect the main leaf motor #1 rear output shaft to the tachometer/overspeed switch assembly. The other jaw coupling is used to connect the span position instrumentation shaft to the transmitter input shaft.

8.2.2.3 MAINTENANCE AND SCHEDULE

!!! WARNING !!!

Use EXTREME CARE and ALWAYS REMOVE POWER from all pertinent electrical equipment, which includes multiple power sources, before beginning maintenance. Refer to Section 7.3, "Lockout/Tagout Procedure."

!!! WARNING !!!

Do not disassemble couplings unless shafts are properly supported.

Document completed maintenance tasks on the maintenance checklists included in Appendix B of the Contract.

MONTHLY	• Inspect keys and keyways at all couplings for grease leakage, tightness and cracking. Check coupling flange bolts for corrosion and tightness. Tighten loose fasteners. • Inspect for leaks at seals and gaskets. If the seal is leaking, inspect seal for damage. Notify the Engineer if the seal is damaged. • Inspect jaw couplings for cracking or damage.

SIX MONTHS (Refer to Section 11.4.3 for Bridge Maintenance Performance Standard)	• For gear couplings, purge lubricant and replace with new Mobil Mobilux EP-0 or equivalent. • For the machinery brake brakewheel couplings, purge lubricant and replace with new Mobil Mobilux EP-0 or equivalent. • Visually inspect couplings and brakewheel couplings for relative movement between coupling components during operation of the span drive machinery.
FIVE YEARS (Refer to Section 11.4.3 for Bridge Maintenance Performance Standard)	• For the motor brakewheel couplings, purge lubricant and replace with new Falk Long Term Grease (LTG) or equivalent.

!!! WARNING !!!

Use EXTREME CARE and VERIFY that no grease gets on the brakewheel surface as this may cause the brakewheel to slip within the brake shoes as the brake is activated which may decrease the overall braking capacity.

8.2.3 PRIMARY REDUCERS

8.2.3.1 DESCRIPTION

Each primary reducer is operated to increase torque and reduce speed from the input shaft to the output shaft through internal gearing.

The primary reducers were designed and manufactured by Horsburgh & Scott. The primary reducer is a parallel shaft reducer and has a gear ratio of 7.50:1. Name plates for each reducer have serial numbers specific to each particular unit that should be referenced if inquiries to the manufacturers are ever required.

The primary reducers are oil lubricated enclosed speed reducers. The input and output shaft bearings are splash lubricated within the reducer housing.

Refer to Photos numbered 9.2A, 9.2B, 9.2Q, and 9.2R.

Refer to Sections 11.1 for component identification and 11.2 for lubrication schematics. Refer to Section 11.7.1 for maintenance manual.

8.2.3.2 NUMBER OF ITEMS AND LOCATION

There is one primary reducer on each leaf. The primary reducers are located in the electrical/mechanical room of each leaf.

8.2.3.3 MAINTENANCE AND SCHEDULE

!!! WARNING !!!

Use EXTREME CARE and ALWAYS REMOVE POWER from all pertinent electrical equipment, which includes multiple power sources, before beginning maintenance. Refer to Section 7.3, "Lockout/Tagout Procedure."

Document completed maintenance tasks on the maintenance checklists included in Appendix B of the Contract.

MONTHLY (Refer to Section 11.4.4 for Bridge Maintenance Performance Standard)	• Visually inspect the oil level on the dipstick before operating the leaf. Add make up oil if the oil level is below the low level mark on the dipstick. • Listen for unusual noises during operation of the machinery. Report any unusual noises to bridge management. • Inspect the breather. Replace the breather if damaged or saturated.
ANNUALLY (Refer to Section 11.4.4 for Bridge Maintenance Performance Standard)	• Check for excessive leakage at the seals. • Check fasteners for tightness. Tighten loose fasteners.
FIVE YEARS (Refer to Section 11.4.4 for Bridge Maintenance Performance Standard)	• Replace oil in the speed reducer housings with Mobil Mobilgear 600 XP 220 or equivalent.

8.2.4 BEARINGS

8.2.4.1 DESCRIPTION

Each bearing supports the span drive machinery shafting throughout the mechanical system. Sleeve type journal bearings support the span drive machinery shafting.

The sleeve bearing housings contains a bronze bushing secured to the cap and base. A grease fitting is located in the bearing cap and grease is purged through the shaft/bushing interface. Laminated brass liners are located between the bearing cap and base to accommodate for wear of the bronze bushing.

Refer to Photos numbered 9.2D, 9.2E, 9.2F, 9.2G, 9.2H, 9.2I, 9.2M, and 9.2O.

Refer to Sections 11.1 for component identification and 11.2 for lubrication schematics.

8.2.4.2 NUMBER OF ITEMS AND LOCATION

There are a total of eleven sleeve bearings used to support the various shafts in the span drive machinery. One bearing supports the span drive machinery shafting located in the trunnion girder. Two bearings support the secondary open gear frame input shaft. Two bearings support the secondary open gear frame output shaft. Two bearings support the primary open gear frame input shaft. Two bearings support the intermediate pinion shaft located in the primary gear frame and the main pinion shaft.

Two bearings support the span position instrumentation shaft.

8.2.4.3 MAINTENANCE AND SCHEDULE

!!! WARNING !!!

Use EXTREME CARE and ALWAYS REMOVE POWER from all pertinent electrical equipment, which includes multiple power sources, before beginning maintenance. Refer to Section 7.3, "Lockout/Tagout Procedure."

Document completed maintenance tasks on the maintenance checklists included in Appendix B of the Contract.

MONTHLY (Refer to Section 11.4.1 for Bridge Maintenance Performance Standard)	• Fill with new grease to completely purge the bearing of the existing grease. Remove excess purged grease. Use Mobil Mobilux EP-2 or equivalent.
ANNUALLY	• Check bearing cap and base fasteners for tightness. Tighten loose fasteners.

8.2.5 OPEN GEARING

8.2.5.1 DESCRIPTION

Each open gear set increases torque and reduces rotational speed to operate the bridge.

The primary open gear frame consists of the main rack and pinion set, an intermediate spur gear and pinion set, and a bevel gear and pinion set.

The rack is a 362 tooth rack with a 576.000 inch pitch diameter, 20° stub cut involute tooth profile, and a face width of 14 $^1/_2$ inches. The rack is composed of 4 rack segments made of American Society for Testing and Materials (ASTM) A27 Grade 70-36 cast carbon steel. The main pinion is a 15 tooth spur gear with a 23.873" pitch diameter, 20° stub cut involute tooth profile, and a face width of 15 inches. The main pinion is made of ASTM A237 Class A forged alloy steel and is integral with the shaft.

The intermediate spur gear is a 62 tooth spur gear with a 69.073 inch pitch diameter, 20° full depth involute tooth profile, and a face width of 8 inches. The spur gear is made of ASTM A27 Grade 70-36 cast carbon steel. The intermediate pinion is a 17 tooth spur gear with an 18.939 inch pitch diameter, 20° full depth involute tooth profile, and a face width of 8 $^1/_2$ inches. The pinion is made of AASHTO M102 Class E forged carbon steel and is integral with the shaft.

The bevel gear is a 78 tooth bevel gear with a 55.863 inch pitch diameter, 20° full depth involute tooth profile, and a 6 $^1/_2$ inch face width. The bevel gear is made of ASTM A27 Grade 70-36 cast carbon steel. The bevel pinion is a 21 tooth gear with a 15.040 inch pitch diameter, 20° full depth involute tooth profile, and a face width of 6 $^1/_2$ inches. The bevel pinion is made of AASHTO M102 Class E forged carbon steel and is integral with the shaft.

The secondary open gear frame consists of a bevel gear and pinion set.

The bevel gear is a 50 tooth bevel gear with a 35.810 inch pitch diameter, 20° full depth involute tooth profile, and a face width of 4 inches. The bevel gear is made of ASTM A27 Grade 70-36 cast carbon steel. The bevel pinion is a 23 tooth gear with a 16.473 inch pitch diameter, 20° full depth involute tooth profile, and a face width of 4 inches. The bevel pinion is made of AASHTO M102 Class E forged carbon steel and is integral to the shaft.

The span position instrumentation gearing consists of a spur gear and two pinions.

The spur gear is a 70 tooth gear with a 14.000 inch pitch diameter, 20° full depth involute tooth profile, and a 1 inch face width. The spur gear is made of ASTM A27 Grade 70-36 cast carbon steel. The identical pinions are 18 tooth spur gears with a 3.600 inch pitch diameter, 20° full depth involute tooth profile, and 1 $^1/_4$ inch face width. The pinions are made of ASTM A27 Grade 70-36 cast carbon steel and are keyed to the rotary cam limit switch shafts.

All open gearing is lubricated with a grease that must be brushed onto the gear teeth manually.

Refer to Photos numbered 9.2E, 9.2F, 9.2G, 9.2H, 9.2I, 9.2J, and 9.2N.

Refer to Sections 11.1 for component identification and 11.2 for lubrication schematics.

8.2.5.2 NUMBER OF ITEMS AND LOCATION

Each leaf has one primary open gear frame located on the counterweight and one secondary open gear frame located in the trunnion girder. Each leaf also has one span position instrumentation gear set located in the electrical/mechanical room.

The main pinion shaft, intermediate pinion shaft, and bevel pinion shaft of the primary open gear frame are each supported by two sleeve bearings. The racks are fastened to a rack girder which is encased in the bascule pier concrete. The bevel pinion shaft and bevel gear shaft in the secondary open gear frame are each supported by two sleeve bearings.

The span position instrumentation gear shaft is supported by two bearings. The span position instrumentation pinions are affixed to the input shaft of each rotary cam limit switch.

8.2.5.3 MAINTENANCE AND SCHEDULE

!!! WARNING !!!

Use EXTREME CARE and ALWAYS REMOVE POWER from all pertinent electrical equipment, which includes multiple power sources, before beginning maintenance. Refer to Section 7.3, "Lockout/Tagout Procedure."

Document completed maintenance tasks on the maintenance checklists included in Appendix B of the Contract.

MONTHLY (Refer to Section 11.4.5 for Bridge Maintenance Performance Standard)	• Lubricate teeth using Mobil Mobiltac 325 NC or equivalent grease.
ANNUALLY (Refer to Section 11.4.5 for Bridge Maintenance Performance Standard)	• Replace open gear lubricant using Mobil Mobiltac 325 NC or equivalent. • Verify that fasteners connecting the rack to the rack support are secure and free of corrosion. Tighten loose fasteners. Clean and spot paint areas of corrosion on the rack support and fasteners. • Inspect keys and keyways for tightness and cracking. • Observe the open gearing during raising and lowering operations. Note excessive vibrations, binding, and unusual noises.

8.2.6 SPAN POSITION INSTRUMENTATION DRIVE EQUIPMENT

8.2.6.1 DESCRIPTION

The span position instrumentation equipment transfers the rotation of the trunnion shaft to the span position instrumentation open gearing.

Linkages consisting of a crank, connecting rod, and lever transfers rotation from the trunnion shaft to the span position instrumentation gear shaft. The shaft is connected to the span position instrumentation gear which drives two pinions affixed to the input shaft of each rotary cam limit switch.

Refer to Photos numbered 9.2K, 9.2L, 9.2M, and 9.2N.

Refer to Sections 11.1 for component identification schematics.

8.2.6.2 NUMBER OF ITEMS AND LOCATION

Each leaf has one set of span position instrumentation drive equipment located in the electrical/mechanical room and bascule pier.

8.2.6.3 MAINTENANCE AND SCHEDULE

!!! WARNING !!!

Use EXTREME CARE and ALWAYS REMOVE POWER from all pertinent electrical equipment, which includes multiple power sources, before beginning maintenance. Refer to Section 7.3, "Lockout/Tagout Procedure."

Document completed maintenance tasks on the maintenance checklists included in Appendix B of the Contract.

ANNUALLY	• Check that linkage fasteners are tight. Tighten loose fasteners. Verify linkages and fasteners are free of corrosion. Clean and spot paint areas of corrosion.

8.2.7 AUXILIARY DRIVE SYSTEM

8.2.7.1 DESCRIPTION

The auxiliary drive system transmits torque from the output shaft of the auxiliary gear motor to the input shaft of the primary reducer.

The auxiliary drive system consists of a pair of sprockets and a roller chain. One sprocket is keyed to the auxiliary gear motor output shaft. The other sprocket is a split sprocket, keyed to the primary reducer input shaft.

The auxiliary drive system roller chain is not connected to the sprockets during normal operation. To engage the system, the sprocket guard is removed and the chain installed around both sprockets.

The auxiliary gear motor was manufactured by Sew-Eurodrive and has a gear ratio of 22.4:1. Refer to Section 8.7.4 "Auxiliary Gear Motor" for the auxiliary gear motor maintenance requirements.

Refer to Photos numbered 9.2Q and 9.2R.

Refer to Sections 11.1 for component identification schematics.

8.2.7.2 NUMBER OF ITEMS AND LOCATION

Each leaf has one set of auxiliary drive system machinery, located in the electrical/mechanical room.

8.2.7.3 MAINTENANCE AND SCHEDULE

!!! WARNING !!!

Use EXTREME CARE and ALWAYS REMOVE POWER from all pertinent electrical equipment, which includes multiple power sources, before beginning maintenance. Refer to Section 7.3, "Lockout/Tagout Procedure."

Document completed maintenance tasks on the maintenance checklists included in Appendix B of the Contract.

ANNUALLY	• Check that sprocket fasteners are tight. Tighten loose fasteners. Verify sprockets and fasteners are free of corrosion. Clean and spot paint areas of corrosion. • Check that the roller chain is free of corrosion. Check that chain links rotate smoothly.

8.3 SPAN LOCK MACHINERY AND CENTERING EQUIPMENT

The span lock machinery is located at the toe of the north bascule leaf and provides a locking mechanism and transfers live loads (traffic loads) between the north and south leaves of the bridge's bascule span. There is one span lock system on both the east and west sides of the bridge. Each span lock system is comprised of a span lock motor, motor coupling, span lock speed reducer, lock bar, rack and pinion, rear and front guides, and a receiving socket.

A centering device and guide are also located at the toe and at the centerline of the bridge. As the spans are lowered into the final seated position, the centering device slides into the centering guide, ensuring that the spans are properly aligned.

8.3.1 LOCK BARS, GUIDES AND RECEIVERS

8.3.1.1 DESCRIPTION

The span lock machinery electrically operates a lock bar that provides a locking mechanism and transfers live load between the two bascule leaves.

The span lock machinery retracts and extends a lock bar through the front and rear guides and into and out of the receiving socket. The guides support the lock bar when it is in the retracted position.

The rear guides, front guides, and receiving sockets are steel castings which contain an upper and lower bronze bushing which is fastened to the respective guides/sockets.

The lock bar and receiving sockets require grease to be brushed onto the sliding surfaces of the lock bar and bushings. In order to lubricate the guides, traffic needs to be stopped and the lock bars pulled to access the areas of the lock bar that are normally engaged with the guides with the lock bars driven.

Refer to Photos numbered 9.3A, 9.3D, 9.3E, and 9.3F.

Refer to Sections 11.1 for component identification and 11.2 for lubrication schematics.

8.3.1.2 NUMBER OF ITEMS AND LOCATION

There are two span lock systems on the bridge, with each one having a lock bar, receiving socket, and front and rear guide. The span lock rear guides are mounted to the inboard side of the north leaf bascule girder web (one on the east side and one on the west). The front guides are mounted to the north leaf Floorbeam 0 web. The receiving sockets are mounted to the south leaf Floorbeam 0 web.

8.3.1.3 MAINTENANCE AND SCHEDULE

!!! WARNING !!!

Use EXTREME CARE and ALWAYS REMOVE POWER from all pertinent electrical equipment, which includes multiple power sources, before beginning maintenance. Refer to Section 7.3, "Lockout/Tagout Procedure."

Document completed maintenance tasks on the maintenance checklists included in Appendix B of the Contract.

MONTHLY (Refer to Section 11.4.7.4 for Bridge Maintenance Performance Standard)	• Remove existing lubricant and brush or swab the lock bar and receiving socket sliding surfaces with Mobil Mobilux EP-2 grease or equivalent. • Visually inspect guides and sockets, lock bars, fasteners and shims for damage. With traffic on the span, observe the lock bars, guides, and receiving sockets for relative vertical movement, resulting in the lock bars impacting the top or bottom of the guide or receiving socket sliding surfaces.
ANNUALLY	• Check the guide and socket fasteners for tightness. Tighten loose fasteners. • The socket and guide housings shall be checked for cracking (Refer to Photos 9.3E and 9.3F). Inspect the areas where the housing changes shape (flange radii). One way a crack is observed is a thin line of corrosion emanating from the stress concentrations (flange radii). • Check sockets and guides for paint failure. Clean flaking paint from components and spot paint areas of corrosion.

8.3.2 SPAN LOCK REDUCER

8.3.2.1 DESCRIPTION

The span lock speed reducer is operated to increase torque and reduce speed from the input shaft to the output shaft through internal gearing.

The span lock reducers are manufactured by Foote Jones. The span lock reducer is a concentric shaft speed reducer.

The span lock reducers are oil lubricated enclosed speed reducers.

Refer to Photos numbered 9.3A, 9.3B and 9.3C.

Refer to Sections 11.1 for component identification and 11.2 for lubrication schematics.

8.3.2.2 NUMBER OF ITEMS AND LOCATION

Each span lock system has one span lock speed reducer located on the span lock platform.

8.3.2.3 MAINTENANCE AND SCHEDULE

!!! WARNING !!!

Use EXTREME CARE and ALWAYS REMOVE POWER from all pertinent electrical equipment, which includes multiple power sources, before beginning maintenance. Refer to Section 7.3, "Lockout/Tagout Procedure."

Document completed maintenance tasks on the maintenance checklists included in Appendix B of the Contract.

MONTHLY (Refer to Section 11.4.7.2 for Bridge Maintenance Performance Standard)	• Before operating the span lock machinery, temporarily loosen / remove the oil level plug and check the oil level inside the reducer housing. Add oil to the reducer if the oil level is more than ¼" below the oil level plug. • Listen for unusual noises during operation of the machinery. Report any unusual noises to bridge management.
ANNUALLY (Refer to Section 11.4.7.2 for Bridge Maintenance Performance Standard)	• Check for excessive leakage at the seals. • Check fasteners for tightness. Tighten loose fasteners.
FIVE YEARS (Refer to Section 11.4.7.2 for Bridge Maintenance Performance Standard)	• Replace oil in the speed reducer housings with Mobil Mobilgear 600 XP 220 or equivalent.

8.3.3 SPAN LOCK MOTOR COUPLING

8.3.3.1 DESCRIPTION

The span lock motor coupling transfers torque from the output shaft of the span lock motor to the input shaft of the span lock reducer.

The span lock motor coupling is a Falk 60T10 grid coupling.

Refer to Photo numbered 9.3A and 9.3B.

Refer to Sections 11.1 for component identification and 11.2 for lubrication schematics. Refer to Section 11.7.3 for manufacturer maintenance manual.

8.3.3.2 NUMBER OF ITEMS AND LOCATION

Each span lock system has one span lock motor coupling connecting the span lock motor output shaft to the span lock reducer input shaft.

8.3.3.3 MAINTENANCE AND SCHEDULE

!!! WARNING !!!

Use EXTREME CARE and ALWAYS REMOVE POWER from all pertinent electrical equipment, which includes multiple power sources, before beginning maintenance. Refer to Section 7.3, "Lockout/Tagout Procedure."

Document completed maintenance tasks on the maintenance checklists included in Appendix B of the Contract.

MONTHLY	• Inspect keys and keyways at all couplings for grease leakage, tightness and cracking. Check coupling flange bolts for corrosion and tightness. Tighten loose fasteners. • Inspect for leaks at seals and gaskets. If coupling is leaking grease from seals, remove coupling cover to inspect seal. Notify the Engineer if the seal is damaged. If coupling covers are removed, replace lubricant.
FIVE YEARS (Refer to Section 11.4.7.1 for Bridge Maintenance Performance Standard)	• Replace coupling lubricant and check for misalignment. Use Falk Long Term Grease or equivalent.

8.3.4 SPAN LOCK RACK AND PINION

8.3.4.1 DESCRIPTION

The span lock rack and pinion converts the rotary motion from the span lock speed reducer output shaft into linear motion to drive and retract the lock bar.

The rack has 22 teeth with a 20° full depth involute tooth profile and a face width of 2 $^1/_2$ inches. The rack is made of ASTM A27 Grade 70-36 cast carbon steel. The span lock pinion is a 17 tooth spur gear with an 8.117 inch pitch diameter, 20° full depth involute tooth profile and a face width of 3 $^1/_2$ inches. The span lock pinion is made of ASTM A27 Grade 70-36 cast carbon steel.

Refer to Photo numbered 9.3C.

Refer to Sections 11.1 for component identification and 11.2 for lubrication schematics.

8.3.4.2 NUMBER OF ITEMS AND LOCATION

Each span lock system has one rack and pinion set. The rack is bolted to the underside of the lock bar. The pinion is keyed to the span lock speed reducer output shaft.

8.3.4.3 MAINTENANCE AND SCHEDULE

!!! WARNING !!!

Use EXTREME CARE and ALWAYS REMOVE POWER from all pertinent electrical equipment, which includes multiple power sources, before beginning maintenance. Refer to Section 7.3, "Lockout/Tagout Procedure."

Document completed maintenance tasks on the maintenance checklists included in Appendix B of the Contract.

MONTHLY (Refer to Section 11.4.7.3 for Bridge Maintenance Performance Standard)	• Lubricate teeth using Mobil Mobiltac 325 NC or equivalent grease.
THREE MONTHS	• Check rack mounting fasteners for tightness. Tighten loose fasteners.
ANNUALLY (Refer to Section 11.4.7.3 for Bridge Maintenance Performance Standard)	• Replace rack and pinion lubricant with Mobil Mobiltac 325 NC. • Inspect keys and keyways for tightness and cracking. • Observe the open gearing during operation of the span lock machinery. Note excessive vibrations, binding, and unusual noises.

8.3.5 CENTERING DEVICE AND CENTERING GUIDE

8.3.5.1 DESCRIPTION

As the spans are lowered into the final seated position, the centering guide and centering device ensures that the spans are properly aligned.

The centering device is made of Class E forged carbon steel and has a pair of manganese steel wear plates on the outboard sides. The centering guide is a steel casting and has a pair of manganese steel wear plates on the inboard faces.

Refer to Photos numbered 9.3G and 9.3H.

Refer to Sections 11.1 for component identification and 11.2 for lubrication schematics.

8.3.5.2 NUMBER OF ITEMS AND LOCATION

There is one centering guide and one centering device on the bridge. The centering device is mounted to the web of Floorbeam 0 at the toe of the south leaf. The centering guide is mounted to the web of Floorbeam 0 at the toe of the north leaf.

In order to lubricate the centering device and guide, one leaf needs to be raised to eye level in order to access the wear plate surfaces. Once complete, the leaf needs to be lowered into the seated position and the opposite leaf raised to eye level to repeat lubrication.

8.3.5.3 MAINTENANCE AND SCHEDULE

!!! WARNING !!!

Use EXTREME CARE and ALWAYS REMOVE POWER from all pertinent electrical equipment, which includes multiple power sources, before beginning maintenance. Refer to Section 7.3, "Lockout/Tagout Procedure."

Document completed maintenance tasks on the maintenance checklists included in Appendix B of the Contract.

MONTHLY (Refer to Section 11.4.8 for Bridge Maintenance Performance Standard)	• Apply grease to the sliding surfaces of the centering device and guide. Remove existing lubricant and brush or swab the centering device and centering guide wear plates with Mobil Mobilux EP-2 grease or equivalent. • Visually inspect centering device, centering guide, wear plates, and fasteners for excessive wear, deformation, fit, or damage.
ANNUALLY	• Visually inspect centering device and centering guide components at flange radii and mounting connections. Components should be checked for cracks, rust and section loss. Mounting connections should be checked for corrosion and tightness. All components should have flaking paint brushed clean and spot painted. Do not paint the wear plate contacting surfaces.

8.4 TRAFFIC GATES

Traffic gates are comprised of warning gates located on the approaches and are used to stop traffic prior to a bridge opening.

8.4.1 WARNING GATES

8.4.1.1 DESCRIPTION

Warning gates signal on and off going traffic to stop for a bridge opening.

The Northwest warning gate was installed in 2009 (model VW-4), whereas the other warning gates are original (model VT-66).

Refer to Photos numbered 9.4B, 9.4C, 9.4D, 9.4E, 9.4F.

Refer to Sections 11.1 for component identification, 11.2 for lubrication schematics, and 11.8.1 for the manufacturer's manual for the VT-66 warning gates.

8.4.1.2 NUMBER OF ITEMS AND LOCATION

There are four warning gates. Two are located on both the north and south sides of the bascule span.

8.4.1.3 MAINTENANCE AND SCHEDULE

!!! WARNING !!!

Use EXTREME CARE and ALWAYS REMOVE POWER from all pertinent electrical equipment, which includes multiple power sources, before beginning maintenance. Refer to Section 7.3, "Lockout/Tagout Procedure."

Document completed maintenance tasks on the maintenance checklists included in Appendix B of the Contract.

GENERAL	Northwest and Northeast Warning Gates	• The northwest and northeast warning gates are outfitted with a shear pin that is intended to fail if the gate is impacted by a vehicle. Spare pins should be available in the event of a failure. Additional pins can be obtained from the gate manufacturer. Replacement of a failed shear pin requires tightening a nut onto the shear pin. Use nylon insert lock nuts. Hand-tighten the nut with a small wrench; the nut should not be heavily tightened. The shear pin should be able to rotate when turned by hand or with a small wrench after tightening. The gate should not be operated with a failed pin, if not otherwise restrained.
SIX MONTHS	All Warning Gates	• Verify bumper rods are properly adjusted and make contact with roadway when lowered. • Verify stay cables are properly adjusted and taught at all times.
	Northwest and Northeast Warning Gates	• Check the transmission oil level. If oil is low check seals for evidence of leaks and add oil. If oil is cloudy or dirty, drain, flush, and refill the unit with Mobil SHC 634 or equivalent. • Lubricate shaft bearings and rod ends until clean grease is purged from the bearing or rod end. Use Mobil Mobilux EP-2 or equivalent. • Lubricate the rotary cam limit switch roller chain with CRC TAC 2 Adhesive Chain Lubricant or equivalent. • Check the roller chain tension. The chain should not be slack. Tighten chain if it is loose.
	Southeast and Southwest Warning Gates	• Check the transmission oil level. If oil is low check seals for evidence of leaks and add oil. If oil is cloudy or dirty, drain, flush, and refill the unit with Mobil Mobilgear 600 XP 220 or equivalent. • Lubricate pivot shaft bearings with Mobil Mobilgear 600 XP 220 or equivalent. • Lubricate crank bearing and warning gate clevis pin until clean grease is purged from the bearing or pin. Use Mobil Mobilux EP-2 or equivalent. • Use an oil can to apply several drops of Mobil Mobilgear 600 XP 220 or equivalent oil to the transmission crank pin. • Lubricate the warning gate instrumentation open gearing with Mobil Mobiltac 325 NC or equivalent.

ANNUALLY	All Warning Gates	• Check hardware for damage and corrosion. Replace damaged hardware. • Check electrical connections and tighten loose connections. • Remove excess grease, oil and debris from equipment. • Check gate housing for corrosion. Clean and spot paint areas of corrosion on the housing. • Check condition of gaskets and replace if damaged.
	Southeast and Southwest Warning Gates	• Replace warning gate instrumentation open gearing with fresh Mobil Mobiltac 325 NC or equivalent.

8.5 ELECTRICAL POWER SYSTEMS

8.5.1 MOTOR CONTROL CABINETS

8.5.1.1 DESCRIPTION

The motor control enclosures house motor controllers, relays, contactors, fuses, over-current protection, and metering equipment.

Refer to Photos numbered 9.6A, 9.6B, 9.6C, 9.6D, 9.6E, 9.6F.

8.5.1.2 NUMBER OF ITEMS AND LOCATION

There are five motor control cabinets and a main circuit breaker enclosure located in the north electrical/mechanical room. The drive and motor selector switches are located in the control cabinet adjacent to the drive cabinets (refer to Photo 9.6E). In addition a single motor control cabinet located in the south electrical/mechanical room.

8.5.1.3 MAINTENANCE AND SCHEDULE

!!! WARNING !!!

Use EXTREME CARE and ALWAYS REMOVE POWER from all pertinent electrical equipment, which includes multiple power sources, before beginning maintenance. Refer to Section 7.3, Lockout/Tagout Procedure.

Document completed maintenance tasks on the maintenance checklists included in Appendix B of the Contract.

THREE MONTHS	• Open and clean with a vacuum cleaner. • Remove accumulation of dirt, grease, and gum with DeoxIT D5 contact cleaner or equivalent. • Check for corrosion and moisture. • Examine connections for poor or loose connections and evidence of overheating. • Lubricate door hinges and latches. • Check circuit breaker disconnects for proper operation. • Inspect terminal block screws and hand tighten loose connections. • Inspect wiring from unit terminal blocks for deterioration of insulation. • Inspect all circuit breakers. Verify with a meter that continuity is broken on trip or switch off conditions. With the circuit breaker in the OFF position, use a multimeter to measure the current and voltage on the load side conductors. The multimeter should read 0 amps and 0 volts. • Check all starter contacts. Note when nearly all of the silver tip is gone and the contact tip support is exposed. Do not file the contacts. Filing or otherwise dressing the contacts only results in lost tip material and reduces starter life. • Inspect all fuses with a meter and verify continuity. For fuse replacement, always install the same type and rating fuses furnished with the motor control center. Evolution in fuse design has produced fuses that are mechanically equivalent but not electrically equivalent. They may not have the same short-circuit withstand ability and current limiting ability. • Inspect fuse clips for dirt and verify that the clips provide a tight fit. • Verify enclosure lights turn on when doors are open. Replace burned out bulbs. • Verify enclosure heaters and thermostats are functioning properly. • Check the condition of gaskets and replace if damaged.
ANNUALLY	• Check for discolored connections on terminals, contact supports, bus bars, or connectors. Discoloration usually indicates that overheating has occurred, probably because of loose connections. Clean connection points that are discolored. Tighten all loose hardware. Check wires and connectors for damage. • Operate the motor controller/contactor without load (turn circuit breakers off) and observe contact operation to be sure it opens and closes cleanly and that the contacts are fully sealed in the closed position. In order to manually operate a motor controller/contact without load, remove power to the MCC cabinet and with a non-conductive object, press the button on the contactor. The button is usually located on the front or bottom of the housing. • Operate the motor controller/contactor under load and check for loud noise and arcing, both on opening and on closing. A loud noise and arcing on closing is usually due to contact bounce. • Measure and record current draw on load side of contactor. An elevated reading may indicate a poor connection. If the recorded current (excluding the current at startup) exceeds the full load current on the motor name plate, notify bridge management.

8.5.2 DRIVE CABINETS AND RESISTORS

8.5.2.1 DESCRIPTION

Drive Cabinets are free standing enclosures which house the leaf motor drive, control relays, contactors, circuit breakers, fuses, and terminal blocks.

Normal operation of the bridge utilizes a single drive per leaf to operate two motors per leaf. However, in the event one of the drive systems is not operational, a back-up drive system can be used by turning the appropriate selector switch located in the control enclosure adjacent to the four drives.

Refer to Photo numbered 9.6G, 9.6H, and 9.6I.

8.5.2.2 NUMBER OF ITEMS AND LOCATION

The North electrical/mechanical room contains all the drives for the entire bridge labeled A, B. C, D. The north primary resistors, north secondary resistors, north emergency resistors, south primary resistors, and south emergency resistors are located in the north electrical/mechanical room. The south secondary resistors are located in the south electrical/mechanical room.

8.5.2.3 MAINTENANCE AND SCHEDULE

!!! WARNING !!!

Use EXTREME CARE and ALWAYS REMOVE POWER from all pertinent electrical equipment, which includes multiple power sources, before beginning maintenance. Refer to Section 7.3, "Lockout/Tagout Procedure."

Document completed maintenance tasks on the maintenance checklists included in Appendix B of the Contract.

THREE MONTHS (Drive Cabinets)	• Open and clean with a vacuum cleaner. • Remove accumulation of dirt, grease, and gum with DeoxIT D5 contact cleaner or equivalent. • Check for corrosion and moisture. • Lubricate door hinges and latches. • Inspect terminal block screws and tighten loose connections. • Inspect wiring from unit terminal blocks for deterioration of insulation. • Inspect all circuit breakers. Verify with a meter that continuity is broken on trip or switch off conditions. With the circuit breaker in the OFF position, use a multimeter to measure the current and voltage on the load side conductors. The multimeter should read 0 amps and 0 volts. • Inspect all fuses with a meter and verify continuity. For fuse replacement, always install the same type and rating fuses furnished with the motor control center. Evolution in fuse design has produced fuses that are mechanically equivalent but not electrically equivalent. They may not have the same short-circuit withstand ability and current limiting ability. • Inspect all relays and tighten loose connections. • Verify enclosure heaters are functioning. • Verify enclosure lights turn on when doors are open. Replace burned out bulbs. • Change the selected drive for each leaf by turning the appropriate selector switch located in the control cabinet.
ANNUALLY Drive Cabinets and Resistor Enclosures	• Check the condition of filters. Replace dirty or damaged filters. • Verify enclosure fan is functioning. • Check for discolored connections on terminals, contact supports, bus bars, or connectors. Discoloration usually indicates that overheating has occurred, probably because of loose connections. Clean connection points that are discolored. Tighten all loose hardware. • Operate the motor controller/contactor without load (turn circuit breakers off) and observe contact operation to be sure it opens and closes cleanly and that the contacts are fully sealed in the closed position. In order to manually operate a motor controller/contact without load, remove power to the MCC cabinet and with a non-conductive object, press the button on the contactor. The button is usually located on the front or bottom of the housing. • Operate the motor controller/contactor normally (under load) from the control desk during a vessel or maintenance opening and check for loud noise and arcing, both on opening and on closing. A loud noise and arcing on closing is usually due to contact bounce. • Open and clean resistor enclosure with a vacuum cleaner. • Check hardware for corrosion. • Check condition of gaskets and replace if damaged.
FIVE YEARS	• Replace general purpose plug-in style ice cube relays.

8.5.3 PANELBOARDS

8.5.3.1 DESCRIPTION

Lighting and power panelboards are assemblies of bus bars and main/branch circuit breakers. The circuit breakers provide over-current protection as well as a means of turning on and off electrical distribution circuits.

Refer to Photos numbered 9.5E and 9.5F.

8.5.3.2 NUMBER OF ITEMS AND LOCATION

A lighting panelboard and a power panelboard are located on each side of the bridge. The north panelboard is located in the generator room and the south panelboard is located in the south electrical/mechanical room.

8.5.3.3 MAINTENANCE AND SCHEDULE

!!! WARNING !!!

Use EXTREME CARE and ALWAYS REMOVE POWER from all pertinent electrical equipment, which includes multiple power sources, before beginning maintenance. Refer to Section 7.3, "Lockout/Tagout Procedure."

Document completed maintenance tasks on the maintenance checklists included in Appendix B of the Contract.

ANNUALLY	• Open and clean with a vacuum cleaner. • Remove accumulation of dirt, grease, and gum with DexoIT D5 contact cleaner or equivalent. • Check for moisture and corrosion. Replace corroded hardware. • Examine bus bar connections for poor or loose connections and evidence of overheating. If necessary, pop out, but do not disconnect the circuit breakers. • Lubricate door hinges and latches. • Inspect all circuit breakers. Verify with a meter that continuity is broken on trip or switch off conditions. With the circuit breaker in the OFF position, use a multimeter to measure the current and voltage on the load side conductors. The multimeter should read 0 amps and 0 volts. • Measure resistance to ground at each panelboard using a ground test kit. Verify resistance is 25 ohms or less.

8.5.4 TRANSFORMERS

8.5.4.1 DESCRIPTION

Transformers are electrical devices that change the electrical power source by either changing the voltage or improving the power distribution. The purpose of the lighting transformers is to change the voltage from 480V or 208V to 120V in order to provide single phase power to lights and other small electrical equipment.

Refer to Photos numbered 9.5A and 9.5D.

8.5.4.2 NUMBER OF ITEMS AND LOCATION

There are two lighting transformers on the bridge. One lighting transformer is located in the generator room and the other is located in the south electrical/mechanical room.

8.5.4.3 MAINTENANCE AND SCHEDULE

!!! WARNING !!!

Use EXTREME CARE and ALWAYS REMOVE POWER from all pertinent electrical equipment, which includes multiple power sources, before beginning maintenance. Refer to Section 7.3, "Lockout/Tagout Procedure."

Document completed maintenance tasks on the maintenance checklists included in Appendix B of the Contract.

ANNUALLY	• Open and clean with vacuum cleaner. • Check for corrosion and moisture. Replace corroded hardware. • Verify all hardware is secure. Tighten loose fasteners. • Check transformer components (terminals, insulation, etc.) for evidence of overheating.

8.5.5 STANDBY EMERGENCY GENERATOR

8.5.5.1 DESCRIPTION

A standby generator is installed to power the bridge and ancillary equipment should utility power become unavailable. In the event power becomes unavailable, the bridge should be operated using only one leaf motor at a time under generator power. Failure to do so may overload the generator. Refer to Section 4.2 for further instructions.

Refer to Photos numbered 9.5B and 9.5C.

8.5.5.2 NUMBER OF ITEMS AND LOCATION

There is one generator located in the generator room of the control house.

8.5.5.3 MAINTENANCE AND SCHEDULE

!!! WARNING !!!

Use EXTREME CARE and ALWAYS REMOVE POWER from all pertinent electrical equipment, which includes multiple power sources, before beginning maintenance. Refer to Section 7.3, "Lockout/Tagout Procedure."

Document completed maintenance tasks on the maintenance checklists included in Appendix B of the Contract.

MONTHLY	• Perform visual inspection of the generator components (including belts, hoses, fasteners, etc.) for signs of damage. • Check for air cleaner restrictions. • Check coolant level, oil level and fuel level. • Check for oil, coolant, and fuel leaks. • Check battery and battery charger for proper operation. • Check electrical safety controls and alarms. • Perform all pre-operation inspections. • Start and run generators for 15 minutes with no load and check for proper alternator voltage. • Perform all post operation inspections.
ANNUALLY	• Check the condition of all filters and breathers and note if dirty, clogged, or damaged. • Check the fuel tanks for water and sediment. • Verify fasteners are secure. Tighten loose fasteners. • Check operation of automatic transfer switch located in the control house. • Start and run generator under load for one complete bridge opening.
FIVE YEARS	• Perform one hour load bank testing and monitor operation. • Perform two hour test without load and monitor operation.

8.5.6 AUTOMATIC TRANSFER SWITCH

8.5.6.1 DESCRIPTION

An automatic transfer switch is provided to automatically transfer power to and from the stand-by generator.

Refer to Photo numbered 9.5E.

8.5.6.2 NUMBER OF ITEMS AND LOCATION

A single automatic transfer switch is located in the generator room adjacent to the generator.

8.5.6.3 MAINTENANCE AND SCHEDULE

!!! WARNING !!!

Use EXTREME CARE and ALWAYS REMOVE POWER from all pertinent electrical equipment, which includes multiple power sources, before beginning maintenance. Refer to Section 7.3, "Lockout/Tagout Procedure."

Document completed maintenance tasks on the maintenance checklists included in Appendix B of the Contract.

ANNUALLY	• Test with operation of the generator • Remove accumulation of dirt, grease, and gum with DeoxIT D5 contact cleaner or equivalent. • Check for corrosion and moisture. • Examine for excessive heating of parts, discoloration of metal parts, charred insulation, odor, or blistering. • Check for freedom of moving parts. • Check for worn or broken mechanical parts. • Tighten loose mountings and connections. • Check for excessive arcing.

8.5.7 SAFETY AND DISCONNECT SWITCHES

8.5.7.1 DESCRIPTION

Switches are devices for making, breaking, or changing connections in an electric circuit under the conditions of the load for which it is rated. There are various types of switches; some of the more common are main circuit breakers and motor disconnect switches.

Refer to Photos numbered 9.5C, 9.6J, and 9.6K.

8.5.7.2 NUMBER OF ITEMS AND LOCATION

Numerous switches are located throughout the bridge and are individually mounted as main circuit breakers, disconnect switches, and motor disconnect switches.

8.5.7.3 MAINTENANCE AND SCHEDULE

!!! WARNING !!!

Use EXTREME CARE and ALWAYS REMOVE POWER from all pertinent electrical equipment, which includes multiple power sources, before beginning maintenance. Refer to Section 7.3, "Lockout/Tagout Procedure."

!!! WARNING !!!

Use proper personal protective equipment when working on energized equipment. Arc flash and other dangers are present and may result in injury or death.

Document completed maintenance tasks on the maintenance checklists included in Appendix B of the Contract.

GENERAL	• When replacing contacts or other current-carrying parts, clean surfaces that are to be bolted together.

ANNUALLY	• Remove accumulation of dirt, grease, and gum with DeoxIT D5 contact cleaner or equivalent. • Check for corrosion and moisture. Replace corroded hardware. • Examine for excessive heating of parts, discoloration of metal parts, charred insulation, odor, or blistering. • Check for freedom of moving parts. • Check for worn or broken mechanical parts. • Tighten loose mountings and connections. • Check contacts for wear and pitting. • Check for excessive arcing. • Check condition of gaskets (for dust-tight or watertight units). Replace damaged gaskets. • For fused units, inspect all circuit breakers. Verify with a meter that continuity is broken on trip or switch off conditions. With the circuit breaker in the OFF position, use a multimeter to measure the current and voltage on the load side conductors. The multimeter should read 0 amps and 0 volts.

8.5.8 ELECTRICAL CONDUCTORS

8.5.8.1 DESCRIPTION

Conductors may be stranded single-conductor or multiple-conductor cable.

8.5.8.2 NUMBER OF ITEMS AND LOCATION

Numerous electrical conductors are located throughout the bridge.

8.5.8.3 MAINTENANCE AND SCHEDULE

!!! WARNING !!!

Use EXTREME CARE and ALWAYS REMOVE POWER from all pertinent electrical equipment, which includes multiple power sources, before beginning maintenance. Refer to Section 7.3, "Lockout/Tagout Procedure."

Document completed maintenance tasks on the maintenance checklists included in Appendix B of the Contract.

ANNUALLY	• Visually inspect terminations and splices for cracks, deterioration, corrosion, discoloring, or any other abnormalities. • Check tightness at each conductor termination at each terminal box. Tighten loose connections. • Check the strain relief fittings for signs of distress. • Inspect wires and electrical cables for grease and oil contamination, fraying, abrasions, sweating, cracked, melted or overheated blue tinted insulation. Clean the insulation of moisture, grease and oil after removing power sources if present.

8.5.9 DROOP CABLES

8.5.9.1 DESCRIPTION

Droop cables are flexible electrical conductors that are routed from the fixed portion of the bascule pier to the movable bascule span equipment.

These cables carry power and control conductors to equipment located on the span (navigation lights, service lighting, and span lock equipment).

Refer to Photos numbered 9.6L and 9.6M.

8.5.9.2 NUMBER OF ITEMS AND LOCATION

Droop cables and associated termination cabinets located in each electrical/mechanical room.

8.5.9.3 MAINTENANCE AND SCHEDULE

!!! WARNING !!!

Use EXTREME CARE and ALWAYS REMOVE POWER from all pertinent electrical equipment, which includes multiple power sources, before beginning maintenance. Refer to Section 7.3, "Lockout/Tagout Procedure."

Document completed maintenance tasks on the maintenance checklists included in Appendix B of the Contract.

ANNUALLY	• Visually inspect terminations and splices for cracks, deterioration, corrosion, discoloring, or any other abnormalities. • Check tightness of each conductor termination at each terminal box. Tighten loose connections. • Check the strain relief fittings for signs of distress. • Check cables for any wear or abrasions on the outer jacket. • Inspect wires and electrical cables for grease and oil contamination, fraying, abrasions, sweating, cracked, melted or overheated blue tinted insulation. Clean the insulation of moisture, grease and oil after removing power sources if present.

8.5.10 SUBMARINE CABLES

8.5.10.1 DESCRIPTION

Submarine cables are electrical conductors routed from the control house underneath the river to the storage house to distribute power and control to the various electrical/mechanical equipment. The submarine cable system consists of conduit and wire (single conductor wire and shielded signal cables) and multiple termination points located in the electrical/mechanical rooms.

Refer to Photo numbered 9.6N.

8.5.10.2 NUMBER OF ITEMS AND LOCATION

The following submarine cables and associated termination cabinets on the bridge are located as follows:

- Main submarine cables (2) – Two located beneath the riverbed and into the bascule piers.

- Auxiliary submarine cables (2) – Two located beneath the riverbed and into the bascule piers.
- Termination boxes/cabinets (2) – One located in each electrical/mechanical room.

8.5.10.3 MAINTENANCE AND SCHEDULE

!!! WARNING !!!

Use EXTREME CARE and ALWAYS REMOVE POWER from all pertinent electrical equipment, which includes multiple power sources, before beginning maintenance. Refer to Section 7.3, "Lockout/Tagout Procedure."

Document completed maintenance tasks on the maintenance checklists included in Appendix B of the Contract.

ANNUALLY	Submarine Cables	• Test each set of submarine cables during normal bridge openings. • Check the strain relief fittings for signs of distress. • Visually inspect the submarine cable and watch for signs of cracks, deterioration and discoloration of the cable jacket.
	Termination Cabinets	• Check tightness of each conductor termination at each terminal box. Tighten loose connections. • Check for discolored connections on terminals, contact supports or connectors. Discoloration usually indicates that overheating has occurred, probably because of loose connections. Clean connection points that are discolored. Tighten all loose hardware. • Operate the remote controlled switches without load (turn circuit breakers off) and observe contact operation to be sure it opens and closes cleanly and that the contacts are fully sealed in the closed position. • Operate the remote controlled switches under load and check for loud noise and arcing, both on opening and on closing. A loud noise and arcing on closing is usually due to contact bounce.

8.6 LIGHTING SYSTEMS

8.6.1 NAVIGATION LIGHTS

8.6.1.1 DESCRIPTION

Pier lights are red lighting fixtures. Their function is to enhance visibility of the piers and locate the channel for marine vessels.

The red/green bascule span pendulum navigation lights are divided fixtures, with portions that are red and portions that are green. When both leafs are fully open, the four outboard lights located at the toes of each leaf turn from red to green. When either leaf is not fully open, all pendulum lights are red.

Refer to Photos numbered 9.4G and 9.4H.

8.6.1.2 NUMBER OF ITEMS AND LOCATION

Three red fender lights are located on each fender ring. There are four bascule span pendulum navigation lights.

8.6.1.3 MAINTENANCE AND SCHEDULE

!!! WARNING !!!

Use EXTREME CARE and ALWAYS REMOVE POWER from all pertinent electrical equipment, which includes multiple power sources, before beginning maintenance. Refer to Section 7.3, "Lockout/Tagout Procedure."

Document completed maintenance tasks on the maintenance checklists included in Appendix B of the Contract.

MONTHLY	• Check navigation lights for proper operation. • Replace lamps if damaged or nonfunctional.
ANNUALLY	• Check gaskets and replace if damaged. • Tighten loose connections. • Check for corrosion of metal parts. Replace corroded hardware. • Check for worn or broken mechanical parts. Check for cracked lenses. • Replace lamps.

8.6.2 INTERIOR/EXTERIOR LIGHTS

8.6.2.1 DESCRIPTION

Various light fixtures and emergency lights are mounted throughout the bridge. Lighting panelboards are located in the electrical/mechanical rooms to feed the lights.

Refer to Photos numbered 9.7C, 9.7D, and 9.7E.

8.6.2.2 NUMBER OF ITEMS AND LOCATION

There are numerous access lights and emergency lights located throughout the bridge in the enclosed rooms, platforms, ladders, and catwalks.

8.6.2.3 MAINTENANCE AND SCHEDULE

!!! WARNING !!!

Use EXTREME CARE and ALWAYS REMOVE POWER from all pertinent electrical equipment, which includes multiple power sources, before beginning maintenance. Refer to Section 7.3, Lockout/Tagout Procedure.

Document completed maintenance tasks on the maintenance checklists included in Appendix B of the Contract.

MONTHLY	• Check for burned-out lamps. Replace burned-out lamps. Verify light switches function properly.

ANNUALLY	• Clean luminaire lenses, interior surfaces, and weep holes (where applicable). • Check gaskets for damage and cracks. Replace damaged gaskets. • Tighten loose connections. • Inspect for corrosion of metal parts. Clean and spot paint corroded components. • Check parts for wear or damage.

8.6.3 TRAFFIC SIGNALS

8.6.3.1 DESCRIPTION

Traffic signals caution roadway and pedestrian traffic before and during periods of span operation.

Refer to Photo numbered 9.4A.

8.6.3.2 NUMBER OF ITEMS AND LOCATION

There are four flashing red traffic signals on each on-coming approach mounted to a mast arm assembly ahead of the warning gates. The lights turn from off to red flashing before each opening.

8.6.3.3 MAINTENANCE AND SCHEDULE

!!! WARNING !!!

Use EXTREME CARE and ALWAYS REMOVE POWER from all pertinent electrical equipment, which includes multiple power sources, before beginning maintenance. Refer to Section 7.3, "Lockout/Tagout Procedure."

Document completed maintenance tasks on the maintenance checklists included in Appendix B of the Contract.

MONTHLY	• Check lights for proper illumination and replace burned out bulbs. • Verify proper operation during marine and maintenance openings.
ANNUALLY	• Clean all reflectors, lenses and spot paint heads.

8.6.4 TRAFFIC GATE ARM LIGHTS

8.6.4.1 DESCRIPTION

Gate arm lights caution roadway traffic before and during periods of span operation.

Refer to Photo numbered 9.4F.

8.6.4.2 NUMBER OF ITEMS AND LOCATION

There are red flashing gate arm lights mounted on the four warning gate arms.

8.6.4.3 MAINTENANCE AND SCHEDULE

!!! WARNING !!!

Use EXTREME CARE and ALWAYS REMOVE POWER from all pertinent electrical equipment, which includes multiple power sources, before beginning maintenance. Refer to Section 7.3, "Lockout/Tagout Procedure."

Document completed maintenance tasks on the maintenance checklists included in Appendix B of the Contract.

MONTHLY	• Check traffic gate arm lights for proper operation. Replace burned out bulbs.
SIX MONTHS	• Check gate arm lights and wiring for damage.

8.7 ELECTRIC MOTORS

8.7.1 LOCK MOTORS

8.7.1.1 DESCRIPTION

The electric lock motors transform electric power to mechanical power to drive and pull the lock bars.

Refer to Photo numbered 9.3B.

Refer to Sections 11.1 for component identification and 11.2 for lubrication schematics.

8.7.1.2 NUMBER OF ITEMS AND LOCATION

The north leaf contains two 3 HP span locks motors. One span lock motor is located on each span lock platform located at the toe of the north leaf.

8.7.1.3 MAINTENANCE AND SCHEDULE

!!! WARNING !!!

Use EXTREME CARE and ALWAYS REMOVE POWER from all pertinent electrical equipment, which includes multiple power sources, before beginning maintenance. Refer to Section 7.3, "Lockout/Tagout Procedure."

DO NOT USE WATER TO HOSE DOWN THE MOTOR HOUSING

Document completed maintenance tasks on the maintenance checklists included in Appendix B of the Contract.

ANNUALLY	Motors	• Check for leakage around bearings. Clean off excess grease and dirt using a rag and WD-40 Specialist Machine and Engine Degreaser or equivalent. • Verify that shaft end-play is normal. • Inspect and tighten loose electrical connections on motor. • Verify that all keys, bolts, and pins are in their proper position. Check all bolts for tightness. If loose, tighten. • During operation, examine motor for smooth running and absence of vibration. • During operation, check motor and bearings for overheating. • Check painted surface for signs of corrosion. Clean and spot paint areas of corrosion. Do not paint nameplates. • Lubricate the motor bearings with Mobil Unirex N2 or equivalent. • Check the phase currents flowing in motors under loaded conditions with a clamp-on ammeter for all motors. Utilize a true RMS ammeter. Compare the measured current with the nameplate data. Record values in the "Notes" sections of the maintenance checklist.
	Solenoid Brakes	• Check electrical connections. Tighten loose connections. • Check components for wear or damage. Check for loose fasteners. Tighten loose fasteners. Check for freedom of moving parts (parts are free of binding and sticking). • Check for excessive heating of parts evidenced by discoloration of metal parts, charred insulation, or odor. Check for collections of dirt or gum, evidence of water dripping, or corrosion. Clean the components of dirt, gum, water, and corrosion. • Observe the brake during operation of the span locks. Check for excessive vibration or unusual noise during operation.
FIVE YEARS		• Clean and paint the motors. Do not paint nameplates.

8.7.2 MAIN LEAF (SPAN) MOTORS

8.7.2.1 DESCRIPTION

The main leaf motors transform electric power to mechanical power to raise and lower each leaf.

Normal operation of the bridge utilizes two leaf motors per leaf. However, in the event one of the leaf motors on either leaf is not operational the leaf can still be operated by turning the appropriate selector switch located in the contactor enclosure adjacent to the four drives.

Refer to Photo numbered 9.2A and 9.2Q.

Refer to Sections 11.1 for component identification and 11.2 for lubrication schematics.

8.7.2.2 NUMBER OF ITEMS AND LOCATION

Each electrical/mechanical room contains two 50HP main leaf motors.

8.7.2.3 MAINTENANCE AND SCHEDULE

!!! WARNING !!!

Use EXTREME CARE and ALWAYS REMOVE POWER from all pertinent electrical equipment, which includes multiple power sources, before beginning maintenance. Refer to Section 7.3, "Lockout/Tagout Procedure."

DO NOT USE WATER TO HOSE DOWN THE MOTOR HOUSING

Document completed maintenance tasks on the maintenance checklists included in Appendix B of the Contract.

ANNUALLY (Refer to Section 11.4.6 for Bridge Maintenance Performance Standard)	• Check for leakage around bearings. Clean off excess grease and dirt using a rag and WD-40 Specialist Machine and Engine Degreaser or equivalent. • Verify that shaft end-play is normal. • Inspect and tighten loose electrical connections on motor. • Verify that all keys, bolts, and pins are in their proper position. Check all bolts for tightness. If loose, tighten. • During operation, examine motor for smooth running and absence of vibration. • During operation, check motor and bearings for overheating. • Lubricate main leaf motor bearings with Mobil Unirex N2 or equivalent. • Check painted surface for signs of corrosion. Clean and spot paint areas of corrosion. Do not paint nameplates. • Check the phase currents flowing in motors under loaded conditions with a clamp-on ammeter for all motors. Utilize a true RMS ammeter. Compare the measured current with the nameplate data. Record values in the "Notes" sections of the maintenance checklist.
FIVE YEARS	• Clean and paint the motors. Do not paint nameplates.

8.7.3 TRAFFIC GATE MOTORS

8.7.3.1 DESCRIPTION

The electric motors for the warning gates transform electric power to mechanical power to operate each warning gate. Each gate motor is provided with a solenoid brake to provide holding torque on the specific device. Refer to Photo numbered 9.4E.

Refer to Sections 11.1 for component identification and 11.2 for lubrication schematics.

8.7.3.2 NUMBER OF ITEMS AND LOCATION

Each warning gate contains a $^1/_2$ HP electric motors located inside the warning gate housing.

8.7.3.3 MAINTENANCE AND SCHEDULE

!!! WARNING !!!

Use EXTREME CARE and ALWAYS REMOVE POWER from all pertinent electrical equipment, which includes multiple power sources, before beginning maintenance. Refer to Section 7.3, "Lockout/Tagout Procedure."

DO NOT USE WATER TO HOSE DOWN THE MOTOR HOUSING

Document completed maintenance tasks on the maintenance checklists included in Appendix B of the Contract.

ANNUALLY	Motors	• Check for leakage around bearings. Clean off excess grease and dirt using a rag and WD-40 Specialist Machine and Engine Degreaser or equivalent. • Verify that shaft end-play is normal. • Inspect and tighten loose electrical connections on motor. • Verify that all keys, bolts, and pins are in their proper position. Check all bolts for tightness. If loose, tighten. • During operation, examine motor for smooth running and absence of vibration. • During operation, check motor and bearings for overheating. • Check painted surface for signs of corrosion. Clean and spot paint areas of corrosion. Do not paint nameplates. • Check the phase currents flowing in motors under loaded conditions with a clamp-on ammeter for all motors. Utilize a true RMS ammeter. Compare the measured current with the nameplate data. Record values in the "Notes" sections of the maintenance checklist.
	Solenoid Brakes	• Check electrical connections. Tighten loose connections. • Check components for wear or damage. Check for loose fasteners. Tighten loose fasteners. Check for freedom of moving parts (parts are free of binding and sticking). • Check for excessive heating of parts evidenced by discoloration of metal parts, charred insulation, or odor. Check for collections of dirt or gum, evidence of water dripping, or corrosion. Clean the components of dirt, gum, water, and corrosion. • Observe the brake during operation of the gate. Check for excessive vibration or unusual noise during operation.

8.7.4 AUXILIARY LEAF (SPAN) GEAR MOTORS

8.7.4.1 DESCRIPTION

The auxiliary gear motors transform electric power to mechanical power to raise and lower each leaf at a reduced speed if failure of the main leaf motors occurs.

Each auxiliary gear motor, manufactured by Sew-Eurodrive, is a 10 HP electric motor, connected to a right angle speed reducer.

Refer to Photos numbered 9.2Q and 9.2R.

Refer to Sections 11.1 for component identification and 11.2 for lubrication schematics.

8.7.4.2 NUMBER OF ITEMS AND LOCATION

There are two auxiliary gear motors. One auxiliary gear motor is located in each electrical/mechanical room.

8.7.4.3 MAINTENANCE AND SCHEDULE

!!! WARNING !!!

Use EXTREME CARE and ALWAYS REMOVE POWER from all pertinent electrical equipment, which includes multiple power sources, before beginning maintenance. Refer to Section 7.3, "Lockout/Tagout Procedure."

DO NOT USE WATER TO HOSE DOWN THE MOTOR HOUSING

Document completed maintenance tasks on the maintenance checklists included in Appendix B of the Contract.

ANNUALLY	Gear Motors	• Check for leakage around bearings. Clean off excess grease and dirt using a rag and WD-40 Specialist Machine and Engine Degreaser or equivalent. • Verify that shaft end-play is normal. • Inspect and tighten loose electrical connections on motor. • Verify that all keys, bolts, and pins are in their proper position. Check all bolts for tightness. If loose, tighten. • During operation, examine motor for smooth running and absence of vibration. • During operation, check motor and bearings for overheating. • Check painted surface for signs of corrosion. Clean and spot paint areas of corrosion. Do not paint nameplates. • Check the phase currents flowing in motors under loaded conditions with a clamp-on ammeter for all motors. Utilize a true RMS ammeter. Compare the measured current with the nameplate data. Record values in the "Notes" sections of the maintenance checklist.

	Solenoid Brakes	• Check electrical connections. Tighten loose connections. • Check components for wear or damage. Check for loose fasteners. Tighten loose fasteners. Check for freedom of moving parts (parts are free of binding and sticking). • Check for excessive heating of parts evidenced by discoloration of metal parts, charred insulation, or odor. Check for collections of dirt or gum, evidence of water dripping, or corrosion. Clean the components of dirt, gum, water, and corrosion. • Observe the brake during operation of the auxiliary gear motor. Check for excessive vibration or unusual noise during operation.
FIVE YEARS		• Replace oil in the reducer. Clean around the oil level plug, located near the top of the speed reducer portion of the gear motor. The speed reducer portion is located at the bottom of the gear motor. Place a basin below the drain plug located near the bottom of the housing. Remove the drain plug to drain the oil from the house. Flush the reducer housing to remove contaminants. Reinstall drain plug. Fill reducer housing with Mobil SHC 629 or equivalent until the oil level is at the bottom of the oil level hole. Reinstall the oil level plug. • Clean and paint the motors. Do not paint nameplates.

8.8 CONTROL SYSTEM

8.8.1 CONTROL CONSOLES

8.8.1.1 DESCRIPTION

The control consoles are fabricated from individual free standing cabinets which house indicating lights, selector switches, pushbuttons, meters, control relays, contactors, circuit breakers, fuses, and/or terminal blocks.

Refer to Photos numbered 9.6O and 9.6W.

8.8.1.2 NUMBER OF ITEMS AND LOCATION

The main control console is located in the control room on the top floor of the control house. One auxiliary drive cabinet is located in each electrical/mechanical room.

8.8.1.3 MAINTENANCE AND SCHEDULE

!!! WARNING !!!

Use EXTREME CARE and ALWAYS REMOVE POWER from all pertinent electrical equipment, which includes multiple power sources, before beginning maintenance. Refer to Section 7.3, "Lockout/Tagout Procedure."

Document completed maintenance tasks on the maintenance checklists included in Appendix B of the Contract.

THREE MONTHS	• Open and clean with a vacuum cleaner. • Remove accumulation of dirt, grease, and gum with DeoxIT D5 contact cleaner or equivalent. • Check for corrosion and moisture. Replace corroded hardware. • Lubricate door hinges and latches. • Inspect terminal block screws and tighten all loose connections. • Inspect wiring from unit terminal blocks for deterioration of insulation • Inspect all circuit breakers. Verify with a meter that continuity is broken on trip or switch off conditions. With the circuit breaker in the OFF position, use a multimeter to measure the current on the load side conductors. The multimeter should read 0 amps and 0 volts. • Inspect all fuses with a meter and verify continuity. For fuse replacement, always install the same type and rating fuses furnished with the control console. Evolution in fuse design has produced fuses that are mechanically equivalent but not electrically equivalent. They may not have the same short-circuit withstand ability and current limiting ability. • Inspect all relays and tighten loose connections. • Check all pushbuttons, selector switches and meters for damage and proper operation. • Check all indicating lights and verify that each lamp illuminates. Replace burned out bulbs. • Verify enclosure lights turn on when doors are open. Replace burned out bulbs. • Remove indicating light covers and check springs are firmly seated and each bulb and lamp holder is making sufficient contact. • Check condition of gaskets and replace if damaged.
ANNUALLY	• Replace all indicating light bulbs • Check for discolored connections on terminals, contact supports, bus bars, or connectors. Discoloration usually indicates that overheating has occurred, probably because of loose connections. Clean connection points that are discolored. Tighten all loose hardware. Check wires and connectors for damage. • Manually operate each relay and contactor with associated circuit breakers off and observe contact operation to be sure it opens and closes cleanly and that the contacts are fully sealed in the closed position. In order to manually operate a relay or contactor with the associated circuit breaker off, verify that power is off, and with a non-conductive object, press the button the relay or contactor. The button is usually located on the front or bottom of the housing. • Monitor relay and contactor operation during normal operation and check for loud noise and arcing, both on opening and on closing. A loud noise and arcing on closing is usually due to contact bounce.

8.8.2 LIMIT SWITCHES

8.8.2.1 DESCRIPTION

A limit switch is a switching device that provides feedback in an electrical circuit. When actuated, this device will restrict or initiate an operation.

Refer to Photos numbered 9.4B, 9.4D, 9.4E, 9.6P, 9.6R, 9.6S, 9.6T, and 9.6X.

Refer to Section 11.1 for component identification.

8.8.2.2 NUMBER OF ITEMS AND LOCATION

Limit switches and resolvers on the bridge are located as follows:

- Span Control
  - Twelve circuit main span position rotary cam limit switches (2) – One located in each electrical/mechanical room above the inboard span motor.
  - Six circuit auxiliary span position rotary cam limit switches (2) – One located in each electrical/mechanical room above the inboard span motor.
  - Brake Limit Switches (12) – Two located on each brake frame
  - Sprocket Guard Limit Switch (2) – One located in each electrical/mechanical room adjacent to the auxiliary gear motor.
  - Fully Seated Limit Switch (2) – One located near the tail end of the NE and SW bascule girders
  - Selsyn Position Transmitter (2) – One located adjacent to each main span position rotary cam limit switch
- Lock Control:
  - Span Lock Pulled Limit Switch (2) – One located on each span lock platform
  - Span Lock Driven Limit Switch (2) - One located on each span lock platform
- Traffic Control:
  - Eight Circuit Warning Gate Rotary Cam Limit Switch (4) – One located inside each warning gate housing
  - Warning Gate Door Switches (2) – Two located on the NW warning gate housing access doors
  - Warning Gate Manual Operation Limit Switch (4) - One located in each warning gate housing.

8.8.2.3 MAINTENANCE AND SCHEDULE

!!! WARNING !!!

Use EXTREME CARE and ALWAYS REMOVE POWER from all pertinent electrical equipment, which includes multiple power sources, before beginning maintenance. Refer to Section 7.3, "Lockout/Tagout Procedure."

Document completed maintenance tasks on the maintenance checklists included in Appendix B of the Contract.

ANNUALLY	All	• Inspect all limit switches for wear. • Remove accumulated dust, dirt, and moisture on housing. Use brush, soft cloth, or vacuum cleaner. • Remove accumulated dust, dirt, and moisture from all shafts, keeping it clean and free of galling. • Inspect latches, mounting hardware and seals to ensure proper seal of housing. • Inspect all fasteners and tighten loose connections. Replace corroded hardware. • If accessible, remove the cover and visually inspect condition of all internal parts. • Check for worn or broken mechanical parts.
	Rotary Cam Limit Switch	• Inspect the rollers and cams for wear.
	Span Lock, Brake, and Sprocket Guard Limit Switches	• Inspect snap action contact blocks and integral component connections. Tighten loose connections. • Inspect all wiring from snap action contact blocks for deterioration. • Cycle lever arm several times.
	Fully Seated Limit Switches	• Inspect all wiring for deterioration. • Inspect limit switch body and remove debris. • Inspect strike plate and magnet for corrosion and remove debris.

8.8.3 SPEED SWITCHES AND TACHOMETER ASSEMBLY

8.8.3.1 DESCRIPTION

A centrifugal speed switch and tachometer assembly is installed in each electrical/mechanical room to check operating speeds during normal operation and provide feedback to the motor drives. In the event the correct speed is not reached during deceleration or the running speeds exceed 750 RPM, the control system will perform an emergency stop.

Refer to Photos numbered 9.2A and 9.2P.

Refer to Section 11.1 for component identification.

8.8.3.2 NUMBER OF ITEMS AND LOCATION

A single overspeed and tachometer assembly is located in each electrical/mechanical room coupled to an output shaft extended from Leaf Motor No. 1.

8.8.3.3 MAINTENANCE AND SCHEDULE

!!! WARNING !!!

Use EXTREME CARE and ALWAYS REMOVE POWER from all pertinent electrical equipment, which includes multiple power sources, before beginning maintenance. Refer to Section 7.3, "Lockout/Tagout Procedure."

Document completed maintenance tasks on the maintenance checklists included in Appendix B of the Contract.

ANNUALLY	• Remove accumulated dust, dirt, and moisture on housing. Use brush, soft cloth, or vacuum cleaner. • Remove accumulated dust, dirt, and moisture from shafts, keeping them clean and free of galling. • Inspect cover to ensure proper seal of housing. • Inspect all fasteners and tighten connections if loose. Replace corroded fasteners. • Check components for wear or damage. Replace worn or damaged belts. Consult the manufacturer for the correct belt type and size. • Check belt tension per manufacturer's recommendations and adjust tension if belt is excessively loose. Correct tension is obtained when 3.5 ounces of force in the center of the timing belt between the pulleys gives 0.015 inches of belt deflection per inch of distance between pulleys. • Check condition of gaskets and replace if damaged.

8.9 MISCELLANEOUS EQUIPMENT

8.9.1 ELECTRIC HORN, AIR HORN AND AIR COMPRESSORS

8.9.1.1 DESCRIPTION

An electric horn and an air horn provide an audible signal to vessels prior to and following bridge openings. Either horn is activated manually by turning or pushing the navigation horn selector switch.

Refer to Photo numbered 9.7B.

8.9.1.2 NUMBER OF ITEMS AND LOCATION

The electric horn and the air horn are located on the control house roof.

8.9.1.3 MAINTENANCE AND SCHEDULE

!!! WARNING !!!

Use EXTREME CARE and ALWAYS REMOVE POWER from all pertinent electrical equipment, which includes multiple power sources, before beginning maintenance. Refer to Section 7.3, "Lockout/Tagout Procedure."

Document completed maintenance tasks on the maintenance checklists included in Appendix B of the Contract.

MONTHLY	• Perform a general visual inspection of the equipment and check for proper operation of the system.
ANNUALLY	• Check electrical connections and tighten loose connections. • Operate the compressor under load and check for excessive heating of parts evidenced by discoloration of metal parts, charred insulation, or odor. • Check and clean components of collections of dirt or gum, evidence of water dripping, or corrosion. • Check the air horn trumpets for debris inside the trumpets. • Inspect connecting piping, tubing or hoses for cracking or leaks. • Check the condition of the air filter. Replace filter if dirty or damaged. • Tighten loose hardware. Check hardware for corrosion.

8.9.2 HEATING AND AIR CONDITIONING SYSTEMS

8.9.2.1 DESCRIPTION

HVAC systems provide service for the control house. Comfort heaters serve the electrical/mechanical rooms, generator room and storage room.

Refer to Photo numbered 9.7A.

8.9.2.2 NUMBER OF ITEMS AND LOCATION

One outdoor air-conditioning and heating unit is located on the roof of the control house. Supply ducts located in the control room carry the air conditioning and heating into the control room.

8.9.2.3 MAINTENANCE AND SCHEDULE

!!! WARNING !!!

Use EXTREME CARE and ALWAYS REMOVE POWER from all pertinent electrical equipment, which includes multiple power sources, before beginning maintenance. Refer to Section 7.3, "Lockout/Tagout Procedure."

Document completed maintenance tasks on the maintenance checklists included in Appendix B of the Contract.

MONTHLY	• Check all air filters. Replace dirty or damaged filters. Do not use chemicals to clean the unit. • Check all cooling coils, seals, fittings, ducting connections and pipelines for leaks. • Check surfaces of casing for signs of corrosion. Retreat or repaint areas of corrosion. • Inspect the condition of all safety devices for deterioration. • Check the performance of all equipment related to temperature and humidity control.

8.9.3 SUMP PUMPS

8.9.3.1 DESCRIPTION

A sump pump system is used to remove water from each counterweight pit.

Refer to Photo numbered 9.7F.

8.9.3.2 NUMBER OF ITEMS AND LOCATION

Sump pump systems are located in each counterweight pit on the bridge. A sump pump control panel is located adjacent to the pump motors.

8.9.3.3 MAINTENANCE AND SCHEDULE

!!! WARNING !!!

Use EXTREME CARE and ALWAYS REMOVE POWER from all pertinent electrical equipment, which includes multiple power sources, before beginning maintenance. Refer to Section 7.3, "Lockout/Tagout Procedure."

Document completed maintenance tasks on the maintenance checklists included in Appendix B of the Contract.

MONTHLY	• Dump buckets of water or run water from a hose into the sump to test the pump's response and look for leaks. Verify that water is pumped out from sump and there is no back-flow. Do not flood the surrounding floor or area. • Check that the motor is free of all debris • During operation, examine motor for smooth running and absence of excessive vibration.

8.9.4 EXHAUST FANS

8.9.4.1 DESCRIPTION

Exhaust fans are installed to vent fresh air into the storage house, generator room and north electrical/mechanical room.

Refer to Photo numbered 9.7G.

8.9.4.2 NUMBER OF ITEMS AND LOCATION

Two exhaust fans are located on the roof the storage house, one exhaust fan is installed in the generator room and the north electrical/mechanical room.

8.9.4.3 MAINTENANCE AND SCHEDULE

!!! WARNING !!!

Use EXTREME CARE and ALWAYS REMOVE POWER from all pertinent electrical equipment, which includes multiple power sources, before beginning maintenance. Refer to Section 7.3, "Lockout/Tagout Procedure."

Document completed maintenance tasks on the maintenance checklists included in Appendix B of the Contract.

ANNUALLY	• Check any belts for wear, damage and tightness. Tension belts if loose. Replace belts if damaged or worn. When replacing belts, use the same type as supplied with the unit. • Check all seals, fittings and connections for leaks. • Check surfaces of casing for signs of corrosion. Clean and spot paint areas of corrosion. • Inspect the condition of all safety devices for deterioration. • Observe the exhaust fans for unusual noises or vibrations during operation.

8.9.5 MOTORIZED DAMPERS

8.9.5.1 DESCRIPTION

Dampers are installed to vent fresh air as well as the exhaust air to and from the generator room and electrical/mechanical rooms.

Refer to Photo numbered 9.7H.

8.9.5.2 NUMBER OF ITEMS AND LOCATION

A damper and associated motor is located in the generator room and each electrical/mechanical room. Each damper is operated by a motorized actuator.

8.9.5.3 MAINTENANCE AND SCHEDULE

!!! WARNING !!!

Use EXTREME CARE and ALWAYS REMOVE POWER from all pertinent electrical equipment, which includes multiple power sources, before beginning maintenance. Refer to Section 7.3, "Lockout/Tagout Procedure."

Document completed maintenance tasks on the maintenance checklists included in Appendix B of the Contract.

ANNUALLY	• Clean debris from damper and louver components. Apply a couple of drops of Mobil Mobilgear 600 XP 100 or equivalent to pivot pints. • With the blades in the closed position, check for gaps between the blades. Adjust linkages to correct any misalignment. Check the condition of any louver or damper blade edge and jamb seals. • Observe the motor motor/operator during operation. Check for any abnormal noise or binding. Check the operator anchorage for damage. • Check the freedom of movement of the louver and damper blades and linkages. Blades should be disconnected from their operators and manually checked. • Check damper and louver components for wear, damage and corrosion. Clean and spot paint areas of corrosion.

8.9.6 WATER HEATER

8.9.6.1 DESCRIPTION

A hot water heater is used to supply the bathroom sink with hot water.

8.9.6.2 NUMBER OF ITEMS AND LOCATION

A single hot water heater is located inside the bathroom.

8.9.6.3 MAINTENANCE AND SCHEDULE

!!! WARNING !!!

Use EXTREME CARE and ALWAYS REMOVE POWER from all pertinent electrical equipment, which includes multiple power sources, before beginning maintenance. Refer to Section 7.3, "Lockout/Tagout Procedure."

Document completed maintenance tasks on the maintenance checklists included in Appendix B of the Contract.

MONTHLY	• Check the unit and associate piping for leaks. • Turn the hot water on at the sink and verify that the water turns hot.

8.9.7 HEAT TRACE

8.9.7.1 DESCRIPTION

Heat trace cabling is installed on the water and waste lines to prevent freezing during winter months.

Refer to Photo numbered 9.7I.

8.9.7.2 NUMBER OF ITEMS AND LOCATION

The heat trace cable is installed on piping routed along the north approach

8.9.7.3 MAINTENANCE AND SCHEDULE

!!! WARNING !!!

Use EXTREME CARE and ALWAYS REMOVE POWER from all pertinent electrical equipment, which includes multiple power sources, before beginning maintenance. Refer to Section 7.3, "Lockout/Tagout Procedure."

Document completed maintenance tasks on the maintenance checklists included in Appendix B of the Contract.

ANNUALLY	• Visually inspect the pipe, insulation, and connections to the heating cable for physical damage. Check that no moisture is present in junction boxes, electrical connections are tight and grounded, and insulation is dry and sealed. Tighten fasteners if loose.

8.9.8 PITS, PLATFORMS, AND WALKWAYS

8.9.8.1 DESCRIPTION

Each counterweight pit provides an area for the counterweight to travel during operation of the bridge. Platforms and walkways provide access to electrical and mechanical components throughout the bascule pier.

Refer to Photo numbered 9.1A, 9.1B, 9.1D, 9.1E, and 9.2J.

8.9.8.2 NUMBER OF ITEMS AND LOCATION

One counterweight pit is located at the bottom of each bascule pier. One platform is located within each bascule pier. Walkways are located within the bascule pier.

8.9.8.3 MAINTENANCE AND SCHEDULE

!!! WARNING !!!

Use EXTREME CARE and ALWAYS REMOVE POWER from all pertinent electrical equipment, which includes multiple power sources, before beginning maintenance. Refer to Section 7.3, "Lockout/Tagout Procedure."

!!! WARNING !!!

Use EXTREME CARE and VERIFY that electrical components and enclosures do not get wet.

Document completed maintenance tasks on the maintenance checklists included in Appendix B of the Contract.

SIX MONTHS	• Clean and power wash the counterweight pits, platforms, and walkways of dirt and debris. Electrical equipment must be protected prior to power washing walkways to prevent water from entering any electrical component. Water intrusion may cause failure to components.

8.9.9 CONDUIT SYSTEMS

8.9.9.1 DESCRIPTION

Conduit, boxes, and supports are used throughout the bridge to route and protect the control and power cables.

8.9.9.2 NUMBER OF ITEMS AND LOCATION

Conduit, boxes, and supports are located throughout the bridge including in the control house, at the span lock platform, in the electrical/mechanical rooms, etc.

8.9.9.3 MAINTENANCE AND SCHEDULE

!!! WARNING !!!

Use EXTREME CARE and ALWAYS REMOVE POWER from all pertinent electrical equipment, which includes multiple power sources, before beginning maintenance. Refer to Section 7.3, "Lockout/Tagout Procedure."

Document completed maintenance tasks on the maintenance checklists included in Appendix B of the Contract.

ANNUALLY	• Open and clean boxes with a vacuum cleaner. • Remove accumulation of dirt, grease, and gum from conduit. • Check for corrosion and moisture. Check conduit for cracking or other damage. Replace corroded hardware. • Tighten loose mounting and connections. • Check condition of gaskets in boxes and replace gaskets if damaged. • Lubricate door hinges and latches, where provided, with 3-IN-ONE Multipurpose oil. • Check and clean all drain holes and fittings.
FIVE YEARS	• Clean and paint all corrosion and oxidation from steel conduit and supports. • Where PVC coated steel conduit is installed, apply touch up compound to cracks and/or cuts in coating.

CHAPTER 9 - PHOTOS

GUIDE TO PHOTOS

9.1 Leaf Support System and Counterweights

9.1A - Trunnion Bearing (Non Span Drive Machinery Side) 9-4
9.1B - Trunnion Bearing (Span Drive Machinery Side) 9-4
9.1C - Live Load Bearing 9-5
9.1D - Live Load Anchorage 9-5
9.1E - Counterweight 9-6
9.1F - Counterweight Pockets 9-6

9.2 Span Drive Machinery

9.2A - Span Drive Machinery in Electrical/Mechanical Room 9-7
9.2B - Machinery Brake 9-7
9.2C - Motor Brake 9-8
9.2D - Bearing and Coupling Inside the Trunnion Girder 9-8
9.2E - Secondary Open Gear Frame Inside the Trunnion Girder 9-9
9.2F - Secondary Open Gearing Inside the Trunnion Girder 9-9
9.2G - Primary Open Gear Frame Input 9-10
9.2H - Primary Open Gear Frame On the Counterweight 9-10
9.2I - Primary Open Gearing Main Pinion 9-11
9.2J - Primary Open Gearing Rack (Bridge Open) 9-11
9.2K - Span Position Instrumentation Linkages 9-12
9.2L - Span Position Instrumentation Crank Arm 9-12
9.2M - Span Position Instrumentation Lever 9-13
9.2N - Span Position Instrumentation Open Gearing 9-13
9.2O - Span Position Instrumentation Transmitter 9-14
9.2P - Tachometer/Overspeed Switch Assembly 9-14

9.3 Span Lock Machinery and Centering Equipment

9.3A - Span Lock Machinery 9-15
9.3B - Span Lock Reducer and Motor 9-15
9.3C - Span Lock Rack and Pinion 9-16
9.3D - Span Lock Bar Rear Guide 9-16
9.3E - Span Lock Bar Front Guide (Lock Bar Retracted) 9-17

9.3F - Span Lock Receiving Socket 9-17
9.3G - Centering Guide 9-18
9.3H - Centering Device 9-18

9.4 Traffic Control Devices and Navigation Lights
9.4A - Traffic Control Equipment 9-19
9.4B - Warning Gate Equipment Type 1 (Front) 9-19
9.4C - Warning Gate Equipment Type 1 (Back) 9-20
9.4D - Warning Gate Equipment Type 2 (Front) 9-20
9.4E - Warning Gate Equipment Type 2 (Back) 9-21
9.4F - Warning Gate Arm Lights 9-21
9.4G - Span Navigation Lights 9-22
9.4H - Fender Navigation Lights 9-22

9.5 Power Distribution Equipment
9.5A - Main Incoming Utility Transformer 9-23
9.5B - Emergency Generator 9-23
9.5C - Emergency Generator 9-24
9.5D - Lighting Transformer 9-24
9.5E - Automatic Transfer Switch 9-25
9.5F - Power Distribution Panelboard 9-25

9.6 Control Equipment
9.6A - Main Circuit Breaker 9-26
9.6B - South Control Cabinet 9-26
9.6C - North Control Cabinet Type 1 9-27
9.6D - North Control Cabinet Type 2 and Relay Cabinet 9-27
9.6E - North Control Cabinet Type 3 (Top View) 9-28
9.6F - North Control Cabinet Type 3 (Bottom View) 9-28
9.6G - Drive Cabinet 9-29
9.6H - South Drive Secondary Resistors 9-29
9.6I - North Primary and Secondary Resistors 9-30
9.6J - Leaf Motors and Disconnect Switches 9-30
9.6K - Span Lock Disconnect Switch 9-31
9.6L - Movable Droop Cable Termination Box 9-31

9.6M - Fixed Droop Cable Termination Box 9-32
9.6N - Submarine Termination Box 9-32
9.6O - Control Console 9-33
9.6P - Span Position Rotary Cam Limit Switches 9-33
9.6Q - Span Position Rotary Cam Limit Switch Components 9-34
9.6R - Span Position Selsyn Transmitter 9-34
9.6S - Fully Seated Limit Switch (Plunger Style) 9-35
9.6T - Fully Seated Limit Switch Components (Plunger Style) 9-35
9.6U - Span Lock Limit Switches (Lever Style) 9-36
9.6V - Brake Limit Switches (Lever Style) 9-36

9.7 Miscellaneous Equipment
9.7A - Heater 9-37
9.7B - Air Horn and HVAC Outdoor Unit 9-37
9.7C - Emergency Light Fixture Type 1 9-38
9.7D - Service Light Fixture Type 1 9-38
9.7E - Service Light Fixture Type 2 9-39
9.7F - Abandoned Sump Pump With Disconnect Switch 9-39
9.7G - Exhaust Fan 9-40
9.7H - Motorized Damper 9-40
9.7I - Heat Trace 9-41

9.1 LEAF SUPPORT SYSTEM AND COUNTERWEIGHTS

PHOTO 9.1A – TRUNNION BEARING (NON-SPAN DRIVE MACHINERY SIDE)

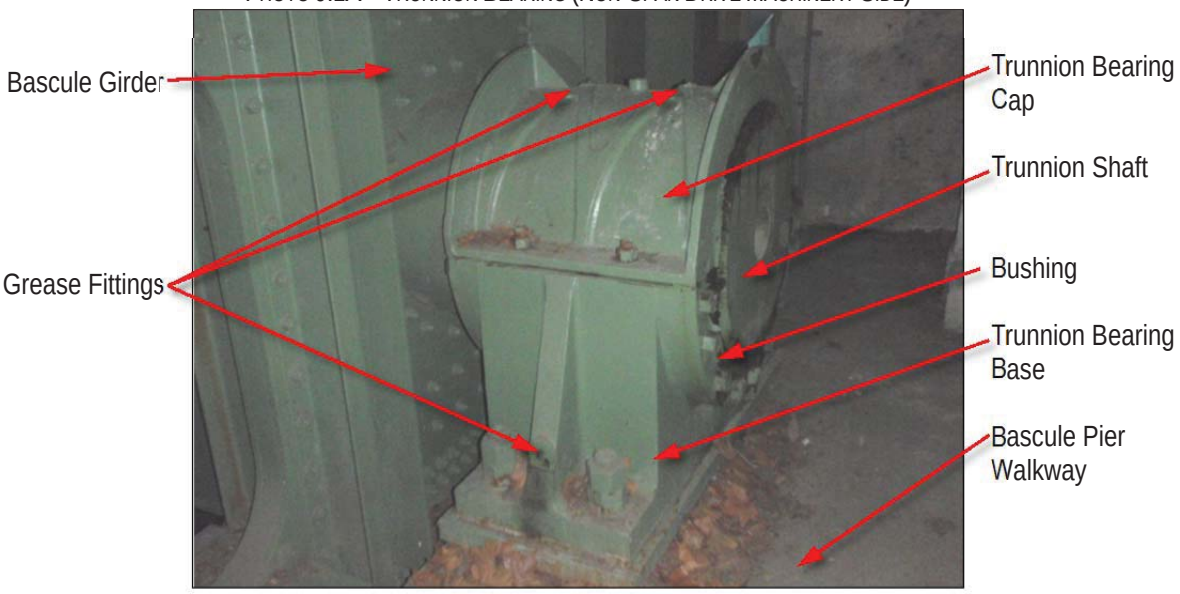

PHOTO 9.1B – TRUNNION BEARING (SPAN DRIVE MACHINERY SIDE)

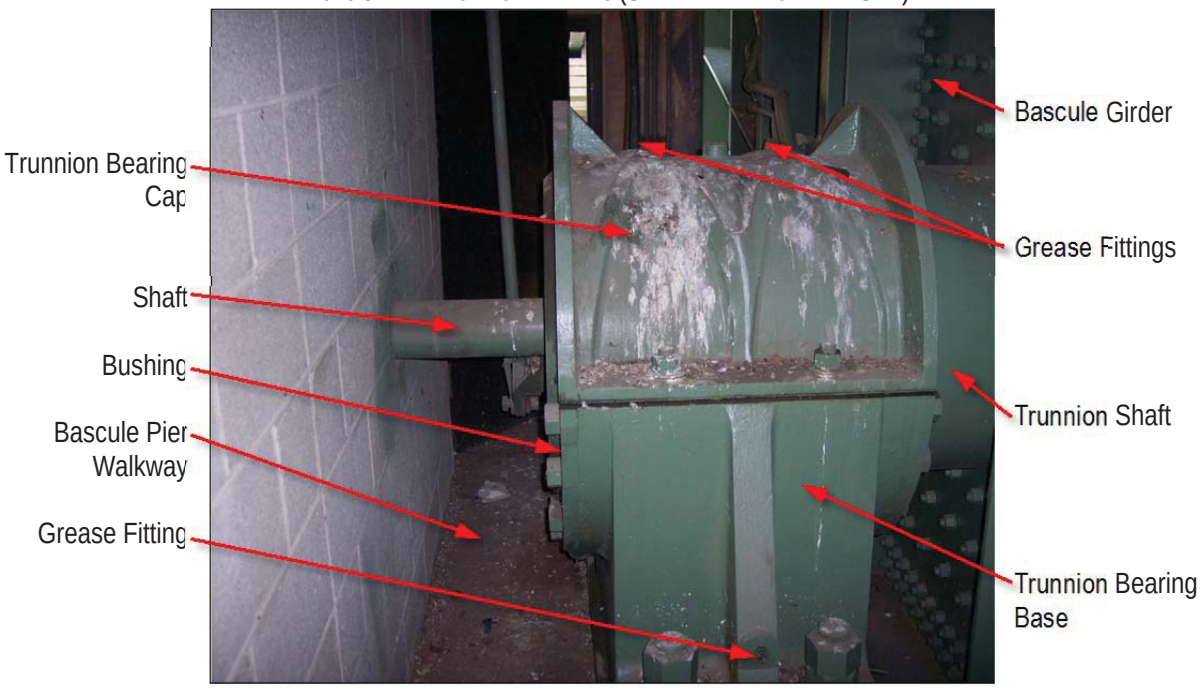

PHOTO 9.1C – LIVE LOAD BEARING

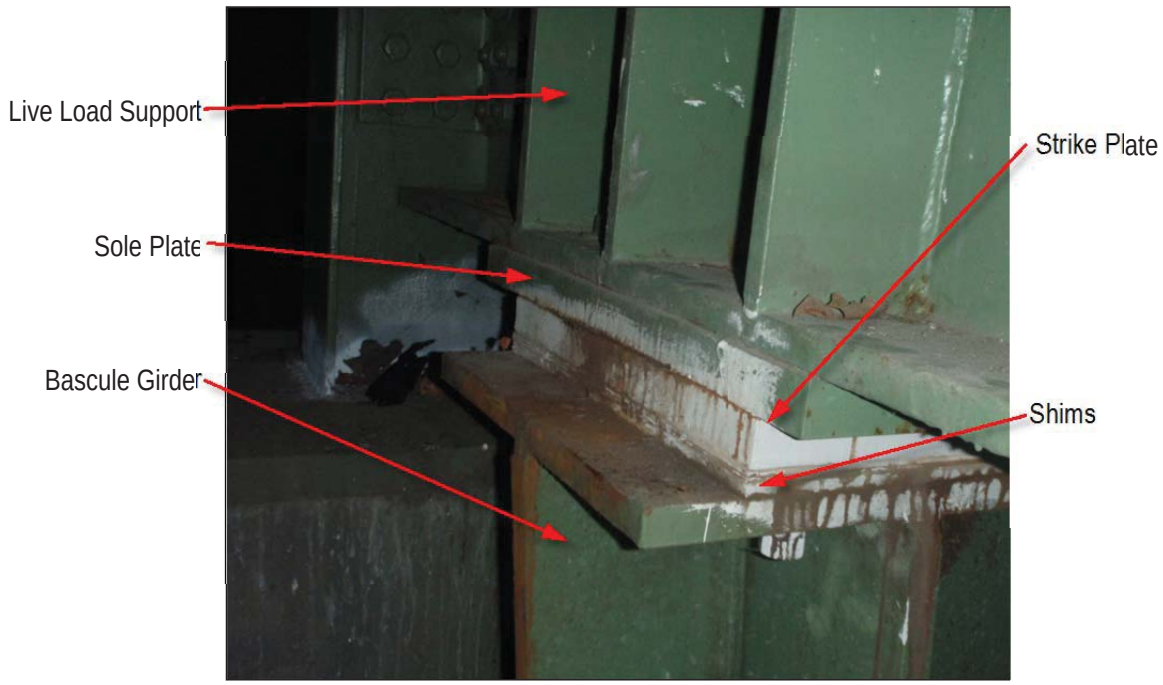

PHOTO 9.1D – LIVE LOAD ANCHORAGE

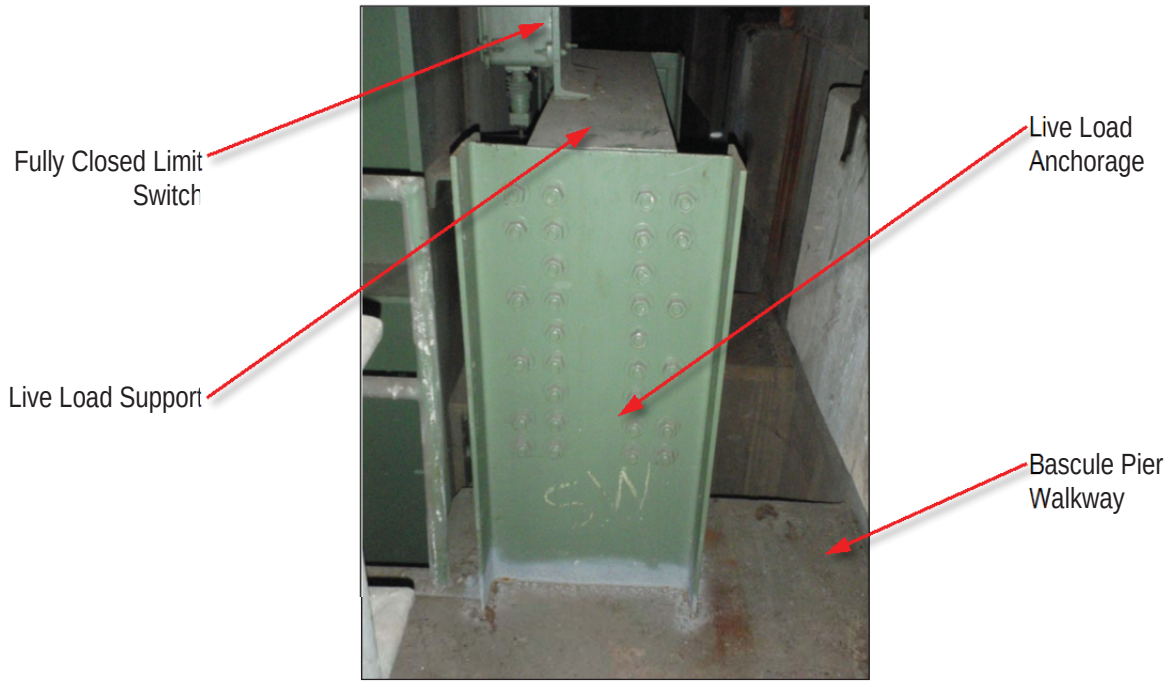

PHOTO 9.1E –COUNTERWEIGHT

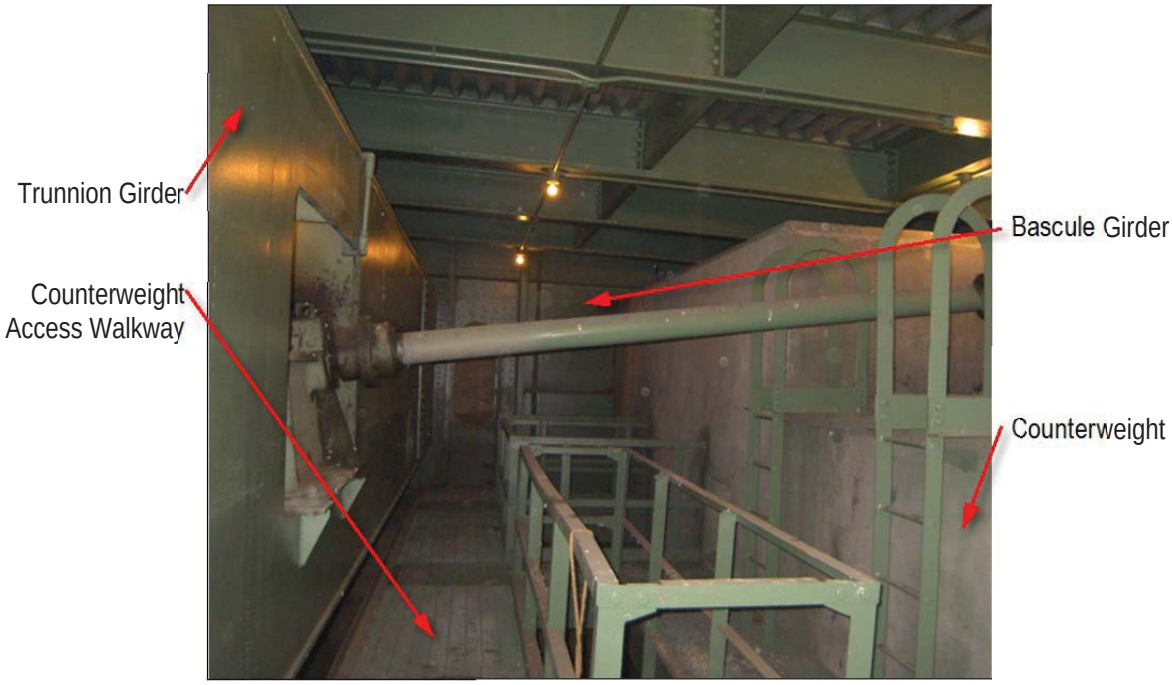

PHOTO 9.1F –COUNTERWEIGHT POCKETS

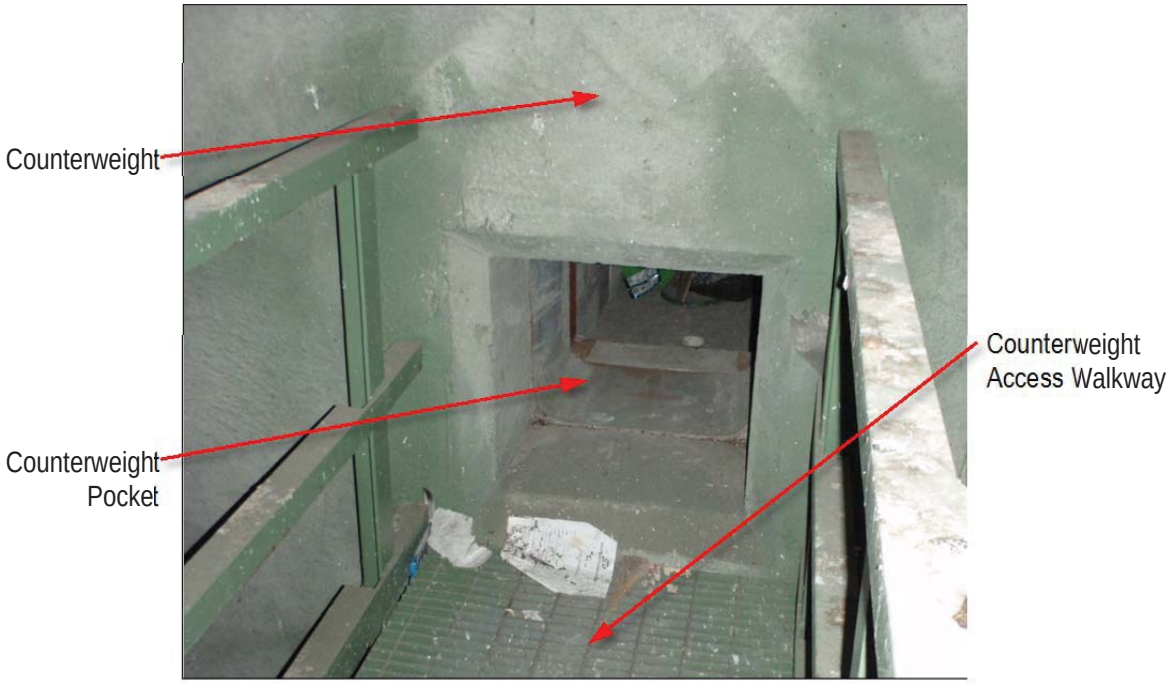

9.2 SPAN DRIVE MACHINERY

PHOTO 9.2A – SPAN DRIVE MACHINERY IN ELECTRICAL / MECHANICAL ROOM

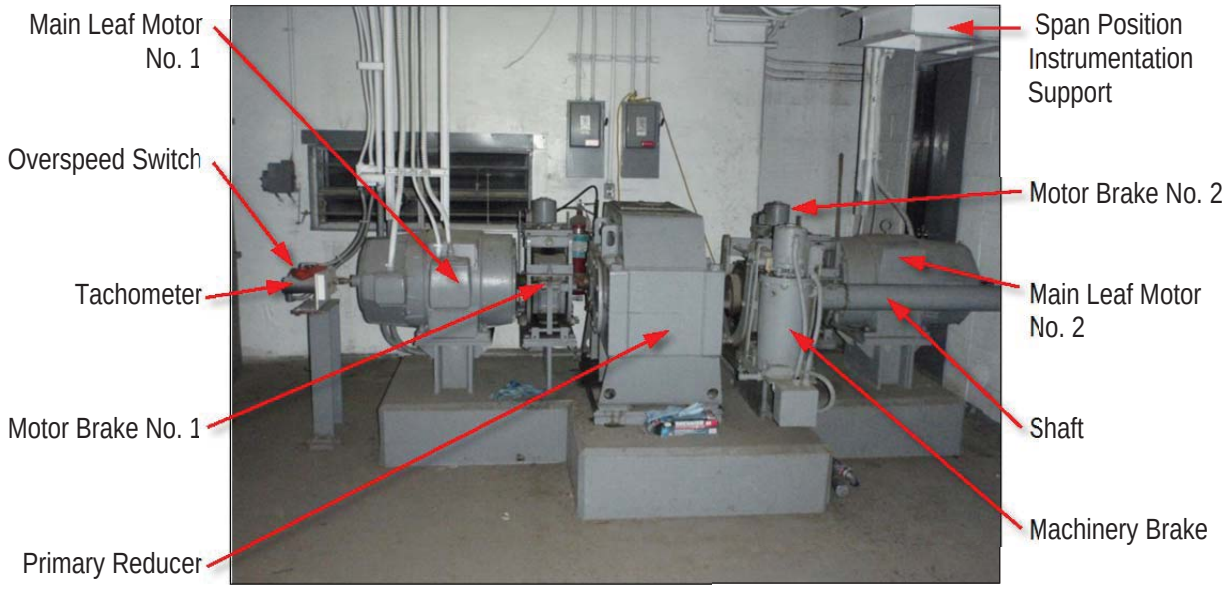

PHOTO 9.2B – MACHINERY BRAKE

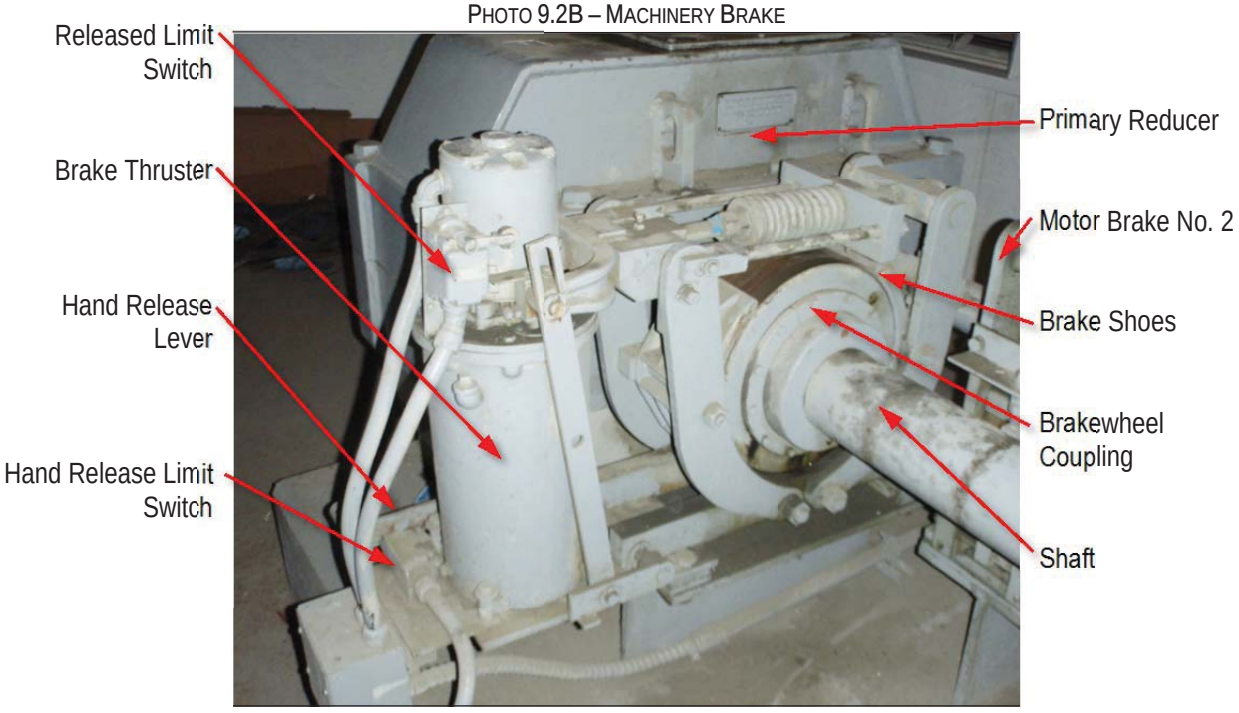

PHOTO 9.2C – MOTOR BRAKE

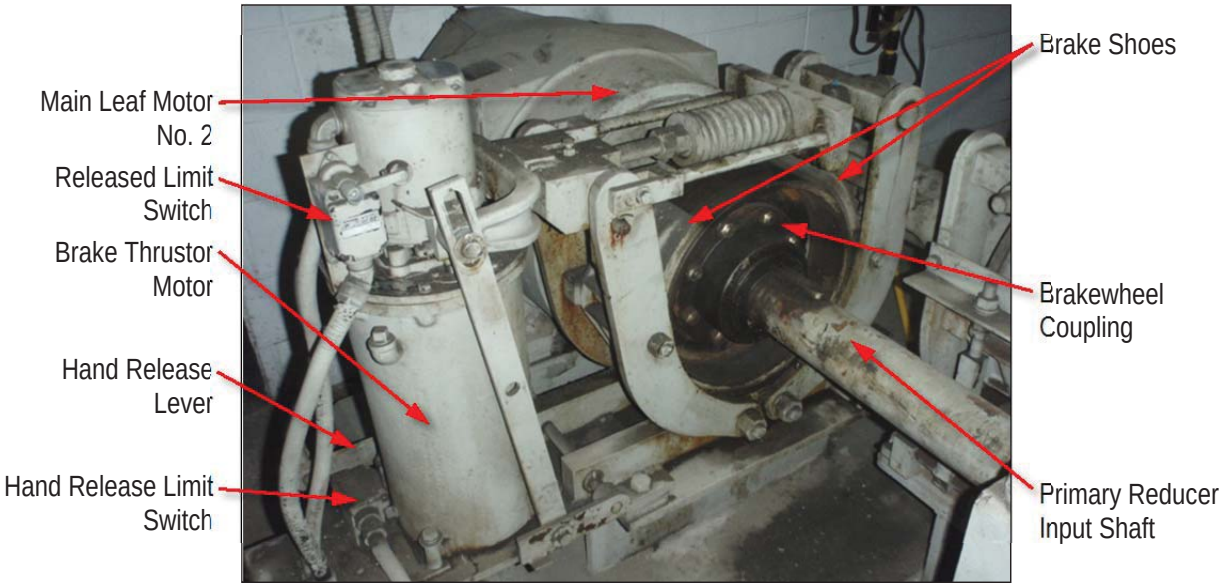

PHOTO 9.2D – BEARING AND COUPLING INSIDE THE TRUNNION GIRDER

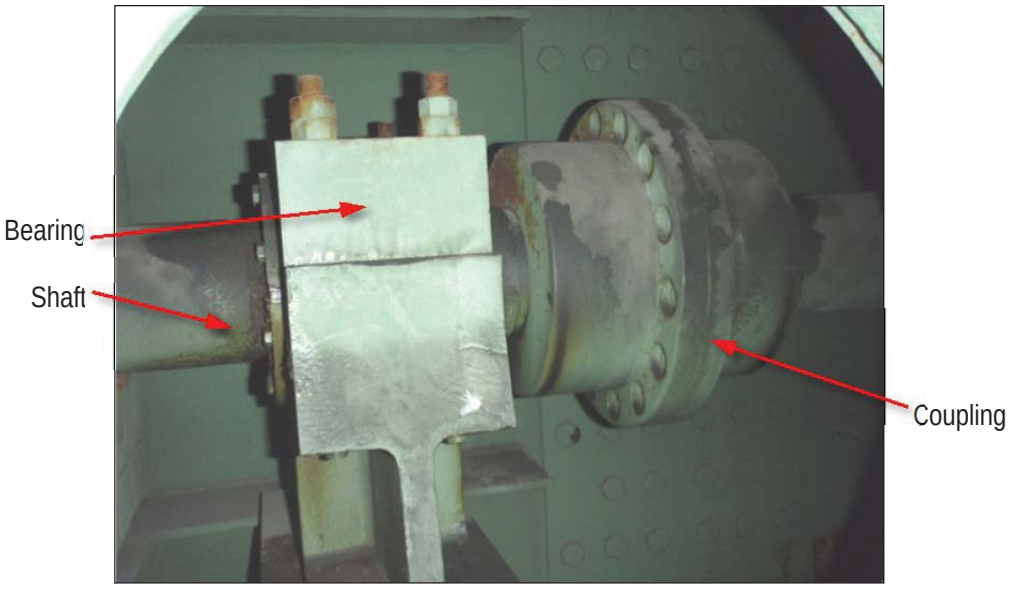

PHOTO 9.2E – SECONDARY OPEN GEAR FRAME INSIDE THE TRUNNION GIRDER

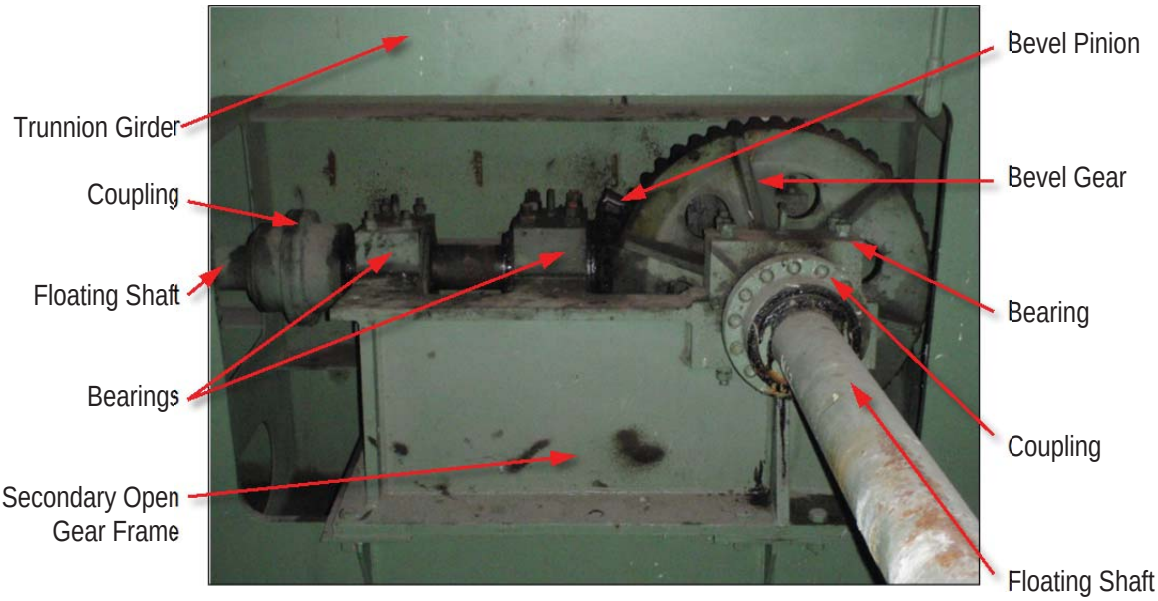

PHOTO 9.2F – SECONDARY OPEN GEARING INSIDE THE TRUNION GIRDER

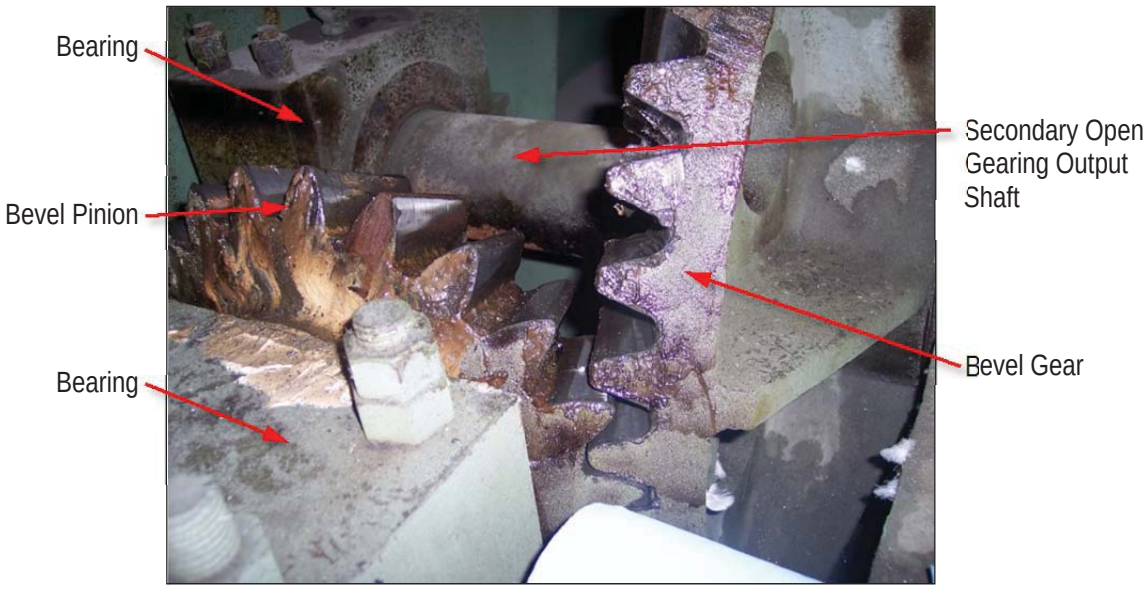

PHOTO 9.2G – PRIMARY OPEN GEAR FRAME INPUT

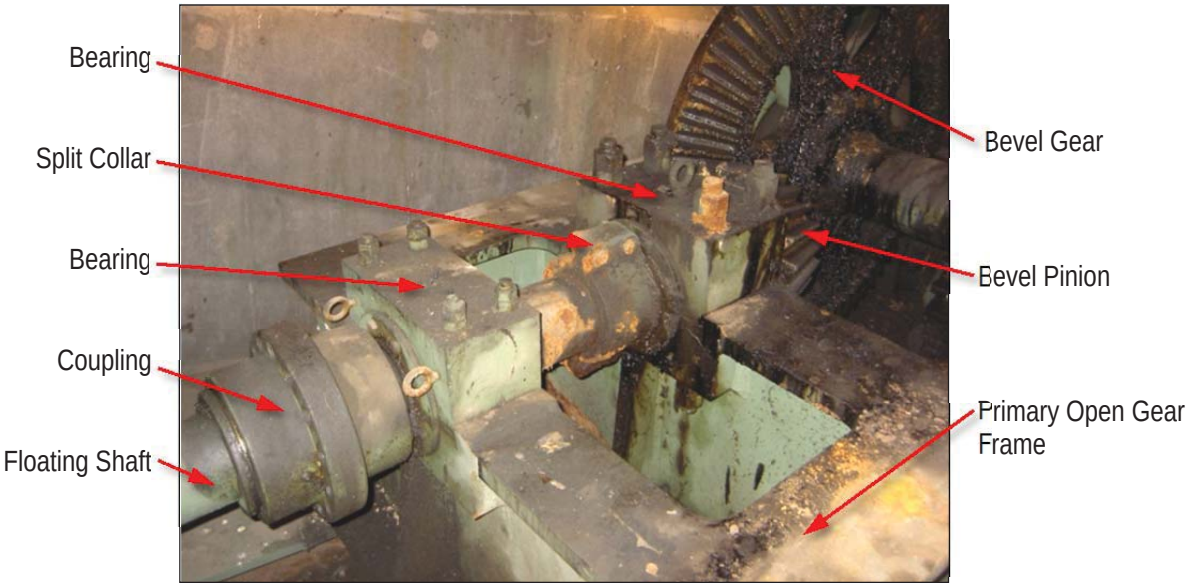

PHOTO 9.2H – PRIMARY OPEN GEAR FRAME ON THE COUNTERWEIGHT

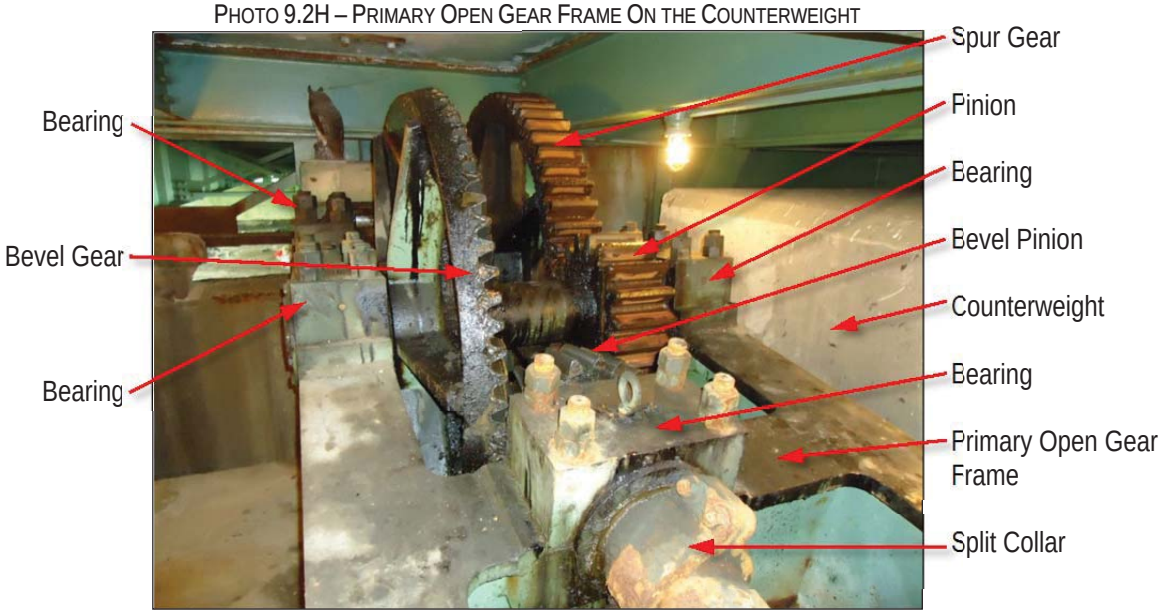

PHOTO 9.2I – PRIMARY OPEN GEARING MAIN PINION

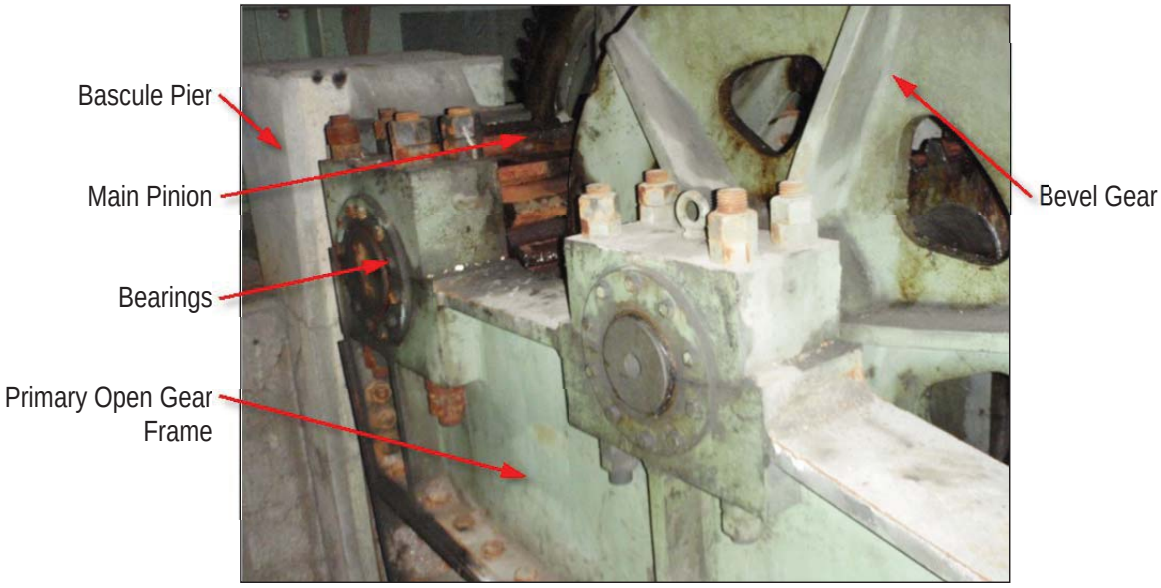

PHOTO 9.2J – PRIMARY OPEN GEARING RACK (BRIDGE OPEN)

PHOTO 9.2K – SPAN POSITION INSTRUMENTATION LINKAGES

PHOTO 9.2L – SPAN POSITION INSTRUMENTATION CRANK ARM

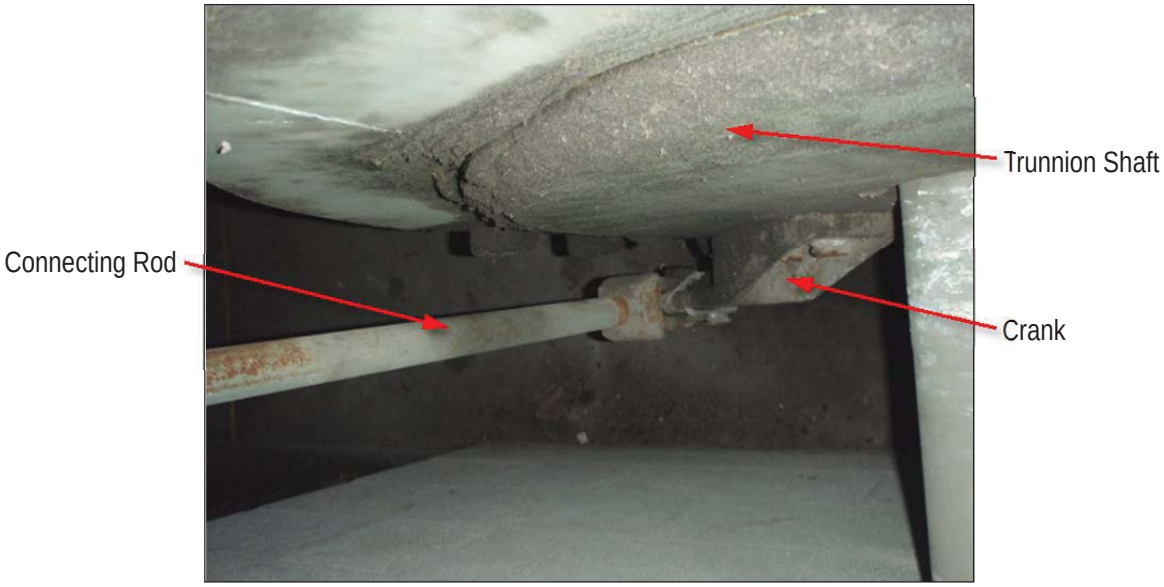

PHOTO 9.2M – SPAN POSITION INSTRUMENTATION LEVER

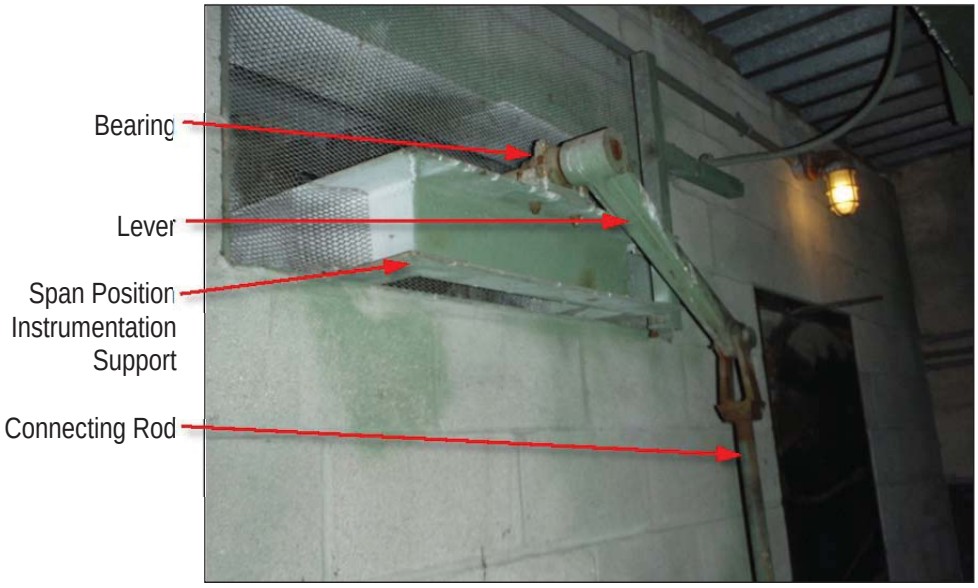

PHOTO 9.2N – SPAN POSITION INSTRUMENTATION OPEN GEARING

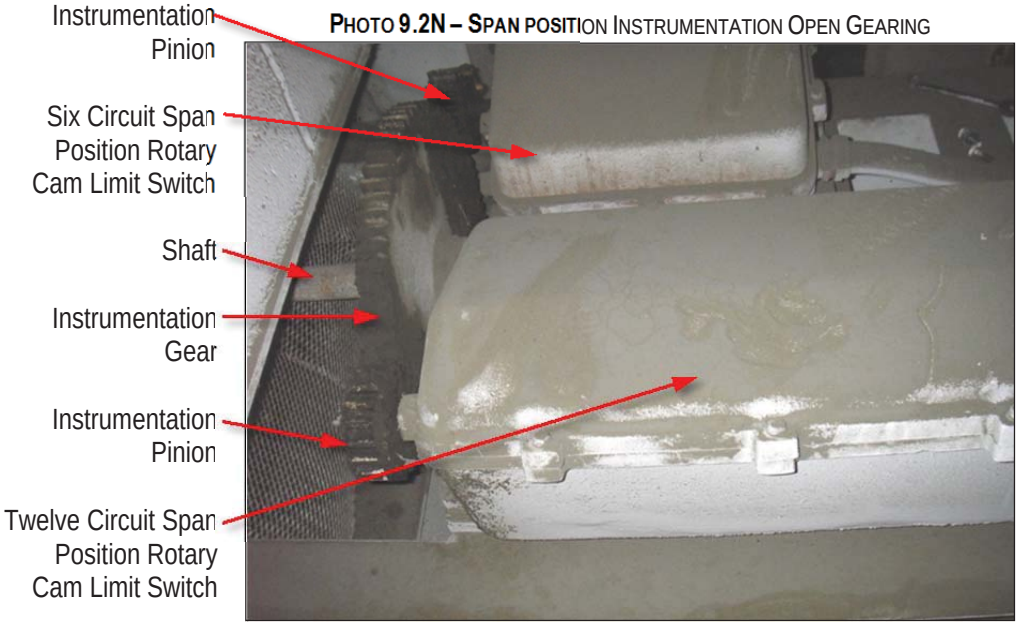

PHOTO 9.2O – SPAN POSITION INSTRUMENTATIONTRANSMITER

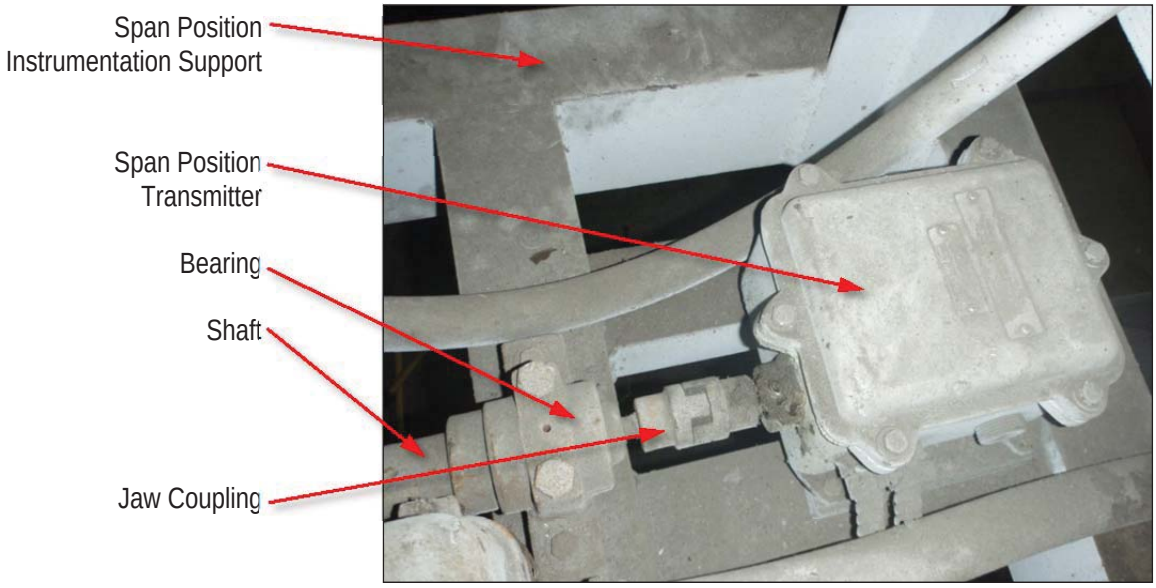

PHOTO 9.2L – TACHOMETER/OVERSPEED SWITCH ASSEMBLY

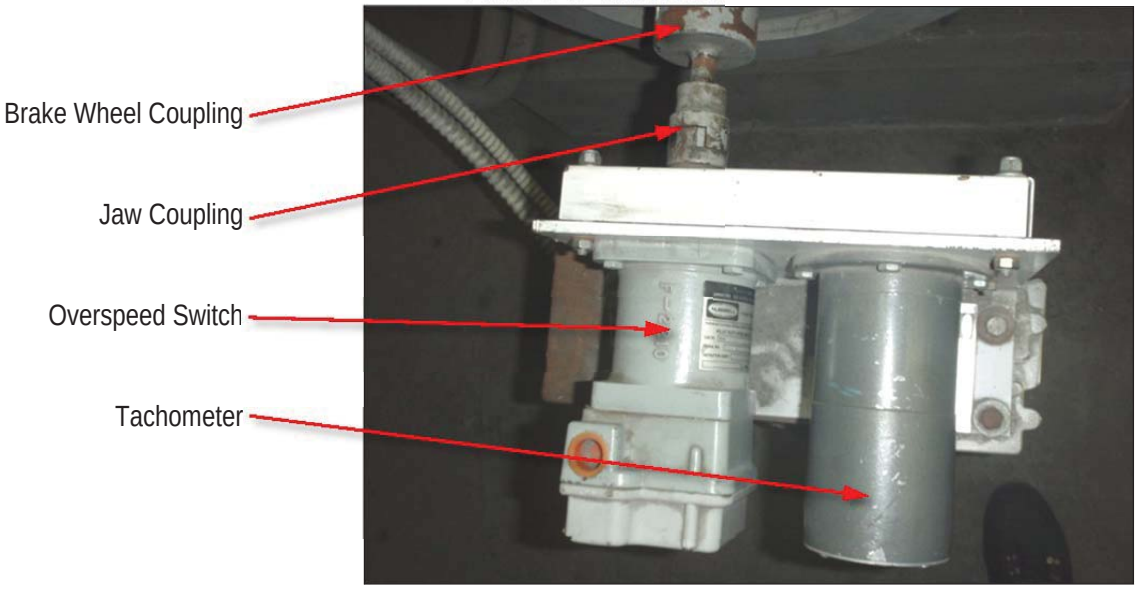

9.3 SPAN LOCK MACHINERY AND CENTERING EQUIPMENT

PHOTO 9.3A – SPAN LOCK MACHINERY

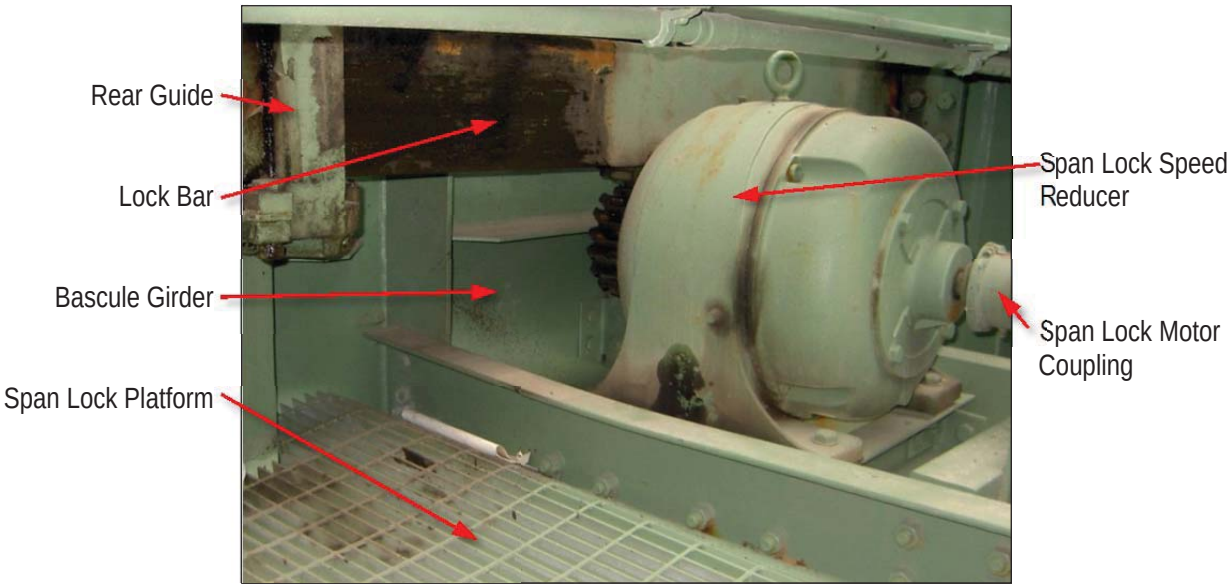

PHOTO 9.3B – SPAN LOCK REDUCER AND MOTOR

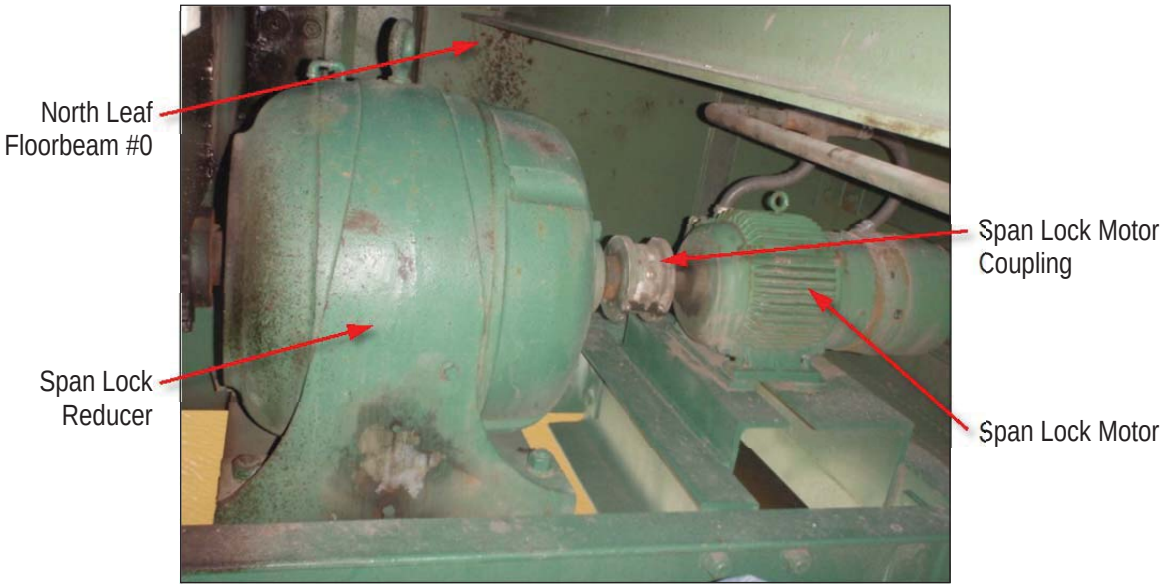

PHOTO 9.3C – SPAN LOCK RACK AND PINION

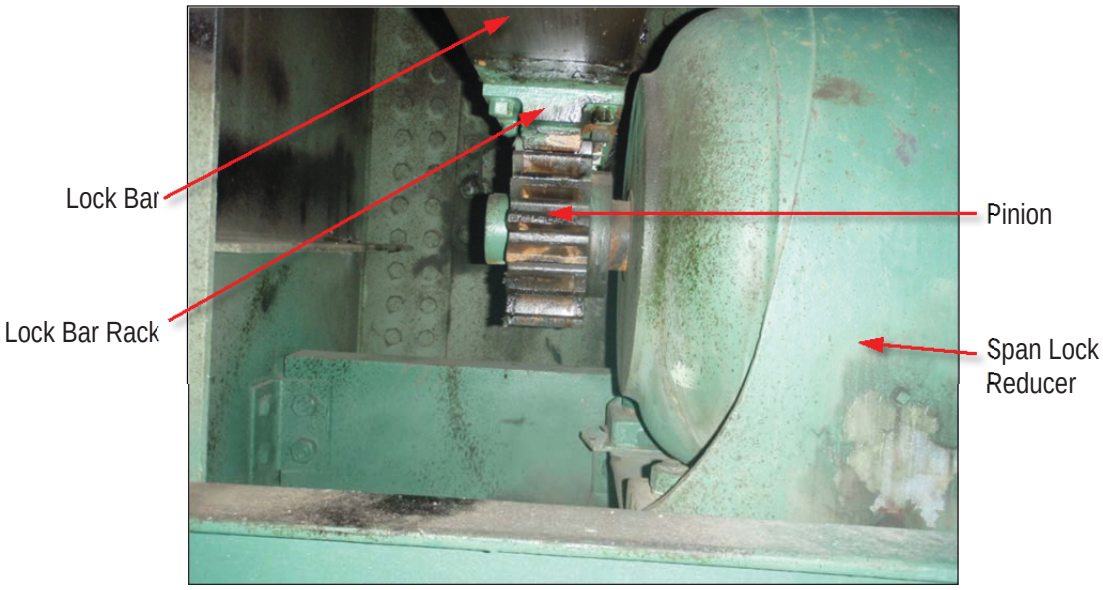

PHOTO 9.3D – SPAN LOCK BAR REAR GUIDE

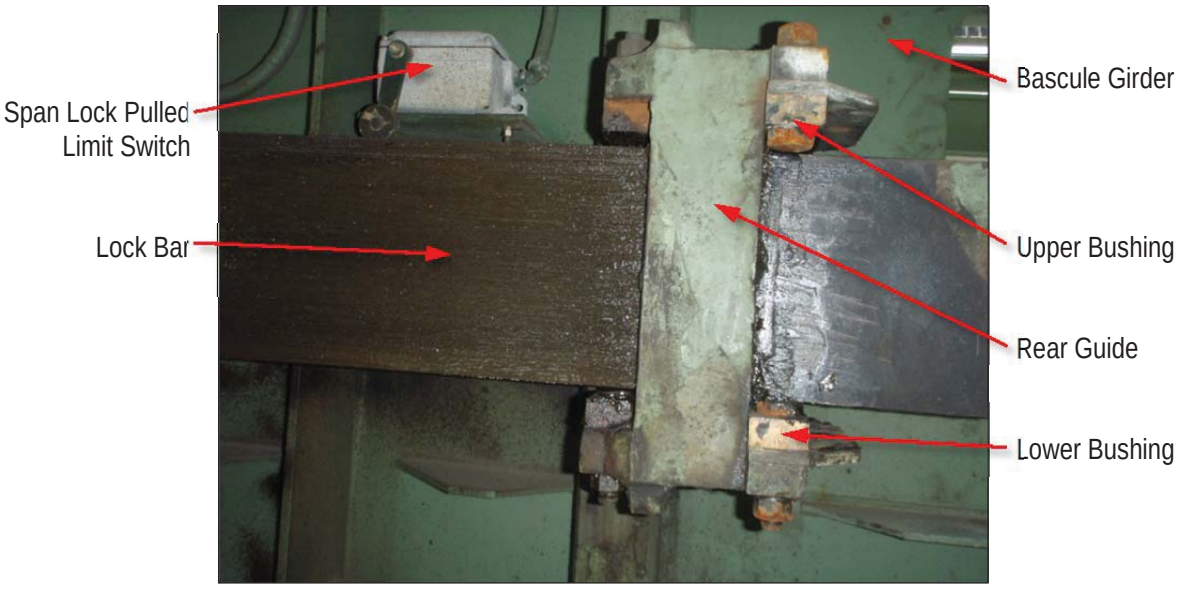

PHOTO 9.3E – SPAN LOCK BAR FRONT GUIDE (LOCK BAR RETRACTED)

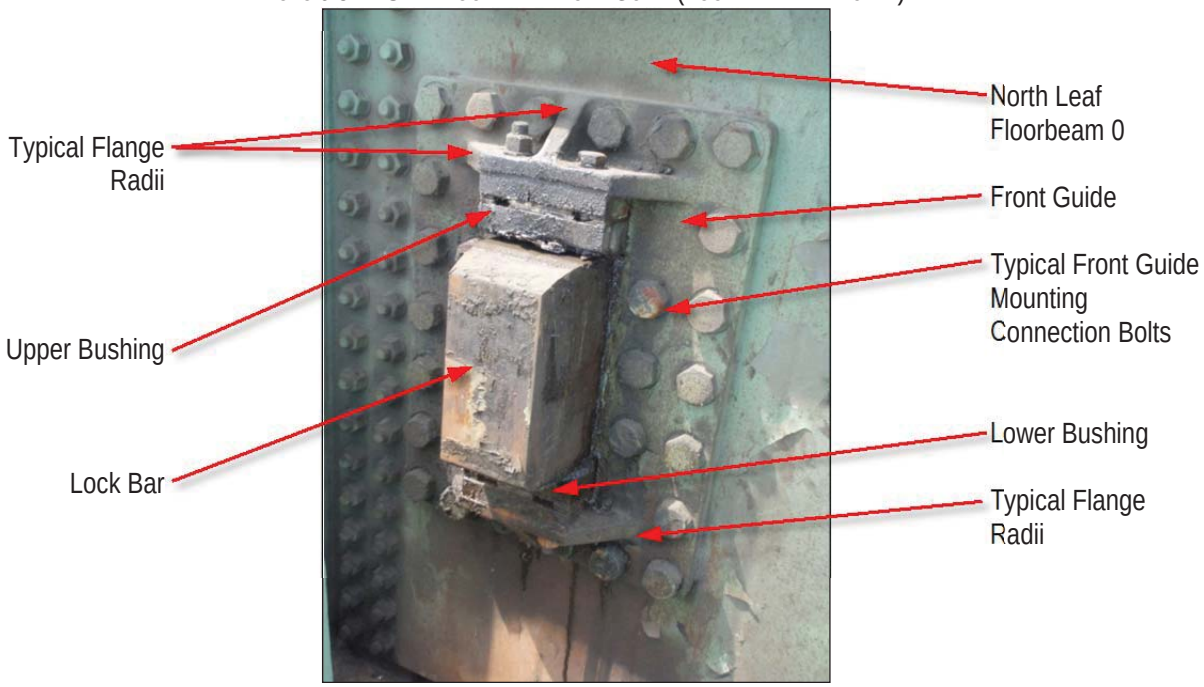

PHOTO 9.3F – SPAN LOCK RECEIVING SOCKET

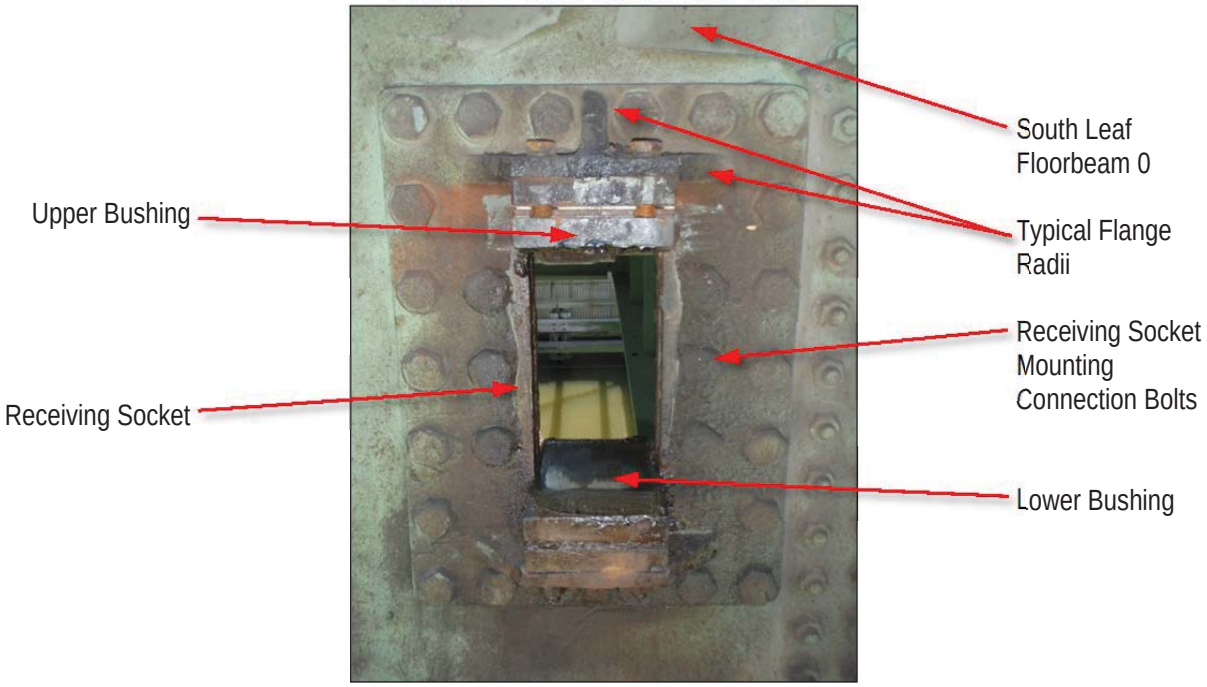

PHOTO 9.3G – CENTERING GUIDE

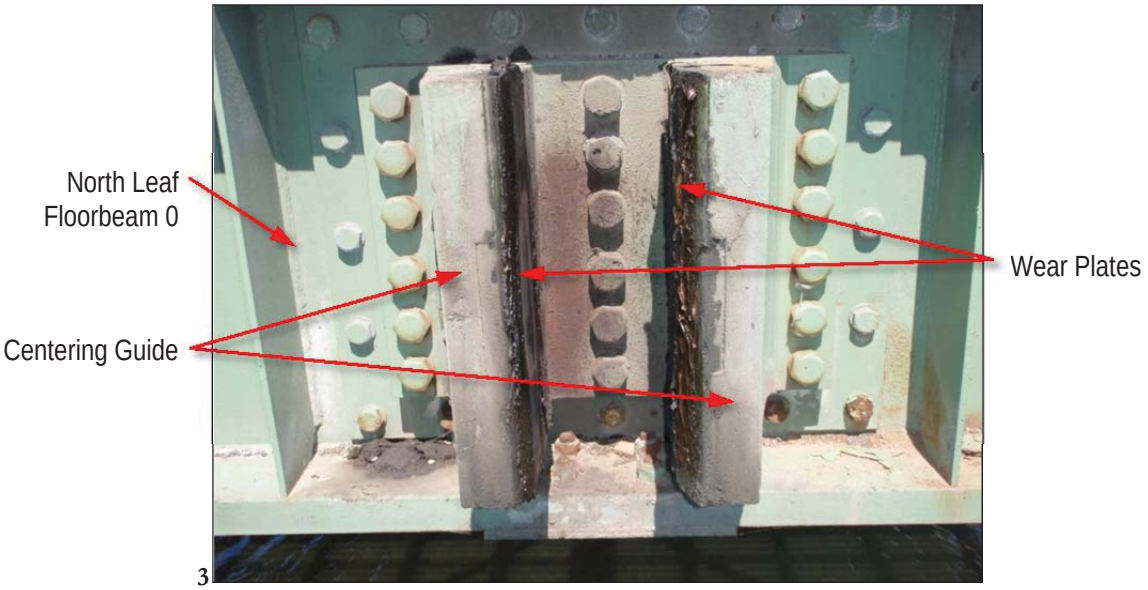

PHOTO 9.3H – CENTERING DEVICE

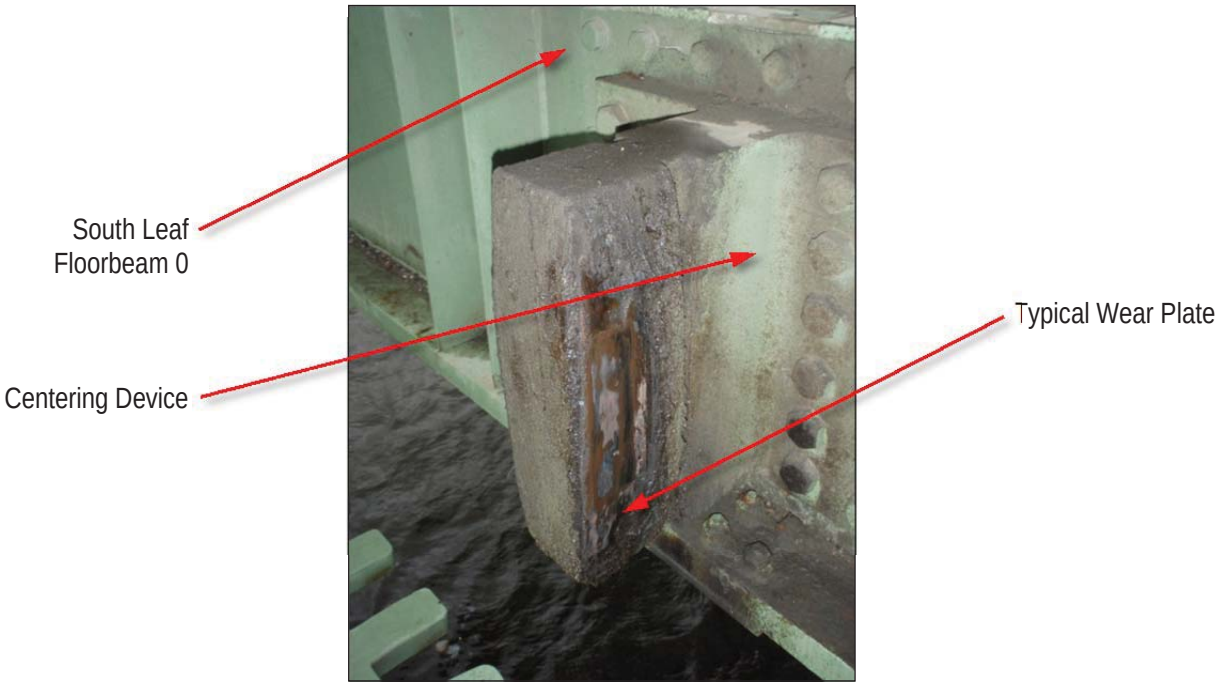

9.4 TRAFFIC CONTROL DEVICES AND NAVIGATION LIGHTS

PHOTO 9.4A – TRAFFIC CONTROL EQUIPMENT

PHOTO 9.4B – WARNING GATE EQUIPMENT TYPE 1 (FRONT)

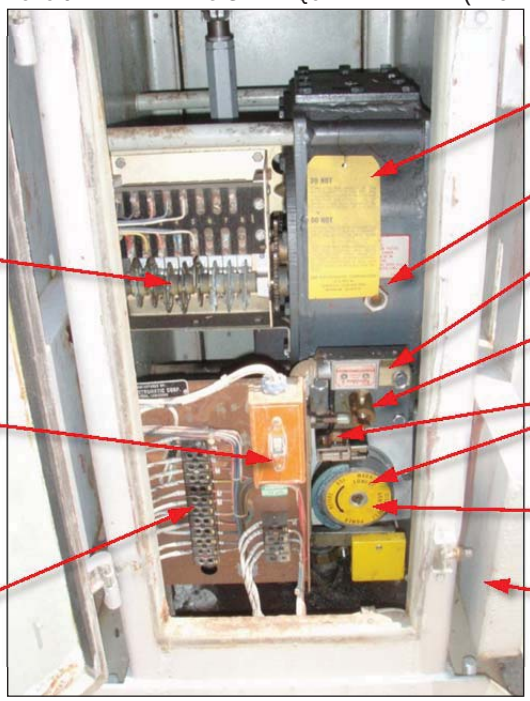

PHOTO 9.4C – WARNING GATE EQUIPMENT TYPE 1 (BACK)

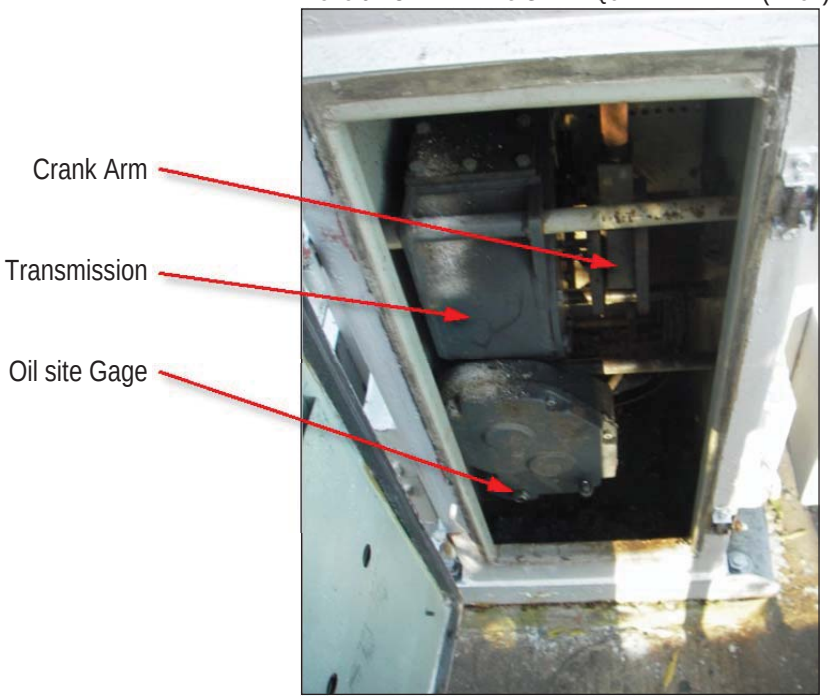

PHOTO 9.4D – WARNING GATE EQUIPMENT TYPE 2 (FRONT)

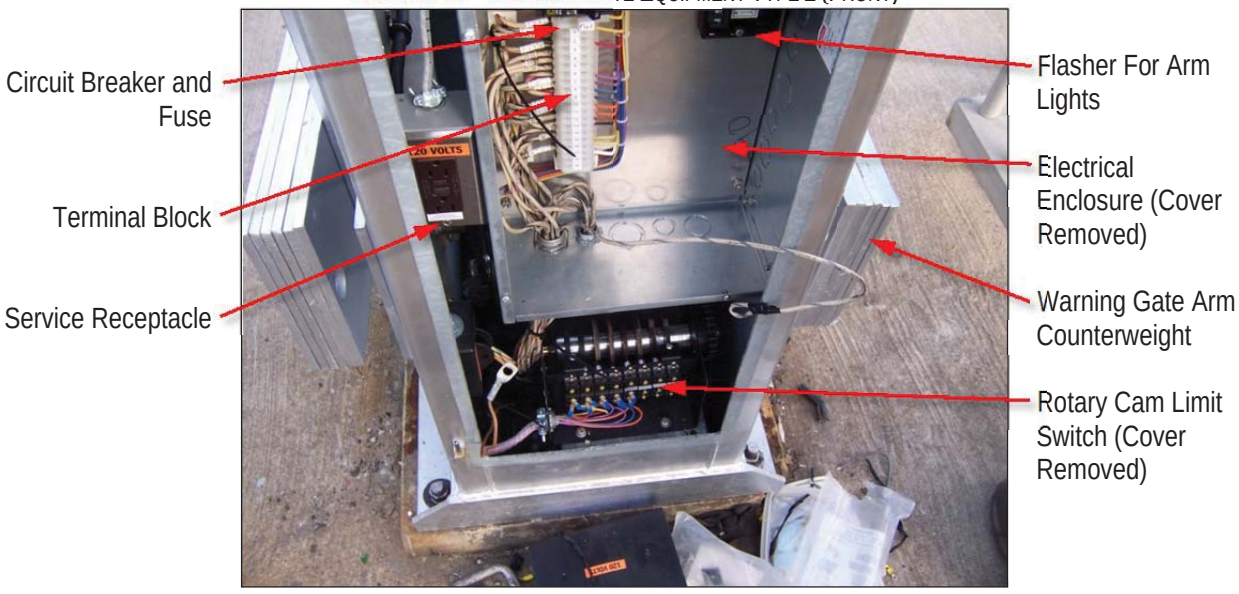

PHOTO 9.4E – WARNING GATE EQUIPMENT TYPE 2 (BACK)

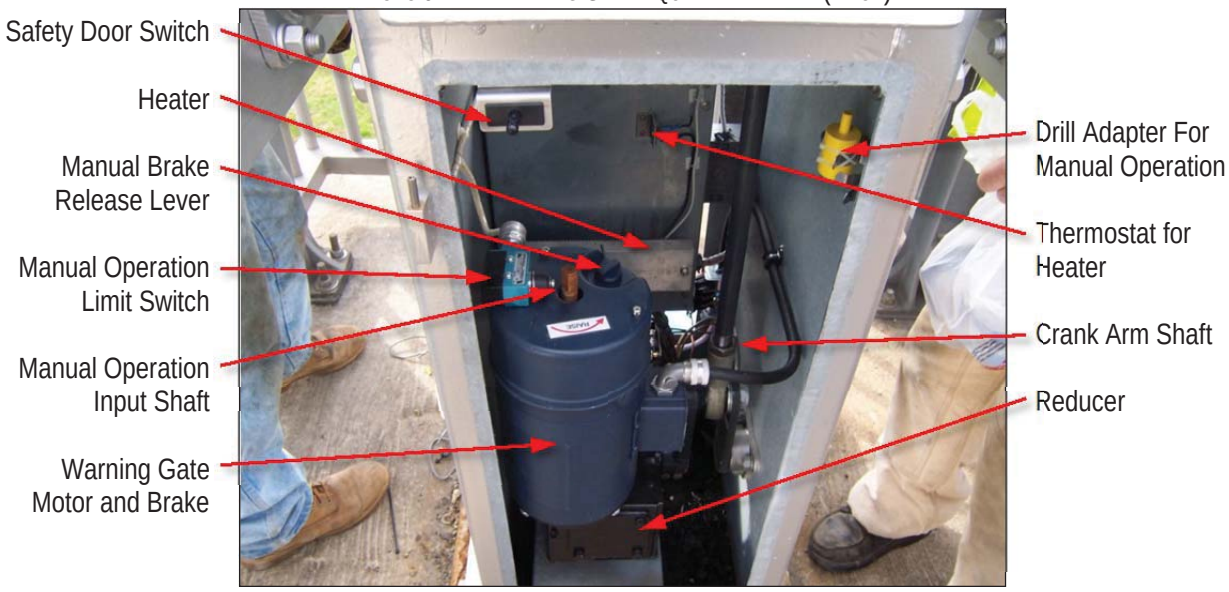

PHOTO 9.4F – WARNING GATE ARM LIGHTS

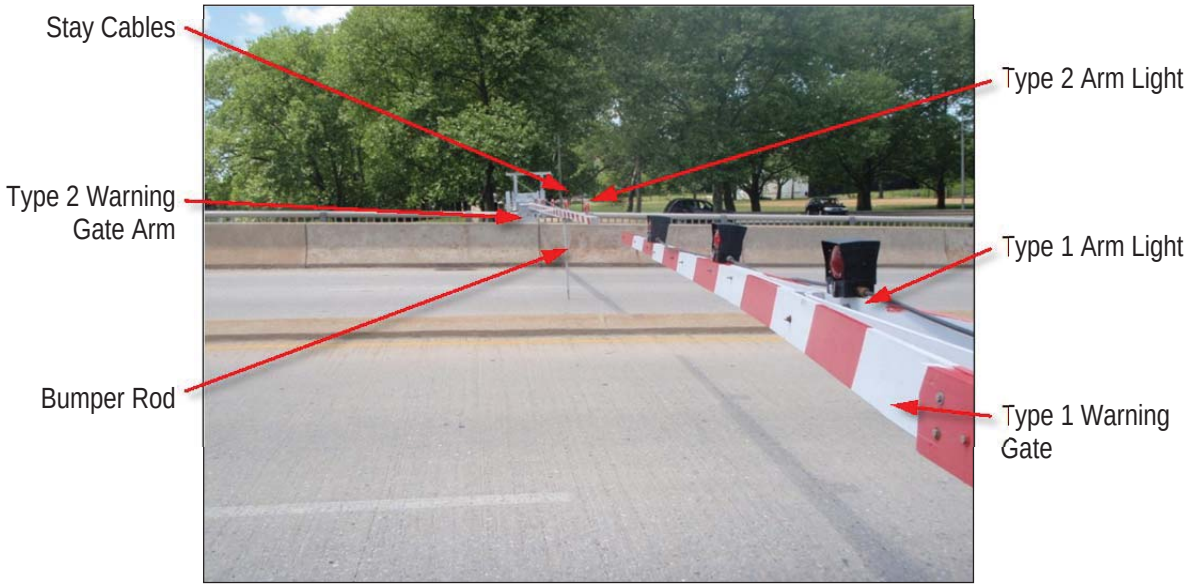

PHOTO 9.4G – SPAN NAVIGATION LIGHTS

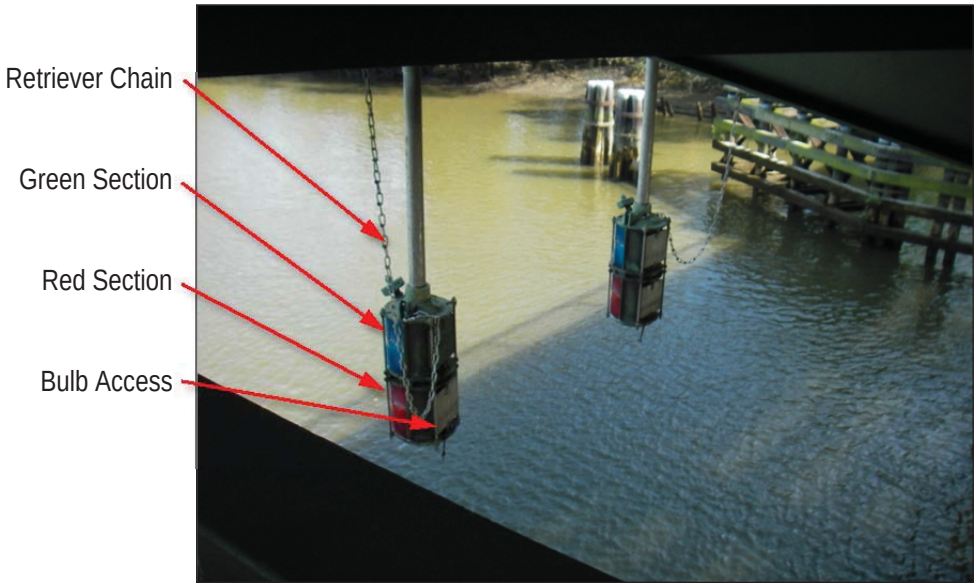

PHOTO 9.4H – FENDER NAVIGATION LIGHTS

9.5 POWER DISTRIBUTION EQUIPMENT

PHOTO 9.5A – MAIN INCOMING UTILITY TRANSFORMER

PHOTO 9.5B – EMERGENCY GENERATOR

PHOTO 9.5C – EMERGENCY GENERATOR

PHOTO 9.5D – LIGHTING TRANSFORMER

PHOTO 9.5E – AUTOMATIC TRANSFER SWITCH (ATS)

PHOTO 9.5F – POWER DISTRIBUTION PANELBOARD

9.6 CONTROL EQUIPMENT

PHOTO 9.6A – MAIN CIRCUIT BREAKER

PHOTO 9.6B – SOUTH CONTROL CABINET

PHOTO 9.6C – NORTH CONTROL CABINET TYPE 1

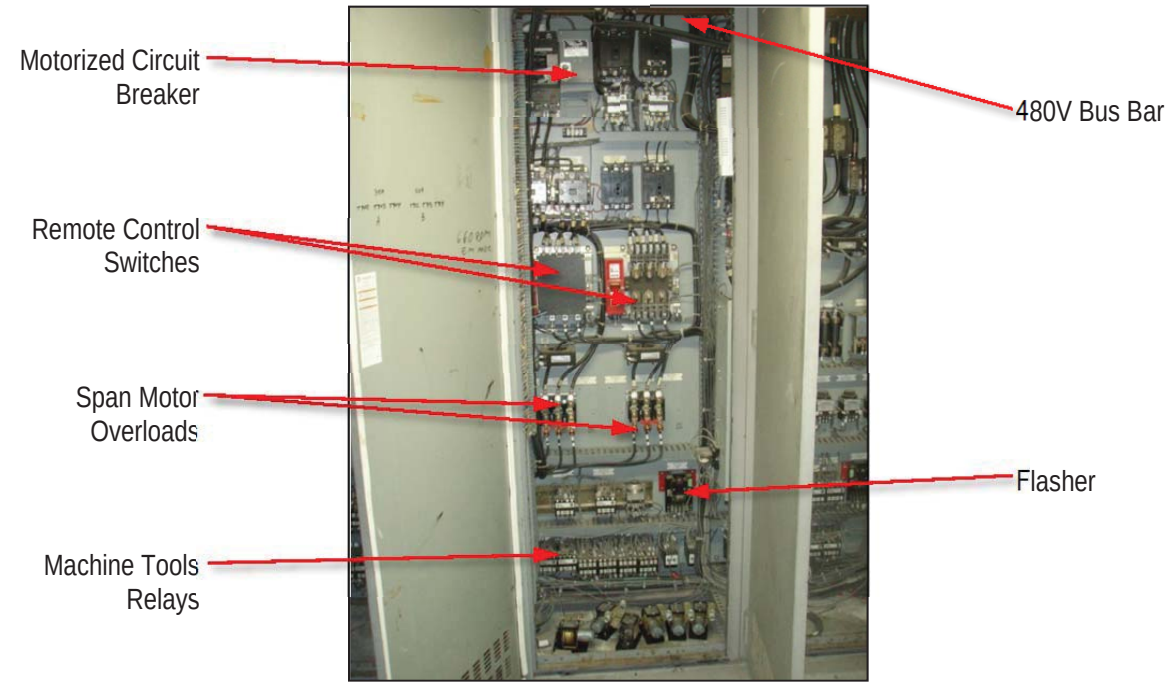

PHOTO 9.6D – NORTH CONTROL CABINET TYPE 2 AND RELAY CABINET

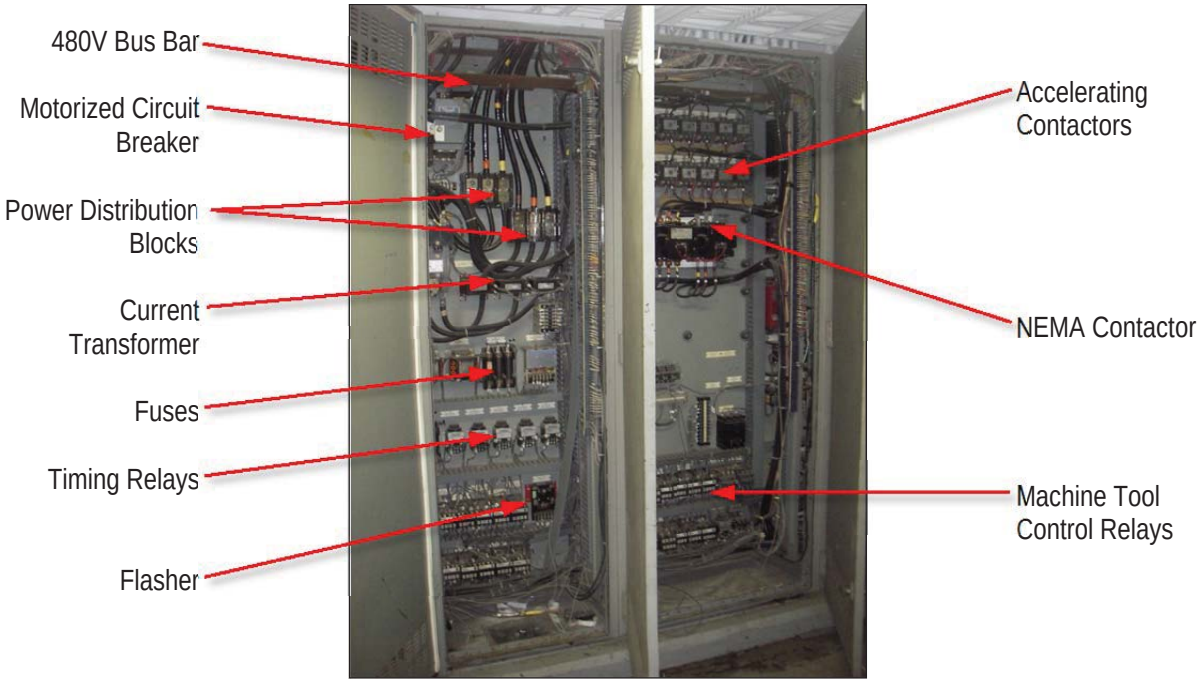

PHOTO 9.6E – NORTH CABINET CABINET TYPE 3 (TOP VIEW)

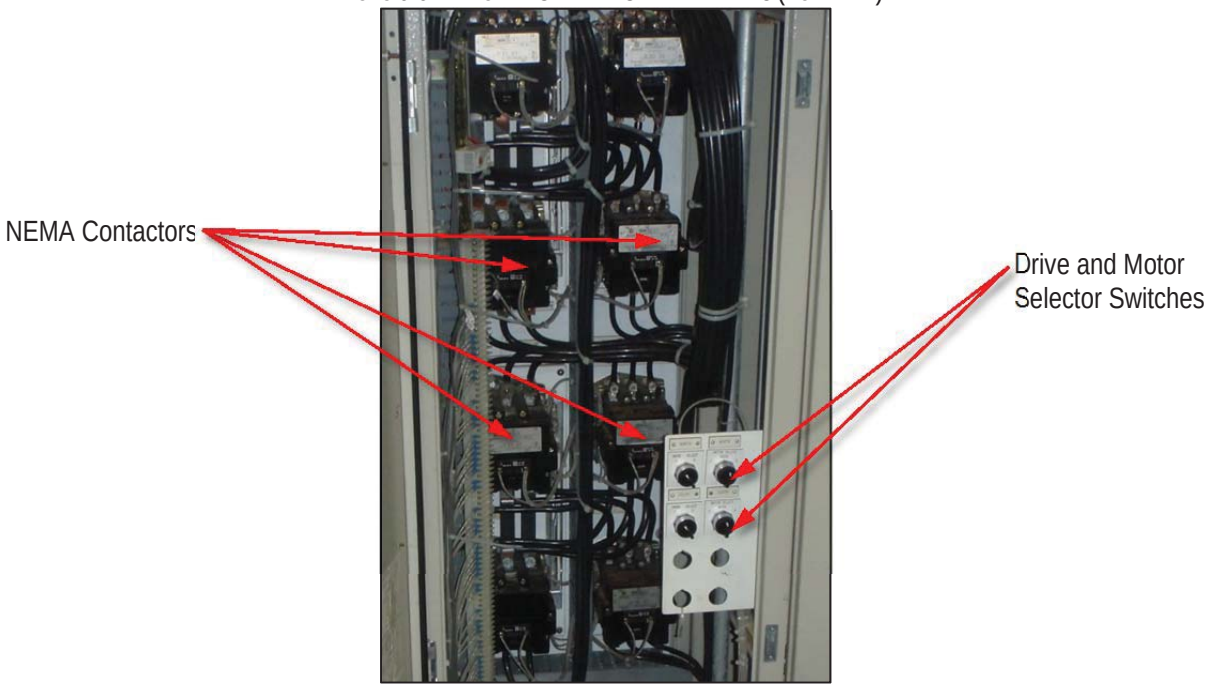

PHOTO 9.6F – NORTH CONTROL CABINET TYPE 3 (BOTTOM VIEW)

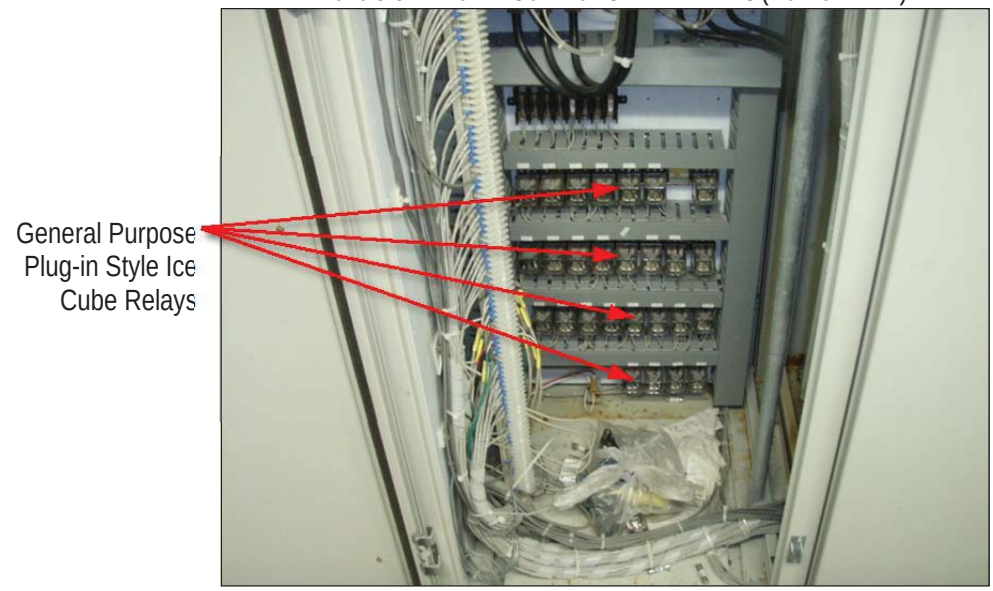

PHOTO 9.6G – DRIVE CABINET

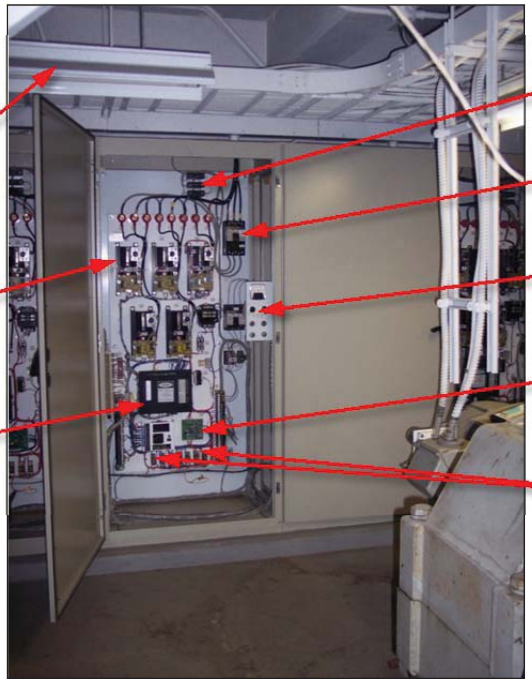

PHOTO 9.6H – SOUTH DRIVE SECONDARY RESISTORS

PHOTO 9.6I – NORTH PRIMARY AND SECONDARY RESISTORS

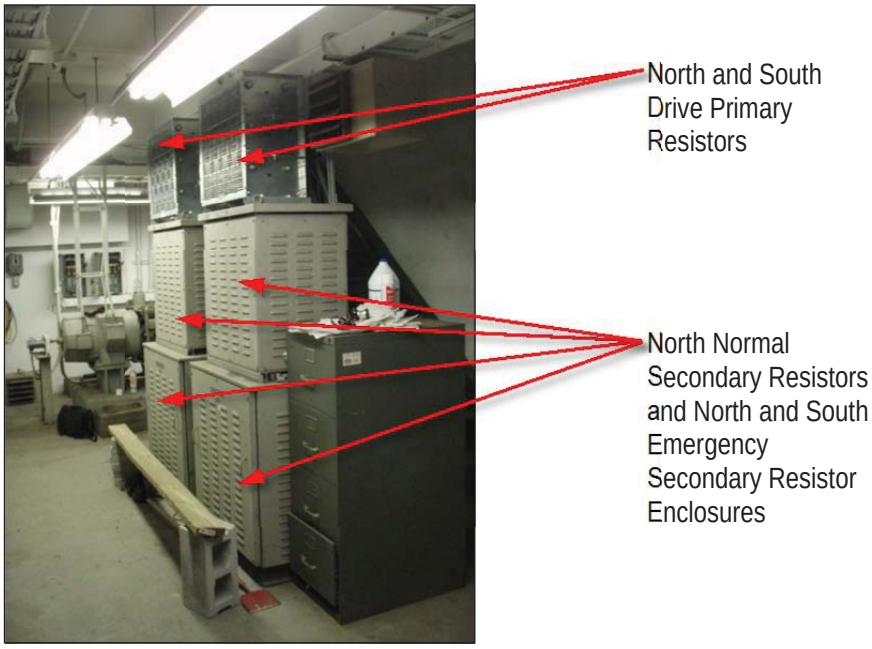

PHOTO 9.6J –LEAF MOTORS AND DISCONNECT SWITCHES

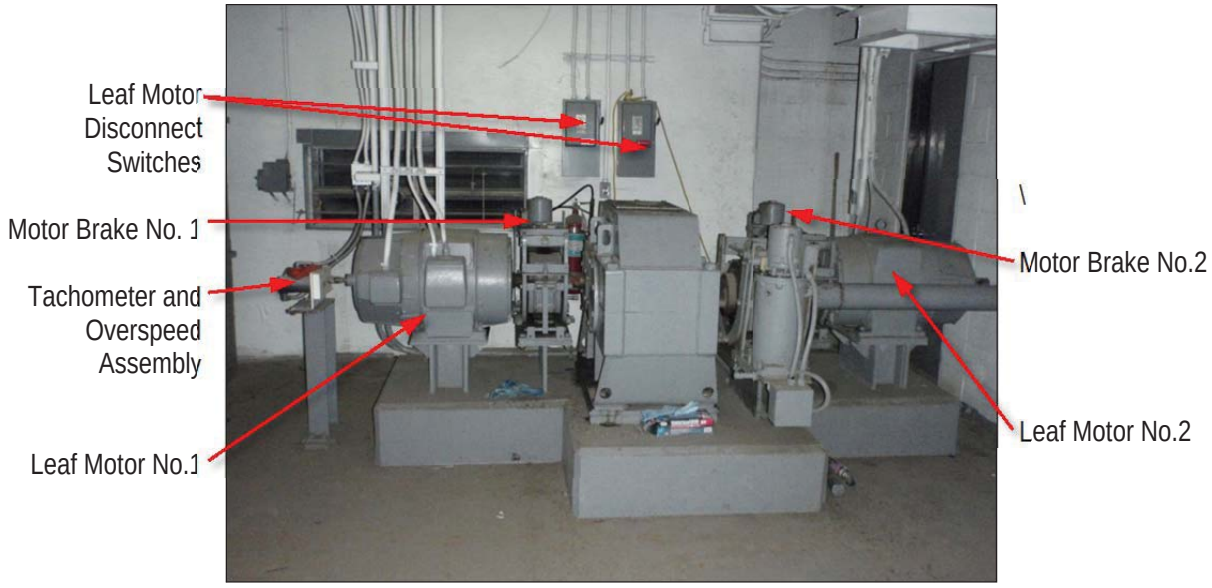

PHOTO 9.6K – SPAN LOCK DISCONNECT SWITCH

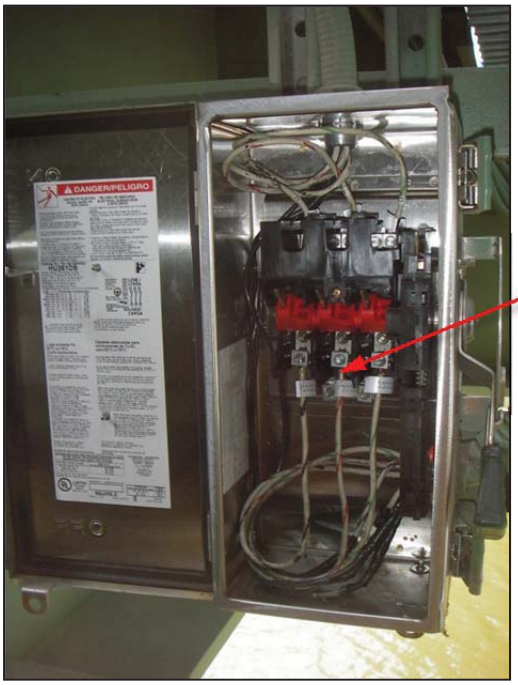

PHOTO 9.6L – MOVABLE DROOP CABLE TERMINATION BOX

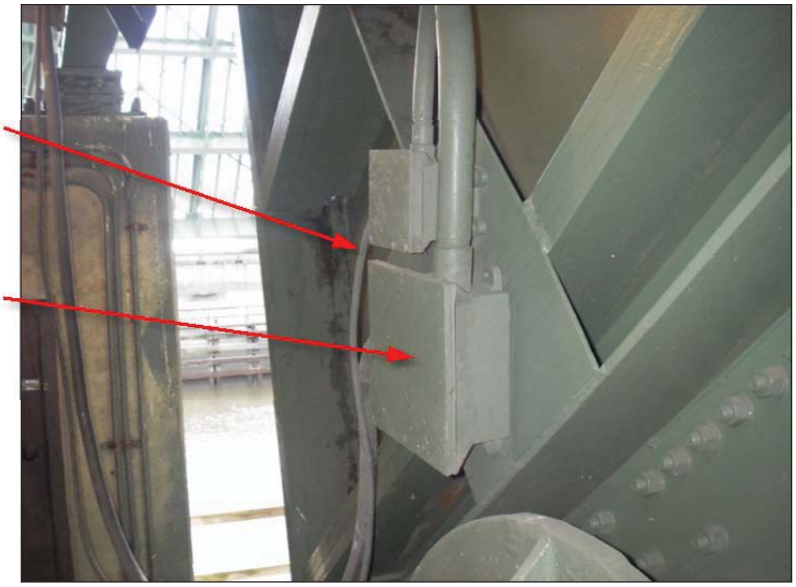

PHOTO 9.6M – FIXED DROOP CABLE TERMINATION BOX

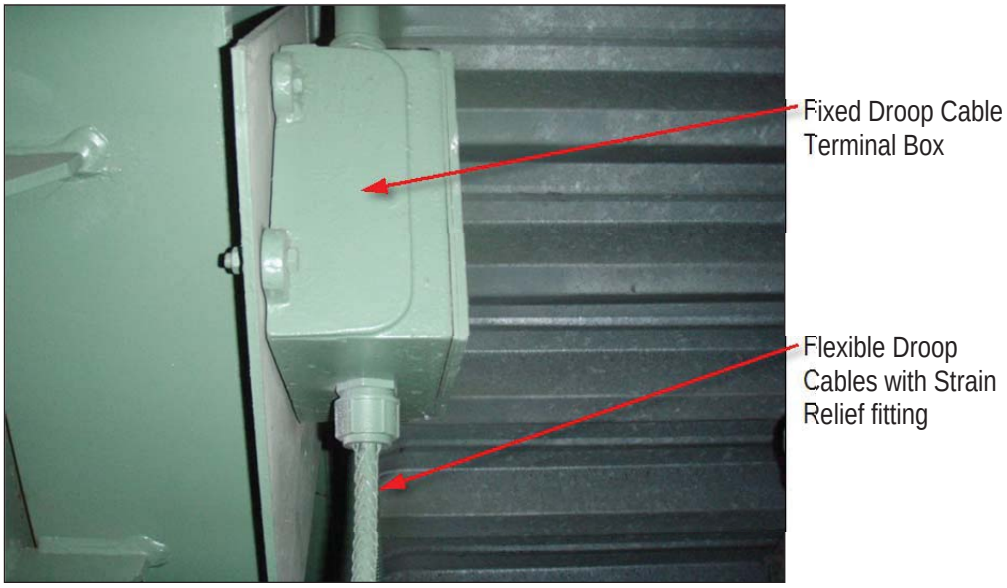

PHOTO 9.6N – SUBMARINE TERMINATION BOX

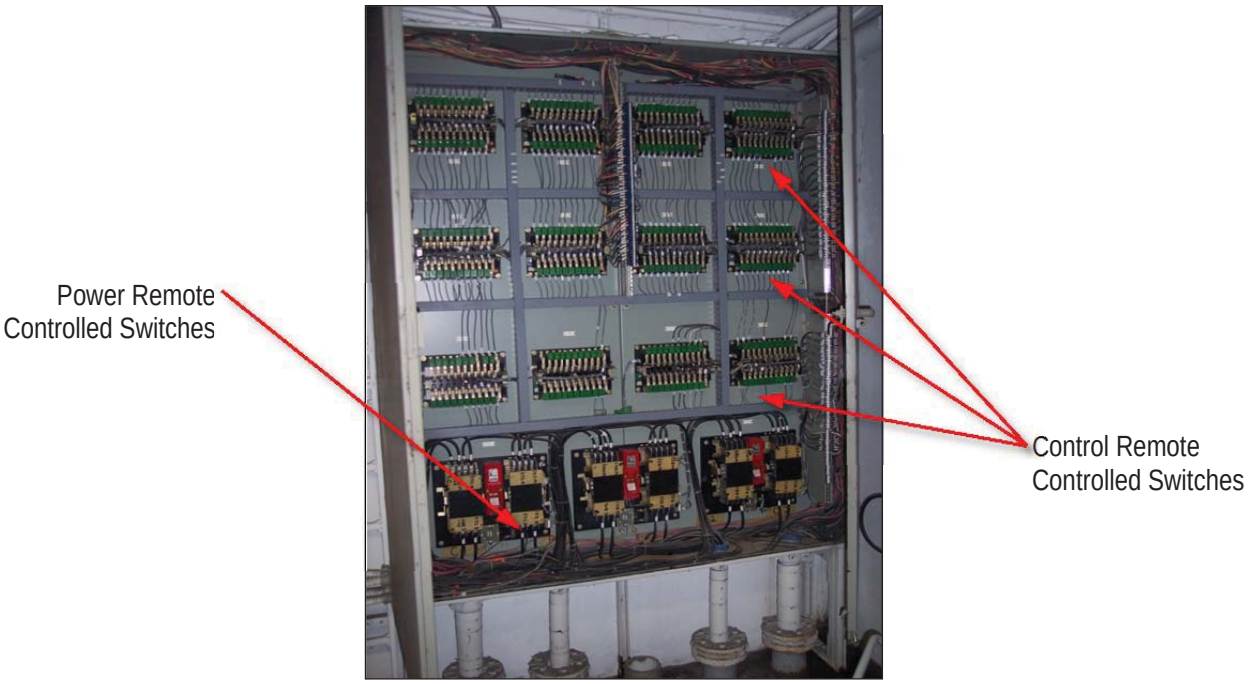

PHOTO 9.6O – CONTROL CONSOLE

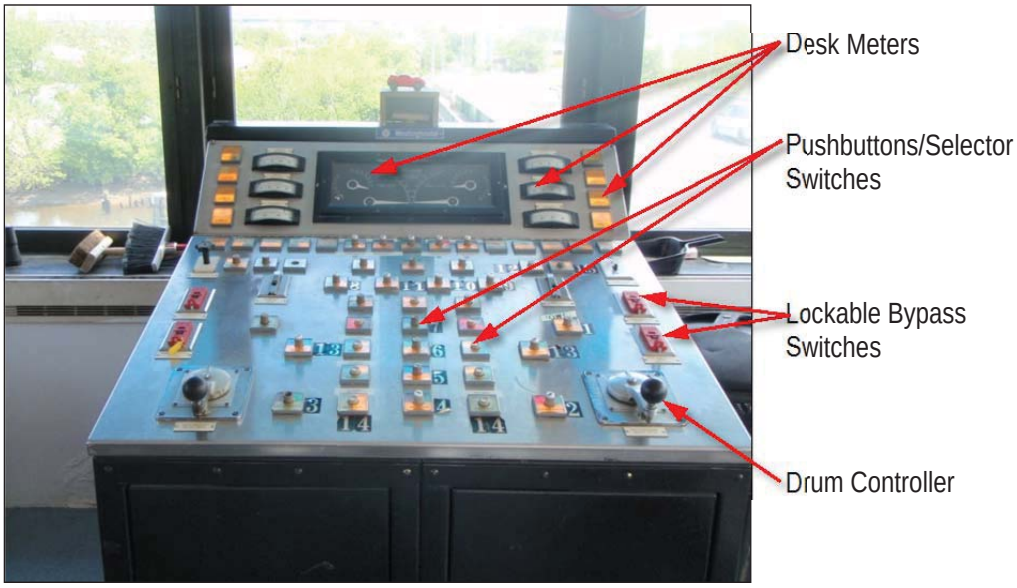

PHOTO 9.6P – SPAN POSITION ROTARY CAM LIMIT SWITCHES

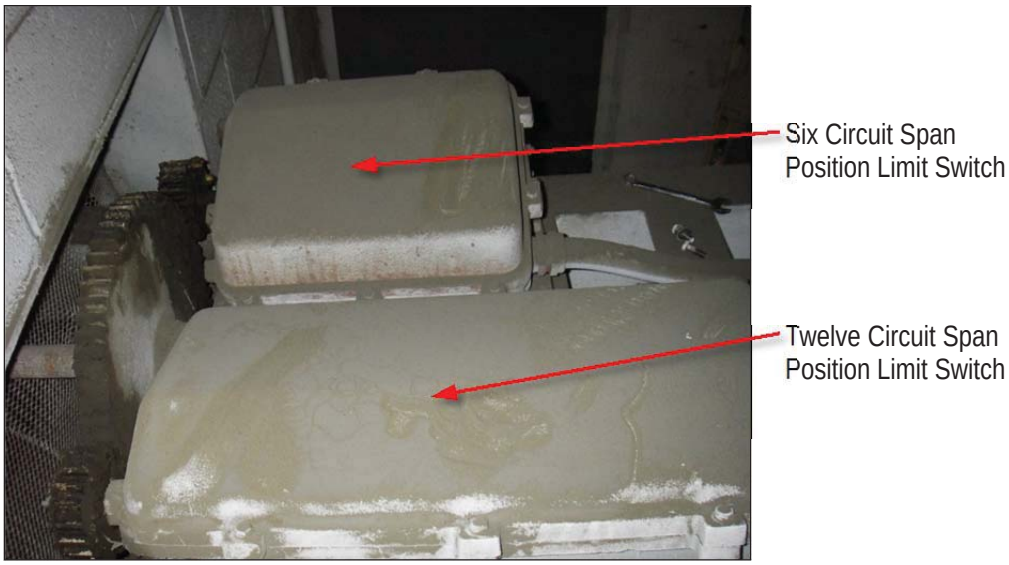

PHOTO 9.6Q – SPAN POSITION ROTARY CAM LIMIT SWITCH COMPONENTS

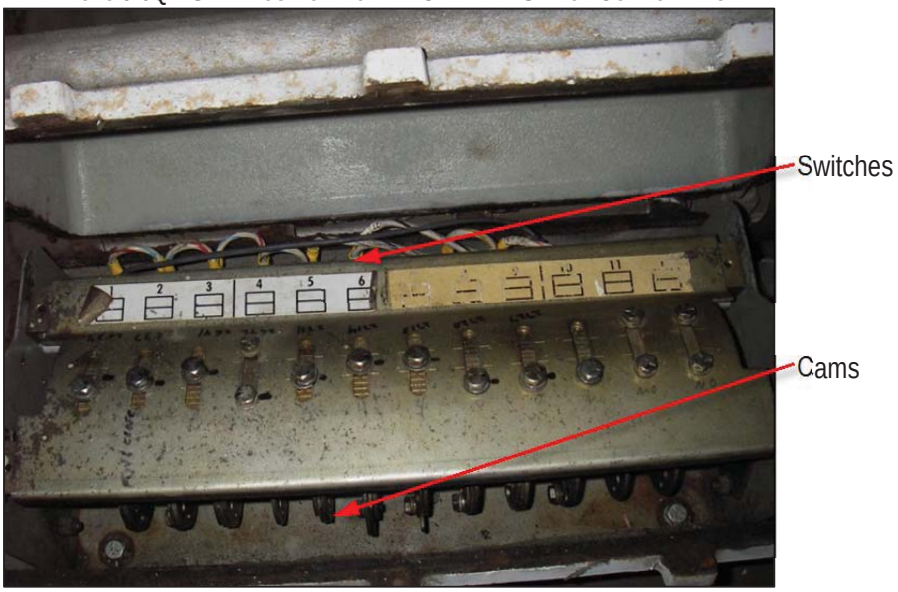

PHOTO 9.6R – SPAN POSITION SELSYN TRANSMITTER

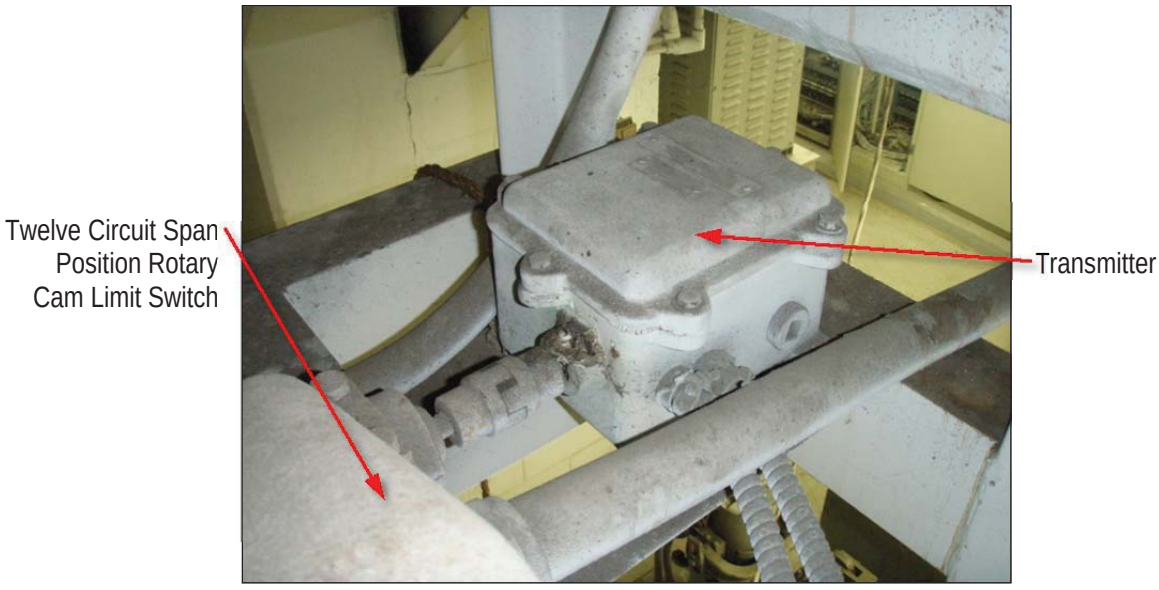

PHOTO 9.6S – FULLY SEATED LIMIT SWITCH (PLUNGER STYLE)

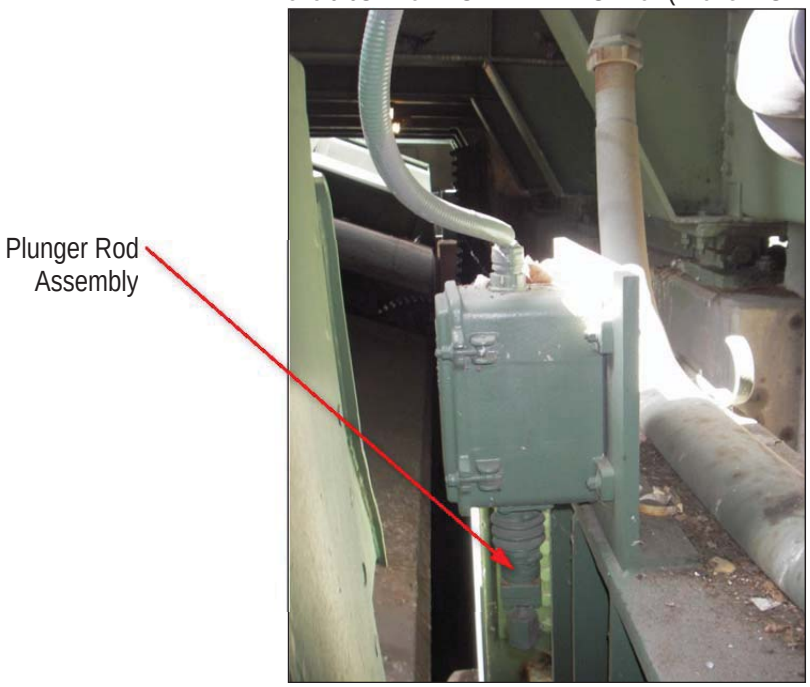

PHOTO 9.6T – FULLY SEATED LIMIT SWITCH COMPONENTS (PLUNGER STYLE)

PHOTO 9.6U – SPAN LOCK LIMIT SWITCHES (LEVER STYLE)

PHOTO 9.6V – BRAKE LIMIT SWITCHES (LEVER STYLE)

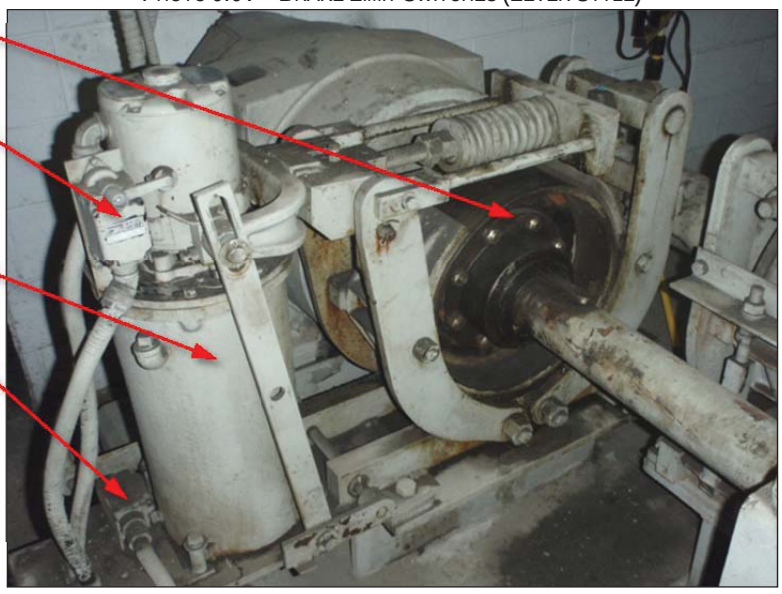

9.7 MISCELLANEOUS EQUIPMENT

PHOTO 9.7A – HEATER

PHOTO 9.7B – AIR HORN AND HVAC OUTDOOR UNIT

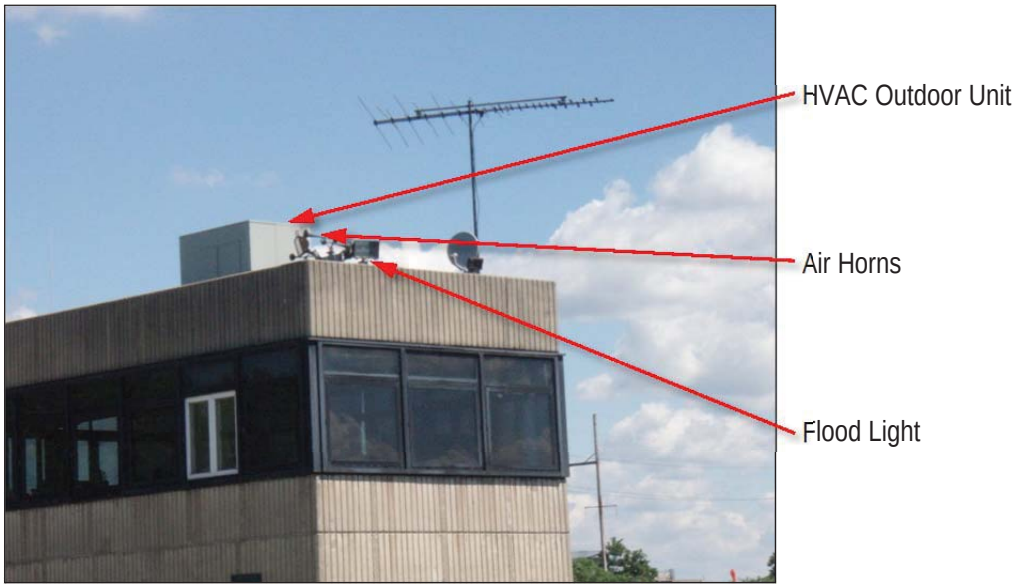

PHOTO 9.7C – EMERGENCY LIGHT FIXTURE

PHOTO 9.7D – SERVICE LIGHT FIXTURE TYPE 1

PHOTO 9.7E – SERVICE LIGHT FIXTURE TYPE 2

PHOTO 9.7F – ABANDONED SUMP PUMP WITH DISCONNECT SWITCH

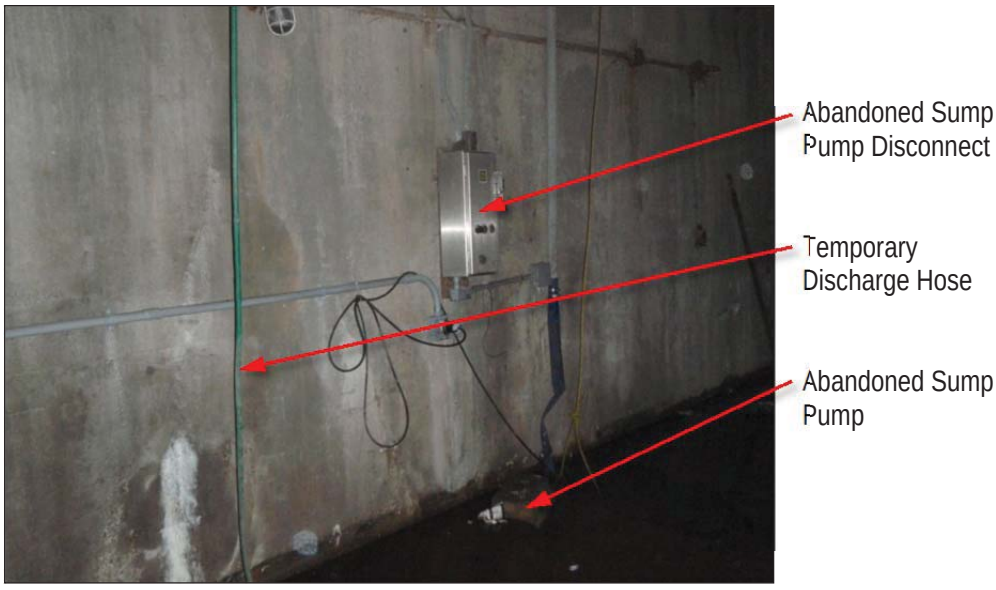

PHOTO 9.7G – EXHAUST FAN

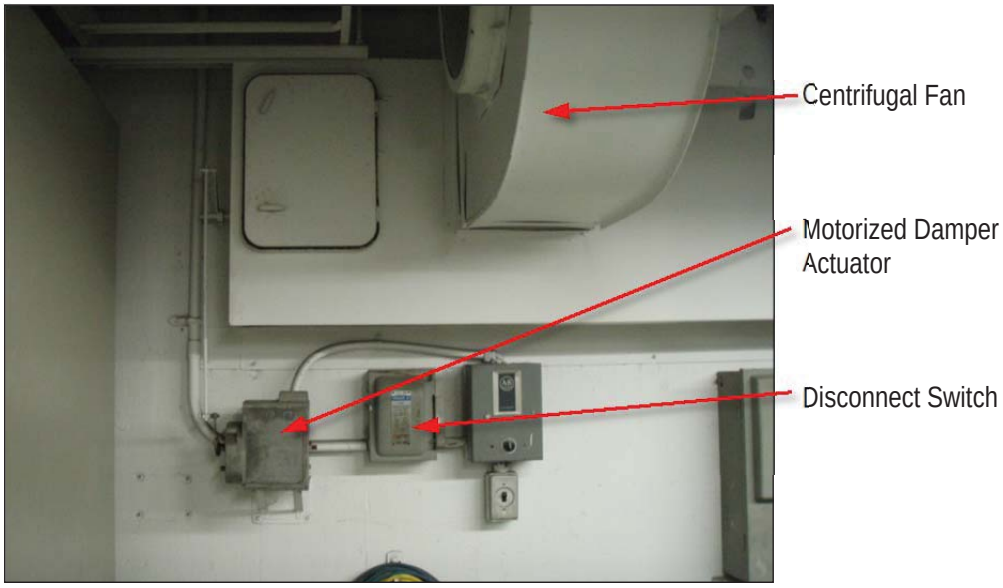

PHOTO 9.7H – MOTORIZED DAMPER

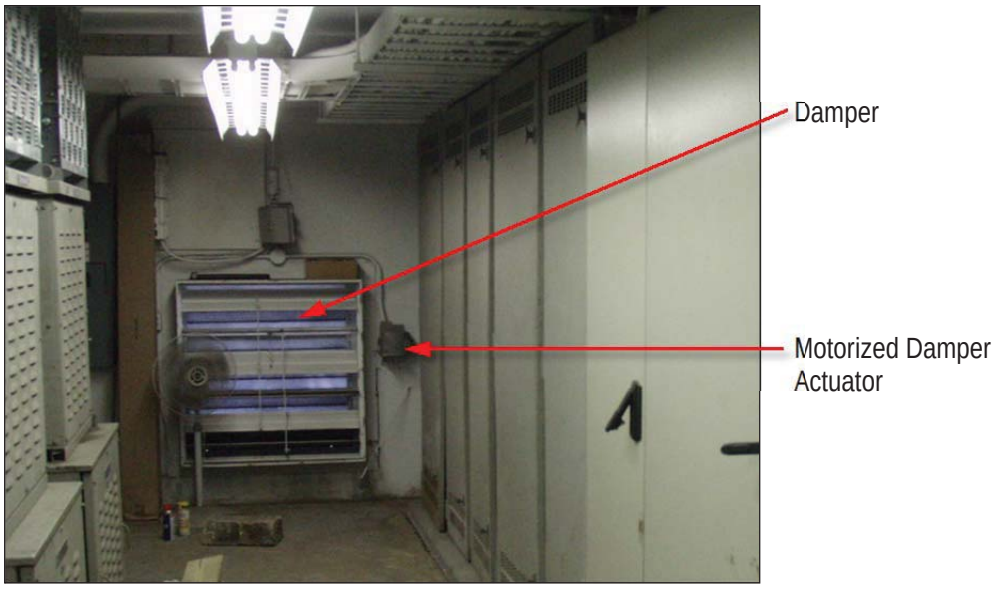

PHOTO 9.7I – HEAT TRACE

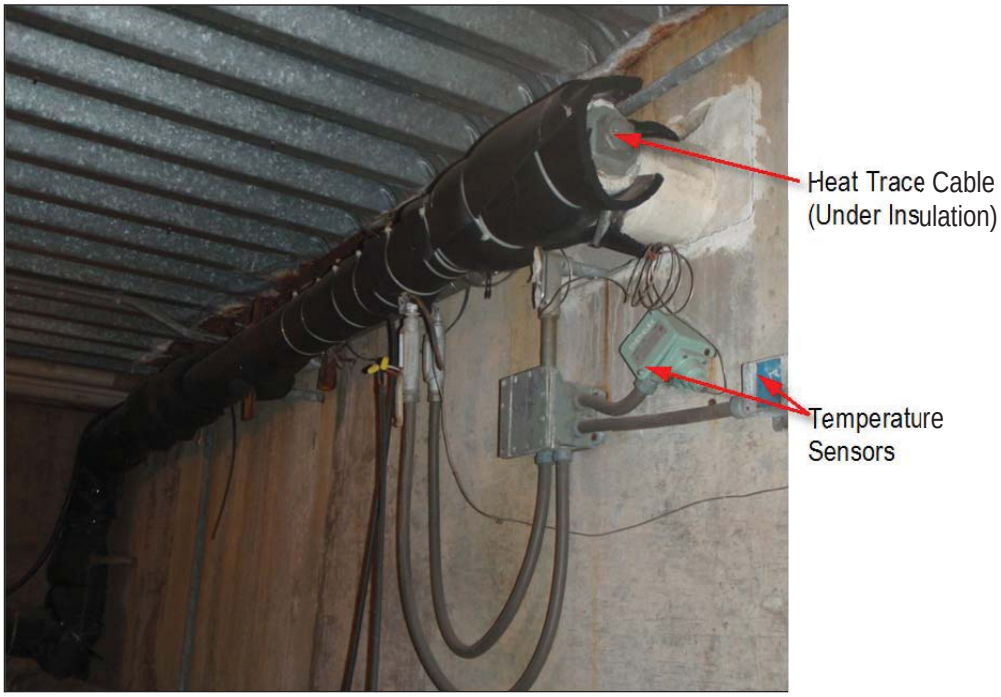

THIS PAGE INTENTIONALLY LEFT BLANK

CHAPTER 10 - MAINTENANCE FORMS

10.1 MECHANICAL AND ELECTRICAL MAINTENANCE CHECKLIST

Form 10-1 - Leaf Support System and Counterweight 10-2
Form 10-2 - Span Drive Machinery 10-3
Form 10-3 - Span Lock Machinery and Centering Equipment 10-5
Form 10-4 - Traffic Gates 10-6
Form 10-5 - Electrical Power Systems 10-7
Form 10-6 - Lighting System 10-11
Form 10-7 - Electric Motors 10-12
Form 10-8 - Control System 10-14
Form 10-9 - Miscellaneous Equipment 10-16

Mechanical Maintenance Checklist - Leaf Support System and Counterweight

Form 10-1
Page 1 of 1

Date: _____ Maintenance Personnel: _____	Maintenance Tasks to be Performed: Monthly	Three Month	Six Month	Annual
	☐	☐	☐	☐

Maintenance Tasks	Maintenance Tasks Completed: Monthly	Three Month	Six Month	Annual
Trunnion Bearings (Section 8.1.1) (Component ID # 11 & 12)				
Lubricate the trunnion bearings.	☐			
Check housing and supporting steel for corrosion. Clean and spot paint as necessary.				☐
Check housing cap bolts and base bolts for tightness. Tighten as necessary.				☐
Observe trunnion bearings during operation of the leaf.				☐
Live Load Bearings (Section 8.1.2) (Component ID # 59)				
Check live load bearing contact.		☐		
Clean debris from all supporting members and plates.		☐		
Clean the area surrounding the connection of the live load anchor to concrete foundation.			☐	
Remove dirt, debris, and corrosion from live load anchor.			☐	
Paint the live load anchor.			☐	
Check that all fasteners are secure and corrosion free.				☐
Check the contacting surfaces between the strike plate and bearing plate for deformations and wear.				☐
If necessary, adjust the shims below the strike plate.				☐
Counterweight (Section 8.1.3)				
Check counterweight balance pockets for proper drainage and clean out debris.				☐
Check for concrete spalling, cracks, and signs of structural distress in the counterweight concrete.				☐
Check for shifting of balance blocks during leaf operation.				☐

Refer to Section 8.1 "Leaf Support System and Counterweight" for component locations, quantities, and additional maintenance information. Component ID # corresponds to components listed in Section 11.1.

Notes:

Mechanical Maintenance Checklist – Span Drive Machinery

Form 10-2
Page 1 of 2

	Maintenance Tasks to Be Performed:			
	Monthly	Six Month	Annual	Five Year
Date: _____ Maintenance Personnel: _____	☐	☐	☐	☐

	Maintenance Tasks Completed			
Maintenance Tasks	**Monthly**	**Six Month**	**Annual**	**Five Year**
Motor and Machinery Brakes (Section 8.2.1) (Component ID # 5 & 8)				
Check fluid level in hydraulic reservoir, check for leakage of fluid and clean as necessary. Fill as needed. (EMG technician)			☐	
Inspect brake shoes and drums for wear, dust, dirt, grease and proper adjustment. Inspect brake pad thickness. Replace as needed.			☐	
Check clearance between the brake shoes and the brakewheel. Adjust linkages as needed.			☐	
Inspect mechanical linkages for freedom of moving parts, wear, broken parts and tightness of nuts and bolts.			☐	
Check for excessive heating of parts.			☐	
Check operations of the brake during test operations of the bridge.			☐	
Check the brake housing and linkages for evidence of water dripping on brake and corrosion.			☐	
Check adjustment of limit switches and hand release devices.			☐	
Check brake actuator reserve stroke.			☐	
Check the brake spring length.			☐	
Lubricate bearing pins.			☐	
Couplings (Section 8.2.2) (Component ID # 3, 6, 9, 14, 16, & 43)				
Inspect key and keyways at all couplings for grease leakage, tightness, and cracking. Check flange bolts for corrosion and tightness.	☐			
Inspect seals and gaskets for leaks. Replace as needed.	☐			
Inspect jaw couplings for cracking or damage.	☐			
Replace gear coupling lubricant.		☐		
Check all gear couplings and brakewheel couplings for any excessive misalignment.		☐		
Replace machinery brakewheel coupling lubricant.		☐		
Replace motor brakewheel coupling lubricant. (To be performed by Mechanical/Electrical Inspection Team)				☐
Primary Reducers (Section 8.2.3) (Component ID # 7)				
Visually inspect the oil level in the sight gauge and bearing reservoirs. Add oil as necessary.	☐			
Listen for unusual noises during operation of the machinery.	☐			
Check for excessive leakage at the seals.			☐	
Check fasteners for tightness.			☐	
Replace oil in the speed reducer housings.			☐	
Bearings (Section 8.2.4) (Component ID # 13, 17, 18, 20, 25, 28, 30, &37)				
Lubricate bearings.	☐			
Check bearing cap and base fasteners for tightness. Tighten as necessary.			☐	

Mechanical Maintenance Checklist – Span Drive Machinery

Form 10-2
Page 2 of 2

Maintenance Tasks	Maintenance Tasks Completed			
	Monthly	Six Month	Annual	Five Year
Open Gearing (Section 8.2.5) (Component ID # 19, 22, 26, 27, 29, 21, 32, 39, & 40)				
Lubricate open gearing teeth.	☐			
Replace open gear lubricant.			☐	
Verify that fasteners connecting the rack to the rack support are secure and free of corrosion. Torque fasteners as needed. Spot paint as needed.			☐	
Inspect keys and keyways for tightness and cracking			☐	
Observe the open gearing during raising and lowering operations.			☐	
Span Position Instrumentation Drive Equipment (Section 8.2.5) (Component ID # 34, 35, & 36)				
Check that all linkage fasteners are tight and free of corrosion.			☐	

Refer to Section 8.2 "Span Drive Machinery" for component locations, quantities, and additional maintenance information. Component ID # corresponds to components listed in Section 11.1.

Notes:

Mechanical Maintenance Checklist – Span Lock Machinery and Centering Equipment

Form 10-3
Page 1 of 1

Date: _____ Maintenance Personnel: _____	Maintenance Tasks to Be Performed: Monthly	Three Month	Annual	Five Year
	☐	☐	☐	☐

Maintenance Tasks	Maintenance Tasks Completed: Monthly	Three Month	Annual	Five Year
Lock Bars, Guides, and Receivers (Section 8.3.1) (Component ID # 45, 46, 55, & 56)				
Apply grease to the sliding surfaces of the lock bar and receiving socket.	☐			
Visually inspect guides, sockets, lock bars, and fasteners for wear, fit, or damage. Observe the lock bars, guides, and receiving sockets for movement with traffic on the span.	☐			
Visually inspect guides and socket castings at flange radii and mounting connections.			☐	
Check receiving socket and guide fasteners tightness.			☐	
Check receiving socket and guide housings for cracking.			☐	
Check receiving socket and guide housing paint. Spot paint as needed.			☐	
Span Lock Reducers (Section 8.3.2) (Component ID # 51)				
Inspect the oil level from the oil fill plug. Add oil as needed.	☐			
Listen for unusual noises during operation of the machinery.	☐			
Check for excessive leakage at the seals.			☐	
Check fasteners for tightness.			☐	
Replace speed reducer oil.			☐	
Span Lock Motor Couplings (Section 8.3.3) (Component ID # 52)				
Inspect keys and keyways at all couplings for grease leakage, tightness and cracking. Inspect flange bolts for corrosion and tightness.	☐			
Inspect seals and gaskets for leaks. Replace as needed.	☐			
Replace motor coupling lubricant and check for misalignment. (To be performed by Mechanical/Electrical Inspection Team)				☐
Span Lock Rack and Pinion (Section 8.3.4) (Component ID # 49 & 50)				
Lubricate open gearing teeth.	☐			
Check rack mounting fasteners for tightness.		☐		
Replace rack and pinion lubricant.			☐	
Inspect keys and keyways for tightness and cracking.			☐	
Observe the open gearing during operation of the span lock machinery.			☐	
Centering Device and Centering Guide (Section 8.3.5) (Component ID # 57 & 58)				
Apply grease to the sliding surfaces of the centering surface and guide.	☐			
Inspect centering device, centering guide, wear plates, and fasteners for excessive wear, deformation, fit, or damage.	☐			
Inspect centering device and centering guide components at flange radii and mounting connections. Spot paint as needed.			☐	

Refer to Section 8.3 "Span Lock Machinery and Centering Equipment" for component locations, quantities, and additional maintenance information. Component ID # corresponds to components listed in Section 11.1.

Notes:

Electrical Maintenance Checklist – Traffic Gates

Form 10-4
Page 1 of 1

Date: _____	Maintenance Personnel: _____	Maintenance Tasks to Be Performed: Six Month	Annual
		☐	☐

Maintenance Tasks	Maintenance Tasks Completed	
	Six Month	Annual
Warning Gates (Section 8.4.1) (Component ID #64, 65, 67, 71, 74, 75, 76, 77, 86, 90, 93, 98)		
Verify bumper rods are properly adjusted.	☐	
Verify stay cables are properly adjusted.	☐	
Check the NW warning gate transmission oil level. Add or replace oil as needed.	☐	
Lubricate NW warning gate shaft bearings and rod ends.	☐	
Lubricate the rotary cam limit switch roller chain.	☐	
Check the roller chain tension and tighten as required.	☐	
Check the NE, SE, and SW warning gate transmission oil level. Add or replace oil as needed.	☐	
Lubricate NE, SE, and SW warning gate pivot shaft bearings.	☐	
Lubricate NE, SE, and SW warning gate clevis pin.	☐	
Lubricate NE, SE, and SW warning gate transmission crank pin.	☐	
Lubricate NE, SE, and SW warning gate instrumentation open gearing.	☐	
Replace NE, SE, and SW warning gate instrumentation open gearing.		☐

Refer to Section 8.4 "Traffic Gates" for component locations, quantities, and additional maintenance information. Component ID # corresponds to components listed in Section 11.1.

Notes:

Electrical Maintenance Checklist – Electrical Power Systems

Form 10-5
Page 1 of 4

		Maintenance Tasks to Be Performed:							
		Week 1	Week 2	Week 3	Week 4	Week 5	Three Month	Annual	Six Year
Date: _____	Maintenance Personnel: _____	☐	☐	☐	☐	☐	☐	☐	☐
Date: _____	Maintenance Personnel: _____	☐	☐	☐	☐	☐	☐	☐	☐
Date: _____	Maintenance Personnel: _____	☐	☐	☐	☐	☐	☐	☐	☐
Date: _____	Maintenance Personnel: _____	☐	☐	☐	☐	☐	☐	☐	☐
Date: _____	Maintenance Personnel: _____	☐	☐	☐	☐	☐	☐	☐	☐

Maintenance Tasks	Maintenance Tasks Completed							
	Week 1	**Week 2**	**Week 3**	**Week 4**	**Week 5**	**Three Month**	**Annual**	**Six Year**
Motor Control Enclosures (Section 8.5.1)								
Open and clean enclosures with a vacuum cleaner.						☐		
Remove accumulation of dirt, grease, and gum with contact cleaner.						☐		
Inspect enclosures for corrosion and moisture.						☐		
Check for poor or loose connections and evidence of overheating.						☐		
Lubricate door hinges and latches.						☐		
Check circuit breaker disconnects for proper operation.						☐		
Inspect terminal block screws and tighten all loose connections.						☐		
Inspect wiring from unit terminal bocks for deterioration of insulation.						☐		
Inspect all circuit breakers. Verify with meter that continuity is broken on trip or switch off conditions.						☐		
Check all starter contacts. Replace contacts when nearly all the silver tip is gone and contact tip support is exposed.						☐		
Inspect all fuses with meter and verify continuity. Replace fuses as needed.						☐		
Inspect fuse clips for dirt and verify that the clips provide a tight fit.						☐		
Verify enclosure lights turn on when doors are open. Replace bulbs as required.						☐		
Verify enclosure heaters are functioning.						☐		
Check for discolored connections on terminals, contact supports, bus bars, or connectors. Clean connection points that are discolored. Tighten all hardware. Replace or repair heat-damaged wires and connectors as necessary.							☐	
Operate the motor controller/contactor without load and observe contact operation to be sure it opens and closes cleanly and that the contacts are fully sealed in the closed position.							☐	
Operate the motor controller/contactor under load and check for loud noise and arcing.							☐	
Measure and record current draw on load side of contactor.							☐	
Drive Cabinets and Resistors (Section 8.5.2)								
Open and with a vacuum cleaner.						☐		
Remove accumulation of dirt, grease, and gum with contact cleaner.						☐		
Check for corrosion and moisture.						☐		
Lubricate door hinges and latches.						☐		
Inspect terminal block screws and tighten all loose connections.						☐		

Electrical Maintenance Checklist – Electrical Power Systems

Form 10-5
Page 2 of 4

Maintenance Tasks	Maintenance Tasks Completed							
	Week 1	Week 2	Week 3	Week 4	Week 5	Three Month	Annual	Six Year
Drive Cabinets and Resistors (cont.)								
Inspect wiring from unit terminal blocks for deterioration of insulation.						☐		
Inspect all circuit breakers. Verify with meter that continuity is broken on trip or switch off conditions.						☐		
Inspect all fuses with meter and verify continuity. Replace as needed.						☐		
Inspect relays and tighten connections as necessary.						☐		
Verify enclosure heaters are functioning.						☐		
Verify enclosure lights turn on when doors are open. Replace bulbs as required.						☐		
Change the selected drive for each leaf.						☐		
Clean drive cabinet and resistor enclosure filters with vacuum or replace as needed.							☐	
Verify enclosure fan is functioning.							☐	
Check drive cabinet and resistor enclosures for discolored connections on terminal, contact supports, bus bars or connectors. Clean connection points that are discolored. Tighten all loose hardware. Replace or repair heat damaged wires and connectors as necessary.							☐	
Operate the motor controller contactors without load and observe contact operation to be sure it opens and closes cleanly and that the contacts are fully sealed in the closed position.							☐	
Operate the motor controller contactors under load and check for loud noise and arcing.							☐	
Replace general purpose plug-in style ice cube relays.								☐
Panelboards (Section 8.5.3)								
Open and clean with a vacuum cleaner.							☐	
Remove accumulation of dirt, grease, and gum with contact cleaner.							☐	
Check for corrosion and moisture.							☐	
Examine bus bar connections for poor or loose connections and evidence of overheating.							☐	
Lubricate door hinges and latches.							☐	
Operate each circuit breaker to check for proper operation.							☐	
Measure resistance to ground at each panelboard using a ground test kit.							☐	
Transformers (Section 8.5.4)								
Open and clean with vacuum cleaner.							☐	
Check for corrosion and moisture.							☐	
Verify all hardware is secure. Tighten as needed.							☐	
Standby Emergency Generator (Section 8.5.5)								
Verify indicators on the control desk and automatic transfer switch are normal.	☐	☐	☐	☐	☐			
Check battery and battery charger.	☐	☐	☐	☐	☐			
Check drive belt tension.	☐	☐	☐	☐	☐			
Check coolant level, oil level, fuel level and air cleaner.	☐	☐	☐	☐	☐			
Perform all pre-start-up inspections and maintenance.	☐	☐	☐	☐	☐			
Start and run the generator for 15 minutes with no load.	☐	☐	☐	☐	☐			

Electrical Maintenance Checklist – Electrical Power Systems

Form 10-5
Page 3 of 4

Maintenance Tasks	Maintenance Tasks Completed							
	Week 1	Week 2	Week 3	Week 4	Week 5	Three Month	Annual	Six Year
Standby Emergency Generator (cont.)								
Perform all post run inspections and maintenance.	☐	☐	☐	☐	☐			
Start and run the generator under load for one complete opening.							☐	
Check for corrosion and moisture on generator and fuel tank.							☐	
Check all bolted connections for tightness. Tighten as needed.							☐	
Inspect all terminal block connections for corrosion.							☐	
Change oil and filter, coolant filter, fuel filter, air cleaner element.							☐	
Check radiator hoses for damage.							☐	
Drain water from fuel tank.							☐	
Automatic Transfer Switch (Section 8.5.6)								
Test annually with operation of the generator.							☐	
Remove accumulation of dirt, grease, and gum with contact cleaner.							☐	
Check for corrosion and moisture							☐	
Examine for excessive heating of parts, discoloration of metal parts, charred insulation, odor, or blistering.							☐	
Check for freedom of moving parts.							☐	
Check for worn or broken mechanical parts.							☐	
Tighten loose mountings and connections.							☐	
Check for excessive arcing.							☐	
Safety and Disconnect Switches (Section 8.5.7)								
Remove accumulation of dirt, grease, and gum with contact cleaner.							☐	
Check for corrosion and moisture.							☐	
Examine for excessive heating of parts, discoloration of metal parts, charred insulation, odor, or blistering.							☐	
Check for freedom of moving parts							☐	
Check for worn or broken mechanical parts.							☐	
Tighten loose mountings and connections.							☐	
Replace pitted or worn contacts if practical. Install and adjust per manufacturers' specifications, otherwise replace entire item.							☐	
Check for excessive arcing.							☐	
Check condition of gaskets for dust-tight or watertight units.							☐	
Electrical Conductors (Section 8.5.8)								
Visually inspect terminations and splices for cracks, deterioration, corrosion, discoloring, or any other abnormalities.							☐	
Check tightness of each conductor termination at each terminal box.							☐	
Check the strain relief fittings for signs of distress.							☐	
Inspect wires and electrical cables for grease and oil contamination, fraying, abrasions, sweating, cracked, melted, or overheated blue tinted insulation. Clean insulation or replace the conductor in kind as needed.							☐	

Electrical Maintenance Checklist – Electrical Power Systems

Form 10-5
Page 4 of 4

Maintenance Tasks	Maintenance Tasks Completed							
	Week 1	Week 2	Week 3	Week 4	Week 5	Three Month	Annual	Six Year
Droop Cables (Section 8.5.8)								
Visually inspect terminations and splices for cracks, deterioration, corrosion, discoloring, or any other abnormalities.							☐	
Check tightness of each conductor termination at each terminal box. Tighten loose connections.							☐	
Check the strain relief fittings for signs of distress.							☐	
Check cables for any wear or abrasions on the outer jacket.							☐	
Inspect wires and electrical cables for grease and oil contamination, fraying, abrasions, sweating, cracked, melted or overheated blue tinted insulation. Clean or replace in kind as needed.							☐	
Submarine Cables (Section 8.5.10)								
Open and clean termination cabinets with a vacuum cleaner.						☐		
Remove accumulation of dirt, grease, and gum with contact cleaner.						☐		
Check termination cabinets for corrosion and moisture.						☐		
Examine termination cabinet connections for poor or loose connections and evidence of overheating.						☐		
Lubricate door hinges and latches.						☐		
Inspect terminal block screws and tighten all connections.						☐		
Inspect wiring from unit terminal bocks for deterioration of insulation.						☐		
Check all contacts. Replace when nearly all the silver tip is gone and the contact tip support is exposed.						☐		
Test each set of submarine cables during normal bridge openings.							☐	
Check the strain relief fittings for signs of distress.							☐	
Visually inspect the submarine cable and watch for signs of cracks, deterioration, and discoloration of the cable jacket.							☐	
Tighten loose termination cabinet connections.							☐	
Check the tightness of each conductor termination at each terminal box. Tighten loose connections.							☐	
Check for discolored connections on terminals, contact supports, or connectors. Clean connection points that are discolored. Tighten all hardware. Replace or repair heat damaged wires and connectors as necessary.							☐	
Operate the remote controlled switches without load and observe contact operation to be sure it opens and closes cleanly and that the contacts are fully sealed in the closed position.							☐	
Operate the remote controlled switches under load and check for loud noise and arcing							☐	

Refer to Section 8.5 "Electrical Power Systems" for component locations, quantities, and additional maintenance information.

Notes:

Electrical Maintenance Checklist – Lighting System

Form 10-6
Page 1 of 1

	Maintenance Tasks To Be Performed:							
	Week 1	Week 2	Week 3	Week 4	Week 5	Monthly	Six Month	Annual
Date: _____ Maintenance Personnel: _____	☐	☐	☐	☐	☐	☐	☐	☐
Date: _____ Maintenance Personnel: _____	☐	☐	☐	☐	☐	☐	☐	☐
Date: _____ Maintenance Personnel: _____	☐	☐	☐	☐	☐	☐	☐	☐
Date: _____ Maintenance Personnel: _____	☐	☐	☐	☐	☐	☐	☐	☐
Date: _____ Maintenance Personnel: _____	☐	☐	☐	☐	☐	☐	☐	☐

	Maintenance Tasks Completed							
Maintenance Tasks	**Week 1**	**Week 2**	**Week 3**	**Week 4**	**Week 5**	**Monthly**	**Six Month**	**Annual**
Navigation Lights (Section 8.6.1)								
Check navigation lights for proper operation.	☐	☐	☐	☐	☐			
Replace lamps or fixtures as needed.	☐	☐	☐	☐	☐			
Check gaskets.								☐
Tighten loose connections.								☐
Inspect for corrosion of metal parts.								☐
Replace worn or broken mechanical parts.								☐
Replace lamps.								☐
Interior/Exterior Lights (Section 8.6.2)								
Check for burned-out lamps. Replace lamp as needed.	☐	☐	☐	☐	☐			
Clean luminaire lenses, interior surfaces, and weep holes (where applicable).								☐
Check gaskets and replace as needed.								☐
Tighten loose connections.								☐
Inspect for corrosion of metal parts. Spot paint as necessary.								☐
Replace worn or broken parts.								☐
Traffic Signals (Section 8.6.3)								
Check lights for proper illumination. Replace bulbs as needed.						☐		
Verify proper operation of the traffic signals and gongs during openings.						☐		
Clean reflectors and lenses. Spot paint heads as needed.								☐
Traffic Gate Arm Lights (Section 8.6.4)								
Check gate arm lights for proper operation. Replace bulbs as needed.	☐	☐	☐	☐	☐			
Replace gate arm light lamps and wiring that is non-functional or damaged.							☐	

Refer to Section 8.6 "Lighting Systems" for component locations, quantities, and additional maintenance information.

Notes:

Electrical Maintenance Checklist – Electric Motors

Form 10-7
Page 1 of 2

Date: _____ Maintenance Personnel: _____	Maintenance Tasks To Be Completed: Annual	Six Year
	☐	☐

Maintenance Tasks	Maintenance Tasks Completed	
	Annual	**Six Year**
Lock Motors (Section 8.7.1) (Component ID # 53)		
Verify that shaft is free of oil and grease.	☐	
Check for leakage around bearings. Clean off excess grease and dirt.	☐	
Verify that shaft end-play is normal.	☐	
Inspect and tighten loose electrical connections on motor.	☐	
See that all keys, bolts, and pins are in their proper position. Check all bolts for tightness. Tighten as needed.	☐	
During operation, examine motor for smooth running and absence of vibration.	☐	
During operation, check motor and bearings for overheating.	☐	
Lubricate span lock motor bearings.	☐	
Check painted surfaces for corrosion. Spot paint as necessary.	☐	
Perform a general visual inspection of the solenoid brakes while stationary and during lock operation.	☐	
Check solenoid brakes electrical connections and tighten as necessary.	☐	
Inspect solenoid brakes mechanical components for wear, broken parts, and bolt and nut tightness. Check for freedom of moving parts	☐	
Check solenoid brakes for excessive heating of parts. Check for collections of dirt or gum, evidence of water dripping, or corrosion. Clean as necessary.	☐	
Check solenoid brakes for excessive vibration or noise during operation.	☐	
Repaint motors.		☐
Main Leaf (Span) Motors (Section 8.7.2) (Component ID # 4)		
Verify that shaft is free of oil and grease.	☐	
Check for leakage around bearings. Clean off excess grease and dirt.	☐	
Verify that shaft end-play is normal.	☐	
Inspect and tighten loose electrical connections on motor.	☐	
See that all keys, bolts, and pins are in their proper position. Check all bolts for tightness. Tighten as needed.	☐	
During operation, examine motor for smooth running and absence of vibration.	☐	
During operation, check motor and bearings for overheating.	☐	
Lubricate main leaf motor bearings.	☐	
Check painted surfaces for corrosion. Spot paint as necessary.	☐	
Repaint motor.		☐
Traffic Gate Motors (Section 8.7.3) (Component ID # 62, 63, 82, & 83)		
Check for leakage around bearings. Clean off excess grease and dirt.	☐	
Verify that shaft end-play is normal.	☐	
Inspect and tighten loose electrical connections on motor.	☐	
See that all keys, bolts, and pins are in their proper position. Check all bolts for tightness. Tighten as needed.	☐	
During operation, examine motor for smooth running and absence of vibration.	☐	
During operation, check motor and bearings for overheating.	☐	

Electrical Maintenance Checklist – Electric Motors

Form 10-7
Page 2 of 2

Maintenance Tasks	Maintenance Tasks Completed	
	Annual	Six Year
Traffic Gate Motor s(cont.)		
Check painted surfaces for corrosion. Spot paint as necessary. Do no paint nameplates.	☐	
Visually inspect solenoid brake while stationary and during gate operation.	☐	
Check solenoid brake electrical connections and tighten as necessary.	☐	
Inspect solenoid brake for wear, damage, and bolt and nut tightness. Check for freedom of moving parts.	☐	
Check solenoid brake components for evidence of excessive heating. Check for accumulation of dirt or gum, evidence of water dripping, or corrosion. Clean as necessary.	☐	
Check solenoid brake for excessive vibration or noise during operation.	☐	

Refer to Section 8.7 "Electric Motors" for component locations, quantities, and additional maintenance information. Component ID # corresponds to components listed in Section 11.1.

Notes:

Electrical Maintenance Checklist – Control System

Form 10-8
Page 1 of 2

Date: _____ Maintenance Personnel: _____	Maintenance Tasks To Be Completed: Three Month	Annual
	☐	☐

Maintenance Tasks	Maintenance Tasks Completed	
	Three Month	Annual
Control Console (Section 8.8.1)		
Open and clean with a vacuum cleaner.	☐	
Remove accumulation of dirt, grease, and gum with contact cleaner.	☐	
Check for corrosion and moisture.	☐	
Lubricate door hinges and latches.	☐	
Inspect terminal block screws and tighten all loose connections.	☐	
Inspect wiring from unit terminal blocks for deterioration of insulation.	☐	
Inspect all circuit breakers. Verify with meter than continuity is broken on trip or switch off conditions.	☐	
Inspect all fuses with meter and verify continuity. Replace fuses if needed.	☐	
Inspect all relays and tighten connections as necessary.	☐	
Check all pushbuttons, selector switches and meters. Replace as necessary.	☐	
Check all indicating lights and verify that each lamp illuminates. Replace bulbs as required		☐
Verify enclosure lights turn on when doors are open. Replace bulbs as required.		☐
Remove indicating light covers and check springs are firmly seated and each bulb and lamp holder is making sufficient contact		☐
Replace all indicating light bulbs		☐
Check for discolored connections on terminals, contact supports, bus bars, or connectors. Clean connection points that are discolored. Tighten all hardware. Replace or repair heat damaged wires and connectors as necessary.		☐
Manually operate each relay with associated circuit breakers off and observe contact operation to be sure it opens and closes cleanly and that the contacts are sealed when in the closed position.		☐
Monitor relay operations during normal operation and check for loud noise and arcing, during opening and on closing operations.		☐
Limit Switches (Section 8.8.2) (5, 8, 41, 42, 44, 47, 48, 60,78, 79, 94, 95, & 99)		☐
Inspect all limit switches for wear.		☐
Remove accumulated dust, dirt, and moisture on housing.		☐
Remove accumulated dust, dirt, and moisture from all shafts.		☐
Inspect latches, mounting hardware, and seals.		☐
Inspect all screws and tighten connections as necessary.		☐
Remove the cover and visually inspect the condition of all internal parts.		☐
Inspect rotary cam limit switch switches for wear.		☐
Inspect rotary cam limit switch rollers for wear.		☐
Inspect rotary cam limit switch cams for wear.		☐
Inspect span lock and brake limit switch contacts and all internal component connections.		☐
Inspect span lock and brake limit switch wiring for deterioration.		☐
Cycle span lock and brake limit switch lever arm several times.		☐
Lubricate fully seated limit switch internal assembly.		☐
Inspect all fully seated limit switch locknuts and tighten as necessary.		☐

Electrical Maintenance Checklist – Control System

Form 10-8
Page 2 of 2

Maintenance Tasks	Maintenance Tasks Completed	
	Three Month	Annual
Limit Switches (cont.)		
Inspect fully seated limit switches springs for corrosion and clean and/or replace as required.		☐
Verify fully seated limit switches adjustment of plunger rod and contact assembly.		☐
Speed Switches and Tachometer Assembly (Section 8.8.3) (Component ID # 1, 2 & 61)		☐
Remove accumulated dust, dirt, and moisture on housing.		☐
Remove accumulated dust, dirt, and moisture from overspeed switch shafts.		☐
Inspect cover to ensure proper seal of housing.		☐
Inspect all screws and tighten connections as necessary.		☐
Inspect the assembly and timing belt for wear. Replace belt if needed.		☐
Check belt tension.		☐

Refer to Section 8.8 "Control System" for component locations, quantities, and additional maintenance information. Component ID # corresponds to components listed in Section 11.1.

Notes:

Electrical Maintenance Checklist – Miscellaneous Equipment

Form 10-9
Page 1 of 2

	Maintenance Tasks To Be Performed:							
	Week 1	Week 2	Week 3	Week 4	Week 5	Monthly	Six Month	Annual
Date: _____ Maintenance Personnel: _____	☐	☐	☐	☐	☐	☐	☐	☐
Date: _____ Maintenance Personnel: _____	☐	☐	☐	☐	☐	☐	☐	☐
Date: _____ Maintenance Personnel: _____	☐	☐	☐	☐	☐	☐	☐	☐
Date: _____ Maintenance Personnel: _____	☐	☐	☐	☐	☐	☐	☐	☐
Date: _____ Maintenance Personnel: _____	☐	☐	☐	☐	☐	☐	☐	☐

	Maintenance Tasks Completed							
Maintenance Tasks	**Week 1**	**Week 2**	**Week 3**	**Week 4**	**Week 5**	**Monthly**	**Six Month**	**Annual**
Electric Horn, Air Horn and Air Compressors (Section 8.9.1)								
Perform a general visual inspection and check for proper operation. Correct as necessary.	☐	☐	☐	☐	☐			
Check electrical connections and tighten as necessary.								☐
Operate the compressor under load and check for excessive heating of parts								☐
Check for collections of dirt or gum, evidence of water dripping, or corrosion. Clean as necessary.								☐
Check the horn trumpets for debris inside the trumpets.								☐
Inspect connecting piping, tubing or hoses for cracking or leaks.								☐
Check the condition of the air filter. Clean or replace as required.								☐
Heating and Air Conditioning Systems (Section 8.9.2)								
Check all air filters. Clean or replace as necessary.						☐		
Check all cooling coils, seals, fittings, ducting connections, and pipelines for leaks. Correct as necessary.						☐		
Check surfaces of casing for signs of corrosion and retreat or paint as necessary.						☐		
Inspect the condition of all safety devices for deterioration.						☐		
Check the performance of all equipment related to temperature and humidity.						☐		
Sump Pump (Section 8.9.3)								
Test operation each sump pump motor.						☐		
Check that the motor is free of debris.						☐		
During operation, examine motor for smooth running and absence of vibration.						☐		
Exhaust Fans (Section 8.9.4)								
Where provided, check belts for wear and tightness. Replace belts as needed.								☐
Check all seals, fittings and connections for leaks and rectify as necessary.								☐
Check surfaces of casing for signs of corrosion.								☐
Inspect the condition of all safety devices for deterioration.								☐
Observe the exhaust fans during operation.								☐
Motorized Dampers (Section 8.9.5)								
Check all louvers and dampers for freedom of movement. Clean and lubricate pivot points. Remove any debris from louver and damper components.								☐
Check blades in the closed position to insure tight closure.								☐
Check Motors through their complete cycle for defects, binding or misalignment. Check operator anchorage and fittings.								☐

Electrical Maintenance Checklist – Miscellaneous Equipment

Form 10-9
Page 2 of 2

Maintenance Tasks	Maintenance Tasks Completed							
	Week 1	Week 2	Week 3	Week 4	Week 5	Monthly	Six Month	Annual
Motorized Dampers (cont.)								
Checked Blades for freedom of movement.								☐
Check pins, straps and bushings for wear, corrosion or rust. Replace or paint as required.								☐
Check louver or damper blade edge and jamb seals where applicable.								☐
Check all linkage, connecting bars and operator connections for proper alignment and fit.								☐
Water Heater (Section 8.9.6)								
Check the unit and associated piping for leaks.						☐		
Heat Trace (Section 8.9.7)								
Visually inspect the pipe, insulation, and connections to the heating cable for physical damage. Check that no moisture is present in junction boxes, electrical connections are tight and grounded, and insulation is dry and sealed.								☐
Pits, Platforms, and Walkways (Section 8.9.8)								
Clean and power wash the counterweight pits, platforms, and walkways of dirt and debris.							☐	

Refer to Section 8.9 "Miscellaneous Equipment" for component locations, quantities, and additional maintenance information.

Notes:

THIS PAGE INTENTIONALLY LEFT BLANK

CHAPTER 11 - SUPPLEMENTAL INFORMATION AND SPECIFICATIONS

CONTENTS

11.1 COMPONENT IDENTIFICATION CHARTS AND DIAGRAMS 11-3
11.2 MACHINERY LUBRICATION SCHEMATICS 11-6
11.3 MACHINERY LUBRICATION SCHEDULE 11-9
11.4 BRIDGE MAINTENANCE PERFORMANCE STANDARDS (PLATES) 11-13
11.4.1 SLEEVE BEARING AND TRUNNION BEARING LUBRICATION 11-13
11.4.2 MOTOR AND MACHINERY BRAKE MAINTENANCE 11-14
11.4.3 COUPLING LUBRICATION 11-17
11.4.4 SPEED REDUCER LUBRICATION 11-20
11.4.5 OPEN GEARING LUBRICATION 11-22
11.4.6 MOTOR BEARING LUBRICATION 11-24
11.4.7 SPAN LOCK MACHINERY LUBRICATION 11-26
11.4.7.1 SPAN LOCK COUPLING LUBRICATION 11-26
11.4.7.2 SPAN LOCK SPEED REDUCER LUBRICATION 11-28
11.4.7.3 SPAN LOCK OPEN GEARING LUBRICATION 11-30
11.4.7.4 SPAN LOCK BAR, GUIDES, AND RECEIVING SOCKET LUBRICATION 11-32
11.4.8 CENTERING GUIDE AND CENTERING DEVICE LUBRICATION 11-34
11.5 MATERIAL DATA SHEETS 11-35
11.5.1 MOBIL MOBILUX EP-0, EP-2 11-35
11.5.2 FALK LONG TERM GREASE 11-54
11.5.3 MOBIL MOBILTAC 325 NC 11-62
11.5.4 MOBIL MOBILGEAR 600 XP 100, 220 11-76
11.5.5 MOBIL UNIREX N2 11-97
11.5.6 CHEVRON HYDRAULIC OIL 5606A 11-107
11.5.7 MOBIL SHC 634 11-116
11.5.8 CRC TAC 2 ADHESIVE CHAIN LUBRICANT 11-129
11.5.9 CRC QUICKCLEAN HEAVY DUTY DEGREASER 11-138
11.5.10 PERMATEX GEAR OIL RTV SEALANT 11-147
11.5.11 CAIG LABORATORIES DEOXIT CONTACT CLEANER 11-152
11.6 COMPONENT MANUFACTURER LIST 11-160
11.7 MECHANICAL EQUIPMENT MANUALS AND SPECIFICATIONS 11-163
11.7.1 PRIMARY – HORSBURGH & SCOTT TYPE 170-S 11-163

11.7.2 MOTOR & MACHINERY BRAKES – GENERAL ELECTRIC IC9516-465N…11-200
11.7.3 SPAN LOCK MOTOR COUPLING – FALK TYPE T10 ……11-206
11.7.4 SPAN LOCK SPEED REDUCER – FOOTE JONES ……11-212
11.8 TRAFFIC CONTROL EQUIPMENT MANUALS AND SPECIFICATIONS ……11-222
11.8.1 WARNING GATE – B&B ROADWAY VT-66 ……11-222
11.9 ELECTRICAL EQUIPMENT MANUALS AND SPECIFICATIONS……11-253
11.9.1 TACHOMETER/OVERSPEED SWITCH ASSEMBLY - HUBBELL……11-253
11.9.2 DRIVE – HUBBELL 4922C ……11-254

11.1 COMPONENT IDENTIFICATION CHARTS AND DIAGRAMS

SPAN DRIVE MACHINERY			
ID NUMBER	MANUFACTURER	DESCRIPTION	SECTION
1	BALDOR	TACHOMETER	8.8.3
2	HUBBELL	OVERSPEED SWITCH	8.8.3
3	-	JAW COUPLING	8.2.2
4	WESTINGHOUSE	MAIN LEAF MOTOR	8.7.2
5	GENERAL ELECTRIC	MOTOR BRAKE, W/ 2 GENERAL ELECTRIC LIMIT SWITCHES	8.2.1 & 8.8.2
6	-	BRAKEWHEEL COUPLING	8.2.2
7	HORSBURGH & SCOTT	PRIMARY SPEED REDUCER	8.2.3
8	GENERAL ELECTRIC	MACHINERY BRAKE, W/ 2 GENERAL ELECTRIC LIMIT SWITCHES	8.2.1 & 8.8.3
9	-	BRAKEWHEEL COUPLING	8.2.2
10	-	SHAFT	-
11	-	TRUNNION BEARING	8.1.1
12	-	TRUNNION SHAFT	8.1.1
13	-	BEARING	8.2.4
14	-	GEAR COUPLING	8.2.2
15	-	FLOATING SHAFT	-
16	-	GEAR COUPLING	8.2.2
17	-	BEARING	8.2.4
18	-	BEARING	8.2.4
19	-	BEVEL PINION	8.2.5
20	-	BEARING	8.2.4
21	-	SHAFT	-
22	-	BEVEL GEAR	8.2.5
23	-	FLOATING SHAFT	-
24	-	SPLIT COLLAR	-
25	-	BEARING	8.2.4
26	-	BEVEL PINION	8.2.5
27	-	BEVEL GEAR	8.2.5
28	-	BEARING	8.2.4
29	-	INTERMEDIATE PINION	8.2.5
30	-	BEARING	8.2.4
31	-	INTERMEDIATE GEAR	8.2.5
32	-	MAIN PINION	8.2.5
33	-	RACK	8.2.5
34	-	CRANK	8.2.6
35	-	CONNECTING ROD	8.2.6
36	-	LEVER	8.2.6
37	-	BEARING	8.2.4
38	-	SHAFT	-
39	-	GEAR	8.2.5
40	-	PINION	8.2.5
41	GENERAL ELECTRIC	ROTARY CAM LIMIT SWITCH	8.8.2
42	GENERAL ELECTRIC	ROTARY CAM LIMIT SWITCH	8.8.2
43	-	JAW COUPLING	8.2.2
44	HENSCHEL CORP.	TRANSMITTER	8.8.2
59	-	LIVE LOAD BEARING	8.1.2
60	-	FULLY SEATED LIMIT SWITCH	8.8.2
61	-	TACHOMETER/OVERSPEED SWITCH ASSEMBLY TIMING BELT	8.8.3

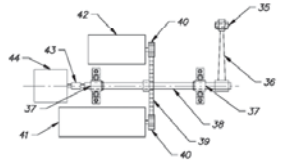

SPAN POSITION INSTRUMENTATION MACHINERY – PLAN

SCALE: NTS

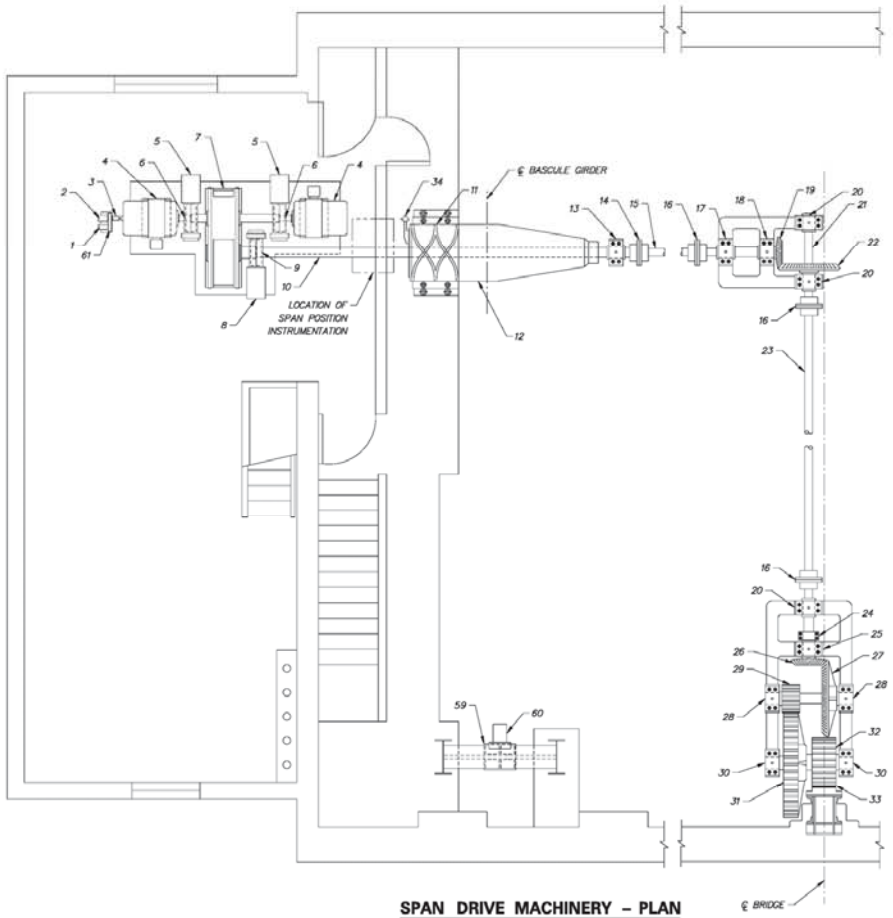

SPAN DRIVE MACHINERY – PLAN

SCALE: NTS

NOTES: TRUNNION BEARINGS AND LIVE LOAD BEARINGS ARE SYMMETRICAL ABOUT CENTERLINE OF BRIDGE (ONLY ONE OF EACH SHOWN)
SPAN POSITION INSTRUMENTATION NOT SHOWN FOR CLARITY
FULLY SEATED LIMIT SWITCHES AT NORTHEAST AND SOUTHWEST LIVE LOAD ANCHORAGES ONLY

DELAWARE DEPARTMENT OF TRANSPORTATION

ADDENDUMS / REVISIONS

THIRD STREET BRIDGE OPERATIONS AND MAINTENANCE MANUAL

CONTRACT: -
COUNTY: NEW CASTLE
BRIDGE NO.: 1693 050
DRAWN BY: JAD
CHECKED BY: DJM

SPAN DRIVE MACHINERY COMPONENT IDENTIFICATION

SECTION No.: 11-1A
PAGE No.: 11-3

THIS PAGE INTENTIONALLY LEFT BLANK

SPAN LOCK MACHINERY			
ID NUMBER	MANUFACTURER	DESCRIPTION	SECTION
45	-	SPAN LOCK REAR GUIDE	8.3.1
46	-	LOCK BAR	8.3.1
47	CUTLER HAMMER	LOCK BAR PULLED LIMIT SWITCH	8.6.2
48	CUTLER HAMMER	LOCK BAR DRIVEN LIMIT SWITCH	8.6.2
49	-	SPAN LOCK PINION	8.3.4
50	-	SPAN LOCK RACK	8.3.4
51	FOOTE JONES	SPEED REDUCER	8.3.2
52	FALK	SPAN LOCK MOTOR COUPLING	8.3.3
53	WESTINGHOUSE	SPAN LOCK MOTOR	8.7.1
54	-	HAND CRANK	-
55	-	SPAN LOCK FRONT GUIDE	8.3.1
56	-	SPAN LOCK RECEIVING SOCKET	8.3.1
57	-	CENTERING GUIDE	8.3.5
58	-	CENTERING DEVICE	8.3.5

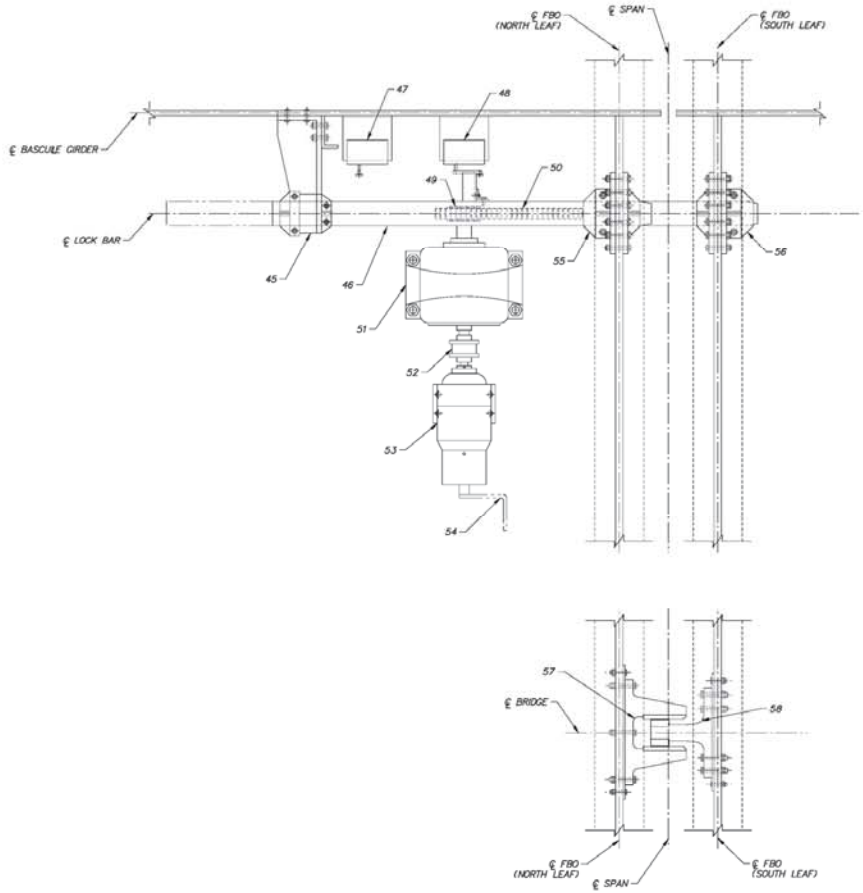

SPAN LOCK MACHINERY AND CENTERING GUIDE – PLAN

SCALE: NTS
NOTE: SPAN LOCK MACHINERY SYMMETRICAL ABOUT CENTERLINE OF BRIDGE

DELAWARE DEPARTMENT OF TRANSPORTATION

ADDENDUMS / REVISIONS

THIRD STREET BRIDGE OPERATIONS AND MAINTENANCE MANUAL

CONTRACT: -
COUNTY: NEW CASTLE
BRIDGE NO.: 1693 050
DRAWN BY: JAD
CHECKED BY: DJM

SPAN LOCK MACHINERY AND CENTERING GUIDE COMPONENT IDENTIFICATION

SECTION No.: 11-18
PAGE No.: 11-4

THIS PAGE INTENTIONALLY LEFT BLANK

NORTHEAST, SOUTHEAST, AND SOUTHWEST WARNING GATE MACHINERY			
ID NUMBER	MANUFACTURER	DESCRIPTION	SECTION
62	-	SOLENOID BRAKE	8.7.3
63	DOERR	WARNING GATE MOTOR	8.7.3
64	B&B ROADWAY	WARNING GATE TRANSMISSION	8.4.1
65	B&B ROADWAY	WARNING GATE BEARING	8.4.1
66	B&B ROADWAY	WARNING GATE TRANSMISSION CRANK	8.4.1
67	B&B ROADWAY	WARNING GATE TRANSMISSION CRANK PIN	8.4.1
68	B&B ROADWAY	WARNING GATE CLEVIS	8.4.1
69	B&B ROADWAY	WARNING GATE CONNECTING ROD	8.4.1
70	B&B ROADWAY	WARNING GATE CLEVIS	8.4.1
71	B&B ROADWAY	WARNING GATE CLEVIS PIN	8.4.1
72	B&B ROADWAY	WARNING GATE PIVOT SHAFT CRANK	8.4.1
73	B&B ROADWAY	WARNING GATE PIVOT SHAFT	8.4.1
74	B&B ROADWAY	WARNING GATE PIVOT SHAFT BEARING	8.4.1
75	B&B ROADWAY	WARNING GATE INSTRUMENTATION GEAR	8.4.1
76	B&B ROADWAY	WARNING GATE SECONDARY INSTRUMENTATION GEAR	8.4.1
77	B&B ROADWAY	WARNING GATE TERTIARY INSTRUMENTATION GEAR	8.4.1
78	B&B ROADWAY	WARNING GATE ROTARY CAM LIMIT SWITCH	8.8.2
79	B&B ROADWAY	MANUAL OPERATION LIMIT SWITCH	8.8.2
80	B&B ROADWAY	MANUAL OPERATION HAND CRANK	8.4.1
81	B&B ROADWAY	WARNING GATE ELECTRICAL COMPONENT BOARD	8.4.1

NORTHWEST WARNING GATE MACHINERY			
ID NUMBER	MANUFACTURER	DESCRIPTION	SECTION
82	-	SOLENOID BRAKE	8.7.3
83	LEESON	WARNING GATE MOTOR	8.7.3
84	B&B ROADWAY	WARNING GATE TRANSMISSION	8.4.1
85	B&B ROADWAY	WARNING GATE TRANSMISSION CRANK	8.4.1
86	B&B ROADWAY	WARNING GATE ROD END	8.4.1
87	B&B ROADWAY	WARNING GATE CRANK ARM	8.4.1
88	B&B ROADWAY	WARNING GATE CRANK ARM BEARING	8.4.1
89	B&B ROADWAY	WARNING GATE CONNECTING ROD	8.4.1
90	B&B ROADWAY	WARNING GATE ROD END	8.4.1
91	B&B ROADWAY	WARNING GATE PIVOT SHAFT CRANK	8.4.1
92	B&B ROADWAY	WARNING GATE PIVOT SHAFT	8.4.1
93	B&B ROADWAY	WARNING GATE PIVOT SHAFT BEARING	8.4.1
94	B&B ROADWAY	WARNING GATE MANUAL OPERATION LIMIT SWITCH	8.8.2
95	B&B ROADWAY	WARNING GATE DOOR LIMIT SWITCH	8.8.2
96	B&B ROADWAY	WARNING GATE MANUAL OPERATION DRILL ADAPTOR	8.4.1
97	B&B ROADWAY	WARNING GATE INSTRUMENTATION SPROCKET	8.4.1
98	B&B ROADWAY	WARNING GATE INSTRUMENTATION DRIVE CHAIN	8.4.1
99	B&R ROADWAY	WARNING GATE ROTARY CAM LIMIT SWITCH	8.8.2

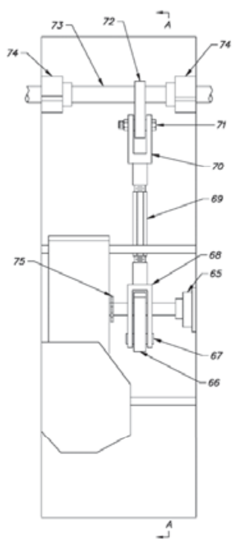

NORTHEAST, SOUTHEAST, AND SOUTHWEST WARNING GATE MACHINERY – ELEVATION
SCALE: NTS

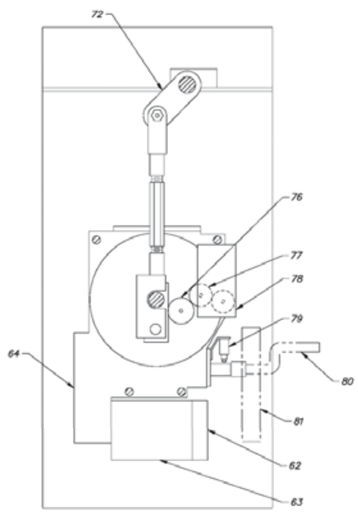

SECTION A–A
SCALE: NTS

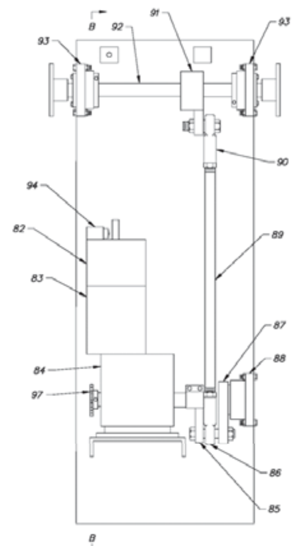

NORTHWEST WARNING GATE MACHINERY – ELEVATION
SCALE: NTS

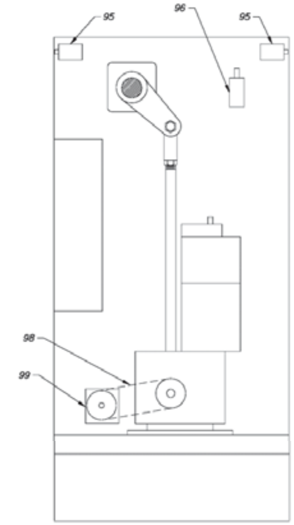

SECTION B–B
SCALE: NTS

DELAWARE DEPARTMENT OF TRANSPORTATION

ADDENDUMS / REVISIONS

THIRD STREET BRIDGE OPERATIONS AND MAINTENANCE MANUAL

CONTRACT	BRIDGE NO.	1693 050	WARNING GATE MACHINERY COMPONENT IDENTIFICATION	SECTION No.
-	DRAWN BY: JAB			11-1C
COUNTY				PAGE No.
NEW CASTLE	CHECKED BY: DJM			11-5

F:\CADD_STD\WORKSPACE\DELDOT\SEED\SB_BORDER.DGN

THIS PAGE INTENTIONALLY LEFT BLANK

11.2 MACHINERY LUBRICATION SCHEMATICS

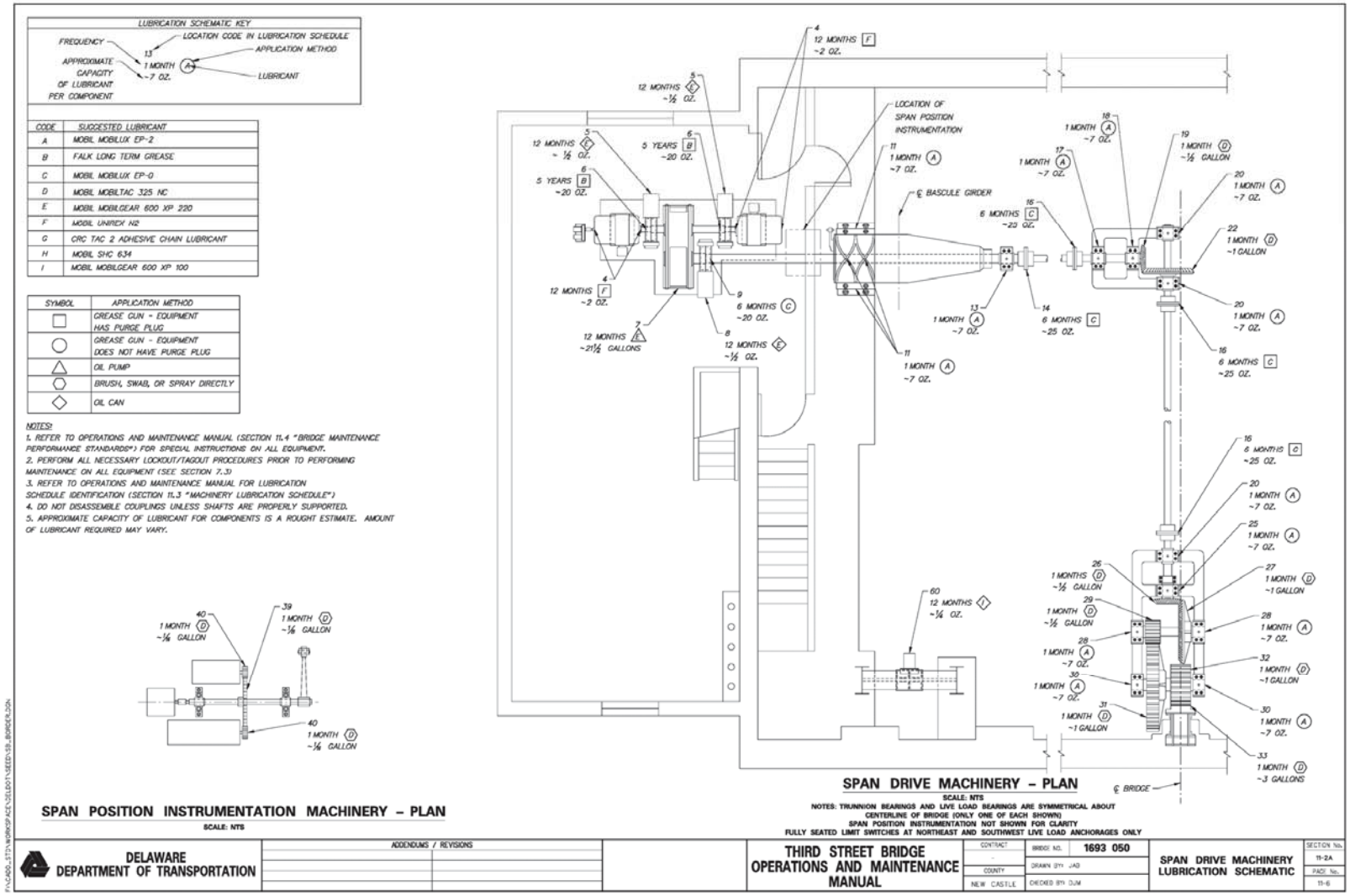

THIS PAGE INTENTIONALLY LEFT BLANK

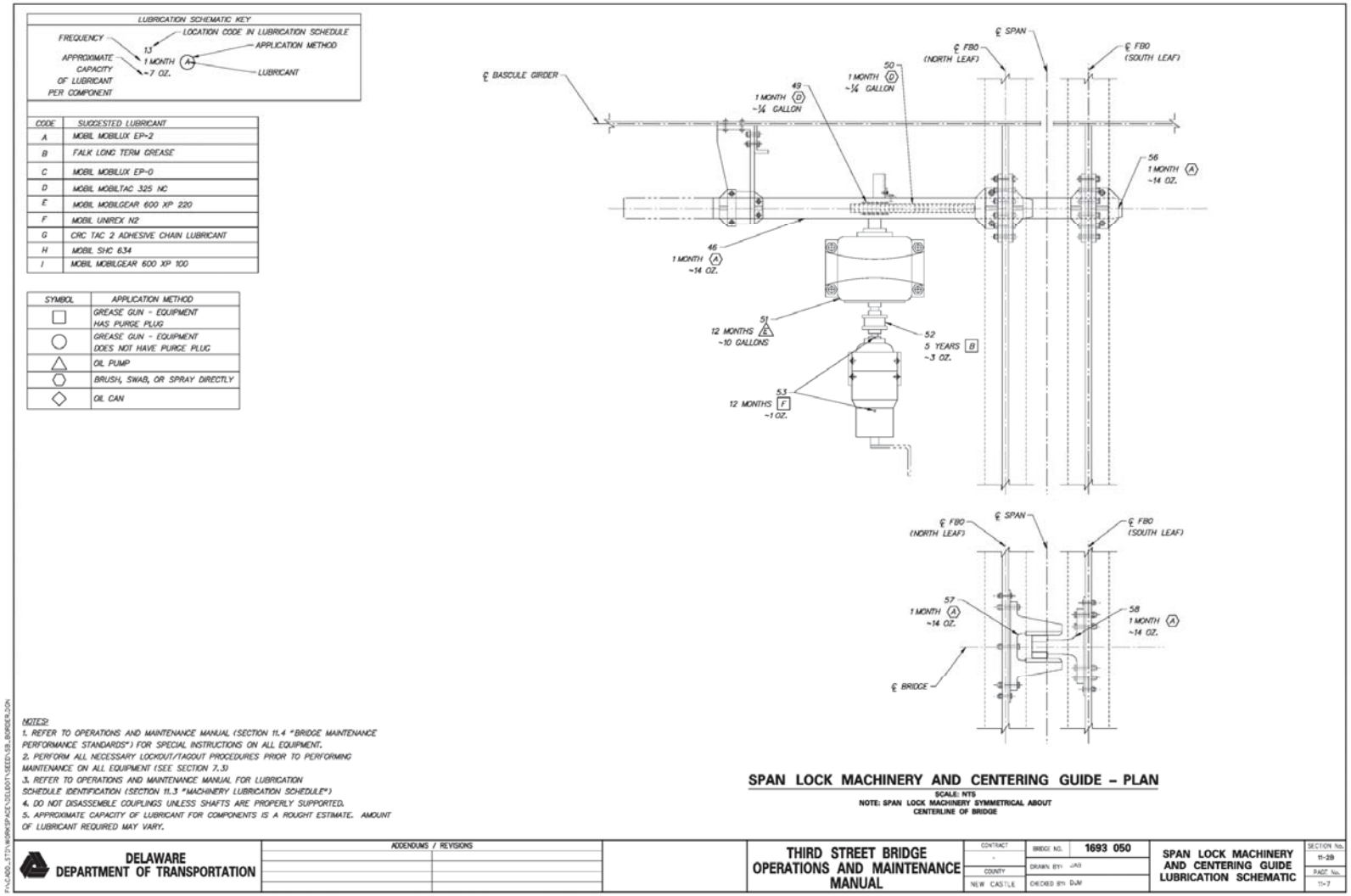
LUBRICATION SCHEMATIC KEY
FREQUENCY
LOCATION CODE IN LUBRICATION SCHEDULE
APPLICATION METHOD
APPROXIMATE CAPACITY OF LUBRICANT PER COMPONENT
1 MONTH
~7 OZ.
LUBRICANT
CODE | SUGGESTED LUBRICANT
A | MOBIL MOBILUX EP-2
B | FALK LONG TERM GREASE
C | MOBIL MOBILUX EP-0
D | MOBIL MOBILTAC 325 NC
E | MOBIL MOBILGEAR 600 XP 220
F | MOBIL UNIREX N2
G | CRC TAC 2 ADHESIVE CHAIN LUBRICANT
H | MOBIL SHC 634
I | MOBIL MOBILGEAR 600 XP 100
SYMBOL | APPLICATION METHOD
GREASE GUN - EQUIPMENT HAS PURGE PLUG
GREASE GUN - EQUIPMENT DOES NOT HAVE PURGE PLUG
OIL PUMP
BRUSH, SWAB, OR SPRAY DIRECTLY
OIL CAN
NOTES:
1. REFER TO OPERATIONS AND MAINTENANCE MANUAL (SECTION 11.4 "BRIDGE MAINTENANCE PERFORMANCE STANDARDS") FOR SPECIAL INSTRUCTIONS ON ALL EQUIPMENT.
2. PERFORM ALL NECESSARY LOCKOUT/TAGOUT PROCEDURES PRIOR TO PERFORMING MAINTENANCE ON ALL EQUIPMENT (SEE SECTION 7.3)
3. REFER TO OPERATIONS AND MAINTENANCE MANUAL FOR LUBRICATION SCHEDULE IDENTIFICATION (SECTION 11.3 "MACHINERY LUBRICATION SCHEDULE")
4. DO NOT DISASSEMBLE COUPLINGS UNLESS SHAFTS ARE PROPERLY SUPPORTED.
5. APPROXIMATE CAPACITY OF LUBRICANT FOR COMPONENTS IS A ROUGHT ESTIMATE. AMOUNT OF LUBRICANT REQUIRED MAY VARY.
℄ SPAN
℄ FBO (NORTH LEAF)
℄ FBO (SOUTH LEAF)
℄ BASCULE GIRDER
46 1 MONTH ~14 OZ.
49 1 MONTH ~¼ GALLON
50 1 MONTH ~¼ GALLON
51 12 MONTHS ~10 GALLONS
52 5 YEARS ~3 OZ.
53 12 MONTHS ~1 OZ.
56 1 MONTH ~14 OZ.
57 1 MONTH ~14 OZ.
58 1 MONTH ~14 OZ.
℄ BRIDGE
SPAN LOCK MACHINERY AND CENTERING GUIDE – PLAN
SCALE: NTS
NOTE: SPAN LOCK MACHINERY SYMMETRICAL ABOUT CENTERLINE OF BRIDGE
DELAWARE DEPARTMENT OF TRANSPORTATION
ADDENDUMS / REVISIONS
THIRD STREET BRIDGE OPERATIONS AND MAINTENANCE MANUAL
CONTRACT -
COUNTY NEW CASTLE
BRIDGE NO. 1693 050
DRAWN BY: JAB
CHECKED BY DJM
SPAN LOCK MACHINERY AND CENTERING GUIDE LUBRICATION SCHEMATIC
SECTION No. 11-2B
PAGE No. 11-7

THIS PAGE INTENTIONALLY LEFT BLANK

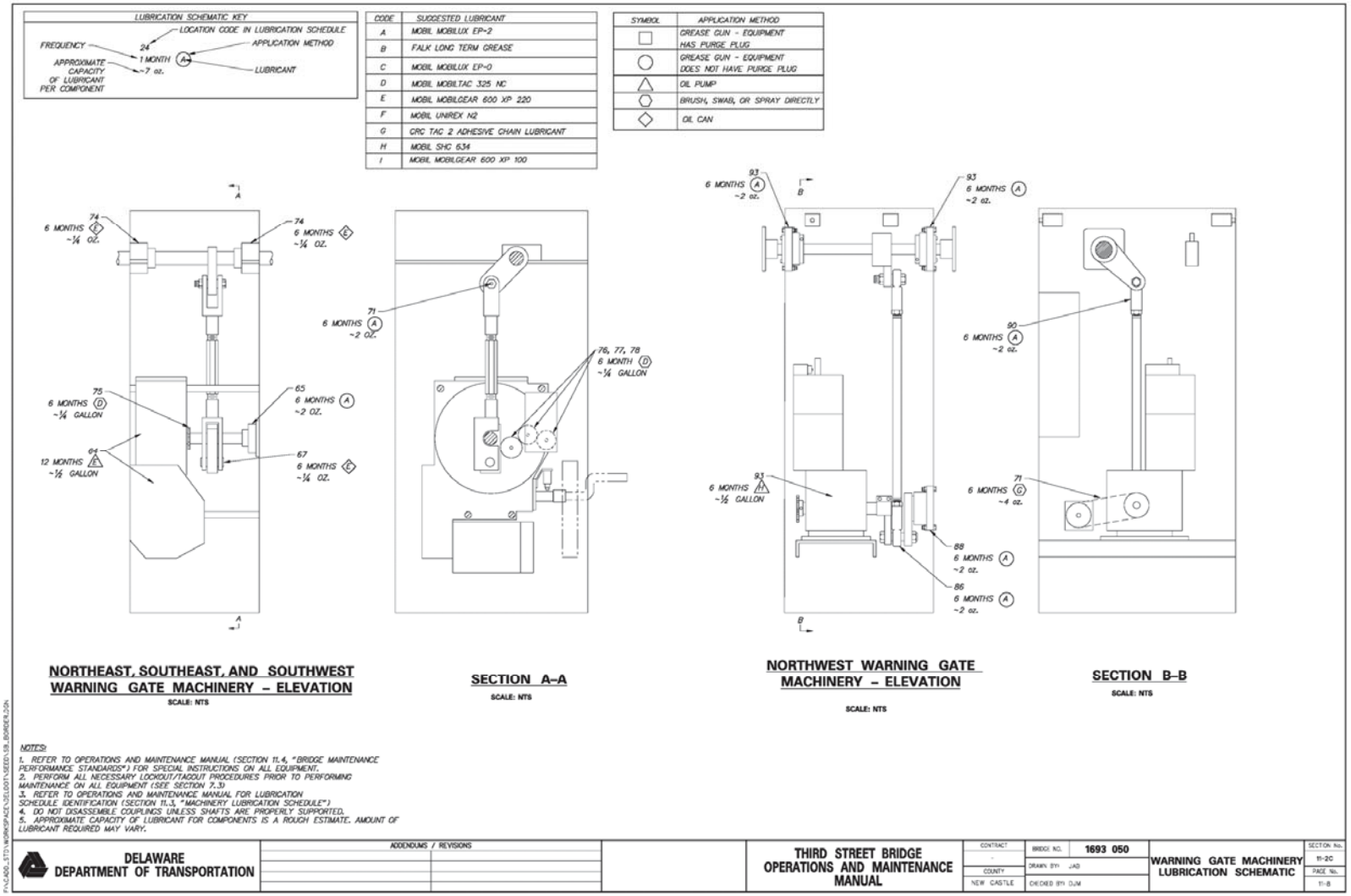
LUBRICATION SCHEMATIC KEY
LOCATION CODE IN LUBRICATION SCHEDULE
APPLICATION METHOD
FREQUENCY
24
1 MONTH
A
APPROXIMATE CAPACITY OF LUBRICANT PER COMPONENT
~7 oz.
LUBRICANT
CODE | SUGGESTED LUBRICANT
A | MOBIL MOBILUX EP-2
B | FALK LONG TERM GREASE
C | MOBIL MOBILUX EP-0
D | MOBIL MOBILTAC 325 NC
E | MOBIL MOBILGEAR 600 XP 220
F | MOBIL UNIREX N2
G | CRC TAC 2 ADHESIVE CHAIN LUBRICANT
H | MOBIL SHC 634
I | MOBIL MOBILGEAR 600 XP 100
SYMBOL | APPLICATION METHOD
GREASE GUN - EQUIPMENT HAS PURGE PLUG
GREASE GUN - EQUIPMENT DOES NOT HAVE PURGE PLUG
OIL PUMP
BRUSH, SWAB, OR SPRAY DIRECTLY
OIL CAN
74
6 MONTHS E ~¼ oz.
74
6 MONTHS E ~¼ oz.
75
6 MONTHS D ~¼ GALLON
65
6 MONTHS A ~2 oz.
94
12 MONTHS F ~½ GALLON
67
6 MONTHS E ~¼ oz.
A
A
NORTHEAST, SOUTHEAST, AND SOUTHWEST WARNING GATE MACHINERY – ELEVATION
SCALE: NTS
71
6 MONTHS A ~2 oz.
76, 77, 78
6 MONTH D ~¼ GALLON
SECTION A–A
SCALE: NTS
93
6 MONTHS A ~2 oz.
B
B
93
6 MONTHS A ~2 oz.
93
6 MONTHS F ~½ GALLON
88
6 MONTHS A ~2 oz.
86
6 MONTHS A ~2 oz.
NORTHWEST WARNING GATE MACHINERY – ELEVATION
SCALE: NTS
90
6 MONTHS A ~2 oz.
71
6 MONTHS G ~4 oz.
SECTION B–B
SCALE: NTS
NOTES:
1. REFER TO OPERATIONS AND MAINTENANCE MANUAL (SECTION 11.4, "BRIDGE MAINTENANCE PERFORMANCE STANDARDS") FOR SPECIAL INSTRUCTIONS ON ALL EQUIPMENT.
2. PERFORM ALL NECESSARY LOCKOUT/TAGOUT PROCEDURES PRIOR TO PERFORMING MAINTENANCE ON ALL EQUIPMENT (SEE SECTION 7.3)
3. REFER TO OPERATIONS AND MAINTENANCE MANUAL FOR LUBRICATION SCHEDULE IDENTIFICATION (SECTION 11.3, "MACHINERY LUBRICATION SCHEDULE")
4. DO NOT DISASSEMBLE COUPLINGS UNLESS SHAFTS ARE PROPERLY SUPPORTED.
5. APPROXIMATE CAPACITY OF LUBRICANT FOR COMPONENTS IS A ROUGH ESTIMATE. AMOUNT OF LUBRICANT REQUIRED MAY VARY.
DELAWARE DEPARTMENT OF TRANSPORTATION
ADDENDUMS / REVISIONS
THIRD STREET BRIDGE OPERATIONS AND MAINTENANCE MANUAL
CONTRACT
COUNTY
NEW CASTLE
BRIDGE NO. 1693 050
DRAWN BY: JAD
CHECKED BY: DJM
WARNING GATE MACHINERY LUBRICATION SCHEMATIC
SECTION No. 11-2C
PAGE No. 11-8

THIS PAGE INTENTIONALLY LEFT BLANK

11.3 MACHINERY LUBRICATION SCHEDULE

THIRD STREET BRIDGE MACHINERY – LUBRICATION SCHEDULE							
Location Code	**Section**	**Machinery**	**Applicator**	**Specified Grade**	**Lubrication Type**	**Mfr. Spec.**	**Frequency (Months)**
1	8.8.3	Tachometer	LUBRICATION NOT REQUIRED				
2	8.8.3	Overspeed Switch	LUBRICATION NOT REQUIRED				
3	8.2.2	Jaw Coupling	LUBRICATION NOT REQUIRED				
4	8.7.2	Main Leaf Motor Bearings	GREASE GUN, REMOVE PLUG, FILL WITH GREASE, REPLACE PLUG	NLGI #2	GREASE	MOBIL UNIREX N2	12
5	8.2.1	Motor Brake Bearing Pins	OIL CAN	AGMA #5 EP	OIL	MOBIL MOBILGEAR 600 XP 220	12
6	8.2.2	Motor Brakewheel Coupling	GREASE GUN, REMOVE PLUG, FILL WITH GREASE, REPLACE PLUG	NLGI # 1/2	GREASE	FALK LONG TERM GREASE	50
7	8.2.3	Primary Reducer	OIL PUMP - REMOVE PLUG, DRAIN OIL, FLUSH, REPLACE PLUG, AND FILL	AGMA #5 EP	OIL	MOBIL MOBILGEAR 600 XP 220	12
8	8.2.1	Machinery Brake Bearing Pins	OIL CAN	AGMA #5 EP	OIL	MOBIL MOBILGEAR 600 XP 220	12
9	8.2.2	Machinery Brakewheel Coupling	GREASE GUN, GREASE FITTING	NLGI #0	GREASE	MOBIL MOBILUX EP-0	6
10	-	Shaft	LUBRICATION NOT REQUIRED				
11	8.1.1	Trunnion Bearing	GREASE GUN, GREASE FITTING	NLGI #2	GREASE	MOBIL MOBILUX EP-2	1
12	8.1.1	Trunnion Shaft	LUBRICATION NOT REQUIRED				
13	8.2.4	Sleeve Bearing	GREASE GUN, GREASE FITTING	NLGI #2	GREASE	MOBIL MOBILUX EP-2	1
14	8.2.2	Gear Coupling	GREASE GUN, REMOVE PLUG, FILL WITH GREASE, REPLACE PLUG	NLGI #0	GREASE	MOBIL MOBILUX EP-0	6
15	-	Floating Shaft	LUBRICATION NOT REQUIRED				
16	8.2.2	Gear Coupling	GREASE GUN, REMOVE PLUG, FILL WITH GREASE, REPLACE PLUG	NLGI #0	GREASE	MOBIL MOBILUX EP-0	6
17	8.2.4	Sleeve Bearing	GREASE GUN, GREASE FITTING	NLGI #2	GREASE	MOBIL MOBILUX EP-2	1
18	8.2.4	Sleeve Bearing	GREASE GUN, GREASE FITTING	NLGI #2	GREASE	MOBIL MOBILUX EP-2	1
19	8.2.5	Bevel Pinion	BRUSH OR SWAB	N/A	GREASE	MOBIL MOBILTAC 325 NC	1
20	8.2.4	Sleeve Bearing	GREASE GUN, GREASE FITTING	NLGI #2	GREASE	MOBIL MOBILUX EP-2	1
21	-	Shaft	LUBRICATION NOT REQUIRED				
22	8.2.5	Bevel Gear	BRUSH OR SWAB	N/A	GREASE	MOBIL MOBILTAC 325 NC	1
23	-	Floating Shaft	LUBRICATION NOT REQUIRED				
24	-	Split Collar	LUBRICATION NOT REQUIRED				

Location Code	Section	Machinery	Applicator	Specified Grade	Lubrication Type	Mfr. Spec.	Frequency (Months)
25	8.2.4	Sleeve Bearing	GREASE GUN, GREASE FITTING	NLGI #2	GREASE	MOBIL MOBILUX EP-2	1
26	8.2.5	Bevel Pinion	BRUSH OR SWAB	N/A	GREASE	MOBIL MOBILTAC 325 NC	1
27	8.2.5	Bevel Gear	BRUSH OR SWAB	N/A	GREASE	MOBIL MOBILTAC 325 NC	1
28	8.2.4	Sleeve Bearing	GREASE GUN, GREASE FITTING	NLGI #2	GREASE	MOBIL MOBILUX EP-2	1
29	8.2.5	Intermediate Pinion	BRUSH OR SWAB	N/A	GREASE	MOBIL MOBILTAC 325 NC	1
30	8.2.4	Sleeve Bearing	GREASE GUN, GREASE FITTING	NLGI #2	GREASE	MOBIL MOBILUX EP-2	1
31	8.2.5	Intermediate Spur Gear	BRUSH OR SWAB	N/A	GREASE	MOBIL MOBILTAC 325 NC	1
32	8.2.5	Main Pinion	BRUSH OR SWAB	N/A	GREASE	MOBIL MOBILTAC 325 NC	1
33	8.2.5	Rack	BRUSH OR SWAB	N/A	GREASE	MOBIL MOBILTAC 325 NC	1
34	8.2.6	Crank	LUBRICATION NOT REQUIRED				
35	8.2.6	Connecting Rod	LUBRICATION NOT REQUIRED				
36	8.2.6	Lever	LUBRICATION NOT REQUIRED				
37	8.2.4	Bearing	LUBRICATION NOT REQUIRED				
38	-	Shaft	LUBRICATION NOT REQUIRED				
39	8.2.5	Instrumentation Spur Gear	BRUSH OR SWAB	N/A	GREASE	MOBIL MOBILTAC 325 NC	1
40	8.2.5	Instrumentation Pinion	BRUSH OR SWAB	N/A	GREASE	MOBIL MOBILTAC 325 NC	1
41	8.8.2	Rotary Cam Limit Switch	LUBRICATION NOT REQUIRED				
42	8.8.2	Rotary Cam Limit Switch	LUBRICATION NOT REQUIRED				
43	8.2.2	Jaw Coupling	LUBRICATION NOT REQUIRED				
44	8.8.2	Transmitter	LUBRICATION NOT REQUIRED				
45	8.3.1	Span Lock Rear Guide	LUBRICATION NOT REQUIRED				
46	8.3.1	Span Lock Bar	BRUSH OR SWAB	NLGI #2	GREASE	MOBIL MOBILUX EP-2	1
47	8.8.2	Lock Bar Pulled Limit Switch	LUBRICATION NOT REQUIRED				
48	8.8.2	Lock Bar Driven Limit Switch	LUBRICATION NOT REQUIRED				
49	8.3.4	Span Lock Pinion	BRUSH OR SWAB	N/A	GREASE	MOBIL MOBILTAC 325 NC	1
50	8.3.4	Span Lock Rack	BRUSH OR SWAB	N/A	GREASE	MOBIL MOBILTAC 325 NC	1

Location Code	Section	Machinery	Applicator	Specified Grade	Lubrication Type	Mfr. Spec.	Frequency (Months)
51	8.3.2	Span Lock Reducer	OIL PUMP - REMOVE PLUG, DRAIN OIL, FLUSH, REPLACE PLUG, AND FILL	AGMA #5 EP	OIL	MOBIL MOBILGEAR 600 XP 220	12
52	8.3.3	Span Lock Motor Coupling	GREASE GUN, REMOVE PURGE PLUG, FILL WITH GREASE, REPLACE PLUG	NLGI # 1/2	GREASE	FALK LONG TERM GREASE	50
53	8..1	Span Lock Motor Bearings	GREASE GUN, REMOVE PLUG, FILL WITH GREASE, REPLACE PLUG	NLGI #2	GREASE	MOBIL UNIREX N2	12
54	-	Hand Crank	LUBRICATION NOT REQUIRED				
55	8.3.1	Front Guide	LUBRICATION NOT REQUIRED				
56	8.3.1	Span Lock Receiving Socket	BRUSH OR SWAB	NLGI #2	GREASE	MOBIL MOBILUX EP-2	1
57	8.3.5	Centering Guide	BRUSH OR SWAB	NLGI #2	GREASE	MOBIL MOBILUX EP-2	1
58	8.3.5	Centering Device	BRUSH OR SWAB	NLGI #2	GREASE	MOBIL MOBILUX EP-2	1
59	8.1.2	Live Load Bearing	LUBRICATION NOT REQUIRED				
60	8.8.2	Fully Seated Limit Switch	OIL CAN	AGMA #3 EP	OIL	MOBIL MOBILGEAR 600 XP 100	12
61	8.2.3	Tachometer/ Overspeed Switch Assembly Timing Belt	LUBRICATION NOT REQUIRED				
62	8.7.3	Solenoid Brake	LUBRICATION NOT REQUIRED				
63	8.7.3	Warning Gate Motor	LUBRICATION NOT REQUIRED				
64	8.4.1	Warning Gate Transmission	OIL PUMP - REMOVE PLUG, DRAIN OIL, FLUSH, REPLACE PLUG, AND FILL	AGMA #5 EP	OIL	MOBIL MOBILGEAR 600 XP 220	6
65	8.4.1	Warning Gate Bearing	GREASE GUN, GREASE FITTING	NLGI #2	GREASE	MOBIL MOBILUX EP-2	6
66	8.4.1	Warning Gate Transmission Crank	LUBRICATION NOT REQUIRED				
67	8.4.1	Warning Gate Transmission Crank Pin	OIL CAN	AGMA #5 EP	OIL	MOBIL MOBILGEAR 600 XP 220	6
68	8.4.1	Warning Gate Clevis	LUBRICATION NOT REQUIRED				
69	8.4.1	Warning Gate Connecting Rod	LUBRICATION NOT REQUIRED				
70	8.4.1	Warning Gate Clevis	LUBRICATION NOT REQUIRED				
71	8.4.1	Warning Gate Clevis Pin	GREASE GUN, GREASE FITTING	NLGI #2	GREASE	MOBIL MOBILUX EP-2	6
72	8.4.1	Warning Gate Pivot Shaft Crank	LUBRICATION NOT REQUIRED				
73	8.4.1	Warning Gate Pivot Shaft	LUBRICATION NOT REQUIRED				
74	8.4.1	Warning Gate Pivot Shaft Bearing	OIL CAN	AGMA #5 EP	OIL	MOBIL MOBILGEAR 600 XP 220	6
75	8.4.1	Warning Gate Instrumentation Gear	BRUSH OR SWAB	N/A	GREASE	MOBIL MOBILTAC 325 NC	6

Location Code	Section	Machinery	Applicator	Specified Grade	Lubrication Type	Mfr. Spec.	Frequency (Months)
76	8.4.1	Warning Gate Secondary Instrumentation Gear	BRUSH OR SWAB	N/A	GREASE	MOBIL MOBILTAC 325 NC	6
77	8.4.1	Warning Gate Tertiary Instrumentation Gear	BRUSH OR SWAB	N/A	GREASE	MOBIL MOBILTAC 325 NC	6
78	8.8.2	Warning Gate Rotary Cam Limit Switch'	LUBRICATION NOT REQUIRED				
80	8.4.1	Manual Operation Hand Crank	LUBRICATION NOT REQUIRED				
81	8.4.1	Warning Gate Electrical Component Board	LUBRICATION NOT REQUIRED				
82	8.7.3	Solenoid Brake	LUBRICATION NOT REQUIRED				
83	8.7.3	NW Warning Gate Motor	LUBRICATION NOT REQUIRED				
84	8.4.1	NW Warning Gate Transmission	OIL CAN	AGMA #7	OIL	MOBIL SHC 634	6
85	8.4.1	NW Warning Gate Transmission Crank	LUBRICATION NOT REQUIRED				
86	8.4.1	NW Warning Gate Rod End	GREASE GUN, GREASE FITTING	NLGI #2	GREASE	MOBIL MOBILUX EP-2	6
87	8.4.1	NW Warning Gate Crank Arm	LUBRICATION NOT REQUIRED				
88	8.4.1	NW Warning Gate Crank Arm Bearing	GREASE GUN, GREASE FITTING	NLGI #2	GREASE	MOBIL MOBILUX EP-2	6
89	8.4.1	NW Connecting Rod	LUBRICATION NOT REQUIRED				
90	8.4.1	NW Warning Gate Rod End	GREASE GUN, GREASE FITTING	NLGI #2	GREASE	MOBIL MOBILUX EP-2	6
91	8.4.1	NW Warning Gate Pivot Shaft Crank	LUBRICATION NOT REQUIRED				
92	8.4.1	NW Warning Gate Pivot Shaft	LUBRICATION NOT REQUIRED				
93	8.4.1	NW Warning Gate Pivot Shaft Bearing	GREASE GUN, GREASE FITTING	NLGI #2	GREASE	MOBIL MOBILUX EP-2	6
94	8.8.2	NW Warning Gate Manual Operation Limit Switch	LUBRICATION NOT REQUIRED				
95	8.8.2	NW Warning Gate Door Limit Switch	LUBRICATION NOT REQUIRED				
96	8.4.1	NW Warning Gate Manual Operation Drill Adaptor	LUBRICATION NOT REQUIRED				
97	8.4.1	NW Warning Gate Instrumentation Sprocket	LUBRICATION NOT REQUIRED				
98	8.4.1	NW Warning Gate Instrumentation Drive Chain	SPRAY	N/A	GREASE	CRC TAC 2 ADHESIVE CHAIN LUBRICANT	6
99	8.8.2	NW Warning Gate Rotary Cam Limit Switch	LUBRICATION NOT REQUIRED				

11.4 BRIDGE MAINTENANCE PERFORMANCE STANDARDS (PLATES)

11.4.1 SLEEVE BEARING AND TRUNNION BEARING LUBRICATION

DELAWARE
DEPARTMENT OF TRANSPORTATION
BRIDGE MANAGEMENT SECTION
BRIDGE MAINTENANCE PERFORMANCE STANDARD

BRIDGE NUMBER
1-693

BMS ACTIVITY CODE
B065-S2J

EFFECTIVE DATE

ACTIVITY TITLE:
Sleeve Bearing and Trunnion Bearing Lubrication

UNIT OF MEASUREMENT:
Number of Sleeve Bearings and Trunnion Bearings

PROCEDURE DESCRIPTION:

WARNING

Use EXTREME CARE and ALWAYS REMOVE POWER from all pertinent electrical equipment, which includes multiple power sources, before beginning maintenance. Refer to Section 7.3, "Lockout/Tagout Procedure" in the Operations and Maintenance Manual.

Monthly

1. Clean grease fittings of dirt, debris, old grease, and any other potential contaminants with a rag and CRC Quick Clean Heavy Duty Degreaser or equivalent.
2. Inspect the grease fittings and replace any cracked or broken grease fittings. The sleeve bearings have a single grease fitting in the bearing cap. Each trunnion bearing has two grease fittings in the bearing cap and two grease fittings located on opposite sides of the bearing housing.
3. Insert grease gun tip onto grease fitting and pump Mobil Mobilux EP-2 or equivalent into the bearing until fresh grease appears along the bearing shaft. Catch old grease in a catch basin. For trunnion bearings, repeat for all four grease fittings.
4. Wipe excess grease from the bearing with a rag and solvent cleaner.
5. Inspect bearings for any unusual defects that may have occurred.

Refer to Sections 8.1.1, 8.2.4, 11.5.1, and 11.5.9 for additional component and material information. For lubrication coding details below, refer to Section 11.2 "Machinery Lubrication Schematics" in the Operations and Maintenance Manual.

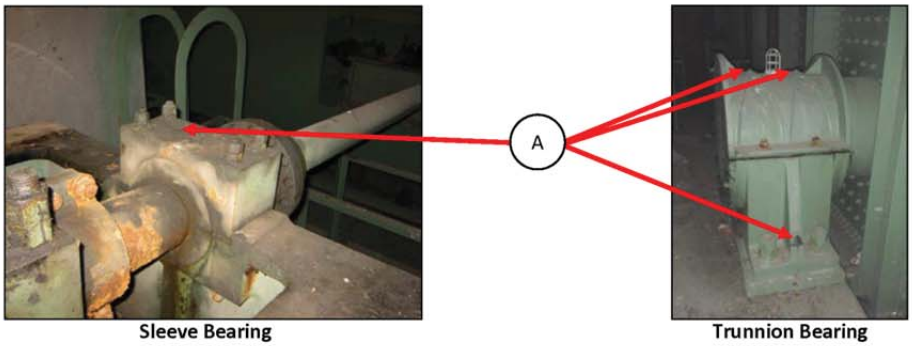

Sleeve Bearing Trunnion Bearing

SCHEDULING CONSIDERATIONS:

Sleeve bearings and trunnion bearings should be lubricated every month.

Also, inspect and lubricate sleeve bearings and trunnion bearings after an overstress situation such as a pinched span.

WORK AREA, ACTIVITY DESCRIPTION & REQUIREMENTS:

Sleeve bearings are located in the trunnion girder, on the secondary open gear frame, and on the primary open gear frame on each span. Trunnion bearings are located on the bascule pier on the outboard sides of the bascule girders on each span. Tasks include locating, inspecting, and lubricating all trunnion bearings and sleeve bearings on the bridge. Lockout/Tagout is required prior to performing any maintenance on this equipment. Report any significant defects to bridge management.

Qty	EQUIPMENT	Qty	EQUIPMENT	Qty	MATERIAL
1	Grease gun	1/Person	Set of chemical resistant Viton gloves	~19 – 14 oz. Tubes	Mobil Mobilux EP-2 or equivalent
	Trunnion bearing grease fittings				
	Sleeve bearing grease fittings	1/Person	Tyvek suit		
1	Catch basin	1/Person	Eye protection	~10 – 20 oz. Cans	CRC Quick Clean Heavy Duty Degreaser or equivalent
1	Bag of rags	1/Person	Chemical respirator		

11.4.2 MOTOR AND MACHINERY BRAKE MAINTENANCE

DELAWARE **DEPARTMENT OF TRANSPORTATION** **BRIDGE MANAGEMENT SECTION** **BRIDGE MAINTENANCE PERFORMANCE STANDARD**	**BRIDGE NUMBER** 1-693
	BMS ACTIVITY CODE B067-S2J Page 1 of 3
	EFFECTIVE DATE

ACTIVITY TITLE:	**UNIT OF MEASUREMENT:**
Motor and Machinery Brake Maintenance	Number of Brakes

PROCEDURE DESCRIPTION:

WARNING

Use EXTREME CARE and ALWAYS REMOVE POWER from all pertinent electrical equipment, which includes multiple power sources, before beginning maintenance. Refer to Section 7.3, "Lockout/Tagout Procedure" in the Operations and Maintenance Manual.

Annually

1. Brake actuator maintenance and checks shall be performed by a GE authorized technician. Brake frames shall be adjusted by district or Mechanical/Electrical Inspection Team. Actuator oil used in the actuator shall be Chevron Hydraulic Oil 5606A unless otherwise specified by the GE specialist. The brake thruster oil does not need to be replaced unless there is suspicion of oil contamination or the brake thruster is malfunctioning. A sticker shall be placed on the thrustor indicating the oil type along with the date of replacement to ensure that non-compatible oils are not mixed. The district shall schedule the GE technician to be assisted by the Mechanical/Electrical Inspection Teams, simultaneously, so that brakes are adjusted at all times.
2. Inspect brake shoes and drums for wear, dust, dirt, grease, and proper adjustment. Check the brake pad thickness. Replace pads when the remaining thickness is less than $^{1}/_{16}$ inch.
3. Check clearance between the brake shoe and brakewheel. The measured gap shall have a minimum of $^{1}/_{64}$ inch clearance between the brake shoe and brakewheel when hand released. If clearances need to be adjusted, the linkages shall be adjusted in accordance with Section 11.7.2. If adjustments are made to the linkages, the reserve stroke and spring length should be verified and adjusted as well. Adjustment procedures are located within Section 11.7.2.
4. Inspect mechanical linkages for wear, broken parts, and tightness of nuts and bolts. Check for freedom of moving parts (no binding or sticking).
5. Check for excessive heating of parts evident by discoloration of metal parts.
6. Check operations of the brake during test operations of the bridge. Check for any unusual odor and excessive vibration.
7. Check the brake housing and linkages for evidences of water dripping on the brake and corrosion.
8. Check adjustment of limit switches and hand release devices.
9. Check brake actuator reserve stroke is approximately 1½ inch +/- $^{1}/_{16}$ inch. As the brake pads wear, the reserve stroke becomes shorter. If the reserve stroke requires adjustment, adjust linkages as specified in Section 11.7.2.
10. Check the brake spring length. Use a tape measure to measure the length of the spring. Spring length adjustment procedures as well as corresponding brake torque data graphs are located in Section 11.7.2. The spring length shall be adjusted to within $^{1}/_{16}$ inch. At the time this Manual was created, the motor brake spring lengths were measured to be $6\ ^{7}/_{8}$ +/- $^{5}/_{16}$ inch and the machinery brake lengths were measured to be $6\ ^{9}/_{16}$ +/- $^{1}/_{16}$ inch. Table 3 in Section 11.7.2 shows the existing motor brake torque range is 425 to 725 ft-lbs and the existing machinery brake torque is 675-750 ft-lbs.
11. Lubricate bearings pins using Mobil Mobilgear 600 XP 220 or equivalent lubricant. Lubricate pins using an oil can and applying a couple of drops to the brake pins. Cycle brake manually using the hand release lever while applying the lubricating oil. Do not allow oil to drip onto the brakewheel. Remove any oil residue that drips from the brake pins.

WARNING

Use EXTREME CARE and ALWAYS VERIFY that no oil gets on the brakewheel surface as this may cause the brakewheel to slip within the brake shoes as the brake is activated which may decrease the overall braking capacity.

Refer to Sections 8.2.1, 11.7.4, 11.5.6, and 11.7.2 for additional component and material information. For lubrication coding details below, refer to Section 11.2, "Machinery Lubrication Schematics" in the Operations and Maintenance Manual.

DELAWARE
DEPARTMENT OF TRANSPORTATION
BRIDGE MANAGEMENT SECTION
BRIDGE MAINTENANCE PERFORMANCE STANDARD

BRIDGE NUMBER	
1-693	
BMS ACTIVITY CODE	
B067-S2J Page 2 of 3	
EFFECTIVE DATE	

ACTIVITY TITLE:	**UNIT OF MEASUREMENT:**
Motor and Machinery Brake Maintenance	Number of Brakes

Brake - Side

Brake - Back

Brake Thruster

Spring Length

Brake Bearing Pins - Front

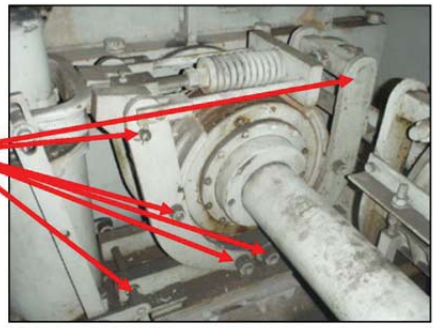

Brake Bearing Pins - Side

DELAWARE **DEPARTMENT OF TRANSPORTATION** **BRIDGE MANAGEMENT SECTION** **BRIDGE MAINTENANCE PERFORMANCE STANDARD**	**BRIDGE NUMBER** 1-693 **BMS ACTIVITY CODE** B067-S2J Page 3 of 3 **EFFECTIVE DATE**

ACTIVITY TITLE:	**UNIT OF MEASUREMENT:**
Motor and Machinery Brake Maintenance	Number of Brakes

SCHEDULING CONSIDERATIONS:

Motor brakes should be inspected annually.

Also, inspect brakes when the bridge opens more than 150 times between Spring and Fall maintenance routines.

WORK AREA, ACTIVITY DESCRIPTION & REQUIREMENTS:

The motor brakes and machinery brakes are located in the electrical/mechanical room. Motor brakes are located between each main leaf motor and the primary reducer input shaft. The machinery brake is located between the primary reducer output shaft and the span drive machinery shafting. Tasks include locating and inspecting all brakes on the bridge. Lockout/Tagout is required prior to performing any maintenance on this equipment. Report any significant defects to bridge management.

Qty	EQUIPMENT	Qty	EQUIPMENT	Qty	MATERIAL
1	Feeler gauge set		Misc. small tools	~2-3 drops at each bearing pin	Mobil Mobilgear 600 XP 220 or equivalent
2	Adjustable wrenches	1/Person	Tyvek suit		
1	Ruler (with graduations of $^1/_{16}$")	1/Person	Set of chemical resistant Viton gloves	~1.5 gallons per thruster	Chevron Hydraulic Oil 5606A or equivalent (for thruster if oil needs to be replaced)
1	Oil can	1/Person	Eye protection		

11.4.3 COUPLING LUBRICATION

DELAWARE **DEPARTMENT OF TRANSPORTATION** **BRIDGE MANAGEMENT SECTION** **BRIDGE MAINTENANCE PERFORMANCE STANDARD**	**BRIDGE NUMBER** 1-693
	BMS ACTIVITY CODE B068-S2J Page 1 of 3
	EFFECTIVE DATE

ACTIVITY TITLE:	**UNIT OF MEASUREMENT:**
Coupling Lubrication	Number of Couplings (with Grease Fittings)

PROCEDURE DESCRIPTION:

WARNING

Use EXTREME CARE and ALWAYS REMOVE POWER from all pertinent electrical equipment, which includes multiple power sources, before beginning maintenance. Refer to Section 7.3, "Lockout/Tagout Procedure" in the Operations and Maintenance Manual.

WARNING

Do not disassemble couplings unless shafts are properly supported.

Six Months

Gear Couplings

1. Clean the coupling of dirt, debris, old grease, and any other potential contaminants with a rag.
2. If it is leaking, replace seal according to manufacturer specifications.
3. Remove both lubrication plugs and insert a grease fitting into the uppermost port.
4. Fill with Mobil Mobilux EP-0 or equivalent until fresh grease appears at the lower port. Catch old grease in a catch basin.
5. Reinstall plugs into coupling. Wipe off excess grease. **MAKE CERTAIN ALL PLUGS HAVE BEEN INSERTED AFTER LUBRICATION**.
6. Check all gear couplings and brakewheel couplings for any excessive misalignment that may have occurred and notify bridge management if such misalignment exists. Inspect the condition and tightness of the fasteners.

Brakewheel Coupling (Machinery Brake)

1. Clean the coupling of dirt, debris, old grease, and any other potential contaminants with a rag.
2. Remove coupling cover and remove existing grease from coupling components.
3. Inspect gasket and seal for damage. Replace as necessary.
4. Fill coupling with Mobil Mobilux EP-0 or equivalent prior to reinstalling the coupling cover.
5. Reinstall cover with a feeler gauge inserted between the cover and brakewheel 180° from the grease fitting to allow grease to be purged from the coupling. Pump grease into coupling until fresh grease appears from the coupling cover where the feeler gauge was inserted.
6. Remove feeler gauge and tighten coupling cover fasteners. Wipe off excess grease.

WARNING

Use EXTREME CARE and ALWAYS VERIFY that no grease gets on the brakewheel surface as this may cause the brakewheel to slip within the brake shoes as the brake is activated which may decrease the overall braking capacity.

Five Years (To be performed by Mechanical/Electrical Inspection Team)

Brakewheel Coupling (Motor Brake)

1. Clean the coupling of dirt, debris, old grease, and any other potential contaminants with a rag.
2. Remove coupling cover and remove existing grease from coupling grid and components.
3. Inspect gasket and seal for damage. Replace as necessary.
4. Fill coupling with Falk Long Term Grease or equivalent prior to reinstalling the coupling cover.
5. Reinstall coupling cover.
6. Clean the grease fitting of dirt, debris, and any other potential contaminants with a rag.
7. Remove the lower lube plug on each side of the coupling.
8. Pump grease into coupling until fresh grease appears at the lower ports.
9. Reinstall plugs into coupling. Wipe off excess grease. **MAKE CERTAIN ALL PLUGS HAVE BEEN INSERTED AFTER LUBRICATION.**

WARNING

Use EXTREME CARE and ALWAYS VERIFY that no grease gets on the brakewheel surface as this may cause the brakewheel to slip within the brake shoes as the brake is activated which may decrease the overall braking capacity.

Refer to Sections 8.2.2, 11.5.1, and 11.5.2 for additional component and material information. For lubrication coding details below, refer to Section 11.2, "Machinery Lubrication Schematics" in the Operations and Maintenance Manual.

DELAWARE
DEPARTMENT OF TRANSPORTATION
BRIDGE MANAGEMENT SECTION
BRIDGE MAINTENANCE PERFORMANCE STANDARD

BRIDGE NUMBER	
1-693	
BMS ACTIVITY CODE	
B068-S2J Page 2 of 3	
EFFECTIVE DATE	

ACTIVITY TITLE:	**UNIT OF MEASUREMENT:**
Coupling Lubrication	Number of Couplings (with Grease Fittings)

Gear Coupling

Gear Coupling

Motor Brake Brakewheel Coupling

Machinery Brake Brakewheel Coupling

SCHEDULING CONSIDERATIONS:

Gear couplings and machinery brake brakewheel couplings should be lubricated every six months. The motor brake brakewheel couplings should be lubricated every five years and/or whenever the couplings are disassembled.

Also, inspect and lubricate couplings with grease fittings when the bridge opens more than 150 times between Spring and Fall maintenance routines or after an overstress situation such as a pinched span.

WORK AREA, ACTIVITY DESCRIPTION & REQUIREMENTS:

Gear couplings are located inside the trunnion girder and connecting the secondary open gear frame gearing to the primary open gear frame gearing. The motor brake brakewheel couplings are located between the main leaf motors and primary speed reducers in the electrical/mechanical room. Machinery brake brakewheel couplings are located at the output shaft of the primary speed reducer in the electrical/mechanical room. Tasks include locating, inspecting, and lubricating all couplings with grease fittings on the bridge with the appropriate lubricant. Lockout/Tagout is required prior to performing any maintenance on this equipment. Report any significant defects to bridge management.

DELAWARE DEPARTMENT OF TRANSPORTATION BRIDGE MANAGEMENT SECTION BRIDGE MAINTENANCE PERFORMANCE STANDARD	BRIDGE NUMBER 1-693
	BMS ACTIVITY CODE B068-S2J Page 3 of 3
	EFFECTIVE DATE

ACTIVITY TITLE: Coupling Lubrication	UNIT OF MEASUREMENT: Number of Couplings (with Grease Fittings)

Qty	EQUIPMENT	Qty	MATERIAL
1	Grease gun	~18 – 14 oz. Tubes	Mobil Mobilux EP-0 or equivalent (Gear Couplings and Machinery Brake Brakewheel Couplings)
4	Motor brake brakewheel coupling grease fittings		
2	Machinery brake brakewheel coupling grease fittings		
8	Gear coupling grease fittings	~6 – 14 oz. Tubes	Falk Long Term Grease or equivalent (Motor Brake Brakewheel Couplings)
1	Bag of rags		
1	Catch basin	4	Seal and gasket kits for motor brake brakewheel couplings
1	Feeler gauges		
1	Ratchet set	2	Seal and gasket kit for machinery brake brakewheel coupling
	Miscellaneous small tools		
1/Person	Tyvek suit	8	Seal and gasket kit for gear couplings
1/Person	Set of nitrile gloves		
1/Person	Eye protection		

11.4.4 SPEED REDUCER LUBRICATION

DELAWARE DEPARTMENT OF TRANSPORTATION BRIDGE MANAGEMENT SECTION BRIDGE MAINTENANCE PERFORMANCE STANDARD	BRIDGE NUMBER 1-693
	BMS ACTIVITY CODE B069-S2J Page 1 of 2
	EFFECTIVE DATE

ACTIVITY TITLE:	UNIT OF MEASUREMENT:
Speed Reducer Lubrication	Number of Speed Reducers

PROCEDURE DESCRIPTION:

WARNING

Use EXTREME CARE and ALWAYS REMOVE POWER from all pertinent electrical equipment, which includes multiple power sources, before beginning maintenance. Refer to Section 7.3, "Lockout/Tagout Procedure" in the Operations and Maintenance Manual.

Monthly

1. Check the speed reducer oil level. The oil level can be observed via the dipstick at the front of the reducer. The oil level should be between the low and full marks on the dipstick. The nameplate indicates that the oil level should be approximately 8.75" below the split in the reducer housing.
2. If oil level is below the low level on the dipstick, oil should be added. Clean the speed reducer housing around the inspection cover. Remove the inspection cover.
3. Pour Mobil Mobilgear 600 XP 220 or equivalent into the speed reducer reservoir. Check the fluid level with the dipstick, and repeat until the fluid level is at the appropriate level as indicated on the dipstick. **DO NOT OVERFILL THE UNITS AS LEAKAGE OR OVERHEATING MAY OCCUR.**
4. Reinstall the inspection cover with new sealant between the cover and housing.
5. Wipe up any spilled oil on the housing or surrounding area.

Annually

1. Clean the speed reducer housing around the inspection cover of dirt, debris, etc.
2. Place oil catch basin under the drain plug. Remove inspection cover.
3. Remove drain plug to drain oil from the speed reducer. If the catch basin is not large enough to collect the oil, intermittently cap the drain plug and dump the oil into a larger container.
4. Flush reducer with Mobil Mobilgear 600 XP 100 or equivalent compatible oil with permanent oil used in the reducers to remove contaminants in the reducer housing.
5. Reinstall the drain plug and tighten.
6. Inspect internal components of the reducer for unusual wear on the gear teeth.
7. Fill the speed reducer with Mobil Mobilgear 600 XP 220 or equivalent to the oil level mark indicated by the dip stick. **DO NOT OVERFILL THE UNITS AS LEAKAGE OR OVERHEATING MAY OCCUR.**
8. Reinstall the inspection cover with new sealant between the cover and housing.
9. Wipe up any spilled oil on the housing or surrounding area.

Refer to Sections 8.2.3, 11.5.4, 11.5.10, and 11.7.1 for additional component and material information. For lubrication coding details below, refer to Section 11.2, "Machinery Lubrication Schematics" in the Operations and Maintenance Manual.

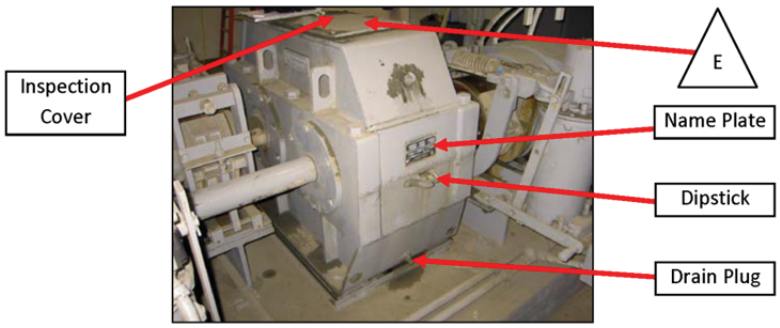

Primary Speed Reducer

DELAWARE **DEPARTMENT OF TRANSPORTATION** **BRIDGE MANAGEMENT SECTION** **BRIDGE MAINTENANCE PERFORMANCE STANDARD**	**BRIDGE NUMBER** 1-693
	BMS ACTIVITY CODE B069-S2J Page 2 or 2
	EFFECTIVE DATE

ACTIVITY TITLE:	**UNIT OF MEASUREMENT:**
Speed Reducer Lubrication	Number of Speed Reducers

SCHEDULING CONSIDERATIONS:

Oil levels should be inspected monthly, with oil added as needed to maintain the proper oil level. The speed reducers should be drained, inspected, and lubricated annually.

Also, inspect speed reducers when the bridge opens more than 150 times between Spring and Fall maintenance routines or after an overstress situation such as a pinched span.

WORK AREA, ACTIVITY DESCRIPTION & REQUIREMENTS:

Speed reducers are located in each electrical/mechanical room. Tasks include locating, inspecting, and lubricating all speed reducers on the bridge. Lockout/Tagout is required prior to performing any maintenance on this equipment. Report any significant defects to bridge management.

Qty	EQUIPMENT	Qty	MATERIAL
1	Bag of rags	~4 – 5 Gallon Buckets	Mobil Mobilgear 600 XP 100 or equivalent (for flushing)
1	Shall catch basin (2" high)		
4	Empty 5 gallon bucket or container		
6	Oil absorbent pads	~9 – 5 Gallon Buckets	Mobil Mobilgear 600 XP 220 or equivalent (permanent oil)
1	Holding/storage tank for transportation of used oil (100 gallon capacity)		
1	Scraper	~2 – 5 oz. Tubes	Permatex Gear Oil RTV Sealant or equivalent
1	Ratchet set		
1	Adjustable wrench		
	Miscellaneous small tools	1	Roll of Teflon tape
1/Person	Coveralls		
1/Person	Set of nitrile gloves		
1/Person	Eye protection	2	Spare housing drain plugs
1/Person	Chemical respirator		

11.4.5 OPEN GEARING LUBRICATION

DELAWARE DEPARTMENT OF TRANSPORTATION BRIDGE MANAGEMENT SECTION BRIDGE MAINTENANCE PERFORMANCE STANDARD	BRIDGE NUMBER 1-693
	BMS ACTIVITY CODE B070-S2J Page 1 of 2
	EFFECTIVE DATE

ACTIVITY TITLE:	UNIT OF MEASUREMENT:
Open Gearing Lubrication	Number of Open Gears

PROCEDURE DESCRIPTION:

WARNING

Use EXTREME CARE and ALWAYS REMOVE POWER from all pertinent electrical equipment, which includes multiple power sources, before beginning maintenance. Refer to Section 7.3, "Lockout/Tagout Procedure" in the Operations and Maintenance Manual.

Monthly

1. Using a brush, evenly coat all gear tooth surfaces with Mobil Mobiltac 325 NC or equivalent lubricant.

Annually

1. Observe displacement patterns in open gearing lubricant for evidence of misalignment.
2. Remove old lubricant and debris by scraping the gear tooth surfaces and disposing of the lubricant in a tray or pan.
3. Apply CRC Quick Clean Heavy Duty Degreaser or equivalent to remove existing lubrication on the gear teeth.
4. With the use of a scraper and rags, remove the remaining grease and solvent and properly dispose of materials.
5. Re-inspect the gears for signs of abnormal wear or misalignment. Report abnormal wear or misalignment to bridge management.
6. Using a brush, evenly coat all gear tooth surfaces with Mobil Mobiltac 325 NC or equivalent lubricant.

Refer to Sections 8.2.5, 11.5.3, and 11.5.9 for additional component and material information. For lubrication coding details below, refer to Section 11.2, "Machinery Lubrication Schematics" in the Operations and Maintenance Manual.

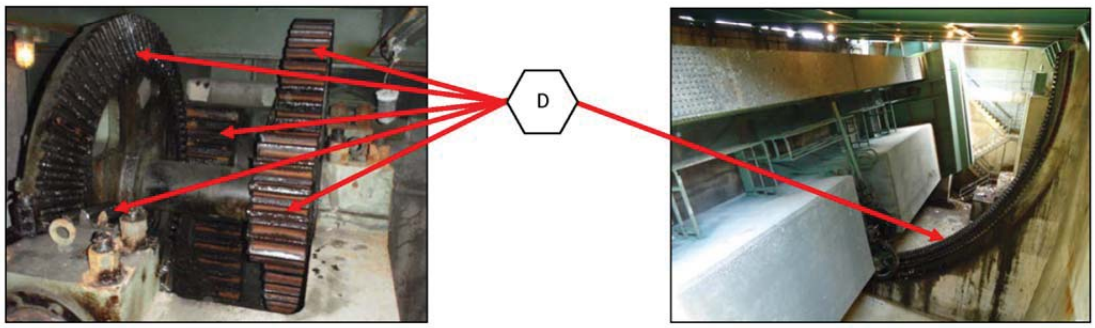

Primary Open Gearing

Rack (Span Open)

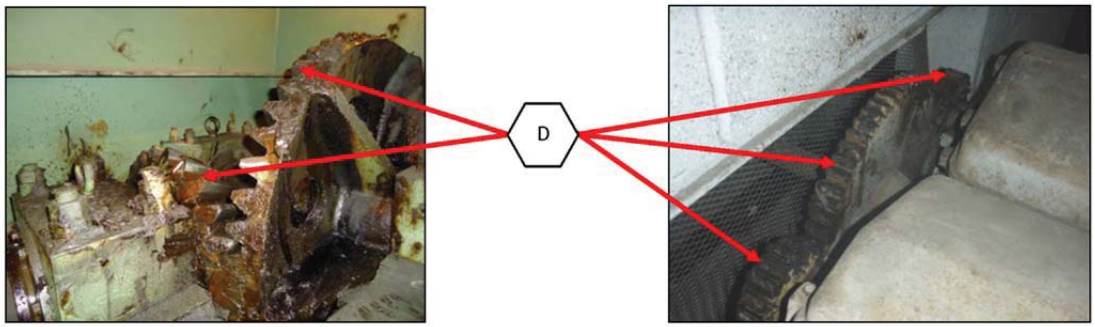

Secondary Open Gearing

Span Position Instrumentation Open Gearing

DELAWARE **DEPARTMENT OF TRANSPORTATION** **BRIDGE MANAGEMENT SECTION** **BRIDGE MAINTENANCE PERFORMANCE STANDARD**	**BRIDGE NUMBER** 1-693
	BMS ACTIVITY CODE B070-S2J Page 2 of 2
	EFFECTIVE DATE

ACTIVITY TITLE:	**UNIT OF MEASUREMENT:**
Open Gearing Lubrication	Number of Open Gears

SCHEDULING CONSIDERATIONS:

Fresh grease should be applied to all open gearing monthly. Open gearing should be cleaned, inspected, and lubricated annually.

Inspect and lubricate open gearing when the bridge opens more than 150 times between Spring and Fall maintenance routines or after an overstress situation such as a pinched span.

WORK AREA, ACTIVITY DESCRIPTION & REQUIREMENTS:

Open gearing is located in the electrical/mechanical room, inside the trunnion girder, on top of the counterweight, and in the counterweight pit of both spans. Tasks include locating, inspecting and lubricating all open gearing on the bridge. Lockout/Tagout is required prior to performing any maintenance on this equipment. Report any significant defects to bridge management.

Qty	EQUIPMENT	Qty	MATERIAL
2	Bag of rags	~4 – 5 Gallon Buckets	Mobil Mobiltac 325 NC or equivalent
2	Scrapers		
2	Brushes		
2	Trays or pans		
1/Person	Tyvek suit	~10 – 20 oz. Cans	CRC Quick Clean Heavy Duty Degreaser or equivalent
1/Person	Set of chemical resistant Viton gloves		
1/Person	Chemical goggles and face shield		
1/Person	Chemical respirator		

11.4.6 MOTOR BEARING LUBRICATION

DELAWARE DEPARTMENT OF TRANSPORTATION BRIDGE MANAGEMENT SECTION BRIDGE MAINTENANCE PERFORMANCE STANDARD	BRIDGE NUMBER 1-693
	BMS ACTIVITY CODE B066-S2J Page 1 of 2
	EFFECTIVE DATE

ACTIVITY TITLE:	UNIT OF MEASUREMENT:
Motor Bearing Lubrication	Number of Motors

PROCEDURE DESCRIPTION:

WARNING

Use EXTREME CARE and ALWAYS REMOVE POWER from all pertinent electrical equipment, which includes multiple power sources, before beginning maintenance. Refer to Section 7.3, "Lockout/Tagout Procedure" in the Operations and Maintenance Manual.

Annually

1. Clean the grease fitting of dirt, debris, and any other potential contaminants with a rag.
2. Remove the purge plug opposite the grease fitting. Place a catch basin below the purge plug to catch old grease.
3. Purge old grease from the bearing by slowly pumping in fresh grease into the bearing until fresh grease flows out along the shaft or through the lower port. For the main leaf motor bearings and span lock motor bearings, use Mobil Unirex N2 or equivalent lubricant. **PUMPING GREASE INTO THE MOTOR BEARINGS WITHOUT REMOVING THE PURGE PLUG WILL RESULT IN DAMAGE TO THE SEAL AND GREASE ENTERING THE MOTOR WINDINGS.**
4. Perform one complete operation cycle of the motor (raise and lowering of the span for the main leaf motors and pulling and driving the lock bars for the span lock motors) prior to reinstalling the purge plugs to remove excess grease.
5. Reinstall the purge plug and wipe excess grease from motor housing with a rag.
6. Repeat for the bearing at the other end of the motor.

Refer to Sections 8.7.1, 8.7.2, and 11.5.5 for additional component and material information. For lubrication coding details below, refer to Section 11.2, "Machinery Lubrication Schematics" in the Operations and Maintenance Manual.

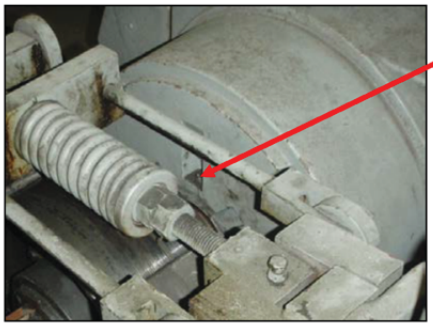

Front Output Shaft of Main Leaf Motor

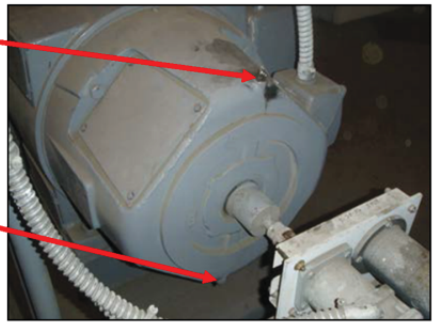

Rear Output Shaft of Main Leaf Motor #1

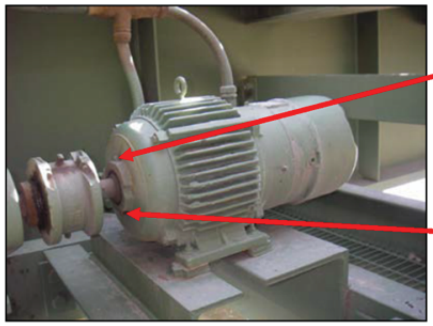

Front Output Shaft of Span Lock Motor

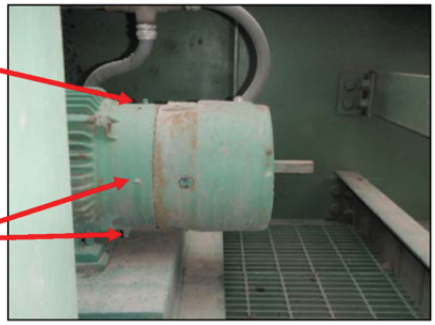

Rear Shaft of Span Lock Motor

DELAWARE
DEPARTMENT OF TRANSPORTATION
BRIDGE MANAGEMENT SECTION
BRIDGE MAINTENANCE PERFORMANCE STANDARD

BRIDGE NUMBER
1-693

BMS ACTIVITY CODE
B066-S2J Page 2 of 2

EFFECTIVE DATE

ACTIVITY TITLE:
Motor Bearing Lubrication

UNIT OF MEASUREMENT:
Number of Motors

SCHEDULING CONSIDERATIONS:

Motor bearings should be lubricated annually.

Also, inspect motor bearings when the bridge opens more than 150 times between Spring and Fall maintenance routines or after an overstress situation such as a pinched span.

WORK AREA, ACTIVITY DESCRIPTION & REQUIREMENTS:

Main leaf motor bearings are located at the front and rear ends of each main leaf motor in the electrical/mechanical room of each span. The span lock motors are located on the east and west span lock access platforms located at the toe of the north bascule leaf. Tasks include locating, inspecting, and lubricating all motor bearings on the bridge. Lockout/Tagout is required prior to performing any maintenance on this equipment. Report any significant defects to bridge management.

Qty	EQUIPMENT	Qty	EQUIPMENT	Qty	MATERIAL
1	Grease gun	1	Adjustable wrench	~1/8 – 14 oz. Tube / Bearing	Mobil Unirex N2 or equivalent
4	Main leaf motor grease fittings		Miscellaneous small tools		
4	Span lock motor grease fittings	1/Person	Coveralls		
1	Bag of rags	1/Person	Set of nitrile gloves		
1	Catch basin	1/Person	Eye protection		

11.4.7 SPAN LOCK MACHINERY LUBRICATION

11.4.7.1 SPAN LOCK COUPLING LUBRICATION

DELAWARE **DEPARTMENT OF TRANSPORTATION** **BRIDGE MANAGEMENT SECTION** **BRIDGE MAINTENANCE PERFORMANCE STANDARD**	**BRIDGE NUMBER** 1-693
	BMS ACTIVITY CODE B068-S2J Page 1 of 2
	EFFECTIVE DATE

ACTIVITY TITLE:	**UNIT OF MEASUREMENT:**
Span Lock Coupling Lubrication	Number of Span Lock Couplings

PROCEDURE DESCRIPTION:

WARNING

Use EXTREME CARE and ALWAYS REMOVE POWER from all pertinent electrical equipment, which includes multiple power sources, before beginning maintenance. Refer to Section 7.3, "Lockout/Tagout Procedure" in the Operations and Maintenance Manual.

Five Years (To be performed by Mechanical/Electrical Inspection Team)

1. Clean the span lock motor coupling of dirt, debris, old grease, and any other potential contaminants with a rag.
2. Inspect the condition and tightness of the fasteners. Inspect the seal rings to see if they are leaking. If leaking is observed, replace the leaking seal(s) according to manufacturer specifications.
3. Remove the coupling cover to access coupling components.
4. Remove existing grease from the coupling cover and grid.
5. Check the coupling for any excessive misalignment that may have occurred and notify bridge management if such misalignment exists. Maximum allowable misalignment values can be found in Table 2 of Section 11.7.3
6. Reinstall the coupling cover with new gaskets.
7. Remove both lube plugs and insert a grease fitting into the uppermost port.
8. Fill with Falk Long Term Grease or equivalent until fresh grease appears at the lower port. Catch any purged grease in a catch basin.
9. Remove the grease fitting and reinstall plugs into coupling. Wipe off excess grease. **MAKE CERTAIN ALL PLUGS HAVE BEEN INSERTED AFTER LUBRICATION**

For lubrication coding details below, refer to Section 11.2, "Machinery Lubrication Schematics" in the Operations and Maintenance Manual.

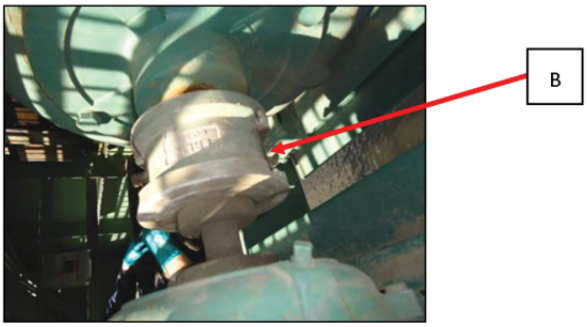

Span Lock Motor Coupling

SCHEDULING CONSIDERATIONS:

Every five years or whenever the span lock motor coupling is disassembled, the span lock motor coupling grease should be replaced.

Inspect span lock machinery when the bridge opens more than 150 times between Spring and Fall maintenance routines or after an overstress situation such as a bound lock bar.

Contact TMC to coordinate temporary closure of the bridge for maintenance.

WORK AREA, ACTIVITY DESCRIPTION & REQUIREMENTS:

The span lock machinery is located on the inboard side of the bascule girders at the toe of the north leaf. Tasks include locating, inspecting and lubricating both span lock systems on the bridge. Lockout/Tagout is required prior to performing any maintenance on this equipment. Report any significant defects to bridge management.

DELAWARE **DEPARTMENT OF TRANSPORTATION** **BRIDGE MANAGEMENT SECTION** **BRIDGE MAINTENANCE PERFORMANCE STANDARD**	**BRIDGE NUMBER** 1-693
	BMS ACTIVITY CODE B068-S2J Page 2 of 2
	EFFECTIVE DATE

ACTIVITY TITLE:	**UNIT OF MEASUREMENT:**
Span Lock Coupling Lubrication	Number of Span Lock Couplings

Qty	EQUIPMENT	Qty	MATERIAL
	Grease gun	~1/2 – 14 oz. Tube	Falk Long Term Grease or equivalent
	Grease fitting		
	Bag of rags		
	Catch basin		
	Small adjustable wrenches		
	Ruler (with graduations of 1/32")	2	Seal and gasket kit for Falk 60T10 Grid Coupling
	Miscellaneous small tools		
	Tyvek suit		
	Set of nitrile gloves		
	Eye protection		

11.4.7.2 SPAN LOCK SPEED REDUCER LUBRICATION

DELAWARE DEPARTMENT OF TRANSPORTATION BRIDGE MANAGEMENT SECTION BRIDGE MAINTENANCE PERFORMANCE STANDARD	BRIDGE NUMBER 1-693
	BMS ACTIVITY CODE B069-S2J Page 1 of 2
	EFFECTIVE DATE

ACTIVITY TITLE:	UNIT OF MEASUREMENT:
Span Lock Speed Reducer Lubrication	Number of Span Lock Speed Reducers

PROCEDURE DESCRIPTION:

WARNING

Use EXTREME CARE and ALWAYS REMOVE POWER from all pertinent electrical equipment, which includes multiple power sources, before beginning maintenance. Refer to Section 7.3, "Lockout/Tagout Procedure" in the Operations and Maintenance Manual.

Monthly

1. Check the speed reducer oil level. Place a catch basin below the oil level plug hole on the side of the reducer. A snooper is needed to place a catch basin beneath the reducer drain plug. Clean the housing around the oil level plug. Slowly begin to unscrew the oil level plug. If oil begins to flow out, collect oil in catch basin ensuring no oil enters the waterway.
2. If oil does not flow from the oil level plug hole with the plug fully removed, inspect oil level through the hole to determine if the oil level is adequate. If oil needs to be added, clean the speed reducer housing around the lube plug at the top of the reducer housing. Remove the lube plug.
3. Pour Mobil Mobilgear 600 XP 220 or equivalent into the speed reducer reservoir until oil reaches the oil level plug hole. Ensure the catch basin is below the oil level plug hole to collect any oil that may leak out. Install the oil level plug. **DO NOT OVERFILL THE UNITS AS LEAKAGE OR OVERHEATING MAY OCCUR.** Reinstall the lube plugs at the top of the reducer.
4. Wipe up any spilled oil on the housing or surround area.

Annually

1. Clean the speed reducer housing around the lube plugs of dirt, debris, etc.
2. Place oil catch basin under the drain plug. A snooper is needed to place a catch basin beneath the reducer drain plug. Remove the lube plug from the top of the speed reducer.
3. Remove drain plug to drain oil from the speed reducer. Flush reducer with a Mobil Mobilgear 600 XP 100 or equivalent oil compatible with the final reducer oil used during operations to remove contaminants in the reducer housing.
4. Reinstall drain plug and tighten.
5. Remove the oil level plug on the side of the reducer. Fill reservoir with Mobil Mobilgear 600 XP 220 or equivalent until oil reaches the oil level plug hole. Reinstall the oil level plug. Reinstall the lube plugs. **DO NOT OVERFILL THE UNITS AS LEAKAGE OR OVERHEATING MAY OCCUR.**
6. Wipe up any spilled oil on the housing or surrounding area.

Refer to Sections 8.3.2, 11.5.4, and 11.7.4 for additional component and material information. For lubrication coding details below, refer to Section 11.2, "Machinery Lubrication Schematics" in the Operations and Maintenance Manual.

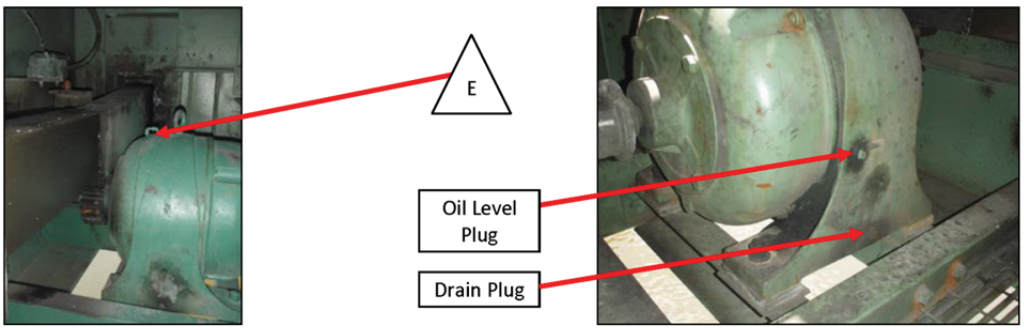

Span Lock Speed Reducer - Top **Span Lock Speed Reducer - Side**

DELAWARE **DEPARTMENT OF TRANSPORTATION** **BRIDGE MANAGEMENT SECTION** **BRIDGE MAINTENANCE PERFORMANCE STANDARD**	**BRIDGE NUMBER** 1-639 **BMS ACTIVITY CODE** B078-S2J Page 2 of 2 **EFFECTIVE DATE**

ACTIVITY TITLE:	**UNIT OF MEASUREMENT:**
Span Lock Speed Reducer Lubrication	Number of Span Lock Speed Reducers

SCHEDULING CONSIDERATIONS:

The span lock speed reducer oil level should be checked monthly. Annually, the span lock speed reducers should be flushed and refilled.

Inspect span lock machinery when the bridge opens more than 150 times between Spring and Fall maintenance routines or after an overstress situation such as a bound lock bar.

Contact TMC to coordinate temporary closure of the bridge for maintenance.

WORK AREA, ACTIVITY DESCRIPTION & REQUIREMENTS:

The span lock machinery is located on the inboard side of the bascule girders at the toe of the north leaf. Tasks include locating, inspecting and lubricating both span lock systems on the bridge. Lockout/Tagout is required prior to performing any maintenance on this equipment. Report any significant defects to bridge management.

Qty	EQUIPMENT	Qty	MATERIAL
1	Snooper	~4 – 5 Gallon Buckets	Mobil Mobilgear 600 XP 100 or equivalent (flushing oil)
1	Bag of rags		
1	Catch basin (15 gallon capacity)		
1	Adjustable wrench	~5 – 5 Gallon Buckets	Mobil Mobilgear 600 XP 220 or equivalent (permanent oil)
	Miscellaneous small tools		
1	Holding/storage tank for transportation of used oil (50 gallon capacity)		
1/Person	Set of nitrile gloves	2 of each	Spare oil level, drain, and fill plugs
1/Person	Eye protection		
1/Person	Coveralls	1	Roll of Teflon tape

11.4.7.3 SPAN LOCK OPEN GEARING LUBRICATION

DELAWARE DEPARTMENT OF TRANSPORTATION BRIDGE MANAGEMENT SECTION BRIDGE MAINTENANCE PERFORMANCE STANDARD	BRIDGE NUMBER 1-693
	BMS ACTIVITY CODE B070-S2J Page 1 of 2
	EFFECTIVE DATE

ACTIVITY TITLE:	UNIT OF MEASUREMENT:
Span Lock Open Gearing Lubrication	Number of Open Gears

PROCEDURE DESCRIPTION:

WARNING

Use EXTREME CARE and ALWAYS REMOVE POWER from all pertinent electrical equipment, which includes multiple power sources, before beginning maintenance. Refer to Section 7.3, "Lockout/Tagout Procedure" in the Operations and Maintenance Manual.

Monthly

1. Place oil absorbent pads beneath open gearings to prevent grease from falling into waterway while removing/applying grease to the gear teeth.
2. Remove debris observed in the open gearing. Using a brush, evenly coat gear tooth surfaces with Mobil Mobiltac 325 NC.

Annually

1. Observe displacement patterns in open gearing lubricant for evidence of misalignment.
2. Place oil absorbent pads beneath open gearing to prevent grease from falling into the way while removing/applying grease to the gear teeth.
2. Remove old lubricant and debris by scraping the gear tooth surfaces and disposing of the lubricant in a tray or pan.
3. Apply CRC Quick Clean Heavy Duty Degreaser or equivalent to remove existing lubrication on the gear teeth. With the use of a scraper and rags, remove the remaining grease and solvent and properly dispose of materials.
4. Re-inspect the gears for signs of abnormal wear or misalignment. Report abnormal wear or misalignment o bridge management.
5. Using a brush, evenly coat all gear tooth surfaces with Mobil Mobiltac 325 NC or equivalent lubricant.

Refer to Sections 8.3.4, 11.5.3, and 11.5.9 for additional component and material information. For lubrication coding details below, refer to Section 11.2, "Machinery Lubrication Schematics" in the Operations and Maintenance Manual.

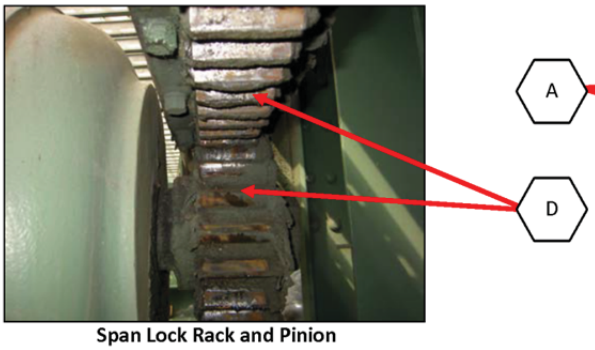

Span Lock Rack and Pinion

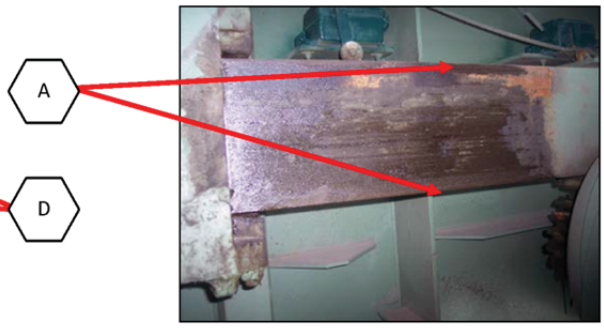

Lock Bar

SCHEDULING CONSIDERATIONS:

Fresh grease should be applied to the lock bar and open gearing monthly. Annually, the racks and pinions should be cleaned, inspected, and lubricated.

Inspect span lock machinery when the bridge opens more than 150 times between Spring and Fall maintenance routines or after an overstress situation such as a bound lock bar.

Contact TMC to coordinate temporary closure of the bridge for maintenance.

DELAWARE **DEPARTMENT OF TRANSPORTATION** **BRIDGE MANAGEMENT SECTION** **BRIDGE MAINTENANCE PERFORMANCE STANDARD**	**BRIDGE NUMBER** 1-693 **BMS ACTIVITY CODE** B070-S2J Page 2 of 2 **EFFECTIVE DATE**

ACTIVITY TITLE:	**UNIT OF MEASUREMENT:**
Span Lock Open Gearing Lubrication	Number of Open Gears

WORK AREA, ACTIVITY DESCRIPTION & REQUIREMENTS:

The span lock machinery is located on the inboard side of the bascule girders at the toe of the north leaf. Tasks include locating, inspecting and lubricating both span lock systems on the bridge. Lockout/Tagout is required prior to performing any maintenance on this equipment. Report any significant defects to bridge management.

Qty	EQUIPMENT	Qty	MATERIAL
1	Scraper	~1/5 – 5 Gallon Bucket	Mobil Mobiltac 325 NC or equivalent
6	Oil absorbent pads		
1	Catch basin		
1	Bag of rags		
1	Brush or swab		
1/Person	Tyvek suit	~1 – 20 oz. Can	CRC Quick Clean Heavy Duty Degreaser or equivalent
1/Person	Set of chemical resistant Viton gloves		
1/Person	Chemical goggles and face shield		
1/Person	Chemical respirator		

11.4.7.4 SPAN LOCK BAR, GUIDES AND RECEIVING SOCKET LUBRICATION

DELAWARE **DEPARTMENT OF TRANSPORTATION** **BRIDGE MANAGEMENT SECTION** **BRIDGE MAINTENANCE PERFORMANCE STANDARD**	**BRIDGE NUMBER** 1-693
	BMS ACTIVITY CODE B078-S2J Page 1 of 2
	EFFECTIVE DATE

ACTIVITY TITLE:	**UNIT OF MEASUREMENT:**
Span Lock Bars, Guides, and Receiving Sockets Lubrication	Number of Span Lock Bars, Guides, and Receiving Sockets

PROCEDURE DESCRIPTION:

WARNING

Use EXTREME CARE and ALWAYS REMOVE POWER from all pertinent electrical equipment, which includes multiple power sources, before beginning maintenance. Refer to Section 7.3, "Lockout/Tagout Procedure" in the Operations and Maintenance Manual.

Monthly

1. With the lock bar fully retracted, remove the existing lubricant from the lock bar and receiving socket.
2. Visually inspect the front and rear guides, sockets, and fasteners for excessive wear or damage.
3. Brush or swab the top and bottom of the receiving socket and sliding surfaces of the lock bar with Mobil Mobilux EP-2 or equivalent lubricant.

Refer to Sections 8.3.1, 11.5.1, and 11.5.9 for additional component and material information. For lubrication coding details below, refer to Section 11.2, "Machinery Lubrication Schematics" in the Operations and Maintenance Manual.

Front Guide – Lock Bar Retracted

Rear Guide

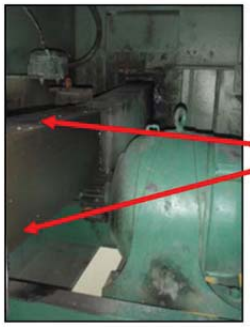

Lock Bar

Receiving Socket

SCHEDULING CONSIDERATIONS:

The span lock bars and receiving sockets should be lubricated on a monthly basis.

Inspect and lubricate span lock guides and sockets when the span lock machinery has an overstress situation such as a bound lock bar.

Contact TMC to coordinate temporary closure of the bridge for maintenance.

DELAWARE **DEPARTMENT OF TRANSPORTATION** **BRIDGE MANAGEMENT SECTION** **BRIDGE MAINTENANCE PERFORMANCE STANDARD**	**BRIDGE NUMBER** 1-693 **BMS ACTIVITY CODE** B078-S2J Page 2 of 2 **EFFECTIVE DATE**

ACTIVITY TITLE:	**UNIT OF MEASUREMENT:**
Span Lock Bars, Guides, and Receiving Sockets Lubrication	Number of Span Lock Bars, Guides, and Receiving Sockets

WORK AREA, ACTIVITY DESCRIPTION & REQUIREMENTS:

The span lock guides receiving sockets are located on the inboard side of each bascule girder at the toe of each span. The front guides are mounted to the north leaf Floorbeam 0 web (per drawings). The rear guides are mounted to the bascule girder web. The receiving sockets are mounted to the south leaf Floorbeam 0 web (per drawings). Tasks include locating, inspecting and lubricating all span lock guides and sockets on the bridge. Lockout/Tagout is required prior to performing any maintenance on this equipment. Report any significant defects to bridge management.

Qty	EQUIPMENT	Qty	MATERIAL
1	Bag of rags	~4 – 14 oz. Tubes	Mobil Mobilux EP-2 or equivalent
1	Scraper		
1	Catch basin		
1	Brush or swab		
1/Person	Tyvek suit	~2 – 20 oz. Cans	CRC Quick Clean Heavy Duty Degreaser or equivalent
1/Person	Set of chemical resistant Viton gloves		
1/Person	Eye protection		
1/Person	Chemical respirator		

11.4.8 CENTERING GUIDE AND CENTERING DEVICE LUBRICATION

DELAWARE **DEPARTMENT OF TRANSPORTATION** **BRIDGE MANAGEMENT SECTION** **BRIDGE MAINTENANCE PERFORMANCE STANDARD**	**BRIDGE NUMBER** 1-693
	BMS ACTIVITY CODE B079-S2J
	EFFECTIVE DATE

ACTIVITY TITLE:	**UNIT OF MEASUREMENT:**
Centering Guide and Centering Device Lubrication	Number of Centering Guides and Centering Devices

PROCEDURE DESCRIPTION:

Monthly

1. Remove the existing lubricant from the centering guide components.
2. Visually inspect centering guide, centering device, wear plates, and fasteners for excessive wear or damage.
3. Brush or swab the sliding surfaces of the centering guide with Mobil Mobilux EP-2 or equivalent lubricant.

Refer to Sections 8.3.5, 11.5.1, and 11.5.9 for additional component and material information. For lubrication coding details below, refer to Section 11.2, "Machinery Lubrication Schematics" in the Operations and Maintenance Manual.

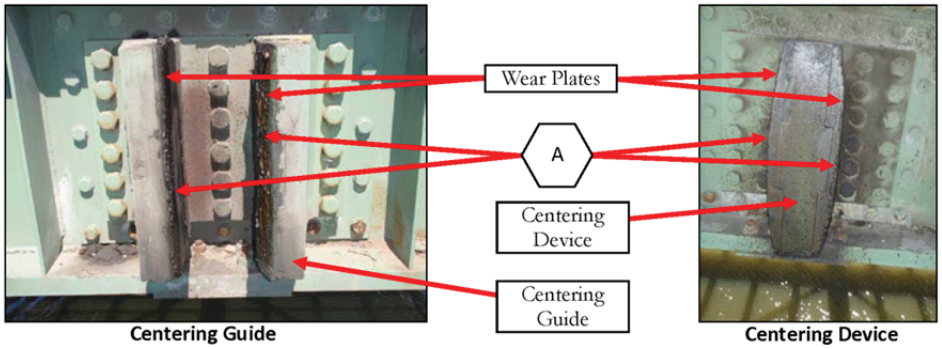

SCHEDULING CONSIDERATIONS:

Centering guide and centering device components should be lubricated monthly.

Contact TMC to coordinate temporary closure of the bridge for maintenance.

WORK AREA, ACTIVITY DESCRIPTION & REQUIREMENTS:

Centering guide components are located at the toe of each span, mounted to the web of Floorbeam 0 (per drawings). Tasks include locating, inspecting, and lubricating all centering guide components on the bridge with the appropriate lubricant. Report any significant defects to bridge management.

Qty	EQUIPMENT	Qty	MATERIAL
1	Bag of rags	~2 – 14 oz. Tubes	Mobil Mobilux EP-2 or equivalent
1	Scraper		
1	Catch basin		
1	Brush or swab		
1/Person	Tyvek suit	~1 – 20 oz. Can	CRC Quick Clean Heavy Duty Degreaser or equivalent
1/Person	Set of chemical resistant Viton gloves		
1/Person	Eye protection		
1/Person	Chemical respirator		

11.5 MATERIAL DATA SHEETS

11.5.1 MOBIL MOBILUX EP-0, EP-2

Mobil

Mobilux EP 0, 1, 2, 3, 460, 004 and 023

Grease

Product Description

Mobilux EP 0, 1, 2, 3, 460, 004 and 023 products are a high performance family of five general-purpose industrial greases and two special-duty semi-fluid greases. These lithium hydroxystearate greases are formulated to provide extra protection against wear, rusting and water washout. They are available in NLGI grades ranging from 00 to 3, with base oil viscosities ISO VG 150, 320 and 460.

Mobilux EP 0, 1, 2, 3 and 460 greases are recommended for most types of industrial applications including heavy-duty applications where high unit pressures or shock loads are present. These greases provide excellent protection against rust and corrosion and resist water wash-out which makes them particularly suitable for equipment where moist or wet conditions are common. Mobilux EP 0 and 1 are suitable for centralised systems. Mobilux EP 2 and 3 are general-purpose greases and Mobilux EP 460 is used in heavy-duty applications such as the wet ends of paper machines. The recommended operating temperature range is from -20°C to 130°C (0°C to 130°C for Mobilux EP 460) but they may be used at higher temperatures if the lubrication frequency is increased accordingly.

Mobilux EP 004 and Mobilux EP 023 are particularly suitable for the lubrication of enclosed gears and bearings in poorly sealed gear cases they can also be used in many other industrial applications where conventional gear oils cannot be retained in gear cases, chain cases, etc. because of leakage due to worn or missing seals. The recommended operating temperature range is -25 to 120°C for Mobilux EP 004 and -15 to 120°C for Mobilux EP 023.

Features and Benefits

Mobilux EP greases have a long history of proven performance and have demonstrated superior performance versus competitive products in the areas of corrosion protection, low temperature pumpability and high temperature service life. A Timken OK load of 40 lb illustrates their load carrying and extreme pressure capability.

- Reduced wear under heavy or shock loading and vibration for good equipment reliability and availability
- Protection against rust and corrosion and resistance to water washout for equipment protection and good lubrication even in presence of water
- Extended bearing life potential in wet environments for reduced bearing costs and unanticipated downtime
- Good pumpability in centralised systems (Mobilux EP 0 and 1)
- Effective leakage control (Mobilux EP 004 and Mobilux EP 023)

Applications

- Mobilux EP 0 and EP 1 provide good low temperature pumpability and are suitable for centralised lubrication systems and other applications where low temperature performance is required.
- Mobilux EP 2 is recommended for multipurpose applications in antifriction and plain bearings, bushings and pins under normal operating conditions.
- Mobilux EP 3 is a stiffer NLGI grade 3 grease recommended for applications where maximum protection against penetration of water or solid contaminants is required.

- Mobilux EP 460 is recommended for the lubrication of low to moderate speed, heavily loaded bearings including those subject to high unit pressures or shock loads. These include steel and paper mills, underground mining, tunnelling, ore crushing plants and other heavy-duty applications where moist or wet conditions are common.
- Mobilux EP 004 and Mobilux EP 023 are particularly suitable for the lubrication of enclosed gears and bearings in poorly sealed gear cases on most underground mining machinery with the exception of electric motor gearings. Mobilux EP 004 and Mobilux EP 023 can also be used in many other industrial applications where conventional gear oils cannot be retained in equipment such as gear cases, chain cases, because of leakage due to worn or missing seals. Mobilux EP 004 passes the SEW 1008 hour gear test requirement DR.EM.203 mod.

Specifications and Approvals

Mobilux EP meets or exceeds the requirements of:	Mobilux EP 0	Mobilux EP 1	Mobilux EP 2	Mobilux EP 3	Mobilux EP 460	Mobilux EP 004	Mobilux EP 023
DIN 51825: (2004-06)		KP1K-30	KP2K-30	KP3K-20	KP2K-20		
DIN 51826: (2005-01)	GP0G-20					GP00G-20	GP000G-20

Mobilux EP has the following builder approvals	Mobilux EP 0	Mobilux EP 1	Mobilux EP 2	Mobilux EP 3	Mobilux EP 460	Mobilux EP 004	Mobilux EP 023
SEW R32/302						X	

Typical Properties

	Mobilux EP 0	Mobilux EP 1	Mobilux EP 2	Mobilux EP 3	Mobilux EP 460	Mobilux EP 004	Mobilux EP 023
NLGI Grade	0	1	2	3	2	00	000
Thickener Type	Lithium	Lithium	Lithium	Lithium	Lithium	Lithium	Lithium
Color, Visual	Brown	Brown	Brown	Brown	Brown	Brown	Brown
Penetration, Worked, 25°C, ASTM D 217	370	325	280	235	280	415	460
Viscosity of Oil, ASTM D 445							
cSt @ 40°C	160	160	160	160	460	160	320
Timken OK Load, ASTM D 2509, lb	40	40	40	40	40	40	40
4-Ball Wear, ASTM D 2266, Scar, mm	0.4	0.4	0.4	0.4	0.4	0.5	0.4
4-Ball Weld Load, ASTM D 2596, Kg	250	250	250	250	250	250	250
Dropping Point, D 2265, C	190	190	190	190	190		
Rust Protection, ASTM D 6138, Distilled Water	0-0	0-0	0-0	0-0	0-0	0-0	0-0

Health and Safety

Based on available information, this product is not expected to produce adverse effects on health when used for the intended application and the recommendations provided in the Material Safety Data Sheet (MSDS) are followed. MSDS's are available upon request through your sales contract office, or via the Internet. This product should not be used for purposes other than its intended use. If disposing of used product, take care to protect the environment.

ExxonMobil

Product Name: MOBILUX EP 0
Revision Date: 30May2007
Page 1 of 8

MATERIAL SAFETY DATA SHEET

SECTION 1 PRODUCT AND COMPANY IDENTIFICATION

PRODUCT

Product Name: **MOBILUX EP 0**
Product Description: Base Oil and Additives
Product Code: 2015A0208030, 641290-00, 971553
Intended Use: Grease

COMPANY IDENTIFICATION

Supplier: **EXXON MOBIL CORPORATION**
3225 GALLOWS RD.
FAIRFAX, VA. 22037 USA

24 Hour Health Emergency	609-737-4411
Transportation Emergency Phone	800-424-9300
ExxonMobil Transportation No.	281-834-3296
MSDS Requests	713-613-3661
Product Technical Information	800-662-4525, 800-947-9147
MSDS Internet Address	http://www.exxon.com, http://www.mobil.com

SECTION 2 COMPOSITION / INFORMATION ON INGREDIENTS

Reportable Hazardous Substance(s) or Complex Substance(s)

Name	CAS#	Concentration*
ZINC DITHIOPHOSPHATE	68649-42-3	< 2.5%

* All concentrations are percent by weight unless material is a gas. Gas concentrations are in percent by volume.

SECTION 3 HAZARDS IDENTIFICATION

This material is not considered to be hazardous according to regulatory guidelines (see (M)SDS Section 15).

POTENTIAL HEALTH EFFECTS

Low order of toxicity. Excessive exposure may result in eye, skin, or respiratory irritation. High-pressure injection under skin may cause serious damage.

NFPA Hazard ID:	Health:	0	Flammability:	1	Reactivity:	0
HMIS Hazard ID:	Health:	0	Flammability:	1	Reactivity:	0

NOTE: This material should not be used for any other purpose than the intended use in Section 1 without expert advice. Health studies have shown that chemical exposure may cause potential human health risks which may vary from person to person.

SECTION 4 FIRST AID MEASURES

INHALATION

Under normal conditions of intended use, this material is not expected to be an inhalation hazard.

SKIN CONTACT

Wash contact areas with soap and water. If product is injected into or under the skin, or into any part of the body, regardless of the appearance of the wound or its size, the individual should be evaluated immediately by a physician as a surgical emergency. Even though initial symptoms from high pressure injection may be minimal or absent, early surgical treatment within the first few hours may significantly reduce the ultimate extent of injury.

EYE CONTACT

Flush thoroughly with water. If irritation occurs, get medical assistance.

INGESTION

First aid is normally not required. Seek medical attention if discomfort occurs.

SECTION 5 FIRE FIGHTING MEASURES

EXTINGUISHING MEDIA

Appropriate Extinguishing Media: Use water fog, foam, dry chemical or carbon dioxide (CO2) to extinguish flames.

Inappropriate Extinguishing Media: Straight Streams of Water

FIRE FIGHTING

Fire Fighting Instructions: Evacuate area. Prevent runoff from fire control or dilution from entering streams, sewers, or drinking water supply. Firefighters should use standard protective equipment and in enclosed spaces, self-contained breathing apparatus (SCBA). Use water spray to cool fire exposed surfaces and to protect personnel.

Hazardous Combustion Products: Aldehydes, Oxides of carbon, Smoke, Fume, Sulfur oxides, Incomplete combustion products

FLAMMABILITY PROPERTIES

Flash Point [Method]: >204C (400F) [EST. FOR OIL, ASTM D-92 (COC)]
Flammable Limits (Approximate volume % in air): LEL: N/D UEL: N/D
Autoignition Temperature: N/D

SECTION 6 ACCIDENTAL RELEASE MEASURES

NOTIFICATION PROCEDURES

In the event of a spill or accidental release, notify relevant authorities in accordance with all applicable regulations. In the event of a spill or accidental release, notify relevant authorities in accordance with all applicable regulations. US regulations require reporting releases of this material to the environment which exceed the applicable reportable quantity or oil spills which could reach any waterway including intermittent dry creeks. The National Response Center can be reached at (800)424-8802.

ExxonMobil

Product Name: MOBILUX EP 0
Revision Date: 30May2007
Page 3 of 8

SPILL MANAGEMENT

Land Spill: Allow spilled material to solidify and scrape up with shovels into a suitable container for recycle or disposal. Scrape up spilled material with shovels into a suitable container for recycle or disposal.

Water Spill: Stop leak if you can do it without risk. Confine the spill immediately with booms. Warn other shipping. Skim from surface.

Water spill and land spill recommendations are based on the most likely spill scenario for this material; however, geographic conditions, wind, temperature, (and in the case of a water spill) wave and current direction and speed may greatly influence the appropriate action to be taken. For this reason, local experts should be consulted. Note: Local regulations may prescribe or limit action to be taken.

ENVIRONMENTAL PRECAUTIONS

Prevent entry into waterways, sewers, basements or confined areas.

SECTION 7 HANDLING AND STORAGE

HANDLING

Prevent small spills and leakage to avoid slip hazard.

Static Accumulator: This material is not a static accumulator.

STORAGE

Do not store in open or unlabelled containers.

SECTION 8 EXPOSURE CONTROLS / PERSONAL PROTECTION

EXPOSURE LIMIT VALUES

NOTE: Limits/standards shown for guidance only. Follow applicable regulations.

ENGINEERING CONTROLS

The level of protection and types of controls necessary will vary depending upon potential exposure conditions. Control measures to consider:

No special requirements under ordinary conditions of use and with adequate ventilation.

PERSONAL PROTECTION

Personal protective equipment selections vary based on potential exposure conditions such as applications, handling practices, concentration and ventilation. Information on the selection of protective equipment for use with this material, as provided below, is based upon intended, normal usage.

Respiratory Protection: If engineering controls do not maintain airborne contaminant concentrations at a level which is adequate to protect worker health, an approved respirator may be appropriate. Respirator selection, use, and maintenance must be in accordance with regulatory requirements, if applicable. Types of

respirators to be considered for this material include:
No protection is ordinarily required under normal conditions of use and with adequate ventilation.

For high airborne concentrations, use an approved supplied-air respirator, operated in positive pressure mode. Supplied air respirators with an escape bottle may be appropriate when oxygen levels are inadequate, gas/vapor warning properties are poor, or if air purifying filter capacity/rating may be exceeded.

Hand Protection: Any specific glove information provided is based on published literature and glove manufacturer data. Work conditions can greatly affect glove durability; inspect and replace worn or damaged gloves. The types of gloves to be considered for this material include:
No protection is ordinarily required under normal conditions of use.

Eye Protection: If contact is likely, safety glasses with side shields are recommended.

Skin and Body Protection: Any specific clothing information provided is based on published literature or manufacturer data. The types of clothing to be considered for this material include:
No skin protection is ordinarily required under normal conditions of use. In accordance with good industrial hygiene practices, precautions should be taken to avoid skin contact.

Specific Hygiene Measures: Always observe good personal hygiene measures, such as washing after handling the material and before eating, drinking, and/or smoking. Routinely wash work clothing and protective equipment to remove contaminants. Discard contaminated clothing and footwear that cannot be cleaned. Practice good housekeeping.

ENVIRONMENTAL CONTROLS
See Sections 6, 7, 12, 13.

SECTION 9 PHYSICAL AND CHEMICAL PROPERTIES

Typical physical and chemical properties are given below. Consult the Supplier in Section 1 for additional data.

GENERAL INFORMATION
Physical State: Solid
Form: Semi-fluid
Color: Brown
Odor: Characteristic
Odor Threshold: N/D

IMPORTANT HEALTH, SAFETY, AND ENVIRONMENTAL INFORMATION
Relative Density (at 15 C): 0.918
Flash Point [Method]: >204C (400F) [EST. FOR OIL, ASTM D-92 (COC)]
Flammable Limits (Approximate volume % in air): LEL: N/D UEL: N/D
Autoignition Temperature: N/D
Boiling Point / Range: > 316C (600F)
Vapor Density (Air = 1): N/D
Vapor Pressure: < 0.013 kPa (0.1 mm Hg) at 20 C
Evaporation Rate (n-butyl acetate = 1): N/D
pH: N/A
Log Pow (n-Octanol/Water Partition Coefficient): > 3.5
Solubility in Water: Negligible

ExxonMobil

Product Name: MOBILUX EP 0
Revision Date: 30May2007
Page 5 of 8

Viscosity: 150 cSt (150 mm2/sec) at 40 C
Oxidizing Properties: See Sections 3, 15, 16.

OTHER INFORMATION
Freezing Point: N/D
Melting Point: N/D
DMSO Extract (mineral oil only), IP-346: < 3 %wt

NOTE: Most physical properties above are for the oil component in the material.

SECTION 10 STABILITY AND REACTIVITY

STABILITY: Material is stable under normal conditions.

CONDITIONS TO AVOID: Excessive heat. High energy sources of ignition.

MATERIALS TO AVOID: Strong oxidizers

HAZARDOUS DECOMPOSITION PRODUCTS: Material does not decompose at ambient temperatures.

HAZARDOUS POLYMERIZATION: Will not occur.

SECTION 11 TOXICOLOGICAL INFORMATION

ACUTE TOXICITY

Route of Exposure	Conclusion / Remarks
Inhalation	
Toxicity (Rat): LC50 > 5000 mg/m3	Minimally Toxic. Based on assessment of the components.
Irritation: No end point data.	Negligible hazard at ambient/normal handling temperatures. Based on assessment of the components.
Ingestion	
Toxicity (Rat): LD50 > 2000 mg/kg	Minimally Toxic. Based on test data for structurally similar materials.
Skin	
Toxicity (Rabbit): LD50 > 2000 mg/kg	Minimally Toxic. Based on test data for structurally similar materials.
Irritation (Rabbit): Data available.	Negligible irritation to skin at ambient temperatures. Based on assessment of the components.
Eye	
Irritation (Rabbit): Data available.	May cause mild, short-lasting discomfort to eyes. Based on assessment of the components.

CHRONIC/OTHER EFFECTS
Contains:
Base oil severely refined: Not carcinogenic in animal studies. Representative material passes IP-346, Modified Ames test, and/or other screening tests. Dermal and inhalation studies showed minimal effects; lung non-specific infiltration of immune cells, oil deposition and minimal granuloma formation. Not sensitizing in test animals.

Additional information is available by request.

The following ingredients are cited on the lists below: None.

--REGULATORY LISTS SEARCHED--

1 = NTP CARC	3 = IARC 1	5 = IARC 2B
2 = NTP SUS	4 = IARC 2A	6 = OSHA CARC

SECTION 12 ECOLOGICAL INFORMATION

The information given is based on data available for the material, the components of the material, and similar materials.

ECOTOXICITY

Material -- Not expected to be harmful to aquatic organisms.

MOBILITY

Base oil component -- Low solubility and floats and is expected to migrate from water to the land. Expected to partition to sediment and wastewater solids.

PERSISTENCE AND DEGRADABILITY

Biodegradation:

Base oil component -- Expected to be inherently biodegradable

BIOACCUMULATION POTENTIAL

Base oil component -- Has the potential to bioaccumulate, however metabolism or physical properties may reduce the bioconcentration or limit bioavailability.

SECTION 13 DISPOSAL CONSIDERATIONS

Disposal recommendations based on material as supplied. Disposal must be in accordance with current applicable laws and regulations, and material characteristics at time of disposal.

DISPOSAL RECOMMENDATIONS

Product is suitable for burning in an enclosed controlled burner for fuel value or disposal by supervised incineration at very high temperatures to prevent formation of undesirable combustion products.

REGULATORY DISPOSAL INFORMATION

RCRA Information: The unused product, in our opinion, is not specifically listed by the EPA as a hazardous waste (40 CFR, Part 261D), nor is it formulated to contain materials which are listed as hazardous wastes. It does not exhibit the hazardous characteristics of ignitability, corrosivity or reactivity and is not formulated with contaminants as determined by the Toxicity Characteristic Leaching Procedure (TCLP). However, used product may be regulated.

Empty Container Warning Empty Container Warning (where applicable): Empty containers may contain residue and can be dangerous. Do not attempt to refill or clean containers without proper instructions. Empty drums should be completely drained and safely stored until appropriately reconditioned or disposed. Empty containers should be taken

ExxonMobil

Product Name: MOBILUX EP 0
Revision Date: 30May2007
Page 7 of 8

for recycling, recovery, or disposal through suitably qualified or licensed contractor and in accordance with governmental regulations. DO NOT PRESSURISE, CUT, WELD, BRAZE, SOLDER, DRILL, GRIND, OR EXPOSE SUCH CONTAINERS TO HEAT, FLAME, SPARKS, STATIC ELECTRICITY, OR OTHER SOURCES OF IGNITION. THEY MAY EXPLODE AND CAUSE INJURY OR DEATH.

SECTION 14 TRANSPORT INFORMATION

LAND (DOT) : Not Regulated for Land Transport

LAND (TDG) : Not Regulated for Land Transport

SEA (IMDG) : Not Regulated for Sea Transport according to IMDG-Code

AIR (IATA) : Not Regulated for Air Transport

SECTION 15 REGULATORY INFORMATION

OSHA HAZARD COMMUNICATION STANDARD: When used for its intended purposes, this material is not classified as hazardous in accordance with OSHA 29 CFR 1910.1200.

NATIONAL CHEMICAL INVENTORY LISTING: DSL, EINECS, KECI, PICCS, TSCA
Special Cases:

Inventory	Status
AICS	Restrictions Apply

EPCRA: This material contains no extremely hazardous substances.

SARA (311/312) REPORTABLE HAZARD CATEGORIES: None.

SARA (313) TOXIC RELEASE INVENTORY:

Chemical Name	CAS Number	Typical Value
ZINC DITHIOPHOSPHATE	68649-42-3	< 2.5%

The Following Ingredients are Cited on the Lists Below:*

Chemical Name	CAS Number	List Citations
DIPHENYLAMINE	122-39-4	5, 9, 18
PHOSPHORUS	7723-14-0	1, 4
ZINC DITHIOPHOSPHATE	68649-42-3	13, 15, 17

--REGULATORY LISTS SEARCHED--

1 = ACGIH ALL	6 = TSCA 5a2	11 = CA P65 REPRO	16 = MN RTK
2 = ACGIH A1	7 = TSCA 5e	12 = CA RTK	17 = NJ RTK
3 = ACGIH A2	8 = TSCA 6	13 = IL RTK	18 = PA RTK
4 = OSHA Z	9 = TSCA 12b	14 = LA RTK	19 = RI RTK

5 = TSCA 4 10 = CA P65 CARC 15 = MI 293

Code key: CARC=Carcinogen; REPRO=Reproductive

* EPA recently added new chemical substances to its TSCA Section 4 test rules. Please contact the supplier to confirm whether the ingredients in this product currently appear on a TSCA 4 or TSCA 12b list.

SECTION 16 OTHER INFORMATION

N/D = Not determined, N/A = Not applicable

THIS SAFETY DATA SHEET CONTAINS THE FOLLOWING REVISIONS:

Revision Changes:
Section 13: Empty Container Warning was modified.
Section 08: Hand Protection was modified.
Section 06: Notification Procedures was modified.
Section 02: Primary Ingredient Name was deleted.
Section 02: CAS Number was deleted.
Section 02: Concentration - Header was deleted.
Section 02: Constituents Table - Header was deleted.
Section 02: Component table was deleted.
Section 08: Exposure Limits Table was deleted.
Section 08: OEL Table - Form Column - Header was deleted.
Section 08: OEL Table - Limit Column - Header was deleted.
Section 08: OEL Table - Notation Column - Header was deleted.
Section 08: OEL Table - Source Column - Header was deleted.
Section 08: Exposure Limit Values - Header was deleted.

The information and recommendations contained herein are, to the best of ExxonMobil's knowledge and belief, accurate and reliable as of the date issued. You can contact ExxonMobil to insure that this document is the most current available from ExxonMobil. The information and recommendations are offered for the user's consideration and examination. It is the user's responsibility to satisfy itself that the product is suitable for the intended use. If buyer repackages this product, it is the user's responsibility to insure proper health, safety and other necessary information is included with and/or on the container. Appropriate warnings and safe-handling procedures should be provided to handlers and users. Alteration of this document is strictly prohibited. Except to the extent required by law, re-publication or retransmission of this document, in whole or in part, is not permitted. The term, "ExxonMobil" is used for convenience, and may include any one or more of ExxonMobil Chemical Company, Exxon Mobil Corporation, or any affiliates in which they directly or indirectly hold any interest.

Internal Use Only
MHC: 0, 0, 0, 0, 0, 0 PPEC: A

DGN: 2009904XUS (553448)

Copyright 2002 Exxon Mobil Corporation, All rights reserved

ExxonMobil

Product Name: MOBILUX EP 2
Revision Date: 21 Jul 2009
Page 1 of 9

MATERIAL SAFETY DATA SHEET

SECTION 1 PRODUCT AND COMPANY IDENTIFICATION

PRODUCT

Product Name: **MOBILUX EP 2**
Product Description: Base Oil and Additives
Product Code: 641274-00, 970717
Intended Use: Grease

COMPANY IDENTIFICATION

Supplier: **EXXON MOBIL CORPORATION**
3225 GALLOWS RD.
FAIRFAX, VA. 22037 USA

24 Hour Health Emergency	609-737-4411
Transportation Emergency Phone	800-424-9300
ExxonMobil Transportation No.	281-834-3296
Product Technical Information	800-662-4525, 800-947-9147
MSDS Internet Address	http://www.exxon.com, http://www.mobil.com

SECTION 2 COMPOSITION / INFORMATION ON INGREDIENTS

Reportable Hazardous Substance(s) or Complex Substance(s)

Name	CAS#	Concentration*
ZINC DITHIOPHOSPHATE	68649-42-3	< 2.5%

* All concentrations are percent by weight unless material is a gas. Gas concentrations are in percent by volume.

SECTION 3 HAZARDS IDENTIFICATION

This material is not considered to be hazardous according to regulatory guidelines (see (M)SDS Section 15).

POTENTIAL HEALTH EFFECTS

Low order of toxicity. Excessive exposure may result in eye, skin, or respiratory irritation. High-pressure injection under skin may cause serious damage.

NFPA Hazard ID:	Health:	0	Flammability:	1	Reactivity:	0
HMIS Hazard ID:	Health:	0	Flammability:	1	Reactivity:	0

NOTE: This material should not be used for any other purpose than the intended use in Section 1 without expert advice. Health studies have shown that chemical exposure may cause potential human health risks which may vary from person to person.

SECTION 4 FIRST AID MEASURES

Inhalation

Under normal conditions of intended use, this material is not expected to be an inhalation hazard.

SKIN CONTACT

Wash contact areas with soap and water. If product is injected into or under the skin, or into any part of the body, regardless of the appearance of the wound or its size, the individual should be evaluated immediately by a physician as a surgical emergency. Even though initial symptoms from high pressure injection may be minimal or absent, early surgical treatment within the first few hours may significantly reduce the ultimate extent of injury.

EYE CONTACT

Flush thoroughly with water. If irritation occurs, get medical assistance.

Ingestion

First aid is normally not required. Seek medical attention if discomfort occurs.

SECTION 5 FIRE FIGHTING MEASURES

EXTINGUISHING MEDIA

Appropriate Extinguishing Media: Use water fog, foam, dry chemical or carbon dioxide (CO2) to extinguish flames.

Inappropriate Extinguishing Media: Straight Streams of Water

FIRE FIGHTING

Fire Fighting Instructions: Evacuate area. Prevent runoff from fire control or dilution from entering streams, sewers, or drinking water supply. Firefighters should use standard protective equipment and in enclosed spaces, self-contained breathing apparatus (SCBA). Use water spray to cool fire exposed surfaces and to protect personnel.

Hazardous Combustion Products: Smoke, Fume, Aldehydes, Sulfur Oxides, Incomplete combustion products, Oxides of carbon

FLAMMABILITY PROPERTIES

Flash Point [Method]: >204C (400F) [EST. FOR OIL, ASTM D-92 (COC)]
Flammable Limits (Approximate volume % in air): LEL: N/D UEL: N/D
Autoignition Temperature: N/D

SECTION 6 ACCIDENTAL RELEASE MEASURES

NOTIFICATION PROCEDURES

In the event of a spill or accidental release, notify relevant authorities in accordance with all applicable regulations. US regulations require reporting releases of this material to the environment which exceed the applicable reportable quantity or oil spills which could reach any waterway including intermittent dry creeks. The National Response Center can be reached at (800)424-8802.

ExxonMobil

Product Name: MOBILUX EP 2
Revision Date: 21 Jul 2009
Page 3 of 9

SPILL MANAGEMENT

Land Spill: Allow spilled material to solidify and scrape up with shovels into a suitable container for recycle or disposal. Scrape up spilled material with shovels into a suitable container for recycle or disposal.

Water Spill: Stop leak if you can do it without risk. Confine the spill immediately with booms. Warn other shipping. Skim from surface.

Water spill and land spill recommendations are based on the most likely spill scenario for this material; however, geographic conditions, wind, temperature, (and in the case of a water spill) wave and current direction and speed may greatly influence the appropriate action to be taken. For this reason, local experts should be consulted. Note: Local regulations may prescribe or limit action to be taken.

ENVIRONMENTAL PRECAUTIONS

Prevent entry into waterways, sewers, basements or confined areas.

SECTION 7 HANDLING AND STORAGE

HANDLING

Prevent small spills and leakage to avoid slip hazard.

Static Accumulator: This material is not a static accumulator.

STORAGE

Do not store in open or unlabelled containers.

SECTION 8 EXPOSURE CONTROLS / PERSONAL PROTECTION

EXPOSURE LIMIT VALUES

NOTE: Limits/standards shown for guidance only. Follow applicable regulations.

ENGINEERING CONTROLS

The level of protection and types of controls necessary will vary depending upon potential exposure conditions. Control measures to consider:

No special requirements under ordinary conditions of use and with adequate ventilation.

PERSONAL PROTECTION

Personal protective equipment selections vary based on potential exposure conditions such as applications, handling practices, concentration and ventilation. Information on the selection of protective equipment for use with this material, as provided below, is based upon intended, normal usage.

Respiratory Protection: If engineering controls do not maintain airborne contaminant concentrations at a level which is adequate to protect worker health, an approved respirator may be appropriate. Respirator selection, use, and maintenance must be in accordance with regulatory requirements, if applicable. Types of respirators to be considered for this material include:

No protection is ordinarily required under normal conditions of use and with adequate ventilation.

For high airborne concentrations, use an approved supplied-air respirator, operated in positive pressure mode. Supplied air respirators with an escape bottle may be appropriate when oxygen levels are inadequate, gas/vapor warning properties are poor, or if air purifying filter capacity/rating may be exceeded.

Hand Protection: Any specific glove information provided is based on published literature and glove manufacturer data. Glove suitability and breakthrough time will differ depending on the specific use conditions. Contact the glove manufacturer for specific advice on glove selection and breakthrough times for your use conditions. Inspect and replace worn or damaged gloves. The types of gloves to be considered for this material include:

No protection is ordinarily required under normal conditions of use.

Eye Protection: If contact is likely, safety glasses with side shields are recommended.

Skin and Body Protection: Any specific clothing information provided is based on published literature or manufacturer data. The types of clothing to be considered for this material include:

No skin protection is ordinarily required under normal conditions of use. In accordance with good industrial hygiene practices, precautions should be taken to avoid skin contact.

Specific Hygiene Measures: Always observe good personal hygiene measures, such as washing after handling the material and before eating, drinking, and/or smoking. Routinely wash work clothing and protective equipment to remove contaminants. Discard contaminated clothing and footwear that cannot be cleaned. Practice good housekeeping.

ENVIRONMENTAL CONTROLS

See Sections 6, 7, 12, 13.

SECTION 9 PHYSICAL AND CHEMICAL PROPERTIES

Typical physical and chemical properties are given below. Consult the Supplier in Section 1 for additional data.

GENERAL INFORMATION

Physical State: Solid
Form: semi-fluid
Color: brown
Odor: Characteristic
Odor Threshold: N/D

IMPORTANT HEALTH, SAFETY, AND ENVIRONMENTAL INFORMATION

Relative Density (at 15 C): 0.92
Flash Point [Method]: >204C (400F) [EST. FOR OIL, ASTM D-92 (COC)]
Flammable Limits (Approximate volume % in air): LEL: N/D UEL: N/D
Autoignition Temperature: N/D
Boiling Point / Range: > 316C (600F)
Vapor Density (Air = 1): N/D
Vapor Pressure: < 0.013 kPa (0.1 mm Hg) at 20 C
Evaporation Rate (N-Butyl Acetate = 1): N/D
pH: N/A
Log Pow (n-Octanol/Water Partition Coefficient): > 3.5

Solubility in Water: Negligible
Viscosity: 150 cSt (150 mm²/sec) at 40 C
Oxidizing Properties: See Sections 3, 15, 16.

OTHER INFORMATION

Freezing Point: N/D
Melting Point: N/D
DMSO Extract (mineral oil only), IP-346: < 3 %wt

NOTE: Most physical properties above are for the oil component in the material.

SECTION 10 STABILITY AND REACTIVITY

STABILITY: Material is stable under normal conditions.

CONDITIONS TO AVOID: Excessive heat. High energy sources of ignition.

MATERIALS TO AVOID: Strong oxidizers

HAZARDOUS DECOMPOSITION PRODUCTS: Material does not decompose at ambient temperatures.

HAZARDOUS POLYMERIZATION: Will not occur.

SECTION 11 TOXICOLOGICAL INFORMATION

ACUTE TOXICITY

Route of Exposure	Conclusion / Remarks
Inhalation	
Toxicity: No end point data.	Minimally Toxic. Based on assessment of the components.
Irritation: No end point data.	Negligible hazard at ambient/normal handling temperatures. Based on assessment of the components.
Ingestion	
Toxicity (Rat): LD50 > 5000 mg/kg	Minimally Toxic. Based on test data for structurally similar materials.
Skin	
Toxicity (Rabbit): LD50 > 5000 mg/kg	Minimally Toxic. Based on test data for structurally similar materials.
Irritation (Rabbit): Data available.	Negligible irritation to skin at ambient temperatures. Based on assessment of the components.
Eye	
Irritation (Rabbit): Data available.	May cause mild, short-lasting discomfort to eyes. Based on assessment of the components.

CHRONIC/OTHER EFFECTS

Contains:

Base oil severely refined: Not carcinogenic in animal studies. Representative material passes IP-346, Modified Ames test, and/or other screening tests. Dermal and inhalation studies showed minimal effects; lung non-specific infiltration of immune cells, oil deposition and minimal granuloma formation. Not sensitizing in test animals.

Additional information is available by request.

The following ingredients are cited on the lists below: None.

--REGULATORY LISTS SEARCHED--

1 = NTP CARC	3 = IARC 1	5 = IARC 2B
2 = NTP SUS	4 = IARC 2A	6 = OSHA CARC

SECTION 12 ECOLOGICAL INFORMATION

The information given is based on data available for the material, the components of the material, and similar materials.

ECOTOXICITY

Material -- Not expected to be harmful to aquatic organisms.

MOBILITY

Base oil component -- Low solubility and floats and is expected to migrate from water to the land. Expected to partition to sediment and wastewater solids.

PERSISTENCE AND DEGRADABILITY

Biodegradation:

Base oil component -- Expected to be inherently biodegradable

BIOACCUMULATION POTENTIAL

Base oil component -- Has the potential to bioaccumulate, however metabolism or physical properties may reduce the bioconcentration or limit bioavailability.

SECTION 13 DISPOSAL CONSIDERATIONS

Disposal recommendations based on material as supplied. Disposal must be in accordance with current applicable laws and regulations, and material characteristics at time of disposal.

DISPOSAL RECOMMENDATIONS

Product is suitable for burning in an enclosed controlled burner for fuel value or disposal by supervised incineration at very high temperatures to prevent formation of undesirable combustion products.

REGULATORY DISPOSAL INFORMATION

RCRA Information: The unused product, in our opinion, is not specifically listed by the EPA as a hazardous waste (40 CFR, Part 261D), nor is it formulated to contain materials which are listed as hazardous wastes. It does not exhibit the hazardous characteristics of ignitability, corrosivity or reactivity and is not formulated with contaminants as determined by the Toxicity Characteristic Leaching Procedure (TCLP). However, used product may be regulated.

Empty Container Warning Empty Container Warning (where applicable): Empty containers may contain residue and can be dangerous. Do not attempt to refill or clean containers without proper instructions. Empty drums should be

ExxonMobil

Product Name: MOBILUX EP 2
Revision Date: 21 Jul 2009
Page 7 of 9

completely drained and safely stored until appropriately reconditioned or disposed. Empty containers should be taken for recycling, recovery, or disposal through suitably qualified or licensed contractor and in accordance with governmental regulations. DO NOT PRESSURISE, CUT, WELD, BRAZE, SOLDER, DRILL, GRIND, OR EXPOSE SUCH CONTAINERS TO HEAT, FLAME, SPARKS, STATIC ELECTRICITY, OR OTHER SOURCES OF IGNITION. THEY MAY EXPLODE AND CAUSE INJURY OR DEATH.

SECTION 14 TRANSPORT INFORMATION

LAND (DOT) : Not Regulated for Land Transport

LAND (TDG) : Not Regulated for Land Transport

SEA (IMDG) : Not Regulated for Sea Transport according to IMDG-Code

AIR (IATA) : Not Regulated for Air Transport

SECTION 15 REGULATORY INFORMATION

OSHA HAZARD COMMUNICATION STANDARD: When used for its intended purposes, this material is not classified as hazardous in accordance with OSHA 29 CFR 1910.1200.

NATIONAL CHEMICAL INVENTORY LISTING: AICS, IECSC, DSL, EINECS, KECI, PICCS, TSCA

EPCRA: This material contains no extremely hazardous substances.

SARA (311/312) REPORTABLE HAZARD CATEGORIES: None.

SARA (313) TOXIC RELEASE INVENTORY:

Chemical Name	CAS Number	Typical Value
ZINC DITHIOPHOSPHATE	68649-42-3	< 2.5%

The following ingredients are cited on the lists below:

Chemical Name	CAS Number	List Citations
DIPHENYLAMINE	122-39-4	5, 18
ZINC DITHIOPHOSPHATE	68649-42-3	13, 15, 17

--REGULATORY LISTS SEARCHED--

1 = ACGIH ALL	6 = TSCA 5a2	11 = CA P65 REPRO	16 = MN RTK
2 = ACGIH A1	7 = TSCA 5e	12 = CA RTK	17 = NJ RTK
3 = ACGIH A2	8 = TSCA 6	13 = IL RTK	18 = PA RTK
4 = OSHA Z	9 = TSCA 12b	14 = LA RTK	19 = RI RTK
5 = TSCA 4	10 = CA P65 CARC	15 = MI 293	

ExxonMobil

Product Name: MOBILUX EP 2
Revision Date: 21 Jul 2009
Page 8 of 9

Code key: CARC=Carcinogen; REPRO=Reproductive

SECTION 16 OTHER INFORMATION

N/D = Not determined, N/A = Not applicable

THIS SAFETY DATA SHEET CONTAINS THE FOLLOWING REVISIONS:

Revision Changes:
Section 04: First Aid Inhalation - Header was modified.
Section 04: First Aid Ingestion - Header was modified.
Section 04: First Aid Inhalation was modified.
Section 06: Notification Procedures - Header was modified.
Section 10 Stability and Reactivity - Header was modified.
Section 13: Disposal Recommendations - Note was modified.
Section 13: Empty Container Warning was modified.
Section 09: Physical State was modified.
Section 09: Color was modified.
Section 09: Boiling Point C(F) was modified.
Section 09: Evaporation Rate - Header was modified.
Section 08: Personal Protection was modified.
Section 08: Hand Protection was modified.
Section 09: Vapor Pressure was modified.
Section 07: Handling and Storage - Handling was modified.
Hazard Identification: Health Hazards was modified.
Section 11: Dermal Lethality Test Data was modified.
Section 11: Oral Lethality Test Data was modified.
Section 11: Inhalation Lethality Test Data was modified.
Section 05: Hazardous Combustion Products was modified.
Section 06: Accidental Release - Spill Management - Land was modified.
Section 06: Accidental Release - Spill Management - Water was modified.
Section 09: Relative Density - Header was modified.
Section 09: Flash Point C(F) was modified.
Section 09: Viscosity was modified.
Section 15: List Citations Table was modified.
Section 15: List Citation Table - Header was modified.
Section 11: Skin Irritation Conclusion was modified.
Section 11: Inhalation Lethality Test Comment was modified.
Section 15: National Chemical Inventory Listing was modified.
Section 16: Code to MHCs was modified.
Section 15: OSHA Hazard Communication Standard was modified.
Hazard Identification: OSHA - May be Hazardous Statement was modified.
Section 06: Notification Procedures was modified.
Section 01: Company Contact Methods Sorted by Priority was modified.
Section 08: Exposure Limit Values - Header was added.
Section 08: Exposure limits/standards was deleted.
Section 15: Special Cases - Header was deleted.
Section 15: Special Cases Table was deleted.
Section 15: Inventory - Header was deleted.
Section 15: Status - Header was deleted.

ExxonMobil

Product Name: MOBILUX EP 2
Revision Date: 21 Jul 2009
Page 9 of 9

The information and recommendations contained herein are, to the best of ExxonMobil's knowledge and belief, accurate and reliable as of the date issued. You can contact ExxonMobil to insure that this document is the most current available from ExxonMobil. The information and recommendations are offered for the user's consideration and examination. It is the user's responsibility to satisfy itself that the product is suitable for the intended use. If buyer repackages this product, it is the user's responsibility to insure proper health, safety and other necessary information is included with and/or on the container. Appropriate warnings and safe-handling procedures should be provided to handlers and users. Alteration of this document is strictly prohibited. Except to the extent required by law, re-publication or retransmission of this document, in whole or in part, is not permitted. The term, "ExxonMobil" is used for convenience, and may include any one or more of ExxonMobil Chemical Company, Exxon Mobil Corporation, or any affiliates in which they directly or indirectly hold any interest.

Internal Use Only
MHC: 0B, 0B, 0, 0, 0, 0 PPEC: A

DGN: 2009877XUS (539035)

Copyright 2002 Exxon Mobil Corporation, All rights reserved

11.5.2 FALK LONG TERM GREASE

FALK®

LONG LTG TERM GREASE

High Speed Grease Centrifuge

Typical Grease After Centrifuging

Facts on Lubrication

Separation Grease is a blend of oil and a thickener or soap. These compounds are not very stable and will eventually bleed or separate under the high centrifugal forces generated in many coupling applications. Once a grease begins to separate, the thickener accumulates in the areas where lubrication is required, and rapid wear of the contacting surfaces occurs. The oil is now free to leak out of the coupling past the seals, causing premature failure of the coupling.

Service Intervals for All-Purpose Greases It is common practice to lubricate all rotating equipment with one or two all purpose greases.

Most greases which are used as coupling lubricants were initially developed as bearing lubricants.

Bearing greases have a low viscosity and high bleed rate which is desirable to avoid heat caused by rolling friction. However, rolling friction is not present in couplings where the only movement is a sliding action caused by misalignment of shafts or thermal growth.

Bearing lubricants are adequate if the coupling manufacturer's service intervals are followed. These intervals are usually six (6) months for gear couplings and one (1) year for grid couplings.

Maintenance & Downtime In today's industrial plants the cost of equipment downtime for servicing can easily exceed hundreds of dollars per hour. So rather than shutting down this critical equipment, the connecting shaft couplings are frequently allowed to run until failure occurs or until the more expensive drive components in the system require maintenance.

In an attempt to hold the line of high maintenance costs, some users have switched to non-lubricated coupling designs. This switch seldom works out for the best however, since many elastomer designs have a short life expectancy and they induce problems elsewhere in the drive system. When they do fail, the connected equipment often has to be moved to replace the element.

Now LTG — What is it?

Our engineers have spent years measuring the wear rates on coupling components using various lubricants and coatings. Virtually every common industrial lubricant has been centrifuged under laboratory conditions per ASTM standard test methods for "Oil Separation from Lubricating Grease by Centrifuging." The results of extensive research indicated that greases with high viscosities and low bleed rates produce the longest life.

Falk LTG is specially formulated to provide superior lubrication for flexible shaft couplings.

How does it work?

The consistency of Falk LTG changes with operating conditions. As manufactured it is an NLGI #1/2 grade. Working of the lubricant under actual service conditions causes it to become semifluid while the grease near the seals will set to a heavier grade, helping to prevent leakage.

LTG is highly resistant to separation, easily out performing all other lubricants tested. The resistance to separation allows the lubricant to be used for relatively long periods of time.

Benefits for your Application

- **Increased coupling life.**
- **Significantly extended re-lubrication intervals.**
- **Reduced maintenance costs.**
- **Reduced downtime.**
- **Superior lubrication.**
- **High load carrying capabilities.**
- **Usable up to 250°F (121°C).**

USDA Approval

LTG has the United States Department of Agriculture Food Safety & Inspection Service approval for applications where there is no possibility of contact with edible products (H-2 rating).

Compatibility

Falk LTG grease is compatible with most coupling lubricants. For optimum performance it is recommended that couplings be cleaned of old grease before packing with LTG.

Extended Maintenance Intervals

Steelflex® When Steelflex couplings are initially lubricated with LTG, scheduled periodic maintenance is not needed. You can now get the superior protective features of the Steelflex, plus the toughness of steel, and eliminate periodic maintenance expense. Falk recommends that such couplings be inspected and re-lubed only when the connected equipment is being serviced or the coupling is opened for alignment checks.

Lifelign® Gear Couplings Re-lube intervals for sensitive gear couplings have been extended from six (6) months to three (3) years.

Specifications

Thickener . . . . . Lithium Soap/Polymer

Base Oil . . . . . Highly Refined Mineral Oil
Viscosity @ 100°F (38°C) 3300SSU (715cSt)
Viscosity @ 210°F (99°C) 163SSU (33cSt)

NLGI Grade . . . . . ½

Consistency (ASTM D-217) 60 stroke worked penetration value in the range of 315-360 measured at 77°F (25°C).

Minimum Timken EP O.K. Load (ASTM D 2509) . . . . . 40 lbs.

Four Ball EP (ASTM D 2596)
Load Wear Index . . . . . 46 kgf
Weld Point . . . . . 250 kgf

Four Ball Wear, Scar (ASTM D 2266) . . . . . .66 mm

Dropping Point . . . . . 350°F (177°C) min.

Flash Point . . . . . 450°F (232°C)

Oxidation and Rust Inhibitors . . . . . Yes

Centrifugal Separation
(ASTM D 4425-84) . . . . . K36# 2/24 max.

Color . . . . . Dark brown

Operating Range . . . . . 20°F (29°C) to 250°F (121°C)

Minimum Pump . . . . . 20°F (-7°C)

Operating Speed Range
Steelflex Couplings . . . . . All Speeds
Gear Couplings . . . . . See Service Manual 458-110

Material Safety Data Sheet

(Form 950401) Available upon request.

5 Year Warranty

A new Steelflex coupling initially lubricated with the proper amount of LTG as described in the service manual, operated within the specified ambient temperature range and installed and aligned within the limits specified in the installation manual is warranted for five (5) years against lubrication related grid member failure.

Packaging

Falk LTG is packaged to suit every need.

Polybags
Included with Sizes 1020-1090T couplings for initial handpacking at installation.

14 ounce cartridges
For use in standard industrial lubrication guns.

35 pound pails

120 pound kegs
For plants with many small couplings or large size couplings. Best for hand packing.

400 pound drums
For plants with a pressurized lubrication system.

A 10-pack of 14 oz. cartridges or a case of 3-10 packs of 14 oz. cartridges.
Ideal for distributor stocks.

Steelflex Coupling Size	Required Lube wt-lbs (kg)	Gear Coupling Size ★	Required Lube wt-lbs (kg)	GC 02 Coupling Size	Required Lube wt-lbs (kg)
1020T	.06 (.027)				
1030T	.09 (.040)	1010G	.09 (.041)	1010G	.025 (.011)
1040T	.12 (.055)				
1050T	.15 (.068)	1015G	.16 (.073)	1015G	.063 (.0283)
1060T	.19 (.086)				
1070T	.25 (.114)	1020G	.25 (.11)	1020G	.094 (.042)
1080T	.38 (.173)	1025G	.50 (.23)	1025G	.144 (.065)
1090T	.56 (.255)	1030G	.80 (.36)	1030G	.201 (.093)
1100T	.94 (427)	1035G	2.00 (.91)	1035G	.269 (.122)
1110T	1.12 (.509)	1040G	2.50 (1.14)		
1120T	1.62 (.736)	1045G	3.00 (6.6)		
1130T	2.0 (.909)	1050G	3.50 (1.59)		
1140T	2.5 (1.136)	1055G	4.00 (1.81)		
1150T	4.3 (1.955)	1060G	4.50 (2.05)		
1160T	6.2 (2.818)	1070G	5.00 (2.27)		
1170T	7.7 (3.5)	1080G	21 (9.55)		
1180T	8.3 (3.773)	1090G	27		
1190T	9.7 (4.409)	1100G	33		
1200T	12.4 (5.636)	1110G	39		
1210T	23.2 (10.55)	1120G	46		
1220T	35.4 (16.09)	1130G	72		
1230T	53.0 (24.09)	1140G	73		
1240T	74.5 (33.86)	1150G	90		
1250T	110.5 (50.23)	1160G	95		
1260T	148.1 (67.32)	1180G	110		
		1200G	150		

★ Refer to Selection Guide 451-110 for larger sizes.

REXNORD

REXNORD INDUSTRIES, LLC • MILWAUKEE, WISCONSIN
FORM 840201D
September 2002, supersedes 9/97

MATERIAL SAFETY DATA SHEET FOR FALK™ LONG TERM GREASE (LTG)

SECTION 1 — PRODUCT AND COMPANY IDENTIFICATION

PRODUCT: Falk™ Long Term Grease

SYNONYMS/Other: NONE
MSDS NUMBER: 950401
PRODUCT TYPE: Multipurpose Grease
PREPARATION/REVISION DATE: 01/03/2012

Please note: Blank spaces are not permitted. If any item is not applicable, or no information is available, the space must be marked.

MANUFACTURER

Lubrication Technologies, Inc.
900 Mendelssohn Avenue North
Golden Valley, MN
55427-4309

TELEPHONE NUMBERS

Emergency Telephone Number: 800-424-9300

SECTION 2 — PRODUCT/INGREDIENTS

INGREDIENTS	CAS #	%	OSHA TWA	OSHA STEL	ACGIH TWA	SKIN
Asphalt (Petroleum)	8052-42-4	5-10%	5 mg/m (PEL)	10 mg/m^3	5 mg/m^3 (TVL)	NO
Phosphororodithoic Acid, O,O-DI C1-14-ALKYL ESTERS, ZINC SALTS (2:1) (ZDDP)	68649-42-3	1-5%	–	–	–	NO

Comments: (TWA) — Time Weighted Average is the employee's average airborne exposure in any 8-hour work shift of a 40-hour work week which shall not be exceeded.
(STEL) — Short Term Exposure Limit is the employee's 15-minute time weighted average exposure which shall not be exceeded at any time during a work day unless another time limit is specified.

J Applicable to Oil Mist, not defined for base oils.

SECTION 3 — HAZARDS IDENTIFICATION

WARNING: *MAY CAUSE EYE IRRITATION*
MAY CAUSE SKIN IRRITATION

Eye Contact: Direct contact may cause irritation, redness, tearing, and blurred vision. Avoid prolonged skin contact. This product contains materials that may cause skin irritation. Prolonged or repeated contact may result in dermatitis (dryness, chapping and reddening of skin). High-pressure grease injection due to break in high pressure lines or via grease gun may not be visible, may cause delayed soft-tissue damage. Delay in treatment may result in discoloration of tissue, leading to loss of body part.

Inhalation: This material has a low vapor pressure and as such is not expected to present an inhalation hazard at ambient temperature. Should heated or misted material lead to overexposure by inhalation, may cause nonspecific discomfort, such as nausea, headache, or weakness.

Ingestion: Do not ingest. Product is expected to be relatively non-toxic unless lung aspiration occurs. Aspiration is not expected with this material due to thickness of product. Coughing, choking, and gagging are often noted at the time of aspiration should it occur. This product has laxative properties and may result in abdominal cramps and diarrhea.

Other: Not applicable.

SECTION 4 — FIRST AID MEASURES

Eye Contact: Flush immediately with large amounts of water for at least 15 minutes. Eyelids should be held away from the

Date Issued: January 2012 — 1 — Form 950401

MATERIAL SAFETY DATA SHEET FOR FALK™ LONG TERM GREASE (LTG)

	eyeball to ensure thorough rinsing. Get medical attention if irritation persists. If material is hot, treat for thermal burns and take victim to hospital immediately.
Skin Contact:	Remove contaminated clothing. Wash contaminated area thoroughly with soap and water. If redness or irritation occurs, seek medical attention. If material is hot, submerge injured area in cold water. If victim is severely burned, remove to a hospital immediately. Wash contaminated clothing before reuse. Of special caution is sub-cutaneous grease injection due to high pressure. Victim may not be aware of injected material. Contact a physician as soon as possible for removal of the injected grease.
Inhalation:	If overcome by inhalation of hot vapors, remove to fresh air. Use oxygen if there is difficulty breathing or artificial respiration if breathing has stopped. Do not leave victim unattended. Seek immediate medical attention if necessary.
Ingestion:	Do not induce vomiting. If spontaneous vomiting occurs, keep head below hips to prevent aspiration and monitor for breathing difficulty. Gastric lavage should be performed only by qualified medical personnel. Keep affected person warm and at rest. Seek immediate medical attention.
Other:	Not applicable.

SECTION 5 — FIRE FIGHTING MEASURES

Flash Point:	218°C (425°F) by ASTM D 92.
Flammable Limits:	Not determined.
Extinguishing media:	Use water spray, dry chemical, alcohol foam, all purpose AFFF, or carbon dioxide to extinguish fire. Water may cause frothing.
Special Fire Fighting Procedures:	Evacuate area and fight fire from a safe distance. If leak or spill has not ignited, ventilate area and use water spray to disperse gas or vapor and to protect personnel attempting to stop a leak. Use water spray to cool adjacent structures and to protect personnel. Shut off source of flow if possible (safely). Stay away from storage tank ends. Withdraw immediately in case of rising sound from venting safety device or any discoloration of storage tank due to fire. Fire fighters must wear MSHA/NIOSH approved positive pressure breathing apparatus (SCBA) with full face mask and full protective equipment.
Unusual Fire & Explosion Hazards:	Dense smoke may be generated while burning. Toxic fumes, gases, or vapors may evolve on burning. Heavy flammable vapors may settle along ground level and low spots to create an invisible fire hazard. The vapors may extend to sources of ignition and flash back.
Byproducts of Combustion:	Fires involving this product may release oxides of carbon, nitrogen, sulfur, phosphorus and metals; reactive hydrocarbons and irritating vapors.
Autoignition Temperature:	Not determined.
Explosion Data:	Not Determined. Care should always be exercised in dust/mist areas.
Other:	Not applicable.

SECTION 6 — ACCIDENTAL RELEASE MEASURES

Spill Control Procedures (Land):	Personnel wearing proper protective equipment should contain spill immediately with inert materials (sand, earth, chemical spill pads of cotton) by forming dikes. Dikes should be placed to contain spill in a manner that will prevent material from entering sewers and waterways. Large spill, once contained, may be picked up using explosion proof, non-sparking vacuum pumps, shovels, or buckets, and disposed of in suitable containers for disposal. If a large spill occurs, notify appropriate authorities. In case of an accident or road spill, contact Chemtrec at 800-424-9300.
Spill Control Procedures (Water):	Remove from surface by skimming or with suitable absorbents. If a large spill occurs, notify appropriate authorities (normally the National Response Center or Coast Guard at 800-424-8802).
Waste Disposal Method:	Most oil based products are incinerated, land-filled, or reclaimed. All disposals must comply with federal, state, and local regulations. The material, if spilled or discarded, may be a regulated waste. Refer to state and local regulations. Department of Transportation (DOT) regulations may apply for transporting this material when spilled. See Section 14.
Other:	***CAUTION:*** *If spilled material is cleaned up using a regulated solvent, the resulting waste mixture will be regulated.*

Form 950401 — 2 — Date Issued: January 2012

MATERIAL SAFETY DATA SHEET FOR FALK™ LONG TERM GREASE (LTG)

SECTION 7 — HANDLING AND STORAGE

Handling Procedures: Keep containers closed when not in use. Do not transfer to unmarked containers. Fire extinguishers should be kept readily available. See NFPA 30 and OSHA 1910.106 — Flammable and Combustible Liquids. Empty containers retain product residue which may exhibit hazards of material, therefore do not pressurize, cut, glaze, weld, or use for any other purposes. Return drums to reclamation centers for proper cleaning and reuse.

Storage Procedures: Store containers away from heat, sparks, open flame, or oxidizing materials.

Additional Information: No additional information.

SECTION 8 — EXPOSURE CONTROLS/PERSONAL PROTECTION

Personal Protection: Applicable mainly to persons in repeated contact situations such as packaging or product, service/maintenance, and cleanup/spill control personnel.

Respiratory Protection: Under conditions of normal use, no respiratory protection is required. Should product misting occur due to use or handling, ensure airborne concentrations are maintained below threshold limits listed on Page One. Otherwise, a respiratory protection program meeting OHSH 1910.134 and ANSI Z88.2 requirements must be followed. Where misting may occur, wear an MSHA/NIOSH approved (or equivalent) half-mask form dust/mist air purifying respirator.

Eye Protection: Under conditions of normal use, eye protection is not necessary. If material is handled such that it could be splashed into the eyes, wear safety glasses with side shields or vented/splash proof goggles (ANSI Z87.1 or approved equivalent).

Hand Protection: Impervious gloves such as neoprene or nitrile rubber to avoid skin sensitization and absorption.

Other Protection: Use of an apron and overboots of chemically impervious materials such as neoprene or nitrile rubber is recommended to avoid skin sensitization and absorption. If handling hot material use insulated protective equipment. Launder soiled clothes. Properly dispose of contaminated leather articles and other material which cannot be decontaminated.

Local Control Measures: Use adequate ventilation when working with material in an enclosed area. Mechanical methods such as fume hoods or area fans may be used to reduce localized vapor/mist areas. If vapor or mist is generated when the material is handled, adequate ventilation in accordance with good engineering practice must be provided to maintain concentrations below the specified exposure levels listed on Page One.

Other: Consumption of food and drink should be avoided in work areas where product is present. Always wash hands and face with soap and water before eating, drinking, or smoking.

SECTION 9 — PHYSICAL AND CHEMICAL PROPERTIES

Vapor Pressure: 0.1 mm Hg at 20°C (68°F).

Specific Gravity: 0.909 at 15.6°C (60.0°F)

Density: 7.57 lb/gal at 15.6°C (30.0°F).

Solubility: Negligible in water, miscible inmost petroleum solvents.

Percent volatile: Negligible.

Vapor density (air=1): >2.

Evaporation rate (n-Butyl Acetate=1) Negligible.

Odor: Mild, greasy odor.

Appearance: Dark Brown semi-solid (grease).

Viscosity: 680cSt at 40°C (104°F).

Pour Point: -15°C (5°F).

Other: Melting point is 215°C (419°F).

SECTION 10 — STABILITY AND REACTIVITY

Stability: Material is stable at room temperatures and pressure.

Date Issued: January 2012 — 3 — Form 950401

MATERIAL SAFETY DATA SHEET FOR FALK™ LONG TERM GREASE (LTG)

Conditions to avoid:	Avoid high temperatures and product contamination.
Incompatibility with other Materials:	Avoid contact with acids and oxidizing materials.
Decomposition Products:	Smoke, carbon monoxide and dioxide, and other aldehydes of incomplete combustion. Oxides of carbon, nitrogen, sulfur, phosphorus, and metals; reactive hydrocarbons, and irritating vapors.
Hazardous Polymerization:	Will not occur.
Other:	Not applicable.

SECTION 11 — TOXICOLOGICAL INFORMATION

Oral Toxicity:	Not determined.
Dermal Toxicity:	Not determined.
Inhalation Toxicity:	On rare occasions, prolonged and repeated exposure to oil mist poses a risk of pulmonary disease such as chronic lung inflammation. This condition is usually asymptotic as a result of repeated small aspirations. Shortness of breath and cough are the most common symptoms. Based on data from similar materials.
Dermal sensitization:	Not determined.
Chronic Toxicity:	Not determined.
Carcinogenicity:	Not determined.
Mutagenicity:	Not determined.
Reproductive Toxicity:	Not determined.
Other:	This product contains petroleum base oils which may be refined by various processes including severe solvent extraction, severe hydrocracking, or severe hydrotreating. None of the oils require a cancer warning under the OSHA Hazard Communication Standard (29 CFR 1910.1200). These oils have not been listed in the National Toxicology Program (NTP) Annual Report nor have they been classified by the International Agency for Research on Cancer (IARC) as: carcinogenic to humans (Group 1), probably carcinogenic to humans (Group 2A), or possibly carcinogenic to humans (Group 2B).

SECTION 12 — ECOLOGICAL INFORMATION

Environmental Toxicity:	This material may be toxic to aquatic organisms and should be kept out of sewage and drainage systems and all bodies of water.
Environmental Fate:	Not determined.
Other:	Not applicable.

SECTION 13 — DISPOSAL CONSIDERATIONS

Waste Disposal:	Under RCRA, it is the responsibility of the user of the product to determine at the time of disposal whether the product meets RCRA criteria for hazardous waste. This product, unadulterated by other material, may be classified as a non-regulated waste in some areas – but still needs to be disposed of at approved facilities. Waste management should be in full compliance with federal, state, and local laws.
Disposal Consideration:	Most used and non-use oils and greases are incinerated by licensed burner facilities for heat value, or reclaimed by oil recycling services. Look in a local telephone directory or internet for headings under, "Waste", "Waste Services", "Waste Disposal: for companies licensed to handle such material. Additional information can be obtained from local EPA, DNR, Sewer and Land-Fill sites. Unused, packaged fluids may be donated to other companies or charities, (fluids MUST be unused).
Other:	the transportation, storage, treatment, and disposal of RCRA waste material must be conducted in compliance with 40 CFR 262, 263, 264, and 270. Disposal can only occur improperly permitted facilities. Check state and local regulations for any additional requirements as these may be more restrictive than federal laws and regulations. Chemical additions, processing, or otherwise altering this material may make the waste management information presented in the MSDS incomplete, inaccurate, or otherwise inappropriate. Disposal of this material must be conducted in compliance with all federal, state, and local regulations.

Form 950401 — 4 — Date Issued: January 2012

MATERIAL SAFETY DATA SHEET FOR FALK™ LONG TERM GREASE (LTG)

SECTION 14 — TRANSPORT INFORMATION

U.S. DOT Shipping Description:	Not regulated by DOT.
U.S. DOT Identification Number:	Not regulated by DOT.
U.S. DOT Hazard Classification:	Not Applicable.
Packaging Class:	Not Applicable.
Other:	Not Applicable.

SECTION 15 — REGULATORY INFORMATION

Clean water act/oil Pollution Act: Under Section 311, of the Clean Water Act (40 CFR 110) and the Oil Pollution Act of 1990, this material is considered an oil. Any spill or discharges that produce a visible sheen or film on surface of water, or in waterways, ditches, or sewers leading to surface water must be reported. Contact the National Response Center at 800-424-8802.

This product contains zinc compounds, a class of Clean Water Act Priority Pollutants.

This product contains antimony compounds, a class of Clean Water Act Priority Pollutants.

TSCA: All components of this material are listed in the U.S. TSCA Inventory.

Other TSCA: Not Applicable.

SARA Title III: Section 302/304 extremely hazardous substances:
This product does not contain greater than 0.1% of any chemical substance on this list.

Section 311, 312 hazard categorization:

Acute (immediate health effects):	NO
Chronic (delayed health effects):	NO
Fire (hazard):	NO
Reactivity (hazard):	NO
Pressure (sudden release hazard):	NO

Section 313 toxic chemicals:

Zinc alkyldithiophosphate
(CAS 68649-42-3)
1-5% wt.
Asphalt (petroleum) CAS 8052-42-4)
1, 13, 16, 17, 18, 19.
Phosphorodithoic Acid (CAS 68649-4-3) 13, 15, 17

CERCLA: For stationary sources – reportable quantity:
Exempt due to petroleum exclusion.

For moving sources – reportable quantity:
Exempt due to petroleum exclusion.

Other: A release of this product, as supplied, is exempt from reporting under the Comprehensive Environmental Response Compensation and Liability Act (CERCLA) by the petroleum exclusion. However, releases may be reportable to the Nation Response Center under the Clean Water Act, 33 U.S.C. 1321(b)(3) and (5) – see head of Section 15. Failure to report may result in substantial civil and criminal penalties.

Recommend contacting the local authorities in the event of any type of spill to determine local reporting requirements and also to aid in the cleanup.

Antimony compounds appear on the following lists:

Pennsylvania Hazardous Substances (environmental).

Massachusetts Hazardous Substances.

Date Issued: January 2012 — 5 — Form 950401

MATERIAL SAFETY DATA SHEET FOR FALK™ LONG TERM GREASE (LTG)

SECTION 16 — OTHER INFORMATION

	NFPA 704	NPCA-HMIS	KEY
HEALTH:	0	0	0 = Minimal
FIRE:	1	1	1 = Slight
REACTIVITY:	0	0	2 = Moderate
SPECIFIC HAZARD:	NONE	N/A	3 = Serious
PROTECTION INDEX:	N/A	B	4 = Severe
Precautionary Labels:	MAY CAUSE EYE IRRITATION MAY CAUSE SKIN IRRITATION		

This product may be formulated in part with components purchased from other companies. In many instances, especially when proprietary or trade secret materials are used. Lube-Tech must rely upon information provided by those materials manufacturers or distributors.

Version: 1

INFORMATION PROVIDED IN THIS MSDS IS CONSIDERED ACCURATE AND RELIABLE BASED ON INFORMATION ISSUED FROM INTERNAL AND OUTSIDE SOURCES TO THE BEST OF LUBE-TECH'S KNOWLEDGE. HOWEVER, LUBE-TECH MAKES NO REPRESENTATIONS, GUARANTEES OR WARRANTIES, EXPRESSED OR IMPLIED, OF MERCHANTABILITY OR FITNESS FOR THE PARTICULAR PURPOSE, REGARDING THE ACCURACY OF SUCH INFORMATION OR THE RESULT TO BE OBTAINED FROM THE USE THEREOF, OR AS TO THE SUFFICIENCY OF THE INFORMATION HEREIN PRESENTED. LUBE-TECH ASSUMES NO RESPONSIBILITY FOR INJURY TO RECIPIENT OR TO THIRD PERSONS OR FOR ANY DAMAGE TO ANY PROPERTY AND RECIPIENT ASSUMES ALL SUCH RISKS.

Revisions / Comments:

REXNORD

Form 950401 — 6 — Date Issued: January 2012

11.5.3 MOBIL MOBILTAC 325 NC

Mobil

Mobiltac 375 NC, 325 NC and 275 NC

Gear Oils

Product Description

Mobiltac 375 NC, 325 NC and 275 NC extra high performance non-leaded, diluent-type, heavy-bodied open gear lubricants designed for a wide variety of open gear and mining applications. They contain a non-chlorinated, volatile solvent that ensures fluidity during application, even at low temperatures. Once applied, the diluent evaporates and the lubricants take on a flexible, adhesive, high-strength consistency that is maintained throughout their service life. Mobiltac 375 NC, 325 NC and 275NC adhere strongly to gear teeth and other machine elements to resist excessive throw-off, thereby providing a wear-resistant, viscous, continuous film that lubricates well under boundary conditions. Mobiltac 275 NC also contains solid phase EP/anti-wear additive for added equipment protection

Mobiltac 375 NC, 325 NC and Mobiltac 275NC will not harden, chip, or flake in cold weather, are self-healing, and do not form a hard-packed buildup in gear-tooth roots. Dripping and throw-off are minimal, and the lubricants are easily cleaned up with a solvent-soaked rag. The lubricants provide resistance to rain, snow, and process water washing. Their flash points minimise the risk of fire. These new generation gear and mining lubricants are applied easily by hand or by automatic dispensers. Mobiltac NC technology has rapidly become a firm favourite among many open gear users and mine operators around the world

Features and Benefits

The Mobiltac NC Series of products are the most recent technology advance for the Mobiltac brand of products that have been used with great success in open gear and other mining applications for several decades. These new technology products provide significantly improved environmental and performance benefits over older diluent-type technologies. They offer the following features and potential benefits:

Features	Advantages and Potential Benefits
Excellent protection of gear teeth and other machine elements under boundary lubrication conditions	Less equipment wear and breakdown; lower replacement, downtime and maintenance costs
Excellent low-temperature pumpability	Easy start-up at low ambient and avoids cost of preheating
Excellent resistance to water washing	Maintains superb protection in wet environments; less unanticipated downtime
Minimal throw-off and dripping	Less product waste and new product cost
No chipping or flaking at low temperatures	Maintains protective lubricating film at low temperatures
Easy to clean up with rags and conventional solvents or cleaning fluids	Improved safety and reduced maintenance costs

Applications

Mobiltac 375 NC, 325 NC and Mobiltac 275NC are designed for use in a wide variety of open gear and mining applications:

- Mobiltac 375 NC, containing a high-viscosity base oil, is recommended for the lubrication of highly loaded open gears, including those that operate at high temperature, for example, ring gears on cement kilns and large gears on ore-processing mills
- Mobiltac 325 NC is recommended for the same applications as Mobiltac 375 NC. It contains more diluent and has a lower viscosity for ease of application at cooler temperatures
- Mobiltac 275 NC is designed for service as a lubricant for mine and quarry shovels, draglines, and related equipment; also open gears, racks and pinions, swing gears, booms and sticks

- Minimum operating temperature for Mobiltac 325 NC is -18 C, 375 NC is -1 C and 275 NC is -9 C

Typical Properties

Mobiltac NC	Mobiltac375 NC	Mobiltac325 NC	Mobiltac275 NC
Appearance	Viscous, semi-fluid, black	Viscous, semi-fluid, black	Viscous, semi-fluid, black
Viscosity, ASTM D 445			
cSt @ 40° C, with diluent	5000	1500	-
cSt @ 100° C, without diluent	1260	1000	-
Flash Point, °C, ASTM D 92	135	110	150
Specific Gravity, °C kg/l, ASTM D 1298	0.96	0.95	0.99
Maximum Temperature Use, °C	121	93	-

Health and Safety

Based on available information, this product is not expected to produce adverse effects on health when used for the intended application and the recommendations provided in the Material Safety Data Sheet (MSDS) are followed. MSDS's are available upon request through your sales contract office, or via the Internet. This product should not be used for purposes other than its intended use. If disposing of used product, take care to protect the environment.

The Mobil logotype, the Pegasus design are trademarks of Exxon Mobil Corporation, or one of its subsidiaries.

Exxon Mobil Corporation
3225 Gallows Road
Fairfax, VA 22037

1-800-ASK MOBIL (275-6624)

Typical Properties are typical of those obtained with normal production tolerance and do not constitute a specification. Variations that do not affect product performance are to be expected during normal manufacture and at different blending locations. The information contained herein is subject to change without notice. All products may not be available locally. For more information, contact your local ExxonMobil contact or visit www.exxonmobil.com
ExxonMobil is comprised of numerous affiliates and subsidiaries, many with names that include Esso, Mobil, or ExxonMobil. Nothing in this document is intended to override or supersede the corporate separateness of local entities. Responsibility for local action and accountability remains with the local ExxonMobil-affiliate entities.

© 2001-2011 Exxon Mobil Corporation. All rights reserved..

ExxonMobil

Product Name: MOBILTAC 325 NC
Revision Date: 27 Feb 2013
Page 1 of 12

MATERIAL SAFETY DATA SHEET

SECTION 1 PRODUCT AND COMPANY IDENTIFICATION

PRODUCT

Product Name: **MOBILTAC 325 NC**
Product Description: Hydrocarbons and Additives
Product Code: 201560404010, 611160-00, 976359
Intended Use: Gear oil

COMPANY IDENTIFICATION

Supplier: **EXXON MOBIL CORPORATION**
3225 GALLOWS RD.
FAIRFAX, VA. 22037 USA

24 Hour Health Emergency	609-737-4411
Transportation Emergency Phone	800-424-9300
ExxonMobil Transportation No.	281-834-3296
Product Technical Information	800-662-4525, 800-947-9147
MSDS Internet Address	http://www.exxon.com, http://www.mobil.com

SECTION 2 COMPOSITION / INFORMATION ON INGREDIENTS

Reportable Hazardous Substance(s) or Complex Substance(s)

Name	CAS#	Concentration*
ASPHALT (PETROLEUM)	8052-42-4	15 - 50%
HYDROTREATED LIGHT DISTILLATE	64742-47-8	8 - 14%
NAPHTHENIC ACIDS, ZINC SALTS	12001-85-3	3 - 6%
STRAIGHT-RUN MIDDLE DISTILLATES	64741-44-2	5 - 10%

* All concentrations are percent by weight unless material is a gas. Gas concentrations are in percent by volume.

SECTION 3 HAZARDS IDENTIFICATION

This material is considered to be hazardous according to regulatory guidelines (see (M)SDS Section 15).

POTENTIAL HEALTH EFFECTS

Irritating to eyes. Irritating to skin. Excessive exposure may result in eye, skin, or respiratory irritation. Under conditions of poor personal hygiene and prolonged repeated contact, some polycyclic aromatic compounds (PACs) have been suspected as a cause of skin cancer in humans. High-pressure injection under skin may cause serious damage.

Target Organs: Skin | Eye |

ENVIRONMENTAL HAZARDS

Harmful to aquatic organisms, may cause long-term adverse effects in the aquatic environment.

ExxonMobil

Product Name: MOBILTAC 325 NC
Revision Date: 27 Feb 2013
Page 2 of 12

NFPA Hazard ID:	Health:	1	Flammability:	1	Reactivity:	0
HMIS Hazard ID:	Health:	1	Flammability:	1	Reactivity:	0

NOTE: This material should not be used for any other purpose than the intended use in Section 1 without expert advice. Health studies have shown that chemical exposure may cause potential human health risks which may vary from person to person.

SECTION 4 FIRST AID MEASURES

INHALATION

Remove from further exposure. For those providing assistance, avoid exposure to yourself or others. Use adequate respiratory protection. If respiratory irritation, dizziness, nausea, or unconsciousness occurs, seek immediate medical assistance. If breathing has stopped, assist ventilation with a mechanical device or use mouth-to-mouth resuscitation.

SKIN CONTACT

Wash contact areas with soap and water. Remove contaminated clothing. Launder contaminated clothing before reuse. If product is injected into or under the skin, or into any part of the body, regardless of the appearance of the wound or its size, the individual should be evaluated immediately by a physician as a surgical emergency. Even though initial symptoms from high pressure injection may be minimal or absent, early surgical treatment within the first few hours may significantly reduce the ultimate extent of injury.

EYE CONTACT

Flush thoroughly with water for at least 15 minutes. Get medical assistance.

INGESTION

First aid is normally not required. Seek medical attention if discomfort occurs.

SECTION 5 FIRE FIGHTING MEASURES

EXTINGUISHING MEDIA

Appropriate Extinguishing Media: Use water fog, foam, dry chemical or carbon dioxide (CO2) to extinguish flames.

Inappropriate Extinguishing Media: Straight Streams of Water

FIRE FIGHTING

Fire Fighting Instructions: Evacuate area. Prevent runoff from fire control or dilution from entering streams, sewers, or drinking water supply. Firefighters should use standard protective equipment and in enclosed spaces, self-contained breathing apparatus (SCBA). Use water spray to cool fire exposed surfaces and to protect personnel.

Unusual Fire Hazards: Hazardous material. Firefighters should consider protective equipment indicated in Section 8.

Hazardous Combustion Products: Hydrogen sulfide, Smoke, Fume, Aldehydes, Sulfur oxides, Incomplete combustion products, Oxides of carbon

ExxonMobil

Product Name: MOBILTAC 325 NC
Revision Date: 27 Feb 2013
Page 3 of 12

FLAMMABILITY PROPERTIES

Flash Point [Method]: >97°C (207°F) [ASTM D-92]
Flammable Limits (Approximate volume % in air): LEL: N/D UEL: N/D
Autoignition Temperature: N/D

SECTION 6 ACCIDENTAL RELEASE MEASURES

NOTIFICATION PROCEDURES

In the event of a spill or accidental release, notify relevant authorities in accordance with all applicable regulations. US regulations require reporting releases of this material to the environment which exceed the applicable reportable quantity or oil spills which could reach any waterway including intermittent dry creeks. The National Response Center can be reached at (800)424-8802.

PROTECTIVE MEASURES

Avoid contact with spilled material. Warn or evacuate occupants in surrounding and downwind areas if required due to toxicity or flammability of the material. See Section 5 for fire fighting information. See the Hazard Identification Section for Significant Hazards. See Section 4 for First Aid Advice. See Section 8 for advice on the minimum requirements for personal protective equipment. Additional protective measures may be necessary, depending on the specific circumstances and/or the expert judgment of the emergency responders.

SPILL MANAGEMENT

Land Spill: Stop leak if you can do it without risk. Recover by pumping or with suitable absorbent.

Water Spill: Stop leak if you can do it without risk. Confine the spill immediately with booms. Warn other shipping. Remove from the surface by skimming or with suitable absorbents. Seek the advice of a specialist before using dispersants.

Water spill and land spill recommendations are based on the most likely spill scenario for this material; however, geographic conditions, wind, temperature, (and in the case of a water spill) wave and current direction and speed may greatly influence the appropriate action to be taken. For this reason, local experts should be consulted. Note: Local regulations may prescribe or limit action to be taken.

ENVIRONMENTAL PRECAUTIONS

Large Spills: Dike far ahead of liquid spill for later recovery and disposal. Prevent entry into waterways, sewers, basements or confined areas.

SECTION 7 HANDLING AND STORAGE

HANDLING

Avoid contact with skin. Avoid contact with eyes. Hydrogen sulfide (H2S) may be given off when this material is heated. Do not depend on sense of smell for warning. Prevent small spills and leakage to avoid slip hazard. Material can accumulate static charges which may cause an electrical spark (ignition source). When the material is handled in bulk, an electrical spark could ignite any flammable vapors from liquids or residues that may be present (e.g., during switch-loading operations). Use proper bonding and/or ground procedures. However, bonding and grounds may not eliminate the hazard from static accumulation. Consult local applicable standards for guidance. Additional references include American Petroleum Institute 2003 (Protection Against Ignitions Arising out of Static, Lightning and Stray Currents) or National Fire Protection

Agency 77 (Recommended Practice on Static Electricity) or CENELEC CLC/TR 50404 (Electrostatics - Code of practice for the avoidance of hazards due to static electricity).

Static Accumulator: This material is a static accumulator.

STORAGE

The container choice, for example storage vessel, may effect static accumulation and dissipation. Do not store in open or unlabelled containers.

SECTION 8 EXPOSURE CONTROLS / PERSONAL PROTECTION

EXPOSURE LIMIT VALUES

Exposure limits/standards (Note: Exposure limits are not additive)

Source	Form	Limit / Standard			NOTE	Source
ASPHALT (PETROLEUM) [benzene solubles]	Inhalable fraction.	TWA	0.5 mg/m3		N/A	ACGIH
HYDROTREATED LIGHT DISTILLATE [total hydrocarbon vapor]	Non-Aerosol	TWA	200 mg/m3		Skin	ACGIH
STRAIGHT-RUN MIDDLE DISTILLATES	Stable Aerosol.	TWA	5 mg/m3		N/A	ExxonMobil
STRAIGHT-RUN MIDDLE DISTILLATES	Vapor.	TWA	200 mg/m3		N/A	ExxonMobil
Hydrogen sulfide		Ceiling	20 ppm		N/A	OSHA Z2
Hydrogen sulfide		Maximum concentration	50 ppm		N/A	OSHA Z2
Hydrogen sulfide		STEL	14 mg/m3	10 ppm	N/A	ExxonMobil
Hydrogen sulfide		TWA	7 mg/m3	5 ppm	N/A	ExxonMobil
Hydrogen sulfide		STEL	5 ppm		N/A	ACGIH
Hydrogen sulfide		TWA	1 ppm		N/A	ACGIH

Exposure limits/standards for materials that can be formed when handling this product: When mists/aerosols can occur the following are recommended: 5 mg/m³ - ACGIH TLV (inhalable fraction), 5 mg/m³ - OSHA PEL.

NOTE: Limits/standards shown for guidance only. Follow applicable regulations.

ENGINEERING CONTROLS

The level of protection and types of controls necessary will vary depending upon potential exposure conditions. Control measures to consider:

No special requirements under ordinary conditions of use and with adequate ventilation.

PERSONAL PROTECTION

Personal protective equipment selections vary based on potential exposure conditions such as applications, handling practices, concentration and ventilation. Information on the selection of protective equipment for use with this material, as provided below, is based upon intended, normal usage.

Respiratory Protection: If engineering controls do not maintain airborne contaminant concentrations at a

level which is adequate to protect worker health, an approved respirator may be appropriate. Respirator selection, use, and maintenance must be in accordance with regulatory requirements, if applicable. Types of respirators to be considered for this material include:

No special requirements under ordinary conditions of use and with adequate ventilation.

For high airborne concentrations, use an approved supplied-air respirator, operated in positive pressure mode. Supplied air respirators with an escape bottle may be appropriate when oxygen levels are inadequate, gas/vapor warning properties are poor, or if air purifying filter capacity/rating may be exceeded.

Hand Protection: Any specific glove information provided is based on published literature and glove manufacturer data. Glove suitability and breakthrough time will differ depending on the specific use conditions. Contact the glove manufacturer for specific advice on glove selection and breakthrough times for your use conditions. Inspect and replace worn or damaged gloves. The types of gloves to be considered for this material include:

Chemical resistant gloves are recommended.

Eye Protection: Chemical goggles and face shield are recommended.

Skin and Body Protection: Any specific clothing information provided is based on published literature or manufacturer data. The types of clothing to be considered for this material include:

Chemical/oil resistant clothing is recommended.

Specific Hygiene Measures: Always observe good personal hygiene measures, such as washing after handling the material and before eating, drinking, and/or smoking. Routinely wash work clothing and protective equipment to remove contaminants. Discard contaminated clothing and footwear that cannot be cleaned. Practice good housekeeping.

ENVIRONMENTAL CONTROLS

Comply with applicable environmental regulations limiting discharge to air, water and soil. Protect the environment by applying appropriate control measures to prevent or limit emissions.

SECTION 9 PHYSICAL AND CHEMICAL PROPERTIES

Note: Physical and chemical properties are provided for safety, health and environmental considerations only and may not fully represent product specifications. Contact the Supplier for additional information.

GENERAL INFORMATION

Physical State: Liquid
Form: Semi-fluid
Color: Black
Odor: Characteristic
Odor Threshold: N/D

IMPORTANT HEALTH, SAFETY, AND ENVIRONMENTAL INFORMATION

Relative Density (at 15 °C): 0.96 [ASTM D1298]
Flash Point [Method]: >97°C (207°F) [ASTM D-92]
Flammable Limits (Approximate volume % in air): LEL: N/D UEL: N/D
Autoignition Temperature: N/D
Boiling Point / Range: > 174°C (345°F) [Estimated]
Vapor Density (Air = 1): > 2 at 101 kPa [Estimated]

Vapor Pressure: [N/D at 20 °C]
Evaporation Rate (n-butyl acetate = 1): N/D
pH: N/A
Log Pow (n-Octanol/Water Partition Coefficient): > 3.5 [Estimated]
Solubility in Water: Negligible
Viscosity: 1200 cSt (1200 mm2/sec) at 40 °C
Oxidizing Properties: See Hazards Identification Section.

OTHER INFORMATION
Freezing Point: N/D
Melting Point: N/A
Decomposition Temperature: N/D

SECTION 10 STABILITY AND REACTIVITY

STABILITY: Material is stable under normal conditions.

CONDITIONS TO AVOID: Excessive heat. High energy sources of ignition.

MATERIALS TO AVOID: Strong oxidizers

HAZARDOUS DECOMPOSITION PRODUCTS: Material does not decompose at ambient temperatures.

HAZARDOUS POLYMERIZATION: Will not occur.

SECTION 11 TOXICOLOGICAL INFORMATION

ACUTE TOXICITY

Route of Exposure	Conclusion / Remarks
Inhalation	
Toxicity: No end point data for material.	Minimally Toxic. Based on assessment of the components.
Irritation: No end point data for material.	Negligible hazard at ambient/normal handling temperatures. Based on assessment of the components.
Ingestion	
Toxicity: No end point data for material.	Minimally Toxic. Based on assessment of the components.
Skin	
Toxicity: No end point data for material.	Minimally Toxic. Based on assessment of the components.
Irritation: No end point data for material.	Irritating to the skin. Based on assessment of the components.
Eye	
Irritation: No end point data for material.	Irritating and will injure eye tissue. Based on assessment of the components.

CHRONIC/OTHER EFFECTS
For the product itself:
Repeated and/or prolonged exposure may cause irritation to the skin, eyes, or respiratory tract.
Contains:
Asphalt (bitumen): May contain low levels of polycyclic aromatic compounds (PACs), some of which are suspected of causing cancer under conditions of poor industrial hygiene and prolonged repeated contact.

These PACs may also be inhaled. Inhalation studies at high concentrations of fumes resulted in bronchitis, pneumonitis, fibrosis and cell damage. Avoid contact with the asphalt emissions.

The following ingredients are cited on the lists below: None.

--REGULATORY LISTS SEARCHED--

1 = NTP CARC	3 = IARC 1	5 = IARC 2B
2 = NTP SUS	4 = IARC 2A	6 = OSHA CARC

SECTION 12 ECOLOGICAL INFORMATION

The information given is based on data available for the material, the components of the material, and similar materials.

ECOTOXICITY

Material -- Expected to be harmful to aquatic organisms. May cause long-term adverse effects in the aquatic environment.

MOBILITY

More volatile component -- Highly volatile, will partition rapidly to air. Not expected to partition to sediment and wastewater solids.

High molecular wt. component -- Low solubility and floats and is expected to migrate from water to the land. Expected to partition to sediment and wastewater solids.

PERSISTENCE AND DEGRADABILITY

Biodegradation:

Low molecular wt. component -- Expected to be inherently biodegradable

High molecular wt. component -- Expected to be persistent.

Atmospheric Oxidation:

More volatile component -- Expected to degrade rapidly in air

BIOACCUMULATION POTENTIAL

Majority of components -- Has the potential to bioaccumulate, however metabolism or physical properties may reduce the bioconcentration or limit bioavailability.

SECTION 13 DISPOSAL CONSIDERATIONS

Disposal recommendations based on material as supplied. Disposal must be in accordance with current applicable laws and regulations, and material characteristics at time of disposal.

DISPOSAL RECOMMENDATIONS

ExxonMobil

Product Name: MOBILTAC 325 NC
Revision Date: 27 Feb 2013
Page 8 of 12

Product is suitable for burning in an enclosed controlled burner for fuel value or disposal by supervised incineration at very high temperatures to prevent formation of undesirable combustion products. Protect the environment. Dispose of used oil at designated sites. Minimize skin contact. Do not mix used oils with solvents, brake fluids or coolants.

REGULATORY DISPOSAL INFORMATION

RCRA Information: The unused product, in our opinion, is not specifically listed by the EPA as a hazardous waste (40 CFR, Part 261D), nor is it formulated to contain materials which are listed as hazardous wastes. It does not exhibit the hazardous characteristics of ignitability, corrositivity or reactivity and is not formulated with contaminants as determined by the Toxicity Characteristic Leaching Procedure (TCLP). However, used product may be regulated.

Empty Container Warning Empty Container Warning (where applicable): Empty containers may contain residue and can be dangerous. Do not attempt to refill or clean containers without proper instructions. Empty drums should be completely drained and safely stored until appropriately reconditioned or disposed. Empty containers should be taken for recycling, recovery, or disposal through suitably qualified or licensed contractor and in accordance with governmental regulations. DO NOT PRESSURISE, CUT, WELD, BRAZE, SOLDER, DRILL, GRIND, OR EXPOSE SUCH CONTAINERS TO HEAT, FLAME, SPARKS, STATIC ELECTRICITY, OR OTHER SOURCES OF IGNITION. THEY MAY EXPLODE AND CAUSE INJURY OR DEATH.

SECTION 14	TRANSPORT INFORMATION

LAND (DOT): Not Regulated for Land Transport

LAND (TDG): Not Regulated for Land Transport

SEA (IMDG): Not Regulated for Sea Transport according to IMDG-Code

AIR (IATA): Not Regulated for Air Transport

SECTION 15	REGULATORY INFORMATION

OSHA HAZARD COMMUNICATION STANDARD: When used for its intended purpose, this material is classified as hazardous in accordance with OSHA 29CFR 1910.1200.

Complies with the following national/regional chemical inventory requirements:: AICS, DSL, ENCS, IECSC, KECI, PICCS, TSCA

EPCRA SECTION 302: This material contains no extremely hazardous substances.

SARA (311/312) REPORTABLE HAZARD CATEGORIES: Immediate Health.

SARA (313) TOXIC RELEASE INVENTORY:

Chemical Name	CAS Number	Typical Value

ExxonMobil

Product Name: MOBILTAC 325 NC
Revision Date: 27 Feb 2013
Page 9 of 12

NAPHTHENIC ACIDS, ZINC SALTS	12001-85-3	3 - 6%

The following ingredients are cited on the lists below:

Chemical Name	CAS Number	List Citations
ASPHALT (PETROLEUM)	8052-42-4	1, 13, 16, 17, 18, 19
HYDROTREATED LIGHT DISTILLATE	64742-47-8	1, 17, 18, 19
NAPHTHENIC ACIDS, ZINC SALTS	12001-85-3	13, 15, 17

--REGULATORY LISTS SEARCHED--

1 = ACGIH ALL	6 = TSCA 5a2	11 = CA P65 REPRO	16 = MN RTK
2 = ACGIH A1	7 = TSCA 5e	12 = CA RTK	17 = NJ RTK
3 = ACGIH A2	8 = TSCA 6	13 = IL RTK	18 = PA RTK
4 = OSHA Z	9 = TSCA 12b	14 = LA RTK	19 = RI RTK
5 = TSCA 4	10 = CA P65 CARC	15 = MI 293	

Code key: CARC=Carcinogen; REPRO=Reproductive

SECTION 16 OTHER INFORMATION

N/D = Not determined, N/A = Not applicable

THIS SAFETY DATA SHEET CONTAINS THE FOLLOWING REVISIONS:

Revision Changes:
Section 04: First Aid Skin was modified.
Section 04: First Aid Eye was modified.
Section 06: Notification Procedures - Header was modified.
Section 11: Eye Irritation Conclusion was modified.
Section 11: Skin Irritation Conclusion was modified.
Section 13: Disposal Considerations - Disposal Recommendations was modified.
Section 10 Stability and Reactivity - Header was modified.
Section 13: Disposal Recommendations - Note was modified.
Section 13: Empty Container Warning was modified.
Section 09: Phys/Chem Properties Note was modified.
Section 09: Boiling Point C(F) was modified.
Section 09: Flash Point C(F) was modified.
Section 09: n-Octanol/Water Partition Coefficient was modified.
Section 08: Comply with applicable regulations phrase was modified.
Section 08: Personal Protection was modified.
Section 08: Hand Protection was modified.
Section 09: Vapor Pressure was modified.
Section 07: Handling and Storage - Handling was modified.
Section 07: Handling and Storage - Storage Phrases was modified.
Hazard Identification: Health Hazards was modified.
Section 11: Dermal Lethality Test Data was modified.
Section 11: Dermal Lethality Test Comment was modified.
Section 11: Oral Lethality Test Data was modified.

ExxonMobil

Product Name: MOBILTAC 325 NC
Revision Date: 27 Feb 2013
Page 10 of 12

Section 11: Inhalation Lethality Test Data was modified.
Section 11: Dermal Irritation Test Data was modified.
Section 11: Eye Irritation Test Data was modified.
Section 11: Oral Lethality Test Comment was modified.
Section 11: Inhalation Irritation Test Data was modified.
Section 05: Hazardous Combustion Products was modified.
Section 06: Accidental Release - Spill Management - Water was modified.
Section 09: Relative Density - Header was modified.
Section 09: Flash Point C(F) was modified.
Section 09: Viscosity was modified.
Section 08: Hand Protection was modified.
Section 08: Eye Protection was modified.
Section 08: Skin and Body Protection was modified.
Section 14: Sea (IMDG) - Header was modified.
Section 14: Air (IATA) - Header was modified.
Section 14: LAND (TDG) - Header was modified.
Section 14: LAND (DOT) - Header was modified.
Composition: Component table was modified.
Section 15: List Citations Table was modified.
Section 15: List Citation Table - Header was modified.
Section 14: LAND (DOT) - Default was modified.
Section 14: LAND (TDG) Default was modified.
Section 14: Sea (IMDG) - Default was modified.
Section 14: Air (IATA) - Default was modified.
Section 15: SARA (311/312) REPORTABLE HAZARD CATEGORIES was modified.
Section 15: National Chemical Inventory Listing - Header was modified.
Section 15: SARA (313) TOXIC RELEASE INVENTORY - Table was modified.
Section 15: National Chemical Inventory Listing was modified.
Section 16: Code to MHCs was modified.
Section 09: Relative Density was modified.
Section 15: Community RTK - Header was modified.
Section 11: Additional Health Information was modified.
Section 16: Code to PPEs was modified.
Section 08: Exposure limits/standards was modified.
Section 15: OSHA Hazard Communication Standard was modified.
Section 06: Notification Procedures was modified.
Section 08: Exposure Limits Table was modified.
Section 11: Chronic Tox - Component was modified.
Section 09: Oxidizing Properties was modified.
Section 08: OEL Table - Notation Column - Header was modified.
Section 08: Exposure Limit Values - Header was modified.
Section 01: Company Contact Methods Sorted by Priority was modified.
Section 05: Fire Fighting Measures - Unusual Fire Hazards was added.
Section 05: Fire Fighting Measures - Unusual Fire Hazards - Header was added.
Section 06: Protective Measures was added.
Section 06: Accidental Release - Protective Measures - Header was added.
Section 09: Form - Header was added.
Section 09: Physical State was added.
Hazard Identification: Health Hazards was added.
Hazard Identification: Emergency Overview Target Organs was added.
Hazard Identification: Emergency Overview Target Organ - Header was added.
Section 16: Precautionary Label Text - Header was added.

ExxonMobil

Product Name: MOBILTAC 325 NC
Revision Date: 27 Feb 2013
Page 11 of 12

Section 16: Signal Word was added.
Section 16: Health Hazards was added.
Section 16: Health Hazards - Header was added.
Section 16: Precautions was added.
Section 16: Precautions - Header was added.
Section 16: First Aid - Header was added.
Section 16: First Aid Eye - Header was added.
Section 16: First Aid Eye was added.
Section 16: First Aid Skin was added.
Section 16: First Aid Skin - Header was added.
Section 16: Fire Fighting Media - Header was added.
Section 16: Fire Fighting Media - Header was added.
Section 16: Spill - Header was added.
Section 16: Water Spill - Header was added.
Section 16: Water Spill was added.
Section 16: Land Spill was added.
Section 16: Land Spill - Header was added.
Section 16: Labeling Use was added.
Section 16: Labeling Use - Header was added.
Section 16: Target Organs was added.
Section 16: Target Organ - Header was added.
Section 16: NA Contains was added.
Section 16: NA Contains - Header was added.
Section 09: Decomposition Temperature was added.
Section 09: Decomposition Temp - Header was added.
Hazard Identification: OSHA - Hazards Statement was added.
Hazard Identification: OSHA - May be Hazardous Statement was deleted.
Hazard Identification: OSHA - Not Hazardous Statement was deleted.
Section 15: TSCA Class 2 Statement was deleted.

PRECAUTIONARY LABEL TEXT:
Contains: HYDROTREATED LIGHT DISTILLATE; STRAIGHT-RUN MIDDLE DISTILLATES
WARNING!
HEALTH HAZARDS
Irritating to eyes. Irritating to skin.
Target Organs: Skin | Eye |

PRECAUTIONS
Avoid contact with skin. Avoid contact with eyes.

FIRST AID
Eye: Flush thoroughly with water for at least 15 minutes. Get medical assistance.

Skin: Wash contact areas with soap and water. Remove contaminated clothing. Launder contaminated clothing before reuse. If product is injected into or under the skin, or into any part of the body, regardless of the appearance of the wound or its size, the individual should be evaluated immediately by a physician as a surgical emergency. Even though initial symptoms from high pressure injection may be minimal or absent, early surgical treatment within the first few hours may significantly reduce the ultimate extent of injury.

FIRE FIGHTING MEDIA
Use water fog, foam, dry chemical or carbon dioxide (CO2) to extinguish flames.

ExxonMobil

Product Name: MOBILTAC 325 NC
Revision Date: 27 Feb 2013
Page 12 of 12

SPILL/LEAK
Land Spill: Stop leak if you can do it without risk. Small Spills: Absorb with earth, sand or other non-combustible material and transfer to containers for later disposal. Recover by pumping or with suitable absorbent.

Water Spill: Stop leak if you can do it without risk. Confine the spill immediately with booms. Warn other shipping. Remove from the surface by skimming or with suitable absorbents. Report spills as required to appropriate authorities. Seek the advice of a specialist before using dispersants.
Use
Not intended or suitable for use in or around a household or dwelling.

The information and recommendations contained herein are, to the best of ExxonMobil's knowledge and belief, accurate and reliable as of the date issued. You can contact ExxonMobil to insure that this document is the most current available from ExxonMobil. The information and recommendations are offered for the user's consideration and examination. It is the user's responsibility to satisfy itself that the product is suitable for the intended use. If buyer repackages this product, it is the user's responsibility to insure proper health, safety and other necessary information is included with and/or on the container. Appropriate warnings and safe-handling procedures should be provided to handlers and users. Alteration of this document is strictly prohibited. Except to the extent required by law, re-publication or retransmission of this document, in whole or in part, is not permitted. The term, "ExxonMobil" is used for convenience, and may include any one or more of ExxonMobil Chemical Company, Exxon Mobil Corporation, or any affiliates in which they directly or indirectly hold any interest.

Internal Use Only
MHC: 0, 0, 0, 2, 4, 0 PPEC: D

DGN: 2009222XUS (1012316)

Copyright 2002 Exxon Mobil Corporation, All rights reserved

11.5.4 MOBIL MOBILGEAR 600 XP 100, 220

Mobil

Mobilgear 600 XP Series

Gear Oil

Product Description

The Mobilgear 600 XP Series are extra high performance gear oils having outstanding extreme pressure characteristics and load-carrying properties, intended for use in all types of enclosed gear drives with circulation or splash lubrication systems. Mobilgear 600 XP Series is designed to stay ahead of the changing needs of gearbox technology. Gearbox technology design trends are towards smaller units with similar power throughput. This increase in power density places increased demands on gear oils. Mobilgear 600 XP Series oils are formulated to meet the stress by providing extra protection for gears, bearings and seals.

Mobilgear 600 XP Series is formulated to protect gear teeth from wear at its earliest stages. Microscopic wear, called micropitting, can lead to significant gear tooth damage. Mobilgear 600 XP Series exceeds the industry requirement for bearing wear protection. In fact, Mobilgear 600 XP Series provides up to 15 times the wear protection as measured by the industry standard FAG FE 8 test. Mobilgear 600 XP Series' balanced formulation is able to provide maximum wear and corrosion protection while maintaining compatibility with common gearbox seal materials. Mobilgear 600 XP helps to maintain gearbox seal integrity thereby preventing oil leaks and keeping contamination out. By protecting the gears, bearings and seals, Mobilgear 600 XP can improve equipment reliability and increase productivity.

Mobilgear 600 XP Series oils are recommended for industrial spur, helical and bevel enclosed gears with circulation or splash lubrication, operating at bulk oil temperatures up to 100°C. They are particularly suitable for gear sets working under heavy or shock loads. Mobilgear 600 XP oils also find broad application in marine gearing applications. They may also be used in non-gear applications include highly loaded and slow speed plain and rolling contact bearings.

Features and Benefits

Mobilgear 600 XP Series products are a leading member of the Mobil brand of industrial lubricants that enjoy a reputation for innovation and high performance capability. These mineral-based products are designed to provide high quality industrial gear oils, meeting the latest industry standards and with high versatility to lubricate a broad range of industrial and marine equipment.

Mobilgear 600 XP Series products offer the following features and potential benefits:

Features	Advantages and Potential Benefits
Enhanced gear wear protection from micropitting	Less gear and bearing wear resulting in less unexpected downtime
Reduced debris denting from generated wear particles	Up to 22% improvement in bearing life reducing bearing replacement costs and improving productivity
Improved bearing wear protection	Improved bearing life resulting in higher productivity
Outstanding compatibility with a range of seal materials	Reduced leakage, oil consumption and contamination ingress helping to reduce maintenance, extend gearbox reliability and higher productivity
Excellent resistance to oil oxidation and thermal degradation	Helps extend lubricant life with lower lubricant and lubrication costs and reduced scheduled downtime.
High resistance to sludge and deposit formation	Cleaner systems and reduced maintenance
Wide range of applications	Fewer grades of lubricant required because of wide range of application, leading to lower purchase and

Features	Advantages and Potential Benefits
	storage costs and less danger of using wrong lubricant
Optimised resistance to rust and corrosion of steel and corrosion of copper and soft metal alloys	Excellent protection of machine parts, with reduced maintenance and repair costs
Resistance to foaming and emulsion formation	Effective lubrication and problem free operation in the presence of water contamination or in equipment prone to oil foaming

Applications

Mobilgear 600 XP lubricants are used in a wide range of industrial and marine applications, especially spur, helical, bevel and worm gearing. Specific applications include:

- Industrial gearing for conveyers, agitators, dryers, extruders, fans, mixers, presses, pulpers, pumps (including oil well pumps), screens, extruders and other heavy duty applications
- Marine gearing including main propulsion, centrifuges, deck machinery such as winches, windlasses, cranes, turning gears, pumps, elevators and rudder carriers
- Non-gear applications include shaft couplings, screws and heavily loaded plain and rolling contact bearings operating at slow speeds.
- Mobilgear 600 XP 100, 150, 220, 320, 460, and 680 are approved by Siemens for use in Flender gearboxes

Specifications and Approvals

Mobilgear 600 XP meets or exceeds the requirements of:	Mobilgear 600 XP 68	Mobilgear 600 XP 100	Mobilgear 600 XP 150	Mobilgear 600 XP 220	Mobilgear 600 XP 320	Mobilgear 600 XP 460	Mobilgear 600 XP 680
AGMA 9005-E02	2 EP	3 EP	4 EP	5 EP	6 EP	7 EP	-
DIN 51517-3: 2009-06	X	X	X	X	X	X	X
ISO 12925-1 Typ	CKD 68	CKD 100	CKD 150	CKD 220	CKD 320	CKC 460	CKC 680

Mobilgear 600 XP has the following builder approvals:	Mobilgear 600 XP 68	Mobilgear 600 XP 100	Mobilgear 600 XP 150	Mobilgear 600 XP 220	Mobilgear 600 XP 320	Mobilgear 600 XP 460	Mobilgear 600 XP 680
Siemens T 7300, Table A-1, Revision 13, FLENDER Code No.:	-	A17	A16	A15	A14	A13	A12
Mueller Weingarten DT 55 005		CLP 100	CLP 150	CLP 220	CLP 320	CLP 460	

Typical Properties

Mobilgear 600 XP	68	100	150	220	320	460	680
ISO Viscosity Grade	68	100	150	220	320	460	680
Viscosity, ASTM D 445							
mm^2/s @ 40°C	68	100	150	220	320	460	680
mm^2/s @ 100°C	8.8	11.2	14.7	19.0	24.1	30.6	39.2
Viscosity Index, ASTM D 2270	101	97	97	97	97	96	90
Pour Point, °C, ASTM D 97	-27	-24	-24	-24	-24	-15	-9
Flash Point, °C, ASTM D 92	230	230	230	240	240	240	285
Density @15.6 °C, ASTM D 4052, kg/l	0.88	0.88	0.89	0.89	0.90	0.90	0.91

Mobilgear 600 XP	68	100	150	220	320	460	680
FZG Micropitting, FVA 54, Fail Stage / Rating		10 / High	10 / High	10 / High	10 / High	10 / High	10 / High
FE 8 wear test, DIN 51819-3, D7,5/80-80. Roller wear, mg	2	2	2	2	2	2	2
Timken OK Load, ASTM D 2782, lb	65	65	65	65	65	65	65
4-Ball EP test, ASTM D 2783,							
Weld Load, kg	200	200	250	250	250	250	250
Load Wear Index, kgf	47	47	47	48	48	48	48
FZG Scuffing, Fail Stage							
A/8.3/90	12+	12+	12+	12+	12+	12+	12+
A/16.6/90		12+	12+	12+	12+	12+	12+
Rust protection, ASTM D 665, Sea Water	Pass	Pass	Pass	Pass	Pass	Pass	Pass
Copper Strip Corrosion, ASTM D 130, 3 hrs @ 100°C	1B	1B	1B	1B	1B	1B	1B
Demulsibility, ASTM D 1401, Time to 3ml emulsion, minutes @ 82°C	30	30	30	30	30	30	30
Foam Test, ASTM D 892, Tendency/Stability, ml/ml Sequence 1	0/0	0/0	0/0	0/0	0/0	0/0	0/0
Sequence 2	30/0	30/0	30/0	30/0	30/0	30/0	30/0

Health and Safety

Based on available information, this product is not expected to produce adverse effects on health when used for the intended application, following the recommendations provided in the Material Safety Data Sheet (MSDS). MSDSs are available upon request through your sales contract office, or via the Internet on http://www.exxonmobil.com. This product should not be used for purposes other than its intended use. If disposing of used product, take care to protect the environment.

All trademarks used herein are trademarks or registered trademarks of Exxon Mobil Corporation or one of its subsidiaries unless indicated otherwise.

7-2011

Exxon Mobil Corporation
3225 Gallows Road
Fairfax, VA 22037

1-800-ASK MOBIL (275-6624)

Typical Properties are typical of those obtained with normal production tolerance and do not constitute a specification. Variations that do not affect product performance are to be expected during normal manufacture and at different blending locations. The information contained herein is subject to change without notice. All products may not be available locally. For more information, contact your local ExxonMobil contact or visit www.exxonmobil.com
ExxonMobil is comprised of numerous affiliates and subsidiaries, many with names that include Esso, Mobil, or ExxonMobil. Nothing in this document is intended to override or supersede the corporate separateness of local entities. Responsibility for local action and accountability remains with the local ExxonMobil-affiliate entities.

© 2001-2011 Exxon Mobil Corporation. All rights reserved..

ExxonMobil

Product Name: MOBILGEAR 600 XP 100
Revision Date: 17 Aug 2010
Page 1 of 9

MATERIAL SAFETY DATA SHEET

SECTION 1 PRODUCT AND COMPANY IDENTIFICATION

PRODUCT

Product Name: **MOBILGEAR 600 XP 100**
Product Description: Base Oil and Additives
Product Code: 201560401210, 613612-00, 97AE97
Intended Use: Gear oil

COMPANY IDENTIFICATION

Supplier: EXXON MOBIL CORPORATION
3225 GALLOWS RD.
FAIRFAX, VA. 22037 USA

24 Hour Health Emergency	609-737-4411
Transportation Emergency Phone	800-424-9300
ExxonMobil Transportation No.	281-834-3296
Product Technical Information	800-662-4525, 800-947-9147
MSDS Internet Address	http://www.exxon.com, http://www.mobil.com

SECTION 2 COMPOSITION / INFORMATION ON INGREDIENTS

No Reportable Hazardous Substance(s) or Complex Substance(s).

SECTION 3 HAZARDS IDENTIFICATION

This material is not considered to be hazardous according to regulatory guidelines (see (M)SDS Section 15).

POTENTIAL HEALTH EFFECTS

Low order of toxicity. Excessive exposure may result in eye, skin, or respiratory irritation. High-pressure injection under skin may cause serious damage.

NFPA Hazard ID:	Health:	0	Flammability:	1	Reactivity:	0
HMIS Hazard ID:	Health:	0	Flammability:	1	Reactivity:	0

NOTE: This material should not be used for any other purpose than the intended use in Section 1 without expert advice. Health studies have shown that chemical exposure may cause potential human health risks which may vary from person to person.

SECTION 4 FIRST AID MEASURES

INHALATION

Remove from further exposure. For those providing assistance, avoid exposure to yourself or others. Use

adequate respiratory protection. If respiratory irritation, dizziness, nausea, or unconsciousness occurs, seek immediate medical assistance. If breathing has stopped, assist ventilation with a mechanical device or use mouth-to-mouth resuscitation.

SKIN CONTACT

Wash contact areas with soap and water. If product is injected into or under the skin, or into any part of the body, regardless of the appearance of the wound or its size, the individual should be evaluated immediately by a physician as a surgical emergency. Even though initial symptoms from high pressure injection may be minimal or absent, early surgical treatment within the first few hours may significantly reduce the ultimate extent of injury.

EYE CONTACT

Flush thoroughly with water. If irritation occurs, get medical assistance.

INGESTION

First aid is normally not required. Seek medical attention if discomfort occurs.

SECTION 5 FIRE FIGHTING MEASURES

EXTINGUISHING MEDIA

Appropriate Extinguishing Media: Use water fog, foam, dry chemical or carbon dioxide (CO2) to extinguish flames.

Inappropriate Extinguishing Media: Straight Streams of Water

FIRE FIGHTING

Fire Fighting Instructions: Evacuate area. Prevent runoff from fire control or dilution from entering streams, sewers, or drinking water supply. Firefighters should use standard protective equipment and in enclosed spaces, self-contained breathing apparatus (SCBA). Use water spray to cool fire exposed surfaces and to protect personnel.

Hazardous Combustion Products: Smoke, Fume, Aldehydes, Sulfur oxides, Incomplete combustion products, Oxides of carbon

FLAMMABILITY PROPERTIES

Flash Point [Method]: >200C (392F) [ASTM D-92]
Flammable Limits (Approximate volume % in air): LEL: 0.9 UEL: 7.0
Autoignition Temperature: N/D

SECTION 6 ACCIDENTAL RELEASE MEASURES

NOTIFICATION PROCEDURES

In the event of a spill or accidental release, notify relevant authorities in accordance with all applicable regulations. US regulations require reporting releases of this material to the environment which exceed the applicable reportable quantity or oil spills which could reach any waterway including intermittent dry creeks. The National Response Center can be reached at (800)424-8802.

ExxonMobil

Product Name: MOBILGEAR 600 XP 100
Revision Date: 17 Aug 2010
Page 3 of 9

SPILL MANAGEMENT

Land Spill: Stop leak if you can do it without risk. Recover by pumping or with suitable absorbent.

Water Spill: Stop leak if you can do it without risk. Confine the spill immediately with booms. Warn other shipping. Remove from the surface by skimming or with suitable absorbents. Seek the advice of a specialist before using dispersants.

Water spill and land spill recommendations are based on the most likely spill scenario for this material; however, geographic conditions, wind, temperature, (and in the case of a water spill) wave and current direction and speed may greatly influence the appropriate action to be taken. For this reason, local experts should be consulted. Note: Local regulations may prescribe or limit action to be taken.

ENVIRONMENTAL PRECAUTIONS

Large Spills: Dike far ahead of liquid spill for later recovery and disposal. Prevent entry into waterways, sewers, basements or confined areas.

SECTION 7 HANDLING AND STORAGE

HANDLING

Prevent small spills and leakage to avoid slip hazard. Material can accumulate static charges which may cause an electrical spark (ignition source). When the material is handled in bulk, an electrical spark could ignite any flammable vapors from liquids or residues that may be present (e.g., during switch-loading operations). Use proper bonding and/or ground procedures. However, bonding and grounds may not eliminate the hazard from static accumulation. Consult local applicable standards for guidance. Additional references include American Petroleum Institute 2003 (Protection Against Ignitions Arising out of Static, Lightning and Stray Currents) or National Fire Protection Agency 77 (Recommended Practice on Static Electricity) or CENELEC CLC/TR 50404 (Electrostatics - Code of practice for the avoidance of hazards due to static electricity).

Static Accumulator: This material is a static accumulator.

STORAGE

The container choice, for example storage vessel, may effect static accumulation and dissipation. Do not store in open or unlabelled containers. Keep away from incompatible materials.

SECTION 8 EXPOSURE CONTROLS / PERSONAL PROTECTION

Exposure limits/standards for materials that can be formed when handling this product: When mists / aerosols can occur, the following are recommended: 5 mg/m³ - ACGIH TLV, 10 mg/m³ - ACGIH STEL, 5 mg/m³ - OSHA PEL.

NOTE: Limits/standards shown for guidance only. Follow applicable regulations.

ENGINEERING CONTROLS

The level of protection and types of controls necessary will vary depending upon potential exposure conditions.

Control measures to consider:
No special requirements under ordinary conditions of use and with adequate ventilation.

PERSONAL PROTECTION

Personal protective equipment selections vary based on potential exposure conditions such as applications, handling practices, concentration and ventilation. Information on the selection of protective equipment for use with this material, as provided below, is based upon intended, normal usage.

Respiratory Protection: If engineering controls do not maintain airborne contaminant concentrations at a level which is adequate to protect worker health, an approved respirator may be appropriate. Respirator selection, use, and maintenance must be in accordance with regulatory requirements, if applicable. Types of respirators to be considered for this material include:
No special requirements under ordinary conditions of use and with adequate ventilation.

For high airborne concentrations, use an approved supplied-air respirator, operated in positive pressure mode. Supplied air respirators with an escape bottle may be appropriate when oxygen levels are inadequate, gas/vapor warning properties are poor, or if air purifying filter capacity/rating may be exceeded.

Hand Protection: Any specific glove information provided is based on published literature and glove manufacturer data. Glove suitability and breakthrough time will differ depending on the specific use conditions. Contact the glove manufacturer for specific advice on glove selection and breakthrough times for your use conditions. Inspect and replace worn or damaged gloves. The types of gloves to be considered for this material include:
No protection is ordinarily required under normal conditions of use.

Eye Protection: If contact is likely, safety glasses with side shields are recommended.

Skin and Body Protection: Any specific clothing information provided is based on published literature or manufacturer data. The types of clothing to be considered for this material include:
No skin protection is ordinarily required under normal conditions of use. In accordance with good industrial hygiene practices, precautions should be taken to avoid skin contact.

Specific Hygiene Measures: Always observe good personal hygiene measures, such as washing after handling the material and before eating, drinking, and/or smoking. Routinely wash work clothing and protective equipment to remove contaminants. Discard contaminated clothing and footwear that cannot be cleaned. Practice good housekeeping.

ENVIRONMENTAL CONTROLS
See Sections 6, 7, 12, 13.

SECTION 9 PHYSICAL AND CHEMICAL PROPERTIES

Typical physical and chemical properties are given below. Consult the Supplier in Section 1 for additional data.

GENERAL INFORMATION
Physical State: Liquid
Color: Brown
Odor: Characteristic
Odor Threshold: N/D

ExxonMobil

Product Name: MOBILGEAR 600 XP 100
Revision Date: 17 Aug 2010
Page 5 of 9

IMPORTANT HEALTH, SAFETY, AND ENVIRONMENTAL INFORMATION

Relative Density (at 15 C): 0.884
Flash Point [Method]: >200C (392F) [ASTM D-92]
Flammable Limits (Approximate volume % in air): LEL: 0.9 UEL: 7.0
Autoignition Temperature: N/D
Boiling Point / Range: > 316C (600F)
Vapor Density (Air = 1): > 2 at 101 kPa
Vapor Pressure: < 0.013 kPa (0.1 mm Hg) at 20 C
Evaporation Rate (n-butyl acetate = 1): N/D
pH: N/A
Log Pow (n-Octanol/Water Partition Coefficient): N/D
Solubility in Water: Negligible
Viscosity: 100 cSt (100 mm2/sec) at 40 C | 11.2 cSt (11.2 mm2/sec) at 100C
Oxidizing Properties: See Hazards Identification Section.

OTHER INFORMATION

Freezing Point: N/D
Melting Point: N/A
Pour Point: -12°C (10°F)
DMSO Extract (mineral oil only), IP-346: < 3 %wt

SECTION 10 STABILITY AND REACTIVITY

STABILITY: Material is stable under normal conditions.

CONDITIONS TO AVOID: Excessive heat. High energy sources of ignition.

MATERIALS TO AVOID: Strong oxidizers

HAZARDOUS DECOMPOSITION PRODUCTS: Material does not decompose at ambient temperatures.

HAZARDOUS POLYMERIZATION: Will not occur.

SECTION 11 TOXICOLOGICAL INFORMATION

ACUTE TOXICITY

Route of Exposure	Conclusion / Remarks
Inhalation	
Toxicity (Rat): LC50 > 5000 mg/m3	Minimally Toxic. Based on test data for structurally similar materials.
Irritation: No end point data.	Negligible hazard at ambient/normal handling temperatures. Based on assessment of the components.
Ingestion	
Toxicity (Rat): LD50 > 5000 mg/kg	Minimally Toxic. Based on test data for structurally similar materials.
Skin	
Toxicity (Rabbit): LD50 > 5000 mg/kg	Minimally Toxic. Based on test data for structurally similar materials.
Irritation (Rabbit): Data available.	Negligible irritation to skin at ambient temperatures. Based on test data for structurally similar materials.

Eye	
Irritation (Rabbit): Data available.	May cause mild, short-lasting discomfort to eyes. Based on test data for structurally similar materials.

CHRONIC/OTHER EFFECTS

For the product itself:

Repeated and/or prolonged exposure may cause irritation to the skin, eyes, or respiratory tract.

Contains:

Base oil severely refined: Not carcinogenic in animal studies. Representative material passes IP-346, Modified Ames test, and/or other screening tests. Dermal and inhalation studies showed minimal effects; lung non-specific infiltration of immune cells, oil deposition and minimal granuloma formation. Not sensitizing in test animals.

Additional information is available by request.

The following ingredients are cited on the lists below: None.

--REGULATORY LISTS SEARCHED--

1 = NTP CARC	3 = IARC 1	5 = IARC 2B
2 = NTP SUS	4 = IARC 2A	6 = OSHA CARC

SECTION 12 ECOLOGICAL INFORMATION

The information given is based on data available for the material, the components of the material, and similar materials.

ECOTOXICITY

Material -- Not expected to be harmful to aquatic organisms.

MOBILITY

Base oil component -- Low solubility and floats and is expected to migrate from water to the land. Expected to partition to sediment and wastewater solids.

PERSISTENCE AND DEGRADABILITY

Biodegradation:

Base oil component -- Expected to be inherently biodegradable

BIOACCUMULATION POTENTIAL

Base oil component -- Has the potential to bioaccumulate, however metabolism or physical properties may reduce the bioconcentration or limit bioavailability.

SECTION 13 DISPOSAL CONSIDERATIONS

Disposal recommendations based on material as supplied. Disposal must be in accordance with current applicable laws and regulations, and material characteristics at time of disposal.

DISPOSAL RECOMMENDATIONS

Product is suitable for burning in an enclosed controlled burner for fuel value or disposal by supervised incineration at very high temperatures to prevent formation of undesirable combustion products.

REGULATORY DISPOSAL INFORMATION

RCRA Information: The unused product, in our opinion, is not specifically listed by the EPA as a hazardous waste (40 CFR, Part 261D), nor is it formulated to contain materials which are listed as hazardous wastes. It does not exhibit the hazardous characteristics of ignitability, corrositivity or reactivity and is not formulated with contaminants as determined by the Toxicity Characteristic Leaching Procedure (TCLP). However, used product may be regulated.

Empty Container Warning Empty Container Warning (where applicable): Empty containers may contain residue and can be dangerous. Do not attempt to refill or clean containers without proper instructions. Empty drums should be completely drained and safely stored until appropriately reconditioned or disposed. Empty containers should be taken for recycling, recovery, or disposal through suitably qualified or licensed contractor and in accordance with governmental regulations. DO NOT PRESSURISE, CUT, WELD, BRAZE, SOLDER, DRILL, GRIND, OR EXPOSE SUCH CONTAINERS TO HEAT, FLAME, SPARKS, STATIC ELECTRICITY, OR OTHER SOURCES OF IGNITION. THEY MAY EXPLODE AND CAUSE INJURY OR DEATH.

SECTION 14 TRANSPORT INFORMATION

LAND (DOT): Not Regulated for Land Transport

LAND (TDG): Not Regulated for Land Transport

SEA (IMDG): Not Regulated for Sea Transport according to IMDG-Code

AIR (IATA): Not Regulated for Air Transport

SECTION 15 REGULATORY INFORMATION

OSHA HAZARD COMMUNICATION STANDARD: When used for its intended purposes, this material is not classified as hazardous in accordance with OSHA 29 CFR 1910.1200.

NATIONAL CHEMICAL INVENTORY LISTING: AICS, EINECS, KECI, PICCS, TSCA
Special Cases:

Inventory	Status
NDSL	Restrictions Apply

EPCRA: This material contains no extremely hazardous substances.

SARA (311/312) REPORTABLE HAZARD CATEGORIES: None.

SARA (313) TOXIC RELEASE INVENTORY: This material contains no chemicals subject to the supplier notification requirements of the SARA 313 Toxic Release Program.

The following ingredients are cited on the lists below: None.

--REGULATORY LISTS SEARCHED--

1 = ACGIH ALL	6 = TSCA 5a2	11 = CA P65 REPRO	16 = MN RTK
2 = ACGIH A1	7 = TSCA 5e	12 = CA RTK	17 = NJ RTK
3 = ACGIH A2	8 = TSCA 6	13 = IL RTK	18 = PA RTK
4 = OSHA Z	9 = TSCA 12b	14 = LA RTK	19 = RI RTK
5 = TSCA 4	10 = CA P65 CARC	15 = MI 293	

Code key: CARC=Carcinogen; REPRO=Reproductive

SECTION 16 OTHER INFORMATION

N/D = Not determined, N/A = Not applicable

THIS SAFETY DATA SHEET CONTAINS THE FOLLOWING REVISIONS:

Revision Changes:
Section 06: Notification Procedures - Header was modified.
Section 10 Stability and Reactivity - Header was modified.
Section 13: Disposal Recommendations - Note was modified.
Section 08: Personal Protection was modified.
Section 08: Hand Protection was modified.
Section 07: Handling and Storage - Handling was modified.
Section 07: Handling and Storage - Storage Phrases was modified.
Section 11: Dermal Lethality Test Data was modified.
Section 11: Oral Lethality Test Data was modified.
Section 11: Inhalation Irritation Test Data was modified.
Section 05: Hazardous Combustion Products was modified.
Section 06: Accidental Release - Spill Management - Water was modified.
Section 09: Relative Density - Header was modified.
Section 09: Viscosity was modified.
Section 14: Sea (IMDG) - Header was modified.
Section 14: Air (IATA) - Header was modified.
Section 14: LAND (TDG) - Header was modified.
Section 14: LAND (DOT) - Header was modified.
Section 15: List Citation Table - Header was modified.
Section 14: LAND (DOT) - Default was modified.
Section 14: LAND (TDG) Default was modified.
Section 14: Sea (IMDG) - Default was modified.
Section 14: Air (IATA) - Default was modified.
Section 16: Code to MHCs was modified.
Section 08: Exposure limits/standards was modified.
Hazard Identification: OSHA - May be Hazardous Statement was modified.
Section 06: Notification Procedures was modified.
Section 09: Oxidizing Properties was modified.
Section 01: Company Contact Methods Sorted by Priority was modified.

ExxonMobil

Product Name: MOBILGEAR 600 XP 100
Revision Date: 17 Aug 2010
Page 9 of 9

The information and recommendations contained herein are, to the best of ExxonMobil's knowledge and belief, accurate and reliable as of the date issued. You can contact ExxonMobil to insure that this document is the most current available from ExxonMobil. The information and recommendations are offered for the user's consideration and examination. It is the user's responsibility to satisfy itself that the product is suitable for the intended use. If buyer repackages this product, it is the user's responsibility to insure proper health, safety and other necessary information is included with and/or on the container. Appropriate warnings and safe-handling procedures should be provided to handlers and users. Alteration of this document is strictly prohibited. Except to the extent required by law, re-publication or retransmission of this document, in whole or in part, is not permitted. The term, "ExxonMobil" is used for convenience, and may include any one or more of ExxonMobil Chemical Company, Exxon Mobil Corporation, or any affiliates in which they directly or indirectly hold any interest.

Internal Use Only
MHC: 0B, 0B, 0, 0, 0, 0 PPEC: A

DGN: 7077870XUS (1012011)

Copyright 2002 Exxon Mobil Corporation, All rights reserved

ExxonMobil

Product Name: MOBILGEAR 600 XP 220
Revision Date: 05 Nov 2010
Page 1 of 9

MATERIAL SAFETY DATA SHEET

SECTION 1 PRODUCT AND COMPANY IDENTIFICATION

PRODUCT

Product Name: **MOBILGEAR 600 XP 220**
Product Description: Base Oil and Additives
Product Code: 201560401220, 613638-00, 97AE99
Intended Use: Gear oil

COMPANY IDENTIFICATION

Supplier: EXXON MOBIL CORPORATION
3225 GALLOWS RD.
FAIRFAX, VA. 22037 USA

24 Hour Health Emergency	609-737-4411
Transportation Emergency Phone	800-424-9300
ExxonMobil Transportation No.	281-834-3296
Product Technical Information	800-662-4525, 800-947-9147
MSDS Internet Address	http://www.exxon.com, http://www.mobil.com

SECTION 2 COMPOSITION / INFORMATION ON INGREDIENTS

No Reportable Hazardous Substance(s) or Complex Substance(s).

SECTION 3 HAZARDS IDENTIFICATION

This material is not considered to be hazardous according to regulatory guidelines (see (M)SDS Section 15).

POTENTIAL HEALTH EFFECTS

Low order of toxicity. Excessive exposure may result in eye, skin, or respiratory irritation. High-pressure injection under skin may cause serious damage.

NFPA Hazard ID:	Health:	0	Flammability:	1	Reactivity:	0
HMIS Hazard ID:	Health:	0	Flammability:	1	Reactivity:	0

NOTE: This material should not be used for any other purpose than the intended use in Section 1 without expert advice. Health studies have shown that chemical exposure may cause potential human health risks which may vary from person to person.

SECTION 4 FIRST AID MEASURES

INHALATION

Remove from further exposure. For those providing assistance, avoid exposure to yourself or others. Use

adequate respiratory protection. If respiratory irritation, dizziness, nausea, or unconsciousness occurs, seek immediate medical assistance. If breathing has stopped, assist ventilation with a mechanical device or use mouth-to-mouth resuscitation.

SKIN CONTACT

Wash contact areas with soap and water. If product is injected into or under the skin, or into any part of the body, regardless of the appearance of the wound or its size, the individual should be evaluated immediately by a physician as a surgical emergency. Even though initial symptoms from high pressure injection may be minimal or absent, early surgical treatment within the first few hours may significantly reduce the ultimate extent of injury.

EYE CONTACT

Flush thoroughly with water. If irritation occurs, get medical assistance.

INGESTION

First aid is normally not required. Seek medical attention if discomfort occurs.

SECTION 5 FIRE FIGHTING MEASURES

EXTINGUISHING MEDIA

Appropriate Extinguishing Media: Use water fog, foam, dry chemical or carbon dioxide (CO2) to extinguish flames.

Inappropriate Extinguishing Media: Straight Streams of Water

FIRE FIGHTING

Fire Fighting Instructions: Evacuate area. Prevent runoff from fire control or dilution from entering streams, sewers, or drinking water supply. Firefighters should use standard protective equipment and in enclosed spaces, self-contained breathing apparatus (SCBA). Use water spray to cool fire exposed surfaces and to protect personnel.

Hazardous Combustion Products: Smoke, Fume, Aldehydes, Sulfur oxides, Incomplete combustion products, Oxides of carbon

FLAMMABILITY PROPERTIES

Flash Point [Method]: >200C (392F) [ASTM D-92]
Flammable Limits (Approximate volume % in air): LEL: 0.9 UEL: 7.0
Autoignition Temperature: N/D

SECTION 6 ACCIDENTAL RELEASE MEASURES

NOTIFICATION PROCEDURES

In the event of a spill or accidental release, notify relevant authorities in accordance with all applicable regulations. US regulations require reporting releases of this material to the environment which exceed the applicable reportable quantity or oil spills which could reach any waterway including intermittent dry creeks. The National Response Center can be reached at (800)424-8802.

ExxonMobil

Product Name: MOBILGEAR 600 XP 220
Revision Date: 05 Nov 2010
Page 3 of 9

SPILL MANAGEMENT

Land Spill: Stop leak if you can do it without risk. Recover by pumping or with suitable absorbent.

Water Spill: Stop leak if you can do it without risk. Confine the spill immediately with booms. Warn other shipping. Remove from the surface by skimming or with suitable absorbents. Seek the advice of a specialist before using dispersants.

Water spill and land spill recommendations are based on the most likely spill scenario for this material; however, geographic conditions, wind, temperature, (and in the case of a water spill) wave and current direction and speed may greatly influence the appropriate action to be taken. For this reason, local experts should be consulted. Note: Local regulations may prescribe or limit action to be taken.

ENVIRONMENTAL PRECAUTIONS

Large Spills: Dike far ahead of liquid spill for later recovery and disposal. Prevent entry into waterways, sewers, basements or confined areas.

SECTION 7 HANDLING AND STORAGE

HANDLING

Prevent small spills and leakage to avoid slip hazard. Material can accumulate static charges which may cause an electrical spark (ignition source). When the material is handled in bulk, an electrical spark could ignite any flammable vapors from liquids or residues that may be present (e.g., during switch-loading operations). Use proper bonding and/or ground procedures. However, bonding and grounds may not eliminate the hazard from static accumulation. Consult local applicable standards for guidance. Additional references include American Petroleum Institute 2003 (Protection Against Ignitions Arising out of Static, Lightning and Stray Currents) or National Fire Protection Agency 77 (Recommended Practice on Static Electricity) or CENELEC CLC/TR 50404 (Electrostatics - Code of practice for the avoidance of hazards due to static electricity).

Static Accumulator: This material is a static accumulator.

STORAGE

The container choice, for example storage vessel, may effect static accumulation and dissipation. Do not store in open or unlabelled containers. Keep away from incompatible materials.

SECTION 8 EXPOSURE CONTROLS / PERSONAL PROTECTION

Exposure limits/standards for materials that can be formed when handling this product: When mists / aerosols can occur, the following are recommended: 5 mg/m³ - ACGIH TLV, 10 mg/m³ - ACGIH STEL, 5 mg/m³ - OSHA PEL.

NOTE: Limits/standards shown for guidance only. Follow applicable regulations.

ENGINEERING CONTROLS

The level of protection and types of controls necessary will vary depending upon potential exposure conditions.

Control measures to consider:
No special requirements under ordinary conditions of use and with adequate ventilation.

PERSONAL PROTECTION

Personal protective equipment selections vary based on potential exposure conditions such as applications, handling practices, concentration and ventilation. Information on the selection of protective equipment for use with this material, as provided below, is based upon intended, normal usage.

Respiratory Protection: If engineering controls do not maintain airborne contaminant concentrations at a level which is adequate to protect worker health, an approved respirator may be appropriate. Respirator selection, use, and maintenance must be in accordance with regulatory requirements, if applicable. Types of respirators to be considered for this material include:
No special requirements under ordinary conditions of use and with adequate ventilation.

For high airborne concentrations, use an approved supplied-air respirator, operated in positive pressure mode. Supplied air respirators with an escape bottle may be appropriate when oxygen levels are inadequate, gas/vapor warning properties are poor, or if air purifying filter capacity/rating may be exceeded.

Hand Protection: Any specific glove information provided is based on published literature and glove manufacturer data. Glove suitability and breakthrough time will differ depending on the specific use conditions. Contact the glove manufacturer for specific advice on glove selection and breakthrough times for your use conditions. Inspect and replace worn or damaged gloves. The types of gloves to be considered for this material include:
No protection is ordinarily required under normal conditions of use.

Eye Protection: If contact is likely, safety glasses with side shields are recommended.

Skin and Body Protection: Any specific clothing information provided is based on published literature or manufacturer data. The types of clothing to be considered for this material include:
No skin protection is ordinarily required under normal conditions of use. In accordance with good industrial hygiene practices, precautions should be taken to avoid skin contact.

Specific Hygiene Measures: Always observe good personal hygiene measures, such as washing after handling the material and before eating, drinking, and/or smoking. Routinely wash work clothing and protective equipment to remove contaminants. Discard contaminated clothing and footwear that cannot be cleaned. Practice good housekeeping.

ENVIRONMENTAL CONTROLS
See Sections 6, 7, 12, 13.

SECTION 9 PHYSICAL AND CHEMICAL PROPERTIES

Typical physical and chemical properties are given below. Consult the Supplier in Section 1 for additional data.

GENERAL INFORMATION
Physical State: Liquid
Color: Amber
Odor: Characteristic
Odor Threshold: N/D

IMPORTANT HEALTH, SAFETY, AND ENVIRONMENTAL INFORMATION

Relative Density (at 15 C): 0.894
Flash Point [Method]: >200C (392F) [ASTM D-92]
Flammable Limits (Approximate volume % in air): LEL: 0.9 UEL: 7.0
Autoignition Temperature: N/D
Boiling Point / Range: > 316C (600F)
Vapor Density (Air = 1): > 2 at 101 kPa
Vapor Pressure: < 0.013 kPa (0.1 mm Hg) at 20 C
Evaporation Rate (n-butyl acetate = 1): N/D
pH: N/A
Log Pow (n-Octanol/Water Partition Coefficient): > 3.5
Solubility in Water: Negligible
Viscosity: 220 cSt (220 mm2/sec) at 40 C | 19 cSt (19 mm2/sec) at 100C
Oxidizing Properties: See Hazards Identification Section.

OTHER INFORMATION

Freezing Point: N/D
Melting Point: N/A
Pour Point: -9°C (16°F)
DMSO Extract (mineral oil only), IP-346: < 3 %wt

SECTION 10 STABILITY AND REACTIVITY

STABILITY: Material is stable under normal conditions.

CONDITIONS TO AVOID: Excessive heat. High energy sources of ignition.

MATERIALS TO AVOID: Strong oxidizers

HAZARDOUS DECOMPOSITION PRODUCTS: Material does not decompose at ambient temperatures.

HAZARDOUS POLYMERIZATION: Will not occur.

SECTION 11 TOXICOLOGICAL INFORMATION

ACUTE TOXICITY

Route of Exposure	Conclusion / Remarks
Inhalation	
Toxicity (Rat): LC50 > 5000 mg/m3	Minimally Toxic. Based on test data for structurally similar materials.
Irritation: No end point data.	Negligible hazard at ambient/normal handling temperatures. Based on assessment of the components.
Ingestion	
Toxicity (Rat): LD50 > 5000 mg/kg	Minimally Toxic. Based on test data for structurally similar materials.
Skin	
Toxicity (Rabbit): LD50 > 5000 mg/kg	Minimally Toxic. Based on test data for structurally similar materials.
Irritation (Rabbit): Data available.	Negligible irritation to skin at ambient temperatures. Based on test data for structurally similar materials.

Eye	
Irritation (Rabbit): Data available.	May cause mild, short-lasting discomfort to eyes. Based on test data for structurally similar materials.

CHRONIC/OTHER EFFECTS

For the product itself:

Repeated and/or prolonged exposure may cause irritation to the skin, eyes, or respiratory tract.

Contains:

Base oil severely refined: Not carcinogenic in animal studies. Representative material passes IP-346, Modified Ames test, and/or other screening tests. Dermal and inhalation studies showed minimal effects; lung non-specific infiltration of immune cells, oil deposition and minimal granuloma formation. Not sensitizing in test animals.

Additional information is available by request.

The following ingredients are cited on the lists below: None.

--REGULATORY LISTS SEARCHED--

1 = NTP CARC	3 = IARC 1	5 = IARC 2B
2 = NTP SUS	4 = IARC 2A	6 = OSHA CARC

SECTION 12 ECOLOGICAL INFORMATION

The information given is based on data available for the material, the components of the material, and similar materials.

ECOTOXICITY

Material -- Not expected to be harmful to aquatic organisms.

MOBILITY

Base oil component -- Low solubility and floats and is expected to migrate from water to the land. Expected to partition to sediment and wastewater solids.

PERSISTENCE AND DEGRADABILITY

Biodegradation:

Base oil component -- Expected to be inherently biodegradable

BIOACCUMULATION POTENTIAL

Base oil component -- Has the potential to bioaccumulate, however metabolism or physical properties may reduce the bioconcentration or limit bioavailability.

SECTION 13 DISPOSAL CONSIDERATIONS

Disposal recommendations based on material as supplied. Disposal must be in accordance with current applicable laws and regulations, and material characteristics at time of disposal.

ExxonMobil

Product Name: MOBILGEAR 600 XP 220
Revision Date: 05 Nov 2010
Page 7 of 9

DISPOSAL RECOMMENDATIONS

Product is suitable for burning in an enclosed controlled burner for fuel value or disposal by supervised incineration at very high temperatures to prevent formation of undesirable combustion products.

REGULATORY DISPOSAL INFORMATION

RCRA Information: The unused product, in our opinion, is not specifically listed by the EPA as a hazardous waste (40 CFR, Part 261D), nor is it formulated to contain materials which are listed as hazardous wastes. It does not exhibit the hazardous characteristics of ignitability, corrositivity or reactivity and is not formulated with contaminants as determined by the Toxicity Characteristic Leaching Procedure (TCLP). However, used product may be regulated.

Empty Container Warning Empty Container Warning (where applicable): Empty containers may contain residue and can be dangerous. Do not attempt to refill or clean containers without proper instructions. Empty drums should be completely drained and safely stored until appropriately reconditioned or disposed. Empty containers should be taken for recycling, recovery, or disposal through suitably qualified or licensed contractor and in accordance with governmental regulations. DO NOT PRESSURISE, CUT, WELD, BRAZE, SOLDER, DRILL, GRIND, OR EXPOSE SUCH CONTAINERS TO HEAT, FLAME, SPARKS, STATIC ELECTRICITY, OR OTHER SOURCES OF IGNITION. THEY MAY EXPLODE AND CAUSE INJURY OR DEATH.

SECTION 14 TRANSPORT INFORMATION

LAND (DOT): Not Regulated for Land Transport

LAND (TDG): Not Regulated for Land Transport

SEA (IMDG): Not Regulated for Sea Transport according to IMDG-Code

AIR (IATA): Not Regulated for Air Transport

SECTION 15 REGULATORY INFORMATION

OSHA HAZARD COMMUNICATION STANDARD: When used for its intended purposes, this material is not classified as hazardous in accordance with OSHA 29 CFR 1910.1200.

Complies with the following national/regional chemical inventory requirements:: EINECS, KECI, PICCS, TSCA
Special Cases:

Inventory	Status
NDSL	Restrictions Apply

EPCRA: This material contains no extremely hazardous substances.

SARA (311/312) REPORTABLE HAZARD CATEGORIES: None.

SARA (313) TOXIC RELEASE INVENTORY: This material contains no chemicals subject to the supplier notification requirements of the SARA 313 Toxic Release Program.

The following ingredients are cited on the lists below: None.

--REGULATORY LISTS SEARCHED--

1 = ACGIH ALL	6 = TSCA 5a2	11 = CA P65 REPRO	16 = MN RTK
2 = ACGIH A1	7 = TSCA 5e	12 = CA RTK	17 = NJ RTK
3 = ACGIH A2	8 = TSCA 6	13 = IL RTK	18 = PA RTK
4 = OSHA Z	9 = TSCA 12b	14 = LA RTK	19 = RI RTK
5 = TSCA 4	10 = CA P65 CARC	15 = MI 293	

Code key: CARC=Carcinogen; REPRO=Reproductive

SECTION 16 OTHER INFORMATION

N/D = Not determined, N/A = Not applicable

THIS SAFETY DATA SHEET CONTAINS THE FOLLOWING REVISIONS:
Revision Changes:
Section 06: Notification Procedures - Header was modified.
Section 10 Stability and Reactivity - Header was modified.
Section 13: Disposal Recommendations - Note was modified.
Section 08: Personal Protection was modified.
Section 08: Hand Protection was modified.
Section 07: Handling and Storage - Handling was modified.
Section 07: Handling and Storage - Storage Phrases was modified.
Section 11: Dermal Lethality Test Data was modified.
Section 11: Oral Lethality Test Data was modified.
Section 11: Inhalation Irritation Test Data was modified.
Section 05: Hazardous Combustion Products was modified.
Section 06: Accidental Release - Spill Management - Water was modified.
Section 09: Relative Density - Header was modified.
Section 09: Viscosity was modified.
Section 14: Sea (IMDG) - Header was modified.
Section 14: Air (IATA) - Header was modified.
Section 14: LAND (TDG) - Header was modified.
Section 14: LAND (DOT) - Header was modified.
Section 15: List Citation Table - Header was modified.
Section 14: LAND (DOT) - Default was modified.
Section 14: LAND (TDG) Default was modified.
Section 14: Sea (IMDG) - Default was modified.
Section 14: Air (IATA) - Default was modified.
Section 15: National Chemical Inventory Listing - Header was modified.
Section 16: Code to MHCs was modified.
Section 08: Exposure limits/standards was modified.
Hazard Identification: OSHA - May be Hazardous Statement was modified.
Section 06: Notification Procedures was modified.
Section 09: Oxidizing Properties was modified.
Section 01: Company Contact Methods Sorted by Priority was modified.

ExxonMobil

Product Name: MOBILGEAR 600 XP 220
Revision Date: 05 Nov 2010
Page 9 of 9

The information and recommendations contained herein are, to the best of ExxonMobil's knowledge and belief, accurate and reliable as of the date issued. You can contact ExxonMobil to insure that this document is the most current available from ExxonMobil. The information and recommendations are offered for the user's consideration and examination. It is the user's responsibility to satisfy itself that the product is suitable for the intended use. If buyer repackages this product, it is the user's responsibility to insure proper health, safety and other necessary information is included with and/or on the container. Appropriate warnings and safe-handling procedures should be provided to handlers and users. Alteration of this document is strictly prohibited. Except to the extent required by law, re-publication or retransmission of this document, in whole or in part, is not permitted. The term, "ExxonMobil" is used for convenience, and may include any one or more of ExxonMobil Chemical Company, Exxon Mobil Corporation, or any affiliates in which they directly or indirectly hold any interest.

Internal Use Only
MHC: 0B, 0B, 0, 0, 0, 0 PPEC: A

DGN: 7077874XUS (1012017)

Copyright 2002 Exxon Mobil Corporation, All rights reserved

11.5.5 MOBIL UNIREX N2

Mobil

UNIREX N

High Temperature Bearing Grease

Product Description

UNIREX N greases are premium-quality, lithium-complex products suitable for high-temperature service in rolling-element bearings. These versatile greases can be used in a wide range of industrial applications and are particularly recommended for electric-motor lubrication.

Unirex N 2 in an NLGI No. 2 grade and is preferred in most cases for application by hand packing or by grease gun. UNIREX N 3 is an NLGI No. 3 grade often used for special applications such as sealed-for-life electric motor bearings, vertically mounted bearings, and higher-speed applications. UNIREX N greases are not intended to be used under extreme pressure conditions where extra anti-welding properties are required.

UNIREX N 2 meets the requirements of Lubricating Grease DIN 51825 - K2N - 30L and ISO L-XBDHA 2.

UNIREX N 3 meets the requirements of Lubricating Grease DIN 51825 - K3N - 20 and ISO L-XBDHA 3.

Features and Benefits

Unirex N greases exhibit excellent high and low temperature performance, resistance to water and corrosion, and long service life in a range of bearing applications.

Features	Advantages and Potential Benefits
Excellent high-temperature performance	Lithium-complex thickener resists softening / running out of bearings at temperatures up to 190°C
Outstanding grease life	Laboratory bearing rig tests show outstanding continuous lubrication performance at bearing temperatures of up to 140°C
Very good low-temperature characteristics	Start-up power requirements are low at temperatures down to at least -20°C and may be suitable at temperatures down to -30°C in those applications where torque is not limiting. Meets DIN 51825 low temperature torque requirements at -20°C.
Excellent mechanical stability	Exhibits excellent resistance to softening due to mechanical working
Excellent water and corrosion resistance	Resists water washout and protects bearings against corrosion
Excellent performance in high-speed applications	Channelling characteristics provide excellent performance in high-speed deep-groove ball bearings. Unirex N3 is recommended where DmN (mean bearing diameter X rpm) exceeds 360,000.

Applications

Because of their outstanding oxidation stability and resistance to softening at high temperatures, UNIREX N greases may be used in many applications such as oven-conveyor bearings, dryer-roller bearings, rotary steam joints, kiln-car bearings, induced-draft fan bearings, and equipment adjacent to high radiant heat such as ovens, soaking pits, etc.

UNIREX N 2 is an NLGI No. 2 grade and is preferred in most cases for application by hand-packing or by grease gun. UNIREX N 2 is recommended for the lubrication of electric motors. It is suitable for NEMA (National Electric Manufacturer's Association) Insulation Class A, B, and F motors.

UNIREX N 3 is an NLGI No. 3 grade and is used for special applications such as sealed-for-life bearings, vertically-mounted bearings, and higher-speed bearings.

Most of the uses for UNIREX N involve manual methods of application. Although UNIREX N 2 is suitable for use in automatic centralized systems, equipment served by these systems would normally not require the long-life properties of UNIREX N, since one of the functions of automatic systems is to replenish the lubricant at relatively short time intervals. UNIREX N 3 should not be used in such systems.

Regardless of the level of oxidation stability of a grease, an increase in temperature will affect the rate of oxidation and thermal deterioration. Consequently, more frequent relubrication is required at higher temperatures. For UNIREX N greases, it is recommended that relubrication intervals not exceed one week of continuous service at 175°C. As temperatures approach 190°C, relubrication intervals should be daily or every shift. Relubrication intervals will, of course, vary widely with the type of service and should be based primarily on the recommendations of the motor manufacturer.

Specifications and Approvals

Unirex N Series meets or exceeds the requirements of:	2	3
DIN 51825: (2004-06)	K2N-30L	K3N-20

Typical Properties

UNIREX N	2	3
Thickener Type	Lithium-complex	Lithium-complex
NLGI Grade	2	3
Color, Visual	Green	Green
Texture	Smooth, Buttery	Smooth, Buttery
Dropping Point, ASTM D 2265, °C	230	230
Base Oil Viscosity, ASTM D 445, cSt @ 40°C	115	115
Base Oil Viscosity Index, ASTM D 2270	95	95
Penetration, worked 60 stokes, ASTM D 217, mm/10	280	235
Penetration change after 100,000 strokes, ASTM D 217, mm/10	25	30
Oil Separation, ASTM D 6184, mass % @100°C / 30 hrs	1.5	0.6
EMCOR Corrosion , ASTM D 6138 (Distilled Water), rating	0,1	0,1
Water Washout @ 79°C, ASTM D 1264, mass %	3.7	3.5
Grease life, DIN 51821 (FE-9), L50 hrs @ 140°C	283	448

Health and Safety

Based on available information, this product is not expected to produce adverse effects on health when used for the intended application and the recommendations provided in the Material Safety Data Sheet (MSDS) are followed. MSDS's are available upon request through your sales contract office, or via the Internet. This product should not be used for purposes other than its intended use. If disposing of used product, take care to protect the environment.

Mobil, the Mobil logotype and the Pegasus design are registered trademarks of Exxon Mobil Corporation, or one of its subsidiaries.

12-2010

Exxon Mobil Corporation

ExxonMobil

Product Name: UNIREX N 2
Revision Date: 07 Jul 2009
Page 1 of 8

MATERIAL SAFETY DATA SHEET

SECTION 1 PRODUCT AND COMPANY IDENTIFICATION

PRODUCT

Product Name: **UNIREX N 2**
Product Description: Base Oil and Additives
Product Code: 2015A0207220, 644351-00, 97N713
Intended Use: Grease

COMPANY IDENTIFICATION

Supplier: **EXXON MOBIL CORPORATION**
3225 GALLOWS RD.
FAIRFAX, VA. 22037 USA

24 Hour Health Emergency	609-737-4411
Transportation Emergency Phone	800-424-9300
ExxonMobil Transportation No.	281-834-3296
Product Technical Information	800-662-4525, 800-947-9147
MSDS Internet Address	http://www.exxon.com, http://www.mobil.com

SECTION 2 COMPOSITION / INFORMATION ON INGREDIENTS

No Reportable Hazardous Substance(s) or Complex Substance(s).

SECTION 3 HAZARDS IDENTIFICATION

This material is not considered to be hazardous according to regulatory guidelines (see (M)SDS Section 15).

POTENTIAL HEALTH EFFECTS

Low order of toxicity. Excessive exposure may result in eye, skin, or respiratory irritation. High-pressure injection under skin may cause serious damage.

NFPA Hazard ID:	Health:	0	Flammability:	1	Reactivity:	0
HMIS Hazard ID:	Health:	0	Flammability:	1	Reactivity:	0

NOTE: This material should not be used for any other purpose than the intended use in Section 1 without expert advice. Health studies have shown that chemical exposure may cause potential human health risks which may vary from person to person.

SECTION 4 FIRST AID MEASURES

Inhalation

Under normal conditions of intended use, this material is not expected to be an inhalation hazard.

SKIN CONTACT

Wash contact areas with soap and water. If product is injected into or under the skin, or into any part of the body, regardless of the appearance of the wound or its size, the individual should be evaluated immediately by a physician as a surgical emergency. Even though initial symptoms from high pressure injection may be minimal or absent, early surgical treatment within the first few hours may significantly reduce the ultimate extent of injury.

EYE CONTACT

Flush thoroughly with water. If irritation occurs, get medical assistance.

Ingestion

First aid is normally not required. Seek medical attention if discomfort occurs.

SECTION 5 FIRE FIGHTING MEASURES

EXTINGUISHING MEDIA

Appropriate Extinguishing Media: Use water fog, foam, dry chemical or carbon dioxide (CO2) to extinguish flames.

Inappropriate Extinguishing Media: Straight Streams of Water

FIRE FIGHTING

Fire Fighting Instructions: Evacuate area. Prevent runoff from fire control or dilution from entering streams, sewers, or drinking water supply. Firefighters should use standard protective equipment and in enclosed spaces, self-contained breathing apparatus (SCBA). Use water spray to cool fire exposed surfaces and to protect personnel.

Hazardous Combustion Products: Smoke, Fume, Aldehydes, Sulfur Oxides, Incomplete combustion products, Oxides of carbon

FLAMMABILITY PROPERTIES

Flash Point [Method]: >200C (392F) [EST. FOR OIL, ASTM D-92 (COC)]
Flammable Limits (Approximate volume % in air): LEL: N/D UEL: N/D
Autoignition Temperature: N/D

SECTION 6 ACCIDENTAL RELEASE MEASURES

NOTIFICATION PROCEDURES

In the event of a spill or accidental release, notify relevant authorities in accordance with all applicable regulations. US regulations require reporting releases of this material to the environment which exceed the applicable reportable quantity or oil spills which could reach any waterway including intermittent dry creeks. The National Response Center can be reached at (800)424-8802.

SPILL MANAGEMENT

Land Spill: Scrape up spilled material with shovels into a suitable container for recycle or disposal.

Water Spill: Stop leak if you can do it without risk. Confine the spill immediately with booms. Warn other

shipping. Skim from surface.

Water spill and land spill recommendations are based on the most likely spill scenario for this material; however, geographic conditions, wind, temperature, (and in the case of a water spill) wave and current direction and speed may greatly influence the appropriate action to be taken. For this reason, local experts should be consulted. Note: Local regulations may prescribe or limit action to be taken.

ENVIRONMENTAL PRECAUTIONS

Prevent entry into waterways, sewers, basements or confined areas.

SECTION 7 HANDLING AND STORAGE

HANDLING

Prevent small spills and leakage to avoid slip hazard.

Static Accumulator: This material is not a static accumulator.

STORAGE

Do not store in open or unlabelled containers.

SECTION 8 EXPOSURE CONTROLS / PERSONAL PROTECTION

NOTE: Limits/standards shown for guidance only. Follow applicable regulations.

ENGINEERING CONTROLS

The level of protection and types of controls necessary will vary depending upon potential exposure conditions. Control measures to consider:

No special requirements under ordinary conditions of use and with adequate ventilation.

PERSONAL PROTECTION

Personal protective equipment selections vary based on potential exposure conditions such as applications, handling practices, concentration and ventilation. Information on the selection of protective equipment for use with this material, as provided below, is based upon intended, normal usage.

Respiratory Protection: If engineering controls do not maintain airborne contaminant concentrations at a level which is adequate to protect worker health, an approved respirator may be appropriate. Respirator selection, use, and maintenance must be in accordance with regulatory requirements, if applicable. Types of respirators to be considered for this material include:

No protection is ordinarily required under normal conditions of use and with adequate ventilation.

For high airborne concentrations, use an approved supplied-air respirator, operated in positive pressure mode. Supplied air respirators with an escape bottle may be appropriate when oxygen levels are inadequate, gas/vapor warning properties are poor, or if air purifying filter capacity/rating may be exceeded.

Hand Protection: Any specific glove information provided is based on published literature and glove manufacturer data. Glove suitability and breakthrough time will differ depending on the specific use conditions. Contact the glove manufacturer for specific advice on glove selection and breakthrough times for your use conditions. Inspect and replace worn or damaged gloves. The types of gloves to be considered for this material include:

No protection is ordinarily required under normal conditions of use.

Eye Protection: If contact is likely, safety glasses with side shields are recommended.

Skin and Body Protection: Any specific clothing information provided is based on published literature or manufacturer data. The types of clothing to be considered for this material include:

No skin protection is ordinarily required under normal conditions of use. In accordance with good industrial hygiene practices, precautions should be taken to avoid skin contact.

Specific Hygiene Measures: Always observe good personal hygiene measures, such as washing after handling the material and before eating, drinking, and/or smoking. Routinely wash work clothing and protective equipment to remove contaminants. Discard contaminated clothing and footwear that cannot be cleaned. Practice good housekeeping.

ENVIRONMENTAL CONTROLS

See Sections 6, 7, 12, 13.

SECTION 9 PHYSICAL AND CHEMICAL PROPERTIES

Typical physical and chemical properties are given below. Consult the Supplier in Section 1 for additional data.

GENERAL INFORMATION

Physical State: Solid
Form: semi-fluid
Color: green
Odor: Characteristic
Odor Threshold: N/D

IMPORTANT HEALTH, SAFETY, AND ENVIRONMENTAL INFORMATION

Relative Density (at 15 C): 0.93
Flash Point [Method]: >200C (392F) [EST. FOR OIL, ASTM D-92 (COC)]
Flammable Limits (Approximate volume % in air): LEL: N/D UEL: N/D
Autoignition Temperature: N/D
Boiling Point / Range: N/D
Vapor Density (Air = 1): N/D
Vapor Pressure: < 0.013 kPa (0.1 mm Hg) at 20 C
Evaporation Rate (N-Butyl Acetate = 1): N/D
pH: N/A
Log Pow (n-Octanol/Water Partition Coefficient): N/D
Solubility in Water: Negligible
Viscosity: 113 cSt (113 mm²/sec) at 40 C [Base oil]
Oxidizing Properties: See Sections 3, 15, 16.

OTHER INFORMATION

Freezing Point: N/D
Melting Point: >219°C (426°F)
DMSO Extract (mineral oil only), IP-346: < 3 %wt

NOTE: Most physical properties above are for the oil component in the material.

SECTION 10 STABILITY AND REACTIVITY

STABILITY: Material is stable under normal conditions.

CONDITIONS TO AVOID: Excessive heat. High energy sources of ignition.

MATERIALS TO AVOID: Strong oxidizers

HAZARDOUS DECOMPOSITION PRODUCTS: Material does not decompose at ambient temperatures.

HAZARDOUS POLYMERIZATION: Will not occur.

SECTION 11 TOXICOLOGICAL INFORMATION

ACUTE TOXICITY

Route of Exposure	Conclusion / Remarks
Inhalation	
Toxicity: No end point data.	Minimally Toxic. Based on assessment of the components.
Irritation: No end point data.	Negligible hazard at ambient/normal handling temperatures. Based on assessment of the components.
Ingestion	
Toxicity (Rat): LD50 > 5000 mg/kg	Minimally Toxic. Based on test data for structurally similar materials.
Skin	
Toxicity (Rabbit): LD50 > 5000 mg/kg	Minimally Toxic. Based on test data for structurally similar materials.
Irritation (Rabbit): Data available.	Negligible irritation to skin at ambient temperatures. Based on assessment of the components.
Eye	
Irritation (Rabbit): Data available.	May cause mild, short-lasting discomfort to eyes. Based on assessment of the components.

CHRONIC/OTHER EFFECTS

For the product itself:

Component concentrations in this formulation would not be expected to cause skin sensitization, based on tests of the components or similar formulations.

Contains:

Base oil severely refined: Not carcinogenic in animal studies. Representative material passes IP-346, Modified Ames test, and/or other screening tests. Dermal and inhalation studies showed minimal effects; lung non-specific infiltration of immune cells, oil deposition and minimal granuloma formation. Not sensitizing in test animals.

Additional information is available by request.

The following ingredients are cited on the lists below: None.

--REGULATORY LISTS SEARCHED--

1 = NTP CARC	3 = IARC 1	5 = IARC 2B
2 = NTP SUS	4 = IARC 2A	6 = OSHA CARC

SECTION 12 ECOLOGICAL INFORMATION

The information given is based on data available for the material, the components of the material, and similar materials.

ECOTOXICITY

Material -- Not expected to be harmful to aquatic organisms.

MOBILITY

Base oil component -- Low solubility and floats and is expected to migrate from water to the land. Expected to partition to sediment and wastewater solids.

PERSISTENCE AND DEGRADABILITY

Biodegradation:

Base oil component -- Expected to be inherently biodegradable

BIOACCUMULATION POTENTIAL

Base oil component -- Has the potential to bioaccumulate, however metabolism or physical properties may reduce the bioconcentration or limit bioavailability.

SECTION 13 DISPOSAL CONSIDERATIONS

Disposal recommendations based on material as supplied. Disposal must be in accordance with current applicable laws and regulations, and material characteristics at time of disposal.

DISPOSAL RECOMMENDATIONS

Product is suitable for burning in an enclosed controlled burner for fuel value or disposal by supervised incineration at very high temperatures to prevent formation of undesirable combustion products.

REGULATORY DISPOSAL INFORMATION

RCRA Information: Disposal of unused product may be subject to RCRA regulations (40 CFR 261). Disposal of the used product may also be regulated due to ignitability, corrosivity, reactivity or toxicity as determined by the Toxicity Characteristic Leaching Procedure (TCLP). Potential RCRA characteristics:
TCLP (BARIUM)

Empty Container Warning Empty Container Warning (where applicable): Empty containers may contain residue and can be dangerous. Do not attempt to refill or clean containers without proper instructions. Empty drums should be completely drained and safely stored until appropriately reconditioned or disposed. Empty containers should be taken for recycling, recovery, or disposal through suitably qualified or licensed contractor and in accordance with governmental regulations. DO NOT PRESSURISE, CUT, WELD, BRAZE, SOLDER, DRILL, GRIND, OR EXPOSE

SUCH CONTAINERS TO HEAT, FLAME, SPARKS, STATIC ELECTRICITY, OR OTHER SOURCES OF IGNITION. THEY MAY EXPLODE AND CAUSE INJURY OR DEATH.

SECTION 14 TRANSPORT INFORMATION

LAND (DOT) : Not Regulated for Land Transport

LAND (TDG) : Not Regulated for Land Transport

SEA (IMDG) : Not Regulated for Sea Transport according to IMDG-Code

AIR (IATA) : Not Regulated for Air Transport

SECTION 15 REGULATORY INFORMATION

OSHA HAZARD COMMUNICATION STANDARD: When used for its intended purposes, this material is not classified as hazardous in accordance with OSHA 29 CFR 1910.1200.

NATIONAL CHEMICAL INVENTORY LISTING: IECSC, DSL, EINECS, TSCA
Special Cases:

Inventory	Status
KECI	Restrictions Apply

EPCRA: This material contains no extremely hazardous substances.

SARA (311/312) REPORTABLE HAZARD CATEGORIES: None.

SARA (313) TOXIC RELEASE INVENTORY: This material contains no chemicals subject to the supplier notification requirements of the SARA 313 Toxic Release Program.

The following ingredients are cited on the lists below:

Chemical Name	CAS Number	List Citations
DIPHENYLAMINE	122-39-4	5

--REGULATORY LISTS SEARCHED--

1 = ACGIH ALL	6 = TSCA 5a2	11 = CA P65 REPRO	16 = MN RTK
2 = ACGIH A1	7 = TSCA 5e	12 = CA RTK	17 = NJ RTK
3 = ACGIH A2	8 = TSCA 6	13 = IL RTK	18 = PA RTK
4 = OSHA Z	9 = TSCA 12b	14 = LA RTK	19 = RI RTK
5 = TSCA 4	10 = CA P65 CARC	15 = MI 293	

Code key: CARC=Carcinogen; REPRO=Reproductive

ExxonMobil

Product Name: UNIREX N 2
Revision Date: 07 Jul 2009
Page 8 of 8

SECTION 16 OTHER INFORMATION

N/D = Not determined, N/A = Not applicable

THIS SAFETY DATA SHEET CONTAINS THE FOLLOWING REVISIONS:

Revision Changes:
Section 04: First Aid Inhalation - Header was modified.
Section 04: First Aid Ingestion - Header was modified.
Section 10 Stability and Reactivity - Header was modified.
Section 13: Disposal Recommendations - Note was modified.
Section 09: Physical State was modified.
Section 09: Color was modified.
Section 09: Evaporation Rate - Header was modified.
Section 08: Personal Protection was modified.
Section 07: Handling and Storage - Handling was modified.
Section 05: Hazardous Combustion Products was modified.
Section 09: Relative Density - Header was modified.
Section 09: Viscosity was modified.
Section 15: List Citation Table - Header was modified.
Section 15: National Chemical Inventory Listing was modified.
Section 15: OSHA Hazard Communication Standard was modified.
Hazard Identification: OSHA - May be Hazardous Statement was modified.
Section 08: Exposure limits/standards was deleted.

The information and recommendations contained herein are, to the best of ExxonMobil's knowledge and belief, accurate and reliable as of the date issued. You can contact ExxonMobil to insure that this document is the most current available from ExxonMobil. The information and recommendations are offered for the user's consideration and examination. It is the user's responsibility to satisfy itself that the product is suitable for the intended use. If buyer repackages this product, it is the user's responsibility to insure proper health, safety and other necessary information is included with and/or on the container. Appropriate warnings and safe-handling procedures should be provided to handlers and users. Alteration of this document is strictly prohibited. Except to the extent required by law, re-publication or retransmission of this document, in whole or in part, is not permitted. The term, "ExxonMobil" is used for convenience, and may include any one or more of ExxonMobil Chemical Company, Exxon Mobil Corporation, or any affiliates in which they directly or indirectly hold any interest.

Internal Use Only
MHC: 0B, 0B, 0, 0, 0, 0 PPEC: A

DGN: 2031341XUS (553418)

Copyright 2002 Exxon Mobil Corporation, All rights reserved

11.5.6 CHEVRON HYDRAULIC OIL 5606A

CHEVRON HYDRAULIC OIL 5606A

PRODUCT DESCRIPTION

Chevron Hydraulic Oil 5606A is manufactured to be used broadly as a hydraulic medium in automotive and industrial equipment operating in unusually cold conditions such as the Alaska North Slope where conventional hydraulic oils are not suitable.

CUSTOMER BENEFITS

Chevron Hydraulic Oil 5606A delivers value through:

- **Minimum viscosity change** over a wide range of operating temperatures.
- **Low pour point** permits operation at low temperatures.
- **Shear stability** for long fluid life.

FEATURES

Chevron Hydraulic Oil 5606A is manufactured from specially selected, highly refined, low viscosity and low pour point petroleum base stocks. It contains a shear resistant viscosity index improver, which provides an extremely high viscosity index. It also contains an antiwear agent and an oxidation inhibitor. It contains a red colored dye to hasten identification.

The low viscosity of the base stock used in this fluid and combined with a shear stable viscosity index improver provides the extremely high viscosity index (300+) which is critical for a lubricant or hydraulic fluid operating over the broad temperature range of -54°C to 60°C (-65°F to 140°F).

Since this is a conventional petroleum base stock, and not a synthetic, the low pour point is critical to minimize filter plugging.

In addition, the antiwear additive and foam inhibitor help prevent pump cavitation and promote long pump and servo valve life.

APPLICATIONS

Chevron Hydraulic Oil 5606A is manufactured to be used broadly as a hydraulic medium in automotive and industrial equipment operating in unusually cold conditions.

Chevron Hydraulic Oil 5606A can be used in hydraulic systems employing synthetic rubber packing and seals. It is not to be used in systems designed for castor oil-alcohol base fluids.

Chevron Hydraulic Oil 5606A is not recommended for any aviation applications. This product is designed for land use only.

Chevron Hydraulic Oil 5606A may not be suitable for extremely high shearing pumps or equipment. Refer to the service manual of the equipment to ensure that the minimum fluid viscosity requirements are met at the highest operating temperature. Please consult with your equipment manufacturer if equipment is operating outside normal operating conditions.

Do not use in high pressure systems in the vicinity of flames, sparks and hot surfaces. Use only in well ventilated areas. Keep container closed.

Product(s) manufactured in the USA.
Always confirm that the product selected is consistent with the original equipment manufacturer's recommendation for the equipment operating conditions and customer's maintenance practices.

A **Chevron** company product

16 February 2010
IO-107

©2007-2010 Chevron Products Company, San Ramon, CA. All rights reserved.
Chevron and the Chevron Hallmark are trademarks owned by Chevron Intellectual Property LLC. All other trademarks are property of their respective owners.

12-11

Chevron Hydraulic Oil 5606A – Continued

TYPICAL TEST DATA

Product Number	*247707*
MSDS Number	*818*
API Gravity	29.7
Viscosity, Kinematic cSt at -40°C cSt at 40°C cSt at 100°C	 510 15.0 5.5
Viscosity, Saybolt SUS at 100°F SUS at 210°F	 80 45
Viscosity Index	300+
Flash Point, °C(°F)	82(180)
Pour Point, °C(°F)	-63(-81)

Minor variations in product typical test data are to be expected in normal manufacturing.

Always confirm that the product selected is consistent with the original equipment manufacturer's recommendation for the equipment operating conditions and customer's maintenance practices.

16 February 2010
IO-107

12-12

Material Safety Data Sheet

SECTION 1 PRODUCT AND COMPANY IDENTIFICATION

Chevron Hydraulic Oil 5606A

Product Use: Hydraulic Oil
Product Number(s): CPS247707
Synonyms: Chevron Aviation Hydraulic Fluid A, Chevron Hydraulic Oil 5606A
Company Identification
Chevron Products Company
a division of Chevron U.S.A. Inc.
6001 Bollinger Canyon Rd.
San Ramon, CA 94583
United States of America
www.chevronlubricants.com

Transportation Emergency Response
CHEMTREC: (800) 424-9300 or (703) 527-3887
Health Emergency
Chevron Emergency Information Center: Located in the USA. International collect calls accepted. (800) 231-0623 or (510) 231-0623
Product Information
email : lubemsds@chevron.com
Product Information: (800) LUBE TEK

SECTION 2 COMPOSITION/ INFORMATION ON INGREDIENTS

COMPONENTS	CAS NUMBER	AMOUNT
Distillates, hydrotreated light	64742-47-8	70 - 90 %weight
Highly refined mineral oil (C15 - C50)	Mixture	10 - 20 %weight
2,6-DI-TERT-BUTYLPHENOL	128-39-2	< 1 %weight

SECTION 3 HAZARDS IDENTIFICATION

****

EMERGENCY OVERVIEW

- COMBUSTIBLE LIQUID AND VAPOR
- MAY CAUSE LUNG DAMAGE IF SWALLOWED
- HARMFUL TO AQUATIC ORGANISMS. MAY CAUSE LONG-TERM ADVERSE EFFECTS IN THE AQUATIC ENVIRONMENT

****

IMMEDIATE HEALTH EFFECTS
Eye: Not expected to cause prolonged or significant eye irritation.

Skin: Skin contact may cause drying or defatting of the skin. Contact with the skin is not expected to cause an allergic skin response. Symptoms may include pain, itching, discoloration, swelling, and blistering. Not expected to be harmful to internal organs if absorbed through the skin. High-Pressure Equipment Information: Accidental high-velocity injection under the skin of materials of this type may result in serious injury. Seek medical attention at once should an accident like this occur. The initial wound at the injection site may not appear to be serious at first; but, if left untreated, could result in disfigurement or amputation of the affected part.

Ingestion: Because of its low viscosity, this material can directly enter the lungs, if swallowed, or if subsequently vomited. Once in the lungs it is very difficult to remove and can cause severe injury or death.
Inhalation: Not expected to be harmful if inhaled. Contains a petroleum-based mineral oil. May cause respiratory irritation or other pulmonary effects following prolonged or repeated inhalation of oil mist at airborne levels above the recommended mineral oil mist exposure limit. Symptoms of respiratory irritation may include coughing and difficulty breathing.

SECTION 4 FIRST AID MEASURES

Eye: No specific first aid measures are required. As a precaution, remove contact lenses, if worn, and flush eyes with water.
Skin: Wash skin with water immediately and remove contaminated clothing and shoes. Get medical attention if any symptoms develop. To remove the material from skin, use soap and water. Discard contaminated clothing and shoes or thoroughly clean before reuse.
Ingestion: If swallowed, get immediate medical attention. Do not induce vomiting. Never give anything by mouth to an unconscious person.
Inhalation: No specific first aid measures are required. If exposed to excessive levels of material in the air, move the exposed person to fresh air. Get medical attention if coughing or respiratory discomfort occurs.
Note to Physicians: Ingestion of this product or subsequent vomiting may result in aspiration of light hydrocarbon liquid, which may cause pneumonitis. In an accident involving high-pressure equipment, this product may be injected under the skin. Such an accident may result in a small, sometimes bloodless, puncture wound. However, because of its driving force, material injected into a fingertip can be deposited into the palm of the hand. Within 24 hours, there is usually a great deal of swelling, discoloration, and intense throbbing pain. Immediate treatment at a surgical emergency center is recommended.

SECTION 5 FIRE FIGHTING MEASURES

Leaks/ruptures in high pressure system using materials of this type can create a fire hazard when in the vicinity of ignition sources (eg. open flame, pilot lights, sparks, or electric arcs). See Section 7 for proper handling and storage.

FIRE CLASSIFICATION:
OSHA Classification (29 CFR 1910.1200): Combustible liquid.

NFPA RATINGS: Health: 1 Flammability: 2 Reactivity: 0

FLAMMABLE PROPERTIES:
Flashpoint: (Pensky-Martens Closed Cup) 80 °C (176 °F) Minimum
Autoignition: No data available
Flammability (Explosive) Limits (% by volume in air): Lower: Not Applicable Upper: Not Applicable

EXTINGUISHING MEDIA: Use water fog, foam, dry chemical or carbon dioxide (CO2) to extinguish flames.

PROTECTION OF FIRE FIGHTERS:
Fire Fighting Instructions: For fires involving this material, do not enter any enclosed or confined fire space without proper protective equipment, including self-contained breathing apparatus.
Combustion Products: Highly dependent on combustion conditions. A complex mixture of airborne solids, liquids, and gases including carbon monoxide, carbon dioxide, and unidentified organic compounds will be evolved when this material undergoes combustion.

SECTION 6 ACCIDENTAL RELEASE MEASURES

Protective Measures: Eliminate all sources of ignition in the vicinity of the spill or released vapor. If this material is released into the work area, evacuate the area immediately. Monitor area with combustible gas indicator.
Spill Management: Stop the source of the release if you can do it without risk. Contain release to prevent further contamination of soil, surface water or groundwater. Clean up spill as soon as possible, observing precautions in Exposure Controls/Personal Protection. Use appropriate techniques such as applying non-combustible absorbent materials or pumping. All equipment used when handling the product must be grounded. A vapor suppressing foam may be used to reduce vapors. Use clean non-sparking tools to collect absorbed material. Where feasible and appropriate, remove contaminated soil. Place contaminated materials in disposable containers and dispose of in a manner consistent with applicable regulations.
Reporting: Report spills to local authorities and/or the U.S. Coast Guard's National Response Center at (800) 424-8802 as appropriate or required.

SECTION 7 HANDLING AND STORAGE

Precautionary Measures: Liquid evaporates and forms vapor (fumes) which can catch fire and burn with explosive force. Invisible vapor spreads easily and can be set on fire by many sources such as pilot lights, welding equipment, and electrical motors and switches. Fire hazard is greater as liquid temperature rises above 29C (85F).
DO NOT USE IN HIGH PRESSURE SYSTEMS in the vicinity of flames, sparks and hot surfaces. Use only in well ventilated areas. Keep container closed.
Do not get in eyes, on skin, or on clothing. Do not taste or swallow. Wash thoroughly after handling.
General Handling Information: Avoid contaminating soil or releasing this material into sewage and drainage systems and bodies of water.
Static Hazard: Electrostatic charge may accumulate and create a hazardous condition when handling this material. To minimize this hazard, bonding and grounding may be necessary but may not, by themselves, be sufficient. Review all operations which have the potential of generating and accumulating an electrostatic charge and/or a flammable atmosphere (including tank and container filling, splash filling, tank cleaning, sampling, gauging, switch loading, filtering, mixing, agitation, and vacuum truck operations) and use appropriate mitigating procedures. For more information, refer to OSHA Standard 29 CFR 1910.106, 'Flammable and Combustible Liquids', National Fire Protection Association (NFPA 77, 'Recommended Practice on Static Electricity', and/or the American Petroleum Institute (API) Recommended Practice 2003, 'Protection Against Ignitions Arising Out of Static, Lightning, and Stray Currents'.
General Storage Information: DO NOT USE OR STORE near heat, sparks, flames, or hot surfaces . USE AND STORE ONLY IN WELL VENTILATED AREA. Keep container closed when not in use.
Container Warnings: Container is not designed to contain pressure. Do not use pressure to empty container or it may rupture with explosive force. Empty containers retain product residue (solid, liquid, and/or vapor) and can be dangerous. Do not pressurize, cut, weld, braze, solder, drill, grind, or expose such containers to heat, flame, sparks, static electricity, or other sources of ignition. They may explode and cause injury or death. Empty containers should be completely drained, properly closed, and promptly returned to a drum reconditioner or disposed of properly.

SECTION 8 EXPOSURE CONTROLS/PERSONAL PROTECTION

GENERAL CONSIDERATIONS:

Consider the potential hazards of this material (see Section 3), applicable exposure limits, job activities, and other substances in the work place when designing engineering controls and selecting personal protective equipment. If engineering controls or work practices are not adequate to prevent exposure to harmful levels of this material, the personal protective equipment listed below is recommended. The user should read and understand all instructions and limitations supplied with the equipment since protection is usually provided for a limited time or under certain circumstances.

ENGINEERING CONTROLS:
Use in a well-ventilated area.

PERSONAL PROTECTIVE EQUIPMENT
Eye/Face Protection: No special eye protection is normally required. Where splashing is possible, wear safety glasses with side shields as a good safety practice.
Skin Protection: Wear protective clothing to prevent skin contact. Selection of protective clothing may include gloves, apron, boots, and complete facial protection depending on operations conducted. Suggested materials for protective gloves include: 4H (PE/EVAL), Nitrile Rubber, Silver Shield, Viton.
Respiratory Protection: No respiratory protection is normally required. Air-Purifying Respirator for Organic Vapors.
If user operations generate an oil mist, determine if airborne concentrations are below the occupational exposure limit for mineral oil mist. If not, wear an approved respirator that provides adequate protection from the measured concentrations of this material. For air-purifying respirators use a particulate cartridge. Use a positive pressure air-supplying respirator in circumstances where air-purifying respirators may not provide adequate protection.

Occupational Exposure Limits:

Component	Agency	TWA	STEL	Ceiling	Notation
Distillates, hydrotreated light	ACGIH	200 mg/m3	–	–	Skin A3 Total hydrocabon vapor
Highly refined mineral oil (C15 - C50)	ACGIH	5 mg/m3	10 mg/m3	–	–
Highly refined mineral oil (C15 - C50)	OSHA Z-1	5 mg/m3	–	–	–

Consult local authorities for appropriate values.

SECTION 9 PHYSICAL AND CHEMICAL PROPERTIES

Attention: the data below are typical values and do not constitute a specification.

Color: Red
Physical State: Liquid
Odor: Petroleum odor
pH: Not Applicable
Vapor Pressure: <0.01 mmHg @ 37.8 °C (100 °F)
Vapor Density (Air = 1): >4
Boiling Point: 207.2°C (405°F)
Solubility: Soluble in hydrocarbons; insoluble in water
Freezing Point: Not Applicable
Density: 0.86 kg/l - 0.9 kg/l @ 15°C (59°F)
Viscosity: 13.2 mm2/s @ 40°C (104°F) Minimum
Evaporation Rate: No data available

SECTION 10 STABILITY AND REACTIVITY

Chemical Stability: This material is considered stable under normal ambient and anticipated storage and handling conditions of temperature and pressure.
Incompatibility With Other Materials: May react with strong acids or strong oxidizing agents, such as chlorates, nitrates, peroxides, etc.
Hazardous Decomposition Products: None known (None expected)
Hazardous Polymerization: Hazardous polymerization will not occur.

SECTION 11 TOXICOLOGICAL INFORMATION

IMMEDIATE HEALTH EFFECTS
Eye Irritation: The eye irritation hazard is based on evaluation of data for similar materials or product components.
Skin Irritation: The skin irritation hazard is based on evaluation of data for similar materials or product components.
Skin Sensitization: The skin sensitization hazard is based on evaluation of data for similar materials or product components.
Acute Dermal Toxicity: The acute dermal toxicity hazard is based on evaluation of data for similar materials or product components.

Acute Oral Toxicity: The acute oral toxicity hazard is based on evaluation of data for similar materials or product components.

Acute Inhalation Toxicity: The acute inhalation toxicity hazard is based on evaluation of data for similar materials or product components.

ADDITIONAL TOXICOLOGY INFORMATION:
This product contains petroleum base oils which may be refined by various processes including severe solvent extraction, severe hydrocracking, or severe hydrotreating. None of the oils requires a cancer warning under the OSHA Hazard Communication Standard (29 CFR 1910.1200). These oils have not been listed in the National Toxicology Program (NTP) Annual Report nor have they been classified by the International Agency for Research on Cancer (IARC) as; carcinogenic to humans (Group 1), probably carcinogenic to humans (Group 2A), or possibly carcinogenic to humans (Group 2B). These oils have not been classified by the American Conference of Governmental Industrial Hygienists (ACGIH) as: confirmed human carcinogen (A1), suspected human carcinogen (A2), or confirmed animal carcinogen with unknown relevance to humans (A3).

SECTION 12 ECOLOGICAL INFORMATION

ECOTOXICITY
This material is expected to be harmful to aquatic organisms and may cause long-term adverse effects in the aquatic environment. The ecotoxicity hazard is based on an evaluation of data for the components or a similar material.

ENVIRONMENTAL FATE
Ready Biodegradability: This material is not expected to be readily biodegradable. The biodegradability of this material is based on an evaluation of data for the components or a similar material.

SECTION 13 DISPOSAL CONSIDERATIONS

Use material for its intended purpose or recycle if possible. Oil collection services are available for used oil recycling or disposal. Place contaminated materials in containers and dispose of in a manner consistent with applicable regulations. Contact your sales representative or local environmental or health authorities

for approved disposal or recycling methods.

SECTION 14 TRANSPORT INFORMATION

The description shown may not apply to all shipping situations. Consult 49CFR, or appropriate Dangerous Goods Regulations, for additional description requirements (e.g., technical name) and mode-specific or quantity-specific shipping requirements.

DOT Shipping Description: PETROLEUM LUBRICATING OIL, NOT REGULATED AS A HAZARDOUS MATERIAL FOR TRANSPORTATION UNDER 49 CFR

IMO/IMDG Shipping Description: PETROLEUM LUBRICATING OIL; NOT REGULATED AS DANGEROUS GOODS FOR TRANSPORT UNDER THE IMDG CODE

ICAO/IATA Shipping Description: PETROLEUM LUBRICATING OIL; NOT REGULATED AS DANGEROUS GOODS FOR TRANSPORT UNDER ICAO TI OR IATA DGR

SECTION 15 REGULATORY INFORMATION

EPCRA 311/312 CATEGORIES:

1.	Immediate (Acute) Health Effects:	YES
2.	Delayed (Chronic) Health Effects:	NO
3.	Fire Hazard:	YES
4.	Sudden Release of Pressure Hazard:	NO
5.	Reactivity Hazard:	NO

REGULATORY LISTS SEARCHED:

01-1=IARC Group 1	03=EPCRA 313
01-2A=IARC Group 2A	04=CA Proposition 65
01-2B=IARC Group 2B	05=MA RTK
02=NTP Carcinogen	06=NJ RTK
	07=PA RTK

No components of this material were found on the regulatory lists above.

CHEMICAL INVENTORIES:
All components comply with the following chemical inventory requirements: AICS (Australia), DSL (Canada), EINECS (European Union), IECSC (China), KECI (Korea), PICCS (Philippines), TSCA (United States).

One or more components does not comply with the following chemical inventory requirements: ENCS (Japan).

NEW JERSEY RTK CLASSIFICATION:
Under the New Jersey Right-to-Know Act L. 1983 Chapter 315 N.J.S.A. 34:5A-1 et. seq., the product is to be identified as follows: PETROLEUM OIL (Hydraulic oil)

WHMIS CLASSIFICATION:
Class B, Division 3: Combustible Liquids

SECTION 16 OTHER INFORMATION

NFPA RATINGS: Health: 1 Flammability: 2 Reactivity: 0

HMIS RATINGS: Health: 2 Flammability: 2 Reactivity: 0
(0-Least, 1-Slight, 2-Moderate, 3-High, 4-Extreme, PPE:- Personal Protection Equipment Index recommendation, *- Chronic Effect Indicator). These values are obtained using the guidelines or published evaluations prepared by the National Fire Protection Association (NFPA) or the National Paint and Coating Association (for HMIS ratings).

LABEL RECOMMENDATION:
Label Category : INDUSTRIAL OIL 4 - IND4, COMBUSTIBLE 1 - COM1

REVISION STATEMENT: This revision updates the following sections of this Material Safety Data Sheet: 1-16
Revision Date: AUGUST 14, 2012

ABBREVIATIONS THAT MAY HAVE BEEN USED IN THIS DOCUMENT:

TLV - Threshold Limit Value	TWA - Time Weighted Average
STEL - Short-term Exposure Limit	PEL - Permissible Exposure Limit
	CAS - Chemical Abstract Service Number
ACGIH - American Conference of Governmental Industrial Hygienists	IMO/IMDG - International Maritime Dangerous Goods Code
API - American Petroleum Institute	MSDS - Material Safety Data Sheet
CVX - Chevron	NFPA - National Fire Protection Association (USA)
DOT - Department of Transportation (USA)	NTP - National Toxicology Program (USA)
IARC - International Agency for Research on Cancer	OSHA - Occupational Safety and Health Administration

Prepared according to the OSHA Hazard Communication Standard (29 CFR 1910.1200) and the ANSI MSDS Standard (Z400.1) by the Chevron Energy Technology Company, 100 Chevron Way, Richmond, California 94802.

The above information is based on the data of which we are aware and is believed to be correct as of the date hereof. Since this information may be applied under conditions beyond our control and with which we may be unfamiliar and since data made available subsequent to the date hereof may suggest modifications of the information, we do not assume any responsibility for the results of its use. This information is furnished upon condition that the person receiving it shall make his own determination of the suitability of the material for his particular purpose.

11.5.7 MOBIL SHC 634

Mobil

Mobil SHC 600 Series

Supreme Performance Gear and Bearing Oils

Product Description

Mobil SHC 600 Series lubricants are supreme performance gear and bearing oils designed to provide outstanding service in terms of equipment protection, oil life and problem-free operation enabling increased customer productivity. These scientifically engineered oils are formulated from base fluids with an inherently high viscosity index and a unique, proprietary, additive system which enables these products to provide outstanding performance in extreme service applications at high and low temperatures, well beyond the capabilities of mineral oils. These products are resistant to mechanical shear, even in heavily loaded gear and high shear bearing applications, so that there is virtually no loss of viscosity.

The Mobil SHC 600 Series products have low traction coefficients, which derive from the molecular structure of the base stocks used. This results in low fluid friction in the load zone of non-conforming surfaces such as gears and rolling contact bearings. Low fluid friction produces lower operating temperatures and improved gear efficiency, which translates into reduced power consumption. It also results in extended parts life and allows for more economical equipment design. The base oils used in the Mobil SHC 600 Series have outstanding response to antioxidant additives resulting in superior resistance to oxidation and sludging, especially at high temperatures. The additive combination used in these oils also provides exceptional resistance to rusting and corrosion, very good antiwear, demulsibility, foam control and air release properties, as well as multimetal compatibility. The Mobil SHC 600 Series oils are also compatible with the same seal and other construction materials used in equipment normally lubricated with mineral oils.

The leading edge technology on which Mobil SHC 600 Series lubricants have always been based has made these the products of choice for operators of a wide range of equipment, worldwide. While initially recognized as a high temperature problem solver, these products are now used in many industrial applications because of the range of benefits they offer.

Features and Benefits

The Mobil SHC brand of lubricants are recognized and appreciated around the world for their innovation and outstanding performance. These molecular designed synthetic products, pioneered by our research scientists, symbolize the continuing commitment to using advanced technology to provide outstanding lubricant products. A key factor in the development of Mobil SHC 600 Series were the close contacts between our scientists and application specialists with key OEMs to ensure that our product offerings will provide exceptional performance in the continually evolving industrial equipment designs.

Our work with equipment builders has helped confirm the results from our own laboratory tests showing the exceptional performance of the Mobil SHC 600 Series lubricants. Not least among the benefits, shown in work with OEMs, is the potential for significant efficiency improvements in changing from mineral oil. These benefits are particularly evident in equipment which, by design, cannot avoid low overall efficiency, such as high ratio worm gears.

To combat high thermal exposure of the oil, our product formulation scientists chose select base oils for Mobil SHC 600 Series oils because of their exceptional thermal/oxidative resistance potential. Our formulators chose specific additives which would maximize the benefits of the base oils to provide excellent oil life and deposit control and resistance to thermal/oxidative and chemical degradation. This formulation approach provides low temperature fluidity characteristics unmatched by mineral products and is a key benefit for remote, low ambient temperature applications. The Mobil SHC 600 Series oils offer the following features and potential benefits:

Features	Advantages and Potential Benefits
Superb high temperature thermal/oxidation resistance	Extends equipment high temperature operating capability
	Long oil life, reduced need and costs for oil change outs
	Minimizes sludge and deposits for trouble-free operation and long filter life
High Viscosity Index and absence of wax	Maintains viscosity and film thickness at high temperatures

High viscosity index and absence of wax	Maintains viscosity and film thickness at high temperatures
	Exceptional low temperature performance, including start-up
Low traction coefficient	Reduces overall friction and can increase efficiency in sliding mechanisms such as gearing, with potential for reduced power consumption and lower steady-state operating temperatures.
	Minimizes effects of micro slip in rolling contact bearings for longer rolling-element life potential
High load carrying capability	Protects equipment and extends life; minimizes unexpected downtime and extends service periods
Balanced additive combination	Provides excellent performance in terms of rust and corrosion prevention, water separability, foam control, air release performance ensuring problem-free operation in a wide range of industrial applications and reduced operating costs

Applications

While Mobil SHC 600 Series are compatible with mineral oil based products, admixture may detract from their performance. Consequently it is recommended that before changing a system to one of the Mobil SHC 600 Series, it should be thoroughly cleaned out and flushed to achieve the maximum performance benefits. The Mobil SHC 600 Series oils are compatible with the following seal materials: fluorocarbon, polyacrylate, polyurethane ether, some silicone, ethylene/acrylic, chlorinated polyethylene, polysulfide, and some nitrile rubbers. There is the potential for substantial variations in the elastomers being used today. For best results, consult your equipment supplier, seal manufacturer, or your local Mobil representative to verify compatibility.

Mobil SHC 600 Series lubricants are recommended for use in a wide variety of gear and bearing applications where high or low temperatures are encountered or where operating temperatures or bulk oil temperatures are such that conventional lubricants give unsatisfactory life, or where improved efficiency is needed. They are particularly effective in applications where the maintenance costs of component replacement, system cleaning and lubricant changes are high. Specific applications include:

- Filled for life gearboxes, especially high ratio/ low-efficiency worm gears
- Remotely located gearboxes, where oil change-out is difficult
- Low temperature applications, such as ski lifts where seasonal oil changes can be avoided
- Mixer roll bearings and roll neck bearings where high temperatures are encountered
- Plastic calendars
- Severe centrifuge applications, including marine centrifuges
- Railroad A/C Traction Drives
- Mobil SHC 625*, 627, 629 and 630 are suitable for Oil Flooded Rotary Screw Compressors compressing natural gas, field gas gathering, CO_2 and other process gasses used in the natural gas industry

Specifications and Approvals

Mobil SHC 600 Series has the following builder approvals:	624	625	626	627	629	630	632	634	636	639
ABB TURBO HZTL 90572			X							
ABB TURBO HZTL 90617			X							
CINCINNATI MACHINE P-34									X	
CINCINNATI MACHINE P-35								X		
CINCINNATI MACHINE P-59							X			

P-59							X			
CINCINNATI MACHINE P-74						X				
CINCINNATI MACHINE P-78										X
CINCINNATI MACHINE P-80			X							
FLENDER BA 7300 table A					X					X
FLENDER BA 7300 table A and C						X	X	X		

Typical Properties

Mobil SHC 600 Series	624	625 (1)	626	627	629	630	632	634	636	639
ISO Viscosity Grade	32	46	68	100	150	220	320	460	680	1000
Viscosity, ASTM D 445										
cSt @ 40° C	31.0	46.0	66.0	97.0	149	222	320	454	652	968
cSt @ 100° C	5.8	7.7	10.3	13.7	19.0	25.7	35.0	46.5	61.2	78.5
Viscosity Index, ASTM D 2270	133	136	144	144	144	147	154	161	163	159
Pour Point, °C, ASTM D 97	-51	-48	-48	-45	-45	-42	-40	-40	-39	-33
Flash Point, °C, ASTM D 92	237	242	231	228	235	240	236	234	240	235
Specific Gravity, ASTM D 4052, 15° C/15° C	0.85	0.85	0.86	0.86	0.86	0.87	0.87	0.87	0.87	0.87
Appearance, visual	Orange	Orange	Orange	Orange	Orange	Orange	Orange	Orange	Orange	Orange
TOST, ASTM D 943, Hours to 2 NN	10,000+	10,000+	10,000+	10,000+	10,000+	10,000+	10,000+	10,000+	10,000+	10,000+
RBOT, ASTM D 2272, min.	1750	1750	1750	1750	1750	1750	1750	1750	1750	1750
Rust protection, ASTM D665, Sea Water	Pass	Pass	Pass	Pass	Pass	Pass	Pass	Pass	Pass	Pass
Water Seperability, ASTM D 1401,Min. to 37 ml water @ 54° C	20	20	20	-	-	-	-	-	-	-
Water Seperability, ASTM D 1401,Min. to 37 ml water @ 82° C	-	-	-	15	15	15	25	25	30	40
Copper Corrosion, ASTM D130, 24 hrs @ 121° C	1B	1B	1B	1B	1B	1B	1B	1B	1B	1B
Foam Test, ASTM D 892, Seq I,II,IIITendency / Stability, ml/ml	0/0, 20/0, 0/0	0/0, 0/0, 0/0	0/0, 0/0, 0/0	0/0, 0/0,0/0	0/0, 0/0,0/0	0/0, 0/0,0/0	0/0,0/0,0/0	0/0, 20/0,0/0	0/0,0/0,0/0	0/0, 0/0, 0/0
FZG scuffing test, DIN 51534 (mod), A/16.6/90, Failure Stage	10	11	11	13	13	13+	13+	13+	13+	13+
(1) 625 is available only in the USA										

Health and Safety

Based on available information, this product is not expected to produce adverse effects on health when used for the intended application and the recommendations provided in the Material Safety Data Sheet (MSDS) are followed. MSDS's are available upon request through your sales contract office, or via the Internet. This product should not be used for purposes other than its intended use. If disposing of used product, take care to protect the environment.

All products may not be available locally.

Note for Canadian users: Mobil SHC 600 Series is not controlled under Canadian WHMIS legislation.

The Mobil logotype, the Pegasus design and SHC are trademarks of ExxonMobil Corporation, or one of its subsidiaries.

11-2010

Exxon Mobil Corporation
3225 Gallows Road
Fairfax, VA 22037

1-800-ASK MOBIL (275-6624)

Typical Properties are typical of those obtained with normal production tolerance and do not constitute a specification. Variations that do not affect product performance are to be expected during normal manufacture and at different blending locations. The information contained herein is subject to change without notice. All products may not be available locally. For more information, contact your local ExxonMobil contact or visit www.exxonmobil.com
ExxonMobil is comprised of numerous affiliates and subsidiaries, many with names that include Esso, Mobil, or ExxonMobil. Nothing in this document is intended to override or supersede the corporate separateness of local entities. Responsibility for local action and accountability remains with the local ExxonMobil-affiliate entities.

Copyright © 2001-2013 Exxon Mobil Corporation. All rights reserved..

ExxonMobil

Product Name: MOBIL SHC 634
Revision Date: 11 May 2012
Page 1 of 9

MATERIAL SAFETY DATA SHEET

SECTION 1 PRODUCT AND COMPANY IDENTIFICATION

PRODUCT

Product Name: **MOBIL SHC 634**
Product Description: Synthetic Base Stocks and Additives
Product Code: 201560500570, 602912-00, 970321
Intended Use: Circulating/gear oil

COMPANY IDENTIFICATION

Supplier: **EXXON MOBIL CORPORATION**
3225 GALLOWS RD.
FAIRFAX, VA. 22037 USA

24 Hour Health Emergency	609-737-4411
Transportation Emergency Phone	800-424-9300
ExxonMobil Transportation No.	281-834-3296
Product Technical Information	800-662-4525, 800-947-9147
MSDS Internet Address	http://www.exxon.com, http://www.mobil.com

SECTION 2 COMPOSITION / INFORMATION ON INGREDIENTS

No Reportable Hazardous Substance(s) or Complex Substance(s).

SECTION 3 HAZARDS IDENTIFICATION

This material is not considered to be hazardous according to regulatory guidelines (see (M)SDS Section 15).

POTENTIAL HEALTH EFFECTS

Low order of toxicity. Excessive exposure may result in eye, skin, or respiratory irritation. High-pressure injection under skin may cause serious damage.

NFPA Hazard ID:	Health:	0	Flammability:	1	Reactivity:	0
HMIS Hazard ID:	Health:	0	Flammability:	1	Reactivity:	0

NOTE: This material should not be used for any other purpose than the intended use in Section 1 without expert advice. Health studies have shown that chemical exposure may cause potential human health risks which may vary from person to person.

SECTION 4 FIRST AID MEASURES

INHALATION

Remove from further exposure. For those providing assistance, avoid exposure to yourself or others. Use

adequate respiratory protection. If respiratory irritation, dizziness, nausea, or unconsciousness occurs, seek immediate medical assistance. If breathing has stopped, assist ventilation with a mechanical device or use mouth-to-mouth resuscitation.

SKIN CONTACT

Wash contact areas with soap and water. If product is injected into or under the skin, or into any part of the body, regardless of the appearance of the wound or its size, the individual should be evaluated immediately by a physician as a surgical emergency. Even though initial symptoms from high pressure injection may be minimal or absent, early surgical treatment within the first few hours may significantly reduce the ultimate extent of injury.

EYE CONTACT

Flush thoroughly with water. If irritation occurs, get medical assistance.

INGESTION

First aid is normally not required. Seek medical attention if discomfort occurs.

SECTION 5 FIRE FIGHTING MEASURES

EXTINGUISHING MEDIA

Appropriate Extinguishing Media: Use water fog, foam, dry chemical or carbon dioxide (CO2) to extinguish flames.

Inappropriate Extinguishing Media: Straight Streams of Water

FIRE FIGHTING

Fire Fighting Instructions: Evacuate area. Prevent runoff from fire control or dilution from entering streams, sewers, or drinking water supply. Firefighters should use standard protective equipment and in enclosed spaces, self-contained breathing apparatus (SCBA). Use water spray to cool fire exposed surfaces and to protect personnel.

Hazardous Combustion Products: Smoke, Fume, Aldehydes, Sulfur oxides, Incomplete combustion products, Oxides of carbon

FLAMMABILITY PROPERTIES

Flash Point [Method]: >210°C (410°F) [ASTM D-92]
Flammable Limits (Approximate volume % in air): LEL: 0.9 UEL: 7.0
Autoignition Temperature: N/D

SECTION 6 ACCIDENTAL RELEASE MEASURES

NOTIFICATION PROCEDURES

In the event of a spill or accidental release, notify relevant authorities in accordance with all applicable regulations. US regulations require reporting releases of this material to the environment which exceed the applicable reportable quantity or oil spills which could reach any waterway including intermittent dry creeks. The National Response Center can be reached at (800)424-8802.

PROTECTIVE MEASURES

Avoid contact with spilled material. See Section 5 for fire fighting information. See the Hazard Identification Section for Significant Hazards. See Section 4 for First Aid Advice. See Section 8 for advice on the minimum requirements for personal protective equipment. Additional protective measures may be necessary, depending on the specific circumstances and/or the expert judgment of the emergency responders.

SPILL MANAGEMENT

Land Spill: Stop leak if you can do it without risk. Recover by pumping or with suitable absorbent.

Water Spill: Stop leak if you can do it without risk. Confine the spill immediately with booms. Warn other shipping. Remove from the surface by skimming or with suitable absorbents. Seek the advice of a specialist before using dispersants.

Water spill and land spill recommendations are based on the most likely spill scenario for this material; however, geographic conditions, wind, temperature, (and in the case of a water spill) wave and current direction and speed may greatly influence the appropriate action to be taken. For this reason, local experts should be consulted. Note: Local regulations may prescribe or limit action to be taken.

ENVIRONMENTAL PRECAUTIONS

Large Spills: Dike far ahead of liquid spill for later recovery and disposal. Prevent entry into waterways, sewers, basements or confined areas.

SECTION 7 HANDLING AND STORAGE

HANDLING

Prevent small spills and leakage to avoid slip hazard. Material can accumulate static charges which may cause an electrical spark (ignition source). When the material is handled in bulk, an electrical spark could ignite any flammable vapors from liquids or residues that may be present (e.g., during switch-loading operations). Use proper bonding and/or ground procedures. However, bonding and grounds may not eliminate the hazard from static accumulation. Consult local applicable standards for guidance. Additional references include American Petroleum Institute 2003 (Protection Against Ignitions Arising out of Static, Lightning and Stray Currents) or National Fire Protection Agency 77 (Recommended Practice on Static Electricity) or CENELEC CLC/TR 50404 (Electrostatics - Code of practice for the avoidance of hazards due to static electricity).

Static Accumulator: This material is a static accumulator.

STORAGE

The container choice, for example storage vessel, may effect static accumulation and dissipation. Do not store in open or unlabelled containers.

SECTION 8 EXPOSURE CONTROLS / PERSONAL PROTECTION

Exposure limits/standards for materials that can be formed when handling this product: When mists/aerosols can occur the following are recommended: 5 mg/m³ - ACGIH TLV (inhalable fraction), 5 mg/m³ - OSHA PEL.

NOTE: Limits/standards shown for guidance only. Follow applicable regulations.

ENGINEERING CONTROLS

The level of protection and types of controls necessary will vary depending upon potential exposure conditions. Control measures to consider:
No special requirements under ordinary conditions of use and with adequate ventilation.

PERSONAL PROTECTION

Personal protective equipment selections vary based on potential exposure conditions such as applications, handling practices, concentration and ventilation. Information on the selection of protective equipment for use with this material, as provided below, is based upon intended, normal usage.

Respiratory Protection: If engineering controls do not maintain airborne contaminant concentrations at a level which is adequate to protect worker health, an approved respirator may be appropriate. Respirator selection, use, and maintenance must be in accordance with regulatory requirements, if applicable. Types of respirators to be considered for this material include:
No special requirements under ordinary conditions of use and with adequate ventilation.

For high airborne concentrations, use an approved supplied-air respirator, operated in positive pressure mode. Supplied air respirators with an escape bottle may be appropriate when oxygen levels are inadequate, gas/vapor warning properties are poor, or if air purifying filter capacity/rating may be exceeded.

Hand Protection: Any specific glove information provided is based on published literature and glove manufacturer data. Glove suitability and breakthrough time will differ depending on the specific use conditions. Contact the glove manufacturer for specific advice on glove selection and breakthrough times for your use conditions. Inspect and replace worn or damaged gloves. The types of gloves to be considered for this material include:
No protection is ordinarily required under normal conditions of use.

Eye Protection: If contact is likely, safety glasses with side shields are recommended.

Skin and Body Protection: Any specific clothing information provided is based on published literature or manufacturer data. The types of clothing to be considered for this material include:
No skin protection is ordinarily required under normal conditions of use. In accordance with good industrial hygiene practices, precautions should be taken to avoid skin contact.

Specific Hygiene Measures: Always observe good personal hygiene measures, such as washing after handling the material and before eating, drinking, and/or smoking. Routinely wash work clothing and protective equipment to remove contaminants. Discard contaminated clothing and footwear that cannot be cleaned. Practice good housekeeping.

ENVIRONMENTAL CONTROLS

Comply with applicable environmental regulations limiting discharge to air, water and soil. Protect the environment by applying appropriate control measures to prevent or limit emissions.

SECTION 9 PHYSICAL AND CHEMICAL PROPERTIES

Note: Physical and chemical properties are provided for safety, health and environmental considerations only

and may not fully represent product specifications. Contact the Supplier for additional information.

GENERAL INFORMATION

Physical State: Liquid
Color: Orange
Odor: Characteristic
Odor Threshold: N/D

IMPORTANT HEALTH, SAFETY, AND ENVIRONMENTAL INFORMATION

Relative Density (at 15 °C): 0.869
Flash Point [Method]: >210°C (410°F) [ASTM D-92]
Flammable Limits (Approximate volume % in air): LEL: 0.9 UEL: 7.0
Autoignition Temperature: N/D
Boiling Point / Range: > 316°C (600°F)
Vapor Density (Air = 1): > 2 at 101 kPa
Vapor Pressure: < 0.013 kPa (0.1 mm Hg) at 20 °C
Evaporation Rate (n-butyl acetate = 1): N/D
pH: N/A
Log Pow (n-Octanol/Water Partition Coefficient): > 3.5
Solubility in Water: Negligible
Viscosity: 460 cSt (460 mm2/sec) at 40 °C
Oxidizing Properties: See Hazards Identification Section.

OTHER INFORMATION

Freezing Point: N/D
Melting Point: N/A
Pour Point: -30°C (-22°F)

SECTION 10 STABILITY AND REACTIVITY

STABILITY: Material is stable under normal conditions.

CONDITIONS TO AVOID: Excessive heat. High energy sources of ignition.

MATERIALS TO AVOID: Strong oxidizers

HAZARDOUS DECOMPOSITION PRODUCTS: Material does not decompose at ambient temperatures.

HAZARDOUS POLYMERIZATION: Will not occur.

SECTION 11 TOXICOLOGICAL INFORMATION

ACUTE TOXICITY

Route of Exposure	Conclusion / Remarks
Inhalation	
Toxicity (Rat): LC50 > 5000 mg/m3	Minimally Toxic. Based on test data for structurally similar materials.
Irritation: No end point data.	Negligible hazard at ambient/normal handling temperatures. Based on assessment of the components.
Ingestion	

Toxicity (Rat): LD50 > 5000 mg/kg	Minimally Toxic. Based on test data for structurally similar materials.
Skin	
Toxicity (Rabbit): LD50 > 5000 mg/kg	Minimally Toxic. Based on test data for structurally similar materials.
Irritation (Rabbit): Data available.	Negligible irritation to skin at ambient temperatures. Based on test data for structurally similar materials.
Eye	
Irritation (Rabbit): Data available.	May cause mild, short-lasting discomfort to eyes. Based on test data for structurally similar materials.

CHRONIC/OTHER EFFECTS

Contains:

Synthetic base oils: Not expected to cause significant health effects under conditions of normal use, based on laboratory studies with the same or similar materials. Not mutagenic or genotoxic. Not sensitizing in test animals and humans.

Additional information is available by request.

The following ingredients are cited on the lists below: None.

--REGULATORY LISTS SEARCHED--

1 = NTP CARC	3 = IARC 1	5 = IARC 2B
2 = NTP SUS	4 = IARC 2A	6 = OSHA CARC

SECTION 12 ECOLOGICAL INFORMATION

The information given is based on data available for the material, the components of the material, and similar materials.

ECOTOXICITY

Material -- Not expected to be harmful to aquatic organisms.
Material -- Not expected to demonstrate chronic toxicity to aquatic organisms.

MOBILITY

Base oil component -- Low solubility and floats and is expected to migrate from water to the land. Expected to partition to sediment and wastewater solids.

SECTION 13 DISPOSAL CONSIDERATIONS

Disposal recommendations based on material as supplied. Disposal must be in accordance with current applicable laws and regulations, and material characteristics at time of disposal.

DISPOSAL RECOMMENDATIONS

Product is suitable for burning in an enclosed controlled burner for fuel value or disposal by supervised incineration at very high temperatures to prevent formation of undesirable combustion products. Protect the environment. Dispose of used oil at designated sites. Minimize skin contact. Do not mix used oils with solvents, brake fluids or coolants.

REGULATORY DISPOSAL INFORMATION

RCRA Information: The unused product, in our opinion, is not specifically listed by the EPA as a hazardous waste (40 CFR, Part 261D), nor is it formulated to contain materials which are listed as hazardous wastes. It does not exhibit the hazardous characteristics of ignitability, corrositivity or reactivity and is not formulated with contaminants as determined by the Toxicity Characteristic Leaching Procedure (TCLP). However, used product may be regulated.

Empty Container Warning Empty Container Warning (where applicable): Empty containers may contain residue and can be dangerous. Do not attempt to refill or clean containers without proper instructions. Empty drums should be completely drained and safely stored until appropriately reconditioned or disposed. Empty containers should be taken for recycling, recovery, or disposal through suitably qualified or licensed contractor and in accordance with governmental regulations. DO NOT PRESSURISE, CUT, WELD, BRAZE, SOLDER, DRILL, GRIND, OR EXPOSE SUCH CONTAINERS TO HEAT, FLAME, SPARKS, STATIC ELECTRICITY, OR OTHER SOURCES OF IGNITION. THEY MAY EXPLODE AND CAUSE INJURY OR DEATH.

SECTION 14 TRANSPORT INFORMATION

LAND (DOT): Not Regulated for Land Transport

LAND (TDG): Not Regulated for Land Transport

SEA (IMDG): Not Regulated for Sea Transport according to IMDG-Code

AIR (IATA): Not Regulated for Air Transport

SECTION 15 REGULATORY INFORMATION

OSHA HAZARD COMMUNICATION STANDARD: When used for its intended purposes, this material is not classified as hazardous in accordance with OSHA 29 CFR 1910.1200.

Complies with the following national/regional chemical inventory requirements:: TSCA
Special Cases:

Inventory	Status
AICS	Restrictions Apply
ELINCS	Restrictions Apply
KECI	Restrictions Apply

EPCRA: This material contains no extremely hazardous substances.

SARA (311/312) REPORTABLE HAZARD CATEGORIES: None.

SARA (313) TOXIC RELEASE INVENTORY: This material contains no chemicals subject to the supplier notification requirements of the SARA 313 Toxic Release Program.

The following ingredients are cited on the lists below:

Chemical Name	CAS Number	List Citations
PHENOL, 4,4-METHYLENEBIS(2,6-BIS(1,1-DIMETHYLETHYL)-	118-82-1	5

--REGULATORY LISTS SEARCHED--

1 = ACGIH ALL	6 = TSCA 5a2	11 = CA P65 REPRO	16 = MN RTK
2 = ACGIH A1	7 = TSCA 5e	12 = CA RTK	17 = NJ RTK
3 = ACGIH A2	8 = TSCA 6	13 = IL RTK	18 = PA RTK
4 = OSHA Z	9 = TSCA 12b	14 = LA RTK	19 = RI RTK
5 = TSCA 4	10 = CA P65 CARC	15 = MI 293	

Code key: CARC=Carcinogen; REPRO=Reproductive

SECTION 16 OTHER INFORMATION

N/D = Not determined, N/A = Not applicable

THIS SAFETY DATA SHEET CONTAINS THE FOLLOWING REVISIONS:

Revision Changes:
Section 13: Disposal Considerations - Disposal Recommendations was modified.
Section 10 Stability and Reactivity - Header was modified.
Section 13: Disposal Recommendations - Note was modified.
Section 09: Phys/Chem Properties Note was modified.
Section 09: Boiling Point C(F) was modified.
Section 09: n-Octanol/Water Partition Coefficient was modified.
Section 08: Comply with applicable regulations phrase was modified.
Section 08: Personal Protection was modified.
Section 09: Vapor Pressure was modified.
Section 07: Handling and Storage - Handling was modified.
Section 07: Handling and Storage - Storage Phrases was modified.
Section 06: Accidental Release - Spill Management - Water was modified.
Section 09: Relative Density - Header was modified.
Section 09: Flash Point C(F) was modified.
Section 09: Viscosity was modified.
Section 14: Sea (IMDG) - Header was modified.
Section 14: Air (IATA) - Header was modified.
Section 14: LAND (TDG) - Header was modified.
Section 14: LAND (DOT) - Header was modified.

ExxonMobil

Product Name: MOBIL SHC 634
Revision Date: 11 May 2012
Page 9 of 9

Section 15: List Citation Table - Header was modified.
Section 14: LAND (DOT) - Default was modified.
Section 14: LAND (TDG) Default was modified.
Section 14: Sea (IMDG) - Default was modified.
Section 14: Air (IATA) - Default was modified.
Section 15: National Chemical Inventory Listing - Header was modified.
Section 15: National Chemical Inventory Listing was modified.
Section 08: Exposure limits/standards was modified.
Section 15: Special Cases Table was modified.
Hazard Identification: OSHA - May be Hazardous Statement was modified.
Section 09: Oxidizing Properties was modified.
Section 06: Protective Measures was added.
Section 06: Accidental Release - Protective Measures - Header was added.

The information and recommendations contained herein are, to the best of ExxonMobil's knowledge and belief, accurate and reliable as of the date issued. You can contact ExxonMobil to insure that this document is the most current available from ExxonMobil. The information and recommendations are offered for the user's consideration and examination. It is the user's responsibility to satisfy itself that the product is suitable for the intended use. If buyer repackages this product, it is the user's responsibility to insure proper health, safety and other necessary information is included with and/or on the container. Appropriate warnings and safe-handling procedures should be provided to handlers and users. Alteration of this document is strictly prohibited. Except to the extent required by law, re-publication or retransmission of this document, in whole or in part, is not permitted. The term, "ExxonMobil" is used for convenience, and may include any one or more of ExxonMobil Chemical Company, Exxon Mobil Corporation, or any affiliates in which they directly or indirectly hold any interest.

Internal Use Only
MHC: 0B, 0B, 0, 0, 0, 0 PPEC: A

DGN: 2007946XUS (547900)

Copyright 2002 Exxon Mobil Corporation, All rights reserved

11.5.8 CRC TAC 2 ADHESIVE CHAIN LUBRICANT

CRC Industries, Inc.
885 Louis Drive • Warminster PA • 18974

Technical Data Sheet

TAC 2™ Adhesive Chain Lubricant

I. Product Description

CRC TAC 2™ is an exceptional lubricant, with a tough adhesive quality, which will bond to chain/wear surfaces to keep them in peak operating condition by reducing friction and wear that cause metal fatigue. **CRC TAC 2™** contains a tackifier that enables the lubricant to cling tenaciously to metal surfaces without increasing the viscosity. Regular use of **CRC TAC 2™** will help inhibit corrosion, reduce load stress and help increase chain life.

II. Applications

Recommended for use as a lubricant and corrosion inhibitor on all types of drive chains, open gears, hoists, winches, pulleys, fork lifts, rollers, garage doors, bushings, seals, o-rings, and wire ropes.

III. Features & Benefits

- **Low Viscosity**. Provides the ability to penetrate and thoroughly coat vital chain pin and bushing areas.
- **Contains Molybdenum**. Provides cling ability to avoid sling-off or excess dripping.
- **High Temperature Stability**. Operates effectively in temperatures up to 350° F continuous, equivalent to many grease products. Covers wide range of applications.
- **Blue Color** allows easy identification of lubricated parts and equipment.
- **No Known Ozone Depleting Chemicals**. Offers effective performance while complying with the EPA regulations on the use of ozone depleting chemicals.
- **M.S.D.[L.]™-Material Safety Data Label**. Provides instant access to current safety information should an accident or OSHA inspection occur. Helps comply **with OSHA Hazard Communications Standard 29 CFR 1910.1200**.

IV. Physical Properties without propellant

Flash Point	<0ºF TCC	**Boiling Point**	140°F
Odor	Mild petroleum	**Solubility**	Negligible in water
Appearance	Blue liquid	**% Volatile**	81.3%
Vapor Density	>1 (air=1)	**Specific Gravity**	0.710
VOC Content (Fed)	577.2 g/L	**Temperature Range**	350°F (Continuous)
Shelf Life	2 years	**Propellant**	Hydrocarbon
Sara Title III, Sect. 313 Chemicals	Yes		
Prop 65	No		

V. Specifications and Approvals

- NSF Registration # 144243, Category Code (H2) for use in federally inspected meat and poultry plants.

TAC 2™ Adhesive Chain Lubricant

VI. Performance Characteristics

Type of Film	Non-drying
Base Type	Organic Molybdenum
ASTM D-3233 (Falex Load Test)	1,500 lbs.

VII. Directions

1. Do not apply while equipment is energized.
2. Shake well before use.
3. Spray upper edges of overlapping chain side plates and allow lubricant to set up before re-energizing.

VIII. Package Description

Part Number	Container Size
03076	16 oz Aerosol

IX. Disposal

Disposal requirements vary by state and local jurisdiction. All used and unused product should be disposed of in conformance with local, state and federal regulations.

X. Special Use Warnings

Aerosol Cans
Do not puncture, incinerate or store above 120°F. Exposure to high temperatures may cause can to burst. Do not place in direct sunlight or near any heat source. Use only in well ventilated area. Avoid continuous breathing of vapor and spray mist. Avoid contact with skin and eyes. If ventilation is not adequate, respiratory protection should be worn. Aerosol cans will conduct electricity. Keep away from all live electrical sources including battery terminals, solenoids, electrical panels and other electronic components. Failure to observe this warning may result in serious injury from flash fire and/or electrical shock.

Bulk
Product is extremely flammable and should be kept from all flames and other ignition sources. Vapors are heavier than air and can collect in low-lying areas.

General
Use only in well ventilated area. Ventilation may be improved by opening a window or door or providing mechanical assistance. Avoid continuous breathing of vapor and spray mist. Avoid contact with skin and eyes. If ventilation is not adequate, respiratory protection should be worn. For more information regarding short term and long term exposure, review this product's Material Safety Data Sheet.

DISCLAIMER: This information is accurate to the best of CRC Industries' knowledge or obtained from sources believed by CRC to be accurate. Before using any product, read all warnings and directions on the label. All products should be tested for suitability on a particular application prior to actual use. CRC Industries, Inc. makes no representations or warranties of any kind concerning this data.

CRC Industries, Inc. *Industrial Products Division* *Warminster, PA 18974*
Technical Service: (800)521-3168 *Customer Service: (800)272-4620* *CRC On-Line: (215)442-6260*

Literature Reorder #TDS343 ***CRC On-Line # 343*** ***REV. 9/11***

CRC MATERIAL SAFETY DATA SHEET

Section 1: Product & Company Identification

Product Name: **TAC 2™ Adhesive Chain Lube** (aerosol)

Product Number (s): **03076**

Product Use: industrial chain lubricant

Manufacturer / Supplier Contact Information:

In United States:
CRC Industries, Inc.
885 Louis Drive
Warminster, PA 18974
www.crcindustries.com
1-215-674-4300 (General)
(800) 521-3168 (Technical)
(800) 272-4620 (Customer Service)

In Canada:
CRC Canada Co.
2-1246 Lorimar Drive
Mississauga, Ontario L5S 1R2
www.crc-canada.ca
1-905-670-2291

In Mexico:
CRC Industries Mexico
Av. Benito Juárez 4055 G
Colonia Orquídea
San Luís Potosí, SLP CP 78394
www.crc-mexico.com
52-444-824-1666

24-Hr Emergency – CHEMTREC: (800) 424-9300 or (703) 527-3887

Section 2: Hazards Identification

Emergency Overview

DANGER: Extremely Flammable. Harmful or Fatal if Swallowed. Contents Under Pressure.
As defined by OSHA's Hazard Communication Standard, this product is hazardous.
Appearance & Odor: Blue liquid with mild petroleum odor

Potential Health Effects:

ACUTE EFFECTS:

EYE: May cause mild irritation including stinging and redness, but does not injure eye.

SKIN: Single, brief exposures may cause mild irritation. Frequent or prolonged contact may cause more severe irritation, defatting of the skin, and dermatitis.

INHALATION: High vapor concentrations are irritating to the respiratory tract and may cause headaches, dizziness, anesthesia, drowsiness, unconsciousness, and other central nervous system effects, including death. May cause peripheral nervous system disorder and/or damage.

INGESTION: Low order of toxicity by ingestion. Main hazard is aspiration into the lungs during swallowing or vomiting. Small amounts aspirated into the respiratory system may cause bronchopneumonia or pulmonary adema, possibly progressing to death.

CHRONIC EFFECTS: Overexposure to n-hexane may cause progressive and potentially irreversible damage to the peripheral nervous system, particularly in the arms and legs.

TARGET ORGANS: Central nervous system, peripheral nervous system, respiratory system

Medical Conditions Aggravated by Exposure: skin and respiratory conditions

See Section 11 for toxicology and carcinogenicity information on product ingredients.

Page 1 of 7

Product Name: TAC 2™ Adhesive Chain Lube (aerosol)
Product Number (s): 03076

Section 3: Composition/Information on Ingredients

COMPONENT	CAS NUMBER	% by Wt.
Hexane isomers	107-83-5 / 64742-49-0	50 - 60
Liquefied petroleum gas	68476-86-8	25 - 35
Acrylic copolymer	proprietary	5 - 15
Petrolatum	8009-03-8	5 - 10
n-Hexane	110-54-3	1.6

Section 4: First Aid Measures

Eye Contact: Immediately flush with plenty of water for 15 minutes. Call a physician if irritation persists.

Skin Contact: Remove contaminated clothing and wash affected area with soap and water. Call a physician if irritation persists. Wash contaminated clothing prior to re-use.

Inhalation: Remove person to fresh air. Keep person calm. If not breathing, give artificial respiration. If breathing is difficult give oxygen. Call a physician.

Ingestion: Do NOT induce vomiting. Contact a physician immediately.

Note to Physicians: Treat symptomatically. Gastric lavage using a cuffed endotracheal tube may be performed at your discretion.

Section 5: Fire-Fighting Measures

Flammable Properties: This product is extremely flammable in accordance with aerosol flammability definitions. (See 16 CFR 1500.3(c)(6)).

Flash Point: < 0°F (TCC) Upper Explosive Limit: 9.0
Autoignition Temperature: 489°F Lower Explosive Limit: 1.7

Fire and Explosion Data:

Suitable Extinguishing Media: Class B fire extinguishers, dry chemical, foam or CO_2

Products of Combustion: Fumes, smoke and carbon monoxide

Explosion Hazards: Aerosol containers, when exposed to heat from fire, may build pressure and explode. Vapors may accumulate in a confined space and create a flammable atmosphere.

Protection of Fire-Fighters: Firefighters should wear self-contained, NIOSH-approved breathing apparatus for protection against suffocation and possible toxic decomposition products. Proper eye and skin protection should be provided. Use water spray to keep fire-exposed containers cool and to knock down vapors which may result from product decomposition. Do not spray water directly on fire; product will float and could be reignited on surface of water.

Section 6: Accidental Release Measures

Personal Precautions: Use personal protection recommended in Section 8.

Product Name: TAC 2™ Adhesive Chain Lube (aerosol)
Product Number (s): 03076

Environmental Precautions: Take precautions to prevent contamination of ground and surface waters. Do not flush into sewers or storm drains.

Methods for Containment & Clean-up: Dike area to contain spill. Remove all sources of ignition. Ventilate the area with fresh air. If in confined space or limited air circulation area, clean-up workers should wear appropriate respiratory protection. Recover or absorb spilled material using an absorbent designed for chemical spills. Place used absorbents into proper waste containers.

Section 7: Handling and Storage

Handling Procedures: Use proper grounding and bonding procedures for transferring materials. Do not use product near any source of ignition. Avoid contact with eyes and skin. Avoid breathing vapors. Use caution around energized equipment. The metal container will conduct electricity if it contacts a live source. This may result in injury to the user from electrical shock and/or flash fire. For product use instructions, please see the product label.

Storage Procedures: Store in a cool dry area out of direct sunlight. Aerosol cans must be maintained below 120 F to prevent cans from rupturing.

Aerosol Storage Level: III

Section 8: Exposure Controls/Personal Protection

Exposure Guidelines:

	OSHA		ACGIH		OTHER		
COMPONENT	TWA	STEL	TWA	STEL	TWA	SOURCE	UNIT
Hexane isomers	500(v)	1000(v)	500	1000	NE		ppm
Liquefied petroleum gas	1000	NE	1000	NE	NE		ppm
Acrylic copolymer	NE	NE	NE	NE	NE		
Petrolatum	NE	NE	NE	NE	NE		
n-Hexane	500	NE	50(s)	NE	NE		ppm
N.E. – Not Established (c) – ceiling (s) – skin (v) – vacated							

Controls and Protection:

Engineering Controls: Area should have ventilation to provide fresh air. Local exhaust ventilation is generally preferred because it can control the emissions of the contaminant at the source, preventing dispersion into the general work area. Use mechanical means if necessary to maintain vapor levels below the exposure guidelines. If working in a confined space, follow applicable OSHA regulations.

Respiratory Protection: None required for normal work where adequate ventilation is provided. If engineering controls are not feasible or if exposure exceeds the applicable exposure limits, use a NIOSH-approved cartridge respirator with organic vapor cartridge. Air monitoring is needed to determine actual employee exposure levels. Use a self-contained breathing apparatus in confined spaces and for emergencies.

Eye/face Protection: For normal conditions, wear safety glasses. Where there is reasonable probability of liquid contact, wear splash-proof goggles.

Skin Protection: Use protective gloves such as nitrile, PVC or Viton. Also, use full protective clothing if there is prolonged or repeated contact of liquid with skin.

Product Name: TAC 2™ Adhesive Chain Lube (aerosol)
Product Number (s): 03076

Section 9: Physical and Chemical Properties

Physical State: liquid
Color: blue
Odor: mild petroleum
Odor Threshold: ND
Specific Gravity: 0.710
Initial Boiling Point: 140°F
Freezing Point: < -76°F
Vapor Pressure: 160 mmHg @ 68°F
Vapor Density: > 1 (air = 1)
Evaporation Rate: fast
Solubility: negligible in water
Coefficient of water/oil distribution: ND
pH: NA
Volatile Organic Compounds: wt %: 81.3 g/L: 577.2 lbs./gal: 4.8

Section 10: Stability and Reactivity

Stability: Stable

Conditions to Avoid: Sources of ignition, temperature extremes

Incompatible Materials: Strong oxidizers

Hazardous Decomposition Products: Oxides of carbon

Possibility of Hazardous Reactions: No

Section 11: Toxicological Information

Long-term toxicological studies have not been conducted for this product. The following information is available for components of this product.

Acute Toxicity:

Component	Oral LD50 (rat)	Dermal LD50 (rabbit)	Inhalation LC50 (rat)
Hexane isomers	No data	No data	No data
Liquefied petroleum gas	No data	No data	No data
Acrylic copolymer	No data	No data	No data
Petrolatum	> 5 g/kg	> 2 g/kg	No data
n-Hexane	28,710 mg/kg	3000 mg/kg	48,000 ppm/4H

Page 4 of 7

Product Name: TAC 2™ Adhesive Chain Lube (aerosol)
Product Number (s): 03076

Chronic Toxicity:

Component	OSHA Carcinogen	IARC Carcinogen	NTP Carcinogen	Irritant	Sensitizer
Hexane isomers	No	No	No	E & S (mild)	Unknown
Liquefied petroleum gas	No	No	No	No	No
Acrylic copolymer	No	No	No	E & S (mild)	Unknown
Petrolatum	No	No	No	No	Unknown
n-Hexane	No	No	No	E, S & R (moderate)	Unknown

E – Eye S – Skin R - Respiratory

Reproductive Toxicity: No information available
Teratogenicity: No information available
Mutagenicity: No information available
Synergistic Effects: No information available

Section 12: Ecological Information

Ecological studies have not been conducted for this product. The following information is available for components of this product.

Ecotoxicity: n-hexane - 48 Hr EC50 water flea: 3.87 mg/L
96 Hr LC50 Lepomis macrochirus: 4.12 mg/L
Persistence / Degradability: No information available
Bioaccumulation / Accumulation: No information available
Mobility in Environment: No information available

Section 13: Disposal Considerations

Waste Classification: The dispensed liquid product is a RCRA hazardous waste for the characteristic of ignitability with a waste code of D001. (See 40 CFR Part 261.20 – 261.33)
Aerosol should be fully emptied and depressurized before disposal. Empty containers may be recycled.

All disposal activities must comply with federal, state, provincial and local regulations. Local regulations may be more stringent than state, provincial or national requirements.

Section 14: Transport Information

US DOT (ground): Consumer Commodity, ORM-D

ICAO/IATA (air): Consumer Commodity, ID8000, 9

IMO/IMDG (water): Aerosols, UN1950, 2.1, Limited Quantity

Special Provisions: None

Section 15: Regulatory Information

Page 5 of 7

Product Name: TAC 2™ Adhesive Chain Lube (aerosol)
Product Number (s): 03076

U.S. Federal Regulations:

Toxic Substances Control Act (TSCA):
All ingredients are either listed on the TSCA inventory or are exempt.

Comprehensive Environmental Response, Compensation and Liability Act (CERCLA):
Reportable Quantities (RQ's) exist for the following ingredients: n-hexane (5000 lbs)

Spills or releases resulting in the loss of any ingredient at or above its RQ require immediate notification to the National Response Center (800-424-8802) and to your Local Emergency Planning Committee.

Superfund Amendments Reauthorization Act (SARA) Title III:
Section 302 Extremely Hazardous Substances (EHS): None

Section 311/312 Hazard Categories:

Fire Hazard	Yes
Reactive Hazard	No
Release of Pressure	Yes
Acute Health Hazard	Yes
Chronic Health Hazard	No

Section 313 Toxic Chemicals: This product contains the following substances subject to the reporting requirements of Section 313 of Title III of the Superfund Amendments and Reauthorization Act of 1986 and 40 CFR Part 372:
n-hexane (1.6%)

Clean Air Act:
Section 112 Hazardous Air Pollutants (HAPs): n-hexane

U.S. State Regulations:

California Safe Drinking Water and Toxic Enforcement Act (Prop 65):
This product may contain the following chemicals known to the state of California to cause cancer, birth defects or other reproductive harm: None

Consumer Products VOC Regulations: This product is not regulated.

State Right to Know:

New Jersey:	75-83-2, 110-54-3, 79-29-8, 68476-86-8
Pennsylvania:	107-83-5, 75-83-2, 110-54-3, 79-29-8, 68476-86-8
Massachusetts:	107-83-5, 75-83-2, 110-54-3, 79-29-8, 68476-86-8
Rhode Island :	110-54-3, 68476-86-8

Canadian Regulations:

Controlled Products Regulations:
This product has been classified in accordance with the hazard criteria of the Controlled Products Regulations and the MSDS contains all the information required by the Controlled Products Regulations.

WHMIS Hazard Class: A, B5

Canadian DSL Inventory: All ingredients are either listed on the DSL Inventory or are exempt.

European Union Regulations:

RoHS Compliance: This product is compliant with Directive 2002/95/EC of the European Parliament and of the Council of 27 January 2003. This product does not contain any of the restricted substances as listed in Article 4(1) of the RoHS Directive.

Additional Regulatory Information: None

Page 6 of 7

Product Name: TAC 2™ Adhesive Chain Lube (aerosol)
Product Number (s): 03076

Section 16: Other Information

HMIS® (II)	
Health:	2
Flammability:	3
Reactivity:	0
PPE:	B

NFPA

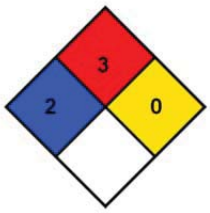

Ratings range from 0 (no hazard) to 4 (severe hazard)

Prepared By: Michelle Rudnick
CRC #: 932A/B
Revision Date: 11/11/2010

Changes since last revision: new product

The information contained in this document applies to this specific material as supplied. It may not be valid for this material if it is used in combination with any other materials. This information is accurate to the best of CRC Industries' knowledge or obtained from sources believed by CRC to be accurate. Before using any product, read all warnings and directions on the label. For further clarification of any information contained on this MSDS consult your supervisor, a health & safety professional, or CRC Industries.

ACGIH: American Conference of Governmental Industrial Hygienists
CAS: Chemical Abstract Service
CFR: Code of Federal Regulations
DOT: Department of Transportation
DSL: Domestic Substance List
g/L: grams per Liter
HMIS: Hazardous Materials Identification System
IARC: International Agency for Research on Cancer
IATA: International Air Transport Association
ICAO: International Civil Aviation Organization
IMDG: International Maritime Dangerous Goods
IMO: International Maritime Organization
lbs./gal: pounds per gallon
LC: Lethal Concentration
LD: Lethal Dose
NA: Not Applicable
ND: Not Determined
NIOSH: National Institute of Occupational Safety & Health
NFPA: National Fire Protection Association
NTP: National Toxicology Program
OSHA: Occupational Safety and Health Administration
PMCC: Pensky-Martens Closed Cup
PPE: Personal Protection Equipment
ppm: Parts per Million
RoHS: Restriction of Hazardous Substances
STEL: Short Term Exposure Limit
TCC: Tag Closed Cup
TWA: Time Weighted Average
WHMIS: Workplace Hazardous Materials Information System

Page 7 of 7

11.5.9 CRC QUICKCLEAN HEAVY DUTY DEGREASER

CRC Industries, Inc.
885 Louis Drive • Warminster PA • 18974

Technical Data Sheet
Quick Clean™
Heavy Duty Degreaser

I. Product Description

CRC Quick Clean™ is a non-flammable, chlorinated, non-ozone depleting degreaser for use on industrial equipment. It provides an economical and aggressive reduced VOC alternative to 1,1,1. It dissolves grease, oil and sludge quickly for more efficient operation of mechanical equipment. **Quick Clean™** is chemically stable, non-conductive and non-corrosive.

II. Applications

Recommended for the removal of grease, oil, grime, sludge and corrosion from motors, air tools, mechanical brakes, clutches, chains, wire rope, machinery, parts, bearings, generators, compressors, pumps, hoists, lifts, dies, molds and a wide variety of other industrial and electrical equipment. Safe for use on oxygen systems*.

III. Features & Benefits

- **Non-Flammable**. Significantly reduces the risk of fire caused by incidental contact of liquid with live equipment or solvents trapped by insulating materials.
- **Fast Evaporation**. Reduces down-time.
- **Leaves No Residue.** Prevents harmful build-up on equipment and eliminates wiping in most applications.
- **No Class I or II Ozone Depleting Chemicals**. Provides an alternative to 1,1,1-Trichloroethane products while complying with the EPA regulations on the use of ozone depleting chemicals.
- **M.S.D.[L.]™-Material Safety Data Label**. Provides instant access to current safety information should an accident or OSHA inspection occur. Helps comply **with OSHA Hazard Communications Standard 29 CFR 1910.1200**.

IV. Physical Properties without propellant

Flash Point	None	**Boiling Point**	250°F (initial)
Odor	Strong in high concentrations	**Solubility**	Slight in water
Appearance	Colorless liquid	**% Volatile**	100
Vapor Density	5.76 (air=1)	**Specific Gravity**	1.619 @ 25°C
VOC Content (Fed)	Exempt (0 g/L)	**Surface Tension**	32.32 dynes/cm
Sara Title III, Sect. 313 Chemicals	Yes	**Propellant**	CO_2
Prop 65	Yes		

V. Specifications and Approvals

- NSF K2 Registered for use in meat and poultry plants.

*Post-test and cleanliness inspection procedures should be followed before re-introduction of oxygen to the system.

Quick Clean™ Heavy Duty Degreaser

VI. Performance Characteristics

ASTM D-56 (Flash Point)	None
ASTM D-877 (Dielectric Strength)	37,500 volts
ASTM D-1130 (KB Value)	95
Surface Tension	32.32 dynes/CM

VII. Directions

- Do not use on polycarbonate plastics such as LEXAN®. If in doubt, call the manufacturer of the equipment. MAY ALSO BE HARMFUL TO OTHER PLASTICS.
- Protect all rubber parts, plastic parts, and painted surfaces from overspray. DO NOT spray directly on painted surfaces.
- Remove access plates to expose equipment interior. For hard to reach areas, use extension tube.
- Spray until clean.
- Air dry or dry with a clean, absorbent cloth.
- Heavy deposits may require scraping and repeated applications.
- **FOR PERSONAL SAFETY DO NOT APPLY WHILE EQUIPMENT IS ENERGIZED**.
- Not for use on sensitive electronic equipment such as tape decks, VCRs, computers, etc. Use a plastic safe CRC Precision Cleaner for those applications.
- Avoid contact with aluminum and its' alloys.

VIII. Package Description

Part Number	Container Size
03180	20 oz Aerosol
03183	5 Gallon Pail
03184	55 Gallon Drum

IX. Disposal

Disposal requirements vary by state and local jurisdiction. All used and unused product should be disposed of in conformance with local, state and federal regulations.

X. Special Use Warnings

Aerosol Cans
Do not puncture, incinerate or store above 120°F. Exposure to high temperatures may cause can to burst. Do not place in direct sunlight or near any heat source. Aerosol cans will conduct electricity. Keep away from all live electrical sources including battery terminals, solenoids, electrical panels and other electronic components. Failure to observe this warning may result in serious injury from flash fire and/or electrical shock.

General
Use only in well ventilated area. Ventilation may be improved by opening a window or door or providing mechanical assistance. Avoid continuous breathing of vapor and spray mist. Avoid contact with skin and eyes. If ventilation is not adequate, respiratory protection should be worn. For more information regarding short term and long term exposure, review this product's Material Safety Data Sheet.

DISCLAIMER: This information is accurate to the best of CRC Industries' knowledge or obtained from sources believed by CRC to be accurate. Before using any product, read all warnings and directions on the label. All products should be tested for suitability on a particular application prior to actual use. CRC Industries, Inc. makes no representations or warranties of any kind concerning this data.

CRC Industries, Inc. *Industrial Products Division* *Warminster, PA 18974*
Technical Service: (800)521-3168 *Customer Service: (800)272-4620* *CRC On-Line: (215)442-6260*

Literature Reorder #TDS186 ***CRC On-Line # 186*** ***REV. 11/11***

CRC MATERIAL SAFETY DATA SHEET

Section 1: Product & Company Identification

Product Name: **Quick Clean™** (aerosol)

Product Number (s): **03180**

Product Use: General purpose degreaser

Manufacturer / Supplier Contact Information:

In United States:
CRC Industries, Inc.
885 Louis Drive
Warminster, PA 18974
www.crcindustries.com
1-215-674-4300(General)
(800) 521-3168 (Technical)
(800) 272-4620 (Customer Service)

In Canada:
CRC Canada Co.
2-1246 Lorimar Drive
Mississauga, Ontario L5S 1R2
www.crc-canada.ca
1-905-670-2291

In Mexico:
CRC Industries Mexico
Av. Benito Juárez 4055 G
Colonia Orquídea
San Luís Potosí, SLP CP 78394
www.crc-mexico.com
52-444-824-1666

24-Hr Emergency – CHEMTREC: (800) 424-9300 or (703) 527-3887

Section 2: Hazards Identification

Emergency Overview

DANGER: Vapor Harmful. Contents Under Pressure.
Appearance & Odor: Colorless liquid, irritating odor at high concentrations.

Potential Health Effects:

ACUTE EFFECTS:

EYE: May cause slight temporary eye irritation. Vapors may irritate the eyes at concentrations of 100 ppm.

SKIN: Short single exposure may cause skin irritation. Prolonged exposure may cause severe skin irritation, even a burn. A single prolonged exposure is not likely to result in the material being absorbed through the skin in harmful amounts.

INHALATION: Dizziness may occur at concentrations of 200 ppm. Progressively higher levels may also cause nasal irritation, nausea, incoordination, and drunkenness. Very high levels or prolonged exposure could lead to unconsciousness and death.

INGESTION: Single dose oral toxicity is considered to be extremely low. Swallowing large amounts may cause injury if aspirated into the lungs. This may be rapidly absorbed through the lungs and result in injury to other body systems.

CHRONIC EFFECTS: Repeated contact with skin may cause drying or flaking of skin. Excessive or long term exposure to vapors may increase sensitivity to epinephrine and increase myocardial irritability.

TARGET ORGANS: Central nervous system, possibly liver and kidney

Medical Conditions Aggravated by Exposure: None known.

See Section 11 for toxicology and carcinogenicity information on product ingredients.

Page 1 of 7

Product Name: Quick Clean™ (aerosol)
Product Number (s): 03180

Section 3: Composition/Information on Ingredients

COMPONENT	CAS NUMBER	% by Wt.
Tetrachloroethylene (PERC)	127-18-4	> 95
Carbon Dioxide	124-38-9	< 5

Section 4: First Aid Measures

Eye Contact: Immediately flush with plenty of water for 15 minutes. Call a physician if irritation persists.

Skin Contact: Remove contaminated clothing and wash affected area with soap and water. Call a physician if irritation persists. Wash contaminated clothing prior to re-use.

Inhalation: Remove person to fresh air. Keep person calm. If not breathing, give artificial respiration. If breathing is difficult give oxygen. Call a physician.

Ingestion: Do NOT induce vomiting. Call a physician immediately.

Note to Physicians: Because rapid absorption may occur through lungs if aspirated and cause systemic effects, the decision of whether to induce vomiting or not should be made by a physician. If lavage is performed, suggest endotracheal and/or esophageal control. If burn is present, treat as any thermal burn, after decontamination. Exposure may increase myocardial irritability. Do not administer sympathomimetic drugs unless absolutely necessary. No specific antidote.

Section 5: Fire-Fighting Measures

Flammable Properties: This product is nonflammable in accordance with aerosol flammability definitions. (See 16 CFR 1500.3(c)(6))

Flash Point: None (TCC) Upper Explosive Limit: None
Autoignition Temperature: None Lower Explosive Limit: None

Fire and Explosion Data:

Suitable Extinguishing Media: This material does not burn. Use extinguishing agent suitable for surrounding fire.

Products of Combustion: Hydrogen chloride. Trace amounts of phosgene and chlorine.

Explosion Hazards: Aerosol containers, when exposed to heat from fire, may build pressure and explode.

Protection of Fire-Fighters: Firefighters should wear self-contained, NIOSH-approved breathing apparatus for protection against suffocation and possible toxic decomposition products. Proper eye and skin protection should be provided. Use water spray to keep fire-exposed containers cool and to knock down vapors which may result from product decomposition.

Section 6: Accidental Release Measures

Personal Precautions: Use personal protection recommended in Section 8. Do not breathe vapors.

Environmental Precautions: Take precautions to prevent contamination of ground and surface waters. Do not flush into sewers or storm drains.

Methods for Containment & Clean-up: Dike area to contain spill. Ventilate the area with fresh air. If in confined space or limited air circulation area, clean-up workers should wear appropriate

Product Name: Quick Clean™ (aerosol)
Product Number (s): 03180

respiratory protection. Recover or absorb spilled material using an absorbent designed for chemical spills. Place used absorbents into proper waste containers.

Section 7: Handling and Storage

Handling Procedures: Vapors of this product are heavier than air and will collect in low areas. Make sure ventilation removes vapors from low areas. Do not eat, drink or smoke while using this product. Use caution around energized equipment. The metal container will conduct electricity if it contacts a live source. This may result in injury to the user from electrical shock and/or flash fire. For product use instructions, please see the product label.

Storage Procedures: Store in a cool dry area out of direct sunlight. Aerosol cans must be maintained below 120°F / 49°C to prevent cans from rupturing.

Aerosol Storage Level: I

Section 8: Exposure Controls/Personal Protection

Exposure Guidelines:

	OSHA		ACGIH		OTHER		
COMPONENT	TWA	STEL	TWA	STEL	TWA	SOURCE	UNIT
Tetrachloroethylene	100	N.E.	25	100	N.E.		ppm
Carbon dioxide	5000	30000 v	5000	30,000	N.E.		ppm
N.E. – Not Established (c) – ceiling (s) – skin (v) – vacated							

Controls and Protection:

Engineering Controls: Area should have ventilation to provide fresh air. Local exhaust ventilation is generally preferred because it can control the emissions of the contaminant at the source, preventing dispersion into the general work area. Use mechanical means if necessary to maintain vapor levels below the exposure guidelines. If working in a confined space, follow applicable OSHA regulations.

Respiratory Protection: None required for normal work where adequate ventilation is provided. If engineering controls are not feasible or if exposure exceeds the applicable exposure limits, use a NIOSH-approved cartridge respirator with organic vapor cartridge. Air monitoring is needed to determine actual employee exposure levels. Use a self-contained breathing apparatus in confined spaces and for emergencies.

Eye/face Protection: For normal conditions, wear safety glasses. Where there is reasonable probability of liquid contact, wear splash-proof goggles.

Skin Protection: Use protective gloves such as PVA, Teflon, or Viton. Also, use full protective clothing if there is prolonged or repeated contact of liquid with skin.

Section 9: Physical and Chemical Properties

Physical State: liquid
Color: colorless
Odor: irritating odor
Odor Threshold: 50 ppm
Specific Gravity: 1.619

Product Name: Quick Clean™ (aerosol)
Product Number (s): 03180

Initial Boiling Point: 250°F / 121°C
Freezing Point: ND
Vapor Pressure: 13 mmHg @ 68°F / 20°C
Vapor Density: 5.76 (air = 1)
Evaporation Rate: very fast
Solubility: 0.015 g / 100 g @ 77°F / 25°C in water
Coefficient of water/oil distribution (log P_{ow}): 2.88
pH: NA
Volatile Organic Compounds: wt %: 0 g/L: 0 lbs./gal: 0

Section 10: Stability and Reactivity

Stability: Stable

Conditions to Avoid: Avoid direct sunlight or ultraviolet sources. Avoid open flames, welding arcs, and other high temperature sources which induce thermal decomposition.

Incompatible Materials: Avoid contact with metals such as: aluminum powders, magnesium powders, potassium, sodium, and zinc powder. Avoid unintended contact with amines. Avoid contact with strong bases and strong oxidizers.

Hazardous Decomposition Products: Hydrogen chloride, trace amounts of chlorine and phosgene

Possibility of Hazardous Reactions: No

Section 11: Toxicological Information

Long-term toxicological studies have not been conducted for this product. The following information is available for components of this product.

Acute Toxicity:

Component	Oral LD50 (rat)	Dermal LD50 (rabbit)	Inhalation LC50 (rat)
Tetrachloroethylene	2629 mg/kg	3228 mg/kg	5200 mg/kg/4H
Carbon dioxide	No data	No data	470,000 ppm/30M

Chronic Toxicity:

Component	OSHA Carcinogen	IARC Carcinogen	NTP Carcinogen	Irritant	Sensitizer
Tetrachloroethylene	No	Group 2A	Reasonably Anticipated to be a Carcinogen	Skin	No
Carbon dioxide	No	No	No	No	No

Reproductive Toxicity: No information available
Teratogenicity: No information available
Mutagenicity: Tetrachloroethylene: In vitro studies were negative
Animal studies were negative
Synergistic Effects: No information available

Section 12: Ecological Information

Ecological studies have not been conducted for this product. The following information is available for components of this product.

Page 4 of 7

Product Name: Quick Clean™ (aerosol)
Product Number (s): 03180

Ecotoxicity:	Tetrachloroethylene -- 96 Hr LC50 Rainbow Trout: 5.28 mg/L (static) 96 Hr LC50 Fathead minnow: 13.4 mg/L (flow-through)
Persistence / Degradability:	Biodegradation under aerobic conditions is below detectable limits. Biodegradation may occur under anaerobic conditions. Biodegradation rate may increase in soil and/or water with acclimation.
Bioaccumulation / Accumulation:	Bioconcentration potential is low (BCF less than 100).
Mobility in Environment:	Potential for mobility in soil is medium.

Section 13: Disposal Considerations

Waste Classification: The dispensed liquid product is a RCRA hazardous waste for toxicity with the following potential waste codes: U210, F001, F002, D039. (See 40 CFR Part 261.20 – 261.33)
Empty aerosol containers may be recycled. Any liquid product should be managed as a hazardous waste.

All disposal activities must comply with federal, state, provincial and local regulations. Local regulations may be more stringent than state, provincial or national requirements.

Section 14: Transport Information

US DOT (ground):	UN1950, Aerosols, non-flammable, 2.2 (6.1), Limited Quantity**
ICAO/IATA (air):	UN1950, Aerosols, non-flammable, containing substances in Division 6.1, Packing Group III, 2.2 (6.1), Limited Quantity
IMO/IMDG (water):	UN1950, Aerosols, 2.2 (6.1)
Special Provisions:	Marine Pollutant **This product can be classified and labeled as 'Consumer Commodity, ORM-D' for domestic ground shipping until January 1, 2014. If shipping as limited quantity by ground, note that shipping papers are not required.

Section 15: Regulatory Information

U.S. Federal Regulations:

Toxic Substances Control Act (TSCA):
All ingredients are either listed on the TSCA inventory or are exempt.

Comprehensive Environmental Response, Compensation and Liability Act (CERCLA):
Reportable Quantities (RQ's) exist for the following ingredients: Tetrachloroethylene (100 lbs)

Spills or releases resulting in the loss of any ingredient at or above its RQ require immediate notification to the National Response Center (800-424-8802) and to your Local Emergency Planning Committee.

Superfund Amendments Reauthorization Act (SARA) Title III:
Section 302 Extremely Hazardous Substances (EHS): None

Section 311/312 Hazard Categories:	Fire Hazard	No
	Reactive Hazard	No
	Release of Pressure	Yes
	Acute Health Hazard	Yes
	Chronic Health Hazard	Yes

Page 5 of 7

Product Name: Quick Clean™ (aerosol)
Product Number (s): 03180

Section 313 Toxic Chemicals: This product contains the following substances subject to the reporting requirements of Section 313 of Title III of the Superfund Amendments and Reauthorization Act of 1986 and 40 CFR Part 372:
tetrachloroethylene (98%)

Clean Air Act:
Section 112 Hazardous Air Pollutants (HAPs): tetrachloroethylene

Occupational Safety and Health Administration:
This product is regulated by the Hazard Communications Standard.

U.S. State Regulations:

California Safe Drinking Water and Toxic Enforcement Act (Prop 65):
This product may contain the following chemicals known to the state of California to cause cancer, birth defects or other reproductive harm: tetrachloroethylene

Consumer Products VOC Regulations: This product is not compliant to be sold for use in California, Connecticut, Delaware, The District of Columbia, Illinois, Indiana, Maine, Maryland, Massachusetts, Michigan, New Jersey, New York, and Rhode Island. In other states with Consumer Products VOC regulations, this product is compliant as a General Purpose Degreaser.

State Right to Know:

New Jersey:	127-18-4, 124-38-9
Pennsylvania:	127-18-4, 124-38-9
Massachusetts:	127-18-4, 124-38-9
Rhode Island .	127-18-4, 124-38-9

Canadian Regulations:

Controlled Products Regulations:
This product has been classified in accordance with the hazard criteria of the Controlled Products Regulations and the MSDS contains all the information required by the Controlled Products Regulations.

WHMIS Hazard Class: A, D1B, D2A, D2B

Canadian DSL Inventory: All ingredients are either listed on the DSL Inventory or are exempt.

European Union Regulations:

RoHS Compliance: This product is compliant with Directive 2002/95/EC of the European Parliament and of the Council of 27 January 2003. This product does not contain any of the restricted substances as listed in Article 4(1) of the RoHS Directive.

Additional Regulatory Information: None

Page 6 of 7

Product Name: Quick Clean™ (aerosol)
Product Number (s): 03180

Section 16: Other Information

HMIS® (II)	
Health:	2
Flammability:	0
Reactivity:	0
PPE:	B

NFPA

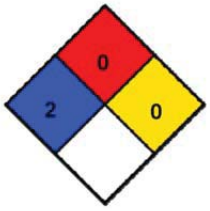

Ratings range from 0 (no hazard) to 4 (severe hazard)

Prepared By: Michelle Rudnick
CRC #: 491G
Revision Date: 07/24/2012

Changes since last revision: Section 14: Transport Information

The information contained in this document applies to this specific material as supplied. It may not be valid for this material if it is used in combination with any other materials. This information is accurate to the best of CRC Industries' knowledge or obtained from sources believed by CRC to be accurate. Before using any product, read all warnings and directions on the label. For further clarification of any information contained on this MSDS consult your supervisor, a health & safety professional, or CRC Industries.

ACGIH: American Conference of Governmental Industrial Hygienists
CAS: Chemical Abstract Service
CFR: Code of Federal Regulations
DOT: Department of Transportation
DSL: Domestic Substance List
g/L: grams per Liter
HMIS: Hazardous Materials Identification System
IARC: International Agency for Research on Cancer
IATA: International Air Transport Association
ICAO: International Civil Aviation Organization
IMDG: International Maritime Dangerous Goods
IMO: International Maritime Organization
lbs./gal: pounds per gallon
LC: Lethal Concentration
LD: Lethal Dose

NA: Not Applicable
ND: Not Determined
NIOSH: National Institute of Occupational Safety & Health
NFPA: National Fire Protection Association
NTP: National Toxicology Program
OSHA: Occupational Safety and Health Administration
PMCC: Pensky-Martens Closed Cup
PPE: Personal Protection Equipment
ppm: Parts per Million
RoHS: Restriction of Hazardous Substances
STEL: Short Term Exposure Limit
TCC: Tag Closed Cup
TWA: Time Weighted Average
WHMIS: Workplace Hazardous Materials Information System

11.5.10 PERMATEX GEAR OIL RTV SEALANT

Toll Free: 87 PERMATEX
(877-376-2839)

10 Columbus Blvd., Hartford,
Connecticut 06106

6875 Parkland Boulevard, Solon
Ohio 44139

Technical Data Sheet

Permatex® Gear Oil RTV Sealant

AAM Revised 02/09

PRODUCT DESCRIPTION

Permatex® Gear Oil RTV Sealant is a single component, room temperature, vulcanizing, gasketing compound designed to provide reliable "formed-in-place" gaskets for mechanical assemblies. The product has been specially formulated to withstand the harsh gear oil environment found in many differentials and transfer cases that destroys normal RTV materials. Normal RTV's are broken down by friction modifiers found in many gear oils and causes leaks and seepage. This specialty RTV has been tested to stringent OEM specifications to ensure complete sealing as a gasket maker. It seeks and seals leak paths that cut and molded gaskets cannot. This product can be used to seal cut gaskets. This material cures on exposure to moisture in the air to form a tough, flexible, silicone rubber gasket. The product resists aging, weathering and thermal cycling without hardening, shrinking or cracking.

PRODUCT BENEFITS

- Maximum gear oil resistance
- Safe for use with friction modifiers
- Sensor safe, non-corrosive
- Good adhesion and flexibility
- Replaces most cut gaskets
- Can be used as a gasket maker or dressing
- Non-flammable
- Low odor

TYPICAL APPLICATIONS

- Specially designed and formulated for differentials and transfer cases

DIRECTIONS FOR USE

For assembly as a form-in-place gasket

1. Remove all previous material from mating surfaces. Permatex® Gasket Remover is recommended for most materials but not for plastics or painted surfaces.
2. For best results, clean and dry all surfaces with a residue-free solvent, such as Permatex® Brake and Parts Cleaner
3. Cut nozzle to desired bead size, 1/16" to 1/4" in diameter. A 1/8" bead is usually sufficient for most applications.
4. Remove cap, puncture tube seal and attach extension nozzle.
5. Apply a continuous and even bead of silicone to one surface, first tracing the internal areas of the gasket configuration, then all surrounding bolt holes.
6. Assemble parts immediately while silicone is still wet.
7. Finger tighten flange until material begins to seep out the sides of the flange.
8. Allow to set for at least one hour and re-torque one quarter to one half turn.
9. For best results, allow to cure overnight.

For assembly as a gasket dressing

1. Repeat steps 1 through 4 as in previous section.
2. Apply a thin film of silicone to one flange surface to be sealed.
3. Place the pre-cut gasket onto silicone film.
4. Apply a second thin film to pre-cut gasket surface.
5. Remove any excess and assemble parts immediately.
   Note: Product is not recommended for use as a cylinder head gasket or head gasket sealant.

Storage of Unused Product

1. Create a "Silicone Plug" by allowing excess material to extend beyond the extension nozzle or aerosol tip to cure, sealing and protecting the remaining product from moisture. For reuse, slowly pull the cured product from the tip.

For Cleanup

1. Remove uncured product from parts and hand-tools with Permatex® Fast Orange® Wipes or Fast Orange® Hand Cleaners. If skinned over, break film with a dry cloth to remove as much as possible. Remove the remaining material with Permatex® Gasket Remover.
2. Clean hands with a dry cloth or Permatex® Fast Orange® Hand Cleaner.

PROPERTIES OF UNCURED MATERIAL

	Typical Value
Chemical Type	Oxime silicone
Appearance	Grey metallic paste
Odor	Mild
Specific Gravity	1.45
Viscosity	Thixotropic paste
Flash Point °C (°F)	>93 (>200)

TYPICAL CURING PERFORMANCE

Permatex® Gear Oil RTV Sealant cures on exposure to moisture in the air. The product dries tack free in two hours and fully cures in 24 hours. Cure times will vary with temperature, humidity and gap.

PERFORMANCE OF CURED MATERIAL

After 7 days at 25°C (77°F). 50% Relative Humidity

	Typical Values	
Hardness (Shore A)	67	
Elongation, %*	200	
Tensile Strength, N/mm² (psi)**	1.7	(250)
Gap Fill, inch	0.25	

*Material will stretch 2 times its original length before breaking.

**Amount of force required to break material.

NOT FOR PRODUCT SPECIFICATIONS
THE TECHNICAL DATA CONTAINED HEREIN ARE INTENDED AS REFERENCE ONLY.
PLEASE CONTACT PERMATEX, INC., TECHNICAL SERVICE DEPARTMENT FOR ASSISTANCE AND RECOMMENDATIONS FOR YOUR SPECIFIC APPLICATION.
PERMATEX, INC., HARTFORD SQUARE NORTH, 10 COLUMBUS BOULEVARD, HARTFORD, CT 06106 PHONE – (1-87PERMATEX)

Technical Data Sheet Gear Oil RTV Sealant

TYPICAL ENVIRONMENTAL RESISTANCE

Temperature Resistance	Typical Values	
Continuous, °C (°F)	-54 to 232	(-65 to 450)
Intermittent, °C (°F)	-54 to 260	(-65 to 500)

Chemical / Solvent Resistance
The product retains effective properties in contact with gear oil fluids. Note: Not recommended for parts in contact with gasoline.

GENERAL INFORMATION
This product is not recommended for use in pure oxygen and/or oxygen rich systems and should not be selected as a sealant for chlorine or other strong oxidizing materials.

For safe handling information on this product, consult the Material Safety Data Sheet, (MSDS).

ORDERING INFORMATION

81182	3 oz. tube
81184	5 fl. oz. cartridge

STORAGE
Products shall be ideally stored in a cool, dry location in unopened containers at a temperature between 8° and 28°C (46° and 82°F) unless otherwise labeled. Optimal storage is at the lower half of this temperature range. To prevent contamination of unused product, do not return any material to its original container.

NOTE
The data contained herein are furnished for information only and are believed to be reliable. We cannot assume responsibility for the results obtained by others over whose methods we have no control. **ITW Permatex, Inc. specifically disclaims all warranties expressed or implied, including warranties of merchantability or fitness for a particular purpose, arising from sale or use of Permatex, Inc. products and disclaims any liability for consequential or incidental damages of any kind, including lost profits.** This product may be covered by one or more United States or foreign patents or patent applications.

Permatex and Fast Orange are trademarks of Illinois Tool Works, Inc. © Copyright 2009 Permatex. Inc. All rights reserved

ITW Permatex
10 Columbus Blvd.
Hartford, CT 06106 USA
Telephone: 1-87-Permatex
(877) 376-2839
Emergency: 800-255-3924 (ChemTel)
International Emergency: +01-813-248-0585

Material Safety Data Sheet

1. PRODUCT IDENTIFICATION

Product Name: **RTV GEAR OIL SILICONE 3 OZ**
Item No: **81182**
Product Type: **Elastomeric rubber**

2. COMPOSITION/INFORMATION ON INGREDIENTS

Component	Weight%	ACGIH; TLV-TWA	OSHA PEL
POLY (DIMETHYLSILOXANE), HYDROXY TERMINATED 70131-67-8	30-50	Not listed	Not listed
CALCIUM CARBONATE 471-34-1	10-30	10 mg/m^3	Not listed
GARNET MINERAL 1302-62-1	10-30	Not listed	Not listed
VINYL OXIMINOSILANE 2224-33-1	<10	Not listed	Not listed
MODIFIED SILICON DIOXIDE 68611-44-9	<5	Not listed	Not listed
2-BUTANONE OXIME 96-29-7	0.5-2.0	Not listed	Not listed

3. HAZARDS IDENTIFICATION

Toxicity: May cause eye and skin irritation. May cause skin sensitization. May be harmful if swallowed. May irritate lips, gums, tongue, mouth, nose and throat. When this product if exposed to moisture, butanone oxime may be formed.
Primary Routes of Entry: Eye and skin contact, ingestion, inhalation
Signs and Symptoms of Exposure: Butanone oxime produced during curing is toxic and irritates eyes, nose and throat. Overexposure to the silane may cause coma and respiratory failure.
Aggravated Medical Condition: Preexisting skin disorders.

4. FIRST AID MEASURES

Ingestion: Rinse mouth. If swallowed, DO NOT induce vomiting. Keep individual calm. Obtain medical attention.
Inhalation: Move to fresh air in case of accidental inhalation of vapours. If not breathing, give artificial respiration. Obtain medical attention.
Skin Contact: Wipe off paste with paper towel or cloth. Wash exposed area with soap and water. Seek medical attention if irritation persists.
Eye Contact: In case of contact, immediately flush eyes with plenty of water for at least 15 minutes and get medical attention if irritation persists.

5. FIRE FIGHTING MEASURES

Flash Point °F(C°): >200°F TCC
Recommended Extinguishing Media: Carbon Dioxide, Dry Chemicals, Foam.
Special Fire-Fighting Procedures: Water spray may be ineffective on flames but should be used to keep fire-exposed containers cool.
Hazardous Products of Combustion: Oxides of carbon, Oxides of nitrogen, Methyl ethyl ketone, possibly methyl ethyl ketoxime, Silica fume, Aldehydes, Formaldehyde, Ammonia
Unusual Fire/Explosion Hazards: None.
Lower Explosive Limit: Not determined
Upper Explosive Limit: Not determined

Product Name: RTV GEAR OIL SILICONE 3 OZ **Item No.** 81182

6. ACCIDENTAL RELEASE MEASURES

Spill Procedures: Wipe or scrape up spill material. Maintain good ventilation for large spills. Place scrap material in a well-ventilated area and allow to cure to rubber. Clean up spills thoroughly as residue is slippery.

7. HANDLING AND STORAGE

Storage: Store in a dry area below 90 degrees F. Keep container closed when not in use.
Handling: Do not inhale vapors. Avoid contact with skin and eyes. Wash hands before eating and smoking.

8. EXPOSURE CONTROLS/PERSONAL PROTECTION

Eyes: Safety glasses. Avoid contact lenses.
Skin: Neoprene or nitrile gloves recommended.
Ventilation: General; local exhaust ventilation as necessary to control any air contaminants to within their exposure limits (or to the lowest feasible levels when limits have not been established) during the use of this product.
Respiratory Protection: Not normally necessary. In case of insufficient ventilation, wear suitable respiratory equipment.

Comments: When heated to temperatures above 300 degrees F. in the presence of air, this product can form formaldehyde vapors. Formaldehyde is a potential cancer hazard and a known skin and respiratory sensitizer. Safe handling conditions may be maintained by keeping vapor concentrations below the OSHA permissible limit for formaldehyde

9. PHYSICAL AND CHEMICAL PROPERTIES

Appearance: Gray paste
Odor: Mild
Boiling Point: Not applicable, polymeric material
pH: Does not apply
Solubility in Water: Polymerized
Specific Gravity: 1.45
VOC(Wt.%): <3%
Vapor Pressure: <5 mm Hg
Vapor Density (Air=1): Heavier than air
Evaporation Rate: Not Determined

10. STABILITY AND REACTIVITY

Chemical Stability: Stable at normal conditions
Hazardous Polymerization: Will not occur
Incompatabilities: Polymerized by contact with moisture., Strong oxidizers, Acids, Reactive metals (e.g. Na, Ca, zinc), Peroxides
Conditions to Avoid: Exposure to moisture.
Hazardous Products of Combustion: Oxides of carbon, Oxides of nitrogen, Methyl ethyl ketone, possibly methyl ethyl ketoxime, Silica fume, Aldehydes, Formaldehyde, Ammonia

11. TOXICOLOGICAL INFORMATION

See Section 3

12. ECOLOGICAL INFORMATION

No data available

13. DISPOSAL CONSIDERATIONS

Recommended Method of Disposal: Disposal should be made in accordance with federal, state and local regulations.
US EPA Waste Number: NH - Not a RCRA Hazardous Waste Material

14. TRANSPORTATION INFORMATION

DOT (49CFR 172)
U.S. Department of Transportation - DOT - 49 CFR (Ground)
DOT Shipping Name: Not regulated
Hazard Class: None
UN/ID Number: None
IATA (Air)
Proper Shipping Name: Not regulated
Class or Division: None
UN/ID Number: None

Product Name: RTV GEAR OIL SILICONE 3 OZ **Item No.** 81182

IMDG (Vessel)

Proper Shipping Name:	Not regulated
Hazard Class:	None
UN Number:	None
Marine Pollutant:	None

15. REGULATORY INFORMATION

SARA 313 Chemicals: The following component(s) is listed as a SARA Section 313 Toxic Chemical.

NONE

California Proposition 65: No California Prop 65 chemicals are known to be present at or above the No Significant Risk Level

TSCA Inventory Status: All components of this product are listed (or exempt) on the EPA TSCA inventory.

16. OTHER INFORMATION

Estimated NFPA Rating: HEALTH 2, FLAMMABILITY 1 , REACTIVITY 0.
Estimated HMIS Classification: HEALTH 2, FLAMMABILILTY 1, PHYSICAL HAZARD 0
(NFPA is a registered trademark of the National Fire Protection Association)
HMIS is a registered trademark of the National Paint and Coatings Association

Prepared By: Denise Boyd, Manager-Environmental, Health & Safety
Company: ITW Permatex 10 Columbus Blvd. Hartford, CT USA 06106
Telephone No.: 1-87-Permatex (877) 376-2839

Revision Date: April 03, 2012
Revision Number: 2

11.5.11 CAIG LABORATORIES DEOXIT D5 CONTACT CLEANER

Since 1956
CAIG LABORATORIES, INC.

DATA SHEET

Our products make your products perform!

DeoxIT® D5 Spray, D-Series
Contact Cleaner & Rejuvenator

Part No.: D5S-6

Container Size: 142 g, adjustable valve (L-M-H)

Product Description:

Unique contact cleaner, rejuvenator, conductivity enhancer and lubricant; dissolves oxidation and corrosion on metal surfaces, fills in microscopic gaps and reseals surface for better contact to enhance flow of electricity. Improves connector performance/reliability. Temperature range: -34 to +200°C.

Features/Benefits:

Spray, adjustable valve (L-M-H) - Flushing Action, and Safe on Plastics.
DeoxIT® D100L concentrate has approximately 20% chemical cleaning action.
Excellent cleaning/deoxidizing, good protection, no ozone depletion.
Improves conductivity and reduces intermittent connections.
Reduces arcing, RFI, wear and abrasion.
Cleaner Audio - Clearer Video - Reliable Data.

Formulation:

5%	DeoxIT® D100L
75%	odorless mineral spirits (64742-88-7)
20%	DIFLUOROETHANE (75-37-6)

VOC COMPLIANT RoHS COMPLIANT

DeoxIT® - Product Selection Guide

	DeoxIT®	DeoxIT® GOLD	DeoxIT® GOLD Gx1	DeoxIT® GOLD Gx2	DeoxIT® SHIELD	DeoxIT® FaderLube
New Surfaces		✔	✔	✔	✔	✔
* In Service / Used	✔					✔
Gold surfaces		✔	✔	✔		
Oxidation / corrosion visible	✔					
Conductive plastics						✔
** Outdoor / Severe environments	✔					✔
Deoxidizing / cleaning properties	20%	0.1%	0.1%	0.0%	0.0%	0.0%
Metal / Plastic surfaces	Yes	Yes	Yes	Yes	Yes	
Plastics compatibility	Excellent	Excellent	Excellent	Excellent	Excellent	Excellent
Temperature range (°C)	-34/200	-45/240	-45/310	-45/500	-34/210	-26/150
Stationary & moving surfaces	Yes	Yes	Yes	Yes	Yes	Yes
Seals & protects base metals	Good	Excellent	Excellent	Excellent	Good	No

✔ All products are Nonflammable and RoHs Compliant
* In Service: Clean with DeoxIT®. For added protection, follow with DeoxIT® GOLD (indoors), DeoxIT® SHIELD (outdoors) or DeoxIT® Grease (additional barrier).
** Severe environments: Pre-clean with DeoxIT®. Follow with DeoxIT® SHIELD or DeoxIT® Grease.

DeoxIT® - Spray Selection Guide

Product Series	FP	QD	NF	PC	VOC
Standard - 5% solution D5S-6, D5MS-15, G5S-6, G5MS-15, S5S-6, S5MS-15, F5S-6, F5MS-15	✔			✔	75
N Series - 5% solution DN5S-6N, DN5MS-15, GN5S-6N, GN5MS-15, SN5S-6, SN5MS-15		✔	✔	✔	20
X Series - 5% solution GX5S-6N		✔	✔	✔	20
100 Series - 100% solution D100S-2, G100S-2, F100S-2			✔	✔	0

FP = Flushing properties QD = Quick dry / non drip NF = Nonflammable
PC = Plastics compatibility VOC = VOC (%)

Page 1

Other Applicators:

D5MS-15	5%	mini-spray	14 g	flammable
DN5S-6N	5%	spray	163 g	nonflammable
DN5MS-15	5%	mini-spray	14 g	nonflammable
D100S-2	100%	spray	57g	nonflammable
D100P	100%	pen	6 mL	nonflammable
D50W	100%	wipes	50 count	nonflammable
D100L-2DB	100%	brush	7.4 mL	nonflammable
D100L-25C	100%	needle dispenser	25 mL	nonflammable
D100L (bulk)	100%	bottle/drum	assort.	nonflammable
D5L (bulk)	5%	bottle/drum	assort.	flammable

DeoxIT® Essential Reference:

DeoxIT® D-Series - *Brings old systems back to life!*
DeoxIT® Gold G-Series - *Maintains new system performance!*
DeoxIT® Shield S-Series - *Maintains new system performance for severe environments!*

Shipping and Additional Information:

Hazardous: ORMD
VOC (%): 75%

Other Information:

RoHS Compliant:	YES
D5S-6 MSDS Link:	http://store.caig.com/
DeoxIT® Product Sheet:	http://store.caig.com/
MentorCard Link:	http://store.caig.com/
WHY DeoxIT® is Different:	http://store.caig.com/

MANUFACTURER DISCLAIMER:

To the best of our knowledge, the information contained herein is accurate. However, neither CAIG Laboratories, Inc., or any of its subsidiaries assumes any liability whatsoever for the accuracy or completeness of the information contained herein. All materials may present unknown hazards and should be used with caution. In particular, improper use of our products and their inappropriate combination with other products and substances may produce harmful results which cannot be anticipated. Final determination of the suitability of any material is the sole responsibility of the user. Although certain hazards are described herein, we cannot guarantee that these are the only hazards that may exist. All service performed on internal parts and equipment should be provided by qualified technicians.

Contact Information:

Since 1956 CAIG LABORATORIES, INC.

North America
CAIG Laboratories, Inc.
12200 Thatcher Court
Poway, CA 92064 USA
Tel: (858) 486-8388
Fax: (858) 486-8398

Website
www.caig.com
www.deoxit.com

General email
info@caig.com

Technical email
tech@caig.com

Page 2

CAIG LABORATORIES, INC.

SAFETY DATA SHEET

Page 1 of 6
MSDS-E-D5S-A

Prepared to OSHA, ACC, ANSI, NOHSC, WHMIS, 2001/58/EC & 1272/2008/EC Standards | MSDS Revision: 3.0 | MSDS Revision Date: 08/22/2012

1. PRODUCT IDENTIFICATION

1.1	Product Name:	**DeoxIT® D-Series, 5% Spray, (P/N D5S-6), 142 g**
1.2	Chemical Name:	See ingredients listed in section 3
1.3	Synonyms:	DeoxIT®, D5S-6, 5% Spray
1.4	Trade Names:	DeoxIT®, D5S-6, 5% Spray
1.5	Product Use:	Clean, deoxidize & improve electrical contacts & connectors
1.6	Manufacturer's Name:	CAIG Laboratories, Inc.
1.7	Manufacturer's Address:	12200 Thatcher Court, Poway, CA 92064-6876 USA
1.8	Emergency Phone:	CHEMTREC: +1 (703) 527-3887 / +1 (800) 424-3887
1.9	Business Phone:	+1 (800)-224-4123
1.10	Other Product Names:	DeoxIT®, D5MS-15, 5% Spray, 14 g

2. HAZARD IDENTIFICATION

2.1 Hazard Identification:

This product is classified as a HAZARDOUS SUBSTANCE but not as DANGEROUS GOODS according to the classification criteria of NOHSC: 1008(2004) and ADG Code (Australia).

WARNING! Flammable aerosol. Colorless, volatile liquid with ethereal and faint sweetish odor. Overexposure may cause dizziness and loss of concentration. At higher levels, CNS depression and cardiac arrhythmia may result from exposure. Vapors displace air and can cause asphyxiation in confined spaces.

Hazard Statements (H): H223 – Flammable aerosol.

Precautionary Statements (P): P210 – Keep away from heat/sparks/open flames/hot surfaces. P211 – Do not spray on an open flame or other ignition source. P251 – Pressurized container. Do not pierce or burn, even after use. P280 – Wear protective gloves and eyewear. P302 + P352 – IF ON SKIN – Wash with plenty of soap and water. P312 – Call a Poison Control Center or doctor/physician if you feel unwell. P333 + P313 – If skin irritation or rash occurs, get medical advise/attention. P321 – Refer to section 4 of this Safety Data Sheet (First Aid). P305+P351+P338 – IF IN EYES - Rinse continuously with water for several minutes. Remove contact lenses if present and easy to do – continue rinsing. P501 – Dispose of contents/container through licensed treatment, storage or disposal facility.

2.2 Routes of Entry: Inhalation: YES | Absorption: YES | Ingestion: YES

2.3 Effects of Exposure:

EYES:	Mild to moderate irritation.
SKIN:	Irritant and potential skin sensitizer. Prolonged or repeated contact may cause contact dermatitis (localized redness or rash).
INGESTION:	Gastrointestinal irritation and central nervous system depression.
INHALATION:	Central nervous system depressant. Irritating to the upper respiratory tract.

2.4 Symptoms of Overexposure:

EYES:	Mild irritation, redness, and watering.
SKIN:	Contact dermatitis, characterized by localized red or puffy dry skin and itching.
INGESTION:	Nausea, vomiting, and diarrhea.
INHALATION:	Mouth, nose, and throat irritation, dizziness, nausea, light-headedness, drunkenness, and loss of coordination.

2.5 Acute Health Effects:

INGESTION:	Gastrointestinal irritation and central nervous system depression.
EYES:	Mild to moderate irritation.
SKIN:	Irritant and potential skin sensitizer. Prolonged or repeated contact may cause contact dermatitis (e.g., localized redness and/or rash).
INGESTION:	Gastrointestinal irritation and central nervous system depression.
INHALATION:	Central nervous system depressant. Irritating to the upper respiratory tract.

2.6 Chronic Health Effects:

EYES:	Mild to moderate irritation.
SKIN:	Irritant and potential skin sensitizer. Prolonged or repeated contact may cause contact dermatitis (e.g., localized redness and/or rash).
INGESTION:	Gastrointestinal irritation and central nervous system depression.
INHALATION:	Central nervous system depressant. Irritating to the upper respiratory tract.

2.7 Target Organs:
Eyes, skin and respiratory system.

NA = Not Available; ND = Not Determined; NE = Not Established; C = Ceiling Limit; See Section 16 for Additional Definitions of Terms Used
NOTE: all WHMIS required information is included. It is located in appropriate sections based on the ANSI Z400.1-2010 format.

CAIG LABORATORIES, INC.

SAFETY DATA SHEET

Page 2 of 6
MSDS-E-D5S-A

Prepared to OSHA, ACC, ANSI, NOHSC, WHMIS, 2001/58/EC & 1272/2008/EC Standards | MSDS Revision: 3.0 | MSDS Revision Date: 08/22/2012

3. COMPOSITION & INGREDIENT INFORMATION

CHEMICAL NAME(S)	CAS No.	RTECS No.	EINECS No.	%	EXPOSURE LIMITS IN AIR (mg/m³) ACGIH ppm TLV	ACGIH ppm STEL	NOHSC ppm ES-TWA	NOHSC ppm ES-STEL	NOHSC ppm ES-PEAK	OSHA ppm PEL	OSHA ppm STEL	OSHA ppm IDLH	OTHER
PETROLEUM NAPHTHA	64742-88-7	XS5250000	265-191-7	40-70	100	NE	100	NE	NE	NA	NE	NE	
DIFLUOROETHANE (R-152a)	75-37-6	KI4100000	200-866-1	10-30	1000	NA	1000	NA	NA	NE	NA	NA	SKIN
DeoxIT® D-Series, D100L	TRADE SECRET			3-7	NA	NA	NA	NA	NA	15	NA	NA	

4. FIRST AID MEASURES

4.1 First Aid:

EYES: Flush eyes thoroughly with copious amounts of water for at least 15 minutes, holding eyelid(s) open to ensure complete flushing. If irritation persists, seek immediate medical attention.

SKIN: Remove contaminated clothing and wash affected areas with soap and water. If irritation persists, seek prompt medical attention. Do not wear contaminated clothing until after it has been properly cleaned.

INGESTION: Drink plenty of water. If irritation persists, contact a physician.

INHALATION: Remove victim to fresh air at once. If breathing is difficult, administer supplemental oxygen and seek immediate medical attention. If breathing stops, perform artificial respiration.

4.2 Medical Conditions Aggravated by Exposure:

None reported by the manufacturer.

HEALTH	1
FLAMMABILITY	2
PHYSICAL HAZARDS	0
PROTECTIVE EQUIPMENT	B

EYES | SKIN

5. FIREFIGHTING MEASURES

5.1 Flashpoint & Method:
48.8 °C - 54.4 °C (120 °F – 130 °F).

5.2 Autoignition Temperature:
NA

5.3 Flammability Limits: Lower Explosive Limit (LEL): NA Upper Explosive Limit (UEL): NA

5.4 Fire & Explosion Hazards:
Level 2 aerosol. Carbon dioxide, carbon monoxide, hydrocarbons.

5.5 Extinguishing Methods:
CO_2, Alcohol foam, Dry Chemical, Water Fog

5.6 Firefighting Procedures:
Wear NIOSH/MSHA approved self-contained breathing apparatus and protective clothing. Use a water spray to cool containers involved in fire. Do not use direct water stream. Container storage areas exposed to direct flame contact should be cooled with large quantities of water as needed to prevent weakening of container structure. Keep containers cool until well after the fire is out to prevent rupture. Prevent runoff from fire control or dilution from entering sewers, drains, drinking water supply, or any natural waterway.

6. ACCIDENTAL RELEASE MEASURES

6.1 Spills:
Secure spill area and deny entry to all unprotected individuals. Individuals involved in the cleanup should wear appropriate personal protective equipment. Area may become slippery. Absorb product onto porous material, such as sand, clay, diatomaceous earth or commercial absorbent material. Place into leak-proof, U.S. DOT-approved containers. If necessary, cover all drains and dike well ahead of the spill to prevent runoff into sewers, drains, and all waterways. Contact appropriate local or provincial authorities for assistance and/or reporting requirements.

CAIG LABORATORIES, INC.

SAFETY DATA SHEET

Page 3 of 6
MSDS-E-D5S-A

Prepared to OSHA, ACC, ANSI, NOHSC, WHMIS, 2001/58/EC & 1272/2008/EC Standards | MSDS Revision: 3.0 | MSDS Revision Date: 08/22/2012

7. HANDLING & STORAGE INFORMATION

7.1	Work & Hygiene Practices: **Wash hands thoroughly after using this product and before eating, drinking, or smoking. Remove soiled clothing to prevent prolonged skin contact.**
7.2	Storage & Handling: **Store at temperatures between 59 °F and 95 °F (15 °C and 35 °C) in a dry, well-ventilated location. Keep away from heat, sparks, open flame, and other sources of ignition. Normal shelf-life: 2-3 years.**
7.3	Special Precautions: **Empty containers can contain flammable vapors. Do not cut, drill, grind, weld or perform similar operations on or near containers.**

8. EXPOSURE CONTROLS & PERSONAL PROTECTION

8.1	Ventilation & Engineering Controls: **Use with adequate ventilation (e.g., open doors and windows, local exhaust ventilation). Ensure appropriate decontamination equipment is available (e.g., sink, safety shower, eye-wash station).**
8.2	Respiratory Protection: **None required, when used with adequate ventilation.**
8.3	Eye Protection: **Wear safety glasses with side shields (ANSI Z87) under normal use conditions.**
8.4	Hand Protection: **None required under normal conditions of use. However, may cause skin irritation in some sensitive individuals. In such cases, wear rubber or impervious plastic gloves.**
8.5	Body Protection: **Use as necessary to prevent skin contact.**

9. PHYSICAL & CHEMICAL PROPERTIES

9.1	Density:	0.75
9.2	Boiling Point:	171.1 °C – 204 °C @ 760 mmHg
9.3	Melting Point:	NA
9.4	Evaporation Rate:	0.11 (n-Butyl Acetate = 1.0)
9.5	Vapor Pressure:	35 psig @ 20 °C, 50 psig @ 50 °C
9.6	Molecular Weight:	NA
9.7	Appearance & Color:	Light red, aerosol
9.8	Odor Threshold:	Ethereal/hydrocarbon odor
9.9	Solubility:	Not soluble in water
9.10	pH	ND
9.11	Viscosity:	10.0 cps
9.12	VOC (grams/liters)	588 g/l
9.13	Other Information:	Vapor Density = 4.9 (air = 1.0)

10. STABILITY & REACTIVITY

10.1	Stability: **Stable under normal conditions of use (see section 7).**
10.2	Hazardous Decomposition Products: **Change in color signifies exposure to ultraviolet light or exceeding shelf life. Will not degrade to unstable products. Discard solution.**
10.3	Hazardous Polymerization: **Will not occur.**
10.4	Conditions to Avoid: **Use or storage near open flames, sparks, high heat (>100 °F) or other heat sources, and proximity to incompatible substances and heavily trafficked areas.**
10.5	Incompatible Substances: **Strong oxidizers.**

CAIG LABORATORIES, INC.

SAFETY DATA SHEET

Page 4 of 6
MSDS-E-D5S-A

Prepared to OSHA, ACC, ANSI, NOHSC, WHMIS, 2001/58/EC & 1272/2008/EC Standards | MSDS Revision: 3.0 | MSDS Revision Date: 08/22/2012

11. TOXICOLOGICAL INFORMATION

11.1	Toxicity Data:	**This product has not been tested on animals to obtain toxicological data. There are toxicology data for the components of this product, which are found in the scientific literature. These data have not been presented in this document.**
11.2	Acute Toxicity:	**See section 3.5**
11.3	Chronic Toxicity:	**See section 3.6**
11.4	Suspected Carcinogen:	**NE**
11.5	**This product is not reported to produce reproductive toxicity in humans.**	
	Mutagenicity:	**This product is not reported to produce mutagenic effects in humans.**
	Embryotoxicity:	**This product is not reported to produce embryotoxic effects in humans.**
	Teratogenicity:	**This product is not reported to produce teratogenic effects in humans.**
	Reproductive Toxicity:	**This product is not reported to produce reproductive effects in humans.**
11.6	Irritancy of Product:	**See Section 2.3**
11.7	Biological Exposure Indices:	**NE**
11.8	Physician Recommendations:	**Treat symptomatically.**

12. ECOLOGICAL INFORMATION

12.1	Environmental Stability:	**This product will slowly volatile from soil. Components of this product will slowly decompose into organic compounds.**
12.2	Effects on Plants & Animals:	**There is no specific data available for this product.**
12.3	Effects on Aquatic Life:	**Releases of large volumes of this product are expected to be harmful or fatal to overexposed aquatic life.**
12.4	Environmental Impact (Percent by Weight):	**CFC: 0.0%** **HCFC: 0.0%** **HFC: 20.0%** **Chlorinated Solvent: 0.0%** **VOC: 75.0%** **ODP: 0.0%**

13. DISPOSAL CONSIDERATIONS

13.1	Waste Disposal:	**Dispose of in accordance with federal, state or local regulations.**
13.2	Special Considerations:	**EPA Waste Code: D001 (characteristic – ignitability)**

14. TRANSPORTATION INFORMATION

The basic description (ID Number, proper shipping name, hazard class & division, packing group) is shown for each mode of transportation. Additional descriptive information may be required by 49 CFR, IATA/ICAO, IMDG and the CTDGR.

14.1	49 CFR (GND):	**CONSUMER COMMODITY, ORM-D (until 12/31/2013)** **UN1950, AEROSOLS, 2.1, LTD QTY (IP VOL ≤ 1.0 L)**
14.2	IATA (AIR):	**CONSUMER COMMODITY, 9, ID8000 (≤ 500 ml)** **UN1950, AEROSOLS, 2.1 (> 500 ml)**
14.3	IMDG (OCN):	**UN1950, AEROSOLS, 2.1, LTD QTY (IP VOL ≤ 1.0 L)**
14.4	TDGR (Canadian GND):	**MARK PACKAGE "LIMITED QUANTITY" or "QUANTITÉ LIMITÉE" or "LTD QTY" or "QUANT LTÉE" (≤ 1.0 L)**
14.5	ADR/RID (EU):	**UN1950, AEROSOLS, 2.1, LTD QTY (IP VOL ≤ 1.0 L)**
14.6	SCT (Mexico):	**UN1950, AEROSOLES, 2.1, CANTIDAD LIMITADA (IP VOL ≤ 1.0 L)**
14.7	ADGR (Australia):	**UN1950, AEROSOLS, 2.1, LTD QTY (IP VOL ≤ 1.0 L)**

CAIG LABORATORIES, INC.

SAFETY DATA SHEET

Page 5 of 6
MSDS-E-D5S-A

Prepared to OSHA, ACC, ANSI, NOHSC, WHMIS, 2001/58/EC & 1272/2008/EC Standards | MSDS Revision: 3.0 | MSDS Revision Date: 08/22/2012

15. REGULATORY INFORMATION

15.1 SARA Reporting Requirements:
NA

15.2 SARA Threshold Planning Quantity:
NA

15.3 TSCA Inventory Status:
All chemical substances of this product are listed on the TSCA inventory or are otherwise exempt from inventory status.

15.4 CERCLA Reportable Quantity (RQ):
NA

15.5 Other Federal Requirements:
NA

15.6 Other Canadian Regulations
This product has been classified according to the hazard criteria of the Controlled Products Regulations (CPR) and the MSDS contains all of the information required by the CPR. The components of this product are listed on the DSL/NDSL. None of the components of this product are listed on the Priorities Substances List.

15.7 State Regulatory Information:
The primary component of this product is not listed on the following state lists: California OSHA; California Proposition 65; Massachusetts Right to Know List of Chemicals; New Jersey Right to Know List 8:59 Appendix A; Pennsylvania Hazardous Substances List 34 323 Appendix A; Wisconsin Hazardous Substances List NR 605.09; Minnesota Hazardous Substances List; and Florida Toxic Substances List.

15.8 67/548/EEC (European Union) Requirements:
The primary component of this product is listed in Annex I of EU Directive 67/548/EEC:
Petroleum Naphtha: Flammable, Harmful (F, Xn). Risk Phrases (R): 10-65 – Flammable. Harmful: may cause lung damage if swallowed. Safety Phrases (S): 2-23-24-62 – Keep away from children. Do not breathe gas, fumes, vapor or spray. Avoid contact with skin. If swallowed, do not induce vomiting: seek medical advice immediately and show this MSDS or the container label. WARNING! Flammable aerosol. Colorless, volatile liquid with ethereal and faint sweetish odor. Overexposure may cause dizziness and loss of concentration. At higher levels, CNS depression and cardiac arrhythmia may result from exposure. Vapors displace air and can cause asphyxiation in confined spaces.
Hazard Statements (H): H223 – Flammable aerosol.
Precautionary Statements (P): P210 – Keep away from heat/sparks/open flames/hot surfaces. P211 – Do not spray on an open flame or other ignition source. P251 – Pressurized container. Do not pierce or burn, even after use. P280 – Wear protective gloves and eyewear. P302 + P352 – IF ON SKIN – Wash with plenty of soap and water. P312 – Call a Poison Control Center or doctor/physician if you feel unwell. P333 + P313 – If skin irritation or rash occurs, get medical advise/attention. P321 – Refer to section 4 of this Safety Data Sheet (First Aid). P305+P351+P338 – IF IN EYES - Rinse continuously with water for several minutes. Remove contact lenses if present and easy to do – continue rinsing. P501 – Dispose of contents/container through licensed treatment, storage or disposal facility.

16. OTHER INFORMATION

16.1 Other Information:
NA

16.2 Terms & Definitions:
See last page of this MSDS.

16.3 Disclaimer:
This Material Safety Data Sheet is offered pursuant to OSHA's Hazard Communication Standard, 29 CFR §1910.1200. Other government regulations must be reviewed for applicability to this product. To the best of ShipMate's & CAIG Laboratories, Inc.'s knowledge, the information contained herein is reliable and accurate as of this date; however, accuracy, suitability or completeness are not guaranteed and no warranties of any type, either expressed or implied, are provided. The information contained herein relates only to the specific product(s). If this product(s) is combined with other materials, all component properties must be considered. Data may be changed from time to time. Be sure to consult the latest edition.

16.4 Prepared for:
CAIG Laboratories, Inc.
12200 Thatcher Court
Poway, CA 92064-6876
Tel: +1 (800) CAIG-123 (244-4123)
Fax: +1 (858) 486-8398 fax
http://www.caig.com/

CAIG LABORATORIES, INC.

16.5 Prepared by:
ShipMate, Inc.
P.O. Box 787
780 Buckaroo Trail Suite D
Sisters, OR 97759
Tel: +1 (310) 370-3600
Fax: +1 (310) 370-5700
http://www.shipmate.com

ShipMate
Dangerous Goods Training & Consulting

CAIG LABORATORIES, INC.

SAFETY DATA SHEET

Page 6 of 6
MSDS-E-DSS-A

Prepared to OSHA, ACC, ANSI, NOHSC, WHMIS, 2001/58/EC & 1272/2008/EC Standards | MSDS Revision: 3.0 | MSDS Revision Date: 08/22/2012

DEFINITION OF TERMS

A large number of abbreviations and acronyms appear on a MSDS. Some of these that are commonly used include the following:

GENERAL INFORMATION:

CAS No.	Chemical Abstract Service Number

EXPOSURE LIMITS IN AIR:

ACGIH	American Conference on Governmental Industrial Hygienists
TLV	Threshold Limit Value
OSHA	U.S. Occupational Safety and Health Administration
PEL	Permissible Exposure Limit
IDLH	Immediately Dangerous to Life and Health

FIRST AID MEASURES:

CPR	Cardiopulmonary resuscitation - method in which a person whose heart has stopped receives manual chest compressions and breathing to circulate blood and provide oxygen to the body.

HAZARDOUS MATERIALS IDENTIFICATION SYSTEM: HMIS

HEALTH, FLAMMABILITY & REACTIVITY RATINGS:

0	Minimal Hazard
1	Slight Hazard
2	Moderate Hazard
3	Severe Hazard
4	Extreme Hazard

HEALTH
FLAMMABILITY
PHYSICAL HAZARDS
PERSONAL PROTECTION

PERSONAL PROTECTION RATINGS:

A	
B	
C	
D	
E	
F	
G	
H	
I	
J	
K	
X	Consult your supervisor or SOPs for special handling directions.

Safety Glasses, Splash Goggles, Face Shield & Eye Protection, Gloves, Boots, Synthetic Apron, Full Suit, Dust Respirator, Full Face Respirator, Dust & Vapor Half-Mask Respirator, Full Face Respirator, Airline Hood/Mask or SCBA

Note: the dotted circle indicates that this respiratory protective equipment is required for high concentrations or for large volume spills or releases of product.

OTHER STANDARD ABBREVIATIONS:

NA	Not Available
NR	No Results
NE	Not Established
ND	Not Determined
ML	Maximum Limit
SCBA	Self-Contained Breathing Apparatus

NATIONAL FIRE PROTECTION ASSOCIATION: NFPA

FLAMMABILITY LIMITS IN AIR:	
Autoignition Temperature	Minimum temperature required to initiate combustion in air with no other source of ignition
LEL	Lower Explosive Limit - lowest percent of vapor in air, by volume, that will explode or ignite in the presence of an ignition source
UEL	Upper Explosive Limit - highest percent of vapor in air, by volume, that will explode or ignite in the presence of an ignition source

HAZARD RATINGS:

0	Minimal Hazard
1	Slight Hazard
2	Moderate Hazard
3	Severe Hazard
4	Extreme Hazard
ACD	Acidic
ALK	Alkaline
COR	Corrosive
W	Use No Water
OX	Oxidizer
TREFOIL	Radioactive

TOXICOLOGICAL INFORMATION:

LD_{50}	Lethal Dose (solids & liquids) which kills 50% of the exposed animals
LC_{50}	Lethal concentration (gases) which kills 50% of the exposed animal
ppm	Concentration expressed in parts of material per million parts
TD_{Lo}	Lowest dose to cause a symptom
TCLo	Lowest concentration to cause a symptom
TD_{Lo}, LD_{Lo}, & LD_{50} or TC, TC_{Lo}, LC_{50}, & LC_{Lo}	Lowest dose (or concentration) to cause lethal or toxic effects
IARC	International Agency for Research on Cancer
NTP	National Toxicology Program
RTECS	Registry of Toxic Effects of Chemical Substances
BCF	Bioconcentration Factor
TL_m	Median threshold limit
log K_{OW} or log K_{OC}	Coefficient of Oil/Water Distribution

REGULATORY INFORMATION:

WHMIS	Canadian Workplace Hazardous Material Information System
DOT	U.S. Department of Transportation
TC	Transport Canada
EPA	U.S. Environmental Protection Agency
DSL	Canadian Domestic Substance List
NDSL	Canadian Non-Domestic Substance List
PSL	Canadian Priority Substances List
TSCA	U.S. Toxic Substance Control Act
EU	European Union (European Union Directive 67/548/EEC)
WGK	Wassergefährdungsklassen (German Water Hazard Class)

WORKPLACE HAZARDOUS MATERIALS IDENTIFICATION (WHMIS) SYSTEM:

A	B	C	D1	D2	D3	E	F
Compressed	Flammable	Oxidizing	Toxic	Infection	Infectious	Corrosive	Reactive

EC (67/548/EEC) INFORMATION:

C	E	F	N	O	T+	Xi	Xn
Corrosive	Explosive	Flammable	Harmful	Oxidizing	Toxic	Irritant	Harmful

CLP/GHS (1272/2008/EC) PICTOGRAMS:

GHS01	GHS02	GHS03	GHS04	GHS05	GHS06	GHS07	GHS08	GHS09
Explosive	Flammable	Oxidizer	Pressurized	Corrosive	Toxic	Harmful Irritating	Health Hazard	Environment

11.6 COMPONENT MANUFACTURER LIST

MECHANICAL COMPONENTS			
Span Drive Machinery			
Section	**Description**	**Model No.**	**Manufacturer**
11.7.1	Primary Reducer	Mark II, Size 170-S, Serial No. M-4865	Horsburgh & Scott
11.7.2	Motor & Machinery Brake	IC9516-465K	General Electric
Main Leaf Motor	Life Line T, Serial No. 7806	Westinghouse	Main Leaf Motor
Span Lock Machinery			
Section	**Description**	**Model No.**	**Manufacturer**
	Span Lock Motor	Serial No. H7809	Westinghouse
11.7.4	Span Lock Reducer	-	Foote Jones
11.7.3	Span Lock Motor Coupling	60T10	Falk

TRAFFIC CONTROL DEVICES			
Navigation Lights			
Section	**Description**	**Model No.**	**Manufacturer**
	Fender Navigation Lights	PL	B&B Roadway
	Span Navigation Lights	BS	B&B Roadway
Warning Gates			
Section	**Description**	**Model No.**	**Manufacturer**
	NW Warning Gate	VW-4	B&B Roadway
	Traffic Gate Arm	Contact Manufacturer	B&B Roadway
	Traffic Gate Arm Lights	L4 / C4	B&B Roadway
	Traffic Gate Motor	C6T17NC167C	Leeson
	Traffic Gate Motor Brake Assembly	Contact Manufacturer	B&B Roadway
	Traffic Gate Door Switch	1200	Pass & Seymore
	Traffic Gate Limit Switch	ALS-A001	B&B Roadway
	Traffic Gate Flasher	FL12	B&B Roadway*
	Traffic Gate Gongs	G12	B&B Roadway
	Main Disconnect Switch	7813 PMD	Pass & Seymore/Legrand
	Arm light Fuse/ Gong Fuse	FMN5	Bussman
	Heater	PHT-A001	Berko
	Overhead Sign Flasher	FL12	B&B Roadway*
11.8.1	NE, SE, & SW Warning Gates	VT-66	B&B Roadway

ELECTRICAL COMPONENTS			
Section	**Description**	**Model No./Description**	**Manufacturer**
	Fuses	Varies - See as-built dwgs	Bussman
	Molded Case Circuit Breaker	Series C, size varies - See as-built dwgs	Cuttler Hammer*
	Molded Case Circuit Breaker Motor Operator	1483D43G10	Cuttler Hammer*
	Ammeter	Contact Manufacturer	Crompton-Instrument*
	Voltmeter (0- 600V)	Contact Manufacturer	Crompton-Instrument*
	Voltmeter Switch	Series 24G	Electroswitch*
	Position Display	Contact Manufacturer	Crompton-Instrument*
	Watt meter (0 - 400KW)	Contact Manufacturer	Crompton-Instrument*
	Control Desk Indicating Light	CMC Series /908 AAA	Senasys*
	Control Desk Pushbutton	CMC Series / 909 AAA	Senasys*
	Control Desk Selector Switch	CMC Series /910 AAA	Senasys*
	Control Desk Selector - Pushbutton	CMC Series /911 AAA	Senasys*
	Cover Plates Insert, Red	986 AAA 01, 986 AAA 02	Senasys*
	Cover Plates Insert, Green	986 AAA 05, 986 AAA 06	Senasys*
	Cover Plates Insert,White	986 AAA 09, 986 AAA 10	Senasys*
	Cover Plates Insert, Amber	986 AAA 11, 986 AAA 12	Senasys*
	Cover Plate	986 AAB 01, 986 AAB 02	Senasys*
	Lamp	PTZ 40, PTZ 66, PTZ 67	Senasys*
	Lamp Holder	986 BAA 05, 986 BAA 06	Senasys*
	Foot Switch	531-SWH	Linearmaster*
	12 Poles Remote Controlled Switch (20A)	918	ASCO*
	3 Poles Remote Controlled Switch (100A)	175	ASCO*
	Nema Size 1 Reversing / Non reversing starters	509BOD / 505VBOD	Square D
	Nema Size 3 Contactors	8910	Square D
	General Purpose Relays	D3PF, D3PR	Cuttler Hammer*
	Machine Tool Relays	Type XO	Square D
	Timing Relay	7000 Series / 7032	Agastat*
	Phase / Undervoltage Relay	SLE Series	Diversified Electronics*
11.9.2	Drives (Secondary Thyristor Controller)	4922C	Hubbell
	Span Lock Disconnect Switches	30A Fusible Nema 4X Safety Switch	Square D
	Span Motor Disconnect Switches	200A Fusible Nema 12 Safety Switch	Square D
11.9.1	Overspeed Tachometer	2210-262CC1-3FX83	Hubbell
	Selsyn	10-1051-100	Henschel Corp

ELECTRICAL COMPONENTS (cont.)			
Section	**Description**	**Model No./Description**	**Manufacturer**
	Span Lock Limit Switches	780	Namco*
	Fully Seated Limit Switch	LSP	B&B Roadway*
	Rotary Cam Limit Switch	1980	Ametek Gemco*
	Brake Limit Switches	E50SB	Cultler Hammer*
	Resistors	Contact Manufacturer	Post Glover
	Terminal Block	721	Buchanan*
	Distribution Block	Type PDB	ILSCO*
	Automatic Transfer Switch 400A	386 Series OR 4000 Series	ASCO*
	Lighting Transformer (480V/ 208V/120V , 45KVA)	V48M28T45EE	Cutler Hammer*
	Lighting Transformer (480V/ 208V/120V , 30KVA)	V48M28T45EE	Cutler Hammer*
	Control Transformer (480V/120V)	C341	Cutler Hammer*
	Isolation Control Transformer 7.5 KVA	HZ127500	Sola Hevi-Duty
	Fuses	Varies - See as-built dwgs	Bussman
	Molded Case Circuit Breaker	Series C, size varies - See as-built dwgs	Cutler Hammer*
	Molded Case Circuit Breaker Motor Operator	1483D43G10	Cutler Hammer*
	Ammeter	Contact Manufacturer	Crompton-Instrument*
	Voltmeter (0- 600V)	Contact Manufacturer	Crompton-Instrument*
	Voltmeter Switch	Series 24G	Electroswitch*
* Existing part no longer manufactured. Approved replacement part is listed			

11.7 MECHANICAL EQUIPMENT MANUALS AND SPECIFICATIONS

11.7.1 PRIMARY – HORSBURGH & SCOTT REDUCER TYPE 170-S

Enclosed Gear Drive Maintenance Manual

Table Of Contents

Section	Title
1	Enclosed Gear Drive Installation
2	Coupling Installation, Lubrication and Maintenance
3	Start-Up and Shut Down Procedures
4	Lubrication and Recommended Lubricants
5	Enclosed Gear Drive Maintenance Schedule
6	Disassembly and Assembly
7	Bearing Adjustment
8	Shaft Seals
9	Long Term Storage Procedure
10	Gear Misalignment Patterns
11	AGMA Terminology of Wear and Failure Standard

Enclosed Gear Drive Maintenance Manual

Cleveland, Ohio www.horsburgh-scott.com

Enclosed Gear Drive Installation

A. Installation

1. The unit should be mounted on a bedplate or base specially designed for this purpose. The mounting surfaces should be flat and rigid. All mounting bolt holes should be used with the size bolting indicated on the Horsburgh & Scott Certified Dimension Drawing.

2. When lifting the unit, use the lifting lugs or eye bolts provided. Never lift a gear drive by the shaft extensions. Care should be taken to prevent damage to lube lines and components when lifting. Always lift the gear drive flat and parallel and do not bump or jar shaft extensions.

3. Any irregularities that occur in the bedplate or base should be taken up by steel shims. See Figure 1. Shims should be of ample surface area and must be placed around the mounting base bolting. In some cases, jack screws are provided for leveling. Never tighten base bolts against a jack screw.

4. Following alignment of connecting shafts, the base bolts are tightened to the recommended values (see Bolt Torque Chart). Some gear drives have holes for dowel pins. Dowel holes should be drilled into the base after final alignment in opposite corners. Dowel pins provide quick realignment after removal of the unit for repair or service. When dowel pins are not used, shear blocks are recommended. Shear blocks should be installed on both sides and faces.

B. Shaft Connections and Alignment

1. In most cases, flexible couplings are mounted on shaft extensions of gear drives. The prime mover and driven equipment should be aligned to the gear drive within the coupling manufacturer's recommendations.

2. Shaft alignments should be checked in four places around the shaft at 90°. The correct gap must also be maintained. The gear drive must be level and secure before alignment of shafting begins.

3. Interference fits are recommended for couplings and devices mounted on shaft extensions. Heat these elements to approximately 250° – 300° F. (if the design allows) before putting them on the shaft. Do not hammer against the shaft in any way -- damage to bearings or gearing may result.

4. Keys should be fitted prior to installing couplings. Keys are to have a snug fit but not so as to cause stress in the shaft or coupling. Corners of keys should be chamfered, along with all radii and corners.

5. Connect equipment with bolts recommended by the manufacturer and tighten to the correct torque values. Lubricate per the manufacturer's specification.

MM 11/2009 **Section 1 - Page 1**

Cleveland, Ohio

Enclosed Gear Drive Maintenance Manual
www.horsburgh-scott.com

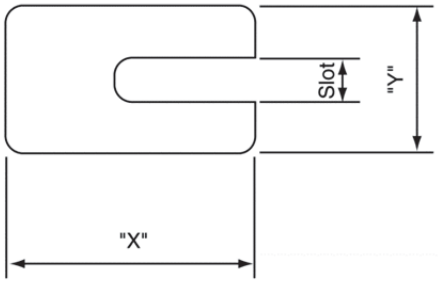

NOTES:
1) "X" to be as wide as the gear drive foot pad
2) "Y" to be as req'd for the area to be 5 times bolt area
3) Slot to be 1/2" larger than bolt dia.
4) Shims to be flat within 0.030"

TYPICAL INSTALLATION

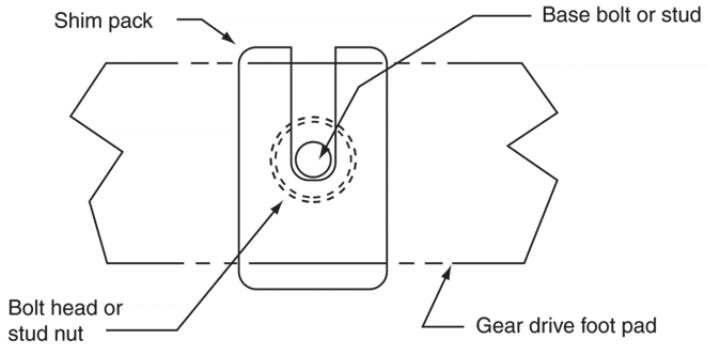

Figure 1 Preferred Base Shim Style

MM 11/2009

Section 1 - Page 2

Enclosed Gear Drive Maintenance Manual

Cleveland, Ohio www.horsburgh-scott.com

Coupling Installation, Lubrication and Maintenance

A. Introduction

The instructions herein apply to general applications of standard couplings only. Custom designed couplings may require special installations, alignment, and maintenance procedures. Careful attention to proper installation and alignment will help ensure trouble free service life.

The main reason for taking time to properly align couplings is to prevent transmission of undesirable stresses and vibrations to shafting, bearings, couplings, and other connected equipment. Proper procedures upon initial installation will give maximum life with the least number of service problems.

CAUTION: The main source of power to the prime mover should always be locked out before any maintenance service work is started. Normal safety rules and procedures must be followed. All couplings must be guarded to protect against accidents from rotating machinery.

B. Installation

The first step to installing couplings is to remove any packaging materials and disassemble the coupling. Clean all parts using a good quality solvent.

Shaft journals should be cleaned and inspected for burrs and signs of abuse that may cause problems during hub installation. Raised spots can be filed down and polished with emery paper. Key and keyway burrs should also be removed to prevent hanging up during assembly. It may be desirable to use a sealant around the key to prevent leakage of the lubrication grease during operation.

Carefully measure the widths and heights of keyways and key to determine that the hub will not bind-up on the key during assembly.

Measure the shaft and hub bore accurately to determine that the interference fit is to your drawings or written specifications.

Seal plates and O-rings should be placed on the shaft extension prior to the hubs. A light coat of oil or grease on the O-rings will aid in assembly over the hub later on. Care should be taken not to allow the heated hub to contact the O-rings.

The coupling hubs should be heated in an oven or oil bath to a maximum of 275° F. The oil flash point must be 350° F. or higher. A rosebud type heating torch can be used, but extra caution must be taken to avoid overheating and to keep the flames away from the teeth. Do not rest the hub on the teeth during heating! Slide the heated hub over the shaft and key, aligning the front face of the hub with the end of the shaft. Repeat the same procedure for the mating hub.

MM 11/2009 **Section 2 - Page 1**

Enclosed Gear Drive Maintenance Manual

Cleveland, Ohio www.horsburgh-scott.com

Coupling Installation, Lubrication and Maintenance

B. Installation (continued)

The coupling hubs must be cool before the alignment procedure starts. Slide coupling sleeves over the hub before moving the equipment into place.

The first step is to bring the coupling halves to the gap specified by the manufacturer. Begin by adjusting the equipment for angular misalignment. If feasible, a dial indictor near the outside diameter on the face is the preferred method of alignment. An alternative method is to use a flat bar of constant thickness, along with feeler gauges, and check the gap between hub faces every 90°. Be sure to always measure to the same depth. The limits shown in Table 1 should be followed as maximums, realizing that the closer to zero the alignment, the greater service life can be expected. Move one or both pieces of machinery to gain the required alignment. Exact or perfect alignment will cause lubrication problems; i.e., fretting. Close to zero alignment is good, perfect alignment is not good.

The next step is to align the coupling halves for parallel offset. Even though the faces may run true to each other, the axis of each half may not be collinear. The preferred method is to use a dial indicator. Mount the indicator on the outside diameter of one hub, and take readings off the outside diameter of the other hub. Rotate the hub that has the dial indicator mounted on it, taking note of the maximum total indicator reading (T.I.R.). The actual value of parallel offset is one half of the T.I.R. The alternative method involves using a straight edge across the hub outside diameters and measuring the gap with a feeler gauge. Be sure to check every 90° with this method.

After both alignment parameters have been measured and set, they should both be rechecked. When moving equipment to correct for one condition, it may adversely affect the other. Careful attention should allow for very accurate alignment.

Upon completion of the alignment, the coupling can be bolted together and lubricated. Prior to sliding the sleeve over the hub, the hub teeth should be packed with grease. The coupling sleeve can then be carefully engaged and slid over the hub. Be sure to install the flange O-ring before piloting the two flanges together. The bolts are fitted with close clearances between the flange holes. The flanges must be square to each other, and the holes in close relative position before the bolt is inserted. Place all the bolts in the flanges prior to any tightening.

At this time, the rear seal retainer plates should be installed. Be sure both O-rings are in place. A light coat of oil or grease will ease in sliding the larger O-ring over the hub. Install all the retainer bolts and tighten.

The flange bolts can now be tightened. All the bolts should be snugged so that the flanges are tight together. Alternating across the coupling will prevent cocking the sleeves and perhaps jamming the assembly.

MM 11/2009 **Section 2 - Page 2**

Coupling Installation, Lubrication and Maintenance

C. Lubrication

A good quality extreme pressure lubricating grease is recommended for all coupling applications. A sufficient amount of clean lubricant is required for long service life.

Frequency of lubrication depends upon service and the atmosphere around the equipment. Applications requiring more frequent lubrication are extreme temperature variations, moisture, heavy shock loads, and load reversals. The final lubrication schedule should be agreed upon by the equipment user and his lubricant supplier.

Extreme pressure greases are recommended for all applications. Horsburgh & Scott recommends a National Lubrication Grease Institute (NLGI), grade #1 for most applications where ambient temperatures range from 20° to 150° F., and the loading is fairly constant. NLGI #0 is recommended for slow speeds and very high loads. Where there are several couplings on the same equipment, the NLGI #0 can be used for all couplings if required at certain points. For operating conditions outside of the ranges above, consult your lubricant supplier.

The coupling halves should be filled with grease using a pressure gun, with the grease fitting at 3 o'clock or 9 o'clock position. Grease should be added until it flows from the vent plug, located 180° from the inlet fitting. Rotate the coupling 180° and repeat the greasing procedure.

For general application, the lubricant should be reapplied at 6 month intervals. Special cases may require more frequent lubrication schedules.

D. Maintenance

Gear couplings require very little maintenance. Check periodically for leaks and loose bolts.

An annual inspection of the gear teeth is recommended for continuous duty applications where cycles are high. Remove all flange bolts and seal retainer bolts and slide both sleeves and retainers back to expose the gear teeth. Wipe all old grease off and inspect the teeth for pitting or cracks. Burrs can be filed off and rough surfaces smoothed over with emery paper. Be sure to clean all parts thoroughly before reassembly.

It is good practice to recheck alignment at this time. Coupling wear could be attributed to misalignment. Upon realignment and reassembly, the coupling life should be extended over one that was not serviced.

Please feel free to contact Horsburgh & Scott at (216) 431-3900 for a field service representative to help with any special problems or for general maintenance inspection.

Enclosed Gear Drive Maintenance Manual

Cleveland, Ohio www.horsburgh-scott.com

Start Up Procedure

Every enclosed gear drive built by Horsburgh & Scott is spin tested at the nameplate speed under no load before it leaves the factory.

CAUTION: Your gear drive is shipped without oil.

Follow the installation and shaft alignment methods as outlined in this manual and your unit is ready for start up. The unit is shipped with no oil and it must be filled to the proper level with the lubricant recommended on the nameplate. When a filler hole is not provided, the gear drive can be filled through the inspection opening. Remove the cover bolts and inspection cover. Do not allow any foreign material to enter the gearcase while adding oil. Add only enough oil to bring the level up to the level indicated.

For drives with circulating oil lube systems, the lube motor should be started prior to turning over the gear drive. Allow the oil to circulate for at least 5 minutes. At this time, the flow to all sight feed oilers must be rechecked. Oilers are factory set but should be rechecked upon initial start up.

All leaks must be repaired at this time. Damage to lube lines caused during shipment or leaks at shaft seals must be repaired before the drive is put into service.

The gear drive can now be turned over. It is recommended that the unit be operated at nameplate speed, under a light load for several hours. After the initial break-in period, the oil level and flow, along with bearing temperatures, should be rechecked. Once satisfactory operation of all the elements is evident, the unit can be run under the rated load.

MM 11/2009 **Section 3 - Page 1**

Enclosed Gear Drive Maintenance Manual

Cleveland, Ohio www.horsburgh-scott.com

Shut Down Procedure

For extended shutdown periods, 1 week or more, the unit will require special lubrication procedures to ensure the machined surfaces are covered with a protective film of oil. The unit should be run for 15 minutes each week to ensure thorough lubrication of all internal parts.

For very long storage periods, when weekly runs will not be possible, the unit should be coated internally with a preservative. Mobil Oil Corporation, Mobilarma 524, is sufficient for six month storage. Longer periods require flushing and reapplication at six-month intervals.

MM 11/2009 **Section 3 - Page 2**

Enclosed Gear Drive Maintenance Manual

Cleveland, Ohio www.horsburgh-scott.com

Lubrication and Recommended Lubricants

A. General Requirements

CAUTION: Your gear drive is shipped without oil.

Units must be filled to the oil level indicator before starting. Each unit is equipped with a nameplate indicating the AGMA classification of oil to be used and the approximate number of gallons required. When units are furnished with dipsticks, the oil level will be indicated on the stick. If the dipstick is lost or misplaced, the recommended oil level is indicated on the nameplate and is made in reference to the split line of the housing. Check the oil level at regular intervals when the unit is warm and NOT running.

It is extremely important to use only a high grade oil of the proper viscosity. The viscosity range of the lubricant must be within the range of operating conditions of the gear drive. The pour point of the oil must be below the lowest expected ambient temperature in which the unit will operate. Lubricants of the straight mineral type are preferred for the majority of all speed reducer applications except worm gears. They should be high-quality, well-refined petroleum oils. The oil must not be corrosive to gears or bearings, must be neutral in reaction, free from grit or abrasives and have good defoaming properties. Good resistance to oxidation is also essential as the oil may be subjected to high operating temperatures. For worm gears, additions of 3% to 10% acidless tallow or similar animal fats are desirable.

B. Extreme Pressure Lubricants

Extreme pressure lubricants contain additives which increase the unit's load carrying capacity and tend to reduce the unit operating temperature. However, these lubricants are not as chemically stable as mineral lubricants and are generally not recommended for temperatures over 160°F. Sludge may form, particularly when the atmosphere is contaminated with dust, extremely humid, chemically laden and when operating temperatures are high. To guard against this, it is recommended that the lubricant be changed at more frequent intervals than with mineral type lubricants.

C. Splash Lubrication

In splash lubricated units, the lubricant is picked up by fast moving gears and distributed to all gear tooth engagements and to troughs for lubricating shaft bearings. The oil level is placed at a height so that the gear having the highest velocity dips into the oil. Throwing action is quite violent and distributes oil to every part of the housing. The housing contours are such that natural drainage for the oil is downward where troughs catch and distribute oil to the bearings. Proper oil level is important. Too low a level will result in poor distribution and lack of lubrication. On the other hand, too high a level will result in unnecessary churning which wastes power, generates excessive heat, increases temperature and thins the oil.
CAUTION: If a unit is to be run for long periods at low speed during break-in periods for connected equipment, the oil level should be raised sufficiently to allow bearings to ride in the oil since the

MM 11/2009 **Section 4 - Page 1**

splash lubrication is relatively ineffective at low speeds. Reduce the oil level to normal after regular speeds are resumed.

D. Circulating System

The basic circulating type of system consists of an oil pump, either motor driven or speed reducer shaft driven, pressure gage or flow gages and the necessary piping. The housing serves as a mounting for the motor driven or shaft driven pump and supplies inlet oil to the pump. The piping is arranged to permit a stream of oil to be sprayed directly onto the teeth in certain critical areas and to lubricate the bearings. Oil filters are sometimes provided to keep the oil clean and free of impurities. Replace or clean elements following recommendations on the filter nameplate.

E. Extreme Ambient Temperature Applications

If ambient temperature conditions vary from the ranges shown in the table "AGMA Viscosity Recommendations for Splash Lubricated Units for Average Operating Conditions", consult Horsburgh & Scott for recommendations. Unless otherwise advised, the AGMA viscosity recommendation that is stamped on the nameplate assumes an ambient temperature of 50°F to 125°F. Ambient temperature is defined as the air temperature in the immediate vicinity of the gear drive. Gear drives exposed to the direct rays of the sun or other radiant heat sources will run hotter even though the ambient temperature may be within reasonable limits. These applications must be given special consideration such as the addition of heat shields or fans. If a speed reducer is to be used outdoors when temperature conditions vary considerably between summer and winter, it is recommended that the oil be changed to the proper viscosity for each season.

F. Grease Lubrication of Bearings

Pressure fittings are supplied for lubricating bearings that are not lubricated by the splash system. Frequency of lubrication will depend upon the amount of running time. Normal requirements would be to apply sufficient grease to form a film over the rollers and races. Greases should be compounded from a high grade soap and refined mineral oil free from acid, alkali and any abrasive filler. Sodium or lithium based greases are generally preferred. For operating temperatures in the range of 32°F to 200°F, we recommend a grease conforming to NLGI #1 Grease. Consult the factory if temperatures are outside this range.

Table 4 – Viscosity ranges for AGMA lubricants

Rust and Oxidation inhibited gear oils AGMA Lubricant No.	Viscosity range [1] mm2/s (cSt) at 40°C	Equivalent ISO grade [1]	Extreme pressure gear lubricant [2] AGMA Lubricant No.	Synthetic gear oils [3] AGMA Lubricant No.
0	28.8 to 35.2	32		0 S
1	41.4 to 50.6	46		1 S
2	61.2 to 74.8	68	2 EP	2 S
3	90 to 110	100	3 EP	3 S
4	135 to 165	150	4 EP	4 S
5	198 to 242	220	5 EP	5 S
6	288 to 352	320	6 EP	6 S
7, 7 Comp [4]	414 to 506	460	7 EP	7 S
8, 8 Comp [4]	613 to 748	680	8 EP	8 S
8A Comp [4]	900 to 1100	1000	8A EP	–
9	1350 to 1650	1500	9 EP	9 S
10	2880 to 3520	–	10 EP	10 S
11	4140 to 5060	–	11 EP	11 S
12	6120 to 7480	–	12 EP	12 S
13	190 to 220 cSt at 100°C (212°F) [5]	–	13 EP	13 S
Residual compounds [6]	**Viscosity ranges 5)**			
AGMA Lubricant No.	**cSt at 100° C (212° F)**			
14R	428.5 to 857.0			
15R	857.0 to 1714.0			

NOTES
1) Per ISO 3448, *Industrial Liquid Lubricants – ISO Viscosity Classification*, Also ASTM D 2422 and British Standards Institution B.S. 4231.
2) Extreme pressure lubricants should be used only when recommended by the gear manufacturer.
3) Synthetic gear oils 9S – 13S are available but not yet in wide use.
4) Oils marked Comp are compounded with 3% to 10% fatty or synthetic fatty oils.
5) Viscosities of AGMA Lubricant Number 13 and above are specified at 100°C (210°F) as measurement of viscosities of these heavy lubricants at 40°C (100°F) would not be practical.
6) Residual compounds – diluent type, commonly known as solvent cutbacks, are heavy oils containing a volatile, non-flammable diluent for ease of application. The diluent evaporates leaving a thick film of lubricant on the gear teeth. Viscosities listed are for the base compound without diluent.
CAUTION: These lubricants may require special handling and storage procedures. Diluent can be toxic or irritating to the skin. Do not use these lubricants without proper ventilation. Consult lubricant supplier's instructions.

Extracted from ANSI/AGMA 9005-D94, *Industrial Gear Lubrication* with the permission of the publisher, the *American Gear Manufacturers Association*, 1500 King Street, Suite 201, Alexandria, Virginia 22314

MM 11/2009 **Section 4 - Page 3**

Enclosed Gear Drive Maintenance Manual

Cleveland, Ohio www.horsburgh-scott.com

Table 5 – AGMA lubricant number guidelines for enclosed helical, herringbone, straight bevel, spiral bevel and spur gear drives [1)]

Pitch line velocity [2),3)] of final reduction stage	AGMA lubricant numbers, [1),4),5)] ambient temperature °C °(F) [6),7)]			
	-40 to -10 (-40 to +14)	-10 to +10 (14 to 50)	10 to 35 (50 to 95)	35 to 55 (95 to 131)
Less than 5 m/s (1000 ft/min) [8)]	3 S	4	6	8
5-15 m/s (1000-3000 ft/min)	3 S	3	5	7
15-25 m/s (3000-5000 ft/min)	2 S	2	4	6
Above 25 m/s (5000 ft/min) [8)]	0 S	0	2	3

NOTES

1) AGMA lubricant numbers listed above refer to R & O and synthetic gear oil shown in table 4. Physical and performance specifications are shown in tables 1 and 3. EP or synthetic gear lubricants in the corresponding viscosity grades may be substituted where deemed acceptable by the gear drive manufacturer.
2) Special considerations may be necessary at speeds above 40 meters per second (8000 feet per minute). Consult gear drive manufacturer for specific recommendations.
3) Pitch line velocity replaces center distance as the gear drive parameter for lubricant selection. The corresponding table from the previous standard is included as annex B for reference.
4) Variations in operating conditions such as surface roughness, temperature rise, loading, speed, etc., may necessitate use of a lubricant of one grader higher or lower. Contact gear drive manufacturer for specific recommendations.
5) Drives incorporating wet clutches or overrunning clutches as backstopping devices should be referred to the gear manufacturer as certain types of lubricants may adversely affect clutch performance.
6) For ambient temperatures outside the ranges shown, consult gear manufacturer.
7) Pour point of lubricant selected should be at least 5°C (9°F) lower than the expected minimum ambient starting temperature. If the ambient starting temperature approaches lubricant pour point, oil sump heaters may be required to facilitate starting and ensure proper lubrication (see 5.1.6).
8) At the extreme upper and lower pitch line velocity ranges, special consideration should be given to all drive components, including bearing and seals, to ensure their proper performance.

Extracted from ANSI/AGMA 9005-D94, *Industrial Gear Lubrication* with the permission of the publisher, the *American Gear Manufacturers Association*, 1500 King Street, Suite 201, Alexandria, Virginia 22314

MM 11/2009 **Section 4 - Page 4**

Table 6 – AGMA Lubricant number guidelines for enclosed cylindrical worm gear drives [1)]

Pitch line velocity [2)] of final reduction stage	AGMA lubricant numbers, [1),] ambient temperature °C °(F) [3), 4)]			
	-40 to -10 (-40 to +14)	-10 to +10 (14 to 50)	10 to 35 (50 to 95)	35 to 55 (95 to 131)
Less than 2.25 m/s (450 ft/min)	5 S	7 Comp	8 Comp	8 S
Above 2.25 m/s (450 ft/min)	5 S	7 Comp	7 Comp	7 S

NOTES

1) AGMA lubricant numbers listed above refer to compounded R & O oils and synthetic oils shown in table 4. Physical and performance specifications are shown in tables 1 and 3. Worm gear drives may also operate satisfactorily using other types of oils. Such oils should be used, however, only with approval of the gear manufacturer.
2) Pitch line velocity replaces center distance as the gear drive parameter for lubricant selection. The corresponding table from the previous standard is included as annex B for reference.
3) Pour point of the oil used should be at least 5°C (9°F) lower than the minimum ambient temperature expected.
4) Worm gear applications involving temperatures outside the limits shown above, or speeds exceeding 2400 rpm or 10 m/s (2000 ft/min) sliding velocity, should be referred to the manufacturer. In general, for higher speeds a pressurized lubrication system is required along with adjustments in recommended viscosity grade.

Extracted from ANSI/AGMA 9005-D94, *Industrial Gear Lubrication* with the permission of the publisher, the *American Gear Manufacturers Association*, 1500 King Street, Suite 201, Alexandria, Virginia 22314

Table 7 – AGMA Lubricant number guidelines for enclosed double enveloping wormgear drives [1)]

Center distance of final reduction stage	Worm speed of final reduction Stage, rpm	AGMA lubricant numbers, [1),] ambient temperature °C °(F) [3), 4)]			
		-40 to -10 (-40 to +14)	-10 to +10 (14 to 50)	10 to 35 (50 to 95)	35 to 55 (95 to 131)
Up to 150 mm (6 in)	Up to 700	7 S	8 Comp	8A Comp	7 S
	Over 700	7 S	8 Comp	8 Comp	7 S
Over 150 mm (6 in) To 300 mm (12 in)	Up to 450	7 S	8 Comp	8A Comp	7 S
	Over 450	7 S	8 Comp	8 Comp	7 S
Over 300 mm (12 in) To 450 mm (18 in)	Up to 300	7 S	8 Comp	8A Comp	7 S
	Over 300	7 S	8 Comp	8 Comp	7 S
Over 450 mm (18 in)	Up to 200	7 S	8 Comp	8A Comp	7 S
	Over 200	7 S	8 Comp	8 Comp	7 S

NOTES:
1) AGMA lubricant numbers listed above refer to compound R & O oils and synthetic oils shown in table 4. Physical and performance specifications are shown in table 1 and 3. EP oils with sulphur-phosphorus additives are not recommended for use without the gear manufacturer's approval. Worm gear drives may operate satisfactorily using other types of oils. Such oils should be used, however, only with approval of the gear manufacturer.
2) Pour point of the oil used should be at least 5°C (9°F) lower than the minimum ambient temperature expected.
3) Worm gear applications involving temperatures outside the limits shown above, or speeds exceeding 2400 rpm or 10 m/s (2000 ft/min) sliding velocity, should be referred to the manufacturer. In general, for higher speeds a pressurized lubrication system is required along with adjustments in recommended viscosity grade.

Extracted from ANSI/AGMA 9005-D94, *Industrial Gear Lubrication* with the permission of the publisher, the *American Gear Manufacturers Association*, 1500 King Street, Suite 201, Alexandria, Virginia 22314

Enclosed Gear Drive Maintenance Manual

Cleveland, Ohio www.horsburgh-scott.com

Enclosed Gear Drive Maintenance Schedule

First Week

1. Check all bolting and retighten if necessary.
2. Check oil level while unit is not running.
3. Remove inspection cover and examine gear teeth for undue wear.
4. With unit running, observe shaft extensions for axial or radial runout.
5. Inspect unit for oil leaks.
6. Check operating temperature.

First Month

1. Drain unit and discard oil.
2. Fill with a good grade of flushing oil, SAE 10.
3. Operate unloaded for approximately fifteen minutes.
4. Drain out flushing oil.
5. Replace filter element, if so equipped.
6. Refill with proper quantity and quality of oil.
7. Operate unit for a few minutes.
8. Check oil level.

Semi-Annually

1. Drain and discard oil.
2. Flush with a good grade of flushing oil, SAE 10.
3. Replace filter element, if so equipped.
4. Remove inspection cover and examine gear teeth for undue wear.
5. Check breather element, clean or replace as necessary
6. Refill with the proper quantity and quality of oil.
7. Operate for a few minutes, check oil level.
8. Check all bolting and retighten if necessary.

Annually

1. Repeat semi-annual maintenance inspection. If conditions warrant, a complete disassembly and inspection may be required.
2. Drain and disconnect couplings.
3. Follow disassembly procedures.

MM 11/2009 **Section 5 - Page 1**

Enclosed Gear Drive Maintenance Manual

Cleveland, Ohio www.horsburgh-scott.com

Disassembly and Assembly

A. Disassembly

1. The first step before any maintenance procedures on a gear drive is to shutdown and lockout the prime mover.
2. Disconnect all couplings.
3. Depending on the atmosphere in which the unit operates, a thorough cleaning of the gear drive and the surrounding area may be required. It is imperative that the drive be clean to prevent dirt from entering the lubrication system.
4. Drain and discard oil and oil filter.
5. If the gear drive is equipped with a circulating lube system, all lines to retaining plates must be disconnected at the plates, along with any lines that may connect the upper half of the housing to the lower half of the housing. This may include electrical wiring to flow switches and/or pressure switches.
6. Remove all housing flange bolts, studs, and all bolts in the retaining plates above the split line. Loosen all bolts in the retaining plates below the split line, and tap the plates loose.
7. Remove the upper half of the housing, using the lifting lugs provided, taking care to ensure that it lifts straight up without cocking. Be sure not to hit any of the rotating elements while removing the upper housing half; this may damage bearings, gear teeth, or the sealing surface. Place the housing top on clean soft wood, never directly on a concrete floor.
8. Shafts that need to be removed that have extensions will have gaskets, shims and retaining plates. These items should be wired together for bearing adjustment during reassembly.
9. Sketch or photograph the arrangement of the extension shafts since some reducers can be assembled either right or left hand.
10. Starting at the input pinion, slowly lift the shaft out of the lower half of the housing, allowing the shaft to rotate and the gear teeth to come out of engagement slowly. The shaft should be lifted straight up and parallel to its position in the drive.
11. Repeat the same procedure for each shaft, taking care not to damage gear teeth of bearings.
12. Thoroughly clean the interior of the lower half of the housing, making sure all dirt has been removed. Also, clean all rotating elements, gears and bearings. Extreme care must be taken when cleaning bearings if they are to be reused. Use a generous amount of a good quality solvent and then use compressed air to remove the solvent from between the rollers and cage. Note: Take proper precautions when using compressed air.

MM 11/2009 **Section 6 - Page 1**

B. Assembly

1. Before any assembly work is performed, all internal elements of the gear drive should be inspected. All gear teeth, bearing cups, and bearing rollers should be visually checked for signs of excessive wear. Check housing bores for signs of wear due to rotating bearing cups. Replace bearings as necessary at this time. Contact Horsburgh & Scott at 216-431-3900 for gear elements that need to be replaced. Also, inspect and replace all shaft seals as needed.

2. Begin assembling the gear drive by checking to make sure the interior of the housing is clean and dry of any solvents.

3. Coat the internal surface of the bearing cup with a light film of grease. Starting with the output shaft, lower the shaft assembly into the lower half of the housing. If the unit has single row taper or radial roller bearings, the bearing cups should be on the cones at this time. Carefully place the shaft assembly in its bore, making sure the bearing is not cocked and that it seats squarely in the bore.

   In the case of spherical or double row roller bearing, a locking pin may be used, and if so, it must be aligned with the counterbore in the bearing outer cup. In some cases, the bearing may be locked by a lock and lube pin through the top half of the housing.

4. If the unit is being assembled with all used parts, bearing clearance adjustments may not be required. If any new parts are on the shaft assembly, bearing clearance will have to be checked and set.

   Note: If factory made gaskets are not available, a good quality manila paper cut to size will be acceptable. Gaskets/shims are never used between the retaining plate and the bearing cup.

5. After setting the axial end play, rotate the shaft to seat the bearings and be sure there is no binding within the bearings.

6. Follow the same procedure for all shaft assemblies in the gear drive, setting the bearings for each shaft as detailed above. Be sure to allow the shafts to rotate and the teeth to mesh as each shaft is placed in its respective bore.

7. When all shafts are in the housing, slowly rotate the input pinion, noting the freedom of movement. Check each mesh for smooth engagement. Inspect gear teeth again to make sure no damage was caused during the assembly.

   Note: Bearing cartridges may have been desirable in the original design. When bearing cartridges are used, they must be assembled on the shaft with the bearing and then set into the housing as an assembly. Oil lubrication supply and drain holes must be aligned, along with any bearing locking pins.

8. Clean and wipe the surfaces at the housing split, taking care not to get any dirt inside the housing or in the bearings. Lightly file and sand any nicks or burrs on the split surfaces.

B. Assembly (continued)

Note:

a. Any Horsburgh & Scott reducer unit built prior to February 7, 1983, was designed with a .010" gasket in the housing split. Upon reassembly of these units, a gasket of equal thickness must be used to maintain bore sizes.

b. Any Horsburgh & Scott reducer unit built after February 7, 1983, does not have the gasket on the split. These units use GE-RTV Silicone Rubber Adhesive sealant on the split. During reassembly, a single .125" bead is used around the entire split surface. Be careful not to allow excess sealant to contaminate bearings when the housing is clamped together.

9. Loosen all lower retaining plate bolts. Lift the upper half of the housing, being sure it lifts straight and parallel. Clean the sealing surface of the upper housing. Slowly lower the upper half of the housing onto the lower half, taking care not to hit the gearing and bearings. If the housing has tapered pins on the split, align these and lower the housing. On later designs, face pins are used instead of tapered dowel pins on the housing split. These pins must be in place before lowering the top half of the housing.

10. Insert bolts in the retaining plates above the split and tighten the retaining plate bolts evenly. Be sure the plate rests flat against the housing. Bolts should be tightened in an even manner, alternating across the retaining plate and then alternating across the gear drive.

11. Insert all bearing boss bolts/nuts and all flange bolts before tightening. Start tightening at the center bearing boss bolts alternating across the housing and finish with the flange bolts. Tighten all bolting to recommended torque values for the particular bolt size.

12. Connect all lube lines and electrical components.

13. Fill the gear drive to the recommended level with the grade of oil specified on the nameplate.

14. For drives with circulating lube systems, start the system and make preliminary adjustments to the sight feed oilers.

15. Reconnect couplings and follow startup procedures.

Enclosed Gear Drive Maintenance Manual

Cleveland, Ohio

www.horsburgh-scott.com

Bolt Torque Chart

Bolt Size (U.N.C.)	Torque (Ft. - Lbs.)
3/8" – 16	17.5
1/2" – 13	51
5/8" – 11	98
3/4" – 10	175
7/8" – 9	320
1" – 8	515
1-1/4" – 7	820
1-1/2" – 6	1480
1-3/4" – 5	1810
2" – 4	2725
2-1/2" – 4	5450
3" – 4	9760

MM 11/2009

Section 6 - Page 4

Enclosed Gear Drive Maintenance Manual

Cleveland, Ohio www.horsburgh-scott.com

Bearing Adjustment

Three basic types used in medium and large industrial gear drives are:

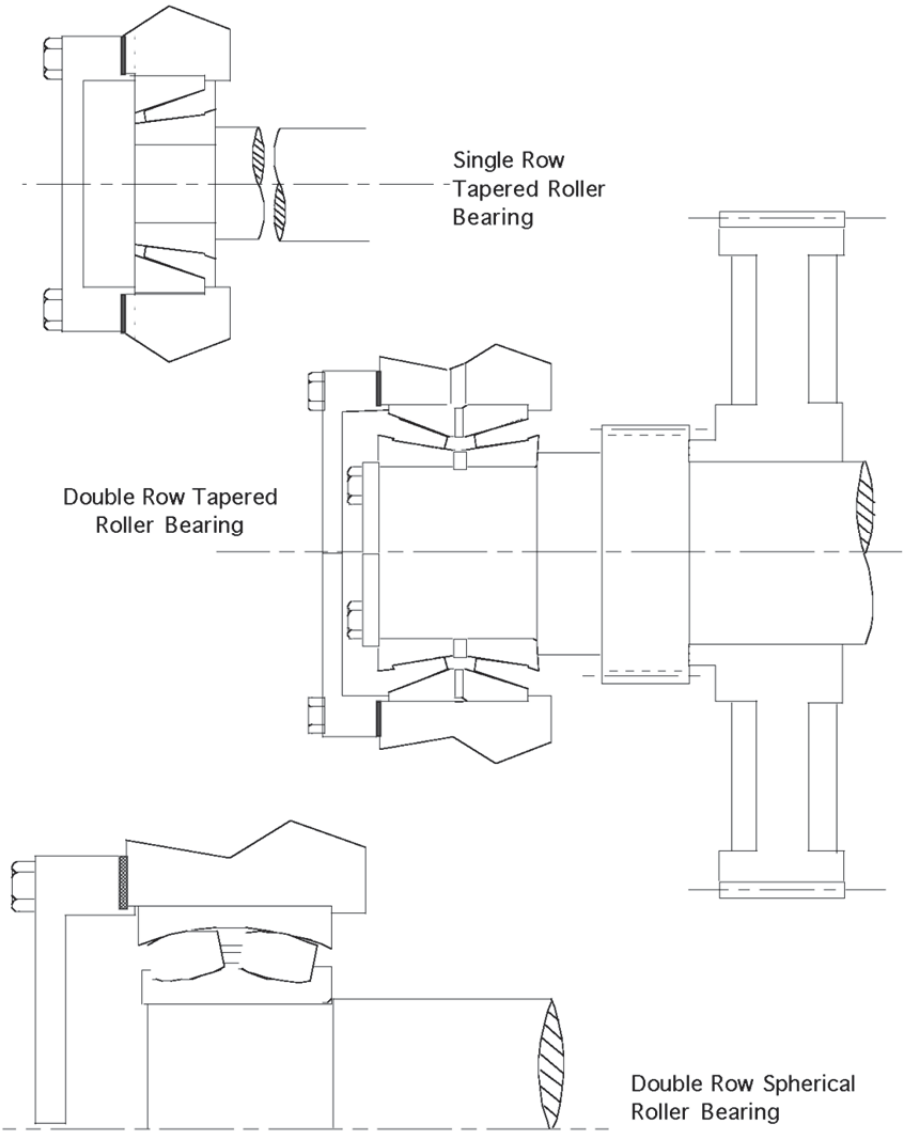

MM 11/2009 **Section 7 - Page 1**

Enclosed Gear Drive Maintenance Manual

Cleveland, Ohio www.horsburgh-scott.com

Bearing Adjustment

A. Single Row Tapered Roller Bearings

Shaft assemblies mounted on single row tapered roller bearings are designed to absorb both radial and thrust loads. Correct bearing clearance is maintained by gaskets or shims which are located between the housing and the bearing retaining plates.

Warning: Proper bearing clearance is essential. Too loose of an adjustment will cause the gear shaft to be out of alignment and will result in noise or vibration. Too tight of an adjustment may cause bearing pre-load which may lead to premature bearing failure. Sufficient clearance must be provided to allow for the axial expansion of the shaft after the unit and bearings have reached operating temperature.

If a unit is reassembled without any new parts, the gasket thickness at each retaining plate should remain the same, but must be verified. If any new parts are installed on any shaft assembly, it will be necessary to check for the proper bearing clearance.

Single row, tapered roller bearings are adjusted with the housing cover removed as follows:

1. Bolt one of the retaining plates to the housing with the gasket thickness approximately equal to the original gasket thickness or approximately 0.030".
2. Bolt the opposite retaining plate to the housing without any gaskets and snug only enough until shaft has 0.000" to 0.00" axial end play. Make sure plate is drawn up evenly and that the bearing cups are seated properly in the bores. A cocked bearing cup or retaining plate will result in false bearing alignment. Rotate the shaft assembly slightly back and forth to properly seat the bearing rollers.
3. Measure the gap as shown in Figure 3. Check at several points to make sure the plate is square with the housing.

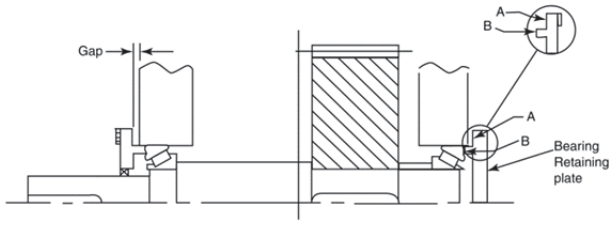

Figure 3 Bearing Adjustment

4. Add 0.005" – 0.008" to this measured gap to determine the total gasket thickness required.

MM 11/2009 **Section 7 - Page 2**

5. Install gaskets between surface 'A' of retaining plate and housing. Tighten bolts and check for bearing clearance. Adjust axial float per the following Shaft Axial End Play Adjustment chart.

Input RPM	Input Shaft Total Axial End Play	Intermediate & Output Shaft Total Axial End Play
0 to 1200	0.004" / 0.006"	0.003" / 0.005"
1201 to 2500	0.005" / 0.007"	0.003" / 0.005"
Above 2500	Consult factory	Consult factory

Occasionally, it may be necessary to machine the retaining plates at the surfaces 'A' and / or 'B' if it is not possible to make the bearing adjustment by means of gaskets alone. If machining is done, care must be taken to make sure surfaces 'A' and 'B' remain parallel to each other.

If factory made gaskets are unavailable, it is acceptable to use a good quality incompressible manila paper cut to size. Our practice is to use at least a 0.005" thick gasket but no more than 0.030" total thickness at any one retaining plate. No gaskets are ever used at surface 'B'. All shafts should rotate freely when finished.

Prior to February 7, 1983, Horsburgh & Scott units were machined and assembled with 0.010" gasket on the housing split surface. If, during any disassembly, this gasket requires replacement, it must be replaced with a material of the same thickness in order to maintain the original bore sizes. Any good quality gasket paper is acceptable provided it is uniform in thickness and has minimum compressibility.

Units manufactured after February 7, 1983 do not have the gasket. These units were assembled with a thin coating of GE-RTV Silicone Rubber Adhesive sealant at the split surface. Whenever a unit is disassembled, the old silicone coating must be removed either by a solvent or scraping prior to assembly. Surfaces must be clean and inspected carefully for nicks or dents which may cause separation between the housing flange.

Apply a single 0.125" diameter bead of the silicone sealant around the entire split surface. Any amount in excess of this may squeeze out and contaminate bearings or foul lubrication systems. Housing sections must be assembled no more longer than 5 minutes after the silicone material is applied. Otherwise, the silicone will not squeeze down to the minimum thickness that is required to maintain the original machining tolerances.

B. Double Row Tapered Bearings

All double row tapered roller bearing that include a spacer, type TDO, come from the factory as a set. These are an assembly and parts must not be interchanged; even between bearings of the same size. In most Horsburgh & Scott designs involving double row tapered roller bearings, one bearing is fixed in the housing and the other will float. This is to allow for thermal expansion of the parts of the gear drive as they reach operating temperature.

In some designs, the cup of the bearing may have a counterbore to be aligned with a pin in the bottom of the housing bore. This pin prevents the cup from rotating and must be aligned as the shaft is being placed into the bore. The bearing cup may also be locked by a lock and lube pin installed in the top half of the housing.

1. Begin by installing the recommended .005" minimum gasket/shim on the retaining plate for the fixed bearing. The fixed bearing can be identified by the shoulder in the housing bore that the cup of the bearing rests against. Install the retaining plate with the bolts for the lower half of the housing. Tighten the bolts to ensure that the bearing cup is captured between the shoulder in the bore and the lip of the retaining plate.

2. Using a feeler gauge, determine the gap between the housing and the retaining plate.

3. Add to the gap .002" and install the correct gasket/shim thickness on the retaining plate. Tighten the lower half bolts evenly to the recommended torque values. Recheck the gap between the housing and retaining plate. Adjust the gasket/shim thickness as necessary.

   Note: The maximum recommended gasket/shim thickness on any one retaining plate is .030". Should more than .030" be required to take up the gap, the retaining plate lip should be machined to reduce the required gasket/shim thickness, see Figure 4.

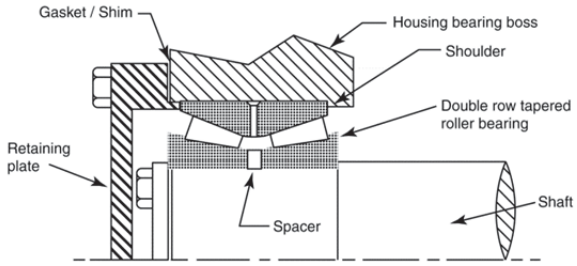

Figure 4 Double Row Tapered Roller Bearing

4. The retaining plate on the floating bearing side of the shaft requires the minimum gasket/shim thickness of .005". The plate should be mounted and clearance checked between the bearing cup and the lip of the retaining plate. The minimum is .030". Adjust as necessary by adding gasket/shims to that retaining plate.

C. Double Row Spherical Bearings

Some designs by the Horsburgh & Scott Company employ double row, spherical roller bearings. These bearings are a one piece assembly and all bearings carrying the same catalog number are interchangeable.

1. Begin by installing one retaining plate with the minimum .005" gasket/shim. Install and tighten the bolts in the retaining plate for the lower half of the housing.

2. With the retaining plate drawn tight, force the shaft against the retaining plate until the outer bearing race is touching the hub projection of the retaining plate. Be sure the bearing race is seated against the projection around the entire diameter.

3. Using a feeler gauge, determine the gap between the retaining plate flange and the housing bearing boss. Add .016" – .020" to the measured gap and install the necessary gasket/shim, see Figure 5. The maximum gasket/shim thickness is .030". In order to maintain this gasket/shim thickness, it may be necessary to divide the required shims between the two retaining plates. The important factor is that the overall gap remain the same. It may be necessary to machine the hub projection of the retaining plate to remain within the desired gasket/shim range. After machining, the lip must be parallel to the face of the retaining plate against the bearing boss, and perpendicular to the hub projection on the retaining plate.

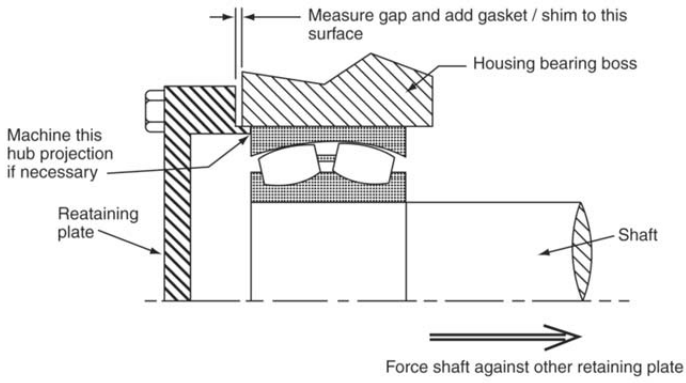

Figure 5

4. After adding the required gasket/shim to the retaining plates and tightening to the correct torque, recheck the clearance gap. The measured gap between the opposite bearing outer race and the hub projection should be .016". Adjust the gasket/shim thickness as necessary, see Figure 6.

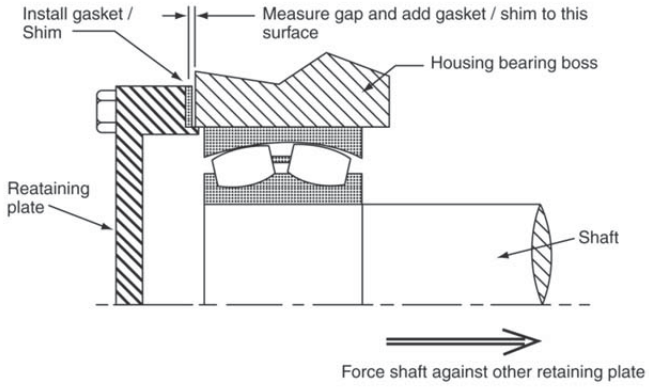

Figure 6

D. Bevel Cartridges

1. Cartridges with single row bearings are generally more difficult and time consuming to set the end play. It is important to take the time necessary to insure that these bearings are set correctly. These bearings are installed in the opposite direction as compared to the other gear drive shaft bearings. The bevel pinion is located on the cartridge shaft. The bevel gear is located on the shaft in the unit.

2. To set the end play, the bearings must be absolutely clean and dry. Install the bearing cone, nearest the bevel pinion, using normal heating or pressing methods. Install both bearing cups in the cartridge. Place the shaft vertically on a work bench, sitting on the bevel pinion. Place the cartridge over the shaft, mating the bearing just installed. Make sure the cartridge inside face is toward the pinion. Place three 1" strips of .001" or .0015" steel shim stock, about 6" long, over the upper cup in the cartridge. Heat the second bearing cone and install it so that the shims are held in place between the cup and the rollers of the cone. Install the lock nut but do not tighten it down while the bearing is hot. When the bearing is at room temperature, remove the three shims being careful not to tear them. Cartridge end play at this point will be about .015" to .020". Install an indicator base on the cartridge with its stylus on the shaft and measure end play by raising and lowering the shaft while holding the cartridge fixed to the workbench. Adjust the end play by tightening the lock nut a small amount each time. Rotate the bearings through several revolutions between each movement of the locknut. Carefully move the locknut in small amounts until the correct end play of .003" – .006" is obtained.

3. It is required to set the backlash when installing bevel cartridges. To set the backlash install the cartridge in the housing with about .030" in shims between the flange of the cartridge and the housing. Note the proper location of the drain lines, lube holes, and slots if so equipped. Ensure the match marks, x-xx, line up between the mating teeth. They are located on the edge of the widest part of the teeth. All other shaft end plays should already be set. The correct amount of backlash is marked on the edge of the gear. With the indicator stylus on the working surface of the pinion tooth at the thickest part, heel area, hold the gear rigid and move the pinion back and forth noting the indicator movement. Add or remove shims from the cartridge flange until the correct amount of backlash is achieved. In some cases, the bevel gear may have to be moved axially to obtain the correct backlash. This is done by removing a shim from a retaining plate and placing a shim of the same thickness on the opposite plate. The shaft will have moved in the direction the shim moved, and exactly the same distance as the shim thickness.

4. To check the contact pattern, apply a thin coat of prussian blue to the bevel pinion and rotate it through the mesh to transfer blue to the gear. A contact pattern located from the toe, thinner section of the tooth, to the center of the tooth is ideal under no load conditions.

E. Worm Gear Drives

Worm gear drives are right angle drives having a worm, a screw-thread like shaft, and a gear, larger in diameter, usually bronze. Worm gear drives have single row tapered roller bearings.

1. Set the end play to .003" – .005" on both worm and gear shafts by either adding or removing shims from the retaining plates. Always rotate the shaft to insure the bearing are seated when making an adjustment.

2. To check contact pattern apply a thin coat of prussian blue to the worm threads. Rotate the worm several revolutions in both directions to transfer blue to the gear. A contact pattern centrally located on the gear tooth and about 50% is considered normal under no-load conditions. To change the contact pattern, adjust the position of the gear axially by removing a shim from one retaining plate and installing exactly the same thickness on the opposite retaining plate. This will move the gear in the direction the shim moved and exactly the amount of the shim thickness. If the unit runs in both directions, be sure the contact pattern is the same on both sides of the gear teeth.

F. Worm Drives With Ball, Spherical, Or Straight Roller Bearings On The Worm Shaft And Single Row Tapered Bearings On The Gear Shaft.

The worm shaft end play is set by installing the thrust side retaining plate without any shims. The thrust side retaining plate can be identified by the longer pilot and, in most drives, a larger bearing. Snug all bolts only tight enough to insure that the bearing is captured, then loosen the bolts and retighten them only hand tight. Using a feeler gage, measure the amount of the gap between the retaining plate and the housing. Add 0.005" to that figure for the total amount of shims to install. If there is no gap between the retaining plate and housing, the retaining plate surfaces must be machined. The end of the pilot that touches the bearing, and the inside of the flange that touches the gaskets, are the areas to be machined. Machine 0.030" more off the flange area. The two surfaces must be parallel to each other within 0.002".

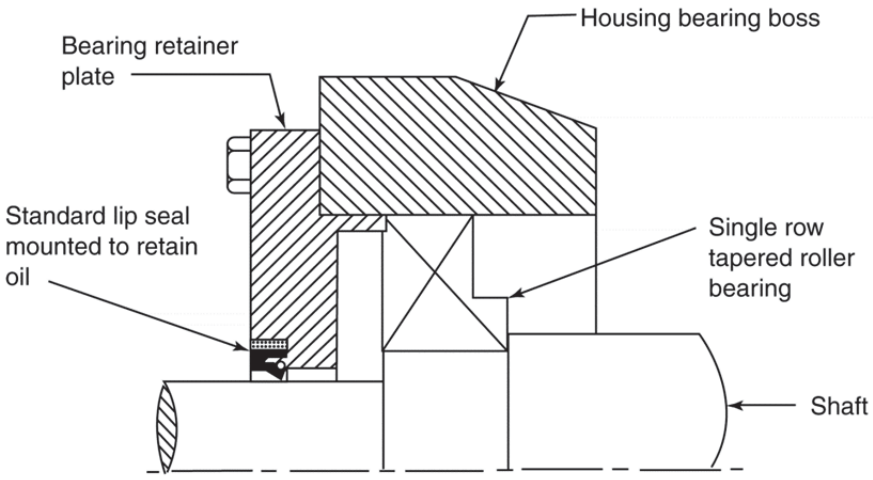

STANDARD OIL SEAL

Figure 7

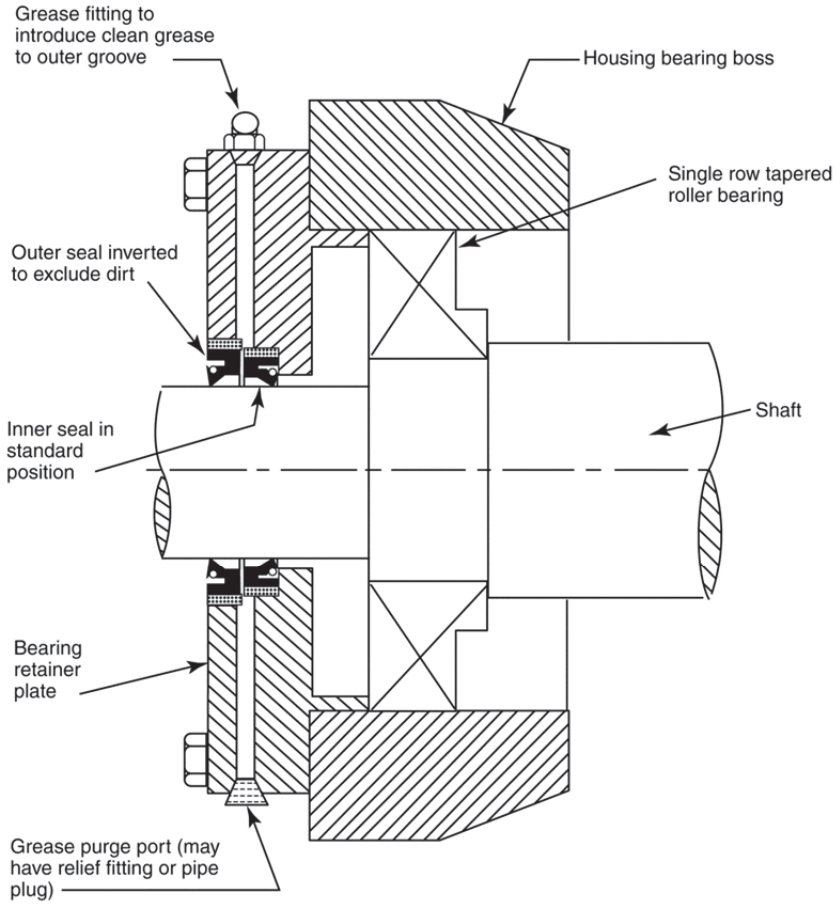

DUAL GREASE PURGED SEAL

Figure 8

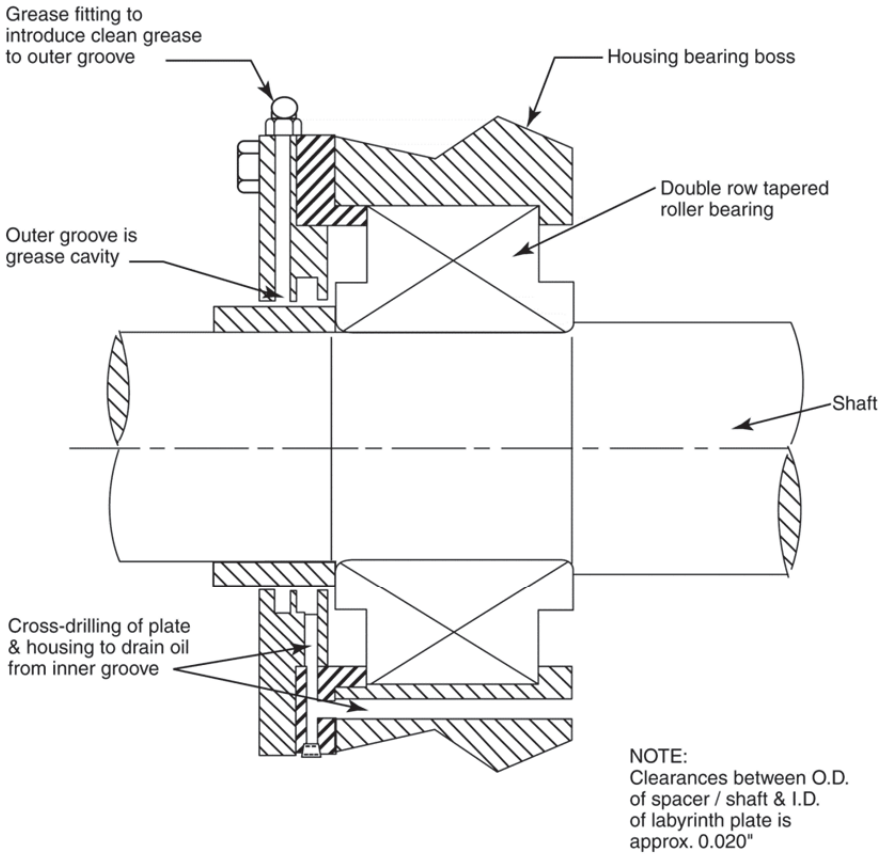

LABYRINTH OIL SEAL

Figure 9

Enclosed Gear Drive Maintenance Manual

Cleveland, Ohio www.horsburgh-scott.com

Long Term Storage Procedure

When it is expected that enclosed gear drives are to be stored for extended periods of time, 6 months or longer, special precautions are required. The internal rotating elements of all gear drives are sprayed with Mobil Oil Corporation's Mobilarma 247 before they leave the plant. This internal spray coating is good for approximately 6 months of indoor storage. (Consult Horsburgh & Scott for outdoor storage procedures.) For longer storage periods, it is required that the gear drive be filled with Mobilarma 247, or equivalent, until all geared elements are entirely submerged, within 30 days of shipment.

Mobilarma 247 has been selected as the storage medium primarily for its rust preventative properties. Suited best for protection of finely finished parts for shipment and storage, its rust preventatives are light-bodied petroleum solvents with polar rust preventative, water displacement and finger neutralizing additives. Although not mechanically strong as a lubricant, Mobilarma 247 is generally compatible with recommended lubricating fluids and need not be flushed from the unit when preparing for operation with the recommended lubricating medium. Should an alternative storage product be considered, its compatibility with Mobilarma 247 (sprayed internally prior to shipment), and the housing internal paint (Sherwin-Williams Kem-Aqua #70P is standard), must be verified, and is the responsibility of the party selecting the storage medium.

The following steps are required prior to completely filling the gear drive for long term storage.

1. Verify that the cap for the oil level dipstick or stand pipe is tight. If the unit has a sight glass oil level gage, the atmospheric vent hole will also need to be made oil tight to prevent leakage.

2. If not in the unit top, remove the breather from housing and plug the breather hole, install breather in the fitting provided for storage.

3. Check that all retaining plate, housing flange, bearing boss, and inspection plate bolts are tight.

4. Fill the unit with Mobilarma 247 rust preventative medium, or equal, through the top inspection cover, until all geared elements are entirely submerged. Replace the inspection cover and tighten bolts.

5. Grease all seals and bearings that require grease lubrication.

Quarterly visual inspection of the oil level is required. Although no leaking is expected, some static weeping may occur at machined interfaces and assembled joints. It may be necessary at some time during the storage period, to add storage medium in order to maintain the proper level. With completely submerged rotating elements, no specific requirements for shaft rotation during the storage period is necessary.

MM 11/2009 **Section 9 - Page 1**

Enclosed Gear Drive Maintenance Manual

Cleveland, Ohio www.horsburgh-scott.com

Preparation for Operation After Long Term Storage

Following a lengthy storage period, the following steps must be taken, prior to start-up:

1. Drain storage medium through housing drain plug provided. It may be necessary to loosen the top inspection cover or retaining plates to allow air to enter and oil to drain. Replace drain plug.

2. Remove plug from breather hole and install breather into crankcase flange.

3. Grease all seals, and grease all bearings that require grease lubrication.

4. For vertical shaft units, drain the internal dry well through the drain line provided at the end of the housing. Drain all lower shaft bearings through the drain line provided.

5. Fill to proper operating oil level with the operating lubricant. If Mobilarma 247 has been selected as the storage medium, flushing of the storage medium is generally NOT required due to compatibility with most recommended operating lubricants.

MM 11/2009 **Section 9 - Page 2**

Enclosed Gear Drive Maintenance Manual

Cleveland, Ohio

www.horsburgh-scott.com

Gear Misalignment Patterns

Spur and Helical Gears

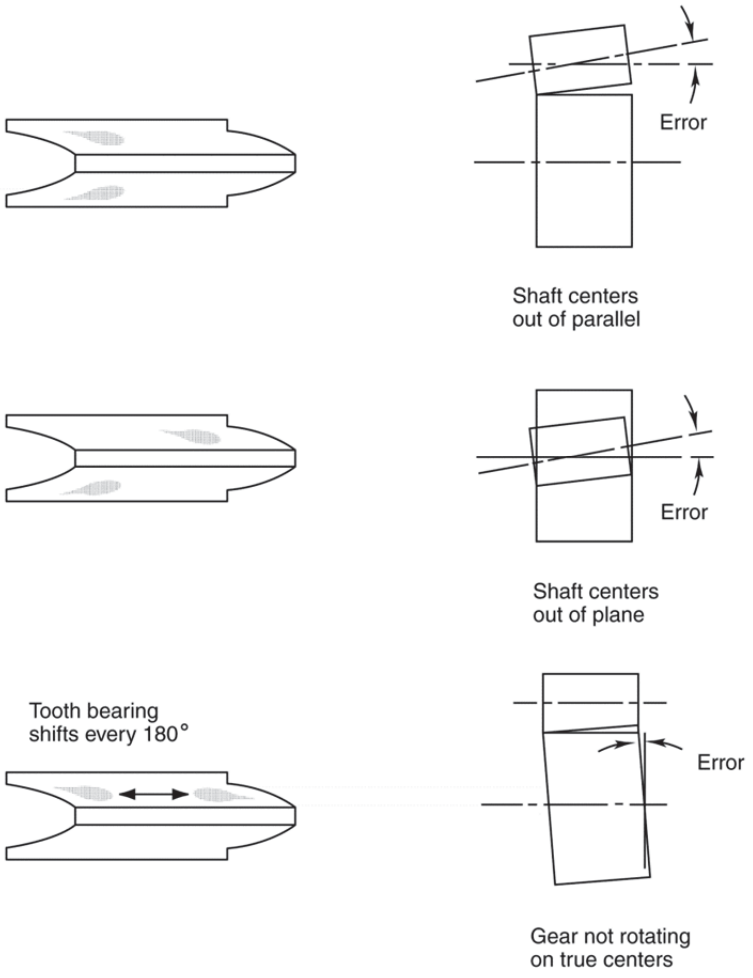

Figure 10

MM 11/2009

Section 10 - Page 1

Cleveland, Ohio

Enclosed Gear Drive Maintenance Manual
www.horsburgh-scott.com

Gear Misalignment Patterns

Herringbone

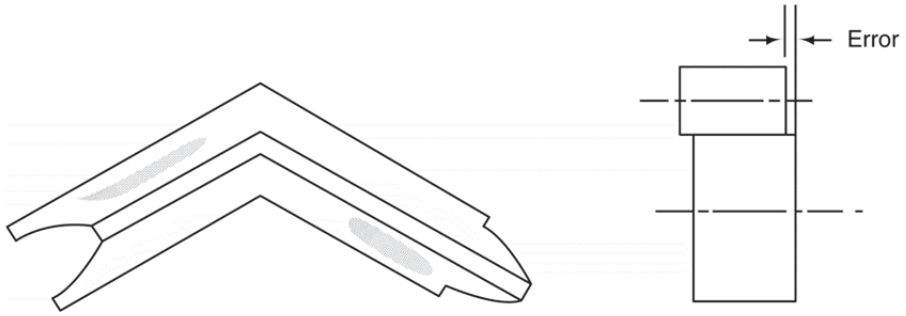

Figure 11

MM 11/2009

Section 10 - Page 2

Gear Misalignment Patterns

Worm Gear

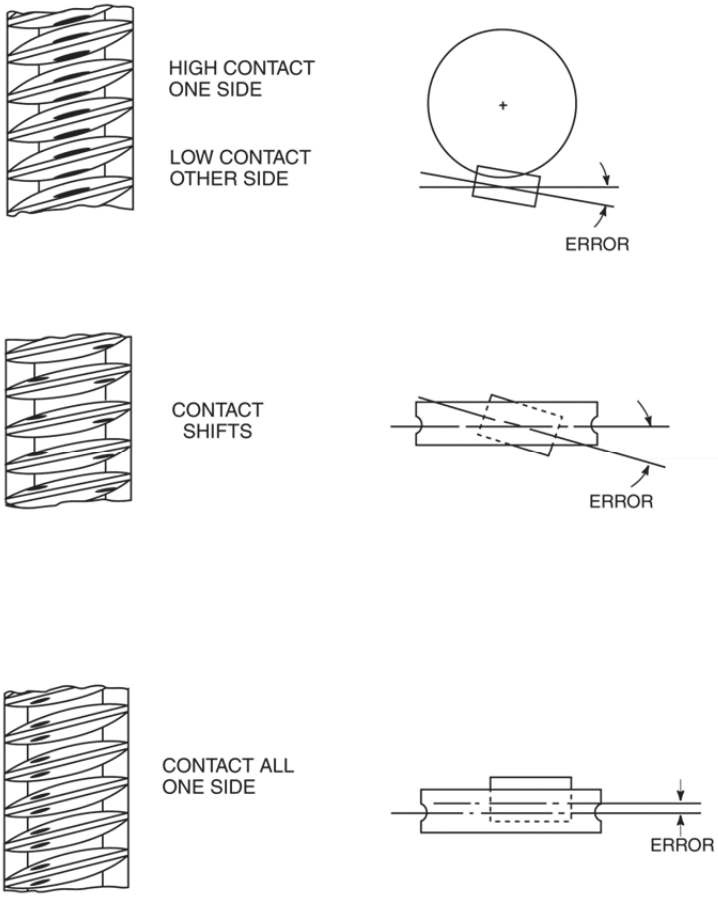

Figure 12

AGMA Terminology of Wear and Failure Standard

The ANSI/AGMA Standard 1010-E95, *Appearance of Gear Teeth - Terminology of Wear and Failure* is helpful for diagnosing gear tooth problems. The AGMA Standards Store allows purchase of electronic copies (in PDF format) of current AGMA standards. Immediately following your order, you will receive an e-mail allowing you to download the documents you purchase. If you would prefer a hard copy of a document, see the contact information for the AGMA Online Store. Visit the AGMA Online Store at www.agma.org.

11.7.2 MOTOR AND MACHINERY BRAKES - GENERAL ELECTRIC IC9516-465N

INSTRUCTIONS

GEH-982G

IC5388 AND IC9516 SPRING-SET BRAKES

THRUSTOR® MECHANISM TYPE

Before any adjustments, servicing, parts replacement or any other act is performed requiring physical contact with the electrical working components or wiring of this equipment, the POWER SUPPLY MUST BE DISCONNECTED.

These spring-set, shoe-type brakes are released through the action of a Thrustor mechanism. Figure 1 illustrates the IC5388 and IC9516-463 brake; Fig. 2 illustrates the IC5388 and IC9516-464, -465, -466, and -467 brakes.

INSTALLATION

These brakes have four holes in the base for holding down bolts located symmetrically with reference to both center lines so that they may be mounted with the Thrustor mechanism on either side of the brake wheel. In the standard mounting the Thrustor mechanism is located to the left of the wheel as shown in Fig. 1. In this position the nuts on the shoe bolts (18) are on the side next to the motor. In case the Thrustor mechanism is mounted on the right these bolts should be removed and replaced with the nut next to the motor to facilitate easy removal of the shoes in replacing linings.

The brake should be mounted in the horizontal position, since the tank of the Thrustor mechanism contains oil. The -463 brake may be tilted a maximum of 15 degrees either side of the vertical, and all other forms may be tilted 45 degrees either side of the vertical.

They have self-aligning shoes and the yoke and lever system are free to float on the hinge pins at the bottom so that the center of the wheel may be off a little in any direction from the theoretical center. This distance varies with different sizes of brakes and is limited by mechanical clearances of the brake mechanism.

In setting up any of these brakes, the shoe bolts (18) should be loose enough to allow the shoe to turn freely. When it is in the final position and the mounting bolts tight, set up spring (14) to rated torque (length is stamped on nameplate). When shoes conform to wheel face, then tighten bolts (18). No further adjustment of the shoes should be required during the life of the lining.

BRAKE WHEELS

The wheels have a taper bore or straight bore. When taper-bore wheels are used on a tapered shaft,

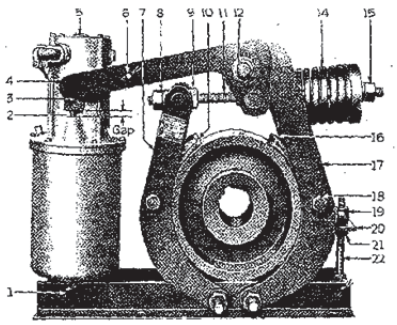

Fig. 1. IC5388- and IC9516-463 brake

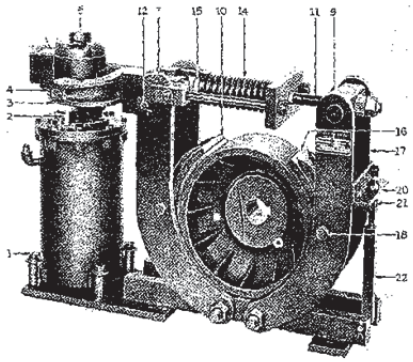

Fig. 2. IC5388- and IC9516-464 brake

These instructions do not purport to cover all details or variations in equipment nor to provide for every possible contingency to be met in connection with installation, operation or maintenance. Should further information be desired or should particular problems arise which are not covered sufficiently for the purchaser's purposes, the matter should be referred to the General Electric Company.

the nut on the end of the shaft should be locked so that it cannot come off. Usually there is a saw cut in the wheel hub, and the bent edge of the plate washer should be inserted in this cut; then, after the nut is set up tight, the washer is bent over against one side of the nut. Sometimes it is not possible to put a saw cut in the wheel hub; in such a case, a lip the width of the key can be made on the inside edge of the washer by two saw cuts. This lip should be bent into the end of the keyway. In other cases, there is a hole in the wheel hub, and the washer should be pushed into this hole with a punch.

If the shaft extension is straight, the wheel should be put on with a press fit.

REMOVING WHEEL HORIZONTALLY

Back off on nuts (8), (9), and (15), and the shoes will move away from the wheel, so that it can be removed horizontally. This applies to all brakes covered in these instructions.

REMOVING THRUSTOR MECHANISM

To remove the Thrustor mechanism, remove pin (1) as shown in Fig. 1 and bolts (1) for the arrangement shown in Fig. 2. Then, back out screws (3), and if the rods (2) do not drop far enough, back off on spring nut (15) so that lever (4) can be raised and the Thrustor mechanism taken out horizontally.

OPERATION AND ADJUSTMENT (SEE FIG. 1)

When the motor (5) of the Thrustor mechanism starts, it causes piston rods (2) and lever (4) to rise, and, through the lever system, causes yoke (17) and shoe (16) to move away from the wheel until angle (20) strikes nut (21). Then yoke (7) moves to the left, moving shoe (10) away from the wheel.

The length of stroke of the piston of the Thrustor mechanism, which is adjustable at nuts (8) and (9) should be sufficient to release the wheel properly. In adjusting the brake, the travel required of the push rods to release the shoes is determined by the dimensions marked "Gap" in Fig. 1, with the brake set. Values of this gap for the several brakes are given in Table 1. If the brake is lined up exactly with the center line of the wheel both horizontally and vertically, this travel may be somewhat reduced, the table giving an indication of travel required for the average set-up.

The clearance between the two shoes and the wheel is equalized by means of nuts (19) and (21). The braking effect due to spring (14) is adjusted by means of nut (15).

The travel of the piston rods (2) increases as the brake shoes wear. Therefore, at required intervals, nuts (8) and (9) should be taken up to shorten the travel, and nut (21) should be screwed up slightly on rod (22) to equalize the clearance between the two shoes and the wheel.

All brakes are shipped from the factory with the springs adjusted for rated torque braking. When the brake is installed, the spring should be set for approximately the torque required, usually the full-load torque of the motor with which it is used.

The torque of the motor may be calculated from the following formula:

$$\text{Torque in pounds at one-foot radius} = \frac{\text{HP} \times 5250}{\text{Full-load Speed (RPM)}}$$

Table 1 gives the torque rating and normal gap of the Thrustor mechanism. For spring lengths see Table 2.

TABLE 1

Brake IC5388 and IC9516	Torque in Lb-ft		Gap in Inches
	Cont.	Int.	
-463	125	160	1 1/8
-464	325	400	1 1/8
-465	600	800	1 1/2
-466	1200	1600	1 7/8
-467	2400	3600	2 3/8

The gap of the push rods of the Thrustor mechanism is measured as follows: With the brake set up as described on previous pages, measure the distance between the top of the tank cover and the bottom of the clevis as shown in Fig. 1. To shorten the length of the gap, release nuts (8) and (9) drawing the two yokes (7) and (17) together. After obtaining the correct gap for releasing the shoes from the wheel, tighten up on nuts (8) and (9).

The curves, Fig. 4, 5, 6, 7, and 8, show the relation between spring length, torque, and spring pressure for the -463, -464, -465, -466 and -467 brakes respectively.

LUBRICATION

Oil should be applied to the bearing pins occasionally.

THRUSTOR MECHANISM

The Thrustor mechanism consists of a motor driving an impeller to provide oil pressure in the cylinder to raise the push rods and thereby perform

TABLE 2

Brake IC5388 and IC9516	Continuous		Intermittent	
	Torque in Lb-Ft	Spring Length in In.	Torque in Lb-Ft	Spring Length in In.
-463	125	4 3/32	160	3 7/8
-464	325	6 1/8	400	5 15/16
-465	600	6 15/16	800	6 19/32
-466	1200	6 31/32	1600	6 13/16
-467	2400	8 3/8	3600	8 5/32

its operating function. See Fig. 3, which shows the form having time delay "down" adjustment.

ADJUSTMENT

If it is desirable to disassemble the unit, be sure that no dirt drops in the tank or remains on the bottom of the piston or other parts when the unit is reassembled.

Try the movement of the assembled unit by raising the piston in the tank by means of the push rods, Fig. 3, to be sure that it moves freely.

When the unit has been completely reassembled, remove the oil-filler plug, Fig. 3, and the oil-level plug on opposite sides of the tank just below the tank cover. Fill the oil tank until the oil starts to flow out of the oil-level plug in the side of the tank. It is important to fill the assembled unit carefully so that the oil just starts to flow out the upper oil-level hole. This is the oil level that must be maintained to obtain correct operation. To make sure no air is trapped below the piston and in the pump move the piston up and down several times by means of lever (4) on brakes while pouring in the oil. Replace both the oil-level and oil-filler plugs after filling.

Use GE No. D6B11A2 oil for ambient temperatures within a range of +20 F to +100 F. Use GE No. 9621 oil for more extreme temperatures (range of -40 F to +150 F).

After the Thrustor mechanism has been operated under power a few times, the oil level should be checked and oil added to the proper level, if necessary.

When the occasion arises to drain the oil from the tank, it is only necessary to remove the drain plug at the bottom of the tank without disassembling the unit.

All motors have ball-bearing construction and are packed at the factory with grease sufficient for a considerable length of time, as determined by the local operating conditions. Under ideal conditions this initial grease should not require renewal for at least a year. However, under some conditions the grease may have to be renewed at more frequent intervals. When a new motor is placed in operation, the operator should inspect the bearings frequently in order to determine approximately the correct grease-renewal interval.

Electrical connections to the motor should be made through flexible metal conduit. Do not use rigid conduit.

CONNECTIONS

The Thrustor mechanism motors are three-phase, single voltage, with the exception of the 230/460-volt motors for -464, -465, -466, and -467 brakes.

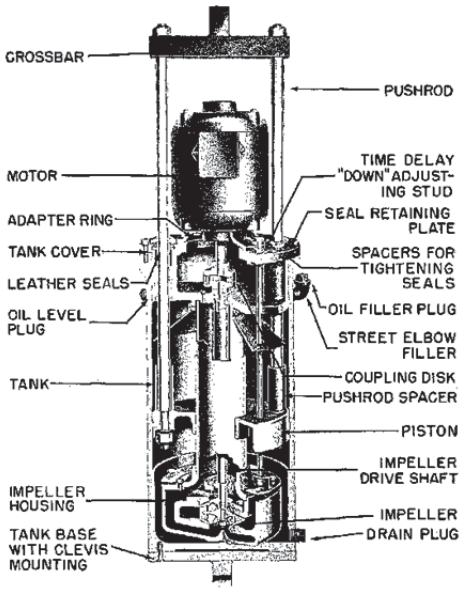

Fig. 3. IC9504 Thrustor Mechanism (quick return), with section cut away to show construction

3

NOTE: *If the brake is to be used on voltages higher than that stamped on the nameplate, a transformer must be used.*

TIME DELAY WHEN SETTING BRAKE

The Thrustor mechanisms on all brakes except -463 are equipped with time delay on down stroke. Under rated load the delay is approximately 5 seconds for full stroke, a longer time being obtained for less load. If there is no need for any time delay, it is made ineffective by turning the downstroke adjusting stud on the outside of the tank cover all the way up and locking in this position with the lock nut.

463 BRAKE WITH TIME DELAY FEATURES

To adjust the time delay, loosen the lock nut and turn the adjusting nut in the desired direction as indicated by the two arrows; (S) (slower) to increase the time; or (F) (faster) to decrease the time for the return stroke. After the time adjustment has been made, tighten the lock nut.

ADJUSTMENT OF QUICK-RETURN THRUSTOR MECHANISM

The "Quick-Return Thrustor Mechanism" is equipped with adjustments for both slower *down* and slower *up* stroke. The Thrustor mechanism is shipped with the adjustment screws ineffective; that is, the up stroke is normal and the down stroke is quick. In order to change the speed of operation proceed as follows:

Turn either adjusting screw in the direction of the respective arrow as shown on the indicating nameplate until the desired speed is obtained and then the lock nuts should be tightened.

It is suggested that the adjustment for the down stroke is made with the piston in the up position (with the Thrustor mechanism motor running) and the adjustment for the up stroke with the piston in the down position (motor de-energized). No undue strain should be put on the adjustment screws, which may cause damage to the internal interlocking mechanism. It is important that on account of the interlocking mechanism the adjusting screw for the up stroke be turned down first and this should be followed by turning the adjusting screw for the down stroke.

RENEWAL PARTS

See Table 3 for principal parts list of the brake itself. The quantities shown in parentheses are for one complete brake. For any other parts not listed in Table 3, refer to the nearest Sales Office of the General Electric Company, giving the complete nameplate rating of the brake and describing the parts in detail.

TABLE 3
TORQUE AND SPRING DATA

Brakes IC5388 and IC9516	Spring (1 Required) Cat. No.	Lining for Brake Shoe with Rivets (2 Required) Cat. No.
-463	2413980	21X465
-464	2412653	21X466
-465	2412654	21X467
-466	2415951	21X468
-467	2418389	21X469

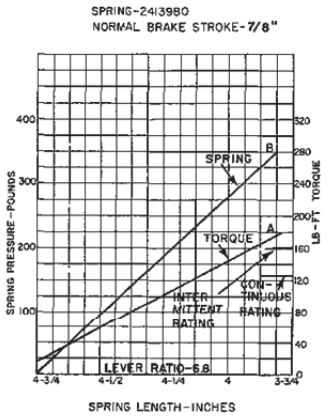

Fig. 4. For IC5388-, and IC9516-463 brakes

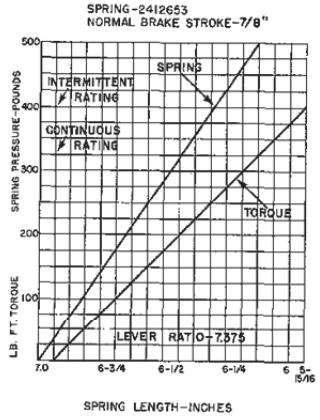

Fig. 5. For IC5388-, and IC9516-464 brakes

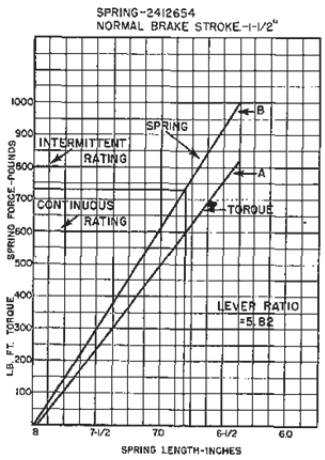

Fig. 6. For IC5388-, and IC9516-465 brakes

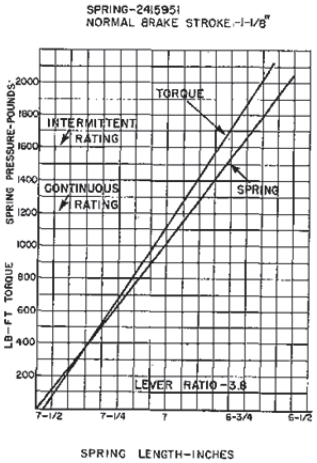

Fig. 7. For IC5388-, and IC9516-466 brakes

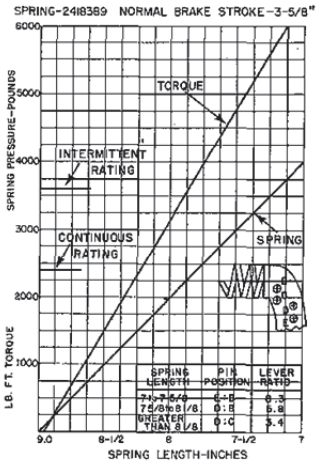

Fig. 8. For IC5388-, and IC9516-467 brakes

GENERAL ELECTRIC COMPANY
COMPONENT AND DEVICES SALES
DRIVE SYSTEMS DEPARTMENT
SALEM, VA 24153

GENERAL ELECTRIC

PI1–81

11.7.3 SPAN LOCK MOTOR COUPLING – FALK TYPE T10

REXNORD

Falk™ Steelflex® Couplings • Installation and Maintenance

Type T10 • Sizes 1020–1140 & 20–140 (Page 1of 6)

How To Use This Manual

This manual provides detailed instructions on maintenance, lubrication, installation, and parts identification. Use the table of contents below to locate required information.

Table of Contents

Introduction . . . . . Page 1
Lube Fittings . . . . . Page 1
Limited End Float . . . . . Page 1
Lubrication . . . . . Pages 1-2
Installation & Alignment Instructions. . . . . Pages 2-4
Annual Maintenance, Relube & Disassembly . . . . . Page 4
Installation & Alignment Data . . . . . Page 5
Parts Identification & Parts Interchangeability . . . . . Page 6

CAREFULLY FOLLOW THE INSTRUCTIONS IN THIS MANUAL FOR OPTIMUM PERFORMANCE AND TROUBLE FREE SERVICE.

INTRODUCTION

This manual applies to Sizes 1020T thru 1140T and 20T thru 140T10 Falk Steelflex Tapered Grid Couplings. Unless otherwise stated, information for Sizes 1020T thru 1140T applies to Sizes 20T thru 140T respectively, e.g. 1020T = 20T, 1100T = 100T, etc. These couplings are designed to operate in either the horizontal or vertical position without modification. Beginning in year 1994 through 2003, these couplings were being supplied with one set of inch series fasteners and one set of Metric fasteners. Beginning in year 2004 only Metric fasteners are being supplied. Refer to Page 6 for part interchangeability.

The performance and life of the couplings depend largely upon how you install and service them.

CAUTION: *Consult applicable local and national safety codes for proper guarding of rotating members. Observe all safety rules when installing or servicing couplings.*

WARNING: *Lockout starting switch of prime mover and remove all external loads from drive before installing or servicing couplings.*

LUBE FITTINGS

Cover halves have $^1/_8$ NPT lube holes. Use a standard grease gun and lube fitting as instructed on Page 4.

LIMITED END FLOAT

When electric motors, generators, engines, compressors and other machines are fitted with sleeve or straight roller bearings, limited axial end float kits are recommended for protecting the bearings. Falk Steelflex couplings are easily modified to limit end float; refer to Manual 428-820 for instructions.

LUBRICATION

Adequate lubrication is essential for satisfactory operation. Page 2 provides a list of typical lubricants and specifications for general purpose and long term greases. Because of its superior lubricating characteristics and low centrifuge properties, Falk Long Term Grease (LTG) is highly recommended. Sizes 1020T to 1090T10 are furnished with a pre-measured amount of grease for each coupling. The grease can be ordered for larger size couplings.

The use of general purpose grease requires re-lubrication of the coupling at least annually.

TYPE T10 STEELFLEX COUPLING

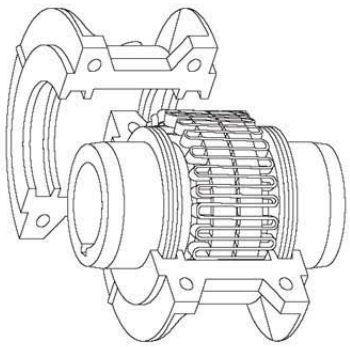

Long Term Grease (LTG)

The high centrifugal forces encountered in couplings separate the base oil and thickener of general purpose greases. Heavy thickener, which has no lubrication qualities, accumulates in the grid-groove area of Steelflex couplings resulting in premature hub or grid failure unless periodic lubrication cycles are maintained.

Falk Long Term Grease (LTG) was developed specifically for couplings. It resists separation of the oil and thickener. The consistency of Falk LTG changes with operating conditions. As manufactured it is an NLGI #1/2 grade. Working of the lubricant under actual service conditions causes it to become semifluid while the grease near the seals will set to a heavier grade, helping to prevent leakage.

LTG is highly resistant to separation, easily out performing all other lubricants tested. The resistance to separation allows the lubricant to be used for relatively long periods of time.

Steelflex couplings initially lubricated with LTG will not require re-lubrication until the connected equipment is stopped for servicing. If a coupling leaks grease, is exposed to extreme temperatures, excessive moisture, or experiences frequent reversals, more frequent lubrication may be required.

Although LTG grease is compatible with most other coupling greases, the mixing of greases may dilute the benefits of LTG.

USDA Approval

LTG has the United States Department of Agriculture Food Safety & Inspection Service approval for applications where there is no possibility of contact with edible products. (H-2 ratings).

CAUTION: *Do not use LTG in bearings.*

Rexnord Industries, LLC, Coupling Group
5555 S. Moorland Rd., New Berlin, WI 53151-7953 USA Telephone : 262-796-4060
Fax: 262-796-4064 e-mail: info@rexnord.com web: www.rexnord.com

428-110
May 2004
Supersedes 2-03

Installation and Maintenance • Falk™ Steelflex® Couplings

(Page 2 of 6) Type T10 • Sizes 1020–1140 & 20–140

REXNORD

Specifications — Falk LTG

The values shown are typical and slight variations are permissible.

AMBIENT TEMPERATURE RANGE — -20°F (-29°C) to 250°F (121°C). Min. Pump = 20° F (-7° C).

MINIMUM BASE OIL VISCOSITY — 3300SSU (715cST) @ 100°F (38°C).

THICKENER — Lithium & soap/polymer.

CENTRIFUGE SEPARATION CHARACTERISTICS — ASTM #D4425 (Centrifuge Test) — K36 = 2/24 max., very high resistance to centrifuging.

NLGI GRADE (ASTM D-217) — $^1/_2$

CONSISTENCY (ASTM D-217) — 60 stroke worked penetration value in the range of 315 to 360 measured at 77°F (25°C)

MINIMUM DROPPING POINT — 350°F (177°C) minimum

MINIMUM TIMKEN O.K. LOAD — 40 lbs.

ADDITIVES — Rust and oxidation inhibitors that do not corrode steel or swell or deteriorate synthetic seals.

Packaging

14 oz. (0,4 kg) CARTRIDGES — Individual or case lots of 10 or 30.

35 lb. (16 kg)PAIL, 120 lb. (54 kg) KEG & 400 lb. (181 kg) DRUMS.

General Purpose Grease

Annual Lubrication — The following specifications and lubricants for general purpose grease apply to Falk Steelflex couplings that are lubricated annually and operate within ambient temperatures of 0°F to 150°F (-18°C to 66°C). For temperatures beyond this range (see Table 1), consult the Factory.

If a coupling leaks grease, is exposed to extreme temperatures, excessive moisture or experiences frequent reversals, more frequent lubrication may be required.

Specifications — General Purpose Coupling Lubricants

The values shown are typical and slight variations are permissible.

DROPPING POINT — 300°F (149°C) or higher.

CONSISTENCY — NLGI No. 2 with 60 stroke worked penetration value in the range of 250 to 300.

SEPARATION AND RESISTANCE — Low oil separation rate and high resistance to separation from centrifuging.

LIQUID CONSTITUENT — Possess good lubricating properties equivalent to a high quality, well refined petroleum oil.

INACTIVE — Must not corrode steel or cause swelling or deterioration of synthetic seals.

CLEAN — Free from foreign inclusions.

General Purpose Greases Meeting Rexnord Specifications

Lubricants listed below are typical products only and should not be construed as exclusive recommendations.

TABLE 1 — General Purpose Greases ★

Ambient Temperature Range	0°F to 150°F (-18°C to 66°C)	-30°F to 100°F (-34°C to 38°C)
Manufacturer	**Lubricant †**	**Lubricant †**
Amoco Oil Co.	Amolith Grease #2	Amolith Grease #2
BP Oil Co.	Energrease LS-EP2	Energrease LS-EP1
Chevron U.S.A. Inc.	Dura-Lith EP2	Dura-Lith EP1
Citgo Petroleum Corp.	Premium Lithium Grease EP2	Premium Lithium Grease EP1
Conoco Inc.	EP Conolith Grease #2	EP Conolith Grease #2
Exxon Company, USA	Unirex EP2	Unirex EP2
E.F. Houghton & Co.	Cosmolube 2	Cosmolube 1
Imperial Oil Ltd.	Unirex EP2	Unirex EP2
Kendall Refining Co.	Lithium Grease L421	Lithium Grease L421
Keystone Div. (Pennwalt)	81 EP-2	81 EP-1
Lyondell Petrochemical (ARCO)	Litholine H EP 2 Grease	Litholine H EP 2 Grease
Mobil Oil Corp.	Mobilux EP111	Mobilith AW1
Petro-Canada Products	Multipurpose EP2	Multipurpose EP1
Phillips 66 Co.	Philube Blue EP	Philube Blue EP
Shell Oil Co.	Alvania Grease 2	Alvania Grease 2
Shell Canada Ltd.	Alvania Grease 2	Alvania Grease 2
Sun Oil Co.	Ultra Prestige 2EP	Ultra Prestige 2EP
Texaco Lubricants	Starplex HD2	Multifak EP2
Unocal 76 (East & West)	Unoba EP2	Unoba EP2
Valvoline Oil Co.	Multilube Lithium EP Grease	. . .

★ Grease application or re-lubrication should be done at temperatures above 20°F (-7°C). If grease must be applied below 20°F (-7°C), consult the Factory.

† Lubricants listed may not be suitable for use in the food processing industry; check with lube manufacturer for approved lubricants.

INSTALLATION OF TYPE T10 STEELFLEX TAPERED GRID COUPLINGS

Installation

Only standard mechanics tools, wrenches, a straight edge and feeler gauges are required to install Falk Steelflex couplings. Coupling Sizes 1020T thru 1090T are generally furnished for CLEARANCE FIT with setscrew over the keyway. Sizes 1100T and larger are furnished for an INTERFERENCE FIT without a setscrew.

CLEARANCE FIT HUBS — Clean all parts using a non-flammable solvent. Check hubs, shafts and keyways for burrs. Do not heat clearance fit hubs. Install keys, mount hubs with flange face flush with shaft ends or as otherwise specified and tighten setscrews.

INTERFERENCE FIT HUBS — Furnished without setscrews. Heat hubs to a maximum of 275°F (135°C) using an oven, torch, induction heater or an oil bath. To prevent seal damage, DO NOT heat hubs beyond a maximum temperature of 400°F (205°C).

When an oxy-acetylene or blow torch is used, use an excess acetylene mixture. Mark hubs near the center of their length in several places on hub body with a temperature sensitive crayon, 275°F (135°C) melt temperature. Direct flame towards hub bore using constant motion to avoid overheating an area.

428-110
May 2004
Supersedes 2-03

Rexnord Industries, LLC, Coupling Group
5555 S. Moorland Rd., New Berlin, WI 53151-7953 USA Telephone : 262-796-4060
Fax: 262-796-4064 e-mail: info@rexnord.com web: www.rexnord.com

REXNORD

Falk™ Steelflex® Couplings • Installation and Maintenance

Type T10 • Sizes 1020–1140 & 20–140 (Page 3of 6)

WARNING: If an oil bath is used, the oil must have a flash point of 350°F (177°C) or higher. Do not rest hubs on the bottom of the container. Do not use an open flame in a combustible atmosphere or near combustible materials.

Heat hubs as instructed above. Mount hubs as quickly as possible with hub face flush with shaft end. Allow hubs to cool before proceeding. Insert setscrews (if required) and tighten.

Maximize Performance And Life

The performance and life of couplings depend largely upon how you install and maintain them. Before installing couplings, make certain that foundations of equipment to be connected meet manufacturers' requirements. Check for soft foot. The use of stainless steel shims is recommended. Measuring misalignment and positioning equipment within alignment tolerances is simplified with an alignment computer. These calculations can also be done graphically or mathematically.

Alignment is shown using spacer bar and straight edge. This practice has proven to be adequate for many industrial applications. However, for superior final alignment, the use of dial indicators (see Manual 458-834 for instructions), lasers, alignment computers or graphical analysis is recommended.

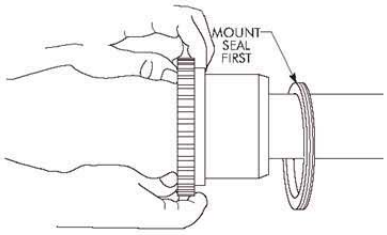

1— Mount Seals And Hubs

Lock out starting switch of prime mover. Clean all metal parts using a non-flammable solvent. Lightly coat seals with grease and place on shafts BEFORE mounting hubs. Heat interference fit hubs as previously instructed. Seal keyways to prevent leakage. Mount hubs on their respective shafts so the hub face is flush with the end of its shaft unless otherwise indicated. Tighten setscrews when furnished.

2 — Gap and Angular Alignment

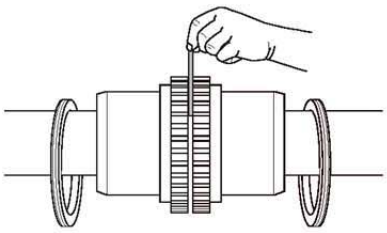

Use a spacer bar equal in thickness to the gap specified in Table 2, Page 5. Insert bar as shown below left, to same depth at 90° intervals and measure clearance between bar and hub face with feelers. The difference in minimum and maximum measurements must not exceed the ANGULAR installation limits specified in Table 2.

3 — Offset Alignment

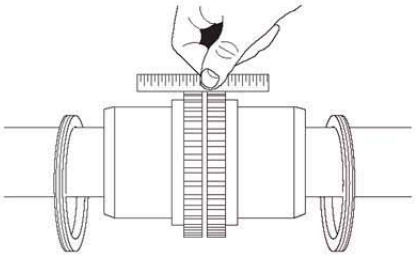

Align so that a straight edge rests squarely (or within the limits specified in Table 2) on both hubs as shown above and also at 90° intervals. Check with feelers. The clearance must not exceed the PARALLEL OFFSET installation limits specified in Table 2. Tighten all foundation bolts and repeat Steps 2 and 3. Realign coupling if necessary.

4 — Insert Grid

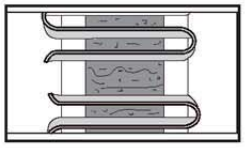

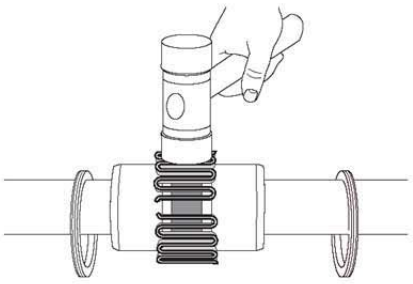

Pack gap and grooves with specified lubricant before inserting grid. When grids are furnished in two or more segments, install them so that all cut ends extend in the same direction (as detailed in the exploded view picture above); this will assure correct grid contact with non-rotating pin in cover halves. Spread the grid slightly to pass over the coupling teeth and seat with a soft mallet.

Rexnord Industries, LLC, Coupling Group
5555 S. Moorland Rd., New Berlin, WI 53151-7953 USA Telephone : 262-796-4060
Fax: 262-796-4064 e-mail: info@rexnord.com web: www.rexnord.com

428-110
May 2004
Supersedes 2-03

Installation and Maintenance • Falk™ Steelflex® Couplings

(Page 4 of 6) Type T10 • Sizes 1020–1140 & 20–140

REXNORD

5 — Pack With Grease And Assemble Covers

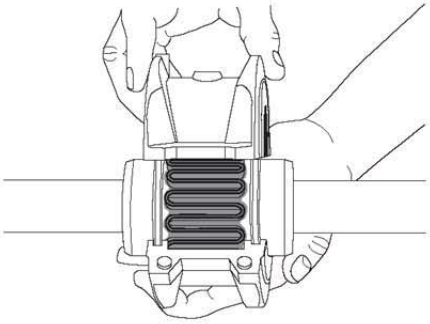

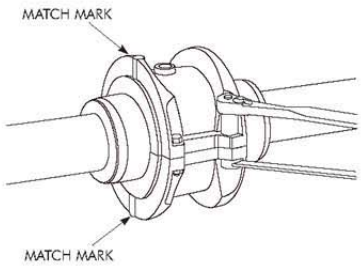

Pack the spaces between and around the grid with as much lubricant as possible and wipe off excess flush with top of grid. Position seals on hubs to line up with grooves in cover. Position gaskets on flange of lower cover half and assemble covers so that the match marks are on the same side (see above). If shafts are not level (horizontal) or coupling is to be used vertically, assemble cover halves with the lug and match

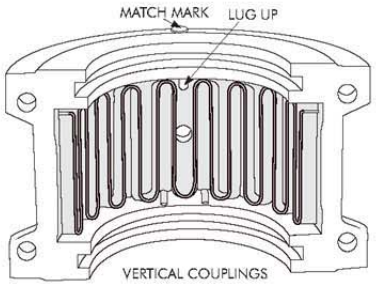

mark UP or on the high side. Push gaskets in until they stop against the seals and secure cover halves with fasteners, tighten to torque specified in Table 2. Make sure gaskets stay in position during tightening of fasteners. ***CAUTION:*** *Make certain lube plugs are installed before operating.*

ANNUAL MAINTENANCE

For extreme or unusual operating conditions, check coupling more frequently.

1. Check alignment per steps on Page 3. If the maximum operating misalignment limits are exceeded, realign the coupling to the recommended installation limits. See Table 2 for installation and operating alignment limits.
2. Check tightening torques of all fasteners.
3. Inspect seal ring and gasket to determine if replacement is required. If leaking grease, replace.
4. When connected equipment is serviced, disassemble the coupling and inspect for wear. Replace worn parts. Clean grease from coupling and repack with new grease. Install coupling using new gasket as instructed in this manual.

Periodic Lubrication

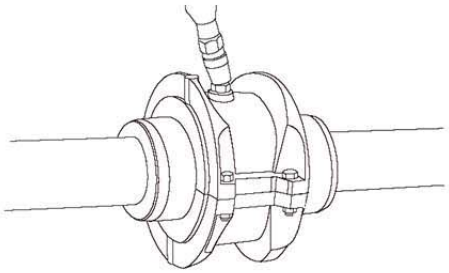

The required frequency of lubrication is directly related to the type of lubricant chosen, and the operating conditions. Steelflex couplings lubricated with common industrial lubricants, such as those shown in Table 1, should be relubed annually. The use of Falk Long Term Grease (LTG) will allow relube intervals to be extended to beyond five years. When relubing, remove both lube plugs and insert lube fitting. Fill with recommended lubricant until an excess appears at the opposite hole. ***CAUTION:*** Make certain all plugs have been inserted after lubricating.

Coupling Disassembly And Grid Removal

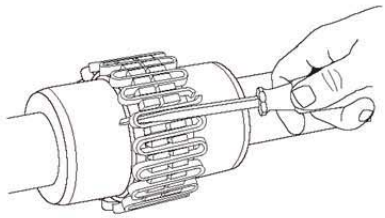

Whenever it is necessary to disconnect the coupling, remove the cover halves and grid. A round rod or screwdriver that will conveniently fit into the open loop ends of the grid is required. Begin at the open end of the grid section and insert the rod or screwdriver into the loop ends. Use the teeth adjacent to each loop as a fulcrum and pry the grid out radially in even, gradual stages, proceeding alternately from side to side.

428-110
May 2004
Supersedes 2-03

Rexnord Industries, LLC, Coupling Group
5555 S. Moorland Rd., New Berlin, WI 53151-7953 USA Telephone : 262-796-4060
Fax: 262-796-4064 e-mail: info@rexnord.com web: www.rexnord.com

REXNORD

Falk™ Steelflex® Couplings • Installation and Maintenance

Type T10 • Sizes 1020–1140 & 20–140 (Page 5of 6)

TYPE T COUPLING INSTALLATION & ALIGNMENT DATA

Maximum life and minimum maintenance for the coupling and connected machinery will result if couplings are accurately aligned. Coupling life expectancy between initial alignment and maximum operating limits is a function of load, speed and lubrication. Maximum operating values listed in Table 2 are based on cataloged allowable rpm.

Values listed are based upon the use of the gaps listed, standard coupling components, standard assemblies and cataloged allowable speeds.

Values may be combined for an installation or operating condition.

Example: 1060T max. operating misalignment is .016" parallel plus .018" angular.

NOTE: For applications requiring greater misalignment, refer application details to the Factory.

Angular misalignment is dimension X minus Y as illustrated below.

Parallel misalignment is distance P between the hub center lines as illustrated below.

End float (with zero angular and parallel misalignment) is the axial movement of the hubs(s) within the cover(s) measured from "0" gap.

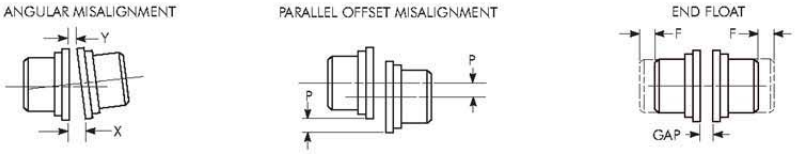

TABLE 2 — Misalignment & End Float

SIZE	Installation Limits						Operating Limits						Cover Fastener Tightening Torque Values Inch or Metric Series Fasteners		Allow Speed (rpm)	Lube Wt	
	Parallel Offset-P		Angular (x-y)		Hub Gap ± 10%		Parallel Offset-P		Angular (x-y)		End Float Physical Limit (Min) 2 x F						
	Max Inch	Max mm	Max Inch	Max mm	Inch	mm	Max Inch	Max mm	Max Inch	Max mm	Inch	mm	(lb-in)	(Nm)		lb	kg
~~1020T~~	~~.006~~	~~0,15~~	~~.003~~	~~0,08~~	~~.125~~	~~3~~	~~.012~~	~~0,30~~	~~.010~~	~~0,25~~	~~.210~~	~~5,33~~	~~100~~	~~11,3~~	~~4500~~	~~.06~~	~~0,03~~
~~1030T~~	~~.006~~	~~0,15~~	~~.003~~	~~0,08~~	~~.125~~	~~3~~	~~.012~~	~~0,30~~	~~.012~~	~~0,30~~	~~.190~~	~~5,03~~	~~100~~	~~11,3~~	~~4500~~	~~.09~~	~~0,04~~
~~1040T~~	~~.006~~	~~0,15~~	~~.003~~	~~0,08~~	~~.125~~	~~3~~	~~.012~~	~~0,30~~	~~.013~~	~~0,33~~	~~.211~~	~~5,36~~	~~100~~	~~11,3~~	~~4500~~	~~.12~~	~~0,05~~
~~1050T~~	~~.008~~	~~0,20~~	~~.004~~	~~0,10~~	~~.125~~	~~3~~	~~.016~~	~~0,41~~	~~.016~~	~~0,41~~	~~.212~~	~~5,38~~	~~200~~	~~22,6~~	~~4500~~	~~.15~~	~~0,07~~
1060T	.008	0,20	.005	0,13	.125	3	.016	0,41	.018	0,46	.258	6,55	200	22,6	4350	.19	0,09
~~1070T~~	~~.008~~	~~0,20~~	~~.005~~	~~0,13~~	~~.125~~	~~3~~	~~.016~~	~~0,41~~	~~.020~~	~~0,51~~	~~.259~~	~~6,58~~	~~200~~	~~22,6~~	~~4125~~	~~.25~~	~~0,11~~
~~1080T~~	~~.008~~	~~0,20~~	~~.006~~	~~0,15~~	~~.125~~	~~3~~	~~.016~~	~~0,41~~	~~.024~~	~~0,61~~	~~.288~~	~~7,32~~	~~200~~	~~22,6~~	~~3600~~	~~.38~~	~~0,17~~
~~1090T~~	~~.008~~	~~0,20~~	~~.007~~	~~0,18~~	~~.125~~	~~3~~	~~.016~~	~~0,41~~	~~.028~~	~~0,71~~	~~.286~~	~~7,26~~	~~200~~	~~22,6~~	~~3400~~	~~.56~~	~~0,25~~
~~1100T~~	~~.010~~	~~0,25~~	~~.008~~	~~0,20~~	~~.188~~	~~5~~	~~.020~~	~~0,51~~	~~.033~~	~~0,84~~	~~.429~~	~~10,90~~	~~312~~	~~35~~	~~2440~~	~~.94~~	~~0,43~~
~~1110T~~	~~.010~~	~~0,25~~	~~.009~~	~~0,23~~	~~.188~~	~~5~~	~~.020~~	~~0,51~~	~~.036~~	~~0,91~~	~~.427~~	~~10,90~~	~~312~~	~~35~~	~~2250~~	~~1.1~~	~~0,51~~
~~1120T~~	~~.011~~	~~0,28~~	~~.010~~	~~0,25~~	~~.250~~	~~6~~	~~.022~~	~~0,56~~	~~.040~~	~~1,02~~	~~.556~~	~~14,12~~	~~650~~	~~73~~	~~2025~~	~~1.6~~	~~0,74~~
~~1130T~~	~~.011~~	~~0,28~~	~~.012~~	~~0,30~~	~~.250~~	~~6~~	~~.022~~	~~0,56~~	~~.047~~	~~1,19~~	~~.551~~	~~14,00~~	~~650~~	~~73~~	~~1800~~	~~2.0~~	~~0,91~~
~~1140T~~	~~.011~~	~~0,28~~	~~.013~~	~~0,33~~	~~.250~~	~~6~~	~~.022~~	~~0,56~~	~~.053~~	~~1,35~~	~~.571~~	~~14,50~~	~~650~~	~~73~~	~~1650~~	~~2.5~~	~~1,14~~

TABLE 3 — Coupling Cover Fastener Identification

SIZE	Inch Series Fasteners				METRIC FASTENERS	
	Old Style		New Style			
1020-1070T10		SAE Grade 8 ★		SAE Grade 8	10.9	Property Class 10.9
1080-1090T10		SAE Grade 8		SAE Grade 8	10.9	Property Class 10.9
1100-1140T10		SAE Grade 5		SAE Grade 5	8.8	Property Class 8.8

★ Older style covers, Sizes 1020T10 thru 1070T10 must utilize socket head cap screws and locknuts held by the cover.

Rexnord Industries, LLC, Coupling Group
5555 S. Moorland Rd., New Berlin, WI 53151-7953 USA Telephone : 262-796-4060
Fax: 262-796-4064 e-mail: info@rexnord.com web: www.rexnord.com

428-110
May 2004
Supersedes 2-03

Installation and Maintenance • Falk™ Steelflex® Couplings

(Page 6 of 6) Type T10 • Sizes 1020–1140 & 20–140

REXNORD

PARTS IDENTIFICATION

All coupling parts have identifying part numbers as shown below. Parts 3 and 4 (Hubs and Grids), are the same for both Type T10 and T20 couplings. All other coupling parts are unique to Type T10. When ordering parts, always SPECIFY SIZE and TYPE shown on the COVER.

PARTS INTERCHANGEABILITY

Parts are interchangeable between Sizes 20T and 1020T, 30T and 1030T, etc. except as noted.

GRIDS — Size 1020T thru 1140T Steelflex couplings use blue or non-painted grids. Older models, 20T thru 140T, use orange grids.

CAUTION: Blue or non-painted grids may be used in all applications, but DO NOT substitute orange grids for blue or nonpainted.

*COVERS — **CAUTION:** DO NOT mix cover halves of different designs. Sizes 1020T thru 1070T10 covers have been manufactured in several different two-rib designs and 80T thru 140T covers have been manufactured with two and three ribs.*

HARDWARE — Older style covers, Sizes 1020T10 thru 1070T10, utilized socket head cap screws with captured locknuts. The new style covers use hex head cap screws (either inch or metric from year 1994 through 2003 and only Metric beginning in 2004). Specify the style cover when ordering replacement parts.

PART NUMBER LOCATION

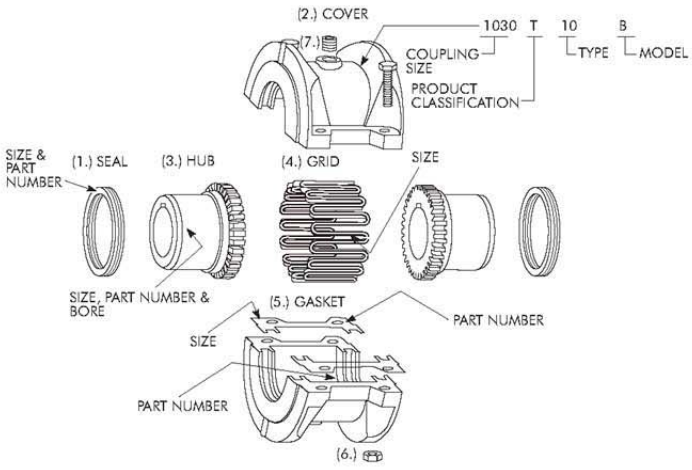

PART DESCRIPTION

1. Seal (T10)
2. Cover (T10)
3. Hub (Specify bore and keyway)
4. Grid
5. Gasket (T10)
6. Metric Fasteners (T10).
7. Lube Plug

ORDER INFORMATION

1. Identify part(s) required by name above.
2. Furnish the following information.

   EXAMPLE:
   Coupling Size: 1030
   Coupling Type: T10
   Model: B
   Bore: 1.375
   Keyway: .375 x .187
3. Contact your Rexnord Distributor or Rexnord for price and availability.

428-110
May 2004
Supersedes 2-03

Rexnord Industries, LLC, Coupling Group
5555 S. Moorland Rd., New Berlin, WI 53151-7953 USA Telephone : 262-796-4060
Fax: 262-796-4064 e-mail: info@rexnord.com web: www.rexnord.com

11.7.4 SPAN LOCK SPEED REDUCER – FOOTE JONES

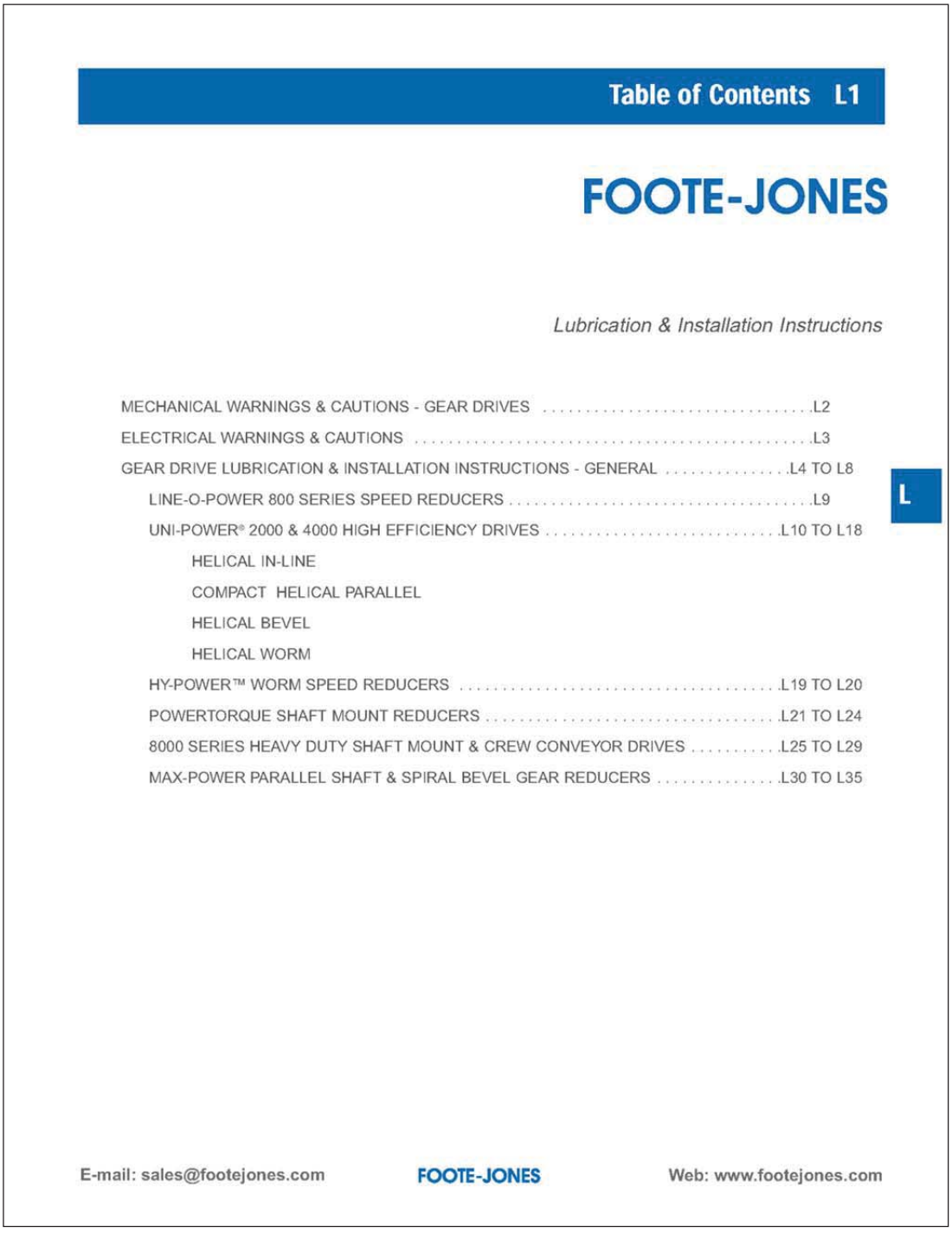

Table of Contents L1

FOOTE-JONES

Lubrication & Installation Instructions

MECHANICAL WARNINGS & CAUTIONS - GEAR DRIVES L2
ELECTRICAL WARNINGS & CAUTIONS L3
GEAR DRIVE LUBRICATION & INSTALLATION INSTRUCTIONS - GENERAL ..... L4 TO L8
LINE-O-POWER 800 SERIES SPEED REDUCERS L9
UNI-POWER® 2000 & 4000 HIGH EFFICIENCY DRIVES ..... L10 TO L18
HELICAL IN-LINE
COMPACT HELICAL PARALLEL
HELICAL BEVEL
HELICAL WORM
HY-POWER™ WORM SPEED REDUCERS ..... L19 TO L20
POWERTORQUE SHAFT MOUNT REDUCERS ..... L21 TO L24
8000 SERIES HEAVY DUTY SHAFT MOUNT & CREW CONVEYOR DRIVES ..... L25 TO L29
MAX-POWER PARALLEL SHAFT & SPIRAL BEVEL GEAR REDUCERS ..... L30 TO L35

L

E-mail: sales@footejones.com FOOTE-JONES Web: www.footejones.com

Lubrication & Installation Instructions

L2 Important Information

WARNING **Please Read Carefully** **CAUTION**

The following WARNING and CAUTION information is supplied to you for your protection and to provide you with many years of trouble free and safe operation of your Foote-Jones product.

Read **ALL** instructions prior to operating reducer. Injury to personnel or reducer failure may be caused by improper installation, maintenance or operation.

WARNING

- Written authorization from Foote-Jones is required to operate or use reducers in man lift or people moving devices.
- Check to make certain application does not exceed the allowable load capacities published in the current catalog.
- Buyer shall be solely responsible for determining the adequacy of the product for any and all uses to which Buyer shall apply the product. The application by Buyer shall not be subject to any implied warranty of fitness for a particular purpose.
- For safety, Buyer or User should provide protective guards over all shaft extensions and any moving apparatus mounted thereon. The User is responsible for checking all applicable safety codes in his area and providing suitable guards. Failure to do so may result in bodily injury and/or damage to equipment.
- Hot oil and reducers can cause severe burns. Use extreme care when removing lubrication plugs and vents.
- Make certain that the power supply is disconnected before attempting to service or remove any components. Lock out the power supply and tag it to prevent unexpected application of power.
- Reducers are not to be considered fail safe or self-locking devices. If these features are required, a properly sized, independent holding device should be utilized. Reducers should not be used as a brake.
- Any brakes that are used in conjunction with a reducer must be sized or positioned in such a way so as to not subject the reducer to loads beyond the catalog rating.
- Lifting supports including eyebolts are to be used for vertically lifting the gearbox only and no other associated attachments or motors.
- Use of an oil with an EP additive on units with backstops may prevent proper operation of the backstop. Injury to personnel, damage to the reducer or other equipment may result.
- Overhung loads subject shaft bearings and shafts to stress which may cause premature bearing failure and/or shaft breakage from bending fatigue, if not sized properly.

CAUTION

- Test run unit to verify operation. If the unit tested is a prototype, that unit must be of current production.
- If the speed reducer cannot be located in a clear and dry area with access to adequate cooling air supply, then precautions must be taken to avoid the ingestion of contaminants such as water and the reduction in cooling ability due to exterior contaminants.
- Mounting bolts should be routinely checked to ensure that the unit is firmly anchored for proper operation.

In the event of the resale of any of the goods, in whatever form, Resellers/Buyers will include the following language in a conspicuous place and in a conspicuous manner in a written agreement covering such sale:

> The manufacturer makes no warranties or representations, express or implied, by operation of law or otherwise, as to the merchantability or fitness for a particular purpose of the goods sold hereunder. Buyer acknowledges that it alone has determined that the goods purchased hereunder will suitably meet the requirements of their intended use. In no event will the manufacturer be liable for consequential, incidental or other damages.

Resellers/Buyers agree to also include this entire document including the warnings and cautions above in a conspicuous place and in a conspicuous manner in writing to instruct users on the safe usage of the product.

This information should be read together with all other printed information supplied by Foote-Jones.

Phone: (605) 225-0360 **FOOTE-JONES** Fax: (605) 225-0567

Lubrication & Installation Instructions

Important Information L3

WARNING **Please Read Carefully** **CAUTION**

This catalog is not intended to provide operational instructions. Appropriate Marathon Electric instructions provided with the motor and precautions attached to the motor should be read carefully prior to installation, operation and/or maintenance of the equipment. Injury to personnel or motor failure may be caused by improper installation, maintenance or operation.

The following WARNING and CAUTION information is supplied to you for your protection and to provide you with many years of trouble free and safe operation of your Marathon Electric product:

WARNING
- Disconnect power and lock out driven equipment before working on a motor.
- Always keep hands and clothing away from moving parts.
- The lifting support on the motor is not to be used to lift the entire machine. Only the motor attached directly to the support may be safely lifted by the support.
- Install and ground per local and national codes.
- Discharge all capacitors before servicing a single phase motor.
- Misapplication of a motor in a hazardous environment can cause fire or an explosion and result in serious injury. Only the end user, local authority having jurisdiction, and/or insurance underwriter are qualified to identify the appropriate class(es), group(s), division and temperature code. Marathon Electric personnel can not evaluate or recommend what motors may be suitable for use in hazardous environments. If a motor is nameplated for hazardous locations, do not operate the motor without all of the grease and drain plugs installed.
- Never attempt to measure the temperature rise of a motor by touch. Temperature rise must be measured by thermometer, resistance, imbedded detector or thermocouple.
- Motors with automatic reset thermal protectors will automatically restart when the protector temperature drops sufficiently. Do not use motors with automatic reset thermal protectors in applications where automatic restart will be hazardous to personnel or equipment.
- Motors with manual reset thermal protectors may start unexpectedly after the protector trips when the surrounding air is at +20°Fahrenheit or lower. If the manual reset protector trips, disconnect motor from its power supply. After the protector cools (five minutes or more), it can be reset and power may be applied to the motor.
- Connect all protective device leads, marked P1, P2, etc., per instructions supplied with the motor.
- Operation of a motor at other than its nameplate rating may result in fire, damage to equipment or serious injury to personnel.
- For safety, Buyer or User should provide protective guards over all shaft extensions and any moving apparatus mounted thereon. The User is responsible for checking all applicable safety codes in his area and providing suitable guards. Failure to do so may result in bodily injury and/or damage to equipment.

CAUTION
- Consult qualified personnel with questions and all electrical repairs must be performed by trained and qualified personnel only.
- For motors nameplated as "belted duty only", do not operate the motor without belts properly installed.
- Motors and/or driven equipment should not be operated faster than their rated speed.
- For inverter applications, follow the inverter manufacturer's installation guidelines.
- Make sure the motor is properly secured and aligned before operation.

L

Resale of Goods

In the event of the resale of any of the goods, in whatever form, Resellers/Buyers will include the following language in a conspicuous place and in a conspicuous manner in a written agreement covering such sale:

> The manufacturer makes no warranty or representations, express or implied, by operation of law or otherwise, as to the merchantability or fitness for a particular purpose of the goods sold hereunder. Buyer acknowledges that it alone has determined that the goods purchased hereunder will suitably meet the requirements of their intended use. In no event will the manufacturer be liable for consequential, incidental or other damages. Even if the repair or replacement remedy shall be deemed to have failed of its essential purpose under Section 2-719 of the Uniform Commercial Code, the manufacturer shall have no liability to Buyer for consequential damages.

Resellers/Buyers agree to also include this entire document including the warnings and cautions above in a conspicuous place and in a conspicuous manner in writing to instruct users on the safe usage of the product.

This information should be read together with all other printed information supplied by Marathon Electric.

For more information contact: **Marathon Electric Manufacturing Corporation**, Subsidiary of Regal-Beloit Corporation, 100 E. Randolph St., Wausau, WI 54401 Phone: 715-675-3311 or Fax: 715-675-8030.

E-mail: sales@footejones.com FOOTE-JONES Web: www.footejones.com

Lubrication & Installation Instructions

L4 General Instructions

WARNING SAFETY
Rotary equipment is dangerous unless adequately guarded. the user is responsible for complying with all applicable safety regulations. Adequate safety instructions must be given by the user to personnel directly responsible for the installation, maintenance, and operation of the equipment. The gear unit must not be operated above its service rating.

ATTENTION: Unit should be inspected immediately on receipt of shipment for any indication of rough handling or damage. Any evidence of this should be reported immediately to the carrier and a claim entered. This may show up as scuffed paint, broken or cracked castings, bent shafts, metal deformation or a shift in alignment of components.

CAUTION Do not operate if mounted on the ceiling, on a wall, or on an incline unless the unit has been specifically modified for such an installation. Special lubrication arrangements must be provided when the mounting is other than standard floor mounting on a level, horizontal surface.

INTRODUCTION

IMPORTANT - Read the following instructions carefully and use them as the basis for proper care of your unit. All tags and bulletins wired to the unit should be carefully read and filed for future reference.

STORAGE

NORMAL PREPARATION

Prior to shipment, all gear units are tested with a rust inhibiting oil that covers all interior surfaces. Shaft extensions and external machine surfaces are coated with a drying-film rust-preventive material. These measures constitute the normal preparation for shipment and for temporary delays during installation, and will provide some protection, for some period of time, depending on the ambient conditions. **Outdoor, unprotected storage is not recommended.** The table in the next column shows **approximate** storage periods.

APPROXIMATE STORAGE PERIODS

Type of Preparation	Outdoor*	Indoor**
Normal	2 Months	6 Months
Long Term	12 Months	24 Months

* Unit stored on blocks and covered with a tarpaulin in a protected area.
** Dry building with reasonably constant temperature.

PREPARATION FOR LONG-TERM STORAGE

If the storage period provided by normal preparation is not adequate, the gear unit must be prepared for long-term storage.

Protection of gear units against corrosion of internal surfaces during long-term storage is best accomplished by submerging the internals in oil and limiting the entry of air into any remaining space over the oil. The major problem in the preparation of the units is to prevent leakage of the oil, which would (1) lower the oil level and leave surfaces exposed and (2) contaminate the storage area. Despite careful preparation by the manufacturer, some oil seepage can be expected. The gear unit should be located in the storage area so as to avoid damage to other equipment and the surroundings.

It is preferable that long-term preparation be done at the factory but, if this is not possible, the following procedure is recommended:

1. Place the gear unit on wooden blocks.
2. Tighten all bolts on the housing and all pipe connections such as plugs, standpipes, dipstick caps, and heaters. Replace the breather with a pressure-relief valve having a 1 PSI setting.
3. Clean the outside diameter surfaces of the bearing covers and the adjacent surfaces of the bearing blocks with solvent. Apply a fillet of adhesive sealant such as General Electric RTV-102 around the junction of these surfaces.
4. All exposed unpainted parts such as shafts should be coated thoroughly with a corrosion preventative compound, solvent cut back type, leaving a firm film. Use Nox Rust No. 369 (Daubert Chemical Co.) or equivalent.
5. Completely fill the gear unit with the type of lubricant specified for operation, and tighten the fill-hole plug.
6. Protect other Buyer's or Seller's vendor-furnished items in accordance with the manufacturer's recommended storage procedures.
7. Cover the gear unit with tarpaulins.
8. It is recommended that the input shaft of every reducer be rotated once a month enough turns to produce one complete turn on the output shaft to prevent Water Etching or False Brinelling of the bearings and seizure of the Elastomeric Seal Lip Material on the shaft.

PROTECTION OF ASSOCIATED EQUIPMENT IN STORAGE

COUPLINGS

Fill with recommended lubricant. Coat the external surfaces with heavy grease. Wrap plastic film around the coupling and tape the plastic to the shaft.

BACKSTOP

Remove the outer half of the backstop guard. While rotating the backstop, squirt a rust inhibiting oil such as Mobilarma 523 (Mobil Oil Company) into every open pinhole in the backstop housing in a manner that will saturate every component in the backstop assembly. Replace the backstop guard. Wrap plastic film around the backstop and tape the plastic to the shaft and to the endbell snout.

Phone: (605) 225-0360 FOOTE-JONES Fax: (605) 225-0567

Lubrication & Installation Instructions

General Instructions L5

CHAIN DRIVES
Remove the chain from the drive, roll it up, coat it with grease, and wrap it in plastic film. Coat the sprockets with a firm film of a corrosion-preventative compound such as Mobilarma 633.

BELT DRIVES
Remove the belt from the sheaves and wrap it in plastic film. Coat the sheaves with a firm film of a corrosion preventive compound such as Mobilarma 633.

MOTORS
Refer to instructions on storage protection provided by the motor manufacturer. The bearings are usually prelubricated. Refer to motor manufacturer for relube period. Use protective cover to keep out water.

INSTALLATION

SAFETY
It is the purchaser's responsibility to determine the applicable local and national safety codes related to speed reducers for the specific installation involved. Shaft guarding and noise level requirements particularly should be checked, and any requirements involving the reducer clearly specified.

PREPARING THE GEAR UNIT FOR INSTALLATION

Just prior to installation, remove the protective coatings and touch up any rust spots. If the unit was filled with oil suitable for operation under ambient conditions, it can be drained down to the recommended operating level. If the oil is not suitable for operation, the unit must be drained and refilled to the recommended level with the grade and type of oil shown on the nameplate for the ambient temperature. Reinstall the breather.

Inspect the seal lips carefully. While in storage, they may have deteriorated, the seal will not perform satisfactorily, and must be replaced.

FOUNDATION
The gear unit should be mounted on a rigid foundation such as a reinforced concrete pad, a base plate, or a steel structure. An inadequate foundation will permit misalignment under load which may result in noise or overloading of elements in the drive train.

Install broad, flat metal shims under the feet to level the gear unit and to align it with the motor and the driven equipment. After bolting the gear unit in place, recheck the alignment; it may be necessary to modify the heights to the shim packs to compensate for the effect of torquing the foundation bolts.

⚠CAUTION Do not mount the gear drive on ceiling, on a wall, or on an incline unless the unit has been specifically modified for such an installation. Special lubrication arrangements must be provided when the mounting is other than standard floor mounting on a level, horizontal surface.

SHAFT CONNECTIONS
WHEN GEARING, BELTS OR CHAINS are used to connect the gear unit to the prime mover or driven equipment, the pinion, sheave, or sprocket should be mounted on the shaft as closely as possible to the bearing cover to minimize shaft deflection and bearing load. Check the overhung loads to be certain that they do not exceed the catalog ratings and that the points of application are not outboard of the bearing cover by more than one shaft diameter. If the overhung load is more than one shaft diameter outboard of the bearing cover, the catalog rating will be reduced. Refer to appropriate catalog section, to determine the actual overhung-load rating, or consult the factory.

For satisfactory performance of belt drives and chain drives, sheaves and sprockets must be properly aligned. A straight-edge laid across the sides of sheaves and sprockets, as shown below, will facilitate below.

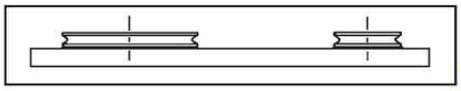

L

EXTERNAL GEARING must be adjusted for proper backlash, face centering, and alignment. Backlash can best be checked with a feeler gauge. Face centering can be gauged satisfactorily by eye–the wider member (usually the pinion) should extend beyond the narrower member approximately equally on both sides. Alignment can be checked by blueing the teeth, running the drive under load, and noting the contact pattern. Contact should be symmetrical about the center of the gear face; corner contact is unacceptable. Face pattern and contact pattern are illustrated below. If the gear unit is to be coupling-connected to the prime mover or the driven equipment,

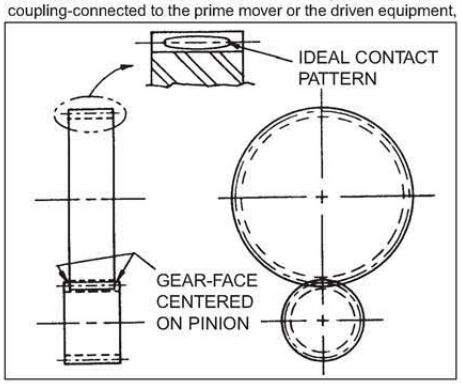

or both, flexible couplings must be used. Rigid couplings are not suitable. Flexible couplings can compensate for reasonable amounts of misalignment but it is good practice to maintain good alignment between the gear unit and the connected equipment. It is also necessary to adjust the location of the connected equipment relative to the gear unit to provide the coupling gap (endwise clearance) between shafts that is recommended by the coupling manufacturer.

E-mail: sales@footejones.com FOOTE-JONES Web: www.footejones.com

Lubrication & Installation Instructions

L6 General Instructions

Coupling alignment errors are of two kinds; angular misalignment and parallel misalignment. Satisfactory alignment of the two shafts is easier to achieve if angular misalignment is corrected first.

Angular misalignment is illustrated below. It is most easily corrected using a feeler gauge equal in thickness to the recommended coupling gap. When good angular alignment has been obtained, the gap measurement at points A, B, C and D will be all equal.

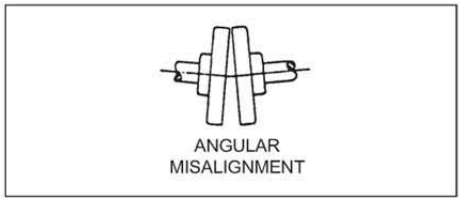

ANGULAR MISALIGNMENT

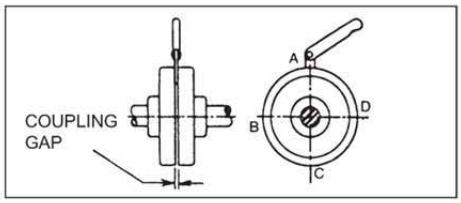

Parallel misalignment is illustrated below. It is corrected in the horizontal direction by shifting one of the two connected units sideways and in the vertical direction by shimming. When good parallel alignment has been obtained, a straight edge at points A, B, C and D will simultaneously contact the outer surfaces of both coupling hubs.

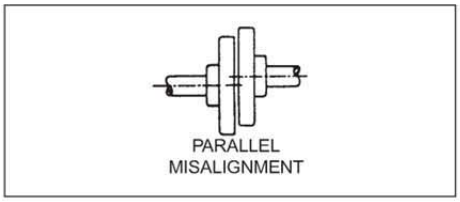

PARALLEL MISALIGNMENT

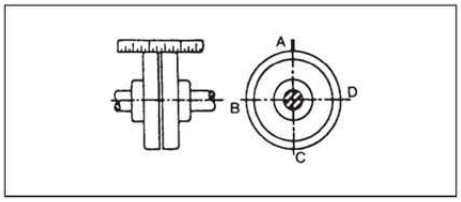

After parallel misalignment has been corrected, it is recommended that the angular alignment be rechecked and readjusted as indicated.

The fit of a coupling hub, pinion, sprocket, or sheave on a gear-unit shaft will range from loose to heavy interference. Heavy hammer blows must never be used to mount any of these components on the shaft because the bearings in the gear unit may be damaged. If the component at the ambient temperature cannot be mounted with light tapping, it must be expanded by heating until it can. Heating will also facilitate the removal of these components, reducing the likelihood of damaging the gear unit.

CAUTION When mounting heated components on a gear-unit shaft, take care to protect the oil seal from heat damage. Use wet rags or an air hose to cool the shaft.

CAUTION Do not overfill; a high oil level will generate heat through churning. To ensure proper lubrication of all moving parts, do not underfill or let the oil level drop more than 1/4 inch below the indicated level.

The initial oil fill should be changed after two weeks of operation. Thereafter, the oil should be changed every six months under normal operating conditions.

Phone: (605) 225-0360 **FOOTE-JONES** Fax: (605) 225-0567

Lubrication & Installation Instructions

General Instructions L7

OPERATION

START-UP

1. CAUTION After the installation has been completed, but before the initial startup, the following checks should be made.

   A. Verify the rating of the reducer, (indicated on the name-plate and certified print) to be sure the service rating, RPM or speed range, thermal rating, and any overhung or thrust loading are not exceeded in actual operation.

   B. Make sure reducer is filled with the correct lubricant to the proper level. Too much oil in the reducer causes churning and excessive heat generated by fluid friction. Likewise, an insufficient amount of oil will make the reducer operate at higher temperatures.

   Make sure all oil passages are clear and permit free flow of the lubricant. Refer to section of this bulletin on lubrication and/or the nameplate affixed to the reducer.

   C. On vertical units, check grease fittings for lubrication (unit shipped without grease in the L.S. bearings).

   D. Lubricate couplings with manufacturer's recommended lubricant.

   E. If backstop is used make sure it is filled to the oil level mark with the proper lubricant.

   F. Fan - On units equipped with a fan check the air supply for proper fan circulation. Avoid high surrounding ambient temperatures,

2. Check for free rotation of all elements. In many cases, the input shaft of the reducer can be turned by hand even with a connected load.

3. Check all bolts and capscrews to make sure they are tight. (See Fig. on Page 6)

4. Check belts and/or chains for proper tension.

5. After energizing motive power, if any undue noise occurs, shut off power immediately.

6. Observe temperature rise. This may take up to two hours to stabilize. In some instances depending on ratio, size and input speed the temperature in the oil sump may rise as much as 100° F (55.6° C) above the ambient. Actual operating temperature will vary with the reducer size, ratio, type and operating conditions. Under no circumstances should the oil bath temperature exceed 200° F (93.3° C). If this should occur, consult the factory. The housing and shaft adjacent to the high speed seal may show temperatures significantly above 200° F (93.3 C). This will diminish as the seal and shaft sealing area wear in. Application of oil at this area during the break-in period will help in assisting this process.

   CAUTION Many times the reducer temperature is judged by the touch of hand and may be considered to be quite hot. The only positive method is to use a surface temperature measuring instrument such as a Pyrocon or by using a thermometer directly in the oil bath,

7. Bearings can produce localized heating from cramping either radial or axial. Check for insufficient end play.

8. CAUTION Do not operate this unit beyond its service rating as any failure resulting could cause damage to property or life and limb.

9. CAUTION The system of connected rotating parts must be free from critical speed, torsional or other type vibration, no matter how induced. The responsibility for this system analysis lies with the purchaser of the speed reducer.

MAINTENANCE CHECK POINTS

For optimum protection and preventative maintenance it is recommended that the reducer be inspected daily. Points to cover are:

L

1. OIL LEAKAGE at oil seal, housing split, bearing cap shims, pipe fittings. Tighten housing bolts, bearing cap bolts and pipe fittings and/or replace oil seal if leakage is sufficient to cause rapid drop in oil level. It may be necessary to add sealant between bearing cap shim packs and the housing.

2. OIL LEVEL - Any undue drop in oil level is an indication of oil leakage from some point on the reducer and should be corrected. If backstop is used, check oil level also.

3. TEMPERATURE - Check the actual temperature of the oil bath, gear case, and shafts at various points. This should be done after the unit has been in operation at least two hours. The average oil bath temperature is 140° F (60° C), however, the range can vary from 100° F to 200° F (37.8° to 93.3° C). Bearings can produce localized heating from cramping either radial or axial. Check for insufficient end play. Any undue rise in temperature above that normally encountered and not accountable for by a rise in the ambient should be investigated. Low oil level, abnormal loading, thickening of lubricant, bearing seizure are possible sources. If in a particular bearing, the heat would be localized in the housing area adjacent to the bearing.

4. SOUND LEVEL - A sudden change in the sound level is a possible indication of low oil level, undue thinning out of lubricant, abnormal loading, worn coupling or deterioration of internal parts.

   Noise is usually difficult to isolate because sound can travel throughout the entire drive system. A noise can be pin-pointed to a specific area by determining its approximate frequency and if it is at accurate regular intervals.

E-mail: sales@footejones.com FOOTE-JONES Web: www.footejones.com

Lubrication & Installation Instructions

L8 General Instructions

5. LUBRICANT CONDITION - A change of color in the oil or thickening or unexplainable corrosion of internal parts is an indication that it has deteriorated and should be changed.

6. LOADING - Periodic load checks are valuable in making sure that reducer rating is not exceeded.

7. OIL BREATHER - Must be kept clean,

8. VIBRATION - A change in the vibration normally associated with the system can indicate worn couplings or internal reducer parts.

9. DIRT ACCUMULATION - Any undue accumulation of dirt on the reducer or in fan components where fans are used will affect proper cooling of the unit.

10. GREASE LUBRICATE - Grease should be applied once a month to the Alemite fitting on the L.S. bearing caps until it escapes from the Alemite relief fitting on the opposite side of the cap or from the outer seal lip, or from the labyrinth. Uses a good Lithium base grease (NLGI No. 2 consistency).

11. COUPLINGS - If noisy, check for lubrication.

12. REPAIR PARTS - Keep recommended spare parts, oil seals, and bearings on hand to reduce down time.

FOOD AND DRUG INDUSTRY

Some operations in the Food and Drug Industry require special lubrication considerations in view of possible toxicity from contamination by the oil or grease used in the equipment. Some EP products contain Lead Naphthenate, Phosphorus, or Chlorine which are toxic and could be harmful.

CAUTION In the Food (including animal food) and Drug Industry, consult the petroleum supplier for recommendation of lubricants which are acceptable to the Food and Drug Administration and/or other authoritative bodies having jurisdiction.

COUPLINGS

Each coupling shipped with a reducer is tagged with a list of the proper lubricants and an outline of the correct lubrication practice to follow. They should be relubricated at regular intervals and not allowed to go dry.

BREATHER

Each unit is equipped with a breather. This should be cleaned at intervals to insure that it is working.

Phone: (605) 225-0360 FOOTE-JONES Fax: (605) 225-0567

Lubrication & Installation Instructions

LINE-O-POWER™ Lubrication L9

LUBRICATION

CAUTION Gear units are shipped without oil.

Before startup, fill the unit to the indicated level with the grade and type of oil shown on the nameplate for the ambient temperature range.

Suitable oils are listed in this manual. If the unit will be operated at ambient temperatures outside the range shown on the nameplate, consult the factory for recommendations.

TABLE 1
AGMA LUBRICANT NUMBERS FOR CONCENTRIC SHAFT REDUCER, COUPLED GEARMOTOR & GEARMOTOR

HELICAL GEAR REDUCERS		AGMA LUBRICANT NUMBER BY AMBIENT TEMPERATURE			
		15 - 60 DEGREES F		50 - 125 DEGREES F	
TYPE	SL, VSL, P, K, L, VL, GM, CVC	NORMAL SERVICE	HEAVY DUTY	NORMAL SERVICE	HEAVY DUTY
SIZE	820 - 827 831 - 837 843 - 847	4	4 EP	5	5 EP

Where the lubricant contains lead naphthenate (an EP additive) the reducer oil sump temperature should not exceed 160°F (70°C).

TABLE 3

UNIT SIZE	APPROXIMATE OIL CAPACITY (GALLONS)					
	GEARMOTOR			REDUCER AND COUPLED GEARMOTOR		
	STD. LEVEL	L.S. LEVEL	VGM LEVEL	STD. LEVEL	L.S. LEVEL	VSL LEVEL
821	.8	1.0	1.9	.8	1.0	1.9
822	1.1	1.3	2.0	1.1	1.3	2.0
823	2.1	2.5	4.5	2.1	2.5	4.5
824	2.8	3.8	7.5	2.8	3.8	7.5
8245	3.7	5.9	7.5	3.7	5.9	7.5
825	5.5	7.8	16.3	5.5	7.8	16.3
8255	8.4	12.0	18.5	8.4	12.0	18.5
826	11.0	16.0	25.0	11.0	16.0	25.0
8265	–	–	–	30.0	40.0	–
827	–	–	–	40.0	50.0	–
831	–	1.4	1.9	–	1.4	1.9
832	–	1.6	2.0	–	1.6	2.0
833	–	3.2	4.5	–	3.2	4.5
834	–	4.6	7.5	–	4.6	7.5
8345	–	6.3	9.7	–	6.3	9.7
835	–	10.2	16.3	–	10.2	16.3
8355	–	14.5	18.5	–	14.5	18.5
836	–	20.5	25.0	–	20.5	25.0
8365	–	26.0	–	–	26.0	–
837	–	35.0	–	–	35.0	–
843	–	3.6	4.5	–	3.6	4.5
844	–	5.1	7.5	–	5.1	7.5
8445	–	7.5	9.7	–	7.5	9.7
845	–	11.0	16.3	–	11.0	16.3
8455	–	15.3	18.5	–	15.3	18.5
846	–	21.0	25.0	–	21.0	25.0
8465	–	47.0	–	–	47.0	–
847	–	59.0	–	–	59.0	–

NOTE: WITH OUTPUT SHAFT SPEED OF 68 RPM OR LESS, THE LOW SPEED LEVEL (HIGH OIL LEVEL) SHOULD BE USED, DATA APPLIES TO HORIZONTAL FLOOR MOUNTED GEARMOTORS AND REDUCER MODELS.

* FOR VERTICAL UNITS (LOW SPEED DOWN), USE THE HIGH OIL LEVEL PLUG.

CAUTION These are approximate amounts. Always fill your speed reducer to the oil level indicator for proper lubrication.

The vertical flange mounted drive has a grease fitting at the bottom of the housing at the output shaft. Re-grease with NLFI No. 2 consistency Lithium Base grease at three month intervals.

The seals at the shaft extensions should be purged periodically with NLGI No. 2 Lithium Base grease. Using a hand gun, pump grease into the fitting until the grease forced out around the shaft is clean. Pump slowly to avoid forcing grease past the lip seal and into the gear unit.

E-mail: sales@footejones.com FOOTE-JONES Web: www.footejones.com

L

Lubrication & Installation Instructions

RECOMMENDED LUBRICANTS

MANUFACTURER	3 (ISO 100)	3EP (ISO 100)	4 (ISO 150)	4EP (ISO 150)	5 (ISO 220)	5EP (ISO 220)	6 (ISO 320)	6EP (ISO 320)
Amoco Oil Co.	American Ind. Oil 100 (-15)	Permagear EP 100 (0)	American Ind. Oil 150 (-10)	Permagear EP150 (0)	American Ind. Oil 220 (-15)	Permagear EP220 (0)	American Ind. Oil 320 (-15)	Permagear EP 320 (+10)
Ashland Oil	Valvoline R&O 100 (-5)	Valvoline AGMA 3EP (-12)	Valvoline R&O 150 (-5)	Valvoline AGMA 4EP (-12)	Valvoline R&O 220 (0)	Valvoline AGMA 5EP (-9)	Valvoline R&O 320 (+5)	Valvoline AGMA 6EP (-9)
Bp Oil		Energear EP100 (+10)		Energear EP150 (+10)		Energear EP220 (+16)		Energear EP320 (+16)
Castrol Performance Lubes	Tribol 1100/100 (-8)	Tribol 1100/100 (-8)	Tribol 1100/150 (-8)	Tribol 1100/150 (-8)	Tribol 1100/220 (-8)	Tribol 1100/220 (0)	Tribol 1100/320 (0)	Tribol 1100/320 (0)
Chevron USA, Inc.	AW Machine Oil 100 (+5)		AW Machine Oil 150 (+10)	Ultra Gear 150 (-17)	AW Machine Oil 220 (+10)	Ultra Gear 220 (0)	AW Machine Oil 320 (+5)	Ultra Gear 320 (0)
Citgo Petroleum	Pacemaker 100 (+10)	Citgear EP100 (0)	Pacemaker 150 (+10)	Citgear EP150 (0)	Pacemaker 220 (+10)	Citgear EP220 (0)	Pacemaker 320 (+10)	Citgear EP320 (0)
Conoco Inc.	Dectol R&O 100	Gear 100	Dectol R&O 150	Gear 150	Dectol R&O 220	Gear 220	Dectol R&O 320	Gear 320
Exxon Co. USA	Teresstic 100 (0)	Spartan EP100 (0)	Teresstic 150 (0)	Spartan EP150 (0	Teresstic 220 (0)	Spartan EP220 (0)	Teresstic 320 (+16)	Spartan EP320 (+16)
Keystone Div. Penwalt Corp.	KLC-30 (+5)		KLC-40 (+5)	Keygear 90 (+5)	KLC-50 (+5)			Keygear 110 (+10)
Lubrication Engineers	Monolec Turbine 6404 (-10)	Almasol Gear 606 (-15)	Monolec Turbine 6405 (-10)	Almasol Turbine 604 (-10)	Monolec Turbine 6406 (-10)	Almasol Turbine 607 (-10)	Monolec Turbine 6407 (0)	Almasol Turbine 605 (0)
Lubriplate	SPO-233 (-35)	APG-80W-90 (-35)	SPO-244 (-25)	APG-90 (-20)	SPO-255 (-10)		SPO-266 (+10)	APG-80W-140 (-25)
Lyondell Oil	Duro 100 (+10)		Duro 150 (+15)	Pennant NL 150 (-10)	Duro 220 (+15)	Pennant NL 220 (0)	Duro 320 (+15)	Pennant NL320 (+10)
Mobil Oil Corp.	DTE 18-M (-20)	Mobilgear 627 (-10)	DTE Oil Extra Heavy (+25)	Mobilgear 629 (-10)	DTE Oil BB (+25)	Mobilgear 630 (0)	DTE Oil AA (+25)	Mobilgear 632 (0)
Pennzoil Co.	Pennzbell R&O 100 (-10)	Super Maxol EP100 (-5)	Pennzbell R&O 150 (+10)	Super Maxol EP150 (+10)	Pennzbell R&O 220 (+15)	Super Maxol EP220 (+15)	Pennzbell R&O 320 (+15)	Super Maxol EP320 (+10)
Phillips Petroleum Co.	Magnus 100 (-15)		Magnus 150 (-15)	Philgear 150 (+5)	Magnus 220 (-12)	Philgear 220 (+10)	Magnus 320 (-15)	Philgear 320 (+10)
Shell Oil Co.	Morlina 100 (0)	Omala 100 (-10)	Morlina 150 (0)	Omala 150 (0)	Morlina 220 (+10)	Omala 220 (+10)	Morlina 320	Omala 320
Sun Oil Co.	Sunvis 9100 (+10)	Sunep 100	Sunvis 9150 (+10)	Sunep 150 (+10)	Sunvis 9220 (+10)	Sunep 220 (+10)	Sunvis 9320	Sunep 320
Texaco Lubricants	Regal R&O 100 (+15)	Meropa 100 (-25)	Regal R&O 150 (+15)	Meropa 150 (-25)	Regal R&O 220 (+15)	Meropa 220 (-10)	Regal R&O 320 (+20)	Meropa 320 (-15)
Unocal		Extra Duty NL 3EP (+5)		Extra Duty NL 4EP (0)		Extra Duty NL 5EP (+10)		Extra Duty NL 6EP (+5)

Numbers in parenthesis are pour point of the lubricant in degrees fahrenheit.

E-mail: sales@footejones.com

FOOTE-JONES

Web: www.footejones.com

L

11.8 TRAFFIC CONTROL EQUIPMENT MANUALS AND SPECIFICATIONS

11.8.1 WARNING GATE SCHEMATIC – B&B ROADWAY VT-66

Protect-O-Arm® Gates and Barriers

ARE A PART OF THE WORLD'S FINEST BRIDGES

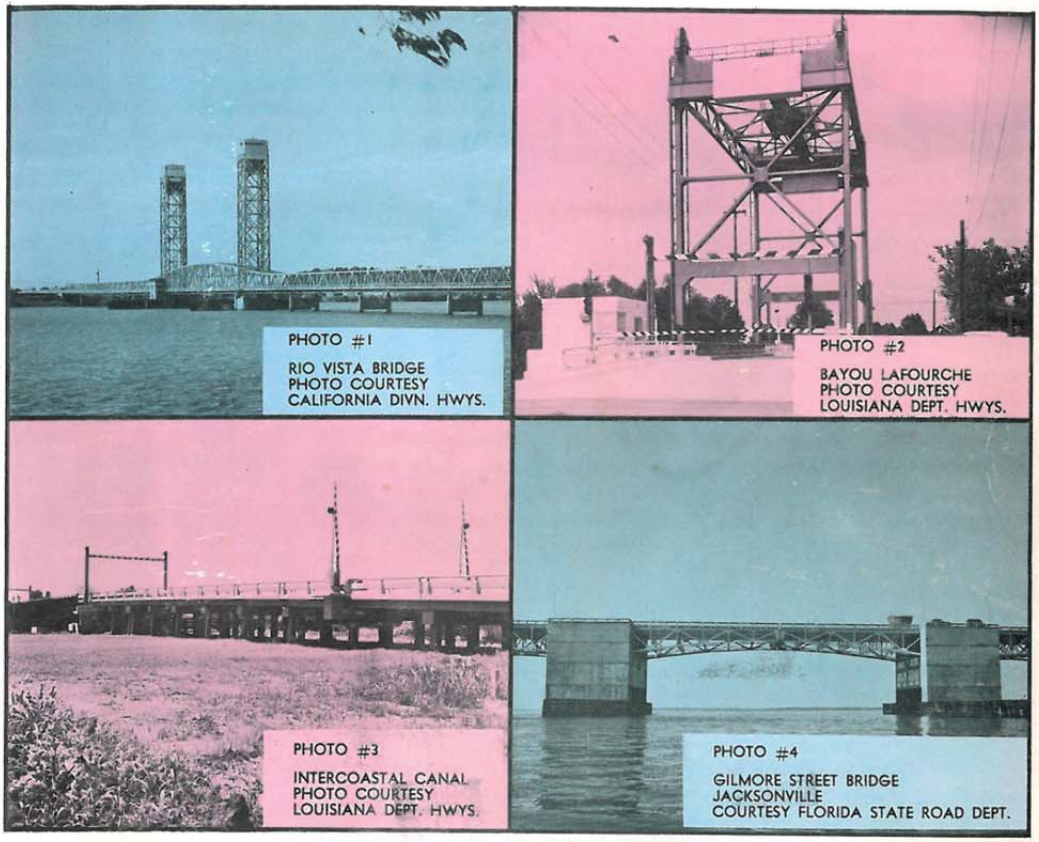

PHOTO #1
RIO VISTA BRIDGE
PHOTO COURTESY
CALIFORNIA DIVN. HWYS.

PHOTO #2
BAYOU LAFOURCHE
PHOTO COURTESY
LOUISIANA DEPT. HWYS.

PHOTO #3
INTERCOASTAL CANAL
PHOTO COURTESY
LOUISIANA DEPT. HWYS.

PHOTO #4
GILMORE STREET BRIDGE
JACKSONVILLE
COURTESY FLORIDA STATE ROAD DEPT.

PROTECT-O-ARM® GATES AND BARRIERS HAVE THE DISTINCTION OF BEING INSTALLED ON THE WORLD'S FINEST BRIDGES. THEIR DESIGN MAKES THEM READILY ADAPTABLE TO ALL TYPES OF STRUCTURES AND TRAFFIC CONDITIONS. THEY ARE PROPERLY DESIGNED, PRECISION MANUFACTURED AND SENSIBLY PRICED.

B & B ELECTROMATIC CORPORATION
MANUFACTURERS SINCE 1925

NORWOOD, LOUISIANA 70761
PHONE: 504 - 629-5234

Bul. C68180

* REG. U. S. PAT. OFF.

Note: Warning Gates in place may vary from drawings located within the manual.

PROTECT-O-ARM® AUTOMATIC GATES PROTECT AND CONTROL TRAFFIC EFFECTIVELY

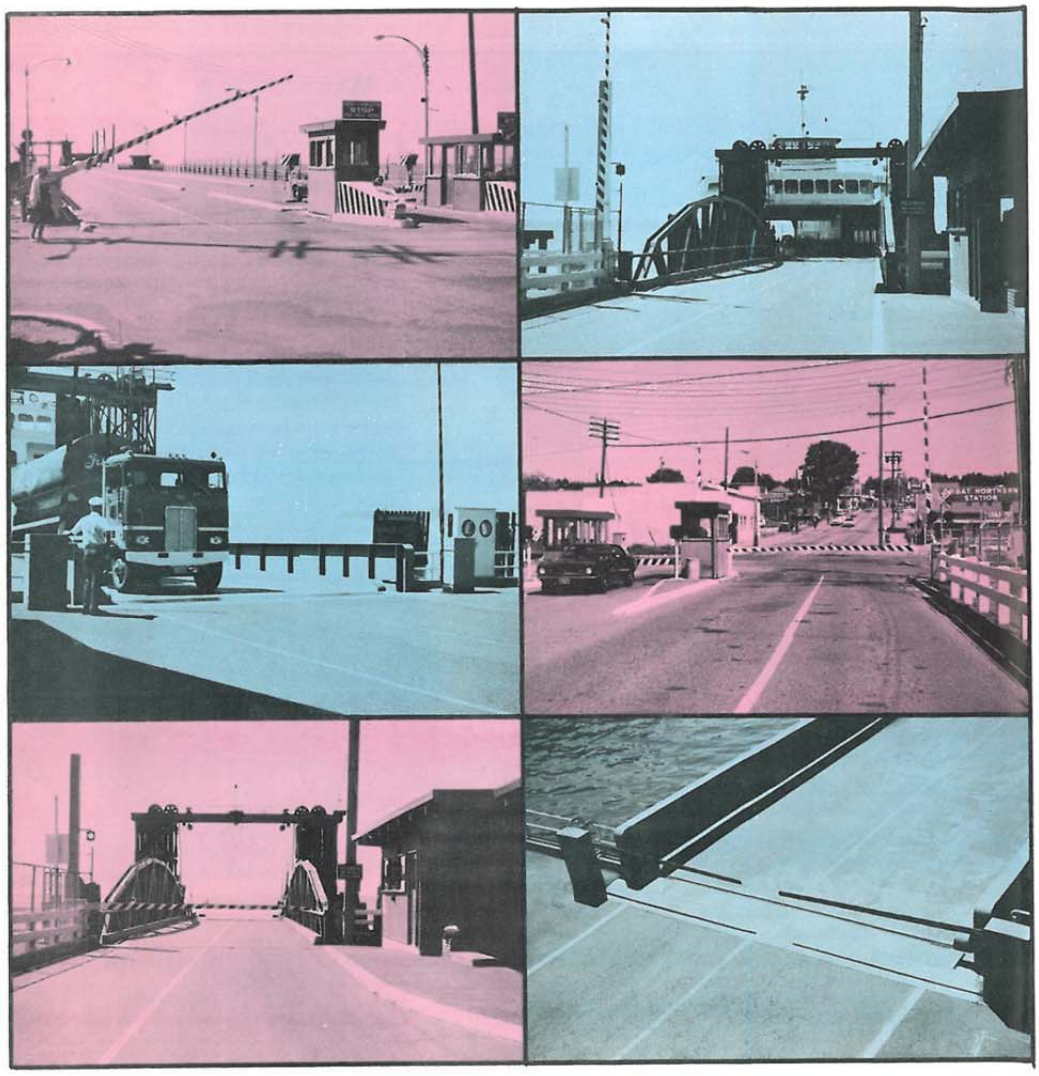

Photos Courtesy H. M. Denny Co., Seattle, Washington

IN THE MOST CRITICAL AND DANGEROUS AREAS, WHEN TRAFFIC CONTROL DEVICES MUST BE INFALLIBLE, THE B&B PROTECT-O-ARM® IS USED.

FOR COMPLETE SPECIFICATIONS, WRITE B&B ELECTROMATIC CORPORATION, B&B BUILDING, NORWOOD, LOUISIANA 70761, OR CALL AREA 504, 629-5234.

BUL616926-S1-M-165

INSTRUCTIONS FOR ORDERING PARTS
FOR B&B "PROTECT-O-ARM" ROADWAY GATE

THE B&B "PROTECT-O-ARM" HAS PROVEN TO HAVE AN EXCEEDINGLY LONG LIFE AND VERY FEW REPAIRS OR REPLACEMENT PARTS ARE REQUIRED FOR THE FIRST 20 TO 30 YEARS. HOWEVER, THROUGH NEGLECT, IMPROPER INSTALLATION OR ACCIDENT, REPLACEMENT PARTS ARE OCCASIONALLY NECESSARY.

EACH GATE CARRIES A SERIAL NUMBER AND THIS MUST BE SHOWN ON ALL CORRESPONDENCE REGARDING PARTS. DUE TO A SPECIAL SITUATION, A CUSTOMER MAY SPECIFY SPECIAL ACCESSORIES AND OPERATIONAL CHARACTERISTICS. TO BE SURE WE HAVE THE RIGHT INFORMATION AND SEND THE RIGHT PARTS, PLEASE FURNISH THE NAME OF THE PURCHASER, THE PROJECT NUMBER AND LOCATION OF THE EQUIPMENT, IF AVAILABLE. WE KEEP A FILE SHOWING THE CUSTOMER, THE OWNER AND THE PROJECT.

UNLESS OTHERWISE SPECIFIED, WE WILL SHIP BY PARCEL POST OR RAIL EXPRESS ALL SHIPMENTS UP TO SEVENTY POUNDS. ABOVE SEVENTY POUNDS WILL BE SHIPPED BY MOTOR FREIGHT. IN AN EMERGENCY, AIR FREIGHT GIVES OVERNIGHT SERVICE FROM OUR PLANT TO ANY SCHEDULED AIRPORT IN THE UNITED STATES.

PARTS ARE GROUPED UNDER SUB-ASSEMBLIES. AN ITEM NUMBER IS SHOWN AND SOME PARTS HAVE A REFERENCE NUMBER. ALWAYS GIVE THE SUB-ASSEMBLY NUMBER (I.E. THE SHEET THAT SHOWS THE PART), THE ITEM NUMBER AND THE REFERENCE NUMBER, IF SHOWN.

PRICES

DUE TO THE EXCEEDINGLY LONG LIFE OF THE "PROTECT-O-ARM" AND THE CONSTANT FLUCTUATION IN COST OF LABOR AND MATERIALS, A FIXED PRICE CANNOT BE ESTABLISHED ON PARTS THAT WOULD BE APPLICABLE FROM YEAR TO YEAR. THIS MAKES IT NECESSARY THAT PRICES BE OBTAINED FROM B&B WHEN SAME ARE NECESSARY BEFORE PLACING ORDER.

THE SUPERIOR CHARACTERISTICS OF OILITE BRONZE BEARINGS AND ENGINEERING DATA

heavy duty, oil cushion *SELF-LUBRICATING* standard OILITE bronze bearings

Slight pressure or heat brings oil to the surface immediately illustrating the bearing's ability to produce instant lubrication. The greater the pressure, the greater the amount of oil. OILITE bearings accurately meter the lubrication supply to the need.

typical properties

	OILITE BRONZE
nominal composition, %	Sn, 10 Bal., Cu
specific gravity, g/cc.	6.4 min.
porosity, %	18-23
ult. tensile strength, p.s.i.	18,000
compressive strength, p.s.i.	20,000
elongation, % min. in 1"	10
coefficient of thermal exp. per °F. (x 10.6)	10.5

equivalent specifications
MIL-B-5687A, Type 1, Comp. A ASTM-B202-51T, Type 1, Class A, SAE, Type 1, Class A, U.S.A. 57-230-2, Type 1, Comp. A, AN-B-7b, Type 1, Comp. A, AMS-4805B, ATSM-B202-51T, and others

WHAT THEY ARE

Self-Lubricating OILITE Bearings are oil cushion bearings of high oil content fabricated from metal powders solely by the Amplex Division of Chrysler Corporation. They contain approximately 20% oil (by volume) which is metered as required to all portions of the bearing surface by capillary action when heat or pressure is applied.

This built-in oil reservoir provides a protective oil film that separates the shaft from the bearing and prevents metal-to-metal contact. Capillary action retains the oil even on a vertical shaft application.

Precision and smooth finish are obtained by a sizing or coining operation in accurate finishing dies.

B & B ELECTROMATIC CORPORATION
MANUFACTURERS SINCE 1925
NORWOOD, LOUISIANA 70761
PHONE: 504 - 629-5234

BUL. G67119p5

* REG. U. S. PAT. OFF.

FINEST MATERIALS, MANUFACTURED TO PRECISION TOLERANCES, ASSURE INTERCHANGEABILITY AND LONG LIFE

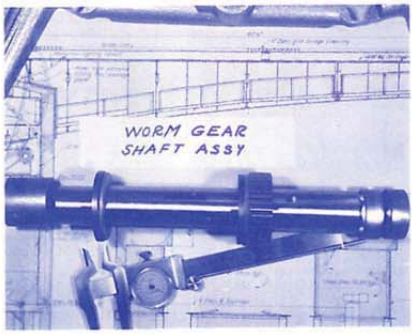

The worm gear shaft is carried on OILITE, oil impregnated, bearings with a load factor of 60,000 lbs.

Like all other shafts, the worm shaft is equipped with OILITE bearings. Shown at the right end of the shaft is the socket for the handcrank. Brake drum is shown on the left end.

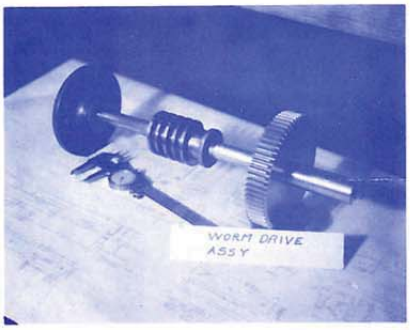

All spur gears 20° pressure angle, 12 pitch, cut by the Fellows method. Idler Gear is of one piece construction equipped with OILITE bearings.

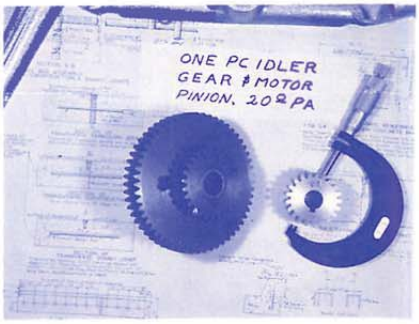

B & B ELECTROMATIC CORPORATION
MANUFACTURERS SINCE 1925

NORWOOD, LOUISIANA 70761
PHONE: 504 - 629-5234

BUL. G67119p6

* REG. U. S. PAT. OFF.

*PROTECT-O-ARM, MODEL VT-66

THE VT-66 *PROTECT-O-ARM MEETS THE MOST EXACTING REQUIREMENTS. ITS MANY EXCLUSIVE FEATURES ARE OUTSTANDING.

QUTSTANDING FEATURES:

1. TOTALLY ENCLOSED TRANSMISSION WITH ALL GEARS RUNNING IN OIL BATH.
2. TOTALLY ENCLOSED MOTOR.
3. THREE-BEARING MAINSHAFT, FOR ARMS OVER 24'.
4. TEN MILLION CYCLE LIMIT SWITCH.
5. LIMIT SWITCH EASILY ADJUSTED FROM FRONT.
6. AUTOMATIC SAFETY DISCONNECT SWITCH DISCONNECTS CONTROL CIRCUIT WHEN HANDCRANK IS INSERTED.
7. MANUAL DISCONNECT SWITCH.
8. WEIGHT SET, SOLENOID RELEASE BRAKE.
9. BRAKE AUTOMATICALLY RELEASED WHEN HANDCRANK IS USED.
10. MAIN ARM SHAFTS LUBRICATED FROM OUTSIDE HOUSING.
11. LIMIT SWITCH GEAR DRIVEN FROM TRANSMISSION AND NOT OPERATED FROM MAIN ARM SHAFT.
12. STANDARD MOUNTING DIMENSIONS.
13. BRONZE HARDWARE ON BOTH DOORS.
14. ARM LENGTHS UP TO 40 FEET.

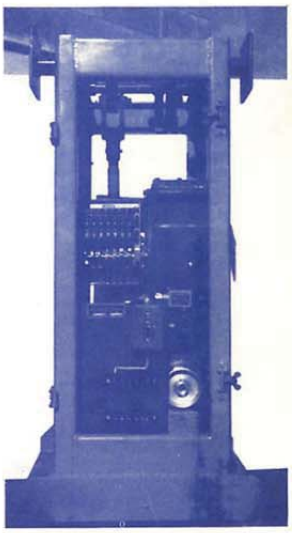

B & B ELECTROMATIC CORPORATION
MANUFACTURERS SINCE 1925

NORWOOD, LOUISIANA 70761
PHONE: 504 - 629-5234

BUL VTG6688

* REG. U. S. PAT. OFF.

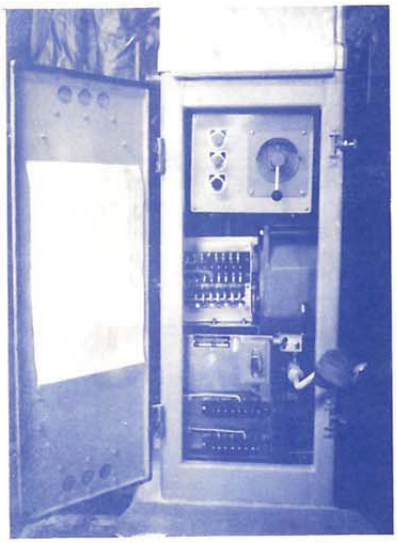

VT-66 MAY BE SUPPLIED WITH MANY ELECTRICAL MODIFICATIONS. NOTE THE HANDCRANK.

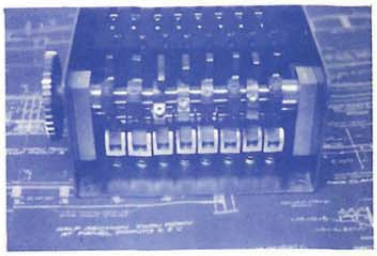

VT-66 LIMIT SWITCH IS A SEPARATE SUB-ASSEMBLY, DRIVEN FROM THE OUTPUT SHAFT OF THE TRANSMISSION. ALL ADJUSTMENTS ARE EASILY MADE WITHOUT REMOVING ANY PARTS. CIRCUITS ARE PLAINLY NUMBERED. MECHANICAL LIFE: TEN MILLION CYCLES.

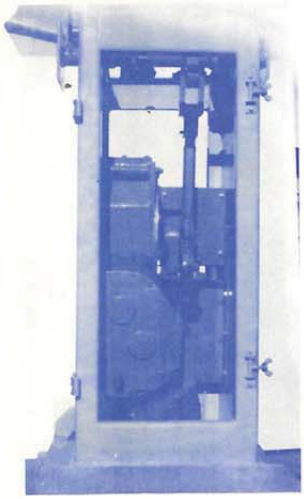

THE TOTALLY ENCLOSED TRANSMISSION AND UNIQUE CONNECTING ROD ARRANGEMENT ELIMINATE DISTORTION AND SIDE DRAFT.

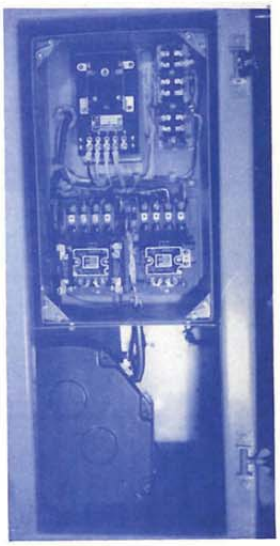

ONE OF THE MANY ELECTRICAL MODULES AVAILABLE IN THE VT-66.

B & B ELECTROMATIC CORPORATION
MANUFACTURERS SINCE 1925

NORWOOD, LOUISIANA 70761
PHONE: 504 - 629-5234

BUL VTG6688P2

* REG. U. S. PAT. OFF.

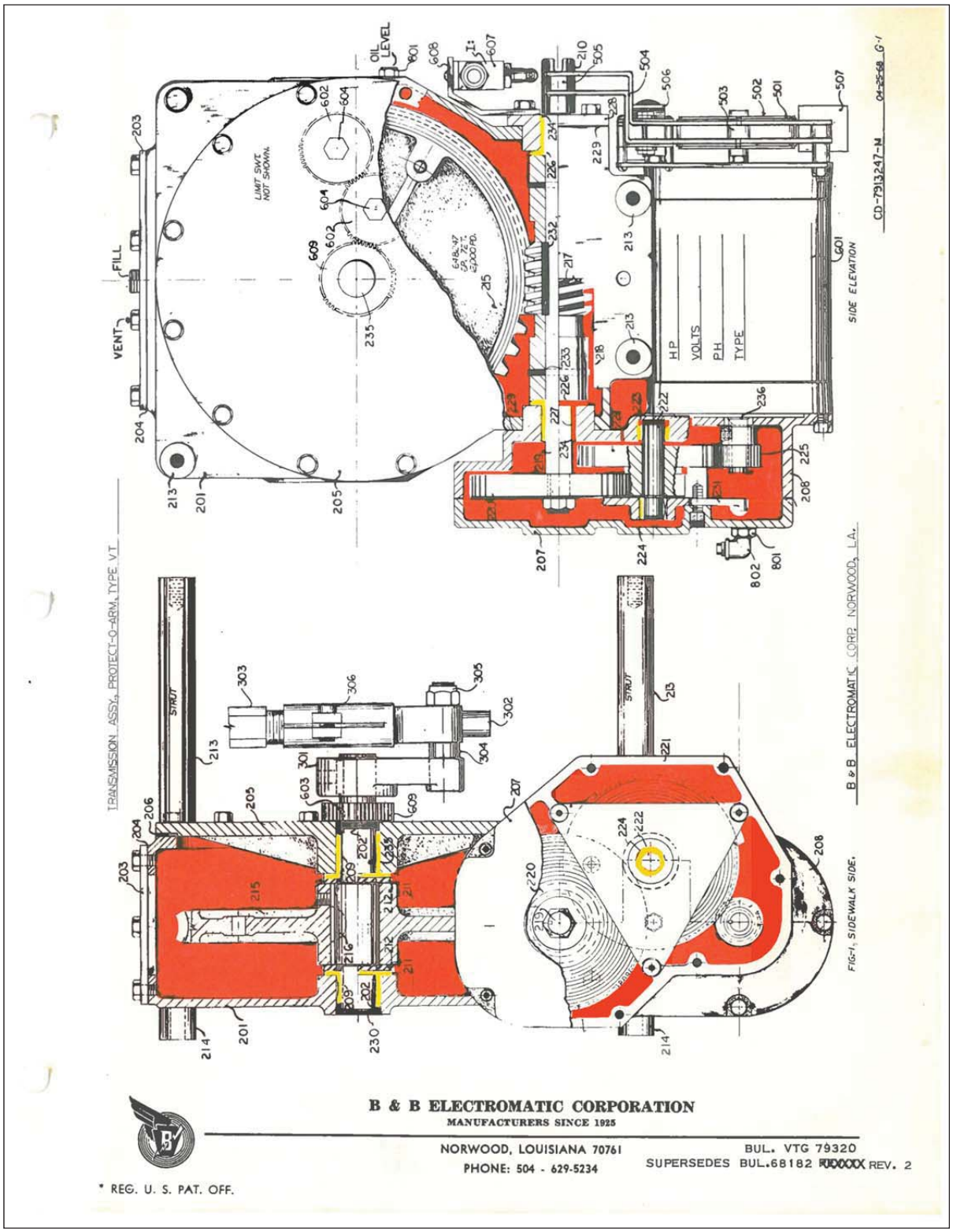
TRANSMISSION ASSY., PROTECT-O-ARM, TYPE VT
SIDE ELEVATION
FIG-1, SIDEWALK SIDE.
B & B ELECTROMATIC CORP., NORWOOD, LA.
CD-7913247-M
OIL LEVEL
FILL
VENT
LIMIT SWT. NOT SHOWN
STRUT
HP
VOLTS
PH
TYPE
B & B ELECTROMATIC CORPORATION
MANUFACTURERS SINCE 1925
NORWOOD, LOUISIANA 70761
PHONE: 504 - 629-5234
BUL. VTG 79320
SUPERSEDES BUL.68182 REVISED REV. 2
* REG. U. S. PAT. OFF.

PARTS LIST
TYPE VT-66 GATES

ITEM	QU.	NAME	PART NO.
201	1	CASE, TRANSMISSION	648305
202	1	OIL SEAL	679412
203	1	PLATE, INSPECTION	648439
204	1	GASKET, INSPECTION PLATE	648310
205	1	PLATE, OUTPUT BEARING SUPPORT	648229
206	1	GASKET, OUTPUT PLATE	648309
207	1	COVER, CHANGE GEAR	648269
208	1	CASE, CHANGE GEAR & MOTOR MOUNTING	648270
209	2	BEARINGS, WORM GEAR SHAFT	ℂ
210	1	NUT, CRANK	648361
211	2	BEARING, THRUST	ℂ
212	2	SPACER, THRUST	ℂ
213	3	STRUT, LONG	679410
214	4	STRUT, SHORT	659008
215	1	GEAR, WORM	648247
216	1	KEY, WORM GEAR	ℂ
217	1	WORM, C377X-H1638	648402
218	2	SPACERS, WORM	648342
219	1	SHAFT, WORM	648343
220	1	GEAR, WORM SHAFT	648323-D
221	1	GEAR, IDLER #8, 7.6 SEC., REF. BUL HZ6682	658839
222	1	SHAFT, IDLER	648409
223	1	BEARING, IDLER SHAFT, REAR	ℂ
224	1	BEARING, IDLER SHAFT, FRONT	ℂ
225	1	PINION, MOTOR, 33-T	658878
226	2	BEARING, WORM THRUST	ℂ
227	2	BEARING, WORM SHAFT	ℂ
228	1	HUB, WORM SHAFT BEARING	648405
229	2	GASKET, WORM SHAFT HUB	648307
230	1	PLUG, WORM SHAFT	679412
231	1	PLATE, IDLER GEAR SHAFT BEARING SUPPORT	648388
232	1	KEY, WORM	ℂ
233	2	PIN, THRUST COLLAR	ℂ
234	2	SEAL	ℂ
235	1	SHAFT, WORM GEAR (OUTPUT) STANDARD	X[illegible]7712674·
236	1	SEAL, OIL	C655XAR10400-208GC
301	1	CRANK, LOWER	648271-2
302	1	END, CONNECTING ROD	627519-RH
303	1	ROD, CONNECTING	575426.5
304	1	SHAFT, PIVOT, ROD END	658784
305	1	STOP NUT, .750	ℂ
306	1	SCREW, CAP, ROD END	ℂ
501	1	DRUM, BRAKE	648357
502	1	LINING, BRAKE	[illegible]9648469**
503	1	SHOE, BRAKE	[illegible]9648359**
504	1	BEAM, BRAKE	648468
505	1	SHOE, BRAKE RELEASE	658706
506	1	SOLENOID BRAKE RELEASE	689859
507	1	WEIGHT, BRAKE ACTUATING	658721
601	1	MOTOR, HP:___V:____PH:____CY:____	ℂ
602	2	GEAR, LIMIT SWITCH IDLER	543542-HV-66
603	1	WOODRUFF KEY	ℂ
604	2	STUD, LIMIT SWITCH DRIVE IDLER GEAR	658781
※605	1	LIMIT SWITCH ASSEMBLY TYPE 3-MN1	658794
※606	1	BRACKET, LIMIT SWITCH MOUNTING	658824-A & B
607	1	SWITCH, AUTOMATIC DISCONNECT	C401X-SF-BRD-2-IPR1-IS
608	1	BRACKET, AUTOMATIC SWITCH, DISCONNECT	658663
609	1	GEAR, LIMIT SWITCH DRIVE	658667
801	2	PLUG, OIL LEVEL INDICATOR	ℂ
802	1	FILLER, OIL	ℂ

※ DENOTES NOT SHOWN
ℂ DENOTES COMMERCIAL ITEM

** SOLD ONLY AS A SUB-ASSEMBLY.

B & B ELECTROMATIC CORPORATION
MANUFACTURERS SINCE 1925

NORWOOD, LOUISIANA 70761
PHONE: 504 - 629-5234

BUL. VTG 79320
SUPERSEDES BUL.68182[illegible] REV. 2

* REG. U. S. PAT. OFF.

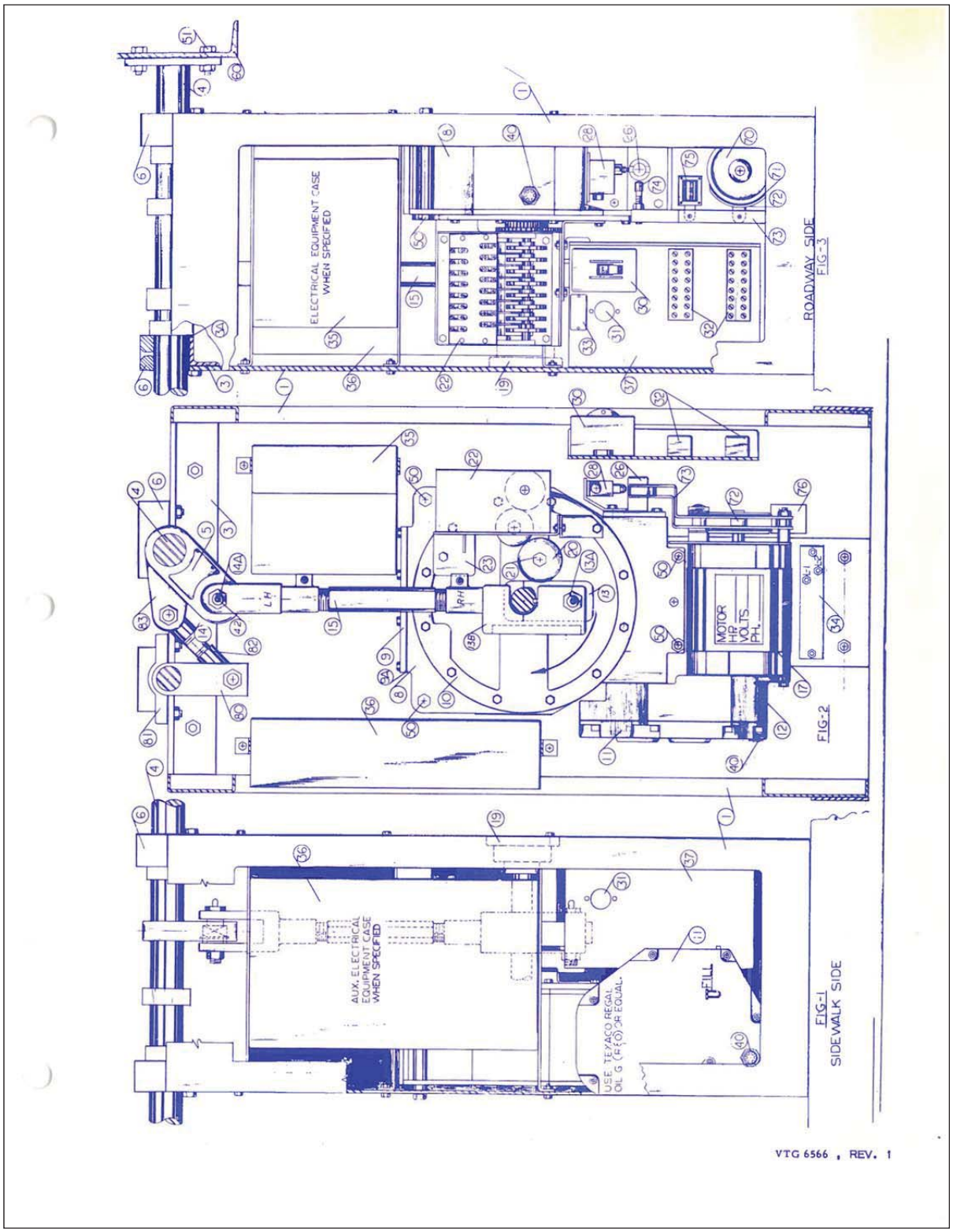
ELECTRICAL EQUIPMENT CASE WHEN SPECIFIED
ROADWAY SIDE
FIG-3
LH
RH
MOTOR HP VOLTS PH.
FIG-2
AUX. ELECTRICAL EQUIPMENT CASE WHEN SPECIFIED
USE TEXACO REGAL OIL G (R&O) OR EQUAL.
FILL
FIG-1
SIDEWALK SIDE
VTG 6566 , REV. 1

PARTS LIST
GATES, TYPE VT-66

ITEM NO.	PART NO.	QUANTITY	DESCRIPTION
1.	658827	1	HOUSING
3.	658673	1-LH 1-RH	STRUT, MAIN ARM BEARING SUPPORT
3A.	441587	2	BEARING, MAIN ARM SHAFT
4.	658866	1	MAIN ARM SHAFT ASSEMBLY
5.	575565-C	1	CRANK, MAIN ARM SHAFT
6.	606796	2	BEARING CAP AND OILER
8.	648305	1	CASE, TRANSMISSION
9.	648439	1	PLATE, INSPECTION
10.	648229	1	PLATE, SIDE
11.	648269	1	COVER, GEAR CASE
12.	648270	1	CASE, GEAR AND MOTOR MOUNTING
13.	648271-2	1	CRANK, LOWER
13A.	658784	1	SHAFT, PIVOT, ROD END
13B.	627519-RH	1	TIE ROD END, LOWER
13C.		1	BOLT, TIE ROD END CLAMPING
14.	627519-LH	1	TIE ROD END, UPPER
14A.	627522	1	SHAFT, PIVOT, ROD END
14B.		1	BOLT, TIE ROD END CLAMPING
15.	575426-2	1	CONNECTING ROD
17.		1	MOTOR, HP V PH CY
19.	C489XFY104	1	BEARING, OUTBOARD
20.	543542HV66	2	GEAR, LIMIT SWITCH IDLER
21.	658781	2	STUD, LIMIT SWITCH IDLER GEAR
22.	658794	1	LIMIT SWITCH, TYPE 3MN1, 8-CIRCUIT
23.	658824A&B	1	BRACKET, LIMIT SWITCH MOUNTING
26.	648361	1	CRANK NUT
28.	C401XSF-BRD2-8PRI-IS	1	AUTOMATIC MOTOR DISCONNECT SWITCH
30.	C301XTC2228	1	MANUAL MOTOR DISCONNECT SWITCH
31.	C301XGY-8	1	THERMOSTAT, HEATER CONTROL
32.	C323XHD		TERMINAL BLOCK
33.		1	NAME PLATE
34.	C301X2A907-A102-200W-115V	1	HEATER
35.	658669-B	1	ELECTRICAL EQUIPMENT CASE
36.	658669-A	1	ELECTRICAL EQUIPMENT CASE
37.	658669-C	1	BRACKET, TERMINAL BLOCK MOUNTING
40.	C505X116-4	1	GEAR CASE OIL LEVEL INDICATOR
42.	C504X5000	2	GREASE FITTINGS
50.	C.I.	4	BOLT, GEAR CASE TO HOUSING MTG.
51.	C.I.	8	BOLT, SIDE ARM CHANNEL MOUNTING
60.	606783-OFFSET	2	CHANNEL, SIDE ARM MOUNTING
70.	648357	1	DRUM, BRAKE
71.	648469*	1	BRAKE LINING
72.	648359*	1	BRAKE SHOE
73.	648468	1	BRAKE BEAM
74.	658706	1	SHOE, BRAKE RELEASE
75.	C502XNA699ES1	1	SOLENOID, BRAKE RELEASE, V CY
76.	658721	1	WEIGHT, BRAKE ACTUATING

* SOLD ONLY AS A SUB-ASSEMBLY

B & B ELECTROMATIC CORPORATION
MANUFACTURERS SINCE 1925

NORWOOD, LOUISIANA 70761
PHONE: 504 - 629-5234

VTG 6566-P2, REV.1

* REG. U. S. PAT. OFF.

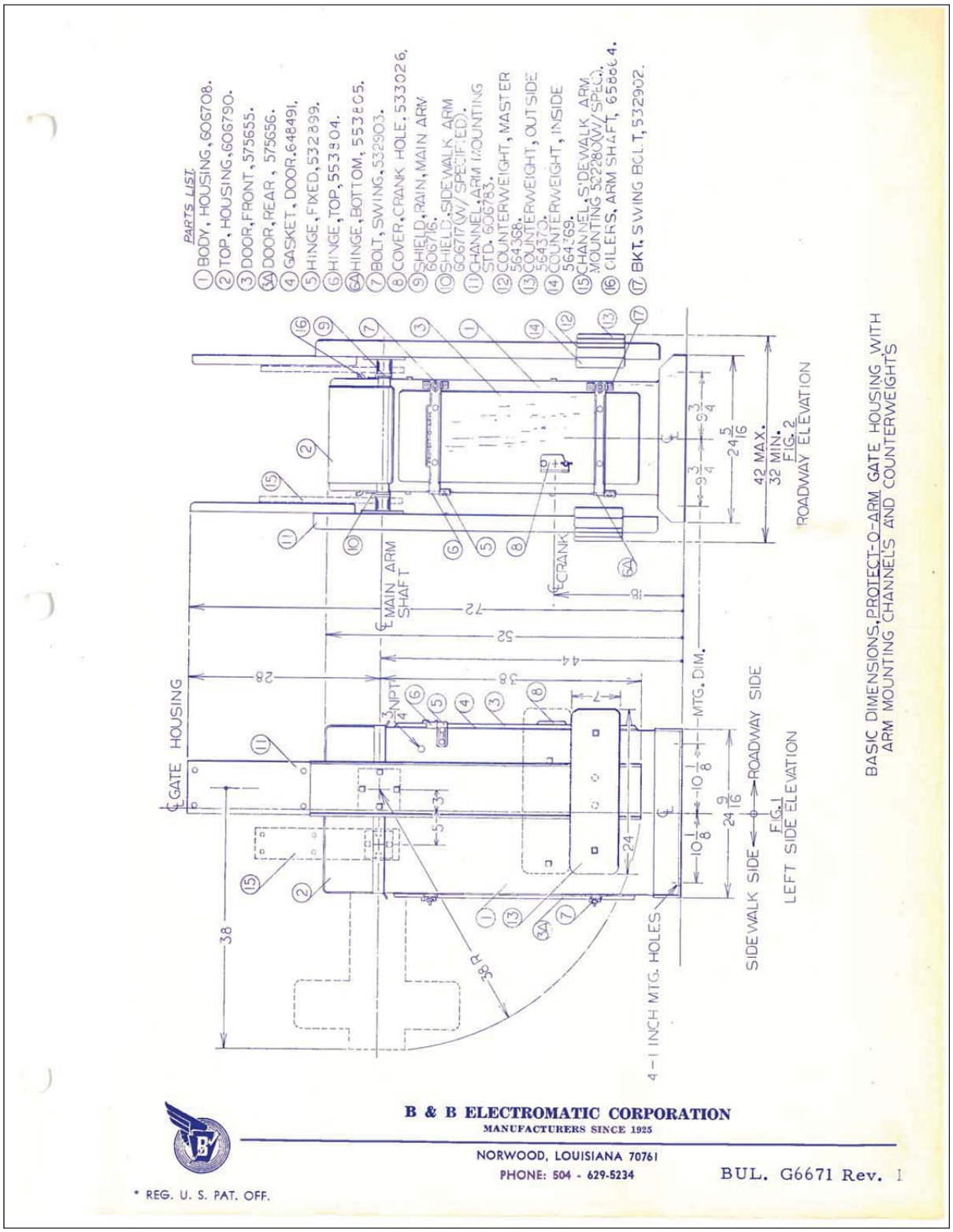
PARTS LIST
(1) BODY, HOUSING, 606708.
(2) TOP, HOUSING, 606790.
(3) DOOR, FRONT, 575655.
(3A) DOOR, REAR, 575656.
(4) GASKET, DOOR, 648491.
(5) HINGE, FIXED, 532899.
(6) HINGE, TOP, 553804.
(6A) HINGE, BOTTOM, 553805.
(7) BOLT, SWING, 532903.
(8) COVER, CRANK HOLE, 533026.
(9) SHIELD, RAIN, MAIN ARM 606716.
(10) SHIELD, SIDEWALK ARM 606717 (W/ SPECIFIED).
(11) CHANNEL, ARM MOUNTING STD. 606783.
(12) COUNTERWEIGHT, MASTER 564368.
(13) COUNTERWEIGHT, OUTSIDE 564370.
(14) COUNTERWEIGHT, INSIDE 564369.
(15) CHANNEL, SIDEWALK ARM MOUNTING 522280 (W/ SPEC).
(16) CILERS, ARM SHAFT, 658664.
(17) BKT. SWING BOLT, 532902.
BASIC DIMENSIONS, PROTECT-O-ARM GATE HOUSING WITH ARM MOUNTING CHANNELS AND COUNTERWEIGHTS
42 MAX.
32 MIN.
FIG. 2
ROADWAY ELEVATION
MAIN ARM SHAFT
CRANK
MTG. DIM.
GATE HOUSING
3/4 NPT
SIDEWALK SIDE
ROADWAY SIDE
FIG. 1
LEFT SIDE ELEVATION
4 - 1 INCH MTG. HOLES
R 36
B & B ELECTROMATIC CORPORATION
MANUFACTURERS SINCE 1925
NORWOOD, LOUISIANA 70761
PHONE: 504 - 629-5234
BUL. G6671 Rev. 1
* REG. U. S. PAT. OFF.

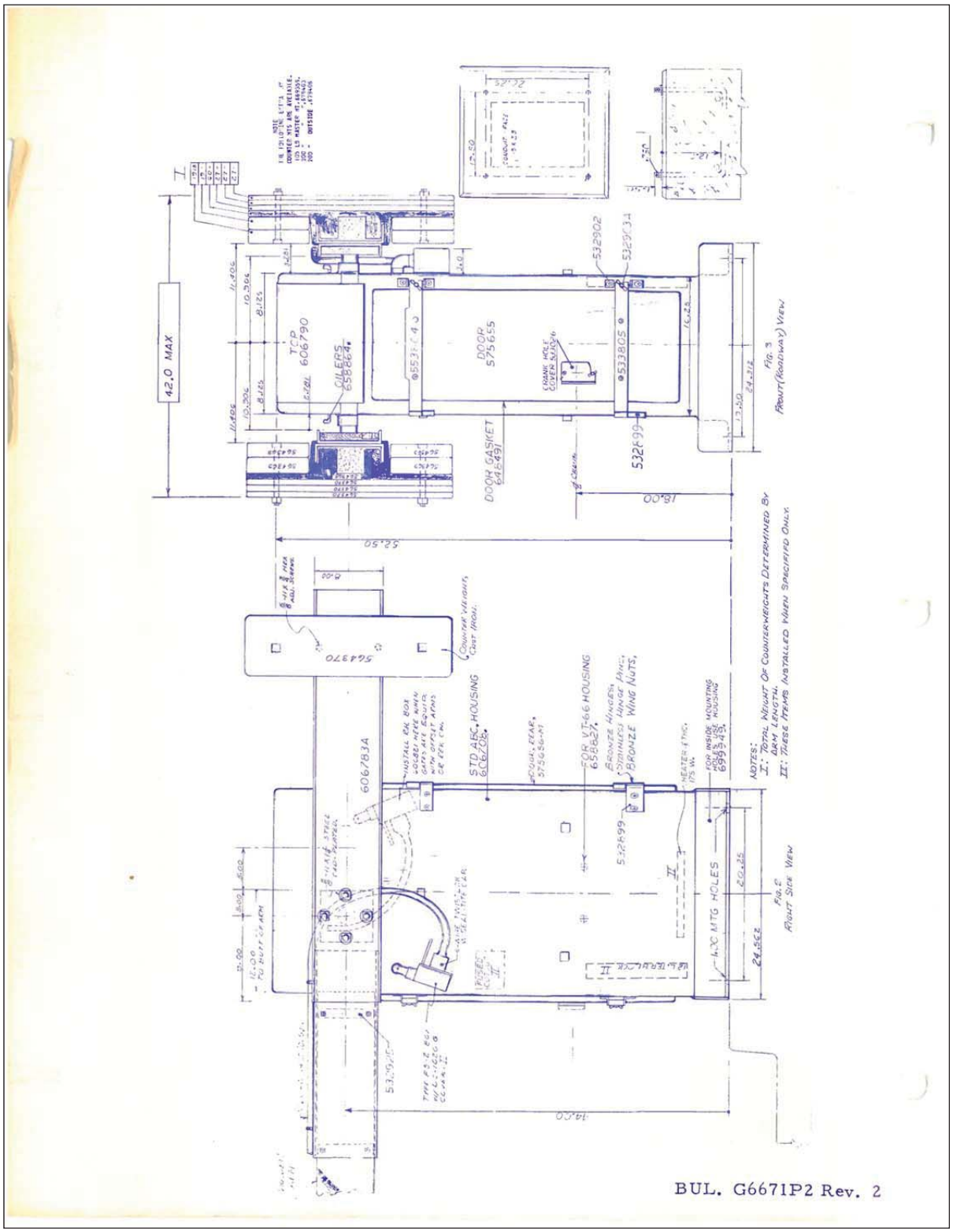
42.0 MAX
TCP 606790
OILERS 658864
DOOR 575655
DOOR GASKET 646491
532902
532934
532699
533805
564370
STD ABC HOUSING 606208
606783A
FOR VT66 HOUSING 658827
BRONZE HINGES (STAINLESS HINGE PINS) BRONZE WING NUTS
FOR INSIDE MOUNTING 699545
4.00 MTG HOLES
COUNTERWEIGHT (CAST IRON)
FIG 3 FRONT (ROADWAY) VIEW
FIG 5 RIGHT SIDE VIEW
NOTES:
I: TOTAL WEIGHT OF COUNTERWEIGHTS DETERMINED BY ARM LENGTH.
II: THESE ITEMS INSTALLED WHEN SPECIFIED ONLY.
BUL. G6671P2 Rev. 2

PAGE 1 OF 2

PARTS LIST
HOUSING ASSEMBLY, ED-564577-A

ITEM	QU.	NAME	REFERENCE NO.
1.	1	BODY, HOUSING, STEEL, PAINTED	606708
2.	1	TOP, HOUSING, STEEL, PAINTED	606790
3.	1	BODY, HOUSING, STEEL, HOT DIP GALV.	606708-GL
4.	1	TOP, HOUSING, STEEL, HOT DIP GALV.	606790-GL
5.	1	BODY, HOUSING, ALUMINUM	606708-AL
6.	1	TOP, HOUSING, ALUMINUM	606790-AL
7.	1	TOP, HOUSING, ALUMINUM, WITH RELAY & CONTROL COMPARTMENT, FURNISHED WITH HINGES, DOORS & GASKETS	596512-AL
8.	1	BODY, HOUSING, STAINLESS	606708-SS
9.	1	TOP, HOUSING, STAINLESS	606790-SS
10.	1	BODY, HOUSING, BRONZE	606708-BR
11.	1	TOP, HOUSING, BRONZE	606790-BR
12.	4	BOLT, FOUNDATION, 3/4-10 X 15, WITH NUTS & WASHERS	℄
13.	4	BOLT, FOUNDATION, 5/8-11 X 14, WITH NUTS AND WASHERS	℄
14.	2	SHIELD, RAIN, MAIN ARM	606716
15.	2	SHIELD, RAIN, SIDEWALK ARM	606717
16.	4	NUT PLATE (1 PER SHIELD)	606720
17.	1	DOOR, FRONT	575655
18.	1	DOOR, REAR	575656
19.	2	HINGE, LOWER, FRONT & REAR	553805
20.	2	HINGE, TOP, FRONT & REAR	553804
21.	4	HINGE, FIXED	532899
22.	2	PIN, HINGE, UPPER (SHORT)	532901
23.	2	PIN, HINGE, LOWER (LONG)	532901
24.	8	BRACKET, SWING BOLT	532902
25.	4	BOLT, SWING, WITH WASHER & WING NUT	532903
26.	2	GASKET, DOOR SEALING (LENGTH, 100 LIN. IN. PER DOOR)	606675
27.	1	COVER, CRANK HOLE	533026
28.	1	BRACKET, OUTLET BOX FASTENING	606833
29.	1	BOX, TWISTLOK RECEPTACLE MTG.	606821
30.	1	GASKET, RECEPTACLE BOX	606827
31.	2	POST, THERMOSTAT MTG.	606734
32.	2	CLIP, HEATER MOUNTING	CC244X31-C11
33.	1	HEATER, 75-375 W, 115V OR 230V	CC238XV
34.	1	OUTLET BOX ASSEMBLY	
35.	1	TERMINAL BLOCK, 2 TO 20 LINE	CC174X2-20

(CONTINUED)

ALWAYS SPECIFY SERIAL NO., MODEL, TYPE & PROJECT.

BUL-564577-M-165

PAGE 2 OF 2

PARTS LIST
HOUSING ASSEMBLY, ED-564577-A

ITEM	QU.	NAME	REFERENCE NO.
FASTENERS:			
36.	4	BOLT, TOP HOLDING, 1/4-20 X 5/8	℄
37.	24	BOLT, HINGE MOUNTING, 1/4-20 X 5/8, STL. CAD PL.	℄
38.	2	BOLT, HEATER MOUNTING, 1/4-20 X 3/4, R.H.BRASS, WITH NUTS & WASHERS	℄
39.	2	SCREWS, THERMOSTAT MTG., 10-32 X 1-1/2 R.H. BRASS, WITH NUTS & WASHERS	℄
40.	3	BOLT, OUTLET BOX MTG. 1/4-20 X 3/4 R.H. BRASS WITH NUTS & WASHERS	606833
41.	8	BOLT, RAIN SHIELD MTG. 1/4-20 X 3/4, STL. CAD PL.	℄
42.	2	BOLT, CRANK HOLE COVER MTG. 1/4-20 X 3/4 R.H. BRASS	606697
43.	1	NUT, CRANK HOLE COVER, ELASTIC STOP, 1/4-20	℄
44.	1	WASHER, CRANK HOLE COVER, 1/4 INTERNAL SHAKEPROOF	℄
45.	2	WASHER, CRANK HOLE COVER, 1/4 ALUM. PLAIN	℄
46.	1	WING NUT, CRANK HOLE COVER	CC245X780
47.	4	WING NUT, SWING BOLT, 3/8-16 BR.	℄
48.	4	WASHER, SWING BOLT, 3/8 PLAIN	℄
49.		CEMENT, DOOR GASKET	℄

ALWAYS SPECIFY SERIAL NO., MODEL, TYPE & PROJECT.

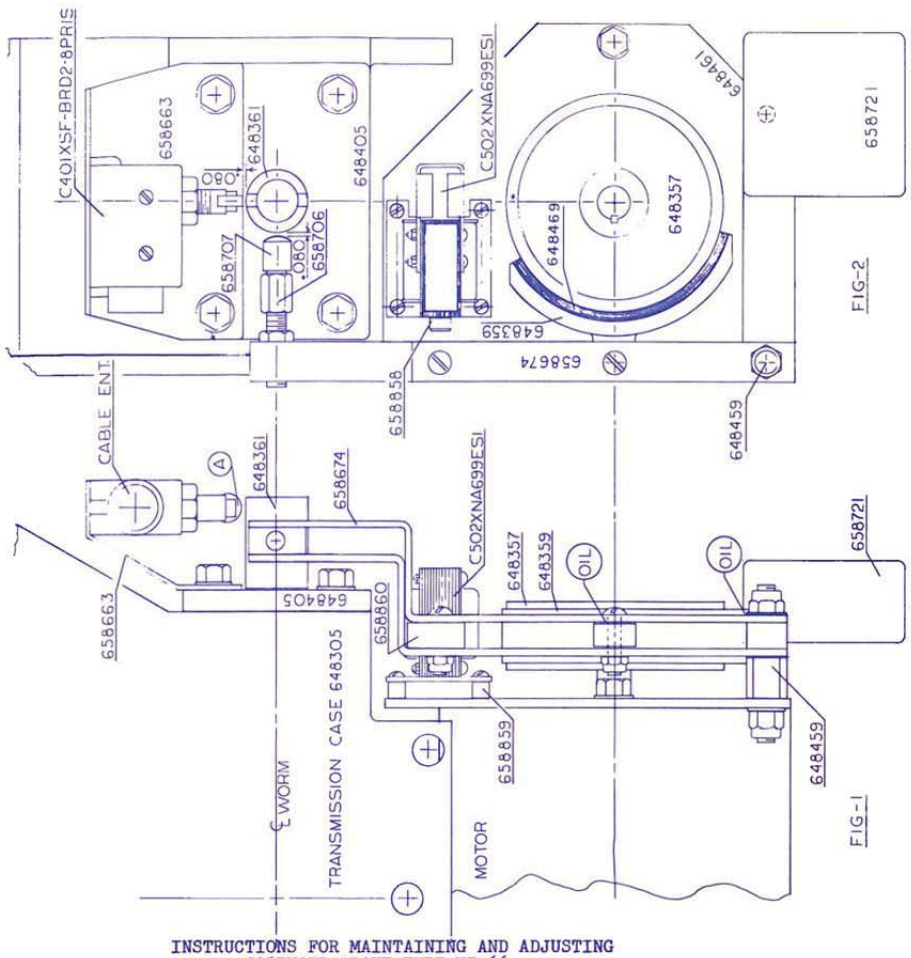

INSTRUCTIONS FOR MAINTAINING AND ADJUSTING
SOLENOID BRAKE TYPE VT-66

THE VT-66 BRAKE IS DESIGNED TO OPERATE IN CONNECTION WITH QUICK-ACTING LIMIT SWITCH 3MN1. THE BRAKE SHOE IS HELD IN CONTACT WITH THE DRUM BY A COUNTERWEIGHT. NO ADJUSTMENT TO THE COUNTERWEIGHT IS REQUIRED. THE BRAKE IS RELEASED BY THE SOLENOID C502XNA699ES1.

WHEN THE SOLENOID IS ENERGIZED, ITS PLUNGER CONTACTS THE BUFFER BLOCK 658860, THUS RELEASING THE PRESSURE ON THE DRUM. WHEN THE GATE IS OPERATED MANUALLY WITH HANDCRANK NO. 658718, THE HEAD OF THE CRANK CONTACTS NYLON SHOE 658707 AND THIS ALSO RELEASES THE BRAKE. AT THE SAME TIME THE HANDCRANK IS INSERTED, IT CONTACTS ROLLER "A" OF THE AUTOMATIC SAFETY DISCONNECT SWITCH NUMBER C401XSF-BRD-2-8PRIS. WHEN THE HANDCRANK IS INSERTED, TWO OPERATIONS ARE PERFORMED, A) RELEASE THE BRAKE: B) DISCONNECT THE CONTROL CIRCUIT TO THE REVERSING CONTACTOR.

ADJUSTING THE RELEASE. AS THE BRAKE LINING, 648439, WEARS, THE RELEASE ROD, 658706, MUST BE READJUSTED AND A MINIMUM OF .080 CLEARANCE BETWEEN THE RELEASE MECHANISM AND CRANK NUT 648361 MUST BE MAINTAINED.

VERY LITTLE LUBRICATION IS REQUIRED. A FEW DROPS OF OIL ONCE A YEAR AT POINTS INDICATED IS SUFFICIENT.

CD 658821

B & B ELECTROMATIC CORPORATION
MANUFACTURERS SINCE 1925

NORWOOD, LOUISIANA 70761
PHONE: 504 - 629-5234

VTG 6565, REV. 1

* REG. U. S. PAT. OFF.

BELOW ARE SHOWN TWO VIEWS OF THE AUTOMATIC BRAKE AND THE LIMIT SWITCH

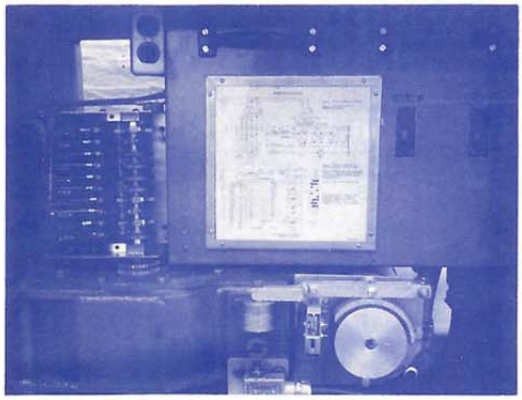

THE UNRETOUCHED PHOTO AT LEFT SHOWS THE AUTOMATIC BRAKE, LIMIT SWITCH AND CUBICLE FOR ELECTRICAL EQUIPMENT, AS WELL AS THE WIRING DIAGRAM. THIS ARRANGEMENT IS AS APPLIED TO THE HZ-64 "PROTECT-O-ARM". NOTE THAT THE CAPACITY OF THE LIMIT SWITCH IS 10 CIRCUITS. THE WIRING DIAGRAM IS ENCAPSULATED.

FIG. 1

THE PHOTO ON THE RIGHT SHOWS THE VT-66, HEAVY DUTY "PROTECT-O-ARM" VIEWED FROM THE ROADWAY SIDE. TERMINAL BLOCK, MANUAL SAFETY DISCONNECT SWITCH, AUTOMATIC BRAKE, AUTOMATIC DISCONNECT SAFETY SWITCH AND THE GEAR DRIVEN LIMIT SWITCH ARE CLEARLY SHOWN.

NOTE THAT THE CAMS ON THE LIMIT SWITCH ARE ADJUSTABLE FROM THE FRONT, WITHOUT HAVING TO FISH THROUGH A MAZE OF WIRES AND CONTACTS.

ALL INCOMING CONDUCTORS TERMINATE ON PRESSURE TYPE TERMINALS. WHEN THE HANDCRANK IS INSERTED, IT OPERATES THE AUTOMATIC DISCONNECT SAFETY SWITCH AND IMMOBILIZES THE MOTOR CONTROL CIRCUIT.

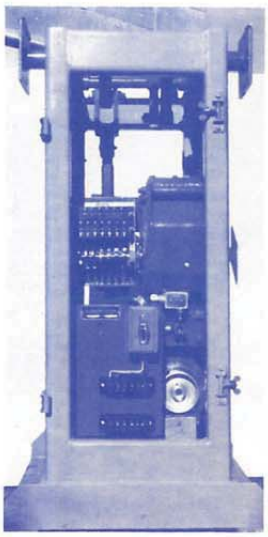

FIG. 2

B & B ELECTROMATIC CORPORATION
MANUFACTURERS SINCE 1925

NORWOOD, LOUISIANA 70761
PHONE: 504 - 629-5234

BUL VTG 6565P2, REV. 1

* REG. U. S. PAT. OFF.

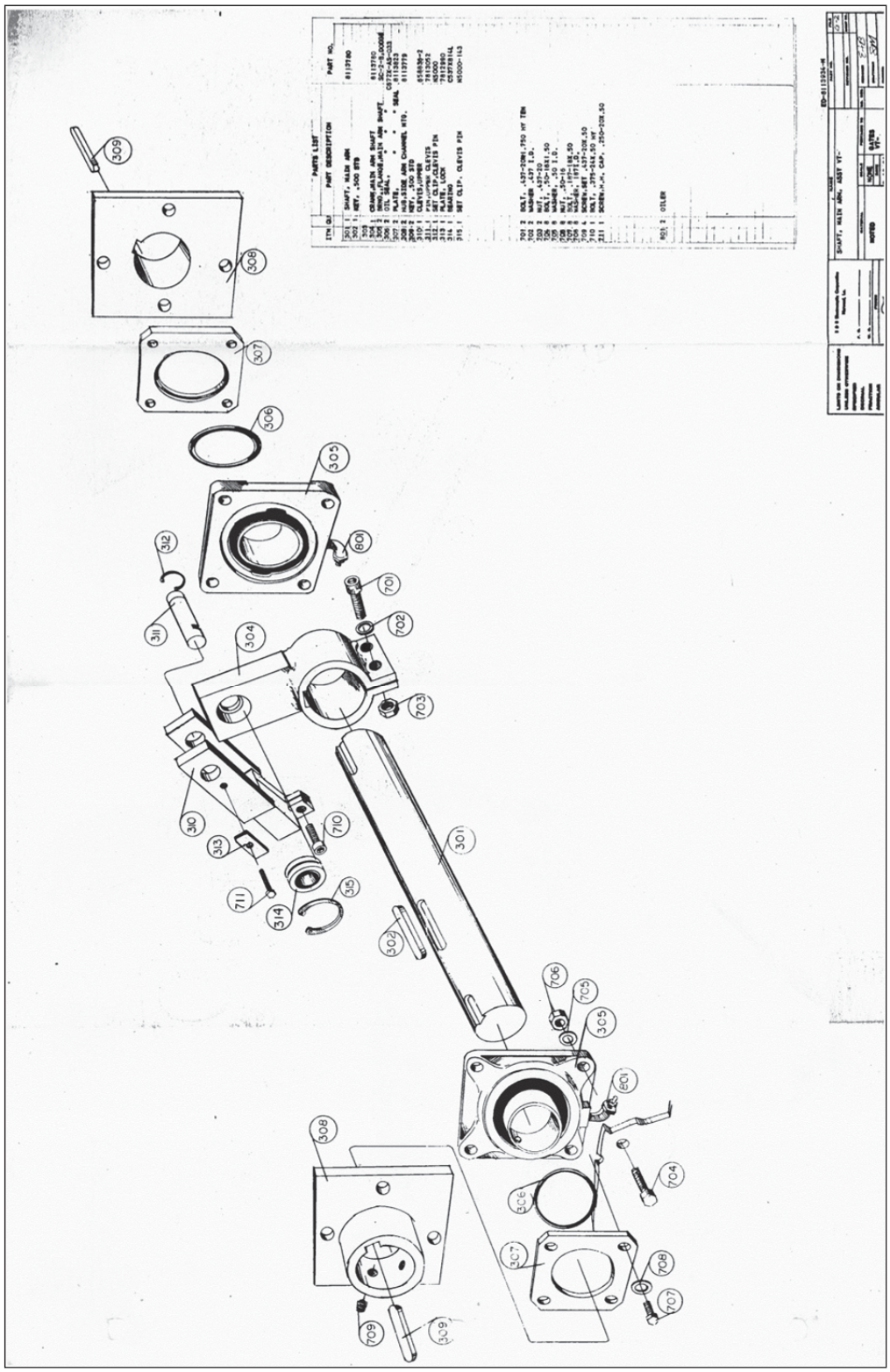

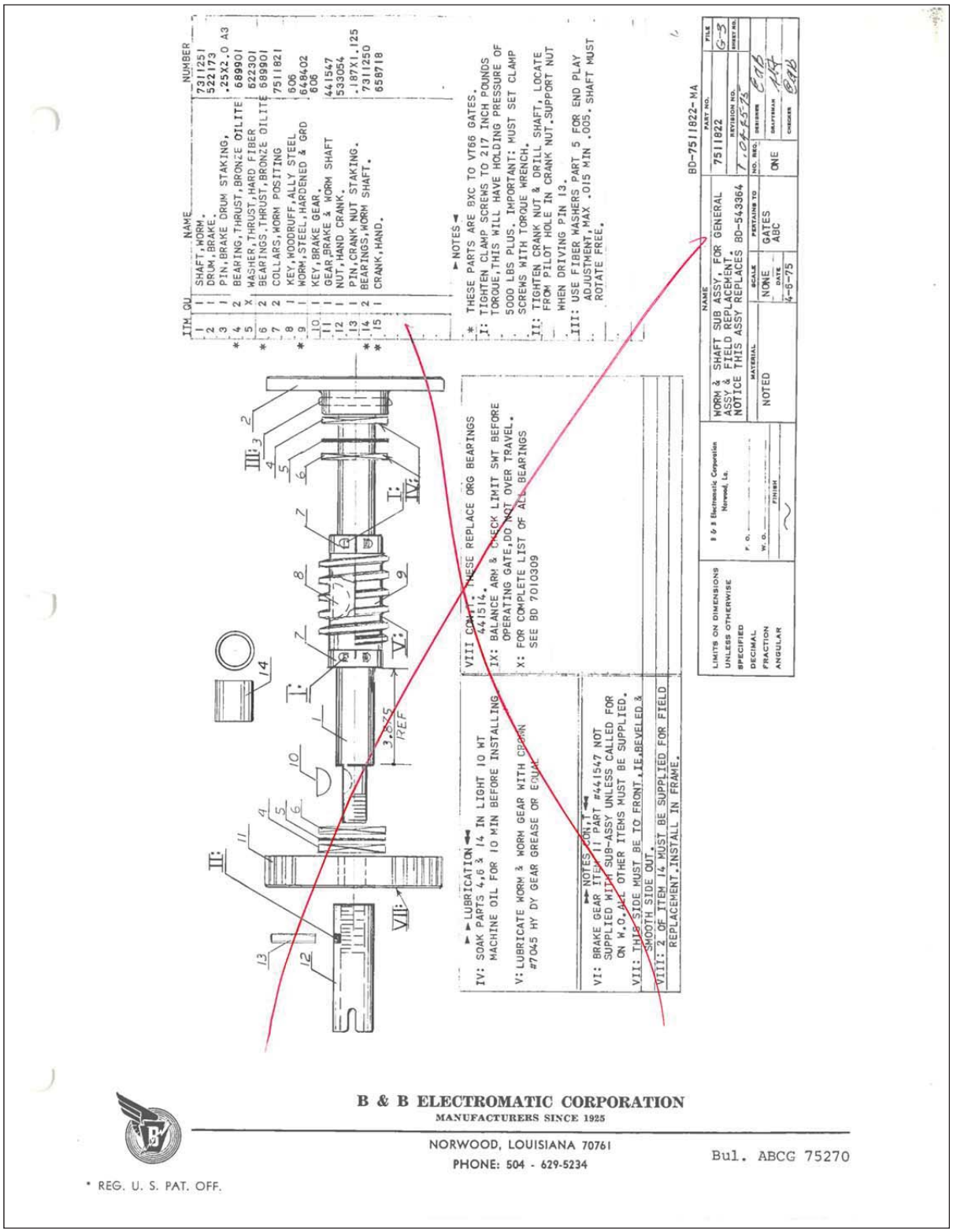
ITM QU NAME NUMBER
1 1 SHAFT,WORM. 7311251
2 1 DRUM,BRAKE. 522173
3 1 PIN,BRAKE DRUM STAKING, .25X2.0 A3
* 4 2 BEARING,THRUST,BRONZE OILITE 68990I
* 5 2 WASHER,THRUST,HARD FIBER 62230I
* 6 2 BEARINGS,THRUST,BRONZE OILITE 68990I
7 2 COLLARS,WORM POSITING 7511821
8 1 KEY,WOODRUFF,ALLY STEEL 606
* 9 1 WORM,STEEL,HARDENED & GRD 648402
10 1 KEY,BRAKE GEAR. 606
11 1 GEAR,BRAKE & WORM SHAFT 441547
12 1 NUT,HAND CRANK. 533054
13 1 PIN,CRANK NUT STAKING. .187X1.125
* 14 2 BEARINGS,WORM SHAFT. 7311250
* 15 1 CRANK,HAND. 658718
► NOTES ◄
* THESE PARTS ARE BXC TO VT66 GATES.
I: TIGHTEN CLAMP SCREWS TO 217 INCH POUNDS TORQUE,THIS WILL HAVE HOLDING PRESSURE OF 5000 LBS PLUS. IMPORTANT: MUST SET CLAMP SCREWS WITH TORQUE WRENCH.
II: TIGHTEN CRANK NUT & DRILL SHAFT, LOCATE FROM PILOT HOLE IN CRANK NUT,SUPPORT NUT WHEN DRIVING PIN 13.
III: USE FIBER WASHERS PART 5 FOR END PLAY ADJUSTMENT,MAX .015 MIN .005, SHAFT MUST ROTATE FREE.
BD-7511822-MA
NAME WORM & SHAFT SUB ASSY, FOR GENERAL ASSY & FIELD REPLACEMENT. NOTICE THIS ASSY REPLACES BD-543364
PART NO. 7511822
REVISION NO. F 08-15-75
MATERIAL NOTED
SCALE NONE
DATE 4-8-75
PERTAINS TO GATES ABC
NO. REQ. ONE
DRAWN EAB
CHECKED EAB
FILE G-3
SHEET NO.
B & B Electromatic Corporation Norwood, La.
P. O.
W. O.
FINISH
LIMITS ON DIMENSIONS UNLESS OTHERWISE SPECIFIED
DECIMAL
FRACTION
ANGULAR
VIII CONT: THESE REPLACE ORG BEARINGS 441514.
IX: BALANCE ARM & CHECK LIMIT SWT BEFORE OPERATING GATE,DO NOT OVER TRAVEL.
X: FOR COMPLETE LIST OF ALL BEARINGS SEE BD 7010309
► ► LUBRICATION ◄ ◄
IV: SOAK PARTS 4,6 & 14 IN LIGHT 10 WT MACHINE OIL FOR 10 MIN BEFORE INSTALLING
V: LUBRICATE WORM & WORM GEAR WITH CRAMN #7045 HY DY GEAR GREASE OR EQUAL
► NOTES CON'T ◄
VI: BRAKE GEAR ITEM 11 PART #441547 NOT SUPPLIED WITH SUB-ASSY UNLESS CALLED FOR ON W.O. ALL OTHER ITEMS MUST BE SUPPLIED.
VII: THIS SIDE MUST BE TO FRONT, IE,BEVELED & SMOOTH SIDE OUT.
VIII: 2 OF ITEM 14 MUST BE SUPPLIED FOR FIELD REPLACEMENT. INSTALL IN FRAME.
3.875 REF
B & B ELECTROMATIC CORPORATION
MANUFACTURERS SINCE 1925
NORWOOD, LOUISIANA 70761
PHONE: 504 - 629-5234
Bul. ABCG 75270
* REG. U. S. PAT. OFF.

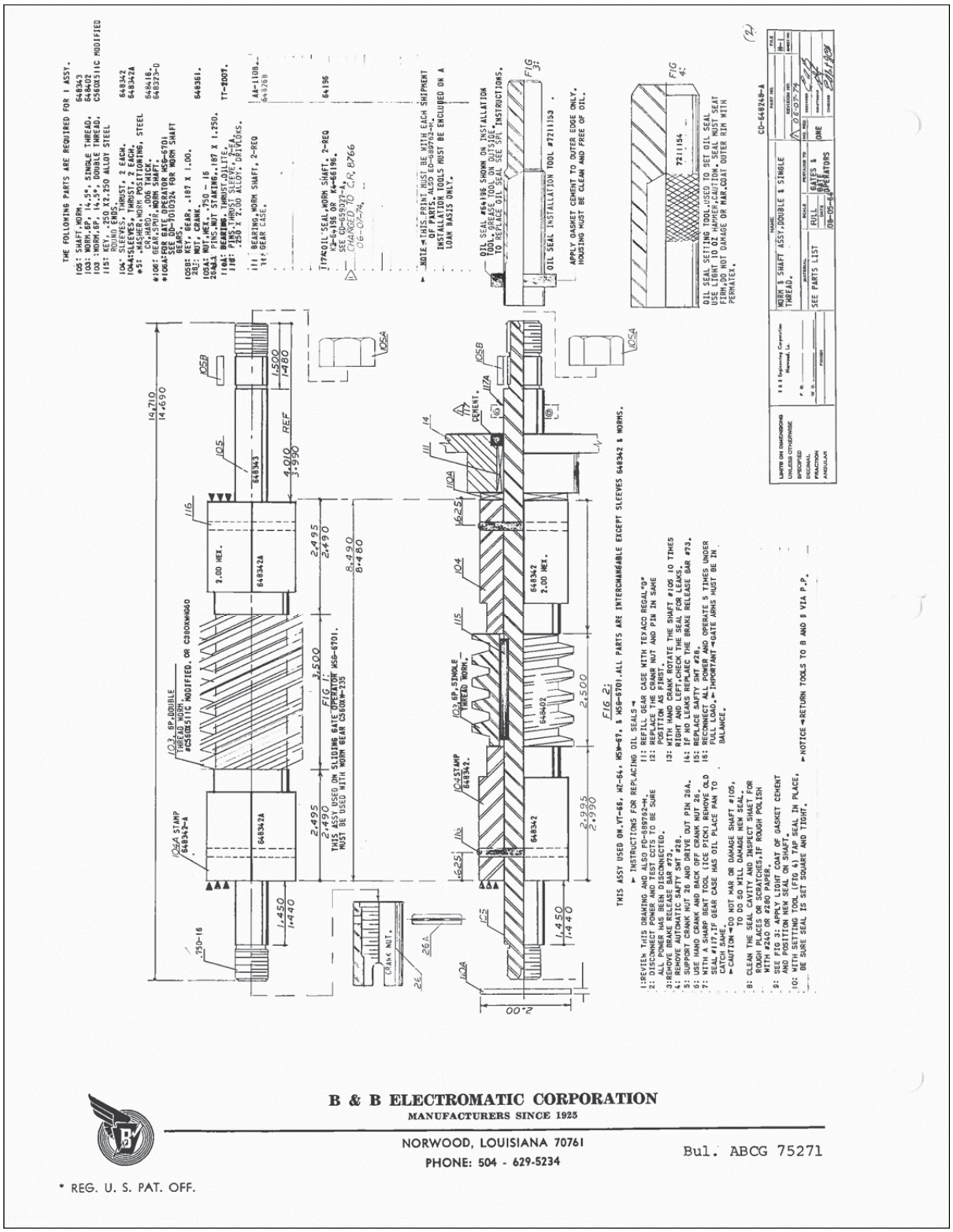
B & B ELECTROMATIC CORPORATION
MANUFACTURERS SINCE 1925
NORWOOD, LOUISIANA 70761
PHONE: 504 - 629-5234
Bul. ABCG 75271
* REG. U. S. PAT. OFF.

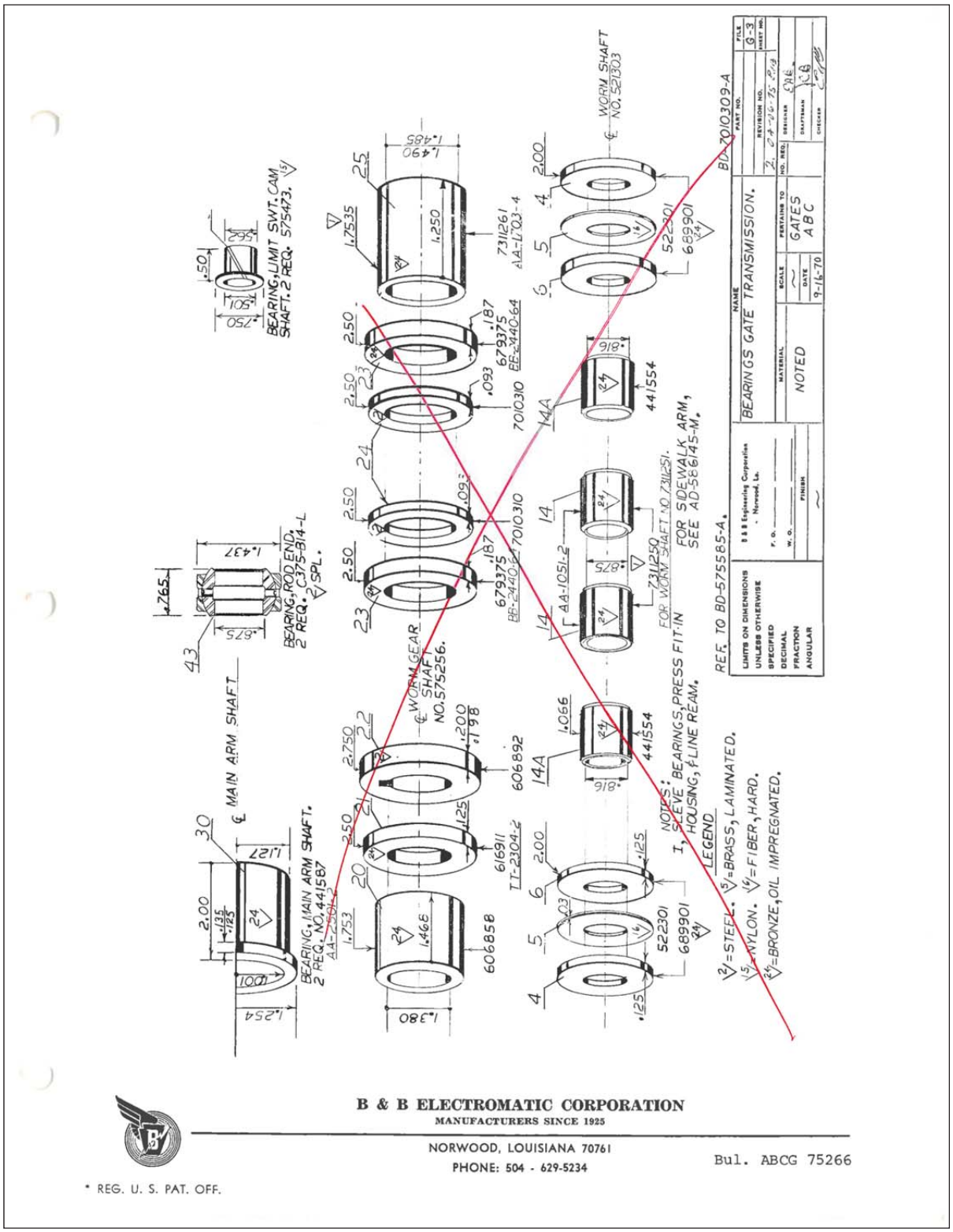
BEARINGS GATE TRANSMISSION.
BD-701309-A
REF. TO BD-575585-A.
NOTED
GATES ABC
B & B ELECTROMATIC CORPORATION
MANUFACTURERS SINCE 1925
NORWOOD, LOUISIANA 70761
PHONE: 504 - 629-5234
Bul. ABCG 75266
* REG. U. S. PAT. OFF.

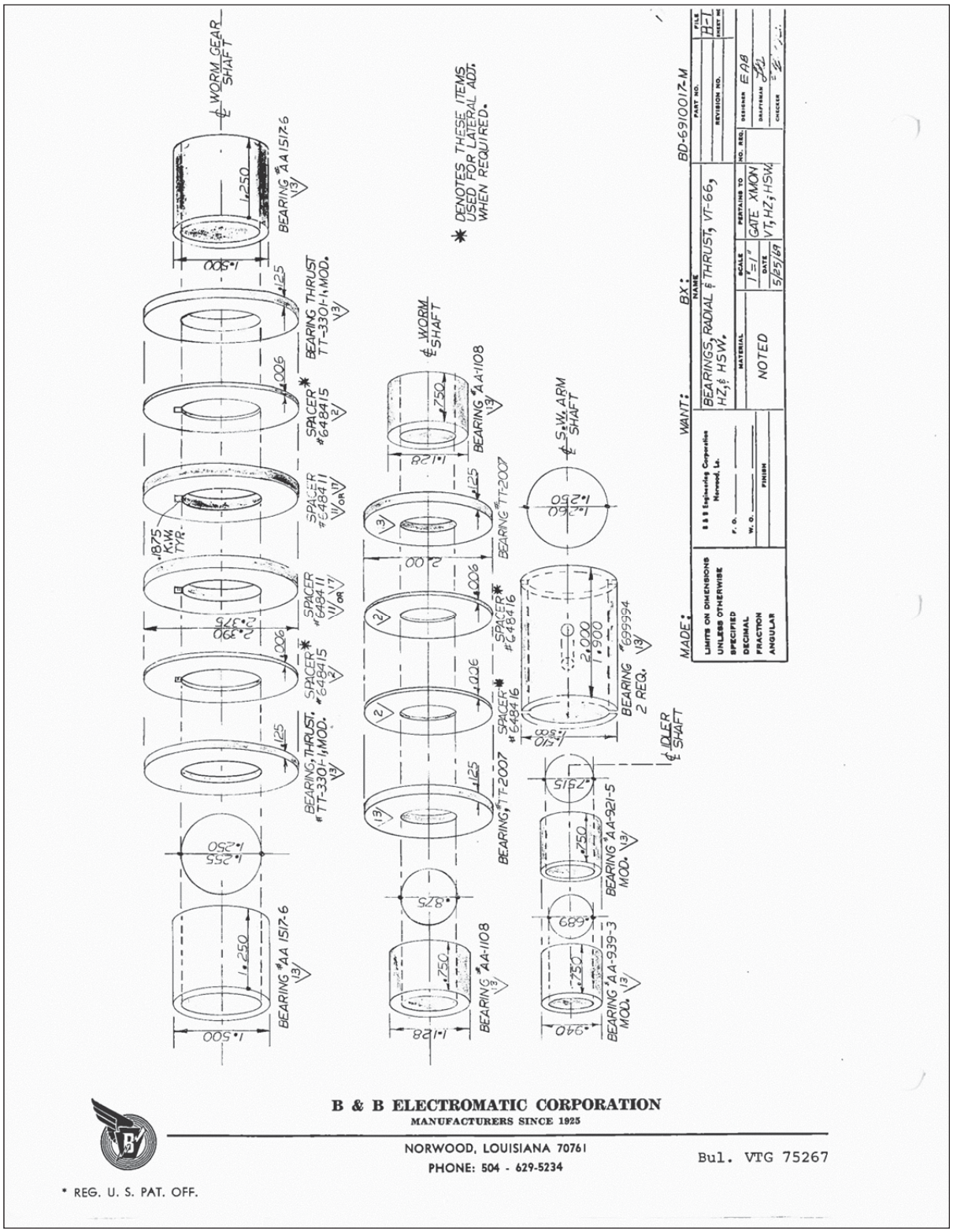
WORM GEAR SHAFT
BEARING #AA 1517-6
BEARING THRUST TT-3301-1, MOD.
SPACER #648415
SPACER #648411
.875 K.W. TYP.
BEARING, THRUST, #TT-3301-1, MOD.
SPACER #648411
SPACER #648415
BEARING #AA 1517-6
DENOTES THESE ITEMS USED FOR LATERAL ADJ. WHEN REQUIRED.
WORM SHAFT
BEARING #AA-1108
BEARING #TT-2007
SPACER #648416
SPACER #648416
BEARING #AA-1108
BEARING #TT-2007
S.W. ARM SHAFT
BEARING #699994 2 REQ.
IDLER SHAFT
BEARING #AA-921-5 MOD.
BEARING #AA-939-3 MOD.
MADE:
WANT:
BX:
BD-691001Z-M
BEARINGS, RADIAL & THRUST, VT-66, HZ, & HSW,
NOTED
GATE XMON VT, HZ, & HSW
5/25/67
B & B ELECTROMATIC CORPORATION
MANUFACTURERS SINCE 1925
NORWOOD, LOUISIANA 70761
PHONE: 504 - 629-5234
Bul. VTG 75267
* REG. U. S. PAT. OFF.

ROTARY CAM LIMIT SWITCH, TYPE 3MN1, MODEL A
FURNISHED IN 8 OR 10 CIRCUIT, 15–A, 600–V

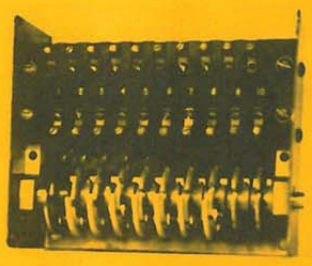

ASSEMBLY, LIMIT SWITCH 3MN1–10

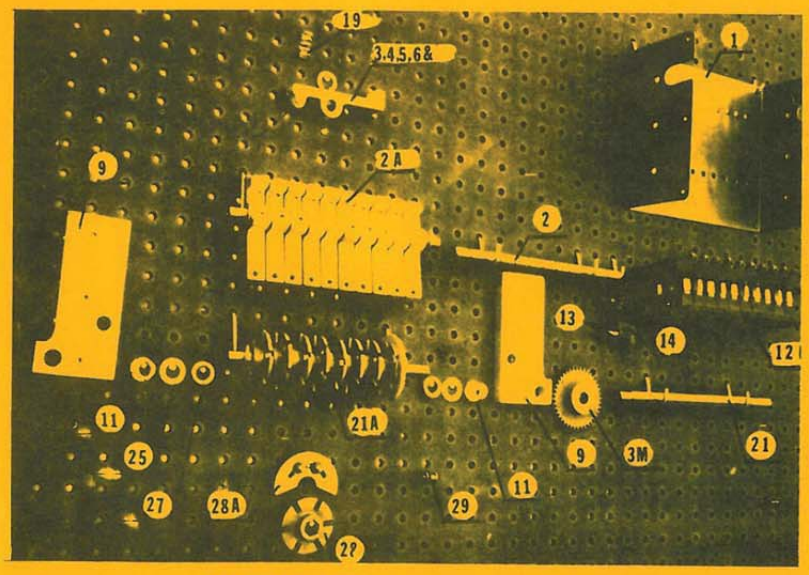

MAJOR PARTS OF 3MN1–A LIMIT SWITCH

B & B ELECTROMATIC CORPORATION
MANUFACTURERS SINCE 1925

NORWOOD, LOUISIANA 70761
PHONE: 504 - 629-5234

BUL LS74250

* REG. U. S. PAT. OFF.

PARTS LIST
LIMIT SWITCH, GATE, MODEL 3MN1–A

ITM.	QU.	NAME	PART NO.	PRICE
1.	1	FRAME, MAIN, 8 OR 10 CCT.	658806	24.00
2.	1	SHAFT, ROCKER ARM	658808	10.00
2A.	1	ASSY., ROCKERS & SHAFT, 8 OR 10 CCT.		ON REQUEST
3.	X	ASSY., ROCKER ARM (CONSISTING OF PARTS 3,4,5 & 6)		8.00
4.	X	ROLLER, CAM FOLLOWER	658778	.80
5.	X	PIN, ROLLER MOUNTING	℄	.25
6.	X	SCREW, SET	℄	.25
7.		DELETED		
8.	X	**RING, ROCKER ARM RETAINING (C503X)	WA522	.25
9.	2	BLOCK, BEARING	658790	11.00
10.	2	**SCREW, SET	℄	.25
11.	2	BEARING, CAMSHAFT MOUNTING (C454X), TYPE 5	8L8F	1.00
12.	1	BLOCK, TERMINAL AND SWITCH MOUNTING	658791	ON REQUEST
12A.	X	ASSY., SWITCH AND TERMINAL BLOCK, 8 OR 10 CCT.		ON REQUEST
13.	X	STUD, SWITCH MOUNTING	658794	.25
14.	X	SWITCH (C318X)	3MN1	8.00
15.	X	CONNECTOR, WIRE (C390X)	XT-10	.50
16.	X	**SCREW, ROUND HEAD, BRASS	℄	.25
17.	4	**SCREW, HEX, STEEL	℄	.25
18.	5	**SCREW, HEX	℄	.25
19.	X	SPRING, ROCKER ARM CONTROL	658865	.80
20.	1	**SCREW, FLAT HEAD	℄	.25
21.	1	SHAFT, CAM, HEX	7411535	12.00
22.	1	**KEY, WOODRUFF	℄	.25
23.	1	**SCREW, SET	℄	.25
24.	1	**WASHER, THRUST	℄	.25
25.	1	SPACER, CAMSHAFT	658862	.50
26.	1	**SPACER	658863	.50
27.	2	WASHER, THRUST	℄	.25
28.	X	CARRIER, CAM LOBE	7311469	3.00
28A.	X	LOBE (FURNISHED IN 70°, 170°, 180° OR 210°)	7411536	2.00
29.	X	ASSY., BOLT AND NUT, CAM LOBE HOLDING	℄	.50
30.	4	BOLT, SWITCH MOUNTING	℄	.50
31.	8	LOCKWASHER	℄	.25
32.	4	NUT, HEX	℄	.25
	1	LIMIT SWITCH, COMPLETE, 8-CCT.	3MN1-8	260.00
	1	LIMIT SWITCH, COMPLETE, 10 CCT.	3MN1-10	300.00

** - THESE PARTS NOT SHOWN
X - QUANTITY DETERMINED BY CIRCUIT CAPACITY OF LIMIT SWITCH

SWITCH CONTACTS ARE MADE WHEN CAM LOBE CONTACTS THE ROLLER OF THE ACTUATING ARM. SWITCH IS QUICK MAKE AND BREAK AND OPERATES ON A 2° MOVEMENT OF THE CAMSHAFT. CAPACITY OF SWITCH IS 15 AMP AT 600-VOLT.

LUBRICATE ALL MOVING PARTS ONCE EACH 6 MONTHS WITH LIGHT WEIGHT MACHINE OIL.

FOR LIMIT SWITCHES MANUFACTURED PRIOR TO MARCH, 1974, SEE PARTS LIST VTG6562.

NOTE: ALL PRICES ARE SUBJECT TO CHANGE WITHOUT NOTICE.

BUL LS74250-2

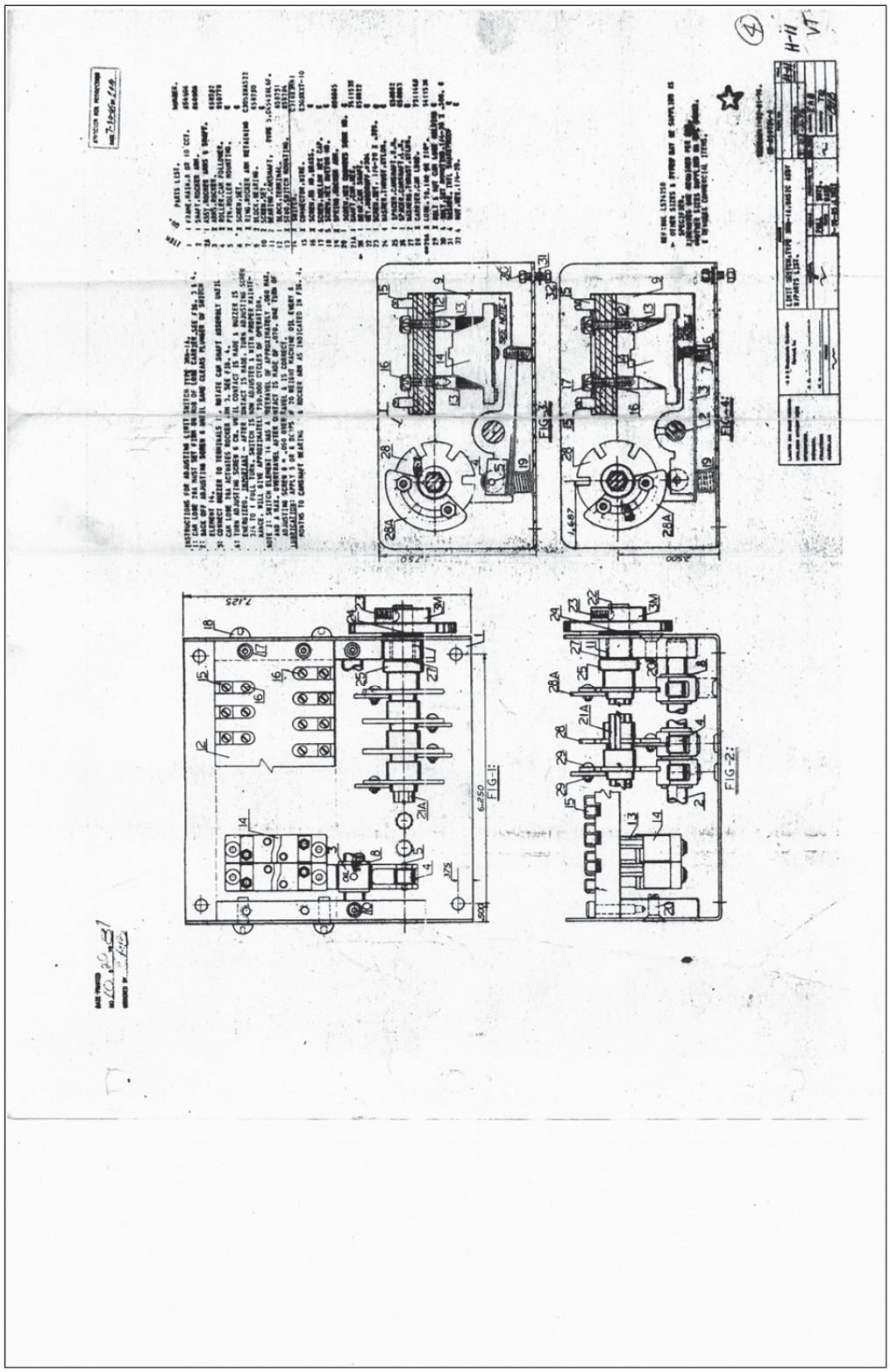

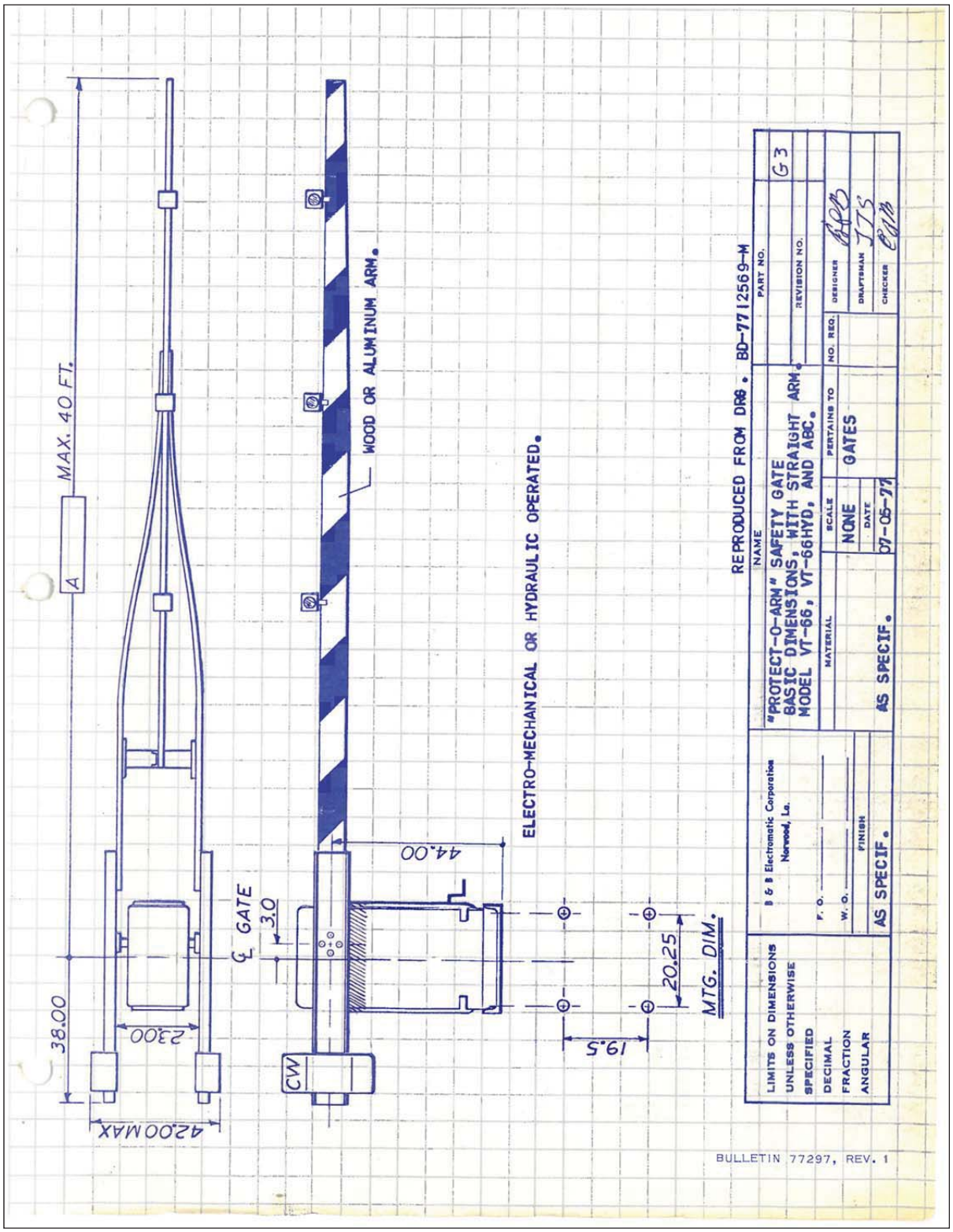
MAX. 40 FT.
A
WOOD OR ALUMINUM ARM.
ELECTRO-MECHANICAL OR HYDRAULIC OPERATED.
REPRODUCED FROM DRG. BD-77 12569-M
44.00
℄ GATE
3.0
38.00
2300
42.00 MAX
CW
20.25
19.5
MTG. DIM.
B & B Electromatic Corporation
Norwood, La.
"PROTECT-O-ARM" SAFETY GATE
BASIC DIMENSIONS, WITH STRAIGHT ARM
MODEL VT-66, VT-66HYD, AND ABC.
NAME
PART NO.
REVISION NO.
NO. REQ.
PERTAINS TO
GATES
SCALE
NONE
DATE
07-05-77
MATERIAL
AS SPECIF.
FINISH
AS SPECIF.
F. O.
W. O.
DESIGNER
DRAFTSMAN
CHECKER
LIMITS ON DIMENSIONS
UNLESS OTHERWISE
SPECIFIED
DECIMAL
FRACTION
ANGULAR
BULLETIN 77297, REV. 1

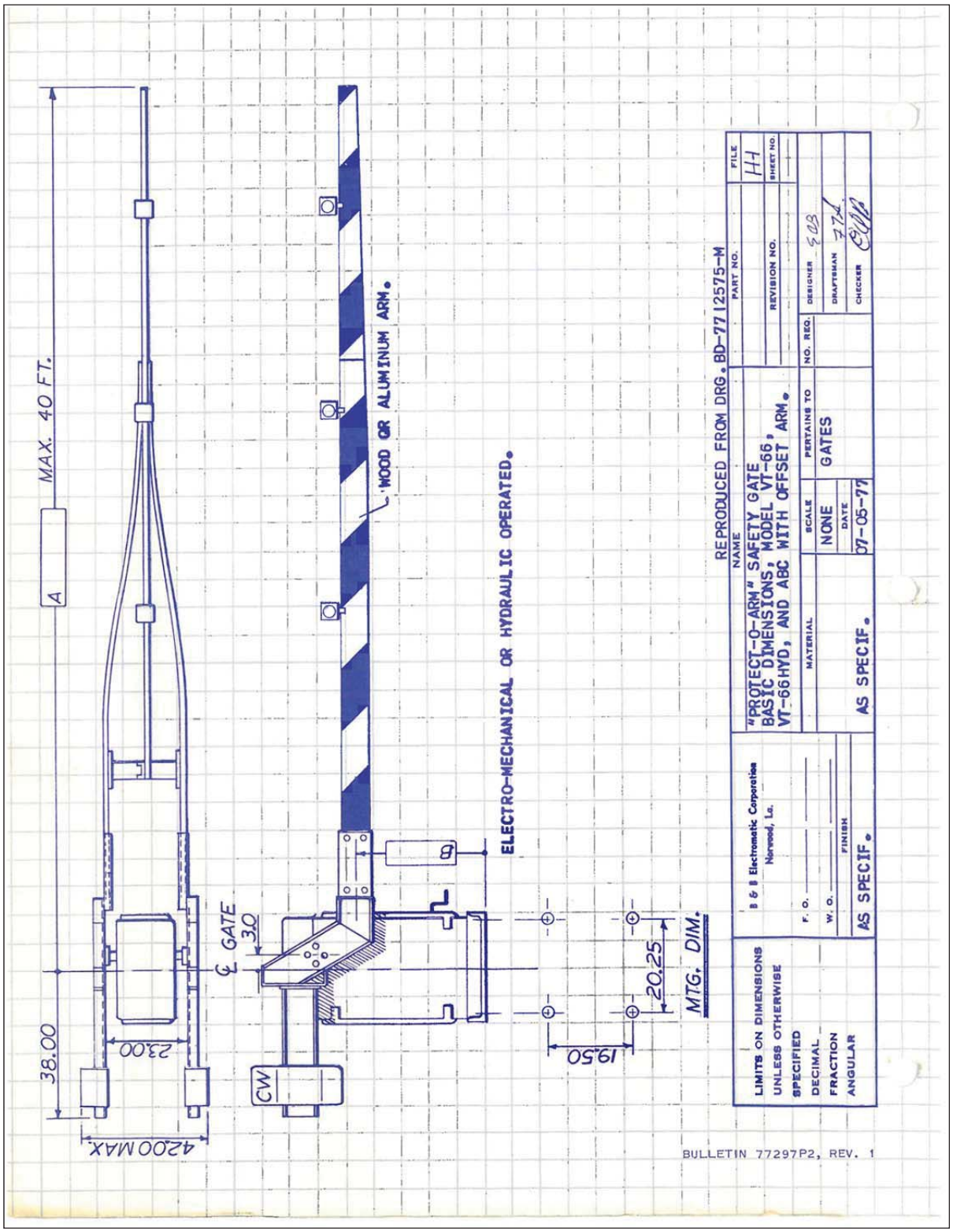
MAX. 40 FT.
A
WOOD OR ALUMINUM ARM.
ELECTRO-MECHANICAL OR HYDRAULIC OPERATED.
℄ GATE
3.0
38.00
23.00
4200 MAX.
CW
19.50
20.25
MTG. DIM.
REPRODUCED FROM DRG. BD-77 12575-M
NAME "PROTECT-O-ARM" SAFETY GATE
BASIC DIMENSIONS, MODEL VT-66, VT-66HYD, AND ABC WITH OFFSET ARM.
PART NO.
REVISION NO.
SHEET NO.
FILE H1
MATERIAL AS SPECIF.
SCALE NONE
DATE 07-05-77
PERTAINS TO GATES
NO. REQ.
DESIGNER
DRAFTSMAN
CHECKER
B & B Electromatic Corporation Norwood, La.
F. O.
W. O.
FINISH AS SPECIF.
LIMITS ON DIMENSIONS UNLESS OTHERWISE SPECIFIED
DECIMAL
FRACTION
ANGULAR
BULLETIN 77297P2, REV. 1

TO PREVENT DAMAGE TO THE OPERATING MECHANISM, THE ARM MUST BE CORRECTLY BALANCED. IF THE GATE IS OPERATED WITHOUT THE ARM BEING CORRECTLY BALANCED, B&B ELECTROMATIC CORPORATION'S RESPONSIBILITY AND GUARANTEE WILL NOT APPLY.

INSTALL THE COUNTERWEIGHTS AS SHOWN IN FIG. 4, MOVING SAME IN THE DIRECTION OF THE MAIN ARM SHAFT UNTIL THE ARM CAN BE SLIGHTLY RAISED WITH ONE FINGER. FASTEN THE COUNTERWEIGHTS SECURELY AND OPERATE THE GATE MANUALLY WITH HANDCRANK. IF THE ARM IS PROPERLY BALANCED, THE GATE SHOULD OPERATE IN BOTH THE "UP" AND "DOWN" POSITIONS WITH THE SAME AMOUNT OF MANUAL EFFORT. IF IT REQUIRES MORE EFFORT TO RAISE THE ARM, COUNTERWEIGHTS MUST BE MOVED TO THE BACK. IF IT REQUIRES MORE EFFORT TO LOWER THE ARM, COUNTERWEIGHTS MUST BE MOVED TOWARD THE MAIN ARM SHAFT. AGAIN WE MUST EMPHASIZE THAT BEFORE THE GATE IS OPERATED, THE ARM MUST BE CORRECTLY BALANCED.

OPERATING UNDER POWER

AFTER ALL FASTENERS AND ELECTRICAL CONNECTIONS HAVE BEEN RE-CHECKED AND THE ARM HAS BEEN CORRECTLY BALANCED, THE GATE MAY BE OPERATED UNDER POWER. OBSERVE THE MOVEMENT OF THE ARM WHEN IT FIRST STARTS FROM EITHER THE EXTREME HORIZONTAL OR VERTICAL POSITION. IF THE OPERATION IS ERRATIC (JERKY), THE ARM IS STILL OUT OF BALANCE AND CONTINUED OPERATION WILL DAMAGE THE MECHANISM. IF IT JERKS WHEN ARM GOES UP, THE ARM IS ON THE HEAVY SIDE AND THE COUNTERWEIGHTS SHOULD BE MOVED SLIGHTLY TO THE BACK. IF THE ARM JERKS WHEN IT STARTS DOWN, IT INDICATES THAT THE COUNTERWEIGHTS ARE TOO HEAVY AND THEY SHOULD BE MOVED TOWARD THE MAIN ARM SHAFT.

REVERSING AT 45° UNDER FULL SPEED

THE "PROTECT-O-ARM" GATE IS DESIGNED, AND THE LIMIT SWITCH IS SET, SO THAT THE MOTOR MAY BE REVERSED AT ANY POSITION OF THE ARM FROM APPROXIMATELY 5° FROM THE VERTICAL TO 5° FROM THE HORIZONTAL. IF MOTOR IS REVERSED WHEN ARM IS APPROXIMATELY 45° FROM THE VERTICAL, WHICH IS THE FULL SPEED POINT, IT PUTS A SEVERE STRAIN ON ALL WORKING PARTS. THE ARM SHOULD NOT BE REVERSED AT THIS POINT UNLESS AN EMERGENCY EXISTS. THE MOTOR SHOULD NEVER BE STOPPED BY MANUAL CONTROL BUT SHOULD BE CONTROLLED BY THE GATE LIMIT SWITCH.

LUBRICATION

THE GATE HAS BEEN PROPERLY LUBRICATED AT THE FACTORY AND MAY BE PLACED IN SERVICE WITHOUT ADDITIONAL LUBRICATION. DURING INSTALLATION THE MECHANISM SHOULD BE PROTECTED FROM DUST, SAND AND FOREIGN MATTER. AFTER INSTALLATION, THE MECHANISM SHOULD BE LUBRICATED AS INSTRUCTED IN LUBRICATION CHART.

FINAL INSPECTION

AFTER ALL TESTS HAVE BEEN COMPLETED IN ACCORDANCE WITH THE SPECIFICATIONS, OPERATING AND INSTALLATION INSTRUCTIONS -- THE HOUSING SHOULD BE INSPECTED TO ASSURE 1) THAT ALL GASKETS ARE IN PLACE; 2) THAT ALL OPENINGS AT THE BASE LINE HAVE BEEN PROPERLY SEALED; 3) THAT THE HOUSING IS CORRECTLY GROUNDED; 4) THAT INCOMING CONDUITS ARE SEALED GAS TIGHT; 5) THAT ALL ELECTRICAL CONDUCTORS HAVE BEEN IDENTIFIED IN ACCORDANCE WITH THE WIRING DIAGRAM; AND 6) THAT MAINTENANCE PERSONNEL HAVE BEEN PROPERLY INSTRUCTED.

BUL. G69200P2, REV. 1

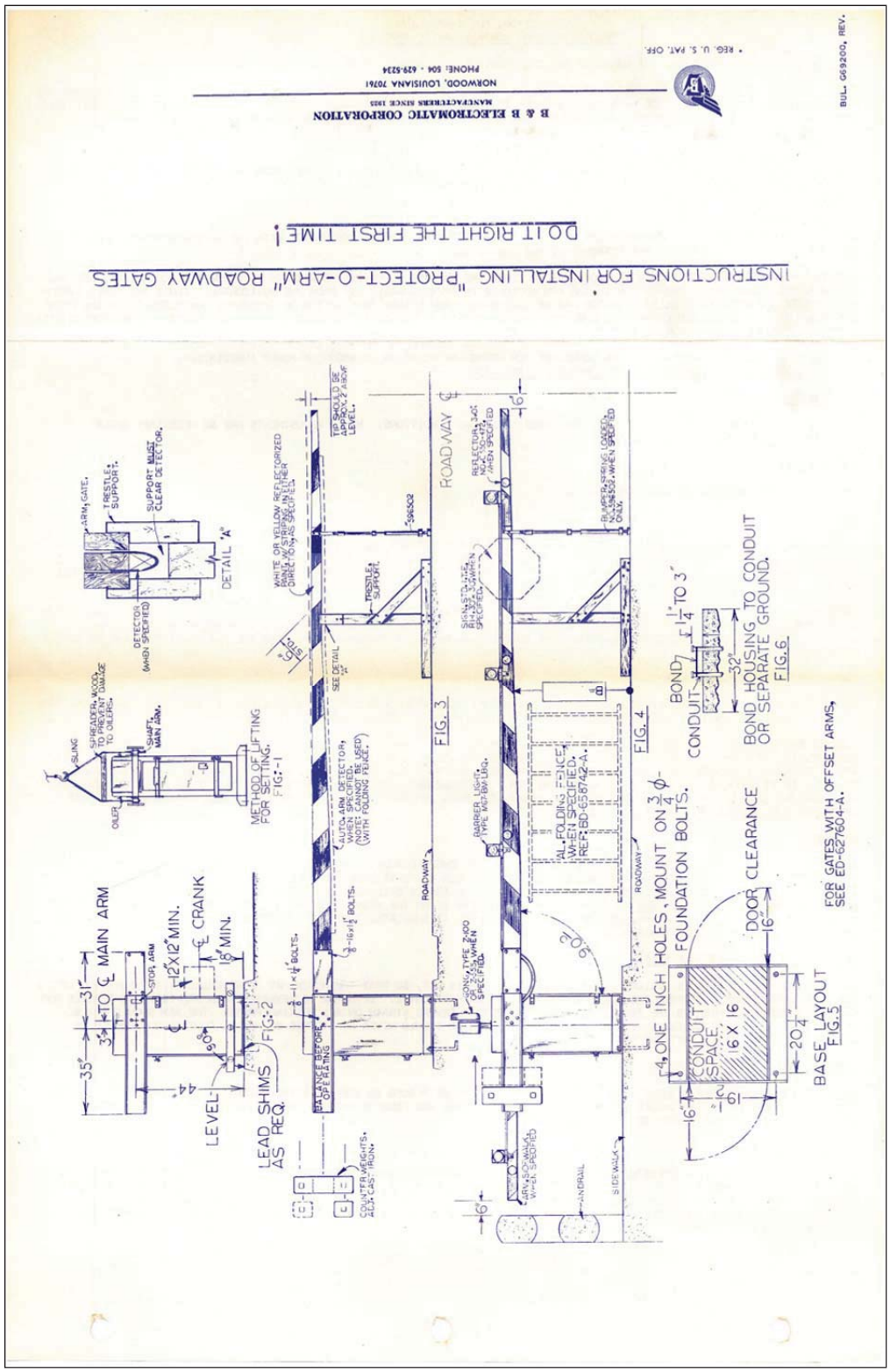
B & B ELECTROMATIC CORPORATION
NORWOOD, LOUISIANA 70761
PHONE: 504 - 629-5234
INSTRUCTIONS FOR INSTALLING "PROTECT-O-ARM" ROADWAY GATES
DO IT RIGHT THE FIRST TIME!
METHOD OF LIFTING FOR SETTING. FIG:-1
LEVEL
LEAD SHIMS AS REQ.
FIG:2
ROADWAY
FIG. 3
FIG. 4
ONE INCH HOLES, MOUNT ON 3/4 FOUNDATION BOLTS.
DOOR CLEARANCE
CONDUIT SPACE 16 X 16
BASE LAYOUT FIG.5
BOND CONDUIT OR SEPARATE GROUND.
BOND HOUSING TO CONDUIT FIG.6
FOR GATES WITH OFFSET ARMS, SEE ED-627604-A.
SIDEWALK
HANDRAIL

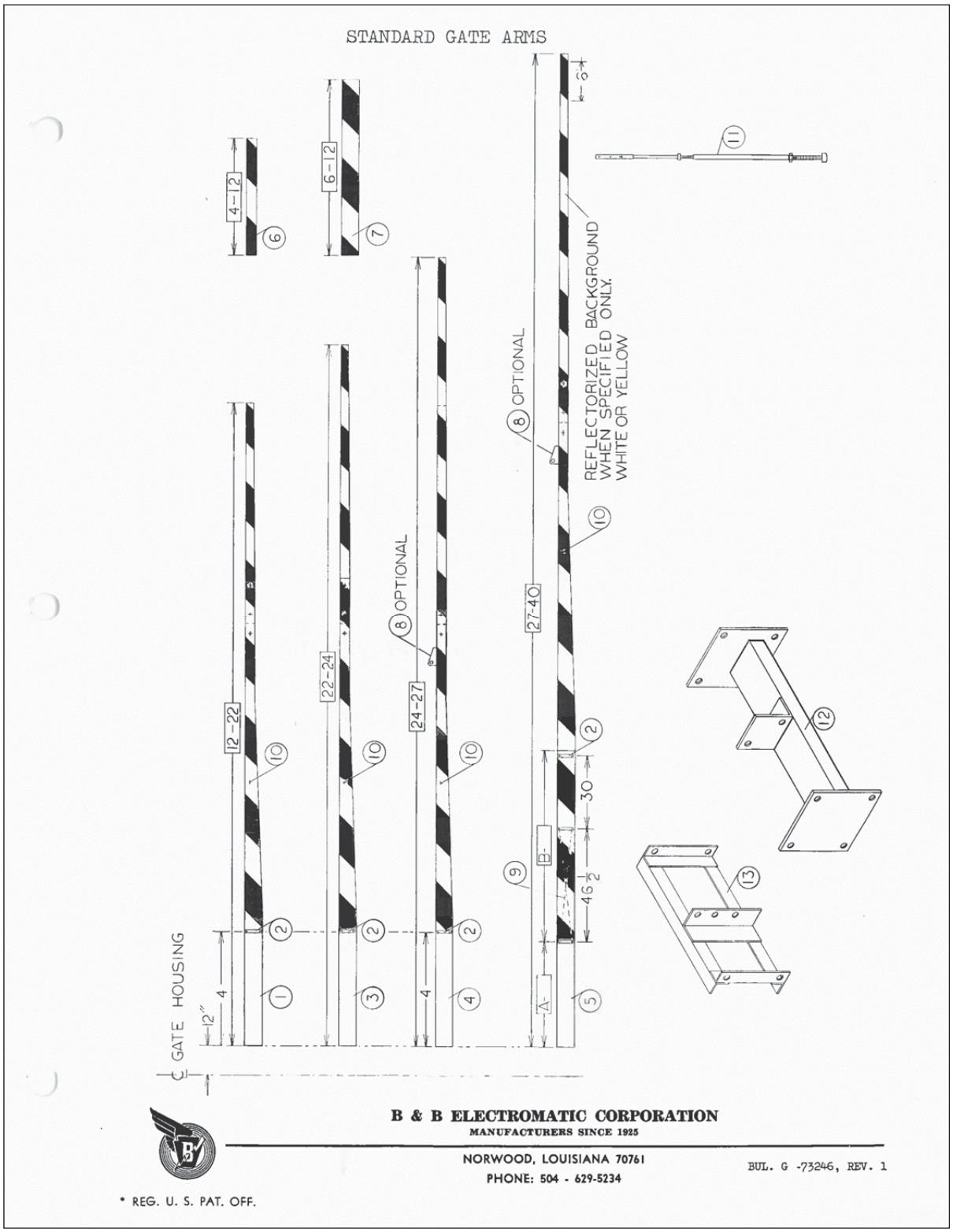
STANDARD GATE ARMS
4-12
6-12
6"
11
6
7
8 OPTIONAL
REFLECTORIZED BACKGROUND
WHEN SPECIFIED ONLY.
WHITE OR YELLOW
10
27-40
12-22
22-24
8 OPTIONAL
24-27
10
10
10
2
30
B
9
46
2
12
13
2
2
2
1
3
4
5
4
4
A
12"
GATE HOUSING
B & B ELECTROMATIC CORPORATION
MANUFACTURERS SINCE 1925
NORWOOD, LOUISIANA 70761
PHONE: 504 - 629-5234
BUL. G -73246, REV. 1
* REG. U. S. PAT. OFF.

PARTS LIST
ARMS, ROADWAY AND SIDEWALK, STANDARD

ITEM	QU.	NAME	REFERENCE NO.
1.	1	ARM, ROADWAY, 12 TO 22 FT.	586025
2.	2	PLATE, WASHER	532925
3.	1	ARM, ROADWAY, 22 TO 24 FT.	586025
4.	1	ARM, ROADWAY, 24 TO 27 FT.	586025
5.	1	ARM, ROADWAY, 27 TO 40 FT.	586025
6.	1	ARM, SIDEWALK, 4 TO 12 FT.	616918
7.	1	ARM, PARKING, 6 TO 12 FT.	616919
8.	1	PLATE, TRUSS ANCHOR	596364
9.	1	BRACE, X-TRUSS	564354
10.	1	ROD, STAY	606795
11.	1	BUMPER, WITH HANGER & BOLTS	596502
12.	1	SPREADER, ROADWAY ARM	689877
13.	1	SPREADER, ROADWAY ARM, FOR STUB ARM	617180

STANDARD GATE ARMS ARE CONSTRUCTED OF EXTRA CLEAR SELECT EDGE GRAIN FIR LUMBER. ALL HARDWARE, EXCEPT THE MAIN MOUNTING BOLTS, ARE ALUMINUM. MAIN MOUNTING BOLTS ARE STEEL ZINC PLATED. WASHER PLATES ARE PROVIDED TO RE-INFORCE ALL BOLT HEADS.

ANCHOR PLATE, ITEM #8, IS USED ONLY WHEN SPECIFIED.

THIS INFORMATION IS NOT FOR CONSTRUCTION PURPOSES AS CLIMATIC, ENVIRONMENTAL, AND ACCESSORIES INFLUENCE BASIC CONSTRUCTION.

ORDERS MUST SPECIFY COLOR OF BACKGROUND, THAT IS, WHITE OR YELLOW, AND STATE IF BACKGROUND IS TO BE REFLECTORIZED.

ARMS ARE SHIPPED IN SECTIONS AND ARE READILY ASSEMBLED IN THE FIELD.

SPRING LOADER BUMPER, ITEM #11, SHOULD BE USED ON ALL ARMS OVER 24 FEET.

ALUMINUM ARMS ARE READILY AVAILABLE.

IN ORDERING, SPECIFY MODEL, TYPE, AND SERIAL NUMBER OF GATE.

BUL. G -73246, REV. 1, P.2

11.9 ELECTRICAL EQUIPMENT MANUALS AND SPECIFICATIONS

11.9.1 TACHOMETER/OVERSPEED SWITCH ASSEMBLY – HUBBELL

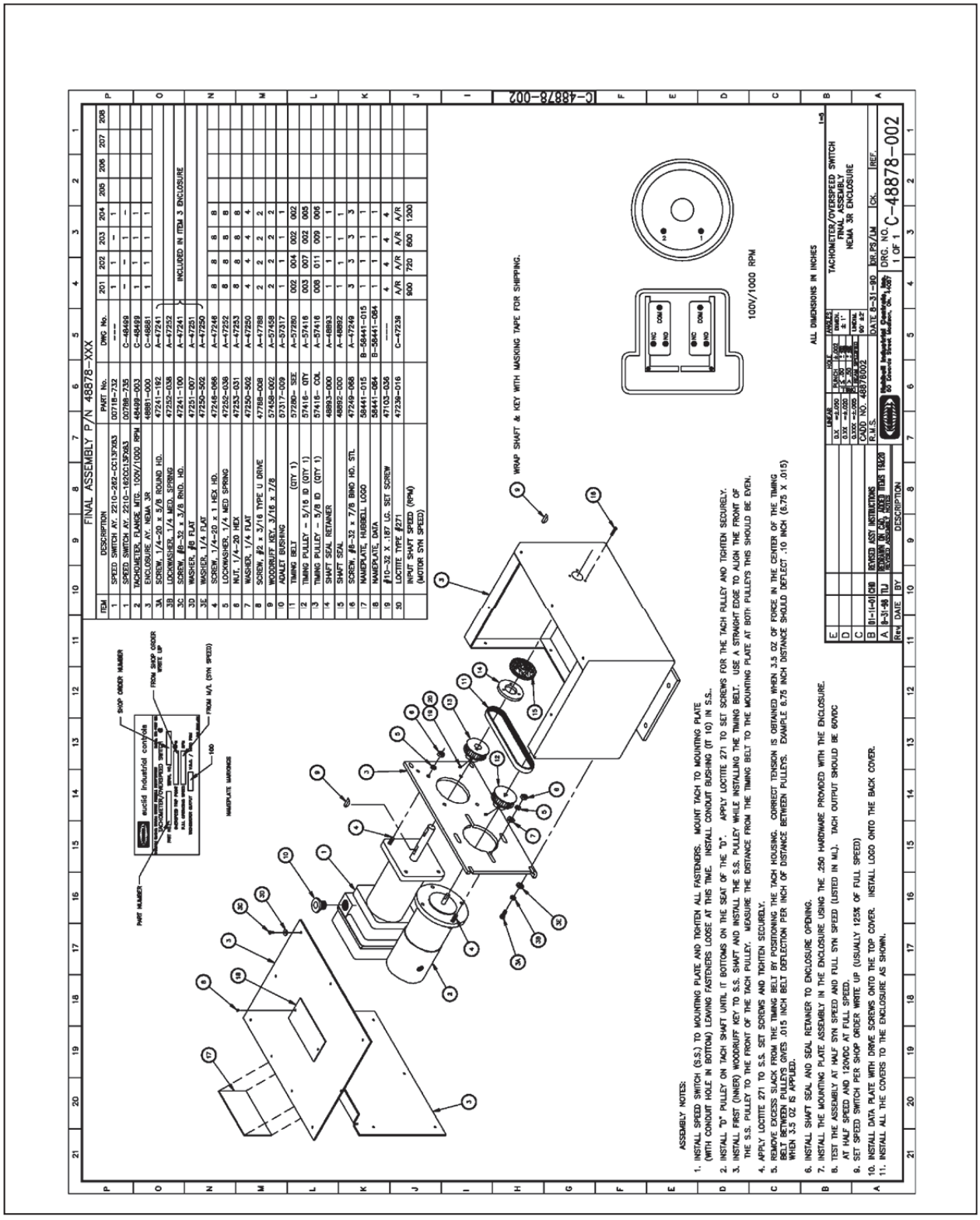

11.9.2 DRIVE – HUBBELL 4922C

Hubbell Industrial Controls, Inc.

S²MC Compact Static Reversing Controller **4922C**

For Hoists without Load Brakes

Instructions 4922C.A • Publication 189H • August 2003

TYPE 4922C INSTRUCTION MANUAL FOR CRANE HOISTS

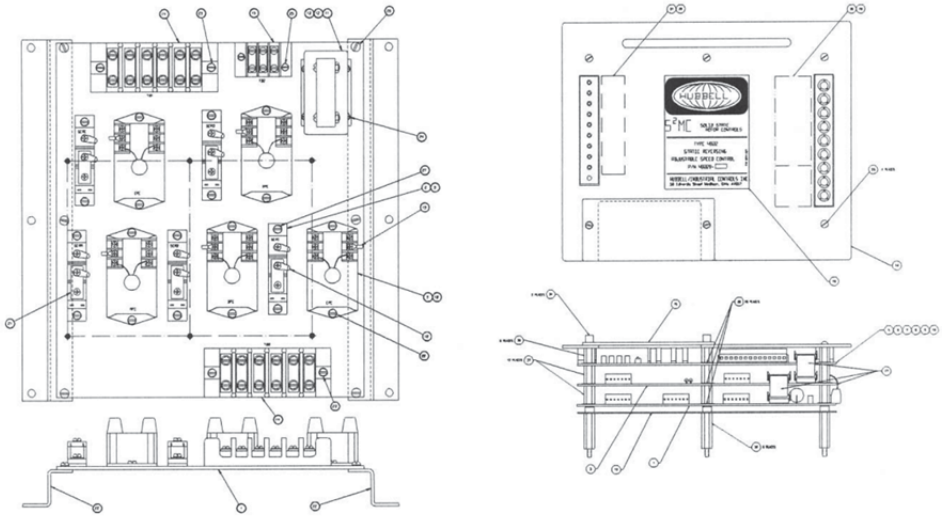

HUBBELL

Instruction Manual 4922C for Cranes

Table of Contents

1.0 General 3

2.0 Circuit Description 3

2.1.1 POWER CIRCUIT GENERAL 3

2.2.1 PRIMARY SCR BRIDGE 3

2.2.2 CONTROL CIRCUIT, STATIC CONTROL ASSEMBLY 4

3.0 Specifications 7

3.1 INITIAL SET-UP STATIC CONTROL ASSEMBLY. 8

3.2 SETUP ADJUSTMENTS 9

Note, drawings and spare parts refered to in this instruction manual are for reference only. Refer to controller nameplate or consult factory for specific drawings.

Serial Number: _____

Reference Drawing Number: _____

Instruction Manual 4922C for Cranes

HUBBELL

1.0 General

The Type 4922C Static Reversing Controller is a solid state adjustable speed motor controller utilizing compact unitized construction and providing speed regulated control of wound rotor motors. The motor speed is controlled by varying the motor primary voltage via primary SCR bridges, and the direction of motor rotation is controlled by selecting the appropriate SCR bridges for the commanded function. The adjustable speed control unit varies the SCR bridge firing signals and the SCR bridge selection in response to a changing motor speed reference signal. The retarding torque during the reduced speed lowering operation is provided by motor counter torque. The retarding torque during full speed lowering can be provided by true motor and system regeneration. Motoring to counter torque transitions and vice versa are automatic and are controlled by the adjustable speed control unit in response to motor loading conditions.

2.0 Circuit Description

2.1.1 POWER CIRCUIT GENERAL

The incoming three phase power, L1, L2, L3 is connected to the main circuit breaker, MCB, and then to the main contactor, M. Power is supplied to the SCR bridges through the overload relays, 1OL, 2OL, and 3OL, when the power contacts of M are closed. Current limit resistors are connected in series with the power inputs of the Lowering SCR bridges. The current limit resistors control SCR fault currents should they occur. The SCR bridge outputs provide adjustable voltage power to the motor primary windings, T1, T2, T3, through the Power Limit Switch, LS. The limit switch transformer, LSXFMR, monitors one of the limit switch power contacts, and removes power from the brake panel should the monitored power contact open. See Fig. 2.1.1. and Fig. 2.1.2.

2.1.2 CONTROL CIRCUIT GENERAL

The three phase power from the main circuit breaker, MCB, is also connected to the control circuit breaker, CCB. The control circuit breaker supplies power to the synchronizing transformer, XFMR2, and the control power transformer, XFMR1. See Fig. 2.1.1. and Fig 2.1.2. Transformer XFMR2 supplies power and SCR synchronizing information to the Static Control Assembly, SCA, and the control power transformer XFMR1 supplies 120 volt power to the remaining control circuit.

The 120 volt control circuit power from the control transformer is controlled by the UV relay located on the tachometer continuity assembly, TCA. The function of the TCA is to verify continuity in the Tachometer / Overspeed Switch circuit. The UV relay will pickup when continuity is established through the tachometer circuit and the control circuit continuity loop composed of the normally closed overload contacts, 1OL, 2OL, and 3OL. The SCR bridge over temperature switch, mounted on the central common SCR bridge, is also included in the control circuit continuity loop along with 1CR and 2CR contacts which are present when the Float option is supplied.

The master switch or pendant station controls the Hoist and Lower Relays, HR and LR, the Off-Point Timing Relay, TR, and the Full Speed Contactor, FS. The brake relay, BR, supplies power to the brake panel and is controlled by HR, LR and the Limit Switch Transformer. HR and LR also operate the Main Contactor, M, through the controlling Master Switch or Pendant contacts. The M Contactor and the initiating directional relay will remain energized when the Master Switch or Pendant is returned to Off-Point to allow the motor to slow the load before removing power and setting the holding brake. The Off-Point Timing Relay, TR, and the Low Speed Relay, LSR, perform this function. Normally, LSR will open at minimum speed to set the brake and remove power. However, should a system problem prevent normal slowdown, the TR contact acts as a backup and removes power and sets the brake after a preset minimum time. See Figure 2.1.1.

The Master Switch or Pendant also provides a bipolar adjustable voltage DC speed reference signal from an internal potentiometer. A positive signal represents the hoisting direction, and a negative signal represents the lowering direction. In this way, the Master Switch handle or Pendant button determines the direction of motion and establishes a voltage reference level by which motor speed will be controlled.

Figure 2.1.2 shows the addition of the SC contactor which is used when the extended slow speed option is required. During normal speed hoisting operations, the Low Speed Relay, LSR, will be picked up, and the Counter-torque Relay, CTR, will remain de-energized. This causes the SC contactor to close and supply normal .1 E/I motor secondary impedance in the rotor circuit. During slow, minimum speed operations, when LSR is dropped out, or during counter-torque operations, when CTR is picked up, the SC contactor will remain open, and the extended .3 E/I secondary impedance will be in the rotor circuit to reduce slow speed and counter-torque motor currents.

Figure 2.1.2 also shows the addition of the Float option components which are, 1FR, 1CR, 2CR, FTR, and the Float Relay Assembly. The Float option is used when very slow or zero speed load position control is required. The Float mode is entered by depressing and holding the Master Switch thumb button while the Master Switch is in the Off position. This mode limits the full travel Master Switch speed value to +/- 10% with smooth load control through zero speed.

2.2.1 PRIMARY SCR BRIDGE

The primary SCR bridge is an SCR/Heat Sink assembly with the power SCRs connected in inverse parallel, See Fig.2.1.3.

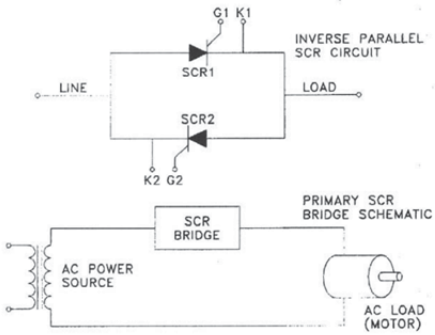

FIGURE 2.1.3

The function of the SCR bridge is to control the amount of voltage applied to the motor. The SCR, silicon controlled rectifier, is similar to standard rectifiers in that it will allow current to flow in one direction while blocking current in the reverse direction. However, SCRs will conduct current only when turned ON, or GATED ON. When two SCRs are connected as shown in Fig. 2.1.3, a controllable AC switch or contact is formed that will carry current in either direction but only when GATED ON. SCRs can react very quickly to gating signals, quickly enough to be able to control portions of half cycles of standard AC power. When the gating or firing signal is presented to the SCR very late in the half cycle, the SCR will block all of the cycle up to the time of firing. At the time the gating signal is applied, the SCR will turn ON and conduct the remaining portions of the half cycle to the load. See Fig. 2.1.4.

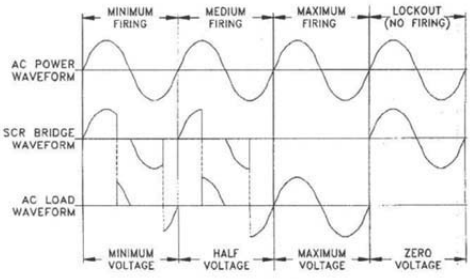

FIGURE 2.1.4

As the firing signal is presented earlier in the half cycle, the SCR will conduct more and more of the cycle on to the load. The extremes will be maximum firing when the SCR bridge passes all of the AC power on to the motor, and lock-out, zero firing, when the SCR bridge blocks all of the AC power.

In static reversing controllers, the SCR bridges also perform a directional control function as well. As can be seen in Figures 2.1.1 and 2.1.2, there are five SCR bridges, 2 Hoist bridges, 2 Lower bridges, and 1 Common bridge. When a Hoist operation is required, adjustable voltage three phase power is supplied to the motor via the two Hoist bridges and the Common bridge. The three phase relationship of the applied motor power determines the direction of developed motor torque and rotation.

A Lower operation will be performed in one of two ways depending upon mechanical losses and the weight of the suspended load. First, adjustable voltage power is supplied to the motor via the two Lower bridges and the Common bridge to produce a driving lower operation. If the loading is such as to continue to require a driving lower torque, the system will supply lowering adjustable voltage power to meet the commanded speed condition. If an overhauling condition exists, a counter-torque lowering operation will occur where the Hoist SCR bridges and the Common bridge provide motor power. True motor and power system regeneration can be used, if desired, to lower overhauling loads at full speed. For this condition, the system turns the Lower SCR bridges and the Common SCR bridge fully on to supply full lowering voltage to the motor.

The transition from driving lower to counter-torque lower is automatic and is determined by the mechanical loading presented to the motor. Full voltage regenerative lowering will produce lowering speeds 10% to 15% greater than full load hoisting speeds.

2.2.2 CONTROL CIRCUIT, STATIC CONTROL ASSEMBLY

The Static Control Assembly, SCA, contains all of the control system responsible for the speed regulation function of the Static Reversing Controller. The system also determines the motor's operating mode by controlling which set of SCR bridges is supplying the power. The Static Control Assembly receives its three phase power from the synchronizing transformer, XFMR2. See Figures. 2.1.1. and 2.1.2. This transformer provides low voltage AC power for the electronic power supply section and synchronizing information for the firing circuits. See Fig. 2.2.1.

The permissive circuit monitors the Permissive command input from the M contactor coil at the 120V AC control power level and converts this signal to an isolated low level signal compatible with the electronic system. The permissive circuit also monitors a tachometer continuity signal originating on the Tachometer Continuity Assembly. In order for the Static Control Assembly system to operate, the tachometer continuity signal must be present along with the control permissive signal from the M contactor circuit. The permissive circuit also monitors the Full Speed command input. This input will enable full speed regenerative lower operation.

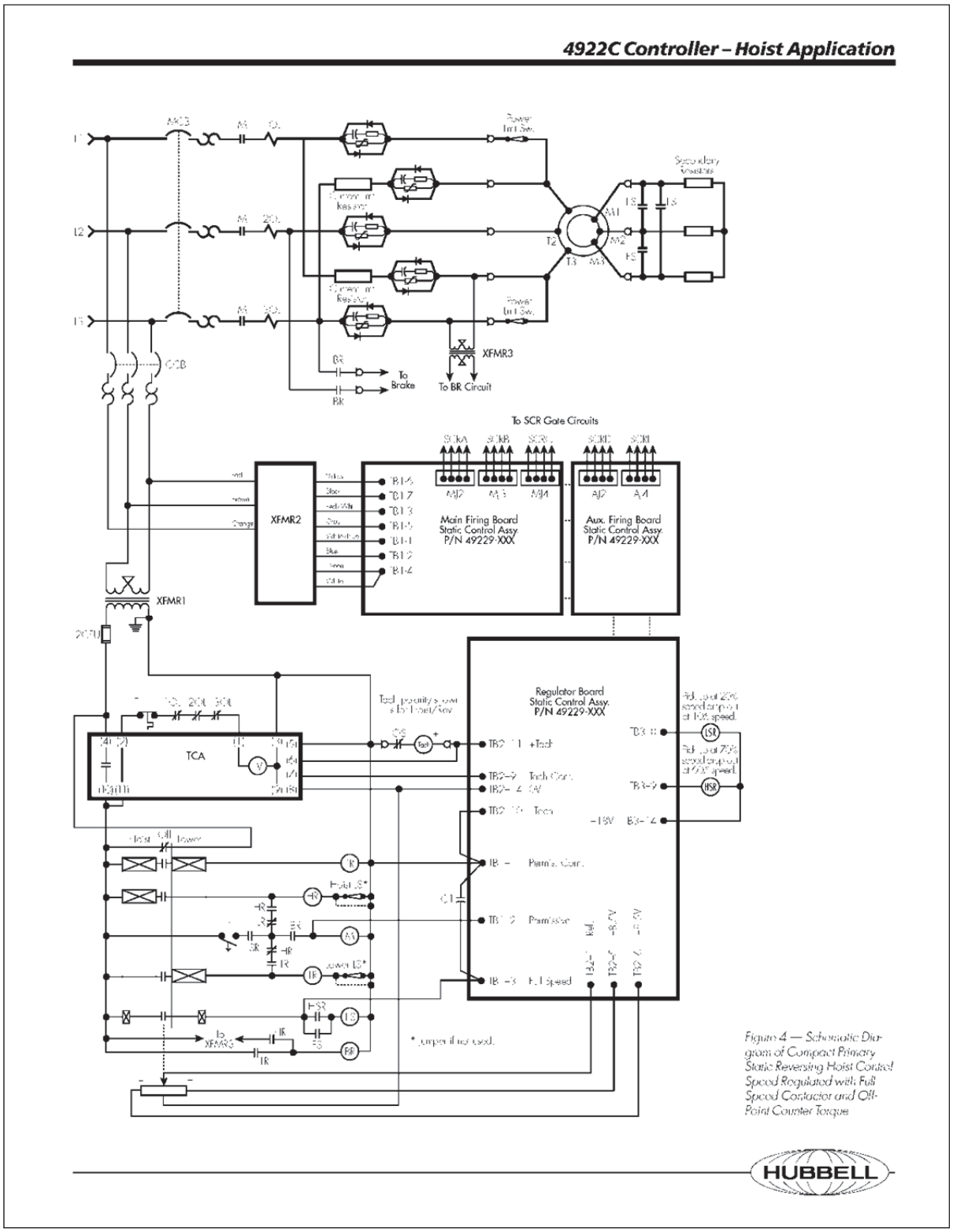

Figure 4 — Schematic Diagram of Compact Primary Static Reversing Hoist Control Speed Regulated with Full Speed Contactor and Off-Point Counter Torque

4922C Controller – Hoist Application

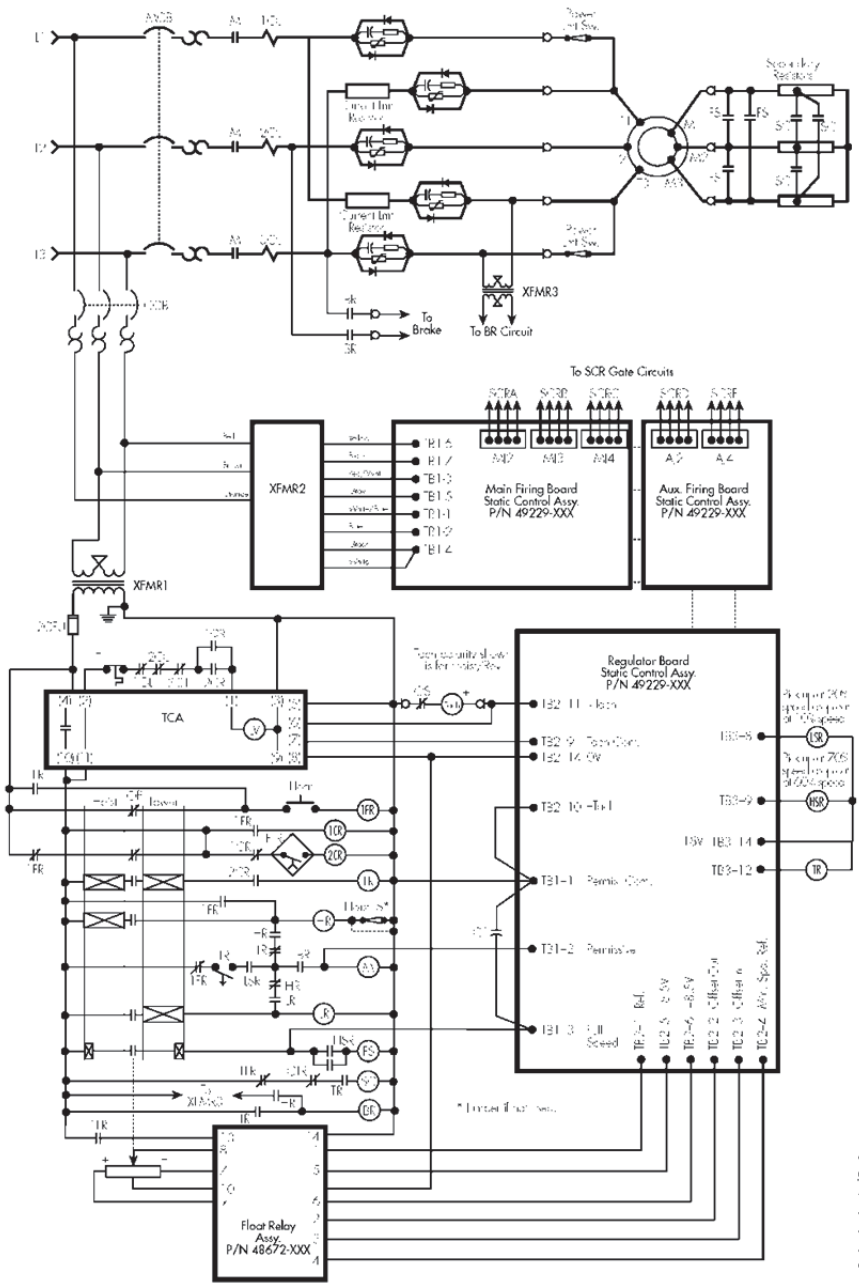

Figure 5 — Schematic Diagram of Compact Primary Static Reversing Hoist Control Speed Regulated with Full Speed Contactor, Extended Slow Speed, and Off-Point Counter Torque and Float

The ramp circuit receives the speed reference signal from the Master Switch or Pendant potentiometer and conditions the signal such that it is allowed to change only at a preset rate. This function provides for controlled acceleration and deceleration.

The speed regulator circuit receives the tachometer signal and compares it to the system speed reference signal from the ramp circuit. If the system speed is below the speed reference level, the output of the speed regulator circuit increases to provide more phase reference signal via the directional command circuit. This increased signal provides more voltage to the motor via the firing circuits and consequently more motor torque to increase system speed. If the system speed is above the speed reference level, the speed regulator output reverses polarity. This action causes the directional command circuit to issue a counter torque command to slow the motor. The resulting counter torque command signal causes the speed regulator circuit to provide a clamped or limited phase reference voltage to the firing circuits to control motor current and torque during the slow down interval.

The directional command circuit receives the bipolar speed error signal and a bipolar tachometer signal from the speed regulator circuit and compares these signals to determine the operational mode of the system motor. The directional command circuit issues a Hoist command signal to activate the Hoist and Common SCR bridges via the delayed directional permissive circuit, or a Lower command signal to activate the Lower and Common SCR bridges in a similar fashion.

The delayed directional permissive circuit receives the directional command signals from the directional command circuit and generates firing circuit permissive signals that are delayed by 4 1/2 cycles of the 60 Hz line. The delay is inserted in the permissive signals to prevent firing circuits that control the previously OFF SCR bridges from turning ON before the SCR bridges which are currently ON have stopped conducting. Shoot through faults are prevented by this delay.

The firing circuits receive the phase reference signal and, along with the synchronizing signals from the three phase synchronizing transformer and the delayed permissive signals from the delayed directional permissive circuit, produce the firing or gating signals required by the SCR bridges.

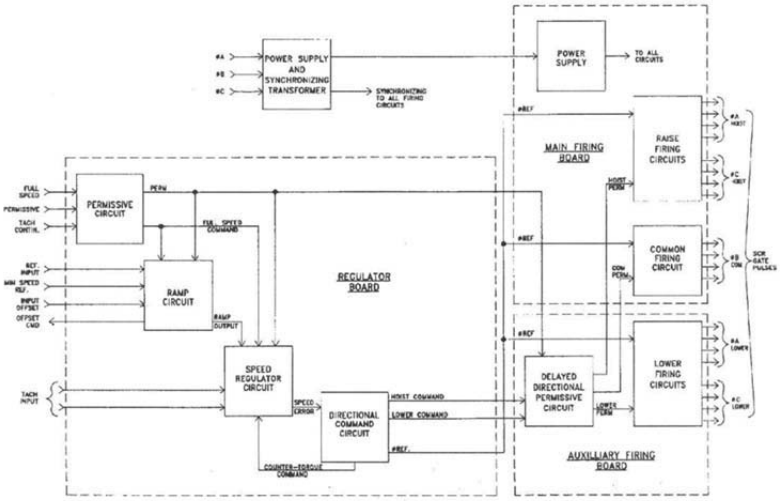

STATIC CONTROL ASSEMBLY
SYSTEM DIAGRAM
FIG. 2.2.1

August 2003 **Page 7**

Instruction Manual 4922C for Cranes

3.0 Specifications

I	**Input Power**	230V or 460V, 3 phase, 60 hz.,
II	**Horsepower Range (at 460V)**	5 - 40HP Compact Construction. 50 - 250 HP with external SCR's.
III	**Speed Range**	Typical 10 to 1 with full speed = 80% sync.
IV	**Speed Regulation**	Better than 1%.
V	**Control Configuration**	Static Reversing
VI	**Temperature Range**	- 40 C to + 55 degree C (typical) - 40 to + 70 degree C (electronics)

3.1 INITIAL SET-UP STATIC CONTROL ASSEMBLY.

The start-up adjustments of the Static Control Assembly involve the setting of the control potentiometers and jumper plugs. Following is a description of these adjustments and their functions. Refer to figure 3.1 for their respective locations.

Permissive Jumper

This jumper has two positions. The left position is the "Set-up" position and allows the ramp circuit adjustments to be made without operating the firing circuits. The right position is the normal "Run" position. In this position the firing circuit permissive signal is active and the firing circuits will operate. Note...with the jumper in the "Set-up" position, the remaining control circuit will be active and holding brakes may be released when direction control commands are issued. To prevent unintended motion, disable the brake control circuit by removing the brake circuit fuses.

Ramp Select Jumper

This jumper has two positions. The upper position, "Internal", is the most common position, and connects the internal ramp signal to the speed regulator circuit. The lower position, "External", is used when the speed regulator circuit is to operate with an outside reference signal such as when two or more drives are to be speed matched from a common ramp signal. Unless the application involves a speed matching function with two or more drives operating in a "Master / Slave" arrangement, place the Ramp Select jumper in the "Internal" position.

RPM Select Jumper

This jumper has five positions, and provides the correct scaling factor for the system tachometer based on the synchronous speed of the driven motor.

The jumper positions available are:

1800 RPM
1200 RPM
900 RPM
720 RPM
600 RPM

For systems not using a Tachometer / Overspeed Switch assembly, place the RPM Select jumper in the corresponding synchronous speed position for the motor used. If

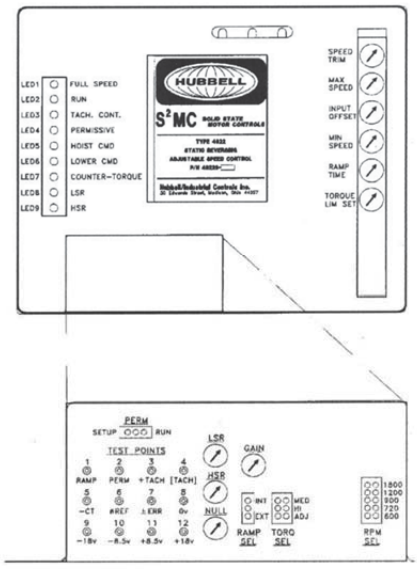

FIG. 3.1

a Tachometer / Overspeed Switch assembly is used, place the RPM Select jumper in the 1200 RPM position. This is necessary because the incorporated tachometer is geared for 1200 RPM operation at motor synchronous speed.

Torque Select Jumper

This jumper is used to select the limited torque value supplied by the motor during counter-torque and plugging operations. The "HI" position, recommended for hoisting applications, limits motor torque to 200% to 250% during counter-torque. The "MED" position limits torque to 150% torque, and the "ADJ" position provides an adjustable range of 50% to 150%. Initially place this jumper in the "HI" position.

Speed Trim Potentiometer

The Speed Trim Potentiometer is used to make fine adjustments in system speed. In typical single motor applications or in multi-motor applications where the motors operate independently, this adjustment should be set to the "50" position. In "Master / Slave" speed matching applications with the Master drive set to the "50" position, this adjustment allows the "Slave" drive to be trimmed to match the speed of the "Master" drive. Initially, set this pot to the "50" position.

Minimum Speed Potentiometer

The Minimum Speed Potentiometer sets the minimum speed signal level out of the ramp circuit. Initially, this potentiometer is set fully counterclockwise to the "0" position.

Maximum Speed Potentiometer

The Maximum Speed Potentiometer determines the amount of scaling that is applied to the input speed reference signal. After the minimum speed signal level has been set, this adjustment will set the full speed level of the input speed reference signal. Initially, this potentiometer is set fully clockwise to the "100" position.

Input Offset Potentiometer

This potentiometer is used to remove residual first point master switch or pendant speed reference signal arising from a speed reference potentiometer without an off-point shorting band. Set this potentiometer fully counterclockwise to the "0" position.

Ramp Time Potentiometer

The Ramp Time potentiometer sets the slope of the output ramp signal to the speed regulator circuit. The adjustment range is from 0.5 seconds at the full counterclockwise position to 10.0 seconds at the full clockwise "100" position. This adjustment determines how quickly the ramp output signal is allowed to increase or decrease. Initially, this potentiometer is set fully counterclockwise to the "0" position.

Torque Limit Set

This potentiometer sets the value of limited motor torque during counter-torque or plugging operations when the torque select jumper, described above, is placed in the "ADJ" position. The adjustment range is from 50% to 150%. Initially, set this potentiometer fully clockwise to the "100" position.

LSR Trim Potentiometer

This adjustment is located directly on the main regulator board and sets the motor speed value above which the "LSR" LED will light, and the LSR relay will pick up. The adjustment range is 5% at full counterclockwise to 25% when fully clockwise. Set this potentiometer mid range.

HSR Trim Potentiometer

This adjustment is located directly on the main regulator board and sets the motor speed value above which the "HSR" LED will light, and the HSR relay will pick up. The adjustment range is 75% at full counterclockwise to 95% when fully clockwise. Set this potentiometer fully counterclockwise.

Gain Potentiometer

This potentiometer is located on the main regulator board and is used to adjust system stability. Initially, set this potentiometer mid range.

Null Potentiometer

This potentiometer is located on the main regulator board and is used to adjust the speed regulator offset. This is a factory adjustment and needs no further attention. Should the setting of this potentiometer be disturbed, return the setting to a mid range position.

3.2 SETUP ADJUSTMENTS

Section 3.1 above described the system adjustments and the initial settings of these adjustments. This section describes the procedure by which the system can be setup. Refer to Figure 3.1 for control adjustment locations.

1. Using a digital voltmeter set to read 20 volts DC, place the black common meter probe tip into test point 8, 0V. The black common lead will remain in this test point for the remainder of the set up procedure.

Place the red meter probe tip into test point 1, Ramp output. For Hoist commands from the master switch or pendant, the output voltage should be positive. For Lower commands, the output should be negative. The following setup will use Lower commands, therefore, a negative voltage on the digital voltmeter is expected.

2. Move the Permissive Jumper from the "Run" position to the "Setup" position. The firing circuits are now disabled. Note.. holding brakes may be released during the remaining setup procedure. To prevent unintended movement, disable the brake control circuit by removing the brake circuit fuses.

3. Close the Control circuit breaker and apply 3 phase system power. The "Tach Continuity" LED should light on the SCA, and the LED on the tach continuity module, if present, should be lit.

4. A typical speed range is 10 to 1 with maximum stepless speed equal to 5.O volts, and minimum speed equal to 0.5 volts. Assuming a typical speed range, proceed as follows:

a. Move the master switch or depress the pendant button until first point lower is obtained. The "Run", "Perm", and "Lower" LEDs should light.

b. Rotate the Input Offset potentiometer clockwise until the digital voltmeter reads 0V.

Instruction Manual 4922C for Cranes

c. Move the master switch in the Lower direction or depress the Lower pendant button until the Full Speed LED lights. Back up from this position until the Full Speed LED just goes out and hold at this point. Adjust the Max Speed potentiometer counterclockwise until a reading of -4.5 volts is obtained on the digital voltmeter. Repeat steps b. and c. until no further adjustments are necessary. Typically, three iterations are required to obtain a 0V reading at first point, and a -4.5V setting at the maximum stepless position.

d. Move the master switch or depress the Lower pendant button until first point Lower is obtained. Rotate the Min Speed potentiometer clockwise until a -0.5V reading is obtained on the digital voltmeter.

e. Move the master switch or depress the Lower pendant button to the last stepless position. The digital voltmeter should read -5.0V.

f. Check the minimum speed and maximum stepless speed points in the Hoist direction. The "Lower" LED should go off and the "Hoist" LED should come on. The digital voltmeter should read +0.5V and +5.0V respectively.

g. Return the master switch or the pendant button to the Off position. The digital voltmeter should indicate 0.0 volts. Determine the required system speed ramp time. The Ramp can provide times to full output from 0.5 seconds to 10 seconds. Rotate the Ramp Time adjustment potentiometer clockwise to the desired time setting. Hoist applications typically use short acceleration times of 0.5 to 2.0 seconds for good response.

5. Determine the relative synchronous speed of the system tachometer. Move the RPM Select jumper to the RPM position corresponding to the tachometer synchronous speed value.

NOTE: When a Hubbell Tachometer/Overspeed Switch Assembly is used, the 1200 RPM range must be selected.

6. Open the Main and Control circuit breakers and remove system power. Move the Permissive Jumper on the regulator board from the "Setup" position to the "Run" position. Restore operation to the holding brake circuit by reinstalling the brake circuit fuses. Close the main and control circuit breakers. The motor control system will now be able to operate the motor.

7. Assuming that the hook is in the UP position, attempt to operate the motor at first point Lower by moving the master switch or by depressing the pendant Lower button. The hook should descend at minimum speed. If the motor appears to be running at full speed, stop the control and reverse the tachometer leads.

8. Observe the operation of the motor to changes in speed reference. This can be accomplished by moving the master switch or pendant button between minimum and mid speed positions. This causes the Ramp output to increase and then decrease. Watch the directional "Lower" and "Hoist" command LEDs for direction command changes and the incandescent lights on the Firing Circuit boards for relative performance and stability. One change in the directional command LEDs is normal indicating the slow down operation. If "back and forth" oscillation of the direction LEDs or repetitive flickering of the Firing Circuit Lights occurs, adjustment of the "Gain" potentiometer on the regulator board will be required. The best performance will be obtained when the Gain potentiometer is adjusted to provide smooth steady response to speed reference changes without repetitive flickering of the firing circuit lights or continued oscillation of the direction command LEDs.

9. Open the Control and Main circuit breakers. This completes the set up of the motor control system.

Hubbell Industrial Controls, Inc.
A subsidiary of Hubbell Incorporated
4301 Cheyenne Dr., Archdale, NC. 27262
Telephone (336) 434-2800 • FAX (336) 434-2803
http://www.hubbell-icd.com
Sales@hubbell-icd.com

THIS PAGE INTENTIONALLY LEFT BLANK

CHAPTER 12 - CONTACTS, TELEPHONE NUMBERS AND EMERGENCY CALL OUTS

12.1 CONTACTS AND TELEPHONE NUMBERS

Delaware State Police.....302.739.5901

United States Coast Guard.....757.398.6390

Delaware Department of Transportation (Maintenance).....302.326.4460

Delaware Department of Transportation (General)..... 302.760.2080

Fire Department 302.576.3950

Third Street Bridge.....302.577.2666

NOAA (National Oceanic and Atmospheric Administration).....206.526.6317

DelDOT (Maintenance).....302.326.4460

DelDOT (General).....302.760.2080

12.2 EMERGENCY CALL OUT PROCEDURES

During emergency situations, the following procedures and protocols should be followed.

12.2.1 MALFUNCTION (FAILURE TO OPEN OR CLOSE)

During maintenance inspection or marine vessel openings, if the bridge cannot be opened or closed contact order should be as follows:

1) Area 23 Supervisor
2) Area 23 Foreman
3) Delaware State Police (only if traffic needs to be detoured)

12.2.2 DAMAGE TO BRIDGE FROM VESSEL OR VEHICLE

When damage to the bridge is observed or detected, contact order should be as follows:

12.2.2.1 MINOR DAMAGE

When damage will not hamper normal bridge operation, perform the following:

1) Log in log book
2) Notify Area 23 Supervisor or Foreman at earliest convenience.

12.2.2.2 MAJOR DAMAGE

When damage may hamper normal bridge operation, perform the following:

1) Notify Area 23 Supervisor or Foreman immediately.
2) Notify Delaware State Police
3) Log in log book

12.2.3 VEHICLE ACCIDENT OR DISABLED VEHICLE ON BRIDGE

When an accident occurs on the bridge or a disabled vehicle is observed, perform the following:

1) If accident, check about possible injuries, notify Delaware State Police.
2) DO NOT operate the bridge if an accident or disabled vehicle is within the operational area of the bridge.
3) If it is an injury accident before or after operational area of the bridge contact emergency services (911) at the scene before proceeding with an opening.
4) If unable to open the bridge due to an accident or disabled vehicle notify any waiting vessels and the Coast Guard.

12.2.4 MARINE RELATED EMERGENCIES

For a marine related accident or emergency contact the following:

1) US Coast Guard
2) Area 23 Supervisor or Foreman

12.2.5 WEATHER RELATED EMERGENCIES

For weather related accident or emergencies contact the following:

1) Delaware State Police and NOAA
2) Area 23 Supervisor or Foreman

Bridge #2-021A

Rehoboth Boulevard Bridge
over Mispillion River

Prepared by:

Hardesty & Hanover

MAINTENANCE MANUAL – VOLUME II

DelDOT

Prepared for:

AECOM

Published: June 2014

Updated: July 2018 (Replacement Chapter 8)

VOLUME 2: MAINTENANCE - TABLE OF CONTENTS

CHAPTER 6 - PURPOSE AND SCOPE OF MAINTENANCE MANUAL 6-1
6.1 PURPOSE OF MAINTENANCE MANUAL 6-1
6.2 LAYOUT OF MAINTENANCE MANUAL 6-1
6.3 REFERENCES 6-1

CHAPTER 7 - MAINTENANCE POLICIES 7-1
7.1 INTRODUCTION 7-1
7.2 MAINTENANCE TECHNICIAN TRAINING 7-1
7.2.1 BRIDGE LAYOUT 7-1
7.2.2 BRIDGE OPERATION 7-1
7.2.3 TROUBLESHOOTING AND EMERGENCY SITUATIONS 7-1
7.2.4 BRIDGE MAINTENANCE 7-1
7.3 LOCKOUT/TAGOUT PROCEDURE 7-1
7.4 PERSONAL PROTECTIVE EQUIPMENT 7-1
7.5 MAINTENANCE ACCESS 7-1
7.5.1 CONTROL ROOM 7-1
7.5.2 ELECTRICAL ROOM 7-2
7.5.3 MACHINERY PLATFORM 7-2
7.5.4 FENDERS 7-2
7.6 MAINTENANCE OPENINGS 7-2
7.7 MAINTENANCE AND BRIDGE OPERATORS DURING OPENINGS 7-2
7.8 MAINTENANCE FORMS 7-2
7.9 MAINTENANCE REPORTING PROCEDURES 7-3

CHAPTER 8 - ELECTRICAL AND MECHANICAL MAINTENANCE 8-1
8.1 LEAF SUPPORT SYSTEM AND COUNTERWEIGHT 8-1
8.1.1 SEGMENTAL GIRDERS & TRACK PLATES 8-1
8.1.2 LIVE LOAD BEARINGS 8-2
8.1.3 COUNTERWEIGHT 8-3
8.2 SPAN DRIVE MACHINERY 8-3
8.2.1 MOTOR AND MACHINERY BRAKES 8-4
8.2.2 COUPLINGS 8-6
8.2.3 BEARINGS 8-7
8.2.4 OPEN GEARING 8-8

8.2.5 MANUAL CHAIN DRIVE SHEAVES 8-10
8.2.6 AIR BUFFER 8-10
8.2.7 INSTRUMENTATION DRIVE EQUIPMENT 8-11
8.3 SPAN LOCK MACHINERY AND CENTERING GUIDES 8-12
8.3.1 SPAN LOCK ASSEMBLY 8-12
8.3.2 CENTERING GUIDES 8-13
8.4 TRAFFIC GATES 8-14
8.4.1 WARNING GATES 8-14
8.4.2 BARRIER GATE 8-15
8.5 ELECTRICAL POWER SYSTEMS 8-16
8.5.1 CONTROL ENCLOSURES 8-16
8.5.2 SECONDARY RESISTORS 8-17
8.5.3 PANELBOARDS 8-18
8.5.4 TRANSFORMERS 8-19
8.5.5 PORTABLE GENERATOR RECEPTACLE 8-20
8.5.6 MANUAL TRANSFER SWITCH 8-20
8.5.7 SAFETY AND DISCONNECT SWITCHES 8-21
8.5.8 ELECTRICAL CONDUCTORS 8-22
8.5.9 DROOP CABLES 8-23
8.5.10 SUBMARINE CABLES 8-24
8.6 LIGHTING SYSTEMS 8-25
8.6.1 NAVIGATION LIGHTS 8-25
8.6.2 INTERIOR/EXTERIOR LIGHTS 8-25
8.6.3 TRAFFIC SIGNALS 8-26
8.6.4 TRAFFIC GATE ARM LIGHTS 8-27
8.7 ELECTRIC MOTORS 8-27
8.7.1 MAIN LEAF (SPAN) MOTOR 8-27
8.7.2 TRAFFIC GATE MOTORS 8-29
8.8 CONTROL SYSTEM 8-30
8.8.1 CONTROL CONSOLE 8-30
8.8.2 LIMIT SWITCHES 8-31
8.9 MISCELLANEOUS EQUIPMENT 8-33
8.9.1 HEATING AND AIR CONDITIONING SYSTEMS 8-33
8.9.2 SUMP PUMPS 8-33
8.9.3 HOT WATER HEATER 8-34

8.9.4 PLATFORMS 8-35
8.9.5 CONDUIT SYSTEMS 8-35

CHAPTER 9 - PHOTOS & TABLE OF CONTENTS 9-1
9.1 LEAF SUPPORT SYSTEM AND COUNTERWEIGHT 9-4
9.2 SPAN DRIVE MACHINERY 9-7
9.3 SPAN LOCK MACHINERY AND CENTERING EQUIPMENT 9-14
9.4 TRAFFIC CONTROL DEVICES AND NAVIGATION LIGHTS 9-16
9.5 POWER DISTRIBUTION EQUIPMENT 9-20
9.6 CONTROL EQUIPMENT 9-23
9.7 MISCELLANEOUS EQUIPMENT 9-30

CHAPTER 10 - MAINTENANCE FORMS & TABLE OF CONTENTS 10-1
10.1 MECHANICAL AND ELECTRICAL MAINTENANCE CHECKLISTS 10-1
10.1.1 FORM 10-1 – LEAF SUPPORT SYSTEM AND COUNTERWEIGHT 10-2
10.1.2 FORM 10-2 – SPAN DRIVE MACHINERY 10-3
10.1.3 FORM 10-3 – SPAN LOCK MACHINERY AND CENTERING GUIDES 10-5
10.1.4 FORM 10-4 – TRAFFIC GATES 10-6
10.1.5 FORM 10-5 – ELECTRICAL POWER SYSTEMS 10-7
10.1.6 FORM 10-6 – LIGHTING SYSTEMS 10-10
10.1.7 FORM 10-7 – ELECTRIC MOTORS 10-12
10.1.8 FORM 10-8 – CONTROL SYSTEM 10-13
10.1.9 FORM 10-9 – MISCELLANEOUS EQUIPMENT 10-15
10.1.10 FORM 10-10 – PORTABLE GENERATOR OPERATION 10-16

CHAPTER 11 - SUPPLEMENTAL INFORMATION & SPECIFICATIONS & TABLE OF CONTENTS 11-1
11.1 COMPONENT IDENTIFICATION CHARTS AND DIAGRAMS 11-3
11.2 MACHINERY LUBRICATION SCHEMATICS 11-5
11.3 MACHINERY LUBRICATION PLANNING TABLES 11-7
11.3.1 MACHINERY LUBRICATION SCHEDULE 11-7
11.3.2 LUBRICANT AND MATERIAL INVENTORY FORM 11-11
11.4 BRIDGE MAINTENANCE PERFORMANCE STANDARDS (PLATES) 11-12
11.4.1 SLEEVE AND COLLAR BEARING LUBRICATION 11-12
11.4.2 MOTOR BEARING LUBRICATION MAINTENANCE 11-13
11.4.3 MOTOR AND MACHINERY BRAKE MAINTENANCE 11-14
11.4.4 OPEN GEARING LUBRICATION 11-17
11.4.5 AIR BUFFER LUBRICATION 11-18

11.4.6 INSTRUMENTATION DRIVE CHAIN LUBRICATION 11-19
11.5 MATERIAL DATA SHEETS 11-20
11.5.1 MOBIL MOBILUX EP-2 11-20
11.5.2 MOBIL MOBILTAC 325 NC 11-31
11.5.3 MOBIL UNIREX N2 11-45
11.5.4 MOBIL DTE 21 11-55
11.5.5 MOBIL 600W CYLINDER OIL 11-68
11.5.6 CRC TAC 2 ADHESIVE CHAIN LUBRICANT 11-78
11.5.7 WD-40 SPECIALIST MACHINE AND ENGINE DEGREASER 11-87
11.5.8 CAIG LABORATORIES DEOXIT D5 CONTACT CLEANER 11-91
11.5.9 3-IN-ONE MULTI-PURPOSE OIL 11-99
11.6 COMPONENT MANUFACTURER LIST 11-103
11.7 MECHANICAL EQUIPMENT MANUALS AND SPECIFICATIONS 11-106
11.7.1 MOTOR BRAKE – EATON SIZE S10 11-106
11.7.2 MACHINERY BRAKE – MONDEL MBT/E-ED121/6S 11-112
11.8 TRAFFIC CONTROL EQUIPMENT MANUALS AND SPECIFICATIONS 11-145
11.8.1 WARNING GATE SCHEMATIC – B&B ROADWAY VT-40 11-145
11.8.2 BARRIER GATE SCHEMATIC – B&B ROADWAY VT-6801 11-171
11.9 ELECTRICAL EQUIPMENT MANUALS AND SPECIFICATIONS 11-194
11.9.1 SPAN POSITION ROTARY CAM LIMIT SWITCH – GENERAL ELECTRIC 11-194
11.10 LOCKOUT/TAGOUT PROCEDURE FOR REHOBOTH BOULEVARD 11-198
11.10.1 PURPOSE 11-198
11.10.2 RESPONSIBILITY 11-198
11.10.3 PREPARATION FOR LOCKOUT OF DE-ENERGIZED EQUIPMENT 11-198
11.10.4 INDIVIDUAL EMPLOYEE CONTROL PROCEDURE 11-199
11.10.5 SIMPLE LOCKOUT 11-199
11.10.6 COMPLEX LOCKOUT 11-199
11.10.7 SEQUENCE OF LOCKOUT SYSTEM PROCEDURES 11-200
11.10.8 RESTORING THE EQUIPMENT TO NORMAL CONDITION 11-201
11.10.9 UNATTENDED LOCKOUTS 11-202
11.10.10 TYPES OF DISCONNECTS 11-202
11.10.11 SIGNAGE 11-203
11.10.12 DISCIPLINE 11-203
11.10.13 EQUIPMENT 11-203
11.10.14 REVIEW 11-204

11.10.15 ASSOCIATED DOCUMENTS....11-204
11.10.16 LOCKOUT PROCEDURE TRAINING....11-204
11.10.17 LOCKOUT/TAGOUT LOG SHEET....11-205
11.10.18 LOCKOUT/TAGOUT INSTRUCTIONS FORM....11-206

CHAPTER 12 - CONTACTS, TELEPHONE NUMBERS, AND EMERGENCY CALL OUTS....12-1
12.1 CONTACTS AND TELEPHONE NUMBERS....12-1
12.2 EMERGENCY CALL OUT PROCEDURES....12-1
12.2.1 MALFUNCTION (FAILURE TO OPEN OR CLOSE)....12-1
12.2.2 DAMAGE TO BRIDGE FROM VESSEL OR VEHICLE....12-1
12.2.3 VEHICLE ACCIDENT OR DISABLED VEHICLE ON BRIDGE....12-2
12.2.4 MARINE RELATED EMERGENCIES....12-2
12.2.5 WEATHER RELATED EMERGENCIES....12-2

Refer to Volume 1 – Operations for Chapters 1-5

Refer to Volume 3 – As-Built Drawings for Chapters 13-14

CHAPTER 6 - PURPOSE AND SCOPE OF MAINTENANCE MANUAL

6.1 PURPOSE OF MAINTENANCE MANUAL

Schedules and procedures are established for the inspection, replacement, cleaning, adjustment, and general maintenance of the mechanical and electrical equipment used to operate the bridge. The frequency of maintenance is based on recommendations by the manufacturers and guidelines established by AASHTO Movable Bridge Inspection, Evaluation and Maintenance Manual. All maintenance forms and activities are to be recorded and maintained by the Maintenance Supervisor.

6.2 LAYOUT OF MAINTENANCE MANUAL

The maintenance section is divided into subsections that group equipment by type. Each subsection describes an equipment item, the number of such items, location, the maintenance frequency, and describes maintenance procedures. Photo references are included where applicable. Chapter 10 Maintenance Forms are identified for the specific equipment.

6.3 REFERENCES

- AASHTO Movable Highway Bridge Design Specifications
- AASHTO Movable Bridge Inspection, Evaluation, and Maintenance Manual
- Manual on Uniform Traffic Control Devises (MUTCD)
- Drawbridge Operation Regulations 33CFR Part 117
- National Electrical Code (NEC)
- National Fire Protection Association (NFPA) 70E - Standard for Electrical Safety in the Workplace

THIS PAGE INTENTIONALLY LEFT BLANK

CHAPTER 7 - MAINTENANCE POLICIES

7.1 INTRODUCTION

This chapter describes minimum qualifications for maintenance technicians and provides detailed information for maintenance personnel to properly maintain the bridge in accordance with AASHTO guidelines.

7.2 MAINTENANCE TECHNICIAN TRAINING

Maintenance technicians must be familiar with the layout of the bridge and all associated electrical and mechanical equipment and must be trained in the following areas. Training shall be scheduled and conducted by Delaware Department of Transportation.

7.2.1 BRIDGE LAYOUT

Each maintenance technician must be able to locate any piece of equipment of the bridge by name and designation (i.e. main leaf motor). He or she must have an in-depth understanding of the electrical and mechanical systems and understand the functions of these systems.

7.2.2 BRIDGE OPERATION

Maintenance technicians must be able operate the bridge and all ancillary devices in a safe manner as described herein. Each maintenance technician must be trained on all modes of operation and have a basic understanding of operation of the bridge.

7.2.3 TROUBLESHOOTING AND EMERGENCY SITUATIONS

Maintenance personnel must be trained in emergency situations and be capable to perform troubleshooting as described in this manual. In the event of an emergency, the operator must have knowledge of proper procedures described herein.

7.2.4 BRIDGE MAINTENANCE

Maintenance technicians must be trained in bridge maintenance activities as specified herein.

7.3 LOCKOUT/TAGOUT PROCEDURE

No electrical apparatus or electrically driven apparatus should be worked on while energized. The appropriate circuit breakers and/or disconnect handles for the equipment being worked on shall be locked in the open (off) position and tagged. The appropriate, immediate upstream circuit breaker or protective device should always be used to electrically isolate the equipment. A sign should be posted on the control desk to identify that the devices are tagged out of service. A contact person shall be identified on the tag. All lock-out and tag-out procedure shall meet the requirements of NFPA 70E. Use a voltage meter to check for stray voltage prior to servicing electrical equipment.

7.4 PERSONAL PROTECTIVE EQUIPMENT

Appropriate Personal Protective Equipment (PPE) should be utilized when performing all maintenance tasks. Refer to Section 11.5 “Material Data Sheets” for material information (including MSDS sheets) which indicate recommended PPE when handling specific materials. Appropriate PPE should also be used when working on electrical components.

7.5 MAINTENANCE ACCESS

Maintenance personnel can access the bridge equipment by following the description provided below.

7.5.1 CONTROL ROOM

The control room is located on the upper level of the control house and is accessible from the north side of the approach.

A control desk is installed in the control room, and contains pilot devices and indicating lights to operate traffic signals, leaf motors, warning gates, barrier gates, brakes, and navigation lights.

7.5.2 ELECTRICAL ROOM

The electrical room is located on the lower level of the control house. A ladder in the control house leads from the control room to the electrical room.

The following equipment is located in the electrical room:

- Manual transfer switch
- Contactor cabinet and secondary resistors
- Submarine cable termination box
- Motor control cabinet, lighting transformer, and panel board
- Sump pump, waste tank, waste tank pump, waste tank control panel
- Water heater

7.5.3 MACHINERY PLATFORM

The machinery platform is located above the roadway, and can be accessed from the ladder located on the sidewalk. The machinery platform contains the main leaf motor, coupling, motor and machinery brakes, open gearing, bearings, limit switches, and provides access to the counterweight.

7.5.4 FENDERS

Fenders can be accessed via boat. Fenders provide access to the fender navigation lights.

7.6 MAINTENANCE OPENINGS

For the requirements on maintenance openings, refer to Chapter 2.

7.7 MAINTENANCE AND BRIDGE OPERATORS DURING OPENINGS

The bridge must be staffed with the following personnel unless otherwise noted during all maintenance openings:

- Trained Bridge Operator
- Maintenance Technicians (not required for vessel openings)

The bridge operator shall be stationed in the control room level of the operator house. During emergency situations where the bridge and/or ancillary devices malfunction, one of the trained technicians shall be capable of relocating to the machinery platform as required.

The maintenance technicians shall be stationed in the vicinity of the electrical/mechanical equipment on the machinery platform and capable of relocating as directed by the operator.

7.8 MAINTENANCE FORMS

Maintenance personnel are required to complete maintenance forms provided in Chapter 10.

7.9 MAINTENANCE REPORTING PROCEDURES

All maintenance shall be conducted in accordance with procedures and protocols defined herein and in accordance with the latest edition of the AASHTO Movable Bridge Inspection, Evaluation and Maintenance Manual.

All maintenance activities shall be documented using forms provided in Chapter 10 of this manual. Record copies of maintenance forms shall be kept and filed by the supervisor.

THIS PAGE INTENTIONALLY LEFT BLANK

CHAPTER 8 - ELECTRICAL AND MECHANICAL MAINTENANCE

Each section of Chapter 8 is to be used in conjunction with Chapter 11 providing additional details on each component to be maintained.

8.1 LEAF SUPPORT SYSTEM AND COUNTERWEIGHT

The leaf support system consists of segmental girders and track plates, live load bearings, and a counterweight. The following outlines the basic maintenance of these items.

8.1.1 SEGMENTAL GIRDERS & TRACK PLATES

8.1.1.1 *DESCRIPTION*

The movable leaf is supported by two flat track plates which also provide the bearing surface of the movable leaf as it opens. A pair of segmental girders, located along the centerline of the bascule girders and bear on the flat track plates, provides the rotational movement of the leaf during openings. As the segmental girders rotate along the track plates, the movable leaf rotates open as well as translates backward to provide clearance for the navigational traffic.

The track plates and segmental girder tread plates interlock through pintels and pockets along the length of the track plates and the radius of the segmental girders. There are a total of fourteen pintels and pockets on each track plate and segmental girder tread plate, respectively.

The flat track plates are secured to a steel support beam with rivets. The steel support beam is simply supported by pier 2 and the north abutment. The flat track plates are made of cast steel and are approximately 20 feet long and comprised of three sections.

The segmental girders are comprised of a curved web plate, rolled steel tread plates, and riveted angles. The curved end of the web plate has a pair of angles riveted to the web. These same angles are also riveted to the segmental girder tread plate which provides a 13 foot radius from the center of rotation. Stiffeners are also secured to the web plate using rivets. The segmental girder is connected to the counterweight steel and vertical steel column (seated position).

The segmental girders and track plates do not require lubrication.

Refer to Photos numbered 9.1A and 9.1B.

8.1.1.2 *NUMBER OF ITEMS AND LOCATION*

There are two segmental girders and track plates. The segmental girders and track plates are located adjacent to the roadway.

8.1.1.3 *MAINTENANCE AND SCHEDULE*

!!! WARNING !!!

Use EXTREME CARE and ALWAYS REMOVE POWER from all pertinent electrical equipment, which includes multiple power sources, before beginning maintenance. Refer to Section 7.3, "Lockout/Tagout Procedure."

Document completed maintenance tasks on the maintenance checklists included in Appendix B of the Contract.

ANNUALLY	• Check track plates and segmental girder rivets for signs of corrosion and distress. Clean corrosion and contaminant and spot paint with matching paint. Painting should be done using the paint system specified by the DelDOT Standard Specifications for painting existing structural steel.

8.1.2 LIVE LOAD BEARINGS

8.1.2.1 *DESCRIPTION*

The live load bearings react against the live load from traffic. Each live load bearing consists of a sole plate which is in contact with the masonry plate.

The sole plate and masonry plate are made of steel. The sole plates are riveted to the bottom flange of each bascule girder at the toe of the span. The masonry plates are mounted to the top of pier 1 by a pair of anchor bolts.

The live load bearings are adjusted by adding or removing shims between the masonry plate and pier 1.

Refer to Photos numbered 9.1C and 9.1D.

Refer to Section 11.1.1 (ID # 43 and 45) for component identification.

8.1.2.2 *NUMBER OF ITEMS AND LOCATION*

There is one live load bearing at the end of each bascule girder. The live load bearings are accessible from pier 1.

8.1.2.3 *MAINTENANCE AND SCHEDULE*

!!! WARNING !!!

Use EXTREME CARE and ALWAYS REMOVE POWER from all pertinent electrical equipment, which includes multiple power sources, before beginning maintenance. Refer to Section 7.3, "Lockout/Tagout Procedure."

Document completed maintenance tasks on the maintenance checklists included in Appendix B of the Contract.

THREE MONTHS	• Check that all live load bearing sole plates are in contact with their masonry plates when the span is closed. There should be no movement of the sole plate when heavy traffic loads cross the span. • Clean debris from all supporting members and plates.

ANNUALLY	• Check that all fasteners are tight. Tighten loose fasteners. • Inspect masonry plate grout for cracking and evidence of deterioration. • Check the contacting surfaces between the sole plate and masonry plate for deformations and wear. There should be no corrosion on the contact areas of either plate. Spot paint the live load bearings and fasteners if corroded. The sole plate and masonry plate contacting surfaces shall not be painted.

8.1.3 COUNTERWEIGHT

8.1.3.1 *DESCRIPTION*

The counterweight is a concrete mass that balances the weight of the bascule leaf forward of the center of rotation.

The counterweight has one pocket located on the front face where balance blocks or plates can be placed. Additional balance material is mounted on both sides of the east bascule girder web at the toe of the bridge.

Refer to Photos numbered 9.1E and 9.1F.

8.1.3.2 *NUMBER OF ITEMS AND LOCATION*

There is one counterweight located behind the center of rotation of the leaf.

8.1.3.3 *MAINTENANCE AND SCHEDULE*

!!! WARNING !!!

Use EXTREME CARE and ALWAYS REMOVE POWER from all pertinent electrical equipment, which includes multiple power sources, before beginning maintenance. Refer to Section 7.3, "Lockout/Tagout Procedure."

Document completed maintenance tasks on the maintenance checklists included in Appendix B of the Contract.

ANNUALLY	• Check counterweight balance block locations for proper drainage and clean out debris. • From the roadway and machinery platform, visually check the counterweight concrete for spalling, cracks, and signs of structural distress. • Check for shifting of balance blocks and balance plates. Neatly restack blocks or plates that have fallen over or shifted out of position.

8.2 SPAN DRIVE MACHINERY

The span drive machinery is located on the machinery platform above the roadway. Span drive machinery consists of one 15 HP electric motor, two brakes, five intermediate open gear sets, two rack and pinion sets, nineteen shaft bearings, one coupling, and nine shafts. The motor has a full load torque of 115 lb-ft at a speed of 680 RPM, and full load current of 46 Amperes.

8.2.1 MOTOR AND MACHINERY BRAKES

8.2.1.1 *DESCRIPTION*

The motor and machinery brakes are used for normal and emergency stopping of the leaf during bridge operations.

The motor brake was manufactured by Cutler Hammer (Eaton) and is a solenoid brake.

The machinery brake was manufactured by Mondel and is a hydraulically released electric shoe brake.

The motor brake model number is 511H996A. The machinery brake model number is 16MBT/E-ED121/6S. The motor brake has a 10 inch brakewheel and set to 125 ft-lbs. The machinery brake has a 16 inch brakewheel. At the time of creation of this manual, the machinery brake was set to provide 1350 ft-lbs of braking torque. The motor brake is spring set and magnetically released, as commanded by the bridge control system. The machinery brake is spring set and electro-hydraulically released, as commanded by the bridge control system.

Refer to Photos numbered 9.2A, 9.2B, 9.2C, 9.2D, and 9.2E.

Refer to Sections 11.1.1 (ID # 1 and 9) for component identification and 11.2.1 for lubrication schematics. Refer to Sections 11.7.1 and 11.7.2 for the manufacturer's manuals.

8.2.1.2 *NUMBER OF ITEMS AND LOCATION*

The span drive machinery is equipped with one motor brake and one machinery brake.

The motor brake is located at the shaft extension out of the back of the main leaf motor. The machinery brake is located on the east side of the machinery platform adjacent to the second intermediate open gear set.

8.2.1.3 *MAINTENANCE AND SCHEDULE*

!!! WARNING !!!

Use EXTREME CARE and ALWAYS REMOVE POWER from all pertinent electrical equipment, which includes multiple power sources, before beginning maintenance. Refer to Section 7.3, "Lockout/Tagout Procedure."

Document completed maintenance tasks on the maintenance checklists included in Appendix B of the Contract.

General	• In the event that brakes require the following items, refer to the Manufacturer's Operation and Maintenance Manuals for detailed instructions. • Machinery brake actuator repairs should be performed by a Mondel authorized specialist. Replacement thruster oil shall be provided by the Mondel authorized specialist. The motor brake and machinery brake frames shall be adjust by the Contractor.

ANNUALLY Refer to Section 11.4.3 for Bridge Maintenance Performance Standard)	Motor and Machinery Brake	• Inspect brake shoes and drums for wear, dust, dirt, grease, and proper adjustment. Check the brake pad thickness. Notify the Engineer if the remaining thickness is less than 1/16 inch. • Check clearance between the brake shoe and brakewheel. The measured gap shall have a minimum of 1/64" clearance between brake shoe and brakewheel when the brake is hand released. If the motor brake clearances need to be adjusted, the linkages shall be adjusted in accordance with Section 11.7.1. If motor brake linkages are adjusted, verify spring length and adjust if needed. Motor brake adjustment procedures are located within Section 11.7.1. If the machinery brake clearances need to be adjusted, the linkages shall be adjusted in accordance with Section 11.7.2. If adjustments are made to the machinery brake linkages, the reserve stroke and torque setting should be verified and adjusted as well. Machinery brake adjustment procedures are located within Section 11.7.2. • Inspect the mechanical linkages for wear, broken parts, and tightness of nuts and bolts. Check for freedom of moving parts (no binding or sticking). Check the brake housing and linkages for corrosion and signs of water dripping onto the brake. • Check for excessive heating of brake components evident by discoloration of metal parts. • Check operations of the brakes during test operations of the bridge. Check for any unusual odor and excessive vibrations. • Check adjustment of limit switches and hand release devices and adjust for proper operation. When the machinery brake hand release lever is pulled up or the motor brake hand release lever is pulled back, the brake pads should release from the brakewheel. The motor brake has two limit switches. The machinery brake has three limit switches. Verify brake limit switches provide proper indication at the control desk when the brake is set, released via the control system, and hand released. Adjust limit switch lever arms for proper indication. • Check for loose brake terminations. Tighten loose connections. • During winter months, verify that the brake pads are not frozen to the brakewheel.

	Machinery Brake	• Check brake reserve stroke height with a scale. The reserve stroke height of the machinery brake should be 0.7" +/- 1/16". The reserve stroke refers to the exposed thruster rod length, measured from the top of the thruster cover to the bottom of the circular thruster rod sleeve (refer to Figure 2 of Section 11.7.2). The machinery brake is equipped with an automatic adjustment mechanism designed to adjust the reserve stroke height as needed without operator adjustment. If the automatic adjustment mechanism is not providing the appropriate reserve stroke height, contact the manufacturer. • Check the machinery brake spring tension via the braking torque gage located near the brake thruster. At the time this Manual was created, the machinery brake torque setting was recorded to be 1350 ft-lbs. The torque is read by matching the top of the spring block to the corresponding torque value on the scale. To adjust the braking torque, turn the torque adjustment screw until the top of the spring block is at the appropriate location on the scale. Perform Item 5 in "Motor and Machinery Brakes" to confirm proper operation of the motor brakes after adjustment.
	Motor Brake	• Check the motor brake spring length. The motor brake spring length should be 5" +/- 1/16". Adjust the spring length adjustment nuts if needed. Refer to Section 11.7.1 for spring length adjustment procedure.

8.2.2 COUPLINGS

8.2.2.1 *DESCRIPTION*

The coupling transfers torque from one shaft to another.

The coupling, located on the machinery platform, is a custom rigid coupling manufactured by Earle Gear. There is one male coupling hub and one female coupling hub that were machined to engage with one another. The hubs are bolted together with six bolts. The coupling hubs are made of cast steel.

The coupling does not require lubrication.

Refer to Photos numbered 9.2B and 9.2C.

Refer to Section 11.1 (ID # 7) for component identification.

8.2.2.2 *NUMBER OF ITEMS AND LOCATION*

The span drive machinery has one coupling located within the main leaf motor enclosure on the machinery platform.

8.2.2.3 *MAINTENANCE AND SCHEDULE*

!!! WARNING !!!

Use EXTREME CARE and ALWAYS REMOVE POWER from all pertinent electrical equipment, which includes multiple power sources, before beginning maintenance. Refer to Section 7.3, "Lockout/Tagout Procedure."

!!! WARNING !!!

Do not disassemble couplings unless shafts are properly supported.

Document completed maintenance tasks on the maintenance checklists included in Appendix B of the Contract.

ANNUALLY	• Inspect keys and keyways at the coupling for tightness and cracking. • Check coupling flange bolts for corrosion and tightness. Tighten loose fasteners.

8.2.3 BEARINGS

8.2.3.1 *DESCRIPTION*

Sleeve and collar bearings support the span drive machinery shafting.

The sleeve bearings contain a split bushing secured to the cap and base. The collar bearings have a one piece cylindrical bushing secured to the cylindrical housing. The sleeve bearings have laminated brass liners located between the bearing cap and base for adjustment due to wear of the bushing. The collar bearings have no adjustment mechanism to compensate for wear of the bushing.

The main pinion shaft sleeve and collar bearings contain bronze bushings. The remaining sleeve and collar bearing bushings contain a Babbitt material.

A grease fitting is located in the bearing cap or in the bearing collar for each bearing.

Refer to Photos numbered 9.2B, 9.2C, 9.2E, 9.2F, 9.2G, 9.2H, 9.2J, 9.2K, and 9.2L.

Refer to Sections 11.1.1 (ID # 6, 10, 12, 15, 17, 18, 21, 22, 25, and 34) for component identification and 11.2.1 for lubrication schematics.

8.2.3.2 *NUMBER OF ITEMS AND LOCATION*

There are a total of eleven sleeve bearings and eight collar bearings used to support the machinery shafting located on the machinery platform.

8.2.3.3 *MAINTENANCE AND SCHEDULE*

!!! WARNING !!!

Use EXTREME CARE and ALWAYS REMOVE POWER from all pertinent electrical equipment, which includes multiple power sources, before beginning maintenance. Refer to Section 7.3, "Lockout/Tagout Procedure."

Document completed maintenance tasks on the maintenance checklists included in Appendix B of the Contract.

THREE MONTHS (Refer to Section 11.4.1 for Bridge Maintenance Performance Standard)	• With a grease gun, pump new grease into the bearing to completely purge the bearing of the existing grease. Remove excess purged grease. Use Mobil Mobilux EP-2 or equivalent.
ANNUALLY	• Check sleeve bearing cap and base fasteners and collar bearing flange fasteners for tightness. Tighten loose fasteners.

8.2.4 OPEN GEARING

8.2.4.1 *DESCRIPTION*

Each open gear set increases torque and reduces rotational speed to operate the bridge. Torque is transmitted between gear sets through shafting.

Working from the motor towards the main pinion and rack, the open gear sets are identified as the main leaf motor gear set, second intermediate gear sets, first intermediate gear sets, and main pinions and racks. The second intermediate gear set, first intermediate gear set, and main pinion and rack are symmetrical about the centerline of the bridge.

The main leaf motor gear set is located at the output of the main leaf motor and consists of two pinions and one gear. One pinion is mounted to the motor output shaft while the other pinion is located on the manual chain drive shaft. The gear is a 120 tooth spur gear with a 40.00 inch pitch diameter, standard 20° involute tooth profile, and a face width of 2 ½ inches. The gear is made of ASTM A27 Grade 70-36 cast steel and is keyed to the shaft. The pinions are 17 tooth spur gears with a 5.67 inch pitch diameter, standard 20° involute tooth profile, and a face width of 3 inches. The pinions are made of ASTM A668 Class D forged steel. The pinions are keyed to their shafts.

Each second intermediate gear set consists of a pinion and gear. The gear is a 94 tooth spur gear with a 31.33 inch pitch diameter, standard 20° involute tooth profile, and a face width of 2 ½ inches. The gear is made of ASTM A27 Grade 70-36 cast steel and is keyed to the shaft. The pinion is a 17 tooth spur gear with a 5.67 inch pitch diameter, standard 20° involute tooth profile, and a face width of 3 inches. The pinion is made of ASTM A668 Class D forged steel and is keyed to the shaft.

Each first intermediate gear set consists of a pinion, idler gear, and a gear. The gear is an 80 tooth spur gear with a 40.00 inch pitch diameter, standard 20° involute tooth profile, and a face width of 3 ½ inches. The gear is made of cast steel and is keyed to the shaft. The idler gear is a 56 tooth spur gear with a 28.00 inch pitch diameter, standard 20° involute tooth profile, and a face width of 3 ½ inches. The idler gear is made of cast steel and is keyed to the shaft. The pinion is a 17 tooth spur gear with an 8.50 inch pitch

diameter, standard 20° involute tooth profile, and a face width of 4 inches. The pinion is made of ASTM A668 Class D forged steel and is keyed to the shaft.

The final gear set on each end of the machinery platform is comprised of a main pinion and rack. Each rack is flat with 96 gear teeth, special 20° involute stub cast tooth profile, and a face width of 6 ½ inches. The rack is made of cast steel and is secured to the rack support frame using countersunk fasteners. Each main pinion is a 15 tooth spur gear with an 11.94 inch pitch diameter, special 20° involute stub cast tooth profile, and a face width of 6 ½ inches. The main pinions are keyed to the main pinion shafts.

All open gearing is lubricated with grease that must be brushed onto the gear teeth manually, as described below.

Refer to Photos numbered 9.1A, 9.1E, 9.2A, 9.2B, 9.2E, 9.2F, 9.2G, 9.2H, 9.2I, 9.2J, 9.2K, and 9.2L.

Refer to Sections 11.1.1 (ID # 3, 4, 11, 13, 16, 20, 24, 26, 27, and 32) for component identification and 11.2.1 for lubrication schematics.

8.2.4.2 *NUMBER OF ITEMS AND LOCATION*

The open gearing is located on the machinery platform located above the roadway. The main rack and pinion set is located outboard of the centerline of the bascule girders.

There are two main rack and pinion sets, two first intermediate gear sets, two second intermediate gear sets, and one spur gear set located at the output of the main leaf motor.

8.2.4.3 *MAINTENANCE AND SCHEDULE*

!!! WARNING !!!

Use EXTREME CARE and ALWAYS REMOVE POWER from all pertinent electrical equipment, which includes multiple power sources, before beginning maintenance. Refer to Section 7.3, "Lockout/Tagout Procedure."

Document completed maintenance tasks on the maintenance checklists included in Appendix B of the Contract.

THREE MONTHS (Refer to Section 11.4.4 for Bridge Maintenance Performance Standard)	• Remove any debris, including leaves, sand, dirt, and bird debris from the gear teeth. • Remove any lubricant and rags that has been displaced to non-contacting surfaces with scrapers. • Lubricate teeth using Mobil Mobiltac 325 NC or equivalent grease.
ANNUALLY (Refer to Section 11.4.4 for Bridge Maintenance Performance Standard)	• Remove debris and lubricant by hand with scrapers, WD-40 Specialist Machine and Engine Degreaser, and rags. Replace open gear lubricant using Mobil Mobiltac 325 NC or equivalent. • Verify that fasteners connecting the racks to the rack supports are secure and free of corrosion. Tighten loose fasteners. Spot paint corroded fasteners. • Visually inspect keys and keyways for cracking. Verify keys are secure within the keyways. • Observe the open gearing during raising and lowering operations. Note excessive vibrations, binding, and unusual noises.

8.2.5 MANUAL CHAIN DRIVE SHEAVES

8.2.5.1 *DESCRIPTION*

The manual chain drive sheaves are used to operate the bridge manually in case power is lost to the main leaf motor.

There are two manual chain drive sheaves located on the machinery platform. The manual drive chains are located in the control house. When installed onto the sheaves, the chains hang down to the roadway level to allow for manual operation of the bridge from the roadway.

The sheaves do not require lubrication.

Refer to Photo numbered 9.2K.

Refer to Section 11.1.1 (ID # 35) for component identification.

8.2.5.2 *NUMBER OF ITEMS AND LOCATION*

Two manual chain drive sheaves are located at the center of the machinery platform.

8.2.5.3 *MAINTENANCE AND SCHEDULE*

!!! WARNING !!!

Use EXTREME CARE and ALWAYS REMOVE POWER from all pertinent electrical equipment, which includes multiple power sources, before beginning maintenance. Refer to Section 7.3, "Lockout/Tagout Procedure."

Document completed maintenance tasks on the maintenance checklists included in Appendix B of the Contract.

ANNUALLY	• Verify manual drive sheave locking collars and set screws are secure on the shaft. Tighten set screws if loose.

8.2.6 AIR BUFFER

8.2.6.1 *DESCRIPTION*

The air buffer cushions the leaf as it is lowered into the seated position.

When the leaf reaches the nearly closed position, the air buffer piston rod contacts the strike plate mounted to the top of pier 1. As the span lowers, air is forced out of the air buffer adjustment valve located at the top of the air buffer cylinder.

The piston rod is guided with a piston rod guide mounted to the web of floorbeam 3. The piston rod guide contains a bronze bushing to support the piston rod.

Refer to Photos numbered 9.2M and 9.2N.

Refer to Sections 11.1.1 (ID # 36, 37, and 38) for component identification and 11.2.1 for lubrication schematics.

8.2.6.2 *NUMBER OF ITEMS AND LOCATION*

One air buffer is located on the movable leaf and is mounted to the web of floorbeam 3 along the centerline of the roadway.

8.2.6.3 *MAINTENANCE AND SCHEDULE*

!!! WARNING !!!

Use EXTREME CARE and ALWAYS REMOVE POWER from all pertinent electrical equipment, which includes multiple power sources, before beginning maintenance. Refer to Section 7.3, "Lockout/Tagout Procedure."

Document completed maintenance tasks on the maintenance checklists included in Appendix B of the Contract.

THREE MONTHS (Refer to Section 11.4.5 for Bridge Maintenance Performance Standard)	• Remove any debris build up from strike plate at pier 1. • Replace piston rod and strike plate lubricant with Mobil Mobilux EP-2 or equivalent.
ANNUALLY	• Check air buffer housing fasteners for tightness. Tighten loose fasteners. • Observe the air buffer during operation for unusual movement, binding, or sounds.

8.2.7 INSTRUMENTATION DRIVE EQUIPMENT

8.2.7.1 *DESCRIPTION*

The rotary cam limit switch is connected to shafting in the west first intermediate gear set. A sprocket is mounted at one of the shaft ends and transmits rotational motion to the sprocket mounted to the rotary cam limit switch shaft using a roller chain.

Refer to Photo numbered 9.2L.

Refer to Sections 11.1.1 (ID # 28, 29, and 30) for component identification and 11.2.1 for lubrication schematics.

8.2.7.2 *NUMBER OF ITEMS AND LOCATION*

One rotary cam limit switch roller chain and two sprockets are located on the west side of the machinery platform adjacent to the first intermediate open gear set.

8.2.7.3 *MAINTENANCE AND SCHEDULE*

!!! WARNING !!!

Use EXTREME CARE and ALWAYS REMOVE POWER from all pertinent electrical equipment, which includes multiple power sources, before beginning maintenance. Refer to Section 7.3, "Lockout/Tagout Procedure."

Document completed maintenance tasks on the maintenance checklists included in Appendix B of the Contract.

THREE MONTHS (Refer to Section 11.4.6 for Bridge Maintenance Performance Standard)	• Lubricate instrumentation roller chain using CRC TAC 2 Adhesive Chain Lubricant or equivalent.
ANNUALLY	• Check sprocket fasteners at the span drive machinery shaft location for tightness. Tighten loose fasteners.

8.3 SPAN LOCK MACHINERY AND CENTERING GUIDES

The span lock components are located at the top flange of the west bascule girder at the toe of the leaf and at the top flange of the southwest approach girder. There is only one span lock assembly on the bridge.

The span lock assembly is comprised of a span lock bar, pin, locking pin, and two lock bar sockets. One end of the lock bar is secured to the socket located on the movable leaf by a pin and the other end is secured to the socket mounted on the approach span with a locking pin. The locking pin is manually removed prior to opening the bridge to disengage the lock bar with the approach span.

The live load bearing masonry plates contain a beveled centering guide on the outboard side of both masonry plates which centers the movable leaf as it is lowered into the fully seated position.

8.3.1 SPAN LOCK ASSEMBLY

8.3.1.1 *DESCRIPTION*

The span lock bar is manually engaged/disengaged which provides a locking mechanism for the bascule leaf when in the seated position.

Prior to an opening, the lock bar is disengaged by manually removing the locking pin from the lock bar socket located on the top flange of the southwest approach span girder.

The span lock bar is made of forged steel. The lock bar sockets are made of a cast steel. The pins are made of steel.

The span lock assembly does not require lubrication.

Refer to Photos numbered 9.3A and 9.3B.

Refer to Section 11.1 (ID # 39, 40, 41, and 42) for component identification.

8.3.1.2 *NUMBER OF ITEMS AND LOCATION*

There is one span lock assembly located on the bridge. The span lock assembly is located on the top flange of the west bascule girder and is accessed from the sidewalk.

8.3.1.3 *MAINTENANCE AND SCHEDULE*

!!! WARNING !!!

Use EXTREME CARE and ALWAYS REMOVE POWER from all pertinent electrical equipment, which includes multiple power sources, before beginning maintenance. Refer to Section 7.3, "Lockout/Tagout Procedure."

Document completed maintenance tasks on the maintenance checklists included in Appendix B of the Contract.

ANNUALLY	• Verify span lock bar is engaged and sockets are secure and free of galling. • Inspect pins for damage and wear. Verify cotter pin is secure. • Check span lock bar socket fasteners for tightness. Tighten loose fasteners.

8.3.2 CENTERING GUIDES

8.3.2.1 *DESCRIPTION*

The centering guides align the toe of the movable leaf while in the seated position.

The centering guides are located on the outboard side of the live load bearing masonry plates. The centering guides comprise of a beveled plate approximately 5 inches high. The centering guides are secured to the masonry plates with four rivets.

The centering guides do not require lubrication.

Refer to Photo numbered 9.3C.

Refer to Section 11.1 (ID # 44) for component identification.

8.3.2.2 *NUMBER OF ITEMS AND LOCATION*

There are two centering guides located at pier 1 adjacent to the live load bearings.

8.3.2.3 *MAINTENANCE AND SCHEDULE*

!!! WARNING !!!

Use EXTREME CARE and ALWAYS REMOVE POWER from all pertinent electrical equipment, which includes multiple power sources, before beginning maintenance. Refer to Section 7.3, "Lockout/Tagout Procedure."

Document completed maintenance tasks on the maintenance checklists included in Appendix B of the Contract.

ANNUALLY	• Check that the centering guide components do not have pack rust and rivets are intact and do not indicate signs of distress or damage. If rivets are damaged or show signs of distress, notify Bridge Management. • Check the beveled plate for deformations and signs of damage. Components should have flaking paint brushed clean and spot painted.

8.4 TRAFFIC GATES

Traffic gates are comprised of warning gates and a barrier gate located on the approaches and are used to stop traffic prior to a bridge opening.

8.4.1 WARNING GATES

8.4.1.1 *DESCRIPTION*

Warning gates signal on and off going traffic to stop for a bridge opening.

The oncoming and off-going warning gates are model VT-40 and manufactured by B&B Roadway.

Refer to Photos numbered 9.4A, 9.4C, 9.4D, and 9.4E.

Refer to Sections 11.1.2 (ID # 48, 49, 50, 51, 52, 53, 54, 55, 56, 57, and 59) for component identification, 11.2.2 for lubrication schematics, and 11.8.1 for the manufacturer's manual for the VT-40 warning gates.

8.4.1.2 *NUMBER OF ITEMS AND LOCATION*

There are two warning gates. One located on each side of the bascule span. The warning gate machinery is located within each warning gate housing.

8.4.1.3 *MAINTENANCE AND SCHEDULE*

!!! WARNING !!!

Use EXTREME CARE and ALWAYS REMOVE POWER from all pertinent electrical equipment, which includes multiple power sources, before beginning maintenance. Refer to Section 7.3, "Lockout/Tagout Procedure."

Document completed maintenance tasks on the maintenance checklists included in Appendix B of the Contract.

SIX MONTHS	• Check the transmission oil level in both sections of the transmission housing. If oil is low, check seals for evidence of leaks and refill. If oil is cloudy or dirty, purge from the drain port, flush transmission housing and refill with Mobil 600W Cylinder oil or equivalent. Use Mobil 600W Cylinder Oil or equivalent compatible oil for flushing the housing. • Lubricate shaft bearings and rod ends until clean grease flows from the bearing purge ports. Use Mobil Mobilux EP-2 or equivalent. • Lubricate the rotary cam limit switch roller chain with CRC TAC 2 Adhesive Chain Lubricant or equivalent. • Check the roller chain tension and adjust tension if too loose or tight. The roller chain sag should be ¼" +/- $^{1}/_{8}$". • Check the clutch for slipping during operation of the barrier gate.
ANNUALLY	• Check hardware for damage and corrosion. Replace damaged hardware. • Check electrical connections and tighten loose connections. • Remove excess grease, oil and debris from equipment. • Check warning gate housing for corrosion. Clean and spot paint areas of corrosion on the housing. • Check condition of gaskets and replace if damaged.

8.4.2 BARRIER GATE

8.4.2.1 *DESCRIPTION*

Barrier gates prevent traffic from entering the draw span during an opening.

The barrier gate is model VT-6801 and manufactured by B&B Roadway.

Refer to Photos numbered 9.4A, 9.4F, and 9.4G.

Refer to Sections 11.1.2 (ID # 63, 64, 65, 66, 67, 68, 69, 70, 71, 72, 75, 76, 77, 78, and 80) for component identification, 11.2.2 for lubrication schematics, and 11.8.2 for the manufacturer's manual for the VT-6801 barrier gate.

8.4.2.2 *NUMBER OF ITEMS AND LOCATION*

There is one barrier gate located at the far (south) side of the bascule span. The barrier gate machinery is located within the barrier gate housing.

8.4.2.3 *MAINTENANCE AND SCHEDULE*

!!! WARNING !!!

Use EXTREME CARE and ALWAYS REMOVE POWER from all pertinent electrical equipment, which includes multiple power sources, before beginning maintenance. Refer to Section 7.3, "Lockout/Tagout Procedure."

Document completed maintenance tasks on the maintenance checklists included in Appendix B of the Contract.

SIX MONTHS	• Check the transmission oil level in both sections of the transmission housing. If oil is low, check seals for evidence of leaks and refill. If oil is cloudy or dirty, purge from the drain port, flush transmission housing, and refill with Mobil 600W Cylinder oil or equivalent. Use Mobil 600W Cylinder Oil or equivalent compatible oil for flushing the housing. • Lubricate shaft bearings and rod ends until clean grease flows from the bearing purge ports. Use Mobil Mobilux EP-2 or equivalent. • Lubricate the rotary cam limit switch roller chain with CRC TAC 2 Adhesive Chain Lubricant or equivalent. • Check the roller chain tension and adjust the tension if chain is too tight or loose. The roller chain sag should be $^{3}/_{8}$" +/- $^{1}/_{8}$".
ANNUALLY	• Check hardware for damage and corrosion. Replace damaged hardware. • Check electrical connections and tighten loose connections. • Remove excess grease, oil and debris from equipment. • Check barrier gate housing for corrosion. Clean and spot paint areas of corrosion on the housing. • Check condition of gaskets and replace if damaged.

8.5 ELECTRICAL POWER SYSTEMS

8.5.1 CONTROL ENCLOSURES

8.5.1.1 *DESCRIPTION*

Control enclosures house motor controllers, relays, contactors, over-current protection, etc. to control and operate the bridge and all ancillary devices. The motor control cabinet includes the control equipment required for warning gates, barrier gates, brakes, and main leaf motor. The contactor cabinet includes control equipment required for speed control of the main leaf motor. The sewer waste pump control panel includes control equipment required for the sewer waste pump.

Refer to Photos numbered 9.6A, 9.6B, 9.6C, 9.6L, 9.7A, and 9.7H.

8.5.1.2 *NUMBER OF ITEMS AND LOCATION*

A motor control cabinet, contactor cabinet (panel), and sewer waste pump control panel are located in the lower level of the control house.

8.5.1.3 *MAINTENANCE AND SCHEDULE*

!!! WARNING !!!

Use EXTREME CARE and ALWAYS REMOVE POWER from all pertinent electrical equipment, which includes multiple power sources, before beginning maintenance. Refer to Section 7.3, Lockout/Tagout Procedure.

Document completed maintenance tasks on the maintenance checklists included in Appendix B of the Contract.

THREE MONTHS	• Open and clean with a vacuum cleaner. • Remove accumulation of dirt, grease, and gum with DeoxIT D5 contact cleaner or equivalent. • Check for corrosion and moisture. • Examine connections for poor or loose connections and evidence of overheating. • Lubricate door hinges and latches with 3-IN-ONE Multi-Purpose Oil. • Inspect terminal block screws and hand tighten loose connections. • Inspect wiring from unit terminal blocks for deterioration of insulation. • Inspect all circuit breakers. Verify with a meter that continuity is broken on trip or switch off conditions. With the circuit breaker in the OFF position, use a multimeter to measure the current and voltage on the load side of the conductors. The multimeter should read 0 amps and 0 volts. • Check all starter contacts. Note when nearly all of the silver tip is gone and the contact tip support is exposed. Do not file the contacts. Filing or otherwise dressing the contacts only results in lost tip material and reduces starter life. • Check the condition of gaskets and replace if damaged.
ANNUALLY	• Check for discolored connections on terminals, contact supports, bus bars, or connectors. Discoloration usually indicates that overheating has occurred, probably because of loose connections. Clean connection points that are discolored. Tighten all loose hardware. Check wires and connectors for damage. • Operate the motor controller/contactor without load (turn circuit breakers off) and observe contact operation to be sure it opens and closes cleanly and that the contacts are fully sealed in the closed position. In order to manually operate a motor controller/contact without load, remove power to the MCC cabinet and with a non-conductive screwdriver, press the button on the contactor. The button is usually located on the front or bottom of the housing. Refer to Photo numbered 9.6L. • Operate the motor controller/contactor under load and check for loud noise and arcing, both on opening and on closing. A loud noise and arcing on closing is usually due to contact bounce.

8.5.2 SECONDARY RESISTORS

8.5.2.1 *DESCRIPTION*

The secondary resistors are used to control the speed of the motor based on the position of the span control drum switch. As the position of the span control drum switch increases, the speed and torque of the motor also increase.

Refer to Photos numbered 9.6C and 9.6D.

8.5.2.2 *NUMBER OF ITEMS AND LOCATION*

There is a single resistor bank installed above the contactor cabinet in a ventilated enclosure located in the lower level of the control house.

8.5.2.3 *MAINTENANCE AND SCHEDULE*

!!! WARNING !!!

Use EXTREME CARE and ALWAYS REMOVE POWER from all pertinent electrical equipment, which includes multiple power sources, before beginning maintenance. Refer to Section 7.3, "Lockout/Tagout Procedure."

Document completed maintenance tasks on the maintenance checklists included in Appendix B of the Contract.

ANNUALLY	• Clean the resistor enclosure with a vacuum. • Secure all loose hardware. • Check for discolored connections on terminals, contact supports, bus bars, or connectors. Discoloration usually indicates that overheating has occurred, probably because of loose connections. Clean connection points that are discolored. Tighten all loose hardware. Check wires and connectors for damage.

8.5.3 PANELBOARDS

8.5.3.1 *DESCRIPTION*

Lighting panelboards are assemblies of bus bars and main/branch circuit breakers. The circuit breakers provide over-current protection as well as a means of turning on and off electrical distribution circuits.

Refer to Photo numbered 9.5E.

8.5.3.2 *NUMBER OF ITEMS AND LOCATION*

A lighting panelboard is located adjacent to the motor control cabinet on the lower level of the control house.

8.5.3.3 *MAINTENANCE AND SCHEDULE*

!!! WARNING !!!

Use EXTREME CARE and ALWAYS REMOVE POWER from all pertinent electrical equipment, which includes multiple power sources, before beginning maintenance. Refer to Section 7.3, "Lockout/Tagout Procedure."

Document completed maintenance tasks on the maintenance checklists included in Appendix B of the Contract.

ANNUALLY	• Open and clean with a vacuum cleaner. • Remove accumulation of dirt, grease, and gum with DexoIT D5 contact cleaner or equivalent. • Check for moisture and corrosion. Replace corroded hardware. • Examine bus bar connections for poor or loose connections and evidence of overheating. If necessary, pop out, but do not disconnect the circuit breakers. • Lubricate door hinges and latches with 3-IN-ONE Multi-Purpose Oil. • Inspect all circuit breakers. Verify with a meter that continuity is broken on trip or switch off conditions. With the circuit breaker in the OFF position, use a multimeter to measure the current and voltage on the load side conductors. The multimeter should read 0 amps and 0 volts. • Measure resistance to ground at each panelboard using a clamp on ground resistance tester. Confirm that the main electrical service to the bridge is off before performing any test. Follow the meter manufacturer's recommendations for isolating the grounding electric. With the meter clamped around the grounding electrode, verify resistance is 25 ohms or less.

8.5.4 TRANSFORMERS

8.5.4.1 *DESCRIPTION*

Transformers are electrical devices that change the electrical power source by either changing the voltage or improving the power distribution. The transformer converts the incoming 240V AC power to 120V AC.

Refer to Photo numbered 9.5D.

8.5.4.2 *NUMBER OF ITEMS AND LOCATION*

There is one transformer located adjacent to the motor control cabinet on the lower level of the control house.

8.5.4.3 *MAINTENANCE AND SCHEDULE*

!!! WARNING !!!

Use EXTREME CARE and ALWAYS REMOVE POWER from all pertinent electrical equipment, which includes multiple power sources, before beginning maintenance. Refer to Section 7.3, "Lockout/Tagout Procedure."

Document completed maintenance tasks on the maintenance checklists included in Appendix B of the Contract.

ANNUALLY	• Open and clean with vacuum cleaner. • Check for corrosion and moisture. Replace corroded hardware. • Verify all hardware is secure. Tighten loose fasteners. • Check transformer components (terminals, insulation, etc.) for evidence of overheating

8.5.5 PORTABLE GENERATOR RECEPTACLE

8.5.5.1 *DESCRIPTION*

A portable generator receptacle is installed to power the bridge and ancillary equipment should utility power become unavailable. In the event power becomes unavailable, a portable generator can be used to operate the bridge. Requirements for portable generator operation are specified in Chapter 4.

Refer to Photo numbered 9.5C.

8.5.5.2 *NUMBER OF ITEMS AND LOCATION*

There is one generator receptacle located in an enclosure mounted to the exterior of the control house.

8.5.5.3 *MAINTENANCE AND SCHEDULE*

!!! WARNING !!!

Use EXTREME CARE and ALWAYS REMOVE POWER from all pertinent electrical equipment, which includes multiple power sources, before beginning maintenance. Refer to Section 7.3, "Lockout/Tagout Procedure."

Document completed maintenance tasks on the maintenance checklists included in Appendix B of the Contract.

ANNUALLY	• Visually inspect the generator receptacle, cables, and associated equipment for wear or damage. • Using an off-site portable generator, start and run the bridge for one complete opening using the main leaf motor. Refer to Section 4.2 "Portable Generator Operation" for additional information.

8.5.6 MANUAL TRANSFER SWITCH

8.5.6.1 *DESCRIPTION*

A manual transfer switch (MTS) is provided to change the incoming power source from the utility power source to a portable stand-by generator. A cord set is installed exiting the MTS that a portable generator can be connected in order to run the bridge during a power outage.

Prior to repairing or servicing the MTS for maintenance where the switch enclosure needs to be opened, it is recommended that the local utility company be contacted to schedule an outage. Working on exposed energized equipment may cause injury or death.

Refer to Photo numbered 9.5B.

8.5.6.2 *NUMBER OF ITEMS AND LOCATION*

A single manual transfer switch is located in the control house.

8.5.6.3 *MAINTENANCE AND SCHEDULE*

!!! WARNING !!!

Use EXTREME CARE and ALWAYS REMOVE POWER from all pertinent electrical equipment, which includes multiple power sources, before beginning maintenance. Refer to Section 7.3, "Lockout/Tagout Procedure."

Document completed maintenance tasks on the maintenance checklists included in Appendix B of the Contract.

ANNUALLY	• Test the switch with operation of the portable generator. • Remove accumulation of dirt, grease, and gum with DeoxIT D5 contact cleaner or equivalent. • Check for corrosion and moisture. • Examine for excessive heating of parts, discoloration of metal parts, charred insulation, odor, or blistering. • Check for freedom of moving parts. • Check for worn or broken mechanical parts. • Tighten loose mountings and connections. • Check for excessive vibration.

8.5.7 SAFETY AND DISCONNECT SWITCHES

8.5.7.1 *DESCRIPTION*

Switches are devices for making, breaking, or changing connections in an electric circuit under the conditions of the load for which it is rated. There are various types of switches; some of the more common are main circuit breakers and motor disconnect switches.

Refer to Photos numbered 9.4C, 9.4F, and 9.6B.

8.5.7.2 *NUMBER OF ITEMS AND LOCATION*

Safety and disconnect switches are located in the warning and barrier gate housings.

8.5.7.3 *MAINTENANCE AND SCHEDULE*

!!! WARNING !!!

Use EXTREME CARE and ALWAYS REMOVE POWER from all pertinent electrical equipment, which includes multiple power sources, before beginning maintenance. Refer to Section 7.3, "Lockout/Tagout Procedure."

!!! WARNING !!!
Use proper personal protective equipment when working on energized equipment. Arc flash and other dangers are present and may result in injury or death.

Document completed maintenance tasks on the maintenance checklists included in Appendix B of the Contract.

GENERAL	• When replacing contacts or other current-carrying parts, clean surfaces that are to be bolted together.
ANNUALLY	• Remove accumulation of dirt, grease, and gum with DeoxIT D5 contact cleaner or equivalent. • Check for corrosion and moisture. Replace corroded hardware. • Examine for excessive heating of parts, discoloration of metal parts, charred insulation, odor, or blistering. • Check for freedom of moving parts. • Check for worn or broken mechanical parts. • Tighten loose mountings and connections. • Check contacts for wear and pitting. • Check for excessive arcing. • Check condition of gaskets (for dust-tight or watertight units). Replace damaged gaskets. • For fused units, inspect all circuit breakers. Verify with a meter that continuity is broken on trip or switch off conditions. With the circuit breaker in the OFF position, use a multimeter to measure the current and voltage on the load side conductors. The multimeter should read 0 amps and 0 volts.

8.5.8 ELECTRICAL CONDUCTORS

8.5.8.1 *DESCRIPTION*

Conductors may be stranded single-conductor or multiple-conductor cables.

8.5.8.2 *NUMBER OF ITEMS AND LOCATION*

Numerous electrical conductors are located throughout the bridge.

8.5.8.3 *MAINTENANCE AND SCHEDULE*

!!! WARNING !!!

Use EXTREME CARE and ALWAYS REMOVE POWER from all pertinent electrical equipment, which includes multiple power sources, before beginning maintenance. Refer to Section 7.3, "Lockout/Tagout Procedure."

Document completed maintenance tasks on the maintenance checklists included in Appendix B of the Contract.

ANNUALLY	• Visually inspect terminations and splices for cracks, deterioration, corrosion, discoloring, or any other abnormalities. • Check tightness at each conductor termination at each terminal box. Tighten loose connections. • Check the strain relief fittings for signs of distress. • Inspect wires and electrical cables for grease and oil contamination, fraying, abrasions, sweating, cracked, melted or overheated blue tinted insulation. Clean the insulation of moisture, grease and oil after removing power sources if present.

8.5.9 DROOP CABLES

8.5.9.1 *DESCRIPTION*

Droop cables are flexible electrical conductors that are routed from the fixed portion of the bridge to the movable bascule span equipment.

Droop cables are provided on the bridge to provide power and control to leaf motor, brakes, limit switches, span navigation lights, etc. located on the movable span.

Refer to Photos numbered 9.6E and 9.6F.

8.5.9.2 *NUMBER OF ITEMS AND LOCATION*

Droop cables and associated terminal boxes/cabinets are located on the west side of the movable span.

8.5.9.3 *MAINTENANCE AND SCHEDULE*

!!! WARNING !!!

Use EXTREME CARE and ALWAYS REMOVE POWER from all pertinent electrical equipment, which includes multiple power sources, before beginning maintenance. Refer to Section 7.3, "Lockout/Tagout Procedure."

Document completed maintenance tasks on the maintenance checklists included in Appendix B of the Contract.

ANNUALLY	• Visually inspect terminations and splices for cracks, deterioration, corrosion, discoloring, or any other abnormalities. • Check tightness of each conductor termination at each terminal box. Tighten loose connections. • Check the strain relief fittings for signs of distress. • Check cables for any wear or abrasions on the outer jacket. • Inspect wires and electrical cables for grease and oil contamination, fraying, abrasions, sweating, cracked, melted or overheated blue tinted insulation. Clean the insulation of moisture, grease and oil after removing power sources if present.

8.5.10 SUBMARINE CABLES

8.5.10.1 *DESCRIPTION*

Submarine cables are electrical conductors routed from the control house underneath the river to the rest pier to distribute power and control to the warning gates, barrier gate, navigation lights, and associated controls on the far side of the bridge. The end of each submarine cable is connected to a terminal enclosure.

Refer to Photos numbered 9.6G and 9.6H.

8.5.10.2 *NUMBER OF ITEMS AND LOCATION*

The submarine cable and associated termination cabinets/boxes on the bridge are located as follows:

- Submarine cable (1) – One located beneath the riverbed and into the lower level of the control house
- Near Side Termination Box/Cabinet (1) – One located in the lower level of the control house
- Far Side Termination Box/Cabinet (1) – One located on the south approach

8.5.10.3 *MAINTENANCE AND SCHEDULE*

!!! WARNING !!!

Use EXTREME CARE and ALWAYS REMOVE POWER from all pertinent electrical equipment, which includes multiple power sources, before beginning maintenance. Refer to Section 7.3, "Lockout/Tagout Procedure."

Document completed maintenance tasks on the maintenance checklists included in Appendix B of the Contract.

ANNUALLY	• Visually inspect terminations and splices for cracks, deterioration, corrosion, discoloring, or any other abnormalities. • Check tightness of each conductor termination at each terminal box. Tighten loose connections. • Check the strain relief fittings for signs of distress. • Visually inspect the submarine cable and watch for signs of cracks, deterioration, and discoloration of the cable jacket.

8.6 LIGHTING SYSTEMS

8.6.1 NAVIGATION LIGHTS

8.6.1.1 *DESCRIPTION*

Pier lights are red lighting fixtures. Their function is to enhance visibility of the piers and locate the channel for marine vessels.

The red/green bascule span pendulum navigation lights are divided fixtures, with portions that are red and portions that are green. When the span is fully open, the two outboard lights located at the toe of the leaf turn from red to green. When the leaf is not fully open, all pendulum lights are red.

Refer to Photo numbered 9.4H.

8.6.1.2 *NUMBER OF ITEMS AND LOCATION*

Three red fender (pier) lights are located on each fender. There are two bascule span pendulum navigation lights located at the toe of the bascule span.

8.6.1.3 *MAINTENANCE AND SCHEDULE*

!!! WARNING !!!

Use EXTREME CARE and ALWAYS REMOVE POWER from all pertinent electrical equipment, which includes multiple power sources, before beginning maintenance. Refer to Section 7.3, "Lockout/Tagout Procedure."

Document completed maintenance tasks on the maintenance checklists included in Appendix B of the Contract.

MONTHLY	• Check navigation lights for proper operation. • Replace lamps if damaged or nonfunctional.
ANNUALLY	• Check gaskets and replace if damaged. • Tighten loose connections. • Check for corrosion of metal parts. Replace corroded hardware. • Check for worn or broken mechanical parts. Check for cracked lenses. • Replace lamps.

8.6.2 INTERIOR/EXTERIOR LIGHTS

8.6.2.1 *DESCRIPTION*

Various light fixtures are mounted throughout the bridge. The lighting panelboard is located in the lower level of the control house to feed the lights.

Refer to Photos numbered 9.7B, 9.7C, and 9.7D.

8.6.2.2 *NUMBER OF ITEMS AND LOCATION*

There are numerous lights located throughout the bridge in the control house and machinery platform.

8.6.2.3 *MAINTENANCE AND SCHEDULE*

!!! WARNING !!!

Use EXTREME CARE and ALWAYS REMOVE POWER from all pertinent electrical equipment, which includes multiple power sources, before beginning maintenance. Refer to Section 7.3, Lockout/Tagout Procedure.

Document completed maintenance tasks on the maintenance checklists included in Appendix B of the Contract.

MONTHLY	• Check for burned-out lamps. Replace burned-out lamps. Verify light switches function properly.
ANNUALLY	• Clean luminaire lenses, interior surfaces, and weep holes (where applicable). • Check gaskets and replace if damaged. • Tighten loose connections. • Inspect for corrosion of metal parts. Spot paint corroded components. • Check parts for wear or damage. • Test emergency light fixtures and batteries, replace batteries if not operational.

8.6.3 TRAFFIC SIGNALS

8.6.3.1 *DESCRIPTION*

Traffic signals caution roadway and pedestrian traffic before and during periods of span operation.

Refer to Photos numbered 9.4A, 9.4B, and 9.4G.

8.6.3.2 *NUMBER OF ITEMS AND LOCATION*

There are 2 traffic signals on each on-coming approach mounted to a mast arm assembly ahead of the warning gates. The lights turn from green to amber and then to red before each opening. A warning gong is located on each traffic signal assembly to alert on-coming traffic of a bridge opening. In addition, the far side approach has an advanced warning signal.

For inaccessible traffic signals, contact DelDOT Traffic Management Center (TMC) (Refer to Chapter 12 for contact phone number).

8.6.3.3 *MAINTENANCE AND SCHEDULE*

!!! WARNING !!!

Use EXTREME CARE and ALWAYS REMOVE POWER from all pertinent electrical equipment, which includes multiple power sources, before beginning maintenance. Refer to Section 7.3, "Lockout/Tagout Procedure."

Document completed maintenance tasks on the maintenance checklists included in Appendix B of the Contract.

MONTHLY	• Check lights for proper illumination and replace burned out bulbs. • Verify proper operation during marine and maintenance openings. • Check for proper operation and sound for each warning gong.
ANNUALLY	• Clean all reflectors, lenses, gongs, and spot paint heads. • Check wiring for deterioration.

8.6.4 TRAFFIC GATE ARM LIGHTS

8.6.4.1 *DESCRIPTION*

Traffic gate arm lights caution roadway traffic before and during periods of span operation.

Refer to Photos numbered 9.4 E and 9.4G.

8.6.4.2 *NUMBER OF ITEMS AND LOCATION*

There are red flashing traffic gate arm lights mounted on the two warning gate arms and one barrier gate arm.

8.6.4.3 *MAINTENANCE AND SCHEDULE*

!!! WARNING !!!

Use EXTREME CARE and ALWAYS REMOVE POWER from all pertinent electrical equipment, which includes multiple power sources, before beginning maintenance. Refer to Section 7.3, "Lockout/Tagout Procedure."

Document completed maintenance tasks on the maintenance checklists included in Appendix B of the Contract.

MONTHLY	• Check traffic gate arm lights for proper operation. Replace burned out bulbs.
SIX MONTHS	• Check traffic gate arm lights and wiring for damage.

8.7 ELECTRIC MOTORS

8.7.1 MAIN LEAF (SPAN) MOTOR

8.7.1.1 *DESCRIPTION*

The main leaf motors transform electric power to mechanical power to raise and lower the leaf.

Normal operation of the bridge utilizes one leaf motor. The main leaf motor is a 15HP motor operating at 680 RPM.

The main leaf motor bearings are lubricated through grease fittings at the front and back of the motor housing.

Refer to Photos numbered 9.2A, 9.2B, 9.2C, 9.2D, and 9.2I.

Refer to Sections 11.1.1 (ID # 2) for component identification and 11.2.1 for lubrication schematics.

8.7.1.2 *NUMBER OF ITEMS AND LOCATION*

The main leaf motor is located on the machinery platform inside an enclosure.

8.7.1.3 *MAINTENANCE AND SCHEDULE*

!!! WARNING !!!

Use EXTREME CARE and ALWAYS REMOVE POWER from all pertinent electrical equipment, which includes multiple power sources, before beginning maintenance. Refer to Section 7.3, "Lockout/Tagout Procedure."

DO NOT USE WATER TO HOSE DOWN THE MOTOR HOUSING

Document completed maintenance tasks on the maintenance checklists included in Appendix B of the Contract.

ANNUALLY (Refer to Section 11.4.2 for Bridge Maintenance Performance Standard)	• Check for leakage around bearings. Clean off excess grease and dirt using a rag and WD-40 Specialist Machine and Engine Degreaser or equivalent. • Verify that shaft end-play is normal by moving the motor shaft by hand (with power off and motor not in operation) and determining whether movement is excessive (more than 1/16"). • Inspect and tighten loose electrical connections on motor. • Verify that all keys, bolts, and pins are in their proper position. Check all bolts for tightness. If loose, tighten. • During operation, examine motor for smooth running and absence of vibration. • During operation, measure and record the motor housing and bearing temperatures with an infrared thermometer. Notify bridge management if the measured temperatures are above 100° F. • Lubricate main leaf motor bearings with Mobil Unirex N2 or equivalent. • Check painted surface for signs of corrosion. Clean and spot paint areas of corrosion. Do not paint nameplates. • Check the phase currents flowing in the motor under loaded conditions with a clamp-on ammeter. Utilize a true RMS ammeter. Compare the measured current with the nameplate data. Record values in the "Notes" sections of the maintenance checklist.
FIVE YEARS	• Clean and paint the motor. Do not paint nameplates.

8.7.2 TRAFFIC GATE MOTORS

8.7.2.1 *DESCRIPTION*

The electric motors for the barrier gates and warning gates transform electric power to mechanical power to operate each traffic gate. Each gate motor is provided with a solenoid brake to provide holding torque on the specific device.

Refer to Photos numbered 9.4C, 9.4D, and 9.4F.

Refer to Section 11.1.2 (ID # 46, 47, 61, and 62) for component identification.

8.7.2.2 *NUMBER OF ITEMS AND LOCATION*

Traffic gates and their locations are as follows:

- 1/2 HP warning gate motors (2) – One located inside each warning gate housing.
- 1 HP barrier gate motor (1) – One located inside the barrier gate housing.

8.7.2.3 *MAINTENANCE AND SCHEDULE*

!!! WARNING !!!

Use EXTREME CARE and ALWAYS REMOVE POWER from all pertinent electrical equipment, which includes multiple power sources, before beginning maintenance. Refer to Section 7.3, "Lockout/Tagout Procedure."

Use CAUTION and VERIFY gate arm travel areas are clear of personnel and all obstructions prior to operating the traffic gates for maintenance to prevent injury or damage to equipment. To observe the traffic gate components within the housing during operation with the housing door open, the traffic gate door limit switch must be manually depressed while the traffic gate is operating.

DO NOT USE WATER TO HOSE DOWN THE MOTOR HOUSING

Document completed maintenance tasks on the maintenance checklists included in Appendix B of the Contract.

ANNUALLY	Motors	• Check for leakage around bearings. Clean off excess grease and dirt using a rag and WD-40 Specialist Machine and Engine Degreaser or equivalent. • Inspect and tighten loose electrical connections on motor. • Verify that all keys, bolts, and pins are in their proper position. Check all bolts for tightness. If loose, tighten. • During operation, examine motor for smooth running and absence of vibration. • During operation, measure and record the motor housing and bearing temperatures with an infrared thermometer. Notify bridge management if the measured temperatures are above 100° F. • Check the phase currents flowing in motors under loaded conditions with a clamp-on ammeter for all motors. Utilize a true RMS ammeter. Compare the measured current with the nameplate data. Record values in the "Notes" sections of the maintenance checklist.

	Solenoid Brakes	• Check electrical connections and tighten loose connections. • Check components for wear or damage. Check for loose fasteners. Tighten loose fasteners. Check for freedom of moving parts (parts are free of binding and sticking). • Check for excessive heating of parts evidenced by discoloration of metal parts, charred insulation, or odor. Check for collections of dirt or gum, evidence of water dripping, or corrosion. Clean the solenoid brake components of dirt, gum, water, and corrosion. • Observe the brake during operation of the gate. Check for excessive vibration or unusual noise during operation.

8.8 CONTROL SYSTEM

8.8.1 CONTROL CONSOLE

8.8.1.1 *DESCRIPTION*

The control console is fabricated from an individual free standing cabinet which house indicating lights, selector switches, pushbuttons, meters, control relays, contactors, circuit breakers, fuses, and terminal blocks.

Refer to Photos numbered 9.6I and 9.6J.

8.8.1.2 *NUMBER OF ITEMS AND LOCATION*

The control console is located in the control room on the upper level of the control house.

8.8.1.3 *MAINTENANCE AND SCHEDULE*

!!! WARNING !!!

Use EXTREME CARE and ALWAYS REMOVE POWER from all pertinent electrical equipment, which includes multiple power sources, before beginning maintenance. Refer to Section 7.3, "Lockout/Tagout Procedure."

Document completed maintenance tasks on the maintenance checklists included in Appendix B of the Contract.

THREE MONTHS	• Open and clean with a vacuum cleaner. • Remove accumulation of dirt, grease, and gum with DeoxIT D5 contact cleaner or equivalent. • Check for corrosion and moisture. Replace corroded hardware. • Lubricate door hinges and latches with 3-IN-ONE Multi-Purpose Oil. • Inspect terminal block screws and tighten all loose connections. • Inspect wiring from unit terminal blocks for deterioration of insulation. • Inspect all circuit breakers. Verify with a meter that continuity is broken on trip or switch off conditions. With the circuit breaker in the OFF position, use a multimeter to measure the current on the load side conductors. The multimeter should read 0 amps and 0 volts. • Inspect all relays and hand tighten loose connections. • Check all pushbuttons, selector switches, and meters for damage and proper operation. • Check all indicating lights and verify that each lamp illuminates. Replace burned out bulbs. • Check condition of gaskets and replace if damaged.
ANNUALLY	• Check for discolored connections on terminals, contact supports, bus bars, or connectors. Discoloration usually indicates that overheating has occurred, probably because of loose connections. Clean connections points that are discolored. Tighten all loose hardware. Check wires and connectors for damage. • Manually operate each relay, where possible, with the associated circuit breakers off and observe contact operation to be sure it opens and closes cleanly and that the contacts are fully sealed in the closed position. In order to manually operate a relay or contactor with the associated circuit breaker off, verify that power is off, and with a non-conductive object, press the button on the relay. The button is usually located on the front or bottom of the housing. Refer to Photo numbered 9.6N. • Monitor relay and contactor operation during normal operation and check for loud noise and arcing, both on opening and on closing. A loud noise and arcing on closing is usually due to contact bounce.

8.8.2 LIMIT SWITCHES

8.8.2.1 *DESCRIPTION*

A limit switch is a switching device that provides feedback in an electrical circuit. When actuated, this device will restrict or initiate an operation.

Refer to Photos numbered 9.2A, 9.2D, 9.2E, 9.2L, 9.4C, 9.4D, 9.4F, and 9.6K.

Refer to Sections 11.1.1 and 11.1.2 (ID # 1, 9, 31, 58, 60, 73, 74, and 79) for component identification.

8.8.2.2 *NUMBER OF ITEMS AND LOCATION*

Limit switches and resolvers on the bridge are located as follows:

- Span Control
  - Eight Circuit Span Position Rotary Cam Limit Switch (1) – One located on the machinery platform (9.2A & 9.2L)
  - Motor Brake Limit Switches (2) – Two located on the motor brake frame (9.2D)

- Machinery Brake Limit Switches (3) – Three located on the machinery brake frame (9.2E)
- Fully Seated Proximity Switch (1) – One located under the pedestrian walkway near the toe of the bascule span (9.6K)

- Traffic Gate Control
  - 8 Circuit Warning Gate Rotary Cam Limit Switch (2) – One located inside each warning gate housing (9.4C)
  - 8 Circuit Barrier Gate Rotary Cam Limit Switch (1) – One located inside the barrier gate housing (9.4F)
  - Warning Gate Door Switches (4) – One located at each warning gate housing access door (9.4C & 9.4D)
  - Barrier Gate Door Switches (2) – One located at each barrier gate housing access door (9.4F)

8.8.2.3 *MAINTENANCE AND SCHEDULE*

!!! WARNING !!!

Use EXTREME CARE and ALWAYS REMOVE POWER from all pertinent electrical equipment, which includes multiple power sources, before beginning maintenance. Refer to Section 7.3, "Lockout/Tagout Procedure."

Document completed maintenance tasks on the maintenance checklists included in Appendix B of the Contract.

ANNUALLY	All Limit Switches	• Inspect all limit switches for wear. • Remove accumulated dust, dirt, and moisture on housing. Use a brush, soft cloth, or vacuum cleaner. • Remove accumulated dust, dirt, and moisture from all shafts, keeping it clean and free of galling. • Inspect latches, mounting hardware, and seals to ensure proper seal of housing. • Inspect all fasteners and tighten loose connections. Replace corroded hardware. • If accessible, remove the cover and visually inspect the condition of all internal parts. • Inspect limit switch wiring for deterioration. • Check for worn or broken mechanical parts.
	Rotary Cam Limit Switch	• Inspect the rotary cam limit switch cams and rollers for wear, corrosion and good contact between the fixed and movable parts.
	Fully Seated Proximity Switch	• Inspect all wiring for deterioration. • Inspect limit switch body and remove debris. • Inspect strike plate and magnet for corrosion and remove debris.

	Brake Limit Switches	• Inspect snap action contact blocks and integral component connections. Hand tighten loose connections. • Inspect all wiring from snap action contact blocks for deterioration. • Cycle lever arm several times.

8.9 MISCELLANEOUS EQUIPMENT

8.9.1 HEATING AND AIR CONDITIONING SYSTEMS

8.9.1.1 *DESCRIPTION*

Wall mounted comfort heaters and an air conditioning system serve to heat and cool the control house.

Refer to Photos numbered 9.7A, 9.7F, and 9.7G.

8.9.1.2 *NUMBER OF ITEMS AND LOCATION*

The air conditioning system is a ductless split system comprised of an indoor unit in the control house and an outdoor unit located outside of the control house. Wall mounted comfort heaters are located throughout the control house.

8.9.1.3 *MAINTENANCE AND SCHEDULE*

!!! WARNING !!!

Use EXTREME CARE and ALWAYS REMOVE POWER from all pertinent electrical equipment, which includes multiple power sources, before beginning maintenance. Refer to Section 7.3, "Lockout/Tagout Procedure."

Document completed maintenance tasks on the maintenance checklists included in Appendix B of the Contract.

MONTHLY	• Visually inspect all air filters. Replace dirty or damaged filters. • Check all cooling coils, seals, fittings, ducting connections, and pipelines for leaks. • Inspect the condition of all safety devices where provided, for deterioration including thermostat and thermal limit safety switch. • Check the performance of all equipment related to temperature and humidity control.

8.9.2 SUMP PUMPS

8.9.2.1 *DESCRIPTION*

Sump pumps are used to remove water and waste water from the control house.

Refer to Photos numbered 9.7A and 9.7E.

8.9.2.2 *NUMBER OF ITEMS AND LOCATION*

The sewer waste pump system is used to remove waste water from the lower level of the control house. The sewer waste pump system includes a wall mounted control panel, located adjacent to the sewer waste tank.

A plug in type pump system is also installed in the lower level of the control house to pump water from the control house.

8.9.2.3 *MAINTENANCE AND SCHEDULE*

!!! WARNING !!!

Use EXTREME CARE and ALWAYS REMOVE POWER from all pertinent electrical equipment, which includes multiple power sources, before beginning maintenance. Refer to Section 7.3, "Lockout/Tagout Procedure."

Document completed maintenance tasks on the maintenance checklists included in Appendix B of the Contract.

MONTHLY	Sump Pump & Sewer Waste Pump	• Check that the motor is free of all debris. • During operation, examine pumps for smooth running and absence of excessive vibration. The pumps should not be operated without water in the sump wet well or sewer waste tank. • During operation, check pump piping and sewer waste tank for leaks.
	Sewer Waste Pump	• Test operation of the sewer waste pump by turning the switch, located inside the sewer waste control panel, to the HAND position (See Photo 9.7H). The pump should not be operated if the sewer waste tank is empty.
	Sump Pump	• Test operation of the sump pump by lifting up on the float switch located near the pump motor (See Photo 9.7E). The sump pump should not be operated without water in the sump wet well. • Dump buckets of water or run water from a hose into the sump to test the pump's response. Verify that water is pumped out from the sump and there is no back-flow. Do not flood the surrounding floor or area.

8.9.3 HOT WATER HEATER

8.9.3.1 *DESCRIPTION*

A hot water heater is used to supply the bathroom sink with hot water.

Refer to Photo numbered 9.7A.

8.9.3.2 *NUMBER OF ITEMS AND LOCATION*

A single hot water heater is located in the lower level of the control house.

8.9.3.3 *MAINTENANCE AND SCHEDULE*

!!! WARNING !!!

Use EXTREME CARE and ALWAYS REMOVE POWER from all pertinent electrical equipment, which includes multiple power sources, before beginning maintenance. Refer to Section 7.3, "Lockout/Tagout Procedure."

Document completed maintenance tasks on the maintenance checklists included in Appendix B of the Contract.

MONTHLY	• Check the unit and associated piping for leaks. • Turn the hot water on at the bathroom sink and verify that the water turns hot.

8.9.4 PLATFORMS

8.9.4.1 *DESCRIPTION*

The machinery platform above the roadway provides access to the counterweight pocket and various electrical and mechanical components.

Refer to Photos numbered 9.1E, 9.1F, 9.2A, and 9.2B.

8.9.4.2 *NUMBER OF ITEMS AND LOCATION*

One machinery platform is located above the roadway.

8.9.4.3 *MAINTENANCE AND SCHEDULE*

!!! WARNING !!!

Use EXTREME CARE and ALWAYS REMOVE POWER from all pertinent electrical equipment, which includes multiple power sources, before beginning maintenance. Refer to Section 7.3, "Lockout/Tagout Procedure."

!!! WARNING !!!

Use EXTREME CARE and VERIFY that electrical components and enclosures do not get wet.

Document completed maintenance tasks on the maintenance checklists included in Appendix B of the Contract.

SIX MONTHS	• Clean and power wash the machinery platform of dirt and debris. Electrical equipment must be protected prior to power washing walkways to prevent water from entering any electrical component. Water intrusion may cause failure to components.

8.9.5 CONDUIT SYSTEMS

8.9.5.1 *DESCRIPTION*

Conduit is installed throughout the electrical room and the machinery platform for protection and routing of electrical wiring to electrical equipment.

Refer to Photos numbered 9.2C, 9.2D, 9.2H, 9.2L, 9.5B, 9.5C, 9.5D, 9.5E, 9.6B, 9.6C, 9.6D, 9.6E, and 9.6K.

8.9.5.2 *NUMBER OF ITEMS AND LOCATION*

Conduit is installed throughout the electrical room and the machinery platform to house field wiring for electrical equipment.

8.9.5.3 *MAINTENANCE AND SCHEDULE*

!!! WARNING !!!

Use EXTREME CARE and ALWAYS REMOVE POWER from all pertinent electrical equipment, which includes multiple power sources, before beginning maintenance. Refer to Section 7.3, "Lockout/Tagout Procedure."

Document completed maintenance tasks on the maintenance checklists included in Appendix B of the Contract.

ANNUALLY	• Open and clean boxes with a vacuum cleaner. • Remove accumulation of dirt, grease, and gum from conduit. • Check for corrosion and moisture. Check conduit for cracking or other damage. Replace corroded hardware. • Tighten loose mountings and connections. • Check condition of gaskets in boxes and replace gaskets if damaged. • Lubricate door hinges and latches, where provided, with 3-IN-ONE Multi-Purpose Oil. • Check and clean all drain holes and fittings.
FIVE YEARS	• Clean and paint all corrosion and oxidation from steel conduit and supports. • Where PVC coated steel conduit is installed, apply touch up compound to cracks and/or cuts in coating.

CHAPTER 9 - PHOTOS

GUIDE TO PHOTOS

9.1 Leaf Support System and Counterweights

9.1A - Typical Segmental Girder and Track Plate 9-3
9.1B - Typical Segmental Girder and Track Plate Interface 9-3
9.1C - Typical Live Load Bearing 9-4
9.1D - Typical Live Load Bearing Masonry Plate 9-4
9.1E - Counterweight 9-5
9.1F - Counterweight and Balance Material 9-5

9.2 Span Drive Machinery

9.2A - Span Drive Machinery Layout – West Side 9-6
9.2B - Span Drive Machinery Layout – East Side 9-6
9.2C - Main Leaf Motor Enclosure 9-7
9.2D - Motor Brake 9-7
9.2E - Machinery Brake 9-8
9.2F - Typical Rack and Pinion 9-8
9.2G - Typical First Intermediate Gear Set 9-9
9.2H - Typical Secondary Intermediate Gear Set 9-9
9.2I - Main Leaf Motor Gear Set 9-10
9.2J - Manual Drive Pinion 9-10
9.2K - Typical Manual Operation Chain Sheave 9-11
9.2L - Span Drive Machinery Instrumentation 9-11
9.2M - Air Buffer 9-12
9.2N - Air Buffer Strike Plate 9-12

9.3 Span Lock Machinery and Centering Equipment

9.3A - Lock Bar Assembly 9-13
9.3B - Locking Pin Assembly 9-13
9.3C - Typical Centering Guide 9-14

9.4 Traffic Control Devices and Navigation Lights

9.4A - Typical Traffic Control Equipment 9-15
9.4B - Advanced Warning Signal 9-15

9.4C - Warning Gate Equipment (Front) 9-16
9.4D - Warning Gate Equipment (Back) 9-16
9.4E - Typical Warning Gate Arm 9-17
9.4F - Typical Barrier Gate Equipment (Front) 9-17
9.4G - Barrier Gate Arm 9-18
9.4H - Typical Navigation Lights 9-18

9.5 Power Distribution Equipment
9.5A - Main Incoming Service Meter 9-19
9.5B - Manual Transfer Switch 9-19
9.5C - Generator Receptacle 9-20
9.5D - Lighting Transformer 9-20
9.5E - Lighting Panelboard 9-21

9.6 Control Equipment
9.6A - Motor Control Cabinet (Open) 9-22
9.6B - Motor Control Cabinet (Closed) 9-22
9.6C - Contactor Panel 9-23
9.6D - Secondary Resistors 9-23
9.6E - Movable Droop Cable Termination Box (Cover Removed) 9-24
9.6F - Fixed Droop Cable Termination Box 9-24
9.6G - Control House Submarine Cable Termination Box 9-25
9.6H - Far Side Submarine Cable Termination Box 9-25
9.6I - Control Console 9-26
9.6J - Control Console Interior 9-26
9.6K - Fully Seated Limit Switch 9-27

9.7 Miscellaneous Equipment
9.7A - Water Heater, Waste Tank and Pump Control Panel 9-28
9.7B - Service Light Fixture Type 1 9-28
9.7C - Service Light Fixture Type 2 9-29
9.7D - Emergency Light Fixture 9-29
9.7E - Sump Pump 9-30
9.7F – Indoor Air Conditioning Unit 9-30
9.7G – Outdoor Air Conditioning Unit 9-31

9.1 LEAF SUPPORT SYSTEM AND COUNTERWEIGHTS

PHOTO 9.1A – TYPICAL SEGMENTAL GIRDER AND TRACK PLATE

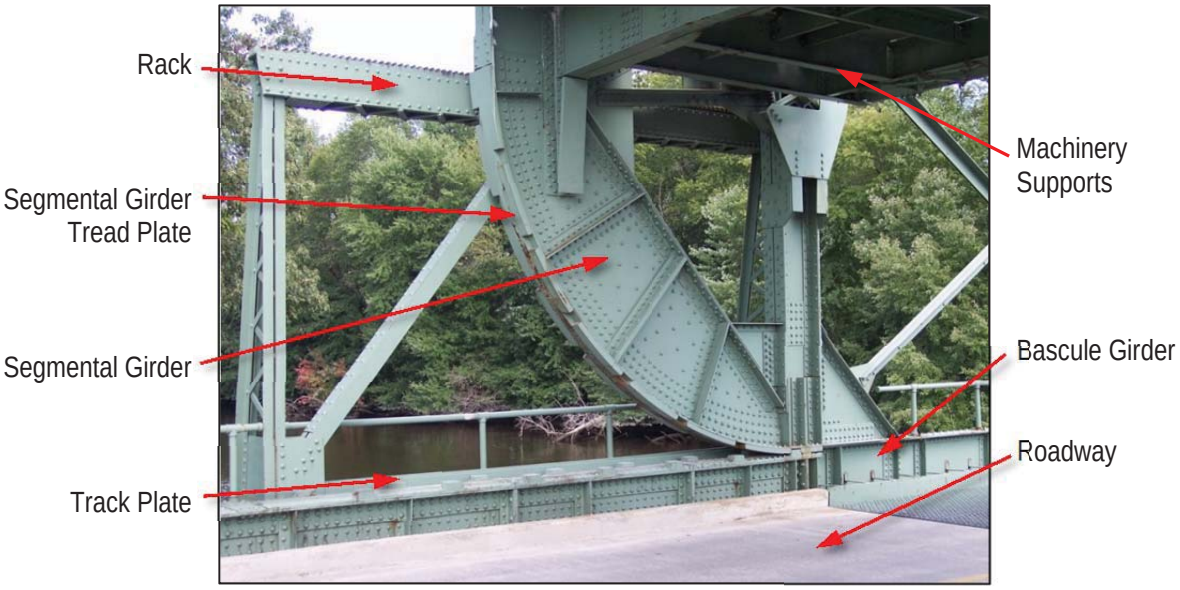

PHOTO 9.1B – TYPICAL SEGMENTAL GIRDER AND TRACK PLATE INTERFACE

PHOTO 9.1C – TYPICAL LIVE LOAD BEARING

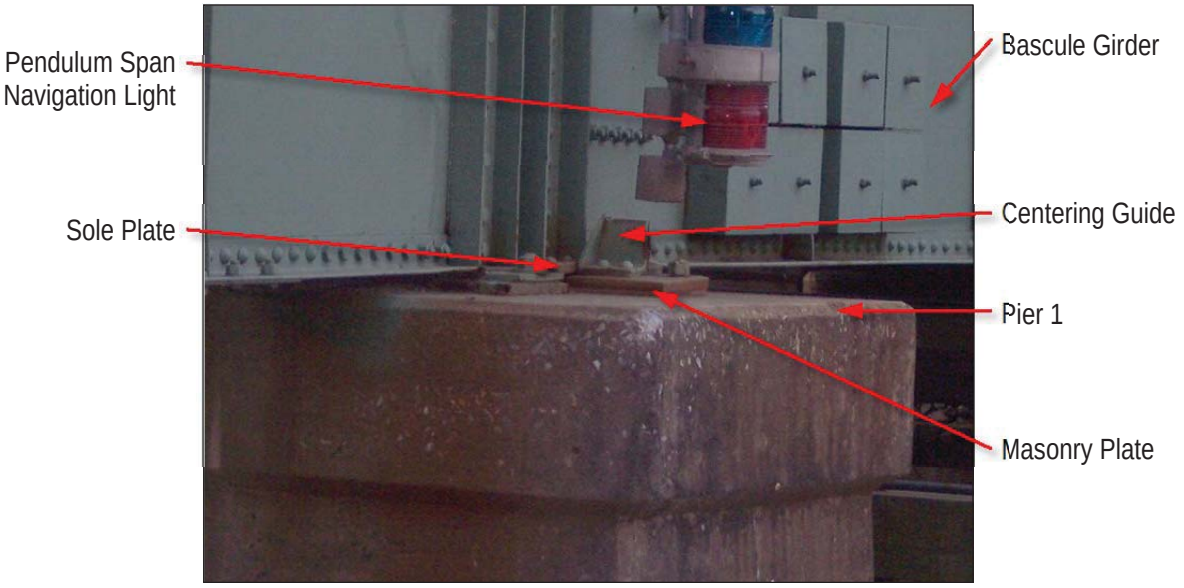

PHOTO 9.1D – TYPICAL LIVE LOAD BEARING MASONRY PLATE

PHOTO 9.1E – COUNTERWEIGHT

PHOTO 9.1F – COUNTERWEIGHT AND BALANCE MATERIAL

9.2 SPAN DRIVE MACHINERY

PHOTO 9.2A – SPAN DRIVE MACHINERY LAYOUT – WEST SIDE

PHOTO 9.2B – SPAN DRIVE MACHINERY LAYOUT – EAST SIDE

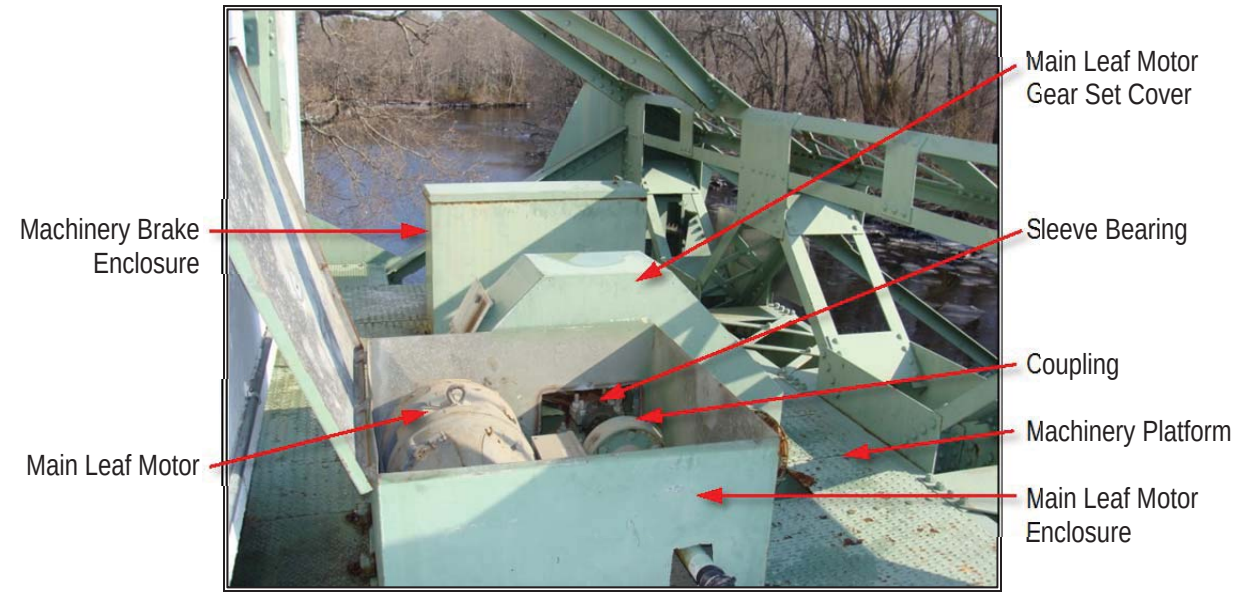

PHOTO 9.2C – MAIN LEAF MOTOR ENCLOSURE

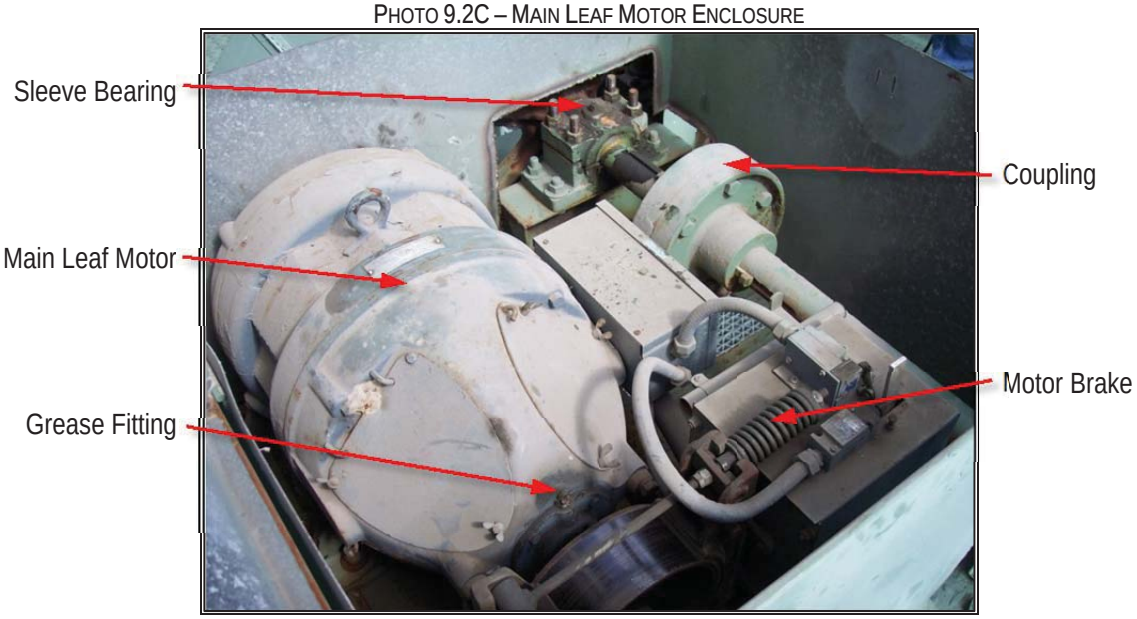

PHOTO 9.2D – MOTOR BRAKE

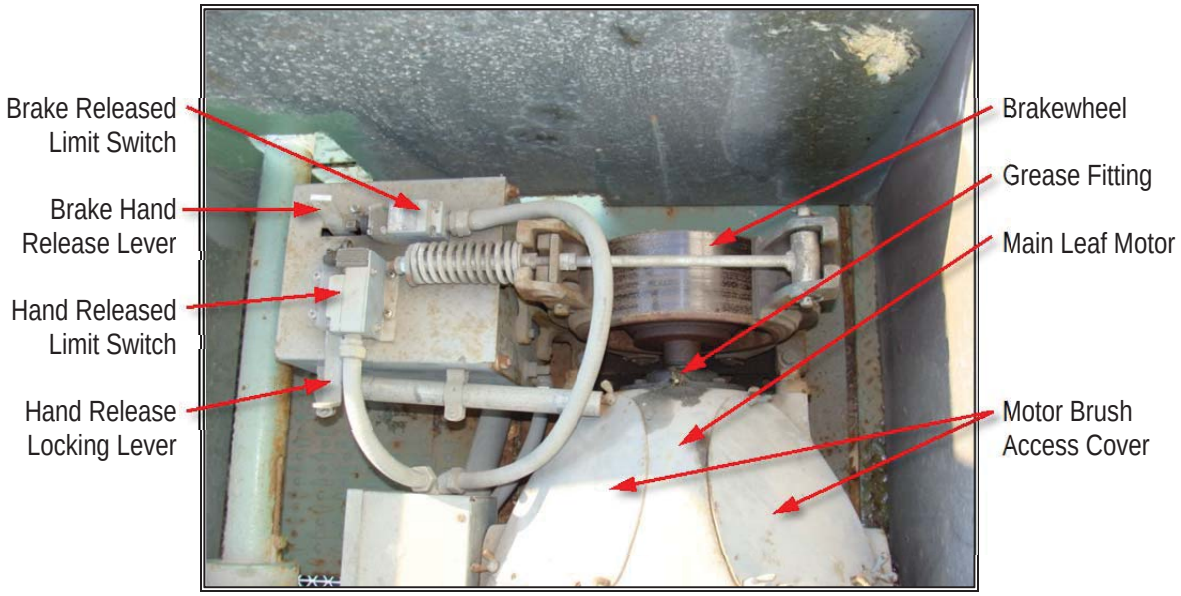

PHOTO 9.2E – MACHINERY BRAKE

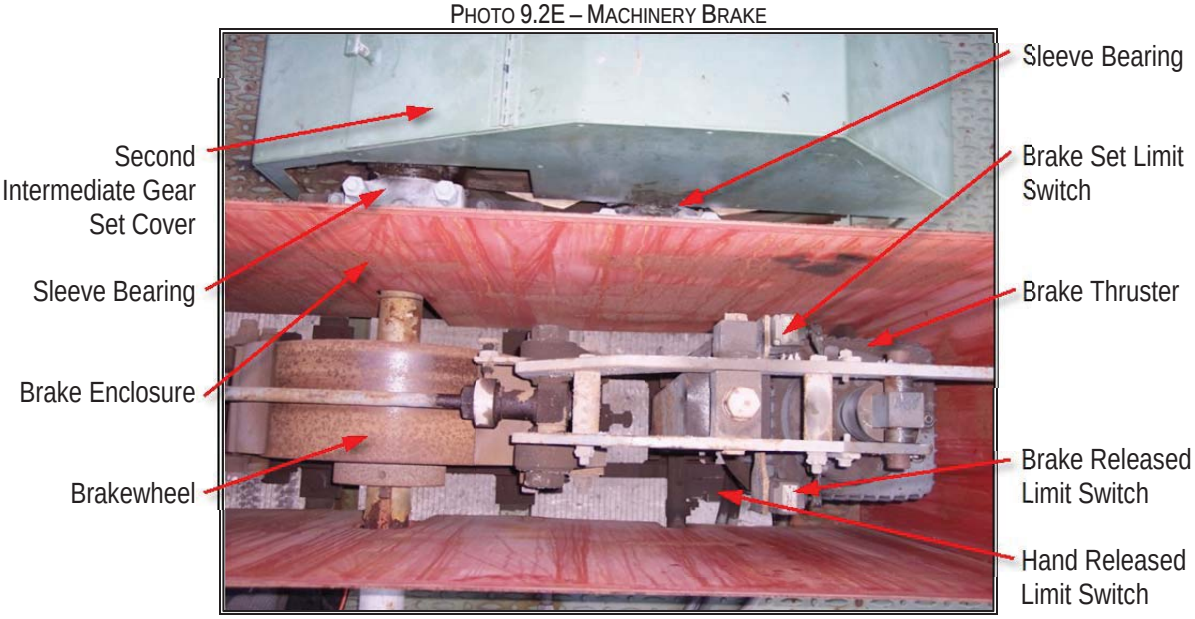

PHOTO 9.2F – TYPICAL RACK AND PINION

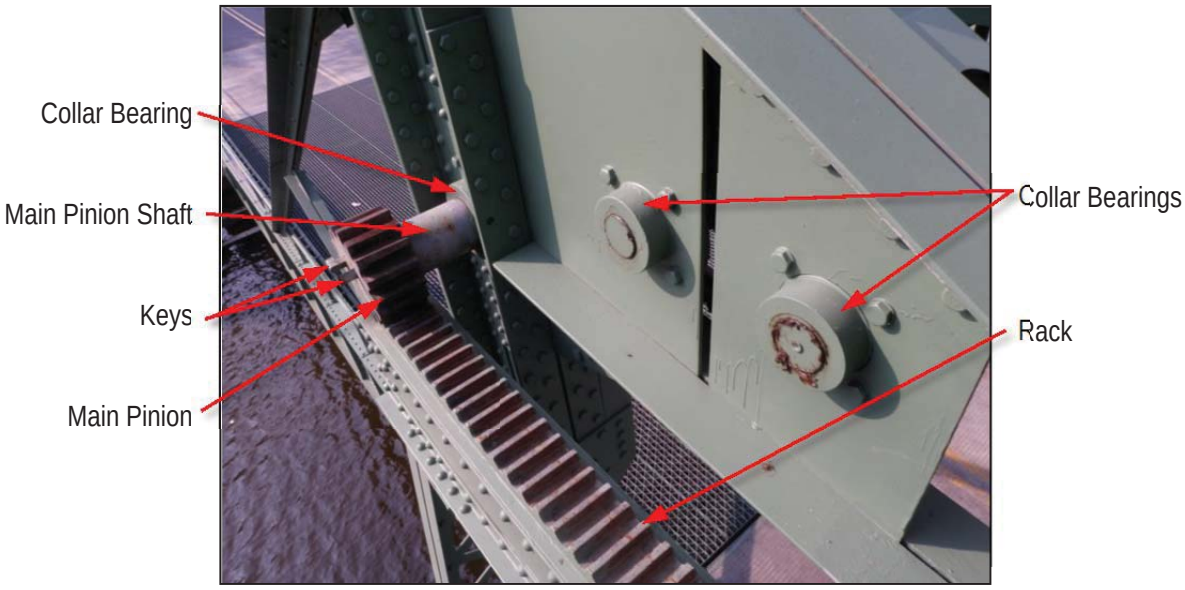

PHOTO 9.2G – TYPICAL FIRST INTERMEDIATE GEAR SET

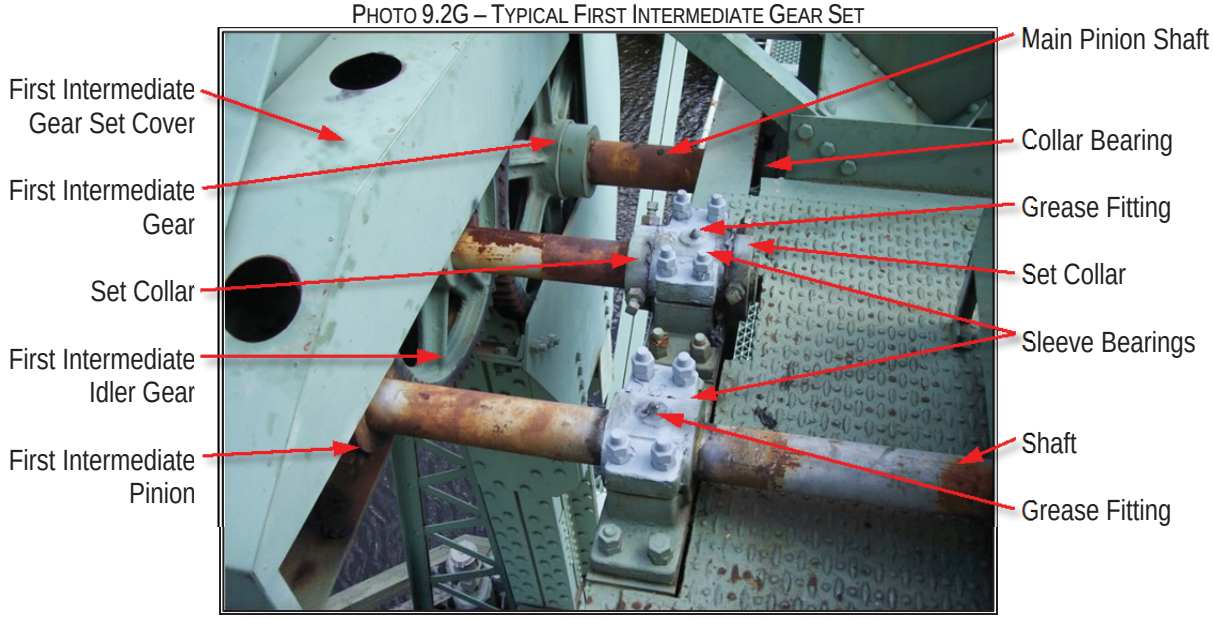

PHOTO 9.2H – TYPICAL SECONDARY INTERMEDIATE GEAR SET

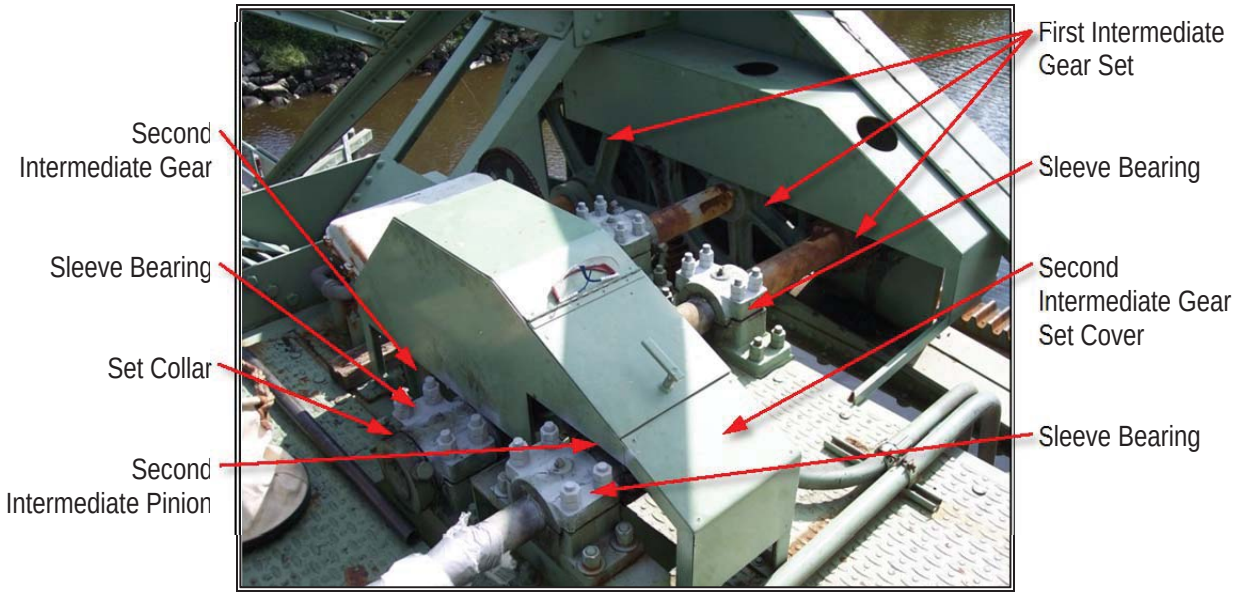

PHOTO 9.2I – MAIN LEAF MOTOR GEAR SET

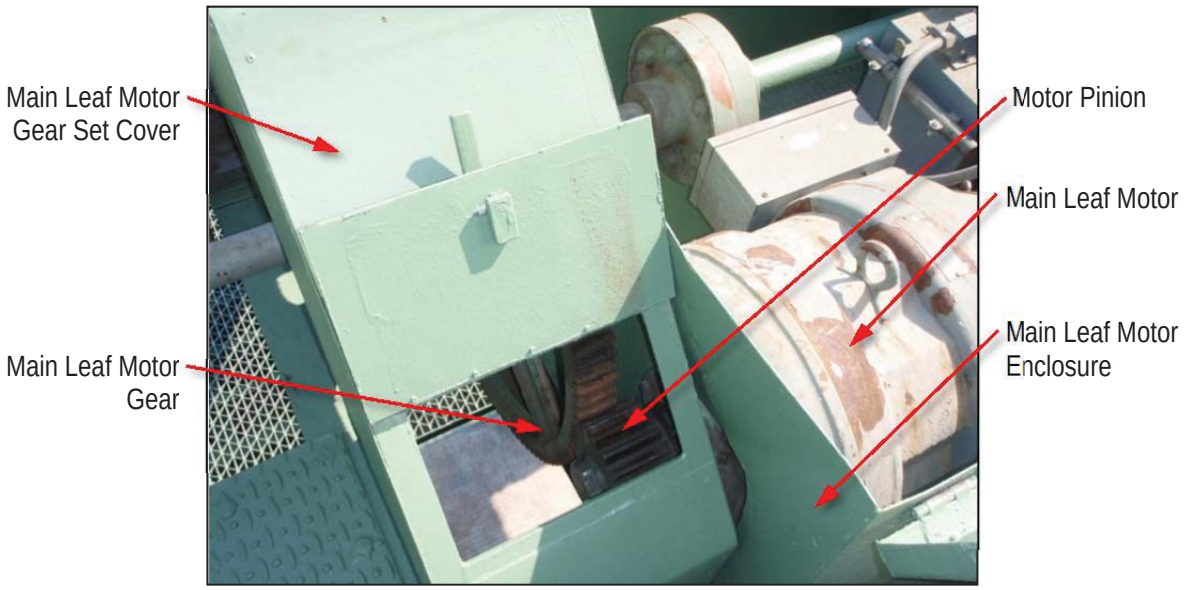

PHOTO 9.2J – MANUAL DRIVE PINION

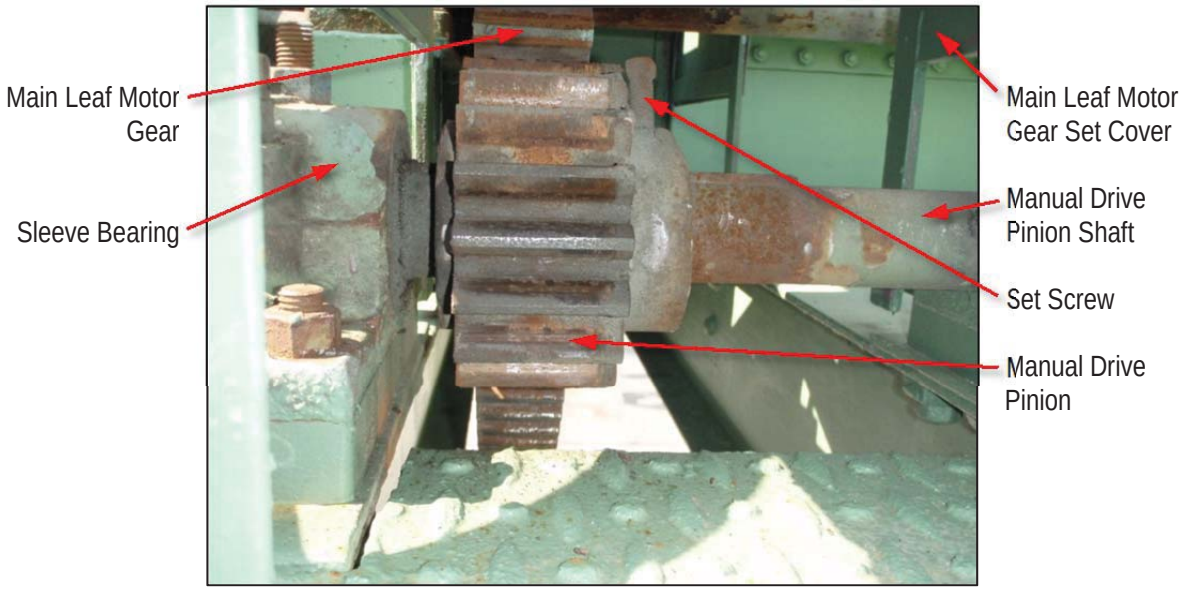

PHOTO 9.2K – TYPICAL MANUAL OPERATION CHAIN SHEAVE

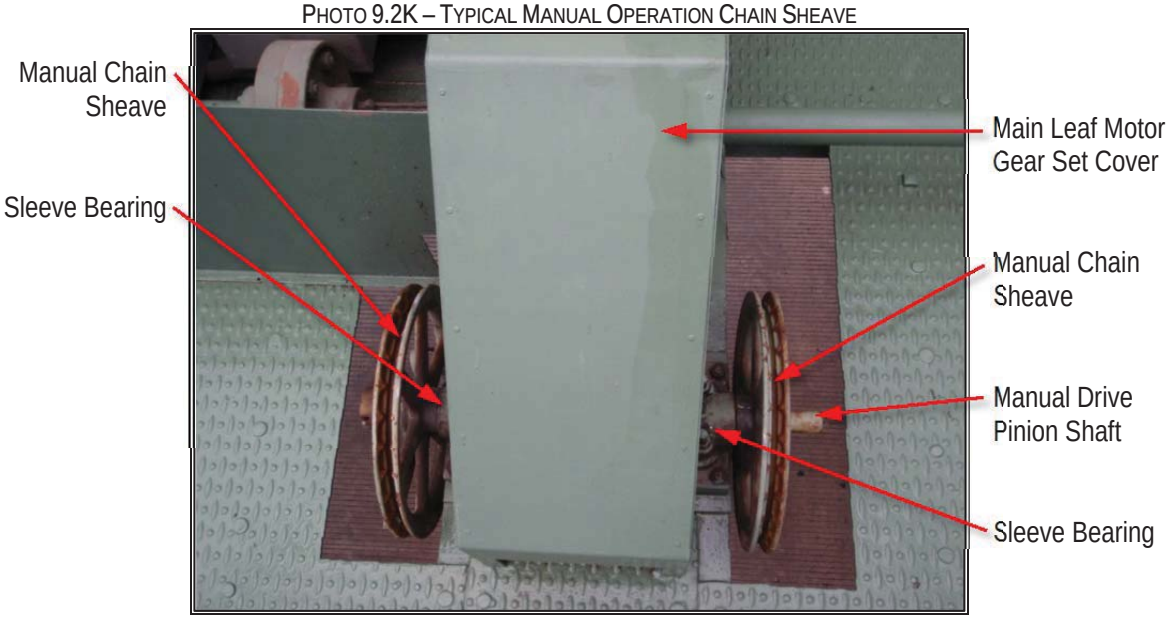

PHOTO 9.2L – SPAN DRIVE MACHINERY INSTRUMENTATION

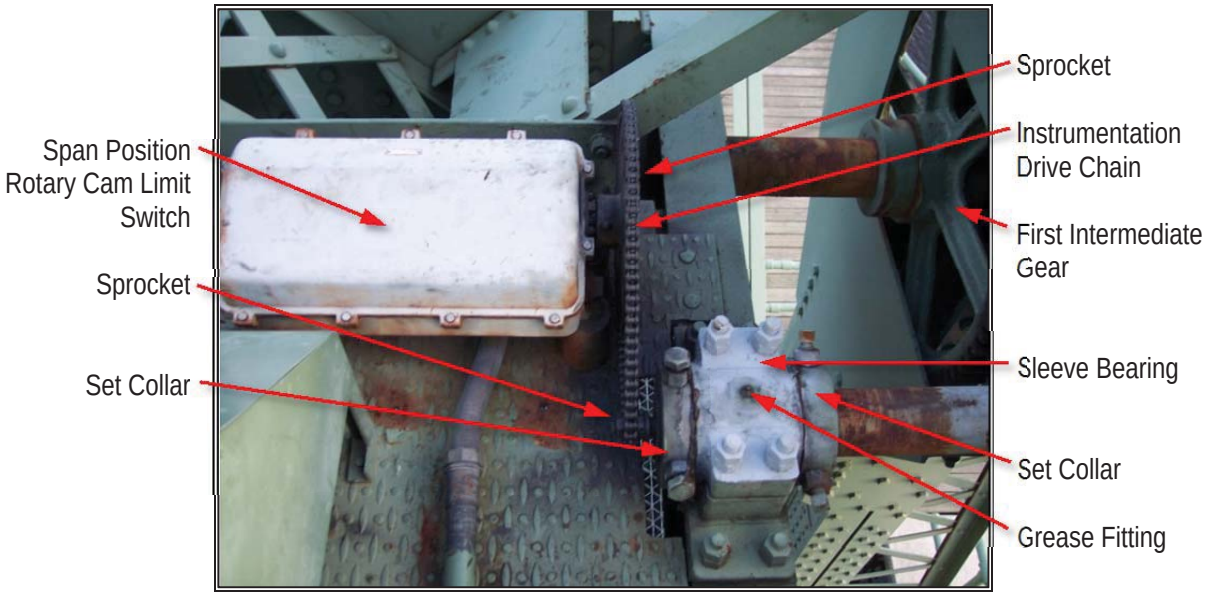

PHOTO 9.2M – AIR BUFFER

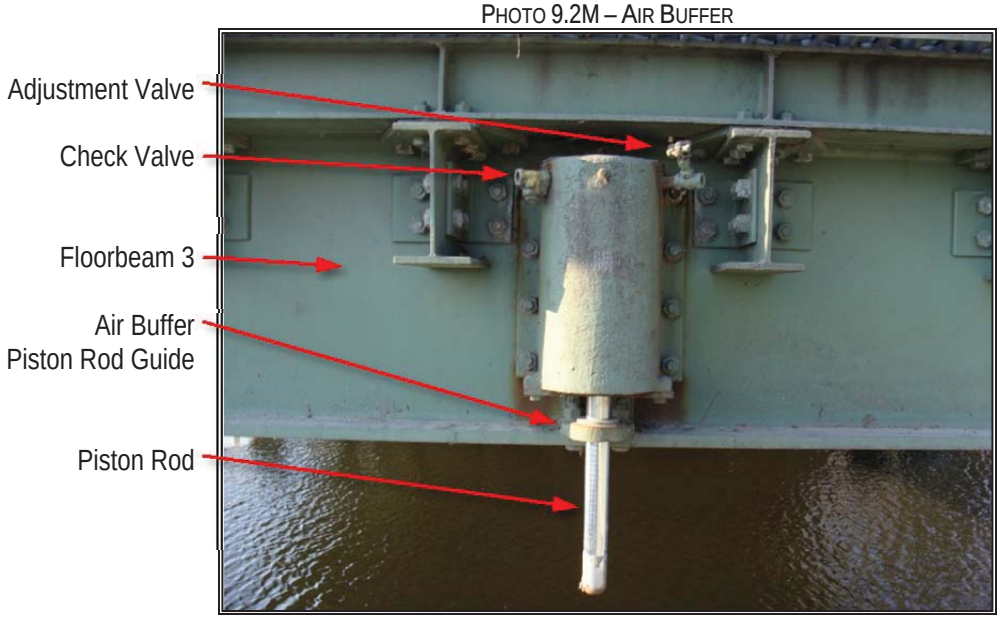

PHOTO 9.2N – AIR BUFFER STRIKE PLATE

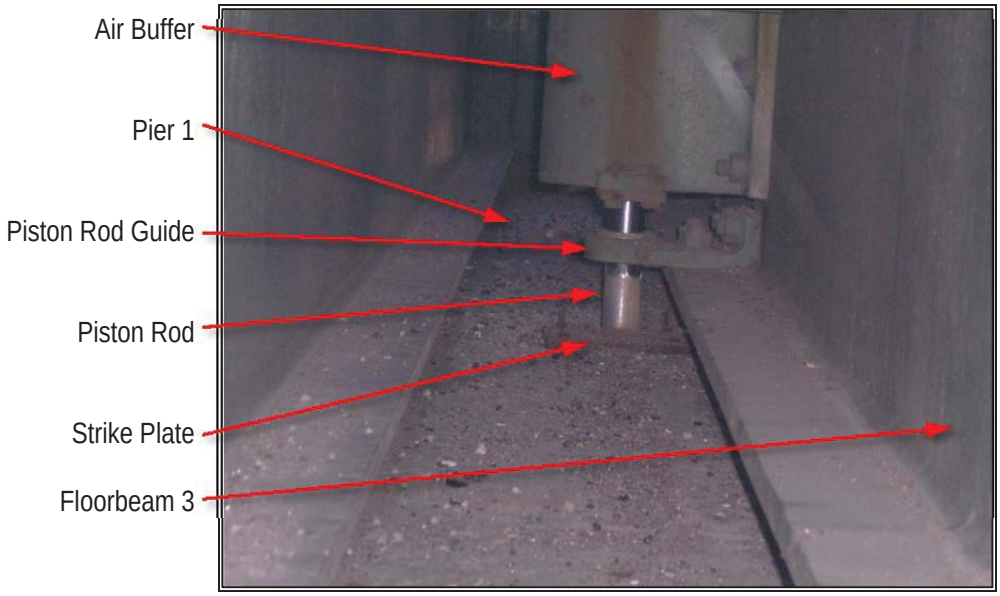

9.3 SPAN LOCK MACHINERY AND CENTERING EQUIPMENT

PHOTO 9.3A – LOCK BAR ASSEMBLY

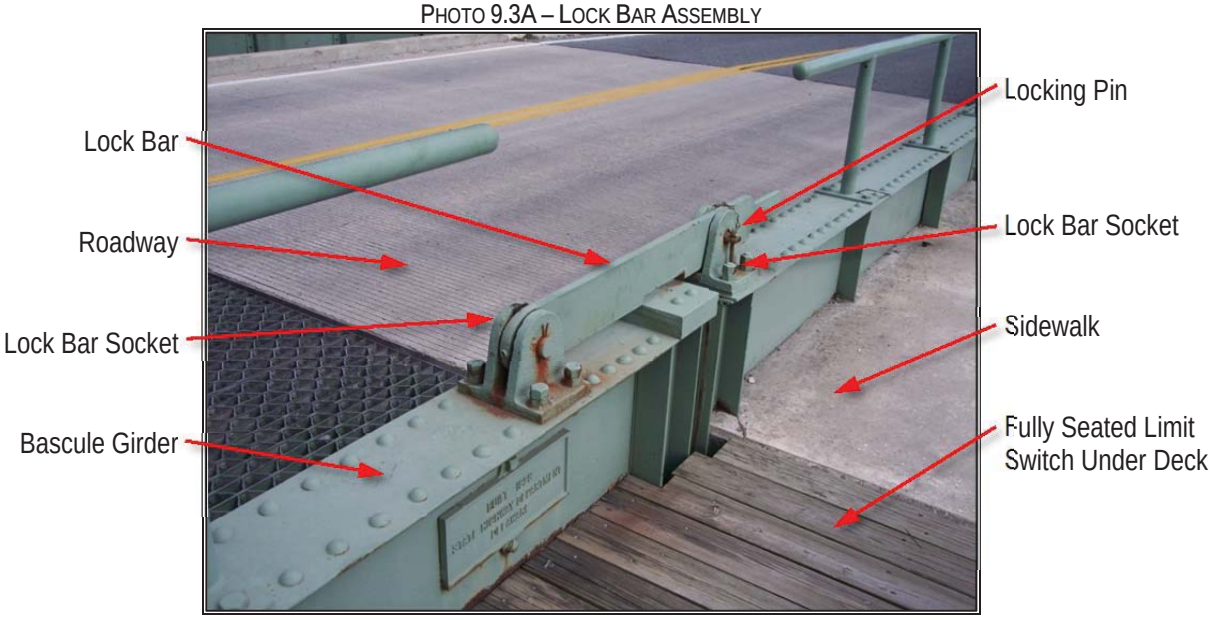

PHOTO 9.3B – LOCKING PIN ASSEMBLY

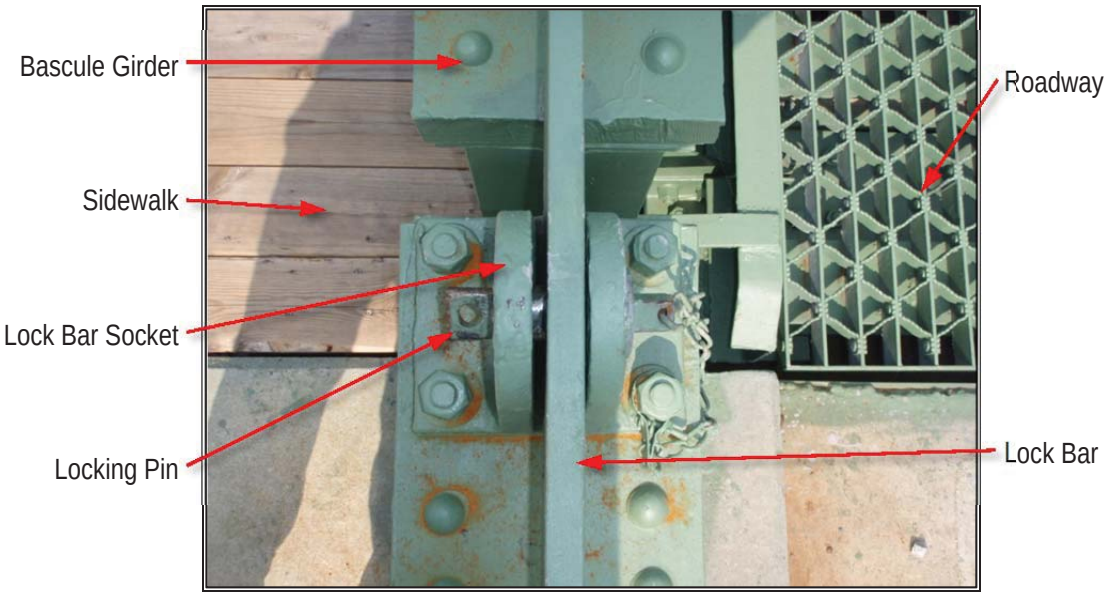

PHOTO 9.3C – TYPICAL CENTERING GUIDE

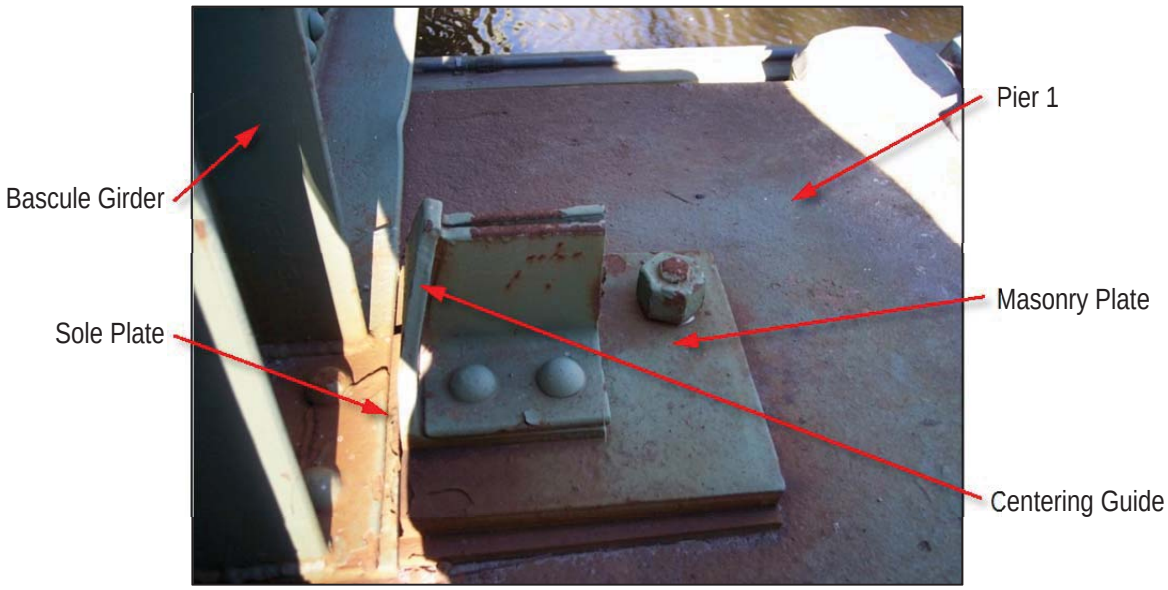

9.4 TRAFFIC CONTROL DEVICES AND NAVIGATION LIGHTS

PHOTO 9.4A – TYPICAL TRAFFIC CONTROL EQUIPMENT

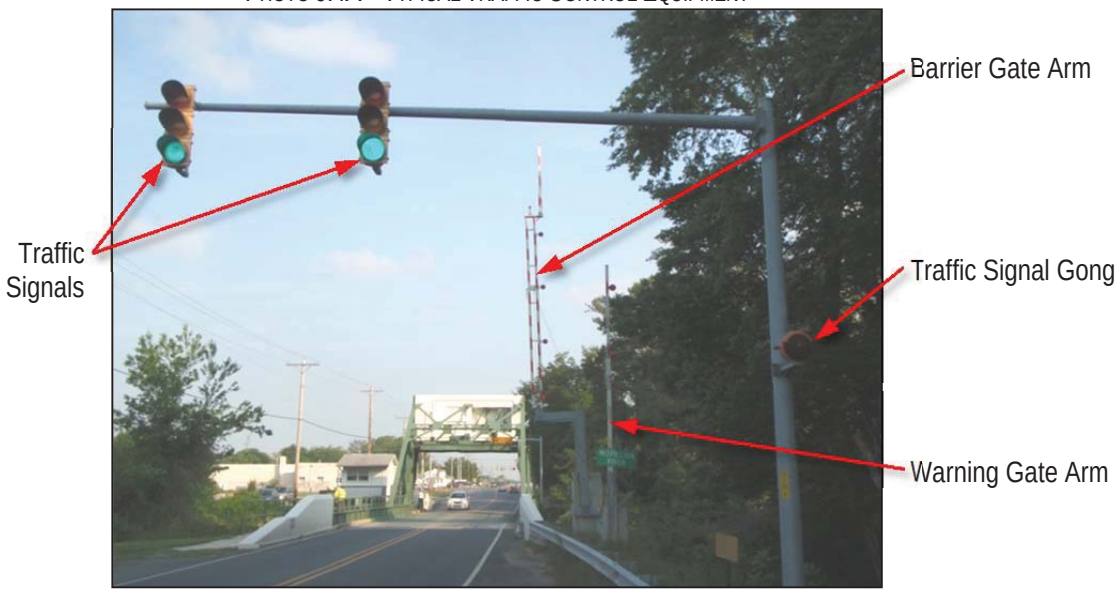

PHOTO 9.4B – ADVANCED WARNING SIGNAL

PHOTO 9.4C – WARNING GATE EQUIPMENT (FRONT)

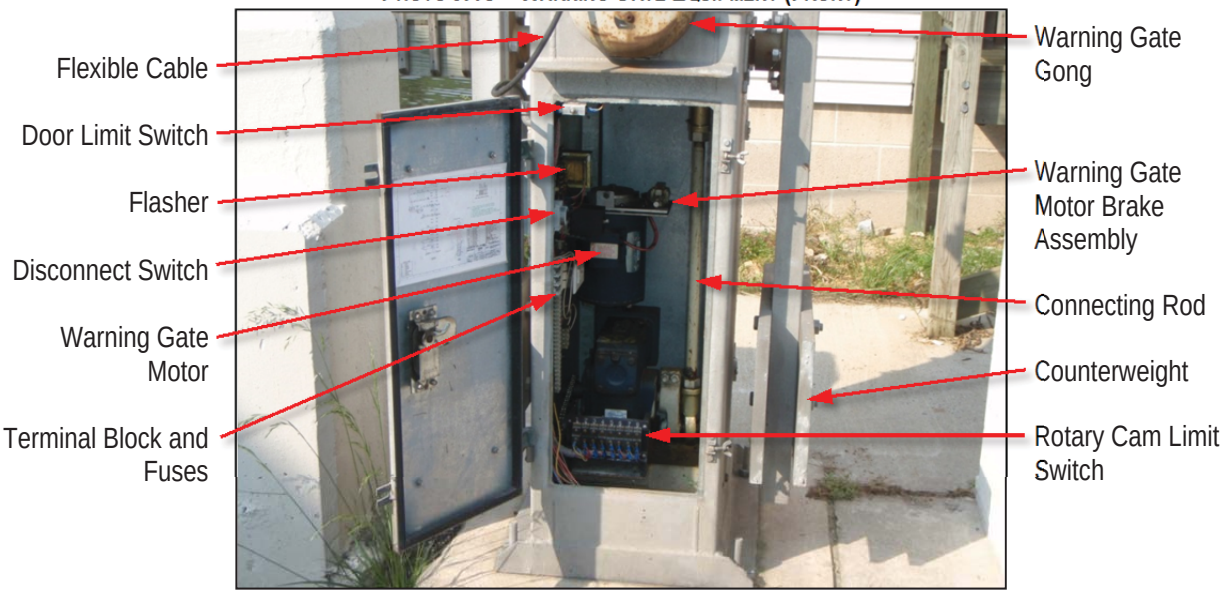

PHOTO 9.4D – WARNING GATE EQUIPMENT (BACK)

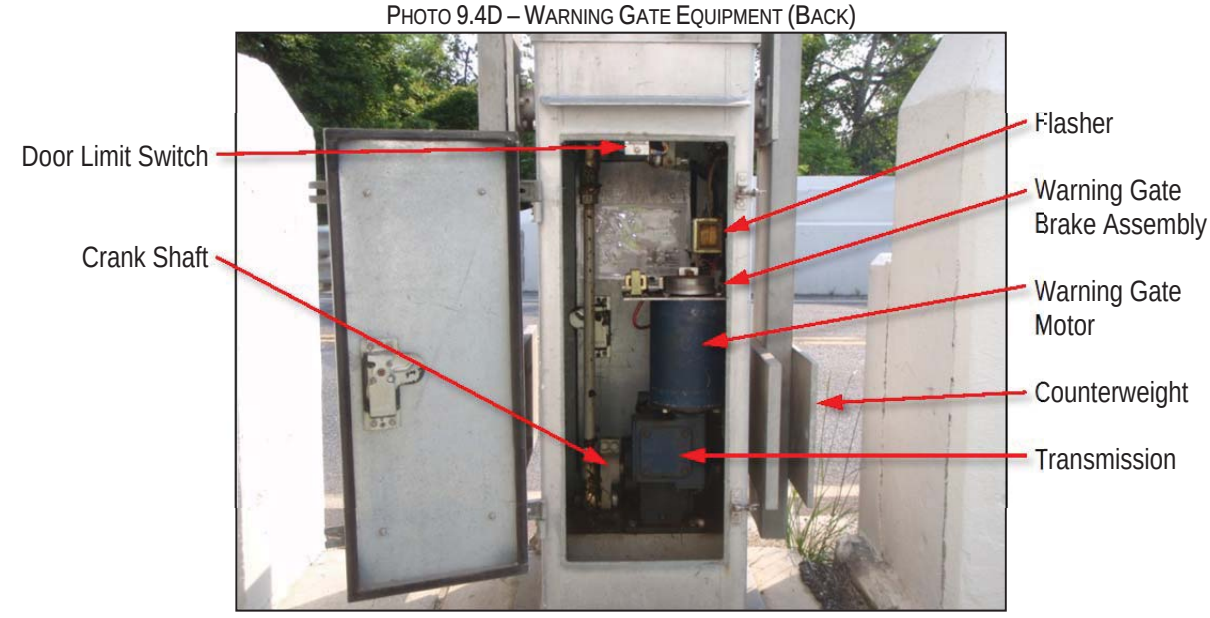

PHOTO 9.4E – TYPICAL WARNING GATE ARM

PHOTO 9.4F – TYPICAL BARRIER GATE EQUIPMENT (FRONT)

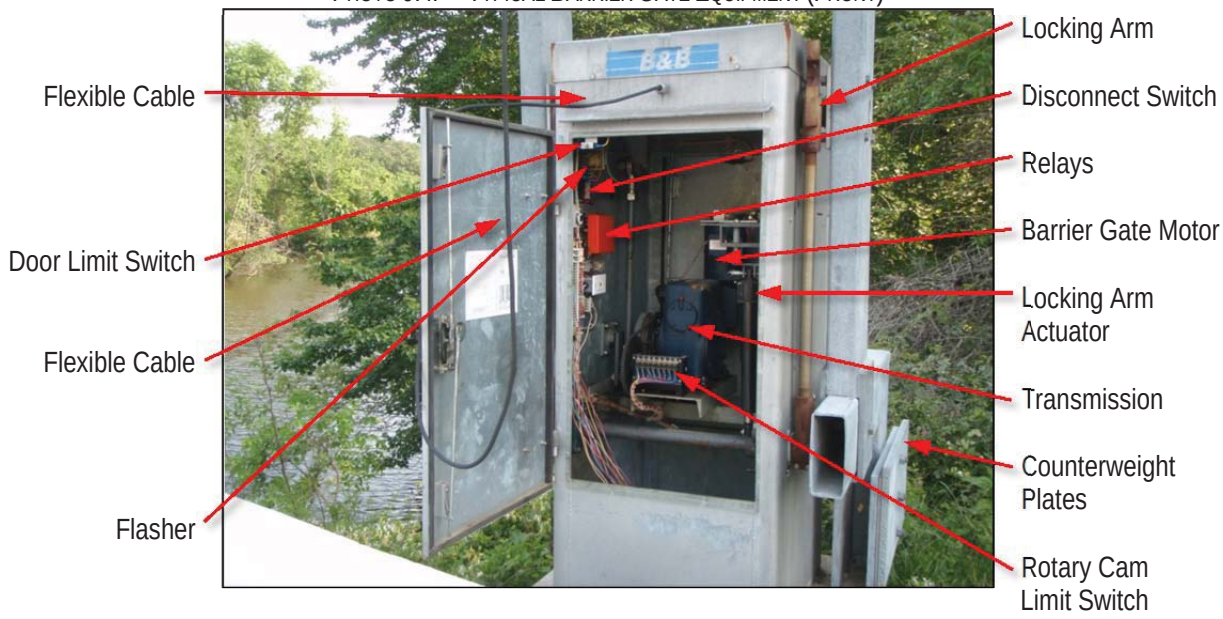

PHOTO 9.4G – BARRIER GATE ARM

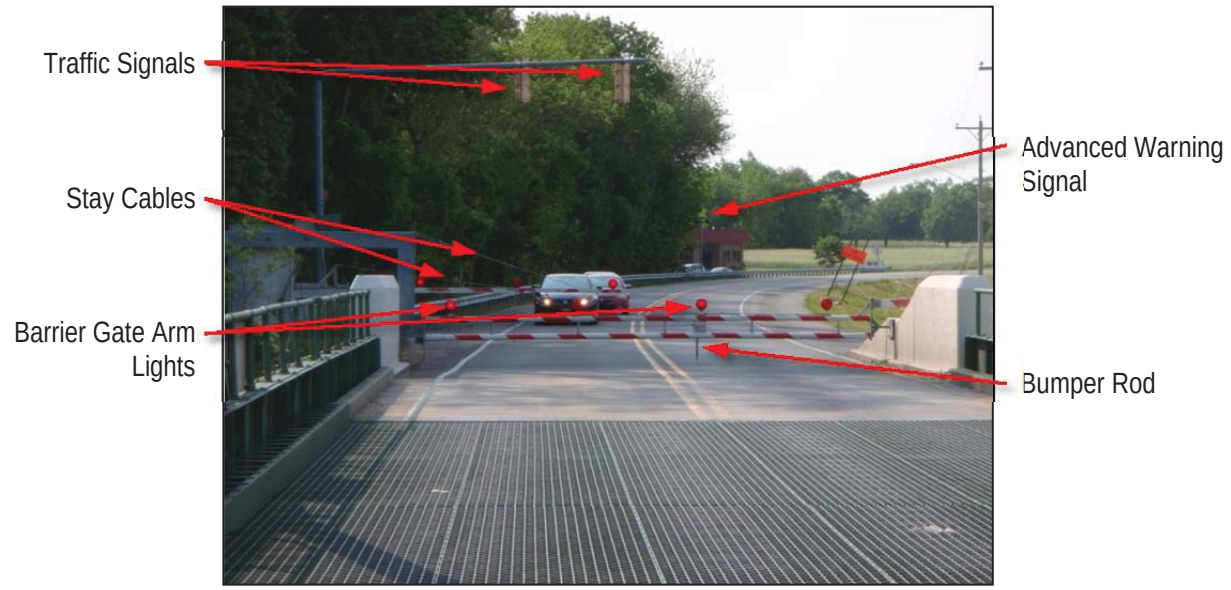

PHOTO 9.4H – TYPICAL NAVIGATION LIGHTS

9.5 POWER DISTRIBUTION EQUIPMENT

PHOTO 9.5A – MAIN INCOMING SERVICE METER

PHOTO 9.5B – MANUAL TRANSFER SWITCH

PHOTO 9.5C – GENERATOR RECEPTACLE

PHOTO 9.5D – LIGHTING TRANSFORMER

PHOTO 9.5E – LIGHTING PANELBOARD

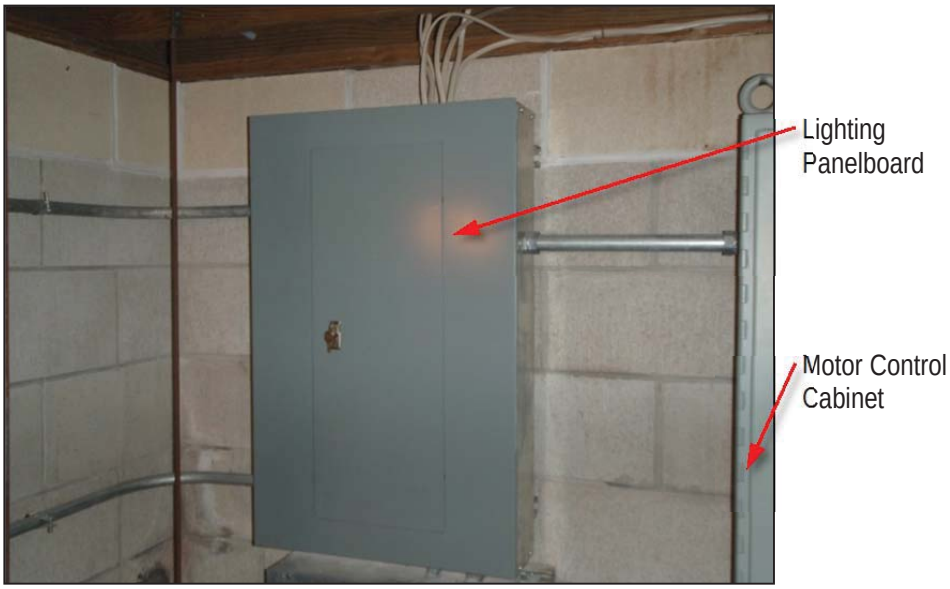

9.6 CONTROL EQUIPMENT

PHOTO 9.6A – MOTOR CONTROL CABINET (OPEN)

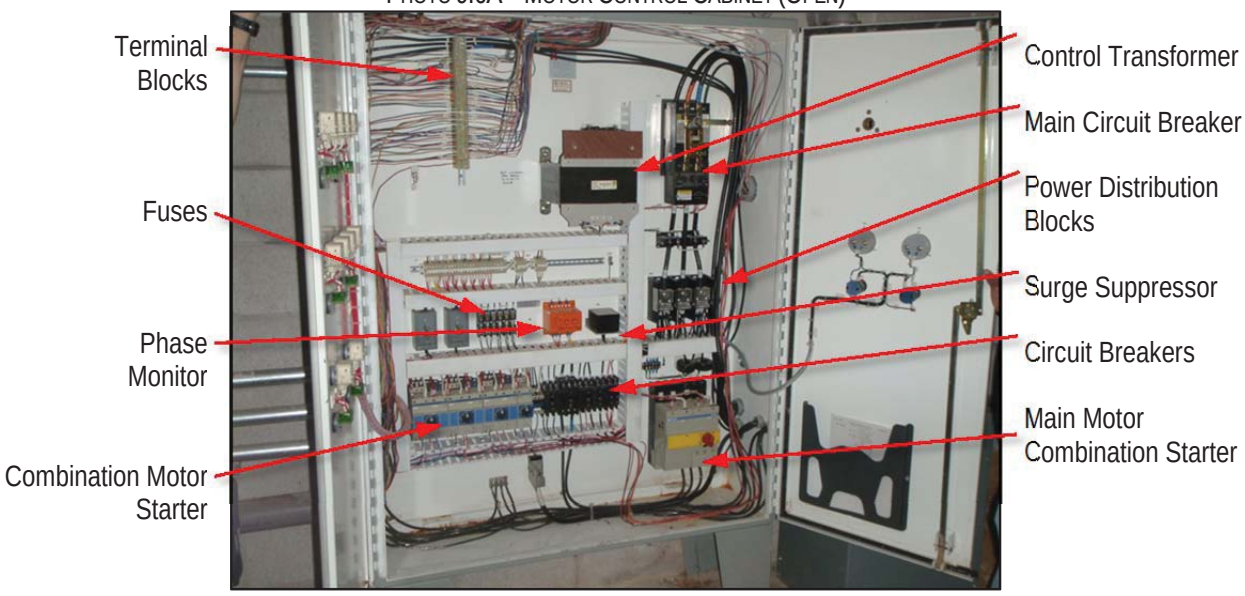

PHOTO 9.6B – MOTOR CONTROL CABINET (CLOSED)

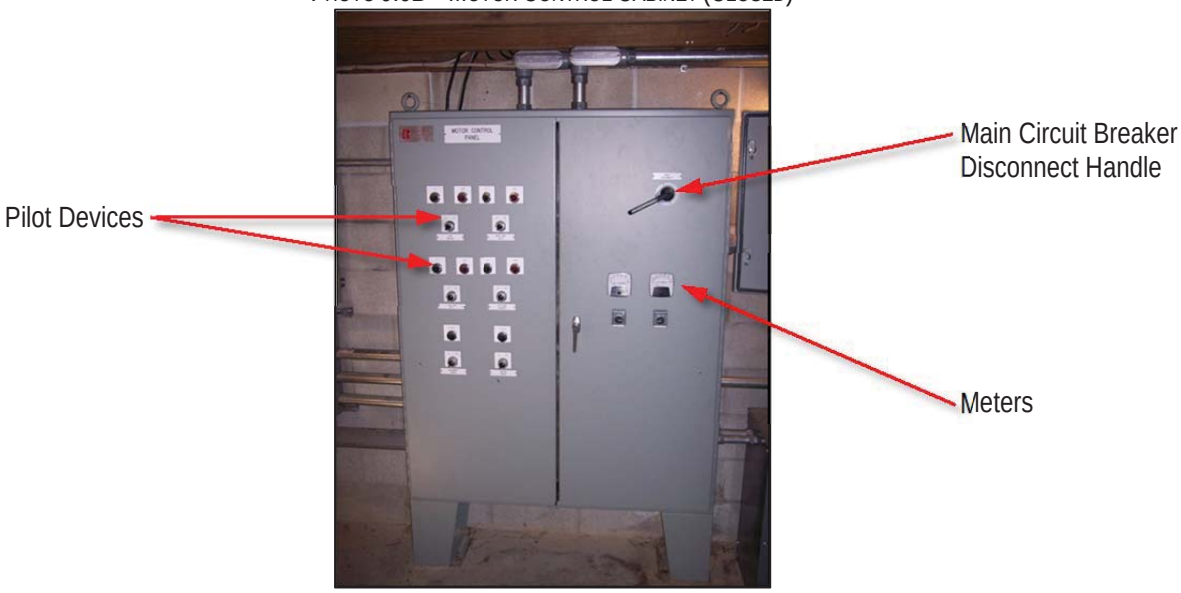

PHOTO 9.6C – CONTACTOR PANEL

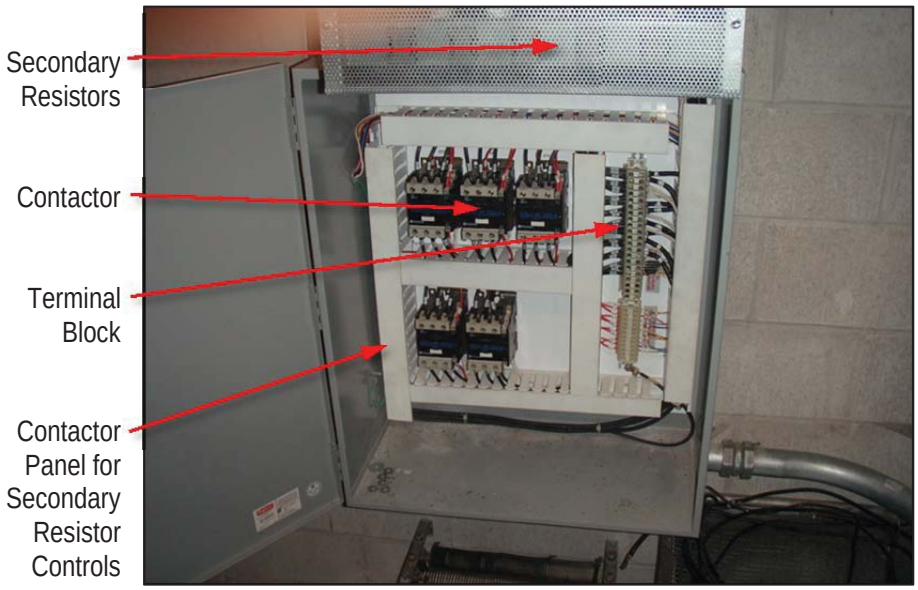

PHOTO 9.6D – SECONDARY RESISTORS

PHOTO 9.6E – MOVABLE DROOP CABLE TERMINATION BOX
(COVER REMOVED)

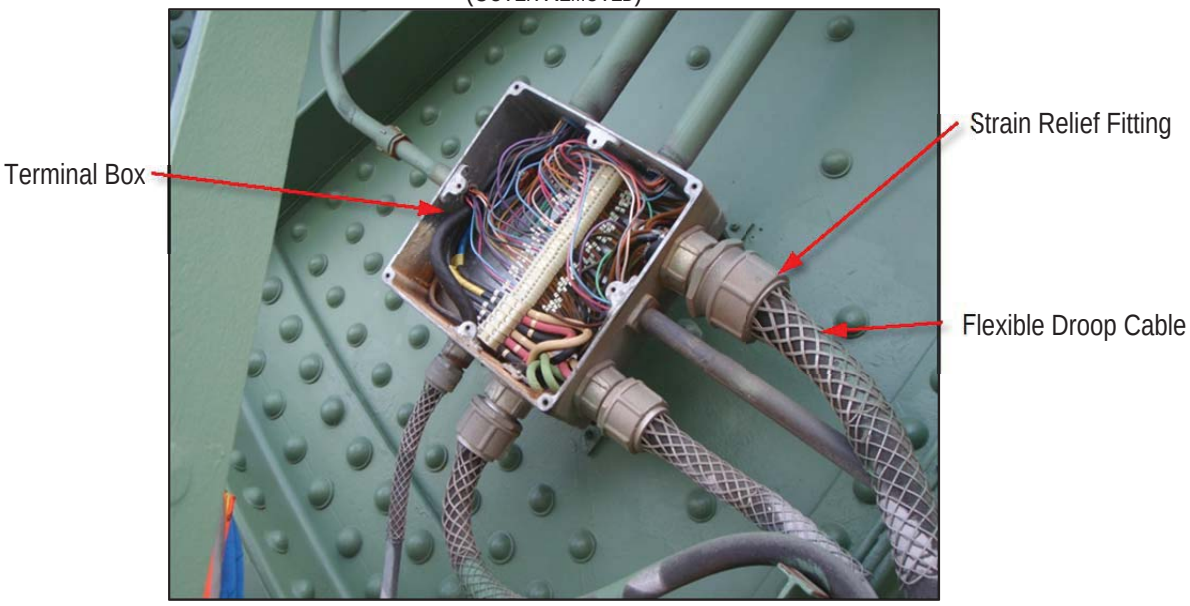

PHOTO 9.6F – FIXED DROOP CABLE TERMINATION BOX

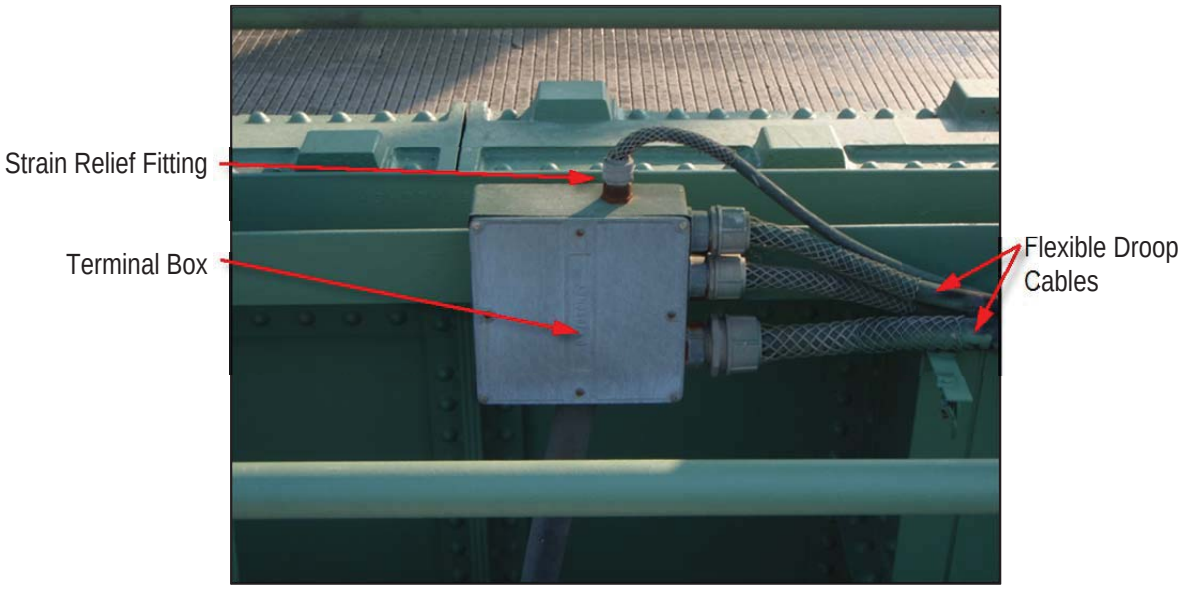

PHOTO 9.6G – CONTROL HOUSE SUBMARINE CABLE TERMINATION BOX

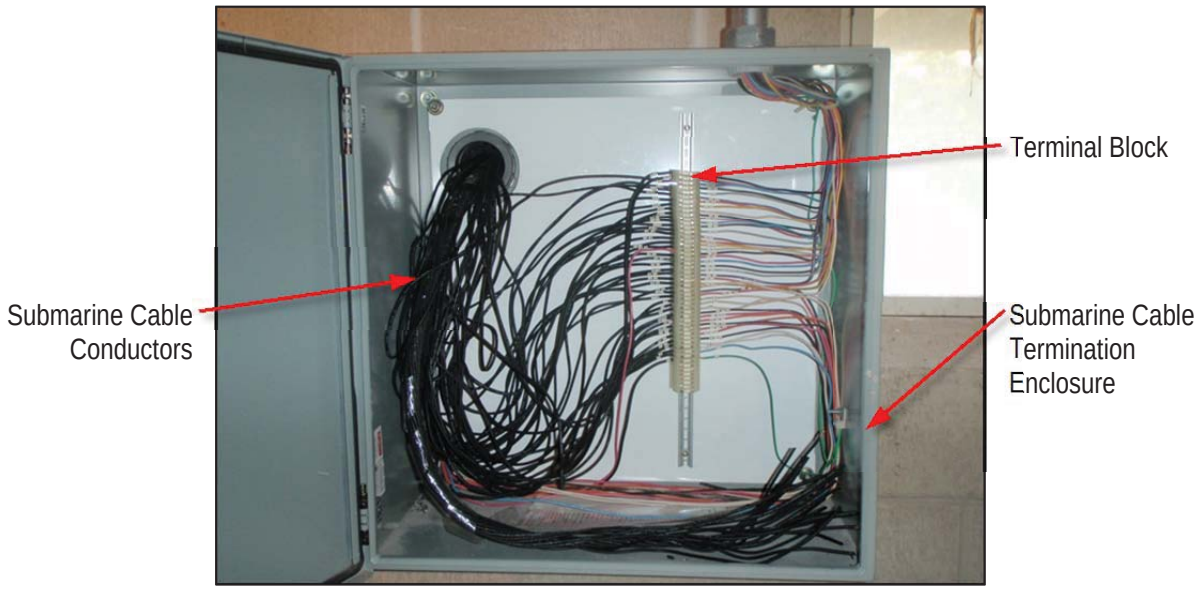

PHOTO 9.6H – FAR SIDE SUBMARINE CABLE TERMINATION ENCLOSURE

PHOTO 9.6I – CONTROL CONSOLE

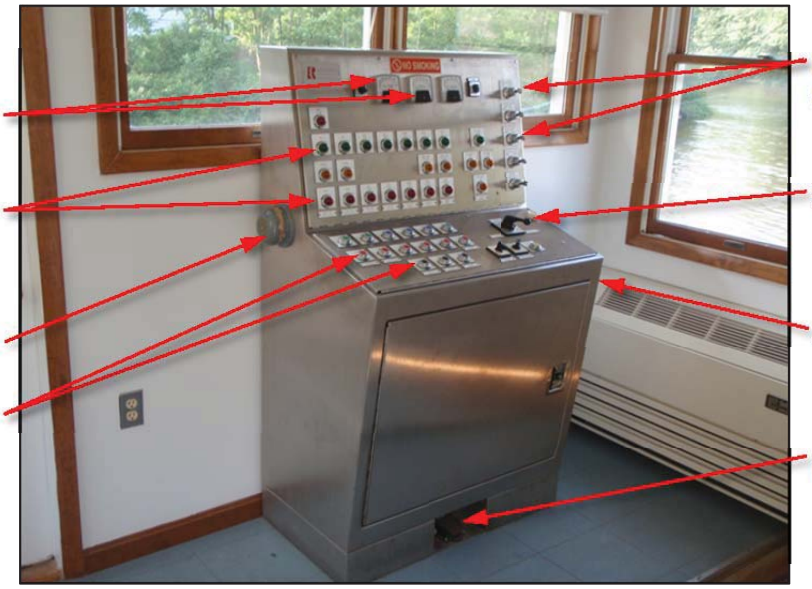

PHOTO 9.6J – CONTROL CONSOLE INTERIOR

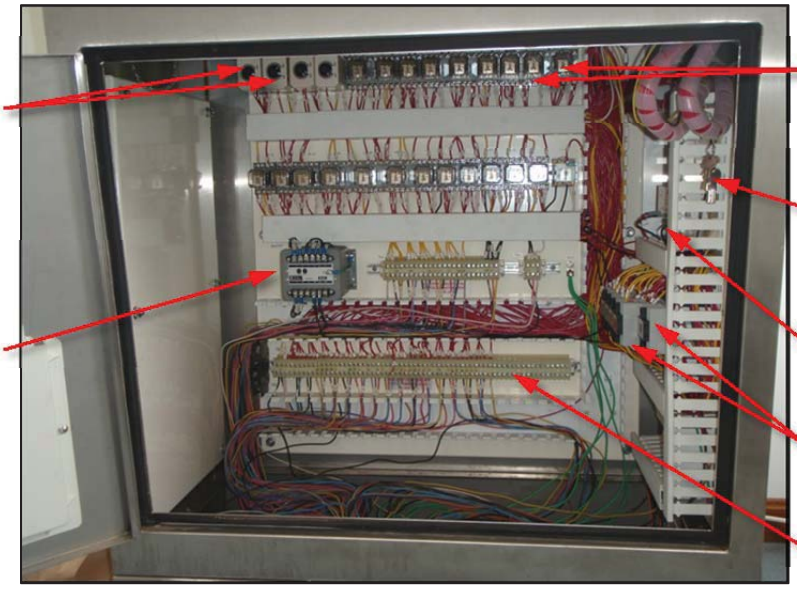

PHOTO 9.6K – FULLY SEATED LIMIT SWITCH

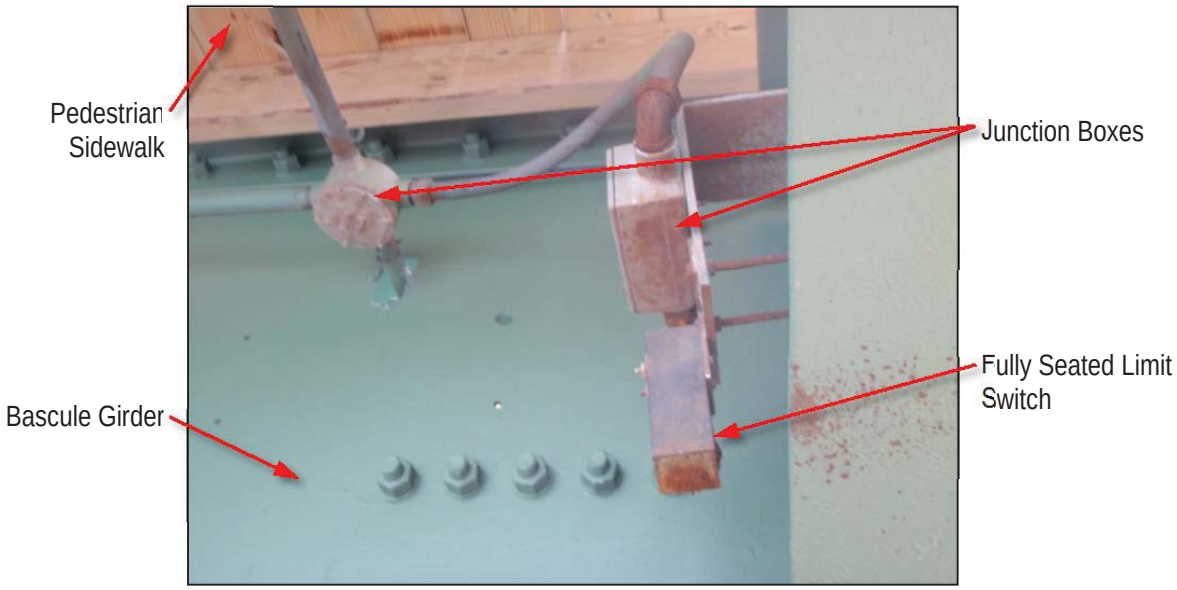

9.7 MISCELLANEOUS EQUIPMENT

PHOTO 9.7A – WATER HEATER, WASTE TANK AND PUMP CONTROL PANEL

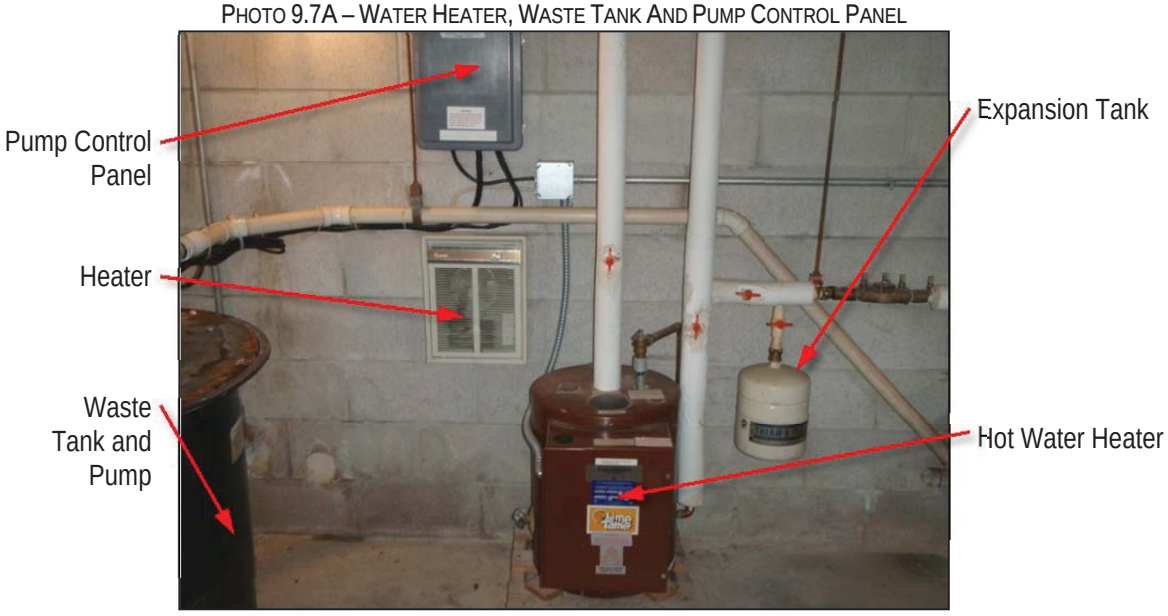

PHOTO 9.7B – SERVICE LIGHT FIXTURE TYPE 1

PHOTO 9.7C – SERVICE LIGHT FIXTURE TYPE 2

PHOTO 9.7D – EMERGENCY LIGHT FIXTURE

PHOTO 9.7E – SUMP PUMP

PHOTO 9.7F – INDOOR AIR CONDITIONING UNIT

PHOTO 9.7G – OUTDOOR AIR CONDITIONING UNIT

THIS PAGE INTENTIONALLY LEFT BLANK

CHAPTER 10 - MAINTENANCE FORMS

10.1 MECHANICAL AND ELECTRICAL MAINTENANCE CHECKLIST

Form 10-1 - Leaf Support System and Counterweight 10-2
Form 10-2 - Span Drive Machinery 10-3
Form 10-3 - Span Lock Machinery and Centering Guides 10-5
Form 10-4 - Traffic Gates 10-6
Form 10-5 - Electrical Power Systems 10-7
Form 10-6 - Lighting System 10-10
Form 10-7 - Electric Motors 10-11
Form 10-8 - Control System 10-12
Form 10-9 - Miscellaneous Equipment 10-13

Mechanical Maintenance Checklist - Leaf Support System and Counterweight

Form 10-1
Page 1 of 1

	Maintenance Tasks to Be Performed:	
	Three Month	Annual
Date: _____ Maintenance Personnel: _____	☐	☐

	Maintenance Tasks Completed	
Maintenance Tasks	**Three Month**	**Annual**
Segmental Girders & Track Plates (Section 8.1.1)		
Check track plates and segmental girder fasteners and rivets for signs of corrosion and distress. Clean and spot paint as needed.		☐
Live Load Bearings (Section 8.1.2) (Component ID #43 & 45)		
Check live load bearing contact.	☐	
Clean debris from all supporting members and plates.	☐	
Check that all fasteners are secure and corrosion free.		☐
Inspect masonry plate grout for cracking and evidence of deterioration.		☐
Check contacting surface between the sole plate and bearing plate for deformation, cracks, and wear. Clean plates of corrosion if present.		☐
Adjust shims between the sole plate and bascule girder if needed.		☐
Counterweight (Section 8.1.3)		
Check counterweight balance block locations for proper drainage and clean out debris.		☐
Check for concrete spalling, cracks, and signs of structural distress in the counterweight concrete.		☐
Check for shifting of balance blocks and steel plates during leaf operation.		☐

Refer to Section 8.1 "Leaf Support System and Counterweight" for component locations, quantities, and additional maintenance information. Component ID # corresponds to components listed in Section 11.1.

Notes:

Mechanical Maintenance Checklist – Span Drive Machinery

Form 10-2
Page 1 of 2

	Maintenance Tasks to Be Performed:	
	Three Month	Five Year
Date: _____ Maintenance Personnel: _____	☐	☐

	Maintenance Tasks Completed	
Maintenance Tasks	**Three Month**	**Annual**
Motor and Machinery Brakes (Section 8.2.1) (Component ID # 1 & 9)		
Inspect brake shoes and drums. Inspect brake pad thickness. Replace pads as needed.		☐
Check clearance between the brake shoes and the brakewheel.		☐
Inspect mechanical linkages and fasteners. Check for freedom of moving parts. Check the brake housing and linkages for corrosion and signs of water dripping onto the brake.		☐
Check for excessive heating of metal parts.		☐
Check the operations of the brake during test operations of the bridge. Check for unusual odor and excessive vibrations.		☐
Check adjustment of limit switches and hand release devices.		☐
Check machinery brake fluid level in hydraulic reservoir. Fill as needed. (Mondel technician)		☐
Check for possible wear of the machinery brake automatic adjustment for lining wear.		☐
Check the machinery brake reserve stroke height.		☐
Check the machinery brake spring tension. Adjust as needed.		☐
Couplings (Section 8.2.2) (Component ID # 7)		
Inspect keys and keyways for tightness and cracking.		☐
Check coupling flange bolts for tightness and cracking. Torque as needed.		☐
Bearings (Section 8.2.3) (Component ID # 6, 10, 12, 15, 17, 18, 21, 22, 25, & 34)		
Lubricate the sleeve and collar bearings	☐	
Check bearing cap and base fasteners for tightness. Torque as necessary.		☐
Open Gearing (Section 8.2.4) (Component ID # 3, 4, 11, 13, 16, 20, 24, 26, 27, & 32)		
Remove debris from gear teeth.	☐	
Remove lubricant that has been displaced to non-contacting surfaces.	☐	
Lubricate open gear teeth.	☐	
Replace open gear lubricant.		☐
Verify that rack support fasteners are secure and free of corrosion. Torque as needed.		☐
Inspect keys and keyways for tightness and cracking.		☐
Observe open gearing during operation of the span drive machinery.		☐
Manual Chain Drive Sheaves (Section 8.2.5) (Component ID # 35)		
Check manual chain drive sheave locking collars and location on shaft to verify movement of the sheave has not occurred.		☐

Mechanical Maintenance Checklist – Span Drive Machinery

Form 10-2
Page 2 of 2

Maintenance Tasks	Maintenance Tasks Completed	
	Three Month	Annual
Air Buffer (Section 8.2.6) (Component ID # 36, 37, & 38)		
Remove debris build up from the strike plate.	☐	
Lubricate the piston rod and strike plate.	☐	
Check air buffer housing fasteners for tightness. Torque as necessary.		☐
Observe the air buffer during operation for unusual movement, binding, or sounds.		☐
Instrumentation Drive (Section 8.2.7) (Component ID # 28 & 29)		
Lubricate instrumentation roller chain.	☐	
Check sprocket fasteners at span drive machinery shaft location for tightness. Tighten as needed.		☐

Refer to Section 8.2 "Span Drive Machinery" for component locations, quantities, and additional maintenance information. Component ID # corresponds to components listed in Section 11.1.

Notes:

Mechanical Maintenance Checklist – Span Lock Machinery and Centering Guides

Form 10-3
Page 1 of 1

Date: _____ Maintenance Personnel: _____	Maintenance Tasks to Be Performed: Annual ☐

Maintenance Tasks	Maintenance Tasks Completed
	Annual
Span Lock Assembly (Section 8.3.1) (Component ID # 40)	
Check span lock bar socket fasteners for tightness. Torque as necessary.	☐
Centering Guides (Section 8.3.2) (Component ID # 44)	
Check that the centering guide rivets are .intact and do not indicate signs of distress.	☐
Check the beveled plate for deformations and signs of damage.	☐

Refer to Section 8.3 "Span Lock Machinery and Centering Guides" for component locations, quantities, and additional maintenance information. Component ID # corresponds to components listed in Section 11.1.

Notes:

Electrical Maintenance Checklist – Traffic Gates

Form 10-4
Page 1 of 1

Date: _____ Maintenance Personnel: _____	Maintenance Tasks to Be Performed: Six Month ☐

Maintenance Tasks	Maintenance Tasks Completed: Six Month
Warning Gates (Section 8.4.1) (Component ID #48, 50, 52, 55, & 57)	
Check the transmission oil level. Check seals and add/replace oil as needed.	☐
Lubricate shaft bearings and rod ends.	☐
Lubricate rotary cam limit switch roller chain.	☐
Check the roller chain tension. Tighten as needed.	☐
Barrier Gate (Section 8.4.2) (Component ID # 64, 66, 68, 71, 73, & 79)	
Check the transmission oil level. Check seals and add/replace oil as needed.	☐
Lubricate shaft bearings and rod ends.	☐
Lubricate rotary cam limit switch chain.	☐
Check the roller chain tension. Tighten as needed.	☐

Refer to Section 8.4 "Traffic Gates" for component locations, quantities, and additional maintenance information. Component ID # corresponds to components listed in Section 11.1.

Notes:

Electrical Maintenance Checklist – Electrical Power Systems

Form 10-5
Page 1 of 3

Date: _____ Maintenance Personnel: _____	Maintenance Tasks to Be Performed: Three Month ☐	Annual ☐

Maintenance Tasks	Maintenance Tasks Completed	
	Three Month	**Annual**
Control Enclosures (Section 8.5.1)		
Open and clean enclosures with a vacuum cleaner.	☐	
Remove accumulation of dirt, grease, and gum with contact cleaner.	☐	
Inspect enclosures for corrosion and moisture.	☐	
Check for poor or loose connections and evidence of overheating.	☐	
Lubricate door hinges and latches.	☐	
Check circuit breaker disconnects for proper operation.	☐	
Inspect terminal block screws and hand tighten loose connections.	☐	
Inspect wiring from unit terminal blocks for deterioration of insulation.	☐	
Inspect all circuit breakers. Verify with meter that continuity is broken on trip or switch off conditions.	☐	
Check all starter contacts. Replace contacts when nearly all the silver tip is gone and contact tip support is exposed.	☐	
Verify enclosure lights turn on when doors are open. Replace bulbs as required.	☐	
Verify enclosure heaters are functioning.	☐	
Check for discolored connections on terminals, contact supports, bus bars, or connectors. Clean connection points that are discolored. Tighten all loose hardware. Replace or repair heat-damaged wires and connectors as necessary.		☐
Operate the motor controller/contactor without load and observe contact operation to be sure it opens and closes cleanly and that the contacts are fully sealed in the closed position.		☐
Operate the motor controller/contactor under load and check for loud noise and arcing.		☐
Measure and record current draw on load side of contactor.		☐
Secondary Resistors (Section 8.5.2)		
Open and clean enclosure with a vacuum cleaner.		☐
Secure all loose hardware.		☐
Check for discolored connections on terminals or connectors. Clean discolored connection points. Tighten all hardware. Replace or repair heat damaged wires and connectors as necessary.		☐
Operate the motor controller/contactor without load and observe contact operation to be sure it opens and closes cleanly and that the contacts are fully sealed in the closed position.		☐
Operate the motor controller/contactor under load and check for loud noise and arcing.		☐
Measure and record current draw on load side of contactor.		☐
Panelboards (Section 8.5.3)		
Open and clean enclosure with a vacuum cleaner.		☐
Remove accumulation of dirt, grease, and gum with contact cleaner.		☐
Check for corrosion and moisture.		☐
Examine bus bar connections for poor or loose connections and evidence of overheating.		☐
Lubricate door hinges and latches.		☐
Operate each circuit breaker to check for proper operation.		☐
Measure resistance to ground using a ground test kit.		☐

Electrical Maintenance Checklist – Electrical Power Systems

Form 10-5
Page 2 of 3

Maintenance Tasks	Maintenance Tasks Completed	
	Three Month	Annual
Transformers (Section 8.5.4)		
Open and clean with a vacuum cleaner.		☐
Inspect for corrosion and moisture.		☐
Verify all hardware is secure. Tighten as needed.		☐
Portable Generator Receptacle (Section 8.5.5)		
Using an off-site portable generator, start and run the bridge for one complete opening.		☐
Visually inspect the generator receptacle, cables, and associated equipment.		☐
Manual Transfer Switch (Section 8.5.6)		
Test switch with operation of the portable generator.		☐
Remove accumulation of dirt, grease, and gum with contact cleaner.		☐
Check for corrosion and moisture.		☐
Examine for excessive heating of parts, discoloration of metal parts, charred insulation, odor or blistering.		☐
Check for freedom of moving parts.		☐
Check for worn or broken mechanical parts.		☐
Tighten loose mountings and connections.		☐
Check for excessive vibration.		☐
Safety and Disconnect Switches (Section 8.5.7)		
Remove accumulation of dirt, grease, and gum with contact cleaner. Lightly lubricate contacts with silicone grease.		☐
Check for corrosion and moisture.		☐
Examine for excessive heating of parts, discoloration of metal parts, charred insulation, odor or blistering.		☐
Check for freedom of moving parts.		☐
Check for worn or broken mechanical parts.		☐
Tighten loose mountings and connections.		☐
Replace pitted or worn contacts or replace entire unit if needed.		☐
Check for excessive arcing.		☐
Check condition of gaskets (for dust tight or watertight units).		☐
Electrical Conductors (Section 8.5.8)		
Visually inspect terminations and splices for cracks, deterioration, corrosion, discoloring, or any other abnormalities.		☐
Check tightness of each conductor termination at each terminal box.		☐
Check the strain relief fittings for signs of distress.		☐
Inspect wires and electrical cables for grease and oil contamination, fraying, abrasions, sweating, crack, melted, or overheated blue tinted insulation. Clean or replace in kind as needed.		☐

Electrical Maintenance Checklist – Electrical Power Systems

Form 10-5
Page 3 of 3

Maintenance Tasks	Maintenance Tasks Completed	
	Three Month	Annual
Droop Cables (Section 8.5.9)		
Visually inspect terminations and splices for cracks, deterioration, corrosion, discoloring, or any other abnormalities.		☐
Check tightness of each conductor termination at each terminal box.		☐
Check the strain relief fittings for signs of distress.		☐
Check cables for any wear or abrasions on the outer jacket.		☐
Inspect wires and electrical cables for grease and oil contamination, fraying, abrasions, sweating, crack, melted, or overheated blue tinted insulation. Clean or replace in kind as needed.		☐
Submarine Cable (Section 8.5.10)		
Visually inspect terminations and splices for cracks, deterioration, corrosion, discoloring, or any other abnormalities.		☐
Check tightness of each conductor termination at each terminal box.		☐
Check the strain relief fittings for signs of distress.		☐
Tighten loose connections		☐
Visually inspect the submarine cable and watch for signs of cracks, deterioration and discoloration of the cable jackets.		☐

Refer to Section 8.5"Electrical Power Systems" for component locations, quantities, and additional maintenance information.

Notes:

Electrical Maintenance Checklist – Lighting System

Form 10-6
Page 1 of 1

	Maintenance Tasks To Be Performed:							
	Week 1	Week 2	Week 3	Week 4	Week 5	Monthly	Six Month	Annual
Date: _____ Maintenance Personnel: _____	☐	☐	☐	☐	☐	☐	☐	☐
Date: _____ Maintenance Personnel: _____	☐	☐	☐	☐	☐	☐	☐	☐
Date: _____ Maintenance Personnel: _____	☐	☐	☐	☐	☐	☐	☐	☐
Date: _____ Maintenance Personnel: _____	☐	☐	☐	☐	☐	☐	☐	☐
Date: _____ Maintenance Personnel: _____	☐	☐	☐	☐	☐	☐	☐	☐

	Maintenance Tasks Completed							
Maintenance Tasks	**Week 1**	**Week 2**	**Week 3**	**Week 4**	**Week 5**	**Monthly**	**Six Month**	**Annual**
Navigation Lights (Section 8.6.1)								
Check navigation lights for proper operation.	☐	☐	☐	☐	☐			
Replace lamps or fixtures as needed.	☐	☐	☐	☐	☐			
Check gaskets.								☐
Tighten loose connections.								☐
Inspect for corrosion of metal parts.								☐
Replace worn or broken mechanical parts.								☐
Replace lamps.								☐
Interior/Exterior Lights (Section 8.6.2)								
Check for burned-out lamps. Replace as needed.	☐	☐	☐	☐	☐			
Clean luminaire lenses, interior surfaces, and weep holes (where applicable).								☐
Check gaskets and replace as needed.								☐
Tighten loose connections.								☐
Inspect for corrosion of metal parts. Spot paint as necessary.								☐
Replace worn or broken parts.								☐
Traffic Signals (Section 8.6.3)								
Check lights for proper illumination. Replace bulbs as needed.						☐		
Verify proper operation during openings.						☐		
Check for proper operation and sound for each warning gong						☐		
Check wiring for deterioration.								☐
Clean reflectors, lenses and gongs. Spot paint as needed.								☐
Traffic Gate Arm Lights (Section 8.6.4)								
Check traffic gate arm lights for proper operation. Replace bulbs as needed.	☐	☐	☐	☐	☐			
Replace traffic gate arm light lamps and check wiring that is non-functional or damaged.							☐	

Refer to Section 8.6 "Lighting Systems" for component locations, quantities, and additional maintenance information.

Notes:

Electrical Maintenance Checklist – Electric Motors

Form 10-7
Page 1 of 1

Date: _____ Maintenance Personnel: _____	Maintenance Tasks To Be Completed: Annual	Six Year
	☐	☐

Maintenance Tasks	Maintenance Tasks Completed	
	Annual	**Six Year**
Main Leaf (Span) Motor (Section 8.7.1) (Component ID # 2)		
Verify that shaft is free of oil and grease.	☐	
Check for leakage around bearings. Clean off excess grease and dirt.	☐	
Verify that shaft end-play is normal.	☐	
Inspect and tighten loose electrical connections on motor.	☐	
See that all keys, bolts, and pins are in their proper position. Check all bolts for tightness. Tighten as needed.	☐	
During operation, examine motor for smooth running and absence of vibration.	☐	
During operation, check motor and bearings for overheating.	☐	
Lubricate motor bearings.	☐	
Check painted surfaces for corrosion. Spot paint as necessary. Do not paint nameplates.	☐	
Repaint Motor. Do not paint nameplates.		☐
Traffic Gate Motor (Section 8.7.2) (Component ID # 47 & 63)		
Check for leakage around bearings. Clean off excess grease and dirt.	☐	
Verify that shaft end-play is normal.	☐	
Inspect and tighten loose electrical connections on motor.	☐	
See that all keys, bolts, and pins are in their proper position. Check all bolts for tightness. Tighten as needed.	☐	
During operation, examine motor for smooth running and absence of vibration.	☐	
During operation, check motor and bearings for overheating.	☐	
Visually inspect solenoid brake while stationary and during gate operation.	☐	
Check solenoid brake electrical connections and tighten as necessary.	☐	
Inspect solenoid brake for wear, damage, and bolt and nut tightness. Check for freedom of moving parts.	☐	
Check solenoid brake components for evidence of excessive heating. Check for accumulation of dirt or gum, evidence of water dripping, or corrosion. Clean as necessary.	☐	
Check solenoid brake for excessive vibration or noise during operation.	☐	

Refer to Section 8.7 "Electric Motors" for component locations, quantities, and additional maintenance information. Component ID # corresponds to components listed in Section 11.1.

Notes:

Electrical Maintenance Checklist – Control System

Form 10-8
Page 1 of 1

	Maintenance Tasks To Be Completed:	
	Three Month	Annual
Date: _____ Maintenance Personnel: _____	☐	☐

	Maintenance Tasks Completed	
Maintenance Tasks	**Three Month**	**Annual**
Control Console (Section 8.8.1)		
Open and clean with a vacuum cleaner.	☐	
Remove accumulation of dirt, grease, and gum with contact cleaner. Lightly lubricate contacts with silicone grease.	☐	
Check for corrosion and moisture.	☐	
Lubricate door hinges and latches.	☐	
Inspect terminal block screws and tighten all loose connections.	☐	
Inspect wiring from unit terminal blocks for deterioration of insulation.	☐	
Inspect all circuit breakers. Verify with meter than continuity is broken on trip or switch off conditions.	☐	
Inspect all fuses with meter and verify continuity. Replace fuses if needed.	☐	
Inspect all relays and tighten connections as necessary.	☐	
Check all pushbuttons, selector switches and meters. Replace as necessary.	☐	
Check all indicating lights by turning the pilot light test selector switch located behind the cabinet door and verify each lamp illuminates. Replace bulbs as needed.	☐	
Verify enclosure lights turn on when doors are open. Replace bulbs as needed.	☐	
Remove indicating light covers and check springs are firmly seated and each bulb and lamp holder is making sufficient contact.	☐	
Replace all indicating light bulbs.		☐
Check for discolored connections on terminals, contact supports, bus bars, or connectors. Clean connection points that are discolored. Tighten all loose hardware. Replace or repair heat damaged wires and connectors as necessary.		☐
Manually operate each relay and contactor with associated circuit breakers off and observe contact operation to be sure it opens and closes cleanly and that the contacts are sealed when in the closed position.		☐
Monitor relay and contactor operations during normal operation and check for loud noise and arcing, during opening and on closing operations.		☐
Limit Switches (Section 8.8.2) (Component ID # 1, 9, 31, 58, 60, 61, 74, 75, 80, & 82)		
Inspect all limit switches for wear.		☐
Remove accumulated dust, dirt, and moisture on housing.		☐
Remove accumulated dust, dirt, and moisture from all shafts.		☐
Inspect latches, mounting hardware, and seals.		☐
Inspect all screws and tighten connections as necessary.		☐
Remove the cover and visually inspect the condition of all internal parts.		☐
Inspect rotary cam limit switch switches for wear.		☐
Inspect rotary cam limit switch rollers for wear.		☐
Inspect rotary cam limit switch cams for wear.		☐
Inspect all wiring for deterioration for fully seated limit switches		☐
Inspection limit switch body and remove debris for fully seated limit switches		☐
Inspect strike plate for corrosion and remove debris for fully seated limit switches		☐
Inspect brake limit switches snap action contact blocks and integral component connections. Tighten as needed.		☐
Inspect brake limit switches wiring from snap action contact blocks for deterioration.		☐
Cycle brake limit switches lever arms several times.		☐

Refer to Section 8.8 "Control System" for component locations, quantities, and additional maintenance information. Component ID # corresponds to components listed in Section 11.1.

Electrical Maintenance Checklist – Miscellaneous Equipment

Form 10-9
Page 1 of 2

Date: _____ Maintenance Personnel: _____	Maintenance Tasks To Be Performed: Monthly	Three Month	Six Month
	☐	☐	☐

Maintenance Tasks	Maintenance Tasks Completed: Monthly	Three Month	Six Month
Heating and Air Conditioning Systems (Section 8.9.1)			
Check all air filters. Clean or replace as necessary.	☐		
Check all cooling coils, seals, fittings, ducting connections, and pipelines for leaks. Correct as necessary.	☐		
Check surfaces of casing for signs of corrosion and retreat or paint as necessary.	☐		
Inspect the condition of all safety devices for deterioration.	☐		
Check the performance of all equipment related to temperature and humidity.	☐		
Sump Pump (Section 8.9.2)			
Test operation each sump pump motor.	☐		
Check that the motor is free of debris.	☐		
During operation, examine motor for smooth running and absence of vibration.	☐		
Open and clean the control panel with a vacuum cleaner.		☐	
Remove accumulation of dirt, grease, and gum from the control panel with contact cleaner.		☐	
Check the control panel for corrosion and moisture.		☐	
Examine the control panel connections for poor or loose connections and evidence of overheating.		☐	
Lubricate the control panel door hinges and latches.		☐	
Check the control panel circuit breaker disconnects for proper operation.		☐	
Inspect the control panel terminal block screws and tighten all connections.		☐	
Inspect the control panel wiring from unit terminal blocks for deterioration and/or overheating of insulation.		☐	
Inspect all control panel circuit breakers. Verify with meter that continuity is broken on trip or switch off conditions.		☐	
Check all starter contacts. Replace when nearly the entire silver tip is gone and the contact tip support is exposed.		☐	
Hot Water Heater (Section 8.9.3)			
Check the unit and associated piping for leaks.		☐	
Platforms (Section 8.9.4)			
Clean and power wash the machinery platform.			☐

Refer to Section 8.9 "Miscellaneous Equipment" for component locations, quantities, and additional maintenance information.

Notes:

THIS PAGE INTENTIONALLY LEFT BLANK

CHAPTER 11 - SUPPLEMENTAL INFORMATION AND SPECIFICATIONS

CONTENTS

11.1 COMPONENT IDENTIFICATION CHARTS AND DIAGRAMS ... 11-2
11.2 MACHINERY LUBRICATION SCHEMATICS ... 11-4
11.3 MACHINERY LUBRICATION SCHEDULE ... 11-6
11.4 BRIDGE MAINTENANCE PERFORMANCE STANDARDS (PLATES) ... 11-9
11.4.1 SLEEVE AND COLLAR BEARING LUBRICATION ... 11-9
11.4.2 MOTOR BEARING LUBRICATION ... 11-10
11.4.3 MOTOR AND MACHINERY BRAKE MAINTENANCE ... 11-11
11.4.4 OPEN GEARING LUBRICATION ... 11-13
11.4.5 AIR BUFFER LUBRICATION ... 11-14
11.4.6 INSTRUMENTATION DRIVE CHAIN LUBRICATION ... 11-15
11.5 MATERIAL DATA SHEETS ... 11-16
11.5.1 MOBIL MOBILUX EP-2 ... 11-16
11.5.2 MOBIL MOBILTAC 325 NC ... 11-27
11.5.3 MOBIL UNIREX N2 ... 11-41
11.5.4 MOBIL DTE 21 ... 11-51
11.5.5 MOBIL 600W CYLINDER OIL ... 11-64
11.5.6 CRC TAC 2 ADHESIVE CHAIN LUBRICANT ... 11-74
11.5.7 CRC QUICKCLEAN HEAVY DUTY DEGREASER ... 11-83
11.5.8 CAIG LABORATORIES DEOXIT CONTACT CLEANER ... 11-92
11.6 COMPONENT MANUFACTURER LIST ... 11-100
11.7 MECHANICAL EQUIPMENT MANUALS AND SPECIFICATIONS ... 11-103
11.7.1 MOTOR BRAKE – EATON SIZE S10 ... 11-103
11.7.2 MACHINERY BRAKE – MONDEL MBT/E-ED121/6 ... 11-108
11.8 TRAFFIC CONTROL EQUIPMENT MANUALS AND SPECIFICATIONS ... 11-141
11.8.1 WARNING GATE – B&B ROADWAY VT-40 ... 11-141
11.8.2 BARRIER GATE – B&B ROADWAY VT-6801 ... 11-167
11.9 ELECTRICAL EQUIPMENT MANUALS AND SPECIFICATIONS ... 11-190
11.9.1 SPAN POSITION ROTARY CAM LIMIT SWITCH – GENERAL ELECTRIC ... 11-190

THIS PAGE INTENTIONALLY LEFT BLANK

11.1 COMPONENT IDENTIFICATION CHARTS AND DIAGRAMS

SPAN DRIVE AND LOCK MACHINERY		
ID NUMBER	DESCRIPTION	SECTION
1	MOTOR BRAKE W/ 2 SQUARE D LIMIT SWITCHES	8.2.1 8.8.2
2	MAIN LEAF MOTOR	8.7.1
3	PINION	8.2.4
4	GEAR	8.2.4
5	SHAFT	-
6	SLEEVE BEARING	8.2.3
7	COUPLING	8.2.2
8	SHAFT	-
9	MACHINERY BRAKE W/ 3 CUTLER HAMMER LIMIT SWITCHES	8.2.1 8.8.2
10	SLEEVE BEARING	8.2.3
11	PINION	8.2.4
12	SLEEVE BEARING	8.2.3
13	GEAR	8.2.4
14	SHAFT	-
15	SLEEVE BEARING	8.2.3
16	PINION	8.2.4
17	COLLAR BEARING	8.2.3
18	SLEEVE BEARING	8.2.3
19	SHAFT	-
20	IDLE GEAR	8.2.4
21	COLLAR BEARING	8.2.3
22	COLLAR BEARING	8.2.3
23	MAIN PINION SHAFT	-
24	GEAR	8.2.4
25	COLLAR BEARING	8.2.3
26	MAIN PINION	8.2.4
27	RACK	8.2.4
28	SPROCKET	8.2.7
29	ROLLER CHAIN	8.2.7
30	SPROCKET	8.2.7
31	SPAN POSITION ROTARY CAM LIMIT SWITCH	8.8.2
32	MANUAL DRIVE PINION	8.2.4
33	SHAFT	-
34	SLEEVE BEARING	8.2.3
35	MANUAL DRIVE CHAIN SHEAVE	8.2.5
36	AIR BUFFER	8.2.6
37	PISTON ROD GUIDE	8.2.6
38	AIR BUFFER STRIKE PLATE	8.2.6
39	LOCK BAR	8.3.1
40	LOCK BAR SOCKET	8.3.1
41	PIN	8.3.1
42	LOCKING PIN	8.3.1
43	SOLE PLATE	8.1.2
44	CENTERING GUIDE	8.3.2
45	MASONRY PLATE	8.1.2

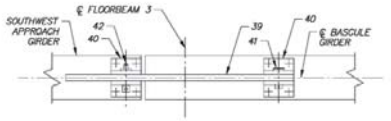

SPAN LOCK COMPONENTS – PLAN
SCALE: NTS
SPAN LOCK BAR LOCATED ONLY AT WEST BASCULE GIRDER

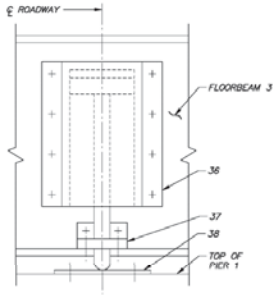

AIR BUFFER – ELEVATION
SCALE: NTS

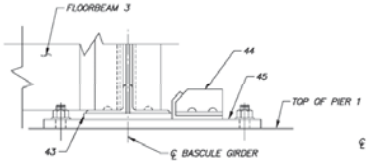

LIVE LOAD BEARING
SCALE: NTS
NOTE: EAST LIVE LOAD BEARING SHOWN, WEST SYMMETRICAL ABOUT CENTERLINE OF BRIDGE

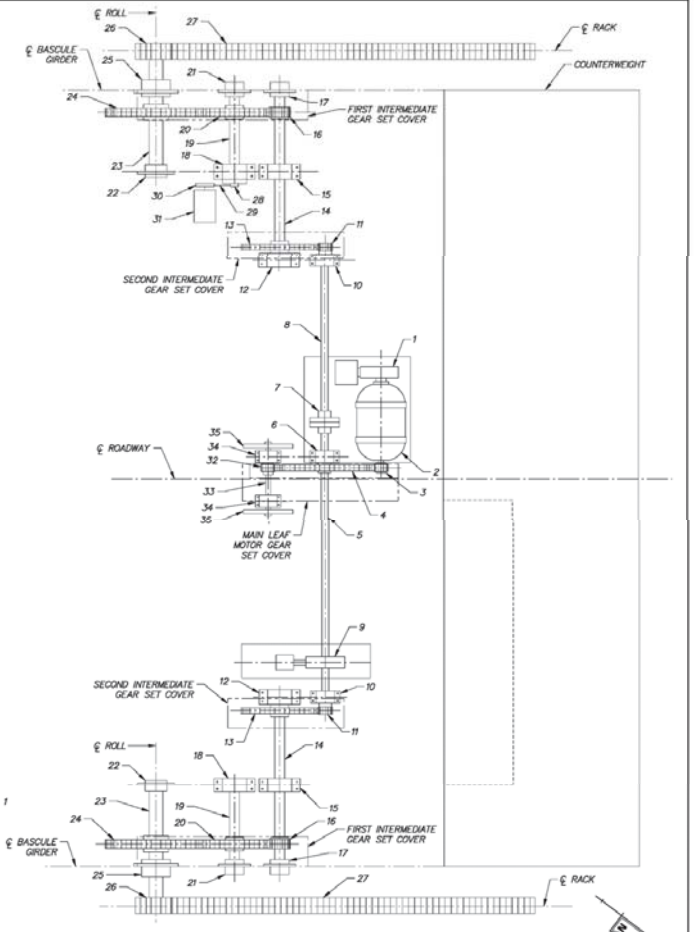

SPAN DRIVE MACHINERY – PLAN
SCALE: NTS

DELAWARE DEPARTMENT OF TRANSPORTATION

ADDENDUMS / REVISIONS

REHOBOTH ROAD BRIDGE OPERATIONS AND MAINTENANCE MANUAL

CONTRACT: -
COUNTY: KENT
BRIDGE NO. 2-021A
DRAWN BY: DJM
CHECKED BY: JAB

SPAN DRIVE & LOCK MACHINERY COMPONENT IDENTIFICATION

SECTION NO. 11-2A
PAGE NO. 11-2

THIS PAGE INTENTIONALLY LEFT BLANK

WARNING GATE MACHINERY		
ID NUMBER	DESCRIPTION	SECTION
46	WARNING GATE SOLENOID BRAKE	8.7.2
47	WARNING GATE MOTOR	8.7.2
48	WARNING GATE TRANSMISSION	8.4.1
49	WARNING GATE TRANSMISSION CRANK	8.4.1
50	WARNING GATE ROD END	8.4.1
51	WARNING GATE CONNECTING ROD	8.4.1
52	WARNING GATE ROD END	8.4.1
53	WARNING GATE PIVOT SHAFT CRANK	8.4.1
54	WARNING GATE PIVOT SHAFT	8.4.1
55	WARNING GATE PIVOT SHAFT BEARING	8.4.1
56	WARNING GATE TRANSMISSION OUTPUT SPROCKET	8.4.1
57	WARNING GATE ROLLER CHAIN	8.4.1
58	WARNING GATE ROTARY CAM LIMIT SWITCH	8.8.2
59	WARNING GATE MANUAL OPERATION HAND CRANK	8.4.1
60	WARNING GATE MANUAL OPERATION LIMIT SWITCH	8.8.2
61	WARNING GATE DOOR SWITCH	8.8.2

BARRIER GATE MACHINERY		
ID NUMBER	DESCRIPTION	SECTION
62	BARRIER GATE SOLENOID BRAKE	8.7.2
63	BARRIER GATE MOTOR	8.7.2
64	BARRIER GATE TRANSMISSION	8.4.2
65	BARRIER GATE TRANSMISSION CLUTCH	8.4.2
66	BARRIER GATE ROD END	8.4.2
67	BARRIER GATE CONNECTING ROD	8.4.2
68	BARRIER GATE ROD END	8.4.2
69	BARRIER GATE PIVOT SHAFT CRANK	8.4.2
70	BARRIER GATE PIVOT SHAFT	8.4.2
71	BARRIER GATE PIVOT SHAFT BEARING	8.4.2
72	BARRIER GATE TRANSMISSION OUTPUT SPROCKET	8.4.2
73	BARRIER GATE ROLLER CHAIN	8.4.2
74	BARRIER GATE ROTARY CAM LIMIT SWITCH	8.8.2
75	BARRIER GATE LOCKING ARM LIMIT SWITCH	8.8.2
76	BARRIER GATE LOCKING ARM ACTUATOR	8.4.2
77	BARRIER GATE LOCKING ARM CRANK	8.4.2
78	BARRIER GATE LOCKING ARM SHAFT	8.4.2
79	BARRIER GATE LOCKING ARM BEARING	8.4.2
80	BARRIER GATE DOOR LIMIT SWITCH	8.8.2
81	BARRIER GATE MANUAL OPERATION HAND CRANK	8.4.2
82	BARRIER GATE MANUAL OPERATION LIMIT SWITCH	8.8.2

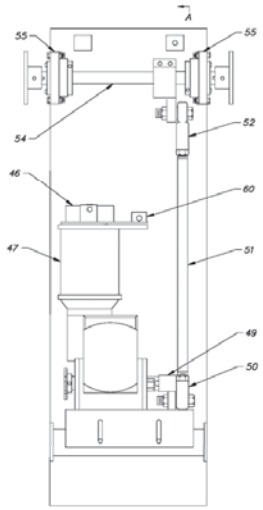

WARNING GATE MACHINERY – ELEVATION
SCALE: NTS
NOTE: ROTARY CAM LIMIT SWITCH NOT SHOWN FOR CLARITY

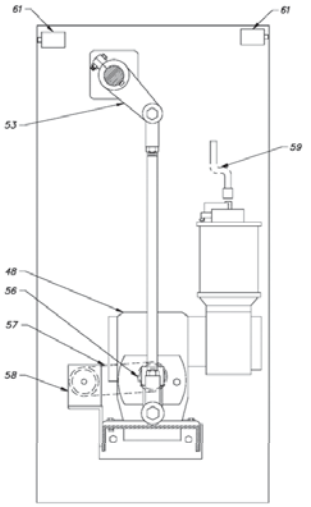

SECTION A–A
SCALE: NTS

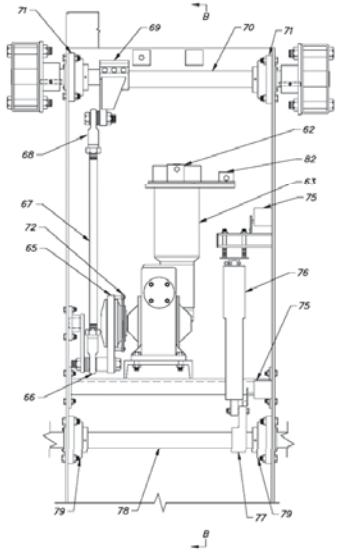

BARRIER GATE MACHINERY – ELEVATION
SCALE: NTS
NOTES: LOCKING ARMS NOT SHOWN FOR CLARITY
ROTARY CAM LIMIT SWITCH NOT SHOWN FOR CLARITY

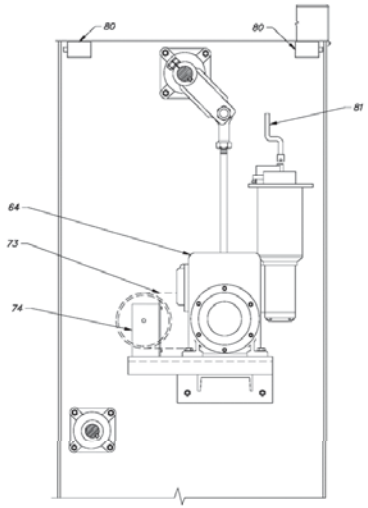

SECTION B–B
SCALE: NTS

F:\LADD\...\T31\WORKSPACE\DLDOT\SEED\SS_BORDER.DGN

DELAWARE
DEPARTMENT OF TRANSPORTATION

ADDENDUMS / REVISIONS

REHOBOTH ROAD BRIDGE
OPERATIONS AND MAINTENANCE
MANUAL

CONTRACT -
COUNTY KENT
BRIDGE NO. 2-021A
DRAWN BY JAD
CHECKED BY DJM

TRAFFIC GATE MACHINERY
COMPONENT IDENTIFICATION

SECTION NO. 11-10
PAGE NO. 11-3

THIS PAGE INTENTIONALLY LEFT BLANK

11.2 MACHINERY LUBRICATION SCHEMATICS

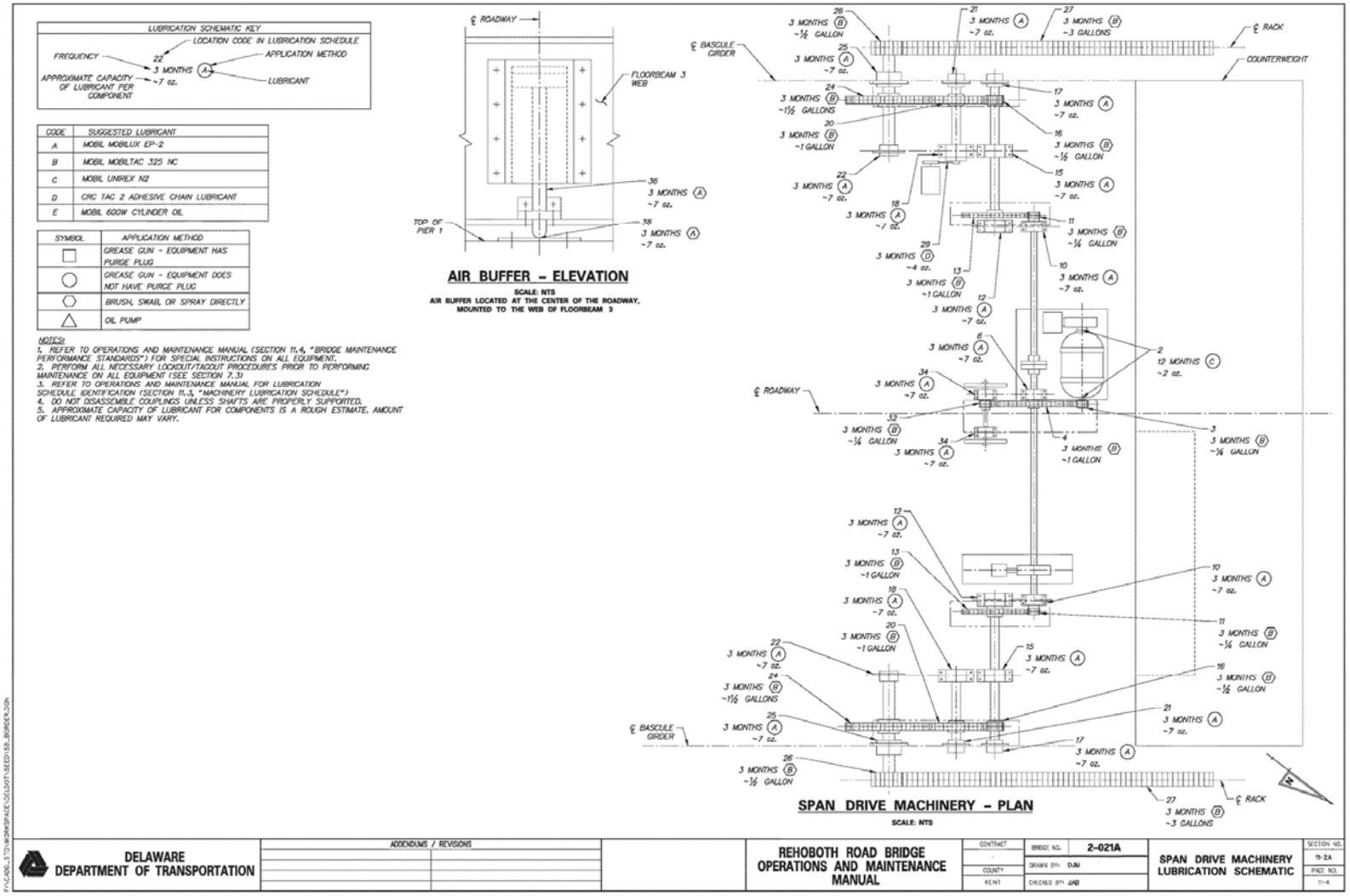

THIS PAGE INTENTIONALLY LEFT BLANK

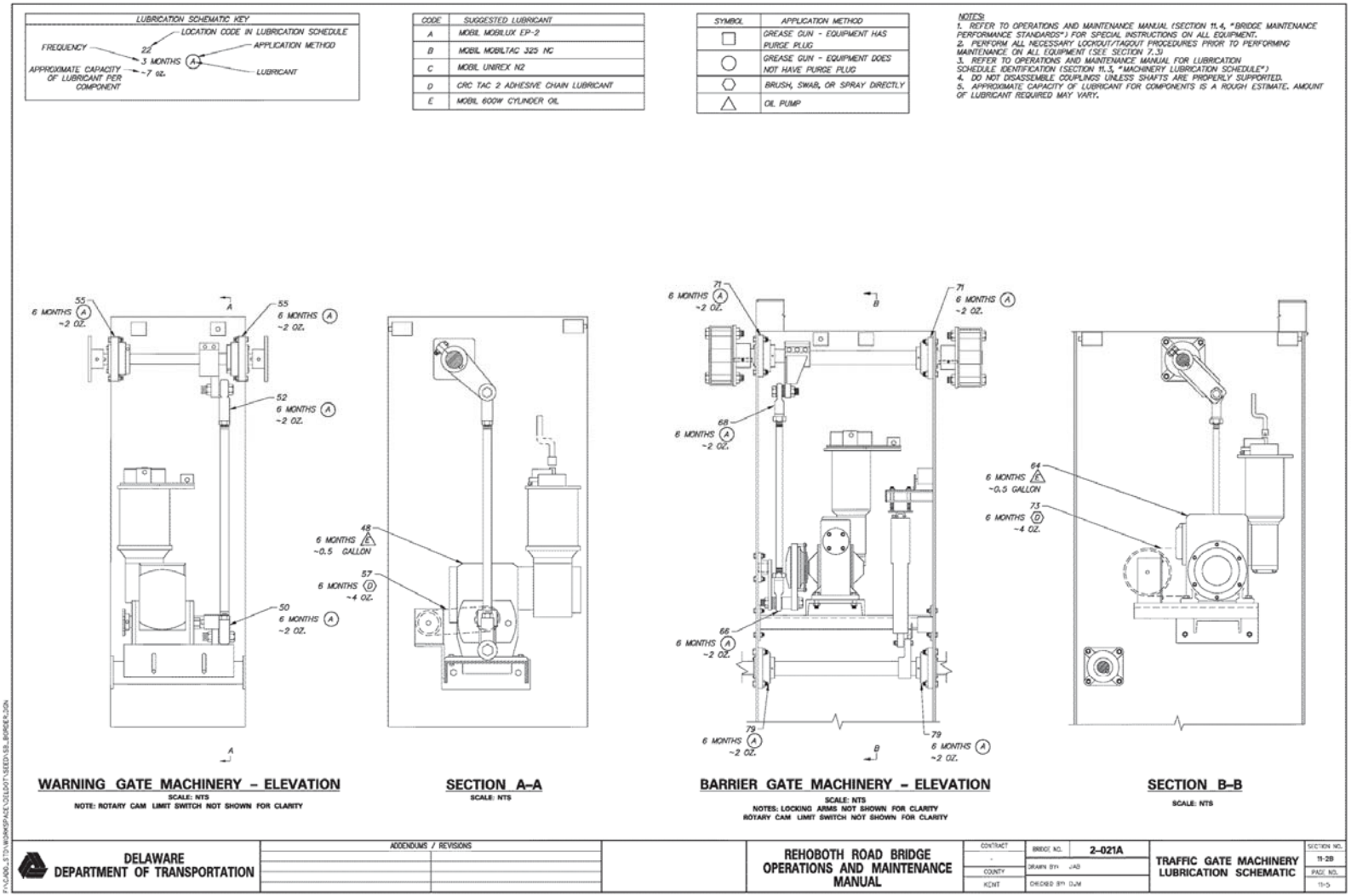
LUBRICATION SCHEMATIC KEY
LOCATION CODE IN LUBRICATION SCHEDULE
FREQUENCY
22
APPLICATION METHOD
3 MONTHS
A
APPROXIMATE CAPACITY OF LUBRICANT PER COMPONENT
~7 oz.
LUBRICANT
CODE | SUGGESTED LUBRICANT
A | MOBIL MOBILUX EP-2
B | MOBIL MOBILTAC 325 NC
C | MOBIL UNIREX N2
D | CRC TAC 2 ADHESIVE CHAIN LUBRICANT
E | MOBIL 600W CYLINDER OIL
SYMBOL | APPLICATION METHOD
GREASE GUN - EQUIPMENT HAS PURGE PLUG
GREASE GUN - EQUIPMENT DOES NOT HAVE PURGE PLUG
BRUSH, SWAB, OR SPRAY DIRECTLY
OIL PUMP
NOTES:
1. REFER TO OPERATIONS AND MAINTENANCE MANUAL (SECTION 11.4, "BRIDGE MAINTENANCE PERFORMANCE STANDARDS") FOR SPECIAL INSTRUCTIONS ON ALL EQUIPMENT.
2. PERFORM ALL NECESSARY LOCKOUT/TAGOUT PROCEDURES PRIOR TO PERFORMING MAINTENANCE ON ALL EQUIPMENT (SEE SECTION 7.3)
3. REFER TO OPERATIONS AND MAINTENANCE MANUAL FOR LUBRICATION SCHEDULE IDENTIFICATION (SECTION 11.3, "MACHINERY LUBRICATION SCHEDULE")
4. DO NOT DISASSEMBLE COUPLINGS UNLESS SHAFTS ARE PROPERLY SUPPORTED.
5. APPROXIMATE CAPACITY OF LUBRICANT FOR COMPONENTS IS A ROUGH ESTIMATE. AMOUNT OF LUBRICANT REQUIRED MAY VARY.
55
6 MONTHS A ~2 OZ.
52
6 MONTHS A ~2 OZ.
48
6 MONTHS A ~0.5 GALLON
57
6 MONTHS D ~4 OZ.
50
6 MONTHS A ~2 OZ.
WARNING GATE MACHINERY – ELEVATION
SCALE: NTS
NOTE: ROTARY CAM LIMIT SWITCH NOT SHOWN FOR CLARITY
SECTION A–A
SCALE: NTS
71
6 MONTHS A ~2 OZ.
68
6 MONTHS A ~2 OZ.
66
6 MONTHS A ~2 OZ.
79
6 MONTHS A ~2 OZ.
BARRIER GATE MACHINERY – ELEVATION
SCALE: NTS
NOTES: LOCKING ARMS NOT SHOWN FOR CLARITY
ROTARY CAM LIMIT SWITCH NOT SHOWN FOR CLARITY
64
6 MONTHS A ~0.5 GALLON
73
6 MONTHS D ~4 OZ.
SECTION B–B
SCALE: NTS
DELAWARE
DEPARTMENT OF TRANSPORTATION
ADDENDUMS / REVISIONS
REHOBOTH ROAD BRIDGE
OPERATIONS AND MAINTENANCE
MANUAL
CONTRACT
BRIDGE NO. 2-021A
DRAWN BY JAB
COUNTY
KENT
CHECKED BY DJM
TRAFFIC GATE MACHINERY
LUBRICATION SCHEMATIC
SECTION NO. 11-2B
PAGE NO. 11-5

THIS PAGE INTENTIONALLY LEFT BLANK

11.3 MACHINERY LUBRICATION SCHEDULE

Location Code	Section	Machinery	Applicator	Specified Grade	Lubrication Type	Mfr. Spec.	Frequency (Months)
1	8.2.1	MOTOR BRAKE	LUBRICATION NOT REQUIRED				
2	8.7.1	MAIN LEAF MOTOR BEARINGS	GREASE GUN, REMOVE PLUG, FILL WITH GREASE, REPLACE PLUG	NLGI #2	GREASE	MOBIL UNIREX N2	12
3	8.2.4	MAIN LEAF MOTOR PINION	BRUSH OR SWAB	N/A	GREASE	MOBIL MOBILTAC 325 NC	3
4	8.2.4	MAIN LEAF MOTOR GEAR	BRUSH OR SWAB	N/A	GREASE	MOBIL MOBILTAC 325 NC	3
5	-	SHAFT	LUBRICATION NOT REQUIRED				
6	8.2.3	SLEEVE BEARING	GREASE GUN, GREASE FITTING	NLGI #2	GREASE	MOBIL MOBILUX EP-2	3
7	8.2.2	COUPLING	LUBRICATION NOT REQUIRED				
8	-	SHAFT	LUBRICATION NOT REQUIRED				
9	8.2.1	MACHINERY BRAKE	LUBRICATION NOT REQUIRED				
10	8.2.3	SLEEVE BEARING	GREASE GUN, GREASE FITTING	NLGI #2	GREASE	MOBIL MOBILUX EP-2	3
11	8.2.4	SECOND INTERMEDIATE PINION	BRUSH OR SWAB	N/A	GREASE	MOBIL MOBILTAC 325 NC	3
12	8.2.3	SLEEVE BEARING	GREASE GUN, GREASE FITTING	NLGI #2	GREASE	MOBIL MOBILUX EP-2	3
13	8.2.4	SECOND INTERMEDIATE GEAR	BRUSH OR SWAB	N/A	GREASE	MOBIL MOBILTAC 325 NC	3
14	-	SHAFT	LUBRICATION NOT REQUIRED				
15	8.2.3	SLEEVE BEARING	GREASE GUN, GREASE FITTING	NLGI #2	GREASE	MOBIL MOBILUX EP-2	3
16	8.2.4	FIRST INTERMEDIATE PINION	BRUSH OR SWAB	N/A	GREASE	MOBIL MOBILTAC 325 NC	3
17	8.2.3	COLLAR BEARING	GREASE GUN, GREASE FITTING	NLGI #2	GREASE	MOBIL MOBILUX EP-2	3
18	8.2.3	SLEEVE BEARING	GREASE GUN, GREASE FITTING	NLGI #2	GREASE	MOBIL MOBILUX EP-2	3
19	-	SHAFT	LUBRICATION NOT REQUIRED				
20	8.2.4	FIRST INTERMEDIATE IDLER GEAR	BRUSH OR SWAB	N/A	GREASE	MOBIL MOBILTAC 325 NC	3
21	8.2.3	COLLAR BEARING	GREASE GUN, GREASE FITTING	NLGI #2	GREASE	MOBIL MOBILUX EP-2	3
22	8.2.3	COLLAR BEARING	GREASE GUN, GREASE FITTING	NLGI #2	GREASE	MOBIL MOBILUX EP-2	3
23	-	MAIN PINION SHAFT	LUBRICATION NOT REQUIRED				
24	8.2.4	FIRST INTERMEDIATE GEAR	BRUSH OR SWAB	N/A	GREASE	MOBIL MOBILTAC 325 NC	3
25	8.2.3	COLLAR BEARING	GREASE GUN, GREASE FITTING	NLGI #2	GREASE	MOBIL MOBILUX EP-2	3
26	8.2.4	MAIN PINION	BRUSH OR SWAB	N/A	GREASE	MOBIL MOBILTAC 325 NC	3
27	8.2.4	RACK	BRUSH OR SWAB	N/A	GREASE	MOBIL MOBILTAC 325 NC	3
28	8.2.7	SPROCKET	LUBRICATION NOT REQUIRED				
29	8.2.7	ROLLER CHAIN	SPRAY	N/A	GREASE	CRC TAC 2 ADHESIVE CHAIN LUBRICANT	3
30	8.2.7	SPROCKET	LUBRICATION NOT REQUIRED				

Location Code	Section	Machinery	Applicator	Specified Grade	Lubrication Type	Mfr. Spec.	Frequency (Months)
31	8.8.2	SPAN POSITION ROTARY CAM LIMIT SWITCH	LUBRICATION NOT REQUIRED				
32	8.2.4	MANUAL DRIVE PINION	BRUSH OR SWAB	N/A	GREASE	MOBIL MOBILTAC 325 NC	3
33	-	SHAFT	LUBRICATION NOT REQUIRED				
34	8.2.3	SLEEVE BEARING	GREASE GUN, GREASE FITTING	NLGI #2	GREASE	MOBIL MOBILUX EP-2	3
35	8.2.5	MANUAL CHAIN DRIVE SHEAVE	LUBRICATION NOT REQUIRED				
36	8.2.6	AIR BUFFER	BRUSH OR SWAB	NLGI #2	GREASE	MOBIL MOBILUX EP-2	3
37	8.2.6	PISTON ROD GUIDE	LUBRICATION NOT REQUIRED				
38	8.2.6	AIR BUFFER STRIKE PLATE	BRUSH OR SWAB	NLGI #2	GREASE	MOBIL MOBILUX EP-2	3
39	8.3.1	LOCK BAR	LUBRICATION NOT REQUIRED				
40	8.3.1	LOCK BAR SOCKET	LUBRICATION NOT REQUIRED				
41	8.3.1	PIN	LUBRICATION NOT REQUIRED				
42	8.3.1	LOCKING PIN	LUBRICATION NOT REQUIRED				
43	8.1.2	SOLE PLATE	LUBRICATION NOT REQUIRED				
44	8.3.2	CENTERING GUIDE	LUBRICATION NOT REQUIRED				
45	8.1.2	MASONRY PLATE	LUBRICATION NOT REQUIRED				
46	8.7.2	WARNING GATE SOLENOID BRAKE	LUBRICATION NOT REQUIRED				
47	8.7.2	WARNING GATE MOTOR	LUBRICATION NOT REQUIRED				
48	8.4.1	WARNING GATE TRANSMISSION	OIL PUMP – REMOVE PLUG, DRAIN OIL, FLUSH, REPLACE PLUG, AND FILL	AGMA #7	OIL	MOBIL 600W CYLINDER OIL	6
49	8.4.1	WARNING GATE TRANSMISSION CRANK	LUBRICATION NOT REQUIRED				
50	8.4.1	WARNING GATE ROD END	GREASE GUN, GREASE FITTING	NLGI #2	GREASE	MOBIL MOBILUX EP-2	6
51	8.4.1	WARNING GATE CONNECTING ROD	LUBRICATION NOT REQUIRED				
52	8.4.1	WARNING GATE ROD END	GREASE GUN, GREASE FITTING	NLGI #2	GREASE	MOBIL MOBILUX EP-2	6
53	8.4.1	WARNING GATE PIVOT SHAFT CRANK	LUBRICATION NOT REQUIRED				
54	8.4.1	WARNING GATE PIVOT SHAFT	LUBRICATION NOT REQUIRED				
55	8.4.1	WARNING GATE PIVOT SHAFT BEARING	GREASE GUN, GREASE FITTING	NLGI #2	GREASE	MOBIL MOBILUX EP-2	6
56	8.4.1	WARNING GATE TRANSMISSION OUTPUT SPROCKET	LUBRICATION NOT REQUIRED				
57	8.4.1	WARNING GATE ROLLER CHAIN	SPRAY	N/A	GREASE	CRC TAC 2 ADHESIVE CHAIN LUBRICANT	6
58	8.8.2	WARNING GATE ROTARY CAM LIMIT SWITCH	LUBRICATION NOT REQUIRED				
59	8.4.1	WARNING GATE MANUAL OPERATION HAND CRANK	LUBRICATION NOT REQUIRED				

Location Code	Section	Machinery	Applicator	Specified Grade	Lubrication Type	Mfr. Spec.	Frequency (Months)
60	8.8.2	WARNING GATE MANUAL OPERATION LIMIT SWITCH	LUBRICATION NOT REQUIRED				
61	8.8.2	WARNING GATE DOOR LIMIT SWITCH	LUBRICATION NOT REQUIRED				
62	8.7.2	BARRIER GATE SOLENOID BRAKE	LUBRICATION NOT REQUIRED				
63	8.7.2	BARRIER GATE MOTOR	LUBRICATION NOT REQUIRED				
64	8.4.2	BARRIER GATE TRANSMISSION	OIL PUMP – REMOVE PLUG, DRAIN OIL, FLUSH, REPLACE PLUG, AND FILL	AGMA #7	OIL	MOBIL 600W CYLINDER OIL	6
65	8.4.2	BARRIER GATE TRANSMISSION CLUTCH	LUBRICATION NOT REQUIRED				
66	8.4.2	BARRIER GATE ROD END	GREASE GUN, GREASE FITTING	NLGI #2	GREASE	MOBIL MOBILUX EP-2	6
67	8.4.2	BARRIER GATE CONNECTING ROD	LUBRICATION NOT REQUIRED				
68	8.4.2	BARRIER GATE ROD END	GREASE GUN, GREASE FITTING	NLGI #2	GREASE	MOBIL MOBILUX EP-2	6
69	8.4.2	BARRIER GATE PIVOT SHAFT CRANK	LUBRICATION NOT REQUIRED				
70	8.4.2	BARRIER GATE PIVOT SHAFT	LUBRICATION NOT REQUIRED				
71	8.4.2	BARRIER GATE PIVOT SHAFT BEARING	GREASE GUN, GREASE FITTING	NLGI #2	GREASE	MOBIL MOBILUX EP-2	6
72	8.4.2	BARRIER GATE TRANSMISSION OUTPUT SPROCKET	LUBRICATION NOT REQUIRED				
73	8.4.2	BARRIER GATE ROLLER CHAIN	SPRAY	N/A	GREASE	CRC TAC 2 ADHESIVE CHAIN LUBRICANT	6
74	8.8.2	BARRIER GATE ROTARY CAM LIMIT SWITCH	LUBRICATION NOT REQUIRED				
75	8.8.2	BARRIER GATE LOCKING ARM LIMIT SWITCH	LUBRICATION NOT REQUIRED				
76	8.4.2	BARRIER GATE LOCKING ARM ACTUATOR	LUBRICATION NOT REQUIRED				
77	8.4.2	BARRIER GATE LOCK ARM CRANK	LUBRICATION NOT REQUIRED				
78	8.4.2	BARRIER GATE LOCKING ARM SHAFT	LUBRICATION NOT REQUIRED				
79	8.4.2	BARRIER GATE LOCKING ARM BEARING	GREASE GUN, GREASE FITTING	NLGI #2	GREASE	MOBIL MOBILUX EP-2	6
80	8.8.2	BARRIER GATE DOOR LIMIT SWITCH	LUBRICATION NOT REQUIRED				
81	8.4.2	BARRIER GATE MANUAL OPERATION HAND CRANK	LUBRICATION NOT REQUIRED				
82	8.8.2	BARRIER GATE MANUAL OPERATION LIMIT SWITCH	LUBRICATION NOT REQUIRED				

11.4 BRIDGE MAINTENANCE PERFORMANCE STANDARDS (PLATES)

11.4.1 SLEEVE AND COLLAR BEARING LUBRICATION

DELAWARE
DEPARTMENT OF TRANSPORTATION
BRIDGE MANAGEMENT SECTION
BRIDGE MAINTENANCE PERFORMANCE STANDARD

BRIDGE NUMBER
2-021A

BMS ACTIVITY CODE
B065-S2J

EFFECTIVE DATE

ACTIVITY TITLE:
Sleeve and Collar Bearing Lubrication

UNIT OF MEASUREMENT:
Number of Sleeve and Collar Bearings

PROCEDURE DESCRIPTION:

WARNING

Use EXTREME CARE and ALWAYS REMOVE POWER from all pertinent electrical and pneumatic equipment, which includes multiple power sources, before beginning maintenance. Refer to Section 7.3, "Lockout/Tagout Procedure" in the Operations and Maintenance Manual.

Three Months:

1. Clean grease fittings of dirt, debris, old grease, and any other potential contaminants with a rag and CRC Quick Clean Heavy Duty Degreaser or equivalent. Inspect the grease fittings and replace any cracked or broken grease fittings.
2. Insert grease gun tip onto a grease fitting and pump Mobil Mobilux EP-2 or equivalent into the bearing until fresh grease appears along the bearing shaft. Catch old grease in a catch basin. Repeat for all grease fittings.
3. Wipe excess grease from the bearing with a rag and solvent cleaner.
4. Inspect bearings for any unusual defects that may have occurred.

Refer to Sections 8.2.3, 11.5.1, and 11.5.7 for additional component and material information. For lubrication coding details below, refer to Section 11.2 "Machinery Lubrication Schematics" in the Operations and Maintenance Manual.

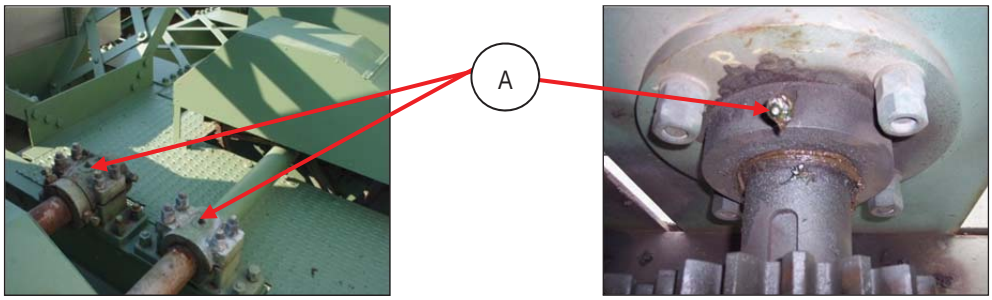

Sleeve Bearings **Collar Bearing**

SCHEDULING CONSIDERATIONS:

Sleeve and collar bearings should be lubricated every month.

Also, inspect and lubricate sleeve and collar bearings after an overstress situation such as a pinched span.

WORK AREA, ACTIVITY DESCRIPTION & REQUIREMENTS:

Sleeve and collar bearings are located on the machinery platform above the roadway. Tasks include locating, inspecting, and lubricating all sleeve and collar bearings on the bridge. Lockout/Tagout is required prior to performing any maintenance on this equipment. Report any significant defects to bridge management.

Qty	EQUIPMENT	Qty	EQUIPMENT	Qty	MATERIAL
1	Grease gun	1/Person	Set of chemical resistant Viton gloves	~10 – 14 oz. Tubes	Mobil Mobilux EP-2 or equivalent
19	Grease fittings	1/Person	Tyvek suit		
1	Catch basin	1/Person	Eye protection	~5 – 20 oz. Cans	CRC Quick Clean Heavy Duty Degreaser or equivalent
1	Bag of rags	1/Person	Chemical respirator		

11.4.2 MOTOR BEARING LUBRICATION MAINTENANCE

DELAWARE **DEPARTMENT OF TRANSPORTATION** **BRIDGE MANAGEMENT SECTION** **BRIDGE MAINTENANCE PERFORMANCE STANDARD**	**BRIDGE NUMBER** 2-021A
	BMS ACTIVITY CODE B066-S2J
	EFFECTIVE DATE

ACTIVITY TITLE:	**UNIT OF MEASUREMENT:**
Motor Bearing Lubrication	Number of Motors

PROCEDURE DESCRIPTION:

WARNING

Use EXTREME CARE and ALWAYS REMOVE POWER from all pertinent electrical and pneumatic equipment, which includes multiple power sources, before beginning maintenance. Refer to Section 7.3, "Lockout/Tagout Procedure" in the Operations and Maintenance Manual.

Annually:

1. Clean grease fittings of dirt, debris, old grease, and any other potential contaminants with a rag. Inspect the grease fittings and replace any cracked or broken grease fittings.
2. Purge old grease from the bearing by slowing pumping fresh grease into the bearing until fresh grease flows out along the shaft and housing interface. For the main leaf motor bearings use Mobil Unirex N2 or equivalent lubricant. **DO NOT OVERGREASE THE MOTOR BEARINGS. THE MOTOR HOUSING SHOULD BE CHECK WHILE GREASING THE BEARINGS TO ENSURE GREASE DOES NOT ENTER THE MOTOR HOUSING.**
3. Perform one complete operation cycle of the motor (raise and lowering of the span for the main leaf motor).
4. Wipe excess grease from the shaft and motor housing interface with a rag. Also check inside the motor for any grease that may have purged inside the motor housing. Remove any grease that may have entered the motor housing.
5. Repeat for the bearing at the other end of the motor.

Refer to Sections 8.7.1 and 11.5.3 for additional component and material information. For lubrication coding details below, refer to Section 11.2 "Machinery Lubrication Schematics" in the Operations and Maintenance Manual.

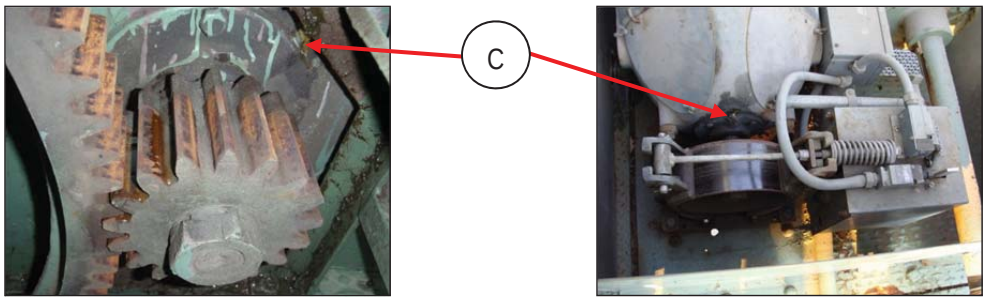

Front Output Shaft of Main Leaf Motor **Rear Output Shaft of Main Leaf Motor**

SCHEDULING CONSIDERATIONS:

Motor bearings should be lubricated annually.

Also, inspect and lubricate motor bearings after an overstress situation such as a pinched span.

WORK AREA, ACTIVITY DESCRIPTION & REQUIREMENTS:

Main leaf motor bearings are located at the front and rear ends of the main leaf motor on the machinery platform. Tasks include locating, inspecting, and lubricating all motor bearings on the bridge. Lockout/Tagout is required prior to performing any maintenance on this equipment. Report any significant defects to bridge management.

Qty	EQUIPMENT	Qty	EQUIPMENT	Qty	MATERIAL
1	Grease gun		Miscellaneous small tools	~1/8 – 14 oz. Tube / Bearing	Mobil Unirex N2 or equivalent
2	Grease fittings				
1	Catch basin	1/Person	Coveralls		
1	Bag of rags	1/Person	Set of nitrile gloves		
1	Adjustable wrench	1/Person	Eye protection		

11.4.3 MOTOR AND MACHINERY BRAKE MAINTENANCE

DELAWARE **DEPARTMENT OF TRANSPORTATION** **BRIDGE MANAGEMENT SECTION** **BRIDGE MAINTENANCE PERFORMANCE STANDARD**	**BRIDGE NUMBER** 2-021A
	BMS ACTIVITY CODE B067-S2J Page 1 of 2
	EFFECTIVE DATE

ACTIVITY TITLE:	**UNIT OF MEASUREMENT:**
Motor and Machinery Brake Maintenance	Number of Brakes

PROCEDURE DESCRIPTION:

WARNING

Use EXTREME CARE and ALWAYS REMOVE POWER from all pertinent electrical and pneumatic equipment, which includes multiple power sources, before beginning maintenance. Refer to Section 7.3, "Lockout/Tagout Procedure" in the Operations and Maintenance Manual.

Annually:

Motor and Machinery Brakes

1. Inspect the brake shoes and brakewheel for wear, dust, dirt, grease, and proper adjustment. The measured gap shall have a minimum of $^{1}/_{64}$" clearance between the brake shoe and brakewheel when hand released. If the brake pads remain in contact with the brakewheel when hand released, observe the brake during operation of the span. A brakewheel that is warm or hot on the brake surface after bridge operation may indicate that the pads are not clear of the brakewheel when released and linkage adjustment have be necessary. If adjustments are made to the machinery brake linkages, the reserve stroke and brake torque should be verified and adjusted as well. Adjustment procedures for the machinery brake are located in Section 11.7.2. After adjusting the brake, if the pads remain in contact with the brakewheel during operation, contact the manufacturer.
2. Inspect the brake shoes and brakewheel for wear, dust, dirt, grease, and proper adjustment. Check the brake pad thickness. Replace pads when the remaining thickness is less than $^{1}/_{16}$".
3. Inspect the mechanical linkages for wear, broken parts, and tightness of nuts and bolts. Check for freedom of moving parts (no binding or sticking). Check the brake housing and linkages for corrosion and signs of water dripping onto the brake.
4. Check for excessive heating of brake components evident by discoloration of metal parts.
5. Check operations of the brakes during test operations of the bridge. Check for any unusual odor and excessive vibrations.
6. Check adjustment of limit switches and hand release devices. The motor brake has two limit switches. The machinery brake has three limit switches.

Machinery Brake

1. Brake actuator maintenance and checks shall be performed by a Mondel authorized technician. Brake frames shall be adjusted by district or electrical/mechanical inspection team. Actuator oil used in the actuator shall be Mobil DTE 21 unless otherwise specified by the Mondel specialist. The brake thruster oil does not need to be replaced unless there is suspicion of oil contamination or the brake thruster is malfunctioning. A sticker shall be placed on the thruster indicating the oil type along with the date of replacement to ensure that non-compatible oils are not mixed. The district shall schedule the Mondel technician to be assisted by the electrical/mechanical inspection teams, simultaneously, so that brakes are adjusted at all times.
2. Check for possible wear of the automatic adjustment mechanism for lining wear.
3. Check brake reserve stroke height. The reserve stroke height of the machinery brake should be 0.7" $^{+}/_{-}$ $^{1}/_{16}$". The machinery brake is equipped with an automatic adjustment mechanism designed to adjust the reserve stroke height as needed without operator adjustment. If the automatic adjustment mechanism is not providing the appropriate reserve stroke height, contact the manufacturer.
4. Check the machinery brake spring tension via the braking torque gage located near the brake thruster. The machinery brake should be set to provide a braking torque of 850 ft-lbs. The torque is read by matching the top of the spring block to the corresponding torque value on the scale. To adjust the braking torque, turn the torque adjustment screw until the top of the spring block is at 850 ft-lbs on the scale. Perform Item 5 in "Motor and Machinery Brakes" to confirm proper operation of the motor brakes after adjustment.

DELAWARE
DEPARTMENT OF TRANSPORTATION
BRIDGE MANAGEMENT SECTION
BRIDGE MAINTENANCE PERFORMANCE STANDARD

BRIDGE NUMBER
2-021A

BMS ACTIVITY CODE
B067-S2J Page 2 of 2

EFFECTIVE DATE

ACTIVITY TITLE:
Motor and Machinery Brake Maintenance

UNIT OF MEASUREMENT:
Number of Brakes

Motor Brake

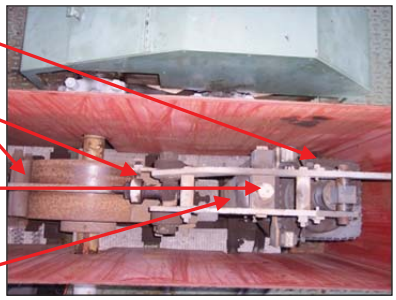

Machinery Brake

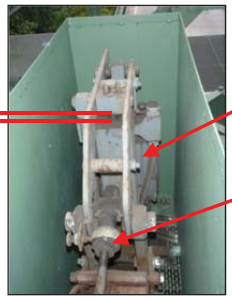

Machinery Brake Thruster and Lever Arm

Machinery Brake Torque Gage

SCHEDULING CONSIDERATIONS:

Motor and machinery brakes should be inspected annually.

Also, inspect brakes when the bridge opens more than 150 times between Spring and Fall maintenance routines or after an overstress situation such as a pinched span.

WORK AREA, ACTIVITY DESCRIPTION & REQUIREMENTS:

The motor brake is located in the main leaf motor enclosure and located at the rear of the main leaf motor. The machinery brake is located on the east side of the machinery platform between the main leaf motor gear set and the second intermediate gear set. Tasks include locating and inspecting all brakes on the bridge. Lockout/Tagout is required prior to performing any maintenance on this equipment. Report any significant defects to bridge management.

Qty	EQUIPMENT	Qty	EQUIPMENT	Qty	MATERIAL
1	Feeler gauge set		Miscellaneous small tools	~2 $^1/_2$ Gallons	Mobil DTE 21 or equivalent (for thruster if oil needs to be replaced)
2	Adjustable wrenches	1/Person	Tyvek suit		
1	Ruler (with graduations of $^1/_{16}$")	1/Person	Set of chemical resistant Viton gloves		
		1/Person	Eye protection		

11.4.4 OPEN GEARING LUBRICATION

DELAWARE DEPARTMENT OF TRANSPORTATION BRIDGE MANAGEMENT SECTION BRIDGE MAINTENANCE PERFORMANCE STANDARD	BRIDGE NUMBER 2-021A
	BMS ACTIVITY CODE B070-S2J
	EFFECTIVE DATE

ACTIVITY TITLE:	UNIT OF MEASUREMENT:
Open Gearing Lubrication	Number of Open Gears

PROCEDURE DESCRIPTION:

WARNING

Use EXTREME CARE and ALWAYS REMOVE POWER from all pertinent electrical and pneumatic equipment, which includes multiple power sources, before beginning maintenance. Refer to Section 7.3, "Lockout/Tagout Procedure" in the Operations and Maintenance Manual.

Three Months:

1. Using a brush, evenly coat all gear tooth surfaces with Mobil Mobiltac 325 NC or equivalent lubricant.
   Each trunnion bearing has one grease fitting in the bearing cap and three grease fittings located on the trunnion shaft.

Annually:

1. Observe displacement patterns in open gearing lubricant for evidence of misalignment.
2. Remove old lubricant and debris by scraping the gear tooth surfaces and disposing of the lubricant in a tray or pan.
3. Apply CRC Quick Clean Heavy Duty Degrease or equivalent to remove existing lubrication on the gear teeth.
4. With the use of a scrapper and rags, remove remaining grease and solvent and properly dispose of materials.
5. Re-inspect the gears for signs of abnormal wear or misalignment. Report abnormal wear or misalignment to bridge management.
6. Using a brush, evenly coat all gear tooth surfaces with Mobil Mobiltac 325 NC or equivalent lubricant.

Refer to Sections 8.2.4, 11.5.2, and 11.5.7 for additional component and material information. For lubrication coding details below, refer to Section 11.2 "Machinery Lubrication Schematics" in the Operations and Maintenance Manual.

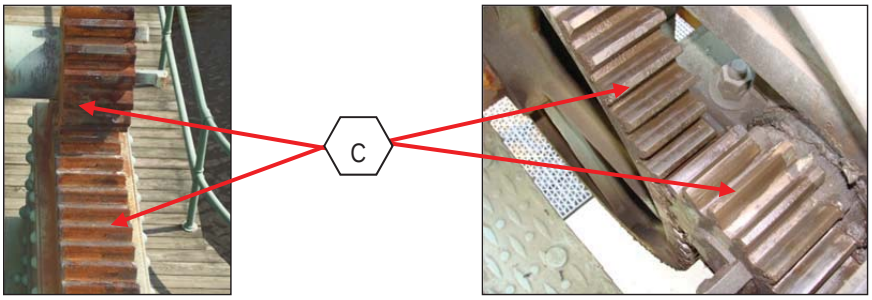

Rack and Pinion **Second Intermediate Gear Set**

SCHEDULING CONSIDERATIONS:

Fresh grease should be applied to all open gearing every three months. Open gearing should be cleaned, inspected, and lubricated annually.

Inspect and lubricate open gearing after an overstress situation such as a pinched span.

WORK AREA, ACTIVITY DESCRIPTION & REQUIREMENTS:

Open gearing is located on the machinery platform above the roadway. Tasks include locating, inspected, and lubricating all open gearing on the bridge. Lockout/Tagout is required prior to performing any maintenance on this equipment. Report any significant defects to bridge management.

Qty	EQUIPMENT	Qty	EQUIPMENT	Qty	MATERIAL
1	Bag of rags	1/Person	Set of chemical resistant Viton gloves	~4 – 5 Gallon Buckets	Mobil Mobiltac 325 NC or equivalent
16	Scrapers	1/Person	Tyvek suit		
1	Brushes	1/Person	Chemical goggles and face shield	~10 – 20 oz. Cans	CRC Quick Clean Heavy Duty Degreaser or equivalent
1	Trays or pans	1/Person	Chemical respirator		

11.4.5 AIR BUFFER LUBRICATION

DELAWARE **DEPARTMENT OF TRANSPORTATION** **BRIDGE MANAGEMENT SECTION** **BRIDGE MAINTENANCE PERFORMANCE STANDARD**	**BRIDGE NUMBER** 2-021A
	BMS ACTIVITY CODE B082-S2J
	EFFECTIVE DATE

ACTIVITY TITLE:	**UNIT OF MEASUREMENT:**
Air Buffer Lubrication	Number of Air Buffers

PROCEDURE DESCRIPTION:

WARNING

Use EXTREME CARE and ALWAYS REMOVE POWER from all pertinent electrical and pneumatic equipment, which includes multiple power sources, before beginning maintenance. Refer to Section 7.3, "Lockout/Tagout Procedure" in the Operations and Maintenance Manual.

Three Months:

1. Clean the debris from around the strike plate and air buffer.
2. Remove old grease with a rag and CRC Quick Clean Heavy Duty Degreaser or equivalent.
3. Brush Mobil Mobilux EP-2 or equivalent onto the piston rod and strike plate.

Refer to Sections 8.2.6, 11.5.1, and 11.5.7 for additional component and material information. For lubrication coding details below, refer to Section 11.2 "Machinery Lubrication Schematics" in the Operations and Maintenance Manual.

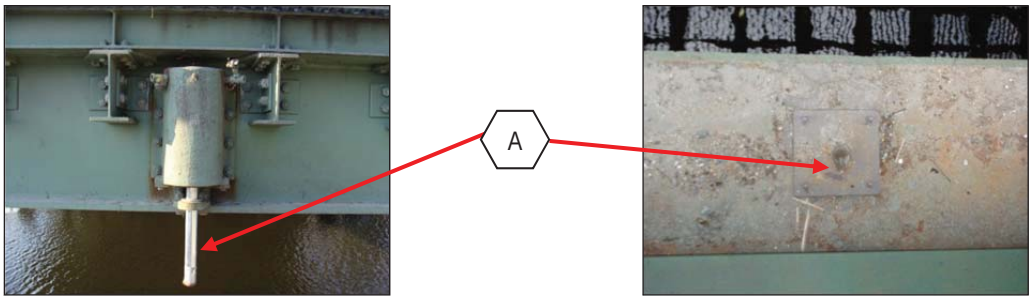

Air Buffer **Strike Plate**

SCHEDULING CONSIDERATIONS:

Air buffer components should be lubricated every 3 months.

Contact TMC to coordinate temporary closure of the bridge for maintenance. .

WORK AREA, ACTIVITY DESCRIPTION & REQUIREMENTS:

The air buffer is located along the centerline of the roadway mounted to the web of floorbeam 3. Access is to the air buffer is obtained by raising the leaf slightly for maintenance personnel. Tasks include locating, inspecting, and lubricating the air buffer components. Report any significant defects to bridge management.

Qty	EQUIPMENT	Qty	EQUIPMENT	Qty	MATERIAL
1	Brush	1/Person	Set of chemical resistant Viton gloves	~1 – 14 oz. Tube	Mobil Mobilux EP-2 or equivalent
1	Bag of rags				
1	Catch basin	1/Person	Tyvek suit	~1 – 20 oz. Cans	CRC Quick Clean Heavy Duty Degreaser or equivalent
1/Person	Chemical respirator	1/Person	Eye protection		

11.4.6 INSTRUMENTATION DRIVE CHAIN LUBRICATION

DELAWARE **DEPARTMENT OF TRANSPORTATION** **BRIDGE MANAGEMENT SECTION** **BRIDGE MAINTENANCE PERFORMANCE STANDARD**	**BRIDGE NUMBER** 2-021A
	BMS ACTIVITY CODE B080-S2J
	EFFECTIVE DATE

ACTIVITY TITLE:	**UNIT OF MEASUREMENT:**
Instrumentation Drive Chain Lubrication	Number of Instrumentation Drive Chains

PROCEDURE DESCRIPTION:

WARNING

Use EXTREME CARE and ALWAYS REMOVE POWER from all pertinent electrical and pneumatic equipment, which includes multiple power sources, before beginning maintenance. Refer to Section 7.3, "Lockout/Tagout Procedure" in the Operations and Maintenance Manual.

Three Months:

1. Clean instrumentation drive chain of dirt, debris, old grease, and any other potential contaminants with a rag and CRC Quick Clean Heavy Duty Degreaser or equivalent.
2. Inspect the chain and sprockets for damage.
3. Spray CRC TAC 2 Adhesive Chain Lubricant or equivalent onto the chain and sprocket teeth.
4. Wipe excess lubricant from the chain and sprockets with a rag and solvent cleaner.

Refer to Sections 8.2.7, 11.5.6, and 11.5.7 for additional component and material information. For lubrication coding details below, refer to Section 11.2 "Machinery Lubrication Schematics" in the Operations and Maintenance Manual.

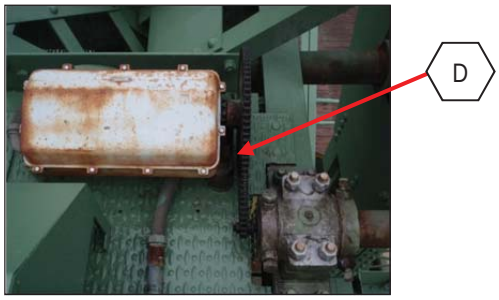

Instrumentation Drive Chain

SCHEDULING CONSIDERATIONS:

The instrumentation drive chain should be lubricated every three months.

WORK AREA, ACTIVITY DESCRIPTION & REQUIREMENTS:

The instrumentation drive chain is located on the west side of the machinery platform, adjacent to the first intermediate gear set. Tasks include locating, inspecting, and lubricating the instrumentation drive chain. Tasks include locating, inspecting, and lubricating all trunnion bearings on the bridge. Lockout/Tagout is required prior to performing any maintenance on this equipment. Report any significant defects to bridge management.

Qty	EQUIPMENT	Qty	EQUIPMENT	Qty	MATERIAL
1	Bag of rags	1/Person	Tyvek suit	~1/4 – 16 oz. Can	CRC TAC 2 Adhesive Chain Lubricant or equivalent
1/Person	Set of chemical resistant Viton gloves	1/Person	Eye protection	~1/4 – 20 oz. Can	CRC Quick Clean Heavy Duty Degreaser or equivalent
		1/Person	Chemical respirator		

11.5 MATERIAL DATA SHEETS

11.5.1 MOBIL MOBILUX EP-2

Mobil

Mobilux EP 0, 1, 2, 3, 460, 004 and 023

Grease

Product Description

Mobilux EP 0, 1, 2, 3, 460, 004 and 023 products are a high performance family of five general-purpose industrial greases and two special-duty semi-fluid greases. These lithium hydroxystearate greases are formulated to provide extra protection against wear, rusting and water washout. They are available in NLGI grades ranging from 00 to 3, with base oil viscosities ISO VG 150, 320 and 460.

Mobilux EP 0, 1, 2, 3 and 460 greases are recommended for most types of industrial applications including heavy-duty applications where high unit pressures or shock loads are present. These greases provide excellent protection against rust and corrosion and resist water wash-out which makes them particularly suitable for equipment where moist or wet conditions are common. Mobilux EP 0 and 1 are suitable for centralised systems. Mobilux EP 2 and 3 are general-purpose greases and Mobilux EP 460 is used in heavy-duty applications such as the wet ends of paper machines. The recommended operating temperature range is from -20°C to 130°C (0°C to 130°C for Mobilux EP 460) but they may be used at higher temperatures if the lubrication frequency is increased accordingly.

Mobilux EP 004 and Mobilux EP 023 are particularly suitable for the lubrication of enclosed gears and bearings in poorly sealed gear cases they can also be used in many other industrial applications where conventional gear oils cannot be retained in gear cases, chain cases, etc. because of leakage due to worn or missing seals. The recommended operating temperature range is -25 to 120°C for Mobilux EP 004 and -15 to 120°C for Mobilux EP 023.

Features and Benefits

Mobilux EP greases have a long history of proven performance and have demonstrated superior performance versus competitive products in the areas of corrosion protection, low temperature pumpability and high temperature service life. A Timken OK load of 40 lb illustrates their load carrying and extreme pressure capability.

- Reduced wear under heavy or shock loading and vibration for good equipment reliability and availability
- Protection against rust and corrosion and resistance to water washout for equipment protection and good lubrication even in presence of water
- Extended bearing life potential in wet environments for reduced bearing costs and unanticipated downtime
- Good pumpability in centralised systems (Mobilux EP 0 and 1)
- Effective leakage control (Mobilux EP 004 and Mobilux EP 023)

Applications

- Mobilux EP 0 and EP 1 provide good low temperature pumpability and are suitable for centralised lubrication systems and other applications where low temperature performance is required.
- Mobilux EP 2 is recommended for multipurpose applications in antifriction and plain bearings, bushings and pins under normal operating conditions.
- Mobilux EP 3 is a stiffer NLGI grade 3 grease recommended for applications where maximum protection against penetration of water or solid contaminants is required.

- Mobilux EP 460 is recommended for the lubrication of low to moderate speed, heavily loaded bearings including those subject to high unit pressures or shock loads. These include steel and paper mills, underground mining, tunnelling, ore crushing plants and other heavy-duty applications where moist or wet conditions are common.
- Mobilux EP 004 and Mobilux EP 023 are particularly suitable for the lubrication of enclosed gears and bearings in poorly sealed gear cases on most underground mining machinery with the exception of electric motor gearings. Mobilux EP 004 and Mobilux EP 023 can also be used in many other industrial applications where conventional gear oils cannot be retained in equipment such as gear cases, chain cases, because of leakage due to worn or missing seals. Mobilux EP 004 passes the SEW 1008 hour gear test requirement DR.EM.203 mod.

Specifications and Approvals

Mobilux EP meets or exceeds the requirements of:	Mobilux EP 0	Mobilux EP 1	Mobilux EP 2	Mobilux EP 3	Mobilux EP 460	Mobilux EP 004	Mobilux EP 023
DIN 51825: (2004-06)		KP1K-30	KP2K-30	KP3K-20	KP2K-20		
DIN 51826: (2005-01)	GP0G-20					GP00G-20	GP000G-20

Mobilux EP has the following builder approvals	Mobilux EP 0	Mobilux EP 1	Mobilux EP 2	Mobilux EP 3	Mobilux EP 460	Mobilux EP 004	Mobilux EP 023
SEW R32/302						X	

Typical Properties

	Mobilux EP 0	Mobilux EP 1	Mobilux EP 2	Mobilux EP 3	Mobilux EP 460	Mobilux EP 004	Mobilux EP 023
NLGI Grade	0	1	2	3	2	00	000
Thickener Type	Lithium	Lithium	Lithium	Lithium	Lithium	Lithium	Lithium
Color, Visual	Brown	Brown	Brown	Brown	Brown	Brown	Brown
Penetration, Worked, 25°C, ASTM D 217	370	325	280	235	280	415	460
Viscosity of Oil, ASTM D 445							
cSt @ 40°C	160	160	160	160	460	160	320
Timken OK Load, ASTM D 2509, lb	40	40	40	40	40	40	40
4-Ball Wear, ASTM D 2266, Scar, mm	0.4	0.4	0.4	0.4	0.4	0.5	0.4
4-Ball Weld Load, ASTM D 2596, Kg	250	250	250	250	250	250	250
Dropping Point, D 2265, C	190	190	190	190	190		
Rust Protection, ASTM D 6138, Distilled Water	0-0	0-0	0-0	0-0	0-0	0-0	0-0

Health and Safety

Based on available information, this product is not expected to produce adverse effects on health when used for the intended application and the recommendations provided in the Material Safety Data Sheet (MSDS) are followed. MSDS's are available upon request through your sales contract office, or via the Internet. This product should not be used for purposes other than its intended use. If disposing of used product, take care to protect the environment.

ExxonMobil

Product Name: MOBILUX EP 2
Revision Date: 21 Jul 2009
Page 1 of 9

MATERIAL SAFETY DATA SHEET

SECTION 1 PRODUCT AND COMPANY IDENTIFICATION

PRODUCT

Product Name: **MOBILUX EP 2**
Product Description: Base Oil and Additives
Product Code: 641274-00, 970717
Intended Use: Grease

COMPANY IDENTIFICATION

Supplier: **EXXON MOBIL CORPORATION**
3225 GALLOWS RD.
FAIRFAX, VA. 22037 USA

24 Hour Health Emergency	609-737-4411
Transportation Emergency Phone	800-424-9300
ExxonMobil Transportation No.	281-834-3296
Product Technical Information	800-662-4525, 800-947-9147
MSDS Internet Address	http://www.exxon.com, http://www.mobil.com

SECTION 2 COMPOSITION / INFORMATION ON INGREDIENTS

Reportable Hazardous Substance(s) or Complex Substance(s)

Name	CAS#	Concentration*
ZINC DITHIOPHOSPHATE	68649-42-3	< 2.5%

* All concentrations are percent by weight unless material is a gas. Gas concentrations are in percent by volume.

SECTION 3 HAZARDS IDENTIFICATION

This material is not considered to be hazardous according to regulatory guidelines (see (M)SDS Section 15).

POTENTIAL HEALTH EFFECTS

Low order of toxicity. Excessive exposure may result in eye, skin, or respiratory irritation. High-pressure injection under skin may cause serious damage.

NFPA Hazard ID:	Health:	0	Flammability:	1	Reactivity:	0
HMIS Hazard ID:	Health:	0	Flammability:	1	Reactivity:	0

NOTE: This material should not be used for any other purpose than the intended use in Section 1 without expert advice. Health studies have shown that chemical exposure may cause potential human health risks which may vary from person to person.

SECTION 4 FIRST AID MEASURES

ExxonMobil

Product Name: MOBILUX EP 2
Revision Date: 21 Jul 2009
Page 2 of 9

Inhalation

Under normal conditions of intended use, this material is not expected to be an inhalation hazard.

SKIN CONTACT

Wash contact areas with soap and water. If product is injected into or under the skin, or into any part of the body, regardless of the appearance of the wound or its size, the individual should be evaluated immediately by a physician as a surgical emergency. Even though initial symptoms from high pressure injection may be minimal or absent, early surgical treatment within the first few hours may significantly reduce the ultimate extent of injury.

EYE CONTACT

Flush thoroughly with water. If irritation occurs, get medical assistance.

Ingestion

First aid is normally not required. Seek medical attention if discomfort occurs.

SECTION 5 FIRE FIGHTING MEASURES

EXTINGUISHING MEDIA

Appropriate Extinguishing Media: Use water fog, foam, dry chemical or carbon dioxide (CO2) to extinguish flames.

Inappropriate Extinguishing Media: Straight Streams of Water

FIRE FIGHTING

Fire Fighting Instructions: Evacuate area. Prevent runoff from fire control or dilution from entering streams, sewers, or drinking water supply. Firefighters should use standard protective equipment and in enclosed spaces, self-contained breathing apparatus (SCBA). Use water spray to cool fire exposed surfaces and to protect personnel.

Hazardous Combustion Products: Smoke, Fume, Aldehydes, Sulfur Oxides, Incomplete combustion products, Oxides of carbon

FLAMMABILITY PROPERTIES

Flash Point [Method]: >204C (400F) [EST. FOR OIL, ASTM D-92 (COC)]
Flammable Limits (Approximate volume % in air): LEL: N/D UEL: N/D
Autoignition Temperature: N/D

SECTION 6 ACCIDENTAL RELEASE MEASURES

NOTIFICATION PROCEDURES

In the event of a spill or accidental release, notify relevant authorities in accordance with all applicable regulations. US regulations require reporting releases of this material to the environment which exceed the applicable reportable quantity or oil spills which could reach any waterway including intermittent dry creeks. The National Response Center can be reached at (800)424-8802.

ExxonMobil

Product Name: MOBILUX EP 2
Revision Date: 21 Jul 2009

SPILL MANAGEMENT

Land Spill: Allow spilled material to solidify and scrape up with shovels into a suitable container for recycle or disposal. Scrape up spilled material with shovels into a suitable container for recycle or disposal.

Water Spill: Stop leak if you can do it without risk. Confine the spill immediately with booms. Warn other shipping. Skim from surface.

Water spill and land spill recommendations are based on the most likely spill scenario for this material; however, geographic conditions, wind, temperature, (and in the case of a water spill) wave and current direction and speed may greatly influence the appropriate action to be taken. For this reason, local experts should be consulted. Note: Local regulations may prescribe or limit action to be taken.

ENVIRONMENTAL PRECAUTIONS

Prevent entry into waterways, sewers, basements or confined areas.

SECTION 7 HANDLING AND STORAGE

HANDLING

Prevent small spills and leakage to avoid slip hazard.

Static Accumulator: This material is not a static accumulator.

STORAGE

Do not store in open or unlabelled containers.

SECTION 8 EXPOSURE CONTROLS / PERSONAL PROTECTION

EXPOSURE LIMIT VALUES

NOTE: Limits/standards shown for guidance only. Follow applicable regulations.

ENGINEERING CONTROLS

The level of protection and types of controls necessary will vary depending upon potential exposure conditions. Control measures to consider:

No special requirements under ordinary conditions of use and with adequate ventilation.

PERSONAL PROTECTION

Personal protective equipment selections vary based on potential exposure conditions such as applications, handling practices, concentration and ventilation. Information on the selection of protective equipment for use with this material, as provided below, is based upon intended, normal usage.

Respiratory Protection: If engineering controls do not maintain airborne contaminant concentrations at a level which is adequate to protect worker health, an approved respirator may be appropriate. Respirator selection, use, and maintenance must be in accordance with regulatory requirements, if applicable. Types of respirators to be considered for this material include:

No protection is ordinarily required under normal conditions of use and with adequate ventilation.

For high airborne concentrations, use an approved supplied-air respirator, operated in positive pressure mode. Supplied air respirators with an escape bottle may be appropriate when oxygen levels are inadequate, gas/vapor warning properties are poor, or if air purifying filter capacity/rating may be exceeded.

Hand Protection: Any specific glove information provided is based on published literature and glove manufacturer data. Glove suitability and breakthrough time will differ depending on the specific use conditions. Contact the glove manufacturer for specific advice on glove selection and breakthrough times for your use conditions. Inspect and replace worn or damaged gloves. The types of gloves to be considered for this material include:

No protection is ordinarily required under normal conditions of use.

Eye Protection: If contact is likely, safety glasses with side shields are recommended.

Skin and Body Protection: Any specific clothing information provided is based on published literature or manufacturer data. The types of clothing to be considered for this material include:

No skin protection is ordinarily required under normal conditions of use. In accordance with good industrial hygiene practices, precautions should be taken to avoid skin contact.

Specific Hygiene Measures: Always observe good personal hygiene measures, such as washing after handling the material and before eating, drinking, and/or smoking. Routinely wash work clothing and protective equipment to remove contaminants. Discard contaminated clothing and footwear that cannot be cleaned. Practice good housekeeping.

ENVIRONMENTAL CONTROLS

See Sections 6, 7, 12, 13.

SECTION 9 PHYSICAL AND CHEMICAL PROPERTIES

Typical physical and chemical properties are given below. Consult the Supplier in Section 1 for additional data.

GENERAL INFORMATION

Physical State: Solid
Form: semi-fluid
Color: brown
Odor: Characteristic
Odor Threshold: N/D

IMPORTANT HEALTH, SAFETY, AND ENVIRONMENTAL INFORMATION

Relative Density (at 15 C): 0.92
Flash Point [Method]: >204C (400F) [EST. FOR OIL, ASTM D-92 (COC)]
Flammable Limits (Approximate volume % in air): LEL: N/D UEL: N/D
Autoignition Temperature: N/D
Boiling Point / Range: > 316C (600F)
Vapor Density (Air = 1): N/D
Vapor Pressure: < 0.013 kPa (0.1 mm Hg) at 20 C
Evaporation Rate (N-Butyl Acetate = 1): N/D
pH: N/A
Log Pow (n-Octanol/Water Partition Coefficient): > 3.5

Solubility in Water: Negligible
Viscosity: 150 cSt (150 mm²/sec) at 40 C
Oxidizing Properties: See Sections 3, 15, 16.

OTHER INFORMATION

Freezing Point: N/D
Melting Point: N/D
DMSO Extract (mineral oil only), IP-346: < 3 %wt

NOTE: Most physical properties above are for the oil component in the material.

SECTION 10 STABILITY AND REACTIVITY

STABILITY: Material is stable under normal conditions.

CONDITIONS TO AVOID: Excessive heat. High energy sources of ignition.

MATERIALS TO AVOID: Strong oxidizers

HAZARDOUS DECOMPOSITION PRODUCTS: Material does not decompose at ambient temperatures.

HAZARDOUS POLYMERIZATION: Will not occur.

SECTION 11 TOXICOLOGICAL INFORMATION

ACUTE TOXICITY

Route of Exposure	Conclusion / Remarks
Inhalation	
Toxicity: No end point data.	Minimally Toxic. Based on assessment of the components.
Irritation: No end point data.	Negligible hazard at ambient/normal handling temperatures. Based on assessment of the components.
Ingestion	
Toxicity (Rat): LD50 > 5000 mg/kg	Minimally Toxic. Based on test data for structurally similar materials.
Skin	
Toxicity (Rabbit): LD50 > 5000 mg/kg	Minimally Toxic. Based on test data for structurally similar materials.
Irritation (Rabbit): Data available.	Negligible irritation to skin at ambient temperatures. Based on assessment of the components.
Eye	
Irritation (Rabbit): Data available.	May cause mild, short-lasting discomfort to eyes. Based on assessment of the components.

CHRONIC/OTHER EFFECTS

Contains:

Base oil severely refined: Not carcinogenic in animal studies. Representative material passes IP-346, Modified Ames test, and/or other screening tests. Dermal and inhalation studies showed minimal effects; lung non-specific infiltration of immune cells, oil deposition and minimal granuloma formation. Not sensitizing in test animals.

Additional information is available by request.

The following ingredients are cited on the lists below: None.

--REGULATORY LISTS SEARCHED--

1 = NTP CARC	3 = IARC 1	5 = IARC 2B
2 = NTP SUS	4 = IARC 2A	6 = OSHA CARC

SECTION 12 ECOLOGICAL INFORMATION

The information given is based on data available for the material, the components of the material, and similar materials.

ECOTOXICITY

Material -- Not expected to be harmful to aquatic organisms.

MOBILITY

Base oil component -- Low solubility and floats and is expected to migrate from water to the land. Expected to partition to sediment and wastewater solids.

PERSISTENCE AND DEGRADABILITY

Biodegradation:

Base oil component -- Expected to be inherently biodegradable

BIOACCUMULATION POTENTIAL

Base oil component -- Has the potential to bioaccumulate, however metabolism or physical properties may reduce the bioconcentration or limit bioavailability.

SECTION 13 DISPOSAL CONSIDERATIONS

Disposal recommendations based on material as supplied. Disposal must be in accordance with current applicable laws and regulations, and material characteristics at time of disposal.

DISPOSAL RECOMMENDATIONS

Product is suitable for burning in an enclosed controlled burner for fuel value or disposal by supervised incineration at very high temperatures to prevent formation of undesirable combustion products.

REGULATORY DISPOSAL INFORMATION

RCRA Information: The unused product, in our opinion, is not specifically listed by the EPA as a hazardous waste (40 CFR, Part 261D), nor is it formulated to contain materials which are listed as hazardous wastes. It does not exhibit the hazardous characteristics of ignitability, corrosivity or reactivity and is not formulated with contaminants as determined by the Toxicity Characteristic Leaching Procedure (TCLP). However, used product may be regulated.

Empty Container Warning Empty Container Warning (where applicable): Empty containers may contain residue and can be dangerous. Do not attempt to refill or clean containers without proper instructions. Empty drums should be

ExxonMobil

Product Name: MOBILUX EP 2
Revision Date: 21 Jul 2009
Page 7 of 9

completely drained and safely stored until appropriately reconditioned or disposed. Empty containers should be taken for recycling, recovery, or disposal through suitably qualified or licensed contractor and in accordance with governmental regulations. DO NOT PRESSURISE, CUT, WELD, BRAZE, SOLDER, DRILL, GRIND, OR EXPOSE SUCH CONTAINERS TO HEAT, FLAME, SPARKS, STATIC ELECTRICITY, OR OTHER SOURCES OF IGNITION. THEY MAY EXPLODE AND CAUSE INJURY OR DEATH.

SECTION 14 TRANSPORT INFORMATION

LAND (DOT) : Not Regulated for Land Transport

LAND (TDG) : Not Regulated for Land Transport

SEA (IMDG) : Not Regulated for Sea Transport according to IMDG-Code

AIR (IATA) : Not Regulated for Air Transport

SECTION 15 REGULATORY INFORMATION

OSHA HAZARD COMMUNICATION STANDARD: When used for its intended purposes, this material is not classified as hazardous in accordance with OSHA 29 CFR 1910.1200.

NATIONAL CHEMICAL INVENTORY LISTING: AICS, IECSC, DSL, EINECS, KECI, PICCS, TSCA

EPCRA: This material contains no extremely hazardous substances.

SARA (311/312) REPORTABLE HAZARD CATEGORIES: None.

SARA (313) TOXIC RELEASE INVENTORY:

Chemical Name	CAS Number	Typical Value
ZINC DITHIOPHOSPHATE	68649-42-3	< 2.5%

The following ingredients are cited on the lists below:

Chemical Name	CAS Number	List Citations
DIPHENYLAMINE	122-39-4	5, 18
ZINC DITHIOPHOSPHATE	68649-42-3	13, 15, 17

--REGULATORY LISTS SEARCHED--

1 = ACGIH ALL	6 = TSCA 5a2	11 = CA P65 REPRO	16 = MN RTK
2 = ACGIH A1	7 = TSCA 5e	12 = CA RTK	17 = NJ RTK
3 = ACGIH A2	8 = TSCA 6	13 = IL RTK	18 = PA RTK
4 = OSHA Z	9 = TSCA 12b	14 = LA RTK	19 = RI RTK
5 = TSCA 4	10 = CA P65 CARC	15 = MI 293	

ExxonMobil

Product Name: MOBILUX EP 2
Revision Date: 21 Jul 2009
Page 8 of 9

Code key: CARC=Carcinogen; REPRO=Reproductive

SECTION 16 OTHER INFORMATION

N/D = Not determined, N/A = Not applicable

THIS SAFETY DATA SHEET CONTAINS THE FOLLOWING REVISIONS:

Revision Changes:
Section 04: First Aid Inhalation - Header was modified.
Section 04: First Aid Ingestion - Header was modified.
Section 04: First Aid Inhalation was modified.
Section 06: Notification Procedures - Header was modified.
Section 10 Stability and Reactivity - Header was modified.
Section 13: Disposal Recommendations - Note was modified.
Section 13: Empty Container Warning was modified.
Section 09: Physical State was modified.
Section 09: Color was modified.
Section 09: Boiling Point C(F) was modified.
Section 09: Evaporation Rate - Header was modified.
Section 08: Personal Protection was modified.
Section 08: Hand Protection was modified.
Section 09: Vapor Pressure was modified.
Section 07: Handling and Storage - Handling was modified.
Hazard Identification: Health Hazards was modified.
Section 11: Dermal Lethality Test Data was modified.
Section 11: Oral Lethality Test Data was modified.
Section 11: Inhalation Lethality Test Data was modified.
Section 05: Hazardous Combustion Products was modified.
Section 06: Accidental Release - Spill Management - Land was modified.
Section 06: Accidental Release - Spill Management - Water was modified.
Section 09: Relative Density - Header was modified.
Section 09: Flash Point C(F) was modified.
Section 09: Viscosity was modified.
Section 15: List Citations Table was modified.
Section 15: List Citation Table - Header was modified.
Section 11: Skin Irritation Conclusion was modified.
Section 11: Inhalation Lethality Test Comment was modified.
Section 15: National Chemical Inventory Listing was modified.
Section 16: Code to MHCs was modified.
Section 15: OSHA Hazard Communication Standard was modified.
Hazard Identification: OSHA - May be Hazardous Statement was modified.
Section 06: Notification Procedures was modified.
Section 01: Company Contact Methods Sorted by Priority was modified.
Section 08: Exposure Limit Values - Header was added.
Section 08: Exposure limits/standards was deleted.
Section 15: Special Cases - Header was deleted.
Section 15: Special Cases Table was deleted.
Section 15: Inventory - Header was deleted.
Section 15: Status - Header was deleted.

ExxonMobil

Product Name: MOBILUX EP 2
Revision Date: 21 Jul 2009
Page 9 of 9

The information and recommendations contained herein are, to the best of ExxonMobil's knowledge and belief, accurate and reliable as of the date issued. You can contact ExxonMobil to insure that this document is the most current available from ExxonMobil. The information and recommendations are offered for the user's consideration and examination. It is the user's responsibility to satisfy itself that the product is suitable for the intended use. If buyer repackages this product, it is the user's responsibility to insure proper health, safety and other necessary information is included with and/or on the container. Appropriate warnings and safe-handling procedures should be provided to handlers and users. Alteration of this document is strictly prohibited. Except to the extent required by law, re-publication or retransmission of this document, in whole or in part, is not permitted. The term, "ExxonMobil" is used for convenience, and may include any one or more of ExxonMobil Chemical Company, Exxon Mobil Corporation, or any affiliates in which they directly or indirectly hold any interest.

Internal Use Only
MHC: 0B, 0B, 0, 0, 0, 0 PPEC: A

DGN: 2009877XUS (539035)

Copyright 2002 Exxon Mobil Corporation, All rights reserved

11.5.2 MOBIL MOBILTAC 325 NC

Mobil

Mobiltac 375 NC, 325 NC and 275 NC

Gear Oils

Product Description

Mobiltac 375 NC, 325 NC and 275 NC extra high performance non-leaded, diluent-type, heavy-bodied open gear lubricants designed for a wide variety of open gear and mining applications. They contain a non-chlorinated, volatile solvent that ensures fluidity during application, even at low temperatures. Once applied, the diluent evaporates and the lubricants take on a flexible, adhesive, high-strength consistency that is maintained throughout their service life. Mobiltac 375 NC, 325 NC and 275NC adhere strongly to gear teeth and other machine elements to resist excessive throw-off, thereby providing a wear-resistant, viscous, continuous film that lubricates well under boundary conditions. Mobiltac 275 NC also contains solid phase EP/anti-wear additive for added equipment protection

Mobiltac 375 NC, 325 NC and Mobiltac 275NC will not harden, chip, or flake in cold weather, are self-healing, and do not form a hard-packed buildup in gear-tooth roots. Dripping and throw-off are minimal, and the lubricants are easily cleaned up with a solvent-soaked rag. The lubricants provide resistance to rain, snow, and process water washing. Their flash points minimise the risk of fire. These new generation gear and mining lubricants are applied easily by hand or by automatic dispensers. Mobiltac NC technology has rapidly become a firm favourite among many open gear users and mine operators around the world

Features and Benefits

The Mobiltac NC Series of products are the most recent technology advance for the Mobiltac brand of products that have been used with great success in open gear and other mining applications for several decades. These new technology products provide significantly improved environmental and performance benefits over older diluent-type technologies. They offer the following features and potential benefits:

Features	Advantages and Potential Benefits
Excellent protection of gear teeth and other machine elements under boundary lubrication conditions	Less equipment wear and breakdown; lower replacement, downtime and maintenance costs
Excellent low-temperature pumpability	Easy start-up at low ambient and avoids cost of preheating
Excellent resistance to water washing	Maintains superb protection in wet environments; less unanticipated downtime
Minimal throw-off and dripping	Less product waste and new product cost
No chipping or flaking at low temperatures	Maintains protective lubricating film at low temperatures
Easy to clean up with rags and conventional solvents or cleaning fluids	Improved safety and reduced maintenance costs

Applications

Mobiltac 375 NC, 325 NC and Mobiltac 275NC are designed for use in a wide variety of open gear and mining applications:

- Mobiltac 375 NC, containing a high-viscosity base oil, is recommended for the lubrication of highly loaded open gears, including those that operate at high temperature, for example, ring gears on cement kilns and large gears on ore-processing mills
- Mobiltac 325 NC is recommended for the same applications as Mobiltac 375 NC. It contains more diluent and has a lower viscosity for ease of application at cooler temperatures
- Mobiltac 275 NC is designed for service as a lubricant for mine and quarry shovels, draglines, and related equipment; also open gears, racks and pinions, swing gears, booms and sticks

- Minimum operating temperature for Mobiltac 325 NC is -18 C, 375 NC is -1 C and 275 NC is -9 C

Typical Properties

Mobiltac NC	Mobiltac375 NC	Mobiltac325 NC	Mobiltac275 NC
Appearance	Viscous, semi-fluid, black	Viscous, semi-fluid, black	Viscous, semi-fluid, black
Viscosity, ASTM D 445			
cSt @ 40° C, with diluent	5000	1500	-
cSt @ 100° C, without diluent	1260	1000	-
Flash Point, °C, ASTM D 92	135	110	150
Specific Gravity, °C kg/l, ASTM D 1298	0.96	0.95	0.99
Maximum Temperature Use, °C	121	93	-

Health and Safety

Based on available information, this product is not expected to produce adverse effects on health when used for the intended application and the recommendations provided in the Material Safety Data Sheet (MSDS) are followed. MSDS's are available upon request through your sales contract office, or via the Internet. This product should not be used for purposes other than its intended use. If disposing of used product, take care to protect the environment.

The Mobil logotype, the Pegasus design are trademarks of Exxon Mobil Corporation, or one of its subsidiaries.

Exxon Mobil Corporation
3225 Gallows Road
Fairfax, VA 22037

1-800-ASK MOBIL (275-6624)

Typical Properties are typical of those obtained with normal production tolerance and do not constitute a specification. Variations that do not affect product performance are to be expected during normal manufacture and at different blending locations. The information contained herein is subject to change without notice. All products may not be available locally. For more information, contact your local ExxonMobil contact or visit www.exxonmobil.com
ExxonMobil is comprised of numerous affiliates and subsidiaries, many with names that include Esso, Mobil, or ExxonMobil. Nothing in this document is intended to override or supersede the corporate separateness of local entities. Responsibility for local action and accountability remains with the local ExxonMobil-affiliate entities.

© 2001-2011 Exxon Mobil Corporation. All rights reserved..

ExxonMobil

Product Name: MOBILTAC 325 NC
Revision Date: 27 Feb 2013
Page 1 of 12

MATERIAL SAFETY DATA SHEET

SECTION 1 PRODUCT AND COMPANY IDENTIFICATION

PRODUCT

Product Name: **MOBILTAC 325 NC**
Product Description: Hydrocarbons and Additives
Product Code: 201560404010, 611160-00, 976359
Intended Use: Gear oil

COMPANY IDENTIFICATION

Supplier: **EXXON MOBIL CORPORATION**
3225 GALLOWS RD.
FAIRFAX, VA. 22037 USA

24 Hour Health Emergency	609-737-4411
Transportation Emergency Phone	800-424-9300
ExxonMobil Transportation No.	281-834-3296
Product Technical Information	800-662-4525, 800-947-9147
MSDS Internet Address	http://www.exxon.com, http://www.mobil.com

SECTION 2 COMPOSITION / INFORMATION ON INGREDIENTS

Reportable Hazardous Substance(s) or Complex Substance(s)

Name	CAS#	Concentration*
ASPHALT (PETROLEUM)	8052-42-4	15 - 50%
HYDROTREATED LIGHT DISTILLATE	64742-47-8	8 - 14%
NAPHTHENIC ACIDS, ZINC SALTS	12001-85-3	3 - 6%
STRAIGHT-RUN MIDDLE DISTILLATES	64741-44-2	5 - 10%

* All concentrations are percent by weight unless material is a gas. Gas concentrations are in percent by volume.

SECTION 3 HAZARDS IDENTIFICATION

This material is considered to be hazardous according to regulatory guidelines (see (M)SDS Section 15).

POTENTIAL HEALTH EFFECTS

Irritating to eyes. Irritating to skin. Excessive exposure may result in eye, skin, or respiratory irritation. Under conditions of poor personal hygiene and prolonged repeated contact, some polycyclic aromatic compounds (PACs) have been suspected as a cause of skin cancer in humans. High-pressure injection under skin may cause serious damage.

Target Organs: Skin | Eye |

ENVIRONMENTAL HAZARDS

Harmful to aquatic organisms, may cause long-term adverse effects in the aquatic environment.

ExxonMobil

Product Name: MOBILTAC 325 NC
Revision Date: 27 Feb 2013
Page 2 of 12

NFPA Hazard ID:	Health:	1	Flammability:	1	Reactivity:	0
HMIS Hazard ID:	Health:	1	Flammability:	1	Reactivity:	0

NOTE: This material should not be used for any other purpose than the intended use in Section 1 without expert advice. Health studies have shown that chemical exposure may cause potential human health risks which may vary from person to person.

SECTION 4 FIRST AID MEASURES

INHALATION

Remove from further exposure. For those providing assistance, avoid exposure to yourself or others. Use adequate respiratory protection. If respiratory irritation, dizziness, nausea, or unconsciousness occurs, seek immediate medical assistance. If breathing has stopped, assist ventilation with a mechanical device or use mouth-to-mouth resuscitation.

SKIN CONTACT

Wash contact areas with soap and water. Remove contaminated clothing. Launder contaminated clothing before reuse. If product is injected into or under the skin, or into any part of the body, regardless of the appearance of the wound or its size, the individual should be evaluated immediately by a physician as a surgical emergency. Even though initial symptoms from high pressure injection may be minimal or absent, early surgical treatment within the first few hours may significantly reduce the ultimate extent of injury.

EYE CONTACT

Flush thoroughly with water for at least 15 minutes. Get medical assistance.

INGESTION

First aid is normally not required. Seek medical attention if discomfort occurs.

SECTION 5 FIRE FIGHTING MEASURES

EXTINGUISHING MEDIA

Appropriate Extinguishing Media: Use water fog, foam, dry chemical or carbon dioxide (CO2) to extinguish flames.

Inappropriate Extinguishing Media: Straight Streams of Water

FIRE FIGHTING

Fire Fighting Instructions: Evacuate area. Prevent runoff from fire control or dilution from entering streams, sewers, or drinking water supply. Firefighters should use standard protective equipment and in enclosed spaces, self-contained breathing apparatus (SCBA). Use water spray to cool fire exposed surfaces and to protect personnel.

Unusual Fire Hazards: Hazardous material. Firefighters should consider protective equipment indicated in Section 8.

Hazardous Combustion Products: Hydrogen sulfide, Smoke, Fume, Aldehydes, Sulfur oxides, Incomplete combustion products, Oxides of carbon

ExxonMobil

Product Name: MOBILTAC 325 NC
Revision Date: 27 Feb 2013
Page 3 of 12

FLAMMABILITY PROPERTIES

Flash Point [Method]: >97°C (207°F) [ASTM D-92]
Flammable Limits (Approximate volume % in air): LEL: N/D UEL: N/D
Autoignition Temperature: N/D

SECTION 6 ACCIDENTAL RELEASE MEASURES

NOTIFICATION PROCEDURES

In the event of a spill or accidental release, notify relevant authorities in accordance with all applicable regulations. US regulations require reporting releases of this material to the environment which exceed the applicable reportable quantity or oil spills which could reach any waterway including intermittent dry creeks. The National Response Center can be reached at (800)424-8802.

PROTECTIVE MEASURES

Avoid contact with spilled material. Warn or evacuate occupants in surrounding and downwind areas if required due to toxicity or flammability of the material. See Section 5 for fire fighting information. See the Hazard Identification Section for Significant Hazards. See Section 4 for First Aid Advice. See Section 8 for advice on the minimum requirements for personal protective equipment. Additional protective measures may be necessary, depending on the specific circumstances and/or the expert judgment of the emergency responders.

SPILL MANAGEMENT

Land Spill: Stop leak if you can do it without risk. Recover by pumping or with suitable absorbent.

Water Spill: Stop leak if you can do it without risk. Confine the spill immediately with booms. Warn other shipping. Remove from the surface by skimming or with suitable absorbents. Seek the advice of a specialist before using dispersants.

Water spill and land spill recommendations are based on the most likely spill scenario for this material; however, geographic conditions, wind, temperature, (and in the case of a water spill) wave and current direction and speed may greatly influence the appropriate action to be taken. For this reason, local experts should be consulted. Note: Local regulations may prescribe or limit action to be taken.

ENVIRONMENTAL PRECAUTIONS

Large Spills: Dike far ahead of liquid spill for later recovery and disposal. Prevent entry into waterways, sewers, basements or confined areas.

SECTION 7 HANDLING AND STORAGE

HANDLING

Avoid contact with skin. Avoid contact with eyes. Hydrogen sulfide (H2S) may be given off when this material is heated. Do not depend on sense of smell for warning. Prevent small spills and leakage to avoid slip hazard. Material can accumulate static charges which may cause an electrical spark (ignition source). When the material is handled in bulk, an electrical spark could ignite any flammable vapors from liquids or residues that may be present (e.g., during switch-loading operations). Use proper bonding and/or ground procedures. However, bonding and grounds may not eliminate the hazard from static accumulation. Consult local applicable standards for guidance. Additional references include American Petroleum Institute 2003 (Protection Against Ignitions Arising out of Static, Lightning and Stray Currents) or National Fire Protection

Agency 77 (Recommended Practice on Static Electricity) or CENELEC CLC/TR 50404 (Electrostatics - Code of practice for the avoidance of hazards due to static electricity).

Static Accumulator: This material is a static accumulator.

STORAGE

The container choice, for example storage vessel, may effect static accumulation and dissipation. Do not store in open or unlabelled containers.

SECTION 8 EXPOSURE CONTROLS / PERSONAL PROTECTION

EXPOSURE LIMIT VALUES

Exposure limits/standards (Note: Exposure limits are not additive)

Source	Form	Limit / Standard			NOTE	Source
ASPHALT (PETROLEUM) [benzene solubles]	Inhalable fraction.	TWA	0.5 mg/m3		N/A	ACGIH
HYDROTREATED LIGHT DISTILLATE [total hydrocarbon vapor]	Non-Aerosol	TWA	200 mg/m3		Skin	ACGIH
STRAIGHT-RUN MIDDLE DISTILLATES	Stable Aerosol.	TWA	5 mg/m3		N/A	ExxonMobil
STRAIGHT-RUN MIDDLE DISTILLATES	Vapor.	TWA	200 mg/m3		N/A	ExxonMobil
Hydrogen sulfide		Ceiling	20 ppm		N/A	OSHA Z2
Hydrogen sulfide		Maximum concentration	50 ppm		N/A	OSHA Z2
Hydrogen sulfide		STEL	14 mg/m3	10 ppm	N/A	ExxonMobil
Hydrogen sulfide		TWA	7 mg/m3	5 ppm	N/A	ExxonMobil
Hydrogen sulfide		STEL	5 ppm		N/A	ACGIH
Hydrogen sulfide		TWA	1 ppm		N/A	ACGIH

Exposure limits/standards for materials that can be formed when handling this product: When mists/aerosols can occur the following are recommended: 5 mg/m³ - ACGIH TLV (inhalable fraction), 5 mg/m³ - OSHA PEL.

NOTE: Limits/standards shown for guidance only. Follow applicable regulations.

ENGINEERING CONTROLS

The level of protection and types of controls necessary will vary depending upon potential exposure conditions. Control measures to consider:

No special requirements under ordinary conditions of use and with adequate ventilation.

PERSONAL PROTECTION

Personal protective equipment selections vary based on potential exposure conditions such as applications, handling practices, concentration and ventilation. Information on the selection of protective equipment for use with this material, as provided below, is based upon intended, normal usage.

Respiratory Protection: If engineering controls do not maintain airborne contaminant concentrations at a

level which is adequate to protect worker health, an approved respirator may be appropriate. Respirator selection, use, and maintenance must be in accordance with regulatory requirements, if applicable. Types of respirators to be considered for this material include:

No special requirements under ordinary conditions of use and with adequate ventilation.

For high airborne concentrations, use an approved supplied-air respirator, operated in positive pressure mode. Supplied air respirators with an escape bottle may be appropriate when oxygen levels are inadequate, gas/vapor warning properties are poor, or if air purifying filter capacity/rating may be exceeded.

Hand Protection: Any specific glove information provided is based on published literature and glove manufacturer data. Glove suitability and breakthrough time will differ depending on the specific use conditions. Contact the glove manufacturer for specific advice on glove selection and breakthrough times for your use conditions. Inspect and replace worn or damaged gloves. The types of gloves to be considered for this material include:

Chemical resistant gloves are recommended.

Eye Protection: Chemical goggles and face shield are recommended.

Skin and Body Protection: Any specific clothing information provided is based on published literature or manufacturer data. The types of clothing to be considered for this material include:

Chemical/oil resistant clothing is recommended.

Specific Hygiene Measures: Always observe good personal hygiene measures, such as washing after handling the material and before eating, drinking, and/or smoking. Routinely wash work clothing and protective equipment to remove contaminants. Discard contaminated clothing and footwear that cannot be cleaned. Practice good housekeeping.

ENVIRONMENTAL CONTROLS

Comply with applicable environmental regulations limiting discharge to air, water and soil. Protect the environment by applying appropriate control measures to prevent or limit emissions.

SECTION 9 PHYSICAL AND CHEMICAL PROPERTIES

Note: Physical and chemical properties are provided for safety, health and environmental considerations only and may not fully represent product specifications. Contact the Supplier for additional information.

GENERAL INFORMATION

Physical State: Liquid
Form: Semi-fluid
Color: Black
Odor: Characteristic
Odor Threshold: N/D

IMPORTANT HEALTH, SAFETY, AND ENVIRONMENTAL INFORMATION

Relative Density (at 15 °C): 0.96 [ASTM D1298]
Flash Point [Method]: >97°C (207°F) [ASTM D-92]
Flammable Limits (Approximate volume % in air): LEL: N/D UEL: N/D
Autoignition Temperature: N/D
Boiling Point / Range: > 174°C (345°F) [Estimated]
Vapor Density (Air = 1): > 2 at 101 kPa [Estimated]

Vapor Pressure: [N/D at 20 °C]
Evaporation Rate (n-butyl acetate = 1): N/D
pH: N/A
Log Pow (n-Octanol/Water Partition Coefficient): > 3.5 [Estimated]
Solubility in Water: Negligible
Viscosity: 1200 cSt (1200 mm2/sec) at 40 °C
Oxidizing Properties: See Hazards Identification Section.

OTHER INFORMATION
Freezing Point: N/D
Melting Point: N/A
Decomposition Temperature: N/D

SECTION 10 STABILITY AND REACTIVITY

STABILITY: Material is stable under normal conditions.

CONDITIONS TO AVOID: Excessive heat. High energy sources of ignition.

MATERIALS TO AVOID: Strong oxidizers

HAZARDOUS DECOMPOSITION PRODUCTS: Material does not decompose at ambient temperatures.

HAZARDOUS POLYMERIZATION: Will not occur.

SECTION 11 TOXICOLOGICAL INFORMATION

ACUTE TOXICITY

Route of Exposure	Conclusion / Remarks
Inhalation	
Toxicity: No end point data for material.	Minimally Toxic. Based on assessment of the components.
Irritation: No end point data for material.	Negligible hazard at ambient/normal handling temperatures. Based on assessment of the components.
Ingestion	
Toxicity: No end point data for material.	Minimally Toxic. Based on assessment of the components.
Skin	
Toxicity: No end point data for material.	Minimally Toxic. Based on assessment of the components.
Irritation: No end point data for material.	Irritating to the skin. Based on assessment of the components.
Eye	
Irritation: No end point data for material.	Irritating and will injure eye tissue. Based on assessment of the components.

CHRONIC/OTHER EFFECTS
For the product itself:
Repeated and/or prolonged exposure may cause irritation to the skin, eyes, or respiratory tract.
Contains:
Asphalt (bitumen): May contain low levels of polycyclic aromatic compounds (PACs), some of which are suspected of causing cancer under conditions of poor industrial hygiene and prolonged repeated contact.

These PACs may also be inhaled. Inhalation studies at high concentrations of fumes resulted in bronchitis, pneumonitis, fibrosis and cell damage. Avoid contact with the asphalt emissions.

The following ingredients are cited on the lists below: None.

--REGULATORY LISTS SEARCHED--

1 = NTP CARC	3 = IARC 1	5 = IARC 2B
2 = NTP SUS	4 = IARC 2A	6 = OSHA CARC

SECTION 12 ECOLOGICAL INFORMATION

The information given is based on data available for the material, the components of the material, and similar materials.

ECOTOXICITY

Material -- Expected to be harmful to aquatic organisms. May cause long-term adverse effects in the aquatic environment.

MOBILITY

More volatile component -- Highly volatile, will partition rapidly to air. Not expected to partition to sediment and wastewater solids.

High molecular wt. component -- Low solubility and floats and is expected to migrate from water to the land. Expected to partition to sediment and wastewater solids.

PERSISTENCE AND DEGRADABILITY

Biodegradation:

Low molecular wt. component -- Expected to be inherently biodegradable

High molecular wt. component -- Expected to be persistent.

Atmospheric Oxidation:

More volatile component -- Expected to degrade rapidly in air

BIOACCUMULATION POTENTIAL

Majority of components -- Has the potential to bioaccumulate, however metabolism or physical properties may reduce the bioconcentration or limit bioavailability.

SECTION 13 DISPOSAL CONSIDERATIONS

Disposal recommendations based on material as supplied. Disposal must be in accordance with current applicable laws and regulations, and material characteristics at time of disposal.

DISPOSAL RECOMMENDATIONS

ExxonMobil

Product Name: MOBILTAC 325 NC
Revision Date: 27 Feb 2013
Page 8 of 12

Product is suitable for burning in an enclosed controlled burner for fuel value or disposal by supervised incineration at very high temperatures to prevent formation of undesirable combustion products. Protect the environment. Dispose of used oil at designated sites. Minimize skin contact. Do not mix used oils with solvents, brake fluids or coolants.

REGULATORY DISPOSAL INFORMATION

RCRA Information: The unused product, in our opinion, is not specifically listed by the EPA as a hazardous waste (40 CFR, Part 261D), nor is it formulated to contain materials which are listed as hazardous wastes. It does not exhibit the hazardous characteristics of ignitability, corrositivity or reactivity and is not formulated with contaminants as determined by the Toxicity Characteristic Leaching Procedure (TCLP). However, used product may be regulated.

Empty Container Warning Empty Container Warning (where applicable): Empty containers may contain residue and can be dangerous. Do not attempt to refill or clean containers without proper instructions. Empty drums should be completely drained and safely stored until appropriately reconditioned or disposed. Empty containers should be taken for recycling, recovery, or disposal through suitably qualified or licensed contractor and in accordance with governmental regulations. DO NOT PRESSURISE, CUT, WELD, BRAZE, SOLDER, DRILL, GRIND, OR EXPOSE SUCH CONTAINERS TO HEAT, FLAME, SPARKS, STATIC ELECTRICITY, OR OTHER SOURCES OF IGNITION. THEY MAY EXPLODE AND CAUSE INJURY OR DEATH.

SECTION 14 TRANSPORT INFORMATION

LAND (DOT): Not Regulated for Land Transport

LAND (TDG): Not Regulated for Land Transport

SEA (IMDG): Not Regulated for Sea Transport according to IMDG-Code

AIR (IATA): Not Regulated for Air Transport

SECTION 15 REGULATORY INFORMATION

OSHA HAZARD COMMUNICATION STANDARD: When used for its intended purpose, this material is classified as hazardous in accordance with OSHA 29CFR 1910.1200.

Complies with the following national/regional chemical inventory requirements:: AICS, DSL, ENCS, IECSC, KECI, PICCS, TSCA

EPCRA SECTION 302: This material contains no extremely hazardous substances.

SARA (311/312) REPORTABLE HAZARD CATEGORIES: Immediate Health.

SARA (313) TOXIC RELEASE INVENTORY:

Chemical Name	CAS Number	Typical Value

NAPHTHENIC ACIDS, ZINC SALTS	12001-85-3	3 - 6%

The following ingredients are cited on the lists below:

Chemical Name	CAS Number	List Citations
ASPHALT (PETROLEUM)	8052-42-4	1, 13, 16, 17, 18, 19
HYDROTREATED LIGHT DISTILLATE	64742-47-8	1, 17, 18, 19
NAPHTHENIC ACIDS, ZINC SALTS	12001-85-3	13, 15, 17

--REGULATORY LISTS SEARCHED--

1 = ACGIH ALL	6 = TSCA 5a2	11 = CA P65 REPRO	16 = MN RTK
2 = ACGIH A1	7 = TSCA 5e	12 = CA RTK	17 = NJ RTK
3 = ACGIH A2	8 = TSCA 6	13 = IL RTK	18 = PA RTK
4 = OSHA Z	9 = TSCA 12b	14 = LA RTK	19 = RI RTK
5 = TSCA 4	10 = CA P65 CARC	15 = MI 293	

Code key: CARC=Carcinogen; REPRO=Reproductive

SECTION 16 OTHER INFORMATION

N/D = Not determined, N/A = Not applicable

THIS SAFETY DATA SHEET CONTAINS THE FOLLOWING REVISIONS:

Revision Changes:
Section 04: First Aid Skin was modified.
Section 04: First Aid Eye was modified.
Section 06: Notification Procedures - Header was modified.
Section 11: Eye Irritation Conclusion was modified.
Section 11: Skin Irritation Conclusion was modified.
Section 13: Disposal Considerations - Disposal Recommendations was modified.
Section 10 Stability and Reactivity - Header was modified.
Section 13: Disposal Recommendations - Note was modified.
Section 13: Empty Container Warning was modified.
Section 09: Phys/Chem Properties Note was modified.
Section 09: Boiling Point C(F) was modified.
Section 09: Flash Point C(F) was modified.
Section 09: n-Octanol/Water Partition Coefficient was modified.
Section 08: Comply with applicable regulations phrase was modified.
Section 08: Personal Protection was modified.
Section 08: Hand Protection was modified.
Section 09: Vapor Pressure was modified.
Section 07: Handling and Storage - Handling was modified.
Section 07: Handling and Storage - Storage Phrases was modified.
Hazard Identification: Health Hazards was modified.
Section 11: Dermal Lethality Test Data was modified.
Section 11: Dermal Lethality Test Comment was modified.
Section 11: Oral Lethality Test Data was modified.

ExxonMobil

Product Name: MOBILTAC 325 NC
Revision Date: 27 Feb 2013
Page 10 of 12

Section 11: Inhalation Lethality Test Data was modified.
Section 11: Dermal Irritation Test Data was modified.
Section 11: Eye Irritation Test Data was modified.
Section 11: Oral Lethality Test Comment was modified.
Section 11: Inhalation Irritation Test Data was modified.
Section 05: Hazardous Combustion Products was modified.
Section 06: Accidental Release - Spill Management - Water was modified.
Section 09: Relative Density - Header was modified.
Section 09: Flash Point C(F) was modified.
Section 09: Viscosity was modified.
Section 08: Hand Protection was modified.
Section 08: Eye Protection was modified.
Section 08: Skin and Body Protection was modified.
Section 14: Sea (IMDG) - Header was modified.
Section 14: Air (IATA) - Header was modified.
Section 14: LAND (TDG) - Header was modified.
Section 14: LAND (DOT) - Header was modified.
Composition: Component table was modified.
Section 15: List Citations Table was modified.
Section 15: List Citation Table - Header was modified.
Section 14: LAND (DOT) - Default was modified.
Section 14: LAND (TDG) Default was modified.
Section 14: Sea (IMDG) - Default was modified.
Section 14: Air (IATA) - Default was modified.
Section 15: SARA (311/312) REPORTABLE HAZARD CATEGORIES was modified.
Section 15: National Chemical Inventory Listing - Header was modified.
Section 15: SARA (313) TOXIC RELEASE INVENTORY - Table was modified.
Section 15: National Chemical Inventory Listing was modified.
Section 16: Code to MHCs was modified.
Section 09: Relative Density was modified.
Section 15: Community RTK - Header was modified.
Section 11: Additional Health Information was modified.
Section 16: Code to PPEs was modified.
Section 08: Exposure limits/standards was modified.
Section 15: OSHA Hazard Communication Standard was modified.
Section 06: Notification Procedures was modified.
Section 08: Exposure Limits Table was modified.
Section 11: Chronic Tox - Component was modified.
Section 09: Oxidizing Properties was modified.
Section 08: OEL Table - Notation Column - Header was modified.
Section 08: Exposure Limit Values - Header was modified.
Section 01: Company Contact Methods Sorted by Priority was modified.
Section 05: Fire Fighting Measures - Unusual Fire Hazards was added.
Section 05: Fire Fighting Measures - Unusual Fire Hazards - Header was added.
Section 06: Protective Measures was added.
Section 06: Accidental Release - Protective Measures - Header was added.
Section 09: Form - Header was added.
Section 09: Physical State was added.
Hazard Identification: Health Hazards was added.
Hazard Identification: Emergency Overview Target Organs was added.
Hazard Identification: Emergency Overview Target Organ - Header was added.
Section 16: Precautionary Label Text - Header was added.

ExxonMobil

Product Name: MOBILTAC 325 NC
Revision Date: 27 Feb 2013
Page 11 of 12

Section 16: Signal Word was added.
Section 16: Health Hazards was added.
Section 16: Health Hazards - Header was added.
Section 16: Precautions was added.
Section 16: Precautions - Header was added.
Section 16: First Aid - Header was added.
Section 16: First Aid Eye - Header was added.
Section 16: First Aid Eye was added.
Section 16: First Aid Skin was added.
Section 16: First Aid Skin - Header was added.
Section 16: Fire Fighting Media - Header was added.
Section 16: Fire Fighting Media - Header was added.
Section 16: Spill - Header was added.
Section 16: Water Spill - Header was added.
Section 16: Water Spill was added.
Section 16: Land Spill was added.
Section 16: Land Spill - Header was added.
Section 16: Labeling Use was added.
Section 16: Labeling Use - Header was added.
Section 16: Target Organs was added.
Section 16: Target Organ - Header was added.
Section 16: NA Contains was added.
Section 16: NA Contains - Header was added.
Section 09: Decomposition Temperature was added.
Section 09: Decomposition Temp - Header was added.
Hazard Identification: OSHA - Hazards Statement was added.
Hazard Identification: OSHA - May be Hazardous Statement was deleted.
Hazard Identification: OSHA - Not Hazardous Statement was deleted.
Section 15: TSCA Class 2 Statement was deleted.

PRECAUTIONARY LABEL TEXT:
Contains: HYDROTREATED LIGHT DISTILLATE; STRAIGHT-RUN MIDDLE DISTILLATES
WARNING!
HEALTH HAZARDS
Irritating to eyes. Irritating to skin.
Target Organs: Skin | Eye |

PRECAUTIONS
Avoid contact with skin. Avoid contact with eyes.

FIRST AID
Eye: Flush thoroughly with water for at least 15 minutes. Get medical assistance.

Skin: Wash contact areas with soap and water. Remove contaminated clothing. Launder contaminated clothing before reuse. If product is injected into or under the skin, or into any part of the body, regardless of the appearance of the wound or its size, the individual should be evaluated immediately by a physician as a surgical emergency. Even though initial symptoms from high pressure injection may be minimal or absent, early surgical treatment within the first few hours may significantly reduce the ultimate extent of injury.

FIRE FIGHTING MEDIA
Use water fog, foam, dry chemical or carbon dioxide (CO2) to extinguish flames.

ExxonMobil

Product Name: MOBILTAC 325 NC
Revision Date: 27 Feb 2013
Page 12 of 12

SPILL/LEAK
Land Spill: Stop leak if you can do it without risk. Small Spills: Absorb with earth, sand or other non-combustible material and transfer to containers for later disposal. Recover by pumping or with suitable absorbent.

Water Spill: Stop leak if you can do it without risk. Confine the spill immediately with booms. Warn other shipping. Remove from the surface by skimming or with suitable absorbents. Report spills as required to appropriate authorities. Seek the advice of a specialist before using dispersants.
Use
Not intended or suitable for use in or around a household or dwelling.

The information and recommendations contained herein are, to the best of ExxonMobil's knowledge and belief, accurate and reliable as of the date issued. You can contact ExxonMobil to insure that this document is the most current available from ExxonMobil. The information and recommendations are offered for the user's consideration and examination. It is the user's responsibility to satisfy itself that the product is suitable for the intended use. If buyer repackages this product, it is the user's responsibility to insure proper health, safety and other necessary information is included with and/or on the container. Appropriate warnings and safe-handling procedures should be provided to handlers and users. Alteration of this document is strictly prohibited. Except to the extent required by law, re-publication or retransmission of this document, in whole or in part, is not permitted. The term, "ExxonMobil" is used for convenience, and may include any one or more of ExxonMobil Chemical Company, Exxon Mobil Corporation, or any affiliates in which they directly or indirectly hold any interest.

Internal Use Only
MHC: 0, 0, 0, 2, 4, 0 PPEC: D

DGN: 2009222XUS (1012316)

Copyright 2002 Exxon Mobil Corporation, All rights reserved

11.5.3 MOBIL UNIREX N2

Mobil

UNIREX N

High Temperature Bearing Grease

Product Description

UNIREX N greases are premium-quality, lithium-complex products suitable for high-temperature service in rolling-element bearings. These versatile greases can be used in a wide range of industrial applications and are particularly recommended for electric-motor lubrication.

Unirex N 2 in an NLGI No. 2 grade and is preferred in most cases for application by hand packing or by grease gun. UNIREX N 3 is an NLGI No. 3 grade often used for special applications such as sealed-for-life electric motor bearings, vertically mounted bearings, and higher-speed applications. UNIREX N greases are not intended to be used under extreme pressure conditions where extra anti-welding properties are required.

UNIREX N 2 meets the requirements of Lubricating Grease DIN 51825 - K2N - 30L and ISO L-XBDHA 2.

UNIREX N 3 meets the requirements of Lubricating Grease DIN 51825 - K3N - 20 and ISO L-XBDHA 3.

Features and Benefits

Unirex N greases exhibit excellent high and low temperature performance, resistance to water and corrosion, and long service life in a range of bearing applications.

Features	Advantages and Potential Benefits
Excellent high-temperature performance	Lithium-complex thickener resists softening / running out of bearings at temperatures up to 190°C
Outstanding grease life	Laboratory bearing rig tests show outstanding continuous lubrication performance at bearing temperatures of up to 140°C
Very good low-temperature characteristics	Start-up power requirements are low at temperatures down to at least -20°C and may be suitable at temperatures down to -30°C in those applications where torque is not limiting. Meets DIN 51825 low temperature torque requirements at -20°C.
Excellent mechanical stability	Exhibits excellent resistance to softening due to mechanical working
Excellent water and corrosion resistance	Resists water washout and protects bearings against corrosion
Excellent performance in high-speed applications	Channelling characteristics provide excellent performance in high-speed deep-groove ball bearings. Unirex N3 is recommended where DmN (mean bearing diameter X rpm) exceeds 360,000.

Applications

Because of their outstanding oxidation stability and resistance to softening at high temperatures, UNIREX N greases may be used in many applications such as oven-conveyor bearings, dryer-roller bearings, rotary steam joints, kiln-car bearings, induced-draft fan bearings, and equipment adjacent to high radiant heat such as ovens, soaking pits, etc.

UNIREX N 2 is an NLGI No. 2 grade and is preferred in most cases for application by hand-packing or by grease gun. UNIREX N 2 is recommended for the lubrication of electric motors. It is suitable for NEMA (National Electric Manufacturer's Association) Insulation Class A, B, and F motors.

UNIREX N 3 is an NLGI No. 3 grade and is used for special applications such as sealed-for-life bearings, vertically-mounted bearings, and higher-speed bearings.

Most of the uses for UNIREX N involve manual methods of application. Although UNIREX N 2 is suitable for use in automatic centralized systems, equipment served by these systems would normally not require the long-life properties of UNIREX N, since one of the functions of automatic systems is to replenish the lubricant at relatively short time intervals. UNIREX N 3 should not be used in such systems.

Regardless of the level of oxidation stability of a grease, an increase in temperature will affect the rate of oxidation and thermal deterioration. Consequently, more frequent relubrication is required at higher temperatures. For UNIREX N greases, it is recommended that relubrication intervals not exceed one week of continuous service at 175°C. As temperatures approach 190°C, relubrication intervals should be daily or every shift. Relubrication intervals will, of course, vary widely with the type of service and should be based primarily on the recommendations of the motor manufacturer.

Specifications and Approvals

Unirex N Series meets or exceeds the requirements of:	2	3
DIN 51825: (2004-06)	K2N-30L	K3N-20

Typical Properties

UNIREX N	2	3
Thickener Type	Lithium-complex	Lithium-complex
NLGI Grade	2	3
Color, Visual	Green	Green
Texture	Smooth, Buttery	Smooth, Buttery
Dropping Point, ASTM D 2265, °C	230	230
Base Oil Viscosity, ASTM D 445, cSt @ 40°C	115	115
Base Oil Viscosity Index, ASTM D 2270	95	95
Penetration, worked 60 stokes, ASTM D 217, mm/10	280	235
Penetration change after 100,000 strokes, ASTM D 217, mm/10	25	30
Oil Separation, ASTM D 6184, mass % @100°C / 30 hrs	1.5	0.6
EMCOR Corrosion , ASTM D 6138 (Distilled Water), rating	0,1	0,1
Water Washout @ 79°C, ASTM D 1264, mass %	3.7	3.5
Grease life, DIN 51821 (FE-9), L50 hrs @ 140°C	283	448

Health and Safety

Based on available information, this product is not expected to produce adverse effects on health when used for the intended application and the recommendations provided in the Material Safety Data Sheet (MSDS) are followed. MSDS's are available upon request through your sales contract office, or via the Internet. This product should not be used for purposes other than its intended use. If disposing of used product, take care to protect the environment.

Mobil, the Mobil logotype and the Pegasus design are registered trademarks of Exxon Mobil Corporation, or one of its subsidiaries.

12-2010

Exxon Mobil Corporation

ExxonMobil

Product Name: UNIREX N 2
Revision Date: 07 Jul 2009
Page 1 of 8

MATERIAL SAFETY DATA SHEET

SECTION 1 PRODUCT AND COMPANY IDENTIFICATION

PRODUCT

Product Name: **UNIREX N 2**
Product Description: Base Oil and Additives
Product Code: 2015A0207220, 644351-00, 97N713
Intended Use: Grease

COMPANY IDENTIFICATION

Supplier: **EXXON MOBIL CORPORATION**
3225 GALLOWS RD.
FAIRFAX, VA. 22037 USA

24 Hour Health Emergency	609-737-4411
Transportation Emergency Phone	800-424-9300
ExxonMobil Transportation No.	281-834-3296
Product Technical Information	800-662-4525, 800-947-9147
MSDS Internet Address	http://www.exxon.com, http://www.mobil.com

SECTION 2 COMPOSITION / INFORMATION ON INGREDIENTS

No Reportable Hazardous Substance(s) or Complex Substance(s).

SECTION 3 HAZARDS IDENTIFICATION

This material is not considered to be hazardous according to regulatory guidelines (see (M)SDS Section 15).

POTENTIAL HEALTH EFFECTS

Low order of toxicity. Excessive exposure may result in eye, skin, or respiratory irritation. High-pressure injection under skin may cause serious damage.

NFPA Hazard ID:	Health:	0	Flammability:	1	Reactivity:	0
HMIS Hazard ID:	Health:	0	Flammability:	1	Reactivity:	0

NOTE: This material should not be used for any other purpose than the intended use in Section 1 without expert advice. Health studies have shown that chemical exposure may cause potential human health risks which may vary from person to person.

SECTION 4 FIRST AID MEASURES

Inhalation

Under normal conditions of intended use, this material is not expected to be an inhalation hazard.

SKIN CONTACT

Wash contact areas with soap and water. If product is injected into or under the skin, or into any part of the body, regardless of the appearance of the wound or its size, the individual should be evaluated immediately by a physician as a surgical emergency. Even though initial symptoms from high pressure injection may be minimal or absent, early surgical treatment within the first few hours may significantly reduce the ultimate extent of injury.

EYE CONTACT

Flush thoroughly with water. If irritation occurs, get medical assistance.

Ingestion

First aid is normally not required. Seek medical attention if discomfort occurs.

SECTION 5 FIRE FIGHTING MEASURES

EXTINGUISHING MEDIA

Appropriate Extinguishing Media: Use water fog, foam, dry chemical or carbon dioxide (CO2) to extinguish flames.

Inappropriate Extinguishing Media: Straight Streams of Water

FIRE FIGHTING

Fire Fighting Instructions: Evacuate area. Prevent runoff from fire control or dilution from entering streams, sewers, or drinking water supply. Firefighters should use standard protective equipment and in enclosed spaces, self-contained breathing apparatus (SCBA). Use water spray to cool fire exposed surfaces and to protect personnel.

Hazardous Combustion Products: Smoke, Fume, Aldehydes, Sulfur Oxides, Incomplete combustion products, Oxides of carbon

FLAMMABILITY PROPERTIES

Flash Point [Method]: >200C (392F) [EST. FOR OIL, ASTM D-92 (COC)]
Flammable Limits (Approximate volume % in air): LEL: N/D UEL: N/D
Autoignition Temperature: N/D

SECTION 6 ACCIDENTAL RELEASE MEASURES

NOTIFICATION PROCEDURES

In the event of a spill or accidental release, notify relevant authorities in accordance with all applicable regulations. US regulations require reporting releases of this material to the environment which exceed the applicable reportable quantity or oil spills which could reach any waterway including intermittent dry creeks. The National Response Center can be reached at (800)424-8802.

SPILL MANAGEMENT

Land Spill: Scrape up spilled material with shovels into a suitable container for recycle or disposal.

Water Spill: Stop leak if you can do it without risk. Confine the spill immediately with booms. Warn other

shipping. Skim from surface.

Water spill and land spill recommendations are based on the most likely spill scenario for this material; however, geographic conditions, wind, temperature, (and in the case of a water spill) wave and current direction and speed may greatly influence the appropriate action to be taken. For this reason, local experts should be consulted. Note: Local regulations may prescribe or limit action to be taken.

ENVIRONMENTAL PRECAUTIONS

Prevent entry into waterways, sewers, basements or confined areas.

SECTION 7 HANDLING AND STORAGE

HANDLING

Prevent small spills and leakage to avoid slip hazard.

Static Accumulator: This material is not a static accumulator.

STORAGE

Do not store in open or unlabelled containers.

SECTION 8 EXPOSURE CONTROLS / PERSONAL PROTECTION

NOTE: Limits/standards shown for guidance only. Follow applicable regulations.

ENGINEERING CONTROLS

The level of protection and types of controls necessary will vary depending upon potential exposure conditions. Control measures to consider:

No special requirements under ordinary conditions of use and with adequate ventilation.

PERSONAL PROTECTION

Personal protective equipment selections vary based on potential exposure conditions such as applications, handling practices, concentration and ventilation. Information on the selection of protective equipment for use with this material, as provided below, is based upon intended, normal usage.

Respiratory Protection: If engineering controls do not maintain airborne contaminant concentrations at a level which is adequate to protect worker health, an approved respirator may be appropriate. Respirator selection, use, and maintenance must be in accordance with regulatory requirements, if applicable. Types of respirators to be considered for this material include:

No protection is ordinarily required under normal conditions of use and with adequate ventilation.

For high airborne concentrations, use an approved supplied-air respirator, operated in positive pressure mode. Supplied air respirators with an escape bottle may be appropriate when oxygen levels are inadequate, gas/vapor warning properties are poor, or if air purifying filter capacity/rating may be exceeded.

Hand Protection: Any specific glove information provided is based on published literature and glove manufacturer data. Glove suitability and breakthrough time will differ depending on the specific use conditions. Contact the glove manufacturer for specific advice on glove selection and breakthrough times for your use conditions. Inspect and replace worn or damaged gloves. The types of gloves to be considered for this material include:

No protection is ordinarily required under normal conditions of use.

Eye Protection: If contact is likely, safety glasses with side shields are recommended.

Skin and Body Protection: Any specific clothing information provided is based on published literature or manufacturer data. The types of clothing to be considered for this material include:

No skin protection is ordinarily required under normal conditions of use. In accordance with good industrial hygiene practices, precautions should be taken to avoid skin contact.

Specific Hygiene Measures: Always observe good personal hygiene measures, such as washing after handling the material and before eating, drinking, and/or smoking. Routinely wash work clothing and protective equipment to remove contaminants. Discard contaminated clothing and footwear that cannot be cleaned. Practice good housekeeping.

ENVIRONMENTAL CONTROLS

See Sections 6, 7, 12, 13.

SECTION 9 PHYSICAL AND CHEMICAL PROPERTIES

Typical physical and chemical properties are given below. Consult the Supplier in Section 1 for additional data.

GENERAL INFORMATION

Physical State: Solid
Form: semi-fluid
Color: green
Odor: Characteristic
Odor Threshold: N/D

IMPORTANT HEALTH, SAFETY, AND ENVIRONMENTAL INFORMATION

Relative Density (at 15 C): 0.93
Flash Point [Method]: >200C (392F) [EST. FOR OIL, ASTM D-92 (COC)]
Flammable Limits (Approximate volume % in air): LEL: N/D UEL: N/D
Autoignition Temperature: N/D
Boiling Point / Range: N/D
Vapor Density (Air = 1): N/D
Vapor Pressure: < 0.013 kPa (0.1 mm Hg) at 20 C
Evaporation Rate (N-Butyl Acetate = 1): N/D
pH: N/A
Log Pow (n-Octanol/Water Partition Coefficient): N/D
Solubility in Water: Negligible
Viscosity: 113 cSt (113 mm²/sec) at 40 C [Base oil]
Oxidizing Properties: See Sections 3, 15, 16.

OTHER INFORMATION

ExxonMobil

Product Name: UNIREX N 2
Revision Date: 07 Jul 2009
Page 5 of 8

Freezing Point: N/D
Melting Point: >219°C (426°F)
DMSO Extract (mineral oil only), IP-346: < 3 %wt

NOTE: Most physical properties above are for the oil component in the material.

SECTION 10 STABILITY AND REACTIVITY

STABILITY: Material is stable under normal conditions.

CONDITIONS TO AVOID: Excessive heat. High energy sources of ignition.

MATERIALS TO AVOID: Strong oxidizers

HAZARDOUS DECOMPOSITION PRODUCTS: Material does not decompose at ambient temperatures.

HAZARDOUS POLYMERIZATION: Will not occur.

SECTION 11 TOXICOLOGICAL INFORMATION

ACUTE TOXICITY

Route of Exposure	Conclusion / Remarks
Inhalation	
Toxicity: No end point data.	Minimally Toxic. Based on assessment of the components.
Irritation: No end point data.	Negligible hazard at ambient/normal handling temperatures. Based on assessment of the components.
Ingestion	
Toxicity (Rat): LD50 > 5000 mg/kg	Minimally Toxic. Based on test data for structurally similar materials.
Skin	
Toxicity (Rabbit): LD50 > 5000 mg/kg	Minimally Toxic. Based on test data for structurally similar materials.
Irritation (Rabbit): Data available.	Negligible irritation to skin at ambient temperatures. Based on assessment of the components.
Eye	
Irritation (Rabbit): Data available.	May cause mild, short-lasting discomfort to eyes. Based on assessment of the components.

CHRONIC/OTHER EFFECTS

For the product itself:

Component concentrations in this formulation would not be expected to cause skin sensitization, based on tests of the components or similar formulations.

Contains:

Base oil severely refined: Not carcinogenic in animal studies. Representative material passes IP-346, Modified Ames test, and/or other screening tests. Dermal and inhalation studies showed minimal effects; lung non-specific infiltration of immune cells, oil deposition and minimal granuloma formation. Not sensitizing in test animals.

Additional information is available by request.

The following ingredients are cited on the lists below: None.

--REGULATORY LISTS SEARCHED--

1 = NTP CARC	3 = IARC 1	5 = IARC 2B
2 = NTP SUS	4 = IARC 2A	6 = OSHA CARC

SECTION 12 ECOLOGICAL INFORMATION

The information given is based on data available for the material, the components of the material, and similar materials.

ECOTOXICITY

Material -- Not expected to be harmful to aquatic organisms.

MOBILITY

Base oil component -- Low solubility and floats and is expected to migrate from water to the land. Expected to partition to sediment and wastewater solids.

PERSISTENCE AND DEGRADABILITY

Biodegradation:

Base oil component -- Expected to be inherently biodegradable

BIOACCUMULATION POTENTIAL

Base oil component -- Has the potential to bioaccumulate, however metabolism or physical properties may reduce the bioconcentration or limit bioavailability.

SECTION 13 DISPOSAL CONSIDERATIONS

Disposal recommendations based on material as supplied. Disposal must be in accordance with current applicable laws and regulations, and material characteristics at time of disposal.

DISPOSAL RECOMMENDATIONS

Product is suitable for burning in an enclosed controlled burner for fuel value or disposal by supervised incineration at very high temperatures to prevent formation of undesirable combustion products.

REGULATORY DISPOSAL INFORMATION

RCRA Information: Disposal of unused product may be subject to RCRA regulations (40 CFR 261). Disposal of the used product may also be regulated due to ignitability, corrosivity, reactivity or toxicity as determined by the Toxicity Characteristic Leaching Procedure (TCLP). Potential RCRA characteristics:
TCLP (BARIUM)

Empty Container Warning Empty Container Warning (where applicable): Empty containers may contain residue and can be dangerous. Do not attempt to refill or clean containers without proper instructions. Empty drums should be completely drained and safely stored until appropriately reconditioned or disposed. Empty containers should be taken for recycling, recovery, or disposal through suitably qualified or licensed contractor and in accordance with governmental regulations. DO NOT PRESSURISE, CUT, WELD, BRAZE, SOLDER, DRILL, GRIND, OR EXPOSE

SUCH CONTAINERS TO HEAT, FLAME, SPARKS, STATIC ELECTRICITY, OR OTHER SOURCES OF IGNITION. THEY MAY EXPLODE AND CAUSE INJURY OR DEATH.

SECTION 14 TRANSPORT INFORMATION

LAND (DOT) : Not Regulated for Land Transport

LAND (TDG) : Not Regulated for Land Transport

SEA (IMDG) : Not Regulated for Sea Transport according to IMDG-Code

AIR (IATA) : Not Regulated for Air Transport

SECTION 15 REGULATORY INFORMATION

OSHA HAZARD COMMUNICATION STANDARD: When used for its intended purposes, this material is not classified as hazardous in accordance with OSHA 29 CFR 1910.1200.

NATIONAL CHEMICAL INVENTORY LISTING: IECSC, DSL, EINECS, TSCA
Special Cases:

Inventory	Status
KECI	Restrictions Apply

EPCRA: This material contains no extremely hazardous substances.

SARA (311/312) REPORTABLE HAZARD CATEGORIES: None.

SARA (313) TOXIC RELEASE INVENTORY: This material contains no chemicals subject to the supplier notification requirements of the SARA 313 Toxic Release Program.

The following ingredients are cited on the lists below:

Chemical Name	CAS Number	List Citations
DIPHENYLAMINE	122-39-4	5

--REGULATORY LISTS SEARCHED--

1 = ACGIH ALL	6 = TSCA 5a2	11 = CA P65 REPRO	16 = MN RTK
2 = ACGIH A1	7 = TSCA 5e	12 = CA RTK	17 = NJ RTK
3 = ACGIH A2	8 = TSCA 6	13 = IL RTK	18 = PA RTK
4 = OSHA Z	9 = TSCA 12b	14 = LA RTK	19 = RI RTK
5 = TSCA 4	10 = CA P65 CARC	15 = MI 293	

Code key: CARC=Carcinogen; REPRO=Reproductive

ExxonMobil

Product Name: UNIREX N 2
Revision Date: 07 Jul 2009
Page 8 of 8

SECTION 16 OTHER INFORMATION

N/D = Not determined, N/A = Not applicable

THIS SAFETY DATA SHEET CONTAINS THE FOLLOWING REVISIONS:

Revision Changes:
Section 04: First Aid Inhalation - Header was modified.
Section 04: First Aid Ingestion - Header was modified.
Section 10 Stability and Reactivity - Header was modified.
Section 13: Disposal Recommendations - Note was modified.
Section 09: Physical State was modified.
Section 09: Color was modified.
Section 09: Evaporation Rate - Header was modified.
Section 08: Personal Protection was modified.
Section 07: Handling and Storage - Handling was modified.
Section 05: Hazardous Combustion Products was modified.
Section 09: Relative Density - Header was modified.
Section 09: Viscosity was modified.
Section 15: List Citation Table - Header was modified.
Section 15: National Chemical Inventory Listing was modified.
Section 15: OSHA Hazard Communication Standard was modified.
Hazard Identification: OSHA - May be Hazardous Statement was modified.
Section 08: Exposure limits/standards was deleted.

The information and recommendations contained herein are, to the best of ExxonMobil's knowledge and belief, accurate and reliable as of the date issued. You can contact ExxonMobil to insure that this document is the most current available from ExxonMobil. The information and recommendations are offered for the user's consideration and examination. It is the user's responsibility to satisfy itself that the product is suitable for the intended use. If buyer repackages this product, it is the user's responsibility to insure proper health, safety and other necessary information is included with and/or on the container. Appropriate warnings and safe-handling procedures should be provided to handlers and users. Alteration of this document is strictly prohibited. Except to the extent required by law, re-publication or retransmission of this document, in whole or in part, is not permitted. The term, "ExxonMobil" is used for convenience, and may include any one or more of ExxonMobil Chemical Company, Exxon Mobil Corporation, or any affiliates in which they directly or indirectly hold any interest.

Internal Use Only
MHC: 0B, 0B, 0, 0, 0, 0 PPEC: A

DGN: 2031341XUS (553418)

Copyright 2002 Exxon Mobil Corporation, All rights reserved

11.5.4 MOBIL DTE 21

Mobil

Mobil DTE Oil Named Series

Premium Performance Circulating Lubricants

Product Description

The Mobil DTE Oil Named Series of lubricants are premium performance circulating lubricants designed for applications including steam and hydro turbine sets and other systems where long lubricant service life is required. Mobil DTE Oil Named Series lubricants are formulated from highly refined base stocks and an additive system which provide an extremely high level of chemical and thermal stability, rapid and complete separation from water and a high resistance to emulsification. They provide excellent protection against rust and corrosion, including resistance to salt water, and good antiwear properties. They have a high viscosity index which ensures minimum variation of film thickness with temperature and minimum power loss during the warm up period. These grades have excellent air release properties which allow entrained air to separate, thus avoiding pump cavitation and erratic operation.

Mobil DTE Oil Named are the lubricants of choice for many users because of their reputation for long life, excellent equipment protection and outstanding versatility in the wide variety of industrial applications. DTE Oil Named lubricants are used widely in steam turbines and hydroturbines with splash, bath and ring-oiling arrangements, and all other continuous circulation methods involving pumps, valves and ancillary equipment. This product series is recommended for continous service in the lubrication of plain and rolling bearings and parallel shaft gearing. They have also been used successfully in rotary air compressor applications and reciprocating natural gas compressors as well as vacuum pumps. Their reputation is based on many decades of successful service and satisfied users.

Features and Benefits

The Mobil DTE family of products is well known and highly regarded worldwide based on their outstanding performance and the RandD expertise and the global technical support which stand behind the brand. The highly versatile performance of Mobil DTE Oil Named oils has made them the oil of choice for a multitude of industrial equipment applications around the world.

Mobil DTE Named oils enjoy an excellent reputation in the lubrication of the circulation systems of steam turbines and hydro turbines, including geared turbines, plus a wide variety of ancillary equipment. As designs change and increase in severity, it is the challenge of our formulation scientists to understand the effect of these changes on the lubricant and to formulate these products for the broad versatility they are recognised for.

For the Mobil DTE Oil Named Series of lubricants, this process has resulted in the use of special base stocks for outstanding oxidation stability, plus a unique additive combination to ensure the excellent, wide-ranging performance of these oils. A review of the features, advantages and potential benefits of the product are shown below.

Features	Advantages and Potential Benefits
Very high level of chemical and thermal stability and resistance to sludging and varnishing	Long oil charge life in circulation systems and reduced oil replacement costs
	Less unplanned downtime and reduced maintenance costs
Excellent water release properties	Improved operating efficiency
Very good antiwear protection	Longer equipment life, reduced maintenance and downtime
Long term protection against rust and corrosion	Longer equipment life, reduced maintenance and downtime
High resistance to foaming and excellent air release	Avoids pump cavitation, noisy and erratic operation

Features	Advantages and Potential Benefits
Highly versatile - multiple applications	Rationalize inventory, reduced inventory costs

Applications

The Mobil DTE Oil Named Series of lubricants are premium performance circulating lubricants designed for applications where long lubricant service life is required. Specific applications include:

- Land-based and marine steam turbine, hydro turbine and some gas turbine circulation systems, including pumps, valves and other ancillary equipment
- Continuous service in plain and roller bearings and parallel shaft gearing
- Turbines with oil supplied by splash, bath, ring oiling or other mechanical means
- Moderate severity hydraulic pumps
- Compressors and vacuum pumps handling air, natural gas, and inert gases, and with discharge temperatures not exceeding 150C

Specifications and Approvals

Mobil DTE Named Series meets or exceeds the requirements of:	Mobil DTE Light	Mobil DTE Medium	Mobil DTE Heavy Medium	Mobil DTE Heavy
DIN 51515-1 L-TD (2001)	X	X		X
DIN 51517 CL (1989)	X	X		X
DIN 51515-1: 2010-02			X	
DIN 51517-2: 2009-06			X	
DIN 51524-1: 2006-09			X	
GE GEK 46506D	X			
GE GEK 27070	X			
GE GEK 28143A	X	X		

According to ExxonMobil, Mobil DTE Named Series is of the following quality level:	Mobil DTE Light	Mobil DTE Medium	Mobil DTE Heavy Medium	Mobil DTE Heavy
DIN 51524 HL (1985)	X	X		X

Typical Properties

Mobil DTE Named Series	Mobil DTE Light	Mobil DTE Medium	Mobil DTE Heavy Medium	Mobil DTE Heavy
ISO Viscosity Grade	32	46	68	100
Viscosity, ASTM D 445				
cSt @ 40º C	31.0	44.5	65.1	95.1
cSt @ 100º C	5.5	6.9	8.7	10.9
Viscosity Index, ASTM D 2270	102	98	95	92
Pour Point, ºC, ASTM D 97	-18	-15	-15	-15
Flash Point, ºC, ASTM D 92	218	221	223	237
Density @15º C kg/l, ASTM D 4052	0.85	0.86	0.87	0.88

Mobil DTE Named Series	Mobil DTE Light	Mobil DTE Medium	Mobil DTE Heavy Medium	Mobil DTE Heavy
TOST, ASTM D 943, Hours to 2 NN	5000	4500	3500	2800
FZG Scuffing, D51354, Fail Stage	8	9	10	10
Rust Prevention, ASTM D 665:				
Distilled Water	Pass	Pass	Pass	Pass
Sea Water	Pass	Pass	Pass	Pass
Water Seperability, ASTM D 1401,Min. to 3 ml emulsion @ 54ºC	15	15	20	30
Copper Strip Corrosion, ASTM D 130,3 hrs @ 121º C	1B	1B	1B	1B
Foam Test, ASTM D 892, Seq I Tendency/stability, ml/ml	20/0	50/0	50/0	50/0
Air Release, ASTM D 3427, 50º C, min.	2	3	4	8

Health and Safety

Based on available information, this product is not expected to produce adverse effects on health when used for the intended application and the recommendations provided in the Material Safety Data Sheet (MSDS) are followed. MSDS's are available upon request through your sales contract office, or via the Internet. This product should not be used for purposes other than its intended use. If disposing of used product, take care to protect the environment.

The Mobil logotype, the Pegasus design and DTE are trademarks of ExxonMobil Corporation, or one of its subsidiaries.

11-2011

Exxon Mobil Corporation
3225 Gallows Road
Fairfax, VA 22037

1-800-ASK MOBIL (275-6624)

Typical Properties are typical of those obtained with normal production tolerance and do not constitute a specification. Variations that do not affect product performance are to be expected during normal manufacture and at different blending locations. The information contained herein is subject to change without notice. All products may not be available locally. For more information, contact your local ExxonMobil contact or visit www.exxonmobil.com
ExxonMobil is comprised of numerous affiliates and subsidiaries, many with names that include Esso, Mobil, or ExxonMobil. Nothing in this document is intended to override or supersede the corporate separateness of local entities. Responsibility for local action and accountability remains with the local ExxonMobil-affiliate entities.

© 2001-2011 Exxon Mobil Corporation. All rights reserved..

ExxonMobil

Product Name: MOBIL DTE 21
Revision Date: 13 Dec 2012
Page 1 of 10

MATERIAL SAFETY DATA SHEET

SECTION 1 PRODUCT AND COMPANY IDENTIFICATION

PRODUCT

Product Name: **MOBIL DTE 21**
Product Description: Base Oil and Additives
Product Code: 201560102005, 602599-00, 970840
Intended Use: Hydraulic fluid

COMPANY IDENTIFICATION

Supplier: EXXON MOBIL CORPORATION
3225 GALLOWS RD.
FAIRFAX, VA. 22037 USA

24 Hour Health Emergency	609-737-4411
Transportation Emergency Phone	800-424-9300
ExxonMobil Transportation No.	281-834-3296
Product Technical Information	800-662-4525, 800-947-9147
MSDS Internet Address	http://www.exxon.com, http://www.mobil.com

SECTION 2 COMPOSITION / INFORMATION ON INGREDIENTS

Reportable Hazardous Substance(s) or Complex Substance(s)

Name	CAS#	Concentration*
SOLVENT REFINED LIGHT PARAFFINIC DISTILLATE (PETROLEUM)	64741-89-5	80 - 90%
STRAIGHT-RUN MIDDLE DISTILLATES	64741-44-2	10 - 20%

* All concentrations are percent by weight unless material is a gas. Gas concentrations are in percent by volume.

SECTION 3 HAZARDS IDENTIFICATION

This material is considered to be hazardous according to regulatory guidelines (see (M)SDS Section 15).

POTENTIAL HEALTH EFFECTS

If swallowed, may be aspirated and cause lung damage. Frequent or prolonged contact may defat and dry the skin, leading to discomfort and dermatitis. May be irritating to the eyes, nose, throat, and lungs. High-pressure injection under skin may cause serious damage.

Target Organs: Skin |

NFPA Hazard ID:	Health:	0	Flammability:	1	Reactivity:	0
HMIS Hazard ID:	Health:	0*	Flammability:	1	Reactivity:	0

NOTE: This material should not be used for any other purpose than the intended use in Section 1 without expert advice. Health studies have shown that chemical exposure may cause potential human health risks which may vary from person to person.

SECTION 4 FIRST AID MEASURES

INHALATION

Remove from further exposure. For those providing assistance, avoid exposure to yourself or others. Use adequate respiratory protection. If respiratory irritation, dizziness, nausea, or unconsciousness occurs, seek immediate medical assistance. If breathing has stopped, assist ventilation with a mechanical device or use mouth-to-mouth resuscitation.

SKIN CONTACT

Wash contact areas with soap and water. Remove contaminated clothing. Launder contaminated clothing before reuse. If product is injected into or under the skin, or into any part of the body, regardless of the appearance of the wound or its size, the individual should be evaluated immediately by a physician as a surgical emergency. Even though initial symptoms from high pressure injection may be minimal or absent, early surgical treatment within the first few hours may significantly reduce the ultimate extent of injury.

EYE CONTACT

Flush thoroughly with water. If irritation occurs, get medical assistance.

INGESTION

Seek immediate medical attention. Do not induce vomiting.

NOTE TO PHYSICIAN

If ingested, material may be aspirated into the lungs and cause chemical pneumonitis. Treat appropriately.

SECTION 5 FIRE FIGHTING MEASURES

EXTINGUISHING MEDIA

Appropriate Extinguishing Media: Use water fog, foam, dry chemical or carbon dioxide (CO2) to extinguish flames.

Inappropriate Extinguishing Media: Straight Streams of Water

FIRE FIGHTING

Fire Fighting Instructions: Evacuate area. Prevent runoff from fire control or dilution from entering streams, sewers, or drinking water supply. Firefighters should use standard protective equipment and in enclosed spaces, self-contained breathing apparatus (SCBA). Use water spray to cool fire exposed surfaces and to protect personnel.

Unusual Fire Hazards: Pressurized mists may form a flammable mixture.

Hazardous Combustion Products: Smoke, Fume, Aldehydes, Sulfur oxides, Incomplete combustion products, Oxides of carbon

FLAMMABILITY PROPERTIES

Flash Point [Method]: >166°C (331°F) [ASTM D-92]
Flammable Limits (Approximate volume % in air): LEL: 0.9 UEL: 7.0

ExxonMobil

Product Name: MOBIL DTE 21
Revision Date: 13 Dec 2012
Page 3 of 10

Autoignition Temperature: N/D

SECTION 6 ACCIDENTAL RELEASE MEASURES

NOTIFICATION PROCEDURES

In the event of a spill or accidental release, notify relevant authorities in accordance with all applicable regulations. US regulations require reporting releases of this material to the environment which exceed the applicable reportable quantity or oil spills which could reach any waterway including intermittent dry creeks. The National Response Center can be reached at (800)424-8802.

PROTECTIVE MEASURES

Avoid contact with spilled material. Warn or evacuate occupants in surrounding and downwind areas if required due to toxicity or flammability of the material. See Section 5 for fire fighting information. See the Hazard Identification Section for Significant Hazards. See Section 4 for First Aid Advice. See Section 8 for advice on the minimum requirements for personal protective equipment. Additional protective measures may be necessary, depending on the specific circumstances and/or the expert judgment of the emergency responders.

For emergency responders: Respiratory protection: respiratory protection will be necessary only in special cases, e.g., formation of mists. Half-face or full-face respirator with filter(s) for dust/organic vapor or Self Contained Breathing Apparatus (SCBA) can be used depending on the size of spill and potential level of exposure. If the exposure cannot be completely characterized or an oxygen deficient atmosphere is possible or anticipated, SCBA is recommended. Work gloves that are resistant to hydrocarbons are recommended. Gloves made of polyvinyl acetate (PVA) are not water-resistant and are not suitable for emergency use. Chemical goggles are recommended if splashes or contact with eyes is possible. Small spills: normal antistatic work clothes are usually adequate. Large spills: full body suit of chemical resistant, antistatic material is recommended.

SPILL MANAGEMENT

Land Spill: Stop leak if you can do it without risk. Recover by pumping or with suitable absorbent.

Water Spill: Stop leak if you can do it without risk. Confine the spill immediately with booms. Warn other shipping. Remove from the surface by skimming or with suitable absorbents. Seek the advice of a specialist before using dispersants.

Water spill and land spill recommendations are based on the most likely spill scenario for this material; however, geographic conditions, wind, temperature, (and in the case of a water spill) wave and current direction and speed may greatly influence the appropriate action to be taken. For this reason, local experts should be consulted. Note: Local regulations may prescribe or limit action to be taken.

ENVIRONMENTAL PRECAUTIONS

Large Spills: Dike far ahead of liquid spill for later recovery and disposal. Prevent entry into waterways, sewers, basements or confined areas.

SECTION 7 HANDLING AND STORAGE

HANDLING

Avoid contact with skin. Prevent small spills and leakage to avoid slip hazard. Material can accumulate static charges which may cause an electrical spark (ignition source). When the material is handled in bulk, an electrical spark could ignite any flammable vapors from liquids or residues that may be present (e.g., during switch-loading operations). Use proper bonding and/or ground procedures. However, bonding and grounds

may not eliminate the hazard from static accumulation. Consult local applicable standards for guidance. Additional references include American Petroleum Institute 2003 (Protection Against Ignitions Arising out of Static, Lightning and Stray Currents) or National Fire Protection Agency 77 (Recommended Practice on Static Electricity) or CENELEC CLC/TR 50404 (Electrostatics - Code of practice for the avoidance of hazards due to static electricity).

Static Accumulator: This material is a static accumulator.

STORAGE

The container choice, for example storage vessel, may effect static accumulation and dissipation. Do not store in open or unlabelled containers. Keep away from incompatible materials.

SECTION 8 EXPOSURE CONTROLS / PERSONAL PROTECTION

EXPOSURE LIMIT VALUES

Exposure limits/standards (Note: Exposure limits are not additive)

Source	Form	Limit / Standard			NOTE	Source
SOLVENT REFINED LIGHT PARAFFINIC DISTILLATE (PETROLEUM)	Mist.	TWA	5 mg/m3		N/A	OSHA Z1
SOLVENT REFINED LIGHT PARAFFINIC DISTILLATE (PETROLEUM)	Inhalable fraction.	TWA	5 mg/m3		N/A	ACGIH
SOLVENT REFINED LIGHT PARAFFINIC DISTILLATE (PETROLEUM)	Mist.	TWA	5 mg/m3		N/A	ACGIH
STRAIGHT-RUN MIDDLE DISTILLATES	Stable Aerosol.	TWA	5 mg/m3		N/A	ExxonMobil
STRAIGHT-RUN MIDDLE DISTILLATES	Vapor.	TWA	200 mg/m3		N/A	ExxonMobil

Exposure limits/standards for materials that can be formed when handling this product: When mists/aerosols can occur the following are recommended: 5 mg/m³ - ACGIH TLV (inhalable fraction), 5 mg/m³ - OSHA PEL.

NOTE: Limits/standards shown for guidance only. Follow applicable regulations.

ENGINEERING CONTROLS

The level of protection and types of controls necessary will vary depending upon potential exposure conditions. Control measures to consider:

No special requirements under ordinary conditions of use and with adequate ventilation.

PERSONAL PROTECTION

Personal protective equipment selections vary based on potential exposure conditions such as applications, handling practices, concentration and ventilation. Information on the selection of protective equipment for use with this material, as provided below, is based upon intended, normal usage.

Respiratory Protection: If engineering controls do not maintain airborne contaminant concentrations at a

level which is adequate to protect worker health, an approved respirator may be appropriate. Respirator selection, use, and maintenance must be in accordance with regulatory requirements, if applicable. Types of respirators to be considered for this material include:
No special requirements under ordinary conditions of use and with adequate ventilation.

For high airborne concentrations, use an approved supplied-air respirator, operated in positive pressure mode. Supplied air respirators with an escape bottle may be appropriate when oxygen levels are inadequate, gas/vapor warning properties are poor, or if air purifying filter capacity/rating may be exceeded.

Hand Protection: Any specific glove information provided is based on published literature and glove manufacturer data. Glove suitability and breakthrough time will differ depending on the specific use conditions. Contact the glove manufacturer for specific advice on glove selection and breakthrough times for your use conditions. Inspect and replace worn or damaged gloves. The types of gloves to be considered for this material include:
If prolonged or repeated contact is likely, chemical resistant gloves are recommended. If contact with forearms is likely, wear gauntlet style gloves.

Eye Protection: If contact is likely, safety glasses with side shields are recommended.

Skin and Body Protection: Any specific clothing information provided is based on published literature or manufacturer data. The types of clothing to be considered for this material include:
If prolonged or repeated contact is likely, chemical, and oil resistant clothing is recommended.

Specific Hygiene Measures: Always observe good personal hygiene measures, such as washing after handling the material and before eating, drinking, and/or smoking. Routinely wash work clothing and protective equipment to remove contaminants. Discard contaminated clothing and footwear that cannot be cleaned. Practice good housekeeping.

ENVIRONMENTAL CONTROLS

Comply with applicable environmental regulations limiting discharge to air, water and soil. Protect the environment by applying appropriate control measures to prevent or limit emissions.

SECTION 9 PHYSICAL AND CHEMICAL PROPERTIES

Note: Physical and chemical properties are provided for safety, health and environmental considerations only and may not fully represent product specifications. Contact the Supplier for additional information.

GENERAL INFORMATION

Physical State: Liquid
Color: Amber
Odor: Characteristic
Odor Threshold: N/D

IMPORTANT HEALTH, SAFETY, AND ENVIRONMENTAL INFORMATION

Relative Density (at 15 °C): 0.845
Flash Point [Method]: >166°C (331°F) [ASTM D-92]
Flammable Limits (Approximate volume % in air): LEL: 0.9 UEL: 7.0
Autoignition Temperature: N/D
Boiling Point / Range: > 232°C (450°F)
Vapor Density (Air = 1): > 2 at 101 kPa

Vapor Pressure: < 0.013 kPa (0.1 mm Hg) at 20 °C
Evaporation Rate (n-butyl acetate = 1): N/D
pH: N/A
Log Pow (n-Octanol/Water Partition Coefficient): > 3.5
Solubility in Water: Negligible
Viscosity: 9 cSt (9 mm2/sec) at 40 °C | 2.7 cSt (2.7 mm2/sec) at 100°C
Oxidizing Properties: See Hazards Identification Section.

OTHER INFORMATION

Freezing Point: N/D
Melting Point: N/A
Pour Point: -24°C (-11°F)
DMSO Extract (mineral oil only), IP-346: < 3 %wt

SECTION 10 STABILITY AND REACTIVITY

STABILITY: Material is stable under normal conditions.

CONDITIONS TO AVOID: Excessive heat. High energy sources of ignition.

MATERIALS TO AVOID: Strong oxidizers

HAZARDOUS DECOMPOSITION PRODUCTS: Material does not decompose at ambient temperatures.

HAZARDOUS POLYMERIZATION: Will not occur.

SECTION 11 TOXICOLOGICAL INFORMATION

ACUTE TOXICITY

Route of Exposure	Conclusion / Remarks
Inhalation	
Toxicity: No end point data for material.	Minimally Toxic. Based on assessment of the components.
Irritation: No end point data for material.	Elevated temperatures or mechanical action may form vapors, mist, or fumes which may be irritating to the eyes, nose, throat, or lungs. Based on assessment of the components.
Ingestion	
Toxicity: No end point data for material.	Minimally Toxic. Based on assessment of the components.
Skin	
Toxicity: No end point data for material.	Minimally Toxic. Based on assessment of the components.
Irritation: No end point data for material.	Negligible irritation to skin at ambient temperatures. Based on assessment of the components.
Eye	
Irritation: No end point data for material.	May cause mild, short-lasting discomfort to eyes. Based on assessment of the components.

CHRONIC/OTHER EFFECTS

For the product itself:

Repeated and/or prolonged exposure may cause irritation to the skin, eyes, or respiratory tract. Small amounts of liquid aspirated into the lungs during ingestion or from vomiting may cause chemical pneumonitis or

pulmonary edema.
Contains:
Base oil severely refined: Not carcinogenic in animal studies. Representative material passes IP-346, Modified Ames test, and/or other screening tests. Dermal and inhalation studies showed minimal effects; lung non-specific infiltration of immune cells, oil deposition and minimal granuloma formation. Not sensitizing in test animals.

Additional information is available by request.

The following ingredients are cited on the lists below: None.

--REGULATORY LISTS SEARCHED--

1 = NTP CARC	3 = IARC 1	5 = IARC 2B
2 = NTP SUS	4 = IARC 2A	6 = OSHA CARC

SECTION 12 ECOLOGICAL INFORMATION

The information given is based on data available for the material, the components of the material, and similar materials.

ECOTOXICITY
Material -- Not expected to be harmful to aquatic organisms.

MOBILITY
Base oil component -- Low solubility and floats and is expected to migrate from water to the land. Expected to partition to sediment and wastewater solids.

PERSISTENCE AND DEGRADABILITY
Biodegradation:
Base oil component -- Expected to be inherently biodegradable

BIOACCUMULATION POTENTIAL
Base oil component -- Has the potential to bioaccumulate, however metabolism or physical properties may reduce the bioconcentration or limit bioavailability.

OTHER ECOLOGICAL INFORMATION
VOC: 14 G/L [ASTM E1868-10]

SECTION 13 DISPOSAL CONSIDERATIONS

Disposal recommendations based on material as supplied. Disposal must be in accordance with current applicable laws and regulations, and material characteristics at time of disposal.

DISPOSAL RECOMMENDATIONS

ExxonMobil

Product Name: MOBIL DTE 21
Revision Date: 13 Dec 2012
Page 8 of 10

Product is suitable for burning in an enclosed controlled burner for fuel value or disposal by supervised incineration at very high temperatures to prevent formation of undesirable combustion products. Protect the environment. Dispose of used oil at designated sites. Minimize skin contact. Do not mix used oils with solvents, brake fluids or coolants.

REGULATORY DISPOSAL INFORMATION

RCRA Information: The unused product, in our opinion, is not specifically listed by the EPA as a hazardous waste (40 CFR, Part 261D), nor is it formulated to contain materials which are listed as hazardous wastes. It does not exhibit the hazardous characteristics of ignitability, corrositivity or reactivity and is not formulated with contaminants as determined by the Toxicity Characteristic Leaching Procedure (TCLP). However, used product may be regulated.

Empty Container Warning Empty Container Warning (where applicable): Empty containers may contain residue and can be dangerous. Do not attempt to refill or clean containers without proper instructions. Empty drums should be completely drained and safely stored until appropriately reconditioned or disposed. Empty containers should be taken for recycling, recovery, or disposal through suitably qualified or licensed contractor and in accordance with governmental regulations. DO NOT PRESSURISE, CUT, WELD, BRAZE, SOLDER, DRILL, GRIND, OR EXPOSE SUCH CONTAINERS TO HEAT, FLAME, SPARKS, STATIC ELECTRICITY, OR OTHER SOURCES OF IGNITION. THEY MAY EXPLODE AND CAUSE INJURY OR DEATH.

SECTION 14 TRANSPORT INFORMATION

LAND (DOT): Not Regulated for Land Transport

LAND (TDG): Not Regulated for Land Transport

SEA (IMDG): Not Regulated for Sea Transport according to IMDG-Code

AIR (IATA): Not Regulated for Air Transport

SECTION 15 REGULATORY INFORMATION

OSHA HAZARD COMMUNICATION STANDARD: When used for its intended purpose, this material is classified as hazardous in accordance with OSHA 29CFR 1910.1200.

Complies with the following national/regional chemical inventory requirements:: AICS, DSL, ENCS, IECSC, KECI, PICCS, TSCA

EPCRA SECTION 302: This material contains no extremely hazardous substances.

SARA (311/312) REPORTABLE HAZARD CATEGORIES: Delayed Health.

SARA (313) TOXIC RELEASE INVENTORY: This material contains no chemicals subject to the supplier notification requirements of the SARA 313 Toxic Release Program.

The following ingredients are cited on the lists below:

Chemical Name	CAS Number	List Citations
SOLVENT REFINED LIGHT PARAFFINIC DISTILLATE (PETROLEUM)	64741-89-5	1, 4, 17, 18, 19
ZINC ALKYL DITHIOPHOSPHATE	68649-42-3	15

--REGULATORY LISTS SEARCHED--

1 = ACGIH ALL	6 = TSCA 5a2	11 = CA P65 REPRO	16 = MN RTK
2 = ACGIH A1	7 = TSCA 5e	12 = CA RTK	17 = NJ RTK
3 = ACGIH A2	8 = TSCA 6	13 = IL RTK	18 = PA RTK
4 = OSHA Z	9 = TSCA 12b	14 = LA RTK	19 = RI RTK
5 = TSCA 4	10 = CA P65 CARC	15 = MI 293	

Code key: CARC=Carcinogen; REPRO=Reproductive

SECTION 16 OTHER INFORMATION

N/D = Not determined, N/A = Not applicable

THIS SAFETY DATA SHEET CONTAINS THE FOLLOWING REVISIONS:
No revision information is available.

PRECAUTIONARY LABEL TEXT:
Contains: SOLVENT REFINED LIGHT PARAFFINIC DISTILLATE (PETROLEUM); STRAIGHT-RUN MIDDLE DISTILLATES
CAUTION!
HEALTH HAZARDS
Repeated exposure may cause skin dryness or cracking. If swallowed, may be aspirated and cause lung damage.
Target Organs: Skin |

FIRST AID
Eye: Flush thoroughly with water. If irritation occurs, get medical assistance.

Oral: Seek immediate medical attention. Do not induce vomiting.

Skin: Wash contact areas with soap and water. Remove contaminated clothing. Launder contaminated clothing before reuse. If product is injected into or under the skin, or into any part of the body, regardless of the appearance of the wound or its size, the individual should be evaluated immediately by a physician as a surgical emergency. Even though initial symptoms from high pressure injection may be minimal or absent, early surgical treatment within the first few hours may significantly reduce the ultimate extent of injury.

FIRE FIGHTING MEDIA
Use water fog, foam, dry chemical or carbon dioxide (CO2) to extinguish flames.

SPILL/LEAK
Land Spill: Stop leak if you can do it without risk. Recover by pumping or with suitable absorbent.

Water Spill: Stop leak if you can do it without risk. Confine the spill immediately with booms. Warn other shipping.

ExxonMobil

Product Name: MOBIL DTE 21
Revision Date: 13 Dec 2012
Page 10 of 10

Remove from the surface by skimming or with suitable absorbents. Report spills as required to appropriate authorities. Seek the advice of a specialist before using dispersants.

Use

Not intended or suitable for use in or around a household or dwelling.

The information and recommendations contained herein are, to the best of ExxonMobil's knowledge and belief, accurate and reliable as of the date issued. You can contact ExxonMobil to insure that this document is the most current available from ExxonMobil. The information and recommendations are offered for the user's consideration and examination. It is the user's responsibility to satisfy itself that the product is suitable for the intended use. If buyer repackages this product, it is the user's responsibility to insure proper health, safety and other necessary information is included with and/or on the container. Appropriate warnings and safe-handling procedures should be provided to handlers and users. Alteration of this document is strictly prohibited. Except to the extent required by law, re-publication or retransmission of this document, in whole or in part, is not permitted. The term, "ExxonMobil" is used for convenience, and may include any one or more of ExxonMobil Chemical Company, Exxon Mobil Corporation, or any affiliates in which they directly or indirectly hold any interest.

Internal Use Only

MHC: 2A, 0B, 0, 0, 0, 1 PPEC: C

DGN: 2025222XUS (547054)

Copyright 2002 Exxon Mobil Corporation, All rights reserved

11.5.5 MOBIL 600W CYLINDER OIL

Mobil

Mobil Cylinder Oils

Gear and Cylinder Oils

Product Description

Mobil Cylinder oils are extra high performance high viscosity oils designed for use in enclosed worm gears operating at moderate to high speeds and temperatures, and where heavy loads, slow speeds or high temperatures demand high viscosity oils. They are also intended for use in all steam engine applications They are formulated from high quality base stocks that are resistant to oxidation and thermal degradation, and the build-up of harmful deposits caused by the high operating temperatures of steam cylinders. They protect against rust and corrosion and provide good film strength and excellent lubricity and they are resistant to water washout.

Mobil 600W Cylinder Oil, Mobil 600W Super Cylinder Oil and Mobil Extra Hecla Super Cylinder Oil are additized to enhance their frictional and load-carrying properties. All four members of the product family are widely used in worm gear applications, couplings and bearings, with viscosity grade depending on operating conditions. In steam applications Mobil 600W Super Cylinder Oil is recommended for saturated and superheated steam up to a temperature of 260ºC. Mobil Extra Hecla Super Cylinder Oil and Mobil Extra Hecla Super Cylinder Oil Mineral may be used with superheated steam above 260ºC. Mobil Extra Hecla Super Cylinder Oil Mineral has good demulsibility. Mobil Cylinder Oils can be applied both by drip feed cups and force feed mechanical lubricating devices.

Mobil Cylinder Oils are the benchmark mineral product for worm gear OEMs and users, and are still recognised as leading products for steam cylinder applications.

Features and Benefits

The Mobil Cylinder Oil brand of lubricants represents the earliest lubricant product marketed by our Corporation's predecessor companies. 600W Cylinder Oil was produced by the Vacuum Oil Company in the second half of the 19th century and was a breakthrough product of its time. Continual upgrading and application of the latest base oil and additive technology has maintained this product series as a leader in its application areas. While steam cylinder applications are now less common, the reputation of Mobil Cylinder Oils in worm gear applications remains unmatched among mineral-based products. Mobil Cylinder Oils offer the following features and potential benefits:

Features	Advantages and Potential Benefits
Excellent film integrity at high temperatures	Excellent equipment protection at high temperatures occasioned by variable load conditions, avoiding unexpected downtime and equipment replacement
	Provision of good sealing film round rods and in glands in steam applications
Excellent resistance to deposit formation at high temperatures	Resistant to deposits on areas subject to high spot temperatures, maintaining cleaner systems, requiring less maintenance
Excellent anti-wear and low friction properties	Additized grades give reduced wear and high efficiency
Very good water separation in absence of additives	Non-additized grade gives ready separation from condensate
High quality and built in performance features	Results in fewer unplanned stoppages and reduced maintenance costs

Applications

Mobil 600W Cylinder Oil is recommended for the following applications:

- The splash lubrication of enclosed worm gears operating at moderate to high speeds and temperatures. (Mobil 600 W Cylinder Oil)
- Steam cylinders, couplings, bearings, and break-in of compressor cylinders (Mobil 600 W Cylinder Oil)
- Mobil 600W Super Cylinder Oil and Mobil Extra Hecla Super Cylinder Oil are recommended for the above applications but under higher temperature and load conditions
- Mobil Extra Hecla Super Cylinder Mineral is recommended where ready separation from condensate is essential, for example, where exhaust steam is used for process work
- Mobil Extra Hecla Super Cylinder Mineral may also be used as a tempering oil for bath temperatures up to 290C

Typical Properties

Mobil Cylinder Oils	Mobil 600 W Cylinder Oil	Mobil 600 W Super Cylinder Oil	Mobil Extra Hecla Super Cylinder Oil	Mobil Extra Hecla Super Cylinder Oil Mineral
ISO Viscosity Grade	--	460	680	1000
Viscosity, ASTM D 445				
cSt @ 40°C	375	460	680	1000
cSt @ 100°C	27.0	30.5	35.8	43.0
Viscosity Index, ASTM D 2270	95	95	85	80
Pour Point, °C, ASTM D 97	-9	-6	0	3
Flash Point, °C, ASTM D 92	282	282	282	288
Density,ASTM D4052 @15.6° C kg/l,	0.90	0.91	0.92	0.92
Copper Strip Corrosion, ASTM D 130,3 hrs @ 100° C	1B	1B	1B	1B

Health and Safety

Based on available information, this product is not expected to produce adverse effects on health when used for the intended application and the recommendations provided in the Material Safety Data Sheet (MSDS) are followed. MSDS's are available upon request through your sales contract office, or via the Internet. This product should not be used for purposes other than its intended use. If disposing of used product, take care to protect the environment.

The Mobil logotype, the Pegasus design are trademarks of Exxon Mobil Corporation, or one of its subsidiaries.

Exxon Mobil Corporation
3225 Gallows Road
Fairfax, VA 22037

1-800-ASK MOBIL (275-6624)

Typical Properties are typical of those obtained with normal production tolerance and do not constitute a specification. Variations that do not affect product performance are to be expected during normal manufacture and at different blending locations. The information contained herein is subject to change without notice. All products may not be available locally. For more information, contact your local ExxonMobil contact or visit www.exxonmobil.com
ExxonMobil is comprised of numerous affiliates and subsidiaries, many with names that include Esso, Mobil, or ExxonMobil. Nothing in this document is intended to override or supersede the corporate separateness of local entities. Responsibility for local action and accountability remains with the local ExxonMobil-affiliate entities.

Copyright © 2001-2013 Exxon Mobil Corporation. All rights reserved..

ExxonMobil

Product Name: MOBIL 600 W CYLINDER OIL
Revision Date: 12Sep2006
Page 1 of 8

MATERIAL SAFETY DATA SHEET

SECTION 1 PRODUCT AND COMPANY IDENTIFICATION

PRODUCT

Product Name: **MOBIL 600 W CYLINDER OIL**
Product Description: Base Oil and Additives
Product Code: 2015605D005, 601260-00, 970243
Intended Use: Cylinder oil

COMPANY IDENTIFICATION

Supplier: EXXON MOBIL CORPORATION
3225 GALLOWS RD.
FAIRFAX, VA. 22037 USA

24 Hour Health Emergency	609-737-4411
Transportation Emergency Phone	800-424-9300
ExxonMobil Transportation No.	281-834-3296
MSDS Requests	713-613-3661
Product Technical Information	800-662-4525, 800-947-9147
MSDS Internet Address	http://www.exxon.com, http://www.mobil.com

SECTION 2 COMPOSITION / INFORMATION ON INGREDIENTS

No Reportable Hazardous Substance(s) or Complex Substance(s).

SECTION 3 HAZARDS IDENTIFICATION

This material is not considered to be hazardous according to regulatory guidelines (see (M)SDS Section 15).

POTENTIAL HEALTH EFFECTS

Low order of toxicity. Excessive exposure may result in eye, skin, or respiratory irritation.

NFPA Hazard ID:	Health:	0	Flammability:	1	Reactivity:	0
HMIS Hazard ID:	Health:	0	Flammability:	1	Reactivity:	0

NOTE: This material should not be used for any other purpose than the intended use in Section 1 without expert advice. Health studies have shown that chemical exposure may cause potential human health risks which may vary from person to person.

SECTION 4 FIRST AID MEASURES

INHALATION

Remove from further exposure. For those providing assistance, avoid exposure to yourself or others. Use adequate respiratory protection. If respiratory irritation, dizziness, nausea, or unconsciousness occurs, seek immediate medical assistance. If breathing has stopped, assist ventilation with a mechanical device or use mouth-to-mouth resuscitation.

SKIN CONTACT
Wash contact areas with soap and water.

EYE CONTACT
Flush thoroughly with water. If irritation occurs, get medical assistance.

INGESTION
First aid is normally not required. Seek medical attention if discomfort occurs.

SECTION 5 FIRE FIGHTING MEASURES

EXTINGUISHING MEDIA

Appropriate Extinguishing Media: Use water fog, foam, dry chemical or carbon dioxide (CO2) to extinguish flames.

Inappropriate Extinguishing Media: *Straight Streams of Water*

FIRE FIGHTING

Fire Fighting Instructions: Evacuate area. Prevent runoff from fire control or dilution from entering streams, sewers, or drinking water supply. Firefighters should use standard protective equipment and in enclosed spaces, self-contained breathing apparatus (SCBA). Use water spray to cool fire exposed surfaces and to protect personnel.

Hazardous Combustion Products: Aldehydes, Oxides of carbon, Smoke, Fume, Sulfur oxides, Incomplete combustion products

FLAMMABILITY PROPERTIES

Flash Point [Method]: >282C (540F) [ASTM D-92]
Flammable Limits (Approximate volume % in air): LEL: 0.9 UEL: 7.0
Autoignition Temperature: N/D

SECTION 6 ACCIDENTAL RELEASE MEASURES

NOTIFICATION PROCEDURES

In the event of a spill or accidental release, notify relevant authorities in accordance with all applicable regulations. U.S. regulations require reporting releases of this material to the environment which exceed the reportable quantity or oil spills which could reach any waterway including intermittent dry creeks. The National Response Center can be reached at (800)424-8802.

SPILL MANAGEMENT

Land Spill: Stop leak if you can do it without risk. Recover by pumping or with suitable absorbent.

Water Spill: Stop leak if you can do it without risk. Confine the spill immediately with booms. Warn other shipping. Remove from the surface by skimming or with suitable absorbents. Seek the advice of a specialist before using dispersants.

Water spill and land spill recommendations are based on the most likely spill scenario for this material; however, geographic conditions, wind, temperature, (and in the case of a water spill) wave and current direction and speed may greatly influence the appropriate action to be taken. For this reason, local experts should be consulted. Note: Local regulations may prescribe or limit action to be taken.

ENVIRONMENTAL PRECAUTIONS

Large Spills: Dike far ahead of liquid spill for later recovery and disposal. Prevent entry into waterways, sewers, basements or confined areas.

SECTION 7 HANDLING AND STORAGE

HANDLING

Prevent small spills and leakage to avoid slip hazard.

Static Accumulator: This material is a static accumulator.

STORAGE

Do not store in open or unlabelled containers.

SECTION 8 EXPOSURE CONTROLS / PERSONAL PROTECTION

Exposure limits/standards for materials that can be formed when handling this product: When mists / aerosols can occur, the following are recommended: 5 mg/m³ - ACGIH TLV, 10 mg/m³ - ACGIH STEL, 5 mg/m³ - OSHA PEL.

NOTE: Limits/standards shown for guidance only. Follow applicable regulations.

ENGINEERING CONTROLS

The level of protection and types of controls necessary will vary depending upon potential exposure conditions. Control measures to consider:

No special requirements under ordinary conditions of use and with adequate ventilation.

PERSONAL PROTECTION

Personal protective equipment selections vary based on potential exposure conditions such as applications, handling practices, concentration and ventilation. Information on the selection of protective equipment for use with this material, as provided below, is based upon intended, normal usage.

Respiratory Protection: If engineering controls do not maintain airborne contaminant concentrations at a level which is adequate to protect worker health, an approved respirator may be appropriate. Respirator selection, use, and maintenance must be in accordance with regulatory requirements, if applicable. Types of respirators to be considered for this material include:

No special requirements under ordinary conditions of use and with adequate ventilation.

For high airborne concentrations, use an approved supplied-air respirator, operated in positive pressure mode. Supplied air respirators with an escape bottle may be appropriate when oxygen levels are inadequate,

gas/vapor warning properties are poor, or if air purifying filter capacity/rating may be exceeded.

Hand Protection: Any specific glove information provided is based on published literature and glove manufacturer data. Work conditions can greatly effect glove durability; inspect and replace worn or damaged gloves. The types of gloves to be considered for this material include:
No protection is ordinarily required under normal conditions of use.

Eye Protection: If contact is likely, safety glasses with side shields are recommended.

Skin and Body Protection: Any specific clothing information provided is based on published literature or manufacturer data. The types of clothing to be considered for this material include:
No skin protection is ordinarily required under normal conditions of use. In accordance with good industrial hygiene practices, precautions should be taken to avoid skin contact.

Specific Hygiene Measures: Always observe good personal hygiene measures, such as washing after handling the material and before eating, drinking, and/or smoking. Routinely wash work clothing and protective equipment to remove contaminants. Discard contaminated clothing and footwear that cannot be cleaned. Practice good housekeeping.

ENVIRONMENTAL CONTROLS
See Sections 6, 7, 12, 13.

SECTION 9 PHYSICAL AND CHEMICAL PROPERTIES

Typical physical and chemical properties are given below. Consult the Supplier in Section 1 for additional data.

GENERAL INFORMATION
Physical State: Liquid
Color: Brown
Odor: Characteristic
Odor Threshold: N/D

IMPORTANT HEALTH, SAFETY, AND ENVIRONMENTAL INFORMATION
Relative Density (at 15 C): 0.9
Flash Point [Method]: >282C (540F) [ASTM D-92]
Flammable Limits (Approximate volume % in air): LEL: 0.9 UEL: 7.0
Autoignition Temperature: N/D
Boiling Point / Range: > 316C (600F)
Vapor Density (Air = 1): > 2 at 101 kPa
Vapor Pressure: < 0.013 kPa (0.1 mm Hg) at 20 C
Evaporation Rate (n-butyl acetate = 1): N/D
pH: N/A
Log Pow (n-Octanol/Water Partition Coefficient): > 3.5
Solubility in Water: Negligible
Viscosity: 375 cSt (375 mm2/sec) at 40 C | 28 cSt (28 mm2/sec) at 100C
Oxidizing Properties: See Sections 3, 15, 16.

OTHER INFORMATION
Freezing Point: N/D
Melting Point: N/A

ExxonMobil

Product Name: MOBIL 600 W CYLINDER OIL
Revision Date: 12Sep2006
Page 5 of 8

Pour Point: -9°C (16°F)
DMSO Extract (mineral oil only), IP-346: < 3 %wt

SECTION 10 STABILITY AND REACTIVITY

STABILITY: Material is stable under normal conditions.

CONDITIONS TO AVOID: Excessive heat. High energy sources of ignition.

MATERIALS TO AVOID: Strong oxidizers

HAZARDOUS DECOMPOSITION PRODUCTS: Material does not decompose at ambient temperatures.

HAZARDOUS POLYMERIZATION: Will not occur.

SECTION 11 TOXICOLOGICAL INFORMATION

ACUTE TOXICITY

Route of Exposure	Conclusion / Remarks
Inhalation	
Toxicity (Rat): LC50 > 5000 mg/m3	Minimally Toxic. Based on test data for structurally similar materials.
Irritation: No end point data.	Negligible hazard at ambient/normal handling temperatures. Based on assessment of the components.
Ingestion	
Toxicity (Rat): LD50 > 2000 mg/kg	Minimally Toxic. Based on test data for structurally similar materials.
Skin	
Toxicity (Rabbit): LD50 > 2000 mg/kg	Minimally Toxic. Based on test data for structurally similar materials.
Irritation (Rabbit): Data available.	Negligible irritation to skin at ambient temperatures. Based on test data for structurally similar materials.
Eye	
Irritation (Rabbit): Data available.	May cause mild, short-lasting discomfort to eyes. Based on test data for structurally similar materials.

CHRONIC/OTHER EFFECTS

Contains:

Base oil severely refined: Not carcinogenic in animal studies. Representative material passes IP-346, Modified Ames test, and/or other screening tests. Dermal and inhalation studies showed minimal effects; lung non-specific infiltration of immune cells, oil deposition and minimal granuloma formation. Not sensitizing in test animals.

Additional information is available by request.

The following ingredients are cited on the lists below: None.

--REGULATORY LISTS SEARCHED--

ExxonMobil

Product Name: MOBIL 600 W CYLINDER OIL
Revision Date: 12Sep2006
Page 6 of 8

1 = NTP CARC	3 = IARC 1	5 = IARC 2B
2 = NTP SUS	4 = IARC 2A	6 = OSHA CARC

SECTION 12 ECOLOGICAL INFORMATION

The information given is based on data available for the material, the components of the material, and similar materials.

ECOTOXICITY

Material -- Not expected to be harmful to aquatic organisms.

MOBILITY

Base oil component -- Low solubility and floats and is expected to migrate from water to the land. Expected to partition to sediment and wastewater solids.

PERSISTENCE AND DEGRADABILITY

Biodegradation:

Base oil component -- Expected to be inherently biodegradable

BIOACCUMULATION POTENTIAL

Base oil component -- Has the potential to bioaccumulate, however metabolism or physical properties may reduce the bioconcentration or limit bioavailability.

SECTION 13 DISPOSAL CONSIDERATIONS

Disposal recommendations based on material as supplied. Disposal must be in accordance with current applicable laws and regulations, and material characteristics at time of disposal.

DISPOSAL RECOMMENDATIONS

Product is suitable for burning in an enclosed controlled burner for fuel value or disposal by supervised incineration at very high temperatures to prevent formation of undesirable combustion products.

REGULATORY DISPOSAL INFORMATION

RCRA Information: The unused product, in our opinion, is not specifically listed by the EPA as a hazardous waste (40 CFR, Part 261D), nor is it formulated to contain materials which are listed as hazardous wastes. It does not exhibit the hazardous characteristics of ignitability, corrosivity or reactivity and is not formulated with contaminants as determined by the Toxicity Characteristic Leaching Procedure (TCLP). However, used product may be regulated.

Empty Container Warning PRECAUTIONARY LABEL TEXT: Empty containers may retain residue and can be dangerous. DO NOT PRESSURIZE, CUT, WELD, BRAZE, SOLDER, DRILL, GRIND OR EXPOSE SUCH CONTAINERS TO HEAT, FLAME, SPARKS, STATIC ELECTRICITY, OR OTHER SOURCES OF IGNITION; THEY MAY EXPLODE AND CAUSE INJURY OR DEATH. Do not attempt to refill or clean container since residue is difficult to remove. Empty drums should be completely drained, properly bunged and promptly returned to a drum reconditioner. All containers should be disposed of in an environmentally safe manner and in accordance with governmental regulations.

SECTION 14 TRANSPORT INFORMATION

LAND (DOT) : Not Regulated for Land Transport

LAND (TDG) : Not Regulated for Land Transport

SEA (IMDG) : Not Regulated for Sea Transport according to IMDG-Code

AIR (IATA) : Not Regulated for Air Transport

SECTION 15 REGULATORY INFORMATION

OSHA HAZARD COMMUNICATION STANDARD: When used for its intended purposes, this material is not classified as hazardous in accordance with OSHA 29 CFR 1910.1200.

NATIONAL CHEMICAL INVENTORY LISTING: AICS, DSL, EINECS, KECI, PICCS, TSCA

EPCRA: This material contains no extremely hazardous substances.

SARA (311/312) REPORTABLE HAZARD CATEGORIES: None.

SARA (313) TOXIC RELEASE INVENTORY: This material contains no chemicals subject to the supplier notification requirements of the SARA 313 Toxic Release Program.

The Following Ingredients are Cited on the Lists Below:

Chemical Name	CAS Number	List Citations
OILS, LARD	8016-28-2	18

--REGULATORY LISTS SEARCHED--

1 = ACGIH ALL	6 = TSCA 5a2	11 = CA P65 REPRO	16 = MN RTK
2 = ACGIH A1	7 = TSCA 5e	12 = CA RTK	17 = NJ RTK
3 = ACGIH A2	8 = TSCA 6	13 = IL RTK	18 = PA RTK
4 = OSHA Z	9 = TSCA 12b	14 = LA RTK	19 = RI RTK
5 = TSCA 4	10 = CA P65 CARC	15 = MI 293	

Code key: CARC=Carcinogen; REPRO=Reproductive

SECTION 16 OTHER INFORMATION

N/D = Not determined, N/A = Not applicable

THIS SAFETY DATA SHEET CONTAINS THE FOLLOWING REVISIONS:
No revision information is available.

The information and recommendations contained herein are, to the best of ExxonMobil's knowledge and belief, accurate and reliable as of the date issued. You can contact ExxonMobil to insure that this document is the most current

available from ExxonMobil. The information and recommendations are offered for the user's consideration and examination. It is the user's responsibility to satisfy itself that the product is suitable for the intended use. If buyer repackages this product, it is the user's responsibility to insure proper health, safety and other necessary information is included with and/or on the container. Appropriate warnings and safe-handling procedures should be provided to handlers and users. Alteration of this document is strictly prohibited. Except to the extent required by law, re-publication or retransmission of this document, in whole or in part, is not permitted. The term, "ExxonMobil" is used for convenience, and may include any one or more of ExxonMobil Chemical Company, Exxon Mobil Corporation, or any affiliates in which they directly or indirectly hold any interest.

Internal Use Only
MHC: 0, 0, 0, 0, 0, 0 PPEC: A

DGN: 2007400XUS (547818)

Copyright 2002 Exxon Mobil Corporation, All rights reserved

11.5.6 CRC TAC 2 ADHESIVE CHAIN LUBRICANT

CRC Industries, Inc.
885 Louis Drive • Warminster PA • 18974

Technical Data Sheet

TAC 2™ Adhesive Chain Lubricant

I. Product Description

CRC TAC 2™ is an exceptional lubricant, with a tough adhesive quality, which will bond to chain/wear surfaces to keep them in peak operating condition by reducing friction and wear that cause metal fatigue. **CRC TAC 2™** contains a tackifier that enables the lubricant to cling tenaciously to metal surfaces without increasing the viscosity. Regular use of **CRC TAC 2™** will help inhibit corrosion, reduce load stress and help increase chain life.

II. Applications

Recommended for use as a lubricant and corrosion inhibitor on all types of drive chains, open gears, hoists, winches, pulleys, fork lifts, rollers, garage doors, bushings, seals, o-rings, and wire ropes.

III. Features & Benefits

- **Low Viscosity**. Provides the ability to penetrate and thoroughly coat vital chain pin and bushing areas.
- **Contains Molybdenum**. Provides cling ability to avoid sling-off or excess dripping.
- **High Temperature Stability**. Operates effectively in temperatures up to 350° F continuous, equivalent to many grease products. Covers wide range of applications.
- **Blue Color** allows easy identification of lubricated parts and equipment.
- **No Known Ozone Depleting Chemicals**. Offers effective performance while complying with the EPA regulations on the use of ozone depleting chemicals.
- **M.S.D.[L.]™-Material Safety Data Label**. Provides instant access to current safety information should an accident or OSHA inspection occur. Helps comply **with OSHA Hazard Communications Standard 29 CFR 1910.1200**.

IV. Physical Properties without propellant

Flash Point	<0ºF TCC	**Boiling Point**	140°F
Odor	Mild petroleum	**Solubility**	Negligible in water
Appearance	Blue liquid	**% Volatile**	81.3%
Vapor Density	>1 (air=1)	**Specific Gravity**	0.710
VOC Content (Fed)	577.2 g/L	**Temperature Range**	350°F (Continuous)
Shelf Life	2 years	**Propellant**	Hydrocarbon
Sara Title III, Sect. 313 Chemicals	Yes		
Prop 65	No		

V. Specifications and Approvals

- NSF Registration # 144243, Category Code (H2) for use in federally inspected meat and poultry plants.

TAC 2™ Adhesive Chain Lubricant

VI. Performance Characteristics

Type of Film	Non-drying
Base Type	Organic Molybdenum
ASTM D-3233 (Falex Load Test)	1,500 lbs.

VII. Directions

1. Do not apply while equipment is energized.
2. Shake well before use.
3. Spray upper edges of overlapping chain side plates and allow lubricant to set up before re-energizing.

VIII. Package Description

Part Number	Container Size
03076	16 oz Aerosol

IX. Disposal

Disposal requirements vary by state and local jurisdiction. All used and unused product should be disposed of in conformance with local, state and federal regulations.

X. Special Use Warnings

Aerosol Cans
Do not puncture, incinerate or store above 120°F. Exposure to high temperatures may cause can to burst. Do not place in direct sunlight or near any heat source. Use only in well ventilated area. Avoid continuous breathing of vapor and spray mist. Avoid contact with skin and eyes. If ventilation is not adequate, respiratory protection should be worn. Aerosol cans will conduct electricity. Keep away from all live electrical sources including battery terminals, solenoids, electrical panels and other electronic components. Failure to observe this warning may result in serious injury from flash fire and/or electrical shock.

Bulk
Product is extremely flammable and should be kept from all flames and other ignition sources. Vapors are heavier than air and can collect in low-lying areas.

General
Use only in well ventilated area. Ventilation may be improved by opening a window or door or providing mechanical assistance. Avoid continuous breathing of vapor and spray mist. Avoid contact with skin and eyes. If ventilation is not adequate, respiratory protection should be worn. For more information regarding short term and long term exposure, review this product's Material Safety Data Sheet.

DISCLAIMER: This information is accurate to the best of CRC Industries' knowledge or obtained from sources believed by CRC to be accurate. Before using any product, read all warnings and directions on the label. All products should be tested for suitability on a particular application prior to actual use. CRC Industries, Inc. makes no representations or warranties of any kind concerning this data.

CRC Industries, Inc. *Industrial Products Division* *Warminster, PA 18974*
Technical Service: (800)521-3168 *Customer Service: (800)272-4620* *CRC On-Line: (215)442-6260*

Literature Reorder #TDS343 ***CRC On-Line # 343*** ***REV. 9/11***

CRC MATERIAL SAFETY DATA SHEET

Section 1: Product & Company Identification

Product Name: **TAC 2™ Adhesive Chain Lube** (aerosol)

Product Number (s): **03076**

Product Use: industrial chain lubricant

Manufacturer / Supplier Contact Information:

In United States:
CRC Industries, Inc.
885 Louis Drive
Warminster, PA 18974
www.crcindustries.com
1-215-674-4300 (General)
(800) 521-3168 (Technical)
(800) 272-4620 (Customer Service)

In Canada:
CRC Canada Co.
2-1246 Lorimar Drive
Mississauga, Ontario L5S 1R2
www.crc-canada.ca
1-905-670-2291

In Mexico:
CRC Industries Mexico
Av. Benito Juárez 4055 G
Colonia Orquídea
San Luís Potosí, SLP CP 78394
www.crc-mexico.com
52-444-824-1666

24-Hr Emergency – CHEMTREC: (800) 424-9300 or (703) 527-3887

Section 2: Hazards Identification

Emergency Overview

DANGER: Extremely Flammable. Harmful or Fatal if Swallowed. Contents Under Pressure.
As defined by OSHA's Hazard Communication Standard, this product is hazardous.
Appearance & Odor: Blue liquid with mild petroleum odor

Potential Health Effects:

ACUTE EFFECTS:

EYE: May cause mild irritation including stinging and redness, but does not injure eye.

SKIN: Single, brief exposures may cause mild irritation. Frequent or prolonged contact may cause more severe irritation, defatting of the skin, and dermatitis.

INHALATION: High vapor concentrations are irritating to the respiratory tract and may cause headaches, dizziness, anesthesia, drowsiness, unconsciousness, and other central nervous system effects, including death. May cause peripheral nervous system disorder and/or damage.

INGESTION: Low order of toxicity by ingestion. Main hazard is aspiration into the lungs during swallowing or vomiting. Small amounts aspirated into the respiratory system may cause bronchopneumonia or pulmonary adema, possibly progressing to death.

CHRONIC EFFECTS: Overexposure to n-hexane may cause progressive and potentially irreversible damage to the peripheral nervous system, particularly in the arms and legs.

TARGET ORGANS: Central nervous system, peripheral nervous system, respiratory system

Medical Conditions Aggravated by Exposure: skin and respiratory conditions

See Section 11 for toxicology and carcinogenicity information on product ingredients.

Page 1 of 7

Product Name: TAC 2™ Adhesive Chain Lube (aerosol)
Product Number (s): 03076

Section 3: Composition/Information on Ingredients

COMPONENT	CAS NUMBER	% by Wt.
Hexane isomers	107-83-5 / 64742-49-0	50 - 60
Liquefied petroleum gas	68476-86-8	25 - 35
Acrylic copolymer	proprietary	5 - 15
Petrolatum	8009-03-8	5 - 10
n-Hexane	110-54-3	1.6

Section 4: First Aid Measures

Eye Contact: Immediately flush with plenty of water for 15 minutes. Call a physician if irritation persists.

Skin Contact: Remove contaminated clothing and wash affected area with soap and water. Call a physician if irritation persists. Wash contaminated clothing prior to re-use.

Inhalation: Remove person to fresh air. Keep person calm. If not breathing, give artificial respiration. If breathing is difficult give oxygen. Call a physician.

Ingestion: Do NOT induce vomiting. Contact a physician immediately.

Note to Physicians: Treat symptomatically. Gastric lavage using a cuffed endotracheal tube may be performed at your discretion.

Section 5: Fire-Fighting Measures

Flammable Properties: This product is extremely flammable in accordance with aerosol flammability definitions. (See 16 CFR 1500.3(c)(6)).

Flash Point: < 0°F (TCC) Upper Explosive Limit: 9.0
Autoignition Temperature: 489°F Lower Explosive Limit: 1.7

Fire and Explosion Data:

Suitable Extinguishing Media: Class B fire extinguishers, dry chemical, foam or CO_2

Products of Combustion: Fumes, smoke and carbon monoxide

Explosion Hazards: Aerosol containers, when exposed to heat from fire, may build pressure and explode. Vapors may accumulate in a confined space and create a flammable atmosphere.

Protection of Fire-Fighters: Firefighters should wear self-contained, NIOSH-approved breathing apparatus for protection against suffocation and possible toxic decomposition products. Proper eye and skin protection should be provided. Use water spray to keep fire-exposed containers cool and to knock down vapors which may result from product decomposition. Do not spray water directly on fire; product will float and could be reignited on surface of water.

Section 6: Accidental Release Measures

Personal Precautions: Use personal protection recommended in Section 8.

Product Name: TAC 2™ Adhesive Chain Lube (aerosol)
Product Number (s): 03076

Environmental Precautions: Take precautions to prevent contamination of ground and surface waters. Do not flush into sewers or storm drains.

Methods for Containment & Clean-up: Dike area to contain spill. Remove all sources of ignition. Ventilate the area with fresh air. If in confined space or limited air circulation area, clean-up workers should wear appropriate respiratory protection. Recover or absorb spilled material using an absorbent designed for chemical spills. Place used absorbents into proper waste containers.

Section 7: Handling and Storage

Handling Procedures: Use proper grounding and bonding procedures for transferring materials. Do not use product near any source of ignition. Avoid contact with eyes and skin. Avoid breathing vapors. Use caution around energized equipment. The metal container will conduct electricity if it contacts a live source. This may result in injury to the user from electrical shock and/or flash fire. For product use instructions, please see the product label.

Storage Procedures: Store in a cool dry area out of direct sunlight. Aerosol cans must be maintained below 120 F to prevent cans from rupturing.

Aerosol Storage Level: III

Section 8: Exposure Controls/Personal Protection

Exposure Guidelines:

	OSHA		ACGIH		OTHER		
COMPONENT	TWA	STEL	TWA	STEL	TWA	SOURCE	UNIT
Hexane isomers	500(v)	1000(v)	500	1000	NE		ppm
Liquefied petroleum gas	1000	NE	1000	NE	NE		ppm
Acrylic copolymer	NE	NE	NE	NE	NE		
Petrolatum	NE	NE	NE	NE	NE		
n-Hexane	500	NE	50(s)	NE	NE		ppm
N.E. – Not Established (c) – ceiling (s) – skin (v) – vacated							

Controls and Protection:

Engineering Controls: Area should have ventilation to provide fresh air. Local exhaust ventilation is generally preferred because it can control the emissions of the contaminant at the source, preventing dispersion into the general work area. Use mechanical means if necessary to maintain vapor levels below the exposure guidelines. If working in a confined space, follow applicable OSHA regulations.

Respiratory Protection: None required for normal work where adequate ventilation is provided. If engineering controls are not feasible or if exposure exceeds the applicable exposure limits, use a NIOSH-approved cartridge respirator with organic vapor cartridge. Air monitoring is needed to determine actual employee exposure levels. Use a self-contained breathing apparatus in confined spaces and for emergencies.

Eye/face Protection: For normal conditions, wear safety glasses. Where there is reasonable probability of liquid contact, wear splash-proof goggles.

Skin Protection: Use protective gloves such as nitrile, PVC or Viton. Also, use full protective clothing if there is prolonged or repeated contact of liquid with skin.

Product Name: TAC 2™ Adhesive Chain Lube (aerosol)
Product Number (s): 03076

Section 9: Physical and Chemical Properties

Physical State: liquid
Color: blue
Odor: mild petroleum
Odor Threshold: ND
Specific Gravity: 0.710
Initial Boiling Point: 140°F
Freezing Point: < -76°F
Vapor Pressure: 160 mmHg @ 68°F
Vapor Density: > 1 (air = 1)
Evaporation Rate: fast
Solubility: negligible in water
Coefficient of water/oil distribution: ND
pH: NA
Volatile Organic Compounds: wt %: 81.3 g/L: 577.2 lbs./gal: 4.8

Section 10: Stability and Reactivity

Stability: Stable

Conditions to Avoid: Sources of ignition, temperature extremes

Incompatible Materials: Strong oxidizers

Hazardous Decomposition Products: Oxides of carbon

Possibility of Hazardous Reactions: No

Section 11: Toxicological Information

Long-term toxicological studies have not been conducted for this product. The following information is available for components of this product.

Acute Toxicity:

Component	Oral LD50 (rat)	Dermal LD50 (rabbit)	Inhalation LC50 (rat)
Hexane isomers	No data	No data	No data
Liquefied petroleum gas	No data	No data	No data
Acrylic copolymer	No data	No data	No data
Petrolatum	> 5 g/kg	> 2 g/kg	No data
n-Hexane	28,710 mg/kg	3000 mg/kg	48,000 ppm/4H

Page 4 of 7

Product Name: TAC 2™ Adhesive Chain Lube (aerosol)
Product Number (s): 03076

Chronic Toxicity:

Component	OSHA Carcinogen	IARC Carcinogen	NTP Carcinogen	Irritant	Sensitizer
Hexane isomers	No	No	No	E & S (mild)	Unknown
Liquefied petroleum gas	No	No	No	No	No
Acrylic copolymer	No	No	No	E & S (mild)	Unknown
Petrolatum	No	No	No	No	Unknown
n-Hexane	No	No	No	E, S & R (moderate)	Unknown

E – Eye S – Skin R - Respiratory

Reproductive Toxicity: No information available
Teratogenicity: No information available
Mutagenicity: No information available
Synergistic Effects: No information available

Section 12: Ecological Information

Ecological studies have not been conducted for this product. The following information is available for components of this product.

Ecotoxicity: n-hexane - 48 Hr EC50 water flea: 3.87 mg/L
96 Hr LC50 Lepomis macrochirus: 4.12 mg/L
Persistence / Degradability: No information available
Bioaccumulation / Accumulation: No information available
Mobility in Environment: No information available

Section 13: Disposal Considerations

Waste Classification: The dispensed liquid product is a RCRA hazardous waste for the characteristic of ignitability with a waste code of D001. (See 40 CFR Part 261.20 – 261.33)
Aerosol should be fully emptied and depressurized before disposal. Empty containers may be recycled.

All disposal activities must comply with federal, state, provincial and local regulations. Local regulations may be more stringent than state, provincial or national requirements.

Section 14: Transport Information

US DOT (ground): Consumer Commodity, ORM-D

ICAO/IATA (air): Consumer Commodity, ID8000, 9

IMO/IMDG (water): Aerosols, UN1950, 2.1, Limited Quantity

Special Provisions: None

Section 15: Regulatory Information

Page 5 of 7

Product Name: TAC 2™ Adhesive Chain Lube (aerosol)
Product Number (s): 03076

U.S. Federal Regulations:

Toxic Substances Control Act (TSCA):
All ingredients are either listed on the TSCA inventory or are exempt.

Comprehensive Environmental Response, Compensation and Liability Act (CERCLA):
Reportable Quantities (RQ's) exist for the following ingredients: n-hexane (5000 lbs)

Spills or releases resulting in the loss of any ingredient at or above its RQ require immediate notification to the National Response Center (800-424-8802) and to your Local Emergency Planning Committee.

Superfund Amendments Reauthorization Act (SARA) Title III:
Section 302 Extremely Hazardous Substances (EHS): None

Section 311/312 Hazard Categories:

Fire Hazard	Yes
Reactive Hazard	No
Release of Pressure	Yes
Acute Health Hazard	Yes
Chronic Health Hazard	No

Section 313 Toxic Chemicals: This product contains the following substances subject to the reporting requirements of Section 313 of Title III of the Superfund Amendments and Reauthorization Act of 1986 and 40 CFR Part 372:
n-hexane (1.6%)

Clean Air Act:
Section 112 Hazardous Air Pollutants (HAPs): n-hexane

U.S. State Regulations:

California Safe Drinking Water and Toxic Enforcement Act (Prop 65):
This product may contain the following chemicals known to the state of California to cause cancer, birth defects or other reproductive harm: None

Consumer Products VOC Regulations: This product is not regulated.

State Right to Know:

New Jersey:	75-83-2, 110-54-3, 79-29-8, 68476-86-8
Pennsylvania:	107-83-5, 75-83-2, 110-54-3, 79-29-8, 68476-86-8
Massachusetts:	107-83-5, 75-83-2, 110-54-3, 79-29-8, 68476-86-8
Rhode Island :	110-54-3, 68476-86-8

Canadian Regulations:

Controlled Products Regulations:
This product has been classified in accordance with the hazard criteria of the Controlled Products Regulations and the MSDS contains all the information required by the Controlled Products Regulations.

WHMIS Hazard Class: A, B5

Canadian DSL Inventory: All ingredients are either listed on the DSL Inventory or are exempt.

European Union Regulations:

RoHS Compliance: This product is compliant with Directive 2002/95/EC of the European Parliament and of the Council of 27 January 2003. This product does not contain any of the restricted substances as listed in Article 4(1) of the RoHS Directive.

Additional Regulatory Information: None

Page 6 of 7

Product Name: TAC 2™ Adhesive Chain Lube (aerosol)
Product Number (s): 03076

Section 16: Other Information

HMIS® (II)	
Health:	2
Flammability:	3
Reactivity:	0
PPE:	B

NFPA

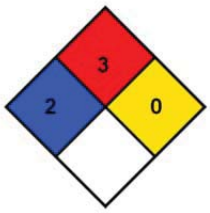

Ratings range from 0 (no hazard) to 4 (severe hazard)

Prepared By: Michelle Rudnick
CRC #: 932A/B
Revision Date: 11/11/2010

Changes since last revision: new product

The information contained in this document applies to this specific material as supplied. It may not be valid for this material if it is used in combination with any other materials. This information is accurate to the best of CRC Industries' knowledge or obtained from sources believed by CRC to be accurate. Before using any product, read all warnings and directions on the label. For further clarification of any information contained on this MSDS consult your supervisor, a health & safety professional, or CRC Industries.

ACGIH: American Conference of Governmental Industrial Hygienists
CAS: Chemical Abstract Service
CFR: Code of Federal Regulations
DOT: Department of Transportation
DSL: Domestic Substance List
g/L: grams per Liter
HMIS: Hazardous Materials Identification System
IARC: International Agency for Research on Cancer
IATA: International Air Transport Association
ICAO: International Civil Aviation Organization
IMDG: International Maritime Dangerous Goods
IMO: International Maritime Organization
lbs./gal: pounds per gallon
LC: Lethal Concentration
LD: Lethal Dose
NA: Not Applicable
ND: Not Determined
NIOSH: National Institute of Occupational Safety & Health
NFPA: National Fire Protection Association
NTP: National Toxicology Program
OSHA: Occupational Safety and Health Administration
PMCC: Pensky-Martens Closed Cup
PPE: Personal Protection Equipment
ppm: Parts per Million
RoHS: Restriction of Hazardous Substances
STEL: Short Term Exposure Limit
TCC: Tag Closed Cup
TWA: Time Weighted Average
WHMIS: Workplace Hazardous Materials Information System

Page 7 of 7

11.5.7 CRC QUICKCLEAN HEAVY DUTY DEGREASER

CRC Industries, Inc.
885 Louis Drive • Warminster PA • 18974

Technical Data Sheet

Quick Clean™
Heavy Duty Degreaser

I. Product Description

CRC Quick Clean™ is a non-flammable, chlorinated, non-ozone depleting degreaser for use on industrial equipment. It provides an economical and aggressive reduced VOC alternative to 1,1,1. It dissolves grease, oil and sludge quickly for more efficient operation of mechanical equipment. **Quick Clean™** is chemically stable, non-conductive and non-corrosive.

II. Applications

Recommended for the removal of grease, oil, grime, sludge and corrosion from motors, air tools, mechanical brakes, clutches, chains, wire rope, machinery, parts, bearings, generators, compressors, pumps, hoists, lifts, dies, molds and a wide variety of other industrial and electrical equipment. Safe for use on oxygen systems*.

III. Features & Benefits

- **Non-Flammable**. Significantly reduces the risk of fire caused by incidental contact of liquid with live equipment or solvents trapped by insulating materials.
- **Fast Evaporation**. Reduces down-time.
- **Leaves No Residue.** Prevents harmful build-up on equipment and eliminates wiping in most applications.
- **No Class I or II Ozone Depleting Chemicals**. Provides an alternative to 1,1,1-Trichloroethane products while complying with the EPA regulations on the use of ozone depleting chemicals.
- **M.S.D.[L.]™-Material Safety Data Label**. Provides instant access to current safety information should an accident or OSHA inspection occur. Helps comply **with OSHA Hazard Communications Standard 29 CFR 1910.1200**.

IV. Physical Properties without propellant

Flash Point	None	**Boiling Point**	250°F (initial)
Odor	Strong in high concentrations	**Solubility**	Slight in water
Appearance	Colorless liquid	**% Volatile**	100
Vapor Density	5.76 (air=1)	**Specific Gravity**	1.619 @ 25°C
VOC Content (Fed)	Exempt (0 g/L)	**Surface Tension**	32.32 dynes/cm
Sara Title III, Sect. 313 Chemicals	Yes	**Propellant**	CO_2
Prop 65	Yes		

V. Specifications and Approvals

- NSF K2 Registered for use in meat and poultry plants.

*Post-test and cleanliness inspection procedures should be followed before re-introduction of oxygen to the system.

Quick Clean™ Heavy Duty Degreaser

VI. Performance Characteristics

ASTM D-56 (Flash Point)	None
ASTM D-877 (Dielectric Strength)	37,500 volts
ASTM D-1130 (KB Value)	95
Surface Tension	32.32 dynes/CM

VII. Directions

- Do not use on polycarbonate plastics such as LEXAN®. If in doubt, call the manufacturer of the equipment. MAY ALSO BE HARMFUL TO OTHER PLASTICS.
- Protect all rubber parts, plastic parts, and painted surfaces from overspray. DO NOT spray directly on painted surfaces.
- Remove access plates to expose equipment interior. For hard to reach areas, use extension tube.
- Spray until clean.
- Air dry or dry with a clean, absorbent cloth.
- Heavy deposits may require scraping and repeated applications.
- **FOR PERSONAL SAFETY DO NOT APPLY WHILE EQUIPMENT IS ENERGIZED**.
- Not for use on sensitive electronic equipment such as tape decks, VCRs, computers, etc. Use a plastic safe CRC Precision Cleaner for those applications.
- Avoid contact with aluminum and its' alloys.

VIII. Package Description

Part Number	Container Size
03180	20 oz Aerosol
03183	5 Gallon Pail
03184	55 Gallon Drum

IX. Disposal

Disposal requirements vary by state and local jurisdiction. All used and unused product should be disposed of in conformance with local, state and federal regulations.

X. Special Use Warnings

Aerosol Cans
Do not puncture, incinerate or store above 120°F. Exposure to high temperatures may cause can to burst. Do not place in direct sunlight or near any heat source. Aerosol cans will conduct electricity. Keep away from all live electrical sources including battery terminals, solenoids, electrical panels and other electronic components. Failure to observe this warning may result in serious injury from flash fire and/or electrical shock.

General
Use only in well ventilated area. Ventilation may be improved by opening a window or door or providing mechanical assistance. Avoid continuous breathing of vapor and spray mist. Avoid contact with skin and eyes. If ventilation is not adequate, respiratory protection should be worn. For more information regarding short term and long term exposure, review this product's Material Safety Data Sheet.

DISCLAIMER: This information is accurate to the best of CRC Industries' knowledge or obtained from sources believed by CRC to be accurate. Before using any product, read all warnings and directions on the label. All products should be tested for suitability on a particular application prior to actual use. CRC Industries, Inc. makes no representations or warranties of any kind concerning this data.

CRC Industries, Inc. *Industrial Products Division* *Warminster, PA 18974*
Technical Service: (800)521-3168 *Customer Service: (800)272-4620* *CRC On-Line: (215)442-6260*

Literature Reorder #TDS186 ***CRC On-Line # 186*** ***REV. 11/11***

CRC MATERIAL SAFETY DATA SHEET

Section 1: Product & Company Identification

Product Name: **Quick Clean™** (aerosol)

Product Number (s): **03180**

Product Use: General purpose degreaser

Manufacturer / Supplier Contact Information:

In United States:
CRC Industries, Inc.
885 Louis Drive
Warminster, PA 18974
www.crcindustries.com
1-215-674-4300(General)
(800) 521-3168 (Technical)
(800) 272-4620 (Customer Service)

In Canada:
CRC Canada Co.
2-1246 Lorimar Drive
Mississauga, Ontario L5S 1R2
www.crc-canada.ca
1-905-670-2291

In Mexico:
CRC Industries Mexico
Av. Benito Juárez 4055 G
Colonia Orquídea
San Luís Potosí, SLP CP 78394
www.crc-mexico.com
52-444-824-1666

24-Hr Emergency – CHEMTREC: (800) 424-9300 or (703) 527-3887

Section 2: Hazards Identification

Emergency Overview

DANGER: Vapor Harmful. Contents Under Pressure.
Appearance & Odor: Colorless liquid, irritating odor at high concentrations.

Potential Health Effects:

ACUTE EFFECTS:

EYE: May cause slight temporary eye irritation. Vapors may irritate the eyes at concentrations of 100 ppm.

SKIN: Short single exposure may cause skin irritation. Prolonged exposure may cause severe skin irritation, even a burn. A single prolonged exposure is not likely to result in the material being absorbed through the skin in harmful amounts.

INHALATION: Dizziness may occur at concentrations of 200 ppm. Progressively higher levels may also cause nasal irritation, nausea, incoordination, and drunkenness. Very high levels or prolonged exposure could lead to unconsciousness and death.

INGESTION: Single dose oral toxicity is considered to be extremely low. Swallowing large amounts may cause injury if aspirated into the lungs. This may be rapidly absorbed through the lungs and result in injury to other body systems.

CHRONIC EFFECTS: Repeated contact with skin may cause drying or flaking of skin. Excessive or long term exposure to vapors may increase sensitivity to epinephrine and increase myocardial irritability.

TARGET ORGANS: Central nervous system, possibly liver and kidney

Medical Conditions Aggravated by Exposure: None known.

See Section 11 for toxicology and carcinogenicity information on product ingredients.

Page 1 of 7

Product Name: Quick Clean™ (aerosol)
Product Number (s): 03180

Section 3: Composition/Information on Ingredients

COMPONENT	CAS NUMBER	% by Wt.
Tetrachloroethylene (PERC)	127-18-4	> 95
Carbon Dioxide	124-38-9	< 5

Section 4: First Aid Measures

Eye Contact: Immediately flush with plenty of water for 15 minutes. Call a physician if irritation persists.

Skin Contact: Remove contaminated clothing and wash affected area with soap and water. Call a physician if irritation persists. Wash contaminated clothing prior to re-use.

Inhalation: Remove person to fresh air. Keep person calm. If not breathing, give artificial respiration. If breathing is difficult give oxygen. Call a physician.

Ingestion: Do NOT induce vomiting. Call a physician immediately.

Note to Physicians: Because rapid absorption may occur through lungs if aspirated and cause systemic effects, the decision of whether to induce vomiting or not should be made by a physician. If lavage is performed, suggest endotracheal and/or esophageal control. If burn is present, treat as any thermal burn, after decontamination. Exposure may increase myocardial irritability. Do not administer sympathomimetic drugs unless absolutely necessary. No specific antidote.

Section 5: Fire-Fighting Measures

Flammable Properties: This product is nonflammable in accordance with aerosol flammability definitions. (See 16 CFR 1500.3(c)(6))

Flash Point: None (TCC) Upper Explosive Limit: None
Autoignition Temperature: None Lower Explosive Limit: None

Fire and Explosion Data:

Suitable Extinguishing Media: This material does not burn. Use extinguishing agent suitable for surrounding fire.

Products of Combustion: Hydrogen chloride. Trace amounts of phosgene and chlorine.

Explosion Hazards: Aerosol containers, when exposed to heat from fire, may build pressure and explode.

Protection of Fire-Fighters: Firefighters should wear self-contained, NIOSH-approved breathing apparatus for protection against suffocation and possible toxic decomposition products. Proper eye and skin protection should be provided. Use water spray to keep fire-exposed containers cool and to knock down vapors which may result from product decomposition.

Section 6: Accidental Release Measures

Personal Precautions: Use personal protection recommended in Section 8. Do not breathe vapors.

Environmental Precautions: Take precautions to prevent contamination of ground and surface waters. Do not flush into sewers or storm drains.

Methods for Containment & Clean-up: Dike area to contain spill. Ventilate the area with fresh air. If in confined space or limited air circulation area, clean-up workers should wear appropriate

Product Name: Quick Clean™ (aerosol)
Product Number (s): 03180

respiratory protection. Recover or absorb spilled material using an absorbent designed for chemical spills. Place used absorbents into proper waste containers.

Section 7: Handling and Storage

Handling Procedures: Vapors of this product are heavier than air and will collect in low areas. Make sure ventilation removes vapors from low areas. Do not eat, drink or smoke while using this product. Use caution around energized equipment. The metal container will conduct electricity if it contacts a live source. This may result in injury to the user from electrical shock and/or flash fire. For product use instructions, please see the product label.

Storage Procedures: Store in a cool dry area out of direct sunlight. Aerosol cans must be maintained below 120°F / 49°C to prevent cans from rupturing.

Aerosol Storage Level: I

Section 8: Exposure Controls/Personal Protection

Exposure Guidelines:

	OSHA		ACGIH		OTHER		
COMPONENT	TWA	STEL	TWA	STEL	TWA	SOURCE	UNIT
Tetrachloroethylene	100	N.E.	25	100	N.E.		ppm
Carbon dioxide	5000	30000 v	5000	30,000	N.E.		ppm
N.E. – Not Established (c) – ceiling (s) – skin (v) – vacated							

Controls and Protection:

Engineering Controls: Area should have ventilation to provide fresh air. Local exhaust ventilation is generally preferred because it can control the emissions of the contaminant at the source, preventing dispersion into the general work area. Use mechanical means if necessary to maintain vapor levels below the exposure guidelines. If working in a confined space, follow applicable OSHA regulations.

Respiratory Protection: None required for normal work where adequate ventilation is provided. If engineering controls are not feasible or if exposure exceeds the applicable exposure limits, use a NIOSH-approved cartridge respirator with organic vapor cartridge. Air monitoring is needed to determine actual employee exposure levels. Use a self-contained breathing apparatus in confined spaces and for emergencies.

Eye/face Protection: For normal conditions, wear safety glasses. Where there is reasonable probability of liquid contact, wear splash-proof goggles.

Skin Protection: Use protective gloves such as PVA, Teflon, or Viton. Also, use full protective clothing if there is prolonged or repeated contact of liquid with skin.

Section 9: Physical and Chemical Properties

Physical State: liquid
Color: colorless
Odor: irritating odor
Odor Threshold: 50 ppm
Specific Gravity: 1.619

Product Name: Quick Clean™ (aerosol)
Product Number (s): 03180

Initial Boiling Point: 250°F / 121°C
Freezing Point: ND
Vapor Pressure: 13 mmHg @ 68°F / 20°C
Vapor Density: 5.76 (air = 1)
Evaporation Rate: very fast
Solubility: 0.015 g / 100 g @ 77°F / 25°C in water
Coefficient of water/oil distribution (log P_{ow}): 2.88
pH: NA
Volatile Organic Compounds: wt %: 0 g/L: 0 lbs./gal: 0

Section 10: Stability and Reactivity

Stability: Stable

Conditions to Avoid: Avoid direct sunlight or ultraviolet sources. Avoid open flames, welding arcs, and other high temperature sources which induce thermal decomposition.

Incompatible Materials: Avoid contact with metals such as: aluminum powders, magnesium powders, potassium, sodium, and zinc powder. Avoid unintended contact with amines. Avoid contact with strong bases and strong oxidizers.

Hazardous Decomposition Products: Hydrogen chloride, trace amounts of chlorine and phosgene

Possibility of Hazardous Reactions: No

Section 11: Toxicological Information

Long-term toxicological studies have not been conducted for this product. The following information is available for components of this product.

Acute Toxicity:

Component	Oral LD50 (rat)	Dermal LD50 (rabbit)	Inhalation LC50 (rat)
Tetrachloroethylene	2629 mg/kg	3228 mg/kg	5200 mg/kg/4H
Carbon dioxide	No data	No data	470,000 ppm/30M

Chronic Toxicity:

Component	OSHA Carcinogen	IARC Carcinogen	NTP Carcinogen	Irritant	Sensitizer
Tetrachloroethylene	No	Group 2A	Reasonably Anticipated to be a Carcinogen	Skin	No
Carbon dioxide	No	No	No	No	No

Reproductive Toxicity: No information available
Teratogenicity: No information available
Mutagenicity: Tetrachloroethylene: In vitro studies were negative
Animal studies were negative
Synergistic Effects: No information available

Section 12: Ecological Information

Ecological studies have not been conducted for this product. The following information is available for components of this product.

Page 4 of 7

Product Name: Quick Clean™ (aerosol)
Product Number (s): 03180

Ecotoxicity:	Tetrachloroethylene -- 96 Hr LC50 Rainbow Trout: 5.28 mg/L (static) 96 Hr LC50 Fathead minnow: 13.4 mg/L (flow-through)
Persistence / Degradability:	Biodegradation under aerobic conditions is below detectable limits. Biodegradation may occur under anaerobic conditions. Biodegradation rate may increase in soil and/or water with acclimation.
Bioaccumulation / Accumulation:	Bioconcentration potential is low (BCF less than 100).
Mobility in Environment:	Potential for mobility in soil is medium.

Section 13: Disposal Considerations

Waste Classification: The dispensed liquid product is a RCRA hazardous waste for toxicity with the following potential waste codes: U210, F001, F002, D039. (See 40 CFR Part 261.20 – 261.33)
Empty aerosol containers may be recycled. Any liquid product should be managed as a hazardous waste.

All disposal activities must comply with federal, state, provincial and local regulations. Local regulations may be more stringent than state, provincial or national requirements.

Section 14: Transport Information

US DOT (ground):	UN1950, Aerosols, non-flammable, 2.2 (6.1), Limited Quantity**
ICAO/IATA (air):	UN1950, Aerosols, non-flammable, containing substances in Division 6.1, Packing Group III, 2.2 (6.1), Limited Quantity
IMO/IMDG (water):	UN1950, Aerosols, 2.2 (6.1)
Special Provisions:	Marine Pollutant **This product can be classified and labeled as 'Consumer Commodity, ORM-D' for domestic ground shipping until January 1, 2014. If shipping as limited quantity by ground, note that shipping papers are not required.

Section 15: Regulatory Information

U.S. Federal Regulations:

Toxic Substances Control Act (TSCA):
All ingredients are either listed on the TSCA inventory or are exempt.

Comprehensive Environmental Response, Compensation and Liability Act (CERCLA):
Reportable Quantities (RQ's) exist for the following ingredients: Tetrachloroethylene (100 lbs)

Spills or releases resulting in the loss of any ingredient at or above its RQ require immediate notification to the National Response Center (800-424-8802) and to your Local Emergency Planning Committee.

Superfund Amendments Reauthorization Act (SARA) Title III:
Section 302 Extremely Hazardous Substances (EHS): None

Section 311/312 Hazard Categories:	Fire Hazard	No
	Reactive Hazard	No
	Release of Pressure	Yes
	Acute Health Hazard	Yes
	Chronic Health Hazard	Yes

Page 5 of 7

Product Name: Quick Clean™ (aerosol)
Product Number (s): 03180

Section 313 Toxic Chemicals: This product contains the following substances subject to the reporting requirements of Section 313 of Title III of the Superfund Amendments and Reauthorization Act of 1986 and 40 CFR Part 372:
tetrachloroethylene (98%)

Clean Air Act:
Section 112 Hazardous Air Pollutants (HAPs): tetrachloroethylene

Occupational Safety and Health Administration:
This product is regulated by the Hazard Communications Standard.

U.S. State Regulations:

California Safe Drinking Water and Toxic Enforcement Act (Prop 65):
This product may contain the following chemicals known to the state of California to cause cancer, birth defects or other reproductive harm: tetrachloroethylene

Consumer Products VOC Regulations: This product is not compliant to be sold for use in California, Connecticut, Delaware, The District of Columbia, Illinois, Indiana, Maine, Maryland, Massachusetts, Michigan, New Jersey, New York, and Rhode Island. In other states with Consumer Products VOC regulations, this product is compliant as a General Purpose Degreaser.

State Right to Know:

New Jersey:	127-18-4, 124-38-9
Pennsylvania:	127-18-4, 124-38-9
Massachusetts:	127-18-4, 124-38-9
Rhode Island .	127-18-4, 124-38-9

Canadian Regulations:

Controlled Products Regulations:
This product has been classified in accordance with the hazard criteria of the Controlled Products Regulations and the MSDS contains all the information required by the Controlled Products Regulations.

WHMIS Hazard Class: A, D1B, D2A, D2B

Canadian DSL Inventory: All ingredients are either listed on the DSL Inventory or are exempt.

European Union Regulations:

RoHS Compliance: This product is compliant with Directive 2002/95/EC of the European Parliament and of the Council of 27 January 2003. This product does not contain any of the restricted substances as listed in Article 4(1) of the RoHS Directive.

Additional Regulatory Information: None

Page 6 of 7

Product Name: Quick Clean™ (aerosol)
Product Number (s): 03180

Section 16: Other Information

HMIS® (II)	
Health:	2
Flammability:	0
Reactivity:	0
PPE:	B

NFPA

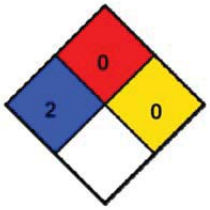

Ratings range from 0 (no hazard) to 4 (severe hazard)

Prepared By: Michelle Rudnick
CRC #: 491G
Revision Date: 07/24/2012

Changes since last revision: Section 14: Transport Information

The information contained in this document applies to this specific material as supplied. It may not be valid for this material if it is used in combination with any other materials. This information is accurate to the best of CRC Industries' knowledge or obtained from sources believed by CRC to be accurate. Before using any product, read all warnings and directions on the label. For further clarification of any information contained on this MSDS consult your supervisor, a health & safety professional, or CRC Industries.

ACGIH: American Conference of Governmental Industrial Hygienists
CAS: Chemical Abstract Service
CFR: Code of Federal Regulations
DOT: Department of Transportation
DSL: Domestic Substance List
g/L: grams per Liter
HMIS: Hazardous Materials Identification System
IARC: International Agency for Research on Cancer
IATA: International Air Transport Association
ICAO: International Civil Aviation Organization
IMDG: International Maritime Dangerous Goods
IMO: International Maritime Organization
lbs./gal: pounds per gallon
LC: Lethal Concentration
LD: Lethal Dose

NA: Not Applicable
ND: Not Determined
NIOSH: National Institute of Occupational Safety & Health
NFPA: National Fire Protection Association
NTP: National Toxicology Program
OSHA: Occupational Safety and Health Administration
PMCC: Pensky-Martens Closed Cup
PPE: Personal Protection Equipment
ppm: Parts per Million
RoHS: Restriction of Hazardous Substances
STEL: Short Term Exposure Limit
TCC: Tag Closed Cup
TWA: Time Weighted Average
WHMIS: Workplace Hazardous Materials Information System

Page 7 of 7

11.5.8 CAIG LABORATORIES DEOXIT D5 CONTACT CLEANER

Since 1956
CAIG LABORATORIES, INC.

DATA SHEET

Our products make your products perform!

DeoxIT® D5 Spray, D-Series

Contact Cleaner & Rejuvenator

Part No.: D5S-6

Container Size: 142 g, adjustable valve (L-M-H)

Product Description:

Unique contact cleaner, rejuvenator, conductivity enhancer and lubricant; dissolves oxidation and corrosion on metal surfaces, fills in microscopic gaps and reseals surface for better contact to enhance flow of electricity. Improves connector performance/reliability. Temperature range: -34 to +200°C.

Features/Benefits:

Spray, adjustable valve (L-M-H) - Flushing Action, and Safe on Plastics.
DeoxIT® D100L concentrate has approximately 20% chemical cleaning action.
Excellent cleaning/deoxidizing, good protection, no ozone depletion.
Improves conductivity and reduces intermittent connections.
Reduces arcing, RFI, wear and abrasion.
Cleaner Audio - Clearer Video - Reliable Data.

Formulation:

5%	DeoxIT® D100L
75%	odorless mineral spirits (64742-88-7)
20%	DIFLUOROETHANE (75-37-6)

VOC COMPLIANT RoHS COMPLIANT

DeoxIT® - Product Selection Guide

	DeoxIT®	DeoxIT® GOLD	DeoxIT® GOLD Gx1	DeoxIT® GOLD Gx2	DeoxIT® SHIELD	DeoxIT® FaderLube
New Surfaces		✔	✔	✔	✔	✔
* In Service / Used	✔					✔
Gold surfaces		✔	✔	✔		
Oxidation / corrosion visible	✔					
Conductive plastics						✔
** Outdoor / Severe environments	✔					✔
Deoxidizing / cleaning properties	20%	0.1%	0.1%	0.0%	0.0%	0.0%
Metal / Plastic surfaces	Yes	Yes	Yes	Yes	Yes	
Plastics compatibility	Excellent	Excellent	Excellent	Excellent	Excellent	Excellent
Temperature range (°C)	-34/200	-45/240	-45/310	-45/500	-34/210	-26/150
Stationary & moving surfaces	Yes	Yes	Yes	Yes	Yes	Yes
Seals & protects base metals	Good	Excellent	Excellent	Excellent	Good	No

✔ All products are Nonflammable and RoHs Compliant
* In Service: Clean with DeoxIT®. For added protection, follow with DeoxIT® GOLD (indoors), DeoxIT® SHIELD (outdoors) or DeoxIT® Grease (additional barrier).
** Severe environments: Pre-clean with DeoxIT®. Follow with DeoxIT® SHIELD or DeoxIT® Grease.

DeoxIT® - Spray Selection Guide

Product Series	FP	QD	NF	PC	VOC
Standard - 5% solution D5S-6, D5MS-15, G5S-6, G5MS-15, S5S-6, S5MS-15, F5S-6, F5MS-15	✔			✔	75
N Series - 5% solution DN5S-6N, DN5MS-15, GN5S-6N, GN5MS-15, SN5S-6, SN5MS-15		✔	✔	✔	20
X Series - 5% solution GX5S-6N		✔	✔	✔	20
100 Series - 100% solution D100S-2, G100S-2, F100S-2			✔	✔	0

FP = Flushing properties QD = Quick dry / non drip NF = Nonflammable
PC = Plastics compatibility VOC = VOC (%)

Page 1

Other Applicators:

D5MS-15	5%	mini-spray	14 g	flammable
DN5S-6N	5%	spray	163 g	nonflammable
DN5MS-15	5%	mini-spray	14 g	nonflammable
D100S-2	100%	spray	57g	nonflammable
D100P	100%	pen	6 mL	nonflammable
D50W	100%	wipes	50 count	nonflammable
D100L-2DB	100%	brush	7.4 mL	nonflammable
D100L-25C	100%	needle dispenser	25 mL	nonflammable
D100L (bulk)	100%	bottle/drum	assort.	nonflammable
D5L (bulk)	5%	bottle/drum	assort.	flammable

DeoxIT® Essential Reference:

DeoxIT® D-Series - *Brings old systems back to life!*
DeoxIT® Gold G-Series - *Maintains new system performance!*
DeoxIT® Shield S-Series - *Maintains new system performance for severe environments!*

Shipping and Additional Information:

Hazardous: ORMD
VOC (%): 75%

Other Information:

RoHS Compliant:	YES
D5S-6 MSDS Link:	http://store.caig.com/
DeoxIT® Product Sheet:	http://store.caig.com/
MentorCard Link:	http://store.caig.com/
WHY DeoxIT® is Different:	http://store.caig.com/

MANUFACTURER DISCLAIMER:

To the best of our knowledge, the information contained herein is accurate. However, neither CAIG Laboratories, Inc., or any of its subsidiaries assumes any liability whatsoever for the accuracy or completeness of the information contained herein. All materials may present unknown hazards and should be used with caution. In particular, improper use of our products and their inappropriate combination with other products and substances may produce harmful results which cannot be anticipated. Final determination of the suitability of any material is the sole responsibility of the user. Although certain hazards are described herein, we cannot guarantee that these are the only hazards that may exist. All service performed on internal parts and equipment should be provided by qualified technicians.

Contact Information:

Since 1956 CAIG LABORATORIES, INC.

North America
CAIG Laboratories, Inc.
12200 Thatcher Court
Poway, CA 92064 USA
Tel: (858) 486-8388
Fax: (858) 486-8398

Website
www.caig.com
www.deoxit.com

General email
info@caig.com

Technical email
tech@caig.com

Page 2

CAIG LABORATORIES, INC.

SAFETY DATA SHEET

Page 1 of 6
MSDS-E-D5S-A

Prepared to OSHA, ACC, ANSI, NOHSC, WHMIS, 2001/58/EC & 1272/2008/EC Standards | MSDS Revision: 3.0 | MSDS Revision Date: 08/22/2012

1. PRODUCT IDENTIFICATION

1.1	Product Name:	**DeoxIT® D-Series, 5% Spray, (P/N D5S-6), 142 g**
1.2	Chemical Name:	**See ingredients listed in section 3**
1.3	Synonyms:	**DeoxIT®, D5S-6, 5% Spray**
1.4	Trade Names:	**DeoxIT®, D5S-6, 5% Spray**
1.5	Product Use:	**Clean, deoxidize & improve electrical contacts & connectors**
1.6	Manufacturer's Name:	**CAIG Laboratories, Inc.**
1.7	Manufacturer's Address:	**12200 Thatcher Court, Poway, CA 92064-6876 USA**
1.8	Emergency Phone:	**CHEMTREC: +1 (703) 527-3887 / +1 (800) 424-3887**
1.9	Business Phone:	**+1 (800)-224-4123**
1.10	Other Product Names:	**DeoxIT®, D5MS-15, 5% Spray, 14 g**

2. HAZARD IDENTIFICATION

2.1 Hazard Identification:

This product is classified as a HAZARDOUS SUBSTANCE but not as DANGEROUS GOODS according to the classification criteria of NOHSC: 1008(2004) and ADG Code (Australia).
WARNING! Flammable aerosol. Colorless, volatile liquid with ethereal and faint sweetish odor. Overexposure may cause dizziness and loss of concentration. At higher levels, CNS depression and cardiac arrhythmia may result from exposure. Vapors displace air and can cause asphyxiation in confined spaces.
Hazard Statements (H): H223 – Flammable aerosol.
Precautionary Statements (P): P210 – Keep away from heat/sparks/open flames/hot surfaces. P211 – Do not spray on an open flame or other ignition source. P251 – Pressurized container. Do not pierce or burn, even after use. P280 – Wear protective gloves and eyewear. P302 + P352 – IF ON SKIN – Wash with plenty of soap and water. P312 – Call a Poison Control Center or doctor/physician if you feel unwell. P333 + P313 – If skin irritation or rash occurs, get medical advise/attention. P321 – Refer to section 4 of this Safety Data Sheet (First Aid). P305+P351+P338 – IF IN EYES - Rinse continuously with water for several minutes. Remove contact lenses if present and easy to do – continue rinsing. P501 – Dispose of contents/container through licensed treatment, storage or disposal facility.

2.2 Routes of Entry:	Inhalation:	YES	Absorption:	YES	Ingestion:	YES

2.3 Effects of Exposure:

EYES: Mild to moderate irritation.
SKIN: Irritant and potential skin sensitizer. Prolonged or repeated contact may cause contact dermatitis (localized redness or rash).
INGESTION: Gastrointestinal irritation and central nervous system depression.
INHALATION: Central nervous system depressant. Irritating to the upper respiratory tract.

2.4 Symptoms of Overexposure:

EYES: Mild irritation, redness, and watering.
SKIN: Contact dermatitis, characterized by localized red or puffy dry skin and itching.
INGESTION: Nausea, vomiting, and diarrhea.
INHALATION: Mouth, nose, and throat irritation, dizziness, nausea, light-headedness, drunkenness, and loss of coordination.

2.5 Acute Health Effects:

INGESTION: Gastrointestinal irritation and central nervous system depression.
EYES: Mild to moderate irritation.
SKIN: Irritant and potential skin sensitizer. Prolonged or repeated contact may cause contact dermatitis (e.g., localized redness and/or rash).
INGESTION: Gastrointestinal irritation and central nervous system depression.
INHALATION: Central nervous system depressant. Irritating to the upper respiratory tract.

2.6 Chronic Health Effects:

EYES: Mild to moderate irritation.
SKIN: Irritant and potential skin sensitizer. Prolonged or repeated contact may cause contact dermatitis (e.g., localized redness and/or rash).
INGESTION: Gastrointestinal irritation and central nervous system depression.
INHALATION: Central nervous system depressant. Irritating to the upper respiratory tract.

2.7 Target Organs:

Eyes, skin and respiratory system.

NA = Not Available; ND = Not Determined; NE = Not Established; C = Ceiling Limit; See Section 16 for Additional Definitions of Terms Used
NOTE: all WHMIS required information is included. It is located in appropriate sections based on the ANSI Z400.1-2010 format.

CAIG LABORATORIES, INC.

SAFETY DATA SHEET

Page 2 of 6
MSDS-E-D5S-A

Prepared to OSHA, ACC, ANSI, NOHSC, WHMIS, 2001/58/EC & 1272/2008/EC Standards | MSDS Revision: 3.0 | MSDS Revision Date: 08/22/2012

3. COMPOSITION & INGREDIENT INFORMATION

CHEMICAL NAME(S)	CAS No.	RTECS No.	EINECS No.	%	EXPOSURE LIMITS IN AIR (mg/m³) ACGIH ppm TLV	ACGIH ppm STEL	NOHSC ppm ES-TWA	NOHSC ppm ES-STEL	NOHSC ppm ES-PEAK	OSHA ppm PEL	OSHA ppm STEL	OSHA ppm IDLH	OTHER
PETROLEUM NAPHTHA	64742-88-7	XS5250000	265-191-7	40-70	100	NE	100	NE	NE	NA	NE	NE	
DIFLUOROETHANE (R-152a)	75-37-6	KI4100000	200-866-1	10-30	1000	NA	1000	NA	NA	NE	NA	NA	SKIN
DeoxIT® D-Series, D100L	TRADE SECRET			3-7	NA	NA	NA	NA	NA	15	NA	NA	

4. FIRST AID MEASURES

4.1 First Aid:

EYES: Flush eyes thoroughly with copious amounts of water for at least 15 minutes, holding eyelid(s) open to ensure complete flushing. If irritation persists, seek immediate medical attention.

SKIN: Remove contaminated clothing and wash affected areas with soap and water. If irritation persists, seek prompt medical attention. Do not wear contaminated clothing until after it has been properly cleaned.

INGESTION: Drink plenty of water. If irritation persists, contact a physician.

INHALATION: Remove victim to fresh air at once. If breathing is difficult, administer supplemental oxygen and seek immediate medical attention. If breathing stops, perform artificial respiration.

4.2 Medical Conditions Aggravated by Exposure:
None reported by the manufacturer.

HEALTH	1
FLAMMABILITY	2
PHYSICAL HAZARDS	0
PROTECTIVE EQUIPMENT	B
EYES	SKIN

5. FIREFIGHTING MEASURES

5.1 Flashpoint & Method:
48.8 °C - 54.4 °C (120 °F – 130 °F).

5.2 Autoignition Temperature:
NA

5.3 Flammability Limits: Lower Explosive Limit (LEL): NA Upper Explosive Limit (UEL): NA

5.4 Fire & Explosion Hazards:
Level 2 aerosol. Carbon dioxide, carbon monoxide, hydrocarbons.

5.5 Extinguishing Methods:
CO_2, Alcohol foam, Dry Chemical, Water Fog

5.6 Firefighting Procedures:
Wear NIOSH/MSHA approved self-contained breathing apparatus and protective clothing. Use a water spray to cool containers involved in fire. Do not use direct water stream. Container storage areas exposed to direct flame contact should be cooled with large quantities of water as needed to prevent weakening of container structure. Keep containers cool until well after the fire is out to prevent rupture. Prevent runoff from fire control or dilution from entering sewers, drains, drinking water supply, or any natural waterway.

6. ACCIDENTAL RELEASE MEASURES

6.1 Spills:
Secure spill area and deny entry to all unprotected individuals. Individuals involved in the cleanup should wear appropriate personal protective equipment. Area may become slippery. Absorb product onto porous material, such as sand, clay, diatomaceous earth or commercial absorbent material. Place into leak-proof, U.S. DOT-approved containers. If necessary, cover all drains and dike well ahead of the spill to prevent runoff into sewers, drains, and all waterways. Contact appropriate local or provincial authorities for assistance and/or reporting requirements.

CAIG LABORATORIES, INC.

SAFETY DATA SHEET

Prepared to OSHA, ACC, ANSI, NOHSC, WHMIS, 2001/58/EC & 1272/2008/EC Standards | MSDS Revision: 3.0 | MSDS Revision Date: 08/22/2012

7. HANDLING & STORAGE INFORMATION

7.1	Work & Hygiene Practices: **Wash hands thoroughly after using this product and before eating, drinking, or smoking. Remove soiled clothing to prevent prolonged skin contact.**
7.2	Storage & Handling: **Store at temperatures between 59 °F and 95 °F (15 °C and 35 °C) in a dry, well-ventilated location. Keep away from heat, sparks, open flame, and other sources of ignition. Normal shelf-life: 2-3 years.**
7.3	Special Precautions: **Empty containers can contain flammable vapors. Do not cut, drill, grind, weld or perform similar operations on or near containers.**

8. EXPOSURE CONTROLS & PERSONAL PROTECTION

8.1	Ventilation & Engineering Controls: **Use with adequate ventilation (e.g., open doors and windows, local exhaust ventilation). Ensure appropriate decontamination equipment is available (e.g., sink, safety shower, eye-wash station).**
8.2	Respiratory Protection: **None required, when used with adequate ventilation.**
8.3	Eye Protection: **Wear safety glasses with side shields (ANSI Z87) under normal use conditions.**
8.4	Hand Protection: **None required under normal conditions of use. However, may cause skin irritation in some sensitive individuals. In such cases, wear rubber or impervious plastic gloves.**
8.5	Body Protection: **Use as necessary to prevent skin contact.**

9. PHYSICAL & CHEMICAL PROPERTIES

9.1	Density:	**0.75**
9.2	Boiling Point:	**171.1 °C – 204 °C @ 760 mmHg**
9.3	Melting Point:	**NA**
9.4	Evaporation Rate:	**0.11 (n-Butyl Acetate = 1.0)**
9.5	Vapor Pressure:	**35 psig @ 20 °C, 50 psig @ 50 °C**
9.6	Molecular Weight:	**NA**
9.7	Appearance & Color:	**Light red, aerosol**
9.8	Odor Threshold:	**Ethereal/hydrocarbon odor**
9.9	Solubility:	**Not soluble in water**
9.10	pH	**ND**
9.11	Viscosity:	**10.0 cps**
9.12	VOC (grams/liters)	**588 g/l**
9.13	Other information:	**Vapor Density = 4.9 (air = 1.0)**

10. STABILITY & REACTIVITY

10.1	Stability: **Stable under normal conditions of use (see section 7).**
10.2	Hazardous Decomposition Products: **Change in color signifies exposure to ultraviolet light or exceeding shelf life. Will not degrade to unstable products. Discard solution.**
10.3	Hazardous Polymerization: **Will not occur.**
10.4	Conditions to Avoid: **Use or storage near open flames, sparks, high heat (>100 °F) or other heat sources, and proximity to incompatible substances and heavily trafficked areas.**
10.5	Incompatible Substances: **Strong oxidizers.**

CAIG LABORATORIES, INC.

SAFETY DATA SHEET

Page 4 of 6
MSDS-E-D5S-A

Prepared to OSHA, ACC, ANSI, NOHSC, WHMIS, 2001/58/EC & 1272/2008/EC Standards | MSDS Revision: 3.0 | MSDS Revision Date: 08/22/2012

11. TOXICOLOGICAL INFORMATION

11.1	Toxicity Data:	**This product has not been tested on animals to obtain toxicological data. There are toxicology data for the components of this product, which are found in the scientific literature. These data have not been presented in this document.**
11.2	Acute Toxicity:	**See section 3.5**
11.3	Chronic Toxicity:	**See section 3.6**
11.4	Suspected Carcinogen:	**NE**
11.5	**This product is not reported to produce reproductive toxicity in humans.**	
	Mutagenicity:	**This product is not reported to produce mutagenic effects in humans.**
	Embryotoxicity:	**This product is not reported to produce embryotoxic effects in humans.**
	Teratogenicity:	**This product is not reported to produce teratogenic effects in humans.**
	Reproductive Toxicity:	**This product is not reported to produce reproductive effects in humans.**
11.6	Irritancy of Product:	**See Section 2.3**
11.7	Biological Exposure Indices:	**NE**
11.8	Physician Recommendations:	**Treat symptomatically.**

12. ECOLOGICAL INFORMATION

12.1	Environmental Stability:	**This product will slowly volatile from soil. Components of this product will slowly decompose into organic compounds.**
12.2	Effects on Plants & Animals:	**There is no specific data available for this product.**
12.3	Effects on Aquatic Life:	**Releases of large volumes of this product are expected to be harmful or fatal to overexposed aquatic life.**
12.4	Environmental Impact (Percent by Weight):	**CFC: 0.0%** **HCFC: 0.0%** **HFC: 20.0%** **Chlorinated Solvent: 0.0%** **VOC: 75.0%** **ODP: 0.0%**

13. DISPOSAL CONSIDERATIONS

13.1	Waste Disposal:	**Dispose of in accordance with federal, state or local regulations.**
13.2	Special Considerations:	**EPA Waste Code: D001 (characteristic – ignitability)**

14. TRANSPORTATION INFORMATION

The basic description (ID Number, proper shipping name, hazard class & division, packing group) is shown for each mode of transportation. Additional descriptive information may be required by 49 CFR, IATA/ICAO, IMDG and the CTDGR.

14.1	49 CFR (GND):	**CONSUMER COMMODITY, ORM-D (until 12/31/2013)** **UN1950, AEROSOLS, 2.1, LTD QTY (IP VOL ≤ 1.0 L)**
14.2	IATA (AIR):	**CONSUMER COMMODITY, 9, ID8000 (≤ 500 ml)** **UN1950, AEROSOLS, 2.1 (> 500 ml)**
14.3	IMDG (OCN):	**UN1950, AEROSOLS, 2.1, LTD QTY (IP VOL ≤ 1.0 L)**
14.4	TDGR (Canadian GND):	**MARK PACKAGE "LIMITED QUANTITY" or "QUANTITÉ LIMITÉE" or "LTD QTY" or "QUANT LTÉE" (≤ 1.0 L)**
14.5	ADR/RID (EU):	**UN1950, AEROSOLS, 2.1, LTD QTY (IP VOL ≤ 1.0 L)**
14.6	SCT (Mexico):	**UN1950, AEROSOLES, 2.1, CANTIDAD LIMITADA (IP VOL ≤ 1.0 L)**
14.7	ADGR (Australia):	**UN1950, AEROSOLS, 2.1, LTD QTY (IP VOL ≤ 1.0 L)**

CAIG LABORATORIES, INC.

SAFETY DATA SHEET

Page 5 of 6
MSDS-E-D5S-A

Prepared to OSHA, ACC, ANSI, NOHSC, WHMIS, 2001/58/EC & 1272/2008/EC Standards | MSDS Revision: 3.0 | MSDS Revision Date: 08/22/2012

15. REGULATORY INFORMATION

15.1 SARA Reporting Requirements:
NA

15.2 SARA Threshold Planning Quantity:
NA

15.3 TSCA Inventory Status:
All chemical substances of this product are listed on the TSCA inventory or are otherwise exempt from inventory status.

15.4 CERCLA Reportable Quantity (RQ):
NA

15.5 Other Federal Requirements:
NA

15.6 Other Canadian Regulations
This product has been classified according to the hazard criteria of the Controlled Products Regulations (CPR) and the MSDS contains all of the information required by the CPR. The components of this product are listed on the DSL/NDSL. None of the components of this product are listed on the Priorities Substances List.

15.7 State Regulatory Information:
The primary component of this product is not listed on the following state lists: California OSHA; California Proposition 65; Massachusetts Right to Know List of Chemicals; New Jersey Right to Know List 8:59 Appendix A; Pennsylvania Hazardous Substances List 34 323 Appendix A; Wisconsin Hazardous Substances List NR 605.09; Minnesota Hazardous Substances List; and Florida Toxic Substances List.

15.8 67/548/EEC (European Union) Requirements:
The primary component of this product is listed in Annex I of EU Directive 67/548/EEC:
Petroleum Naphtha: Flammable, Harmful (F, Xn). Risk Phrases (R): 10-65 – Flammable. Harmful: may cause lung damage if swallowed. Safety Phrases (S): 2-23-24-62 – Keep away from children. Do not breathe gas, fumes, vapor or spray. Avoid contact with skin. If swallowed, do not induce vomiting: seek medical advice immediately and show this MSDS or the container label. WARNING! Flammable aerosol. Colorless, volatile liquid with ethereal and faint sweetish odor. Overexposure may cause dizziness and loss of concentration. At higher levels, CNS depression and cardiac arrhythmia may result from exposure. Vapors displace air and can cause asphyxiation in confined spaces.
Hazard Statements (H): H223 – Flammable aerosol.
Precautionary Statements (P): P210 – Keep away from heat/sparks/open flames/hot surfaces. P211 – Do not spray on an open flame or other ignition source. P251 – Pressurized container. Do not pierce or burn, even after use. P280 – Wear protective gloves and eyewear. P302 + P352 – IF ON SKIN – Wash with plenty of soap and water. P312 – Call a Poison Control Center or doctor/physician if you feel unwell. P333 + P313 – If skin irritation or rash occurs, get medical advise/attention. P321 – Refer to section 4 of this Safety Data Sheet (First Aid). P305+P351+P338 – IF IN EYES - Rinse continuously with water for several minutes. Remove contact lenses if present and easy to do – continue rinsing. P501 – Dispose of contents/container through licensed treatment, storage or disposal facility.

16. OTHER INFORMATION

16.1 Other Information:
NA

16.2 Terms & Definitions:
See last page of this MSDS.

16.3 Disclaimer:
This Material Safety Data Sheet is offered pursuant to OSHA's Hazard Communication Standard, 29 CFR §1910.1200. Other government regulations must be reviewed for applicability to this product. To the best of ShipMate's & CAIG Laboratories, Inc.'s knowledge, the information contained herein is reliable and accurate as of this date; however, accuracy, suitability or completeness are not guaranteed and no warranties of any type, either expressed or implied, are provided. The information contained herein relates only to the specific product(s). If this product(s) is combined with other materials, all component properties must be considered. Data may be changed from time to time. Be sure to consult the latest edition.

16.4 Prepared for:
CAIG Laboratories, Inc.
12200 Thatcher Court
Poway, CA 92064-6876
Tel: +1 (800) CAIG-123 (244-4123)
Fax: +1 (858) 486-8398 fax
http://www.caig.com/

CAIG LABORATORIES, INC.

16.5 Prepared by:
ShipMate, Inc.
P.O. Box 787
780 Buckaroo Trail Suite D
Sisters, OR 97759
Tel: +1 (310) 370-3600
Fax: +1 (310) 370-5700
http://www.shipmate.com

ShipMate
Dangerous Goods Training & Consulting

CAIG LABORATORIES, INC.

SAFETY DATA SHEET

Page 6 of 6
MSDS-E-D5S-A

Prepared to OSHA, ACC, ANSI, NOHSC, WHMIS, 2001/58/EC & 1272/2008/EC Standards | MSDS Revision: 3.0 | MSDS Revision Date: 08/22/2012

DEFINITION OF TERMS

A large number of abbreviations and acronyms appear on a MSDS. Some of these that are commonly used include the following:

GENERAL INFORMATION:

CAS No.	Chemical Abstract Service Number

EXPOSURE LIMITS IN AIR:

ACGIH	American Conference on Governmental Industrial Hygienists
TLV	Threshold Limit Value
OSHA	U.S. Occupational Safety and Health Administration
PEL	Permissible Exposure Limit
IDLH	Immediately Dangerous to Life and Health

FIRST AID MEASURES:

CPR	Cardiopulmonary resuscitation - method in which a person whose heart has stopped receives manual chest compressions and breathing to circulate blood and provide oxygen to the body.

HAZARDOUS MATERIALS IDENTIFICATION SYSTEM: HMIS

HEALTH, FLAMMABILITY & REACTIVITY RATINGS:

0	Minimal Hazard
1	Slight Hazard
2	Moderate Hazard
3	Severe Hazard
4	Extreme Hazard

HEALTH
FLAMMABILITY
PHYSICAL HAZARDS
PERSONAL PROTECTION

PERSONAL PROTECTION RATINGS:

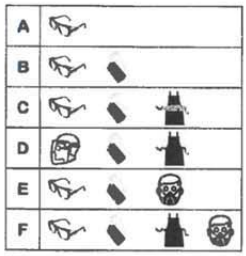

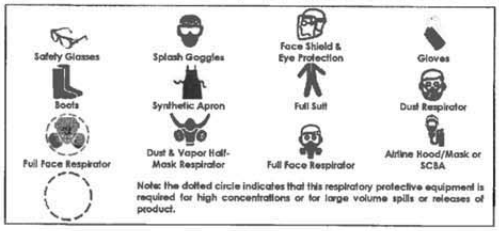

OTHER STANDARD ABBREVIATIONS:

NA	Not Available
NR	No Results
NE	Not Established
ND	Not Determined
ML	Maximum Limit
SCBA	Self-Contained Breathing Apparatus

NATIONAL FIRE PROTECTION ASSOCIATION: NFPA

FLAMMABILITY LIMITS IN AIR:	
Autoignition Temperature	Minimum temperature required to initiate combustion in air with no other source of ignition
LEL	Lower Explosive Limit - lowest percent of vapor in air, by volume, that will explode or ignite in the presence of an ignition source
UEL	Upper Explosive Limit - highest percent of vapor in air, by volume, that will explode or ignite in the presence of an ignition source

HAZARD RATINGS:

0	Minimal Hazard
1	Slight Hazard
2	Moderate Hazard
3	Severe Hazard
4	Extreme Hazard
ACID	Acidic
ALK	Alkaline
COR	Corrosive
W	Use No Water
OX	Oxidizer
TREFOIL	Radioactive

TOXICOLOGICAL INFORMATION:

LD_{50}	Lethal Dose (solids & liquids) which kills 50% of the exposed animals
LC_{50}	Lethal concentration (gases) which kills 50% of the exposed animal
ppm	Concentration expressed in parts of material per million parts
TD_{Lo}	Lowest dose to cause a symptom
TCLo	Lowest concentration to cause a symptom
TD_{Lo}, LD_{Lo}, & LD_{50} or TC, TC_{Lo}, LC_{50}, & LC_{Lo}	Lowest dose (or concentration) to cause lethal or toxic effects
IARC	International Agency for Research on Cancer
NTP	National Toxicology Program
RTECS	Registry of Toxic Effects of Chemical Substances
BCF	Bioconcentration Factor
TL_m	Median threshold limit
log K_{OW} or log K_{OC}	Coefficient of Oil/Water Distribution

REGULATORY INFORMATION:

WHMIS	Canadian Workplace Hazardous Material Information System
DOT	U.S. Department of Transportation
TC	Transport Canada
EPA	U.S. Environmental Protection Agency
DSL	Canadian Domestic Substance List
NDSL	Canadian Non-Domestic Substance List
PSL	Canadian Priority Substances List
TSCA	U.S. Toxic Substance Control Act
EU	European Union (European Union Directive 67/548/EEC)
WGK	Wassergefährdungsklassen (German Water Hazard Class)

WORKPLACE HAZARDOUS MATERIALS IDENTIFICATION (WHMIS) SYSTEM:

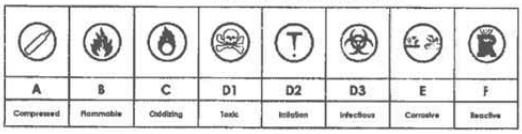

A	B	C	D1	D2	D3	E	F
Compressed	Flammable	Oxidizing	Toxic	Irritation	Infectious	Corrosive	Reactive

EC (67/548/EEC) INFORMATION:

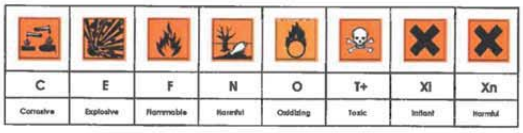

C	E	F	N	O	T+	Xi	Xn
Corrosive	Explosive	Flammable	Harmful	Oxidizing	Toxic	Irritant	Harmful

CLP/GHS (1272/2008/EC) PICTOGRAMS:

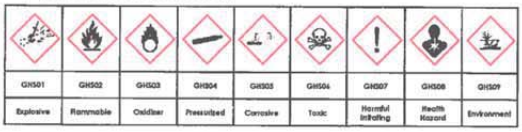

GHS01	GHS02	GHS03	GHS04	GHS05	GHS06	GHS07	GHS08	GHS09
Explosive	Flammable	Oxidizer	Pressurized	Corrosive	Toxic	Harmful Irritating	Health Hazard	Environment

11.6 COMPONENT MANUFACTURER LIST

MECHANICAL COMPONENTS			
Span Drive Machinery			
Section	**Description**	**Model No.**	**Manufacturer**
11.7.1	Motor Brake	Size S10	Eaton
11.7.2	Machinery Brake	MBT/E-ED121/6S	Mondel
	Main Leaf Motor	Contact Manufacturer	Reuland Electric Company

TRAFFIC CONTROL DEVICES			
Navigation Lights			
Section	**Description**	**Model No.**	**Manufacturer**
	Fender Navigation Lights	PL	B&B Roadway
	Span Navigation Lights	BS	B&B Roadway
Warning and Barrier Gates			
Section	**Description**	**Model No.**	**Manufacturer**
	Warning/Barrier Gate Arm	Contact Manufacturer	B&B Roadway
	Warning/Barrier Gate Arm Lights	L7-12 Volt	B&B Roadway
	Warning Gate Bell	G-6	B&B Roadway
	Warning/Barrier Gate Flasher	FL-12	B&B Roadway
	Warning/Barrier Gate Door Switch	E19-00M	Cherry Corp
	Warning Gate Motor and Brake	C6T17NC167C	Leeson
	Warning/Barrier Gate Limit Switch	LS-8	B&B Roadway
	Warning/Barrier Gate 5A Fuse	FMN-5	Cooper Bussman
	Warning/Barrier Gate 2A Fuse	FMN-5	Cooper Bussman
	Barrier Gate Motor and Brake	C6T17NC199A	Leeson
	Barrier Gate Lock Actuator	A12-10B5	Thomson
	Barrier Gate Lock Limit switch	C2JK05	Telemechnique
	Barrier Gate Capacitor	5413GC43	
	Barrier Gate Lock/Un-Lock Relay	5X841	Dayton
	Warning/Barrier Gate Disconnect Switch	OT25F3	ABB
	W3-6 Advanced Warning Sign	W3-6	US Barricades
	Warning Beacon	Beacon 12	US Barricades

ELECTRICAL COMPONENTS (cont)			
Control Desk Components (cont)			
Section	**Description**	**Model No./Description**	**Manufacturer**
	Voltmeter	250-344-RXRX	EIL
	Wattmeter	250-3	EIL
	Wattmeter Transducer	WTB020J	EIL
	Footswitch	632-S	Linemaster
	DPDT Control Relay	8501-KP12P14V20	Square D
	DPDT Control Relay Socket	8501-NR51	Square D
	3PDT Control Relay	8501-KP13P14V20	Square D
	3PDT Control Relay Socket	8501-NR61	Square D
	On-Delay Timer	2A561	Dayton
	On-Delay Timer (1.2-120s)	9050-JCK14V20	Square D
	On-Delay Timer (0.1-10min)	9050-JCK16V20	Square D
	Industrial Control Relay	8501-X000-V02	Square D
	Adder Deck for Control Relay	8501-XB40	Square D
	Contact Block for Control Relay	8501-XC1	Square D
	Pilot Light	9001-KP38	Square D
	Amber Lens	9001-A9	Square D
	Green Lens	9001-G9	Square D
	Red Lens	9001-R9	Square D
	Push-button	9001-KR1U	Square D
	Push-button Contact (NO/NC)	9001-KA1	Square D
	Push-button Contact (NO)	9001-KA2	Square D
	Push-button Contact (NC)	9001-KA3	Square D
	Two Position Key Switch	9001-KS11K1	Square D
	Two Position Key Switch (OFF/ON)	9001-KS11K1(E11)	Square D
	Selector Switch Contact	9003-K2B001UA	Square D
	Selector Switch Handle	9003-KAD1C	Square D
	Circuit Breaker	QOU110	Square D
Contactor Panel Components (cont)			
Section	**Description**	**Model No./Description**	**Manufacturer**
	Contactor	LC1D6511G6	Telemechnique
	NO Aux Contact	LA1-DN-10	Telemechnique
Field Components			
	Lighting Transformer (15KVA)	EE15S3H	Square D
	Manual Transfer Switch	3140-82354	Square D
	Fully Closed Limit Switch	Go switch Series 80	Topworx

ELECTRICAL COMPONENTS (cont)			
Field Components (cont)			
Section	**Description**	**Model No./Description**	**Manufacturer**
	Fully Closed Limit Switch Magnet	81-10118A1 AMC5	Topworx
	Fully Closed limit Switch Bracket	ABS6	Topworx
	Machinery Brake Limit Switch		
	Motor Brake Limit Switch		
	Rotary Cam Limit Switch		
	Secondary Resistors	HC69483534C	Hubbell
	Waste Pump Control Panel	D208-3	Hydromatic
	Lighting Panelboard		
	Light Fixture	VDA15GP	Vaporgard
	Emergency Light Fixture		Emergi-Lite
	Heater		Q-Mark
	Air Conditioner Condenser	American Series	EMI
	Air Conditioner Air Handler	American Series	EMI
	Sump Pump	WS2038D3/3888D3	Gould Pumps
	Photocell		

11.7 MECHANICAL EQUIPMENT MANUALS AND SPECIFICATIONS

11.7.1 MOTOR BRAKE – EATON SIZE S10

1

12/15/88
Supersedes TIP 511
Pages 1, 2, 5 & 6, dated 11/1/77
Pages 3 & 4, dated 10/2/78

MAGNETIC BRAKES

Type "S" — A-c and D-c Solenoid Operated Brakes

TECHNICAL INFORMATION PUBLICATION 511

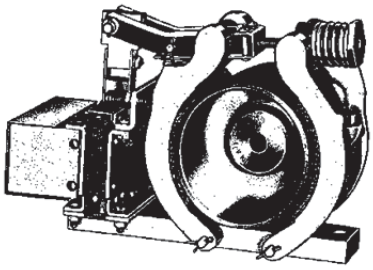

SIZE S-4 BRAKE AND WHEEL

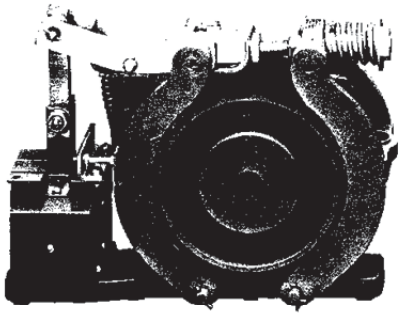

SIZE S-7 BRAKE AND WHEEL

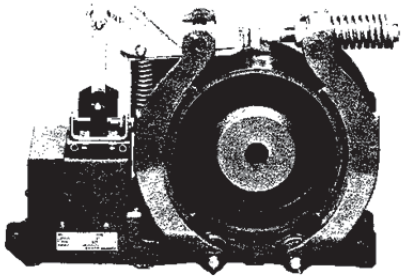

SIZE S-8½ BRAKE AND WHEEL

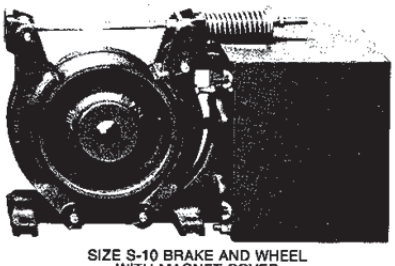

SIZE S-10 BRAKE AND WHEEL WITH MAGNET COVER

DESIGN CHARACTERISTICS

- **Sizes** — Available in 4, 5½, 7, 8½ and 10 inch brake wheel sizes.
- **Operation** — Brake is electrically released and spring applied for "fail-safe" operation.
- **Operating Mechanism** — Solenoid type operating mechanism on sizes through S-8½. S-10 brakes use a clapper type magnet assembly.
- **Brake Linings** — Replaceable, non-asbestos molded linings used on all sizes. Linings attached to shoes by removable flathead groov-pins.
- **Adjustments** — Separate adjustments are provided for Braking Torque and Lining Clearance.
- **Brake Wheels** — Standard 4, 5½ and 7 inch wheels constructed of high strength cast iron – 8½ and 10 inch wheels made of ductile iron. All wheels accurately machined and balanced at factory.
- **Mounting** — Designed for floor mounting only.
- **Electrical Connection** — Terminal cover provided for conduit connection.
- **Enclosures** — Optional:
  NEMA 2-3R – Dripproof, Rainproof (not available on 10″ brake)

APPLICATION

Typical applications include Conveyors, Hoisting Equipment, Machine Tools, Printing Presses, Small Cranes, Overhead Doors, Dumb Waiters, Vacuum Molding Machines and Carnival Rides.

DESCRIPTION

General

Cutler-Hammer Type S brakes are electrically released and spring applied providing "fail-safe" operation. The retarding torque developed is directly proportional to the spring pressure. Shunt wound brakes, either A-c or D-c will release (magnet pick-up and seal) at 85% of full line voltage.

The brake wheel is of relatively large size in relation to the torque developed by the brake. This permits use of a larger brake shoe lining and lower shoe pressures. Low shoe pressure, equally distributed over a large lining area, results in even wear of the friction surfaces and even braking torque. The over-size wheel type construction also permits use of a smaller operating solenoid that requires less current for a given torque rating.

Low stresses on all of the pins and pivot points and reduced maintenance costs through minimum stressing of parts and lining are further advantages obtained by low shoe pressure.

The installation and use of Cutler-Hammer products should be in accordance with the provisions of the U.S. National Electrical Code and/or other local codes or industry standards that are pertinent to the particular end use. Installations or use not in accordance with these codes and standards could be hazardous to personnel and/or equipment.

Printed in U.S.A.
G

EATON
1

2

TECHNICAL INFORMATION PUBLICATION 511

MAGNETIC BRAKES

Type "S" — A-c and D-c Solenoid Operated Brakes

12/15/88

Supersedes TIP 511
Pages 1, 2, 5 & 6, dated 11/1/77
Pages 3 & 4, dated 10/2/78

DESCRIPTION (continued)

All brakes through size S-8½ are solenoid operated, the size S-10 is operated by a clapper-type magnet. Clapper-type magnets have a characteristic *hammer blow* sound on pick up and, to a lesser degree, on drop out. The noise is normal and does not indicate faulty operation.

The size S-8½ and S-10 brakes are designed for A-c service only.

Brake Linings

All brakes are supplied with molded non-asbestos lining material. The material is medium to high friction material that has high heat resistance and maintains a constant friction coefficient over a wide temperature range.

Manual Release Kits

An external manual operating lever kit is available for field installation on sizes S-4 through S-7 A-c and D-c enclosed brakes. With this lever installed the brake can be manually released without removing the enclosure cover and without electric power.

The kit for the open type sizes S-4 through S-7 A-c and D-c brakes, mechanically holds the brake open or released by means of a spring loaded pin mounted on the solenoid frame. The spring pin can be released either manually or electrically by energizing the brake coil.

Adjustments

Adjustments for torque and lining wear are conveniently and quickly made. Braking torque and lining wear adjustments are made at the top of the brake. A set screw and locking nut located on top of the solenoid frame provide adjustment for equalizing clearance between the brake shoes to prevent dragging when the brake is released.

D-c Brakes

Standard D-c brakes are equipped with shunt coils. The magnet coil circuit on D-c brakes consists of two separate windings and a protective switch. In operation, the low resistance "pick-up" winding is used to provide maximum power when the plunger is being pulled in. Near the end

BRAKE RATINGS AND MAGNET COIL DATA

A-C BRAKES

Brake Size	Torque – Lbs. Ft.		60 Cycles				50 Cycles			
			Inrush		Sealed		Inrush		Sealed	
	Continuous	Intermittent	Volt Amps.	Watts	Volt Amps.	Watts	Volt Amps.	Watts	Volt Amps.	Watts
S-4	3	3	595	320	96	19	465	290	65	15
	10	10	595	320	96	19	465	290	65	15
	—	15	1,150	560	118	38	1,110	600	120	40
S-5½	25	25	1,990	680	174	53	1,790	780	160	50
	—	35	2,510	1,000	245	90	2,350	1,010	220	65
S-7	50	50	2,470	840	220	80	1,790	780	160	50
	—	75	2,990	1,000	336	113	2,450	900	300	100
S-8½	85	85	4,404	1,900	264	83	4,301	2,085	287	87
	—	110	5,580	2,850	358	113	5,478	2,925	442	118
S-10	125	125	8,360	750	1,540	220	6,820	820	968	150
	—	160	11,000	1,200	2,420	350	9,900	1,300	1,848	240

D-C BRAKES

Brake Size	Torque – Lbs. Ft.		Volt Amperes			
			Inrush		Sealed	
	Continuous	Intermittent	120 V.	240 V.	120 V.	240 V.
S-4	3	3	570	580	10	11
	10	10	570	580	10	11
	—	15	570	580	10	11
S-5½	25	25	780	860	10	9
	—	35	780	860	10	9
S-7	50	50	780	860	10	9
	—	75	1,100	1,080	8	9

See note on installation and use of this product at bottom of page 1.

Printed in U.S.A.
G

12/15/88
Supersedes TIP 511
Pages 1, 2, 5 & 6, dated 11/1/77
Pages 3 & 4, dated 10/2/78

MAGNETIC BRAKES

Type "S" — A-c and D-c Solenoid Operated Brakes

TECHNICAL INFORMATION PUBLICATION 511

DESCRIPTION (continued)

of the stroke, the plunger actuates the protecting switch which connects a high resistance type second winding in series with the "pick-up" winding. The combined resistance of these two windings serves to limit the current to the solenoid coil preventing excessive heat build-up in the coil. The resultant lower current is sufficient to hold the solenoid plunger in the sealed position.

Coil Duty Classification

Shunt brake coils are rated either for Intermittent or Continuous duty. Intermittent duty indicates that the coil can be placed across the line for a maximum of one hour without excessive heating, but then must remain inoperative for one hour. This is equivalent to 1/2 time duty or one minute on and one minute off. Coils rated for continuous duty can be connected across the line continuously, within their rated voltage, without exceeding safe temperature limits.

Mounting

Type S brakes are designed and recommended for use and mounting only in the floor position. Side or vertical mountings are not recommended because the solenoid loading is altered resulting in accelerated wear and premature coil failure.

Brake Wheels

The rim and wed thickness of Type S brake wheel is designed to be as small as practical to keep the WK^2 of the wheel to a minimum. The WK^2 of Type S brake wheels is as follows:

Wheel Dia. (in)	4	5½	7	8½	10
WK^2 (lb. ft.²)	0.057	0.26	0.77	1.54	3.1

All brake wheels are bored and balanced before shipment. Since a pilot bore is required for the balancing operation, unbored wheels cannot be supplied.

All size wheels have both a minimum and maximum recommended bore dimension.

Wheel Bore Dia. (In)	4	5½	7	8½	10
Minimum Bore (In)	½	¾	1	1⅛	1⅜
Maximum Bore (In)	1⅜	2	2¼	2¾	2⅞

It is important the minimum and maximum recommended dimensions be adhered to. The high braking torque developed may cause a motor shaft of lesser dimensions to fail when the brake is applied. Conversely, a wheel bore in excess of recommended dimension would reduce the strength of the hub to a point where hub failure could result upon application of the brake.

Standard straight bores are manufactured within a tolerance of −0.001 inch. For tapered bores the tolerance is −0.005 inch. The standard taper is 1.250 inches per foot on diameter. The keyway tolerance is +0.005 inch on the width and +0.016 inch on the depth.

Brake Selection

The method most generally used to determine the required braking torque is to calculate the full load motor torque by means of the following formula:

$$T = \frac{5252 \times HP}{R.P.M.}$$

T = Full load motor torque in lbs. ft.
HP = Motor horsepower.
R.P.M. = Speed of shaft on which brake wheel is mounted.

The torque rating of the brake selected should be at least equal to the full load motor torque for the duty considered.

For a stop within a given time limit the brake should be selected on the basis of the total inertia to be retarded. Where the inertia to be retarded can be determined accurately, torque requirements may be determined as follows:

$$T = \frac{WK^2 \times R.P.M.}{308 \times t}$$

T = Torque in lb.-ft.
WK^2 = Inertia of rotating load in lb. ft.²
R.P.M. = Speed of rotating wheel.
t = Time, in seconds, to stop.

In some applications where the brake must stop or hold abnormal loads on the driving equipment, the braking torque must be determined using the extreme operating conditions. In these cases, the braking torque is determined by calculating the maximum load and translating it into lbs. ft. torque at the shaft on which the brake is mounted.

See note on installation and use of this product at bottom of page 1.

Printed in U.S.A.
G

4

12/15/88

Supersedes TIP 511
Pages 1, 2, 5 & 6, dated 11/1/77
Pages 3 & 4, dated 10/2/78

MAGNETIC BRAKES

Type "S" — A-c and D-c Solenoid Operated Brakes OPEN TYPE

TECHNICAL INFORMATION PUBLICATION 511

APPROXIMATE DIMENSIONS AND SHIPPING WEIGHTS

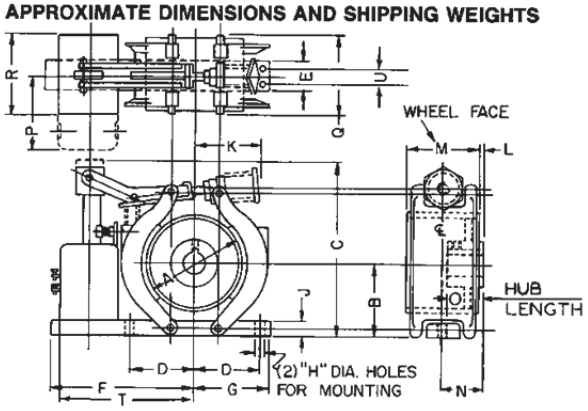

TYPES S-4, S-5½, S-7 AND S-8½

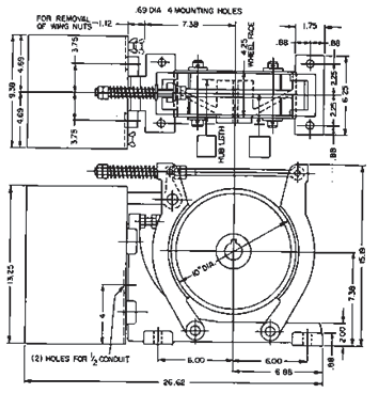

TYPE S-10

WEIGHTS — Brake with Wheel, 200 lbs.
Wheel, 38.5 lbs. — Boxed, Brake and Wheel, 225 lbs.

Brake Size	Torq. Rat'g. Ft. – Lbs.	Dimensions in Inches																	Weight in Lbs.		
		A	B❶	C	D	E	F	G	H	J	K	L	M	N	O	P	Q	R	T	U	Brake With Wheel Net	Brake With Wheel Boxed	Net – Wheel Only
TYPE "S" A-C SHOE BRAKES																							
S-4	3	4	2⅞	7½	2⅝	1¼	7½	3⅛	⅜	⅝	2⅞	¼	2¾	1⅝	1⅝	2⅞	3	3⅛	—	—	16	17	4
S-4	10	4	2⅞	7½	2⅝	1¼	7½	3⅛	⅜	⅝	2⅞	¼	2¾	1⅝	1⅝	2⅞	3	3⅛	—	—	16	17	4
S-4	15	4	2⅞	7½	2⅝	1¼	7½	3⅛	⅜	⅝	2⅞	¼	2¾	1⅝	1⅝	2⅞	3	3⅛	—	—	16	17	4
S-5½	25	5½	4	9½	3½	2	8⅜	4⅛	7/16	1	4⅛	⅜	3¼	2	2	3⅛	3¾	3⅛	—	—	33	36	8
S-5½	35	5½	4	9½	3½	2	8⅜	4⅛	7/16	1	4⅛	⅜	3¼	2	2	3⅛	3¾	3⅛	—	—	33	36	8
S-7	50	7	5	11½	4⅜	2½	9½	5	9/16	1	6	—	4¼	2⅛	3	3⅛	4¾	3⅛	—	—	52	55	19
S-7	75	7	5	11½	4⅜	2½	9½	5	9/16	1	6	—	4¼	2⅛	3	3⅛	4¾	3⅛	—	—	52	55	19
S-8½	85	8½	5⅞	12¾	5½	—	12⅞	6	9/16	1½	7 13/64	—	6½	3¼	2⅞	3¼	6½	6½	11⅞	2½	80	114	25
S-8½	110	8½	5⅞	12¾	5½	—	12⅞	6	9/16	1½	7 13/64	—	6½	3¼	2⅞	3¼	6½	6½	11⅞	2½	80	114	25
TYPE "S" D-C SHOE BRAKES																							
S-4	3	4	3 7/16	8	2⅝	1¼	7 9/16	3¼	⅜	¾	2⅞	¼	2¾	1⅝	1⅝	2⅝	3	4 1/16	—	—	18	20	4
S-4	10	4	3 7/16	8	2⅝	1¼	7 9/16	3¼	⅜	¾	2⅞	¼	2¾	1⅝	1⅝	2⅝	3	4 1/16	—	—	18	20	4
S-4	15	4	3 7/16	8	2⅝	1¼	7 9/16	3¼	⅜	¾	2⅞	¼	2¾	1⅝	1⅝	2⅝	3	4 1/16	—	—	18	20	4
S-5½	25	5½	4	9 7/16	3½	2	8⅜	4⅛	7/16	¾	4⅞	⅜	3¼	2	2	2 13/16	3¾	4 1/16	—	—	35	38	8
S-5½	35	5½	4	9 7/16	3½	2	8⅜	4⅛	7/16	¾	4⅞	⅜	3¼	2	2	2 13/16	3¾	4 1/16	—	—	35	38	8
S-7	50	7	5	11 7/16	4⅜	2½	9 7/16	5	9/16	¾	6	—	4¼	2⅛	3	2 13/16	4⅞	4 1/16	—	—	54	58	19
S-7	75	7	5	11 7/16	4⅜	2½	9 7/16	5	9/16	¾	6	—	4¼	2⅛	3	2 13/16	4⅞	4 1/16	—	—	54	58	19

❶ Open type brake only.

STANDARD BRAKE WHEEL SIZES

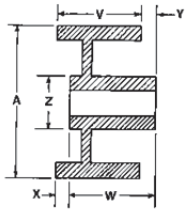

Dimensions in Inches						Bore	
A	V	W❷	X	Y	Z	Maximum	Minimum
4	2¾	1⅝	1⅜	—	2½	1⅜	½
5½	3¼	2	1⅝	⅜	3¼	2	¾
7	4¼	3	1¼	—	4	2¼	1
8½	4¼	2⅞	1½	3/16	4½	2¾	1⅛
10	4¼	3¼	1¼	¼	4⅞	2⅞	1⅜

❷ Hub lengths other than standard are not available.

See note on installation and use of this product at bottom of page 1.

Printed in U.S.A.
G

EATON 4

12/15/88
Supersedes TIP 511
Pages 1, 2, 5 & 6, dated 11/1/77
Pages 3 & 4, dated 10/2/78

MAGNETIC BRAKES

Type "S" — A-c and D-c Solenoid Operated Brakes

TECHNICAL INFORMATION PUBLICATION 511

NEMA 2–3R DRIPTIGHT, WEATHER-RESISTANT ENCLOSURE

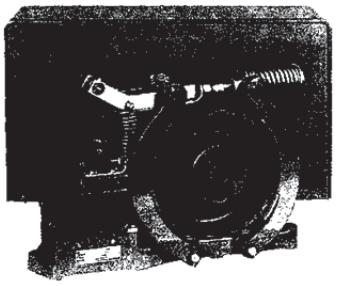

DESCRIPTION

This enclosure is designed for applications where the brake is subjected to the weather, falling moisture or dirt. Since the enclosure must be mounted at installation in the field, the assembly has a minimum number of parts. The side panels are provided with knockouts suitable to shaft size requirements.

A manual release is available as a kit for field installation. It is available for sizes S-4, S-5½ and S7.

APPROXIMATE DIMENSIONS

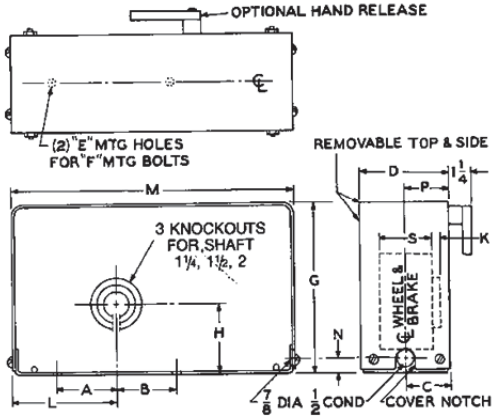

Enclosure for S-4, S-5½ and S-7 Brakes

Brake Size	Dimensions, Inches							
	A	B	C	D	E	F	G	H
S-4	2⅝	2⅝	2 7/16	4⅞	1/32	5/16	8¾	❶
S-5½	3½	3½	2⅝	5¼	13/32	3/8	9 7/8	4⅛
S-7	4⅜	4⅜	3	6	9/16	½	12 9/16	5⅛

❶ A-C – 3", D-C – 3 9/16"

Brake Size	Dimensions, Inches					
	K	L	M	N	P	S
S-4	13/16	4	13	⅞	1⅝	2¾
S-5½	⅜	6	16 11/32	⅞	2	3¼
S-7	0	6¾	18¼	15/16	3	4¼

The S-8½ brake enclosure has a mounting bed designed to accommodate conduit entrance at either end. The brake is mounted through the bed plate – the top is an "inverted-u" shaped cover that includes the end covers and bolts to the bed plate. The side panels are interchangeable for either left or right side shaft opening and also bolt to the bed plate. The side panels are removeable for inspection.

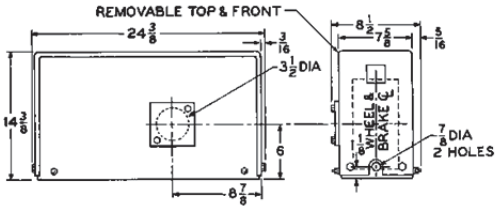

Dimensions are approximate — do not use for construction.

See note on installation and use of this product at bottom of page 1.

Printed in U.S.A.
G

EATON
5

11.7.2 MACHINERY BRAKE – MONDEL MBT/E-ED121/6S

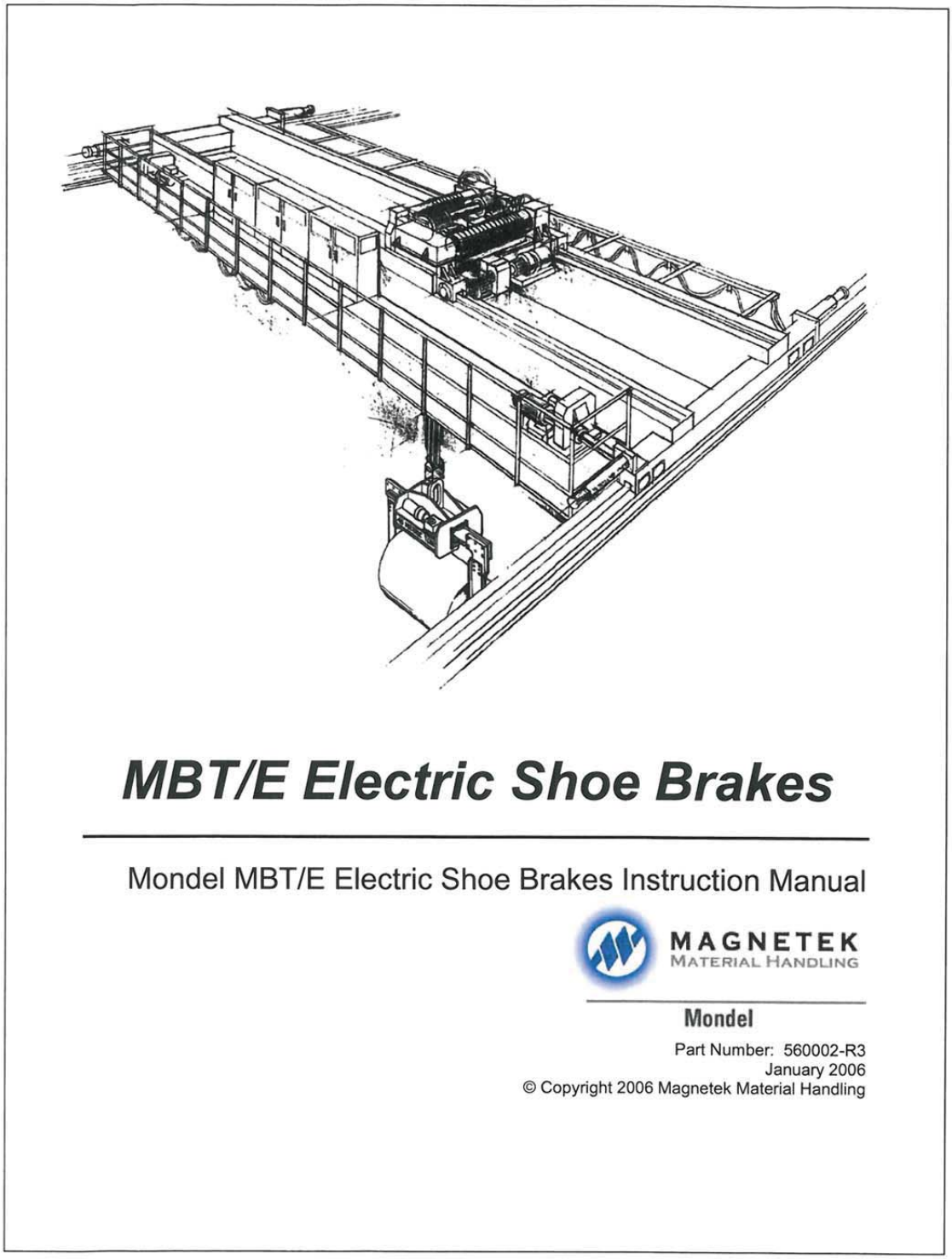

MBT/E Electric Shoe Brakes

Mondel MBT/E Electric Shoe Brakes Instruction Manual

MAGNETEK
MATERIAL HANDLING

Mondel

Part Number: 560002-R3
January 2006
© Copyright 2006 Magnetek Material Handling

MAGNETEK
MATERIAL HANDLING

Mondel

Installation and Maintenance Instructions

MBT/E Electric Shoe Brakes

SUPPLEMENTS FORMING PART OF THIS MANUAL:

DATE OF MANUFACTURE:	
APPLICABLE DIMENSION PRINT:	
EXPLODED VIEW:	
PARTS LIST:	

Table of Contents

Chapter 1.0: MBT/E Electric Shoe Brakes Warnings and Cautions 4
Chapter 2.0: General Description 7
Chapter 3.0: Application 9
Chapter 4.0: Description of Operation 10
Chapter 5.0: Installation 13
Chapter 6.0: Adjustment 15
Chapter 7.0: Electrical Detail 22
Chapter 8.0: Operational Test 23
Chapter 9.0: Maintenance and Repair 25
Chapter 10.0: Replacement Parts 32
Chapter 11.0: Long Term Storage 33

Chapter 1.0: MBT/E Electric Shoe Brakes Warnings and Cautions

Read and Understand All Warnings And Cautions Printed In This Manual Before Commencing Installation, Adjustment Or Repair.

Chapter 5: INSTALLATION – Warnings and Cautions

Anyone involved in the installation or service of this brake must have:

- **Received specific training.**
- **Had experience on similar equipment.**
- **Knowledge of the equipment on which the brake is installed.**
- **The ability to understand the terminology.**
- **The ability to understand the diagrams.**

Do not proceed unless technically qualified for the work involved.

Never lift the brake assembly by the brake rod. The weight of the brake can irreversibly damage the rod leading to fracture and total loss of braking torque.

The integrity of the brake may be compromised or replacement parts may not fit if alterations are made to the brake to achieve required alignment.

If the alterations to the brake supporting structure are required, they must be done under the direction of a competent authority.

On a hoist, chock the drum to prevent any rotation due to the effect of gravity on the hook block etc.

Competent personnel must disconnect all electrical power to this equipment. Consult specific wiring diagrams to identify and isolate all live power inputs to the equipment.

Unexpected movement or hazardous voltage can cause injury or death. Disconnect, lock out, and tag out the power source that feeds this device to prevent power from being applied while inspection and repairs are being performed. Before beginning repairs, try the operational controls to verify that the intended power source is disconnected.

Disconnect, lock out, and tag out the disconnect switch which feeds the brake and related equipment to prevent power from being applied while service is being performed.

On the travel motion subject to the effect of wind or camber gradient, apply the wind anchors or otherwise secure the equipment against inadvertent movement when the brake is being worked on or is removed entirely.

Failure to properly install the brake wheel will result in the brake wheel working its way off the motor shaft, resulting in total loss of braking. Do not operate this brake unless the wheel has been secured to the motor shaft.

Failure to properly center the brake and obtain uniform lining contact results in localized heating and, ultimately, reduced torque, which can cause injury or death.

Chapter 6: ADJUSTMENT – Warnings and Cautions

Protect against the possibility of movement due to the effects of gravity, wind or other source of energy, which has the potential to create a hazard when the brake is being worked on or is removed entirely.

If the brake is arranged to operate in manual mode, the actuator "reserve stroke" must be monitored and adjusted to be within the range of 30 to 35% of full stroke with the brake applied.

An actuator reserve stroke of zero will result in total loss of brake torque.

Under no circumstances should the brake be allowed to function with zero reserve stroke. Such operation results in loss of load control, which can result in injury or death.

Always replace the caps on the actuator once adjustments are complete. This will prevent entry of contaminants.

The optional automatic adjustment mechanism uses a one-way clutch to adjust brake shoe clearance. It is located inside the clutch ring (R) shown in Fig.2A. Never disassemble this clutch. Incorrect reassembly will render the auto-adjust feature inoperative. This can lead to loss of load control and result in damage, injury or death.

If it is necessary to use a wrench to adjust the reserve stroke of a brake with auto-adjust, first withdraw the drive pin (E) shown in Fig.2A and rotate the mechanism in the required direction. Do not disturb the factory set pre-load, which is secured by set screws in nut (F). Releasing the brake will take the load off of the brake rod thread and make it easier to turn.

The two setscrews used to lock nut (F), see Fig. 2A, to the clutch drive shaft, are factory set. Do not loosen these setscrews or change the position of nut (F) with respect to the assembly. Failure to observe this warning can cause the automatic adjustment feature to become inoperative. This can lead to loss of load control and result in damage, injury or death.

Chapter 7: ELECTRICAL DETAIL – Warnings and Cautions

The actuator motor must be connected to its electrical supply through a flexible cable or sealed flexible conduit. This will allow the actuator to move during brake operation and prevent contaminant entry.

To avoid contact with live terminals and to prevent contaminant entry, replace the terminal box cover as soon as connections are complete.

Chapter 8: OPERATIONAL TEST – Warnings and Cautions

Always perform an operational test of the brake after any replacement, adjustment, or repair. Read and understand the intent of the warnings published in this document – if in doubt, ask.

Before conducting an operational test, remove all tools, chocks and other equipment, which may create a hazard when the machine is operated.

Following any repair or adjustment, and before conducting an operational test, verify that all brake adjustments are complete in accordance with Chapter 6.

In a hoist application, post observers to monitor the position of the hook if it travels out of sight of the operator.

Before attempting to operate any motion in any application, advise and account for the location and security of all personnel involved.

Chapter 9: MAINTENANCE AND REPAIR – Warnings and Cautions

When replacing a brake wheel or associated drive line components on an existing installation, verify that the brake is centered with uniform lining contact as described under the topic "Brake Installation". Incorrect repair or replacement can result in death or injury to personnel.

During operation, the actuator's internal temperature and pressure will increase. This is normal but presents a risk of burns and scalds if the filler plug is removed while the actuator is hot. Switch off power to the actuator and allow it to cool to ambient temperature before checking, topping off, or draining hydraulic fluid.

Improper brake operation and loss of load control due to incorrect brake adjustment can result in death or injury to personnel. Do not allow the actuator to bottom out when it retracts as this will lead to total loss of brake torque.

Chapter 2.0: General Description

2.1: Mondel type MBT/E spring applied, Hy-Thrust actuated brakes are designed for use on cranes and other severe braking applications in heavy industry. They can be used in conjunction with any drive type applied to hoisting or horizontal travel motions.

2.2: There are two basic models of this versatile, high-speed, AC operated brake: Type MBT with a fixed value internal torque spring, and type MBT/E with an adjustable external torque spring.

2.3: Construction and operation of both models is similar; they are available in all Association of Iron and Steel Engineers, (AISE) ratings and dimensions. A limited range of shunt-wound DC motor actuators is available.

2.4: A wide range of options is available.

2.5: The type MBT and MBT/E brakes are manufactured in accordance with AISE and NEMA standards. Electrical components have both CSA and UL approvals.

2.6: When the load cycle requires a larger than normal size, as is frequently the case with crane bridge drives, type MBT and MBT/E brakes can be provided with torque ratings lower than traditional for a given wheel size.

Except when specifically engineered and used in conjunction with Mondel Braketronic Controllers, type MBT/E are more suited to crane bridge brakes.

2.7: The type MBT and MBT/E brakes can be supplied as "drop-ins", with footprints and shaft heights, to replace a wide range of competitor's brakes, including some metric sizes.

2.8: Major pivot points use self-lubricated composite bearings. Periodic lubrication is not required.

2.9: The standard actuator is weatherproof and dust proof. The electric motor is TENV construction, and the hydraulic section is fully sealed and self-contained. Electric motors for certain hazardous areas are available as options.

2.10: An optional breather valve can be installed to replace the standard filler plug for environments, which experience large temperature swings. The breather prevents pressure build-up within the actuator.

2.11: For highly corrosive applications, special hardware, enclosures, and surface treatments are available.

IF YOU HAVE AN UNUSUAL APPLICATION, OR REQUIRE A RECOMMENDATION FOR A BRAKE SIZE AND TYPE, CONTACT MAGNETEK.

Figure 1

General Arrangement
MBT/E Electric Shoe Brake

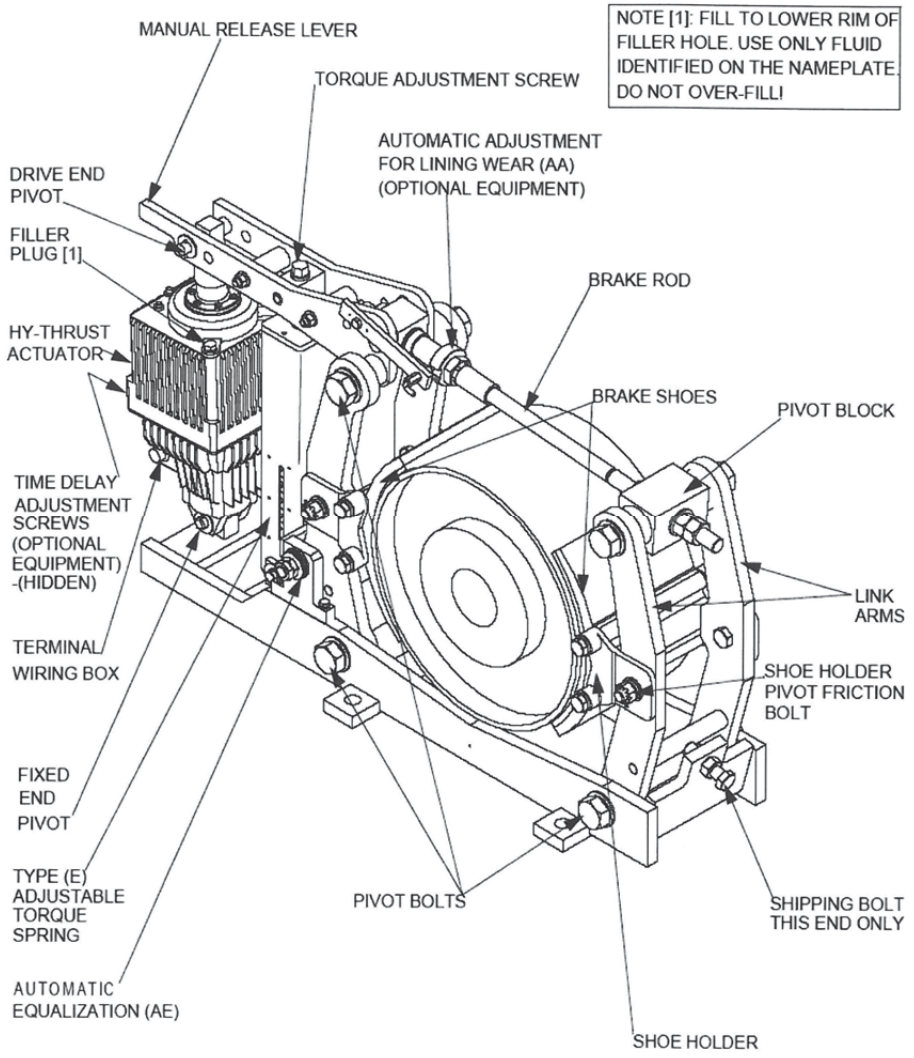

6/7/2006 Page 8 of 33 MBT/E Electric Shoe Brakes Manual 560002-R3

Chapter 3.0: Application

3.1: The brake covered by this manual is type MBT/E. This brake has an adjustable external torque spring and is generally applied on installations where the required torque cannot be pre-determined within well-defined limits.

3.2: For a given wheel diameter, the Association of Iron and Steel Engineers (AISE) determines the prescribed torque when applied to 30 and 60 minute rated motors in steel mill applications.

3.3: When applied to four quadrant drives or other applications where wheel heating can be accurately predicted, type MBT/E brakes can be provided with torque values in excess of the AISE standard.

3.4: When the load cycle requires a larger than normal wheel size, as is frequently the case on crane bridge drives, MBT/E brakes can be provided with torques lower than AISE standard for a given wheel size.

3.5: For applications where larger than normal running clearance is required, a larger actuator can be applied to a given brake. Typical would be severe applications where wheel expansion can be considerable or where excessive wheel run-out can be expected.

Chapter 4.0: Description of Operation

4.1: The brake is spring applied and actuator released. A heavy-duty compression spring, external to the actuator, pulls down on the brake lever and forces the shoes against the wheel.

4.2: The actuator piston rod extends when power is applied, the brake-shoe pressure removed, and running shoe clearance established.

4.3: Subject to the effect of brake geometry, braking torque depends upon three major factors:

4.3.(a): The diameter of the wheel.

4.3.(b): The coefficient of friction of the lining material.

4.3.(c): The force with which the linings are applied to the wheel.

4.4: Power applied to the actuator cancels the brakes ability to apply torque.

4.5: The force with which the linings are applied to the wheel depends on the spring length and characteristics. Spring length increases as linings wear (unless automatic adjustment is used).

4.6: When the brake is released, Automatic Equalization of shoe clearance ensures equal clearance between each shoe and the wheel.

4.7: Because the applied brake shoe force is proportional to the compressed length of the torque spring, a slight decrease in brake torque occurs as linings wear (unless automatic adjustment is used).

4.8: Re-adjustment of the reserve stroke to its specified setting restores the required spring force and torque.

NEMA states: "The torque ratings apply at a worn lining condition defined as the point where re-adjustment is required as recommended by the manufacturer".

4.9: Automatic Equalization (AE) is standard on all brakes of this class.

4.10: To understand how the automatic equalization works, it is important to recognize that the total available shoe clearance is directly related to the length of active stroke and that the actuators "Fully Released" position is the only consistent value for actuator stroke. The "Brake Applied" position varies as the linings wear, resulting in a reduced "Reserve Stroke". The "Brake Applied" position also varies due to wheel expansion caused by temperature increase; this results in an increased "Reserve Stroke".

4.11: On brakes without Automatic Adjustment, after some significant lining wear and the brake wheel close to ambient temperature, a reduction in the "Reserve Stroke" and a corresponding increase in the "Active Stroke", will be noticed. Corrective action will be necessary to ensure the minimum reserve stroke. (See Chapter 6: "Actuator Stroke Adjustment / Brakes without Automatic Adjustment).

4.12: On brakes equipped with the Automatic Adjustment (AA) option, the reserve stroke is maintained by a one-way clutch mechanism arranged to shorten the effective brake rod length – but only when adjustment is required – as follows:

4.12.(a): A retractable pin mounted on the brake lever, oscillates within a slot in the (AA) clutch ring. (See Fig. 2A).

4.12.(b): When the angle, through which the pin moves within the slot, does not allow contact with the sides of the slot, nothing happens!

4.12.(c): When the brake applies, after some minimal amount of lining wear, the pin will contact the side of the slot in the collar, which will advance the ratcheting mechanism and prepare for adjustment the next time the brake is released.

4.12.(d): When the brake is next released and the load on the thread is minimal, the free wheel set-up referred to in the previous paragraph will result in an advance on the thread when the pin engages the other side of the slot in the collar.

4.12.(e): The ratcheting advancement will continue, a little at a time, until the pre-determined reserve stroke is reached.

4.13: When the brake is released, the shoes are moved apart to provide running clearance from the wheel. The actuator's active stroke establishes the total clearance available for both shoes.

4.13.(a): As the brake releases, the shoe nearest to the actuator has been biased to open first. This is done during manufacture, by inclining the actuator away from the nearest shoe (See Fig. 2).

4.13.(b): Clearance provided to the nearest shoe is restricted by the (AE) mechanism – located on the base – which transfers the remaining clearance to the other shoe.

4.13.(c): As shoe wear occurs the friction bolt in the (AE) mechanism relocates to provide a new reference point for the brake shoe on the actuator side of the brake.

4.13.(c).(i): The total available shoe clearance is determined by the active stroke.

4.13.(c).(ii): The clearance between the friction bolt and holes in the actuator links through which it passes, determines the "actuator side" shoe clearance.

4.14: Various optional features are available, including latching hand release mechanisms, limit switches, hydraulic and pneumatic overrides, etc. If the brake covered by this manual has any of the optional features, they will be listed on the front page of this manual and covered by supplementary instructions.

4.15: The actuator for this series of Mondel Brakes can be supplied with optional, factory installed time delays.

Figure 2

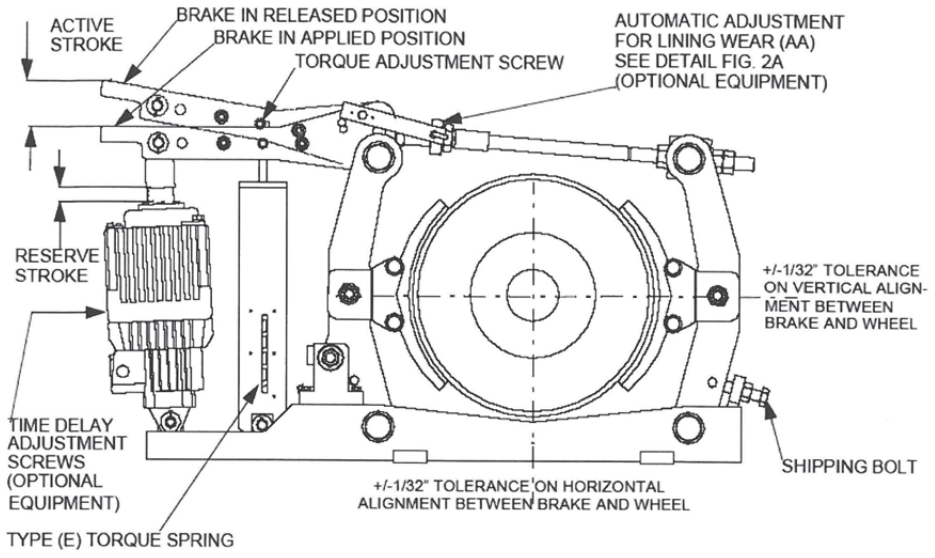

Figure 2A

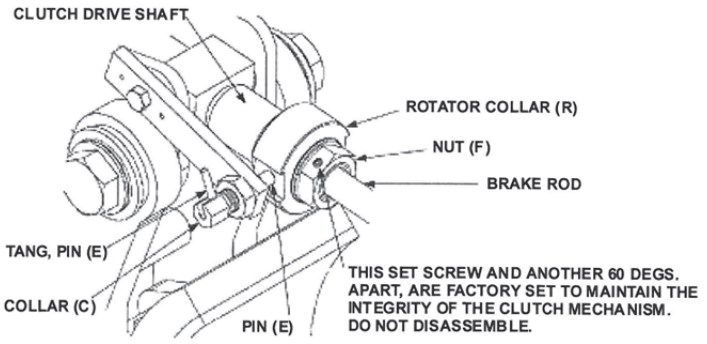

NOTE: TABLE 5 LISTS THE NEMA MINIMUM RECOMMENDED LINING THICKNESS.

6/7/2006 Page 12 of 33 MBT/E Electric Shoe Brakes Manual 560002-R3

Chapter 5.0: Installation

5.1: After unpacking, visually inspect the brake assembly to ensure that damage has not occurred during shipment and that there are no loose or missing parts.

5.2: Remove and discard any shipping bolts (See Fig. 2 for location) or wedges used to secure the brake against vibration during transportation.

5.3: Prepare the brake support structure and install the brake assembly subject to the following:

5.3.(a): Allow adequate clearance to adjacent obstructions. This will ensure the minimum practical access for adjustments and maintenance.

5.3.(b): Whether mounting a brake in a new or existing installation, the base mounting bolts need a reasonable clearance in the base mounting holes, to allow the brake to be aligned for full contact between the brake linings and the wheel.

5.3.(c): Circumstances may determine the best order of installation for the brake and the wheel. This may be due to the available space or handling facilities on site; generally the wheel is installed first.

5.3.(d): Center the brake shoes across the width of the brake wheel. This avoids ridge formation and the possible creation of a dangerous situation as the linings wear.

5.4: Alternatively, it may be necessary to introduce the brake to the brake wheel from one side of the wheel. In this case partial dismantling of the brake may be required depending on the circumstances. Refer to the general arrangement and exploded view drawings in this manual to evaluate the options.

5.4.(a): After installing the brake and wheel, make preliminary adjustments to apply sufficient shoe pressure to raise the actuator piston rod ½" above its fully retracted position.

5.4.(b): This will apply the brake at approximately rated torque, causing the brake to square itself to the wheel if the mounting bolts are loose and the bolt hole clearance will permit. This will maximize the shoe contact area.

5.4.(c): When the brake assembly is correctly aligned and clamped to the wheel, remove each of the securing bolts in turn and verify clearance in the base mounting holes. This will ensure tolerance to allow minor adjustment to the brake alignment to accommodate future relined shoes.

5.4.(d): Magnetek does not recommend "Dowelling" or "Keeper Plates" to maintain alignment.

5.5: Type MBT/E brakes are generally installed with the base horizontal and the brake wheel shaft horizontal.

5.6: In most applications the brake can be installed from one side of the brake wheel. Alternatively it may be necessary to partially dismantle the brake.

5.7: Type MBT/E brakes can also be wall mounted, with the brake wheel shaft horizontal. This is only possible if the actuator pump suction is flooded, which will be the case if the actuator hydraulic section filler plug is at the highest point possible with the actuator horizontal. For this mounting arrangement the actuator is best located above the wheel.

5.8: Type MBT/E brakes can also be wall mounted with the brake wheel shaft vertical. Again this requires the actuator hydraulic section filler plug to be at the highest point possible with the

actuator horizontal. For this mounting arrangement factory modifications are necessary to ensure equal shoe clearance.

5.9: For any other mounting arrangements consult factory.

5.10: The brake assembly must always be square and aligned to the brake wheel within a maximum of ± 1/32 inch, in all three axes (horizontal, vertical, and longitudinal).

5.11: Adjust the brake support bracket to achieve the specified horizontal and longitudinal alignment. For best performance, the brake base should be flat and parallel to the wheel rim or motor shaft. It may be necessary to release and re-apply the brake pressure several times to achieve optimum alignment. Shim under the brake base for the vertical alignment.

5.11.(a): When the brake assembly is correctly aligned and clamped to the wheel, check the securing bolt clearance in each of the brake base holes. There must be clearance in the base and through the brake support bracket to allow minor adjustments. Be sure that the brake shoes are still aligned parallel to the face of the brake and that each brake shoe is fully secured to its link arm.

5.11.(b): With the brake fully applied, verify that the shoes are centered on the wheel face and that lining contact is within adequate bedding range.

5.12: When the brake is correctly aligned in all three axes, tighten the brake mounting bolts and re-check the alignment.

5.13: Connect the actuator to the electrical supply using a flexible, sealed conductor, suitable for the rated temperature. Use type "S0", or higher temperature, cable. The actuator must be allowed few degrees of movement without the risk of dirt or moisture entering the terminal box. Chapter 7 provides all necessary electrical details.

Chapter 6.0: Adjustment

6.1: Following any adjustment or repair of the brake, test operation of the brake as described under "Operational test", Chapter 8.

6.2: Complete adjustment is required following any rework where any settings were disturbed.

Table 1

BRAKE WHEEL SIZES (Inches)	TYPICAL RUNNING CLEARANCE BETWEEN LINING AND BRAKE WHEEL (Inches)	MAXIMUM FULL SPEED BRAKE WHEEL run-out (Inches)
6	0.014	0.006
8	0.016	0.008
10	0.020	0.010
13	0.026	0.013
16	0.032	0.016
19	0.038	0.019
23	0.046	0.023
30	0.060	0.030

Notes:
1. Refer to "Brake Installation" and "Replacing the Brake Shoes" for adjustment instructions.
2. Evaluate brake wheel run-out at full speed. It must not exceed value shown in this table.

6.3: Manual Operation

6.3.(a): Brake installation, shoe replacement, and actuator replacement, described elsewhere, require the brake to be released and reapplied without energizing the actuator. When type "S" Latching Hand Release is fitted, it can be used; or it can be manually over-ridden as follows:

6.3.(b): Brakes without Automatic Adjustment:

6.3.(b).(i): To manually release the brake: Adjust the brake rod hex-nuts – to increase the brake rod length – reducing the "reserve stroke" until the piston rod is no longer visible. Continue adjustment until there is sufficient lining to brake wheel clearance.

6.3.(c): To manually apply the brake: Adjust the brake rod hex-nuts – to decrease the brake rod length – increasing the "reserve stroke" until the linings contact the brake wheel. Continue until the brake release lever begins to rise. Proceed to "Actuator Stroke Adjustment".

6.3.(d): Brakes with Automatic Adjustment:

6.3.(e): To manually release the brake: Refer to Fig. 2A, withdraw drive pin (E), then carefully rotate the mechanism by hand to increase the brake rod length and, at the same time, reduce the reserve stroke until the piston rod is no longer visible. Continue adjustment until there is sufficient shoe/wheel clearance.

6.3.(f): To manually apply the brake: Refer to Fig. 2A and withdraw drive pin (E), then rotate the mechanism by hand to decrease the effective brake rod length until the linings contact the wheel and the brake lever begins to rise. Proceed to "Actuator Stroke Adjustment".

6.4: Actuator Stroke Adjustment

6.4.(a): When power is applied to the actuator the piston will be caused to extend. This will compress the external spring and raise the brake lever to provide operating clearance between the shoes and the wheel.

6.4.(b): When power is removed from the actuator, the spring will retract the lever until the shoe pressure on the wheel prevents any further lever movement as the reserve stroke setting is attained and the intended brake torque achieved.

6.4.(c): Brakes without Automatic Adjustment:

6.4.(d): Adjust the brake rod nuts until the brake release lever raises the piston rod to the specified reserve stroke, (Table 2). Re-secure the brake rod nuts against the pivot block.

6.4.(e): Brakes with Automatic Adjustment:

6.4.(f): To make initial adjustment before engaging the auto adjust (AA), refer to Fig. 2A and withdraw pin (E). Rotate the mechanism by hand to decrease the brake rod length until the linings contact the wheel and the brake lever begins to rise. Continue adjustment until the required reserve stroke is about 1/8" less than specified. Re-engage pin (E) allowing the (AA) mechanism to complete the final stage of the adjustment process. This will verify that the mechanism is operating correctly.

6.4.(g): Energize the actuator several times until the rotating collar (R) is no longer turned by the (AA) drive pin (E). Verify that the reserve stroke is still at the desired value per Table 2.

6.5: Torque Adjustment

6.5.(a): Torque adjustment for Mondel MBT/E brakes is adjustable on site. Tighten or loosen torque adjustment screw, see Fig. 2, to set the torque within the prescribed range shown on the scale. The torque setting is obtained by matching the top of the spring-block to a line on the spring scale.

Table 2

Stroke Length Setting In Inches

ACTUATOR	MAX STROKE (inches)	ACTIVE STROKE (inches) Without Auto Adjust	DESIRED RESERVE STROKE (inches)	
			WITHOUT AUTO ADJUST	WITH AUTO ADJUST
Ed23/5	1.97	1.27	0.7	0.6
Ed30/5	1.97	1.27	0.7	0.6
Ed50/6	2.36	1.56	0.8	0.7
Ed80/6	2.36	1.56	0.8	0.7
Ed121/6	2.36	1.56	0.8	0.7

The rated torque will be developed when the following conditions are met:

6.5.(a).(i): The brake is applied and aligned properly.

6.5.(a).(ii): The actuator stroke is correct.

6.5.(a).(iii): The correct linings are fitted.

6.5.(a).(iv): The linings are in good condition and bedding is completed.

6.5.(a).(v): The brake wheel is aligned and in good condition.

6.6: Automatic Equalization Assembly

6.6.(a): The total available shoe clearance is determined by the active stroke of the actuator. Distribution of the resulting clearance is determined by two factors.

6.6.(a).(i): As the brake releases under power, the shoe nearest to the actuator has been biased to open first. This is done during manufacture by inclining the actuator away from the nearest shoe. (Fig. 2).

6.6.(a).(ii): Clearance provided to the nearest shoe is restricted by the (AE) mechanism located on the base. The clearance between the friction bolt and holes in the actuator links, through which it passes, determines the "actuator side" shoe clearance.

6.6.(b): When the predetermined "actuator side" shoe clearance has been established, the remaining clearance is transferred to the "non-actuator side" shoe.

6.6.(c): As lining wear occurs, the friction bolt in the (AE) mechanism is dragged to a new location, to provide the reference point for the shoe clearance on the "actuator side" of the brake.

6.6.(d): The (AE) friction bolt mechanism is self-compensating after initial adjustments are completed as follows:

6.6.(d).(i): Release the brake and, using a soft-faced mallet if necessary, force the actuator side link away from the wheel. This will set the actuator side (inner) shoe to the maximum available clearance.

6.6.(e): The actual clearance which will be allowed to the "actuator side" shoe is determined by the difference in diameter between the friction bolt shank and the holes in the links, through which it passes.

6.6.(f): The friction bolt assembly is pre-tensioned at the factory. If the friction bolt assembly is disturbed for any reason it can be retensioned as follows:

6.6.(g): Refer to Fig. 3A: Install a castellated hex-nut, secured by a cotter pin, on one end of the friction bolt. Add a stack of three Belleville washers in series, (inner rim against the nut), followed by a plain washer.

6.6.(g).(i): Insert the partially assembled friction bolt into the (AE) assembly on the brake.

6.6.(g).(ii): Assemble one plain washer and a Belleville washer (outer rim against the washer), on the free end of the friction bolt. Follow with a castellated hex-nut. Tighten the nut until the Belleville washers just flatten out; do not over tighten. From that position loosen the hex nut three flats (one-half turn). Then loosen or tighten the nut only enough to align the nearest cotter pin slot and hole. Install the cotter pin. This completes the assembly.

Figure 3A

Type AE Automatic Equalization Mechanism Assembly

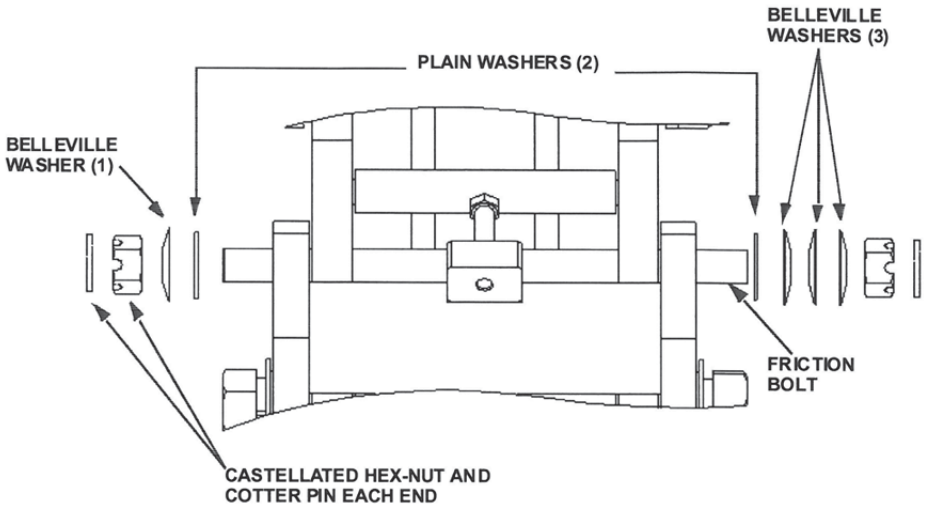

6.7: Parallel Shoe Gap Adjustment

6.7.(a): For optimum lining wear distribution, brake shoes have controlled freedom to align with the wheel contour as the linings wear.

6.7.(b): Each brake shoe holder pivots on its link arm. Its freedom to rotate under gravity is controlled by a shoe holder friction mechanism, similar to the one in the (AE) mechanism.

6.7.(c): To align shoes to the wheel, apply the brake at the applied torque and make the following initial adjustments:

6.7.(c).(i): Release the brake manually or under power.

6.7.(c).(ii): With the brake released, use a soft-faced mallet to tap the upper edge of each brake shoe in, towards the wheel, in the direction it would rotate under gravity. The friction bolt mechanism will be forced to follow the arc the shoe holder describes as it is forced down.

6.7.(c).(iii): Re-apply the brake and the shoes will be forced to align with the wheel and will force the friction bolt back to optimize parallel clearance with the wheel.

6.7.(d): If the shoe holder pivot tension adjustment is lost, it can be re-established as follows:

6.7.(d).(i): Install a Belleville washer on the friction bolt hex cap screw, (inner rim against the head of the cap screw), followed by a plain washer. (Fig. 3B).

6.7.(d).(ii): Insert the partially assembled friction bolt through the shoe holder into the link arm.

6.7.(d).(iii): Place a plain washer on the free end of the friction bolt. Follow with a castellated hex-nut. Tighten the nut until the Belleville washers just flatten out; do not over-tighten. From that position loosen the hex-nut three flats (one-half turn). Then loosen or tighten the nut only enough to align the nearest cotter pin slot and hole. Install the cotter pin. This completes the assembly. Repeat for each friction bolt.

Figure 3B

Shoe Holder Pivot Tension Mechanism Assembly

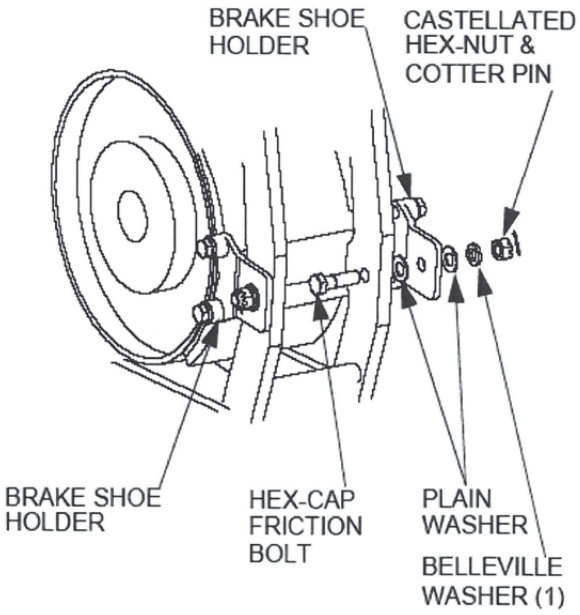

6.8: Time Delay Adjustment

6.8.(a): The actuator nameplate will indicate when optional time delay valves are installed.

6.8.(a).(i): Letter "**S**" indicates an adjustable piston retract, (brake application), time delay.

6.8.(a).(ii): Letter "**H**" indicates an adjustable piston extend, (brake release), time delay.

6.8.(a).(iii): If both letters "**S**" and "**H**" are present, then the actuator is equipped with adjustable time delay valves independently controlling both the piston extend and retract times.

6.8.(a).(iv): When time delay valves are not fitted, the actuator response time to extend or retract, is between 0.4 and 0.8 seconds depending on actuator size.

6.8.(a).(v): With time delay valve(s) installed, the extend and/or retract times are adjustable between approximately 0.5 and 10 seconds depending on actuator size.

6.8.(b): Remove the delay valve protective cap to expose the adjustment screw. For minimum delay, set the screw head flush with the housing. Figs. 1 and 2 show valve location.

6.8.(c): Turn the screw clockwise to increase and counter clockwise to decrease the delay.

Note: The standard actuator has the shortest response time. An actuator fitted with delay(s) provides longer response times, even when the delay(s) are adjusted for minimum effect.

Chapter 7.0: Electrical Detail

7.1: Operation of the actuator is not dependant on the direction of motor rotation. The cable leads can be connected to the U1, V1 and W1 (T1, T2, T3) terminals, in any phase sequence.

7.2: The motor leaves the factory already arranged for the specified voltage, which is also shown on the nameplate.

7.3: If the motor was specified for a nominal 460 volts supply, it will be connected with nine terminals and the links arranged as shown in Fig. 4. If at some future date the motor is required to operate from a 230 volts supply, re-arrangement of the links is required as shown.

Figure 4

Electrical Connections

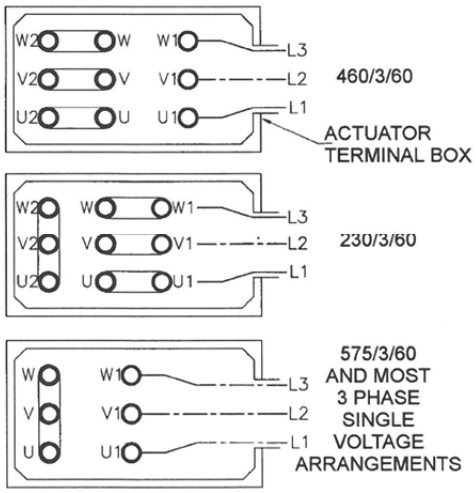

7.4: When specified for operation on 575 volts or other single voltage, it will be connected with six terminals, and the links arranged as shown in Fig. 4. The winding will not be capable of re-connection for any other voltage.

7.5: Explosion proof actuators are only arranged for the terminal voltage shown on the nameplate. Three terminal posts will be visible when the cover plate is removed under the required conditions. No provision is made for external re-connection to any other voltage.

7.6: A wiring diagram showing the possible terminal link arrangements is fastened inside the actuator terminal box cover.

Chapter 8.0: Operational Test

8.1: Heed all warnings and cautions in addition to the owners' safety procedures.

8.2: Follow all standards and local statutes.

8.3: Remove any drum chocks on a hoist application.

8.4: As a preliminary test of the brake without load, energize the actuator for one short jog. If the brake fails to stop and hold the motion stationary, repair or re-adjust the brake as necessary. Visually inspect the brake during operation to ensure all adjustments are correct. If successful, continue with longer duration jogs until confident that the brake is operating satisfactorily.

8.5: A minimum of 60% contact between lining and wheel on each shoe is required before subjecting the brake to its rated capacity.

8.6: If re-lined shoes have been fitted, or the brake alignment has been altered or is otherwise suspect, you may have to realign the brake. This will minimize the bedding needed to obtain the necessary 60% of brake lining to wheel contact.

8.7: The required lining contact is seldom achieved without "bedding", but time spent to achieve satisfactory bedding will be rewarded with a considerably longer life for the lining.

8.8: Modern linings, although hard wearing, are difficult to "bed" when the area in contact with the wheel cannot support the heat energy transferred to the brake. As a result the linings will become "glazed" where in contact with the wheel. "Glazing" is the name applied to a condition where the lining has been heated beyond its working temperature range and is no longer capable of its designed coefficient of friction. "Glazing" will seldom be removed by further braking operations as any increase in area of lining contact will immediately be glazed.

8.9: "Glazing" can be prevented by ensuring a minimum of 60% contact area before placing the brake in service.

8.10: On hoists, well-spaced, short bursts of energy, such as an E.Stop at high speed with no load are best to achieve initial "bedding". This will limit the energy input while the wheel is monitored for temperature.

8.11: A distinct advantage of the type MBT/E brakes is that the actuator can be easily over-ridden while the drive is operating. This can be accomplished with a short length of pipe fitted over the "manual release lever extension". See Fig. 1. When circumstances permit, pressure can be applied to force the shoes against the wheel while the drive is operating. Care must be taken to achieve the minimum 60% contact between lining and wheel on each shoe without exceeding the maximum of 150° C.

8.12: Bedding is just as important when the brake is applied with a four-quadrant drive and not subjected to dynamic loading, except under emergency conditions.

8.13: The following are the key steps to satisfactory "bedding" to extend lining life.

8.13.(a): Use only genuine Mondel lined brake shoes. This will maintain specified brake performance and ensure that the braking torque is neither more nor less than the specified rating.

8.13.(a).(i): Linings thicker than the original equipment may result in contact with the wheel only at the tips.

8.13.(a).(ii): Linings thinner than the original equipment may result in contact with the wheel only across the middle and cause vibration during stops.

8.13.(b): Do not use re-lined shoes where the castings are damaged, worn or distorted.

8.13.(c): Square the brake to the wheel for optimum contact between the linings and the wheel.

8.13.(d): Type **MBT and MBT/E** brakes incorporate a mechanism to equalize brake shoe clearance; ensure that it is correctly adjusted in accordance with Chapter 6.

8.13.(e): Type **MBT and MBT/E** brakes incorporate a mechanism to keep brake shoe clearance parallel to the wheel; ensure that it is correctly adjusted in accordance with Chapter 6.

8.14: Wheel run-out must be within the allowable tolerance; see Table 1. Any unnecessary lining drag will result in excessive heat in the wheel and lining deterioration.

8.15: Every operational test should include verification of brake wheel run-out as follows:

8.15.(a): At all speeds, verify that the linings are clear of the wheel. Take steps to correct wheel run-out, imbalance, or the effects of critical speed.

8.15.(b): If necessary, check low speed brake wheel run-out as follows:

8.15.(b).(i): Using a run-out gauge, verify that radial run-out does not exceed 0.001" per inch of brake wheel diameter. Refer to Table 1 for brake wheel run-out allowance. Lifting the brake wheel with a suitable lever while observing the dial gauge is another way to check bearing play.

Chapter 9.0: Maintenance and Repair

NEMA recommends that brakes be fitted with new or re-lined shoes before the lining material is worn excessively. Refer to Table 5 for minimum thickness.

9.1: Replacing the Brake Shoes

9.1.(a): Remove and install the brake shoes as follows:

9.1.(a).(i): On a hoist, lower the load to the floor and disconnect the load from the bottom block.

9.1.(a).(ii): Reset the bottom block on the floor or on a suitable support. Chock drum to prevent rotation of the drum.

9.1.(b): Refer to Chapter 6 and manually release the brake to provide sufficient clearance between the brake linings and the brake wheel.

9.1.(b).(i): Loosen and back-out shoe holder screws (J) until free of the clearance holes. See Fig. 5.

9.1.(b).(ii): Rotate one shoe holder out of the way from the "horizontal" position to the "up" or "down" position. Remove the shoe from this side.

9.1.(b).(iii): Additional clearance will be required to insert the new shoes. Adjust brake rod as required. (See Chapter 6 "Manually Releasing The Brake").

9.1.(b).(iv): Before starting shoe installation, check that the brake surface of the wheel is clean and free from oil and grease.

9.1.(b).(v): Next, verify that the lining surface will be true to the wheel when the shoe is installed. Carefully check lining contact with the wheel. Remove any high spots with emery paper to ensure 60% contact between the lining and the wheel.

9.1.(c): Ensure adequate clearance will be available and install the replacement shoe assemblies in the reverse order.

9.1.(d): Rotate the shoe holder back into the "up" position and turn the shoe holder screws in until seated in the clearance holes in the side of the brake shoe.

9.1.(e): Ensure that the brake shoe is fully seated and the clearance holes in both sides engage the shoe holder screws. Finally, secure the screws tight against the holder.

9.1.(f): Whenever brake service requires loosening of the pivot bolts, ensure that the reinstalled pivot bolts are tightened to the torque values listed in Table 3.

Table 3: Recommended Pivot Bolt Torque

Brake Dia. Inches)	5	8	10	13	16	19	23	30
Torque (ft-lb)	25	80	90	130	230	400	500	600

6/7/2006 Page 25 of 33 MBT/E Electric Shoe Brakes Manual 560002-R3

9.1.(g): The braking surface of the wheel must be clean and free from any oil or grease contamination, which may have occurred during servicing.

9.1.(h): Re-apply the brake and make all adjustments covered in Chapter 6.

NOTE: The brake can be damaged if the brake shoes are not properly aligned. Do not operate the brake unless the brake shoes are in their correct position and all shoe holder-mounting screws are fully tightened.

9.1.(i): Newly lined shoes seldom fit perfectly with the contour of an existing brake wheel, particularly if the wheel is worn or undersized. If the brake has been moved, realignment of the brake with the wheel may be necessary. Refer to the topic "Brake Installation" for the correct alignment and bedding procedure.

9.1.(j): Refer to Chapter 6 and adjust the reserve stroke as required. Observe instructions for adjusting the optional (AA) feature when provided.

9.1.(k): Refer to Chapter 6 and adjust the torque as required.

9.1.(l): Refer to Chapter 6 and adjust the brake shoe clearance as required.

9.1.(m): Refer to Chapter 6 and adjust the (AE) mechanism as required.

9.1.(n): Refer to Chapter 8; bed and test the brake as described.

Figure 5

Brake Shoe Removal/Replacement

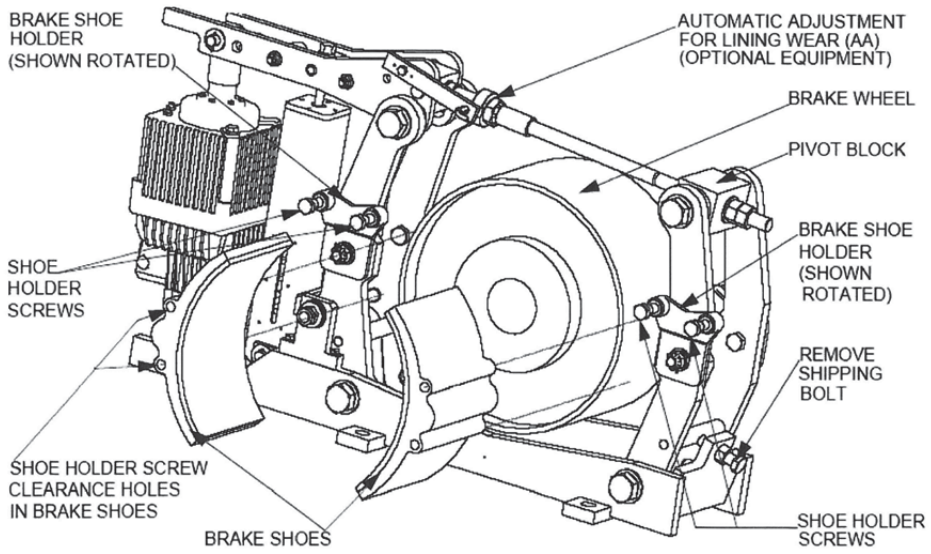

9.2: Removing The Actuator

9.2.(a): Secure against any possibility of an unexpected movement when the actuator is removed.

9.2.(b): Lower the load to the floor and disconnect the load from the bottom block.

9.2.(c): Reset the bottom block on the floor or on a suitable support. Chock the drum to prevent rotation.

9.2.(d): Disconnect and remove electrical wiring and conduit to the actuator.

9.2.(e): Before attempting to remove the actuator, release the brake. See Chapter 6: "Manually Releasing the Brake".

9.2.(f): Secure or support the actuator before attempting to remove the pivot pins.

9.2.(g): Refer to Fig. 6: remove the cotter pins etc., which secure the actuator to the brake assembly.

9.2.(h): Remove the complete actuator using appropriate lifting devices.

9.2.(i): Should service be required, return the actuator to Magnetek for repairs or service. Identify the actuator with the original brake serial number.

9.3: Re-Installing The Actuator

9.3.(a): Verify adequate means are still in place to protect unexpected movement when the actuator is replaced.

9.3.(b): Position the actuator within the lever and attach to the base. Use a lifting device as necessary.

9.3.(c): Attach and secure the actuator using the correct pivot pins, etc. Check for wear prior to re-fitting.

9.3.(d): Refer to Chapter 6 and adjust the reserve stroke as required. Observe instructions for adjusting the optional (AA) feature when provided.

9.3.(e): Refer to Chapter 6 and adjust the torque as required.

9.3.(f): Refer to Chapter 6 and adjust the brake shoe clearance as required.

9.3.(g): Refer to Chapter 6 and adjust the (AE) mechanism as required.

9.3.(h): Refer to Chapter 8; bed and test the brake as described.

Figure 6

Actuator Removal and/or Replacement

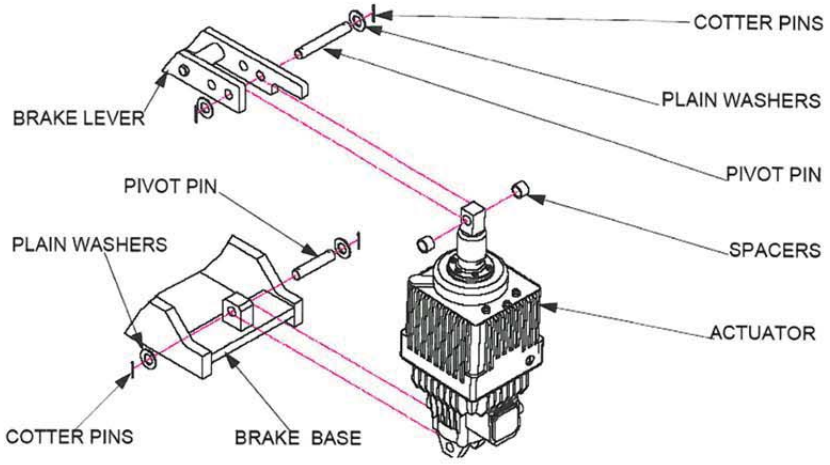

9.4: Fitting Relined Brake Shoes

It is not recommended that shoes be relined in the field. New bonded shoe assemblies can be ordered as repair parts. Factory rebuilt shoes are also available from Magnetek. Under this program, credit will be allowed for old shoes in usable condition.

9.5: Removal and Installation of Motor and Brake Wheel as an Assembly

9.5.(a): Quick replacement of the drive motor and brake wheel, as an assembly, can be accomplished with minimum disturbance to the brake.

9.5.(b): Disconnect, lock out, and tag out the disconnect switch that feeds this equipment to prevent power from being applied while service is being performed.

9.5.(c): Remove both shoe assemblies as described under the topic, "Replacing the Brake Shoes". If the shoes will not be replaced as part of this work order, identify the shoes in order that they can be re-fitted without having to be re-bedded.

9.5.(d): Disconnect the brake rod from the brake lever.

9.5.(e): Swing the entire brake rod assembly clear to permit unobstructed vertical withdrawal of the brake wheel without damage.

9.5.(f): Remove the motor and brake wheel by lifting straight up until the wheel clears the brake.

9.5.(g): Do not disturb the position of the brake rod by turning it into or out of the pivot link. Doing so will alter the brake rod adjustment.

9.5.(h): Install the motor, with brake wheel installed, by lowering it into place.

9.5.(i): Reinstall the shoe assemblies as described under the topic "Replacing the Brake Shoes".

9.5.(j): Re-attach the brake rod to the brake lever.

9.5.(k): Ensure that all shoe holder mounting screws are correctly tightened (Fig. 5).

9.5.(l): Test the operation of the brake as described under the topic "Operational Test".

9.5.(m): Install the brake wheel as described elsewhere.

9.5.(n): Verify the brake is still properly centered over the wheel. Make any adjustments as required. See Chapter 5, "Brake Installation".

9.5.(o): Maintenance and inspection periods depend on operating conditions. High duty cycle applications obviously require more frequent inspections than brakes operating on low duty cycle applications. In either case, Magnetek recommends a general inspection every 100 operating hours or every month as a minimum.

9.6: Inspection

9.6.(a): Electrical connections and mechanical fasteners should be checked for tightness. Inspect the brake wheel to ensure that it is neither damaged nor loose. Inspect the brake mounting bolts for tightness, and that brake shoe clearance settings are within specifications.

9.6.(b): Inspect the brake wheel for unusual scoring, signs of over-heating, cracking or wear. Replace any damaged, cracked or excessively worn brake wheels.

9.6.(c): Inspect the condition of the bearings and bushings as well as the electrical and mechanical integrity of the complete braking system. Make any repairs or adjustments that may be required to ensure proper brake system operation.

9.6.(d): Check the brake wheel run-out at all speeds. See Chapter 8 "Operational Test".

9.6.(e): Correct operation of the motor can be determined by measuring its operating current. Refer to Motor Nameplate for rated value.

9.7: Lubrication

9.7.(a): Periodic lubrication is not required on these brakes. Major pivot points are equipped with bearings, which do not require lubrication. Oil or any other lubricant applied to any part of the brake may trap airborne contaminants.

9.8: Actuator Working Fluid

9.8.(a): The actuator leaves the factory correctly filled with the fluid and seals for the specified operating temperature range.

9.8.(b): The fluid will not deteriorate in service, and if there are no tell-tale signs of leakage, no additional fluid will be required.

9.8.(c): The actuator working fluid should be checked periodically, but must not be over-filled to ensure an adequate air space is retained to allow for fluid expansion. See Fig. 1 for plug location and proper fluid level.

9.8.(d): If additional fluid is necessary for any reason, use only the fluid identified on the nameplate to ensure compatibility with the installed seals and the specified operating temperature range. **DO NOT OVER-FILL.**

9.8.(e): Table 4 specifies Hydraulic Fluid types for a range of ambient temperatures.

9.9: Brake Adjustments

9.9.(a): Wear will be more rapid when the linings are new, while the high spots are wearing down as the bedding process takes place. Adjustment will be required soon after the brake has been put into service.

9.9.(b): On units without automatic adjustment, brake release lever travel increases with lining wear. This decreases the reserve stroke. Carry out periodic maintenance to reset the reserve stroke as described in Chapter 6 "Actuator Stroke Adjustment".

9.9.(c): Brake torque decreases as the brake lever drops. On critical applications, such as hoists, brake adjustment should be performed frequently enough so that the torque loss does not result in loss of load control. In no event should the actuator or lever be allowed to "bottom out". This results in total loss of braking torque and could result in death or injury to personnel.

Following any adjustment, maintenance, or repair on the brake, fully test its operation as described under topic "Operational Test".

Table 4: Recommended Hydraulic Fluids

Ambient Temperature				Hydraulic Fluid
Lower Limit ^0F	Upper Limit ^0F	Lower Limit ^0C	Upper Limit ^0C	
-13	+122	-25	+50	C-10 (1)
+32	+176	0	+80	C-46 (1)
-31	+104	-35	+40	Aero 41 (2)
-76	+140	-60	+60	M-20 (3)

(1) C-10 and C-46 are Shell Morlina® products.
(2) Aero 41 is a Shell® product.
(3) M-20 is a Bayer® Baysilone product.
All hydraulic fluids are obtainable from Magnetek.

Chapter 10.0: Replacement Parts

10.1: Brake Lining Replacement

10.1.(a): As a general guide, Magnetek recommends that brake linings be replaced when the linings wear down to 1/16" minimum thickness. Table 5, shows NEMA's recommended range of minimum lining thickness for bonded and riveted linings on brake wheels from 8" to 30" diameter...

Table 5

Wheel Diameter (Inches)	Maximum RPM Ductile Iron	Minimum Wheel Dia. (Inches) (1)	Lining Thickness (Inches) (2)	
			Riveted (3)	Bonded
8	5000	7.94	0.010	0.016
10	4000	9.92	0.010	0.020
13	3300	12.90	0.010	0.026
16	2600	15.87	0.015	0.032
19	2300	18.87	0.015	0.038
23	1900	22.87	0.015	0.046
30	1340	29.87	0.015	0.060

(1) Minimum after re-machining.
(2) Minimum permissible prior to replacement.
(3) Above rivet head at maximum wear point.

10.2: Detailed procedures for brake shoe replacement and actuator removal and installation are covered earlier in this manual.

10.3: For other parts replacement or complete disassembly and rebuild, refer to the exploded view attached to this manual.

10.4: Before returning a brake to service after major repairs or overhaul, carry out all adjustments outlined in this manual followed by a complete operational test.

10.5: Ordering Parts

10.5.(a): For part number and identification refer to the Exploded View and Bill of Material forming part of this manual.

10.5.(b): Always quote the Magnetek Serial Number when ordering parts.

10.5.(c): For optimum brake life and performance use only genuine Mondel parts.

Chapter 11.0: Long Term Storage

11.1: If a brake assembly will not be installed immediately, it can be stored indoors, in a dry location indefinitely, or outdoors for a reasonable time if adequately protected from moisture and corrosive atmosphere. The brake assembly must always be protected from direct exposure to the elements unless specifically treated at the factory for use in that environment. Covering with plastic sheeting is not acceptable unless provision is made to prevent condensation under the plastic.

11.2: During storage, rust may form on the surface of the brake wheel. This is not usually a problem with ductile iron wheels nor is it necessary to clean the wheel before placing the wheel in service. The first few brake applications will polish the wheel.

11.3: Steel wheels may form scale when corroded, and the braking surface may have to be re-machined to remove the scale. See Table 5 for machining limits. Dynamic balance may be affected.

11.4: Before painting a brake, protect all pivot points, self-adjusting mechanism, pull-rod, actuator piston, brake drum and linings, etc.

11.4.(a): Data plates and labels must not be removed or painted over.

11.8 TRAFFIC CONTROL EQUIPMENT MANUALS AND SPECIFICATIONS

11.8.1 WARNING GATE SCHEMATIC – B&B ROADWAY VT-40

B&B
ELECTROMATIC

Handbook

for

Gates & Barriers

FACTORY ORDER # 96-7933

SER # 4189, 4190

GATE: VT-40

PROVIDED BY

B&B ROADWAY

PHONE: (888) 560-2060

WWW.BBROADWAY.COM

Quality Manufacturing since 1925

CONTENTS

Section 1: Installation, Adjustment, and Maintenance

Installation Instructions
VT-40 Field Adjustment Instructions
VT-40 Lubrication Instructions
Lubricant Chart
VT Gate Start-Up Instructions

Section 2: Specifications and Assembly

VT-40 Specifications
VT-40 Assembly
Basic Housing Dimensions

Section 3: Accessories and Components

Universal Brake Assembly
Shear Pin Data for Lift Gates
RDC Limit Switch Assembly
AL-7 (12V) Arm Light
AW25-400 (12V) Solid State Flasher
10" Warning Bell

Section 4: Drawings Pertaining to This Installation

VT- 40 Installation Drawing (Drawing # 0040DI02063, Rev. 1)
(Drawing # 0040DI02062, Rev. 1)
VT-6801 Wiring Diagram (Drawing # 0040DE02064, Rev. 1)

Notice: Failure to follow recommended installation, operation and maintenance procedures can result in damage to the gate and will void all warranties and responsibility for gates and related equipment. Please contact the factory for answers to any questions regarding the VT-6801 barrier gate.

Provided by

B&B ROADWAY

15191 Hwy 243, Russellville, Al 35654

Phone: (888) 560-2060

WWW.BBROADWAY.COM

Section 1

Installation, Adjustment, and Maintenance

VT GATE INSTALLATION INSTRUCTIONS

F.O. # 96-7933 SERIAL # 4189,4190

NOTE: FAILURE TO INSTALL YOUR GATE PROPERLY COULD CAUSE DAMAGE TO THE OPERATING MECHANISM. IF SIDEARM CHANNELS ARE INSTALLED FROM FACTORY, THEY NEED TO BE REMOVED BEFORE PROCEEDING WITH THE FOLLOWING INSTRUCTIONS.

1. READ THE INSTRUCTIONS AND REVIEW THE DRAWINGS THOROUGHLY. ANY PART OF THESE INSTRUCTIONS YOU DO NOT UNDERSTAND, CONTACT THE FACTORY.

2. CHECK THE ANCHOR BOLT LOCATIONS AND PREPARE THE FOUNDATION FOR THE GATE. SET THE GATE OPERATOR AND BE SURE TO SEAL THE BOTTOM WITH DUCT SEAL. HOUSING MUST BE LEVEL. ANCHOR BOLTS MUST BE TIGHTENED EVENTLY.

3. MAKE SURE THE LOCAL POWER SUPPLY FOR THE MOTOR AND CONTROL CIRCUIT ARE CORRECT.

IMPORTANT: ALL CONDUIT MUST BE SEALED AND THE HOUSING GROUNDED.

4. USING THE HANDCRANK, RAISE THE MAIN ARM SHAFT 45 DEGREES TO THE VERTICAL NOTING ROTATION ARROW ON BRAKE DRUM.

5. OPEN MAIN DISCONNECT SWITCH S1 AND CONNECT THE POWER. CONNECT THE CONTROL CIRCUIT IF SEPARATE. IF SUPPLIED FROM THE MOTOR CIRCUIT, CHECK CONNECTIONS AT THE TERMINALS.

NOTE: AT THIS POINT IN THE INSTALLATION, NO SIDEARM CHANNELS, COUNTERWEIGHTS OR ARMS SHOULD HAVE BEEN INSTALLED.

6. "BUMP" TEST GATE OPERATOR FOR CORRECT MOTOR ROTATION. MOTOR ROTATION SHOULD MATCH ROTATION ARROW ON BRAKE DRUM. REVERSE POWER LEADS IF NECESSARY TO GET PROPER MOTOR ROTATION.

7. RUN GATE OPERATOR (W/O SIDE ARM CHANNELS, ARMS OR COUNTERWEIGHTS) THROUGH SEVERAL COMPLETE CYCLES. LEAVE GATE OPERATOR IN DOWN POSITION AND OPEN MAIN DISCONNECT SWITCH.

NOTE: THIS GATE HAS BEEN COMPLETELY ASSEMBLED, LUBRICATED, AND TEST RUN THROUGH 24 COMPLETE CYCYLES UNDER FULL POWER AT THE FACTORY. IF SATISFACTORY OPERATION IS NOT DISPLAYED IN STEP 10 RECHECK ALL ELECTRICAL CONNECTIONS CAREFULLY. CONSULT FACTORY IF PROBLEM IS NOT FOUND.

8. NOW INSTALL THE SIDEARM CHANNELS, THE ARM AND THE COUNTERWEIGHTS. SUPPORT THE OUTER END OF THE ARM UNTIL COUNTERWEIGHTS ARE ALL INSTALLED. ATTACH ANY LIGHTS, SIGNS OR OTHER FIXTURES. INSTALL COUNTERWEIGHTS IN POSITION MARKED ON SIDE ARM CHANNELS.

9. MAKE SURE ROTATION OF MOTOR WITH HANDCRANK LOWERS OR RAISES ARM AS INDICATED ON BRAKE DRUM.

10. CLOSE THE MAIN DISCONNECT SWITCH S1 AND OPERATE THE CONTROL CIRCUIT. IF ALL CONNECTIONS HAVE BEEN MADE CORRECTLY, GATE ARM WILL OPERATE TO FULLY UP OR FULLY DOWN. THE LIMIT SWITCH WILL AUTOMATICALLY STOP THE MOTOR AT THE EXTREME 90 DEGREE MOVEMENT OF THE ARM.

IMPORTANT: IF THE POWER CONNECTIONS TO THE MOTOR ARE REVERSED, THE LIMIT SWITCH WILL AUTOMATICALLY DISCONNECT THE MOTOR WHEN IT REACHES ABOUT 93 DEGREES EITHER UP OR DOWN, DEPENDING ON THE POSITION OF THE CONTROLS, IE, UP OR DOWN. THE LIMIT SWITCH HAS BEEN SET AT THE FACTORY AND SHOULD NOT REQUIRE ADJUSTMENT. ARM SHOULD BE RAISED OR LOWERED BY LENGTHENING OR SHORTENING THE CONNECTING ROD, NOT BY ADJUSTMENT OF THE LIMIT SWITCH CAMS.

VT-40 WARNING GATE START-UP INSTRUCTIONS

NOTE: These instructions assume installation has been completed. If necessary, refer to the enclosed installation instructions.

1. Open the operator door.
2. Connect power by flipping the disconnect switch to the "ON" position.
3. Test operate the gate to be sure it is functioning properly.

VT-40 WARNING GATE SHUT-DOWN INSTRUCTIONS

1. Open the operator door.
2. Disconnect power by flipping the disconnect switch to the "OFF" position.

VT-40 WARNING GATE EMERGENCY OPERATION INSTRUCTIONS

1. Open the operator door.
2. Disconnect power by flipping the disconnect switch to the "OFF" position.
3. Locate the hand-crank mounted inside the housing.
4. Slip the hand-crank onto the shaft extending through the brake. The brake will automatically release.
5. Turn the hand-crank to raise or lower the gate, as needed. A tag on the brake indicates crank direction for opening or closing the gate.
6. Remove the hand-crank.
7. Flip the disconnect switch back to the "ON" position to resume powered operation.

VT-40 FIELD ADJUSTMENT INSTRUCTIONS

**WARNING: Operating mechanism can be damaged if gate is operated when:

1) Arm is installed and counterweights are not installed, or
2) Arm is not installed and counterweights are installed.

Please see installation instructions in handbook.

"Down" or "Closed Position Adjustment:

1. Break jam nuts loose at rod ends (items 8 and 9).
2. Shorten or lengthen connecting rod (item 6) by twisting it. Observe movement of arm.
3. Tighten jam nuts.

"Up" or "Open" Position Adjustment:

Note: "Open" position is 90 degrees from the "down" position and cannot be adjusted independently unless a special adjustable crank arm has been specified by the customer to accommodate nonstandard installation conditions.

If the gate is equipped with an adjustable crank (item 28), the "open" arm position can be adjusted between 60 and 90 degrees from the "down" position to clear overhead obstacles. The crank arm has been preset at the factory and verified by full test operation. The crank will not normally require field adjustment.

Limit Switch Adjustment:

The limit switch assembly (item 7) will not normally require field adjustment. Limit switch cams have been preset at the factory and verified by full test operation for each gate. It is recommended that the factory be consulted before adjusting the limit switch assembly. If it is determined that an adjustment is required, the cams can be adjusted using an allen wrench.

VT-40 LUBRICATION INSTRUCTIONS

Lubricate mechanism every 12 months as follows:

Transmission (Item 4 on Assembly drawing):

First gear drive box:

1. Open the back door of the housing (opposite roadway).
2. Check oil by removing the oil level plug located on the left hand vertical surface of the transmission (item 4) a few inches below the motor (item 5).
    a. If oil is visible, oil level is adequate - replace plug and go to next section.
    b. If oil is not visible, go to step 3.
3. Remove fill plug on top of first gear box.
4. Fill the case to the level plug (removed in step two) with oil chosen per lubrication chart on the following page.
5. Replace plugs.

Final drive gear box:

1. Check the oil level by removing the oil level plug located near the bottom of the transmission (item 4). The plug will be facing you when standing at the back door.
    a. If oil is visible, oil level is adequate - replace the plug and go to next section.
    b. If oil is not visible, go to step 2.
2. Remove oil fill plug on top of final gear box.
3. Fill the case to the level plug (removed in step one) with oil chosen per lubrication chart on following page.
4. Replace plugs.

Arm Shaft (Item 38):

1. Grease with Texaco Marfak 2 or equal.
2. Wipe off excess.

Connecting Rod Ends (Items 6, 8, and 9):

1. Grease threads with Texaco Marfak 2 or equal.
2. Wipe off excess.

RECOMMENDED LUBRICANTS

VT-40, VT-77, AND VT6801

WORM GEAR REDUCERS

AMBIENT TEMPERATURE	-30 TO 15°F	16 TO 50° F	51 TO 110° F	111 TO 165° F
MAX. OPERATING TEMP.	150° F	185° F	200° F	200° F
VISCOSITY @ 100° F, SUS		1919 TO 2346	2837 TO 3467	4171 TO 5098
COMPOUNDED WITH	3% TO 10% FATTY OR SYNTHETIC FATTY OILS OR MILD EP ADDITIVES			
AGMA LUBRICANT NO.		#7 COMPOUND	#8 COMPOUND	#8A COMPOUND
CITIES SERVICE CO.	CITGO EP COMP. 68	CITGO CYL. OIL 400-S	CITGO CYL. OIL 680-7	CITGO CYL. OIL 680-7
FISKE BROS. REFINING	APG-80	LUBRIPLATE CP GEAR OIL #7	LUBRIPLATE CP GEAR OIL #8	LUBRIPLATE CP GEAR OIL #8A
GULF OIL CORP.	SL-460 E.P.	TRANSGEAR EP 460	TRANSGEAR EP 680	TRANSGEAR EP 800
KEYSTONE DIV.	KSL-365	KSL-366	K-600	K-620
MOBIL OIL CORP.	SHC 634	MOBIL 600W	MOBIL 600W SUPER	MOBIL EXTRA HECIA
SHELL OIL CORP.	OMALA 68	OMALA 460	OMALA 680	OMALA 80
SUN OIL CORP.	SUNEP 1050	SUNEP 1110	SUNEP 1150	SUNOCO GEAR OIL 8 AC
TEXACO, INC.	MEROPA 68	VANGUARD CYL. OIL 460	HONOR CYL. OIL 680	650T CYL. OIL 1000
AMERICAN LUB., INC.		IND. GEAR OIL 140	AGMA #8 GEAR OIL	AGMA #8 GEAR OIL
CHEVRON	NL GEAR COMP. 100	NL GEAR COMP. 460	NL GEAR COMP. 680	NL GEAR COMPOUND 1500

FOR SPECIAL APPLICATIONS THAT INVOLVE SEVERE AMBIENT TEMPERATURE EXTREMES OR A SEASONAL OIL REQUIREMENT, USE MOBIL SCH. 626.

Section 2

Specifications and Assembly

SPECIFICATIONS COVERING MODEL VT-40 AUTOMATIC SAFETY GATE

GENERAL

The safety gate shall be B&B type VT-40 or an approved equal.

The gate shall be of the standard vertical to horizontal arm type, shall have a weatherproof housing and operating mechanism and shall include such controls, accessories and modifications as specified.

The gate and all related equipment except lamps and fuses shall be guaranteed against defective material and workmanship for a period of 5 years from date of shipment under B&B's standard warranty.

APPLICATIONS

The VT-40 automatic safety gate shall typically be used as a warning, traffic control and access control gate. Typical applications shall include moveable bridge traffic warning gate, parking lot access control gate and any medium to heavy duty traffic control or warning installation.

HOUSING

The housing shall be fabricated from .188" carbon steel and shall be hot dip galvanized after fabrication. Formed, channel-shaped side plates shall be used to produce a strong configuration without welded corners. The gate shall receive a finish coat of aluminum paint.

Front and rear access doors shall be hung on bronze, full-cross hinges with stainless steel hinge pins. Hinges shall be of the slip-off type. Padlockable doors (padlock by others) shall be held in place with two bronze wing nuts and stainless steel swing bolts and shall be sealed with neoprene strip gaskets. Top shall be held in place with corrosion resistant hex head bolts. Openings for arm shafts shall be equipped with "O" ring seals.

The housing base shall provide four 1.00" holes for mounting on the customer's foundation. Anchor bolts shall be not less than .75" diameter. Anchor bolts and template shall be furnished by the gate manufacturer.

ARM

The arm shall be aluminum / fiberglass combination – This lightweight, durable arm shall be fabricated from special high strength rectangular fiberglass and 6061-T6 rectangular aluminum tubing. Gate arms shall be covered on both sides with 16" alternating red and white engineering grade reflectorized sheeting. Stainless steel truss cables shall be furnished with all arms.

Roadway and sidewalk arm lengths (Dimensions "A" and "B") shall be measured from the centerline of the gate housing to the tip of the arm. For actual arm lengths, see drawing # 0040DI2062, Rev. 1 & 0040DI2063, Rev. 1

One gate shall be supplied with a sidewalk arm. See drawing # 0040DI2062, Rev. 1

ARM BASE

A break-away shear pin base is standard for aluminum / fiberglass arms. When excessive force is applied to gate arms equipped with a shear pin base, the pin shall shear. The arm shall then swing 45 degrees horizontally and drop free of the gate operator, minimizing damage to the vehicle and the gate.

The shear pin base and lightweight arm assembly shall be designed for easy, rapid reinstallation or replacement by one person.

ARM MOUNTING CHANNELS

Arm mounting channels shall be carbon steel, hot dip galvanized. The roadway arm shaft shall be 44" above the base line of the gate housing.

COUNTERWEIGHTS

Each gate shall be equipped with suitable hot dip galvanized steel counterweights of the sectional, bolt-on type. Counterweights shall have at least 10% adjustment.

ARM SHAFTS

The main arm shaft shall be mounted in heavy duty ball bearings and shall be lubricated from the inside. The main arm shaft shall be not less than 2.00" diameter. Shaft material shall be ASTM A311 Class B high strength, fatigue resistant steel.

The sidewalk shaft (see drawing # 0040DI2062, Rev. 1) shall be mounted in heavy duty ball bearings and shall be lubricated from the inside. It shall be connected to the roadway arm shaft with a linkage that will rotate the sidewalk arm through the same angle as the roadway arm. Shaft material shall be ASTM A311 Class B steel.

TRANSMISSION

The transmission shall be a fully enclosed, all gear, direct drive unit running in an oil bath. The drive train shall not use belts or chains and shall be connected to the arm shaft with an adjustable connecting rod having self-aligning ball ends. The connecting rod shall be constructed of ASTM A311 Class B high strength, fatigue resistant steel.

During the opening and closing cycles, the gate arm shall begin with zero velocity and accelerate smoothly reaching maximum velocity at mid stroke (45 degrees). The arm shall then decelerate smoothly to zero velocity at full stroke (90 degrees) preventing bounce or whip of the arm. Standard operating time to open or close the gate shall be 13 seconds.

The standard connecting rod assembly shall be designed to move the gate through a 90 degree travel.

MOTOR

The motor voltage and phase shall be 240V, 3PH. Horsepower shall be ½ HP. (For electrical information, refer to drawing # 0040DE2064, Rev. 1) The motor shall be of the flange mounted type, attached to the transmission case with not less than 4 bolts. To permit reversing movement of the arms at any point of travel, the motor shall be of the instant reversing type. Motor data shall appear in the manual.

BRAKING MECHANISM

A solenoid release, automatic motor brake shall be furnished as part of the gate drive mechanism. The brake shall automatically release when the handcrank is inserted to manually operate the gate.

HANDCRANK

A handcrank shall be included with each gate to operate the gate during power failure. Door safety switches shall automatically break the control circuit power when the door is opened for manual operation.

LIMIT SWITCH

The gate limit switch shall be a unit assembly containing 8 individual switches having one set of normally open and one set of normally closed contacts each. Contacts shall be totally enclosed and shall have UL rating of not less than 15 amperes at 220 volts AC. Limit switch shall be readily accessible and easily replaced with normal hand tools. Each individual switch shall be controlled by an independent cam, which shall be adjustable with a single set screw. Limit switch assemblies containing 10 or 12 circuits shall be supplied when specified. The limit switch body, shafts and cams shall be of corrosion resistant non-ferrous materials.

SAFETY SWITCHES, TERMINAL BLOCKS AND WIRING

To protect operating and maintenance personnel from injury during service or installation a manual disconnect switch shall be furnished, installed and fully wired in the main motor leads. Automatic disconnect switches shall be arranged to break the control circuit when either door is opened. Pressure type terminal blocks shall be provided and installed inside the housing on the roadway side. All control wires shall terminate on these blocks. Each terminal shall be clearly labeled and all conductors shall be color coded or numbered. The wiring diagram shall reflect such colors or numbers. No conductor shall be small then # 16 AWG stranded. All connections to screw type terminals shall have lugs. Conductors shall be encased in conduit wherever practical.

GATE MANUFACTURER REQUIREMENT

The manufacturer of safety gates and positive barriers shall have a minimum of 5 years experience in the manufacture of industrial gates and barriers and shall furnish replacement parts for a minimum of 10 years. Replacement parts shall normally be available within 24 hours.

VT-40 PROTECT-O-ARM GATE
(Replaces the VT-66 Gate)

VT-40 WITH STANDARD SIDEARM CHANNELS

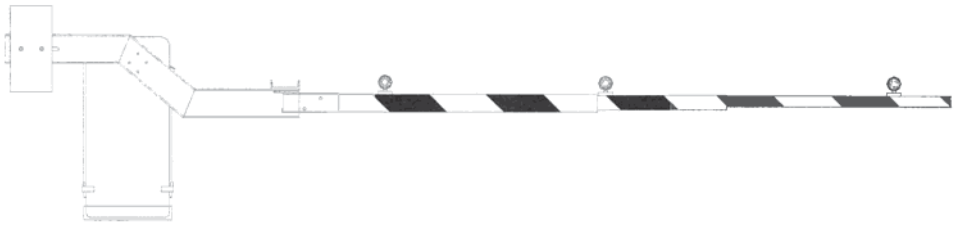

VT-40 WITH OPTIONAL OFFSET SIDEARM CHANNELS

LIGHTWEIGHT ALUMINUM & FIBERGLASS ARM

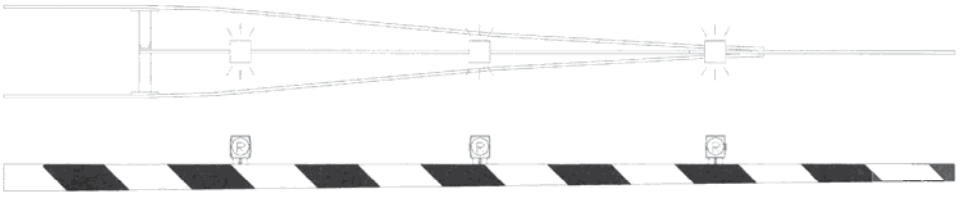

WISHBONE WOODEN ARM

B&B ELECTROMATIC

BUL 0040-0012 REV 4/91

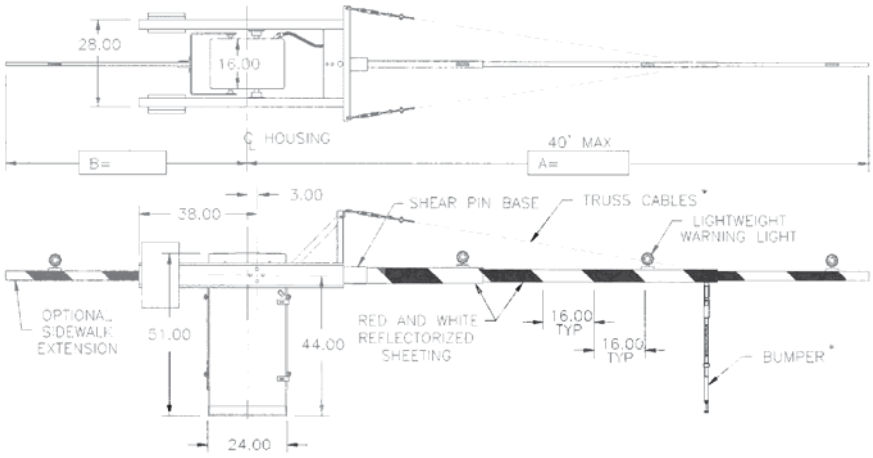

VT-40 STANDARD DIMENSIONS

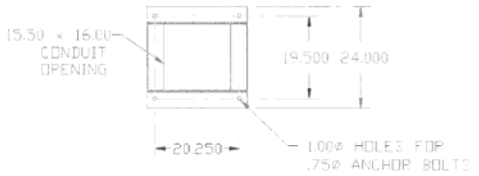

MTG DIM

*NOTE: TRUSS CABLES AND BUMPER USED ON LONGER ARMS

PARTIAL LISTING OF AVAILABLE OPTIONS AND ACCESSORIES

Gong or Bell.....	A 12" motor driven gong with steel or bronze shell or a 6", 8" or 10" vibrating bell can be mounted on the operator housing, when specified.
Arm Lights.....	110V and 12V lights can be mounted on the gate arm, quantity and spacing as required.
Flasher.....	A heavy duty 2-circuit flasher is mounted in the operator housing, when specified. The flasher provides 2 alternately flashing circuits plus a steady burn circuit.
Heater & Thermostat	A heater and thermostat can be provided for cold climates with voltage and wattage as required.
Hi-Intensity Sheeting	Standard arm striping material is engineering grade reflectorized sheeting. Hi-intensity grade sheeting is available, when specified.
Rigid Base.....	A shear pin base designed to minimize damage to vehicles is standard with lightweight aluminum and fiberglass arms. A rigid base is standard with wooden arms and is available for standard lightweight aluminum and fiberglass arms, when specified.
Folding Fence.....	An aluminum folding fence is furnished for heavy pedestrian traffic areas.
Sidewalk Arm.....	A sidewalk arm can be added to control pedestrian traffic.
Housing Material.....	Galvanized steel is standard. Aluminum and stainless steel are available when specified.

B&B ELECTROMATIC

BUL 0040-0012 REV 4/91

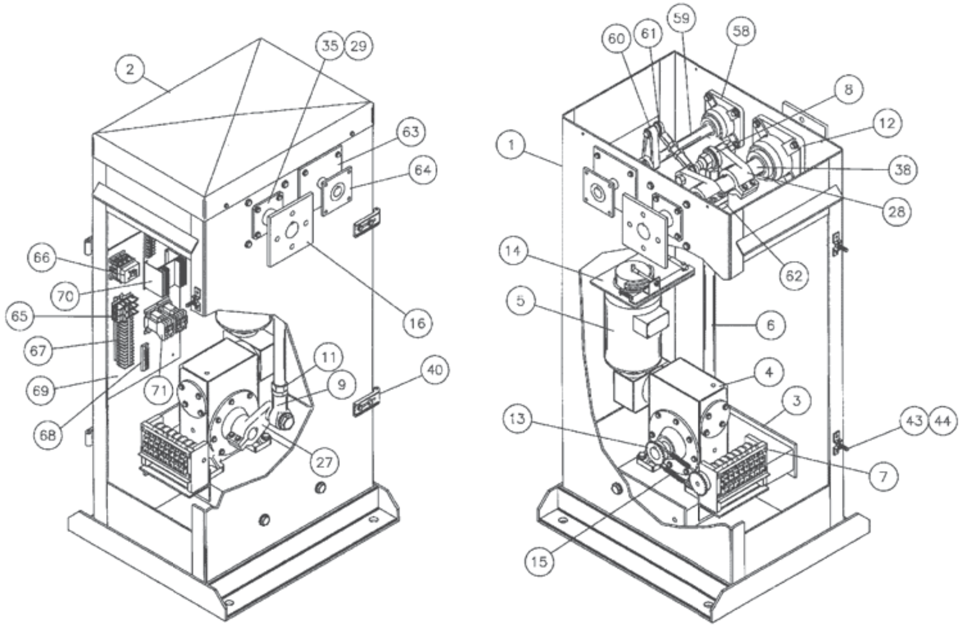

PARTIAL PARTS LIST

ITEM	QTY.	PART NO.	DESCRIPTION
1	1	0066-3891	HOUSING
2	1	0066-4439	COVER, HOUSING
3	1	0040-0500	CHANNEL, TRANSMISSION MOUNTING
4	1	X788-6-750	TRANSMISSION, 6MCTD-750:1-56C-UR-L
5	1		MOTOR, 56C FRAME, HP & VOLTAGE AS REQUIRED
6	1	0040-0501	CONNECTING ROD
7	1	0040-0008	LIMIT SWITCH, RDC-15-8CCT
8	1	0040-7760	ROD END, RH, C776XMW-16-1Z
9	1	0040-7761	ROD END, LH, C776XMG-16-1Z
11	1	1211-0016NF-LH	JAM NUT, 1-14, LH
12	1	1700-0200	BEARING, ARM SHAFT, C489XFY-200
13	1	0040-3524-1.5	SPROCKET, LIMIT SWITCH DRIVE
14	1	0040-0003	BRAKE ASSEMBLY, SEE DWG 0040BA0023
15	22"	0077-3500	CHAIN, LIMIT SWITCH DRIVE
16	1	0066-3779	HUB, SIDE ARM CHANNEL
27	1	0066-5271-3	CRANK, TRANSMISSION
28	1	0066-3780-1	CRANK, ARM SHAFT
29	2	0066-3823	COVER PLATE
35	2	2600-568-228	O-RING, ARM SHAFT
38	1	0065-3600	SHAFT ARM
40	2	0066-3605	HINGE, LOWER DOOR
43	4	0066-0501	SWING BOLT
44	8	0066-2902	SWING BOLT BRACKET
58*	2	1700-0104	BEARING, 1.50" FLANGE
59*	1	0066-4148	SHAFT, SIDEWALK ARM
60*	1	0066-4149	CRANK, SIDEWALK ARM SHAFT
61*	1	0040-X	LINKAGE, SIDEWALK ARM
62*	1	0066-4150	CRANK, MAIN ARM SIDEWALK LINKAGE
63*	2	0033-4411	PLATE, SHAFT SEALING
64*	2	0066-4146	HUB, SIDEWALK ARM CHANNEL MOUNTING
65			FUSES (AS REQUIRED. SEE WIRING DIAGRAM)
66	1		SWITCH, DISCONNECT (SEE WIRING DIAGRAM)
67	1		TERMINAL BLOCK (SEE WIRING DIAGRAM)
68	1		NEUTRAL BUSS (SEE WIRING DIAGRAM)
69	1	0040-0533	MOUNTING PANEL, ELECTRICAL

Section 3

Accessories and Components

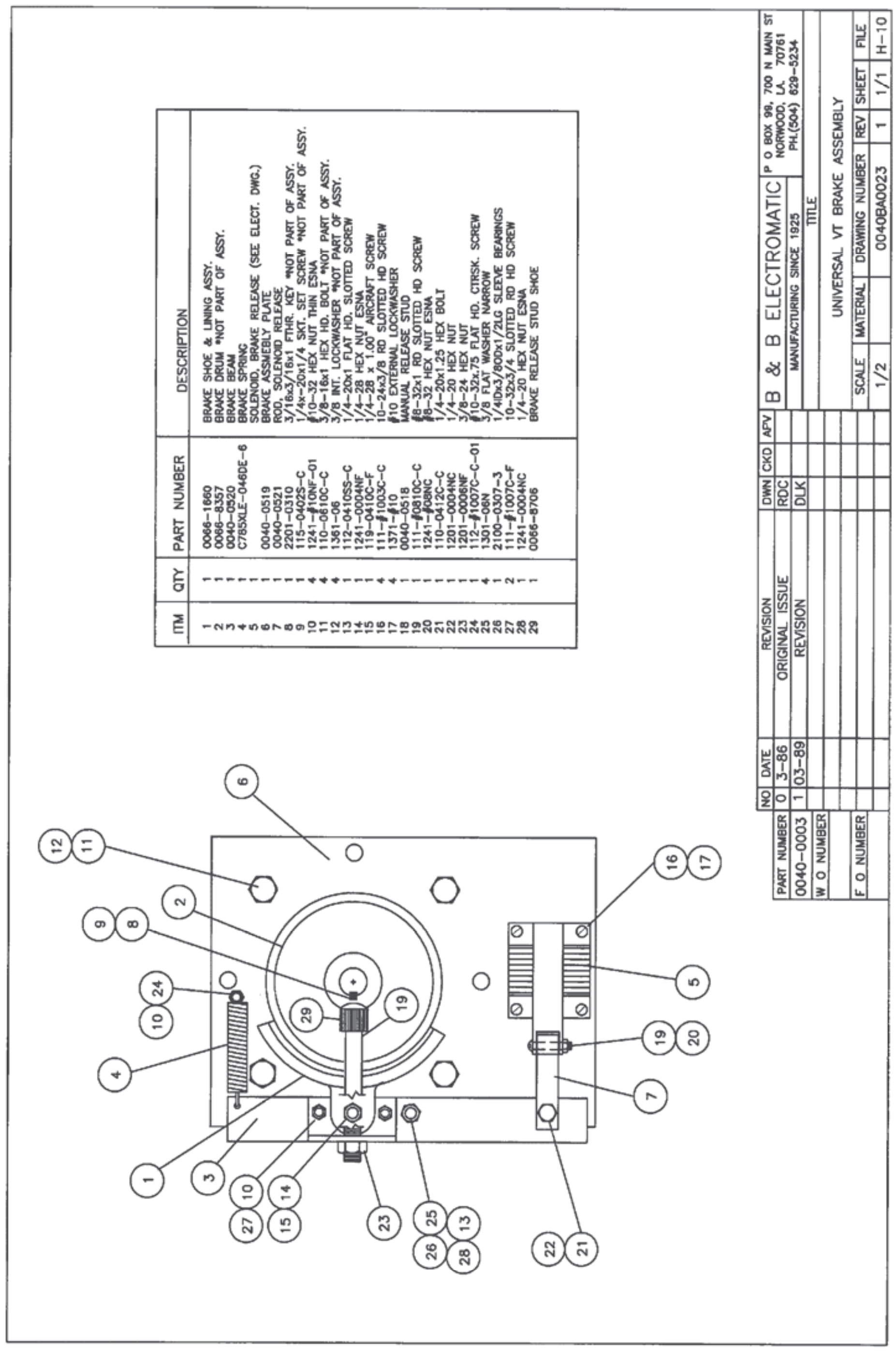

ITM	QTY	PART NUMBER	DESCRIPTION
1	1	0066-1660	BRAKE SHOE & LINING ASSY.
2	1	0066-8357	BRAKE DRUM *NOT PART OF ASSY.
3	1	0040-0520	BRAKE BEAM
4	1	C785XLE-046DE-6	BRAKE SPRING
5	1		SOLENOID, BRAKE RELEASE (SEE ELECT. DWG.)
6	1	0040-0519	BRAKE ASSMEBLY PLATE
7	1	0040-0521	ROD, SOLENOID RELEASE
8	1	2201-0310	3/16x3/16x1 FTHR. KEY *NOT PART OF ASSY.
9	1	115-0402S-C	1/4x-20x1/4 SKT. SET SCREW *NOT PART OF ASSY.
10	4	1241-#10NF-01	#10-32 HEX NUT THIN ESNA
11	4	110-0610C-C	3/8-16x1 HEX HD. BOLT *NOT PART OF ASSY.
12	4	1361-06	3/8 INT. LOCKWASHER *NOT PART OF ASSY.
13	1	112-0410SS-C	1/4-20x1 FLAT HD. SLOTTED SCREW
14	1	1241-0004NF	1/4-28 HEX NUT ESNA
15	1	119-0410C-F	1/4-28 x 1.00" AIRCRAFT SCREW
16	4	111-#1003C-C	10-24x3/8 RD SLOTTED HD SCREW
17	4	1371-#10	#10 EXTERNAL LOCKWASHER
18	1	0040-0518	MANUAL RELEASE STUD
19	1	111-#0810C-C	#8-32x1 RD SLOTTED HD SCREW
20	1	1241-#08NC	#8-32 HEX NUT ESNA
21	1	110-0412C-C	1/4-20x1.25 HEX BOLT
22	1	1201-0004NC	1/4-20 HEX NUT
23	1	1201-0006NF	3/8-24 HEX NUT
24	1	112-#1007C-C-01	#10-32x.75 FLAT HD. CTRSK. SCREW
25	4	1301-06N	3/8 FLAT WASHER NARROW
26	1	2100-0307-3	1/4IDx3/8ODx1/2LG SLEEVE BEARINGS
27	2	111-#1007C-F	10-32x3/4 SLOTTED RD HD SCREW
28	1	1241-0004NC	1/4-20 HEX NUT ESNA
29	1	0066-8706	BRAKE RELEASE STUD SHOE

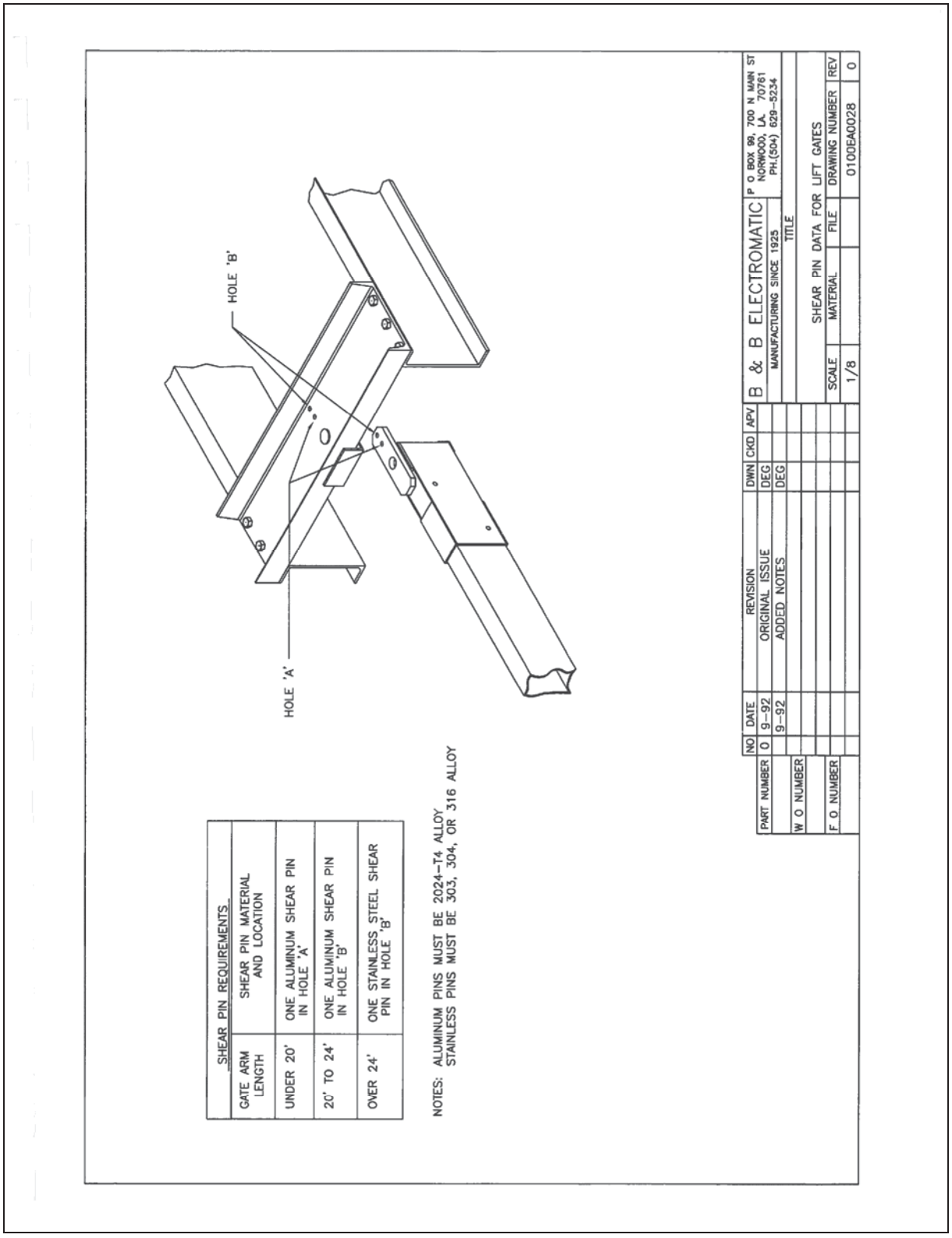
HOLE 'B'
HOLE 'A'
SHEAR PIN REQUIREMENTS
GATE ARM LENGTH
SHEAR PIN MATERIAL AND LOCATION
UNDER 20'
ONE ALUMINUM SHEAR PIN IN HOLE 'A'
20' TO 24'
ONE ALUMINUM SHEAR PIN IN HOLE 'B'
OVER 24'
ONE STAINLESS STEEL SHEAR PIN IN HOLE 'B'
NOTES: ALUMINUM PINS MUST BE 2024-T4 ALLOY
STAINLESS PINS MUST BE 303, 304, OR 316 ALLOY
NO DATE REVISION DWN CKD APV
0 9-92 ORIGINAL ISSUE DEG
9-92 ADDED NOTES DEG
PART NUMBER
W O NUMBER
F O NUMBER
B & B ELECTROMATIC
MANUFACTURING SINCE 1925
P O BOX 98, 700 N MAIN ST
NORWOOD, LA 70761
PH:(504) 629-5234
TITLE
SHEAR PIN DATA FOR LIFT GATES
SCALE 1/8
MATERIAL
FILE
DRAWING NUMBER 0100EA0028
REV 0

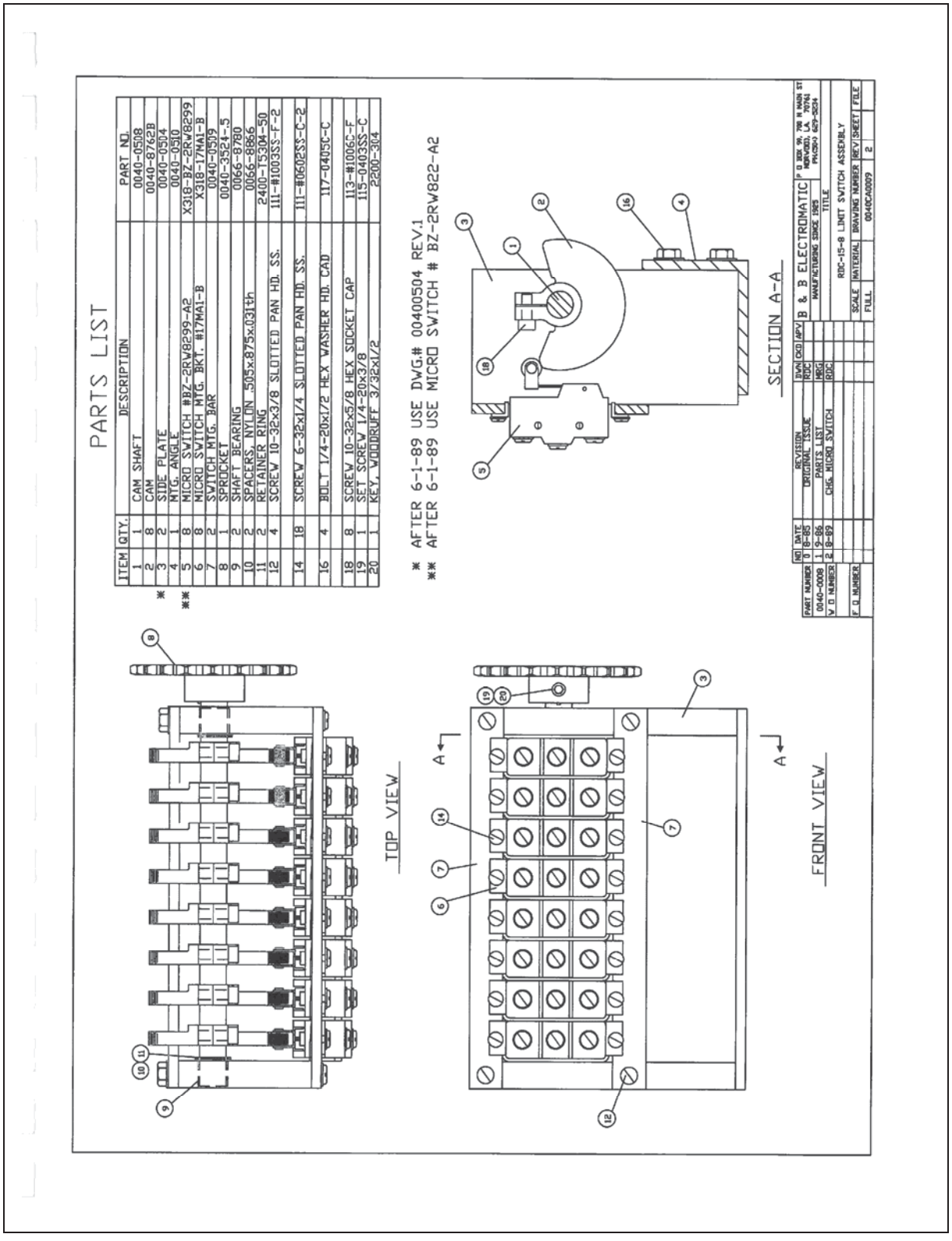
PARTS LIST
ITEM QTY. DESCRIPTION PART NO.
1 1 CAM SHAFT 0040-0508
2 8 CAM 0040-8762B
3 2 SIDE PLATE 0040-0504
4 1 MTG. ANGLE 0040-0510
5 8 MICRO SWITCH #BZ-2RW8299-A2 X318-BZ-2RW8299
6 8 MICRO SWITCH MTG. BKT. #17MA1-B X318-17MA1-B
7 2 SWITCH MTG. BAR 0040-0509
8 1 SPROCKET 0040-3524-5
9 2 SHAFT BEARING 0066-8780
10 2 SPACERS, NYLON .505x.875x.031th 0066-8866
11 2 RETAINER RING 2400-75304-50
12 4 SCREW 10-32x3/8 SLOTTED PAN HD. SS. 111-#1003SS-F-2
14 18 SCREW 6-32x1/4 SLOTTED PAN HD. SS. 111-#0602SS-C-2
16 4 BOLT 1/4-20x1/2 HEX WASHER HD. CAD 117-0405C-C
18 8 SCREW 10-32x5/8 HEX SOCKET CAP 113-#1006C-F
19 1 SET SCREW 1/4-20x3/8 115-0403SS-C
20 1 KEY, WOODRUFF 3/32x1/2 2200-304
* AFTER 6-1-89 USE DWG.# 00400504 REV.1
** AFTER 6-1-89 USE MICRO SWITCH # BZ-2RW822-A2
SECTION A-A
TOP VIEW
FRONT VIEW
B & B ELECTROMATIC
RDC-15-8 LIMIT SWITCH ASSEMBLY
0040CA0009

AL-7 Gate Arm Light Specifications

General
The lightweight warning light will be a moisture and corrosion proof unit. It will be designed for long life under normal operation conditions. Nearly the entire projected surface for the 2-way light will be utilized for light emission.

Housing
The AL-7 housing will be molded plastic. The lenses and housing shall achieve a thin provile and hold the weight of the light to a minimum. The dual lens configuration shall provide 2-way visibility. Each lens shall be held in place by 4 screws.

Lens
The lens color shall be red. Lenses shall be 7" diameter as specified.

Lamp
The optical system shall be designed for 12V, as specified. A 1000 hour, 21 candle power lamp (18W) shall be supplied with each light for 12V operation.

Weight
Approximate shipping weight for the AL-7 shall be 1 lb.

AW25-400 SERIES
WARNING LIGHT FLASHERS

GENERAL
The flasher will be a B&B ARMR model AW25-300. It will be a solid state flasher having two alternately flashing circuits and one steady burn circuit. The flasher will be designed for heavy duty applications including traffic control gates and barriers.

CONSTRUCTION
The flasher assembly will include mounting hardware as required, solid state flasher circuitry, a terminal block and a transformer when required. The flasher assembly will be fully wired at the factory. All components will be corrosion resistant. The entire transfer relay assembly, including all electronic circuitry, will be encapsulated in weatherproof, shock-resistant plastic enclosure to prevent possible damage from condensation or water buildup within the flasher.

FLASH RATE
The standard flash rate for the two alternately flashing circuits will be .50 second on & .50 second off. An additional steady burn circuit will also be provided.

INPUT VOLTAGE
The standard input voltage is 120VAC.

ORDERING INFORMATION
Specify AW25-400-12V for standard 120V input/12V output flasher.

SHIPPING WEIGHT
Approximate shipping weight is 3 pounds.

B & B ELECTROMATIC

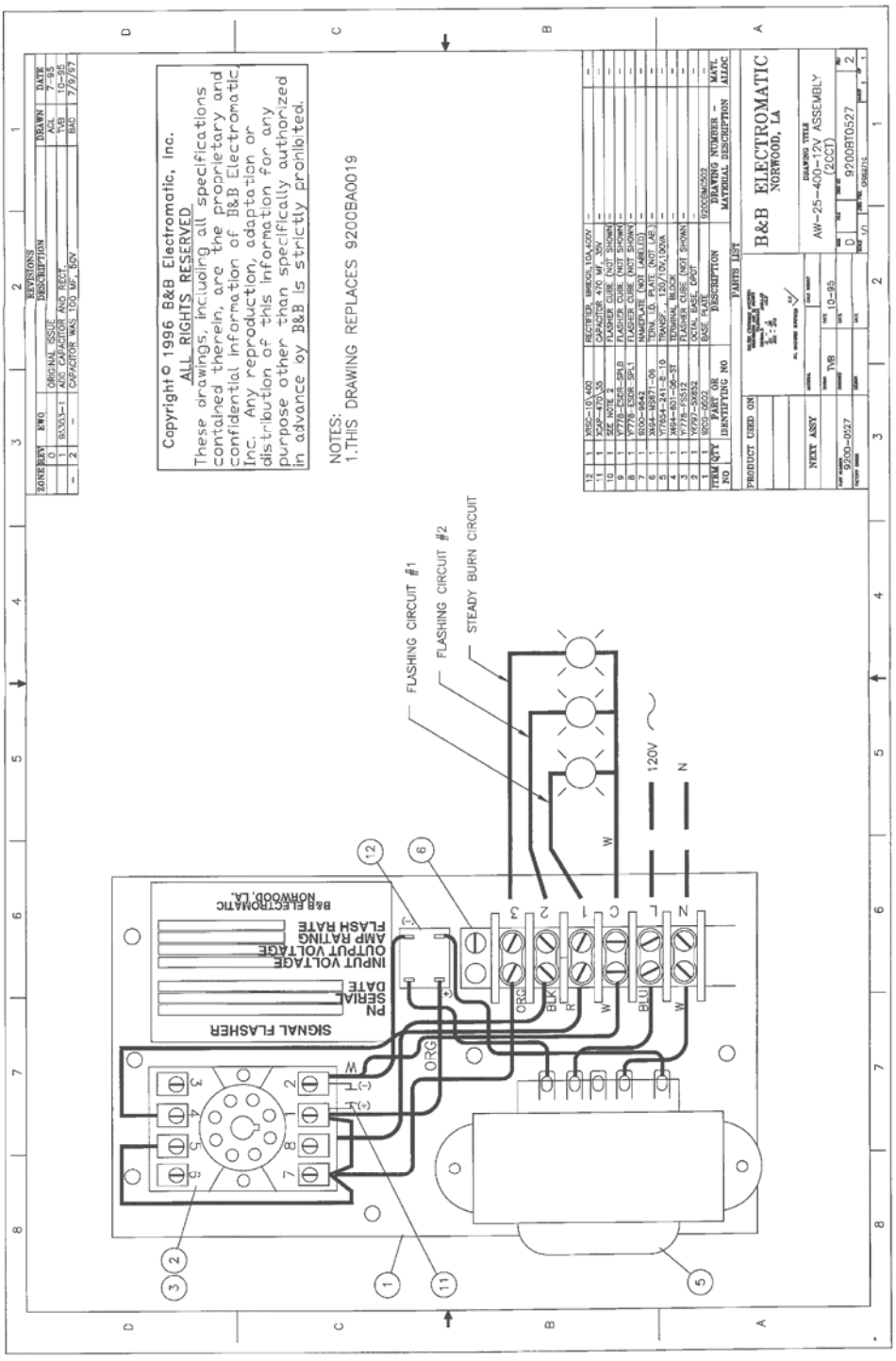
Copyright© 1996 B&B Electromatic, Inc.
ALL RIGHTS RESERVED
These drawings, including all specifications contained therein, are the proprietary and confidential information of B&B Electromatic Inc. Any reproduction, adaptation or distribution of this information for any purpose other than specifically authorized in advance by B&B is strictly prohibited.
NOTES:
1.THIS DRAWING REPLACES 9200BA0019
B&B ELECTROMATIC
NORWOOD, LA
AW-25-400-12V ASSEMBLY (2CCT)
9200BT0527
FLASHING CIRCUIT #1
FLASHING CIRCUIT #2
STEADY BURN CIRCUIT
120V
N
SIGNAL FLASHER
INPUT VOLTAGE
OUTPUT VOLTAGE
AMP RATING
FLASH RATE
PN
SERIAL
DATE
B&B ELECTROMATIC
NORWOOD, LA.
ORG
BLK
R
W
BLU

SPECIFICATIONS COVERING WARNING BELLS

General
The warning bell will be an economical solution for many alarm, warning, and signaling applications where an extra heavy-duty railroad type gong is not required. It will be suitable for both indoor and outdoor installations.

Construction
The bell and operating mechanism will be weatherproof for outdoor service.

Shell
Warning bells will be with 10" shells.

Voltage
The standard supply voltage required will be 120 volt, AC, 60 cycle.

Sound Levels
The sound level of the warning bell will be adjustable. The adjustment will be located on the lower side of the operating mechanism. The maximum sound level for the bell will depend on the shell diameter and will be as follows:

10" shell - 90db

Shipping Weight
Approximate shipping weight will be 15 pounds.

Section 4

Drawings Pertaining to This Installation

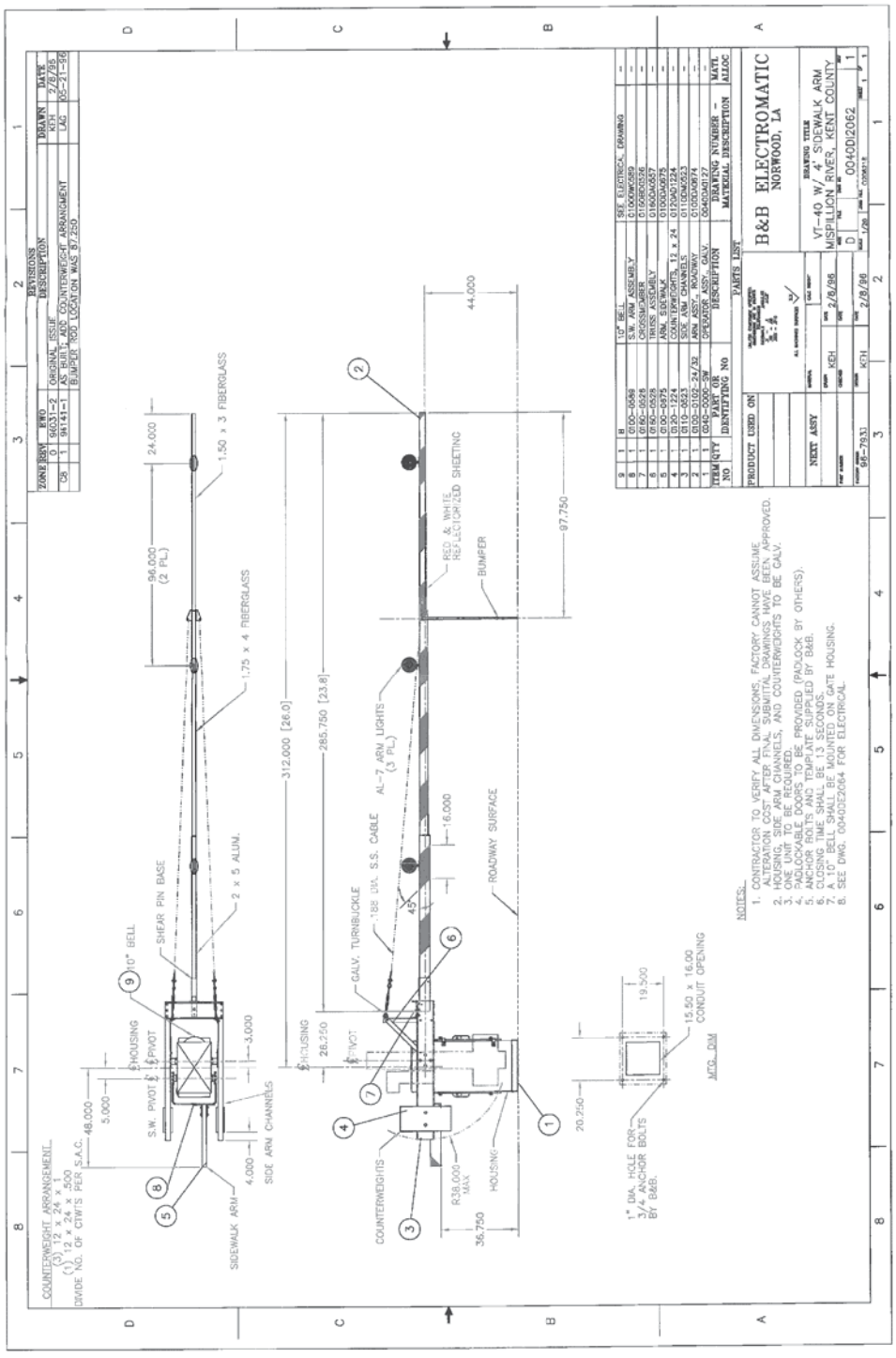
B&B ELECTROMATIC
NORWOOD, LA
VT-40 W/ 4' SIDEWALK ARM
MISPILLION RIVER, KENT COUNTY
0040D12062
97-7933
2/8/96
KEH
D
PARTS LIST
NOTES:
1. CONTRACTOR TO VERIFY ALL DIMENSIONS. FACTORY CANNOT ASSUME ALTERATION COST AFTER FINAL SUBMITTAL DRAWINGS HAVE BEEN APPROVED.
2. HOUSING, SIDE ARM CHANNELS, AND COUNTERWEIGHTS TO BE GALV.
3. ONE UNIT TO BE REQUIRED.
4. PADLOCKABLE DOORS TO BE PROVIDED (PADLOCK BY OTHERS).
5. ANCHOR BOLTS ALL TEMPLATES SUPPLIED BY B&B.
6. CONCRETE SHALL BE 3,500 PSI.
7. A 10" BELL SHALL BE MOUNTED ON GATE HOUSING.
8. SEE DWG. 0040DE2064 FOR ELECTRICAL.
COUNTERWEIGHT ARRANGEMENT
(3) 12 x 24 x 1
(1) 12 x 24 x .500
DIVIDE NO. OF CTWTS PER S.A.C.
48.000
5.000
3.000
4.000
SIDE ARM CHANNELS
SIDEWALK ARM
S.W. PIVOT
HOUSING
PIVOT
SHEAR PIN BASE
10" BELL
96.000 (2 PL)
24.000
1.50 x 3 FIBERGLASS
1.75 x 4 FIBERGLASS
2 x 5 ALUM.
312.000 [26.0]
285.750 [23.8]
26.250
HOUSING
PIVOT
GALV. TURNBUCKLE
.188 DIA. S.S. CABLE
AL-7 ARM LIGHTS (3 PL)
45°
16.000
ROADWAY SURFACE
44.000
97.750
RED & WHITE REFLECTORIZED SHEETING
BUMPER
COUNTERWEIGHTS
R38.000 MAX
36.750
HOUSING
20.250
1" DIA. HOLE FOR 3/4 ANCHOR BOLTS BY B&B.
19.500
15.50 x 16.00 CONDUIT OPENING
MTG. DIM

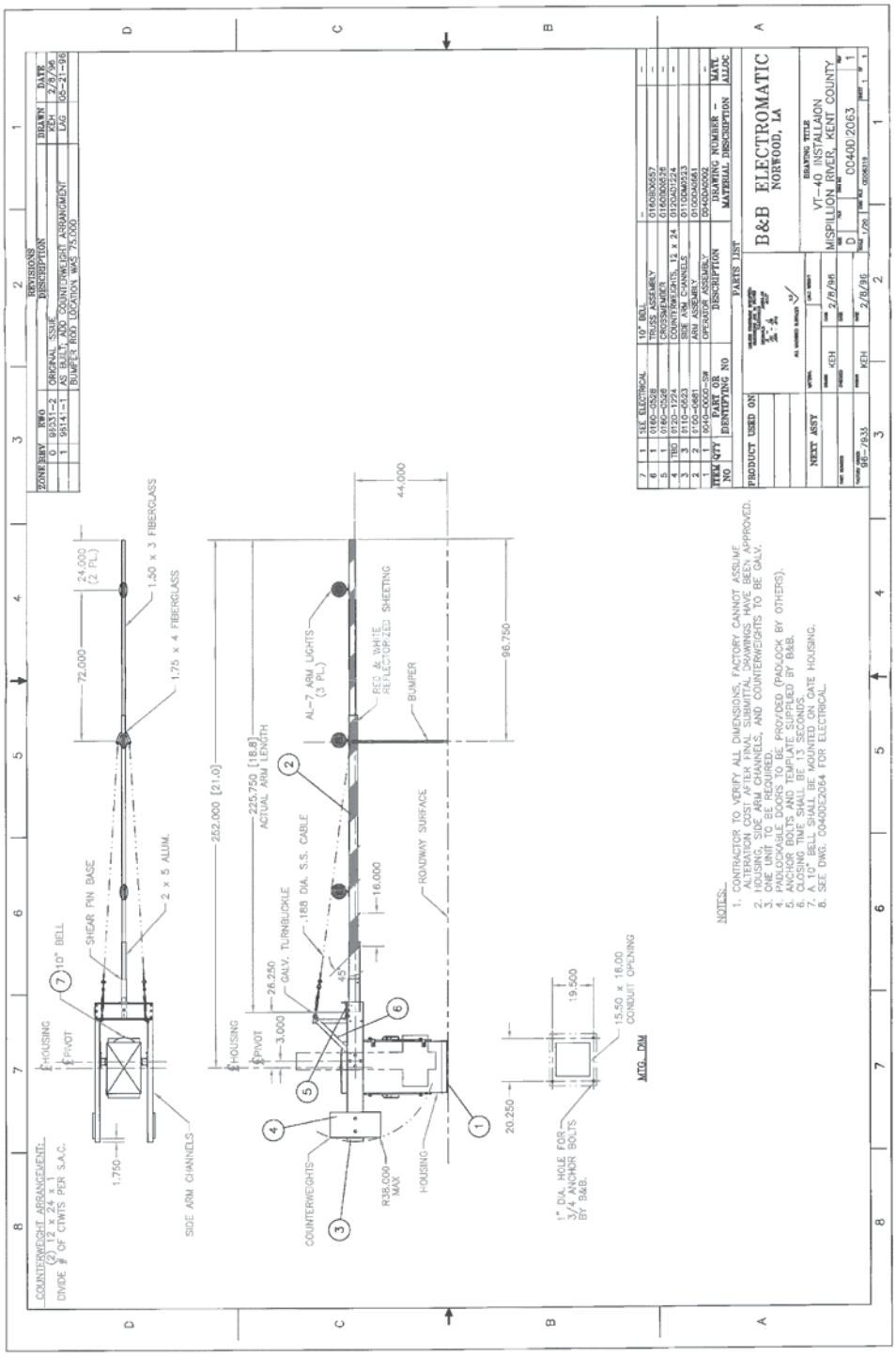
B&B ELECTROMATIC
NORWOOD, LA
VT-40 INSTALLATION
MISPILLION RIVER, KENT COUNTY
C0402063
NOTES:
1. CONTRACTOR TO VERIFY ALL DIMENSIONS, FACTORY CANNOT ASSUME ALTERATION COST AFTER FINAL SUBMITTAL DRAWINGS HAVE BEEN APPROVED.
2. HOUSING, SIDE ARM CHANNELS, AND COUNTERWEIGHTS TO BE GALV.
3. ONE LIMIT TYPE REQUIRED.
4. PADLOCKABLE DOORS TO BE PROVIDED (PADLOCK BY OTHERS).
5. ANCHOR BOLTS AND TEMPLATE SUPPLIED BY B&B.
6. CLOSING TIME SHALL BE 13 SECONDS.
7. A 10" BELL SHALL BE MOUNTED ON GATE HOUSING.
8. SEE DWG. C0402E2064 FOR ELECTRICAL.
COUNTERWEIGHT ARRANGEMENT:
(2) 12 x 24 x 1
DIVIDE # OF CTWTS PER S.A.C.
SIDE ARM CHANNELS
COUNTERWEIGHTS
HOUSING
PIVOT
SHEAR PIN BASE
10" BELL
1.50 x 3 FIBERGLASS
1.75 x 4 FIBERGLASS
2 x 5 ALUM.
24.000 (2 PL)
72.000
1.750
252.000 [21.0]
225.750 [18.8] ACTUAL ARM LENGTH
26.250
3.000
.188 DIA. S.S. CABLE
GALV. TURNBUCKLE
45°
AL-7 ARM LIGHTS (3 PL.)
RED & WHITE REFLECTORIZED SHEETING
BUMPER
44.000
96.750
16.000
ROADWAY SURFACE
R38.000 MAX
20.250
19.500
15.50 x 16.00 CONDUIT OPENING
MTG. PAD
1" DIA. HOLE FOR 3/4 ANCHOR BOLTS BY B&B.

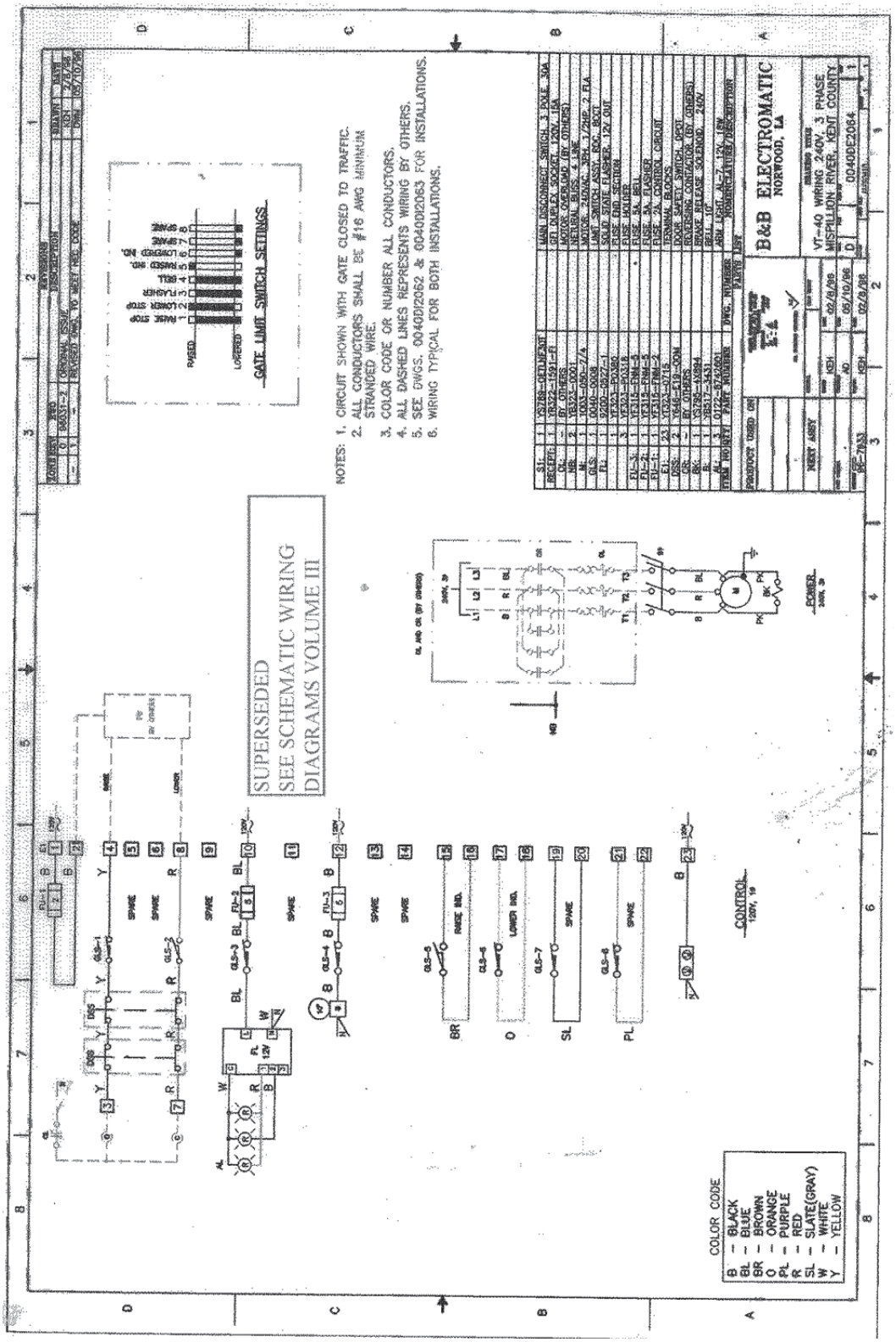
B&B ELECTROMATIC
NORWOOD, LA
VT-40 WIRING 240V, 3 PHASE
MISPILLION RIVER, KENT COUNTY
00409E2064
SUPERSEDED
SEE SCHEMATIC WIRING
DIAGRAMS VOLUME III
GATE LIMIT SWITCH SETTINGS
NOTES: 1. CIRCUIT SHOWN WITH GATE CLOSED TO TRAFFIC.
2. ALL CONDUCTORS SHALL BE #16 AWG MINIMUM STRANDED WIRE.
3. COLOR CODE OR NUMBER ALL CONDUCTORS.
4. ALL DASHED LINES REPRESENTS WIRING BY OTHERS.
5. SEE DWGS. 00409D2062 & 00409D2063 FOR INSTALLATIONS.
6. WIRING TYPICAL FOR BOTH INSTALLATIONS.
COLOR CODE
B – BLACK
BL – BLUE
BR – BROWN
O – ORANGE
PL – PURPLE
R – RED
SL – SLATE(GRAY)
W – WHITE
Y – YELLOW
CONTROL
120V, 1Φ
POWER
240V, 3Φ

11.8.2 BARRIER GATE SCHEMATIC – B&B ROADWAY VT-6801

B&B
ELECTROMATIC

Handbook

for

Gates & Barriers

FACTORY ORDER # 96-7933

SER # 4191

GATE: VT-6801

PROVIDED BY

B&B ROADWAY

PHONE: (888) 560-2060

WWW.BBROADWAY.COM

Quality Manufacturing since 1925

CONTENTS

Section 1: Installation, Adjustment, and Maintenance

Installation Instructions

Installation and Adjustment Illustration

VT-6801 Lubrication Instructions

Lubricant Chart

Section 2: Specifications and Assembly

VT-6801 Assembly Drawing

VT-6801 Specifications

Section 3: Accessories and Components

RDC Limit Switch Assembly

Universal Brake Assembly

AL-7 (12V) Arm Light

AW25-400 (12V) Solid State Flasher

Section 4: Drawings Pertaining to This Installation

VT- 6801 Installation Drawing (Drawing # 6801D0207, Rev. 1)

VT-6801 Wiring Diagram (Drawing # 6801DE0208, Rev. 2)

Notice: Failure to follow recommended installation, operation and maintenance procedures can result in damage to the gate and will void all warranties and responsibility for gates and related equipment. Please contact the factory for answers to any questions regarding the VT-6801 barrier gate.

Provided by

B&B ROADWAY

15191 Hwy 243, Russellville, Al 35654

Phone: (888) 560-2060

WWW.BBROADWAY.COM

Section 1

Installation, Adjustment, and Maintenance

VT-6801 BARRIER INSTALLATION INSTRUCTIONS

F.O. # 96-7933 SERIAL # 4191

***NOTE: Failure to install your gate properly could cause damage to the operating mechanism.**

1. Read the instructions and review the drawings thoroughly. Any part of these instructions you do not understand, contact the factory.
2. Check the anchor bolt locations and prepare the foundation for the gate operator and be sure to seal the bottom with duct seal. Housing must be tightened evenly.
3. Make sure the local power supply for the motor and control circuit are correct.
4. Using the handcrank, raise the main arm shaft 45 degrees to the vertical noting rotation arrow on brake drum.
5. Open main disconnect switch S1 and connect the power. Connect the control circuit if separate. If supplied from the motor circuit, check connections at the terminals.
6. "BUMP" test gate operator for correct motor rotation. Note motor rotation should match rotation arrow on brake drum. Reverse power leads if necessary to get proper motor rotation.
7. Run gate operator (without side arm channels, arms or counterweights) through several complete cycles. Leave gate operator in down position and open main disconnect switch.

***Note: This gate has been completely assembled, lubricated, and test run through 24 complete cycles under full power at the factory. If satisfactory operation is not displayed in step 10 recheck all electrical connections carefully. Consult factory if problem is not found.**

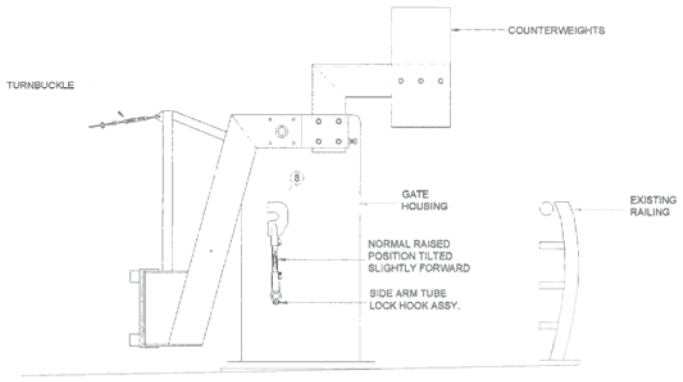

FIG. 1

8. *Fig. 1 - Choose correct side arm tube lock hook assembly **(8)** and install in position shown. Tighten bolts temporarily to hold in position.*

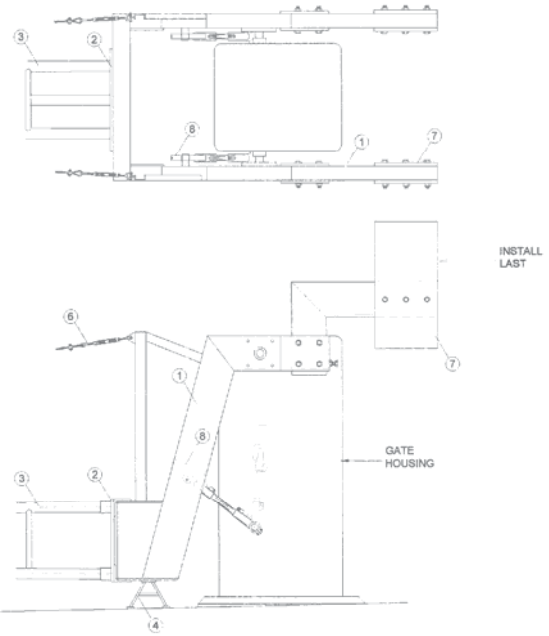

FIG. 2

9. *Fig. 2 - Install the side arm tubes* ***(1) Without counterweights****, be sure to leave all bolted connections loose. Next install the arm mounting crossmember* ***(2)*** *then choose proper aluminum arm* ***(3)*** *and move into position with gate housing.*

IMPORTANT: BE SURE TO SUPPORT ARM ON THE OUTER END* *(4)****.*

Next, remove aluminum clip at base plate on arm, making sure you do not loose restraining cable inside tubes. Mount arm using only the top and bottom bolts. The guy cables should be installed now ***(6)*** *using the gate installation drawing in each handbook, install the proper amount of counterweights* ***(7)*** *on each side of arm tube, (making sure the counterweights you installed match the installation drawings). Now tighten all bolted connections securely.*

10. Make sure rotation or motor with handcrank lowers or raises arm as indicated on brake drum.

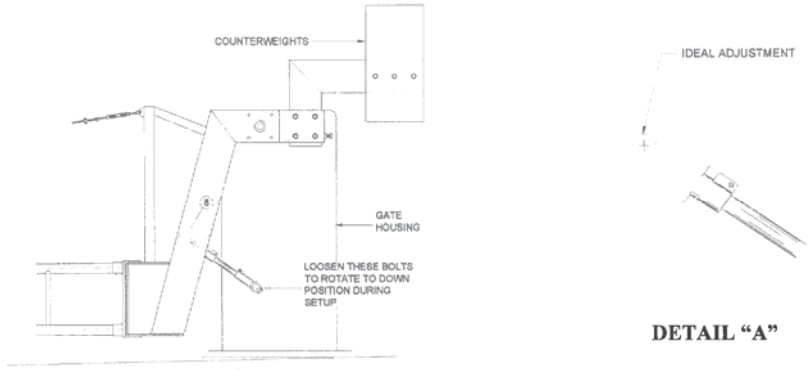

DETAIL "A"

FIG. 3

11. *Fig. 3 - Loosen the side arm tube lock hook assembly* ***(8)*** *and rotate to the down position. Tighten bolts securely. Hook should be on center of rod. If not, use adjustment rod to position hook in ideal location.* ***(See Detail "A")***

VT-6801 LUBRICATION INSTRUCTIONS

Note: Refer to "VT-6801 Basic Assembly" in Section 2 "Specifications and Assembly" for item numbers shown in instructions.

Lubricate mechanism every 12 months as follows:

Transmission (Item 2):

First gear drive box:

1. Open back door of housing (away from roadway).
2. Check oil by removing oil level plug located on vertical surface on left hand side of transmission (Item 2) a few inches below motor (Item 3).
    a. If oil is at or near plug, oil level is adequate – replace plug and go to next section.
    b. If oil is not visible, go to step 3.
3. Remove fill plug on top of first gear box.
4. Fill case to level plug (removed in step 1) with oil chosen per lubrication chart on following page.
5. Replace plugs.

Final drive gear box:

1. Check oil level by removing oil level plug located near bottom of transmission (Item 2). Plug will be facing you when standing at the back door.
    a. If oil is at or near plug, oil level is adequate – replace plug and go to next section.
    b. If oil is not visible, go to step 2.
2. Remove oil fill plug on top of final gear box.
3. Fill case to level plug (removed in step 1) with oil chosen per lubrication chart on following page.
4. Replace plugs.

Arm Shaft Bearing (Item 11):

1. Grease with Texaco Marfak 2 or equal.
2. Wipe off excess.

Connecting Rod Ends (Item 5,7, and 8):

1. Grease thread area with Texaco Marfak 2 or equal.
2. Wipe off excess.

Limit Switch Drive Chain (Item 14):

1. Spray chain with aerosol chain lube.
2. Wipe off excess.

RECOMMENDED LUBRICANTS

VT-40, VT-77, AND VT6801

WORM GEAR REDUCERS

AMBIENT TEMPERATURE	-30 TO 15°F	16 TO 50° F	51 TO 110° F	111 TO 165° F
MAX. OPERATING TEMP.	150° F	185° F	200° F	200° F
VISCOSITY @ 100° F, SUS		1919 TO 2346	2837 TO 3467	4171 TO 5098
COMPOUNDED WITH	3% TO 10% FATTY OR SYNTHETIC FATTY OILS OR MILD EP ADDITIVES			
AGMA LUBRICANT NO.		#7 COMPOUND	#8 COMPOUND	#8A COMPOUND
CITIES SERVICE CO.	CITGO EP COMP. 68	CITGO CYL. OIL 400-S	CITGO CYL. OIL 680-7	CITGO CYL. OIL 680-7
FISKE BROS. REFINING	APG-80	LUBRIPLATE CP GEAR OIL #7	LUBRIPLATE CP GEAR OIL #8	LUBRIPLATE CP GEAR OIL #8A
GULF OIL CORP.	SL-460 E.P.	TRANSGEAR EP 460	TRANSGEAR EP 680	TRANSGEAR EP 800
KEYSTONE DIV.	KSL-365	KSL-366	K-600	K-620
MOBIL OIL CORP.	SHC 634	MOBIL 600W	MOBIL 600W SUPER	MOBIL EXTRA HECIA
SHELL OIL CORP.	OMALA 68	OMALA 460	OMALA 680	OMALA 80
SUN OIL CORP.	SUNEP 1050	SUNEP 1110	SUNEP 1150	SUNOCO GEAR OIL 8 AC
TEXACO, INC.	MEROPA 68	VANGUARD CYL. OIL 460	HONOR CYL. OIL 680	650T CYL. OIL 1000
AMERICAN LUB., INC.		IND. GEAR OIL 140	AGMA #8 GEAR OIL	AGMA #8 GEAR OIL
CHEVRON	NL GEAR COMP. 100	NL GEAR COMP. 460	NL GEAR COMP. 680	NL GEAR COMPOUND 1500

FOR SPECIAL APPLICATIONS THAT INVOLVE SEVERE AMBIENT TEMPERATURE EXTREMES OR A SEASONAL OIL REQUIREMENT, USE MOBIL SCH. 626.

Section 2

Specifications and Assembly

VT-6801 AUTOMATIC SAFETY BARRIER SPECIFICATIONS

GENERAL

The safety gate shall be B&B type VT-6801.

The barrier shall be of the standard vertical to horizontal arm type, shall be equipped with an energy absorption cable assembly when used as a safety barrier, shall have a weatherproof housing and operating mechanism and shall include such controls, accessories and modifications as specified.

The automatic barrier and all related equipment except lamps and fuses shall be guaranteed against defective material and workmanship for a period of 2 years from date of shipment under B&B's standard warranty.

APPLICATIONS

The VT-6801 automatic safety barrier shall typically be used as a safety barrier. Common applications shall include vertical lift positive traffic safety barrier installations on moveable bridges and any heavy duty vertical lift positive traffic barrier installation where safety is an important consideration.

HOUSING

The housing shall be fabricated from .375" steel plate and shall be hot dip galvanized after fabrication. Formed, channel-shaped side plates shall be used to produce a strong configuration without welded corners. Cross members shall be heavy channels. After fabrication, the housing shall receive a finish coat by others.

Front and rear access doors shall be hung on bronze, full-cross hinges with stainless steel hinge pins. Hinges shall be of the slip-off type. Doors shall be held in place with padlockable door locks and shall be sealed with neoprene strip gaskets. (Padlock provided by others. Lock hasp shall accommodate padlock shank diameters of up to 3/8" diameter.) Top shall be held in place with corrosion resistant hex head bolts. Openings for arm shafts shall be equipped with "O" ring seals.

The housing base shall provide four 1.25" holes for mounting on the customer's foundation. Anchor bolts shall be not less than 1.00" diameter. Anchor bolts and template shall be furnished by B&B.

ARM

The arm shall be double rail aluminum. This arm shall be fabricated from a pair of high strength 6061-T6 aluminum tubes, spaced 11" apart in a vertical pane. Barrier arms shall be covered on both sides with 16" alternating red and white engineering grade reflectorized sheeting. Stainless steel truss cables and a spring loaded roadway bumper shall also be furnished.

A sidewalk arm shall be furnished when specified. Roadway and sidewalk arm lengths (Dimensions "A" and "B") shall be measured from the centerline of the barrier mechanism housing to the tip of the arm. For actual arm length, refer to drawing # 6801DI0207, Rev 1.

ARM MOUNTING CHANNELS

Arm mounting channels shall be carbon steel, hot dip galvanized. The roadway arm shaft shall be 69" above the base line of the barrier mechanism housing. Channels shall be offset to place the barrier arm centerline at 24" above the roadway. Counterweight offset shall be determined by the manufacturer to balance the barrier in both raised and lowered postions.

COUNTERWEIGHTS

Each gate shall be equipped with suitable hot dip galvanized steel counterweights of the sectional, bolt-on type.

ARM SHAFTS

The main arm shaft shall be mounted in heavy duty ball bearings and shall be lubricated from the inside. The main arm shaft shall be not less than 2.25" diameter. Shaft material shall be ASTM A311 Class B high strength, fatigue resistant steel.

TRANSMISSION

The transmission shall be a fully enclosed, all gear, direct drive unit running in an oil bath. The drive train shall not use belts or chains and shall be connected to the arm shaft with an adjustable connecting rod having self-aligning ball ends. The connecting rod shall be constructed of ASTM A311 Class B high strength, fatigue resistant steel.

During the opening and closing cycles, the gate arm shall begin with zero velocity and accelerate smoothly reaching maximum velocity at mid stroke (45 degrees). The arm shall then decelerate smoothly to zero velocity at full stroke (90 degrees) preventing bounce or whip of the arm. Operating time to open or close the gate shall be 16 seconds.

MOTOR

The motor voltage and phase shall be 240V, 3PH. Horsepower shall be 1 HP. For electrical information, refer to drawing # 6801DE0208, Rev. 2. The motor shall be of the flange mounted type, attached to the transmission case with not less than 4 bolts. To permit reversing movement of the arms at any point of travel, the motor shall be of the instant reversing type. A slip clutch shall be provided and set to allow momentary slippage to protect mechanism when the motor is instantly reversed or when the arm encounters an obstruction. Motor data shall appear in the manual.

BRAKING MECHANISM

A solenoid release, automatic motor brake shall be furnished as part of the gate drive mechanism. The brake shall automatically release when the handcrank is inserted to manually operate the gate.

HANDCRANK

A handcrank shall be included with each gate to operate the gate during power failure. Door safety switches shall automatically break the control circuit power when the door is opened for manual operation.

LIMIT SWITCH

The gate limit switch shall be a unit assembly containing 8 individual switches having one set of normally open and one set of normally closed contacts each. Contacts shall be totally enclosed and shall have UL rating of not less than 15 amperes at 220 volts AC. Limit switch shall be readily accessible and easily replaced with normal hand tools. Each individual switch shall be controlled by an independent cam, which shall be adjustable with a single set screw. The limit switch body, shafts and cams shall be of corrosion resistant non-ferrous materials.

SAFETY SWITCHES, TERMINAL BLOCKS AND WIRING

To protect operating and maintenance personnel from injury during service or installation, a manual disconnect switch shall be furnished, installed and fully wired in the main motor leads. Automatic disconnect switches shall be arranged to break the control circuit when either door is opened. Pressure type terminal blocks shall be provided and installed inside the housing on the roadway side. All control wires shall terminate on these blocks. Each terminal shall be clearly labeled and all conductors shall be color coded or numbered. The wiring diagram shall reflect such colors or numbers. No conductor shall be small then # 16 AWG stranded. All connections to screw type terminals shall have lugs. Conductors shall be encased in conduit wherever practical.

ENERGY ABSORPTION CAPACITY

The barrier shall be capable of absorbing the energy of a 5,000 pound vehicle traveling up to 50 mph.

ENERGY ABSORPTION CABLES

When a double rail aluminum arm is supplied, the barrier shall be equipped with two energy absorption cables, two 7/16" diameter cables shall be run, centered, inside the arm tubes. The cables shall be annealed to permit energy absorption by work hardening, providing a softer stop than a rigid type barrier.

CABLE ANCHORAGE SYSTEMS

The energy absorption cables shall be anchored at both the housing and the tip end of the barrier. The method of cable anchorage shall be:

1) **Side arm lock** – For anchoring the cable at the housing end, a side arm lock shall be provided. After the barrier arm is lowered, the side arm lock shall swing down, driven by an actuator, over a rod welded solidly in

the side arm. The side arm lock design shall transmit the cable force into the housing to minimize damage to the operating mechanism in the event of a crash. The side arm lock shall be used in conjunction with an end lock.

2) **End lock** – For anchoring the cable at the arm tip, a passive end lock shall be provided. The end lock design shall automatically engage the cable assembly when the barrier arm is lowered to the horizontal position. Neither mechanical linkages, actuators, nor arm tip mounted limit switches shall be required for alignment and engagement of the cable assembly. The end lock assembly shall facilitate locking the barrier to wall.

BARRIER MANUFACTURER REQUIREMENT

The manufacturer of safety gates and positive barriers shall have a minimum of 5 years experience in the manufacture of industrial gates and barriers and shall furnish replacement parts for a minimum of 10 years. Replacement parts shall normally be available within 24 hours.

VT-6801 VERTICAL AUTOMATIC BARRIER

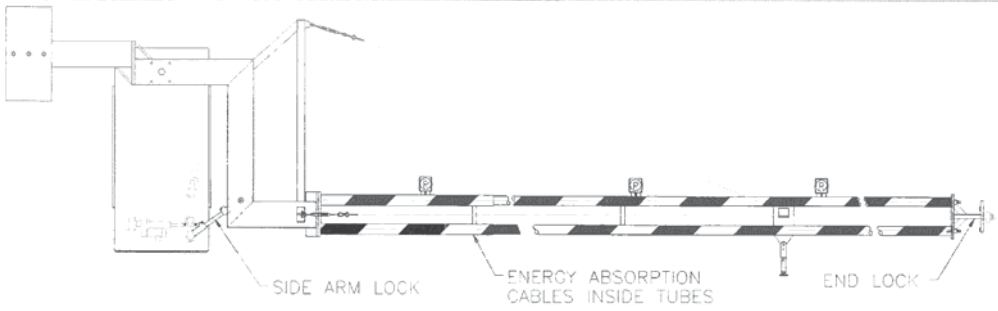

VT-6801 WITH OPTIONAL SIDE ARM LOCK, CABLES AND END LOCK

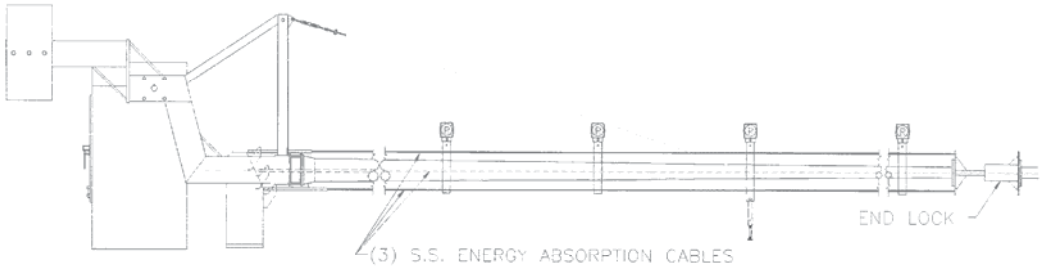

VT-6801 WITH OPTIONAL CABLE ANCHORAGE, CABLES AND END LOCK

DOUBLE ALUMINUM TUBE ARM

TAPERED ALUMINUM POLE ARM

B&B ELECTROMATIC

BUL 6801-0068 REV 10/92

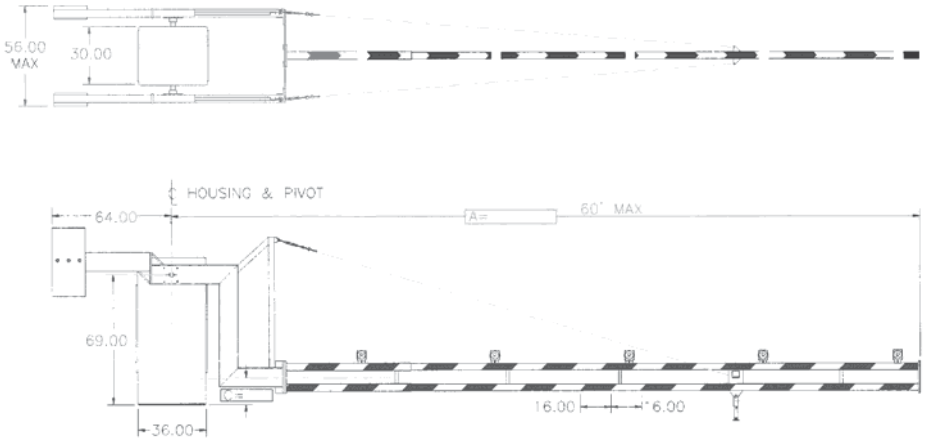

VT-6801 STANDARD DIMENSIONS

MTG DIM

PARTIAL LISTING OF AVAILABLE OPTIONS AND ACCESSORIES

Gong.....	A 12" motor driven gong with steel or bronze shell can be mounted on the operator housing, when specified.
Bell.....	A 6", 8" or 10" vibrating bell can be mounted on the operator housing, when specified.
Arm Lights.....	Several variations of 110V and 12V lights can be mounted on the gate arm.
Flasher.....	A heavy duty 2-circuit flasher is mounted in the operator housing, when specified. The flasher provides 2 alternately flashing circuits plus a steady burn circuit.
Heater & Thermostat	A heater and thermostat can be provided for cold climates with voltage and wattage as required.
Hi-Intensity Sheeting	Standard arm striping material is engineering grade reflectorized sheeting. Hi-intensity sheeting is available, when specified.
Housing Material.....	Galvanized steel is standard. Aluminum and stainless steel are available when specified.
Energy Cables.....	Annealed cables can be provided when specified to increase the energy absorption capacity of the barrier system.
Cable Anchorage.....	Several configurations of end locks and cable anchorage systems are available when specified to automatically anchor the energy absorption cables at each end in the close position.

B&B ELECTROMATIC

BUL 6801-0068 REV 10/92

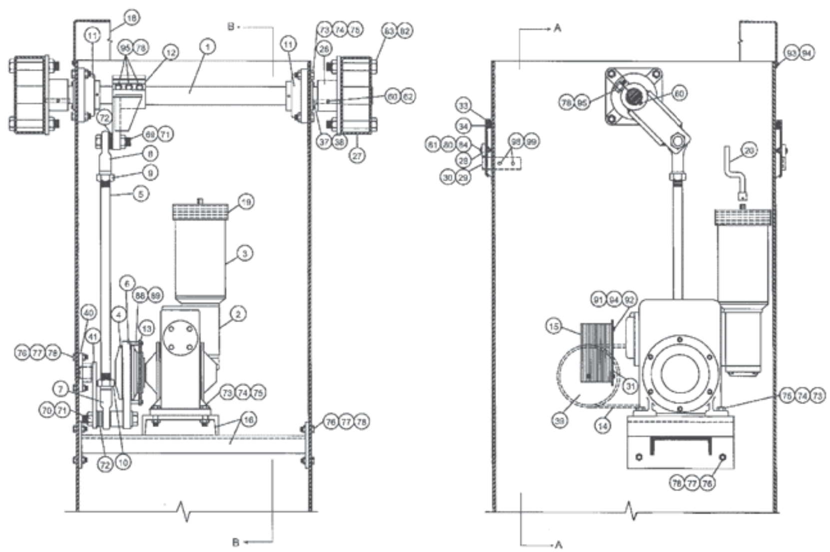

SECTION A-A

SECTION B-B

PARTIAL PARTS LIST

ITEM	QTY.	PART NO.	DESCRIPTION
1	1	6801-1038	SHAFT, MAIN ARM
2	1	X788-8-1000	SPEED REDUCER, C788X8MCTD-1000:1-56C-UL-R
3	1		MOTOR, 56C FRAME, H.P. Ø & VOLTAGE AS SPECIFIED
4	1	6801-700A-2	TORQUE LIMITER, C548X700A-2-1.155
5	1	6801-1026-1	CONNECTING ROD
6	1	6801-1027	TRANSMISSION CRANK
7	1	6801-7760	ROD END, LOWER, C776X KG-20-1Z
8	1	6801-7761	ROD END, UPPER, C776X KW-20-1Z
9	1	1200-0020NF	JAM NUT, 1.25-12
10	1	1200-0020NF/LH	JAM NUT, 1.25-12 L.H.
11	1	1700-0204	BEARING, MAIN ARM SHAFT, C489XFY-204
12	1	6801-1028-1	MAIN ARM CRANK
13	1	6801-0501	SPROCKET, LIMIT SWITCH DRIVE
14	1	0077-3500	CHAIN, LIMIT SWITCH DRIVE
15	1	0088-0012	LIMIT SWITCH, B&B 3MN1-8
16	1	6801-1029	TRANSMISSION MOUNTING CHANNEL ASSY.
17	1	6801-4389	HOUSING, GATE
18	1	6801-4393	COVER, HOUSING
19	1	0040-0003	UNIVERSAL BRAKE ASSEMBLY SEE DWG. #0040BA0023
20	1	6801-1030	HAND CRANK
26	2	0077-4445	HUB, SIDE ARM TUBE
27	2	HR041-03	TUBE, SIDE ARM
28	4	0077-1725	BRASS HINGE
29	4	0077-1732	HINGE PIN
30	4	0064-9194A	BUTT HINGE
31	1	0077-2817	LIMIT SWITCH MOUNTING BRACKET
33	2	6801-1757	DOOR, GATE HOUSING
34	2	0066-1002	GASKET, DOOR
37	2	0077-2815	SEAL PLATE, MAIN ARM SHAFT
38	2	2600-568-331	"O" RING, SEAL PLATE, C576XPRP-568-331
39	1	6801-0502	LIMIT SWITCH SPROCKET
40	1	6801-0506	AUX. XMSN. CRANK PILLOW BLOCK BRG.
41	1	6801-0505	AUX. XMSN. CRANK
60	3	2201-0825	1/2x1/2x2 FEATHER KEY
62	4	115-0610S-F	1/2-20x1 SOCKET SET SCREW
69	1	110-2040C-F	CONNECTING ROD BOLT 1.25-12x4 HEX BOLT
70	1	110-2060C-F	CONNECTING ROD BOLT, 1.25-12x6 HEX BOLT
71	2	1241-0020NF	CONNECTING ROD NUTS, 1.25-12 ESNA
72	6-8	1301-20W	WASHERS, 1.25 FLAT
73	24	110-1020C-F	5/8-18x2 HEX BOLT
74	24	1201-0010NF	5/8-18 HEX NUT
75	24	1351-10	5/8 SPLIT WASHER
76	12	110-0815C-F	1/2-20x1.5 HEX BOLT
77	12	1201-0008NF	1/2-20 HEX NUT
78	15	1351-08	1/2 SPLIT WASHER
80	8	1361-06	3/8 INTERNAL LOCK WASHER
81	6	110-1255C-C	3/4-10x5.5 HEX BOLT
82	8	110-1255C-C	3/4-10x5.5 HEX BOLT
83	8	1201-0012NC	3/4-10 HEX NUTS
84	8	118-0615C-C	3/8-16x1.5 CARRIAGE BOLT
88	4	110-0417C-C	1/4-20x1.75 HEX BOLT
89	4	6801-0503	SPACER, LIMIT SWITCH DRIVE SPROCKET
91	4	110-0407C-C	1/4-20x3/4 HEX BOLT
92	6	1202-0004NC	1/4-20 HEX NUTS
93	24	110-0405SSC	1/4-20x1/2 HEX BOLT S/S
94	24	1304-04W	1/4 FLAT WASHER ALUM.
95	3	110-0817C-F	1/2-20x1.75 SOCKET HD. CAP SCREW
96	8	110-0507C-C	5/16-18x3/4 HEX BOLT
99	8	1361-05	5/16 INTERNAL LOCK WASHER

Section 3

Accessories and Components

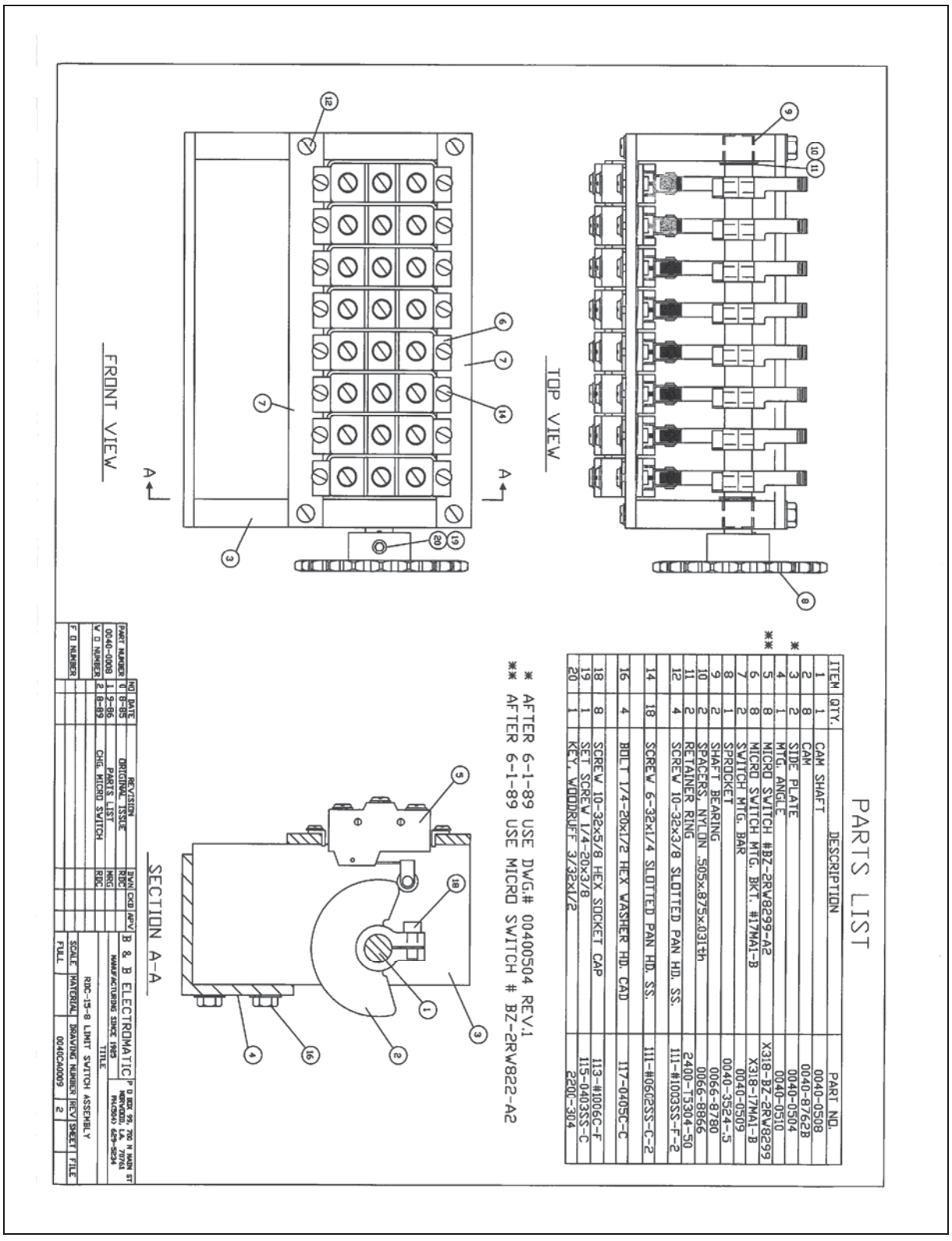
PARTS LIST
ITEM QTY. DESCRIPTION PART NO.
1 1 CAM SHAFT 0040-0508
2 8 CAM 0040-8762B
3 2 SIDE PLATE 0040-0504
4 1 MTG. ANGLE 0040-0510
5 8 MICRO SWITCH #BZ-2RW8299-A2 X318-BZ-2RW8299
6 8 MICRO SWITCH MTG. BKT. #17MA1-B X318-17MA1-B
7 2 SWITCH MTG. BAR 0040-0509
8 1 SPROCKET 0040-3524-.5
9 2 SHAFT BEARING 0066-8780
10 2 SPACERS, NYLON .505x.875x.031th 0066-8866
11 2 RETAINER RING 2400-T5304-50
12 4 SCREW 10-32x3/8 SLOTTED PAN HD. SS. 111-#1003SS-F-2
14 18 SCREW 6-32x1/4 SLOTTED PAN HD. SS. 111-#0602SS-C-2
15 4 BOLT 1/4-20x1/2 HEX WASHER HD. CAD 117-0405C-C
18 8 SCREW 10-32x5/8 HEX SOCKET CAP 113-#1006C-F
19 1 SET SCREW 1/4-20x3/8 115-0403SS-C
20 1 KEY, WOODRUFF 3/32x1/2 2206-304
* AFTER 6-1-89 USE DWG.# 00400504 REV.1
** AFTER 6-1-89 USE MICRO SWITCH # BZ-2RW822-A2
TOP VIEW
FRONT VIEW
SECTION A-A
B & B ELECTROMATIC
MANUFACTURING SINCE 1985
R2C-15-8 LIMIT SWITCH ASSEMBLY
00400A0069

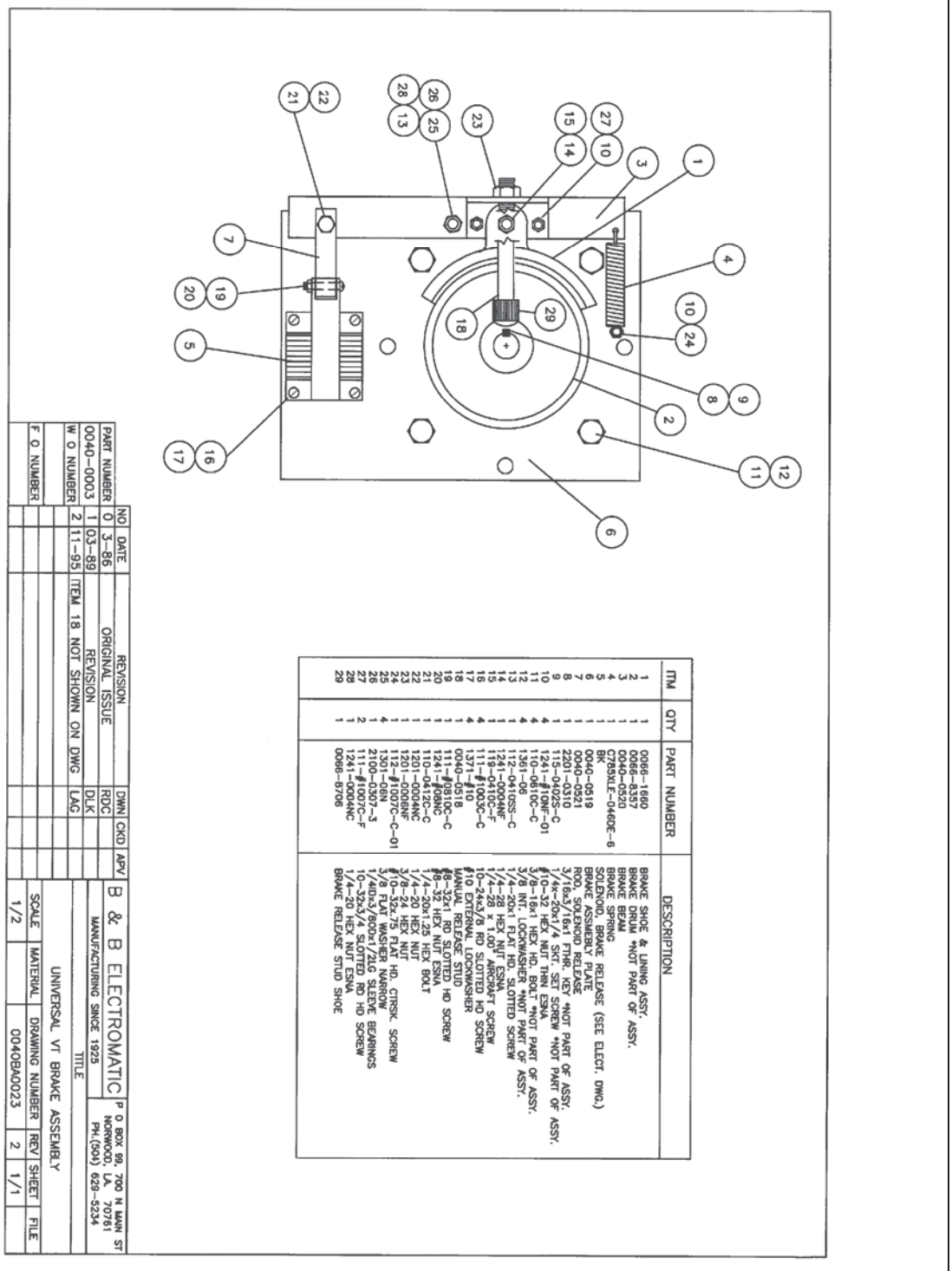

ITM	QTY	PART NUMBER	DESCRIPTION
1	1	0066-1660	BRAKE SHOE & LINING ASSY.
2	1	0066-8357	BRAKE DRUM *NOT PART OF ASSY.
3	1	0040-0520	BRAKE BEAM
4	1	C785XLE-0460E-6	BRAKE SPRING
5	1	BK	SOLENOID, BRAKE RELEASE (SEE ELECT. DWG.)
6	1	0040-0519	BRAKE ASSMEBLY PLATE
7	1	0040-0521	ROD, SOLENOID RELEASE
8	1	2201-0310	3/16x3/16x1 FTHR. KEY *NOT PART OF ASSY.
9	1	115-0402S-C	1/4x-20x1/4 SKT. SET SCREW *NOT PART OF ASSY.
10	4	1241-#10NF-01	#10-32 HEX NUT THIN ESNA
11	4	1101-0810C-C	3/8-16x1 HEX HD. BOLT *NOT PART OF ASSY.
12	4	1301-06N	#10 LOCKWASHER *NOT PART OF ASSY.
13	1	112-0410SS-C	1/4-20x.. FLAT HSHD SLOTTED SCREW
14	1	1241-0004NF	1/4-28 HEX NUT ESNA
15	1	119-0410C-F	1/4-28 x 1.00" AIRCRAFT SCREW
16	4	111-#1003C-C	10-24x3/8 RD SLOTTED HD SCREW
17	4	1371-#10	#10 EXTERNAL LOCKWASHER
18	1	0040-0518	MANUAL RELEASE STUD
19	1	111-#0810C-C	#8-32x1 RD SLOTTED HD SCREW
20	1	1241-0004NC	1/4-20x1.25 HEX NUT ESNA
21	1	110-0412C-C	1/4-20x1.25 FLEX BOLT
22	1	1201-0004NC	1/4-20 HEX NUT
23	1	1201-0006NF	3/8-24 HEX NUT
24	1	112-#1007C-C-01	#10-32x.75 FLAT HD. CTRSK. SCREW
25	4	1301-06N	3/8 FLAT WASHER NARROW
26	1	2100-0307-3	1/4IDx3/8ODx1/2LG SLEEVE BEARINGS
27	2	111-#1007C-F	10-32x3/4 SLOTTED RD HD SCREW
28	1	1241-0004NC	1/4-20 HEX NUT ESNA
29	1	0066-8706	BRAKE RELEASE STUD SHOE

NO	DATE	REVISION	DWN	CKD	APV
0	3-86	ORIGINAL ISSUE	RDC		
1	03-89	REVISION	DLK		
2	11-95	ITEM 18 NOT SHOWN ON DWG	LAG		

PART NUMBER 0040-0003
W O NUMBER
F O NUMBER

B & B ELECTROMATIC
MANUFACTURING SINCE 1925
P O BOX 99, 700 N MAIN ST
NORWOOD, LA. 70761
PH.(504) 629-5234

TITLE
UNIVERSAL VT BRAKE ASSEMBLY

SCALE	MATERIAL	DRAWING NUMBER	REV	SHEET	FILE
1/2		0040BA0023	2	1/1	

AL-7 Gate Arm Light Specifications

General
The lightweight warning light will be a moisture and corrosion proof unit. It will be designed for long life under normal operation conditions. Nearly the entire projected surface for the 2-way light will be utilized for light emission.

Housing
The AL-7 housing will be molded plastic. The lenses and housing shall achieve a thin provile and hold the weight of the light to a minimum. The dual lens configuration shall provide 2-way visibility. Each lens shall be held in place by 4 screws.

Lens
The lens color shall be red. Lenses shall be 7" diameter as specified.

Lamp
The optical system shall be designed for 12V, as specified. A 1000 hour, 21 candle power lamp (18W) shall be supplied with each light for 12V operation.

Weight
Approximate shipping weight for the AL-7 shall be 1 lb.

AW25-400 SERIES
WARNING LIGHT FLASHERS

GENERAL
The flasher will be a B&B ARMR model AW25-300. It will be a solid state flasher having two alternately flashing circuits and one steady burn circuit. The flasher will be designed for heavy duty applications including traffic control gates and barriers.

CONSTRUCTION
The flasher assembly will include mounting hardware as required, solid state flasher circuitry, a terminal block and a transformer when required. The flasher assembly will be fully wired at the factory. All components will be corrosion resistant. The entire transfer relay assembly, including all electronic circuitry, will be encapsulated in weatherproof, shock-resistant plastic enclosure to prevent possible damage from condensation or water buildup within the flasher.

FLASH RATE
The standard flash rate for the two alternately flashing circuits will be .50 second on & .50 second off. An additional steady burn circuit will also be provided.

INPUT VOLTAGE
The standard input voltage is 120VAC.

ORDERING INFORMATION
Specify AW25-400-12V for standard 120V input/12V output flasher.

SHIPPING WEIGHT
Approximate shipping weight is 3 pounds.

B & B ELECTROMATIC

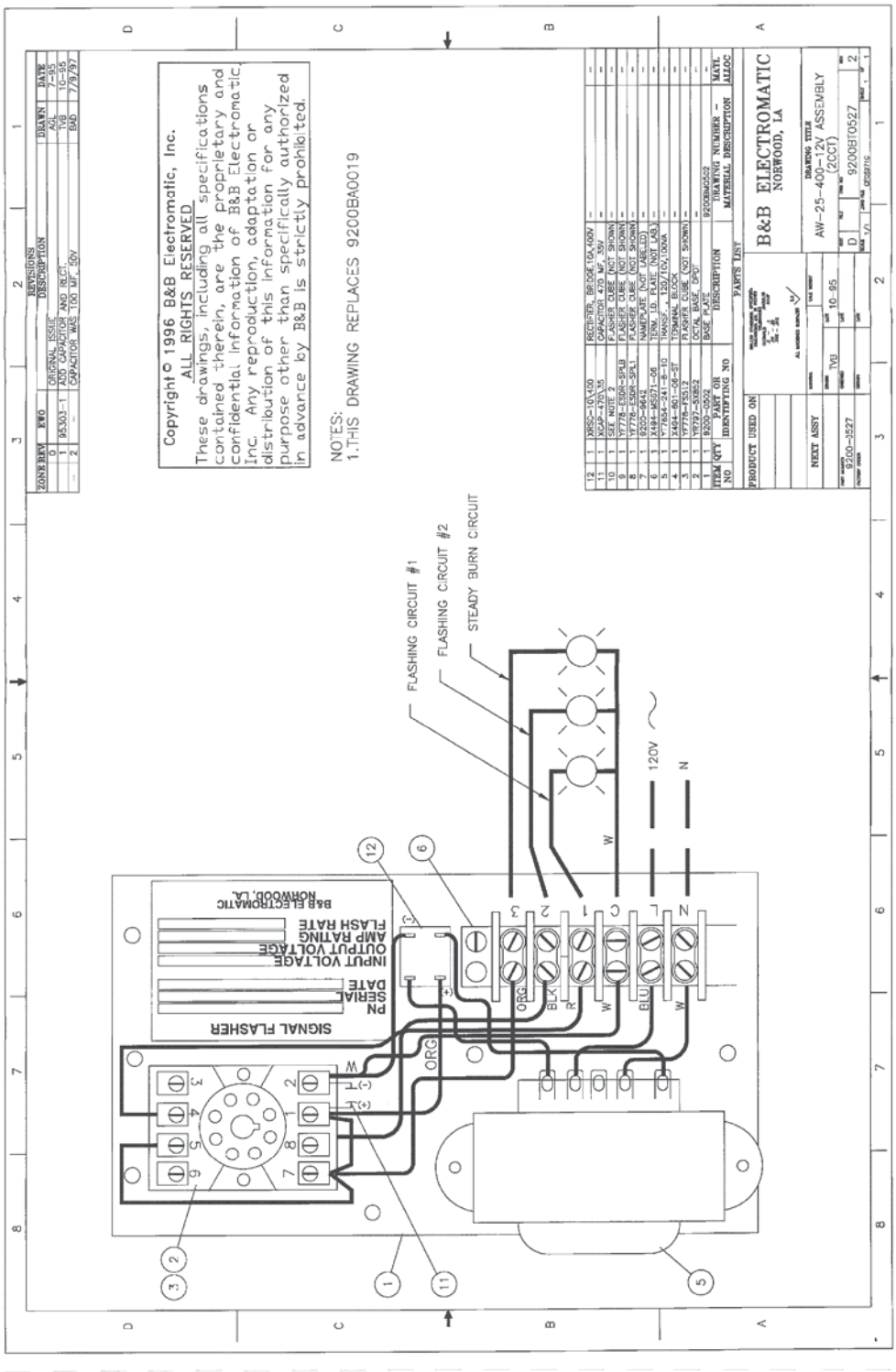
Copyright© 1996 B&B Electromatic, Inc.
ALL RIGHTS RESERVED
These drawings, including all specifications contained therein, are the proprietary and confidential information of B&B Electromatic, Inc. Any reproduction, adaptation or distribution of this information for any purpose other than specifically authorized in advance by B&B is strictly prohibited.
NOTES:
1.THIS DRAWING REPLACES 9200BA0019
B&B ELECTROMATIC
NORWOOD, LA
AW-25-400-12V ASSEMBLY (2CCT)
9200B10527
FLASHING CIRCUIT #1
FLASHING CIRCUIT #2
STEADY BURN CIRCUIT
120V
SIGNAL FLASHER
INPUT VOLTAGE
OUTPUT VOLTAGE
AMP RATING
FLASH RATE
SERIAL
DATE
PN

Section 4

Drawings Pertaining to This Installation

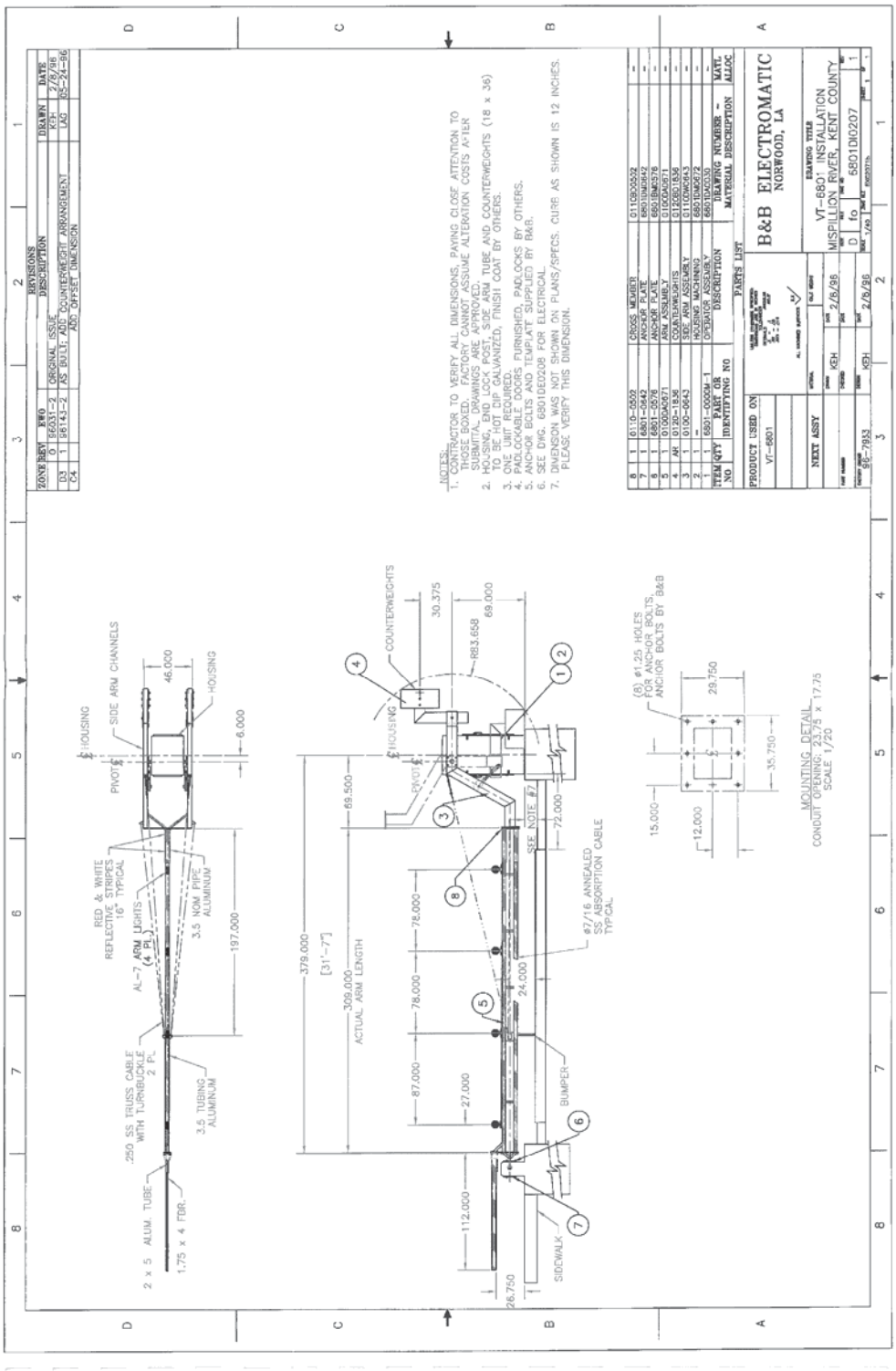
B&B ELECTROMATIC
NORWOOD, LA
VT-680 INSTALLATION
MISPILLION RIVER, KENT COUNTY
6801DI0207
NOTES:
1. CONTRACTOR TO VERIFY ALL DIMENSIONS, PAYING CLOSE ATTENTION TO THOSE BOXED. FACTORY CANNOT ASSUME ALTERATION COSTS AFTER SHIPMENT. ARE ASSEMBLED.
2. HOUSING, END LOCK POST, SIDE ARM TUBE AND COUNTERWEIGHTS (18 x 36) TO BE HOT DIP GALVANIZED, FINISH COAT BY OTHERS.
3. ONE UNIT REQUIRED.
4. PADLOCKABLE DOORS FURNISHED, PADLOCKS BY OTHERS.
5. ANCHOR BOLTS AND TEMPLATE SUPPLIED BY B&B.
6. SEE DRG. 6801DE0208 FOR ELECTRICAL.
7. DIMENSION WAS NOT SHOWN ON PLANS/SPECS. CURB AS SHOWN IS 12 INCHES. PLEASE VERIFY THIS DIMENSION.
PARTS LIST
MOUNTING DETAIL
CONDUIT OPENING: 23.75" x 17.75
SCALE 1/20
SIDEWALK
BUMPER
COUNTERWEIGHTS
HOUSING
PIVOT
SIDE ARM CHANNELS
RED & WHITE REFLECTIVE STRIPES 16" TYPICAL
AL-7 ARM LIGHTS (4 PL.)
.250 SS TRUSS CABLE WITH TURNBUCKLE 2 PL.
2 x 5 ALUM. TUBE
1.75 x 4 FDR.
3.5 TUBING ALUMINUM
3.5 NOM PIPE ALUMINUM
SEE NOTE #7
ø7/16 ANNEALED SS ABSORPTION CABLE TYPICAL
(8) ø1.25 HOLES FOR ANCHOR BOLTS; ANCHOR BOLTS BY B&B
ACTUAL ARM LENGTH
379.000
309.000
197.000
112.000
69.500
78.000
87.000
27.000
24.000
72.000
46.000
6.000
30.375
69.000
R83.658
26.750
29.750
35.750
15.000
12.000

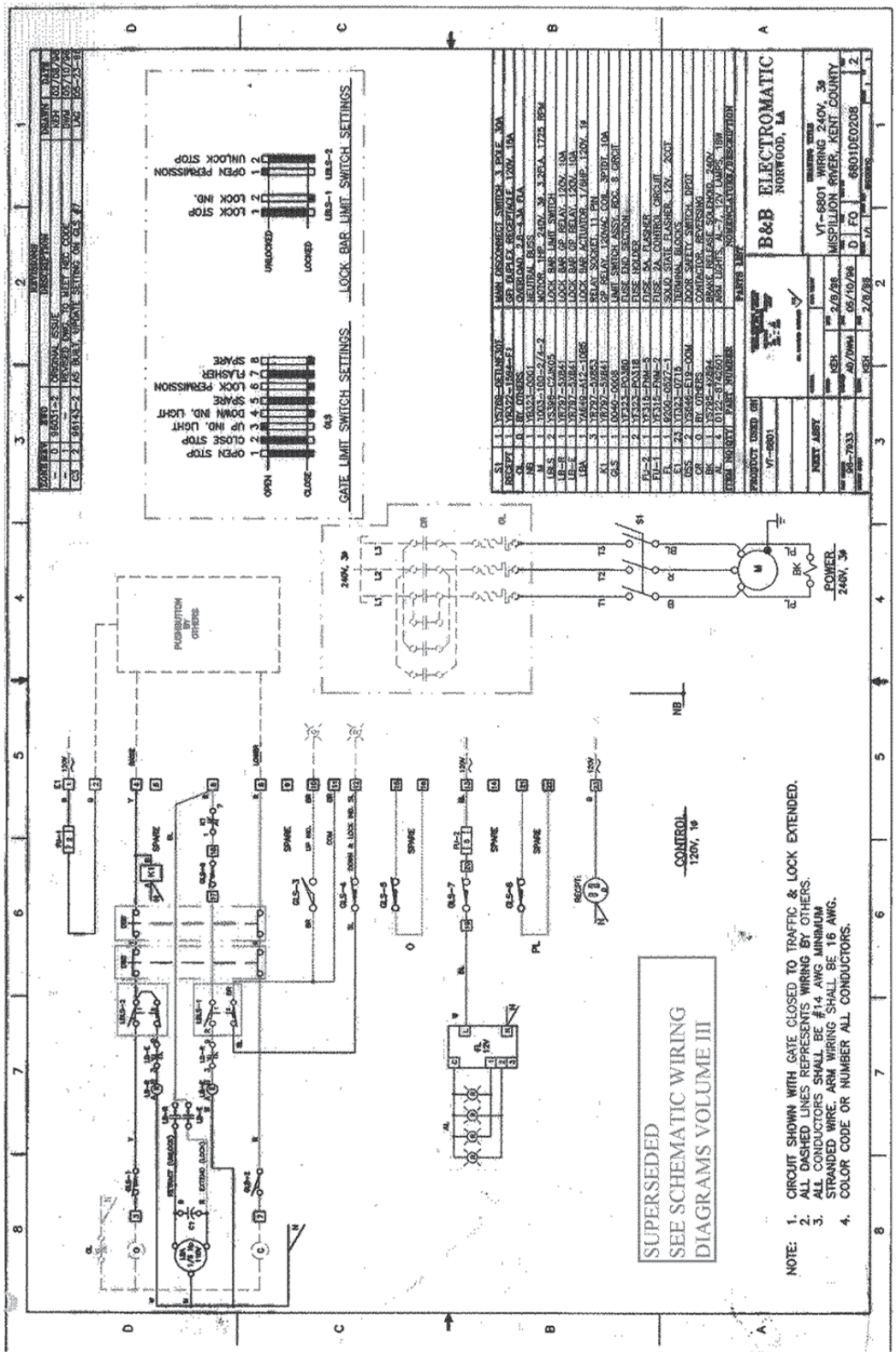
B&B ELECTROMATIC
NORWOOD, IA
VT-6801 WIRING 240V, 3Φ
MISPILLION RIVER, KENT COUNTY
68011DE0208
GATE LIMIT SWITCH SETTINGS
LOCK BAR LIMIT SWITCH SETTINGS
OPEN STOP
CLOSE STOP
UP IND. LIGHT
DOWN IND. LIGHT
LOCK PERMISSION
SPARE
FLASHER
SPARE
LOCK STOP
LOCK IND.
OPEN PERMISSION
UNLOCK STOP
POWER
240V, 3Φ
CONTROL
120V, 1Φ
SUPERSEDED
SEE SCHEMATIC WIRING
DIAGRAMS VOLUME III
NOTE:
1. CIRCUIT SHOWN WITH GATE CLOSED TO TRAFFIC & LOCK EXTENDED.
2. ALL DASHED LINES REPRESENTS WIRING BY OTHERS.
3. ALL CONDUCTORS SHALL BE #14 AWG MINIMUM STRANDED WIRE, ARM WIRING SHALL BE 16 AWG.
4. COLOR CODE OR NUMBER ALL CONDUCTORS.

11.9 ELECTRICAL EQUIPMENT MANUALS AND SPECIFICATIONS

11.9.1 SPAN POSITION ROTARY CAM LIMIT SWITCH – GENERAL ELECTRIC

GEH-3066B

ROTATING LIMIT SWITCHES
DS9446A, B, C

WARNING

Before any adjustments, servicing, parts replacement or any other act is performed requiring physical contact with the electrical working components or wiring of this equipment, the POWER SUPPLY MUST BE DISCONNECTED.

DESCRIPTION

GENERAL DESCRIPTION

This line of limit switches is of the rotating-cam type and is designed for continuous rotation in either the clockwise or counterclockwise direction. They may also be used for reversing service. Contacts are provided for controlling one to twelve independent circuits.

Each set of contacts is actuated by means of cams which are supported on a separate disk welded to the main shaft. As the shaft rotates, these cams cause the contacts to open and close. The sequence of operation of the contacts depends on the position of the various cams with respect to the shaft.

The operating speed should not exceed the maximum rating of the switch (60, 150 or 600 rpm, depending on the form).

The torque requirements of the switch are a maximum of 12 inch-pounds to open one contact. The contacts are forced open by direct cam action and are spring closed. This provides a fail-safe condition as an opening of the circuit is not dependent on springs or other parts that could possibly fail. Slow rotation applications of 60 rpm or less are furnished with snap-action contact blocks.

BASIC SWITCH OPERATION (See Fig. 1)

The construction of one complete unit is shown in Fig. 1. The contact unit (1) is a normally closed device and when the cam shaft (2) is rotated so that the contact arm roller (3) rides on the high portion of the operating cam (4), a switch unit plunger (5) is depressed, thus opening the contacts. As the cam continues to turn, the roller will drop down to the lower portion of the cam, thus allowing the spring-loaded switch unit plunger to return to its normal position.

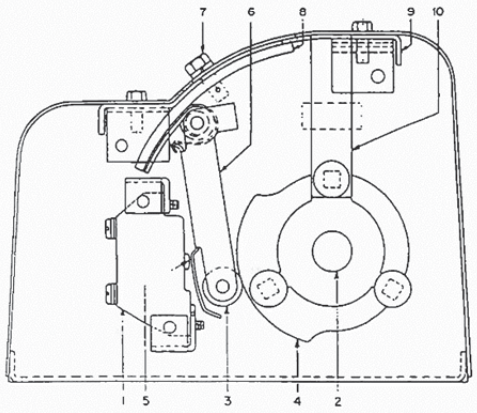

1 Contact unit
2 Cam shaft
3 Contact-arm roller
4 Operating cam
1 Contact unit
5 Switch-unit plunger
6 Contact arm
7 Vernier-adjustment locking screw
8 Vernier plate
9 Cam-follower bracket
7 Vernier-adjustment
10 Filler strips

Fig. 1. Cross-sectional view of a typical sheet-metal-enclosed rotating limit switch.

INSTALLATION

GENERAL

Conduit entrance is provided on both ends of the switch. The mounting feet are raised to minimize the effect of any distortion in the surface on which the switch is mounted. This also serves to prevent entrance of water into the bottom of the enclosure.

MOUNTING

Take reasonable care in aligning the switch shaft with the drive shaft. This will prevent excessive wear on the switch bearings and provide long trouble-free mechanical life. Self-aligning sealed ball bearings are provided which exclude dust and dirt, and provide a minimum of torque required to drive the shaft.

ELECTRICAL RATINGS

Carry Continuously ----------15 amps

AC "Make" Value ----------75 amps

AC Interrupting		DC Inductive	
Volts	Amperes	Volts	Amperes
110	75	125	1.8
220	50	250	0.7*
440	18	600	0.24
550	14		

* Snap-action unit is rated at 0.6 ampere.

CAM SETTING

SCORED CAMS (60, 150 rpm maximum)

The disc line-up on the cam shaft to which the cams are attached, have indicating marks at 15 degree intervals. The keyway slots in the ends of the shaft coincide with the zero position.

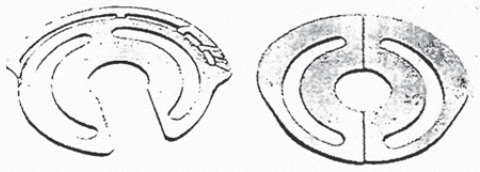

Fig. 2. Two types of cams used with DS9446 rotating limit switches.

After determining the number of degrees that the contacts should be opened, select the proper cam section from Table 1.

Use two cams of the same section number to obtain the desired range of settings given in the table for each circuit. The left-hand column of Table 1 indicates what cam sections are to be broken off to obtain a particular cam number.

For ease in snapping off the cam portions at the scored points it is recommended that an adjustable wrench be used. (See Fig. 3) Extra care should be used when snapping off cam portion No. 4 (leaving portions No. 5 and 6) to avoid breaking off cam portion No. 5. It is recommended that a second adjustable wrench be used.

TABLE 1
OPERATION AND ADJUSTMENT OF CAMS

Break Off Cam Section No.	Closed Range (in degrees)		Open Range (in degrees)	
	Min.	Max.	Min.	Max.
Full cam	10	175	185	350
No. 1	175	255	105	185
No. 1, 2	255	295	65	105
No. 1, 2, 3	285	315	45	65
No. 1, 2, 3, 4	315	325	35	45
No. 1, 2, 3, 4, 5	325	335	25	35

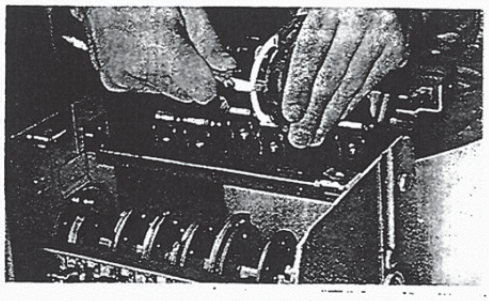

Fig. 3. Recommended method of snapping off cam sections.

Place the two scored cams on each cam holder and align the cams to give the approximate desired contact opening and closing. When placing the cams on the shaft, be sure that the cams are placed back-to-back with the markings of each cam facing outward. This will prevent an interrupted cam surface and also prevent the roller from striking a broken cam surface. Secure the cams to the cam holder at 180-degree intervals with the two bolts and lock washers furnished. Before tightening the bolts, finer cam adjustment can be made, if required, by lining up the start of the cam rise with respect to the cam holder indicating marks at the desired points of contact opening and closing.

NON-SCORED CAMS (600 rpm)

The maximum operating speed of this type of limit switch, consistent with long mechanical life, is 600 rpm. The only difference between this type and the 150 rpm switches previously described are the operating cams furnished. High-speed cams are not of the "break-away" type. They are 180-degree half cams which have a low-angle slope to prevent excessive wear of the cam roller at high speeds. They provide approximately 180-degree contact open and 180-degree contact closed operation per revolution of the cam shaft. For greater or lesser contact opening or closing positions, two circuits must be used to provide the contact settings. They must then be tied together electrically.

The cams can be positioned through 360 degrees with respect to the cam shaft to get the desired open or closed contact position. Fine setting can be obtained by using the vernier adjustment mechanism.

VERNIER ADJUSTMENT

The vernier-adjustment mechanism fulfills two purposes. It provides vernier or fine incremental adjustment of the switch open and closed contact positions, and allows for adjustment while the switch is actually rotating. The vernier-adjustment locking screw (7, Fig. 1) varies the relative position of the cam-follower roller with the operating cam. To adjust a specific circuit for desired open or closed contact position, loosen the vernier-adjustment locking screw (7) and slide it up or down to open or close contact sooner or later as desired.

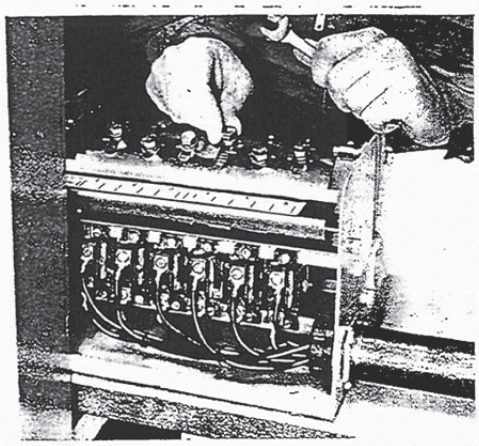

Fig. 4. Vernier adjustment of cam position.

The markings on the vernier plate (8) represent two-degree increments of adjustment. It should be noted that the vernier adjustment affects the opening and closing of the contact unit by the same amount. It is not possible to get individual incremental adjustment of the opening and closing position on any one circuit. If this is required, then the closing position must be set on another circuit. The two contact units involved can then be electrically tied together. After final settings are established, securely tighten the adjusting screw to prevent any accidental movement.

MAINTENANCE

No further lubrication beyond that provided at the factory is required on the DS9446 line of limit switches. The contact unit is a completely self-contained device which may be replaced by removing two metal screws and inserting a new unit. The silver contacts require no attention but must be replaced before all the silver is worn away. Filing or otherwise dressing the the contacts results only in loss of silver and reduction of the normal contact life.

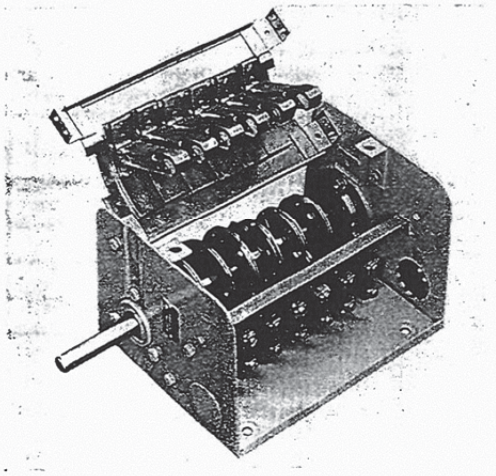

Fig. 5. View of cam-follower roller assembly and interior of switch.

Inspection of the cam-follower roller assembly can be made by removing the two forward bolts holding the cam-follower bracket, then swinging the entire bracket assembly back to provide access to the cam-follower parts.

SHEET-METAL-ENCLOSED SWITCHES

The following procedures should be followed when replacing bearings, cam shaft or reversing the cam-shaft extension. (See Fig. 1.)

Remove the cam-follower bracket (9), then remove the six bolts holding the bearing flangettes. After removing the filler strips (10), loosen the thrust collars on

each end of the shaft and slide them inward along the shaft. Lift the entire camshaft assembly upward and out of the switch frame.

After reversing or replacing the parts, reassemble the filler strips (10) and the six bolts holding the flangettes. Visually center the flangettes with the hole in the frame.

Reassemble and tighten the cam-follower bracket. Measure for proper shaft-extension length and then position and tighten the thrust collars.

The final step in the reassembly procedure is to reset the desired contact sequence by adjusting the cam and vernier adjustment.

WATERTIGHT-ENCLOSED SWITCHES

The following procedures should be followed when replacing bearings, camshaft or reversing the camshaft extension (See Fig. 6).

Remove the cast cover. Remove both seal plates (1 and 2), the cam-follower bracket (3), and the four bolts (4) which secure the internal switch from the cast box. Remove the internal switch from the cast box.

Use the procedure outlined under "SHEET-METAL-ENCLOSED SWITCHES" to replace parts or reverse the camshaft with one exception. Loosen the flangette on the shaft-extension side only.

Replace the internal switch in the cast box with the shaft extension protruding from the desired side and replace and tighten the four mounting bolts which secure the internal switch to the box. Replace and secure the seal plates.

Visually center the shaft in the seal-plate hole and tighten the internal flangette. Reassemble and tighten the cam-follower bracket. Measure for proper shaft-extension length and position and tighten the thrust collars.

The final step in the reassembly procedure is to reset the desired contact sequence by adjusting the cam and vernier adjustment.

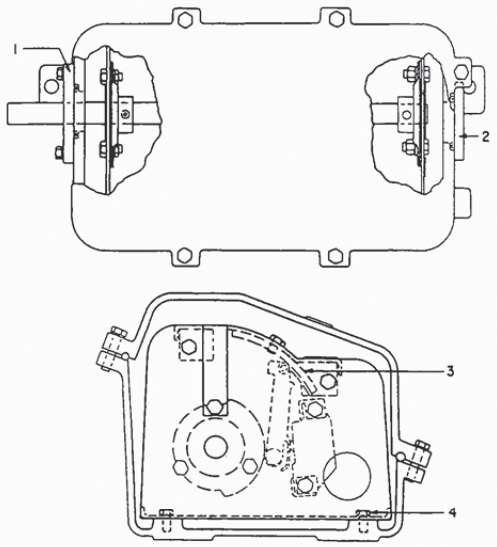

1 Seal plate
2 Seal plate
3 Cam-follower bracket
4 Hold-down bolts

Fig. 6. Cutaway and cross-sectional views of a typical watertight-enclosed rotating limit switch

These instructions do not purport to cover all details or variations in equipment, nor to provide for every possible contingency to be met during installation, operation, and maintenance. Should further information be desired or should particular problems arise that are not covered sufficiently for the purchaser's purpose, the matter should be referred to GE Drive Systems, Salem, Virginia, U.S.A.

CHAPTER 12 - CONTACTS, TELEPHONE NUMBERS AND EMERGENCY CALL OUTS

12.1 CONTACTS AND TELEPHONE NUMBERS

Delaware State Police.....302.739.5901

United States Coast Guard.....757.398.6390

Delaware Department of Transportation (Maintenance).....302.326.4460

Delaware Department of Transportation (General)..... 302.760.2080

Fire Department 302.422.8001

NOAA (National Oceanic and Atmospheric Administration).....206.526.6317

12.2 EMERGENCY CALL OUT PROCEDURES

During emergency situations, the following procedures and protocols should be followed.

12.2.1 MALFUNCTION (FAILURE TO OPEN OR CLOSE)

During maintenance inspection or marine vessel openings, if the bridge cannot be opened or closed contact order should be as follows:

1) Area 20 Supervisor
2) Area 20 Foreman
3) Delaware State Police (only if traffic needs to be detoured)

12.2.2 DAMAGE TO BRIDGE FROM VESSEL OR VEHICLE

When damage to the bridge is observed or detected, contact order should be as follows:

12.2.2.1 MINOR DAMAGE

When damage will not hamper normal bridge operation, perform the following:

1) Log in log book
2) Notify Area 20 Supervisor or Foreman at earliest convenience.

12.2.2.2 MAJOR DAMAGE

When damage may hamper normal bridge operation, perform the following:

1) Notify Area 20 Supervisor or Foreman immediately.
2) Notify Delaware State Police
3) Log in log book

12.2.3 VEHICLE ACCIDENT OR DISABLED VEHICLE ON BRIDGE

When an accident occurs on the bridge or a disabled vehicle is observed, perform the following:

1) If accident, check about possible injuries, notify Delaware State Police.
2) DO NOT operate the bridge if an accident or disabled vehicle is within the operational area of the bridge.

3) If it is an injury accident before or after operational area of the bridge contact emergency services (911) at the scene before proceeding with an opening.

4) If unable to open the bridge due to an accident or disabled vehicle notify any waiting vessels and the Coast Guard.

12.2.4 MARINE RELATED EMERGENCIES

For a marine related accident or emergency contact the following:

1) US Coast Guard

2) Area 20 Supervisor or Foreman

12.2.5 WEATHER RELATED EMERGENCIES

For weather related accident or emergencies contact the following:

1) Delaware State Police and NOAA

2) Area 20 Supervisor or Foreman

Bridge #3-151

Front Street Bridge
over Nanticoke River

Prepared by:

Hardesty & Hanover

MAINTENANCE MANUAL – VOLUME II

DelDOT

Prepared for:

AECOM

Published: September 2014

Updated: July 2018 (Replacement Chapter 8)

TABLE OF CONTENTS

CHAPTER 6 - PURPOSE AND SCOPE OF MAINTENANCE MANUAL 6-1
6.1 PURPOSE OF MAINTENANCE MANUAL 6-1
6.2 LAYOUT OF MAINTENANCE MANUAL 6-1
6.3 REFERENCES 6-1

CHAPTER 7 - MAINTENANCE POLICIES 7-1
7.1 INTRODUCTION 7-1
7.2 MAINTENANCE TECHNICIAN TRAINING 7-1
7.2.1 BRIDGE LAYOUT 7-1
7.2.2 BRIDGE OPERATION 7-1
7.2.3 TROUBLESHOOTING AND EMERGENCY SITUATIONS 7-1
7.2.4 BRIDGE MAINTENANCE 7-1
7.3 LOCKOUT/TAGOUT PROCEDURE 7-1
7.4 PERSONAL PROTECTIVE EQUIPMENT 7-1
7.5 MAINTENANCE ACCESS 7-1
7.5.1 CONTROL ROOM 7-2
7.5.2 BASCULE PIER 7-2
7.5.3 REST PIER 7-2
7.5.4 FENDERS 7-2
7.5.5 ROADWAY 7-2
7.6 MAINTENANCE OPENINGS 7-2
7.7 MAINTENANCE AND BRIDGE OPERATORS DURING OPENINGS 7-3
7.8 MAINTENANCE FORMS 7-3
7.9 MAINTENANCE REPORTING PROCEDURES 7-3

CHAPTER 8 - ELECTRICAL AND MECHANICAL MAINTENANCE 8-1
8.1 LEAF SUPPORT SYSTEM AND COUNTERWEIGHT 8-1
8.1.1 TRUNNION BEARINGS 8-1
8.1.2 LIVE LOAD BEARINGS 8-2
8.1.3 COUNTERWEIGHT 8-3
8.2 SPAN DRIVE MACHINERY 8-3
8.2.1 AUXILIARY AIR DRIVE SYSTEM 8-4
8.2.2 MOTOR BRAKE AND MACHINERY BRAKE 8-5
8.2.3 COUPLINGS 8-7

8.2.4 BEARINGS 8-9
8.2.5 OPEN GEARING 8-10
8.3 CENTERING EQUIPMENT 8-12
8.3.1 CENTERING GUIDES 8-12
8.4 TRAFFIC GATES 8-13
8.4.1 WARNING GATES 8-13
8.5 ELECTRICAL POWER SYSTEMS 8-14
8.5.1 CONTROL ENCLOSURE 8-14
8.5.2 SECONDARY RESISTORS 8-15
8.5.3 PANELBOARDS 8-15
8.5.4 PORTABLE GENERATOR CORD SET 8-16
8.5.5 SAFETY (MANUAL TRANSFER) AND DISCONNECT SWITCHES 8-17
8.5.6 ELECTRICAL CONDUCTORS 8-18
8.5.7 DROOP CABLES 8-19
8.5.8 SUBMARINE CABLES 8-19
8.6 LIGHTING SYSTEMS 8-20
8.6.1 NAVIGATION LIGHTS 8-20
8.6.2 INTERIOR/EXTERIOR LIGHTS 8-21
8.6.3 TRAFFIC AND ADVANCED WARNING SIGNALS 8-21
8.6.4 TRAFFIC GATE ARM LIGHTS 8-22
8.7 ELECTRIC MOTORS 8-23
8.7.1 MAIN LEAF (SPAN) MOTOR 8-23
8.7.2 WARNING GATE MOTORS 8-24
8.8 CONTROL SYSTEM 8-25
8.8.1 CONTROL CONSOLE 8-25
8.8.2 LIMIT SWITCHES 8-27
8.9 MISCELLANEOUS EQUIPMENT 8-28
8.9.1 ELECTRIC HORN 8-28
8.9.2 HEATING AND AIR CONDITIONING SYSTEMS 8-29
8.9.3 SUMP PUMP 8-30
8.9.4 HOT WATER HEATER 8-30
8.9.5 HEAT TRACE 8-31
8.9.6 PIT 8-31
8.9.7 CONDUIT SYSTEMS 8-32

CHAPTER 9 - PHOTOS & TABLE OF CONTENTS 9-1

9.1 LEAF SUPPORT SYSTEM AND COUNTERWEIGHT 9-4
9.2 SPAN DRIVE MACHINERY....9-7
9.3 CENTERING GUIDES....9-13
9.4 TRAFFIC CONTROL DEVICES AND NAVIGATION LIGHTS....9-14
9.5 POWER DISTRIBUTION EQUIPMENT....9-19
9.6 CONTROL EQUIPMENT....9-21
9.7 MISCELLANEOUS EQUIPMENT....9-29

CHAPTER 10 - MAINTENANCE FORMS & TABLE OF CONTENTS 10-1
10.1 MECHANICAL AND ELECTRICAL MAINTENANCE CHECKLISTS 10-1
10.1.1 FORM 10-1 – LEAF SUPPORT SYSTEM AND COUNTERWEIGHT 10-2
10.1.2 FORM 10-2 – SPAN DRIVE MACHINERY....10-3
10.1.3 FORM 10-3 – CENTERING EQUIPMENT....10-5
10.1.4 FORM 10-4 – TRAFFIC GATES....10-6
10.1.5 FORM 10-5 – ELECTRICAL POWER SYSTEMS 10-7
10.1.6 FORM 10-6 – LIGHTING SYSTEMS....10-9
10.1.7 FORM 10-7 – ELECTRIC MOTORS....10-10
10.1.8 FORM 10-8 – CONTROL SYSTEM....10-11
10.1.9 FORM 10-9 – MISCELLANEOUS EQUIPMENT 10-12
10.1.10 FORM 10-10 – PORTABLE GENERATOR OPERATION 10-14

CHAPTER 11 - SUPPLEMENTAL INFORMATION AND SPECIFICATIONS & TABLE OF CONTENTS....11-1
11.1 COMPONENT IDENTIFICATION CHARTS AND DIAGRAMS....11-3
11.2 MACHINERY LUBRICATION SCHEMATICS....11-5
11.3 MACHINERY LUBRICATION PLANNING TABLES 11-7
11.3.1 MACHINERY LUBRICATION SCHEDULE....11-7
11.3.2 LUBRICANT AND MATERIAL INVENTORY FORM 11-12
11.4 BRIDGE MAINTENANCE PERFORMANCE STANDARDS (PLATES)....11-13
11.4.1 SLEEVE BEARING AND TRUNNION BEARING LUBRICATION....11-13
11.4.2 MOTOR BEARING LUBRICATION 11-14
11.4.3 MOTOR AND MACHINERY BRAKE MAINTENANCE 11-15
11.4.4 COUPLING LUBRICATION....11-17
11.4.5 OPEN GEARING LUBRICATION....11-19
11.4.6 ROLLER BEARING LUBRICATION 11-20
11.5 MATERIAL DATA SHEETS....11-22
11.5.1 MOBIL MOBILUX EP-0, EP-2 11-22
11.5.2 MOBIL MOBILTAC 325 NC....11-41

11.5.3 MOBIL MOBILGEAR 600 XP 220 11-55
11.5.4 MOBIL UNIREX N2 11-76
11.5.5 MOBIL MOBILGREASE XHP 222 11-86
11.5.6 INGERSOLL RAND NO. 50 OIL 11-97
11.5.7 CRC TAC 2 ADHESIVE CHAIN LUBRICANT 11-100
11.5.8 MOBIL SHC 629 11-109
11.5.9 MOBIL 600W CYLINDER OIL 11-122
11.5.10 MOBIL DTE 21 11-132
11.5.11 WD-40 SPECIALIST MACHINE AND ENGINE DEGREASER 11-145
11.5.12 CAIG LABORATORIES DEOXIT D5 CONTACT CLEANER 11-149
11.5.13 3-IN-ONE MULTI-PURPOSE OIL 11-157
11.6 COMPONENT MANUFACTURER LIST 11-161
11.7 MECHANICAL EQUIPMENT MANUALS AND SPECIFICATIONS 11-165
11.7.1 AUXILIARY AIR MOTOR – INGERSOLL RAND 34RB029 11-165
11.7.2 AUXILIARY AIR MOTOR FILTER – WILKERSON F30 11-175
11.7.3 AUXILIARY AIR MOTOR REGULATOR – WILKERSON R30 11-177
11.7.4 AUXILIARY AIR MOTOR LUBRICATOR – WILKERSON L30 ECONOMIST 11-179
11.7.5 MOTOR BRAKE – MONDEL MBT/E-ED23/5S 11-181
11.7.6 MACHINERY BRAKE – MONDEL 13MST/E-ED80/6S 11-214
11.7.7 AUXILIARY AIR MOTOR DISCONNECT COUPLING – KOPFLEX TYPE FCC 11-247
11.7.8 GEAR COUPLING – FALK TYPE G10, SIZE 1020 11-251
11.7.9 TAPERED ROLLER BEARINGS – SEALMASTER RPB BEARINGS 11-259
11.7.10 SPHERICAL ROLLER BEARINGS – SEALMASTER SLEEVLOC BEARINGS 11-261
11.7.11 SPHERICAL ROLLER BEARING – TIMKEN BEARINGS 11-264
11.8 TRAFFIC CONTROL EQUIPMENT MANUALS AND SPECIFICATIONS 11-277
11.8.1 WARNING GATE – B&B ROADWAY VW-5 11-277
11.8.1 WARNING GATE – B&B ROADWAY VT-40 11-299
11.9 ELECTRICAL EQUIPMENT MANUALS AND SPECIFICATIONS 11-303
11.9.1 SPAN MOTOR – REULAND ELECTRIC 11-303
11.9.2 AC CONTACTOR – SQUARE D CLASS 8503 TYPE MXDO-1 11-305
11.9.3 AIR CONDITIONING UNIT – AMANA PTAC 11-312
11.10 LOCKOUT/TAGOUT PROCEDURE FOR FRONT STREET 11-332
11.10.1 PURPOSE 11-332
11.10.2 RESPONSIBILITY 11-332
11.10.3 PREPARATION FOR LOCKOUT OF DE-ENERGIZED EQUIPMENT 11-332

11.10.4 INDIVIDUAL EMPLOYEE CONTROL PROCEDURE 11-333
11.10.5 SIMPLE LOCKOUT 11-333
11.10.6 COMPLEX LOCKOUT 11-333
11.10.7 SEQUENCE OF LOCKOUT SYSTEM PROCEDURES 11-334
11.10.8 RESTORING THE EQUIPMENT TO NORMAL CONDITION 11-335
11.10.9 UNATTENDED LOCKOUTS 11-336
11.10.10 TYPES OF DISCONNECTS 11-336
11.10.11 SIGNAGE 11-337
11.10.12 DISCIPLINE 11-337
11.10.13 EQUIPMENT 11-337
11.10.14 REVIEW 11-338
11.10.15 ASSOCIATED DOCUMENTS 11-338
11.10.16 LOCKOUT PROCEDURE TRAINING 11-338
11.10.17 LOCKOUT/TAGOUT LOG SHEET 11-339
11.10.18 LOCKOUT/TAGOUT INSTRUCTION FORM 11-340

CHAPTER 12 - CONTACTS, TELEPHONE NUMBERS, AND EMERGENCY CALL OUTS 12-1
12.1 CONTACTS AND TELEPHONE NUMBERS 12-1
12.2 EMERGENCY CALL OUT PROCEDURES 12-1
12.2.1 MALFUNCTION (FAILURE TO OPEN OR CLOSE) 12-1
12.2.2 DAMAGE TO BRIDGE FROM VESSEL OR VEHICLE 12-1
12.2.3 VEHICLE ACCIDENT OR DISABLED VEHICLE ON BRIDGE 12-2
12.2.4 MARINE RELATED EMERGENCIES 12-2
12.2.5 WEATHER RELATED EMERGENCIES 12-2

Refer to Volume 1 – Operations for Chapters 1-5

Refer to Volume 3 – As-Built Drawings for Chapters 13-14

CHAPTER 6 - PURPOSE AND SCOPE OF MAINTENANCE MANUAL

6.1 PURPOSE OF MAINTENANCE MANUAL

Schedules and procedures are established for the inspection, replacement, cleaning, adjustment, and general maintenance of the mechanical and electrical equipment used to operate the bridge. The frequency of maintenance is based on recommendations by the manufacturers and guidelines established by AASHTO Movable Bridge Inspection, Evaluation and Maintenance Manual. All maintenance forms and activities are to be recorded and maintained by the Maintenance Supervisor.

6.2 LAYOUT OF MAINTENANCE MANUAL

The maintenance section is divided into subsections that group equipment by type. Each subsection describes an equipment item, the number of such items, location, the maintenance frequency, and describes maintenance procedures. Photo references are included where applicable. Chapter 10 Maintenance Forms are identified for the specific equipment.

6.3 REFERENCES

- AASHTO Movable Highway Bridge Design Specifications
- AASHTO Movable Bridge Inspection, Evaluation, and Maintenance Manual
- Manual on Uniform Traffic Control Devises (MUTCD)
- Drawbridge Operation Regulations 33CFR Part 117
- National Electrical Code (NEC)
- National Fire Protection Association (NFPA) 70E - Standard for Electrical Safety in the Workplace

THIS PAGE INTENTIONALLY LEFT BLANK

CHAPTER 7 - MAINTENANCE POLICIES

7.1 INTRODUCTION

This chapter describes minimum qualifications for maintenance technicians and provides detailed information for maintenance personnel to properly maintain the bridge in accordance with AASHTO guidelines.

7.2 MAINTENANCE TECHNICIAN TRAINING

Maintenance technicians must be familiar with the layout of the bridge and all associated electrical and mechanical equipment and must be trained in the following areas. Training shall be scheduled and conducted by Delaware Department of Transportation.

7.2.1 BRIDGE LAYOUT

Each maintenance technician must be able to locate any piece of equipment of the bridge by name and designation (i.e. span drive motor). He or she must have an in-depth understanding of the electrical and mechanical systems and understand the functions of these systems.

7.2.2 BRIDGE OPERATION

Maintenance technicians must be able to operate the bridge and all ancillary devices in a safe manner as described herein. Each maintenance technician must be trained on all modes of operation and have a basic understanding of operation of the bridge.

7.2.3 TROUBLESHOOTING AND EMERGENCY SITUATIONS

Maintenance personnel must be trained in emergency situations and be capable to perform troubleshooting as described in this manual. In the event of an emergency, the operator must have knowledge of proper procedures describes herein.

7.2.4 BRIDGE MAINTENANCE

Maintenance technicians must be trained in bridge maintenance activities as specified herein.

7.3 LOCKOUT/TAGOUT PROCEDURE

No electrical apparatus or electrically driven apparatus should be worked on while energized. The appropriate circuit breakers and/or disconnect handles for the equipment being worked on shall be locked in the open (off) position and tagged. The appropriate, immediate upstream circuit breaker or protective device should always be used to electrically isolate the equipment. A sign should be posted on the control desk to identify that the devices are tagged out of service. A contact person shall be identified on the tag. All lock-out and tag-out procedures shall meet the requirements of NFPA 70E. Use a voltage meter to check for stray voltage prior to servicing electrical equipment.

7.4 PERSONAL PROTECTIVE EQUIPMENT

Appropriate Personal Protective Equipment (PPE) should be utilized when performing all maintenance tasks. Refer to Section 11.5 “Material Data Sheets” for material information (including MSDS sheets) which indicate recommended PPE when handling specific materials. Appropriate PPE should also be used when working on electrical components.

7.5 MAINTENANCE ACCESS

Maintenance personnel can access the bridge equipment by following the information provided below.

7.5.1 CONTROL ROOM

The control room is located in the control house located on the northwest side of the bridge and is accessible from the sidewalk.

A control desk is installed in the control room and contains pilot devices and indicating lights to operate traffic signals, leaf motor, warning gates, brakes, and navigation lights.

The control room also contains the motor control cabinet and secondary resistors.

7.5.2 BASCULE PIER

The bascule pier contains the span drive machinery and provides access to the bascule span counterweight. Access to the bascule pier is obtained through hatches located in the sidewalks on the east and west sides of the bridge.

The machinery platform is accessed through the vertical ladder located on the front wall of the bascule pier. Machinery components that can be accessed from the machinery platform include the inboard trunnion bearings, shafts, couplings, bearings, open gearing, main leaf motor, brakes, rotary cam limit switch, and auxiliary air motor.

The outboard trunnion bearings, racks, pinions, and pinion bearings are accessed from the floor of the bascule pier.

The sump pump is located in the northwest corner of the bascule pier.

7.5.3 REST PIER

The rest pier (pier 2) is located on the south side of the bridge and provides access to the live load bearings, centering guides, and the fully seated limit switches. The rest pier can be accessed with a boat. Another means of access is to stop traffic and raise the bridge to allow personnel to lower down onto the rest pier.

The submarine cable terminal box is located on the south side of the rest pier and requires a boat to access.

7.5.4 FENDERS

The south fender is located adjacent to the rest pier and can be accessed by boat or a bridge opening. The north fender is located adjacent to the bascule pier and can be accessed from a boat or by climbing down the ladder adjacent to the control house on the west side of the bascule span. Fenders provide access to the fender navigation lights.

7.6 MAINTENANCE OPENINGS

For the requirements on maintenance openings, refer to Chapter 2.

7.7 MAINTENANCE AND BRIDGE OPERATORS DURING OPENINGS

The bridge must be staffed with the following personnel unless otherwise noted during all maintenance openings:

- One (1) Trained Bridge Operator
- Two (2) Maintenance Technicians (not required for vessel openings)

The bridge operator shall be stationed in the control room of the control house. During emergency situations where the bridge and/or ancillary devices malfunction, one of the trained technicians shall be capable of relocating to the machinery platform as required.

The maintenance technicians shall be stationed in the vicinity of the machinery platform and capable of relocating as directed by the operator.

7.8 MAINTENANCE FORMS

Maintenance personnel are required to complete maintenance forms provided in Chapter 10.

7.9 MAINTENANCE REPORTING PROCEDURES

All maintenance shall be conducted in accordance with procedures and protocols defined herein and in accordance with the latest edition of the AASHTO Movable Bridge Inspection, Evaluation and Maintenance Manual.

All maintenance activities shall be documented using forms provided in Chapter 10 of this manual. Record copies of maintenance forms shall be kept and filed by the supervisor.

THIS PAGE INTENTIONALLY LEFT BLANK

CHAPTER 8 - ELECTRICAL AND MECHANICAL MAINTENANCE

Each section of Chapter 8 is to be used in conjunction with Chapter 11 providing additional details on each component to be maintained.

8.1 LEAF SUPPORT SYSTEM AND COUNTERWEIGHT

The leaf support system consists of trunnion bearings, live load bearings, and a counterweight. The following outlines the preventative maintenance of these items.

8.1.1 TRUNNION BEARINGS

8.1.1.1 DESCRIPTION

A pair of trunnion bearings supports each trunnion shaft mounted to the bascule girder and provides the rotational axis through the trunnion shafts. Each trunnion bearing is supported by a trunnion bearing support frame.

The trunnion bearings are split sleeve type journal bearings with split pillow blocks. The bearing base is cast steel and the lower bushing a bronze alloy. The bearing cap is cast steel with a keyed Babbitt bushing. Brass liners of various thicknesses are located between the bearing cap and base for adjustment due to wear of the lower bushing. The trunnion shaft is forged steel.

Each trunnion bearing has one grease fitting located in the bearing cap and four grease fittings located in the face of the trunnion shaft for a total of five grease fittings per trunnion bearing location.

Refer to Photos numbered 9.1A and 9.1B.

Refer to Sections 11.1.1 (ID # 29, 30, and 31) for component identification and 11.2.1 for lubrication schematics.

8.1.1.2 NUMBER OF ITEMS AND LOCATION

There are four trunnion bearings. Two bearings are used to support each bascule girder. The trunnion bearing assemblies are located in the bascule pier just forward of the counterweight.

8.1.1.3 MAINTENANCE AND SCHEDULE

!!! WARNING !!!

Use EXTREME CARE and ALWAYS REMOVE POWER from all pertinent electrical equipment, which includes multiple power sources, before beginning maintenance. Refer to Section 7.3, "Lockout/Tagout Procedure."

Document completed maintenance tasks on the maintenance checklists included in Appendix B of the Contract.

MONTHLY (Refer to Section 11.4.1 for Bridge Maintenance Performance Standard)	• Purge old grease by pumping new lubricant into the grease fittings. There are five grease fittings per trunnion bearing. Remove excess grease from the inboard and outboard sides of the trunnion bearings after lubricating. The lubricant should be Mobil Mobilux EP-2 grease or equivalent. • Remove any roadway debris that has accumulated on and around the trunnion assemblies and the portions of the bascule girders near the trunnions.

ANNUALLY	• Check housing and supporting frame for signs of corrosion. Clean and spot paint corroded components. • Check housing cap bolts and base bolts for tightness. Tighten loose fasteners. • Observe the trunnion bearings during opening and closing operations of the leaf. Note any unusual movements, binding, or abnormal sounds.

8.1.2 LIVE LOAD BEARINGS

8.1.2.1 DESCRIPTION

The live load bearings react against the live load from traffic. The live load bearing consists of a sole plate which is in contact with the masonry plate.

The masonry plates are made of steel. The sole plates are made of American Society for Testing and Materials (ASTM) A709 Grade 50 steel. The sole plates are mounted to the bottom flange of each bascule girder at the toe of the span. The masonry plates are mounted on top of pier 2 (from the south).

The live load bearings are adjusted by adding or removing shims between the sole plate and bascule girder bottom flange.

Refer to Photos numbered 9.1C, 9.1D, 9.3A, and 9.3B.

Refer to Section 11.1.1 (ID # 47, 48, 49, and 50) for components identification.

8.1.2.2 NUMBER OF ITEMS AND LOCATION

There is one live load bearing located at the toe of each bascule girder. The live load bearings are accessible from pier 2.

8.1.2.3 MAINTENANCE AND SCHEDULE

!!! WARNING !!!

Use EXTREME CARE and ALWAYS REMOVE POWER from all pertinent electrical equipment, which includes multiple power sources, before beginning maintenance. Refer to Section 7.3, "Lockout/Tagout Procedure."

Document completed maintenance tasks on the maintenance checklists included in Appendix B of the Contract.

THREE MONTHS	• Check that all live load bearing sole plates are in contact with their masonry plates when the span is closed and the brakes are set. There should be no movement of the live load sole plates when heavy traffic loads cross the span. • Clean debris from all supporting members and plates.

ANNUALLY	• Check that all fasteners are tight and corrosion free. Tighten loose fasteners. • Inspect masonry plate grout for cracking and evidence of deterioration. • Check the contacting surfaces between the sole plate and masonry plate for deformations and wear. There should be no corrosion on the contact areas of either plate. If corrosion is present, clean the bearing surfaces. Spot paint the live load bearings and fasteners if corroded. Painting should be done using the paint system specified by the DelDOT Standard Specifications for painting existing structural steel (color typically Forest Green #24172, Federal Standard 595C, and typically alkyd) and be compatible with the existing system. The sole plate and masonry plate contacting surfaces should not be painted.

8.1.3 COUNTERWEIGHT

8.1.3.1 DESCRIPTION

The counterweight is a concrete mass that balances the weight of the bascule leaf that is forward of the trunnion centerline.

The counterweight has two pockets located on the front face where balance blocks can be placed. There are also steel plates mounted to the top of the counterweight to balance the bascule leaf.

Refer to Photos numbered 9.1E and 9.1F.

8.1.3.2 NUMBER OF ITEMS AND LOCATION

There is one counterweight located behind the trunnion bearings.

8.1.3.3 MAINTENANCE AND SCHEDULE

!!! WARNING !!!

Use EXTREME CARE and ALWAYS REMOVE POWER from all pertinent electrical equipment, which includes multiple power sources, before beginning maintenance. Refer to Section 7.3, "Lockout/Tagout Procedure."

Document completed maintenance tasks on the maintenance checklists included in Appendix B of the Contract.

ANNUALLY	• Check counterweight balance pockets for proper drainage and clean out debris. • From the counterweight pit floor and platforms, visually check the counterweight concrete for spalling, cracks, and signs of structural distress. • Check for shifting of balance blocks and plates. Neatly restack blocks or plates that have fallen over or shifted out of position.

8.2 SPAN DRIVE MACHINERY

The span drive machinery is located in the bascule pier on the machinery platform. Span drive machinery consists of one 15 HP electric motor, one 4 HP auxiliary air motor, two brakes, two rack and pinion sets, two first intermediate gear sets, two second intermediate gear sets, two third intermediate gear sets, one main leaf motor gear set, nineteen shaft bearings, three couplings, and nine shafts. The main leaf motor has a full load torque of 87 lb-ft at a speed of 900 RPM, and full load current of 66 Amperes.

8.2.1 AUXILIARY AIR DRIVE SYSTEM

8.2.1.1 DESCRIPTION

An auxiliary drive system provides a means to operate the span in the case of a failure of the main leaf motor. A portable air compressor is brought on site to operate the auxiliary air motor.

The reversible auxiliary air motor, manufactured by Ingersoll Rand, is model number 34RB029. The auxiliary air motor has a maximum power output of 4 HP at 99 RPM. The affixed gearbox has a gear ratio of 29:1. The portable air compressor must supply an air pressure of 100 psi and 185 cfm.

The air compressor supplies air through the filter, regulator, and air line lubricator prior to entering the air motor. The filter, regulator, and lubricator were manufactured by Wilkerson. The filter, model number F30, removes contaminants from the air supplied by the air compressor. The regulator, model number R30, restricts the air pressure within the air line. The regulator is set at 100 psi. The lubricator, model number L30 EconOmist, adds oil to the air to properly lubricate the air motor vanes during operation of the motor. Rigid piping connects the filter, regulator, and lubricator.

A shut off valve, manufactured by Nibco, is located directly upstream of the filter to prevent air from entering the auxiliary air motor.

A directional valve, manufactured by Bosch Rexroth and model number PT-064501-00300, is located in the air line between the lubricator and the air motor. The handle on the directional valve directs the flow of air into one of the two air lines which determines the rotation of the air motor shaft.

Flexible air hoses, manufactured by Alfagomma and model number T-130 AK, connect the auxiliary air motor components. Two flexible air hoses connect the directional valve to the auxiliary air motor. A flexible air hose connects the air line lubricator to the control valve input. A flexible air hose also connects the rigid piping to the portable air compressor.

Air exits the air motor and leaves the system via the directional valve.

The auxiliary air motor is connected to the span drive machinery by the auxiliary air motor disconnect coupling.

Refer to Photos numbered 9.2A, 9.2C, 9.2D, 9.2E, and 9.2F.

Refer to Sections 11.1.1 (ID # 36, 37, 38, 39, 40, and 41) for component identification and 11.2.1 for lubrication schematics. Refer to Sections 11.7.1, 11.7.2, 11.7.3, and 11.7.4 for manufacturer's maintenance manuals.

8.2.1.2 NUMBER OF ITEMS AND LOCATION

There is one auxiliary air motor system on the machinery platform.

8.2.1.3 MAINTENANCE AND SCHEDULE

!!! WARNING !!!

Use EXTREME CARE and ALWAYS REMOVE POWER from all pertinent electrical equipment, which includes multiple power sources, before beginning maintenance. Refer to Section 7.3, "Lockout/Tagout Procedure."

Document completed maintenance tasks on the maintenance checklists included in Appendix B of the Contract.

ANNUALLY	• Remove filter reservoir and clean out any contaminants. • Inspect lubricator oil level. Remove the fill plug and add Ingersoll Rand No. 50 oil or equivalent until oil level is ¼" from the top of the bowl. • Verify the auxiliary air motor gear box oil level is up to the oil level plug. If the oil level is low, add oil until the oil level is up to the oil level plug. Use Mobil Mobilgear 600 XP 220 or equivalent oil. • Perform a test operation of the bridge using the auxiliary drive air motor. Inspect the air lines for leaks during operation of the air motor. Inspect the condition of the air line piping and hoses.
FIVE YEARS	• Drain, flush, and refill auxiliary air motor gear box oil. Remove fill plug, vent plug, and drain oil from the auxiliary air motor gearbox. Flush housing with Mobil Mobilgear 600 XP 220 or equivalent oil that is compatible with the oil that is used during operation of the bridge. Reinstall drain plug and fill with Mobil Mobilgear 600 XP 220 or equivalent. The oil level should be up to the oil level plug hole. Reinstall fill plug and vent plug. Clean any spilled oil on the housing or surrounding area. • Disassemble and service the filter in accordance with Section 11.7.2. Inspect filter components for wear and replace if damaged. Clean and reassemble filter components. • Disassemble and service the regulator in accordance with Section 11.7.3. Inspect regulator components for wear and replace if damaged. Clean and reassemble regulator components. • Disassemble, drain, and service the lubricator in accordance with Section 11.7.4. Inspect lubricator components for wear and replace if damaged. Clean and reassemble lubricator components. Remove fill plug and add Ingersoll Rand No. 50 oil or equivalent until oil level is ¼" from the top of the bowl. • After servicing components, check system for air leaks.

8.2.2 MOTOR BRAKE AND MACHINERY BRAKE

8.2.2.1 DESCRIPTION

The motor and machinery brakes are used for normal and emergency stopping of the span during bridge operations.

The motor and machinery brake were manufactured by Mondel and are electric shoe brakes.

The motor brake model number is 10MBTE-ED23/5S. The machinery brake model number is 13MST/E-ED80/6S. The motor brake utilizes a 10 inch diameter brakewheel. The machinery brake utilizes a 13 inch diameter brakewheel.

The motor brake torque setting shall provide 150 ft-lbs of braking torque at the motor brakewheel. The machinery brake torque setting shall provide 300 ft-lbs of braking torque at the machinery brakewheel.

The motor and machinery brakes are spring set and electro-hydraulically released, as commanded by the bridge control system.

Refer to Photos numbered 9.2A, 9.2B, 9.2G, and 9.2H.

Refer to Section 11.1.1 (ID # 1 and 10) for component identification. Refer to Sections 11.7.5 and 11.7.6 for manufacturer's maintenance manuals.

8.2.2.2 *NUMBER OF ITEMS AND LOCATION*

The span drive machinery is equipped with one motor brake and one machinery brake.

One motor brake is located at the rear of the main leaf motor within the main leaf motor enclosure. The machinery brake is located on the east side of the machinery platform adjacent to the third intermediate gear set.

8.2.2.3 *MAINTENANCE AND SCHEDULE*

!!! WARNING !!!

Use EXTREME CARE and ALWAYS REMOVE POWER from all pertinent electrical equipment, which includes multiple power sources, before beginning maintenance. Refer to Section 7.3, "Lockout/Tagout Procedure."

Document completed maintenance tasks on the maintenance checklists included in Appendix B of the Contract.

GENERAL	• In the event that brakes require the following items, refer to the Manufacturer's Operation and Maintenance Manuals for detailed instructions. • Motor brake and machinery brake actuator repairs should be performed by a Mondel authorized specialist. Replacement thruster oil shall be provided by the Mondel authorized specialist. The motor brake and machinery brake frames shall be adjusted by the Contractor.
ANNUALLY (Refer to Section 11.4.3 for Bridge Maintenance Performance Standard)	• Inspect brake shoes and drums for wear, dust, dirt, grease, and proper adjustment. Check the brake pad thickness. Notify the Engineer if the remaining thickness is less than 1/16 inch. • Check clearances between the brake shoes and brakewheel. The measured gap shall have a minimum of $^{1}/_{64}$ inch clearance between the brake shoe and brakewheel when hand released. If clearances need to be adjusted, the linkages shall be adjusted in accordance with Sections 11.7.5 and 11.7.6. If adjustments are made to the linkages, the reserve stroke and torque setting should be verified and adjusted as well. Adjustment procedures are located within Sections 11.7.5 and 11.7.6. • Inspect mechanical linkages for wear, broken parts, and tightness of nuts and bolts. Check for freedom of moving parts (no binding or sticking). Check the brake housing and linkages for evidence of water dripping on the brake and corrosion. • Check for excessive heating of parts evident by discoloration of metal parts.

- Check operation of the brake during test operations of the bridge. Check for any unusual odor and excessive vibration.
- Check adjustment of limit switches and hand release devices and adjust for proper operation. When the brake hand release lever is pulled up, the brake pads should release from the brakewheel. The motor brake has three limit switches. The machinery brake has three limit switches. Verify brake limit switches provide proper indication at the control desk when the brake is set, released via the control system, and hand released. Adjust limit switch lever arms for proper indication.
- Check the brake reserve stroke height with a scale. The reserve stroke height of the motor brake should be 0.7 inch +/- $^{1}/_{16}$ inch. The reserve stroke height for the machinery brake should be 0.8 inch +/- $^{1}/_{16}$ in. The reserve stroke refers to the exposed thruster rod length, measured from the top of the thruster cover to the bottom of the lug at the end of the thruster rod (refer to Figure 2 of Sections 11.7.5 and 11.7.6). As the brake pads wear, the reserve stroke becomes shorter. If the reserve stroke requires adjustment, adjust linkages as specified in Sections 11.7.5 and 11.7.6.
- Check the motor brake and machinery brake spring tension via the brake torque gauge located near the thruster. The motor brake should be set to provide a braking torque of 150 ft-lbs. The machinery brake should be set to provide a braking torque of 300 ft-lbs. The torque is read by matching the top of the spring block to the corresponding torque value on the scale. To adjust the brake torque, turn the torque adjustment screw until the top of the spring block is at the appropriate torque setting on the scale. Check operation of the brake (bullet 5 above) to confirm proper operation of the motor brake or machinery brake after adjustment.
- Check for loose brake terminations. Tighten loose connections.
- During winter months, verify that the brake pads are not frozen to the brakewheel.

8.2.3 COUPLINGS

8.2.3.1 DESCRIPTION

Each coupling transfers torque from one shaft to another.

One gear coupling, manufactured by Falk, is used to transmit the torque in the span drive machinery. The gear coupling is model 1020G10.

The gear coupling has two grease fittings in the coupling cover.

One auxiliary air motor manual disconnect coupling, manufactured by Kop-Flex, is used to transmit the torque from the auxiliary air motor to the span drive machinery. The auxiliary air motor disconnect coupling is model FCC, size 1.5.

The auxiliary air motor disconnect coupling has two purge plugs located on the flange of each coupling half. There are two plugs in the shifting collar. When lubricating the shifting collar, replace the plugs with grease fittings.

A jaw coupling, manufactured by Boston Gear, is used to connect the rotary cam limit switch gearbox to the span drive machinery. The jaw coupling is model FC15-3/4. The jaw coupling does not require lubrication.

Refer to Photos numbered 9.2A, 9.2C, and 9.2J.

Refer to Sections 11.1.1 (ID # 6, 34, and 42) for component identification and 11.2.1 for lubrication schematics. Refer to Sections 11.7.7 and 11.7.8 for manufacturer's maintenance manuals.

8.2.3.2 *NUMBER OF ITEMS AND LOCATION*

The span drive machinery has one gear coupling. The gear coupling is located in front of the main leaf motor enclosure adjacent to the main leaf motor gear set and connects the east and west third intermediate pinion shafts.

The span drive machinery has one manual disconnect coupling located between the auxiliary air motor output shaft and the auxiliary pinion shaft.

The span drive machinery has one jaw coupling. The jaw coupling is located at the rotary cam limit switch input shaft on the west side of the machinery platform, adjacent to the second intermediate pinion shaft.

8.2.3.3 *MAINTENANCE AND SCHEDULE*

!!! WARNING !!!

Use EXTREME CARE and ALWAYS REMOVE POWER from all pertinent electrical equipment, which includes multiple power sources, before beginning maintenance. Refer to Section 7.3, "Lockout/Tagout Procedure."

!!! WARNING !!!

Do not disassemble couplings unless shafts are properly supported.

Document completed maintenance tasks on the maintenance checklists included in Appendix B of the Contract.

MONTHLY	• Inspect key and keyways at all couplings for grease leakage, tightness, and cracking. Check coupling flange bolts for corrosion and tightness. Per the manufactures installation instructions, the gear coupling fasteners should be torqued to 31 ft-lbs and the disconnect coupling fasteners torqued to 20 ft-lbs. • Inspect for leaks at seals and gaskets. If the seal is leaking, inspect for damage. Notify the Engineer if the seal is damaged. • Inspect the jaw coupling for cracking or damage.
SIX MONTHS (Refer to Section 11.4.4 for Bridge Maintenance Performance Standard)	• For the gear coupling and manual disconnect coupling, purge lubricant and replace with new Mobil Mobilux EP-0 or equivalent. • Visually inspect couplings for relative movement between coupling components during operation of the span drive machinery.
ANNUALLY (Refer to Section 11.4.4 for Bridge Maintenance Performance Standard)	• For the manual disconnect coupling shifting collar, purge lubricant and replace with new Mobil Mobilux EP-0 or equivalent. • Manually test the clutch to ensure it properly engages and disengages the auxiliary air motor disconnect coupling.

8.2.4 BEARINGS

8.2.4.1 DESCRIPTION

Roller bearings and sleeve bearings support the various span drive machinery shafting.

The third intermediate pinion shafts are supported by pillow block tapered roller bearings manufactured by Sealmaster. Two pillow block tapered roller bearings, model number RPB-212-4C, support the west third intermediate pinion shaft. Three pillow block tapered roller bearings support the east third intermediate pinion shaft. Two are model number RPB-212-4C (located west of the brake) and one is RPB-215-4C (located to the east of the machinery brake). A grease fitting is located in each bearing cap and grease is purged through the shaft/seal interface.

The second intermediate pinion shafts are each supported by two pillow block spherical roller bearings manufactured by Torrington. The spherical roller bearings are model number SAFS-024x4.188 and have a tapered bore. A grease fitting is located in each bearing cap and two purge plugs are located in the housing base.

The main pinion shaft and first intermediate pinion shaft are supported by sleeve bearings. The sleeve bearings contain bronze bushings in the cap and base. A grease fitting is located in each bearing cap and grease is purged through the shaft/bushing interface.

The auxiliary pinion shaft is supported by two spherical roller bearings manufactured by Sealmaster. The model number for the bearings is SPB2108-C2. A grease fitting is located in the bearing cap and grease is purged through the shaft/seal interface.

Refer to Photos numbered 9.2A, 9.2B, 9.2C, 9.2H, 9.2I, 9.2J, 9.2K, and 9.2L.

Refer to Sections 11.1.1 (ID # 5, 7, 9, 11, 13, 17, 19, 21, 24, 27, 33, 43, and 46) for component identification and 11.2.1 for lubrication schematics. Refer to Sections 11.7.9, 11.7.10, and 11.7.11 for manufacturer's maintenance manuals.

8.2.4.2 NUMBER OF ITEMS AND LOCATION

There are a total of eleven roller bearings and eight sleeve bearings used to support the span drive machinery shafting. The bearings are located on the machinery platform in the bascule pier.

8.2.4.3 MAINTENANCE AND SCHEDULE

!!! WARNING !!!

Use EXTREME CARE and ALWAYS REMOVE POWER from all pertinent electrical equipment, which includes multiple power sources, before beginning maintenance. Refer to Section 7.3, "Lockout/Tagout Procedure."

Document completed maintenance tasks on the maintenance checklists included in Appendix B of the Contract.

MONTHLY (Refer to Section 11.4.1 for Bridge Maintenance Performance Standard)	• For sleeve bearings, fill with new grease to completely purge the bearings of the existing grease. Remove excess purged grease. Use Mobil Mobilux EP-2 or equivalent.

SIX MONTHS (Refer to Section 11.4.6 for Bridge Maintenance Performance Standard)	• For tapered roller bearings and Sealmaster spherical roller bearings, lubricate bearings with Mobil Mobilgrease XHP 222 or equivalent. • For Torrington spherical roller bearings, add replenishment grease. Use Mobil Mobilgrease XHP 222 or equivalent.
ANNUALLY	• Check bearing cap and base fasteners for tightness. Tighten loose fasteners. The Sealmaster tapered roller bearing cap fasteners should be torqued to 75 ft-lbs and set screws torqued to 33 ft-lbs to 43 ft-lbs. The Sealmaster spherical roller bearing set screws should be torqued to 55 ft-lbs. • Check that all main pinion bearing set collar set screws are secure. Tighten set screws if loose.
TWO YEARS (Refer to Section 11.4.6 for Bridge Maintenance Performance Standard)	• For Torrington spherical roller bearings, replace lubricant with Mobil Mobilgrease XHP 222 or equivalent.

8.2.5 OPEN GEARING

8.2.5.1 DESCRIPTION

Each open gear set increases torque and reduces rotational speed to operate the bridge.

Working from the motors towards the main pinion and rack, the open gear sets are identified as the motor gear set, the third intermediate gear set, the second intermediate gear set, the first intermediate gear set, and the main pinions and racks. The third intermediate gear sets, second intermediate gear sets, first intermediate gear sets, and main pinions and racks are symmetrical about the centerline of the bridge.

The main leaf motor gear set, located at the output of the main leaf motor, consists of a gear, the motor pinion and the auxiliary air motor pinion. The gear is a 99 tooth spur gear with a 33.00 inch pitch diameter, standard 20° involute tooth profile, and a face width of 2 ½ inches. The gear is keyed to the west third intermediate shaft. The motor pinion is a 15 tooth spur gear with a 6.00 inch pitch diameter, standard 20° involute tooth profile, and a face width of 2 ½ inches. The pinion is keyed to the main leaf motor front output shaft. The auxiliary air motor pinion is identical to the pinion located on the main leaf motor, and is keyed to the auxiliary pinion shaft.

Each third intermediate gear set consists of a pinion and gear. The gear is a 75 tooth spur gear with a 30.00 inch pitch diameter, standard 20° involute tooth profile, and a face width of 2 ½ inches. The third intermediate gears are keyed to the second intermediate pinion shafts. The pinion is a 15 tooth spur gear with a 6.00 inch pitch diameter, standard 20° involute tooth profile, and a face width of 2 ½ inches. The third intermediate pinions are keyed to the third intermediate pinion shafts.

Each second intermediate gear set consists of a pinion and gear. The gear is a 66 tooth spur gear with a 31.51 inch pitch diameter, standard 20° involute tooth profile, and a face width of 4 inches. The second intermediate gears are keyed to the first intermediate pinion shafts. The pinion is a 18 tooth spur gear with a 8.59 inch pitch diameter, standard 20° involute tooth profile, and a face width of 4 inches. The second intermediate pinions are keyed to the second intermediate pinion shafts.

Each first intermediate gear set consists of a pinion and gear. The gear is an 58 tooth spur gear with a 46.15 inch pitch diameter, standard 20° involute tooth profile, and a face width of 6 inches. The first

intermediate gears are keyed to the main pinion shafts. The pinion is a 15 tooth spur gear with an 11.93 inch pitch diameter, standard 20° involute tooth profile, and a face width of 6 inches. The first intermediate pinions are keyed to the first intermediate pinion shafts.

Each rack is a 30 tooth rack with a 70 inch pitch diameter, standard 20° involute tooth profile, and a face width of 11 ½ inches. The rack is made of cast steel. Each main pinion is a 15 tooth spur gear with an 17.91 inch pitch diameter, standard 20° involute tooth profile, and a face width of 11 ½ inches. The main pinions are keyed to the main pinion shafts.

All open gearing is lubricated with grease that must be brushed onto the gear teeth manually, as described below.

Refer to Photos numbered 9.2A, 9.2B, 9.2C, 9.2G, 9.2I, 9.2J, 9.2K, and 9.2L.

Refer to Sections 11.1.1 (ID # 3, 4, 12, 14, 16, 18, 22, 23, 26, 28, and 44) for component identification and 11.2.1 for lubrication schematics.

8.2.5.2 *Number of Items and Location*

The open gearing is located on the machinery platform located above the roadway. A rack and pinion set is located at the centerline of each bascule girder.

There are two main pinion and rack sets, two first intermediate gear sets, two second intermediate gear sets, two third intermediate gear sets, and one spur gear set located at the output of the main leaf motor.

8.2.5.3 *Maintenance and Schedule*

!!! WARNING !!!

Use EXTREME CARE and ALWAYS REMOVE POWER from all pertinent electrical equipment, which includes multiple power sources, before beginning maintenance. Refer to Section 7.3, "Lockout/Tagout Procedure."

Document completed maintenance tasks on the maintenance checklists included in Appendix B of the Contract.

MONTHLY (Refer to Section 11.4.5 for Bridge Maintenance Performance Standard)	• Remove any debris, including leaves, sand, dirt, and bird debris, from gear teeth. • Remove any lubricant that has been displaced to non-contacting surfaces with rags and scrapers. • Lubricate teeth using Mobil Mobiltac 325 NC or equivalent. • Clean out rack supports of debris and water. • Remove any roadway debris that has accumulated on the bascule girder flanges above and around the open gearing and rack support.

ANNUALLY (Refer to Section 11.4.5 for Bridge Maintenance Performance Standard)	• Replace open gear lubricant using Mobil Mobiltac 325 NC or equivalent. • Verify that fasteners connecting the rack to the rack support are secure and free of corrosion. Tighten loose fasteners. Spot paint corroded fasteners. Painting should be done using the paint system specified by the DelDOT Standard Specifications for painting existing structural steel (color typically Forest Green #24172, Federal Standard 595C, and typically alkyd) and be compatible with the existing system. • Visually inspect keys and keyways for cracking. Verify keys are secure within the keyways. • Observe the open gearing during raising and lowering operations. Note excessive vibrations, binding, and unusual noises.

8.3 CENTERING EQUIPMENT

The live load bearing masonry plates contain a beveled centering guide on the outboard side of both masonry plates which centers the movable leaf as it is lowered into the fully seated position.

8.3.1 CENTERING GUIDES

8.3.1.1 DESCRIPTION

The centering guides align the toe of the movable leaf while in the seated position.

The centering guides are located on the outboard side of the live load bearing masonry plates. The centering guides comprise of a bent angle approximately 5 inches high. The centering guides are secured to the masonry plates with one anchor bolt.

The centering guides do not require lubrication.

Refer to Photos numbered 9.1D, 9.3A, and 9.3B.

Refer to Section 11.1.1 (ID # 51) for component identification.

8.3.1.2 NUMBER OF ITEMS AND LOCATION

There are two centering guides located at pier 2, adjacent to the live load bearings.

8.3.1.3 MAINTENANCE AND SCHEDULE

!!! WARNING !!!

Use EXTREME CARE and ALWAYS REMOVE POWER from all pertinent electrical equipment, which includes multiple power sources, before beginning maintenance. Refer to Section 7.3, "Lockout/Tagout Procedure."

Document completed maintenance tasks on the maintenance checklists included in Appendix B of the Contract.

ANNUALLY	• Check the centering guide anchor bolts for deterioration or signs of distress. • Check the beveled plate for deformations and signs of damage. Components should have flaking paint brushed clean and spot painted.

8.4 TRAFFIC GATES

Traffic gates are comprised of warning gates located on the approaches and are used to stop traffic prior to a bridge opening.

8.4.1 WARNING GATES

8.4.1.1 DESCRIPTION

Warning gates signal on and off going traffic to stop for a bridge opening.

The south warning gate is model VW-5 and manufactured by B&B Roadway. The north warning gate is model VT-40 and manufactured by B&B Roadway.

Refer to Photos numbered 9.4A, 9.4B, 9.4C, 9.4D, 9.4E, 9.4F, 9.4G, 9.4H, and 9.4I.

Refer to Sections 11.1.2 (ID # 54, 58, 60, 63, 64, 71, 73, 75, 78, and 81) for component identification, 11.2.2 for lubrication schematic, 11.6 for component manufacturer list, 11.8.1 for the manufacturer's manual of the south warning gate, and 11.8.2 for manufacturer's literature for the north warning gate.

8.4.1.2 NUMBER OF ITEMS AND LOCATION

There are two warning gates. One is located on the north approach and one is located on the south approach. The warning gate machinery is located within each warning gate housing.

8.4.1.3 MAINTENANCE AND SCHEDULE

!!! WARNING !!!

Use EXTREME CARE and ALWAYS REMOVE POWER from all pertinent electrical equipment, which includes multiple power sources, before beginning maintenance. Refer to Section 7.3, "Lockout/Tagout Procedure."

Document completed maintenance tasks on the maintenance checklists included in Appendix B of the Contract

SIX MONTHS	• Check the oil level in both sections of the transmission. If oil is low, check seals for evidence of leaks and add oil until the oil level is up to the oil level plug or sight gage. For the north warning gate transmission, use Mobil 600W Cylinder Oil or equivalent for the permanent oil and for flushing the housing. For the south warning gate transmission, use Mobil SHC 626 or equivalent for the permanent oil and for flushing the housing. • Lubricate pivot shaft bearings and rod ends until clean grease flows from the bearing or rod end. Use Mobil Mobilux EP-2 or equivalent. • Lubricate the rotary cam limit switch roller chain with CRC TAC 2 Adhesive Chain Lubricant or equivalent. • Check the roller chain tension and adjust tension if needed. The south warning gate roller chain sag should be $1/8$" +/- $1/8$". The north warning gate roller chain sag should be $1/4$" +/- $1/8$". Refer to the manufacturer's maintenance guidelines in Section 11.8.1 for adjusting the chain tension.

ANNUALLY	• Check hardware for damage and corrosion. Replace damaged hardware. • Check electrical connections and tighten loose connections. • Remove excess grease, oil and debris from equipment. • Check gate housing for corrosion. Clean and spot paint areas of corrosion on the housing. • Check condition of gaskets and replace if damaged.

8.5 ELECTRICAL POWER SYSTEMS

8.5.1 CONTROL ENCLOSURE

8.5.1.1 DESCRIPTION

Control enclosures house motor controllers, relays, contactors, over-current protection, etc. to control and operate the bridge and all ancillary devices. The motor control enclosure includes the control equipment required for traffic signals, warning gates, brakes, and leaf motor operation.

Refer to Photos numbered 9.6A, 9.6B, 9.6C, 9.6D, 9.6E, and 9.6F.

8.5.1.2 NUMBER OF ITEMS AND LOCATION

A single motor control cabinet is located in the control house.

8.5.1.3 MAINTENANCE AND SCHEDULE

!!! WARNING !!!

Use EXTREME CARE and ALWAYS REMOVE POWER from all pertinent electrical equipment, which includes multiple power sources, before beginning maintenance. Refer to Section 7.3, Lockout/Tagout Procedure.

Document completed maintenance tasks on the maintenance checklists included in Appendix B of the Contract.

THREE MONTHS	• Open and clean with a vacuum cleaner. • Remove accumulation of dirt, grease, and gum with DexoIT D5 contact cleaner or equivalent. • Check for corrosion and moisture. • Examine connections for poor or loose connections and evidence of overheating. • Lubricate door hinges and latches with 3-IN-ONE Multi-Purpose Oil. • Inspect terminal block screws for tightness. Hand tighten loose connections. • Inspect wiring from unit terminal blocks for deterioration of insulation. • Inspect all circuit breakers. Verify with a meter that continuity is broken on trip or switch off conditions. With the circuit breaker in the OFF position, use a multimeter to measure the current and voltage on the load side conductors. The multimeter should read 0 amps and 0 volts. • Check all starter contacts. Note when nearly all the silver tip is gone and the contact tip support is exposed. Do not file the contacts. Filing or otherwise dressing the contacts only results in lost tip material and reduces starter life. • Check the condition of gaskets and replace if damaged.

ANNUALLY	• Check for discolored connections on terminals, contact supports, bus bars, or connectors. Discoloration usually indicates that overheating has occurred, probably because of loose connections. Clean connection points that are discolored. Tighten all loose hardware. Check wires and connectors for damage. • Operate the motor controller/contactor without load (turn circuit breakers off) and observe contact operation to be sure it opens and closes cleanly and that the contacts are fully sealed in the closed position. In order to manually operate a motor controller/contactor without load, remove power to the cabinet and with a non-conductive screwdriver, press the button on the contactor. The button is usually located on the front or bottom of the housing. • Operate the motor controller/contactor under load and check for loud noise and arcing, both on opening and on closing. A loud noise and arcing on closing is usually due to contact bounce.

8.5.2 SECONDARY RESISTORS

8.5.2.1 DESCRIPTION

The drive resistors are installed inside a ventilated enclosure. As the span operates, the bridge operator changes the secondary resistance connected to the motor by changing the position of the span control drum switch, which in turn changes the speed of the motor.

Refer to Photos numbered 9.6A and 9.6F.

8.5.2.2 NUMBER OF ITEMS AND LOCATION

There is a single secondary resistor enclosure located above the motor control cabinet in the control house.

8.5.2.3 MAINTENANCE AND SCHEDULE

!!! WARNING !!!

Use EXTREME CARE and ALWAYS REMOVE POWER from all pertinent electrical equipment, which includes multiple power sources, before beginning maintenance. Refer to Section 7.3, "Lockout/Tagout Procedure."

Document completed maintenance tasks on the maintenance checklists included in Appendix B of the Contract.

ANNUALLY	• Open and clean with a vacuum cleaner. • Remove accumulation of dirt, grease, and gum with DexoIT D5 contact cleaner or equivalent. • Check for corrosion and moisture. • Inspect and test terminal block screws for tightness. Hand tighten all loose connections. • Inspect wiring from unit terminal blocks for deterioration of insulation.

8.5.3 PANELBOARDS

8.5.3.1 DESCRIPTION

Lighting and power panelboards are assemblies of bus bars and main/branch circuit breakers. The circuit breakers provide over-current protection as well as a means of turning on and off electrical distribution circuits.

Refer to Photos numbered 9.5B and 9.5C.

8.5.3.2 NUMBER OF ITEMS AND LOCATION

Two panelboards are located in the control house. Panelboard LP1, located on the south side of the entrance door, contains breakers for the motor, lights, and all other circuits. Panelboard LP2, located on the north side of the entrance door, only contains breakers for the brakes.

8.5.3.3 MAINTENANCE AND SCHEDULE

!!! WARNING !!!

Use EXTREME CARE and ALWAYS REMOVE POWER from all pertinent electrical equipment, which includes multiple power sources, before beginning maintenance. Refer to Section 7.3, "Lockout/Tagout Procedure."

Document completed maintenance tasks on the maintenance checklists included in Appendix B of the Contract.

ANNUALLY	• Open and clean with a vacuum cleaner. • Remove accumulation of dirt, grease, and gum with DexoIT D5 contact cleaner or equivalent. • Check for moisture and corrosion. Replace corroded hardware. • Examine bus bar connections for poor or loose connections and evidence of overheating. If necessary, pop out, but do not disconnect the circuit breakers. • Lubricate door hinges and latches with 3-IN-ONE Multi-Purpose Oil. • Inspect all circuit breakers. Verify with a meter that continuity is broken on trip or switch off conditions. With the circuit breaker in the OFF position, use a multimeter to measure the current and voltage on the load side conductors. The multimeter should read 0 amps and 0 volts. • Measure resistance to ground at each panelboard using a clamp on ground resistance tester. Confirm that the main electrical service to the bridge is off before performing any test. Follow the meter manufacturer's recommendations for isolating the grounding electric. With the meter clamped around the grounding electrode, verify resistance is 25 ohms or less.

8.5.4 PORTABLE GENERATOR CORD SET

8.5.4.1 DESCRIPTION

A cord set is installed to connect a portable generator to the bridge electrical system in order to power the bridge and ancillary equipment should utility power become unavailable. Requirements for portable generator operation are specified in Chapter 4.

Refer to Photo numbered 9.5A.

8.5.4.2 NUMBER OF ITEMS AND LOCATION

There is one portable generator cord set connected to the manual transfer switch on the near (north) side approach.

8.5.4.3 MAINTENANCE AND SCHEDULE

!!! WARNING !!!

Use EXTREME CARE and ALWAYS REMOVE POWER from all pertinent electrical equipment, which includes multiple power sources, before beginning maintenance. Refer to Section 7.3, "Lockout/Tagout Procedure."

Document completed maintenance tasks on the maintenance checklists included in Appendix B of the Contract.

ANNUALLY	• Visually inspect the cables and associated equipment for wear or damage. • Using an off-site portable generator, start and run the bridge for one complete opening using the main leaf motor. Refer to Section 4.2 "Portable Generator Operation" for additional information.

8.5.5 SAFETY (MANUAL TRANSFER) AND DISCONNECT SWITCHES

8.5.5.1 DESCRIPTION

Switches are devices for making, breaking, or changing connections in an electric circuit under the conditions of the load for which it is rated. There are various types of switches; some of the more common are main circuit breakers and motor disconnect switches.

Refer to Photos numbered 9.2A, 9.2B, 9.2D, 9.4E, 9.4G, 9.5A, and 9.6J.

8.5.5.2 NUMBER OF ITEMS AND LOCATION

Disconnect switches are located throughout the bridge.

The main leaf motor, motor brake, and machinery brake disconnect switches are located at the machinery platform in the bascule pier. One warning gate disconnect switch is located in each warning gate housing. The manual transfer switch (MTS), which serves as a service disconnect for electrical power to the bridge, is located on the near (north) side approach.

8.5.5.3 MAINTENANCE AND SCHEDULE

!!! WARNING !!!

Use EXTREME CARE and ALWAYS REMOVE POWER from all pertinent electrical equipment, which includes multiple power sources, before beginning maintenance. Refer to Section 7.3, "Lockout/Tagout Procedure."

!!! WARNING !!!

Use proper personal protective equipment when working on energized equipment. Arc flash and other dangers are present and may result in injury or death.

Document completed maintenance tasks on the maintenance checklists included in Appendix B of the Contract.

GENERAL	• When replacing contacts or other current-carrying parts, clean surfaces that are to be bolted together.
ANNUALLY	• Remove accumulation of dirt, grease, and gum with DexoIT D5 contact cleaner or equivalent. • Check for corrosion and moisture. Replace corroded hardware. • Examine for excessive heating of parts, discoloration of metal parts, charred insulation, odor, or blistering. • Check for freedom of moving parts. • Check for worn or broken mechanical parts. • Tighten loose mountings and connections. • Check contacts for wear and pitting. • Check for excessive arcing. • Check condition of gaskets (for dust-tight or watertight units). Replace damaged gaskets. • For fused units, inspect all circuit breakers. Verify with a meter that continuity is broken on trip or switch off conditions. With the circuit breaker in the OFF position, use a multimeter to measure the current and voltage on the load side conductors. The multimeter should read 0 amps and 0 volts. • Test the manual transfer switch with operation of the portable generator.

8.5.6 ELECTRICAL CONDUCTORS

8.5.6.1 DESCRIPTION

Conductors may be stranded single-conductor or multiple-conductor cable.

8.5.6.2 NUMBER OF ITEMS AND LOCATION

Numerous electrical conductors are located throughout the bridge.

8.5.6.3 MAINTENANCE AND SCHEDULE

!!! WARNING !!!

Use EXTREME CARE and ALWAYS REMOVE POWER from all pertinent electrical equipment, which includes multiple power sources, before beginning maintenance. Refer to Section 7.3, "Lockout/Tagout Procedure."

Document completed maintenance tasks on the maintenance checklists included in Appendix B of the Contract.

ANNUALLY	• Visually inspect terminations and splices for cracks, deterioration, corrosion, discoloring, or any other abnormalities. • Check tightness at each conductor termination at each terminal box. Tighten loose connections. • Check the strain relief fittings for signs of distress. • Inspect wires and electrical cables for grease and oil contamination, fraying, abrasions, sweating, cracked, melted or overheated blue tinted insulation. Clean the insulation of moisture, grease and oil after removing power sources if present.

8.5.7 DROOP CABLES

8.5.7.1 DESCRIPTION

Droop cables are flexible electrical conductors that are routed from the fixed portion of the bascule pier to the span pendulum navigation lights and fully closed limit switches. When the bridge is seated, the droop cables are partially submerged in water.

Refer to Photos numbered 9.6K, 9.6M, and 9.6O.

8.5.7.2 NUMBER OF ITEMS AND LOCATION

Droop cables are located at the bascule pier and bascule span.

8.5.7.3 MAINTENANCE AND SCHEDULE

!!! WARNING !!!

Use EXTREME CARE and ALWAYS REMOVE POWER from all pertinent electrical equipment, which includes multiple power sources, before beginning maintenance. Refer to Section 7.3, "Lockout/Tagout Procedure."

Document completed maintenance tasks on the maintenance checklists included in Appendix B of the Contract.

ANNUALLY	• Visually inspect terminations and splices for cracks, deterioration, corrosion, discoloring, or any other abnormalities. • Check tightness of each conductor termination at each terminal box. Tighten loose connections. • Check the strain relief fittings for signs of distress. • Check cables for any wear or abrasions on the outer jacket. • Inspect wires and electrical cables for grease and oil contamination, fraying, abrasions, sweating, cracked, melted or overheated blue tinted insulation. Clean the insulation of moisture, grease and oil after removing power sources if present.

8.5.8 SUBMARINE CABLES

8.5.8.1 DESCRIPTION

Submarine cables are electrical conductors routed from the control house underneath the river to the rest pier to distribute power and control to the traffic signals and far side warning gate. The end of the submarine cable is connected to a terminal enclosure on the rest pier which is only accessible from a boat.

Refer to Photos numbered 9.6L and 9.6M.

8.5.8.2 NUMBER OF ITEMS AND LOCATION

A single submarine cable is routed from the control desk to the terminal cabinet located on the south side of the rest pier (pier 2).

8.5.8.3 MAINTENANCE AND SCHEDULE

!!! WARNING !!!

Use EXTREME CARE and ALWAYS REMOVE POWER from all pertinent electrical equipment, which includes multiple power sources, before beginning maintenance. Refer to Section 7.3, "Lockout/Tagout Procedure."

Document completed maintenance tasks on the maintenance checklists included in Appendix B of the Contract.

ANNUALLY	• Visually inspect terminations and splices for cracks, deterioration, corrosion, discoloring, or any other abnormalities. • Check tightness of each conductor termination at each terminal box. Tighten loose connections. • Check the strain relief fittings for signs of distress. • Visually inspect the submarine cable and watch for signs of cracks, deterioration, and discoloration of the cable jacket.

8.6 LIGHTING SYSTEMS

8.6.1 NAVIGATION LIGHTS

8.6.1.1 DESCRIPTION

Fender navigation lights are red lighting fixtures. Their function is to enhance visibility of the fenders and locate the channel for marine vessels.

The red/green bascule span pendulum navigation lights are divided fixtures, with portions that are red and portions that are green. When the leaf is fully open, the two pendulum navigation lights located on the span turn from red to green. When the leaf is not fully open, all pendulum navigation lights are red.

Refer to Photos numbered 9.4I and 9.4J.

8.6.1.2 NUMBER OF ITEMS AND LOCATION

Three red fender lights are located on each fender ring. There are two bascule span pendulum navigation lights.

8.6.1.3 MAINTENANCE AND SCHEDULE

!!! WARNING !!!

Use EXTREME CARE and ALWAYS REMOVE POWER from all pertinent electrical equipment, which includes multiple power sources, before beginning maintenance. Refer to Section 7.3, "Lockout/Tagout Procedure."

Document completed maintenance tasks on the maintenance checklists included in Appendix B of the Contract.

MONTHLY	• Check navigation lights for proper operation. • Replace lamps if damaged or nonfunctional.

ANNUALLY	• Check gaskets and replace if damaged. • Tighten loose connections. • Check for corrosion of metal parts. Replace corroded hardware. • Check for worn or broken mechanical parts. Check for cracked lenses.
FIVE YEARS	• Replace lamps.

8.6.2 INTERIOR/EXTERIOR LIGHTS

8.6.2.1 DESCRIPTION

Various light fixtures are mounted throughout the bridge. The lighting panelboard is located in the control house to feed the lights.

Refer to Photos numbered 9.7C, 9.7D, and 9.7E.

8.6.2.2 NUMBER OF ITEMS AND LOCATION

There are numerous lights located throughout the bridge.

8.6.2.3 MAINTENANCE AND SCHEDULE

!!! WARNING !!!

Use EXTREME CARE and ALWAYS REMOVE POWER from all pertinent electrical equipment, which includes multiple power sources, before beginning maintenance. Refer to Section 7.3, Lockout/Tagout Procedure.

Document completed maintenance tasks on the maintenance checklists included in Appendix B of the Contract.

MONTHLY	• Check for burned out lamps. Replace burned out lamps. Verify light switches function properly.
ANNUALLY	• Clean luminaire lenses, interior surfaces, and weep holes (where applicable). • Check gaskets and replace if damaged. • Tighten loose connections. • Inspect for corrosion of metal parts. Spot paint corroded components. • Test emergency light fixtures and batteries. Replace if battery is not operational. • Check parts for wear or damage.

8.6.3 TRAFFIC AND ADVANCED WARNING SIGNALS

8.6.3.1 DESCRIPTION

Traffic and advanced warning signals caution roadway and pedestrian traffic before and during periods of span operation.

Refer to Photos numbered 9.4A, 9.4B, 9.4C, 9.4D, 9.4I, and 9.5A.

8.6.3.2 NUMBER OF ITEMS AND LOCATION

There are four traffic signals on the bridge mounted to traffic signal poles ahead of the warning gates. The lights turn from green to amber and then to red before each opening. A warning bell is located on one of the near side traffic signal poles to alert traffic of a bridge opening.

There is an advanced warning beacon and sign on the near side approach. The beacon lights will alternately flash during a bridge opening.

8.6.3.3 MAINTENANCE AND SCHEDULE

!!! WARNING !!!

Use EXTREME CARE and ALWAYS REMOVE POWER from all pertinent electrical equipment, which includes multiple power sources, before beginning maintenance. Refer to Section 7.3, "Lockout/Tagout Procedure."

Document completed maintenance tasks on the maintenance checklists included in Appendix B of the Contract.

MONTHLY	• Check lights for proper illumination and replace bulbs when they do not illuminate or are not working. • Verify proper operation during marine and maintenance openings.
THREE MONTHS	• Inspect all fuses with a meter and verify continuity. For fuse replacement, always install the same type and rating fuses furnished with the control console. Progression in fuse design has produced fuses that are mechanically equivalent but not electrically equivalent. Fuses may not have the same short-circuit withstand ability and current limiting ability.
ANNUALLY	• Clean all reflectors, lenses, and spot paint heads.

8.6.4 TRAFFIC GATE ARM LIGHTS

8.6.4.1 DESCRIPTION

Traffic gate arm lights caution roadway traffic before and during periods of span operation.

Refer to Photos numbered 9.4C and 9.4D.

8.6.4.2 NUMBER OF ITEMS AND LOCATION

There are red flashing gate arm lights mounted on the two warning gates.

8.6.4.3 MAINTENANCE AND SCHEDULE

!!! WARNING !!!

Use EXTREME CARE and ALWAYS REMOVE POWER from all pertinent electrical equipment, which includes multiple power sources, before beginning maintenance. Refer to Section 7.3, "Lockout/Tagout Procedure."

Document completed maintenance tasks on the maintenance checklists included in Appendix B of the Contract.

MONTHLY	• Check traffic gate arm lights for proper operation. Replace burned out bulbs.
THREE MONTHS	• Inspect all fuses with a meter and verify continuity. For fuse replacement, always install the same type and rating fuses furnished with the control console. Progression in fuse design has produced fuses that are mechanically equivalent but not electrically equivalent. Fuses may not have the same short-circuit withstand ability and current limiting ability.

SIX MONTHS	• Check gate arm lights and wiring for damage.

8.7 ELECTRIC MOTORS

8.7.1 MAIN LEAF (SPAN) MOTOR

8.7.1.1 DESCRIPTION

The main leaf motor transforms electric power to mechanical power to raise and lower the leaf.

Normal operation of the bridge utilizes the main leaf motor located on the machinery platform. However, in the event the leaf motor or drive is not operational, the leaf can still be operated by using the auxiliary air motor.

Refer to Photos numbered 9.2A and 9.2G.

Refer to Sections 11.1.1 (ID # 2) for component identification, 11.2.1 for lubrication schematic, and 11.9.1 for manufacturer's literature.

8.7.1.2 NUMBER OF ITEMS AND LOCATION

The main leaf motor is rated 15 HP and is located on the machinery platform.

8.7.1.3 MAINTENANCE AND SCHEDULE

!!! WARNING !!!

Use EXTREME CARE and ALWAYS REMOVE POWER from all pertinent electrical equipment, which includes multiple power sources, before beginning maintenance. Refer to Section 7.3, "Lockout/Tagout Procedure."

DO NOT USE WATER TO HOSE DOWN THE MOTOR HOUSING

Document completed maintenance tasks on the maintenance checklists included in Appendix B of the Contract.

ANNUALLY (Refer to Section 11.4.2 for Bridge Maintenance Performance Standard)	• Check for leakage around bearings. Clean off excess grease and dirt using a rag and WD-40 Specialist Machine and Engine Degreaser or equivalent. • Verify that shaft end-play is normal by moving the motor shaft by hand (with power off and motor not in operation) and determining whether movement is excessive (more than 1/16"). • Inspect and tighten loose electrical connections on motor. • Verify that all keys, bolts, and pins are in their proper position. Check all bolts for tightness. If loose, tighten. • During operation, examine motor for smooth running and absence of vibration. • During operation, measure and record the motor housing and bearing temperatures with an infrared thermometer. Notify bridge management if the measured temperatures are above 100° F. • Lubricate main leaf motor bearings with Mobil Unirex N2 or equivalent. • Check painted surface for signs of corrosion. Clean and spot paint areas of corrosion. Do not paint nameplates. • Check the phase currents flowing in the motor under loaded conditions with a clamp-on ammeter. Utilize a true RMS ammeter. Compare the measured current with the nameplate data. Record values in the "Notes" sections of the maintenance checklist.
FIVE YEARS	• Clean and paint the motor. Do not paint nameplates

8.7.2 WARNING GATE MOTORS

8.7.2.1 DESCRIPTION

The electric motors for the warning gates transform electric power to mechanical power to operate each traffic gate. Each warning gate motor is provided with a solenoid brake to provide holding torque on the specific device.

Refer to Photos numbered 9.4F and 9.4H.

Refer to Section 11.1.2 (ID # 52, 53, 69, and 70) for component identification.

8.7.2.2 NUMBER OF ITEMS AND LOCATION

There are two warning gate motors. One warning gate motor is located within each warning gate housing.

8.7.2.3 MAINTENANCE AND SCHEDULE

!!! WARNING !!!

Use EXTREME CARE and ALWAYS REMOVE POWER from all pertinent electrical equipment, which includes multiple power sources, before beginning maintenance. Refer to Section 7.3, "Lockout/Tagout Procedure."

Use CAUTION and VERIFY gate arm travel areas are clear of personnel and obstructions prior to operating
the traffic gates for maintenance to prevent injury or damage to equipment.

DO NOT USE WATER TO HOSE DOWN THE MOTOR HOUSING

Document completed maintenance tasks on the maintenance checklists included in Appendix B of the Contract.

ANNUALLY	Motors	• Check for leakage around bearings. Clean off excess grease and dirt using a rag and WD-40 Specialist Machine and Engine Degreaser or equivalent. • Inspect and tighten loose electrical connections on motor. • Verify that all keys, bolts, and pins are in their proper position. Check all bolts for tightness. If loose, tighten. • During operation, examine motor for smooth running and absence of vibration. • During operation, measure and record the motor housing and bearing temperatures with an infrared thermometer. Notify bridge management if the measured temperatures are above 100° F. • Check the phase currents flowing in motors under loaded conditions with a clamp-on ammeter for all motors. Utilize a true RMS ammeter. Compare the measured current with the nameplate data. Record values in the "Notes" sections of the maintenance checklist.
	Solenoid Brakes	• Check electrical connections and tighten loose connections. • Check components for wear or damage. Check for loose fasteners. Tighten loose fasteners. Check for freedom of moving parts (parts are free of binding and sticking). • Check for excessive heating of parts evidenced by discoloration of metal parts, charred insulation, or odor. Check for collections of dirt or gum, evidence of water dripping, or corrosion. Clean the solenoid brake components of dirt, gum, water, and corrosion. • Observe the brake during operation of the gate. Check for excessive vibration or unusual noise during operation.

8.8 CONTROL SYSTEM

8.8.1 CONTROL CONSOLE

8.8.1.1 DESCRIPTION

The control console is fabricated from an individual free standing cabinet which houses indicating lights, selector switches, pushbuttons, meters, control relays, contactors, circuit breakers, fuses, and terminal blocks.

Refer to Photos numbered 9.6G, 9.6H, and 9.6I.

8.8.1.2 NUMBER OF ITEMS AND LOCATION

The control console is located in the control room on the top floor of the control house.

8.8.1.3 MAINTENANCE AND SCHEDULE

!!! WARNING !!!

Use EXTREME CARE and ALWAYS REMOVE POWER from all pertinent electrical equipment, which includes multiple power sources, before beginning maintenance. Refer to Section 7.3, "Lockout/Tagout Procedure."

Document completed maintenance tasks on the maintenance checklists included in Appendix B of the Contract.

THREE MONTHS	• Open and clean with a vacuum cleaner. • Remove accumulation of dirt, grease, and gum with DexoIT D5 contact cleaner or equivalent. • Check for corrosion and moisture. Replace corroded hardware. • Lubricate door hinges and latches with 3-IN-ONE Multi-Purpose Oil. • Inspect terminal block screws for tightness. Hand tighten all loose connections. • Inspect wiring from unit terminal blocks for deterioration of insulation. • Check all starter contacts. Note when nearly all the silver tip is gone and the contact tip support is exposed. Do not file the contacts. Filing or otherwise dressing the contacts only results in lost tip material and reduces starter life. • Inspect all relays and tighten connections when loose. • Check all pushbuttons, selector switches, and meters for damage and proper operation. • Check all indicating lights by pushing each light and verifying that it illuminates. Replace burned out bulbs. • Visually inspect Uninterruptable Power Supply (UPS) including the status indicating light. • Check condition of gaskets and replace if damaged.

ANNUALLY	• Check for discolored connections on terminals, contact supports, bus bars, or connectors. Discoloration usually indicates that overheating has occurred, probably because of loose connections. Clean connections points that are discolored. Tighten all loose hardware. Check wires and connectors for damage. • Manually operate each relay and contactor with associated circuit breakers off and observe contact operation to be sure it opens and closes cleanly and that the contacts are fully sealed in the closed position. In order to manually operate a relay or contactor with the associated circuit breaker off, verify that power is off, and with a non-conductive screwdriver, press the button on the relay or contactor. The button is usually located on the front or bottom of the housing. • Monitor relay and contactor operation during normal operation and check for loud noise and arcing, both on opening and on closing. A loud noise and arcing on closing is usually due to contact bounce. • Verify the power on indicator on the UPS is steady ON and no audible indication is present. If any other indication is present, consult manufacturer's literature.

8.8.2 LIMIT SWITCHES

8.8.2.1 DESCRIPTION

A limit switch is a switching device that provides feedback in an electrical circuit. When actuated, this device will restrict or initiate an operation.

Refer to Photos numbered 9.2E, 9.2G, 9.2H, 9.2I, 9.2J, 9.3A, 9.3B, 9.4E, 9.4F, 9.4G, 9.4H, 9.6N, and 9.6O.

Refer to Sections 11.1.1 and 11.1.2 (ID # 1, 10, 35, 65, 66, 68, 82, and 83) for component identification.

8.8.2.2 NUMBER OF ITEMS AND LOCATION

Limit switches and resolvers on the bridge are located as follows:

- Span Control
    - Four Circuit Span Position Rotary Cam Limit Switch with Resolver (1) – One located on the machinery platform (9.2E, 9.2I, 9.2J, & 9.6N)
    - Brake Limit Switches (6) – Three located on each brake frame (9.2G & 9.2H)
    - Fully Seated Limit Switches (2) – One located at the toe on each side of the bascule span (9.3A, 9.3B, & 9.6O)
- Traffic Control
    - Eight Circuit Warning Gate Rotary Cam Limit Switch (2) – One located inside each warning gate housing (9.4E & 9.4G)
    - Warning Gate Manual Operation Limit Switch (1) – One located in the far (south) side warning gate housing (9.4H)
    - Warning Gate Door Switch (4) – Two located inside each warning gate housing (9.4E, 9.4F, 9.4G, & 9.4H)

8.8.2.3 MAINTENANCE AND SCHEDULE

!!! WARNING !!!

Use EXTREME CARE and ALWAYS REMOVE POWER from all pertinent electrical equipment, which includes multiple power sources, before beginning maintenance. Refer to Section 7.3, "Lockout/Tagout Procedure."

Document completed maintenance tasks on the maintenance checklists included in Appendix B of the Contract.

ANNUALLY	All Limit Switches	• Inspect all limit switches for wear. • Remove accumulated dust, dirt, and moisture on housing. Use brush, soft cloth, or vacuum cleaner. • Remove accumulated dust, dirt, and moisture from all shafts, keeping it clean and free of galling. • Inspect latches, mounting hardware, and seals to ensure proper seal of housing. • Inspect all fasteners and tighten loose connections. Replace corroded hardware. • If accessible, remove the cover and visually inspect condition of all internal parts. • Inspect limit switch wiring for deterioration. • Check for worn or broken mechanical parts.
	Rotary Cam Limit Switch	• Inspect the rotary cam limit switch cams and rollers for wear, corrosion and good contact between the fixed and movable parts.
	Lever Arm Limit Switches	• Inspect snap action contact blocks and all internal component connections. Hand tighten loose connections. • Inspect all wiring from snap action contact blocks for deterioration. • Cycle lever arm several times.

8.9 MISCELLANEOUS EQUIPMENT

8.9.1 ELECTRIC HORN

8.9.1.1 DESCRIPTION

An electric horn provides an audible signal to vessels prior to and following bridge openings. The horn is activated by pushing the navigation horn pushbutton located on the control desk.

Refer to Photo numbered 9.7B.

8.9.1.2 NUMBER OF ITEMS AND LOCATION

A single electric horn is located outside the control house facing the navigable channel.

8.9.1.3 MAINTENANCE AND SCHEDULE

!!! WARNING !!!

Use EXTREME CARE and ALWAYS REMOVE POWER from all pertinent electrical equipment, which includes multiple power sources, before beginning maintenance. Refer to Section 7.3, "Lockout/Tagout Procedure."

Document completed maintenance tasks on the maintenance checklists included in Appendix B of the Contract.

MONTHLY	• Perform a general visual inspection of the equipment and check for proper operation of the system.
ANNUALLY	• Check electrical connections and tighten loose connections. • Check the electric horn for debris. • Tighten loose hardware. Check hardware for corrosion.

8.9.2 HEATING AND AIR CONDITIONING SYSTEMS

8.9.2.1 DESCRIPTION

A heating and air conditioning system serve to heat and cool the control house.

Refer to Photos numbered 9.7A, 9.7H, and 9.7K.

8.9.2.2 NUMBER OF ITEMS AND LOCATION

A single unit is located on the exterior wall (west side) of the control house. The unit is powered from the lighting panelboard located in the control house, adjacent to the exterior door.

8.9.2.3 MAINTENANCE AND SCHEDULE

!!! WARNING !!!

Use EXTREME CARE and ALWAYS REMOVE POWER from all pertinent electrical equipment, which includes multiple power sources, before beginning maintenance. Refer to Section 7.3, "Lockout/Tagout Procedure."

Document completed maintenance tasks on the maintenance checklists included in Appendix B of the Contract.

MONTHLY	• Visually inspect all air filters. Replace dirty or damaged filters. • Check all cooling coils, seals, fittings, ducting connections, and pipelines for leaks. • Inspect the condition of all safety devices, where provided, for deterioration including thermostat and thermal limit safety switches. • Check performance of equipment related to temperature and humidity control.
ANNUALLY	• Remove, clean, and service, and reinstall unit in accordance with Section 11.9.3.

8.9.3 SUMP PUMP

8.9.3.1 DESCRIPTION

A sump pump system is used to remove water from the counterweight pit.

Refer to Photo numbered 9.7F.

8.9.3.2 NUMBER OF ITEMS AND LOCATION

The sump pump system is located in the counterweight pit of the bascule pier and plugs into the adjacent receptacle on the wall.

8.9.3.3 MAINTENANCE AND SCHEDULE

!!! WARNING !!!

Use EXTREME CARE and ALWAYS REMOVE POWER from all pertinent electrical equipment, which includes multiple power sources, before beginning maintenance. Refer to Section 7.3, "Lockout/Tagout Procedure."

Document completed maintenance tasks on the maintenance checklists included in Appendix B of the Contract.

MONTHLY	• Check that the motor is free of all debris. • Dump buckets of water or run water from a hose into the sump to test the pump's response and look for leaks. Verify water is pumped out from the sump and there is no back-flow. Do not flood the surrounding floor or area. • During operation, examine motor for smooth running and absence of excessive vibration. The sump pump should not be operated without water in the sump wet well. • Check sump pump piping for leaks. • Check the operation of the sump pump heat lamp. Replace the bulb if it is burned out.

8.9.4 HOT WATER HEATER

8.9.4.1 DESCRIPTION

A hot water heater is used to supply the bathroom sink with hot water.

Refer to Photo numbered 9.7J.

8.9.4.2 NUMBER OF ITEMS AND LOCATION

A single hot water heater is located inside the bathroom.

8.9.4.3 MAINTENANCE AND SCHEDULE

!!! WARNING !!!

Use EXTREME CARE and ALWAYS REMOVE POWER from all pertinent electrical equipment, which includes multiple power sources, before beginning maintenance. Refer to Section 7.3, "Lockout/Tagout Procedure."

Document completed maintenance tasks on the maintenance checklists included in Appendix B of the Contract.

MONTHLY	• Check the unit and associated piping for leaks. • Turn the hot water on at the bathroom sink and verify that the water turns hot.

8.9.5 HEAT TRACE

8.9.5.1 DESCRIPTION

Heat trace cabling and associated equipment is installed on the water and waste lines to prevent freezing during winter months.

Refer to Photo numbered 9.7I.

8.9.5.2 NUMBER OF ITEMS AND LOCATION

The heat trace cable is installed on piping routed along the north approach.

8.9.5.3 MAINTENANCE AND SCHEDULE

!!! WARNING !!!

Use EXTREME CARE and ALWAYS REMOVE POWER from all pertinent electrical equipment, which includes multiple power sources, before beginning maintenance. Refer to Section 7.3, "Lockout/Tagout Procedure."

Document completed maintenance tasks on the maintenance checklists included in Appendix B of the Contract.

ANNUALLY	• Visually inspect the pipe, insulation, and connections to the heating cable for physical damage. Check that no moisture is present in junction boxes, electrical connections are tight and grounded, and insulation is dry and sealed. Tighten fasteners if loose.

8.9.6 PIT

8.9.6.1 DESCRIPTION

The counterweight pit provides an area for the counterweight to travel during operation of the bridge.

Refer to Photos numbered 9.1E, 9.1F, and 9.7F.

8.9.6.2 NUMBER OF ITEMS AND LOCATION

A counterweight pit is located at the bottom of the bascule pier.

8.9.6.3 MAINTENANCE AND SCHEDULE

!!! WARNING !!!

Use EXTREME CARE and ALWAYS REMOVE POWER from all pertinent electrical equipment, which includes multiple power sources, before beginning maintenance. Refer to Section 7.3, "Lockout/Tagout Procedure."

!!! WARNING !!!

Use EXTREME CARE and VERIFY that electrical components and enclosures do not get wet.

Document completed maintenance tasks on the maintenance checklists included in Appendix B of the Contract.

SIX MONTHS	• Clean and power wash the counterweight pit of dirt and debris. Electrical equipment must be protected prior to power washing the counterweight pit to prevent water from entering any electrical component. Water intrusion may cause failure to components.

8.9.7 CONDUIT SYSTEMS

8.9.7.1 DESCRIPTION

Conduit, boxes, and supports are used throughout the bridges to route and protect control and power cables.

Refer to Photos numbered 9.2F, 9.2K, 9.5B, 9.6K, 9.6M, and 9.7B

8.9.7.2 NUMBER OF ITEMS AND LOCATION

Conduit, boxes, and supports are located in the control house, roadway, machinery platform, etc.

8.9.7.3 MAINTENANCE AND SCHEDULE

!!! WARNING !!!

Use EXTREME CARE and ALWAYS REMOVE POWER from all pertinent electrical equipment, which includes multiple power sources, before beginning maintenance. Refer to Section 7.3, "Lockout/Tagout Procedure."

Document completed maintenance tasks on the maintenance checklists included in Appendix B of the Contract.

ANNUALLY	• Open and clean boxes with a vacuum cleaner. • Remove accumulation of dirt, grease, and gum from conduit. • Check for corrosion and moisture. Check conduit for cracking or other damage. Replace corroded hardware. • Tighten loose mountings and connections. • Check condition of gaskets in boxes and replace gaskets if damaged. • Lubricate door hinges and latches, where provided, with 3-IN-ONE Multi-Purpose Oil. • Check and clean all drain holes and fittings.
FIVE YEARS	• Clean and paint all corrosion and oxidation from steel conduit and supports. • Where PVC coated steel conduit is installed, apply touch up compound to cracks and/or cuts in coating.

CHAPTER 9 - PHOTOS

GUIDE TO PHOTOS

9.1 Leaf Support System and Counterweights

9.1A - Trunnion Bearing (Front View) 9-3
9.1B - Trunnion Bearing (Side View) 9-3
9.1C - Live Load Bearing 9-4
9.1D - Live Load Bearing Masonry Plate 9-4
9.1E - Front Face of Counterweight (Bridge Closed) 9-5
9.1F - Top of Counterweight (Bridge Open) 9-5

9.2 Span Drive Machinery

9.2A - Span Drive Machinery (West Side of Platform) 9-6
9.2B - Span Drive Machinery (East Side of Platform) 9-6
9.2C - Auxiliary Drive Components 9-7
9.2D - Auxiliary Air Motor Flexible Hose Arrangement 9-7
9.2E - Auxiliary Drive Air Line Components 9-8
9.2F - Auxiliary Drive Flexible Air Hose near West Access Hatch 9-8
9.2G - Main Leaf Motor and Motor Brake 9-9
9.2H - Machinery Brake 9-9
9.2I - Third Intermediate Gear Set (West Side of Platform) 9-10
9.2J - First and Second Intermediate Gear Sets (West Side of Platform) 9-10
9.2K - Rack and Pinion 9-11
9.2L - Main Pinion Bearing 9-11

9.3 Centering Guides

9.3A - East Centering Guide 9-12
9.3B - West Centering Guide 9-12

9.4 Traffic Control Devices and Navigation Lights

9.4A - Traffic Control Equipment 9-13
9.4B - Advanced Warning Signal 9-13
9.4C - Near Side Warning Gate 9-14
9.4D - Far Side Warning Gate 9-14
9.4E - Near Side Warning Gate Equipment (Front) 9-15

9.4F - Near Side Warning Gate Equipment (Back) 9-15
9.4G - Far Side Warning Gate Equipment (Front) 9-16
9.4H - Far Side Warning Gate Equipment (Back) 9-16
9.4I - Fender and Span Navigation Lights – West Side 9-17
9.4J - Fender and Span Navigation Lights – East Side 9-17

9.5 Power Distribution Equipment
9.5A - Main Incoming Service and Manual Transfer Switch 9-18
9.5B - Distribution Panelboard 9-18
9.5C - Power Panelboard 9-19

9.6 Control Equipment
9.6A - Motor Control Cabinet 9-20
9.6B - Motor Control Cabinet (Right Section) 9-20
9.6C - Motor Control Cabinet (Middle Section) 9-21
9.6D - Motor Control Cabinet (Left Section) 9-21
9.6E - Secondary Resistors 9-22
9.6F - Control Console 9-22
9.6G - Control Desk Interior 9-23
9.6H - Span Position Display 9-23
9.6I - Machinery Platform Disconnect Switches 9-24
9.6J - Droop Cables 9-24
9.6K - Far Side Submarine Termination Box 9-25
9.6L - Submarine Cable under Control House 9-25
9.6M - Span Position Rotary Cam Limit Switch 9-26
9.6N - Fully Seated Limit Switch 9-26

9.7 Miscellaneous Equipment
9.7A – Control House Exterior 9-27
9.7B - Electric Horn 9-27
9.7C - Emergency Light Fixture 9-28
9.7D - Control House Light Fixture 9-28
9.7E - Machinery Platform Light Fixture 9-29
9.7F - Sump Pump 9-29
9.7G - Lightning Protection Air Terminal 9-30
9.7H - Lightning Protection Down Conductor 9-30

9.1 LEAF SUPPORT SYSTEM AND COUNTERWEIGHTS

PHOTO 9.1A – TRUNNION BEARING (FRONT VIEW)

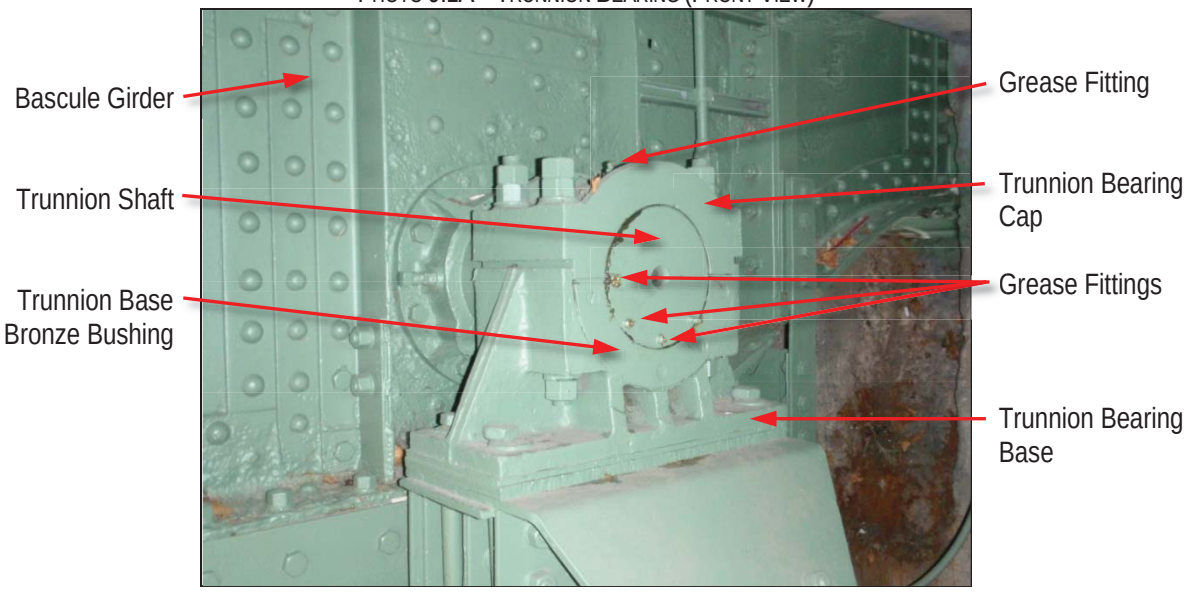

PHOTO 9.1B – TRUNNION BEARING (SIDE VIEW)

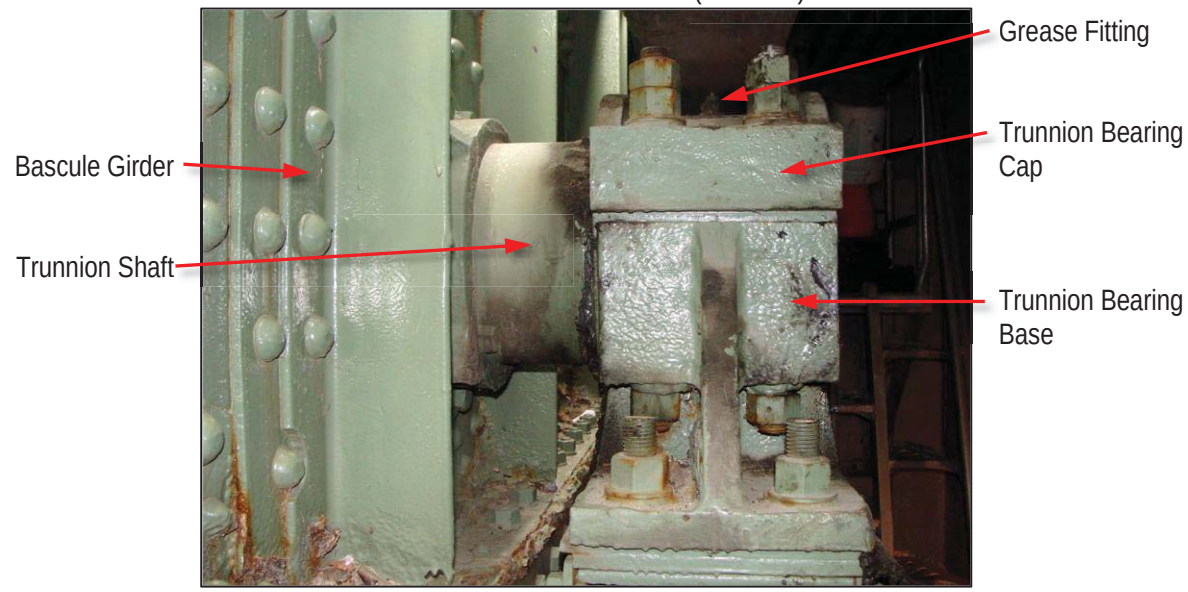

PHOTO 9.1C – LIVE LOAD BEARING

PHOTO 9.1D – LIVE LOAD BEARING MASONRY PLATE

PHOTO 9.1E – FRONT FACE OF COUNTERWEIGHT (BRIDGE CLOSED)

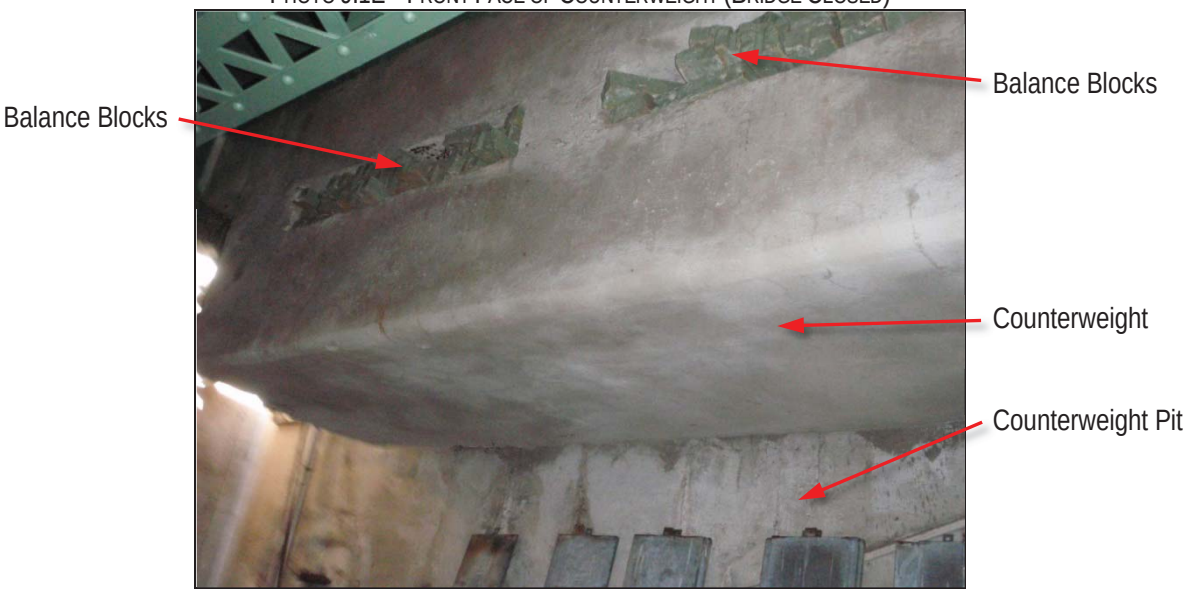

PHOTO 9.1F – TOP OF COUNTERWEIGHT (BRIDGE OPEN)

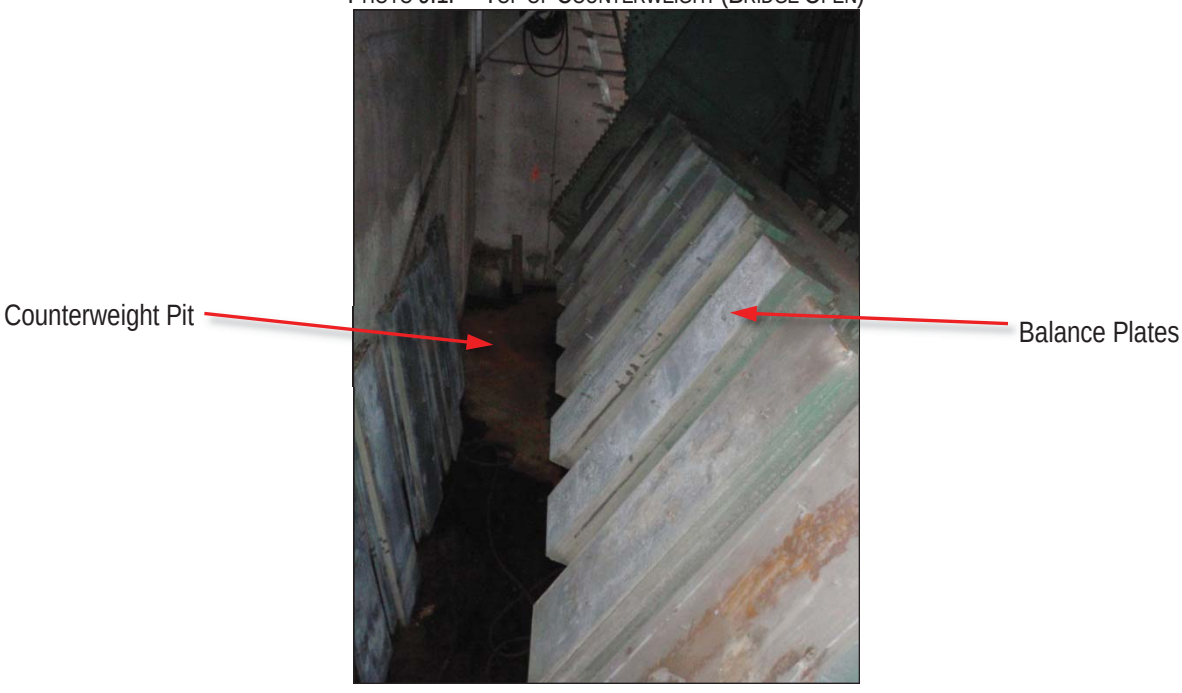

9.2 SPAN DRIVE MACHINERY

PHOTO 9.2A – SPAN DRIVE MACHINERY (WEST SIDE OF PLATFORM)

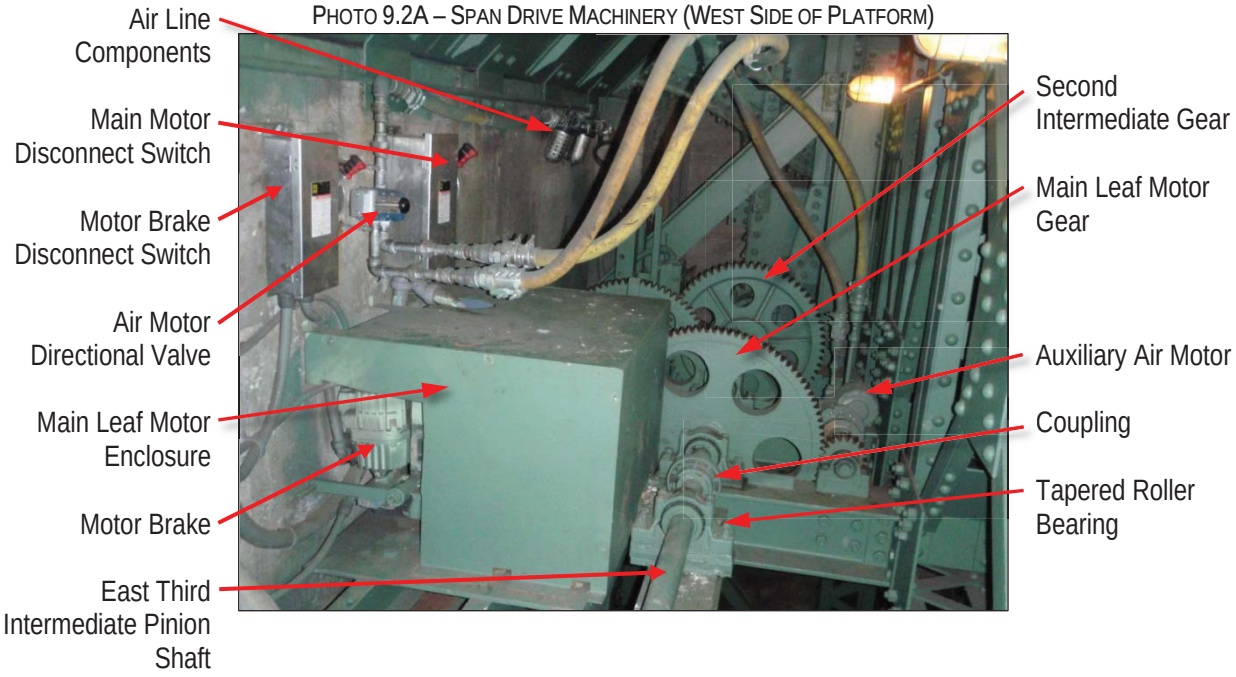

PHOTO 9.2B – SPAN DRIVE MACHINERY (EAST SIDE OF PLATFORM)

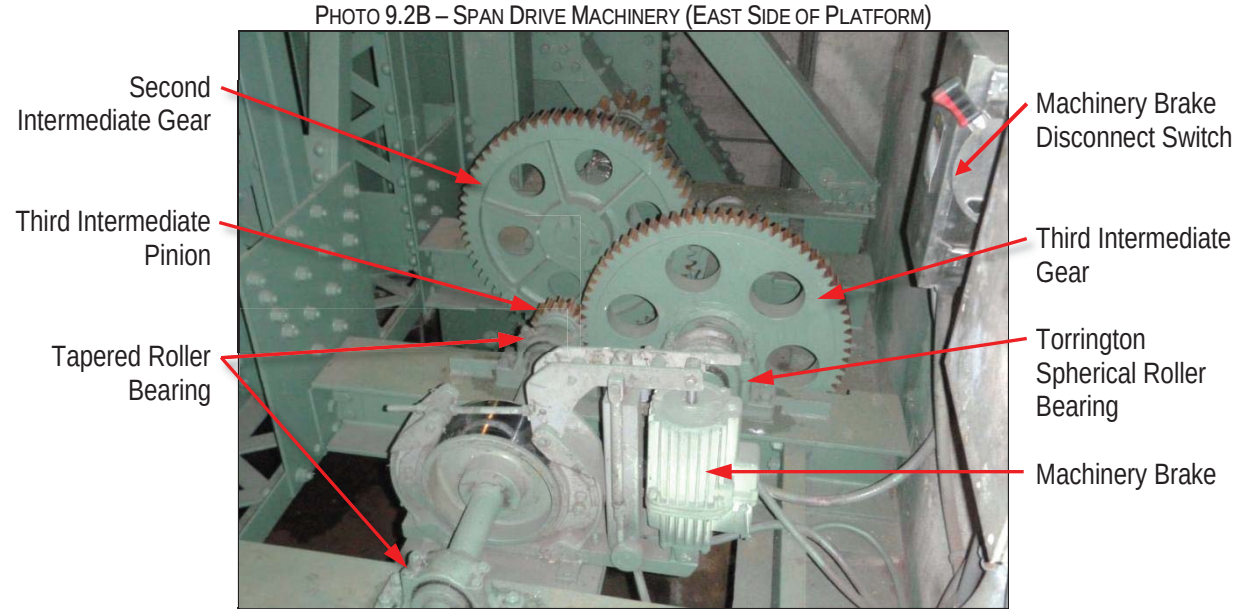

PHOTO 9.2C – AUXILIARY DRIVE COMPONENTS

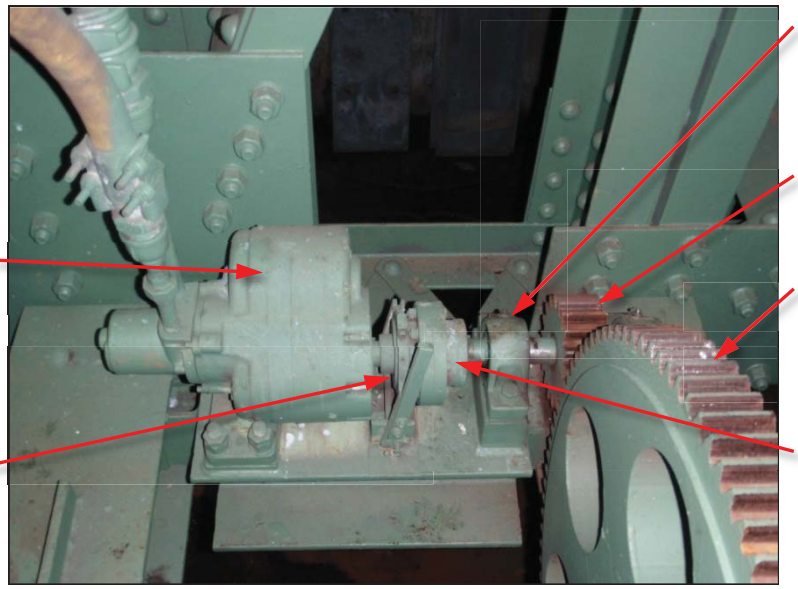

PHOTO 9.2D – AUXILIARY AIR MOTOR FLEXIBLE HOSE ARRANGEMENT

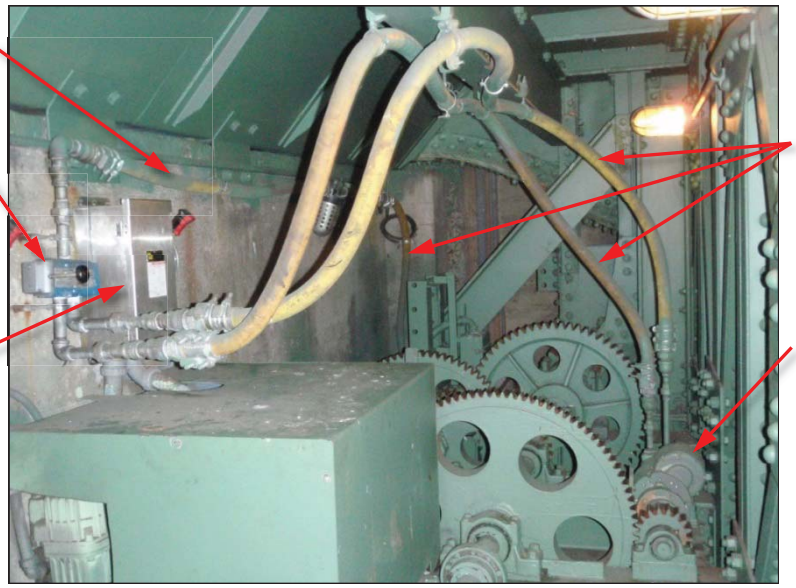

PHOTO 9.2E – AUXILIARY DRIVE AIR LINE COMPONENTS

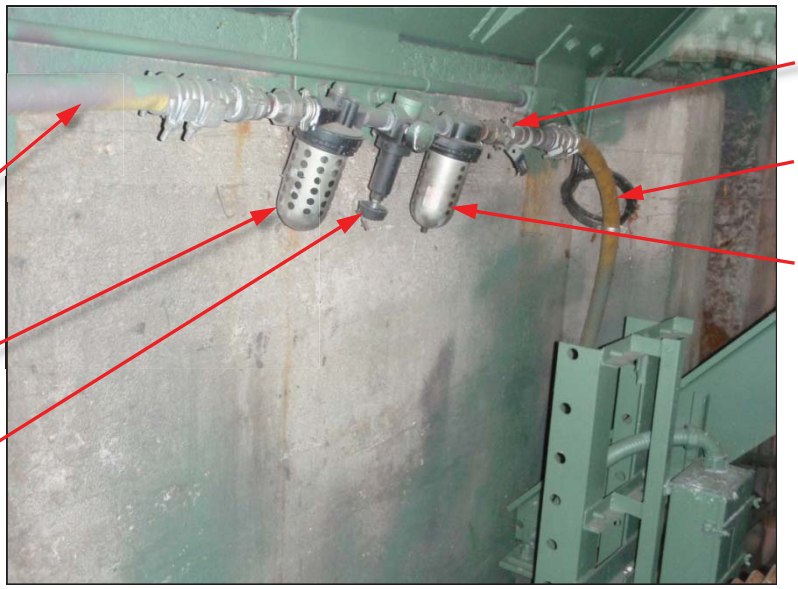

PHOTO 9.2F – AUXILIARY DRIVE FLEXIBLE AIR HOSE NEAR WEST ACCESS HATCH

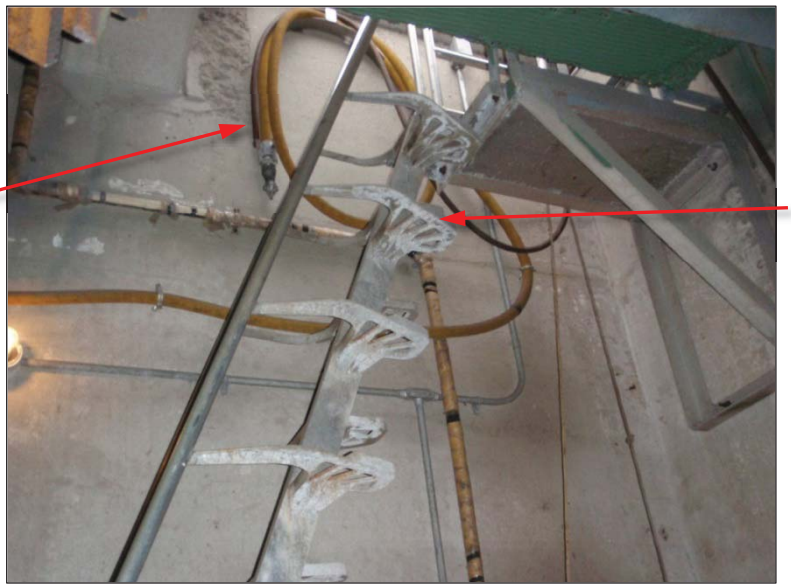

PHOTO 9.2G – MAIN LEAF MOTOR AND MOTOR BRAKE

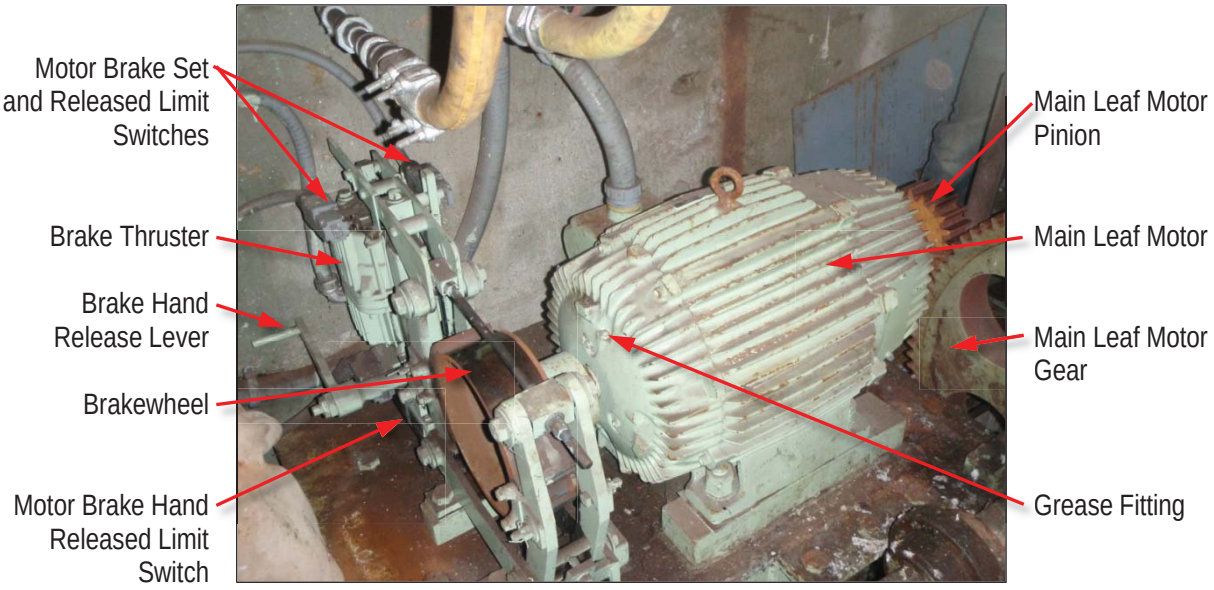

PHOTO 9.2H – MACHINERY BRAKE

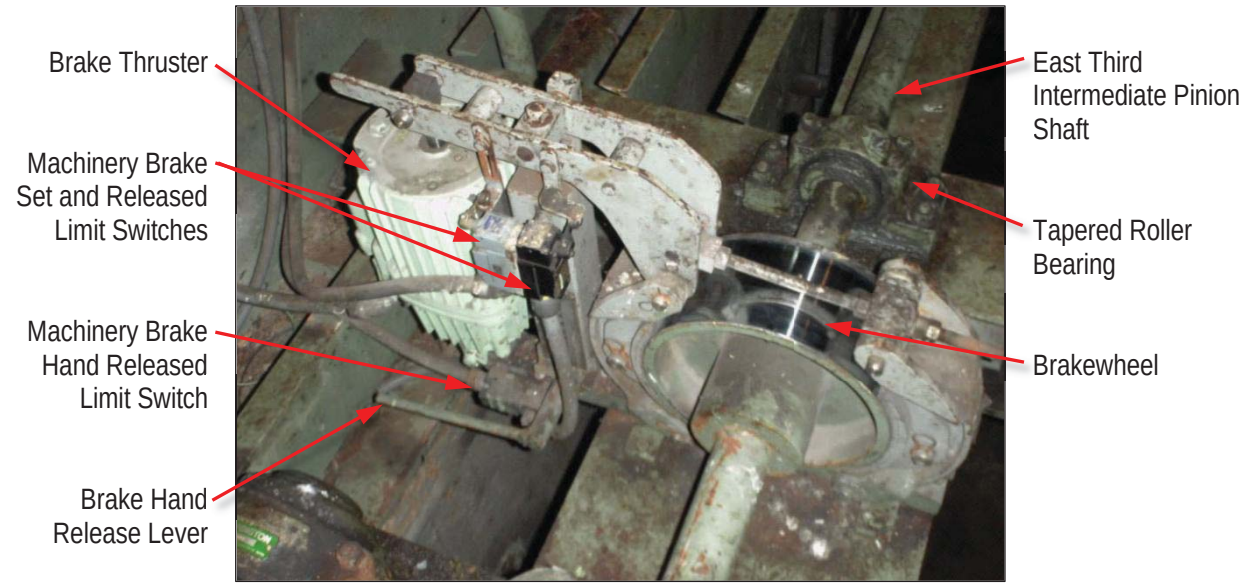

PHOTO 9.2I – THIRD INTERMEDIATE GEAR SET (WEST SIDE OF PLATFORM)

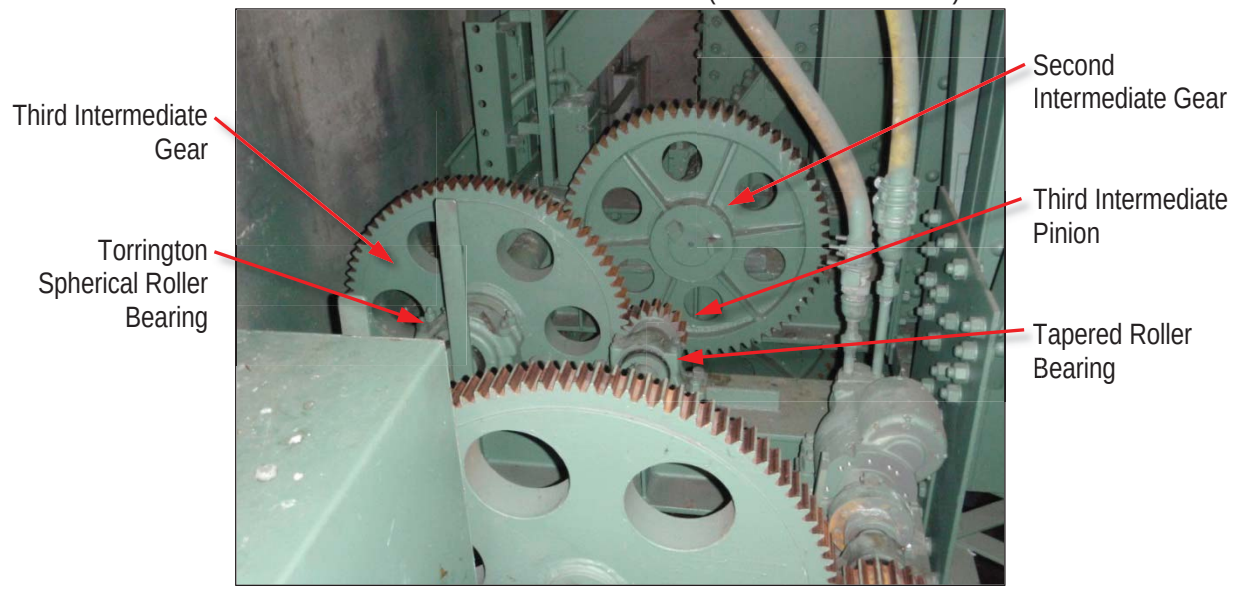

PHOTO 9.2J – FIRST AND SECOND INTERMEDIATE GEAR SETS (WEST SIDE OF PLATFORM)

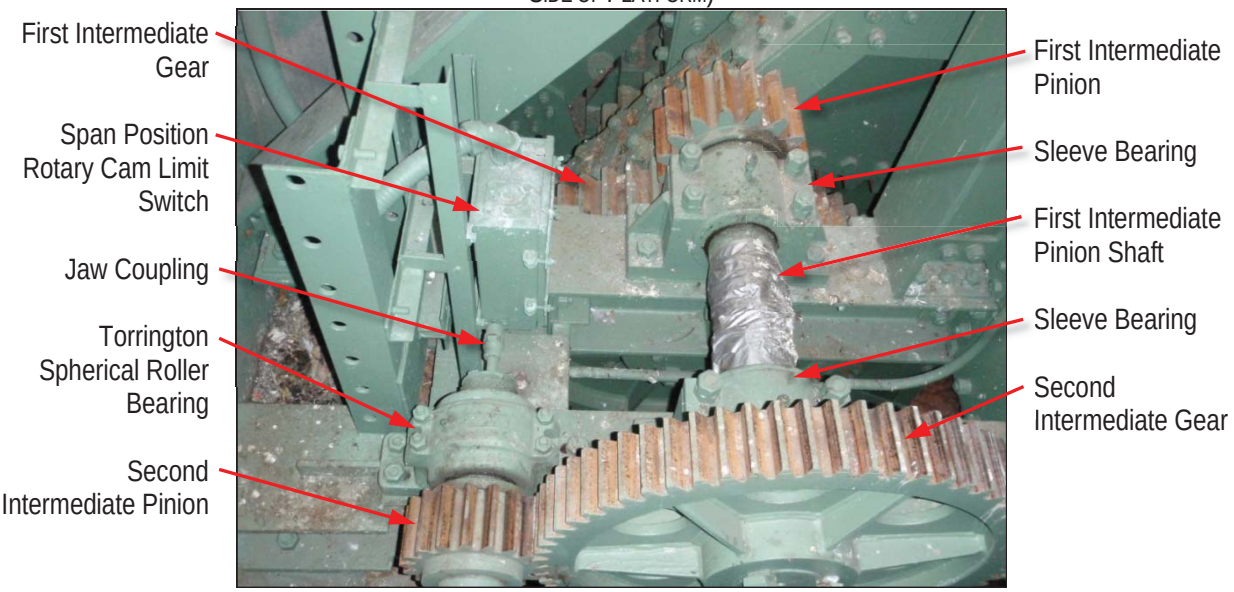

PHOTO 9.2K – RACK AND PINION

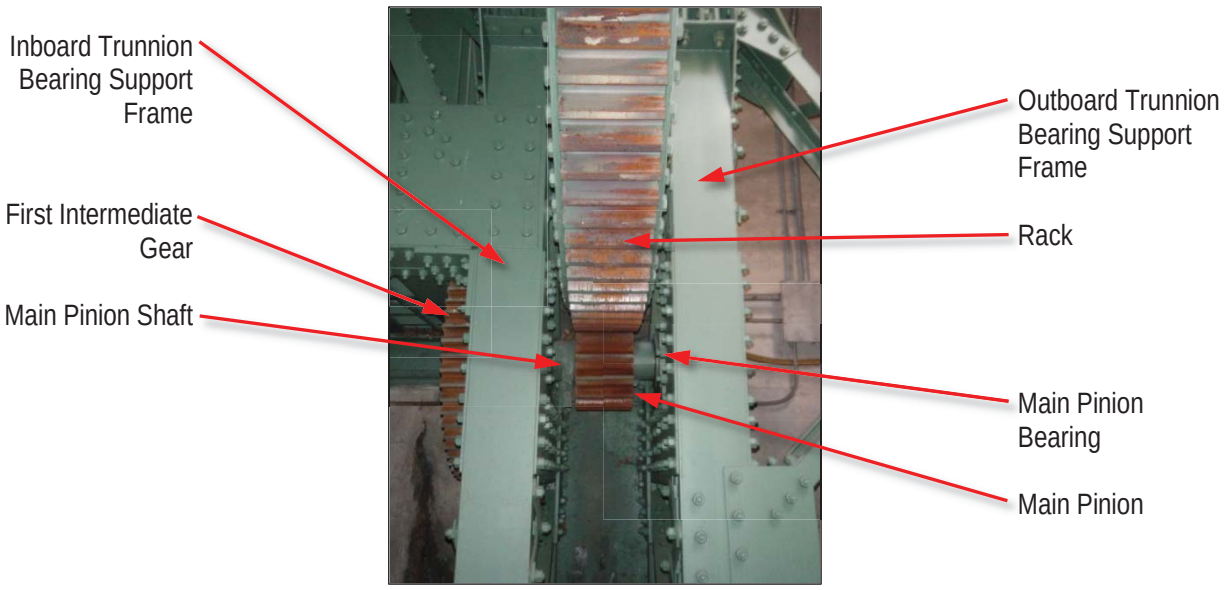

PHOTO 9.2L – MAIN PINION BEARING

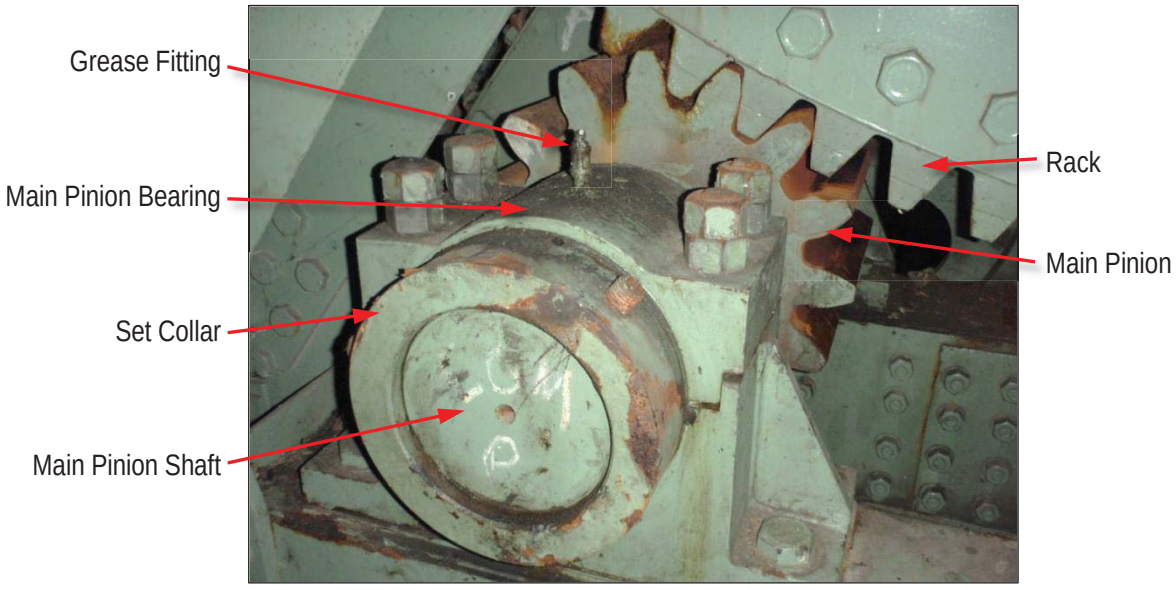

9.3 CENTERING GUIDES

PHOTO 9.3A – EAST CENTERING GUIDE

PHOTO 9.3B – WEST CENTERING GUIDE

9.4 TRAFFIC CONTROL DEVICES AND NAVIGATION LIGHTS

PHOTO 9.4A – TRAFFIC CONTROL EQUIPMENT

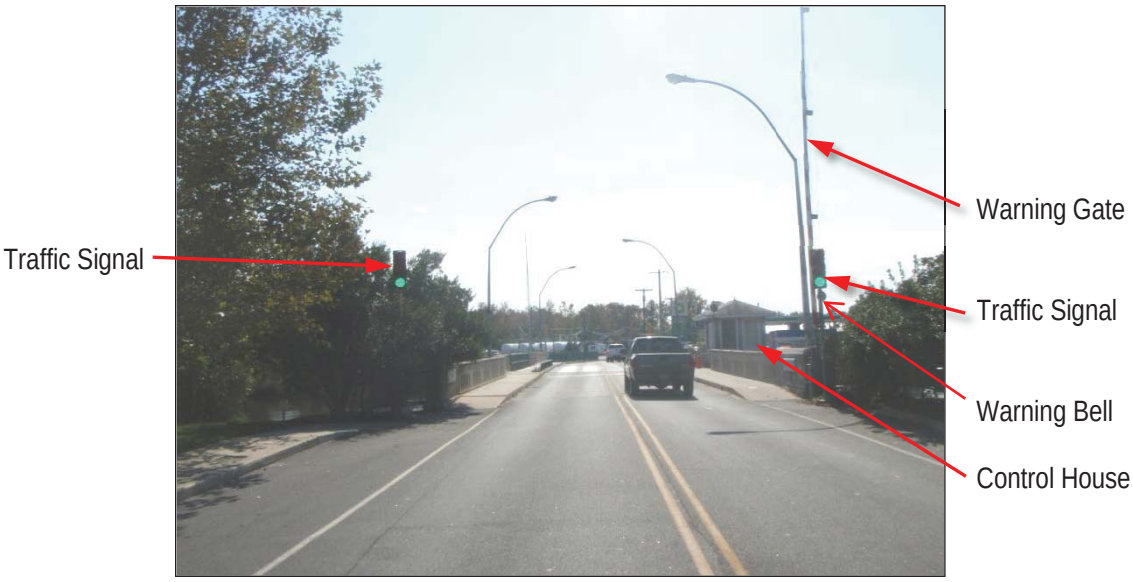

PHOTO 9.4B – ADVANCED WARNING SIGNAL

PHOTO 9.4C – NEAR SIDE WARNING GATE

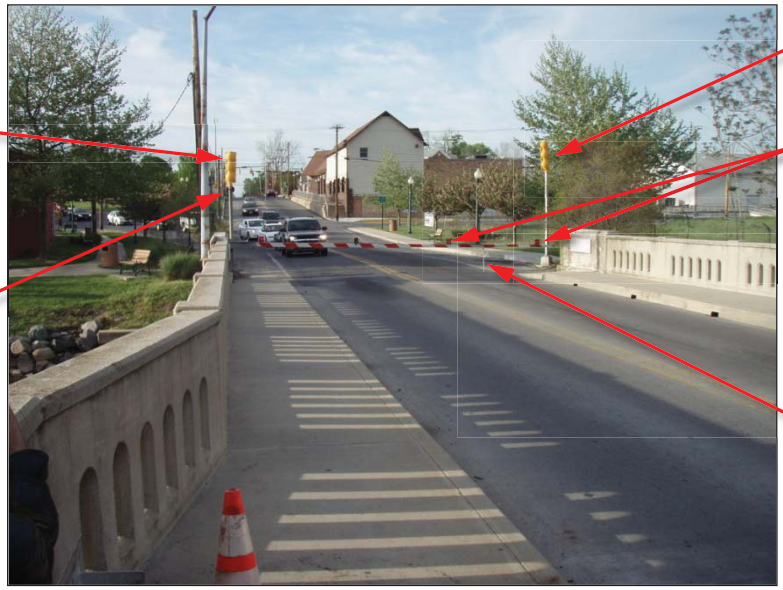

PHOTO 9.4D – FAR SIDE WARNING GATE

PHOTO 9.4E – NEAR SIDE WARNING GATE EQUIPMENT (FRONT)

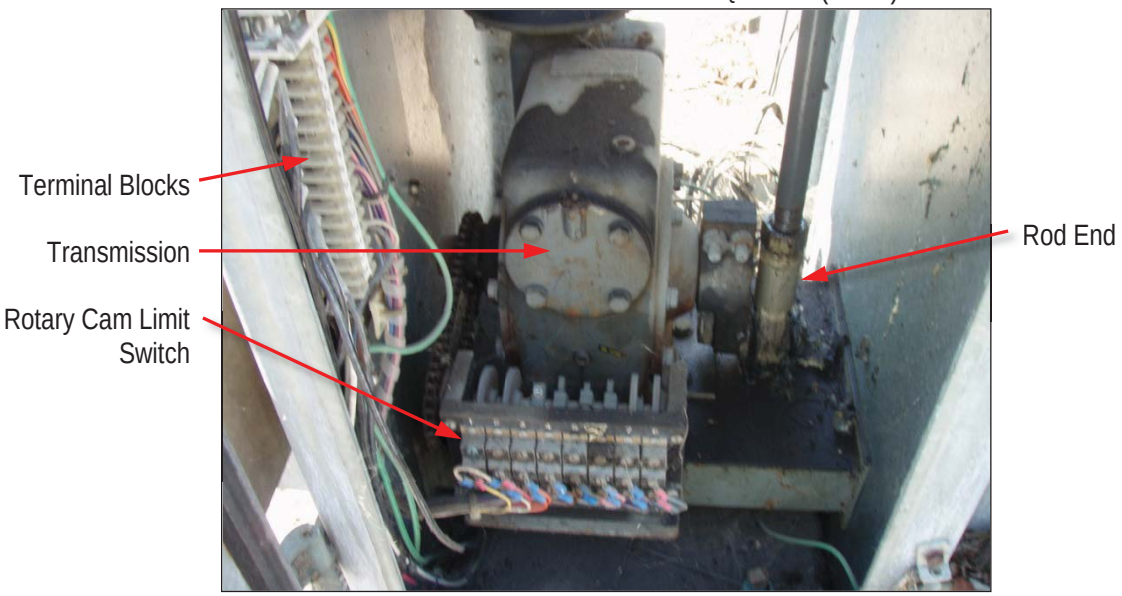

PHOTO 9.4F – NEAR SIDE WARNING GATE EQUIPMENT (BACK)

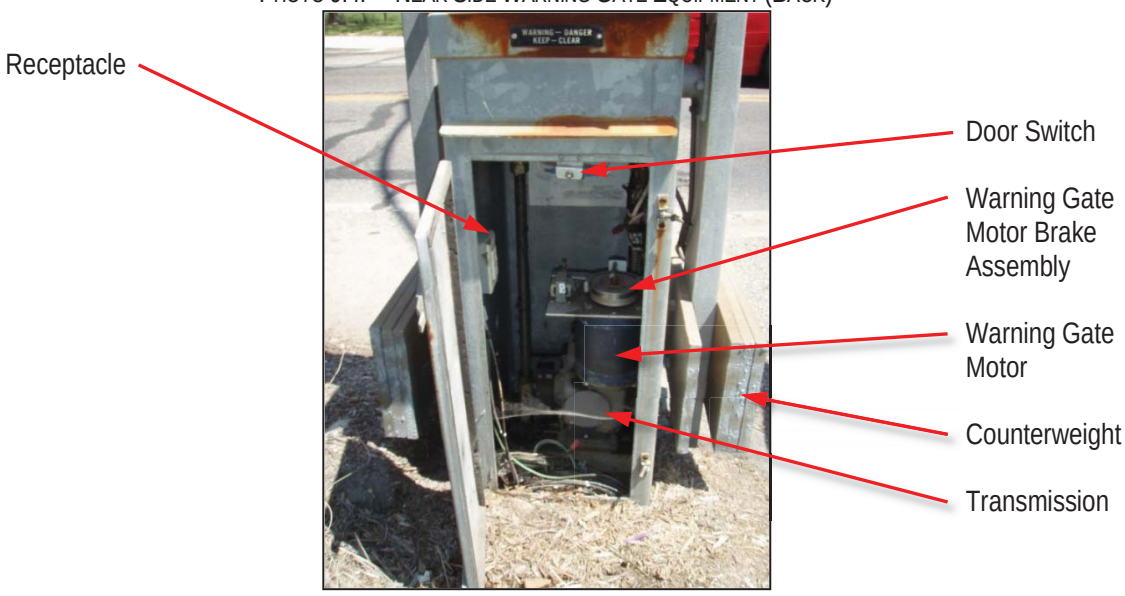

PHOTO 9.4G – FAR SIDE WARNING GATE EQUIPMENT (FRONT)

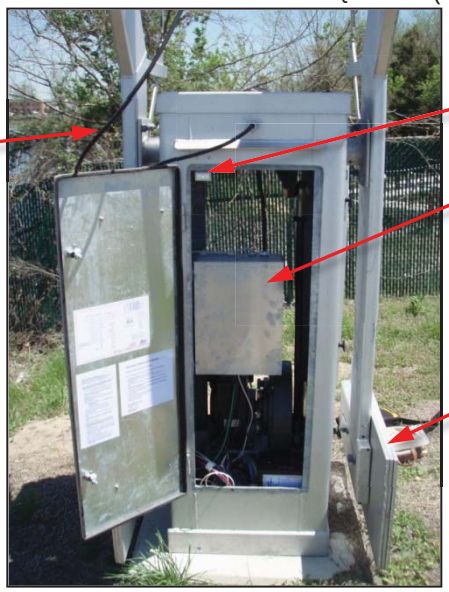

PHOTO 9.4H – FAR SIDE WARNING GATE EQUIPMENT (BACK)

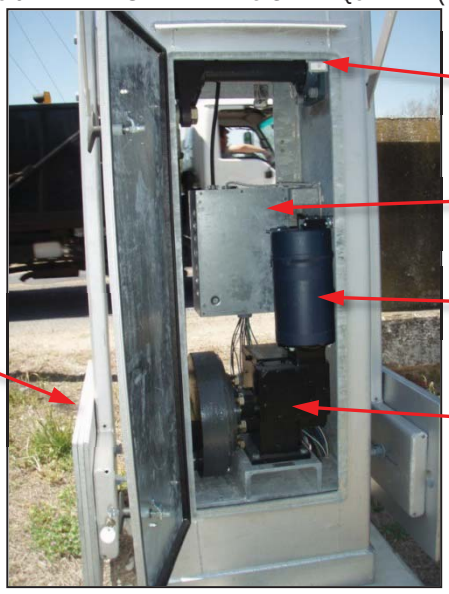

PHOTO 9.4I – FENDER AND SPAN NAVIGATION LIGHTS – WEST SIDE

PHOTO 9.4J – FENDER AND SPAN NAVIGATION LIGHTS – EAST SIDE

9.5 POWER DISTRIBUTION EQUIPMENT

PHOTO 9.5A – MAIN INCOMING SERVICE AND MANUAL TRANSFER SWITCH

PHOTO 9.5B – DISTRIBUTION PANELBOARD

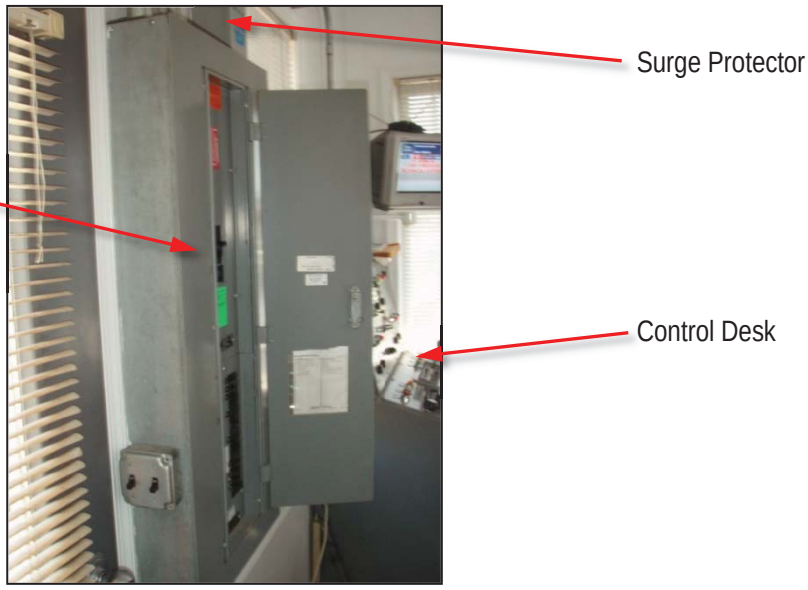

PHOTO 9.5C – POWER PANELBOARD

9.6 CONTROL EQUIPMENT

PHOTO 9.6A – MOTOR CONTROL CABINET

PHOTO 9.6B – MOTOR CONTROL CABINET (RIGHT SECTION)

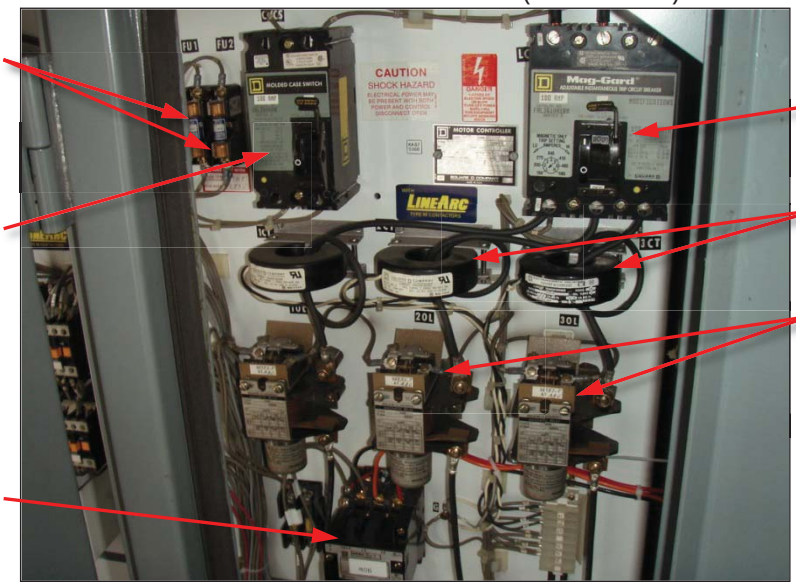

PHOTO 9.6C – MOTOR CONTROL CABINET (MIDDLE SECTION)

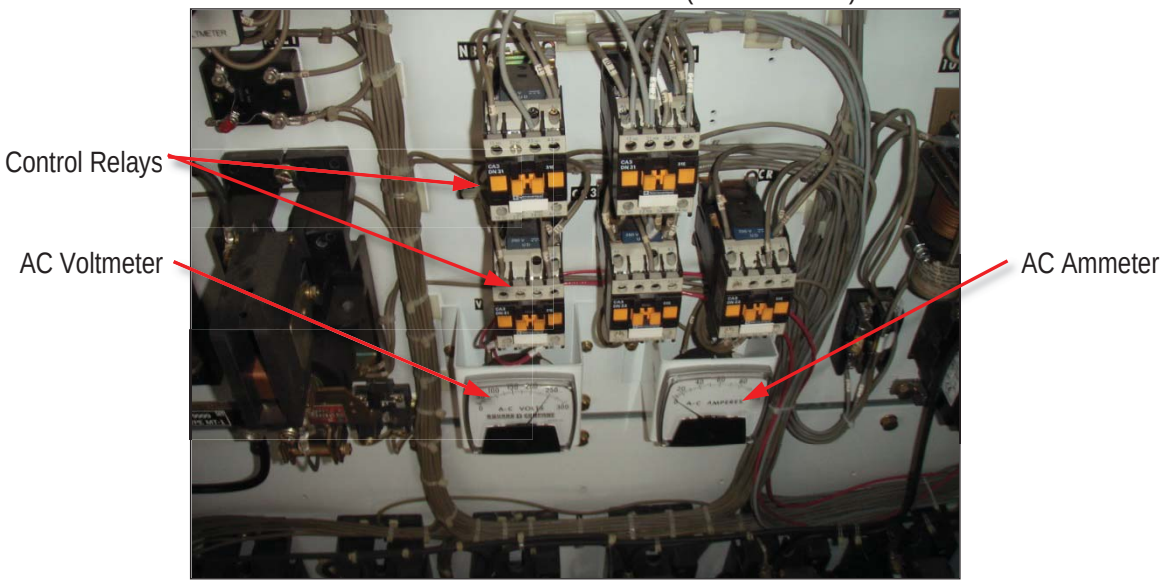

PHOTO 9.6D – MOTOR CONTROL CABINET (LEFT SECTION)

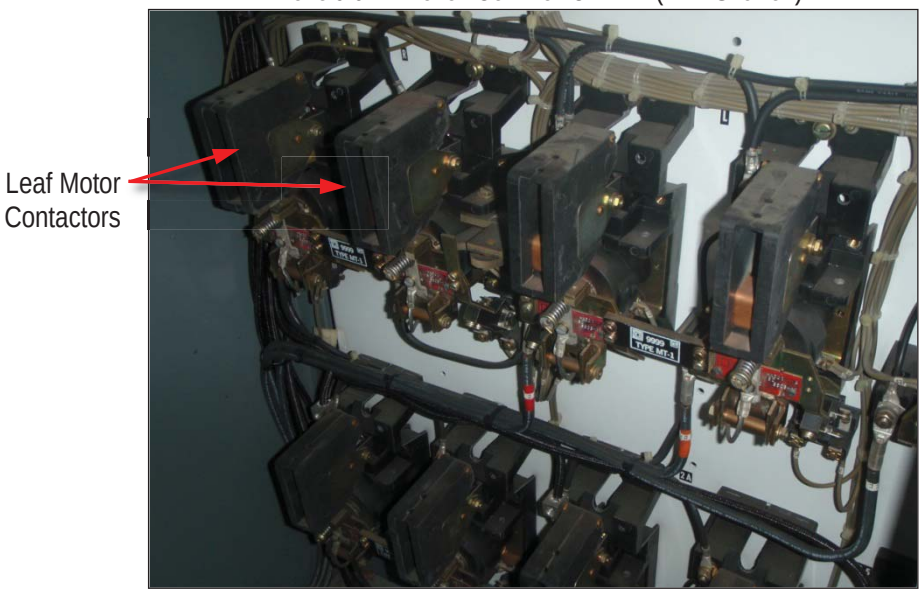

PHOTO 9.6E – SECONDARY RESISTORS

PHOTO 9.6F – CONTROL CONSOLE

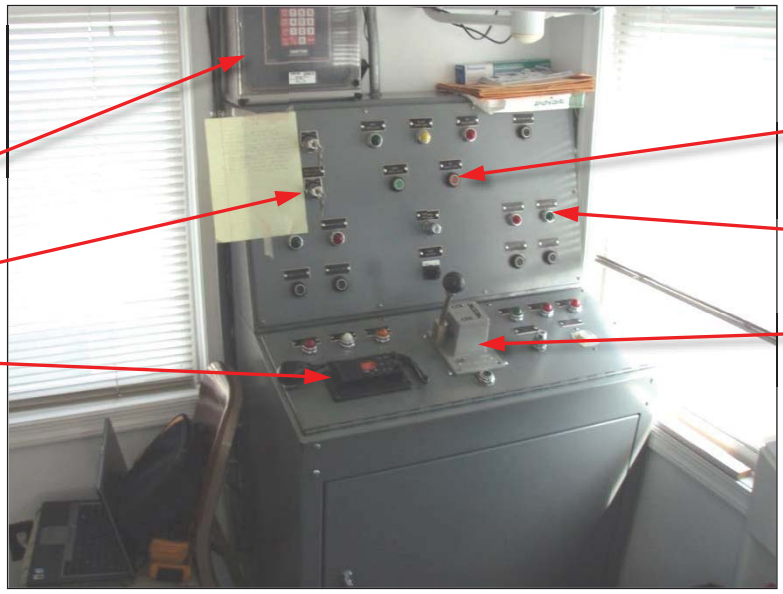

PHOTO 9.6G – CONTROL DESK INTERIOR

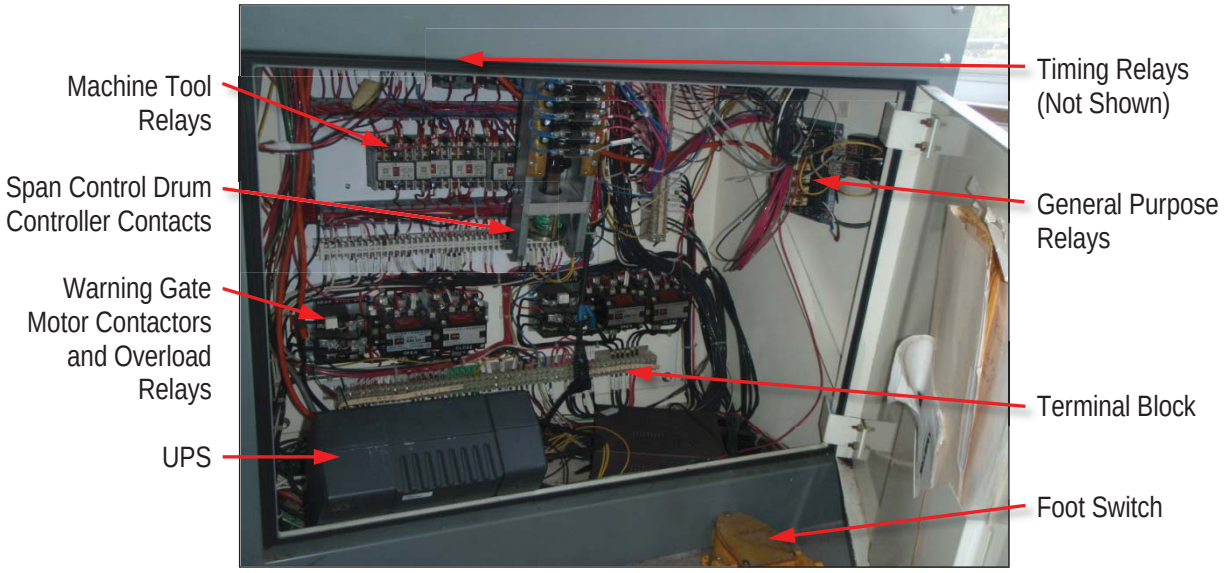

PHOTO 9.6H – SPAN POSITION DISPLAY

PHOTO 9.6I – MACHINERY PLATFORM DISCONNECT SWITCHES

PHOTO 9.6J – DROOP CABLES

PHOTO 9.6K – FAR SIDE SUBMARINE TERMINATION BOX

PHOTO 9.6L – SUBMARINE CABLE UNDER CONTROL HOUSE

PHOTO 9.6M – SPAN POSITION ROTARY CAM LIMIT SWITCH

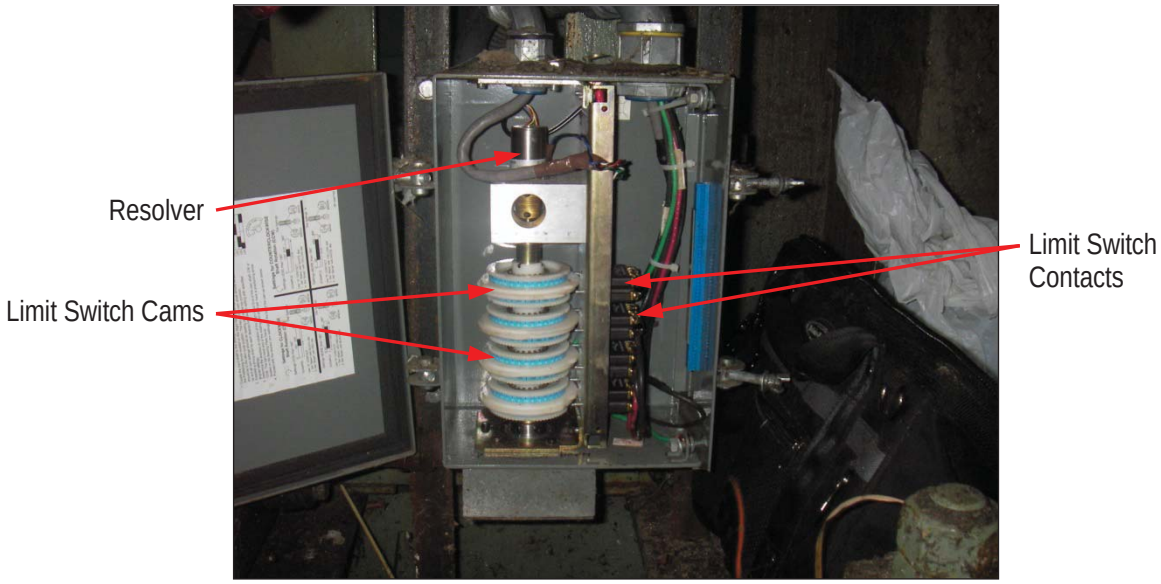

PHOTO 9.6N – FULLY SEATED LIMIT SWITCH

9.7 MISCELLANEOUS EQUIPMENT

PHOTO 9.7A – CONTROL HOUSE EXTERIOR

PHOTO 9.7B – ELECTRIC HORN

PHOTO 9.7C – EMERGENCY LIGHT FIXTURE

PHOTO 9.7D – CONTROL HOUSE LIGHT FIXTURE

PHOTO 9.7E – MACHINERY PLATFORM LIGHT FIXTURE

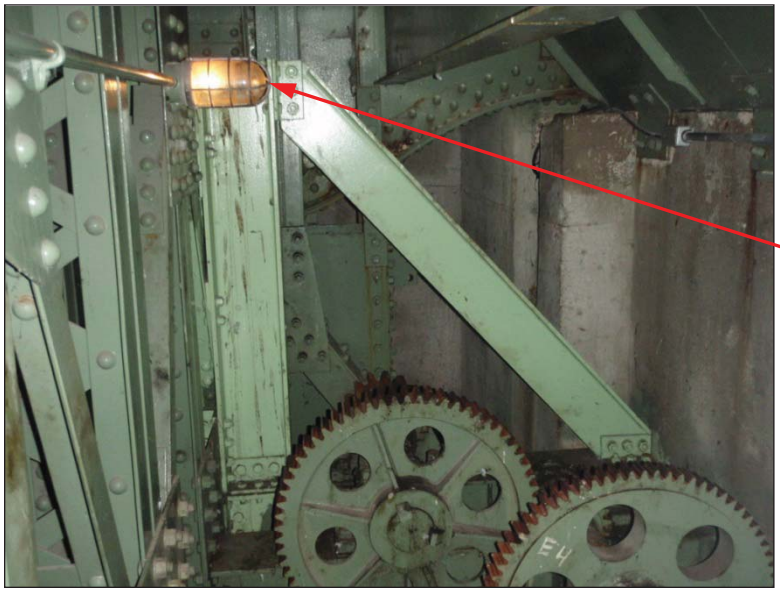

PHOTO 9.7F – SUMP PUMP

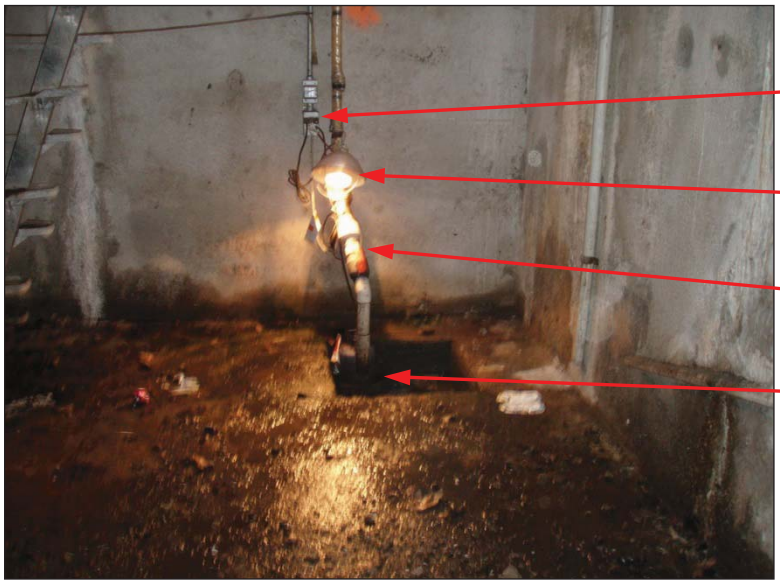

PHOTO 9.7G – LIGHTNING PROTECTION AIR TERMINAL

PHOTO 9.7H – LIGHTNING PROTECTION DOWN CONDUCTOR

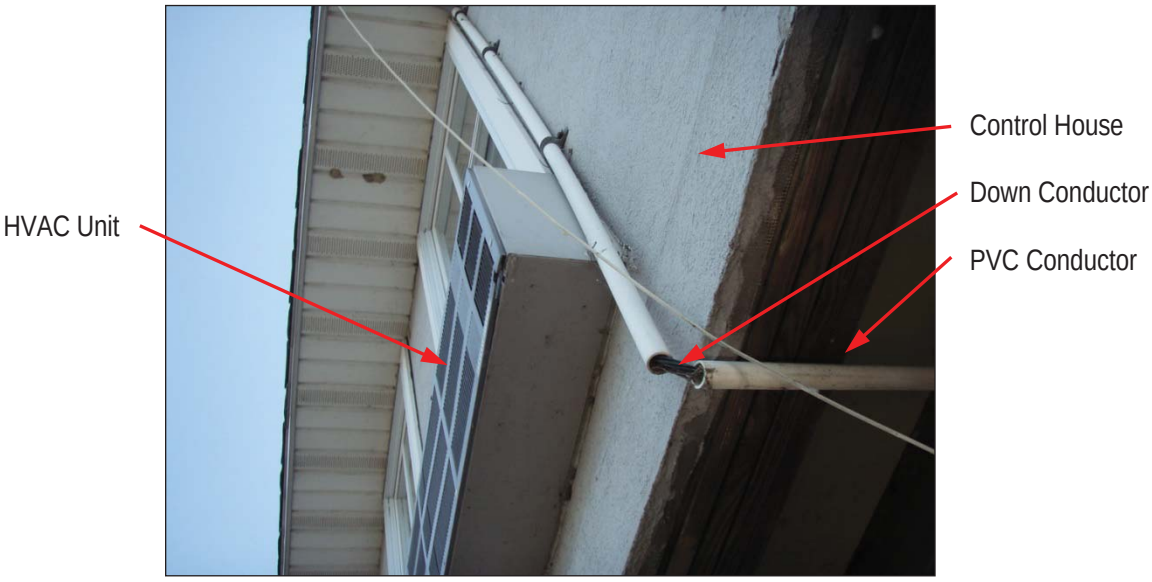

CHAPTER 10 - MAINTENANCE FORMS

10.1 MECHANICAL AND ELECTRICAL MAINTENANCE CHECKLIST

Form 10-1 – Leaf Support System and Counterweight....10-2
Form 10-2 – Span Drive Machinery....10-3
Form 10-3 – Centering Equipment....10-5
Form 10-4 – Traffic Gates....10-6
Form 10-5 – Electrical Power Systems....10-7
Form 10-6 – Lighting Systems....10-9
Form 10-7 – Electric Motors....10-10
Form 10-8 – Control System....10-11
Form 10-9 – Miscellaneous Equipment....10-12

Mechanical Maintenance Checklist - Leaf Support System and Counterweight

Form 10-1
Page 1 of 1

Date: _____ Maintenance Personnel: _____	Maintenance Tasks to be Performed: Monthly	Three Month	Annual
	☐	☐	☐

Maintenance Tasks	Maintenance Tasks Completed: Monthly	Three Month	Annual
Trunnion Bearing (Section 8.1.1) (Component ID # 29, 30, & 31)			
Lubricate the trunnion bearings.	☐		
Check housing and supporting steel for corrosion. Clean and spot paint as necessary.			☐
Check housing cap bolts and base bolts for tightness. Tighten as necessary.			☐
Observe trunnion bearings during operation of the leaf.			☐
Live Load Bearings (Section 8.1.2) (Component ID # 47, 48, 49, & 50)			
Check live load bearing contact.		☐	
Clean debris from all supporting members and plates.		☐	
Check that all fasteners are secure and corrosion free.			☐
Inspect masonry plate grout for cracking and evidence of deterioration.			☐
Check the contacting surfaces between the sole plate and masonry plate for deformations and wear.			☐
If necessary, adjust the shims between the sole plate and bascule girder.			☐
Counterweight (Section 8.1.3)			
Check counterweight balance pockets for proper drainage and clean out debris.			☐
Check for concrete spalling, cracks, and signs of structural distress in the counterweight concrete.			☐
Check for shifting of balance blocks and steel plates during leaf operation.			☐

Refer to Section 8.1 "Leaf Support System and Counterweight" for component locations, quantities, and additional maintenance information. Component ID # corresponds to components listed in Section 11.1.

Notes:

Mechanical Maintenance Checklist – Span Drive Machinery

Form 10-2
Page 1 of 2

Date: _____ Maintenance Personnel: _____	Maintenance Tasks to Be Performed: Monthly	Six Month	Annual	Two Year	Five Year
	☐	☐	☐	☐	☐

Maintenance Tasks	Maintenance Tasks Completed: Monthly	Six Month	Annual	Two Year	Five Year
Auxiliary Drive System (Section 8.2.1) (Component ID # 36, 37, 38, 39, 40, & 41)					
Remove filter reservoir and clean out contaminants.			☐		
Inspect lubricator oil level. Fill as needed.			☐		
Inspect air lines for leaks during operation of air motor.			☐		
Drain, flush, and refill auxiliary air motor gear box oil.			☐		
Disassemble and inspect filter components.					☐
Disassemble and inspect regulator components.					☐
Disassemble, drain, and inspect lubricator components.					☐
Check system for air leaks.					☐
Motor and Machinery Brakes (Section 8.2.2) (Component ID # 1 & 10)					
Check fluid level in hydraulic reservoir, check for leakage of fluid and clean as necessary. Fill as needed. (Mondel technician)			☐		
Inspect brake shoes and drums for wear, dust, dirt, grease and proper adjustment. Inspect brake pad thickness. Replace as needed.			☐		
Check clearance between the brake shoes and the brakewheel.			☐		
Inspect mechanical linkages for freedom of moving parts, wear, broken parts and tightness of nuts and bolts. Check for freedom of moving parts.			☐		
Check for excessive heating of parts.			☐		
Check operations of the brake during test operations of the bridge.			☐		
Check the brake housing and linkages for evidence of water dripping on brake and corrosion.			☐		
Check adjustment of limit switches and hand release devices.			☐		
Check brake actuator reserve stroke.			☐		
Check the brake spring length.			☐		
Couplings (Section 8.2.3) (Component ID # 6, 34, & 42)					
Inspect key and keyways at all couplings for grease leakage, tightness, and cracking. Check flange bolts for corrosion and tightness.	☐				
Inspect seals and gaskets for leaks. Replace as needed.	☐				
Inspect jaw couplings for cracking or damage.	☐				
Replace gear coupling lubricant.		☐			
Check for relative movement between coupling components.		☐			
Lubricate manual disconnect coupling shifting collar.			☐		
Manually test clutch.			☐		

Mechanical Maintenance Checklist – Span Drive Machinery

Form 10-2
Page 2 of 2

Maintenance Tasks	Maintenance Tasks Completed				
	Monthly	Six Month	Annual	Two Year	Five Year
Bearings (Section 8.2.4) (Component ID # 5, 7, 9, 11, 13, 17, 19, 21, 24, 27, 33, 43, & 46)					
Lubricate sleeve bearings.	☐				
Lubricate tapered roller bearings and Sealmaster spherical roller bearings.		☐			
Add replenishment grease to the Torrington spherical roller bearings.		☐			
Inspect bearing cap and base fasteners.			☐		
Inspect main pinion bearing set collar set screws.			☐		
Replace lubricant in Torrington spherical roller bearings.				☐	
Open Gearing (Section 8.2.5) (Component ID # 3, 4, 12, 14, 16, 18, 22, 23, 26, 28, & 44)					
Remove debris from gear teeth and apply grease as needed to protect teeth.	☐				
Clean out rack supports and debris of water.	☐				
Replace open gear lubricant.			☐		
Verify that fasteners connecting the rack to the rack support are secure and free of corrosion. Torque fasteners as needed. Spot paint as needed.			☐		
Inspect keys and keyways for tightness and cracking			☐		
Observe the open gearing during raising and lowering operations.			☐		

Refer to Section 8.2 "Span Drive Machinery" for component locations, quantities, and additional maintenance information. Component ID # corresponds to components listed in Section 11.1.

Notes:

Mechanical Maintenance Checklist – Centering Equipment

Form 10-3
Page 1 of 1

Date: _____ Maintenance Personnel: _____	Maintenance Tasks to Be Performed: Annual ☐

Maintenance Tasks	Maintenance Tasks Completed: Annual
Centering Guides (Section 8.3.1) (Component ID # 51)	
Inspect centering guide bolts for deterioration or signs of distress.	☐
Inspect the beveled plate for deformations and signs of damage.	☐

Refer to Section 8.3 "Centering Equipment" for component locations, quantities, and additional maintenance information. Component ID # corresponds to components listed in Section 11.1.

Notes:

Electrical Maintenance Checklist – Traffic Gates

Form 10-4
Page 1 of 1

Date: _____ Maintenance Personnel: _____	Maintenance Tasks to Be Performed: Six Months ☐

Maintenance Tasks	Maintenance Tasks Completed Six Months
Warning Gates (Section 8.4.1) (Component ID # 54, 58, 60, 63, 54, 71, 73, 75, 78, & 82)	
Check the transmission oil level. Add oil as needed.	☐
Lubricate shaft bearings and rod ends.	☐
Lubricate the rotary cam limit switch roller chain.	☐
Check the roller chain tension and tighten as required.	☐

Refer to Section 8.4 "Traffic Gates" for component locations, quantities, and additional maintenance information. Component ID # corresponds to components listed in Section 11.1.

Notes:

Electrical Maintenance Checklist – Electrical Power Systems

Form 10-5
Page 1 of 2

Date: _____	Maintenance Personnel: _____	Maintenance Tasks to Be Performed: Three Month ☐	Annual ☐

Maintenance Tasks	Maintenance Tasks Completed	
	Three Month	**Annual**
Control Enclosure (Section 8.5.1)		
Open and clean enclosures with a vacuum cleaner.	☐	
Remove accumulation of dirt, grease, and gum with contact cleaner.	☐	
Inspect enclosures for corrosion and moisture.	☐	
Examine connections for poor or loose connections and evidence of overheating.	☐	
Lubricate door hinges and latches.	☐	
Check circuit breaker disconnects for proper operation.	☐	
Inspect terminal block screws for tightness. Hand tighten all loose connections.	☐	
Inspect wiring from unit terminal bocks for deterioration of insulation.	☐	
Inspect all circuit breakers. Verify with meter that continuity is broken on trip or switch off conditions.	☐	
Check all starter contacts. Replace contacts when nearly all the silver tip is gone and contact tip support is exposed.	☐	
Check for discolored connections on terminals, contact supports, bus bars, or connectors. Clean discolored connection points. Tighten all loose hardware. Replace or repair heat-damaged wires and connectors as necessary.		☐
Operate the motor controller/contactor without load and observe contact operation. To be sure it opens and closes cleanly and that the contacts are fully sealed in the closed position.		☐
Operate the motor controller/contactor under load and check for loud noise and arcing.		☐
Secondary Resistors (Section 8.5.2)		
Open and clean enclosures with a vacuum cleaner.		☐
Remove accumulation of dirt, grease, and gum with contact cleaner.		☐
Inspect enclosures for corrosion and moisture.		☐
Inspect terminal block screws for tightness. Hands tighten all loose connections.		☐
Inspect wiring from unit terminal bocks for deterioration of insulation.		☐
Panelboards (Section 8.5.3)		
Open and clean with a vacuum cleaner.		☐
Remove accumulation of dirt, grease, and gum with contact cleaner.		☐
Check for corrosion and moisture.		☐
Examine bus bar connections for poor or loose connections and evidence of overheating.		☐
Lubricate door hinges and latches.		☐
Operate each circuit breaker to check for proper operation.		☐
Measure resistance to ground at each panelboard using a ground test kit.		☐
Portable Generator Cord Set (Section 8.5.4)		
Visually inspect the cables and associated equipment.		☐
Using an off-site portable generator, start and run bridge for one complete test opening using the portable generator and main leaf motor.		☐

Electrical Maintenance Checklist – Electrical Power Systems

Form 10-5
Page 2 of 2

Maintenance Tasks	Maintenance Tasks Completed	
	Three Month	Annual
Safety and Disconnect Switches (Section 8.5.5)		
Remove accumulation of dirt, grease, and gum with contact cleaner.		☐
Check for corrosion and moisture.		☐
Examine for excessive heating of parts, discoloration of metal parts, charred insulation, odor, or blistering.		☐
Check for freedom of moving parts.		☐
Check for worn or broken mechanical parts.		☐
Tighten loose mountings and connections.		☐
Replace pitted or worn contacts or replace entire unit if needed.		☐
Check for excessive arcing.		☐
Check condition of gaskets (for dust-tight or watertight units).		☐
Electrical Conductors (Section 8.5.6)		
Visually inspect terminations and splices for cracks, deterioration, corrosion, discoloring, or any other abnormalities.		☐
Check tightness of each conductor termination at each terminal box.		☐
Check the strain relief fittings for signs of distress.		☐
Inspect wires and electrical cables for grease and oil contamination, fraying, abrasions, sweating, cracked, melted or overheated blue tinted insulation.		☐
Droop Cables (Section 8.5.7)		
Visually inspect terminations and splices for cracks, deterioration, corrosion, discoloring, or any other abnormalities.		☐
Check tightness of each conductor termination at each terminal box. Tighten loose connections.		☐
Check the strain relief fittings for signs of distress.		☐
Check cables for any wear or abrasions on the outer jacket.		☐
Inspect wires and electrical cables for grease and oil contamination, fraying, abrasions, sweating, cracked, melted or overheated blue tinted insulation. Clean or replace in kind as needed.		☐
Submarine Cables (Section 8.5.8)		
Visually inspect terminations and splices for cracks, deterioration, corrosion, discoloring, or any other abnormalities.		☐
Check tightness of each conductor termination at each terminal box. Tighten loose connections.		☐
Check the strain relief fittings for signs of distress.		☐
Visually inspect the submarine cable and watch for signs of cracks, deterioration and discoloration of the cable jacket.		☐

Refer to Section 8.5 "Electrical Power Systems" for component locations, quantities, and additional maintenance information.

Notes:

Electrical Maintenance Checklist – Lighting System

Form 10-6
Page 1 of 1

	Maintenance Tasks To Be Performed:								
	Week 1	Week 2	Week 3	Week 4	Week 5	Monthly	Six Month	Annual	Six Year
Date: _____ Maintenance Personnel: _____	☐	☐	☐	☐	☐	☐	☐	☐	☐
Date: _____ Maintenance Personnel: _____	☐	☐	☐	☐	☐	☐	☐	☐	☐
Date: _____ Maintenance Personnel: _____	☐	☐	☐	☐	☐	☐	☐	☐	☐
Date: _____ Maintenance Personnel: _____	☐	☐	☐	☐	☐	☐	☐	☐	☐
Date: _____ Maintenance Personnel: _____	☐	☐	☐	☐	☐	☐	☐	☐	☐

	Maintenance Tasks Completed								
Maintenance Tasks	**Week 1**	**Week 2**	**Week 3**	**Week 4**	**Week 5**	**Monthly**	**Six Month**	**Annual**	**Six Year**
Navigation Lights (Section 8.6.1)									
Check navigation lights for proper operation.	☐	☐	☐	☐	☐				
Replace lamps or fixtures as needed.	☐	☐	☐	☐	☐				
Check gaskets.								☐	
Tighten loose connections.								☐	
Inspect for corrosion of metal parts.								☐	
Replace worn or broken mechanical parts.								☐	
Replace lamps.									☐
Interior/Exterior Lights (Section 8.6.2)									
Check for burned-out lamps. Replace lamp as needed.	☐	☐	☐	☐	☐				
Clean luminaire lenses, interior surfaces, and weep holes (where applicable).								☐	
Check gaskets and replace as needed.								☐	
Tighten loose connections.								☐	
Inspect for corrosion of metal parts. Spot paint as necessary.								☐	
Replace worn or broken parts.								☐	
Traffic and Advanced Warning Signals (Section 8.6.3)									
Check lights for proper illumination. Replace bulbs as needed.						☐			
Verify proper operation of the traffic signals during openings.						☐			
Clean reflectors and lenses. Spot paint heads as needed.								☐	
Warning Gate Arm Lights (Section 8.6.4)									
Check gate arm lights for proper operation. Replace bulbs as needed.	☐	☐	☐	☐	☐				
Replace gate arm light lamps and wiring that is non-functional or damaged.							☐		

Refer to Section 8.6 "Lighting Systems" for component locations, quantities, and additional maintenance information.

Notes:

Electrical Maintenance Checklist – Electric Motors

Form 10-7
Page 1 of 1

Date: _____ Maintenance Personnel: _____	Maintenance Tasks To Be Completed: Annual	Six Year
	☐	☐

Maintenance Tasks	Maintenance Tasks Completed	
	Annual	**Six Year**
Main Leaf (Span) Motor (Section 8.7.1) (Component ID # 2)		
Verify that shaft is free of oil and grease.	☐	
Check for leakage around bearings. Clean off excess grease and dirt.	☐	
Verify that shaft end-play is normal.	☐	
Inspect and tighten loose electrical connections on motor.	☐	
See that all keys, bolts, and pins are in their proper position. Check all bolts for tightness. Tighten as needed.	☐	
During operation, examine motor for smooth running and absence of vibration.	☐	
During operation, check motor and bearings for overheating.	☐	
Lubricate main leaf motor bearings.	☐	
Check painted surfaces for corrosion. Spot paint as necessary.	☐	
Repaint motor.		☐
Warning Gate Motors (Section 8.7.2) (Component ID # 53 & 70)		
Check for leakage around bearings. Clean off excess grease and dirt.	☐	
Inspect and tighten loose electrical connections on motor.	☐	
See that all keys, bolts, and pins are in their proper position. Check all bolts for tightness. Tighten as needed.	☐	
During operation, examine motor for smooth running and absence of vibration.	☐	
During operation, check motor and bearings for overheating.	☐	
Visually inspect solenoid brake while stationary and during gate operation.	☐	
Check solenoid brake electrical connections and tighten as necessary.	☐	
Inspect solenoid brake for wear, damage, and bolt and nut tightness. Check for freedom of moving parts.	☐	
Check solenoid brake components for evidence of excessive heating. Check for accumulation of dirt or gum, evidence of water dripping, or corrosion. Clean as necessary.	☐	
During operation, check solenoid brake for excessive vibration or noise.	☐	

Refer to Section 8.7 "Electric Motors" for component locations, quantities, and additional maintenance information. Component ID # corresponds to components listed in Section 11.1.

Notes:

Electrical Maintenance Checklist – Control System

Form 10-8
Page 1 of 1

	Maintenance Tasks To Be Completed:	
	Three Month	Annual
Date: _____ Maintenance Personnel: _____	☐	☐

Maintenance Tasks	Maintenance Tasks Completed	
	Three Month	Annual
Control Console (Section 8.8.1)		
Open and clean with a vacuum cleaner.	☐	
Remove accumulation of dirt, grease, and gum with contact cleaner.	☐	
Check for corrosion and moisture.	☐	
Lubricate door hinges and latches.	☐	
Inspect terminal block screws and tighten all connections.	☐	
Inspect wiring from unit terminal blocks for deterioration of insulation.	☐	
Inspect all relays and tighten connections if necessary.	☐	
Check all pushbuttons, selector switches and meters and replace as necessary.	☐	
Check all indicating lights. Replace bulbs as required	☐	
Verify enclosure lights turn on when doors are open. Replace bulbs as required.	☐	
Visually inspect UPS.	☐	
Check for discolored connections on terminals, contact supports, bus bars, or connectors. Clean connection points that are discolored. Tighten all loose hardware. Replace or repair heat damaged wires and connectors as necessary.		☐
Manually operate each relay with associated circuit breakers off and observe contact operation to be sure it opens and closes cleanly and that the contacts are sealed when in the closed position.		☐
Monitor relay operations during normal operation and check for loud noise and arcing, during opening and on closing operations.		☐
Perform battery test of UPS.		☐
Limit Switches (Section 8.8.2) (Component ID # 1, 10, 35, 65, 66, 68, 79, 83, & 84)		
Inspect all limit switches for wear.		☐
Remove accumulated dust, dirt, and moisture on housing.		☐
Remove accumulated dust, dirt, and moisture from all shafts.		☐
Inspect latches, mounting hardware, and seals.		☐
Inspect all fasteners and tighten connections as necessary.		☐
If accessible, remove the cover and visually inspect the condition of all internal parts.		☐
Inspect rotary cam limit switch switches for wear.		☐
Inspect rotary cam limit switch rollers for wear.		☐
Inspect rotary cam limit switch cams for wear.		☐
Inspect brake and fully seated limit switch snap action contact blocks and all internal component connections.		☐
Inspect brake and fully seated limit switch wiring from snap action contact blocks for deterioration.		☐
Cycle brake and fully seated limit switch lever arm several times.		☐

Refer to Section 8.8 "Control System" for component locations, quantities, and additional maintenance information. Component ID # corresponds to components listed in Section 11.1.

Notes:

_____

_____

_____

_____

Electrical Maintenance Checklist – Miscellaneous Equipment

Form 10-9
Page 1 of 2

	Maintenance Tasks To Be Performed:							
	Week 1	Week 2	Week 3	Week 4	Week 5	Monthly	Six Month	Annual
Date: _____ Maintenance Personnel: _____	☐	☐	☐	☐	☐	☐	☐	☐
Date: _____ Maintenance Personnel: _____	☐	☐	☐	☐	☐	☐	☐	☐
Date: _____ Maintenance Personnel: _____	☐	☐	☐	☐	☐	☐	☐	☐
Date: _____ Maintenance Personnel: _____	☐	☐	☐	☐	☐	☐	☐	☐
Date: _____ Maintenance Personnel: _____	☐	☐	☐	☐	☐	☐	☐	☐

	Maintenance Tasks Completed							
Maintenance Tasks	**Week 1**	**Week 2**	**Week 3**	**Week 4**	**Week 5**	**Monthly**	**Six Month**	**Annual**
Electric Horn (Section 8.9.1)								
Perform a general visual inspection and check for proper operation. Correct as necessary.	☐	☐	☐	☐	☐			
Check electrical connections and tighten as necessary.								☐
Check the electric horn for debris.								☐
Heating and Air Conditioning Systems (Section 8.9.2)								
Check all air filters. Clean or replace as necessary.						☐		
Check all cooling coils, seals, fittings, ducting connections, and pipelines for leaks. Correct as necessary.						☐		
Check surfaces of casing for signs of corrosion and retreat or paint as necessary.						☐		
Inspect the condition of all safety devices for deterioration.						☐		
Check the performance of all equipment related to temperature and humidity.						☐		
Sump Pump (Section 8.9.3)								
Test operation of the sump pump.						☐		
Check that the motor is free of debris.						☐		
During operation, examine motor for smooth running and absence of vibration.						☐		
Check sump pump heat lamp. Replace bulb as needed.						☐		
Hot Water Heater (Section 8.9.4)								
Check the unit and associated piping for leaks.						☐		
Heat Trace (Section 8.9.5)								
Visually inspect the pipe, insulation, and connections to the heating cable for physical damage.							☐	
Pit (Section 8.9.6)								
Clean and power wash the counterweight pit of dirt and debris.							☐	

Refer to Section 8.9 "Miscellaneous Equipment" for component locations, quantities, and additional maintenance information.

Notes:

CHAPTER 11 - SUPPLEMENTAL INFORMATION AND SPECIFICATIONS

CONTENTS

11.1 COMPONENT IDENTIFICATION CHARTS AND DIAGRAMS ... 11-3
11.2 MACHINERY LUBRICATION SCHEMATICS ... 11-5
11.3 MACHINERY LUBRICATION SCHEDULE ... 11-7
11.4 BRIDGE MAINTENANCE PERFORMANCE STANDARDS (PLATES) ... 11-12
11.4.1 SLEEVE BEARING AND TRUNNION BEARING LUBRICATION ... 11-12
11.4.2 MOTOR BEARING LUBRICATION ... 11-13
11.4.3 MOTOR AND MACHINERY BRAKE MAINTENANCE ... 11-14
11.4.4 COUPLING LUBRICATION ... 11-16
11.4.5 OPEN GEARING LUBRICATION ... 11-18
11.4.6 ROLLER BEARING LUBRICATION ... 11-19
11.5 MATERIAL DATA SHEETS ... 11-21
11.5.1 MOBIL MOBILUX EP-0, EP-2 ... 11-21
11.5.2 MOBIL MOBILTAC 325 NC ... 11-40
11.5.3 MOBIL MOBILGEAR 600 XP 220 ... 11-54
11.5.4 MOBIL UNIREX N2 ... 11-75
11.5.5 MOBIL MOBILGREASE XHP 222 ... 11-85
11.5.6 INGERSOLL RAND NO. 50 OIL ... 11-96
11.5.7 CRC TAC 2 ADHESIVE CHAIN LUBRICANT ... 11-99
11.5.8 MOBIL SHC 629 ... 11-108
11.5.9 MOBIL 600W CYLINDER OIL ... 11-121
11.5.10 MOBIL DTE 21 ... 11-131
11.5.11 CRC QUICK CLEAN HEAVY DUTY DEGREASER ... 11-144
11.5.12 CAIG LABORATORIES DEOXIT CONTACT CLEANER ... 11-153
11.6 COMPONENT MANUFACTURER LIST ... 11-161
11.7 MECHANICAL EQUIPMENT MANUALS AND SPECIFICATIONS ... 11-165
11.7.1 AUXILIARY AIR MOTOR – INGERSOLL RAND 34RB029 ... 11-165
11.7.2 AUXILIARY AIR MOTOR FILTER – WILKERSON F30 ... 11-175
11.7.3 AUXILIARY AIR MOTOR REGULATOR – WILKERSON R30 ... 11-177
11.7.4 AUXILIARY AIR MOTOR LUBRICATOR – WILKERSON L30 ECONOMIST ... 11-179
11.7.5 MOTOR BRAKE – MONDEL MBT/E-ED23/5S ... 11-181
11.7.6 MACHINERY BRAKE – MONDEL 13MST/E-ED80/6S ... 11-215

11.7.7 AUXILIARY AIR MOTOR DISCONNECT COUPLING – KOPFLEX TYPE FCC 11-248
11.7.8 GEAR COUPLING – FALK TYPE G51, SIZE 1020 11-252
11.7.9 TAPERED ROLLER BEARINGS – SEALMASTER RPB BEARINGS 11-260
11.7.10 SPHERICAL ROLLER BEARINGS – SEALMASTER SLEEVLOC BEARINGS 11-262
11.7.11 SPHERICAL ROLLER BEARING – TIMKEN BEARINGS 11-265
11.8 TRAFFIC CONTROL EQUIPMENT MANUALS AND SPECIFICATIONS 11-279
11.8.1 WARNING GATE – B&B ROADWAY VW-5 11-279
11.9 ELECTRICAL EQUIPMENT MANUALS AND SPECIFICATIONS..... ...11-301
11.9.1 SPAN MOTOR – REULAND ELECTRIC 11-301
11.9.2 AC CONTACTOR – SQUARE D CLASS 8503 TYPE MXDO-1..... ...11-303

11.1 COMPONENT IDENTIFICATION CHARTS AND DIAGRAMS

SPAN DRIVE MACHINERY		
ID NUMBER	DESCRIPTION	SECTION
1	MOTOR BRAKE, W/ 3 SQUARE D LIMIT SWITCHES	8.2.2 & 8.8.2
2	MAIN LEAF MOTOR	8.7.1
3	MOTOR PINION	8.2.5
4	MOTOR GEAR	8.2.5
5	TAPERED ROLLER BEARING	8.2.4
6	GEAR COUPLING	8.2.3
7	TAPERED ROLLER BEARING	8.2.4
8	EAST THIRD INTERMEDIATE PINION SHAFT	-
9	TAPERED ROLLER BEARING	8.2.4
10	MACHINERY BRAKE, W/ 3 SQUARE D LIMIT SWITCHES	8.2.2 & 8.8.2
11	TAPERED ROLLER BEARING	8.2.4
12	THIRD INTERMEDIATE PINION	8.2.5
13	ROLLER BEARING	8.2.4
14	THIRD INTERMEDIATE GEAR	8.2.5
15	SECOND INTERMEDIATE PINION SHAFT	-
16	SECOND INTERMEDIATE PINION	8.2.5
17	ROLLER BEARING	8.2.4
18	SECOND INTERMEDIATE GEAR	8.2.5
19	SLEEVE BEARING	8.2.4
20	FIRST INTERMEDIATE PINION SHAFT	-
21	SLEEVE BEARING	8.2.4
22	FIRST INTERMEDIATE PINION	8.2.5
23	FIRST INTERMEDIATE GEAR	8.2.5
24	SLEEVE BEARING	8.2.4
25	MAIN PINION SHAFT	-
26	MAIN PINION	8.2.5
27	SLEEVE BEARING W/ SET COLLAR	8.2.4
28	RACK	8.2.5
29	TRUNNION BEARING	8.1.1
30	TRUNNION SHAFT	8.1.1
31	TRUNNION BEARING	8.1.1
32	WEST THIRD INTERMEDIATE PINION SHAFT	-
33	TAPERED ROLLER BEARING	8.2.4
34	JAW COUPLING	8.2.3
35	ROTARY CAM LIMIT SWITCH	8.8.2
36	AUXILIARY AIR MOTOR SHUT OFF VALVE	8.2.1
37	AUXILIARY AIR MOTOR FILTER	8.2.1
38	AUXILIARY AIR MOTOR REGULATOR	8.2.1
39	AUXILIARY AIR MOTOR LUBRICATOR	8.2.1
40	AUXILIARY AIR MOTOR DIRECTIONAL VALVE	8.2.1
41	AIR MOTOR	8.2.1
42	DISCONNECT COUPLING WITH SHIFTER COLLAR	8.2.3
43	SPHERICAL ROLLER BEARING	8.2.4
44	AUXILIARY AIR MOTOR PINION	8.2.5
45	AUXILIARY PINION SHAFT	-
46	SPHERICAL ROLLER BEARING	8.2.4
47	MASONRY PLATE	8.1.2
48	STRIKE PLATE	8.1.2
49	SHIM PLATE (WEST LIVE LOAD BEARING ONLY)	8.1.2
50	FILL PLATE (WEST LIVE LOAD BEARING ONLY)	8.1.2
51	CENTERING GUIDE	8.3.1

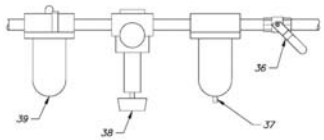

AIR LINE COMPONENTS
SCALE: NTS

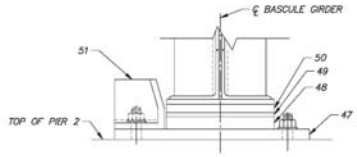

LIVE LOAD BEARING AND CENTERING GUIDE
SCALE: NTS
NOTE: WEST LIVE LOAD BEARING SHOWN, EAST LIVE LOAD BEARING SYMMETRICAL ABOUT CENTERLINE OF BRIDGE, EXCEPT AS NOTED

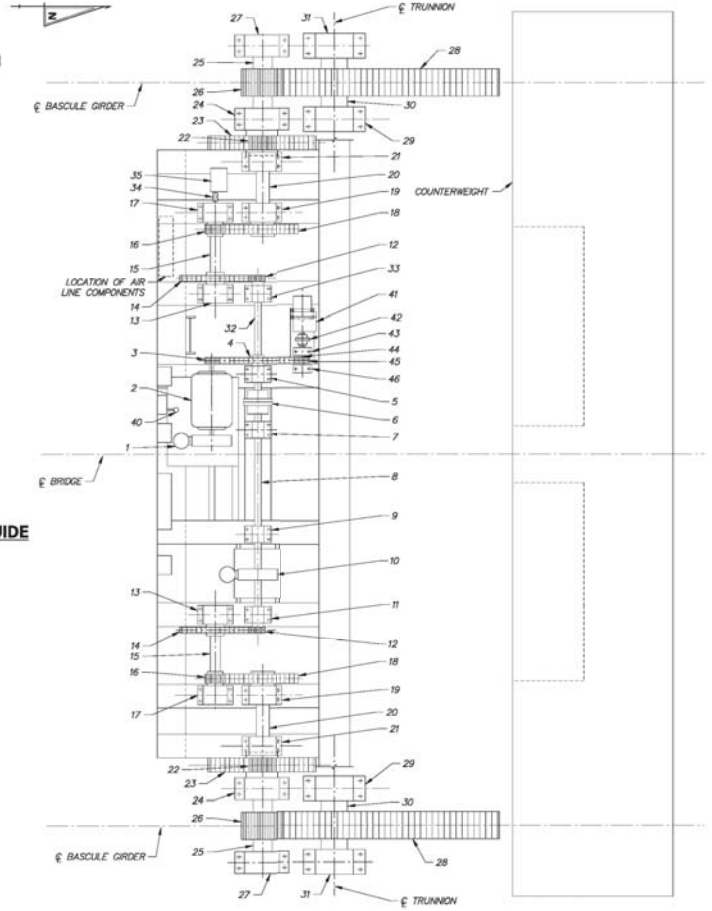

SPAN DRIVE MACHINERY – PLAN
SCALE: NTS
NOTE: MOTOR ENCLOSURE AND TRUNNION BEARING SUPPORT FRAMES NOT SHOWN FOR CLARITY

DELAWARE DEPARTMENT OF TRANSPORTATION

ADDENDUMS / REVISIONS

FRONT STREET BRIDGE OPERATIONS AND MAINTENANCE MANUAL

CONTRACT -
COUNTY SUSSEX
BRIDGE NO. 3-151
DRAWN BY: DJM
CHECKED BY: JAB

SPAN DRIVE MACHINERY COMPONENT IDENTIFICATION

SECTION NO. 11-1A
PAGE NO. 11-3

THIS PAGE INTENTIONALLY LEFT BLANK

SOUTH WARNING GATE MACHINERY		
ID NUMBER	DESCRIPTION	SECTION
52	SOUTH WARNING GATE SOLENOID BRAKE	8.7.2
53	SOUTH WARNING GATE MOTOR	8.7.2
54	SOUTH WARNING GATE TRANSMISSION	8.4.1
55	SOUTH WARNING GATE TORQUE LIMITER	8.4.1
56	SOUTH WARNING GATE INSTRUMENTATION SPROCKET	8.4.1
57	SOUTH WARNING GATE INSTRUMENTATION SPROCKET BEARING	8.4.1
58	SOUTH WARNING GATE ROD END	8.4.1
59	SOUTH WARNING GATE CONNECTING ROD	8.4.1
60	SOUTH WARNING GATE ROD END	8.4.1
61	SOUTH WARNING GATE PIVOT SHAFT CRANK	8.4.1
62	SOUTH WARNING GATE PIVOT SHAFT	8.4.1
63	SOUTH WARNING GATE PIVOT SHAFT BEARING	8.4.1
64	SOUTH WARNING GATE ROLLER CHAIN	8.4.1
65	SOUTH WARNING GATE ROTARY CAM LIMIT SWITCH	8.8.2
66	SOUTH WARNING GATE MANUAL OPERATION LIMIT SWITCH	8.8.2
67	SOUTH WARNING GATE HAND CRANK	8.4.1
68	SOUTH WARNING GATE DOOR LIMIT SWITCH	8.8.2

NORTH WARNING GATE MACHINERY		
ID NUMBER	DESCRIPTION	SECTION
69	NORTH WARNING GATE SOLENOID BRAKE	8.7.2
70	NORTH WARNING GATE MOTOR	8.7.2
71	NORTH WARNING GATE TRANSMISSION	8.4.1
72	NORTH WARNING GATE TRANSMISSION CRANK	8.4.1
73	NORTH WARNING GATE ROD END	8.4.1
74	NORTH WARNING GATE CONNECTING ROD	8.4.1
75	NORTH WARNING GATE ROD END	8.4.1
76	NORTH WARNING GATE PIVOT SHAFT CRANK	8.4.1
77	NORTH WARNING GATE PIVOT SHAFT	8.4.1
78	NORTH WARNING GATE PIVOT SHAFT BEARING	8.4.1
79	NORTH WARNING GATE HAND CRANK	8.4.1
80	NORTH WARNING GATE INSTRUMENTATION SPROCKET	8.4.1
81	NORTH WARNING GATE ROLLER CHAIN	8.4.1
82	NORTH WARNING GATE ROTARY CAM LIMIT SWITCH	8.8.2
83	NORTH WARNING GATE DOOR LIMIT SWITCH	8.8.2

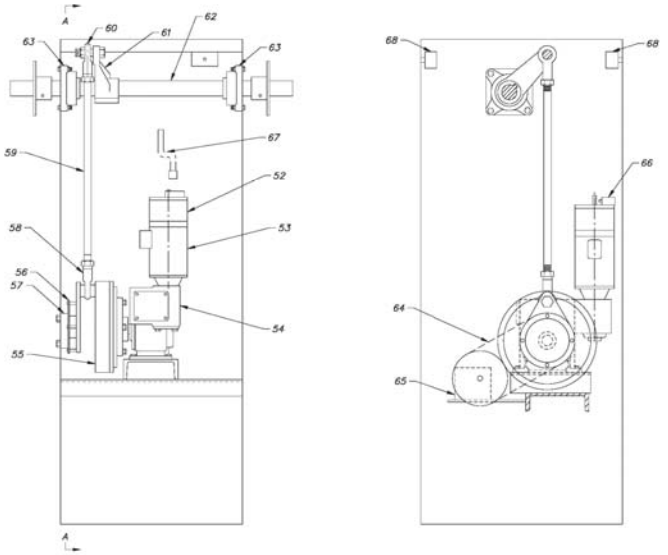

SOUTH WARNING GATE MACHINERY – ELEVATION
SCALE: NTS
NOTE: WARNING GATE ROTARY CAM LIMIT SWITCH NOT SHOWN FOR CLARITY

SECTION A–A
SCALE: NTS

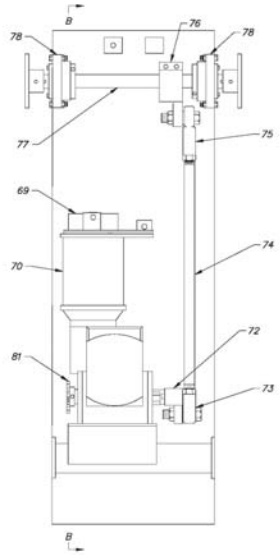

NORTH WARNING GATE MACHINERY – ELEVATION
SCALE: NTS
NOTE: WARNING GATE ROTARY CAM LIMIT SWITCH NOT SHOWN FOR CLARITY

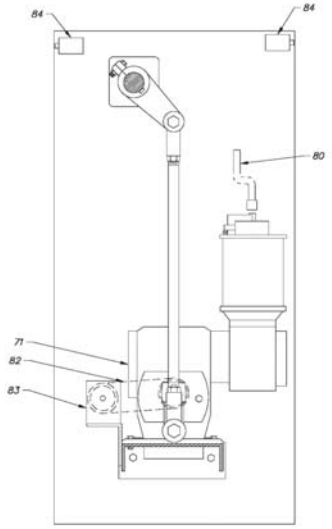

SECTION B–B
SCALE: NTS

F:\ACAD_STD\WORKSPACE\3DLOGO1\SEED-SB_BORDER.DGN

DELAWARE DEPARTMENT OF TRANSPORTATION	ADDENDUMS / REVISIONS		FRONT STREET BRIDGE OPERATIONS AND MAINTENANCE MANUAL	CONTRACT -	BRIDGE NO. 3–151	WARNING GATE MACHINERY COMPONENT IDENTIFICATION	SECTION NO. 11-18
				COUNTY SUSSEX	DRAWN BY: JAD		PAGE NO. 11-4
					CHECKED BY: DJM		

THIS PAGE INTENTIONALLY LEFT BLANK

11.2 MACHINERY LUBRICATION SCHEMATICS

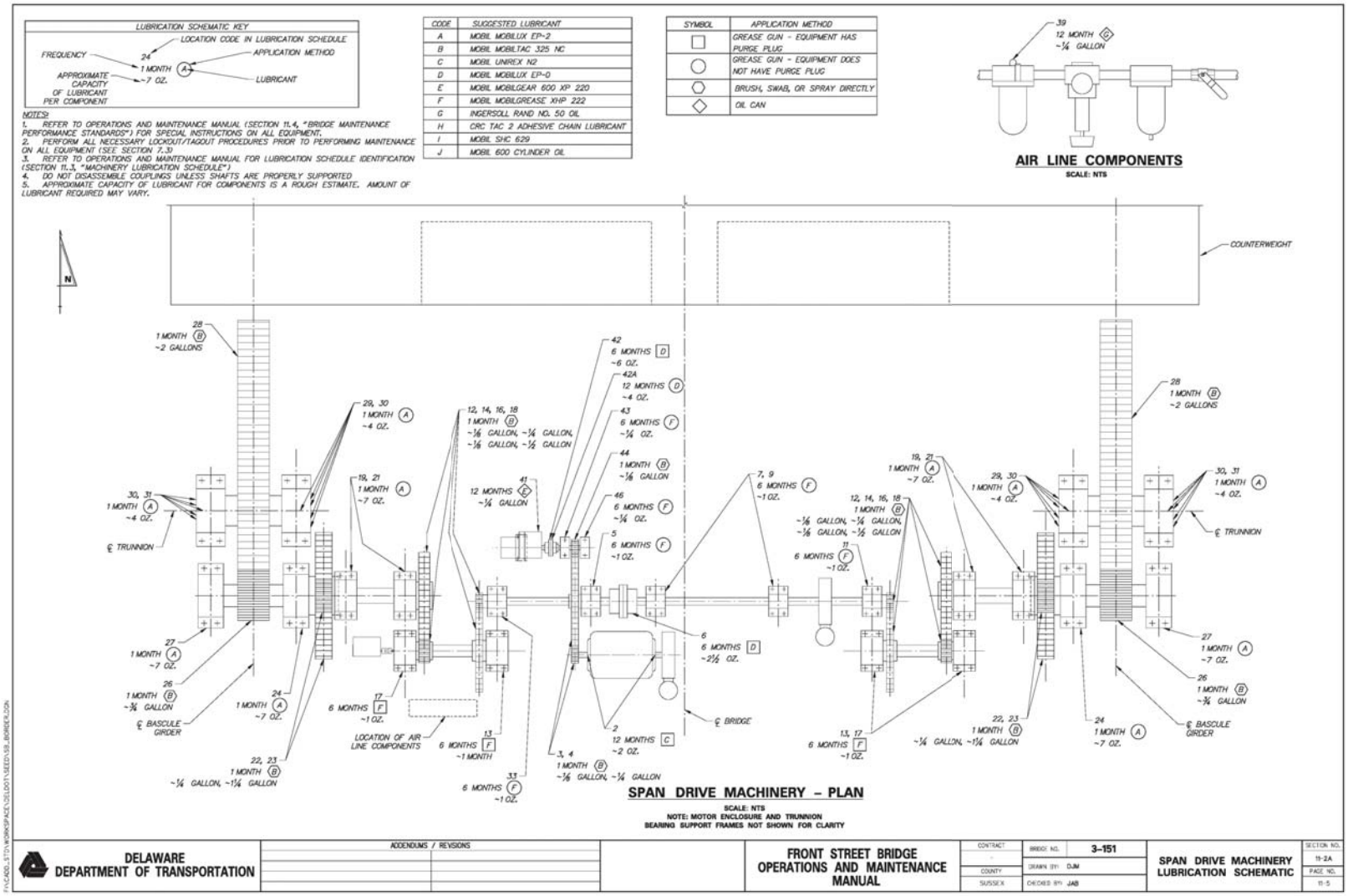

THIS PAGE INTENTIONALLY LEFT BLANK

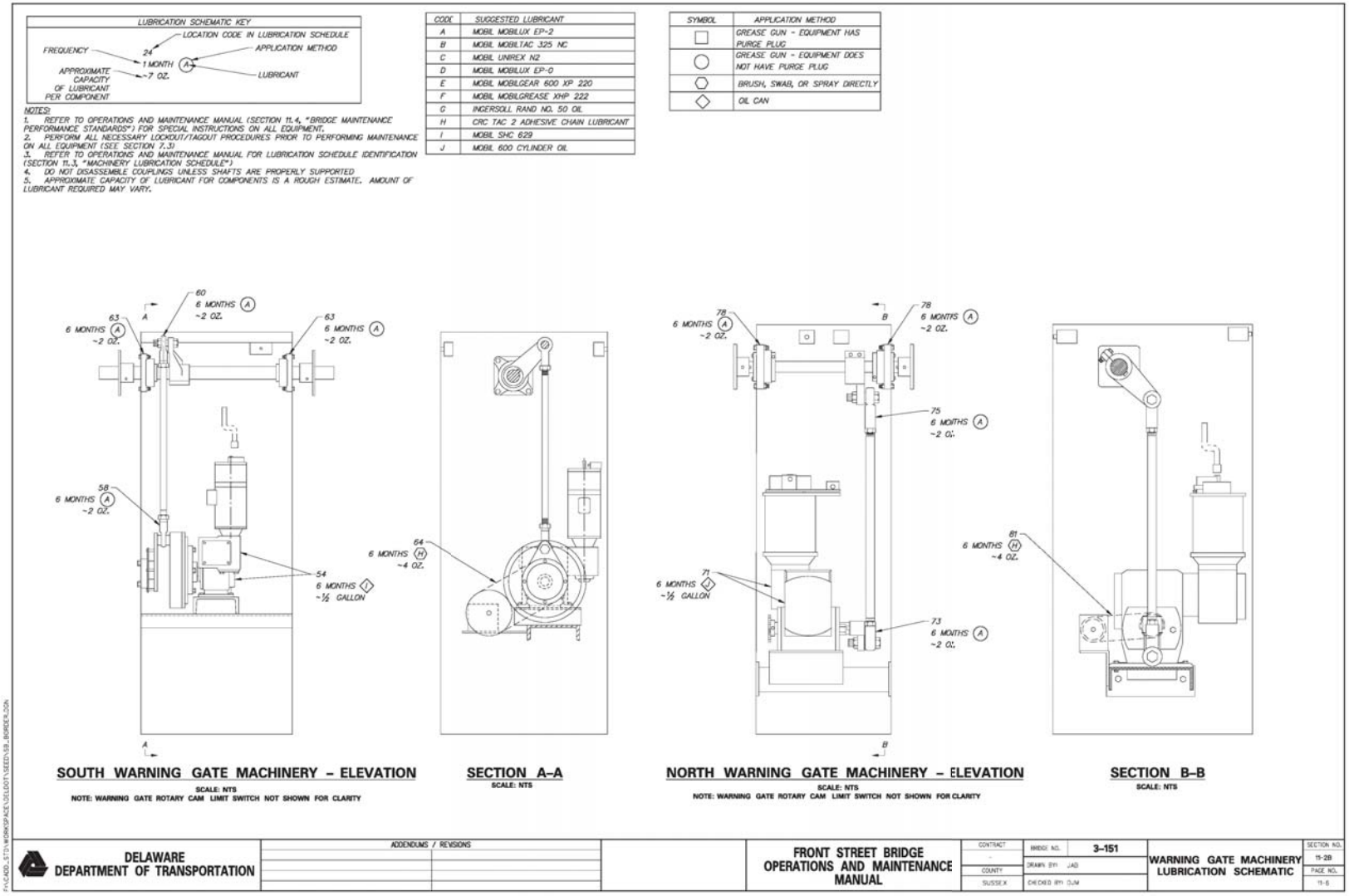
LUBRICATION SCHEMATIC KEY
LOCATION CODE IN LUBRICATION SCHEDULE
FREQUENCY
24
1 MONTH
A
APPLICATION METHOD
LUBRICANT
APPROXIMATE CAPACITY OF LUBRICANT PER COMPONENT
~7 OZ.
NOTES:
1. REFER TO OPERATIONS AND MAINTENANCE MANUAL (SECTION 11.4, "BRIDGE MAINTENANCE PERFORMANCE STANDARDS") FOR SPECIAL INSTRUCTIONS ON ALL EQUIPMENT.
2. PERFORM ALL NECESSARY LOCKOUT/TAGOUT PROCEDURES PRIOR TO PERFORMING MAINTENANCE ON ALL EQUIPMENT (SEE SECTION 7.3)
3. REFER TO OPERATIONS AND MAINTENANCE MANUAL FOR LUBRICATION SCHEDULE IDENTIFICATION (SECTION 11.3, "MACHINERY LUBRICATION SCHEDULE")
4. DO NOT DISASSEMBLE COUPLINGS UNLESS SHAFTS ARE PROPERLY SUPPORTED
5. APPROXIMATE CAPACITY OF LUBRICANT FOR COMPONENTS IS A ROUGH ESTIMATE. AMOUNT OF LUBRICANT REQUIRED MAY VARY.
CODE
SUGGESTED LUBRICANT
A MOBIL MOBILUX EP-2
B MOBIL MOBILTAC 325 NC
C MOBIL UNIREX N2
D MOBIL MOBILUX EP-0
E MOBIL MOBILGEAR 600 XP 220
F MOBIL MOBILGREASE XHP 222
G INGERSOLL RAND NO. 50 OIL
H CRC TAC 2 ADHESIVE CHAIN LUBRICANT
I MOBIL SHC 629
J MOBIL 600 CYLINDER OIL
SYMBOL
APPLICATION METHOD
GREASE GUN - EQUIPMENT HAS PURGE PLUG
GREASE GUN - EQUIPMENT DOES NOT HAVE PURGE PLUG
BRUSH, SWAB, OR SPRAY DIRECTLY
OIL CAN
60
6 MONTHS A
~2 OZ.
63
6 MONTHS A
~2 OZ.
58
6 MONTHS A
~2 OZ.
54
6 MONTHS I
~½ GALLON
64
6 MONTHS H
~4 OZ.
78
6 MONTHS A
~2 OZ.
75
6 MONTHS A
~2 OZ.
71
6 MONTHS J
~½ GALLON
73
6 MONTHS A
~2 OZ.
81
6 MONTHS H
~4 OZ.
SOUTH WARNING GATE MACHINERY – ELEVATION
SCALE: NTS
NOTE: WARNING GATE ROTARY CAM LIMIT SWITCH NOT SHOWN FOR CLARITY
SECTION A–A
SCALE: NTS
NORTH WARNING GATE MACHINERY – ELEVATION
SCALE: NTS
NOTE: WARNING GATE ROTARY CAM LIMIT SWITCH NOT SHOWN FOR CLARITY
SECTION B–B
SCALE: NTS
DELAWARE DEPARTMENT OF TRANSPORTATION
ADDENDUMS / REVISIONS
FRONT STREET BRIDGE OPERATIONS AND MAINTENANCE MANUAL
CONTRACT
BRIDGE NO. 3-151
DRAWN BY: JAD
COUNTY
SUSSEX
CHECKED BY: DJM
WARNING GATE MACHINERY LUBRICATION SCHEMATIC
SECTION NO. 11-2B
PAGE NO. 11-6

THIS PAGE INTENTIONALLY LEFT BLANK

11.3 MACHINERY LUBRICATION SCHEDULE

Location Code	Section	Machinery	Applicator	Specified Grade	Lubrication Type	Mfr. Spec.	Frequency (Months)
1	8.2.2	MOTOR BRAKE	LUBRICATION NOT REQUIRED				
2	8.7.1	MAIN LEAF MOTOR	GREASE GUN, REMOVE PLUG, FILL WITH GREASE, REPLACE PLUG	NLGI #2	GREASE	MOBIL UNIREX N2	12
3	8.2.5	MOTOR PINION	BRUSH OR SWAB	N/A	GREASE	MOBIL MOBILTAC 325 NC	1
4	8.2.5	MOTOR GEAR	BRUSH OR SWAB	N/A	GREASE	MOBIL MOBILTAC 325 NC	1
5	8.2.4	TAPERED ROLLER BEARING	GREASE GUN, GREASE FITTING	NLGI #2	GREASE	MOBIL MOBILGREASE XHP 222	6
6	8.2.3	GEAR COUPLING	GREASE GUN, REMOVE PLUG, FILL WITH GREASE, REPLACE PLUG	NLGI #0	GREASE	MOBIL MOBILUX EP-0	6
7	8.2.4	TAPERED ROLLER BEARING	GREASE GUN, GREASE FITTING	NLGI #2	GREASE	MOBIL MOBILGREASE XHP 222	6
8	-	SHAFT	LUBRICATION NOT REQUIRED				
9	8.2.4	TAPERED ROLLER BEARING	GREASE GUN, GREASE FITTING	NLGI #2	GREASE	MOBIL MOBILGREASE XHP 222	6
10	8.2.2	MACHINERY BRAKE	LUBRICATION NOT REQUIRED				
11	8.2.4	TAPERED ROLLER BEARING	GREASE GUN, GREASE FITTING	NLGI #2	GREASE	MOBIL MOBILGREASE XHP 222	6
12	8.2.5	THIRD INTERMEDIATE PINION	BRUSH OR SWAB	N/A	GREASE	MOBIL MOBILTAC 325 NC	1
13	8.2.4	TORRINGTON SPHERICAL ROLLER BEARING	GREASE GUN, REMOVE PLUG, FILL WITH GREASE, REPLACE PLUG	NLGI #2	GREASE	MOBIL MOBILGREASE XHP 222	6
14	8.2.5	THIRD INTERMEDIATE GEAR	BRUSH OR SWAB	N/A	GREASE	MOBIL MOBILTAC 325 NC	1
15	-	SHAFT	LUBRICATION NOT REQUIRED				
16	8.2.5	SECOND INTERMEDIATE PINION	BRUSH OR SWAB	N/A	GREASE	MOBIL MOBILTAC 325 NC	1
17	8.2.4	TORRINGTON SPHERICAL ROLLER BEARING	GREASE GUN, REMOVE PLUG, FILL WITH GREASE, REPLACE PLUG	NLGI #2	GREASE	MOBIL MOBILGREASE XHP 222	6
18	8.2.5	SECOND INTERMEDIATE GEAR	BRUSH OR SWAB	N/A	GREASE	MOBIL MOBILTAC 325 NC	1
19	8.2.4	SLEEVE BEARING	GREASE GUN, GREASE FITTING	NLGI #2	GREASE	MOBIL MOBILUX EP-2	1

Location Code	Section	Machinery	Applicator	Specified Grade	Lubrication Type	Mfr. Spec.	Frequency (Months)
20	-	SHAFT	LUBRICATION NOT REQUIRED				
21	8.2.4	SLEEVE BEARING	GREASE GUN, GREASE FITTING	NLGI #2	GREASE	MOBIL MOBILUX EP-2	1
22	8.2.5	FIRST INTERMEDIATE PINION	BRUSH OR SWAB	N/A	GREASE	MOBIL MOBILTAC 325 NC	1
23	8.2.5	FIRST INTERMEDIATE GEAR	BRUSH OR SWAB	N/A	GREASE	MOBIL MOBILTAC 325 NC	1
24	8.2.4	SLEEVE BEARING	GREASE GUN, GREASE FITTING	NLGI #2	GREASE	MOBIL MOBILUX EP-2	1
25	-	MAIN PINION SHAFT	LUBRICATION NOT REQUIRED				
26	8.2.5	MAIN PINION	BRUSH OR SWAB	N/A	GREASE	MOBIL MOBILTAC 325 NC	1
27	8.2.4	SLEEVE BEARING	GREASE GUN, GREASE FITTING	NLGI #2	GREASE	MOBIL MOBILUX EP-2	1
28	8.2.5	RACK	BRUSH OR SWAB	N/A	GREASE	MOBIL MOBILTAC 325 NC	1
29	8.1.1	TRUNNION BEARING	GREASE GUN, GREASE FITTING	NLGI #2	GREASE	MOBIL MOBILUX EP-2	1
30	8.1.1	TRUNNION SHAFT	GREASE GUN, GREASE FITTING	NLGI #2	GREASE	MOBIL MOBILUX EP-2	1
31	8.1.1	TRUNNION BEARING	GREASE GUN, GREASE FITTING	NLGI #2	GREASE	MOBIL MOBILUX EP-2	1
32	-	SHAFT	LUBRICATION NOT REQUIRED				
33	8.2.4	TAPERED ROLLER BEARING	GREASE GUN, GREASE FITTING	NLGI #2	GREASE	MOBIL MOBILGREASE XHP 222	6
34	8.2.3	JAW COUPLING	LUBRICATION NOT REQUIRED				
35	8.8.2	ROTARY CAM LIMIT SWITCH	LUBRICATION NOT REQUIRED				
36	8.2.1	AUXILIARY MOTOR SHUT OFF VALVE	LUBRICATION NOT REQUIRED				
37	8.2.1	AUXILIARY MOTOR FILTER	LUBRICATION NOT REQUIRED				
38	8.2.1	AUXILIARY MOTOR REGULATOR	LUBRICATION NOT REQUIRED				
39	8.2.1	AUXILIARY MOTOR LUBRICATOR	OIL CAN	N/A	OIL	INGERSOLL RAND NO. 50	12
40	8.2.1	AUXILIARY MOTOR DIRECTIONAL VALVE	LUBRICATION NOT REQUIRED				
41	8.2.1	AUXILIARY AIR MOTOR	OIL CAN	AGMA #5EP	OIL	MOBIL MOBILGEAR 600 XP 220	12
42	8.2.3	DISCONNECT COUPLING	GREASE GUN, REMOVE PLUG, FILL WITH GREASE, REPLACE PLUG	NLGI #0	GREASE	MOBIL MOBILUX EP-0	6

Location Code	Section	Machinery	Applicator	Specified Grade	Lubrication Type	Mfr. Spec.	Frequency (Months)
42A	8.2.3	DISCONNECT COUPLING SHIFTER COLLAR	GREASE GUN, GREASE FITTING	NLGI #0	GREASE	MOBIL MOBILUX EP-0	12
43	8.2.4	SPHERICAL ROLLER BEARING	GREASE GUN, GREASE FITTING	NLGI #2	GREASE	MOBIL MOBILGREASE XHP 222	6
44	8.2.5	AUXILIARY AIR MOTOR PINION	BRUSH OR SWAB	N/A	GREASE	MOBIL MOBILTAC 325 NC	1
45	-	SHAFT	LUBRICATION NOT REQUIRED				
46	8.2.4	SPHERICAL ROLLER BEARING	GREASE GUN, GREASE FITTING	NLGI #2	GREASE	MOBIL MOBILGREASE XHP 222	6
47	8.1.2	MASONRY PLATE	LUBRICATION NOT REQUIRED				
48	8.1.2	SOLE PLATE	LUBRICATION NOT REQUIRED				
49	8.1.2	SHIM PLATE	LUBRICATION NOT REQUIRED				
50	8.1.2	FILL PLATE	LUBRICATION NOT REQUIRED				
51	8.3.1	CENTERING GUIDE	LUBRICATION NOT REQUIRED				
52	8.7.2	SOUTH WARNING GATE SOLENOID BRAKE	LUBRICATION NOT REQUIRED				
53	8.7.2	SOUTH WARNING GATE MOTOR	LUBRICATION NOT REQUIRED				
54	8.4.1	SOUTH WARNING GATE TRANSMISSION	OIL CAN	AGMA #2	OIL	MOBIL SHC 629	6
55	8.4.1	SOUTH WARNING GATE TORQUE LIMITER	LUBRICATION NOT REQUIRED				
56	8.4.1	SOUTH WARNING GATE INSTRUMENTATION SPROCKET	LUBRICATION NOT REQUIRED				
57	8.4.1	SOUTH WARNING GATE INSTRUMENTATION SPROCKET BEARING	LUBRICATION NOT REQUIRED				
58	8.4.1	SOUTH WARNING GATE ROD END	GREASE GUN, GREASE FITTING	NLGI #2	GREASE	MOBIL MOBILUX EP-2	6
59	8.4.1	SOUTH WARNING GATE CONNECTING ROD	LUBRICATION NOT REQUIRED				
60	8.4.1	SOUTH WARNING GATE ROD END	GREASE GUN, GREASE FITTING	NLGI #2	GREASE	MOBIL MOBILUX EP-2	6
61	8.4.1	SOUTH WARNING GATE PIVOT SHAFT CRANK	LUBRICATION NOT REQUIRED				
62	8.4.1	SOUTH WARNING GATE PIVOT SHAFT	LUBRICATION NOT REQUIRED				
63	8.4.1	SOUTH WARNING GATE PIVOT SHAFT BEARING	GREASE GUN, GREASE FITTING	NLGI #2	GREASE	MOBIL MOBILUX EP-2	6

Location Code	Section	Machinery	Applicator	Specified Grade	Lubrication Type	Mfr. Spec.	Frequency (Months)
64	8.4.1	SOUTH WARNING GATE ROLLER CHAIN	SPRAY	N/A	GREASE	CRC TAC 2 ADHESIVE CHAIN LUBRICANT	6
65	8.8.2	SOUTH WARNING GATE ROTARY CAM LIMIT SWITCH	LUBRICATION NOT REQUIRED				
66	8.8.2	SOUTH WARNING GATE MANUAL OPERATION LIMIT SWITCH	LUBRICATION NOT REQUIRED				
67	8.4.1	SOUTH WARNING GATE HAND CRANK	LUBRICATION NOT REQUIRED				
68	8.8.2	SOUTH WARNING GATE DOOR LIMIT SWITCH	LUBRICATION NOT REQUIRED				
69	8.7.2	NORTH WARNING GATE SOLENOID BRAKE	LUBRICATION NOT REQUIRED				
70	8.7.2	NORTH WARNING GATE MOTOR	LUBRICATION NOT REQUIRED				
71	8.4.1	NORTH WARNING GATE TRANSMISSION	OIL CAN	N/A	OIL	MOBIL 600W CYLINDER OIL	6
72	8.4.1	NORTH WARNING GATE TRANSMISSION CRANK	LUBRICATION NOT REQUIRED				
73	8.4.1	NORTH WARNING GATE ROD END	GREASE GUN, GREASE FITTING	NLGI #2	GREASE	MOBIL MOBILUX EP-2	6
74	8.4.1	NORTH WARNING GATE CONNECTING ROD	LUBRICATION NOT REQUIRED				
75	8.4.1	NORTH WARNING GATE ROD END	GREASE GUN, GREASE FITTING	NLGI #2	GREASE	MOBIL MOBILUX EP-2	6
76	8.4.1	NORTH WARNING GATE PIVOT SHAFT CRANK	LUBRICATION NOT REQUIRED				
77	8.4.1	NORTH WARNING GATE PIVOT SHAFT	LUBRICATION NOT REQUIRED				
78	8.4.1	NORTH WARNING GATE PIVOT SHAFT BEARING	GREASE GUN, GREASE FITTING	NLGI #2	GREASE	MOBIL MOBILUX EP-2	6
79	8.4.1	NORTH WARNING GATE HAND CRANK	LUBRICATION NOT REQUIRED				
80	8.4.1	NORTH WARNING GATE INSTRUMENTATION SPROCKET	LUBRICATION NOT REQUIRED				
81		NORTH WARNING GATE ROLLER CHAIN	SPRAY	N/A	GREASE	CRC TAC 2 ADHESIVE CHAIN LUBRICANT	6

Location Code	Section	Machinery	Applicator	Specified Grade	Lubrication Type	Mfr. Spec.	Frequency (Months)
82	8.8.2	NORTH WARNING GATE ROTARY CAM LIMIT SWITCH	LUBRICATION NOT REQUIRED				
83	8.8.2	NORTH WARNING GATE DOOR LIMIT SWITCH	LUBRICATION NOT REQUIRED				

11.4 BRIDGE MAINTENANCE PERFORMANCE STANDARDS (PLATES)

11.4.1 SLEEVE BEARING AND TRUNNION BEARING LUBRICATION

DELAWARE **DEPARTMENT OF TRANSPORTATION** **BRIDGE MANAGEMENT SECTION** **BRIDGE MAINTENANCE PERFORMANCE STANDARD**	**BRIDGE NUMBER** 3-151
	BMS ACTIVITY CODE B065-S2J
	EFFECTIVE DATE

ACTIVITY TITLE:	**UNIT OF MEASUREMENT:**
Sleeve Bearing and Trunnion Bearing Lubrication	Number of Sleeve Bearings and Trunnion Bearings

PROCEDURE DESCRIPTION:

WARNING

Use EXTREME CARE and ALWAYS REMOVE POWER from all pertinent electrical and pneumatic equipment, which includes multiple power sources, before beginning maintenance. Refer to Section 7.3, "Lockout/Tagout Procedure" in the Operations and Maintenance Manual.

Monthly:

1. Clean grease fittings of dirt, debris, old grease, and any other potential contaminants with a rag and CRC Quick Clean Heavy Duty Degreaser or equivalent. Inspect the grease fittings and replace any cracked or broken grease fittings.
   Each trunnion bearing has one grease fitting in the bearing cap and four grease fittings located at each end of the trunnion shaft. Each sleeve bearing has one grease fitting in the bearing cap.
2. Insert grease gun tip onto a grease fitting and pump Mobil Mobilux EP-2 or equivalent into the bearing until fresh grease appears along the bearing shaft and purge locations. Catch old grease in a catch basin. Repeat for all grease fittings.
3. Wipe excess grease from the bearing with a rag and solvent cleaner.
4. Inspect bearings for any unusual defects that may have occurred.

Refer to Sections 8.1.1, 8.2.4, 11.5.1, and 11.5.11 for additional component and material information. For lubrication coding details below, refer to Section 11.2 "Machinery Lubrication Schematics" in the Operations and Maintenance Manual.

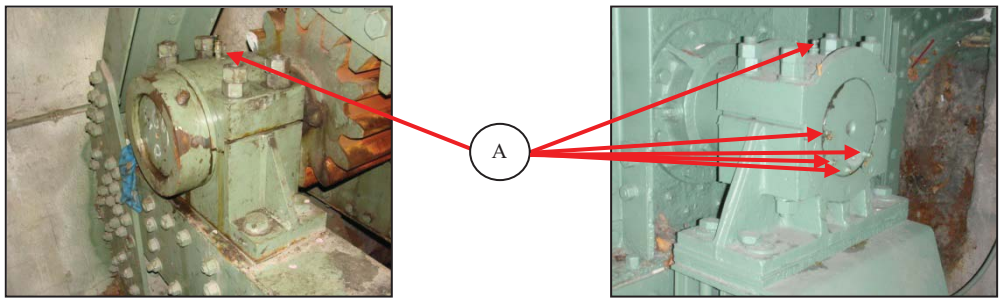

Sleeve Bearing **Trunnion Bearing**

SCHEDULING CONSIDERATIONS:

Sleeve bearings and trunnion bearings should be lubricated every month.

Also, inspect and lubricate sleeve bearings and trunnion bearings after an overstress situation such as a pinched span.

WORK AREA, ACTIVITY DESCRIPTION & REQUIREMENTS:

Sleeve bearings are located on the machinery platform in the bascule pier. Trunnion bearings are located in the bascule pier on the inboard and outboard sides of each bascule girder. Tasks include locating, inspecting, and lubricating all trunnion bearings on the bridge. Lockout/Tagout is required prior to performing any maintenance on this equipment. Report any significant defects to bridge management.

Qty	EQUIPMENT	Qty	EQUIPMENT	Qty	MATERIAL
1	Grease gun	1/Person	Set of chemical resistant Viton gloves	~ 10– 14 oz. Tubes	Mobil Mobilux EP-2 or equivalent
28	Grease fittings	1/Person	Tyvek suit		
1	Catch basin	1/Person	Eye protection	~5 – 20 oz. Cans	CRC Quick Clean Heavy Duty Degreaser or equivalent
1	Bag of rags	1/Person	Chemical respirator		

11.4.2 MOTOR BEARING LUBRICATION

DELAWARE DEPARTMENT OF TRANSPORTATION BRIDGE MANAGEMENT SECTION BRIDGE MAINTENANCE PERFORMANCE STANDARD	**BRIDGE NUMBER** 3-151
	BMS ACTIVITY CODE B066-S2J
	EFFECTIVE DATE

ACTIVITY TITLE:	**UNIT OF MEASUREMENT:**
Motor Bearing Lubrication	Number of Motors

PROCEDURE DESCRIPTION:

WARNING

Use EXTREME CARE and ALWAYS REMOVE POWER from all pertinent electrical equipment, which includes multiple power sources, before beginning maintenance. Refer to Section 7.3, "Lockout/Tagout Procedure" in the Operations and Maintenance Manual.

Annually:

1. Clean the grease fitting of dirt, debris, and any other potential contaminants with a rag.
2. Remove the lube plugs. Install a grease fitting into the uppermost port. Place a catch basin below the lower port to catch old grease.
3. Purge old grease from the bearing by slowly pumping fresh grease into the bearing until fresh grease flows out along the shaft or through the lower port. For the main leaf motor bearings, use Mobil Unirex N2 or equivalent lubricant. **PUMPING GREASE INTO THE MOTOR BEARINGS WITHOUT REMOVING THE PURGE PLUG WILL RESULT IN DAMAGE TO THE SEAL AND GREASE ENTERING THE MOTOR WINDINGS.**
4. Perform one complete operation cycle of the motor (raising and lowering of the span) prior to reinstalling the purge plugs to remove excess grease.
5. Reinstall the lube plugs and wipe excess grease from motor housing with a rag.
6. Repeat for the bearing at the other end of the motor.

Refer to Sections 8.7.1 and 11.5.4 for additional component and material information. For lubrication coding details below, refer to Section 11.2, "Machinery Lubrication Schematics" in the Operations and Maintenance Manual.

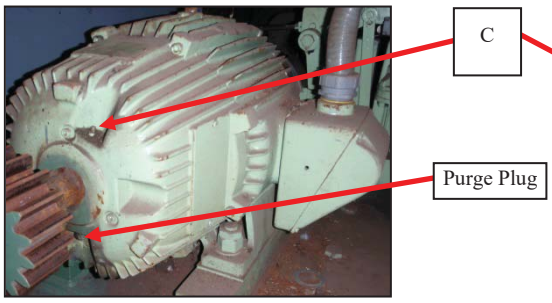

Front Output Shaft of Main Leaf Motor

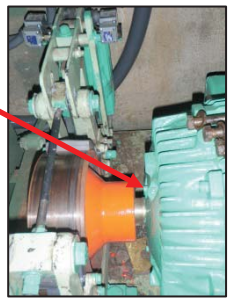

Rear Output Shaft of Main Leaf Motor

SCHEDULING CONSIDERATIONS:

Motor bearings should be lubricated annually.

Also, inspect motor bearings when the bridge opens more than 150 times between Spring and Fall maintenance routines or after an overstress situation such as a pinched span.

WORK AREA, ACTIVITY DESCRIPTION & REQUIREMENTS:

Main leaf motor bearings are located at the front and rear ends of the main leaf motor on the machinery platform. Tasks include locating, inspecting, and lubricating all motor bearings on the bridge. Lockout/Tagout is required prior to performing any maintenance on this equipment. Report any significant defects to bridge management.

Qty	EQUIPMENT	Qty	EQUIPMENT	Qty	MATERIAL
1	Grease gun		Miscellaneous small tools	~1/4 – 14 oz. Tube	Mobil Unirex N2 or equivalent
2	Grease fittings				
1	Bag of rags	1/Person	Coveralls		
1	Catch basin	1/Person	Set of nitrile gloves		
1	Adjustable wrench	1/Person	Eye protection		

11.4.3 MOTOR AND MACHINERY BRAKE MAINTENANCE

DELAWARE **DEPARTMENT OF TRANSPORTATION** **BRIDGE MANAGEMENT SECTION** **BRIDGE MAINTENANCE PERFORMANCE STANDARD**	**BRIDGE NUMBER** 3-151
	BMS ACTIVITY CODE B067-S2J Page 1 of 2
	EFFECTIVE DATE

ACTIVITY TITLE:	**UNIT OF MEASUREMENT:**
Motor and Machinery Brake Maintenance	Number of Brakes

PROCEDURE DESCRIPTION:

WARNING

Use EXTREME CARE and ALWAYS REMOVE POWER from all pertinent electrical and pneumatic equipment, which includes multiple power sources, before beginning maintenance. Refer to Section 7.3, "Lockout/Tagout Procedure" in the Operations and Maintenance Manual.

Annually:

1. Brake actuator maintenance and checks shall be performed by a qualified technician with experience in installation and maintenance of hydraulic brake systems. Brake frames shall be adjusted by district personnel. The oil used in the actuator shall be Mobil DTE21 unless otherwise specified by the technician. The brake thruster oil does not need to be replaced unless there is suspicion of oil contamination or the brake thruster is malfunctioning. A sticker shall be placed on the thruster indicating the oil type along with the date of replacement to ensure that non-compatible oils are not mixed. The district shall schedule the technician to be assisted by district personnel, so that brakes are adjusted at all times.
2. Inspect brake shoes and drums for wear, dust, dirt, grease, and proper adjustment. Check the brake pad thickness. Replace pads when the remaining thickness is less than $^{1}/_{16}$ inch.
3. Check clearance between the brake shoe and brakewheel. The measured gap shall have a minimum of $^{1}/_{64}$ inch clearance between the brake shoe and brakewheel when hand released. If clearances need to be adjusted, the linkages shall be adjusted in accordance with Sections 11.7.5 and 11.7.6. If adjustments are made to the linkages, the reserve stroke and spring length should be verified and adjusted as well. Adjustment procedures are located within Sections 11.7.5 and 11.7.6.
4. Inspect mechanical linkages for wear, broken parts, and tightness of nuts and bolts. Check for freedom of moving parts (no binding or sticking).
5. Check for excessive heating of parts evident by discoloration of metal parts.
6. Check operations of the brake during test operations of the bridge. Check for any unusual odor and excessive vibration.
7. Check the brake housing and linkages for evidences of water dripping on the brake and corrosion.
8. Check adjustment of limit switches and hand release devices.
9. Check that the motor brake actuator reserve stroke is approximately 0.7 inch +/- $^{1}/_{16}$ inch. Check that the machinery brake actuator reserve stroke is approximately 0.8 inch +/- $^{1}/_{16}$ inch. As the brake pads wear, the reserve stroke becomes shorter. If the reserve stroke requires adjustment, adjust linkages as specified in Sections 11.7.5 and 11.7.6.
10. Check the motor brake and machinery brake spring tension via the brake torque gauge located near the thruster of each brake. The motor brake should be set to provide a braking torque of 150 ft-lbs. The machinery brake should be set to provide a braking torque of 500 ft-lbs. The torque is read by matching the top of the spring block to the corresponding torque value on the scale. To adjust the brake torque, turn the torque adjustment screw until the top of the spring block is at the appropriate torque setting on the scale. Perform Item 6 to confirm proper operation of the motor brake and machinery brake after adjustment.

Refer to Sections 8.2.2, 11.5.10, 11.7.5, and 11.7.6 for additional component and material information.

DELAWARE
DEPARTMENT OF TRANSPORTATION
BRIDGE MANAGEMENT SECTION
BRIDGE MAINTENANCE PERFORMANCE STANDARD

BRIDGE NUMBER
3-151

BMS ACTIVITY CODE
B067-S2J Page 2 of 2

EFFECTIVE DATE

ACTIVITY TITLE:
Motor and Machinery Brake Maintenance

UNIT OF MEASUREMENT:
Number of Brakes

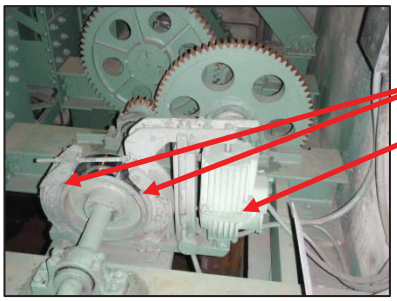

Machinery Brake

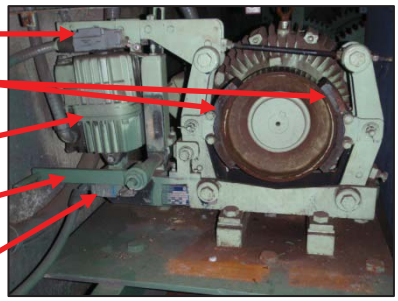

Motor Brake

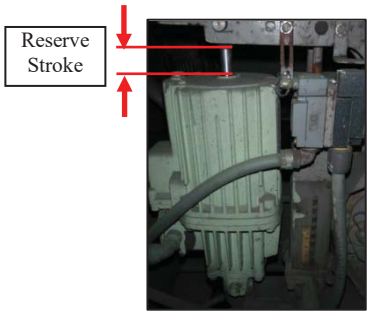

Brake Thruster

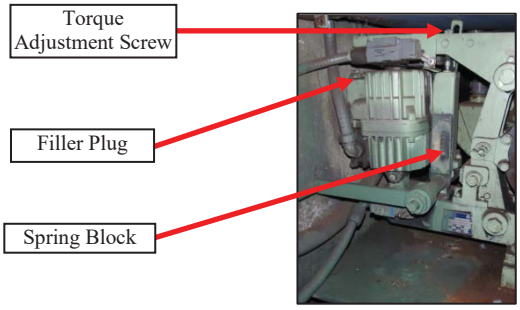

Brake Torque Gage

SCHEDULING CONSIDERATIONS:

The motor brake and machinery brake should be inspected annually.

Also, inspect brakes when the bridge opens more than 150 times between Spring and Fall maintenance routines.

WORK AREA, ACTIVITY DESCRIPTION & REQUIREMENTS:

The motor brake and machinery brake are located on the machinery platform. The motor brake is located at the rear of the main leaf motor. The machinery brake is located on the east side of the machinery platform, between two of the bearings supporting the east third intermediate pinion shaft. Tasks include locating and inspecting all brakes on the bridge. Lockout/Tagout is required prior to performing any maintenance on this equipment. Report any significant defects to bridge management.

Qty	EQUIPMENT	Qty	EQUIPMENT	Qty	MATERIAL
1	Feeler gauge set		Misc. Tools	~1/2 gallon (motor brake thruster)	Mobil DTE 21 or equivalent (for thruster if oil needs to be replaced)
2	Adjustable wrenches	1/Person	Tyvek suit		
1	Ruler (with graduations of 1/16")	1/Person	Set of chemical resistant Viton gloves	~1 gallon (machinery brake thruster)	
		1/Person	Eye protection		

11.4.4 COUPLING LUBRICATION

DELAWARE DEPARTMENT OF TRANSPORTATION BRIDGE MANAGEMENT SECTION BRIDGE MAINTENANCE PERFORMANCE STANDARD	BRIDGE NUMBER 3-151
	BMS ACTIVITY CODE B068-S2J Page 1 of 2
	EFFECTIVE DATE

ACTIVITY TITLE:	UNIT OF MEASUREMENT:
Coupling Lubrication	Number of Couplings (with Grease Fittings)

PROCEDURE DESCRIPTION:

WARNING

Use EXTREME CARE and ALWAYS REMOVE POWER from all pertinent electrical and pneumatic equipment, which includes multiple power sources, before beginning maintenance. Refer to Section 7.3, "Lockout/Tagout Procedure" in the Operations and Maintenance Manual.

WARNING

Do not disassemble couplings until shafts are properly supported.

Six Months:

Gear Coupling and Disconnect Coupling

1. Clean the coupling of dirt, debris, old grease, and any other potential contaminants with a rag.
2. Check the coupling for any excessive misalignment that may have occurred and notify bridge management if such misalignment exists. Inspect the condition and tightness of the fasteners. Inspect the seal ring to see if it is leaking. If it is leaking, replace seal according to manufacturer specifications.
3. Clean the grease fitting of dirt, old grease, and any other contaminants with a rag. Inspect the grease fitting and replace if cracked or broken. Remove the lube plug.
4. Fill with Mobil Mobilux EP-0 or equivalent until fresh grease appears at the lower port. Catch old grease in a catch basin.
5. Reinstall plug into coupling. Wipe off excess grease. Make certain all plugs have been inserted after lubrication.

Annually:

Auxiliary Air Motor Disconnect Coupling Shifting Collar

1. Clean disconnect coupling shifting collar of dirt, old grease, and any other contaminants with a rag.
2. Remove both shifting collar lube plugs and install a grease fitting into one of the ports.
3. Using a grease gun, pump the appropriate amount of fresh Mobil Mobilux EP-0 into the disconnect coupling shifting collar grease fittings to completely purge the existing grease. Rotate the auxiliary air motor disconnect coupling by manually turning the auxiliary air motor output shaft to distribute the grease around the sliding surface between the shifting collar and the long sleeve of the coupling.
4. Wipe off excess grease with a rag.
5. Remove the grease fitting and reinstall the lube plugs.
6. Manually test the clutch to ensure it properly engages and disengages the auxiliary motor disconnect coupling. To engage the manual disconnect coupling, disconnect power to the main motor and verify that the air compressor is not connected to the auxiliary air motor system. Remove the lock pin below the pivot fastener on the clutch handle base. Pull the clutch handle towards the auxiliary air motor to engage the coupling. The auxiliary air motor output shaft may have to be manually rotated to allow the gear teeth within the coupling to fully engage. Reinstall the lock pin to secure the clutch into the engaged position. If the lock pin can not be reinstalled, the gear teeth are not fully engaged.
7. To disengage the auxiliary air motor disconnect coupling, verify that the disconnect switch for the main leaf motor is switched to the off position and that the air compressor is not connected to the auxiliary air motor system. Remove the lock pin and push the clutch towards the manual disconnect coupling. Reinstall the lock pin. Turn the main motor disconnect switch to the ON position.

DELAWARE
DEPARTMENT OF TRANSPORTATION
BRIDGE MANAGEMENT SECTION
BRIDGE MAINTENANCE PERFORMANCE STANDARD

BRIDGE NUMBER
3-151

BMS ACTIVITY CODE
B068-S2J Page 2 of 2

EFFECTIVE DATE

ACTIVITY TITLE:
Coupling Lubrication

UNIT OF MEASUREMENT:
Number of Couplings (with Grease Fittings)

Refer to Sections 8.2.3, 11.5.1, 11.7.7, and 11.7.8 for additional component and material information. For lubrication coding details below, refer to Section 11.2, "Machinery Lubrication Schematics" in the Operations and Maintenance Manual.

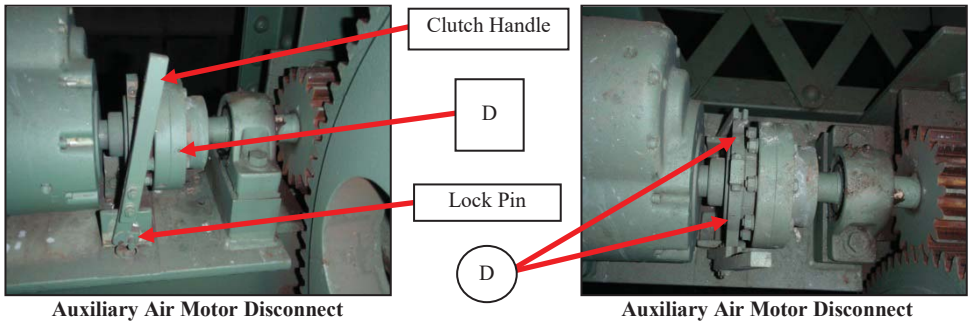

Auxiliary Air Motor Disconnect Coupling - Side

Auxiliary Air Motor Disconnect Coupling -Top

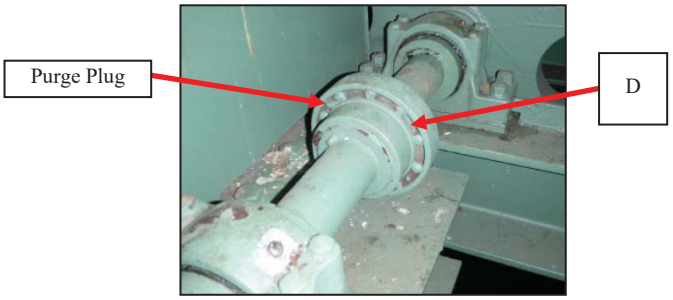

Gear Coupling

SCHEDULING CONSIDERATIONS:

Gear couplings should be lubricated every six months. The manual disconnect coupling sliding surfaces should be lubricated annually.

Also, inspect and lubricate couplings with grease fittings and manual disconnect coupling linkages when the bridge opens more than 150 times between Spring and Fall maintenance routines or after an overstress situation such as a pinched span.

WORK AREA, ACTIVITY DESCRIPTION & REQUIREMENTS:

Couplings requiring lubrication are located at the machinery platform in the bascule pier. Tasks include locating, inspecting, and lubricating all couplings with grease fittings and manual disconnect coupling linkages on the bridge with the appropriate lubricant. Lockout/Tagout is required prior to performing any maintenance on this equipment. Report any significant defects to bridge management.

Qty	EQUIPMENT	Qty	EQUIPMENT	Qty	MATERIAL
1	Grease gun	1	Catch basin	~1/2 – 14 oz. tube	Mobil Mobilux EP-0 or equivalent
2	Aux. disconnect coupling and clutch grease fittings	1	Ratchet set		
			Misc. small tools	1	Gasket for Kop-flex FCC Disconnect Coupling Size $1^{1}/_{2}$
		1/Person	Tyvek suit		
1	Gear coupling grease fittings	1/Person	Set of nitrile gloves	1	Seal and Gasket Kit for Falk 1020 G51 Gear Coupling
1	Bag of rags	1/Person	Eye protection		

11.4.5 OPEN GEARING LUBRICATION

DELAWARE DEPARTMENT OF TRANSPORTATION BRIDGE MANAGEMENT SECTION BRIDGE MAINTENANCE PERFORMANCE STANDARD	**BRIDGE NUMBER** 3-151
	BMS ACTIVITY CODE B070-S2J
	EFFECTIVE DATE

ACTIVITY TITLE:	**UNIT OF MEASUREMENT:**
Open Gearing Lubrication	Number of Open Gears

PROCEDURE DESCRIPTION:

WARNING

Use EXTREME CARE and ALWAYS REMOVE POWER from all pertinent electrical and pneumatic equipment, which includes multiple power sources, before beginning maintenance. Refer to Section 7.3, "Lockout/Tagout Procedure" in the Operations and Maintenance Manual.

Monthly:

1. Remove debris from gear teeth.
2. Using a brush, evenly coat all gear tooth surfaces with Mobil Mobiltac 325 NC or equivalent lubricant.

Annually:

1. Observe displacement patterns in open gearing lubricant for evidence of misalignment.
2. Remove old lubricant and debris by scraping the gear tooth surfaces and disposing of the lubricant in a tray or pan.
3. Apply CRC Quick Clean Heavy Duty Degreaser or equivalent to remove existing lubrication on the gear teeth.
4. With the use of a scraper and rags, remove the remaining grease and solvent and properly dispose of materials.
5. Re-inspect the gears for signs of abnormal wear or misalignment.
6. Using a brush, evenly coat all gear tooth surfaces with Mobil Mobiltac 325 NC or equivalent lubricant.

Refer to Sections 8.2.5, 11.5.2, and 11.5.11 for additional component and material information. For lubrication coding details below, refer to Section 11.2, "Machinery Lubrication Schematics" in the Operations and Maintenance Manual.

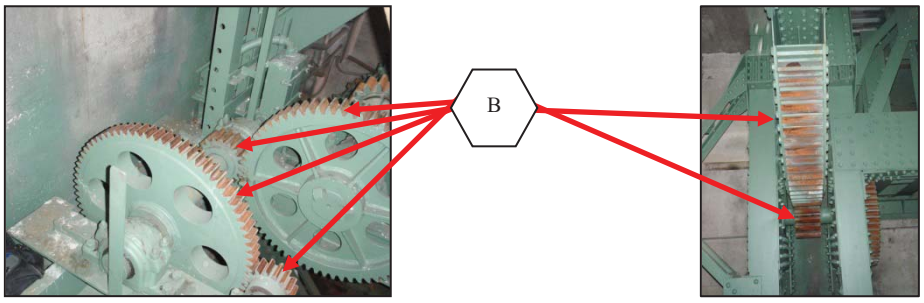

Open Gearing **Rack and Main Pinion**

SCHEDULING CONSIDERATIONS:

Fresh grease should be applied to all open gearing monthly. Open gearing should be cleaned, inspected, and lubricated annually.

Inspect and lubricate open gearing when the bridge opens more than 150 times between Spring and Fall maintenance routines or after an overstress situation such as a pinched span.

WORK AREA, ACTIVITY DESCRIPTION & REQUIREMENTS:

Open gearing is located at the machinery platform in the bascule pier. Tasks include locating, inspecting and lubricating all open gearing on the bridge. Lockout/Tagout is required prior to performing any maintenance on this equipment. Report any significant defects to bridge management.

Qty	EQUIPMENT	Qty	EQUIPMENT	Qty	MATERIAL
2	Bag of rags	1/Person	Tyvek suit	~2 – 5 Gallon Buckets	Mobil Mobiltac 325 NC or equivalent
2	Scrapers	1/Person	Set of chemical resistant Viton gloves		
2	Brushes	1/Person	Chemical goggles and face shield	~20 – 20 oz. Cans	CRC Quickclean Heavy Duty Degreaser or equivalent
2	Trays or pans	1/Person	Chemical respirator		

11.4.6 ROLLER BEARING LUBRICATION

DELAWARE DEPARTMENT OF TRANSPORTATION BRIDGE MANAGEMENT SECTION BRIDGE MAINTENANCE PERFORMANCE STANDARD	BRIDGE NUMBER 3-151
	BMS ACTIVITY CODE B076-S2J Page 1 of 2
	EFFECTIVE DATE

ACTIVITY TITLE:	UNIT OF MEASUREMENT:
Roller Bearing Lubrication	Number of Roller Bearings

PROCEDURE DESCRIPTION:

WARNING

Use EXTREME CARE and ALWAYS REMOVE POWER from all pertinent electrical and pneumatic equipment, which includes multiple power sources, before beginning maintenance. Refer to Section 7.3, "Lockout/Tagout Procedure" in the Operations and Maintenance Manual.

Six Months:

Tapered Roller Bearings and Sealmaster Spherical Roller Bearings

1. Clean the bearings of dirt, debris, old grease, and any other potential contaminants with a rag.
2. Purge old grease from the bearing by pumping in fresh Mobil Mobilgrease XHP 222 via the grease fitting located at the top of the bearing. Catch old grease in a catch basin.
3. Wipe excess grease from the bearing.

Torrington Spherical Roller Bearings

1. Clean the bearing of dirt, debris, old grease, and any other potential contaminants with a rag. Inspect the grease fittings and replace any cracked or broken fittings.
2. Remove the purge plugs located on the base of the bearing.
3. Purge old grease from the bearing by pumping in fresh Mobil Mobilgrease XHP 222 via the grease fitting located at the top of the bearing cap. Catch old grease in a catch basin.
4. Wipe excess grease from the bearing.
5. Reinstall the purge plugs.

Two Years:

Torrington Spherical Roller Bearings

1. Every two years, the bearing cap should be removed and old lubricant cleaned from the bearing. Lock out all span drive machinery prior to removing the bearing cap. Prior to removing the bearing cap, hand release the motor brake and machinery brake at once to remove any residual torque in the span drive machinery. Set the brakes after the torque is released.
2. To remove the cap, unscrew the four cap fasteners located at the top of the cap. Lift the cap from the bearing housing carefully.
3. Carefully remove the old grease from the bearings using a plastic scrapper, clean rags, and CRC Quick Clean Heavy Duty Degreaser. **Extreme caution is required to protect the bearing and to prevent contaminants from entering the bearing.** Do not use metal tools to remove grease, as they may damage the rollers.
4. The bearing rollers and races should be inspected for wear and damage after all lubricant has been removed.
5. Measure and record the bearing clearances between the rollers and outer race with feeler gauges. If the measured clearance has increased since prior inspection, notify bridge management.
6. Replace the bearing cap, making sure that no debris gets into the bearing. Tighten the cap fasteners.
7. Clean the grease fitting of dirt, debris, old grease, and any other potential contaminants with a rag. Inspect the grease fitting and replace if cracked or broken. Remove the purge plugs located on the base of the bearing. Pump fresh Mobil Mobilgrease XHP 222 into the bearing until fresh grease is visible on the interface between the bearing and the shaft or through the purge plug ports. Reinstall the purge plugs at the base of the bearing.
8. Set the span drive machinery disconnect switches to the ON position.

Refer to Sections 8.2.4, 11.5.5, 11.5.11, 11.7.9, 11.7.10, and 11.7.11 for additional component and material information. For lubrication coding details below, refer to Section 11.2, "Machinery Lubrication Schematics" in the Operations and Maintenance Manual.

DELAWARE
DEPARTMENT OF TRANSPORTATION
BRIDGE MANAGEMENT SECTION
BRIDGE MAINTENANCE PERFORMANCE STANDARD

BRIDGE NUMBER
3-151

BMS ACTIVITY CODE
B076-S2J Page 2 of 2

EFFECTIVE DATE

ACTIVITY TITLE:
Roller Bearing Lubrication

UNIT OF MEASUREMENT:
Number of Roller Bearings

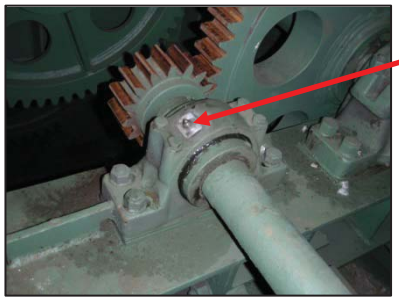

Tapered Roller Bearing

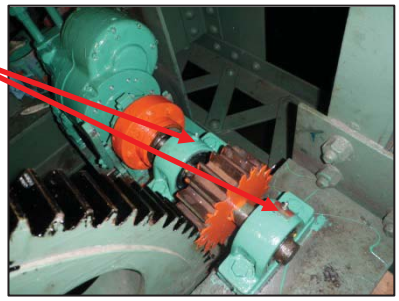

Sealmaster Spherical Roller Bearings

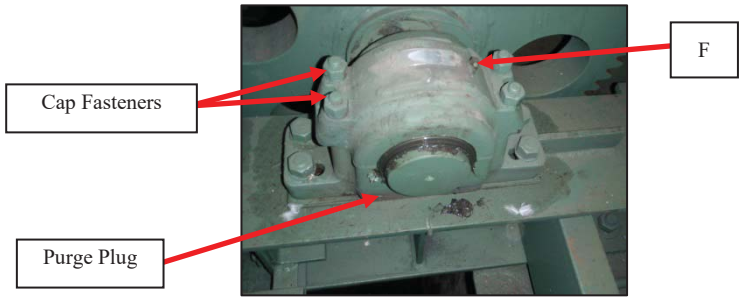

Torrington Spherical Roller Bearing

SCHEDULING CONSIDERATIONS:

The tapered roller bearings, Sealmaster spherical roller bearings, and Torrington spherical roller bearings should be lubricated every six months. Every two years the Torrington spherical roller bearing cap should be removed to allow for the removal of old lubricant and inspection of the rollers and races.

Also, inspect and lubricate tapered roller bearings, Sealmaster spherical roller bearings, and Torrington spherical roller bearings when the bridge opens more than 150 times between Spring and Fall maintenance routines or after an overstress situation such as a pinched span.

WORK AREA, ACTIVITY DESCRIPTION & REQUIREMENTS:

Five tapered roller bearings, two Sealmaster spherical roller bearings, and four Torrington spherical roller bearings are located on the machinery platform in the bascule pier. Tasks include locating, inspecting, and lubricating all roller bearings on the bridge with the appropriate lubricant. Lockout/Tagout is required prior to removing the bearing cap. Report any significant defects to bridge management.

Qty	EQUIPMENT	Qty	EQUIPMENT	Qty	MATERIAL
1	Grease gun	1	Large wrench	~1 – 14 oz. Tube (Replenishment quantity) ~10 – 14 oz. Tubes (Replacement quantity)	Mobil Mobilgrease XHP 222 or equivalent
10	Grease fittings	1	Miscellaneous small tools		
1	Bag of rags				
1	Catch basin	1/Person	Coveralls	~4 – 20 oz. Cans	CRC Quick Clean Heavy Duty Degreaser or equivalent
1	Set of feeler gauges	1/Person	Set of nitrile gloves		
1	Plastic scrapper	1/Person	Eye protection		

11.5 MATERIAL DATA SHEETS

11.5.1 MOBIL MOBILUX EP-0, EP-2

Mobil

Mobilux EP 0, 1, 2, 3, 460, 004 and 023

Grease

Product Description

Mobilux EP 0, 1, 2, 3, 460, 004 and 023 products are a high performance family of five general-purpose industrial greases and two special-duty semi-fluid greases. These lithium hydroxystearate greases are formulated to provide extra protection against wear, rusting and water washout. They are available in NLGI grades ranging from 00 to 3, with base oil viscosities ISO VG 150, 320 and 460.

Mobilux EP 0, 1, 2, 3 and 460 greases are recommended for most types of industrial applications including heavy-duty applications where high unit pressures or shock loads are present. These greases provide excellent protection against rust and corrosion and resist water wash-out which makes them particularly suitable for equipment where moist or wet conditions are common. Mobilux EP 0 and 1 are suitable for centralised systems. Mobilux EP 2 and 3 are general-purpose greases and Mobilux EP 460 is used in heavy-duty applications such as the wet ends of paper machines. The recommended operating temperature range is from -20°C to 130°C (0°C to 130°C for Mobilux EP 460) but they may be used at higher temperatures if the lubrication frequency is increased accordingly.

Mobilux EP 004 and Mobilux EP 023 are particularly suitable for the lubrication of enclosed gears and bearings in poorly sealed gear cases they can also be used in many other industrial applications where conventional gear oils cannot be retained in gear cases, chain cases, etc. because of leakage due to worn or missing seals. The recommended operating temperature range is -25 to 120°C for Mobilux EP 004 and -15 to 120°C for Mobilux EP 023.

Features and Benefits

Mobilux EP greases have a long history of proven performance and have demonstrated superior performance versus competitive products in the areas of corrosion protection, low temperature pumpability and high temperature service life. A Timken OK load of 40 lb illustrates their load carrying and extreme pressure capability.

- Reduced wear under heavy or shock loading and vibration for good equipment reliability and availability
- Protection against rust and corrosion and resistance to water washout for equipment protection and good lubrication even in presence of water
- Extended bearing life potential in wet environments for reduced bearing costs and unanticipated downtime
- Good pumpability in centralised systems (Mobilux EP 0 and 1)
- Effective leakage control (Mobilux EP 004 and Mobilux EP 023)

Applications

- Mobilux EP 0 and EP 1 provide good low temperature pumpability and are suitable for centralised lubrication systems and other applications where low temperature performance is required.
- Mobilux EP 2 is recommended for multipurpose applications in antifriction and plain bearings, bushings and pins under normal operating conditions.
- Mobilux EP 3 is a stiffer NLGI grade 3 grease recommended for applications where maximum protection against penetration of water or solid contaminants is required.

- Mobilux EP 460 is recommended for the lubrication of low to moderate speed, heavily loaded bearings including those subject to high unit pressures or shock loads. These include steel and paper mills, underground mining, tunnelling, ore crushing plants and other heavy-duty applications where moist or wet conditions are common.
- Mobilux EP 004 and Mobilux EP 023 are particularly suitable for the lubrication of enclosed gears and bearings in poorly sealed gear cases on most underground mining machinery with the exception of electric motor gearings. Mobilux EP 004 and Mobilux EP 023 can also be used in many other industrial applications where conventional gear oils cannot be retained in equipment such as gear cases, chain cases, because of leakage due to worn or missing seals. Mobilux EP 004 passes the SEW 1008 hour gear test requirement DR.EM.203 mod.

Specifications and Approvals

Mobilux EP meets or exceeds the requirements of:	Mobilux EP 0	Mobilux EP 1	Mobilux EP 2	Mobilux EP 3	Mobilux EP 460	Mobilux EP 004	Mobilux EP 023
DIN 51825: (2004-06)		KP1K-30	KP2K-30	KP3K-20	KP2K-20		
DIN 51826: (2005-01)	GP0G-20					GP00G-20	GP000G-20

Mobilux EP has the following builder approvals	Mobilux EP 0	Mobilux EP 1	Mobilux EP 2	Mobilux EP 3	Mobilux EP 460	Mobilux EP 004	Mobilux EP 023
SEW R32/302						X	

Typical Properties

	Mobilux EP 0	Mobilux EP 1	Mobilux EP 2	Mobilux EP 3	Mobilux EP 460	Mobilux EP 004	Mobilux EP 023
NLGI Grade	0	1	2	3	2	00	000
Thickener Type	Lithium	Lithium	Lithium	Lithium	Lithium	Lithium	Lithium
Color, Visual	Brown	Brown	Brown	Brown	Brown	Brown	Brown
Penetration, Worked, 25°C, ASTM D 217	370	325	280	235	280	415	460
Viscosity of Oil, ASTM D 445							
cSt @ 40°C	160	160	160	160	460	160	320
Timken OK Load, ASTM D 2509, lb	40	40	40	40	40	40	40
4-Ball Wear, ASTM D 2266, Scar, mm	0.4	0.4	0.4	0.4	0.4	0.5	0.4
4-Ball Weld Load, ASTM D 2596, Kg	250	250	250	250	250	250	250
Dropping Point, D 2265, C	190	190	190	190	190		
Rust Protection, ASTM D 6138, Distilled Water	0-0	0-0	0-0	0-0	0-0	0-0	0-0

Health and Safety

Based on available information, this product is not expected to produce adverse effects on health when used for the intended application and the recommendations provided in the Material Safety Data Sheet (MSDS) are followed. MSDS's are available upon request through your sales contract office, or via the Internet. This product should not be used for purposes other than its intended use. If disposing of used product, take care to protect the environment.

ExxonMobil

Product Name: MOBILUX EP 0
Revision Date: 30May2007
Page 1 of 8

MATERIAL SAFETY DATA SHEET

SECTION 1 PRODUCT AND COMPANY IDENTIFICATION

PRODUCT

Product Name: **MOBILUX EP 0**
Product Description: Base Oil and Additives
Product Code: 2015A0208030, 641290-00, 971553
Intended Use: Grease

COMPANY IDENTIFICATION

Supplier: **EXXON MOBIL CORPORATION**
3225 GALLOWS RD.
FAIRFAX, VA. 22037 USA

24 Hour Health Emergency	609-737-4411
Transportation Emergency Phone	800-424-9300
ExxonMobil Transportation No.	281-834-3296
MSDS Requests	713-613-3661
Product Technical Information	800-662-4525, 800-947-9147
MSDS Internet Address	http://www.exxon.com, http://www.mobil.com

SECTION 2 COMPOSITION / INFORMATION ON INGREDIENTS

Reportable Hazardous Substance(s) or Complex Substance(s)

Name	CAS#	Concentration*
ZINC DITHIOPHOSPHATE	68649-42-3	< 2.5%

* All concentrations are percent by weight unless material is a gas. Gas concentrations are in percent by volume.

SECTION 3 HAZARDS IDENTIFICATION

This material is not considered to be hazardous according to regulatory guidelines (see (M)SDS Section 15).

POTENTIAL HEALTH EFFECTS

Low order of toxicity. Excessive exposure may result in eye, skin, or respiratory irritation. High-pressure injection under skin may cause serious damage.

NFPA Hazard ID:	Health:	0	Flammability:	1	Reactivity:	0
HMIS Hazard ID:	Health:	0	Flammability:	1	Reactivity:	0

NOTE: This material should not be used for any other purpose than the intended use in Section 1 without expert advice. Health studies have shown that chemical exposure may cause potential human health risks which may vary from person to person.

SECTION 4 FIRST AID MEASURES

INHALATION

Under normal conditions of intended use, this material is not expected to be an inhalation hazard.

SKIN CONTACT

Wash contact areas with soap and water. If product is injected into or under the skin, or into any part of the body, regardless of the appearance of the wound or its size, the individual should be evaluated immediately by a physician as a surgical emergency. Even though initial symptoms from high pressure injection may be minimal or absent, early surgical treatment within the first few hours may significantly reduce the ultimate extent of injury.

EYE CONTACT

Flush thoroughly with water. If irritation occurs, get medical assistance.

INGESTION

First aid is normally not required. Seek medical attention if discomfort occurs.

SECTION 5 FIRE FIGHTING MEASURES

EXTINGUISHING MEDIA

Appropriate Extinguishing Media: Use water fog, foam, dry chemical or carbon dioxide (CO2) to extinguish flames.

Inappropriate Extinguishing Media: Straight Streams of Water

FIRE FIGHTING

Fire Fighting Instructions: Evacuate area. Prevent runoff from fire control or dilution from entering streams, sewers, or drinking water supply. Firefighters should use standard protective equipment and in enclosed spaces, self-contained breathing apparatus (SCBA). Use water spray to cool fire exposed surfaces and to protect personnel.

Hazardous Combustion Products: Aldehydes, Oxides of carbon, Smoke, Fume, Sulfur oxides, Incomplete combustion products

FLAMMABILITY PROPERTIES

Flash Point [Method]: >204C (400F) [EST. FOR OIL, ASTM D-92 (COC)]
Flammable Limits (Approximate volume % in air): LEL: N/D UEL: N/D
Autoignition Temperature: N/D

SECTION 6 ACCIDENTAL RELEASE MEASURES

NOTIFICATION PROCEDURES

In the event of a spill or accidental release, notify relevant authorities in accordance with all applicable regulations. In the event of a spill or accidental release, notify relevant authorities in accordance with all applicable regulations. US regulations require reporting releases of this material to the environment which exceed the applicable reportable quantity or oil spills which could reach any waterway including intermittent dry creeks. The National Response Center can be reached at (800)424-8802.

ExxonMobil

Product Name: MOBILUX EP 0
Revision Date: 30May2007
Page 3 of 8

SPILL MANAGEMENT

Land Spill: Allow spilled material to solidify and scrape up with shovels into a suitable container for recycle or disposal. Scrape up spilled material with shovels into a suitable container for recycle or disposal.

Water Spill: Stop leak if you can do it without risk. Confine the spill immediately with booms. Warn other shipping. Skim from surface.

Water spill and land spill recommendations are based on the most likely spill scenario for this material; however, geographic conditions, wind, temperature, (and in the case of a water spill) wave and current direction and speed may greatly influence the appropriate action to be taken. For this reason, local experts should be consulted. Note: Local regulations may prescribe or limit action to be taken.

ENVIRONMENTAL PRECAUTIONS

Prevent entry into waterways, sewers, basements or confined areas.

SECTION 7 HANDLING AND STORAGE

HANDLING

Prevent small spills and leakage to avoid slip hazard.

Static Accumulator: This material is not a static accumulator.

STORAGE

Do not store in open or unlabelled containers.

SECTION 8 EXPOSURE CONTROLS / PERSONAL PROTECTION

EXPOSURE LIMIT VALUES

NOTE: Limits/standards shown for guidance only. Follow applicable regulations.

ENGINEERING CONTROLS

The level of protection and types of controls necessary will vary depending upon potential exposure conditions. Control measures to consider:

No special requirements under ordinary conditions of use and with adequate ventilation.

PERSONAL PROTECTION

Personal protective equipment selections vary based on potential exposure conditions such as applications, handling practices, concentration and ventilation. Information on the selection of protective equipment for use with this material, as provided below, is based upon intended, normal usage.

Respiratory Protection: If engineering controls do not maintain airborne contaminant concentrations at a level which is adequate to protect worker health, an approved respirator may be appropriate. Respirator selection, use, and maintenance must be in accordance with regulatory requirements, if applicable. Types of

respirators to be considered for this material include:
No protection is ordinarily required under normal conditions of use and with adequate ventilation.

For high airborne concentrations, use an approved supplied-air respirator, operated in positive pressure mode. Supplied air respirators with an escape bottle may be appropriate when oxygen levels are inadequate, gas/vapor warning properties are poor, or if air purifying filter capacity/rating may be exceeded.

Hand Protection: Any specific glove information provided is based on published literature and glove manufacturer data. Work conditions can greatly affect glove durability; inspect and replace worn or damaged gloves. The types of gloves to be considered for this material include:
No protection is ordinarily required under normal conditions of use.

Eye Protection: If contact is likely, safety glasses with side shields are recommended.

Skin and Body Protection: Any specific clothing information provided is based on published literature or manufacturer data. The types of clothing to be considered for this material include:
No skin protection is ordinarily required under normal conditions of use. In accordance with good industrial hygiene practices, precautions should be taken to avoid skin contact.

Specific Hygiene Measures: Always observe good personal hygiene measures, such as washing after handling the material and before eating, drinking, and/or smoking. Routinely wash work clothing and protective equipment to remove contaminants. Discard contaminated clothing and footwear that cannot be cleaned. Practice good housekeeping.

ENVIRONMENTAL CONTROLS
See Sections 6, 7, 12, 13.

SECTION 9 PHYSICAL AND CHEMICAL PROPERTIES

Typical physical and chemical properties are given below. Consult the Supplier in Section 1 for additional data.

GENERAL INFORMATION
Physical State: Solid
Form: Semi-fluid
Color: Brown
Odor: Characteristic
Odor Threshold: N/D

IMPORTANT HEALTH, SAFETY, AND ENVIRONMENTAL INFORMATION
Relative Density (at 15 C): 0.918
Flash Point [Method]: >204C (400F) [EST. FOR OIL, ASTM D-92 (COC)]
Flammable Limits (Approximate volume % in air): LEL: N/D UEL: N/D
Autoignition Temperature: N/D
Boiling Point / Range: > 316C (600F)
Vapor Density (Air = 1): N/D
Vapor Pressure: < 0.013 kPa (0.1 mm Hg) at 20 C
Evaporation Rate (n-butyl acetate = 1): N/D
pH: N/A
Log Pow (n-Octanol/Water Partition Coefficient): > 3.5
Solubility in Water: Negligible

ExxonMobil

Product Name: MOBILUX EP 0
Revision Date: 30May2007
Page 5 of 8

Viscosity: 150 cSt (150 mm2/sec) at 40 C
Oxidizing Properties: See Sections 3, 15, 16.

OTHER INFORMATION
Freezing Point: N/D
Melting Point: N/D
DMSO Extract (mineral oil only), IP-346: < 3 %wt

NOTE: Most physical properties above are for the oil component in the material.

SECTION 10 STABILITY AND REACTIVITY

STABILITY: Material is stable under normal conditions.

CONDITIONS TO AVOID: Excessive heat. High energy sources of ignition.

MATERIALS TO AVOID: Strong oxidizers

HAZARDOUS DECOMPOSITION PRODUCTS: Material does not decompose at ambient temperatures.

HAZARDOUS POLYMERIZATION: Will not occur.

SECTION 11 TOXICOLOGICAL INFORMATION

ACUTE TOXICITY

Route of Exposure	Conclusion / Remarks
Inhalation	
Toxicity (Rat): LC50 > 5000 mg/m3	Minimally Toxic. Based on assessment of the components.
Irritation: No end point data.	Negligible hazard at ambient/normal handling temperatures. Based on assessment of the components.
Ingestion	
Toxicity (Rat): LD50 > 2000 mg/kg	Minimally Toxic. Based on test data for structurally similar materials.
Skin	
Toxicity (Rabbit): LD50 > 2000 mg/kg	Minimally Toxic. Based on test data for structurally similar materials.
Irritation (Rabbit): Data available.	Negligible irritation to skin at ambient temperatures. Based on assessment of the components.
Eye	
Irritation (Rabbit): Data available.	May cause mild, short-lasting discomfort to eyes. Based on assessment of the components.

CHRONIC/OTHER EFFECTS
Contains:
Base oil severely refined: Not carcinogenic in animal studies. Representative material passes IP-346, Modified Ames test, and/or other screening tests. Dermal and inhalation studies showed minimal effects; lung non-specific infiltration of immune cells, oil deposition and minimal granuloma formation. Not sensitizing in test animals.

Additional information is available by request.

The following ingredients are cited on the lists below: None.

--REGULATORY LISTS SEARCHED--

1 = NTP CARC	3 = IARC 1	5 = IARC 2B
2 = NTP SUS	4 = IARC 2A	6 = OSHA CARC

SECTION 12 ECOLOGICAL INFORMATION

The information given is based on data available for the material, the components of the material, and similar materials.

ECOTOXICITY

Material -- Not expected to be harmful to aquatic organisms.

MOBILITY

Base oil component -- Low solubility and floats and is expected to migrate from water to the land. Expected to partition to sediment and wastewater solids.

PERSISTENCE AND DEGRADABILITY

Biodegradation:

Base oil component -- Expected to be inherently biodegradable

BIOACCUMULATION POTENTIAL

Base oil component -- Has the potential to bioaccumulate, however metabolism or physical properties may reduce the bioconcentration or limit bioavailability.

SECTION 13 DISPOSAL CONSIDERATIONS

Disposal recommendations based on material as supplied. Disposal must be in accordance with current applicable laws and regulations, and material characteristics at time of disposal.

DISPOSAL RECOMMENDATIONS

Product is suitable for burning in an enclosed controlled burner for fuel value or disposal by supervised incineration at very high temperatures to prevent formation of undesirable combustion products.

REGULATORY DISPOSAL INFORMATION

RCRA Information: The unused product, in our opinion, is not specifically listed by the EPA as a hazardous waste (40 CFR, Part 261D), nor is it formulated to contain materials which are listed as hazardous wastes. It does not exhibit the hazardous characteristics of ignitability, corrosivity or reactivity and is not formulated with contaminants as determined by the Toxicity Characteristic Leaching Procedure (TCLP). However, used product may be regulated.

Empty Container Warning Empty Container Warning (where applicable): Empty containers may contain residue and can be dangerous. Do not attempt to refill or clean containers without proper instructions. Empty drums should be completely drained and safely stored until appropriately reconditioned or disposed. Empty containers should be taken

ExxonMobil

Product Name: MOBILUX EP 0
Revision Date: 30May2007
Page 7 of 8

for recycling, recovery, or disposal through suitably qualified or licensed contractor and in accordance with governmental regulations. DO NOT PRESSURISE, CUT, WELD, BRAZE, SOLDER, DRILL, GRIND, OR EXPOSE SUCH CONTAINERS TO HEAT, FLAME, SPARKS, STATIC ELECTRICITY, OR OTHER SOURCES OF IGNITION. THEY MAY EXPLODE AND CAUSE INJURY OR DEATH.

SECTION 14 TRANSPORT INFORMATION

LAND (DOT) : Not Regulated for Land Transport

LAND (TDG) : Not Regulated for Land Transport

SEA (IMDG) : Not Regulated for Sea Transport according to IMDG-Code

AIR (IATA) : Not Regulated for Air Transport

SECTION 15 REGULATORY INFORMATION

OSHA HAZARD COMMUNICATION STANDARD: When used for its intended purposes, this material is not classified as hazardous in accordance with OSHA 29 CFR 1910.1200.

NATIONAL CHEMICAL INVENTORY LISTING: DSL, EINECS, KECI, PICCS, TSCA
Special Cases:

Inventory	Status
AICS	Restrictions Apply

EPCRA: This material contains no extremely hazardous substances.

SARA (311/312) REPORTABLE HAZARD CATEGORIES: None.

SARA (313) TOXIC RELEASE INVENTORY:

Chemical Name	CAS Number	Typical Value
ZINC DITHIOPHOSPHATE	68649-42-3	< 2.5%

The Following Ingredients are Cited on the Lists Below:*

Chemical Name	CAS Number	List Citations
DIPHENYLAMINE	122-39-4	5, 9, 18
PHOSPHORUS	7723-14-0	1, 4
ZINC DITHIOPHOSPHATE	68649-42-3	13, 15, 17

--REGULATORY LISTS SEARCHED--

1 = ACGIH ALL	6 = TSCA 5a2	11 = CA P65 REPRO	16 = MN RTK
2 = ACGIH A1	7 = TSCA 5e	12 = CA RTK	17 = NJ RTK
3 = ACGIH A2	8 = TSCA 6	13 = IL RTK	18 = PA RTK
4 = OSHA Z	9 = TSCA 12b	14 = LA RTK	19 = RI RTK

5 = TSCA 4 10 = CA P65 CARC 15 = MI 293

Code key: CARC=Carcinogen; REPRO=Reproductive

* EPA recently added new chemical substances to its TSCA Section 4 test rules. Please contact the supplier to confirm whether the ingredients in this product currently appear on a TSCA 4 or TSCA 12b list.

SECTION 16 OTHER INFORMATION

N/D = Not determined, N/A = Not applicable

THIS SAFETY DATA SHEET CONTAINS THE FOLLOWING REVISIONS:

Revision Changes:
Section 13: Empty Container Warning was modified.
Section 08: Hand Protection was modified.
Section 06: Notification Procedures was modified.
Section 02: Primary Ingredient Name was deleted.
Section 02: CAS Number was deleted.
Section 02: Concentration - Header was deleted.
Section 02: Constituents Table - Header was deleted.
Section 02: Component table was deleted.
Section 08: Exposure Limits Table was deleted.
Section 08: OEL Table - Form Column - Header was deleted.
Section 08: OEL Table - Limit Column - Header was deleted.
Section 08: OEL Table - Notation Column - Header was deleted.
Section 08: OEL Table - Source Column - Header was deleted.
Section 08: Exposure Limit Values - Header was deleted.

The information and recommendations contained herein are, to the best of ExxonMobil's knowledge and belief, accurate and reliable as of the date issued. You can contact ExxonMobil to insure that this document is the most current available from ExxonMobil. The information and recommendations are offered for the user's consideration and examination. It is the user's responsibility to satisfy itself that the product is suitable for the intended use. If buyer repackages this product, it is the user's responsibility to insure proper health, safety and other necessary information is included with and/or on the container. Appropriate warnings and safe-handling procedures should be provided to handlers and users. Alteration of this document is strictly prohibited. Except to the extent required by law, re-publication or retransmission of this document, in whole or in part, is not permitted. The term, "ExxonMobil" is used for convenience, and may include any one or more of ExxonMobil Chemical Company, Exxon Mobil Corporation, or any affiliates in which they directly or indirectly hold any interest.

Internal Use Only
MHC: 0, 0, 0, 0, 0, 0 PPEC: A

DGN: 2009904XUS (553448)

Copyright 2002 Exxon Mobil Corporation, All rights reserved

ExxonMobil

Product Name: MOBILUX EP 2
Revision Date: 21 Jul 2009
Page 1 of 9

MATERIAL SAFETY DATA SHEET

SECTION 1 PRODUCT AND COMPANY IDENTIFICATION

PRODUCT

Product Name: **MOBILUX EP 2**
Product Description: Base Oil and Additives
Product Code: 641274-00, 970717
Intended Use: Grease

COMPANY IDENTIFICATION

Supplier: **EXXON MOBIL CORPORATION**
3225 GALLOWS RD.
FAIRFAX, VA. 22037 USA

24 Hour Health Emergency	609-737-4411
Transportation Emergency Phone	800-424-9300
ExxonMobil Transportation No.	281-834-3296
Product Technical Information	800-662-4525, 800-947-9147
MSDS Internet Address	http://www.exxon.com, http://www.mobil.com

SECTION 2 COMPOSITION / INFORMATION ON INGREDIENTS

Reportable Hazardous Substance(s) or Complex Substance(s)

Name	CAS#	Concentration*
ZINC DITHIOPHOSPHATE	68649-42-3	< 2.5%

* All concentrations are percent by weight unless material is a gas. Gas concentrations are in percent by volume.

SECTION 3 HAZARDS IDENTIFICATION

This material is not considered to be hazardous according to regulatory guidelines (see (M)SDS Section 15).

POTENTIAL HEALTH EFFECTS

Low order of toxicity. Excessive exposure may result in eye, skin, or respiratory irritation. High-pressure injection under skin may cause serious damage.

NFPA Hazard ID:	Health:	0	Flammability:	1	Reactivity:	0
HMIS Hazard ID:	Health:	0	Flammability:	1	Reactivity:	0

NOTE: This material should not be used for any other purpose than the intended use in Section 1 without expert advice. Health studies have shown that chemical exposure may cause potential human health risks which may vary from person to person.

SECTION 4 FIRST AID MEASURES

Inhalation

Under normal conditions of intended use, this material is not expected to be an inhalation hazard.

SKIN CONTACT

Wash contact areas with soap and water. If product is injected into or under the skin, or into any part of the body, regardless of the appearance of the wound or its size, the individual should be evaluated immediately by a physician as a surgical emergency. Even though initial symptoms from high pressure injection may be minimal or absent, early surgical treatment within the first few hours may significantly reduce the ultimate extent of injury.

EYE CONTACT

Flush thoroughly with water. If irritation occurs, get medical assistance.

Ingestion

First aid is normally not required. Seek medical attention if discomfort occurs.

SECTION 5 FIRE FIGHTING MEASURES

EXTINGUISHING MEDIA

Appropriate Extinguishing Media: Use water fog, foam, dry chemical or carbon dioxide (CO2) to extinguish flames.

Inappropriate Extinguishing Media: Straight Streams of Water

FIRE FIGHTING

Fire Fighting Instructions: Evacuate area. Prevent runoff from fire control or dilution from entering streams, sewers, or drinking water supply. Firefighters should use standard protective equipment and in enclosed spaces, self-contained breathing apparatus (SCBA). Use water spray to cool fire exposed surfaces and to protect personnel.

Hazardous Combustion Products: Smoke, Fume, Aldehydes, Sulfur Oxides, Incomplete combustion products, Oxides of carbon

FLAMMABILITY PROPERTIES

Flash Point [Method]: >204C (400F) [EST. FOR OIL, ASTM D-92 (COC)]
Flammable Limits (Approximate volume % in air): LEL: N/D UEL: N/D
Autoignition Temperature: N/D

SECTION 6 ACCIDENTAL RELEASE MEASURES

NOTIFICATION PROCEDURES

In the event of a spill or accidental release, notify relevant authorities in accordance with all applicable regulations. US regulations require reporting releases of this material to the environment which exceed the applicable reportable quantity or oil spills which could reach any waterway including intermittent dry creeks. The National Response Center can be reached at (800)424-8802.

SPILL MANAGEMENT

Land Spill: Allow spilled material to solidify and scrape up with shovels into a suitable container for recycle or disposal. Scrape up spilled material with shovels into a suitable container for recycle or disposal.

Water Spill: Stop leak if you can do it without risk. Confine the spill immediately with booms. Warn other shipping. Skim from surface.

Water spill and land spill recommendations are based on the most likely spill scenario for this material; however, geographic conditions, wind, temperature, (and in the case of a water spill) wave and current direction and speed may greatly influence the appropriate action to be taken. For this reason, local experts should be consulted. Note: Local regulations may prescribe or limit action to be taken.

ENVIRONMENTAL PRECAUTIONS

Prevent entry into waterways, sewers, basements or confined areas.

SECTION 7 HANDLING AND STORAGE

HANDLING

Prevent small spills and leakage to avoid slip hazard.

Static Accumulator: This material is not a static accumulator.

STORAGE

Do not store in open or unlabelled containers.

SECTION 8 EXPOSURE CONTROLS / PERSONAL PROTECTION

EXPOSURE LIMIT VALUES

NOTE: Limits/standards shown for guidance only. Follow applicable regulations.

ENGINEERING CONTROLS

The level of protection and types of controls necessary will vary depending upon potential exposure conditions. Control measures to consider:

No special requirements under ordinary conditions of use and with adequate ventilation.

PERSONAL PROTECTION

Personal protective equipment selections vary based on potential exposure conditions such as applications, handling practices, concentration and ventilation. Information on the selection of protective equipment for use with this material, as provided below, is based upon intended, normal usage.

Respiratory Protection: If engineering controls do not maintain airborne contaminant concentrations at a level which is adequate to protect worker health, an approved respirator may be appropriate. Respirator selection, use, and maintenance must be in accordance with regulatory requirements, if applicable. Types of respirators to be considered for this material include:

No protection is ordinarily required under normal conditions of use and with adequate ventilation.

For high airborne concentrations, use an approved supplied-air respirator, operated in positive pressure mode. Supplied air respirators with an escape bottle may be appropriate when oxygen levels are inadequate, gas/vapor warning properties are poor, or if air purifying filter capacity/rating may be exceeded.

Hand Protection: Any specific glove information provided is based on published literature and glove manufacturer data. Glove suitability and breakthrough time will differ depending on the specific use conditions. Contact the glove manufacturer for specific advice on glove selection and breakthrough times for your use conditions. Inspect and replace worn or damaged gloves. The types of gloves to be considered for this material include:

No protection is ordinarily required under normal conditions of use.

Eye Protection: If contact is likely, safety glasses with side shields are recommended.

Skin and Body Protection: Any specific clothing information provided is based on published literature or manufacturer data. The types of clothing to be considered for this material include:

No skin protection is ordinarily required under normal conditions of use. In accordance with good industrial hygiene practices, precautions should be taken to avoid skin contact.

Specific Hygiene Measures: Always observe good personal hygiene measures, such as washing after handling the material and before eating, drinking, and/or smoking. Routinely wash work clothing and protective equipment to remove contaminants. Discard contaminated clothing and footwear that cannot be cleaned. Practice good housekeeping.

ENVIRONMENTAL CONTROLS

See Sections 6, 7, 12, 13.

SECTION 9 PHYSICAL AND CHEMICAL PROPERTIES

Typical physical and chemical properties are given below. Consult the Supplier in Section 1 for additional data.

GENERAL INFORMATION

Physical State: Solid
Form: semi-fluid
Color: brown
Odor: Characteristic
Odor Threshold: N/D

IMPORTANT HEALTH, SAFETY, AND ENVIRONMENTAL INFORMATION

Relative Density (at 15 C): 0.92
Flash Point [Method]: >204C (400F) [EST. FOR OIL, ASTM D-92 (COC)]
Flammable Limits (Approximate volume % in air): LEL: N/D UEL: N/D
Autoignition Temperature: N/D
Boiling Point / Range: > 316C (600F)
Vapor Density (Air = 1): N/D
Vapor Pressure: < 0.013 kPa (0.1 mm Hg) at 20 C
Evaporation Rate (N-Butyl Acetate = 1): N/D
pH: N/A
Log Pow (n-Octanol/Water Partition Coefficient): > 3.5

Solubility in Water: Negligible
Viscosity: 150 cSt (150 mm²/sec) at 40 C
Oxidizing Properties: See Sections 3, 15, 16.

OTHER INFORMATION
Freezing Point: N/D
Melting Point: N/D
DMSO Extract (mineral oil only), IP-346: < 3 %wt

NOTE: Most physical properties above are for the oil component in the material.

SECTION 10 STABILITY AND REACTIVITY

STABILITY: Material is stable under normal conditions.

CONDITIONS TO AVOID: Excessive heat. High energy sources of ignition.

MATERIALS TO AVOID: Strong oxidizers

HAZARDOUS DECOMPOSITION PRODUCTS: Material does not decompose at ambient temperatures.

HAZARDOUS POLYMERIZATION: Will not occur.

SECTION 11 TOXICOLOGICAL INFORMATION

ACUTE TOXICITY

Route of Exposure	Conclusion / Remarks
Inhalation	
Toxicity: No end point data.	Minimally Toxic. Based on assessment of the components.
Irritation: No end point data.	Negligible hazard at ambient/normal handling temperatures. Based on assessment of the components.
Ingestion	
Toxicity (Rat): LD50 > 5000 mg/kg	Minimally Toxic. Based on test data for structurally similar materials.
Skin	
Toxicity (Rabbit): LD50 > 5000 mg/kg	Minimally Toxic. Based on test data for structurally similar materials.
Irritation (Rabbit): Data available.	Negligible irritation to skin at ambient temperatures. Based on assessment of the components.
Eye	
Irritation (Rabbit): Data available.	May cause mild, short-lasting discomfort to eyes. Based on assessment of the components.

CHRONIC/OTHER EFFECTS
Contains:
Base oil severely refined: Not carcinogenic in animal studies. Representative material passes IP-346, Modified Ames test, and/or other screening tests. Dermal and inhalation studies showed minimal effects; lung non-specific infiltration of immune cells, oil deposition and minimal granuloma formation. Not sensitizing in test animals.

Additional information is available by request.

The following ingredients are cited on the lists below: None.

--REGULATORY LISTS SEARCHED--

1 = NTP CARC	3 = IARC 1	5 = IARC 2B
2 = NTP SUS	4 = IARC 2A	6 = OSHA CARC

SECTION 12 ECOLOGICAL INFORMATION

The information given is based on data available for the material, the components of the material, and similar materials.

ECOTOXICITY

Material -- Not expected to be harmful to aquatic organisms.

MOBILITY

Base oil component -- Low solubility and floats and is expected to migrate from water to the land. Expected to partition to sediment and wastewater solids.

PERSISTENCE AND DEGRADABILITY

Biodegradation:

Base oil component -- Expected to be inherently biodegradable

BIOACCUMULATION POTENTIAL

Base oil component -- Has the potential to bioaccumulate, however metabolism or physical properties may reduce the bioconcentration or limit bioavailability.

SECTION 13 DISPOSAL CONSIDERATIONS

Disposal recommendations based on material as supplied. Disposal must be in accordance with current applicable laws and regulations, and material characteristics at time of disposal.

DISPOSAL RECOMMENDATIONS

Product is suitable for burning in an enclosed controlled burner for fuel value or disposal by supervised incineration at very high temperatures to prevent formation of undesirable combustion products.

REGULATORY DISPOSAL INFORMATION

RCRA Information: The unused product, in our opinion, is not specifically listed by the EPA as a hazardous waste (40 CFR, Part 261D), nor is it formulated to contain materials which are listed as hazardous wastes. It does not exhibit the hazardous characteristics of ignitability, corrosivity or reactivity and is not formulated with contaminants as determined by the Toxicity Characteristic Leaching Procedure (TCLP). However, used product may be regulated.

Empty Container Warning Empty Container Warning (where applicable): Empty containers may contain residue and can be dangerous. Do not attempt to refill or clean containers without proper instructions. Empty drums should be

ExxonMobil

Product Name: MOBILUX EP 2
Revision Date: 21 Jul 2009
Page 7 of 9

completely drained and safely stored until appropriately reconditioned or disposed. Empty containers should be taken for recycling, recovery, or disposal through suitably qualified or licensed contractor and in accordance with governmental regulations. DO NOT PRESSURISE, CUT, WELD, BRAZE, SOLDER, DRILL, GRIND, OR EXPOSE SUCH CONTAINERS TO HEAT, FLAME, SPARKS, STATIC ELECTRICITY, OR OTHER SOURCES OF IGNITION. THEY MAY EXPLODE AND CAUSE INJURY OR DEATH.

SECTION 14 TRANSPORT INFORMATION

LAND (DOT) : Not Regulated for Land Transport

LAND (TDG) : Not Regulated for Land Transport

SEA (IMDG) : Not Regulated for Sea Transport according to IMDG-Code

AIR (IATA) : Not Regulated for Air Transport

SECTION 15 REGULATORY INFORMATION

OSHA HAZARD COMMUNICATION STANDARD: When used for its intended purposes, this material is not classified as hazardous in accordance with OSHA 29 CFR 1910.1200.

NATIONAL CHEMICAL INVENTORY LISTING: AICS, IECSC, DSL, EINECS, KECI, PICCS, TSCA

EPCRA: This material contains no extremely hazardous substances.

SARA (311/312) REPORTABLE HAZARD CATEGORIES: None.

SARA (313) TOXIC RELEASE INVENTORY:

Chemical Name	CAS Number	Typical Value
ZINC DITHIOPHOSPHATE	68649-42-3	< 2.5%

The following ingredients are cited on the lists below:

Chemical Name	CAS Number	List Citations
DIPHENYLAMINE	122-39-4	5, 18
ZINC DITHIOPHOSPHATE	68649-42-3	13, 15, 17

--REGULATORY LISTS SEARCHED--

1 = ACGIH ALL	6 = TSCA 5a2	11 = CA P65 REPRO	16 = MN RTK
2 = ACGIH A1	7 = TSCA 5e	12 = CA RTK	17 = NJ RTK
3 = ACGIH A2	8 = TSCA 6	13 = IL RTK	18 = PA RTK
4 = OSHA Z	9 = TSCA 12b	14 = LA RTK	19 = RI RTK
5 = TSCA 4	10 = CA P65 CARC	15 = MI 293	

Code key: CARC=Carcinogen; REPRO=Reproductive

SECTION 16 OTHER INFORMATION

N/D = Not determined, N/A = Not applicable

THIS SAFETY DATA SHEET CONTAINS THE FOLLOWING REVISIONS:

Revision Changes:
Section 04: First Aid Inhalation - Header was modified.
Section 04: First Aid Ingestion - Header was modified.
Section 04: First Aid Inhalation was modified.
Section 06: Notification Procedures - Header was modified.
Section 10 Stability and Reactivity - Header was modified.
Section 13: Disposal Recommendations - Note was modified.
Section 13: Empty Container Warning was modified.
Section 09: Physical State was modified.
Section 09: Color was modified.
Section 09: Boiling Point C(F) was modified.
Section 09: Evaporation Rate - Header was modified.
Section 08: Personal Protection was modified.
Section 08: Hand Protection was modified.
Section 09: Vapor Pressure was modified.
Section 07: Handling and Storage - Handling was modified.
Hazard Identification: Health Hazards was modified.
Section 11: Dermal Lethality Test Data was modified.
Section 11: Oral Lethality Test Data was modified.
Section 11: Inhalation Lethality Test Data was modified.
Section 05: Hazardous Combustion Products was modified.
Section 06: Accidental Release - Spill Management - Land was modified.
Section 06: Accidental Release - Spill Management - Water was modified.
Section 09: Relative Density - Header was modified.
Section 09: Flash Point C(F) was modified.
Section 09: Viscosity was modified.
Section 15: List Citations Table was modified.
Section 15: List Citation Table - Header was modified.
Section 11: Skin Irritation Conclusion was modified.
Section 11: Inhalation Lethality Test Comment was modified.
Section 15: National Chemical Inventory Listing was modified.
Section 16: Code to MHCs was modified.
Section 15: OSHA Hazard Communication Standard was modified.
Hazard Identification: OSHA - May be Hazardous Statement was modified.
Section 06: Notification Procedures was modified.
Section 01: Company Contact Methods Sorted by Priority was modified.
Section 08: Exposure Limit Values - Header was added.
Section 08: Exposure limits/standards was deleted.
Section 15: Special Cases - Header was deleted.
Section 15: Special Cases Table was deleted.
Section 15: Inventory - Header was deleted.
Section 15: Status - Header was deleted.

ExxonMobil

Product Name: MOBILUX EP 2
Revision Date: 21 Jul 2009
Page 9 of 9

The information and recommendations contained herein are, to the best of ExxonMobil's knowledge and belief, accurate and reliable as of the date issued. You can contact ExxonMobil to insure that this document is the most current available from ExxonMobil. The information and recommendations are offered for the user's consideration and examination. It is the user's responsibility to satisfy itself that the product is suitable for the intended use. If buyer repackages this product, it is the user's responsibility to insure proper health, safety and other necessary information is included with and/or on the container. Appropriate warnings and safe-handling procedures should be provided to handlers and users. Alteration of this document is strictly prohibited. Except to the extent required by law, re-publication or retransmission of this document, in whole or in part, is not permitted. The term, "ExxonMobil" is used for convenience, and may include any one or more of ExxonMobil Chemical Company, Exxon Mobil Corporation, or any affiliates in which they directly or indirectly hold any interest.

Internal Use Only
MHC: 0B, 0B, 0, 0, 0, 0 PPEC: A

DGN: 2009877XUS (539035)

Copyright 2002 Exxon Mobil Corporation, All rights reserved

11.5.2 MOBIL MOBILTAC 325 NC

Mobil

Mobiltac 375 NC, 325 NC and 275 NC

Gear Oils

Product Description

Mobiltac 375 NC, 325 NC and 275 NC extra high performance non-leaded, diluent-type, heavy-bodied open gear lubricants designed for a wide variety of open gear and mining applications. They contain a non-chlorinated, volatile solvent that ensures fluidity during application, even at low temperatures. Once applied, the diluent evaporates and the lubricants take on a flexible, adhesive, high-strength consistency that is maintained throughout their service life. Mobiltac 375 NC, 325 NC and 275NC adhere strongly to gear teeth and other machine elements to resist excessive throw-off, thereby providing a wear-resistant, viscous, continuous film that lubricates well under boundary conditions. Mobiltac 275 NC also contains solid phase EP/anti-wear additive for added equipment protection

Mobiltac 375 NC, 325 NC and Mobiltac 275NC will not harden, chip, or flake in cold weather, are self-healing, and do not form a hard-packed buildup in gear-tooth roots. Dripping and throw-off are minimal, and the lubricants are easily cleaned up with a solvent-soaked rag. The lubricants provide resistance to rain, snow, and process water washing. Their flash points minimise the risk of fire. These new generation gear and mining lubricants are applied easily by hand or by automatic dispensers. Mobiltac NC technology has rapidly become a firm favourite among many open gear users and mine operators around the world

Features and Benefits

The Mobiltac NC Series of products are the most recent technology advance for the Mobiltac brand of products that have been used with great success in open gear and other mining applications for several decades. These new technology products provide significantly improved environmental and performance benefits over older diluent-type technologies. They offer the following features and potential benefits:

Features	Advantages and Potential Benefits
Excellent protection of gear teeth and other machine elements under boundary lubrication conditions	Less equipment wear and breakdown; lower replacement, downtime and maintenance costs
Excellent low-temperature pumpability	Easy start-up at low ambient and avoids cost of preheating
Excellent resistance to water washing	Maintains superb protection in wet environments; less unanticipated downtime
Minimal throw-off and dripping	Less product waste and new product cost
No chipping or flaking at low temperatures	Maintains protective lubricating film at low temperatures
Easy to clean up with rags and conventional solvents or cleaning fluids	Improved safety and reduced maintenance costs

Applications

Mobiltac 375 NC, 325 NC and Mobiltac 275NC are designed for use in a wide variety of open gear and mining applications:

- Mobiltac 375 NC, containing a high-viscosity base oil, is recommended for the lubrication of highly loaded open gears, including those that operate at high temperature, for example, ring gears on cement kilns and large gears on ore-processing mills
- Mobiltac 325 NC is recommended for the same applications as Mobiltac 375 NC. It contains more diluent and has a lower viscosity for ease of application at cooler temperatures
- Mobiltac 275 NC is designed for service as a lubricant for mine and quarry shovels, draglines, and related equipment; also open gears, racks and pinions, swing gears, booms and sticks

- Minimum operating temperature for Mobiltac 325 NC is -18 C, 375 NC is -1 C and 275 NC is -9 C

Typical Properties

Mobiltac NC	Mobiltac375 NC	Mobiltac325 NC	Mobiltac275 NC
Appearance	Viscous, semi-fluid, black	Viscous, semi-fluid, black	Viscous, semi-fluid, black
Viscosity, ASTM D 445			
cSt @ 40° C, with diluent	5000	1500	-
cSt @ 100° C, without diluent	1260	1000	-
Flash Point, °C, ASTM D 92	135	110	150
Specific Gravity, °C kg/l, ASTM D 1298	0.96	0.95	0.99
Maximum Temperature Use, °C	121	93	-

Health and Safety

Based on available information, this product is not expected to produce adverse effects on health when used for the intended application and the recommendations provided in the Material Safety Data Sheet (MSDS) are followed. MSDS's are available upon request through your sales contract office, or via the Internet. This product should not be used for purposes other than its intended use. If disposing of used product, take care to protect the environment.

The Mobil logotype, the Pegasus design are trademarks of Exxon Mobil Corporation, or one of its subsidiaries.

Exxon Mobil Corporation
3225 Gallows Road
Fairfax, VA 22037

1-800-ASK MOBIL (275-6624)

Typical Properties are typical of those obtained with normal production tolerance and do not constitute a specification. Variations that do not affect product performance are to be expected during normal manufacture and at different blending locations. The information contained herein is subject to change without notice. All products may not be available locally. For more information, contact your local ExxonMobil contact or visit www.exxonmobil.com
ExxonMobil is comprised of numerous affiliates and subsidiaries, many with names that include Esso, Mobil, or ExxonMobil. Nothing in this document is intended to override or supersede the corporate separateness of local entities. Responsibility for local action and accountability remains with the local ExxonMobil-affiliate entities.

© 2001-2011 Exxon Mobil Corporation. All rights reserved..

ExxonMobil

Product Name: MOBILTAC 325 NC
Revision Date: 27 Feb 2013
Page 1 of 12

MATERIAL SAFETY DATA SHEET

SECTION 1 PRODUCT AND COMPANY IDENTIFICATION

PRODUCT

Product Name: **MOBILTAC 325 NC**
Product Description: Hydrocarbons and Additives
Product Code: 201560404010, 611160-00, 976359
Intended Use: Gear oil

COMPANY IDENTIFICATION

Supplier: **EXXON MOBIL CORPORATION**
3225 GALLOWS RD.
FAIRFAX, VA. 22037 USA

24 Hour Health Emergency	609-737-4411
Transportation Emergency Phone	800-424-9300
ExxonMobil Transportation No.	281-834-3296
Product Technical Information	800-662-4525, 800-947-9147
MSDS Internet Address	http://www.exxon.com, http://www.mobil.com

SECTION 2 COMPOSITION / INFORMATION ON INGREDIENTS

Reportable Hazardous Substance(s) or Complex Substance(s)

Name	CAS#	Concentration*
ASPHALT (PETROLEUM)	8052-42-4	15 - 50%
HYDROTREATED LIGHT DISTILLATE	64742-47-8	8 - 14%
NAPHTHENIC ACIDS, ZINC SALTS	12001-85-3	3 - 6%
STRAIGHT-RUN MIDDLE DISTILLATES	64741-44-2	5 - 10%

* All concentrations are percent by weight unless material is a gas. Gas concentrations are in percent by volume.

SECTION 3 HAZARDS IDENTIFICATION

This material is considered to be hazardous according to regulatory guidelines (see (M)SDS Section 15).

POTENTIAL HEALTH EFFECTS

Irritating to eyes. Irritating to skin. Excessive exposure may result in eye, skin, or respiratory irritation. Under conditions of poor personal hygiene and prolonged repeated contact, some polycyclic aromatic compounds (PACs) have been suspected as a cause of skin cancer in humans. High-pressure injection under skin may cause serious damage.

Target Organs: Skin | Eye |

ENVIRONMENTAL HAZARDS

Harmful to aquatic organisms, may cause long-term adverse effects in the aquatic environment.

ExxonMobil

Product Name: MOBILTAC 325 NC
Revision Date: 27 Feb 2013
Page 2 of 12

NFPA Hazard ID:	Health:	1	Flammability:	1	Reactivity:	0
HMIS Hazard ID:	Health:	1	Flammability:	1	Reactivity:	0

NOTE: This material should not be used for any other purpose than the intended use in Section 1 without expert advice. Health studies have shown that chemical exposure may cause potential human health risks which may vary from person to person.

SECTION 4 FIRST AID MEASURES

INHALATION

Remove from further exposure. For those providing assistance, avoid exposure to yourself or others. Use adequate respiratory protection. If respiratory irritation, dizziness, nausea, or unconsciousness occurs, seek immediate medical assistance. If breathing has stopped, assist ventilation with a mechanical device or use mouth-to-mouth resuscitation.

SKIN CONTACT

Wash contact areas with soap and water. Remove contaminated clothing. Launder contaminated clothing before reuse. If product is injected into or under the skin, or into any part of the body, regardless of the appearance of the wound or its size, the individual should be evaluated immediately by a physician as a surgical emergency. Even though initial symptoms from high pressure injection may be minimal or absent, early surgical treatment within the first few hours may significantly reduce the ultimate extent of injury.

EYE CONTACT

Flush thoroughly with water for at least 15 minutes. Get medical assistance.

INGESTION

First aid is normally not required. Seek medical attention if discomfort occurs.

SECTION 5 FIRE FIGHTING MEASURES

EXTINGUISHING MEDIA

Appropriate Extinguishing Media: Use water fog, foam, dry chemical or carbon dioxide (CO2) to extinguish flames.

Inappropriate Extinguishing Media: Straight Streams of Water

FIRE FIGHTING

Fire Fighting Instructions: Evacuate area. Prevent runoff from fire control or dilution from entering streams, sewers, or drinking water supply. Firefighters should use standard protective equipment and in enclosed spaces, self-contained breathing apparatus (SCBA). Use water spray to cool fire exposed surfaces and to protect personnel.

Unusual Fire Hazards: Hazardous material. Firefighters should consider protective equipment indicated in Section 8.

Hazardous Combustion Products: Hydrogen sulfide, Smoke, Fume, Aldehydes, Sulfur oxides, Incomplete combustion products, Oxides of carbon

ExxonMobil

Product Name: MOBILTAC 325 NC
Revision Date: 27 Feb 2013
Page 3 of 12

FLAMMABILITY PROPERTIES

Flash Point [Method]: >97°C (207°F) [ASTM D-92]
Flammable Limits (Approximate volume % in air): LEL: N/D UEL: N/D
Autoignition Temperature: N/D

SECTION 6 ACCIDENTAL RELEASE MEASURES

NOTIFICATION PROCEDURES

In the event of a spill or accidental release, notify relevant authorities in accordance with all applicable regulations. US regulations require reporting releases of this material to the environment which exceed the applicable reportable quantity or oil spills which could reach any waterway including intermittent dry creeks. The National Response Center can be reached at (800)424-8802.

PROTECTIVE MEASURES

Avoid contact with spilled material. Warn or evacuate occupants in surrounding and downwind areas if required due to toxicity or flammability of the material. See Section 5 for fire fighting information. See the Hazard Identification Section for Significant Hazards. See Section 4 for First Aid Advice. See Section 8 for advice on the minimum requirements for personal protective equipment. Additional protective measures may be necessary, depending on the specific circumstances and/or the expert judgment of the emergency responders.

SPILL MANAGEMENT

Land Spill: Stop leak if you can do it without risk. Recover by pumping or with suitable absorbent.

Water Spill: Stop leak if you can do it without risk. Confine the spill immediately with booms. Warn other shipping. Remove from the surface by skimming or with suitable absorbents. Seek the advice of a specialist before using dispersants.

Water spill and land spill recommendations are based on the most likely spill scenario for this material; however, geographic conditions, wind, temperature, (and in the case of a water spill) wave and current direction and speed may greatly influence the appropriate action to be taken. For this reason, local experts should be consulted. Note: Local regulations may prescribe or limit action to be taken.

ENVIRONMENTAL PRECAUTIONS

Large Spills: Dike far ahead of liquid spill for later recovery and disposal. Prevent entry into waterways, sewers, basements or confined areas.

SECTION 7 HANDLING AND STORAGE

HANDLING

Avoid contact with skin. Avoid contact with eyes. Hydrogen sulfide (H2S) may be given off when this material is heated. Do not depend on sense of smell for warning. Prevent small spills and leakage to avoid slip hazard. Material can accumulate static charges which may cause an electrical spark (ignition source). When the material is handled in bulk, an electrical spark could ignite any flammable vapors from liquids or residues that may be present (e.g., during switch-loading operations). Use proper bonding and/or ground procedures. However, bonding and grounds may not eliminate the hazard from static accumulation. Consult local applicable standards for guidance. Additional references include American Petroleum Institute 2003 (Protection Against Ignitions Arising out of Static, Lightning and Stray Currents) or National Fire Protection

Agency 77 (Recommended Practice on Static Electricity) or CENELEC CLC/TR 50404 (Electrostatics - Code of practice for the avoidance of hazards due to static electricity).

Static Accumulator: This material is a static accumulator.

STORAGE

The container choice, for example storage vessel, may effect static accumulation and dissipation. Do not store in open or unlabelled containers.

SECTION 8 EXPOSURE CONTROLS / PERSONAL PROTECTION

EXPOSURE LIMIT VALUES

Exposure limits/standards (Note: Exposure limits are not additive)

Source	Form	Limit / Standard			NOTE	Source
ASPHALT (PETROLEUM) [benzene solubles]	Inhalable fraction.	TWA	0.5 mg/m3		N/A	ACGIH
HYDROTREATED LIGHT DISTILLATE [total hydrocarbon vapor]	Non-Aerosol	TWA	200 mg/m3		Skin	ACGIH
STRAIGHT-RUN MIDDLE DISTILLATES	Stable Aerosol.	TWA	5 mg/m3		N/A	ExxonMobil
STRAIGHT-RUN MIDDLE DISTILLATES	Vapor.	TWA	200 mg/m3		N/A	ExxonMobil
Hydrogen sulfide		Ceiling	20 ppm		N/A	OSHA Z2
Hydrogen sulfide		Maximum concentration	50 ppm		N/A	OSHA Z2
Hydrogen sulfide		STEL	14 mg/m3	10 ppm	N/A	ExxonMobil
Hydrogen sulfide		TWA	7 mg/m3	5 ppm	N/A	ExxonMobil
Hydrogen sulfide		STEL	5 ppm		N/A	ACGIH
Hydrogen sulfide		TWA	1 ppm		N/A	ACGIH

Exposure limits/standards for materials that can be formed when handling this product: When mists/aerosols can occur the following are recommended: 5 mg/m³ - ACGIH TLV (inhalable fraction), 5 mg/m³ - OSHA PEL.

NOTE: Limits/standards shown for guidance only. Follow applicable regulations.

ENGINEERING CONTROLS

The level of protection and types of controls necessary will vary depending upon potential exposure conditions. Control measures to consider:

No special requirements under ordinary conditions of use and with adequate ventilation.

PERSONAL PROTECTION

Personal protective equipment selections vary based on potential exposure conditions such as applications, handling practices, concentration and ventilation. Information on the selection of protective equipment for use with this material, as provided below, is based upon intended, normal usage.

Respiratory Protection: If engineering controls do not maintain airborne contaminant concentrations at a

level which is adequate to protect worker health, an approved respirator may be appropriate. Respirator selection, use, and maintenance must be in accordance with regulatory requirements, if applicable. Types of respirators to be considered for this material include:

No special requirements under ordinary conditions of use and with adequate ventilation.

For high airborne concentrations, use an approved supplied-air respirator, operated in positive pressure mode. Supplied air respirators with an escape bottle may be appropriate when oxygen levels are inadequate, gas/vapor warning properties are poor, or if air purifying filter capacity/rating may be exceeded.

Hand Protection: Any specific glove information provided is based on published literature and glove manufacturer data. Glove suitability and breakthrough time will differ depending on the specific use conditions. Contact the glove manufacturer for specific advice on glove selection and breakthrough times for your use conditions. Inspect and replace worn or damaged gloves. The types of gloves to be considered for this material include:

Chemical resistant gloves are recommended.

Eye Protection: Chemical goggles and face shield are recommended.

Skin and Body Protection: Any specific clothing information provided is based on published literature or manufacturer data. The types of clothing to be considered for this material include:

Chemical/oil resistant clothing is recommended.

Specific Hygiene Measures: Always observe good personal hygiene measures, such as washing after handling the material and before eating, drinking, and/or smoking. Routinely wash work clothing and protective equipment to remove contaminants. Discard contaminated clothing and footwear that cannot be cleaned. Practice good housekeeping.

ENVIRONMENTAL CONTROLS

Comply with applicable environmental regulations limiting discharge to air, water and soil. Protect the environment by applying appropriate control measures to prevent or limit emissions.

SECTION 9 PHYSICAL AND CHEMICAL PROPERTIES

Note: Physical and chemical properties are provided for safety, health and environmental considerations only and may not fully represent product specifications. Contact the Supplier for additional information.

GENERAL INFORMATION

Physical State: Liquid
Form: Semi-fluid
Color: Black
Odor: Characteristic
Odor Threshold: N/D

IMPORTANT HEALTH, SAFETY, AND ENVIRONMENTAL INFORMATION

Relative Density (at 15 °C): 0.96 [ASTM D1298]
Flash Point [Method]: >97°C (207°F) [ASTM D-92]
Flammable Limits (Approximate volume % in air): LEL: N/D UEL: N/D
Autoignition Temperature: N/D
Boiling Point / Range: > 174°C (345°F) [Estimated]
Vapor Density (Air = 1): > 2 at 101 kPa [Estimated]

Vapor Pressure: [N/D at 20 °C]
Evaporation Rate (n-butyl acetate = 1): N/D
pH: N/A
Log Pow (n-Octanol/Water Partition Coefficient): > 3.5 [Estimated]
Solubility in Water: Negligible
Viscosity: 1200 cSt (1200 mm2/sec) at 40 °C
Oxidizing Properties: See Hazards Identification Section.

OTHER INFORMATION
Freezing Point: N/D
Melting Point: N/A
Decomposition Temperature: N/D

SECTION 10 STABILITY AND REACTIVITY

STABILITY: Material is stable under normal conditions.

CONDITIONS TO AVOID: Excessive heat. High energy sources of ignition.

MATERIALS TO AVOID: Strong oxidizers

HAZARDOUS DECOMPOSITION PRODUCTS: Material does not decompose at ambient temperatures.

HAZARDOUS POLYMERIZATION: Will not occur.

SECTION 11 TOXICOLOGICAL INFORMATION

ACUTE TOXICITY

Route of Exposure	Conclusion / Remarks
Inhalation	
Toxicity: No end point data for material.	Minimally Toxic. Based on assessment of the components.
Irritation: No end point data for material.	Negligible hazard at ambient/normal handling temperatures. Based on assessment of the components.
Ingestion	
Toxicity: No end point data for material.	Minimally Toxic. Based on assessment of the components.
Skin	
Toxicity: No end point data for material.	Minimally Toxic. Based on assessment of the components.
Irritation: No end point data for material.	Irritating to the skin. Based on assessment of the components.
Eye	
Irritation: No end point data for material.	Irritating and will injure eye tissue. Based on assessment of the components.

CHRONIC/OTHER EFFECTS
For the product itself:
Repeated and/or prolonged exposure may cause irritation to the skin, eyes, or respiratory tract.
Contains:
Asphalt (bitumen): May contain low levels of polycyclic aromatic compounds (PACs), some of which are suspected of causing cancer under conditions of poor industrial hygiene and prolonged repeated contact.

These PACs may also be inhaled. Inhalation studies at high concentrations of fumes resulted in bronchitis, pneumonitis, fibrosis and cell damage. Avoid contact with the asphalt emissions.

The following ingredients are cited on the lists below: None.

--REGULATORY LISTS SEARCHED--

1 = NTP CARC	3 = IARC 1	5 = IARC 2B
2 = NTP SUS	4 = IARC 2A	6 = OSHA CARC

SECTION 12 ECOLOGICAL INFORMATION

The information given is based on data available for the material, the components of the material, and similar materials.

ECOTOXICITY

Material -- Expected to be harmful to aquatic organisms. May cause long-term adverse effects in the aquatic environment.

MOBILITY

More volatile component -- Highly volatile, will partition rapidly to air. Not expected to partition to sediment and wastewater solids.

High molecular wt. component -- Low solubility and floats and is expected to migrate from water to the land. Expected to partition to sediment and wastewater solids.

PERSISTENCE AND DEGRADABILITY

Biodegradation:

Low molecular wt. component -- Expected to be inherently biodegradable

High molecular wt. component -- Expected to be persistent.

Atmospheric Oxidation:

More volatile component -- Expected to degrade rapidly in air

BIOACCUMULATION POTENTIAL

Majority of components -- Has the potential to bioaccumulate, however metabolism or physical properties may reduce the bioconcentration or limit bioavailability.

SECTION 13 DISPOSAL CONSIDERATIONS

Disposal recommendations based on material as supplied. Disposal must be in accordance with current applicable laws and regulations, and material characteristics at time of disposal.

DISPOSAL RECOMMENDATIONS

Product is suitable for burning in an enclosed controlled burner for fuel value or disposal by supervised incineration at very high temperatures to prevent formation of undesirable combustion products. Protect the environment. Dispose of used oil at designated sites. Minimize skin contact. Do not mix used oils with solvents, brake fluids or coolants.

REGULATORY DISPOSAL INFORMATION

RCRA Information: The unused product, in our opinion, is not specifically listed by the EPA as a hazardous waste (40 CFR, Part 261D), nor is it formulated to contain materials which are listed as hazardous wastes. It does not exhibit the hazardous characteristics of ignitability, corrositivity or reactivity and is not formulated with contaminants as determined by the Toxicity Characteristic Leaching Procedure (TCLP). However, used product may be regulated.

Empty Container Warning Empty Container Warning (where applicable): Empty containers may contain residue and can be dangerous. Do not attempt to refill or clean containers without proper instructions. Empty drums should be completely drained and safely stored until appropriately reconditioned or disposed. Empty containers should be taken for recycling, recovery, or disposal through suitably qualified or licensed contractor and in accordance with governmental regulations. DO NOT PRESSURISE, CUT, WELD, BRAZE, SOLDER, DRILL, GRIND, OR EXPOSE SUCH CONTAINERS TO HEAT, FLAME, SPARKS, STATIC ELECTRICITY, OR OTHER SOURCES OF IGNITION. THEY MAY EXPLODE AND CAUSE INJURY OR DEATH.

SECTION 14	TRANSPORT INFORMATION

LAND (DOT): Not Regulated for Land Transport

LAND (TDG): Not Regulated for Land Transport

SEA (IMDG): Not Regulated for Sea Transport according to IMDG-Code

AIR (IATA): Not Regulated for Air Transport

SECTION 15	REGULATORY INFORMATION

OSHA HAZARD COMMUNICATION STANDARD: When used for its intended purpose, this material is classified as hazardous in accordance with OSHA 29CFR 1910.1200.

Complies with the following national/regional chemical inventory requirements:: AICS, DSL, ENCS, IECSC, KECI, PICCS, TSCA

EPCRA SECTION 302: This material contains no extremely hazardous substances.

SARA (311/312) REPORTABLE HAZARD CATEGORIES: Immediate Health.

SARA (313) TOXIC RELEASE INVENTORY:

Chemical Name	CAS Number	Typical Value

NAPHTHENIC ACIDS, ZINC SALTS	12001-85-3	3 - 6%

The following ingredients are cited on the lists below:

Chemical Name	CAS Number	List Citations
ASPHALT (PETROLEUM)	8052-42-4	1, 13, 16, 17, 18, 19
HYDROTREATED LIGHT DISTILLATE	64742-47-8	1, 17, 18, 19
NAPHTHENIC ACIDS, ZINC SALTS	12001-85-3	13, 15, 17

--REGULATORY LISTS SEARCHED--

1 = ACGIH ALL	6 = TSCA 5a2	11 = CA P65 REPRO	16 = MN RTK
2 = ACGIH A1	7 = TSCA 5e	12 = CA RTK	17 = NJ RTK
3 = ACGIH A2	8 = TSCA 6	13 = IL RTK	18 = PA RTK
4 = OSHA Z	9 = TSCA 12b	14 = LA RTK	19 = RI RTK
5 = TSCA 4	10 = CA P65 CARC	15 = MI 293	

Code key: CARC=Carcinogen; REPRO=Reproductive

SECTION 16 OTHER INFORMATION

N/D = Not determined, N/A = Not applicable

THIS SAFETY DATA SHEET CONTAINS THE FOLLOWING REVISIONS:

Revision Changes:
Section 04: First Aid Skin was modified.
Section 04: First Aid Eye was modified.
Section 06: Notification Procedures - Header was modified.
Section 11: Eye Irritation Conclusion was modified.
Section 11: Skin Irritation Conclusion was modified.
Section 13: Disposal Considerations - Disposal Recommendations was modified.
Section 10 Stability and Reactivity - Header was modified.
Section 13: Disposal Recommendations - Note was modified.
Section 13: Empty Container Warning was modified.
Section 09: Phys/Chem Properties Note was modified.
Section 09: Boiling Point C(F) was modified.
Section 09: Flash Point C(F) was modified.
Section 09: n-Octanol/Water Partition Coefficient was modified.
Section 08: Comply with applicable regulations phrase was modified.
Section 08: Personal Protection was modified.
Section 08: Hand Protection was modified.
Section 09: Vapor Pressure was modified.
Section 07: Handling and Storage - Handling was modified.
Section 07: Handling and Storage - Storage Phrases was modified.
Hazard Identification: Health Hazards was modified.
Section 11: Dermal Lethality Test Data was modified.
Section 11: Dermal Lethality Test Comment was modified.
Section 11: Oral Lethality Test Data was modified.

ExxonMobil

Product Name: MOBILTAC 325 NC
Revision Date: 27 Feb 2013
Page 10 of 12

Section 11: Inhalation Lethality Test Data was modified.
Section 11: Dermal Irritation Test Data was modified.
Section 11: Eye Irritation Test Data was modified.
Section 11: Oral Lethality Test Comment was modified.
Section 11: Inhalation Irritation Test Data was modified.
Section 05: Hazardous Combustion Products was modified.
Section 06: Accidental Release - Spill Management - Water was modified.
Section 09: Relative Density - Header was modified.
Section 09: Flash Point C(F) was modified.
Section 09: Viscosity was modified.
Section 08: Hand Protection was modified.
Section 08: Eye Protection was modified.
Section 08: Skin and Body Protection was modified.
Section 14: Sea (IMDG) - Header was modified.
Section 14: Air (IATA) - Header was modified.
Section 14: LAND (TDG) - Header was modified.
Section 14: LAND (DOT) - Header was modified.
Composition: Component table was modified.
Section 15: List Citations Table was modified.
Section 15: List Citation Table - Header was modified.
Section 14: LAND (DOT) - Default was modified.
Section 14: LAND (TDG) Default was modified.
Section 14: Sea (IMDG) - Default was modified.
Section 14: Air (IATA) - Default was modified.
Section 15: SARA (311/312) REPORTABLE HAZARD CATEGORIES was modified.
Section 15: National Chemical Inventory Listing - Header was modified.
Section 15: SARA (313) TOXIC RELEASE INVENTORY - Table was modified.
Section 15: National Chemical Inventory Listing was modified.
Section 16: Code to MHCs was modified.
Section 09: Relative Density was modified.
Section 15: Community RTK - Header was modified.
Section 11: Additional Health Information was modified.
Section 16: Code to PPEs was modified.
Section 08: Exposure limits/standards was modified.
Section 15: OSHA Hazard Communication Standard was modified.
Section 06: Notification Procedures was modified.
Section 08: Exposure Limits Table was modified.
Section 11: Chronic Tox - Component was modified.
Section 09: Oxidizing Properties was modified.
Section 08: OEL Table - Notation Column - Header was modified.
Section 08: Exposure Limit Values - Header was modified.
Section 01: Company Contact Methods Sorted by Priority was modified.
Section 05: Fire Fighting Measures - Unusual Fire Hazards was added.
Section 05: Fire Fighting Measures - Unusual Fire Hazards - Header was added.
Section 06: Protective Measures was added.
Section 06: Accidental Release - Protective Measures - Header was added.
Section 09: Form - Header was added.
Section 09: Physical State was added.
Hazard Identification: Health Hazards was added.
Hazard Identification: Emergency Overview Target Organs was added.
Hazard Identification: Emergency Overview Target Organ - Header was added.
Section 16: Precautionary Label Text - Header was added.

ExxonMobil

Product Name: MOBILTAC 325 NC
Revision Date: 27 Feb 2013
Page 11 of 12

Section 16: Signal Word was added.
Section 16: Health Hazards was added.
Section 16: Health Hazards - Header was added.
Section 16: Precautions was added.
Section 16: Precautions - Header was added.
Section 16: First Aid - Header was added.
Section 16: First Aid Eye - Header was added.
Section 16: First Aid Eye was added.
Section 16: First Aid Skin was added.
Section 16: First Aid Skin - Header was added.
Section 16: Fire Fighting Media - Header was added.
Section 16: Fire Fighting Media - Header was added.
Section 16: Spill - Header was added.
Section 16: Water Spill - Header was added.
Section 16: Water Spill was added.
Section 16: Land Spill was added.
Section 16: Land Spill - Header was added.
Section 16: Labeling Use was added.
Section 16: Labeling Use - Header was added.
Section 16: Target Organs was added.
Section 16: Target Organ - Header was added.
Section 16: NA Contains was added.
Section 16: NA Contains - Header was added.
Section 09: Decomposition Temperature was added.
Section 09: Decomposition Temp - Header was added.
Hazard Identification: OSHA - Hazards Statement was added.
Hazard Identification: OSHA - May be Hazardous Statement was deleted.
Hazard Identification: OSHA - Not Hazardous Statement was deleted.
Section 15: TSCA Class 2 Statement was deleted.

PRECAUTIONARY LABEL TEXT:
Contains: HYDROTREATED LIGHT DISTILLATE; STRAIGHT-RUN MIDDLE DISTILLATES
WARNING!
HEALTH HAZARDS
Irritating to eyes. Irritating to skin.
Target Organs: Skin | Eye |

PRECAUTIONS
Avoid contact with skin. Avoid contact with eyes.

FIRST AID
Eye: Flush thoroughly with water for at least 15 minutes. Get medical assistance.

Skin: Wash contact areas with soap and water. Remove contaminated clothing. Launder contaminated clothing before reuse. If product is injected into or under the skin, or into any part of the body, regardless of the appearance of the wound or its size, the individual should be evaluated immediately by a physician as a surgical emergency. Even though initial symptoms from high pressure injection may be minimal or absent, early surgical treatment within the first few hours may significantly reduce the ultimate extent of injury.

FIRE FIGHTING MEDIA
Use water fog, foam, dry chemical or carbon dioxide (CO2) to extinguish flames.

ExxonMobil

Product Name: MOBILTAC 325 NC
Revision Date: 27 Feb 2013
Page 12 of 12

SPILL/LEAK
Land Spill: Stop leak if you can do it without risk. Small Spills: Absorb with earth, sand or other non-combustible material and transfer to containers for later disposal. Recover by pumping or with suitable absorbent.

Water Spill: Stop leak if you can do it without risk. Confine the spill immediately with booms. Warn other shipping. Remove from the surface by skimming or with suitable absorbents. Report spills as required to appropriate authorities. Seek the advice of a specialist before using dispersants.
Use
Not intended or suitable for use in or around a household or dwelling.

The information and recommendations contained herein are, to the best of ExxonMobil's knowledge and belief, accurate and reliable as of the date issued. You can contact ExxonMobil to insure that this document is the most current available from ExxonMobil. The information and recommendations are offered for the user's consideration and examination. It is the user's responsibility to satisfy itself that the product is suitable for the intended use. If buyer repackages this product, it is the user's responsibility to insure proper health, safety and other necessary information is included with and/or on the container. Appropriate warnings and safe-handling procedures should be provided to handlers and users. Alteration of this document is strictly prohibited. Except to the extent required by law, re-publication or retransmission of this document, in whole or in part, is not permitted. The term, "ExxonMobil" is used for convenience, and may include any one or more of ExxonMobil Chemical Company, Exxon Mobil Corporation, or any affiliates in which they directly or indirectly hold any interest.

Internal Use Only
MHC: 0, 0, 0, 2, 4, 0 PPEC: D

DGN: 2009222XUS (1012316)

Copyright 2002 Exxon Mobil Corporation, All rights reserved

11.5.3 MOBIL MOBILGEAR 600 XP 220

Mobil

Mobilgear 600 XP Series

Gear Oil

Product Description

The Mobilgear 600 XP Series are extra high performance gear oils having outstanding extreme pressure characteristics and load-carrying properties, intended for use in all types of enclosed gear drives with circulation or splash lubrication systems. Mobilgear 600 XP Series is designed to stay ahead of the changing needs of gearbox technology. Gearbox technology design trends are towards smaller units with similar power throughput. This increase in power density places increased demands on gear oils. Mobilgear 600 XP Series oils are formulated to meet the stress by providing extra protection for gears, bearings and seals.

Mobilgear 600 XP Series is formulated to protect gear teeth from wear at its earliest stages. Microscopic wear, called micropitting, can lead to significant gear tooth damage. Mobilgear 600 XP Series exceeds the industry requirement for bearing wear protection. In fact, Mobilgear 600 XP Series provides up to 15 times the wear protection as measured by the industry standard FAG FE 8 test. Mobilgear 600 XP Series' balanced formulation is able to provide maximum wear and corrosion protection while maintaining compatibility with common gearbox seal materials. Mobilgear 600 XP helps to maintain gearbox seal integrity thereby preventing oil leaks and keeping contamination out. By protecting the gears, bearings and seals, Mobilgear 600 XP can improve equipment reliability and increase productivity.

Mobilgear 600 XP Series oils are recommended for industrial spur, helical and bevel enclosed gears with circulation or splash lubrication, operating at bulk oil temperatures up to 100°C. They are particularly suitable for gear sets working under heavy or shock loads. Mobilgear 600 XP oils also find broad application in marine gearing applications. They may also be used in non-gear applications include highly loaded and slow speed plain and rolling contact bearings.

Features and Benefits

Mobilgear 600 XP Series products are a leading member of the Mobil brand of industrial lubricants that enjoy a reputation for innovation and high performance capability. These mineral-based products are designed to provide high quality industrial gear oils, meeting the latest industry standards and with high versatility to lubricate a broad range of industrial and marine equipment.

Mobilgear 600 XP Series products offer the following features and potential benefits:

Features	Advantages and Potential Benefits
Enhanced gear wear protection from micropitting	Less gear and bearing wear resulting in less unexpected downtime
Reduced debris denting from generated wear particles	Up to 22% improvement in bearing life reducing bearing replacement costs and improving productivity
Improved bearing wear protection	Improved bearing life resulting in higher productivity
Outstanding compatibility with a range of seal materials	Reduced leakage, oil consumption and contamination ingress helping to reduce maintenance, extend gearbox reliability and higher productivity
Excellent resistance to oil oxidation and thermal degradation	Helps extend lubricant life with lower lubricant and lubrication costs and reduced scheduled downtime.
High resistance to sludge and deposit formation	Cleaner systems and reduced maintenance
Wide range of applications	Fewer grades of lubricant required because of wide range of application, leading to lower purchase and

Features	Advantages and Potential Benefits
	storage costs and less danger of using wrong lubricant
Optimised resistance to rust and corrosion of steel and corrosion of copper and soft metal alloys	Excellent protection of machine parts, with reduced maintenance and repair costs
Resistance to foaming and emulsion formation	Effective lubrication and problem free operation in the presence of water contamination or in equipment prone to oil foaming

Applications

Mobilgear 600 XP lubricants are used in a wide range of industrial and marine applications, especially spur, helical, bevel and worm gearing. Specific applications include:

- Industrial gearing for conveyers, agitators, dryers, extruders, fans, mixers, presses, pulpers, pumps (including oil well pumps), screens, extruders and other heavy duty applications
- Marine gearing including main propulsion, centrifuges, deck machinery such as winches, windlasses, cranes, turning gears, pumps, elevators and rudder carriers
- Non-gear applications include shaft couplings, screws and heavily loaded plain and rolling contact bearings operating at slow speeds.
- Mobilgear 600 XP 100, 150, 220, 320, 460, and 680 are approved by Siemens for use in Flender gearboxes

Specifications and Approvals

Mobilgear 600 XP meets or exceeds the requirements of:	Mobilgear 600 XP 68	Mobilgear 600 XP 100	Mobilgear 600 XP 150	Mobilgear 600 XP 220	Mobilgear 600 XP 320	Mobilgear 600 XP 460	Mobilgear 600 XP 680
AGMA 9005-E02	2 EP	3 EP	4 EP	5 EP	6 EP	7 EP	-
DIN 51517-3: 2009-06	X	X	X	X	X	X	X
ISO 12925-1 Typ	CKD 68	CKD 100	CKD 150	CKD 220	CKD 320	CKC 460	CKC 680

Mobilgear 600 XP has the following builder approvals:	Mobilgear 600 XP 68	Mobilgear 600 XP 100	Mobilgear 600 XP 150	Mobilgear 600 XP 220	Mobilgear 600 XP 320	Mobilgear 600 XP 460	Mobilgear 600 XP 680
Siemens T 7300, Table A-1, Revision 13, FLENDER Code No.:	-	A17	A16	A15	A14	A13	A12
Mueller Weingarten DT 55 005		CLP 100	CLP 150	CLP 220	CLP 320	CLP 460	

Typical Properties

Mobilgear 600 XP	68	100	150	220	320	460	680
ISO Viscosity Grade	68	100	150	220	320	460	680
Viscosity, ASTM D 445							
mm^2/s @ 40°C	68	100	150	220	320	460	680
mm^2/s @ 100°C	8.8	11.2	14.7	19.0	24.1	30.6	39.2
Viscosity Index, ASTM D 2270	101	97	97	97	97	96	90
Pour Point, °C, ASTM D 97	-27	-24	-24	-24	-24	-15	-9
Flash Point, °C, ASTM D 92	230	230	230	240	240	240	285
Density @15.6 °C, ASTM D 4052, kg/l	0.88	0.88	0.89	0.89	0.90	0.90	0.91

Mobilgear 600 XP	68	100	150	220	320	460	680
FZG Micropitting, FVA 54, Fail Stage / Rating		10 / High	10 / High	10 / High	10 / High	10 / High	10 / High
FE 8 wear test, DIN 51819-3, D7,5/80-80. Roller wear, mg	2	2	2	2	2	2	2
Timken OK Load, ASTM D 2782, lb	65	65	65	65	65	65	65
4-Ball EP test, ASTM D 2783,							
Weld Load, kg	200	200	250	250	250	250	250
Load Wear Index, kgf	47	47	47	48	48	48	48
FZG Scuffing, Fail Stage							
A/8.3/90	12+	12+	12+	12+	12+	12+	12+
A/16.6/90		12+	12+	12+	12+	12+	12+
Rust protection, ASTM D 665, Sea Water	Pass	Pass	Pass	Pass	Pass	Pass	Pass
Copper Strip Corrosion, ASTM D 130, 3 hrs @ 100°C	1B	1B	1B	1B	1B	1B	1B
Demulsibility, ASTM D 1401, Time to 3ml emulsion, minutes @ 82°C	30	30	30	30	30	30	30
Foam Test, ASTM D 892, Tendency/Stability, ml/ml Sequence 1	0/0	0/0	0/0	0/0	0/0	0/0	0/0
Sequence 2	30/0	30/0	30/0	30/0	30/0	30/0	30/0

Health and Safety

Based on available information, this product is not expected to produce adverse effects on health when used for the intended application, following the recommendations provided in the Material Safety Data Sheet (MSDS). MSDSs are available upon request through your sales contract office, or via the Internet on http://www.exxonmobil.com. This product should not be used for purposes other than its intended use. If disposing of used product, take care to protect the environment.

All trademarks used herein are trademarks or registered trademarks of Exxon Mobil Corporation or one of its subsidiaries unless indicated otherwise.

7-2011

Exxon Mobil Corporation
3225 Gallows Road
Fairfax, VA 22037

1-800-ASK MOBIL (275-6624)

Typical Properties are typical of those obtained with normal production tolerance and do not constitute a specification. Variations that do not affect product performance are to be expected during normal manufacture and at different blending locations. The information contained herein is subject to change without notice. All products may not be available locally. For more information, contact your local ExxonMobil contact or visit www.exxonmobil.com
ExxonMobil is comprised of numerous affiliates and subsidiaries, many with names that include Esso, Mobil, or ExxonMobil. Nothing in this document is intended to override or supersede the corporate separateness of local entities. Responsibility for local action and accountability remains with the local ExxonMobil-affiliate entities.

© 2001-2011 Exxon Mobil Corporation. All rights reserved..

ExxonMobil

Product Name: MOBILGEAR 600 XP 100
Revision Date: 17 Aug 2010
Page 1 of 9

MATERIAL SAFETY DATA SHEET

SECTION 1 PRODUCT AND COMPANY IDENTIFICATION

PRODUCT

Product Name: **MOBILGEAR 600 XP 100**
Product Description: Base Oil and Additives
Product Code: 201560401210, 613612-00, 97AE97
Intended Use: Gear oil

COMPANY IDENTIFICATION

Supplier: EXXON MOBIL CORPORATION
3225 GALLOWS RD.
FAIRFAX, VA. 22037 USA

24 Hour Health Emergency	609-737-4411
Transportation Emergency Phone	800-424-9300
ExxonMobil Transportation No.	281-834-3296
Product Technical Information	800-662-4525, 800-947-9147
MSDS Internet Address	http://www.exxon.com, http://www.mobil.com

SECTION 2 COMPOSITION / INFORMATION ON INGREDIENTS

No Reportable Hazardous Substance(s) or Complex Substance(s).

SECTION 3 HAZARDS IDENTIFICATION

This material is not considered to be hazardous according to regulatory guidelines (see (M)SDS Section 15).

POTENTIAL HEALTH EFFECTS

Low order of toxicity. Excessive exposure may result in eye, skin, or respiratory irritation. High-pressure injection under skin may cause serious damage.

NFPA Hazard ID:	Health:	0	Flammability:	1	Reactivity:	0
HMIS Hazard ID:	Health:	0	Flammability:	1	Reactivity:	0

NOTE: This material should not be used for any other purpose than the intended use in Section 1 without expert advice. Health studies have shown that chemical exposure may cause potential human health risks which may vary from person to person.

SECTION 4 FIRST AID MEASURES

INHALATION

Remove from further exposure. For those providing assistance, avoid exposure to yourself or others. Use

adequate respiratory protection. If respiratory irritation, dizziness, nausea, or unconsciousness occurs, seek immediate medical assistance. If breathing has stopped, assist ventilation with a mechanical device or use mouth-to-mouth resuscitation.

SKIN CONTACT

Wash contact areas with soap and water. If product is injected into or under the skin, or into any part of the body, regardless of the appearance of the wound or its size, the individual should be evaluated immediately by a physician as a surgical emergency. Even though initial symptoms from high pressure injection may be minimal or absent, early surgical treatment within the first few hours may significantly reduce the ultimate extent of injury.

EYE CONTACT

Flush thoroughly with water. If irritation occurs, get medical assistance.

INGESTION

First aid is normally not required. Seek medical attention if discomfort occurs.

SECTION 5 FIRE FIGHTING MEASURES

EXTINGUISHING MEDIA

Appropriate Extinguishing Media: Use water fog, foam, dry chemical or carbon dioxide (CO2) to extinguish flames.

Inappropriate Extinguishing Media: Straight Streams of Water

FIRE FIGHTING

Fire Fighting Instructions: Evacuate area. Prevent runoff from fire control or dilution from entering streams, sewers, or drinking water supply. Firefighters should use standard protective equipment and in enclosed spaces, self-contained breathing apparatus (SCBA). Use water spray to cool fire exposed surfaces and to protect personnel.

Hazardous Combustion Products: Smoke, Fume, Aldehydes, Sulfur oxides, Incomplete combustion products, Oxides of carbon

FLAMMABILITY PROPERTIES

Flash Point [Method]: >200C (392F) [ASTM D-92]
Flammable Limits (Approximate volume % in air): LEL: 0.9 UEL: 7.0
Autoignition Temperature: N/D

SECTION 6 ACCIDENTAL RELEASE MEASURES

NOTIFICATION PROCEDURES

In the event of a spill or accidental release, notify relevant authorities in accordance with all applicable regulations. US regulations require reporting releases of this material to the environment which exceed the applicable reportable quantity or oil spills which could reach any waterway including intermittent dry creeks. The National Response Center can be reached at (800)424-8802.

SPILL MANAGEMENT

Land Spill: Stop leak if you can do it without risk. Recover by pumping or with suitable absorbent.

Water Spill: Stop leak if you can do it without risk. Confine the spill immediately with booms. Warn other shipping. Remove from the surface by skimming or with suitable absorbents. Seek the advice of a specialist before using dispersants.

Water spill and land spill recommendations are based on the most likely spill scenario for this material; however, geographic conditions, wind, temperature, (and in the case of a water spill) wave and current direction and speed may greatly influence the appropriate action to be taken. For this reason, local experts should be consulted. Note: Local regulations may prescribe or limit action to be taken.

ENVIRONMENTAL PRECAUTIONS

Large Spills: Dike far ahead of liquid spill for later recovery and disposal. Prevent entry into waterways, sewers, basements or confined areas.

SECTION 7 HANDLING AND STORAGE

HANDLING

Prevent small spills and leakage to avoid slip hazard. Material can accumulate static charges which may cause an electrical spark (ignition source). When the material is handled in bulk, an electrical spark could ignite any flammable vapors from liquids or residues that may be present (e.g., during switch-loading operations). Use proper bonding and/or ground procedures. However, bonding and grounds may not eliminate the hazard from static accumulation. Consult local applicable standards for guidance. Additional references include American Petroleum Institute 2003 (Protection Against Ignitions Arising out of Static, Lightning and Stray Currents) or National Fire Protection Agency 77 (Recommended Practice on Static Electricity) or CENELEC CLC/TR 50404 (Electrostatics - Code of practice for the avoidance of hazards due to static electricity).

Static Accumulator: This material is a static accumulator.

STORAGE

The container choice, for example storage vessel, may effect static accumulation and dissipation. Do not store in open or unlabelled containers. Keep away from incompatible materials.

SECTION 8 EXPOSURE CONTROLS / PERSONAL PROTECTION

Exposure limits/standards for materials that can be formed when handling this product: When mists / aerosols can occur, the following are recommended: 5 mg/m³ - ACGIH TLV, 10 mg/m³ - ACGIH STEL, 5 mg/m³ - OSHA PEL.

NOTE: Limits/standards shown for guidance only. Follow applicable regulations.

ENGINEERING CONTROLS

The level of protection and types of controls necessary will vary depending upon potential exposure conditions.

Control measures to consider:
No special requirements under ordinary conditions of use and with adequate ventilation.

PERSONAL PROTECTION

Personal protective equipment selections vary based on potential exposure conditions such as applications, handling practices, concentration and ventilation. Information on the selection of protective equipment for use with this material, as provided below, is based upon intended, normal usage.

Respiratory Protection: If engineering controls do not maintain airborne contaminant concentrations at a level which is adequate to protect worker health, an approved respirator may be appropriate. Respirator selection, use, and maintenance must be in accordance with regulatory requirements, if applicable. Types of respirators to be considered for this material include:
No special requirements under ordinary conditions of use and with adequate ventilation.

For high airborne concentrations, use an approved supplied-air respirator, operated in positive pressure mode. Supplied air respirators with an escape bottle may be appropriate when oxygen levels are inadequate, gas/vapor warning properties are poor, or if air purifying filter capacity/rating may be exceeded.

Hand Protection: Any specific glove information provided is based on published literature and glove manufacturer data. Glove suitability and breakthrough time will differ depending on the specific use conditions. Contact the glove manufacturer for specific advice on glove selection and breakthrough times for your use conditions. Inspect and replace worn or damaged gloves. The types of gloves to be considered for this material include:
No protection is ordinarily required under normal conditions of use.

Eye Protection: If contact is likely, safety glasses with side shields are recommended.

Skin and Body Protection: Any specific clothing information provided is based on published literature or manufacturer data. The types of clothing to be considered for this material include:
No skin protection is ordinarily required under normal conditions of use. In accordance with good industrial hygiene practices, precautions should be taken to avoid skin contact.

Specific Hygiene Measures: Always observe good personal hygiene measures, such as washing after handling the material and before eating, drinking, and/or smoking. Routinely wash work clothing and protective equipment to remove contaminants. Discard contaminated clothing and footwear that cannot be cleaned. Practice good housekeeping.

ENVIRONMENTAL CONTROLS
See Sections 6, 7, 12, 13.

SECTION 9 PHYSICAL AND CHEMICAL PROPERTIES

Typical physical and chemical properties are given below. Consult the Supplier in Section 1 for additional data.

GENERAL INFORMATION
Physical State: Liquid
Color: Brown
Odor: Characteristic
Odor Threshold: N/D

IMPORTANT HEALTH, SAFETY, AND ENVIRONMENTAL INFORMATION

Relative Density (at 15 C): 0.884
Flash Point [Method]: >200C (392F) [ASTM D-92]
Flammable Limits (Approximate volume % in air): LEL: 0.9 UEL: 7.0
Autoignition Temperature: N/D
Boiling Point / Range: > 316C (600F)
Vapor Density (Air = 1): > 2 at 101 kPa
Vapor Pressure: < 0.013 kPa (0.1 mm Hg) at 20 C
Evaporation Rate (n-butyl acetate = 1): N/D
pH: N/A
Log Pow (n-Octanol/Water Partition Coefficient): N/D
Solubility in Water: Negligible
Viscosity: 100 cSt (100 mm2/sec) at 40 C | 11.2 cSt (11.2 mm2/sec) at 100C
Oxidizing Properties: See Hazards Identification Section.

OTHER INFORMATION

Freezing Point: N/D
Melting Point: N/A
Pour Point: -12°C (10°F)
DMSO Extract (mineral oil only), IP-346: < 3 %wt

SECTION 10 STABILITY AND REACTIVITY

STABILITY: Material is stable under normal conditions.

CONDITIONS TO AVOID: Excessive heat. High energy sources of ignition.

MATERIALS TO AVOID: Strong oxidizers

HAZARDOUS DECOMPOSITION PRODUCTS: Material does not decompose at ambient temperatures.

HAZARDOUS POLYMERIZATION: Will not occur.

SECTION 11 TOXICOLOGICAL INFORMATION

ACUTE TOXICITY

Route of Exposure	Conclusion / Remarks
Inhalation	
Toxicity (Rat): LC50 > 5000 mg/m3	Minimally Toxic. Based on test data for structurally similar materials.
Irritation: No end point data.	Negligible hazard at ambient/normal handling temperatures. Based on assessment of the components.
Ingestion	
Toxicity (Rat): LD50 > 5000 mg/kg	Minimally Toxic. Based on test data for structurally similar materials.
Skin	
Toxicity (Rabbit): LD50 > 5000 mg/kg	Minimally Toxic. Based on test data for structurally similar materials.
Irritation (Rabbit): Data available.	Negligible irritation to skin at ambient temperatures. Based on test data for structurally similar materials.

Eye	
Irritation (Rabbit): Data available.	May cause mild, short-lasting discomfort to eyes. Based on test data for structurally similar materials.

CHRONIC/OTHER EFFECTS

For the product itself:

Repeated and/or prolonged exposure may cause irritation to the skin, eyes, or respiratory tract.

Contains:

Base oil severely refined: Not carcinogenic in animal studies. Representative material passes IP-346, Modified Ames test, and/or other screening tests. Dermal and inhalation studies showed minimal effects; lung non-specific infiltration of immune cells, oil deposition and minimal granuloma formation. Not sensitizing in test animals.

Additional information is available by request.

The following ingredients are cited on the lists below: None.

--REGULATORY LISTS SEARCHED--

1 = NTP CARC	3 = IARC 1	5 = IARC 2B
2 = NTP SUS	4 = IARC 2A	6 = OSHA CARC

SECTION 12 ECOLOGICAL INFORMATION

The information given is based on data available for the material, the components of the material, and similar materials.

ECOTOXICITY

Material -- Not expected to be harmful to aquatic organisms.

MOBILITY

Base oil component -- Low solubility and floats and is expected to migrate from water to the land. Expected to partition to sediment and wastewater solids.

PERSISTENCE AND DEGRADABILITY

Biodegradation:

Base oil component -- Expected to be inherently biodegradable

BIOACCUMULATION POTENTIAL

Base oil component -- Has the potential to bioaccumulate, however metabolism or physical properties may reduce the bioconcentration or limit bioavailability.

SECTION 13 DISPOSAL CONSIDERATIONS

Disposal recommendations based on material as supplied. Disposal must be in accordance with current applicable laws and regulations, and material characteristics at time of disposal.

DISPOSAL RECOMMENDATIONS

Product is suitable for burning in an enclosed controlled burner for fuel value or disposal by supervised incineration at very high temperatures to prevent formation of undesirable combustion products.

REGULATORY DISPOSAL INFORMATION

RCRA Information: The unused product, in our opinion, is not specifically listed by the EPA as a hazardous waste (40 CFR, Part 261D), nor is it formulated to contain materials which are listed as hazardous wastes. It does not exhibit the hazardous characteristics of ignitability, corrositivity or reactivity and is not formulated with contaminants as determined by the Toxicity Characteristic Leaching Procedure (TCLP). However, used product may be regulated.

Empty Container Warning Empty Container Warning (where applicable): Empty containers may contain residue and can be dangerous. Do not attempt to refill or clean containers without proper instructions. Empty drums should be completely drained and safely stored until appropriately reconditioned or disposed. Empty containers should be taken for recycling, recovery, or disposal through suitably qualified or licensed contractor and in accordance with governmental regulations. DO NOT PRESSURISE, CUT, WELD, BRAZE, SOLDER, DRILL, GRIND, OR EXPOSE SUCH CONTAINERS TO HEAT, FLAME, SPARKS, STATIC ELECTRICITY, OR OTHER SOURCES OF IGNITION. THEY MAY EXPLODE AND CAUSE INJURY OR DEATH.

SECTION 14 TRANSPORT INFORMATION

LAND (DOT): Not Regulated for Land Transport

LAND (TDG): Not Regulated for Land Transport

SEA (IMDG): Not Regulated for Sea Transport according to IMDG-Code

AIR (IATA): Not Regulated for Air Transport

SECTION 15 REGULATORY INFORMATION

OSHA HAZARD COMMUNICATION STANDARD: When used for its intended purposes, this material is not classified as hazardous in accordance with OSHA 29 CFR 1910.1200.

NATIONAL CHEMICAL INVENTORY LISTING: AICS, EINECS, KECI, PICCS, TSCA
Special Cases:

Inventory	Status
NDSL	Restrictions Apply

EPCRA: This material contains no extremely hazardous substances.

SARA (311/312) REPORTABLE HAZARD CATEGORIES: None.

SARA (313) TOXIC RELEASE INVENTORY: This material contains no chemicals subject to the supplier notification requirements of the SARA 313 Toxic Release Program.

ExxonMobil

Product Name: MOBILGEAR 600 XP 100
Revision Date: 17 Aug 2010
Page 8 of 9

The following ingredients are cited on the lists below: None.

--REGULATORY LISTS SEARCHED--

1 = ACGIH ALL	6 = TSCA 5a2	11 = CA P65 REPRO	16 = MN RTK
2 = ACGIH A1	7 = TSCA 5e	12 = CA RTK	17 = NJ RTK
3 = ACGIH A2	8 = TSCA 6	13 = IL RTK	18 = PA RTK
4 = OSHA Z	9 = TSCA 12b	14 = LA RTK	19 = RI RTK
5 = TSCA 4	10 = CA P65 CARC	15 = MI 293	

Code key: CARC=Carcinogen; REPRO=Reproductive

SECTION 16 OTHER INFORMATION

N/D = Not determined, N/A = Not applicable

THIS SAFETY DATA SHEET CONTAINS THE FOLLOWING REVISIONS:

Revision Changes:
Section 06: Notification Procedures - Header was modified.
Section 10 Stability and Reactivity - Header was modified.
Section 13: Disposal Recommendations - Note was modified.
Section 08: Personal Protection was modified.
Section 08: Hand Protection was modified.
Section 07: Handling and Storage - Handling was modified.
Section 07: Handling and Storage - Storage Phrases was modified.
Section 11: Dermal Lethality Test Data was modified.
Section 11: Oral Lethality Test Data was modified.
Section 11: Inhalation Irritation Test Data was modified.
Section 05: Hazardous Combustion Products was modified.
Section 06: Accidental Release - Spill Management - Water was modified.
Section 09: Relative Density - Header was modified.
Section 09: Viscosity was modified.
Section 14: Sea (IMDG) - Header was modified.
Section 14: Air (IATA) - Header was modified.
Section 14: LAND (TDG) - Header was modified.
Section 14: LAND (DOT) - Header was modified.
Section 15: List Citation Table - Header was modified.
Section 14: LAND (DOT) - Default was modified.
Section 14: LAND (TDG) Default was modified.
Section 14: Sea (IMDG) - Default was modified.
Section 14: Air (IATA) - Default was modified.
Section 16: Code to MHCs was modified.
Section 08: Exposure limits/standards was modified.
Hazard Identification: OSHA - May be Hazardous Statement was modified.
Section 06: Notification Procedures was modified.
Section 09: Oxidizing Properties was modified.
Section 01: Company Contact Methods Sorted by Priority was modified.

ExxonMobil

Product Name: MOBILGEAR 600 XP 100
Revision Date: 17 Aug 2010
Page 9 of 9

The information and recommendations contained herein are, to the best of ExxonMobil's knowledge and belief, accurate and reliable as of the date issued. You can contact ExxonMobil to insure that this document is the most current available from ExxonMobil. The information and recommendations are offered for the user's consideration and examination. It is the user's responsibility to satisfy itself that the product is suitable for the intended use. If buyer repackages this product, it is the user's responsibility to insure proper health, safety and other necessary information is included with and/or on the container. Appropriate warnings and safe-handling procedures should be provided to handlers and users. Alteration of this document is strictly prohibited. Except to the extent required by law, re-publication or retransmission of this document, in whole or in part, is not permitted. The term, "ExxonMobil" is used for convenience, and may include any one or more of ExxonMobil Chemical Company, Exxon Mobil Corporation, or any affiliates in which they directly or indirectly hold any interest.

Internal Use Only
MHC: 0B, 0B, 0, 0, 0, 0 PPEC: A

DGN: 7077870XUS (1012011)

Copyright 2002 Exxon Mobil Corporation, All rights reserved

ExxonMobil

Product Name: MOBILGEAR 600 XP 220
Revision Date: 05 Nov 2010
Page 1 of 9

MATERIAL SAFETY DATA SHEET

SECTION 1 PRODUCT AND COMPANY IDENTIFICATION

PRODUCT

Product Name: **MOBILGEAR 600 XP 220**
Product Description: Base Oil and Additives
Product Code: 201560401220, 613638-00, 97AE99
Intended Use: Gear oil

COMPANY IDENTIFICATION

Supplier: EXXON MOBIL CORPORATION
3225 GALLOWS RD.
FAIRFAX, VA. 22037 USA

24 Hour Health Emergency	609-737-4411
Transportation Emergency Phone	800-424-9300
ExxonMobil Transportation No.	281-834-3296
Product Technical Information	800-662-4525, 800-947-9147
MSDS Internet Address	http://www.exxon.com, http://www.mobil.com

SECTION 2 COMPOSITION / INFORMATION ON INGREDIENTS

No Reportable Hazardous Substance(s) or Complex Substance(s).

SECTION 3 HAZARDS IDENTIFICATION

This material is not considered to be hazardous according to regulatory guidelines (see (M)SDS Section 15).

POTENTIAL HEALTH EFFECTS

Low order of toxicity. Excessive exposure may result in eye, skin, or respiratory irritation. High-pressure injection under skin may cause serious damage.

NFPA Hazard ID:	Health:	0	Flammability:	1	Reactivity:	0
HMIS Hazard ID:	Health:	0	Flammability:	1	Reactivity:	0

NOTE: This material should not be used for any other purpose than the intended use in Section 1 without expert advice. Health studies have shown that chemical exposure may cause potential human health risks which may vary from person to person.

SECTION 4 FIRST AID MEASURES

INHALATION

Remove from further exposure. For those providing assistance, avoid exposure to yourself or others. Use

adequate respiratory protection. If respiratory irritation, dizziness, nausea, or unconsciousness occurs, seek immediate medical assistance. If breathing has stopped, assist ventilation with a mechanical device or use mouth-to-mouth resuscitation.

SKIN CONTACT

Wash contact areas with soap and water. If product is injected into or under the skin, or into any part of the body, regardless of the appearance of the wound or its size, the individual should be evaluated immediately by a physician as a surgical emergency. Even though initial symptoms from high pressure injection may be minimal or absent, early surgical treatment within the first few hours may significantly reduce the ultimate extent of injury.

EYE CONTACT

Flush thoroughly with water. If irritation occurs, get medical assistance.

INGESTION

First aid is normally not required. Seek medical attention if discomfort occurs.

SECTION 5 FIRE FIGHTING MEASURES

EXTINGUISHING MEDIA

Appropriate Extinguishing Media: Use water fog, foam, dry chemical or carbon dioxide (CO2) to extinguish flames.

Inappropriate Extinguishing Media: Straight Streams of Water

FIRE FIGHTING

Fire Fighting Instructions: Evacuate area. Prevent runoff from fire control or dilution from entering streams, sewers, or drinking water supply. Firefighters should use standard protective equipment and in enclosed spaces, self-contained breathing apparatus (SCBA). Use water spray to cool fire exposed surfaces and to protect personnel.

Hazardous Combustion Products: Smoke, Fume, Aldehydes, Sulfur oxides, Incomplete combustion products, Oxides of carbon

FLAMMABILITY PROPERTIES

Flash Point [Method]: >200C (392F) [ASTM D-92]
Flammable Limits (Approximate volume % in air): LEL: 0.9 UEL: 7.0
Autoignition Temperature: N/D

SECTION 6 ACCIDENTAL RELEASE MEASURES

NOTIFICATION PROCEDURES

In the event of a spill or accidental release, notify relevant authorities in accordance with all applicable regulations. US regulations require reporting releases of this material to the environment which exceed the applicable reportable quantity or oil spills which could reach any waterway including intermittent dry creeks. The National Response Center can be reached at (800)424-8802.

SPILL MANAGEMENT

Land Spill: Stop leak if you can do it without risk. Recover by pumping or with suitable absorbent.

Water Spill: Stop leak if you can do it without risk. Confine the spill immediately with booms. Warn other shipping. Remove from the surface by skimming or with suitable absorbents. Seek the advice of a specialist before using dispersants.

Water spill and land spill recommendations are based on the most likely spill scenario for this material; however, geographic conditions, wind, temperature, (and in the case of a water spill) wave and current direction and speed may greatly influence the appropriate action to be taken. For this reason, local experts should be consulted. Note: Local regulations may prescribe or limit action to be taken.

ENVIRONMENTAL PRECAUTIONS

Large Spills: Dike far ahead of liquid spill for later recovery and disposal. Prevent entry into waterways, sewers, basements or confined areas.

SECTION 7 HANDLING AND STORAGE

HANDLING

Prevent small spills and leakage to avoid slip hazard. Material can accumulate static charges which may cause an electrical spark (ignition source). When the material is handled in bulk, an electrical spark could ignite any flammable vapors from liquids or residues that may be present (e.g., during switch-loading operations). Use proper bonding and/or ground procedures. However, bonding and grounds may not eliminate the hazard from static accumulation. Consult local applicable standards for guidance. Additional references include American Petroleum Institute 2003 (Protection Against Ignitions Arising out of Static, Lightning and Stray Currents) or National Fire Protection Agency 77 (Recommended Practice on Static Electricity) or CENELEC CLC/TR 50404 (Electrostatics - Code of practice for the avoidance of hazards due to static electricity).

Static Accumulator: This material is a static accumulator.

STORAGE

The container choice, for example storage vessel, may effect static accumulation and dissipation. Do not store in open or unlabelled containers. Keep away from incompatible materials.

SECTION 8 EXPOSURE CONTROLS / PERSONAL PROTECTION

Exposure limits/standards for materials that can be formed when handling this product: When mists / aerosols can occur, the following are recommended: 5 mg/m³ - ACGIH TLV, 10 mg/m³ - ACGIH STEL, 5 mg/m³ - OSHA PEL.

NOTE: Limits/standards shown for guidance only. Follow applicable regulations.

ENGINEERING CONTROLS

The level of protection and types of controls necessary will vary depending upon potential exposure conditions.

Control measures to consider:
No special requirements under ordinary conditions of use and with adequate ventilation.

PERSONAL PROTECTION

Personal protective equipment selections vary based on potential exposure conditions such as applications, handling practices, concentration and ventilation. Information on the selection of protective equipment for use with this material, as provided below, is based upon intended, normal usage.

Respiratory Protection: If engineering controls do not maintain airborne contaminant concentrations at a level which is adequate to protect worker health, an approved respirator may be appropriate. Respirator selection, use, and maintenance must be in accordance with regulatory requirements, if applicable. Types of respirators to be considered for this material include:
No special requirements under ordinary conditions of use and with adequate ventilation.

For high airborne concentrations, use an approved supplied-air respirator, operated in positive pressure mode. Supplied air respirators with an escape bottle may be appropriate when oxygen levels are inadequate, gas/vapor warning properties are poor, or if air purifying filter capacity/rating may be exceeded.

Hand Protection: Any specific glove information provided is based on published literature and glove manufacturer data. Glove suitability and breakthrough time will differ depending on the specific use conditions. Contact the glove manufacturer for specific advice on glove selection and breakthrough times for your use conditions. Inspect and replace worn or damaged gloves. The types of gloves to be considered for this material include:
No protection is ordinarily required under normal conditions of use.

Eye Protection: If contact is likely, safety glasses with side shields are recommended.

Skin and Body Protection: Any specific clothing information provided is based on published literature or manufacturer data. The types of clothing to be considered for this material include:
No skin protection is ordinarily required under normal conditions of use. In accordance with good industrial hygiene practices, precautions should be taken to avoid skin contact.

Specific Hygiene Measures: Always observe good personal hygiene measures, such as washing after handling the material and before eating, drinking, and/or smoking. Routinely wash work clothing and protective equipment to remove contaminants. Discard contaminated clothing and footwear that cannot be cleaned. Practice good housekeeping.

ENVIRONMENTAL CONTROLS
See Sections 6, 7, 12, 13.

SECTION 9 PHYSICAL AND CHEMICAL PROPERTIES

Typical physical and chemical properties are given below. Consult the Supplier in Section 1 for additional data.

GENERAL INFORMATION
Physical State: Liquid
Color: Amber
Odor: Characteristic
Odor Threshold: N/D

IMPORTANT HEALTH, SAFETY, AND ENVIRONMENTAL INFORMATION

Relative Density (at 15 C): 0.894
Flash Point [Method]: >200C (392F) [ASTM D-92]
Flammable Limits (Approximate volume % in air): LEL: 0.9 UEL: 7.0
Autoignition Temperature: N/D
Boiling Point / Range: > 316C (600F)
Vapor Density (Air = 1): > 2 at 101 kPa
Vapor Pressure: < 0.013 kPa (0.1 mm Hg) at 20 C
Evaporation Rate (n-butyl acetate = 1): N/D
pH: N/A
Log Pow (n-Octanol/Water Partition Coefficient): > 3.5
Solubility in Water: Negligible
Viscosity: 220 cSt (220 mm2/sec) at 40 C | 19 cSt (19 mm2/sec) at 100C
Oxidizing Properties: See Hazards Identification Section.

OTHER INFORMATION

Freezing Point: N/D
Melting Point: N/A
Pour Point: -9°C (16°F)
DMSO Extract (mineral oil only), IP-346: < 3 %wt

SECTION 10 STABILITY AND REACTIVITY

STABILITY: Material is stable under normal conditions.

CONDITIONS TO AVOID: Excessive heat. High energy sources of ignition.

MATERIALS TO AVOID: Strong oxidizers

HAZARDOUS DECOMPOSITION PRODUCTS: Material does not decompose at ambient temperatures.

HAZARDOUS POLYMERIZATION: Will not occur.

SECTION 11 TOXICOLOGICAL INFORMATION

ACUTE TOXICITY

Route of Exposure	Conclusion / Remarks
Inhalation	
Toxicity (Rat): LC50 > 5000 mg/m3	Minimally Toxic. Based on test data for structurally similar materials.
Irritation: No end point data.	Negligible hazard at ambient/normal handling temperatures. Based on assessment of the components.
Ingestion	
Toxicity (Rat): LD50 > 5000 mg/kg	Minimally Toxic. Based on test data for structurally similar materials.
Skin	
Toxicity (Rabbit): LD50 > 5000 mg/kg	Minimally Toxic. Based on test data for structurally similar materials.
Irritation (Rabbit): Data available.	Negligible irritation to skin at ambient temperatures. Based on test data for structurally similar materials.

Eye	
Irritation (Rabbit): Data available.	May cause mild, short-lasting discomfort to eyes. Based on test data for structurally similar materials.

CHRONIC/OTHER EFFECTS

For the product itself:

Repeated and/or prolonged exposure may cause irritation to the skin, eyes, or respiratory tract.

Contains:

Base oil severely refined: Not carcinogenic in animal studies. Representative material passes IP-346, Modified Ames test, and/or other screening tests. Dermal and inhalation studies showed minimal effects; lung non-specific infiltration of immune cells, oil deposition and minimal granuloma formation. Not sensitizing in test animals.

Additional information is available by request.

The following ingredients are cited on the lists below: None.

--REGULATORY LISTS SEARCHED--

1 = NTP CARC	3 = IARC 1	5 = IARC 2B
2 = NTP SUS	4 = IARC 2A	6 = OSHA CARC

SECTION 12 ECOLOGICAL INFORMATION

The information given is based on data available for the material, the components of the material, and similar materials.

ECOTOXICITY

Material -- Not expected to be harmful to aquatic organisms.

MOBILITY

Base oil component -- Low solubility and floats and is expected to migrate from water to the land. Expected to partition to sediment and wastewater solids.

PERSISTENCE AND DEGRADABILITY

Biodegradation:

Base oil component -- Expected to be inherently biodegradable

BIOACCUMULATION POTENTIAL

Base oil component -- Has the potential to bioaccumulate, however metabolism or physical properties may reduce the bioconcentration or limit bioavailability.

SECTION 13 DISPOSAL CONSIDERATIONS

Disposal recommendations based on material as supplied. Disposal must be in accordance with current applicable laws and regulations, and material characteristics at time of disposal.

ExxonMobil

Product Name: MOBILGEAR 600 XP 220
Revision Date: 05 Nov 2010
Page 7 of 9

DISPOSAL RECOMMENDATIONS

Product is suitable for burning in an enclosed controlled burner for fuel value or disposal by supervised incineration at very high temperatures to prevent formation of undesirable combustion products.

REGULATORY DISPOSAL INFORMATION

RCRA Information: The unused product, in our opinion, is not specifically listed by the EPA as a hazardous waste (40 CFR, Part 261D), nor is it formulated to contain materials which are listed as hazardous wastes. It does not exhibit the hazardous characteristics of ignitability, corrositivity or reactivity and is not formulated with contaminants as determined by the Toxicity Characteristic Leaching Procedure (TCLP). However, used product may be regulated.

Empty Container Warning Empty Container Warning (where applicable): Empty containers may contain residue and can be dangerous. Do not attempt to refill or clean containers without proper instructions. Empty drums should be completely drained and safely stored until appropriately reconditioned or disposed. Empty containers should be taken for recycling, recovery, or disposal through suitably qualified or licensed contractor and in accordance with governmental regulations. DO NOT PRESSURISE, CUT, WELD, BRAZE, SOLDER, DRILL, GRIND, OR EXPOSE SUCH CONTAINERS TO HEAT, FLAME, SPARKS, STATIC ELECTRICITY, OR OTHER SOURCES OF IGNITION. THEY MAY EXPLODE AND CAUSE INJURY OR DEATH.

SECTION 14 TRANSPORT INFORMATION

LAND (DOT): Not Regulated for Land Transport

LAND (TDG): Not Regulated for Land Transport

SEA (IMDG): Not Regulated for Sea Transport according to IMDG-Code

AIR (IATA): Not Regulated for Air Transport

SECTION 15 REGULATORY INFORMATION

OSHA HAZARD COMMUNICATION STANDARD: When used for its intended purposes, this material is not classified as hazardous in accordance with OSHA 29 CFR 1910.1200.

Complies with the following national/regional chemical inventory requirements:: EINECS, KECI, PICCS, TSCA
Special Cases:

Inventory	Status
NDSL	Restrictions Apply

EPCRA: This material contains no extremely hazardous substances.

SARA (311/312) REPORTABLE HAZARD CATEGORIES: None.

SARA (313) TOXIC RELEASE INVENTORY: This material contains no chemicals subject to the supplier notification requirements of the SARA 313 Toxic Release Program.

The following ingredients are cited on the lists below: None.

--REGULATORY LISTS SEARCHED--

1 = ACGIH ALL	6 = TSCA 5a2	11 = CA P65 REPRO	16 = MN RTK
2 = ACGIH A1	7 = TSCA 5e	12 = CA RTK	17 = NJ RTK
3 = ACGIH A2	8 = TSCA 6	13 = IL RTK	18 = PA RTK
4 = OSHA Z	9 = TSCA 12b	14 = LA RTK	19 = RI RTK
5 = TSCA 4	10 = CA P65 CARC	15 = MI 293	

Code key: CARC=Carcinogen; REPRO=Reproductive

SECTION 16 OTHER INFORMATION

N/D = Not determined, N/A = Not applicable

THIS SAFETY DATA SHEET CONTAINS THE FOLLOWING REVISIONS:
Revision Changes:
Section 06: Notification Procedures - Header was modified.
Section 10 Stability and Reactivity - Header was modified.
Section 13: Disposal Recommendations - Note was modified.
Section 08: Personal Protection was modified.
Section 08: Hand Protection was modified.
Section 07: Handling and Storage - Handling was modified.
Section 07: Handling and Storage - Storage Phrases was modified.
Section 11: Dermal Lethality Test Data was modified.
Section 11: Oral Lethality Test Data was modified.
Section 11: Inhalation Irritation Test Data was modified.
Section 05: Hazardous Combustion Products was modified.
Section 06: Accidental Release - Spill Management - Water was modified.
Section 09: Relative Density - Header was modified.
Section 09: Viscosity was modified.
Section 14: Sea (IMDG) - Header was modified.
Section 14: Air (IATA) - Header was modified.
Section 14: LAND (TDG) - Header was modified.
Section 14: LAND (DOT) - Header was modified.
Section 15: List Citation Table - Header was modified.
Section 14: LAND (DOT) - Default was modified.
Section 14: LAND (TDG) Default was modified.
Section 14: Sea (IMDG) - Default was modified.
Section 14: Air (IATA) - Default was modified.
Section 15: National Chemical Inventory Listing - Header was modified.
Section 16: Code to MHCs was modified.
Section 08: Exposure limits/standards was modified.
Hazard Identification: OSHA - May be Hazardous Statement was modified.
Section 06: Notification Procedures was modified.
Section 09: Oxidizing Properties was modified.
Section 01: Company Contact Methods Sorted by Priority was modified.

ExxonMobil

Product Name: MOBILGEAR 600 XP 220
Revision Date: 05 Nov 2010
Page 9 of 9

The information and recommendations contained herein are, to the best of ExxonMobil's knowledge and belief, accurate and reliable as of the date issued. You can contact ExxonMobil to insure that this document is the most current available from ExxonMobil. The information and recommendations are offered for the user's consideration and examination. It is the user's responsibility to satisfy itself that the product is suitable for the intended use. If buyer repackages this product, it is the user's responsibility to insure proper health, safety and other necessary information is included with and/or on the container. Appropriate warnings and safe-handling procedures should be provided to handlers and users. Alteration of this document is strictly prohibited. Except to the extent required by law, re-publication or retransmission of this document, in whole or in part, is not permitted. The term, "ExxonMobil" is used for convenience, and may include any one or more of ExxonMobil Chemical Company, Exxon Mobil Corporation, or any affiliates in which they directly or indirectly hold any interest.

Internal Use Only
MHC: 0B, 0B, 0, 0, 0, 0 PPEC: A

DGN: 7077874XUS (1012017)

Copyright 2002 Exxon Mobil Corporation, All rights reserved

11.5.4 MOBIL UNIREX N2

Mobil

UNIREX N

High Temperature Bearing Grease

Product Description

UNIREX N greases are premium-quality, lithium-complex products suitable for high-temperature service in rolling-element bearings. These versatile greases can be used in a wide range of industrial applications and are particularly recommended for electric-motor lubrication.

Unirex N 2 in an NLGI No. 2 grade and is preferred in most cases for application by hand packing or by grease gun. UNIREX N 3 is an NLGI No. 3 grade often used for special applications such as sealed-for-life electric motor bearings, vertically mounted bearings, and higher-speed applications. UNIREX N greases are not intended to be used under extreme pressure conditions where extra anti-welding properties are required.

UNIREX N 2 meets the requirements of Lubricating Grease DIN 51825 - K2N - 30L and ISO L-XBDHA 2.

UNIREX N 3 meets the requirements of Lubricating Grease DIN 51825 - K3N - 20 and ISO L-XBDHA 3.

Features and Benefits

Unirex N greases exhibit excellent high and low temperature performance, resistance to water and corrosion, and long service life in a range of bearing applications.

Features	Advantages and Potential Benefits
Excellent high-temperature performance	Lithium-complex thickener resists softening / running out of bearings at temperatures up to 190°C
Outstanding grease life	Laboratory bearing rig tests show outstanding continuous lubrication performance at bearing temperatures of up to 140°C
Very good low-temperature characteristics	Start-up power requirements are low at temperatures down to at least -20°C and may be suitable at temperatures down to -30°C in those applications where torque is not limiting. Meets DIN 51825 low temperature torque requirements at -20°C.
Excellent mechanical stability	Exhibits excellent resistance to softening due to mechanical working
Excellent water and corrosion resistance	Resists water washout and protects bearings against corrosion
Excellent performance in high-speed applications	Channelling characteristics provide excellent performance in high-speed deep-groove ball bearings. Unirex N3 is recommended where DmN (mean bearing diameter X rpm) exceeds 360,000.

Applications

Because of their outstanding oxidation stability and resistance to softening at high temperatures, UNIREX N greases may be used in many applications such as oven-conveyor bearings, dryer-roller bearings, rotary steam joints, kiln-car bearings, induced-draft fan bearings, and equipment adjacent to high radiant heat such as ovens, soaking pits, etc.

UNIREX N 2 is an NLGI No. 2 grade and is preferred in most cases for application by hand-packing or by grease gun. UNIREX N 2 is recommended for the lubrication of electric motors. It is suitable for NEMA (National Electric Manufacturer's Association) Insulation Class A, B, and F motors.

UNIREX N 3 is an NLGI No. 3 grade and is used for special applications such as sealed-for-life bearings, vertically-mounted bearings, and higher-speed bearings.

Most of the uses for UNIREX N involve manual methods of application. Although UNIREX N 2 is suitable for use in automatic centralized systems, equipment served by these systems would normally not require the long-life properties of UNIREX N, since one of the functions of automatic systems is to replenish the lubricant at relatively short time intervals. UNIREX N 3 should not be used in such systems.

Regardless of the level of oxidation stability of a grease, an increase in temperature will affect the rate of oxidation and thermal deterioration. Consequently, more frequent relubrication is required at higher temperatures. For UNIREX N greases, it is recommended that relubrication intervals not exceed one week of continuous service at 175°C. As temperatures approach 190°C, relubrication intervals should be daily or every shift. Relubrication intervals will, of course, vary widely with the type of service and should be based primarily on the recommendations of the motor manufacturer.

Specifications and Approvals

Unirex N Series meets or exceeds the requirements of:	2	3
DIN 51825: (2004-06)	K2N-30L	K3N-20

Typical Properties

UNIREX N	2	3
Thickener Type	Lithium-complex	Lithium-complex
NLGI Grade	2	3
Color, Visual	Green	Green
Texture	Smooth, Buttery	Smooth, Buttery
Dropping Point, ASTM D 2265, °C	230	230
Base Oil Viscosity, ASTM D 445, cSt @ 40°C	115	115
Base Oil Viscosity Index, ASTM D 2270	95	95
Penetration, worked 60 stokes, ASTM D 217, mm/10	280	235
Penetration change after 100,000 strokes, ASTM D 217, mm/10	25	30
Oil Separation, ASTM D 6184, mass % @100°C / 30 hrs	1.5	0.6
EMCOR Corrosion , ASTM D 6138 (Distilled Water), rating	0,1	0,1
Water Washout @ 79°C, ASTM D 1264, mass %	3.7	3.5
Grease life, DIN 51821 (FE-9), L50 hrs @ 140°C	283	448

Health and Safety

Based on available information, this product is not expected to produce adverse effects on health when used for the intended application and the recommendations provided in the Material Safety Data Sheet (MSDS) are followed. MSDS's are available upon request through your sales contract office, or via the Internet. This product should not be used for purposes other than its intended use. If disposing of used product, take care to protect the environment.

Mobil, the Mobil logotype and the Pegasus design are registered trademarks of Exxon Mobil Corporation, or one of its subsidiaries.

12-2010

Exxon Mobil Corporation

ExxonMobil

Product Name: UNIREX N 2
Revision Date: 07 Jul 2009
Page 1 of 8

MATERIAL SAFETY DATA SHEET

SECTION 1 PRODUCT AND COMPANY IDENTIFICATION

PRODUCT

Product Name: **UNIREX N 2**
Product Description: Base Oil and Additives
Product Code: 2015A0207220, 644351-00, 97N713
Intended Use: Grease

COMPANY IDENTIFICATION

Supplier: **EXXON MOBIL CORPORATION**
3225 GALLOWS RD.
FAIRFAX, VA. 22037 USA

24 Hour Health Emergency	609-737-4411
Transportation Emergency Phone	800-424-9300
ExxonMobil Transportation No.	281-834-3296
Product Technical Information	800-662-4525, 800-947-9147
MSDS Internet Address	http://www.exxon.com, http://www.mobil.com

SECTION 2 COMPOSITION / INFORMATION ON INGREDIENTS

No Reportable Hazardous Substance(s) or Complex Substance(s).

SECTION 3 HAZARDS IDENTIFICATION

This material is not considered to be hazardous according to regulatory guidelines (see (M)SDS Section 15).

POTENTIAL HEALTH EFFECTS

Low order of toxicity. Excessive exposure may result in eye, skin, or respiratory irritation. High-pressure injection under skin may cause serious damage.

NFPA Hazard ID:	Health:	0	Flammability:	1	Reactivity:	0
HMIS Hazard ID:	Health:	0	Flammability:	1	Reactivity:	0

NOTE: This material should not be used for any other purpose than the intended use in Section 1 without expert advice. Health studies have shown that chemical exposure may cause potential human health risks which may vary from person to person.

SECTION 4 FIRST AID MEASURES

Inhalation

Under normal conditions of intended use, this material is not expected to be an inhalation hazard.

SKIN CONTACT

Wash contact areas with soap and water. If product is injected into or under the skin, or into any part of the body, regardless of the appearance of the wound or its size, the individual should be evaluated immediately by a physician as a surgical emergency. Even though initial symptoms from high pressure injection may be minimal or absent, early surgical treatment within the first few hours may significantly reduce the ultimate extent of injury.

EYE CONTACT

Flush thoroughly with water. If irritation occurs, get medical assistance.

Ingestion

First aid is normally not required. Seek medical attention if discomfort occurs.

SECTION 5 FIRE FIGHTING MEASURES

EXTINGUISHING MEDIA

Appropriate Extinguishing Media: Use water fog, foam, dry chemical or carbon dioxide (CO2) to extinguish flames.

Inappropriate Extinguishing Media: Straight Streams of Water

FIRE FIGHTING

Fire Fighting Instructions: Evacuate area. Prevent runoff from fire control or dilution from entering streams, sewers, or drinking water supply. Firefighters should use standard protective equipment and in enclosed spaces, self-contained breathing apparatus (SCBA). Use water spray to cool fire exposed surfaces and to protect personnel.

Hazardous Combustion Products: Smoke, Fume, Aldehydes, Sulfur Oxides, Incomplete combustion products, Oxides of carbon

FLAMMABILITY PROPERTIES

Flash Point [Method]: >200C (392F) [EST. FOR OIL, ASTM D-92 (COC)]
Flammable Limits (Approximate volume % in air): LEL: N/D UEL: N/D
Autoignition Temperature: N/D

SECTION 6 ACCIDENTAL RELEASE MEASURES

NOTIFICATION PROCEDURES

In the event of a spill or accidental release, notify relevant authorities in accordance with all applicable regulations. US regulations require reporting releases of this material to the environment which exceed the applicable reportable quantity or oil spills which could reach any waterway including intermittent dry creeks. The National Response Center can be reached at (800)424-8802.

SPILL MANAGEMENT

Land Spill: Scrape up spilled material with shovels into a suitable container for recycle or disposal.

Water Spill: Stop leak if you can do it without risk. Confine the spill immediately with booms. Warn other

shipping. Skim from surface.

Water spill and land spill recommendations are based on the most likely spill scenario for this material; however, geographic conditions, wind, temperature, (and in the case of a water spill) wave and current direction and speed may greatly influence the appropriate action to be taken. For this reason, local experts should be consulted. Note: Local regulations may prescribe or limit action to be taken.

ENVIRONMENTAL PRECAUTIONS

Prevent entry into waterways, sewers, basements or confined areas.

SECTION 7 HANDLING AND STORAGE

HANDLING

Prevent small spills and leakage to avoid slip hazard.

Static Accumulator: This material is not a static accumulator.

STORAGE

Do not store in open or unlabelled containers.

SECTION 8 EXPOSURE CONTROLS / PERSONAL PROTECTION

NOTE: Limits/standards shown for guidance only. Follow applicable regulations.

ENGINEERING CONTROLS

The level of protection and types of controls necessary will vary depending upon potential exposure conditions. Control measures to consider:

No special requirements under ordinary conditions of use and with adequate ventilation.

PERSONAL PROTECTION

Personal protective equipment selections vary based on potential exposure conditions such as applications, handling practices, concentration and ventilation. Information on the selection of protective equipment for use with this material, as provided below, is based upon intended, normal usage.

Respiratory Protection: If engineering controls do not maintain airborne contaminant concentrations at a level which is adequate to protect worker health, an approved respirator may be appropriate. Respirator selection, use, and maintenance must be in accordance with regulatory requirements, if applicable. Types of respirators to be considered for this material include:

No protection is ordinarily required under normal conditions of use and with adequate ventilation.

For high airborne concentrations, use an approved supplied-air respirator, operated in positive pressure mode. Supplied air respirators with an escape bottle may be appropriate when oxygen levels are inadequate, gas/vapor warning properties are poor, or if air purifying filter capacity/rating may be exceeded.

Hand Protection: Any specific glove information provided is based on published literature and glove manufacturer data. Glove suitability and breakthrough time will differ depending on the specific use conditions. Contact the glove manufacturer for specific advice on glove selection and breakthrough times for your use conditions. Inspect and replace worn or damaged gloves. The types of gloves to be considered for this material include:

No protection is ordinarily required under normal conditions of use.

Eye Protection: If contact is likely, safety glasses with side shields are recommended.

Skin and Body Protection: Any specific clothing information provided is based on published literature or manufacturer data. The types of clothing to be considered for this material include:

No skin protection is ordinarily required under normal conditions of use. In accordance with good industrial hygiene practices, precautions should be taken to avoid skin contact.

Specific Hygiene Measures: Always observe good personal hygiene measures, such as washing after handling the material and before eating, drinking, and/or smoking. Routinely wash work clothing and protective equipment to remove contaminants. Discard contaminated clothing and footwear that cannot be cleaned. Practice good housekeeping.

ENVIRONMENTAL CONTROLS

See Sections 6, 7, 12, 13.

SECTION 9 PHYSICAL AND CHEMICAL PROPERTIES

Typical physical and chemical properties are given below. Consult the Supplier in Section 1 for additional data.

GENERAL INFORMATION

Physical State: Solid
Form: semi-fluid
Color: green
Odor: Characteristic
Odor Threshold: N/D

IMPORTANT HEALTH, SAFETY, AND ENVIRONMENTAL INFORMATION

Relative Density (at 15 C): 0.93
Flash Point [Method]: >200C (392F) [EST. FOR OIL, ASTM D-92 (COC)]
Flammable Limits (Approximate volume % in air): LEL: N/D UEL: N/D
Autoignition Temperature: N/D
Boiling Point / Range: N/D
Vapor Density (Air = 1): N/D
Vapor Pressure: < 0.013 kPa (0.1 mm Hg) at 20 C
Evaporation Rate (N-Butyl Acetate = 1): N/D
pH: N/A
Log Pow (n-Octanol/Water Partition Coefficient): N/D
Solubility in Water: Negligible
Viscosity: 113 cSt (113 mm²/sec) at 40 C [Base oil]
Oxidizing Properties: See Sections 3, 15, 16.

OTHER INFORMATION

Freezing Point: N/D
Melting Point: >219°C (426°F)
DMSO Extract (mineral oil only), IP-346: < 3 %wt

NOTE: Most physical properties above are for the oil component in the material.

SECTION 10 STABILITY AND REACTIVITY

STABILITY: Material is stable under normal conditions.

CONDITIONS TO AVOID: Excessive heat. High energy sources of ignition.

MATERIALS TO AVOID: Strong oxidizers

HAZARDOUS DECOMPOSITION PRODUCTS: Material does not decompose at ambient temperatures.

HAZARDOUS POLYMERIZATION: Will not occur.

SECTION 11 TOXICOLOGICAL INFORMATION

ACUTE TOXICITY

Route of Exposure	Conclusion / Remarks
Inhalation	
Toxicity: No end point data.	Minimally Toxic. Based on assessment of the components.
Irritation: No end point data.	Negligible hazard at ambient/normal handling temperatures. Based on assessment of the components.
Ingestion	
Toxicity (Rat): LD50 > 5000 mg/kg	Minimally Toxic. Based on test data for structurally similar materials.
Skin	
Toxicity (Rabbit): LD50 > 5000 mg/kg	Minimally Toxic. Based on test data for structurally similar materials.
Irritation (Rabbit): Data available.	Negligible irritation to skin at ambient temperatures. Based on assessment of the components.
Eye	
Irritation (Rabbit): Data available.	May cause mild, short-lasting discomfort to eyes. Based on assessment of the components.

CHRONIC/OTHER EFFECTS

For the product itself:

Component concentrations in this formulation would not be expected to cause skin sensitization, based on tests of the components or similar formulations.

Contains:

Base oil severely refined: Not carcinogenic in animal studies. Representative material passes IP-346, Modified Ames test, and/or other screening tests. Dermal and inhalation studies showed minimal effects; lung non-specific infiltration of immune cells, oil deposition and minimal granuloma formation. Not sensitizing in test animals.

Additional information is available by request.

The following ingredients are cited on the lists below: None.

--REGULATORY LISTS SEARCHED--

1 = NTP CARC	3 = IARC 1	5 = IARC 2B
2 = NTP SUS	4 = IARC 2A	6 = OSHA CARC

SECTION 12 ECOLOGICAL INFORMATION

The information given is based on data available for the material, the components of the material, and similar materials.

ECOTOXICITY

Material -- Not expected to be harmful to aquatic organisms.

MOBILITY

Base oil component -- Low solubility and floats and is expected to migrate from water to the land. Expected to partition to sediment and wastewater solids.

PERSISTENCE AND DEGRADABILITY

Biodegradation:

Base oil component -- Expected to be inherently biodegradable

BIOACCUMULATION POTENTIAL

Base oil component -- Has the potential to bioaccumulate, however metabolism or physical properties may reduce the bioconcentration or limit bioavailability.

SECTION 13 DISPOSAL CONSIDERATIONS

Disposal recommendations based on material as supplied. Disposal must be in accordance with current applicable laws and regulations, and material characteristics at time of disposal.

DISPOSAL RECOMMENDATIONS

Product is suitable for burning in an enclosed controlled burner for fuel value or disposal by supervised incineration at very high temperatures to prevent formation of undesirable combustion products.

REGULATORY DISPOSAL INFORMATION

RCRA Information: Disposal of unused product may be subject to RCRA regulations (40 CFR 261). Disposal of the used product may also be regulated due to ignitability, corrosivity, reactivity or toxicity as determined by the Toxicity Characteristic Leaching Procedure (TCLP). Potential RCRA characteristics:
TCLP (BARIUM)

Empty Container Warning Empty Container Warning (where applicable): Empty containers may contain residue and can be dangerous. Do not attempt to refill or clean containers without proper instructions. Empty drums should be completely drained and safely stored until appropriately reconditioned or disposed. Empty containers should be taken for recycling, recovery, or disposal through suitably qualified or licensed contractor and in accordance with governmental regulations. DO NOT PRESSURISE, CUT, WELD, BRAZE, SOLDER, DRILL, GRIND, OR EXPOSE

ExxonMobil

Product Name: UNIREX N 2
Revision Date: 07 Jul 2009
Page 7 of 8

SUCH CONTAINERS TO HEAT, FLAME, SPARKS, STATIC ELECTRICITY, OR OTHER SOURCES OF IGNITION. THEY MAY EXPLODE AND CAUSE INJURY OR DEATH.

SECTION 14 TRANSPORT INFORMATION

LAND (DOT) : Not Regulated for Land Transport

LAND (TDG) : Not Regulated for Land Transport

SEA (IMDG) : Not Regulated for Sea Transport according to IMDG-Code

AIR (IATA) : Not Regulated for Air Transport

SECTION 15 REGULATORY INFORMATION

OSHA HAZARD COMMUNICATION STANDARD: When used for its intended purposes, this material is not classified as hazardous in accordance with OSHA 29 CFR 1910.1200.

NATIONAL CHEMICAL INVENTORY LISTING: IECSC, DSL, EINECS, TSCA
Special Cases:

Inventory	Status
KECI	Restrictions Apply

EPCRA: This material contains no extremely hazardous substances.

SARA (311/312) REPORTABLE HAZARD CATEGORIES: None.

SARA (313) TOXIC RELEASE INVENTORY: This material contains no chemicals subject to the supplier notification requirements of the SARA 313 Toxic Release Program.

The following ingredients are cited on the lists below:

Chemical Name	CAS Number	List Citations
DIPHENYLAMINE	122-39-4	5

--REGULATORY LISTS SEARCHED--

1 = ACGIH ALL	6 = TSCA 5a2	11 = CA P65 REPRO	16 = MN RTK
2 = ACGIH A1	7 = TSCA 5e	12 = CA RTK	17 = NJ RTK
3 = ACGIH A2	8 = TSCA 6	13 = IL RTK	18 = PA RTK
4 = OSHA Z	9 = TSCA 12b	14 = LA RTK	19 = RI RTK
5 = TSCA 4	10 = CA P65 CARC	15 = MI 293	

Code key: CARC=Carcinogen; REPRO=Reproductive

ExxonMobil

Product Name: UNIREX N 2
Revision Date: 07 Jul 2009
Page 8 of 8

SECTION 16 OTHER INFORMATION

N/D = Not determined, N/A = Not applicable

THIS SAFETY DATA SHEET CONTAINS THE FOLLOWING REVISIONS:

Revision Changes:
Section 04: First Aid Inhalation - Header was modified.
Section 04: First Aid Ingestion - Header was modified.
Section 10 Stability and Reactivity - Header was modified.
Section 13: Disposal Recommendations - Note was modified.
Section 09: Physical State was modified.
Section 09: Color was modified.
Section 09: Evaporation Rate - Header was modified.
Section 08: Personal Protection was modified.
Section 07: Handling and Storage - Handling was modified.
Section 05: Hazardous Combustion Products was modified.
Section 09: Relative Density - Header was modified.
Section 09: Viscosity was modified.
Section 15: List Citation Table - Header was modified.
Section 15: National Chemical Inventory Listing was modified.
Section 15: OSHA Hazard Communication Standard was modified.
Hazard Identification: OSHA - May be Hazardous Statement was modified.
Section 08: Exposure limits/standards was deleted.

The information and recommendations contained herein are, to the best of ExxonMobil's knowledge and belief, accurate and reliable as of the date issued. You can contact ExxonMobil to insure that this document is the most current available from ExxonMobil. The information and recommendations are offered for the user's consideration and examination. It is the user's responsibility to satisfy itself that the product is suitable for the intended use. If buyer repackages this product, it is the user's responsibility to insure proper health, safety and other necessary information is included with and/or on the container. Appropriate warnings and safe-handling procedures should be provided to handlers and users. Alteration of this document is strictly prohibited. Except to the extent required by law, re-publication or retransmission of this document, in whole or in part, is not permitted. The term, "ExxonMobil" is used for convenience, and may include any one or more of ExxonMobil Chemical Company, Exxon Mobil Corporation, or any affiliates in which they directly or indirectly hold any interest.

Internal Use Only
MHC: 0B, 0B, 0, 0, 0, 0 PPEC: A

DGN: 2031341XUS (553418)

Copyright 2002 Exxon Mobil Corporation, All rights reserved

11.5.5 MOBIL MOBILGREASE XHP 222

Mobil

Mobilgrease XHP 220 Series

Product Description

Mobilgrease XHP 220 greases are extended service lithium complex greases intended for a wide variety of applications and severe operating conditions. These greases were designed to outperform conventional products by applying cutting edge, proprietary, lithium complex manufacturing technology. They are formulated to provide excellent high temperature performance with superb adhesion, structural stability and resistance to water contamination. These greases have a high level of chemical stability and offer excellent protection against rust and corrosion. These greases feature high dropping points and maximum recommended operating temperature of 140° C (284°F). Mobilgrease XHP 220 greases are available in NLGI grades 00, 0, 1, 2 and 3 with an ISO VG 220 base oil viscosity.

Mobilgrease XHP 220 greases are designed for a wide range of applications including the industrial, automotive, construction and marine sectors. Their performance features make them ideal choices for operating conditions including high temperature, water contamination, shock loading and extended re-lubrication operations. Mobilgrease XHP 222 Special is an extreme pressure grease fortified with 0.75% molybdenum disulfide that provides protection from wear under conditions pivoting and other conditions that lead to loss of oil film.

Features and Benefits

Mobilgrease XHP 220 greases are leading members of the Mobilgrease brand of products, which have gained a reputation world-wide for innovation and performance excellence. Mobilgrease XHP 220 greases are state-of-the-art products designed by our formulation technologists and backed by our world-wide technical support staff.

A key factor in the excellent adhesion and cohesion properties and high drop point of Mobilgrease XHP 220 greases is the proprietary manufacturing technology developed at our research facilities and adopted by our modern manufacturing facilities. These products use specially selected additives to provide excellent oxidation stability, rust and corrosion control, resistance to water contamination as well as anti-wear and EP protection. Mobilgrease XHP 220 Series products offer the following features and potential benefits:

Features	Advantages and Potential Benefits
Superb resistance to water washout and spray-off	Helps assure proper lubrication and protection even in the most severe water exposure conditions
Highly adhesive and cohesive structure	Excellent grease tenacity, helps reduce leakage and extend re-lubrication intervals for reduced maintenance requirements.
Excellent rust and corrosion resistance	Protection of lubricated parts even in hostile aqueous environments.
Very good resistance to thermal, oxidative and structural degradation at high temperature	Helps extend grease life and enhance bearing protection in high temperature applications helping to reduce maintenance and replacement costs.
Very good anti-wear and EP performance	Reliable protection of lubricated equipment, even under conditions of high sliding with potential for extended equipment life and reduced unanticipated downtime
Broad multi-purpose application	Provides potential for inventory rationalization and reduced inventory costs

Applications

Mobilgrease XHP 220 greases are used in a wide range of equipment including industrial, automotive, construction and marine applications. Their blue color enables easy verification of application:

Mobilgrease XHP 005 and 220 are softer, high-temperature greases recommended by ExxonMobil for centralized grease application systems, gear lubrication, and where extreme-cold-temperature pumpability is important.

Mobilgrease XHP 221 is recommended by ExxonMobil for use in industrial and marine applications, chassis components and farm equipment. It provides excellent low temperature performance.

Mobilgrease XHP 222 is recommended by ExxonMobil for industrial and marine applications, chassis components and farm equipment. Its sticky formulation stays in applications longer.

Mobilgrease XHP 223 is recommended by ExxonMobil for applications where good high temperature and anti-leakage properties are required. It is particularly recommended for severe truck wheel bearing applications or for rolling element bearings subject to vibration, or where higher speeds require a grease with higher consistency to provide channeling characteristics.

Mobilgrease XHP 222 Special contains 0.75% molybdenum disulfide, is grey in color and is recommended by ExxonMobil for moderate duty service in industrial applications, chassis components and farm equipment. It also finds application in king pins, U-joints, fifth wheels and bucket pins

Specifications and Approvals

Mobilgrease XHP 220 Series meets or exceeds the requirements of	005	220	221	222	223	222 Special
DIN 51825: (2004-06)			KP1N-20	KP2N-20		

Typical Properties

Mobilgrease XHP	005	220	221	222	223	222 Special
NLGI Grade	00	0	1	2	3	2
Thickener Type	Li-Complex	Li-Complex	Li-Complex	Li-Complex	Li-Complex	Li-Complex
Color, Visual	Dark Blue	Dark Blue	Dark Blue	Dark Blue	Dark Blue	Grey-Black
Molybdenum DiSulfide, wt%	--	--	--	--	--	0.75%
Penetration, Worked, 25° C, ASTM D 217	415	370	325	280	235	280
Dropping Point, °C, ASTM D 2265	-----	270	280	280	280	280
Viscosity of Oil, ASTM D 445						
cSt @ 40° C	220	220	220	220	220	220
4-Ball Wear Test, ASTM D 2266, scar, mm	0.50	0.50	0.5	0.5	0.5	0.5
4-Ball Weld Load, ASTM D 2596, kg	315	315	315	315	315	315
Timken OK Load, ASTM D 2509, lb	40	40	40	40	40	40
Bomb Oxidation, ASTM D 942, Pressure drop at 100 hrs, kPa (psig)	35 (5)	35 (5)	35 (5)	35 (5)	35 (5)	35 (5)
Corrosion Prevention, ASTM D 1743	Pass	Pass	Pass	Pass	Pass	Pass
Rust Protection, IP 220-mod., Distilled Water Washout	0,0	0,0	0,0	0,0	0,0	0,0
Copper Strip Corrosion, ASTM D 4048	1B	1B	1B	1B	1B	1B

ExxonMobil

Product Name: MOBILGREASE XHP 222
Revision Date: 13 Sep 2013
Page 1 of 9

MATERIAL SAFETY DATA SHEET

SECTION 1 PRODUCT AND COMPANY IDENTIFICATION

PRODUCT

Product Name: **MOBILGREASE XHP 222**
Product Description: Base Oil and Additives
Product Code: 2015A0202530, 2015A0202530, 530436-00, 97E898
Intended Use: Grease

COMPANY IDENTIFICATION

Supplier: **EXXON MOBIL CORPORATION**
3225 GALLOWS RD.
FAIRFAX, VA. 22037 USA

24 Hour Health Emergency	609-737-4411
Transportation Emergency Phone	800-424-9300
ExxonMobil Transportation No.	281-834-3296
Product Technical Information	800-662-4525, 800-947-9147
MSDS Internet Address	http://www.exxon.com, http://www.mobil.com

SECTION 2 COMPOSITION / INFORMATION ON INGREDIENTS

Reportable Hazardous Substance(s) or Complex Substance(s)

Name	CAS#	Concentration*
ZINC DITHIOPHOSPHATE	68649-42-3	1 - 2.5%

* All concentrations are percent by weight unless material is a gas. Gas concentrations are in percent by volume.

SECTION 3 HAZARDS IDENTIFICATION

This material is not considered to be hazardous according to regulatory guidelines (see (M)SDS Section 15).

POTENTIAL HEALTH EFFECTS

Excessive exposure may result in eye, skin, or respiratory irritation. High-pressure injection under skin may cause serious damage.

NFPA Hazard ID:	Health:	0	Flammability:	1	Reactivity:	0
HMIS Hazard ID:	Health:	0	Flammability:	1	Reactivity:	0

NOTE: This material should not be used for any other purpose than the intended use in Section 1 without expert advice. Health studies have shown that chemical exposure may cause potential human health risks which may vary from person to person.

SECTION 4 FIRST AID MEASURES

INHALATION

Under normal conditions of intended use, this material is not expected to be an inhalation hazard.

SKIN CONTACT

Wash contact areas with soap and water. If product is injected into or under the skin, or into any part of the body, regardless of the appearance of the wound or its size, the individual should be evaluated immediately by a physician as a surgical emergency. Even though initial symptoms from high pressure injection may be minimal or absent, early surgical treatment within the first few hours may significantly reduce the ultimate extent of injury.

EYE CONTACT

Flush thoroughly with water. If irritation occurs, get medical assistance.

INGESTION

First aid is normally not required. Seek medical attention if discomfort occurs.

SECTION 5 FIRE FIGHTING MEASURES

EXTINGUISHING MEDIA

Appropriate Extinguishing Media: Use water fog, foam, dry chemical or carbon dioxide (CO2) to extinguish flames.

Inappropriate Extinguishing Media: Straight Streams of Water

FIRE FIGHTING

Fire Fighting Instructions: Evacuate area. Prevent runoff from fire control or dilution from entering streams, sewers, or drinking water supply. Firefighters should use standard protective equipment and in enclosed spaces, self-contained breathing apparatus (SCBA). Use water spray to cool fire exposed surfaces and to protect personnel.

Hazardous Combustion Products: Smoke, Fume, Aldehydes, Sulfur oxides, Incomplete combustion products, Oxides of carbon

FLAMMABILITY PROPERTIES

Flash Point [Method]: >204°C (400°F) [EST. FOR OIL, ASTM D-92 (COC)]
Flammable Limits (Approximate volume % in air): LEL: N/D UEL: N/D
Autoignition Temperature: N/D

SECTION 6 ACCIDENTAL RELEASE MEASURES

NOTIFICATION PROCEDURES

In the event of a spill or accidental release, notify relevant authorities in accordance with all applicable regulations. US regulations require reporting releases of this material to the environment which exceed the applicable reportable quantity or oil spills which could reach any waterway including intermittent dry creeks. The National Response Center can be reached at (800)424-8802.

PROTECTIVE MEASURES

Avoid contact with spilled material. See Section 5 for fire fighting information. See the Hazard Identification Section for Significant Hazards. See Section 4 for First Aid Advice. See Section 8 for advice on the minimum requirements for personal protective equipment. Additional protective measures may be necessary, depending on the specific circumstances and/or the expert judgment of the emergency responders.

For emergency responders: Respiratory protection: respiratory protection will be necessary only in special cases, e.g., formation of mists. Half-face or full-face respirator with filter(s) for dust/organic vapor or Self Contained Breathing Apparatus (SCBA) can be used depending on the size of spill and potential level of exposure. If the exposure cannot be completely characterized or an oxygen deficient atmosphere is possible or anticipated, SCBA is recommended. Work gloves that are resistant to hydrocarbons are recommended. Gloves made of polyvinyl acetate (PVA) are not water-resistant and are not suitable for emergency use. Chemical goggles are recommended if splashes or contact with eyes is possible. Small spills: normal antistatic work clothes are usually adequate. Large spills: full body suit of chemical resistant, antistatic material is recommended.

SPILL MANAGEMENT

Land Spill: Allow spilled material to solidify and scrape up with shovels into a suitable container for recycle or disposal. Scrape up spilled material with shovels into a suitable container for recycle or disposal.

Water Spill: Stop leak if you can do it without risk. Confine the spill immediately with booms. Warn other shipping. Skim from surface.

Water spill and land spill recommendations are based on the most likely spill scenario for this material; however, geographic conditions, wind, temperature, (and in the case of a water spill) wave and current direction and speed may greatly influence the appropriate action to be taken. For this reason, local experts should be consulted. Note: Local regulations may prescribe or limit action to be taken.

ENVIRONMENTAL PRECAUTIONS

Prevent entry into waterways, sewers, basements or confined areas.

SECTION 7 HANDLING AND STORAGE

HANDLING

Prevent small spills and leakage to avoid slip hazard.

Static Accumulator: This material is not a static accumulator.

STORAGE

Do not store in open or unlabelled containers.

SECTION 8 EXPOSURE CONTROLS / PERSONAL PROTECTION

EXPOSURE LIMIT VALUES

NOTE: Limits/standards shown for guidance only. Follow applicable regulations.

ENGINEERING CONTROLS

The level of protection and types of controls necessary will vary depending upon potential exposure conditions. Control measures to consider:
No special requirements under ordinary conditions of use and with adequate ventilation.

PERSONAL PROTECTION

Personal protective equipment selections vary based on potential exposure conditions such as applications, handling practices, concentration and ventilation. Information on the selection of protective equipment for use with this material, as provided below, is based upon intended, normal usage.

Respiratory Protection: If engineering controls do not maintain airborne contaminant concentrations at a level which is adequate to protect worker health, an approved respirator may be appropriate. Respirator selection, use, and maintenance must be in accordance with regulatory requirements, if applicable. Types of respirators to be considered for this material include:
No protection is ordinarily required under normal conditions of use and with adequate ventilation.

For high airborne concentrations, use an approved supplied-air respirator, operated in positive pressure mode. Supplied air respirators with an escape bottle may be appropriate when oxygen levels are inadequate, gas/vapor warning properties are poor, or if air purifying filter capacity/rating may be exceeded.

Hand Protection: Any specific glove information provided is based on published literature and glove manufacturer data. Glove suitability and breakthrough time will differ depending on the specific use conditions. Contact the glove manufacturer for specific advice on glove selection and breakthrough times for your use conditions. Inspect and replace worn or damaged gloves. The types of gloves to be considered for this material include:
No protection is ordinarily required under normal conditions of use.

Eye Protection: If contact is likely, safety glasses with side shields are recommended.

Skin and Body Protection: Any specific clothing information provided is based on published literature or manufacturer data. The types of clothing to be considered for this material include:
No skin protection is ordinarily required under normal conditions of use. In accordance with good industrial hygiene practices, precautions should be taken to avoid skin contact.

Specific Hygiene Measures: Always observe good personal hygiene measures, such as washing after handling the material and before eating, drinking, and/or smoking. Routinely wash work clothing and protective equipment to remove contaminants. Discard contaminated clothing and footwear that cannot be cleaned. Practice good housekeeping.

ENVIRONMENTAL CONTROLS

Comply with applicable environmental regulations limiting discharge to air, water and soil. Protect the environment by applying appropriate control measures to prevent or limit emissions.

SECTION 9 PHYSICAL AND CHEMICAL PROPERTIES

Note: Physical and chemical properties are provided for safety, health and environmental considerations only and may not fully represent product specifications. Contact the Supplier for additional information.

ExxonMobil

Product Name: MOBILGREASE XHP 222
Revision Date: 13 Sep 2013
Page 5 of 9

GENERAL INFORMATION

Physical State: Solid
Form: Semi-fluid
Color: Dark Blue
Odor: Characteristic
Odor Threshold: N/D

IMPORTANT HEALTH, SAFETY, AND ENVIRONMENTAL INFORMATION

Relative Density (at 15 °C): 0.91
Flash Point [Method]: >204°C (400°F) [EST. FOR OIL, ASTM D-92 (COC)]
Flammable Limits (Approximate volume % in air): LEL: N/D UEL: N/D
Autoignition Temperature: N/D
Boiling Point / Range: > 316°C (600°F)
Vapor Density (Air = 1): N/D
Vapor Pressure: < 0.013 kPa (0.1 mm Hg) at 20 °C
Evaporation Rate (n-butyl acetate = 1): N/D
pH: N/A
Log Pow (n-Octanol/Water Partition Coefficient): > 3.5
Solubility in Water: Negligible
Viscosity: 220 cSt (220 mm2/sec) at 40 °C | >16 cSt (16 mm2/sec) at 100°C
Oxidizing Properties: See Hazards Identification Section.

OTHER INFORMATION

Freezing Point: N/D
Melting Point: >260°C (500°F)
DMSO Extract (mineral oil only), IP-346: < 3 %wt
Decomposition Temperature: N/D

NOTE: Most physical properties above are for the oil component in the material.

SECTION 10 STABILITY AND REACTIVITY

STABILITY: Material is stable under normal conditions.

CONDITIONS TO AVOID: Excessive heat. High energy sources of ignition.

MATERIALS TO AVOID: Strong oxidizers

HAZARDOUS DECOMPOSITION PRODUCTS: Material does not decompose at ambient temperatures.

HAZARDOUS POLYMERIZATION: Will not occur.

SECTION 11 TOXICOLOGICAL INFORMATION

ACUTE TOXICITY

Route of Exposure	Conclusion / Remarks
Inhalation	
Toxicity: No end point data for material.	Minimally Toxic. Based on assessment of the components.
Irritation: No end point data for material.	Negligible hazard at ambient/normal handling temperatures.

Ingestion	
Toxicity: No end point data for material.	Minimally Toxic. Based on assessment of the components.
Skin	
Toxicity: No end point data for material.	Minimally Toxic. Based on assessment of the components.
Irritation: No end point data for material.	Negligible irritation to skin at ambient temperatures. Based on assessment of the components.
Eye	
Irritation: No end point data for material.	May cause mild, short-lasting discomfort to eyes. Based on assessment of the components.

CHRONIC/OTHER EFFECTS

Contains:

Base oil severely refined: Not carcinogenic in animal studies. Representative material passes IP-346, Modified Ames test, and/or other screening tests. Dermal and inhalation studies showed minimal effects; lung non-specific infiltration of immune cells, oil deposition and minimal granuloma formation. Not sensitizing in test animals.
C.I. Solvent blue: Positive in the Ames and Mouse Lymphoma mutagenicity assay.
Middle distillates: Carcinogenic in animal tests. Lifetime skin painting tests produced tumors, but the mechanism is due to repeated cycles of skin damage and restorative hyperplasia. This mechanism is considered unlikely in humans where such prolonged skin irritation would not be tolerated. Did not cause mutations In Vitro. Inhalation of vapors did not result in reproductive or developmental effects in laboratory animals. Inhalation of high concentrations in animals resulted in respiratory tract irritation, lung changes and some reduction in lung function. Non-sensitizing in test animals.

The following ingredients are cited on the lists below: None.

--REGULATORY LISTS SEARCHED--

1 = NTP CARC	3 = IARC 1	5 = IARC 2B
2 = NTP SUS	4 = IARC 2A	6 = OSHA CARC

SECTION 12 ECOLOGICAL INFORMATION

The information given is based on data available for the material, the components of the material, and similar materials.

ECOTOXICITY

Material -- Not expected to be harmful to aquatic organisms.

MOBILITY

Base oil component -- Low solubility and floats and is expected to migrate from water to the land. Expected to partition to sediment and wastewater solids.

PERSISTENCE AND DEGRADABILITY

Biodegradation:

Base oil component -- Expected to be inherently biodegradable

BIOACCUMULATION POTENTIAL

Base oil component -- Has the potential to bioaccumulate, however metabolism or physical properties may reduce the bioconcentration or limit bioavailability.

SECTION 13 DISPOSAL CONSIDERATIONS

Disposal recommendations based on material as supplied. Disposal must be in accordance with current applicable laws and regulations, and material characteristics at time of disposal.

DISPOSAL RECOMMENDATIONS

Product is suitable for burning in an enclosed controlled burner for fuel value or disposal by supervised incineration at very high temperatures to prevent formation of undesirable combustion products.

REGULATORY DISPOSAL INFORMATION

RCRA Information: The unused product, in our opinion, is not specifically listed by the EPA as a hazardous waste (40 CFR, Part 261D), nor is it formulated to contain materials which are listed as hazardous wastes. It does not exhibit the hazardous characteristics of ignitability, corrositivity or reactivity and is not formulated with contaminants as determined by the Toxicity Characteristic Leaching Procedure (TCLP). However, used product may be regulated.

Empty Container Warning Empty Container Warning (where applicable): Empty containers may contain residue and can be dangerous. Do not attempt to refill or clean containers without proper instructions. Empty drums should be completely drained and safely stored until appropriately reconditioned or disposed. Empty containers should be taken for recycling, recovery, or disposal through suitably qualified or licensed contractor and in accordance with governmental regulations. DO NOT PRESSURISE, CUT, WELD, BRAZE, SOLDER, DRILL, GRIND, OR EXPOSE SUCH CONTAINERS TO HEAT, FLAME, SPARKS, STATIC ELECTRICITY, OR OTHER SOURCES OF IGNITION. THEY MAY EXPLODE AND CAUSE INJURY OR DEATH.

SECTION 14 TRANSPORT INFORMATION

LAND (DOT): Not Regulated for Land Transport

LAND (TDG): Not Regulated for Land Transport

SEA (IMDG): Not Regulated for Sea Transport according to IMDG-Code

AIR (IATA): Not Regulated for Air Transport

SECTION 15 REGULATORY INFORMATION

OSHA HAZARD COMMUNICATION STANDARD: When used for its intended purposes, this material is not

classified as hazardous in accordance with OSHA 29 CFR 1910.1200.

Complies with the following national/regional chemical inventory requirements: AICS, ENCS, IECSC, PICCS, TSCA

Special Cases:

Inventory	Status
KECI	Restrictions Apply
NDSL	Restrictions Apply

EPCRA SECTION 302: This material contains no extremely hazardous substances.

SARA (311/312) REPORTABLE HAZARD CATEGORIES: None.

SARA (313) TOXIC RELEASE INVENTORY:

Chemical Name	CAS Number	Typical Value
ZINC DITHIOPHOSPHATE	68649-42-3	1 - 2.5%

The following ingredients are cited on the lists below:

Chemical Name	CAS Number	List Citations
ETHYL BENZENE	100-41-4	10
NAPHTHENIC ACIDS, ZINC SALTS	12001-85-3	15
XYLENES	1330-20-7	15
ZINC DITHIOPHOSPHATE	68649-42-3	13, 15, 17, 19
ZINC NEODECANOATE	27253-29-8	15

--REGULATORY LISTS SEARCHED--

1 = ACGIH ALL	6 = TSCA 5a2	11 = CA P65 REPRO	16 = MN RTK
2 = ACGIH A1	7 = TSCA 5e	12 = CA RTK	17 = NJ RTK
3 = ACGIH A2	8 = TSCA 6	13 = IL RTK	18 = PA RTK
4 = OSHA Z	9 = TSCA 12b	14 = LA RTK	19 = RI RTK
5 = TSCA 4	10 = CA P65 CARC	15 = MI 293	

Code key: CARC=Carcinogen; REPRO=Reproductive

SECTION 16	OTHER INFORMATION

N/D = Not determined, N/A = Not applicable

THIS SAFETY DATA SHEET CONTAINS THE FOLLOWING REVISIONS:
Revision Changes:
Section 11: Inhalation Lethality Test Comment information was modified.
Section 16: MSN, MAT ID information was modified.

Product Name: MOBILGREASE XHP 222
Revision Date: 13 Sep 2013
Page 9 of 9

Section 09: Decomposition Temperature information was added.
Section 09: Decomposition Temp - Header information was added.

The information and recommendations contained herein are, to the best of ExxonMobil's knowledge and belief, accurate and reliable as of the date issued. You can contact ExxonMobil to insure that this document is the most current available from ExxonMobil. The information and recommendations are offered for the user's consideration and examination. It is the user's responsibility to satisfy itself that the product is suitable for the intended use. If buyer repackages this product, it is the user's responsibility to insure proper health, safety and other necessary information is included with and/or on the container. Appropriate warnings and safe-handling procedures should be provided to handlers and users. Alteration of this document is strictly prohibited. Except to the extent required by law, re-publication or retransmission of this document, in whole or in part, is not permitted. The term, "ExxonMobil" is used for convenience, and may include any one or more of ExxonMobil Chemical Company, Exxon Mobil Corporation, or any affiliates in which they directly or indirectly hold any interest.

Internal Use Only
MHC: 0B,0B,0,0,0,0 PPEC: A

DGN: 2006153XUS (550268)

Copyright 2002 Exxon Mobil Corporation, All rights reserved

11.5.6 INGERSOLL RAND NO. 50 OIL

Ingersoll Rand

Material Safety Data Sheet

Ingersoll Rand # 50 Oil

Section 1. Product and Company Identification

Product Name	: Ingersoll Rand # 50 Oil
Synonym	: Not Available
Product Use	: Lubricant
Validation Date	: 04/11/2011
In Case of Emergency	: **1-800-TOOL HLP**
	1-800-866-5457
MSDS authored by:	: Ingersoll Rand Industrial Technologies 800-A Beaty Street, P.O. Box 1600, Davidson, NC 28036

Section 2. Hazards identification

Hazardous Materials Identification System (HMIS) :

Health	Flammability	Reactivity
1	1	0

Chemical Name	: Not Applicable - Mixture
Chemical Family	: Petroleum Hydrocarbon
Product Appearance and Odor	: Amber Liquid, petroleum odor
Route of Exposure	: Inhalation and skin contact
Potential Health Effects	: Prolonged or repeated skin contact with this product tends to remove skin oils possibly leading to irritation and dermatitis. Product contacting the eye may cause irritation. Product has a low order of oral and dermal toxicity. Possible aspiration hazard. Induced vomiting may cause aspiration of product into the lungs.
Carcinogenicity	: None
OSHA Designation	: None
NTP Designation	: None
IARC Designation	: None
Signs/Symptoms	: Skin and eye irritation, defatting of skin, nausea and vomiting.

Section 3. Composition / Information on Ingredients

Chemical Name	**CAS #(s)**	**Percent**
Petroleum based lubricating oil	64742-54-7, 64742-65-0	>99%
OSHA PEL TWA	5 mg/m^3	
ACGIH TLV TWA	5 mg/m^3	
ACGIH STEL/Ceiling	Not provided	

Chemical Name	**CAS #(s)**	**Percent**
Butylated hydroxytoluene	128-39-2	<1%
OSHA PEL TWA	Not established	
ACGIH TLV TWA	Not established	
ACGIH STEL/Ceiling	Not provided	

Section 4. First Aid Measures

Eye Contact	: Flush with clear water for at least 15 minutes. If irritation persists, seek medical attention.
Skin contact	: Remove contaminated clothing and wash skin thoroughly with soap and water.
Inhalation	: Vapor pressure is very low. Vapor inhalation under ambient conditions is normally not a problem. If overcome by vapor from hot product, immediately remove to fresh air and call a physician. If breathing is irregular or has stopped, start resuscitation; administer oxygen if available. If overexposure to oil mist, remove from further exposure until excessive oil mist condition subsides.
Ingestion	: If ingested, do not induce vomiting. Call a physician immediately.

Ingersoll Rand # 50 Oil /Automotive Air Tool Lubricant MSDS Page 1 of 3

Section 5. Fire-Fighting Measures

Flash Point : 177 °C (350 °F)
Flash Point Method : COC
Auto-ignition Temperature : Not established
National Fire Protection Association (NFPA) :

Health	Flammability	Reactivity
1	1	0

Upper Flammable or Explosive Limits : Not established
Lower Flammable or Explosive Limits : Not established
Extinguishing Media : Foam, water spray (fog), dry chemical, carbon dioxide and vaporizing liquid type extinguishing agents may all be suitable for extinguishing fires involving this type product, depending on size or potential size of fire and circumstances related to the situation. Water froth may be used to flush spills away from exposure.
Fire Fighting Procedures : Minimize breathing gases, vapor, fumes, and smoke, or decomposing products. Do not enter any enclosed or confined area without proper protective equipment and breathing apparatus.

Section 6. Accidental Release Measures

Leak Response : Keep product out of sewers and watercourses by diking or impounding. Absorb with sand or inert material. Sweep or scoop up and remove. Prevent spread of spill. Advise authorities if product has entered or may enter sewers, watercourses or extensive land areas. Assure conformity with local regulations.
Disposal Methods : Assure conformity with applicable disposal regulations. Dispose of absorbed material at an approved waste site or facility. (Consult federal, state, or local authorities for proper disposal procedures.)

Section 7. Handling and Storage

Handling procedures : Keep containers closed when not in use. Do not handle near heat, sparks, flame, or strong oxidants.

Section 8. Exposure Controls / Personal Protection

Ventilation : Provide ventilation sufficient to prevent exceeding recommended exposure limit or buildup of explosive concentrations or vapor in air. Use local exhaust to capture vapor, mist or fumes, if necessary. Workplace environment conditions vary widely. Therefore design criteria for ventilation cannot be specified in a MSDS.
Respiratory Protection : Use only NIOSH approved equipment. Normally not needed at ambient temperatures. Use supplied air respiratory protection in confined or enclosed spaces, if needed. Use filter, dust, fume, or vapor respirator type under misting conditions. Use can or cartridge, gas or vapor respirator type under conditions exceeding TWA standard.
OSHA PEL TWA : 5 mg/m^3
ACGIH TLV TWA : 5 mg/m^3
Protective Gloves : Use chemical-resistant gloves, if needed, to avoid prolonged or repeated skin contact.
Eye Protection : Use splash goggles or face shield when eye contact may occur due to splashing or spraying of material.
Other Protective Equipment : Use chemical-resistant apron or other impervious clothing, if needed, to avoid contaminating regular clothing, which could result in prolonged or repeated skin contact.
Personal Hygiene : There are no known hazards associated with this material when used as recommended. The following general hygiene considerations are recognized as common good industrial hygiene practices. Minimize breathing vapor, mist, or fumes. Avoid prolonged or repeated contact with skin. Remove contaminated clothing; launder or dry-clean before reuse. Remove contaminated shoes and thoroughly clean before reuse; discard if oil-soaked. Cleanse skin thoroughly after contact, before breaks and meals, and at end of work period. Product is readily removed from skin by waterless hand cleaners, followed by washing thoroughly with soap and water.

Page 2 of 3 Ingersoll Rand # 50 Oil/Automotive Air Tool Lubricant MSDS

Section 9. Physical and Chemical Properties

Physical State/Appearance	: Amber liquid, petroleum odor	**Flash Point**	: 177 °C (350 °F)
p/H	: Not rated	**Flash Point Method**	: COC
Decomposition Temperature	: Not available	**Solubility In Water**	: Nil
Vapor Pressure	: < .01 mmHg @ 20 °C	**Evaporation Point (n-Butyl Acetate = 1)**	: Not available
Vapor Density (Air = 1)	: > 5	**VOC Content**	: 0.11 lb/gal
Boiling Range	: Not available	**Viscosity**	: Unknown
Melting Point	: Not applicable	**Specific Gravity (25 °C/25 °C) (Water = 1)**	: < 1.0

Section 10. Stability and Reactivity

Chemical Stability : Yes
Conditions To Avoid : Open flames
Incompatibilities with Other Materials : Strong oxidizers, concentrated oxygen, sodium or calcium hypochlorite for explosion hazard
Hazardous Polymerization : No
Hazardous Decomposition Products : (Under fire conditions) Smoke, fumes, carbon monoxide, and other decomposition products in case of incomplete combustion.

Section 11. Toxicological Information

Oral (Acute) : Not established
Dermal (Acute) : Not established
Eye : Not established
Inhalation (Acute) : Not established
Chronic, Subchronic, Etc. : Not established
Medical Conditions Aggravated by Exposure : Not established
Toxicological Paragraph : This product does NOT contain any ingredients identified as carcinogenic by IARC, NTP, or OSHA

Section 12. Ecological Information

Ecological Paragraph : Not established

Section 13. Disposal Considerations

Waste Disposal : Consult federal, state, or local authorities for proper disposal procedures. Assure conformity with applicable disposal regulations. Dispose of absorbed material at an approved waste site or facility.

Section 14. Transport Information

Transportation Information : Not regulated by Department of Transportation (DOT)

Section 15. Regulatory Information

Applies to all ingredients :
SARA : This material is not known to contain any chemicals at a concentration of greater than 1.0 percent or carcinogenic chemicals at a concentration greater than .01 percent.
US Federal : Not provided
State : Not provided

Section 16. Other Information

Disclaimer : The above information is accurate to the best of our knowledge. However, since data, safety standards, and government regulations are subject to change and the conditions of handling and use, or misuse use beyond our control, seller makes no warranty, either expressed or implied, with respect to the completeness or continuing accuracy of the information contained herein and disclaims all liability for reliance thereon. User should satisfy himself that he has all current data relevant to his particular use.
Other Information : Not available

Ingersoll Rand # 50 Oil /Automotive Air Tool Lubricant MSDS Page 3 of 3

11.5.7 CRC TAC 2 ADHESIVE CHAIN LUBRICANT

CRC Industries, Inc.
885 Louis Drive • Warminster PA • 18974

Technical Data Sheet

TAC 2™ Adhesive Chain Lubricant

I. Product Description

CRC TAC 2™ is an exceptional lubricant, with a tough adhesive quality, which will bond to chain/wear surfaces to keep them in peak operating condition by reducing friction and wear that cause metal fatigue. **CRC TAC 2™** contains a tackifier that enables the lubricant to cling tenaciously to metal surfaces without increasing the viscosity. Regular use of **CRC TAC 2™** will help inhibit corrosion, reduce load stress and help increase chain life.

II. Applications

Recommended for use as a lubricant and corrosion inhibitor on all types of drive chains, open gears, hoists, winches, pulleys, fork lifts, rollers, garage doors, bushings, seals, o-rings, and wire ropes.

III. Features & Benefits

- **Low Viscosity**. Provides the ability to penetrate and thoroughly coat vital chain pin and bushing areas.
- **Contains Molybdenum**. Provides cling ability to avoid sling-off or excess dripping.
- **High Temperature Stability**. Operates effectively in temperatures up to 350° F continuous, equivalent to many grease products. Covers wide range of applications.
- **Blue Color** allows easy identification of lubricated parts and equipment.
- **No Known Ozone Depleting Chemicals**. Offers effective performance while complying with the EPA regulations on the use of ozone depleting chemicals.
- **M.S.D.[L.]™-Material Safety Data Label**. Provides instant access to current safety information should an accident or OSHA inspection occur. Helps comply **with OSHA Hazard Communications Standard 29 CFR 1910.1200**.

IV. Physical Properties without propellant

Flash Point	<0ºF TCC	**Boiling Point**	140°F
Odor	Mild petroleum	**Solubility**	Negligible in water
Appearance	Blue liquid	**% Volatile**	81.3%
Vapor Density	>1 (air=1)	**Specific Gravity**	0.710
VOC Content (Fed)	577.2 g/L	**Temperature Range**	350°F (Continuous)
Shelf Life	2 years	**Propellant**	Hydrocarbon
Sara Title III, Sect. 313 Chemicals	Yes		
Prop 65	No		

V. Specifications and Approvals

- NSF Registration # 144243, Category Code (H2) for use in federally inspected meat and poultry plants.

TAC 2™ Adhesive Chain Lubricant

VI. Performance Characteristics

Type of Film	Non-drying
Base Type	Organic Molybdenum
ASTM D-3233 (Falex Load Test)	1,500 lbs.

VII. Directions

1. Do not apply while equipment is energized.
2. Shake well before use.
3. Spray upper edges of overlapping chain side plates and allow lubricant to set up before re-energizing.

VIII. Package Description

Part Number	Container Size
03076	16 oz Aerosol

IX. Disposal

Disposal requirements vary by state and local jurisdiction. All used and unused product should be disposed of in conformance with local, state and federal regulations.

X. Special Use Warnings

Aerosol Cans
Do not puncture, incinerate or store above 120°F. Exposure to high temperatures may cause can to burst. Do not place in direct sunlight or near any heat source. Use only in well ventilated area. Avoid continuous breathing of vapor and spray mist. Avoid contact with skin and eyes. If ventilation is not adequate, respiratory protection should be worn. Aerosol cans will conduct electricity. Keep away from all live electrical sources including battery terminals, solenoids, electrical panels and other electronic components. Failure to observe this warning may result in serious injury from flash fire and/or electrical shock.

Bulk
Product is extremely flammable and should be kept from all flames and other ignition sources. Vapors are heavier than air and can collect in low-lying areas.

General
Use only in well ventilated area. Ventilation may be improved by opening a window or door or providing mechanical assistance. Avoid continuous breathing of vapor and spray mist. Avoid contact with skin and eyes. If ventilation is not adequate, respiratory protection should be worn. For more information regarding short term and long term exposure, review this product's Material Safety Data Sheet.

DISCLAIMER: This information is accurate to the best of CRC Industries' knowledge or obtained from sources believed by CRC to be accurate. Before using any product, read all warnings and directions on the label. All products should be tested for suitability on a particular application prior to actual use. CRC Industries, Inc. makes no representations or warranties of any kind concerning this data.

CRC Industries, Inc. *Industrial Products Division* *Warminster, PA 18974*
Technical Service: (800)521-3168 *Customer Service: (800)272-4620* *CRC On-Line: (215)442-6260*

Literature Reorder #TDS343 ***CRC On-Line # 343*** ***REV. 9/11***

CRC MATERIAL SAFETY DATA SHEET

Section 1: Product & Company Identification

Product Name: **TAC 2™ Adhesive Chain Lube** (aerosol)

Product Number (s): **03076**

Product Use: industrial chain lubricant

Manufacturer / Supplier Contact Information:

In United States:
CRC Industries, Inc.
885 Louis Drive
Warminster, PA 18974
www.crcindustries.com
1-215-674-4300 (General)
(800) 521-3168 (Technical)
(800) 272-4620 (Customer Service)

In Canada:
CRC Canada Co.
2-1246 Lorimar Drive
Mississauga, Ontario L5S 1R2
www.crc-canada.ca
1-905-670-2291

In Mexico:
CRC Industries Mexico
Av. Benito Juárez 4055 G
Colonia Orquídea
San Luís Potosí, SLP CP 78394
www.crc-mexico.com
52-444-824-1666

24-Hr Emergency – CHEMTREC: (800) 424-9300 or (703) 527-3887

Section 2: Hazards Identification

Emergency Overview

DANGER: Extremely Flammable. Harmful or Fatal if Swallowed. Contents Under Pressure.
As defined by OSHA's Hazard Communication Standard, this product is hazardous.
Appearance & Odor: Blue liquid with mild petroleum odor

Potential Health Effects:

ACUTE EFFECTS:

EYE: May cause mild irritation including stinging and redness, but does not injure eye.

SKIN: Single, brief exposures may cause mild irritation. Frequent or prolonged contact may cause more severe irritation, defatting of the skin, and dermatitis.

INHALATION: High vapor concentrations are irritating to the respiratory tract and may cause headaches, dizziness, anesthesia, drowsiness, unconsciousness, and other central nervous system effects, including death. May cause peripheral nervous system disorder and/or damage.

INGESTION: Low order of toxicity by ingestion. Main hazard is aspiration into the lungs during swallowing or vomiting. Small amounts aspirated into the respiratory system may cause bronchopneumonia or pulmonary adema, possibly progressing to death.

CHRONIC EFFECTS: Overexposure to n-hexane may cause progressive and potentially irreversible damage to the peripheral nervous system, particularly in the arms and legs.

TARGET ORGANS: Central nervous system, peripheral nervous system, respiratory system

Medical Conditions Aggravated by Exposure: skin and respiratory conditions

See Section 11 for toxicology and carcinogenicity information on product ingredients.

Page 1 of 7

Product Name: TAC 2™ Adhesive Chain Lube (aerosol)
Product Number (s): 03076

Section 3: Composition/Information on Ingredients

COMPONENT	CAS NUMBER	% by Wt.
Hexane isomers	107-83-5 / 64742-49-0	50 - 60
Liquefied petroleum gas	68476-86-8	25 - 35
Acrylic copolymer	proprietary	5 - 15
Petrolatum	8009-03-8	5 - 10
n-Hexane	110-54-3	1.6

Section 4: First Aid Measures

Eye Contact: Immediately flush with plenty of water for 15 minutes. Call a physician if irritation persists.

Skin Contact: Remove contaminated clothing and wash affected area with soap and water. Call a physician if irritation persists. Wash contaminated clothing prior to re-use.

Inhalation: Remove person to fresh air. Keep person calm. If not breathing, give artificial respiration. If breathing is difficult give oxygen. Call a physician.

Ingestion: Do NOT induce vomiting. Contact a physician immediately.

Note to Physicians: Treat symptomatically. Gastric lavage using a cuffed endotracheal tube may be performed at your discretion.

Section 5: Fire-Fighting Measures

Flammable Properties: This product is extremely flammable in accordance with aerosol flammability definitions. (See 16 CFR 1500.3(c)(6)).

Flash Point: < 0°F (TCC) Upper Explosive Limit: 9.0
Autoignition Temperature: 489°F Lower Explosive Limit: 1.7

Fire and Explosion Data:

Suitable Extinguishing Media: Class B fire extinguishers, dry chemical, foam or CO_2

Products of Combustion: Fumes, smoke and carbon monoxide

Explosion Hazards: Aerosol containers, when exposed to heat from fire, may build pressure and explode. Vapors may accumulate in a confined space and create a flammable atmosphere.

Protection of Fire-Fighters: Firefighters should wear self-contained, NIOSH-approved breathing apparatus for protection against suffocation and possible toxic decomposition products. Proper eye and skin protection should be provided. Use water spray to keep fire-exposed containers cool and to knock down vapors which may result from product decomposition. Do not spray water directly on fire; product will float and could be reignited on surface of water.

Section 6: Accidental Release Measures

Personal Precautions: Use personal protection recommended in Section 8.

Product Name: TAC 2™ Adhesive Chain Lube (aerosol)
Product Number (s): 03076

Environmental Precautions: Take precautions to prevent contamination of ground and surface waters. Do not flush into sewers or storm drains.

Methods for Containment & Clean-up: Dike area to contain spill. Remove all sources of ignition. Ventilate the area with fresh air. If in confined space or limited air circulation area, clean-up workers should wear appropriate respiratory protection. Recover or absorb spilled material using an absorbent designed for chemical spills. Place used absorbents into proper waste containers.

Section 7: Handling and Storage

Handling Procedures: Use proper grounding and bonding procedures for transferring materials. Do not use product near any source of ignition. Avoid contact with eyes and skin. Avoid breathing vapors. Use caution around energized equipment. The metal container will conduct electricity if it contacts a live source. This may result in injury to the user from electrical shock and/or flash fire. For product use instructions, please see the product label.

Storage Procedures: Store in a cool dry area out of direct sunlight. Aerosol cans must be maintained below 120 F to prevent cans from rupturing.

Aerosol Storage Level: III

Section 8: Exposure Controls/Personal Protection

Exposure Guidelines:

	OSHA		ACGIH		OTHER		
COMPONENT	TWA	STEL	TWA	STEL	TWA	SOURCE	UNIT
Hexane isomers	500(v)	1000(v)	500	1000	NE		ppm
Liquefied petroleum gas	1000	NE	1000	NE	NE		ppm
Acrylic copolymer	NE	NE	NE	NE	NE		
Petrolatum	NE	NE	NE	NE	NE		
n-Hexane	500	NE	50(s)	NE	NE		ppm
N.E. – Not Established		(c) – ceiling		(s) – skin		(v) – vacated	

Controls and Protection:

Engineering Controls: Area should have ventilation to provide fresh air. Local exhaust ventilation is generally preferred because it can control the emissions of the contaminant at the source, preventing dispersion into the general work area. Use mechanical means if necessary to maintain vapor levels below the exposure guidelines. If working in a confined space, follow applicable OSHA regulations.

Respiratory Protection: None required for normal work where adequate ventilation is provided. If engineering controls are not feasible or if exposure exceeds the applicable exposure limits, use a NIOSH-approved cartridge respirator with organic vapor cartridge. Air monitoring is needed to determine actual employee exposure levels. Use a self-contained breathing apparatus in confined spaces and for emergencies.

Eye/face Protection: For normal conditions, wear safety glasses. Where there is reasonable probability of liquid contact, wear splash-proof goggles.

Skin Protection: Use protective gloves such as nitrile, PVC or Viton. Also, use full protective clothing if there is prolonged or repeated contact of liquid with skin.

Page 3 of 7

Product Name: TAC 2™ Adhesive Chain Lube (aerosol)
Product Number (s): 03076

Section 9: Physical and Chemical Properties

Physical State: liquid
Color: blue
Odor: mild petroleum
Odor Threshold: ND
Specific Gravity: 0.710
Initial Boiling Point: 140°F
Freezing Point: < -76°F
Vapor Pressure: 160 mmHg @ 68°F
Vapor Density: > 1 (air = 1)
Evaporation Rate: fast
Solubility: negligible in water
Coefficient of water/oil distribution: ND
pH: NA
Volatile Organic Compounds: wt %: 81.3 g/L: 577.2 lbs./gal: 4.8

Section 10: Stability and Reactivity

Stability: Stable

Conditions to Avoid: Sources of ignition, temperature extremes

Incompatible Materials: Strong oxidizers

Hazardous Decomposition Products: Oxides of carbon

Possibility of Hazardous Reactions: No

Section 11: Toxicological Information

Long-term toxicological studies have not been conducted for this product. The following information is available for components of this product.

Acute Toxicity:

Component	Oral LD50 (rat)	Dermal LD50 (rabbit)	Inhalation LC50 (rat)
Hexane isomers	No data	No data	No data
Liquefied petroleum gas	No data	No data	No data
Acrylic copolymer	No data	No data	No data
Petrolatum	> 5 g/kg	> 2 g/kg	No data
n-Hexane	28,710 mg/kg	3000 mg/kg	48,000 ppm/4H

Page 4 of 7

Product Name: TAC 2™ Adhesive Chain Lube (aerosol)
Product Number (s): 03076

Chronic Toxicity:

Component	OSHA Carcinogen	IARC Carcinogen	NTP Carcinogen	Irritant	Sensitizer
Hexane isomers	No	No	No	E & S (mild)	Unknown
Liquefied petroleum gas	No	No	No	No	No
Acrylic copolymer	No	No	No	E & S (mild)	Unknown
Petrolatum	No	No	No	No	Unknown
n-Hexane	No	No	No	E, S & R (moderate)	Unknown

E – Eye S – Skin R - Respiratory

Reproductive Toxicity: No information available
Teratogenicity: No information available
Mutagenicity: No information available
Synergistic Effects: No information available

Section 12: Ecological Information

Ecological studies have not been conducted for this product. The following information is available for components of this product.

Ecotoxicity: n-hexane - 48 Hr EC50 water flea: 3.87 mg/L
96 Hr LC50 Lepomis macrochirus: 4.12 mg/L
Persistence / Degradability: No information available
Bioaccumulation / Accumulation: No information available
Mobility in Environment: No information available

Section 13: Disposal Considerations

Waste Classification: The dispensed liquid product is a RCRA hazardous waste for the characteristic of ignitability with a waste code of D001. (See 40 CFR Part 261.20 – 261.33)
Aerosol should be fully emptied and depressurized before disposal. Empty containers may be recycled.

All disposal activities must comply with federal, state, provincial and local regulations. Local regulations may be more stringent than state, provincial or national requirements.

Section 14: Transport Information

US DOT (ground): Consumer Commodity, ORM-D

ICAO/IATA (air): Consumer Commodity, ID8000, 9

IMO/IMDG (water): Aerosols, UN1950, 2.1, Limited Quantity

Special Provisions: None

Section 15: Regulatory Information

Page 5 of 7

Product Name: TAC 2™ Adhesive Chain Lube (aerosol)
Product Number (s): 03076

U.S. Federal Regulations:

Toxic Substances Control Act (TSCA):
All ingredients are either listed on the TSCA inventory or are exempt.

Comprehensive Environmental Response, Compensation and Liability Act (CERCLA):
Reportable Quantities (RQ's) exist for the following ingredients: n-hexane (5000 lbs)

Spills or releases resulting in the loss of any ingredient at or above its RQ require immediate notification to the National Response Center (800-424-8802) and to your Local Emergency Planning Committee.

Superfund Amendments Reauthorization Act (SARA) Title III:
Section 302 Extremely Hazardous Substances (EHS): None

Section 311/312 Hazard Categories:

Fire Hazard	Yes
Reactive Hazard	No
Release of Pressure	Yes
Acute Health Hazard	Yes
Chronic Health Hazard	No

Section 313 Toxic Chemicals: This product contains the following substances subject to the reporting requirements of Section 313 of Title III of the Superfund Amendments and Reauthorization Act of 1986 and 40 CFR Part 372:
n-hexane (1.6%)

Clean Air Act:
Section 112 Hazardous Air Pollutants (HAPs): n-hexane

U.S. State Regulations:

California Safe Drinking Water and Toxic Enforcement Act (Prop 65):
This product may contain the following chemicals known to the state of California to cause cancer, birth defects or other reproductive harm: None

Consumer Products VOC Regulations: This product is not regulated.

State Right to Know:

New Jersey:	75-83-2, 110-54-3, 79-29-8, 68476-86-8
Pennsylvania:	107-83-5, 75-83-2, 110-54-3, 79-29-8, 68476-86-8
Massachusetts:	107-83-5, 75-83-2, 110-54-3, 79-29-8, 68476-86-8
Rhode Island :	110-54-3, 68476-86-8

Canadian Regulations:

Controlled Products Regulations:
This product has been classified in accordance with the hazard criteria of the Controlled Products Regulations and the MSDS contains all the information required by the Controlled Products Regulations.

WHMIS Hazard Class: A, B5

Canadian DSL Inventory: All ingredients are either listed on the DSL Inventory or are exempt.

European Union Regulations:

RoHS Compliance: This product is compliant with Directive 2002/95/EC of the European Parliament and of the Council of 27 January 2003. This product does not contain any of the restricted substances as listed in Article 4(1) of the RoHS Directive.

Additional Regulatory Information: None

Page 6 of 7

Product Name: TAC 2™ Adhesive Chain Lube (aerosol)
Product Number (s): 03076

Section 16: Other Information

HMIS® (II)	
Health:	2
Flammability:	3
Reactivity:	0
PPE:	B

NFPA

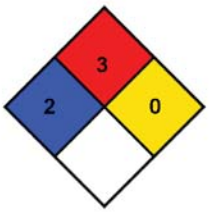

Ratings range from 0 (no hazard) to 4 (severe hazard)

Prepared By: Michelle Rudnick
CRC #: 932A/B
Revision Date: 11/11/2010

Changes since last revision: new product

The information contained in this document applies to this specific material as supplied. It may not be valid for this material if it is used in combination with any other materials. This information is accurate to the best of CRC Industries' knowledge or obtained from sources believed by CRC to be accurate. Before using any product, read all warnings and directions on the label. For further clarification of any information contained on this MSDS consult your supervisor, a health & safety professional, or CRC Industries.

ACGIH: American Conference of Governmental Industrial Hygienists
CAS: Chemical Abstract Service
CFR: Code of Federal Regulations
DOT: Department of Transportation
DSL: Domestic Substance List
g/L: grams per Liter
HMIS: Hazardous Materials Identification System
IARC: International Agency for Research on Cancer
IATA: International Air Transport Association
ICAO: International Civil Aviation Organization
IMDG: International Maritime Dangerous Goods
IMO: International Maritime Organization
lbs./gal: pounds per gallon
LC: Lethal Concentration
LD: Lethal Dose

NA: Not Applicable
ND: Not Determined
NIOSH: National Institute of Occupational Safety & Health
NFPA: National Fire Protection Association
NTP: National Toxicology Program
OSHA: Occupational Safety and Health Administration
PMCC: Pensky-Martens Closed Cup
PPE: Personal Protection Equipment
ppm: Parts per Million
RoHS: Restriction of Hazardous Substances
STEL: Short Term Exposure Limit
TCC: Tag Closed Cup
TWA: Time Weighted Average
WHMIS: Workplace Hazardous Materials Information System

Page 7 of 7

11.5.8 MOBIL SHC 629

Mobil

Mobil SHC 600 Series

Supreme Performance Gear and Bearing Oils

Product Description

Mobil SHC 600 Series lubricants are supreme performance gear and bearing oils designed to provide outstanding service in terms of equipment protection, oil life and problem-free operation enabling increased customer productivity. These scientifically engineered oils are formulated from base fluids with an inherently high viscosity index and a unique, proprietary, additive system which enables these products to provide outstanding performance in extreme service applications at high and low temperatures, well beyond the capabilities of mineral oils. These products are resistant to mechanical shear, even in heavily loaded gear and high shear bearing applications, so that there is virtually no loss of viscosity.

The Mobil SHC 600 Series products have low traction coefficients, which derive from the molecular structure of the base stocks used. This results in low fluid friction in the load zone of non-conforming surfaces such as gears and rolling contact bearings. Low fluid friction produces lower operating temperatures and improved gear efficiency, which translates into reduced power consumption. It also results in extended parts life and allows for more economical equipment design. The base oils used in the Mobil SHC 600 Series have outstanding response to antioxidant additives resulting in superior resistance to oxidation and sludging, especially at high temperatures. The additive combination used in these oils also provides exceptional resistance to rusting and corrosion, very good antiwear, demulsibility, foam control and air release properties, as well as multimetal compatibility. The Mobil SHC 600 Series oils are also compatible with the same seal and other construction materials used in equipment normally lubricated with mineral oils.

The leading edge technology on which Mobil SHC 600 Series lubricants have always been based has made these the products of choice for operators of a wide range of equipment, worldwide. While initially recognized as a high temperature problem solver, these products are now used in many industrial applications because of the range of benefits they offer.

Features and Benefits

The Mobil SHC brand of lubricants are recognized and appreciated around the world for their innovation and outstanding performance. These molecular designed synthetic products, pioneered by our research scientists, symbolize the continuing commitment to using advanced technology to provide outstanding lubricant products. A key factor in the development of Mobil SHC 600 Series were the close contacts between our scientists and application specialists with key OEMs to ensure that our product offerings will provide exceptional performance in the continually evolving industrial equipment designs.

Our work with equipment builders has helped confirm the results from our own laboratory tests showing the exceptional performance of the Mobil SHC 600 Series lubricants. Not least among the benefits, shown in work with OEMs, is the potential for significant efficiency improvements in changing from mineral oil. These benefits are particularly evident in equipment which, by design, cannot avoid low overall efficiency, such as high ratio worm gears.

To combat high thermal exposure of the oil, our product formulation scientists chose select base oils for Mobil SHC 600 Series oils because of their exceptional thermal/oxidative resistance potential. Our formulators chose specific additives which would maximize the benefits of the base oils to provide excellent oil life and deposit control and resistance to thermal/oxidative and chemical degradation. This formulation approach provides low temperature fluidity characteristics unmatched by mineral products and is a key benefit for remote, low ambient temperature applications. The Mobil SHC 600 Series oils offer the following features and potential benefits:

Features	Advantages and Potential Benefits
Superb high temperature thermal/oxidation resistance	Extends equipment high temperature operating capability
	Long oil life, reduced need and costs for oil change outs
	Minimizes sludge and deposits for trouble-free operation and long filter life
High Viscosity Index and absence of wax	Maintains viscosity and film thickness at high temperatures

High viscosity index and absence of wax	Maintains viscosity and film thickness at high temperatures
	Exceptional low temperature performance, including start-up
Low traction coefficient	Reduces overall friction and can increase efficiency in sliding mechanisms such as gearing, with potential for reduced power consumption and lower steady-state operating temperatures.
	Minimizes effects of micro slip in rolling contact bearings for longer rolling-element life potential
High load carrying capability	Protects equipment and extends life; minimizes unexpected downtime and extends service periods
Balanced additive combination	Provides excellent performance in terms of rust and corrosion prevention, water separability, foam control, air release performance ensuring problem-free operation in a wide range of industrial applications and reduced operating costs

Applications

While Mobil SHC 600 Series are compatible with mineral oil based products, admixture may detract from their performance. Consequently it is recommended that before changing a system to one of the Mobil SHC 600 Series, it should be thoroughly cleaned out and flushed to achieve the maximum performance benefits. The Mobil SHC 600 Series oils are compatible with the following seal materials: fluorocarbon, polyacrylate, polyurethane ether, some silicone, ethylene/acrylic, chlorinated polyethylene, polysulfide, and some nitrile rubbers. There is the potential for substantial variations in the elastomers being used today. For best results, consult your equipment supplier, seal manufacturer, or your local Mobil representative to verify compatibility.

Mobil SHC 600 Series lubricants are recommended for use in a wide variety of gear and bearing applications where high or low temperatures are encountered or where operating temperatures or bulk oil temperatures are such that conventional lubricants give unsatisfactory life, or where improved efficiency is needed. They are particularly effective in applications where the maintenance costs of component replacement, system cleaning and lubricant changes are high. Specific applications include:

- Filled for life gearboxes, especially high ratio/ low-efficiency worm gears
- Remotely located gearboxes, where oil change-out is difficult
- Low temperature applications, such as ski lifts where seasonal oil changes can be avoided
- Mixer roll bearings and roll neck bearings where high temperatures are encountered
- Plastic calendars
- Severe centrifuge applications, including marine centrifuges
- Railroad A/C Traction Drives
- Mobil SHC 625*, 627, 629 and 630 are suitable for Oil Flooded Rotary Screw Compressors compressing natural gas, field gas gathering, CO2 and other process gasses used in the natural gas industry

Specifications and Approvals

Mobil SHC 600 Series has the following builder approvals:	624	625	626	627	629	630	632	634	636	639
ABB TURBO HZTL 90572			X							
ABB TURBO HZTL 90617			X							
CINCINNATI MACHINE P-34									X	
CINCINNATI MACHINE P-35								X		
CINCINNATI MACHINE P-59							X			

P-59							X			
CINCINNATI MACHINE P-74						X				
CINCINNATI MACHINE P-78										X
CINCINNATI MACHINE P-80			X							
FLENDER BA 7300 table A					X					X
FLENDER BA 7300 table A and C						X	X	X		

Typical Properties

Mobil SHC 600 Series	**624**	**625 (1)**	**626**	**627**	**629**	**630**	**632**	**634**	**636**	**639**
ISO Viscosity Grade	32	46	68	100	150	220	320	460	680	1000
Viscosity, ASTM D 445										
cSt @ 40° C	31.0	46.0	66.0	97.0	149	222	320	454	652	968
cSt @ 100° C	5.8	7.7	10.3	13.7	19.0	25.7	35.0	46.5	61.2	78.5
Viscosity Index, ASTM D 2270	133	136	144	144	144	147	154	161	163	159
Pour Point, °C, ASTM D 97	-51	-48	-48	-45	-45	-42	-40	-40	-39	-33
Flash Point, °C, ASTM D 92	237	242	231	228	235	240	236	234	240	235
Specific Gravity, ASTM D 4052, 15° C/15° C	0.85	0.85	0.86	0.86	0.86	0.87	0.87	0.87	0.87	0.87
Appearance, visual	Orange	Orange	Orange	Orange	Orange	Orange	Orange	Orange	Orange	Orange
TOST, ASTM D 943, Hours to 2 NN	10,000+	10,000+	10,000+	10,000+	10,000+	10,000+	10,000+	10,000+	10,000+	10,000+
RBOT, ASTM D 2272, min.	1750	1750	1750	1750	1750	1750	1750	1750	1750	1750
Rust protection, ASTM D665, Sea Water	Pass	Pass	Pass	Pass	Pass	Pass	Pass	Pass	Pass	Pass
Water Seperability, ASTM D 1401,Min. to 37 ml water @ 54° C	20	20	20	-	-	-	-	-	-	-
Water Seperability, ASTM D 1401,Min. to 37 ml water @ 82° C	-	-	-	15	15	15	25	25	30	40
Copper Corrosion, ASTM D130, 24 hrs @ 121° C	1B	1B	1B	1B	1B	1B	1B	1B	1B	1B
Foam Test, ASTM D 892, Seq I,II,IIITendency / Stability, ml/ml	0/0, 20/0, 0/0	0/0, 0/0, 0/0	0/0, 0/0, 0/0	0/0, 0/0,0/0	0/0, 0/0,0/0	0/0, 0/0,0/0	0/0,0/0,0/0	0/0, 20/0,0/0	0/0,0/0,0/0	0/0, 0/0, 0/0
FZG scuffing test, DIN 51534 (mod), A/16.6/90, Failure Stage	10	11	11	13	13	13+	13+	13+	13+	13+
(1) 625 is available only in the USA										

Health and Safety

Based on available information, this product is not expected to produce adverse effects on health when used for the intended application and the recommendations provided in the Material Safety Data Sheet (MSDS) are followed. MSDS's are available upon request through your sales contract office, or via the Internet. This product should not be used for purposes other than its intended use. If disposing of used product, take care to protect the environment.

All products may not be available locally.

Note for Canadian users: Mobil SHC 600 Series is not controlled under Canadian WHMIS legislation.

The Mobil logotype, the Pegasus design and SHC are trademarks of ExxonMobil Corporation, or one of its subsidiaries.

11-2010

Exxon Mobil Corporation
3225 Gallows Road
Fairfax, VA 22037

1-800-ASK MOBIL (275-6624)

Typical Properties are typical of those obtained with normal production tolerance and do not constitute a specification. Variations that do not affect product performance are to be expected during normal manufacture and at different blending locations. The information contained herein is subject to change without notice. All products may not be available locally. For more information, contact your local ExxonMobil contact or visit www.exxonmobil.com
ExxonMobil is comprised of numerous affiliates and subsidiaries, many with names that include Esso, Mobil, or ExxonMobil. Nothing in this document is intended to override or supersede the corporate separateness of local entities. Responsibility for local action and accountability remains with the local ExxonMobil-affiliate entities.

Copyright © 2001-2013 Exxon Mobil Corporation. All rights reserved..

ExxonMobil

Product Name: MOBIL SHC 629
Revision Date: 11 May 2012
Page 1 of 9

MATERIAL SAFETY DATA SHEET

SECTION 1 PRODUCT AND COMPANY IDENTIFICATION

PRODUCT

Product Name: **MOBIL SHC 629**
Product Description: Synthetic Base Stocks and Additives
Product Code: 201560500540, 602946-00, 970114
Intended Use: Circulating/gear oil

COMPANY IDENTIFICATION

Supplier: **EXXON MOBIL CORPORATION**
3225 GALLOWS RD.
FAIRFAX, VA. 22037 USA

24 Hour Health Emergency	609-737-4411
Transportation Emergency Phone	800-424-9300
ExxonMobil Transportation No.	281-834-3296
Product Technical Information	800-662-4525, 800-947-9147
MSDS Internet Address	http://www.exxon.com, http://www.mobil.com

SECTION 2 COMPOSITION / INFORMATION ON INGREDIENTS

No Reportable Hazardous Substance(s) or Complex Substance(s).

SECTION 3 HAZARDS IDENTIFICATION

This material is not considered to be hazardous according to regulatory guidelines (see (M)SDS Section 15).

POTENTIAL HEALTH EFFECTS

Low order of toxicity. Excessive exposure may result in eye, skin, or respiratory irritation. High-pressure injection under skin may cause serious damage.

NFPA Hazard ID:	Health:	0	Flammability:	1	Reactivity:	0
HMIS Hazard ID:	Health:	0	Flammability:	1	Reactivity:	0

NOTE: This material should not be used for any other purpose than the intended use in Section 1 without expert advice. Health studies have shown that chemical exposure may cause potential human health risks which may vary from person to person.

SECTION 4 FIRST AID MEASURES

INHALATION

Remove from further exposure. For those providing assistance, avoid exposure to yourself or others. Use

adequate respiratory protection. If respiratory irritation, dizziness, nausea, or unconsciousness occurs, seek immediate medical assistance. If breathing has stopped, assist ventilation with a mechanical device or use mouth-to-mouth resuscitation.

SKIN CONTACT

Wash contact areas with soap and water. If product is injected into or under the skin, or into any part of the body, regardless of the appearance of the wound or its size, the individual should be evaluated immediately by a physician as a surgical emergency. Even though initial symptoms from high pressure injection may be minimal or absent, early surgical treatment within the first few hours may significantly reduce the ultimate extent of injury.

EYE CONTACT

Flush thoroughly with water. If irritation occurs, get medical assistance.

INGESTION

First aid is normally not required. Seek medical attention if discomfort occurs.

SECTION 5 FIRE FIGHTING MEASURES

EXTINGUISHING MEDIA

Appropriate Extinguishing Media: Use water fog, foam, dry chemical or carbon dioxide (CO2) to extinguish flames.

Inappropriate Extinguishing Media: Straight Streams of Water

FIRE FIGHTING

Fire Fighting Instructions: Evacuate area. Prevent runoff from fire control or dilution from entering streams, sewers, or drinking water supply. Firefighters should use standard protective equipment and in enclosed spaces, self-contained breathing apparatus (SCBA). Use water spray to cool fire exposed surfaces and to protect personnel.

Hazardous Combustion Products: Smoke, Fume, Aldehydes, Sulfur oxides, Incomplete combustion products, Oxides of carbon

FLAMMABILITY PROPERTIES

Flash Point [Method]: >210°C (410°F) [ASTM D-92]
Flammable Limits (Approximate volume % in air): LEL: 0.9 UEL: 7.0
Autoignition Temperature: N/D

SECTION 6 ACCIDENTAL RELEASE MEASURES

NOTIFICATION PROCEDURES

In the event of a spill or accidental release, notify relevant authorities in accordance with all applicable regulations. US regulations require reporting releases of this material to the environment which exceed the applicable reportable quantity or oil spills which could reach any waterway including intermittent dry creeks. The National Response Center can be reached at (800)424-8802.

PROTECTIVE MEASURES

Avoid contact with spilled material. See Section 5 for fire fighting information. See the Hazard Identification Section for Significant Hazards. See Section 4 for First Aid Advice. See Section 8 for advice on the minimum requirements for personal protective equipment. Additional protective measures may be necessary, depending on the specific circumstances and/or the expert judgment of the emergency responders.

SPILL MANAGEMENT

Land Spill: Stop leak if you can do it without risk. Recover by pumping or with suitable absorbent.

Water Spill: Stop leak if you can do it without risk. Confine the spill immediately with booms. Warn other shipping. Remove from the surface by skimming or with suitable absorbents. Seek the advice of a specialist before using dispersants.

Water spill and land spill recommendations are based on the most likely spill scenario for this material; however, geographic conditions, wind, temperature, (and in the case of a water spill) wave and current direction and speed may greatly influence the appropriate action to be taken. For this reason, local experts should be consulted. Note: Local regulations may prescribe or limit action to be taken.

ENVIRONMENTAL PRECAUTIONS

Large Spills: Dike far ahead of liquid spill for later recovery and disposal. Prevent entry into waterways, sewers, basements or confined areas.

SECTION 7 HANDLING AND STORAGE

HANDLING

Prevent small spills and leakage to avoid slip hazard. Material can accumulate static charges which may cause an electrical spark (ignition source). When the material is handled in bulk, an electrical spark could ignite any flammable vapors from liquids or residues that may be present (e.g., during switch-loading operations). Use proper bonding and/or ground procedures. However, bonding and grounds may not eliminate the hazard from static accumulation. Consult local applicable standards for guidance. Additional references include American Petroleum Institute 2003 (Protection Against Ignitions Arising out of Static, Lightning and Stray Currents) or National Fire Protection Agency 77 (Recommended Practice on Static Electricity) or CENELEC CLC/TR 50404 (Electrostatics - Code of practice for the avoidance of hazards due to static electricity).

Static Accumulator: This material is a static accumulator.

STORAGE

The container choice, for example storage vessel, may effect static accumulation and dissipation. Do not store in open or unlabelled containers.

SECTION 8 EXPOSURE CONTROLS / PERSONAL PROTECTION

Exposure limits/standards for materials that can be formed when handling this product: When mists/aerosols can occur the following are recommended: 5 mg/m³ - ACGIH TLV (inhalable fraction), 5 mg/m³ - OSHA PEL.

NOTE: Limits/standards shown for guidance only. Follow applicable regulations.

ENGINEERING CONTROLS

The level of protection and types of controls necessary will vary depending upon potential exposure conditions. Control measures to consider:
No special requirements under ordinary conditions of use and with adequate ventilation.

PERSONAL PROTECTION

Personal protective equipment selections vary based on potential exposure conditions such as applications, handling practices, concentration and ventilation. Information on the selection of protective equipment for use with this material, as provided below, is based upon intended, normal usage.

Respiratory Protection: If engineering controls do not maintain airborne contaminant concentrations at a level which is adequate to protect worker health, an approved respirator may be appropriate. Respirator selection, use, and maintenance must be in accordance with regulatory requirements, if applicable. Types of respirators to be considered for this material include:
No special requirements under ordinary conditions of use and with adequate ventilation.

For high airborne concentrations, use an approved supplied-air respirator, operated in positive pressure mode. Supplied air respirators with an escape bottle may be appropriate when oxygen levels are inadequate, gas/vapor warning properties are poor, or if air purifying filter capacity/rating may be exceeded.

Hand Protection: Any specific glove information provided is based on published literature and glove manufacturer data. Glove suitability and breakthrough time will differ depending on the specific use conditions. Contact the glove manufacturer for specific advice on glove selection and breakthrough times for your use conditions. Inspect and replace worn or damaged gloves. The types of gloves to be considered for this material include:
No protection is ordinarily required under normal conditions of use.

Eye Protection: If contact is likely, safety glasses with side shields are recommended.

Skin and Body Protection: Any specific clothing information provided is based on published literature or manufacturer data. The types of clothing to be considered for this material include:
No skin protection is ordinarily required under normal conditions of use. In accordance with good industrial hygiene practices, precautions should be taken to avoid skin contact.

Specific Hygiene Measures: Always observe good personal hygiene measures, such as washing after handling the material and before eating, drinking, and/or smoking. Routinely wash work clothing and protective equipment to remove contaminants. Discard contaminated clothing and footwear that cannot be cleaned. Practice good housekeeping.

ENVIRONMENTAL CONTROLS

Comply with applicable environmental regulations limiting discharge to air, water and soil. Protect the environment by applying appropriate control measures to prevent or limit emissions.

SECTION 9 PHYSICAL AND CHEMICAL PROPERTIES

Note: Physical and chemical properties are provided for safety, health and environmental considerations only

and may not fully represent product specifications. Contact the Supplier for additional information.

GENERAL INFORMATION

Physical State: Liquid
Color: Orange
Odor: Characteristic
Odor Threshold: N/D

IMPORTANT HEALTH, SAFETY, AND ENVIRONMENTAL INFORMATION

Relative Density (at 15 °C): 0.864
Flash Point [Method]: >210°C (410°F) [ASTM D-92]
Flammable Limits (Approximate volume % in air): LEL: 0.9 UEL: 7.0
Autoignition Temperature: N/D
Boiling Point / Range: > 316°C (600°F)
Vapor Density (Air = 1): > 2 at 101 kPa
Vapor Pressure: < 0.013 kPa (0.1 mm Hg) at 20 °C
Evaporation Rate (n-butyl acetate = 1): N/D
pH: N/A
Log Pow (n-Octanol/Water Partition Coefficient): > 3.5
Solubility in Water: Negligible
Viscosity: 150 cSt (150 mm2/sec) at 40 °C | 20.8 cSt (20.8 mm2/sec) at 100°C
Oxidizing Properties: See Hazards Identification Section.

OTHER INFORMATION

Freezing Point: N/D
Melting Point: N/A
Pour Point: -39°C (-38°F)

SECTION 10 STABILITY AND REACTIVITY

STABILITY: Material is stable under normal conditions.

CONDITIONS TO AVOID: Excessive heat. High energy sources of ignition.

MATERIALS TO AVOID: Strong oxidizers

HAZARDOUS DECOMPOSITION PRODUCTS: Material does not decompose at ambient temperatures.

HAZARDOUS POLYMERIZATION: Will not occur.

SECTION 11 TOXICOLOGICAL INFORMATION

ACUTE TOXICITY

Route of Exposure	Conclusion / Remarks
Inhalation	
Toxicity (Rat): LC50 > 5000 mg/m3	Minimally Toxic. Based on test data for structurally similar materials.
Irritation: No end point data.	Negligible hazard at ambient/normal handling temperatures. Based on assessment of the components.
Ingestion	

Toxicity (Rat): LD50 > 5000 mg/kg	Minimally Toxic. Based on test data for structurally similar materials.
Skin	
Toxicity (Rabbit): LD50 > 5000 mg/kg	Minimally Toxic. Based on test data for structurally similar materials.
Irritation (Rabbit): Data available.	Negligible irritation to skin at ambient temperatures. Based on test data for structurally similar materials.
Eye	
Irritation (Rabbit): Data available.	May cause mild, short-lasting discomfort to eyes. Based on test data for structurally similar materials.

CHRONIC/OTHER EFFECTS

Contains:

Synthetic base oils: Not expected to cause significant health effects under conditions of normal use, based on laboratory studies with the same or similar materials. Not mutagenic or genotoxic. Not sensitizing in test animals and humans.

Additional information is available by request.

The following ingredients are cited on the lists below: None.

--REGULATORY LISTS SEARCHED--

1 = NTP CARC	3 = IARC 1	5 = IARC 2B
2 = NTP SUS	4 = IARC 2A	6 = OSHA CARC

SECTION 12 ECOLOGICAL INFORMATION

The information given is based on data available for the material, the components of the material, and similar materials.

ECOTOXICITY

Material -- Not expected to be harmful to aquatic organisms.
Material -- Not expected to demonstrate chronic toxicity to aquatic organisms.

MOBILITY

Base oil component -- Low solubility and floats and is expected to migrate from water to the land. Expected to partition to sediment and wastewater solids.

SECTION 13 DISPOSAL CONSIDERATIONS

Disposal recommendations based on material as supplied. Disposal must be in accordance with current applicable laws and regulations, and material characteristics at time of disposal.

DISPOSAL RECOMMENDATIONS

Product is suitable for burning in an enclosed controlled burner for fuel value or disposal by supervised incineration at very high temperatures to prevent formation of undesirable combustion products. Protect the environment. Dispose of used oil at designated sites. Minimize skin contact. Do not mix used oils with solvents, brake fluids or coolants.

REGULATORY DISPOSAL INFORMATION

RCRA Information: The unused product, in our opinion, is not specifically listed by the EPA as a hazardous waste (40 CFR, Part 261D), nor is it formulated to contain materials which are listed as hazardous wastes. It does not exhibit the hazardous characteristics of ignitability, corrositivity or reactivity and is not formulated with contaminants as determined by the Toxicity Characteristic Leaching Procedure (TCLP). However, used product may be regulated.

Empty Container Warning Empty Container Warning (where applicable): Empty containers may contain residue and can be dangerous. Do not attempt to refill or clean containers without proper instructions. Empty drums should be completely drained and safely stored until appropriately reconditioned or disposed. Empty containers should be taken for recycling, recovery, or disposal through suitably qualified or licensed contractor and in accordance with governmental regulations. DO NOT PRESSURISE, CUT, WELD, BRAZE, SOLDER, DRILL, GRIND, OR EXPOSE SUCH CONTAINERS TO HEAT, FLAME, SPARKS, STATIC ELECTRICITY, OR OTHER SOURCES OF IGNITION. THEY MAY EXPLODE AND CAUSE INJURY OR DEATH.

SECTION 14 TRANSPORT INFORMATION

LAND (DOT): Not Regulated for Land Transport

LAND (TDG): Not Regulated for Land Transport

SEA (IMDG): Not Regulated for Sea Transport according to IMDG-Code

AIR (IATA): Not Regulated for Air Transport

SECTION 15 REGULATORY INFORMATION

OSHA HAZARD COMMUNICATION STANDARD: When used for its intended purposes, this material is not classified as hazardous in accordance with OSHA 29 CFR 1910.1200.

Complies with the following national/regional chemical inventory requirements:: TSCA
Special Cases:

Inventory	Status
AICS	Restrictions Apply
ELINCS	Restrictions Apply
KECI	Restrictions Apply

EPCRA: This material contains no extremely hazardous substances.

SARA (311/312) REPORTABLE HAZARD CATEGORIES: None.

SARA (313) TOXIC RELEASE INVENTORY: This material contains no chemicals subject to the supplier notification requirements of the SARA 313 Toxic Release Program.

The following ingredients are cited on the lists below:

Chemical Name	CAS Number	List Citations
PHENOL, 4,4-METHYLENEBIS(2,6-BIS(1,1-DIMETHYLETHYL)-	118-82-1	5

--REGULATORY LISTS SEARCHED--

1 = ACGIH ALL	6 = TSCA 5a2	11 = CA P65 REPRO	16 = MN RTK
2 = ACGIH A1	7 = TSCA 5e	12 = CA RTK	17 = NJ RTK
3 = ACGIH A2	8 = TSCA 6	13 = IL RTK	18 = PA RTK
4 = OSHA Z	9 = TSCA 12b	14 = LA RTK	19 = RI RTK
5 = TSCA 4	10 = CA P65 CARC	15 = MI 293	

Code key: CARC=Carcinogen; REPRO=Reproductive

SECTION 16 OTHER INFORMATION

N/D = Not determined, N/A = Not applicable

THIS SAFETY DATA SHEET CONTAINS THE FOLLOWING REVISIONS:

Revision Changes:
Section 13: Disposal Considerations - Disposal Recommendations was modified.
Section 10 Stability and Reactivity - Header was modified.
Section 13: Disposal Recommendations - Note was modified.
Section 09: Phys/Chem Properties Note was modified.
Section 09: Boiling Point C(F) was modified.
Section 08: Comply with applicable regulations phrase was modified.
Section 08: Personal Protection was modified.
Section 01: Product Intended Use was modified.
Section 09: Vapor Pressure was modified.
Section 07: Handling and Storage - Handling was modified.
Section 07: Handling and Storage - Storage Phrases was modified.
Section 06: Accidental Release - Spill Management - Water was modified.
Section 09: Relative Density - Header was modified.
Section 09: Flash Point C(F) was modified.
Section 09: Viscosity was modified.
Section 14: Sea (IMDG) - Header was modified.
Section 14: Air (IATA) - Header was modified.
Section 14: LAND (TDG) - Header was modified.
Section 14: LAND (DOT) - Header was modified.

ExxonMobil

Product Name: MOBIL SHC 629
Revision Date: 11 May 2012
Page 9 of 9

Section 15: List Citation Table - Header was modified.
Section 14: LAND (DOT) - Default was modified.
Section 14: LAND (TDG) Default was modified.
Section 14: Sea (IMDG) - Default was modified.
Section 14: Air (IATA) - Default was modified.
Section 15: National Chemical Inventory Listing - Header was modified.
Section 15: National Chemical Inventory Listing was modified.
Section 08: Exposure limits/standards was modified.
Section 15: Special Cases Table was modified.
Hazard Identification: OSHA - May be Hazardous Statement was modified.
Section 09: Oxidizing Properties was modified.
Section 06: Protective Measures was added.
Section 06: Accidental Release - Protective Measures - Header was added.
Section 09: Viscosity was added.
Section 09: DMSO IP was deleted.
Section 09: DMSO IP - Header was deleted.

The information and recommendations contained herein are, to the best of ExxonMobil's knowledge and belief, accurate and reliable as of the date issued. You can contact ExxonMobil to insure that this document is the most current available from ExxonMobil. The information and recommendations are offered for the user's consideration and examination. It is the user's responsibility to satisfy itself that the product is suitable for the intended use. If buyer repackages this product, it is the user's responsibility to insure proper health, safety and other necessary information is included with and/or on the container. Appropriate warnings and safe-handling procedures should be provided to handlers and users. Alteration of this document is strictly prohibited. Except to the extent required by law, re-publication or retransmission of this document, in whole or in part, is not permitted. The term, "ExxonMobil" is used for convenience, and may include any one or more of ExxonMobil Chemical Company, Exxon Mobil Corporation, or any affiliates in which they directly or indirectly hold any interest.

Internal Use Only
MHC: 0B, 0B, 0, 0, 0, 0 PPEC: A

DGN: 2007961XUS (1013314)

Copyright 2002 Exxon Mobil Corporation, All rights reserved

11.5.9 MOBIL 600W CYLINDER OIL

Mobil

Mobil Cylinder Oils

Gear and Cylinder Oils

Product Description

Mobil Cylinder oils are extra high performance high viscosity oils designed for use in enclosed worm gears operating at moderate to high speeds and temperatures, and where heavy loads, slow speeds or high temperatures demand high viscosity oils. They are also intended for use in all steam engine applications They are formulated from high quality base stocks that are resistant to oxidation and thermal degradation, and the build-up of harmful deposits caused by the high operating temperatures of steam cylinders. They protect against rust and corrosion and provide good film strength and excellent lubricity and they are resistant to water washout.

Mobil 600W Cylinder Oil, Mobil 600W Super Cylinder Oil and Mobil Extra Hecla Super Cylinder Oil are additized to enhance their frictional and load-carrying properties. All four members of the product family are widely used in worm gear applications, couplings and bearings, with viscosity grade depending on operating conditions. In steam applications Mobil 600W Super Cylinder Oil is recommended for saturated and superheated steam up to a temperature of 260ºC. Mobil Extra Hecla Super Cylinder Oil and Mobil Extra Hecla Super Cylinder Oil Mineral may be used with superheated steam above 260ºC. Mobil Extra Hecla Super Cylinder Oil Mineral has good demulsibility. Mobil Cylinder Oils can be applied both by drip feed cups and force feed mechanical lubricating devices.

Mobil Cylinder Oils are the benchmark mineral product for worm gear OEMs and users, and are still recognised as leading products for steam cylinder applications.

Features and Benefits

The Mobil Cylinder Oil brand of lubricants represents the earliest lubricant product marketed by our Corporation's predecessor companies. 600W Cylinder Oil was produced by the Vacuum Oil Company in the second half of the 19th century and was a breakthrough product of its time. Continual upgrading and application of the latest base oil and additive technology has maintained this product series as a leader in its application areas. While steam cylinder applications are now less common, the reputation of Mobil Cylinder Oils in worm gear applications remains unmatched among mineral-based products. Mobil Cylinder Oils offer the following features and potential benefits:

Features	Advantages and Potential Benefits
Excellent film integrity at high temperatures	Excellent equipment protection at high temperatures occasioned by variable load conditions, avoiding unexpected downtime and equipment replacement
	Provision of good sealing film round rods and in glands in steam applications
Excellent resistance to deposit formation at high temperatures	Resistant to deposits on areas subject to high spot temperatures, maintaining cleaner systems, requiring less maintenance
Excellent anti-wear and low friction properties	Additized grades give reduced wear and high efficiency
Very good water separation in absence of additives	Non-additized grade gives ready separation from condensate
High quality and built in performance features	Results in fewer unplanned stoppages and reduced maintenance costs

Applications

Mobil 600W Cylinder Oil is recommended for the following applications:

- The splash lubrication of enclosed worm gears operating at moderate to high speeds and temperatures. (Mobil 600 W Cylinder Oil)
- Steam cylinders, couplings, bearings, and break-in of compressor cylinders (Mobil 600 W Cylinder Oil)
- Mobil 600W Super Cylinder Oil and Mobil Extra Hecla Super Cylinder Oil are recommended for the above applications but under higher temperature and load conditions
- Mobil Extra Hecla Super Cylinder Mineral is recommended where ready separation from condensate is essential, for example, where exhaust steam is used for process work
- Mobil Extra Hecla Super Cylinder Mineral may also be used as a tempering oil for bath temperatures up to 290C

Typical Properties

Mobil Cylinder Oils	Mobil 600 W Cylinder Oil	Mobil 600 W Super Cylinder Oil	Mobil Extra Hecla Super Cylinder Oil	Mobil Extra Hecla Super Cylinder Oil Mineral
ISO Viscosity Grade	--	460	680	1000
Viscosity, ASTM D 445				
cSt @ 40ºC	375	460	680	1000
cSt @ 100ºC	27.0	30.5	35.8	43.0
Viscosity Index, ASTM D 2270	95	95	85	80
Pour Point, ºC, ASTM D 97	-9	-6	0	3
Flash Point, ºC, ASTM D 92	282	282	282	288
Density,ASTM D4052 @15.6º C kg/l,	0.90	0.91	0.92	0.92
Copper Strip Corrosion, ASTM D 130,3 hrs @ 100º C	1B	1B	1B	1B

Health and Safety

Based on available information, this product is not expected to produce adverse effects on health when used for the intended application and the recommendations provided in the Material Safety Data Sheet (MSDS) are followed. MSDS's are available upon request through your sales contract office, or via the Internet. This product should not be used for purposes other than its intended use. If disposing of used product, take care to protect the environment.

The Mobil logotype, the Pegasus design are trademarks of Exxon Mobil Corporation, or one of its subsidiaries.

Exxon Mobil Corporation
3225 Gallows Road
Fairfax, VA 22037

1-800-ASK MOBIL (275-6624)

Typical Properties are typical of those obtained with normal production tolerance and do not constitute a specification. Variations that do not affect product performance are to be expected during normal manufacture and at different blending locations. The information contained herein is subject to change without notice. All products may not be available locally. For more information, contact your local ExxonMobil contact or visit www.exxonmobil.com
ExxonMobil is comprised of numerous affiliates and subsidiaries, many with names that include Esso, Mobil, or ExxonMobil. Nothing in this document is intended to override or supersede the corporate separateness of local entities. Responsibility for local action and accountability remains with the local ExxonMobil-affiliate entities.

Copyright © 2001-2013 Exxon Mobil Corporation. All rights reserved..

ExxonMobil

Product Name: MOBIL 600 W CYLINDER OIL
Revision Date: 12Sep2006
Page 1 of 8

MATERIAL SAFETY DATA SHEET

SECTION 1 PRODUCT AND COMPANY IDENTIFICATION

PRODUCT

Product Name: **MOBIL 600 W CYLINDER OIL**
Product Description: Base Oil and Additives
Product Code: 2015605D005, 601260-00, 970243
Intended Use: Cylinder oil

COMPANY IDENTIFICATION

Supplier: EXXON MOBIL CORPORATION
3225 GALLOWS RD.
FAIRFAX, VA. 22037 USA

24 Hour Health Emergency	609-737-4411
Transportation Emergency Phone	800-424-9300
ExxonMobil Transportation No.	281-834-3296
MSDS Requests	713-613-3661
Product Technical Information	800-662-4525, 800-947-9147
MSDS Internet Address	http://www.exxon.com, http://www.mobil.com

SECTION 2 COMPOSITION / INFORMATION ON INGREDIENTS

No Reportable Hazardous Substance(s) or Complex Substance(s).

SECTION 3 HAZARDS IDENTIFICATION

This material is not considered to be hazardous according to regulatory guidelines (see (M)SDS Section 15).

POTENTIAL HEALTH EFFECTS

Low order of toxicity. Excessive exposure may result in eye, skin, or respiratory irritation.

NFPA Hazard ID:	Health:	0	Flammability:	1	Reactivity:	0
HMIS Hazard ID:	Health:	0	Flammability:	1	Reactivity:	0

NOTE: This material should not be used for any other purpose than the intended use in Section 1 without expert advice. Health studies have shown that chemical exposure may cause potential human health risks which may vary from person to person.

SECTION 4 FIRST AID MEASURES

INHALATION

Remove from further exposure. For those providing assistance, avoid exposure to yourself or others. Use adequate respiratory protection. If respiratory irritation, dizziness, nausea, or unconsciousness occurs, seek immediate medical assistance. If breathing has stopped, assist ventilation with a mechanical device or use mouth-to-mouth resuscitation.

SKIN CONTACT
Wash contact areas with soap and water.

EYE CONTACT
Flush thoroughly with water. If irritation occurs, get medical assistance.

INGESTION
First aid is normally not required. Seek medical attention if discomfort occurs.

SECTION 5 FIRE FIGHTING MEASURES

EXTINGUISHING MEDIA
Appropriate Extinguishing Media: Use water fog, foam, dry chemical or carbon dioxide (CO2) to extinguish flames.

Inappropriate Extinguishing Media: Straight Streams of Water

FIRE FIGHTING
Fire Fighting Instructions: Evacuate area. Prevent runoff from fire control or dilution from entering streams, sewers, or drinking water supply. Firefighters should use standard protective equipment and in enclosed spaces, self-contained breathing apparatus (SCBA). Use water spray to cool fire exposed surfaces and to protect personnel.

Hazardous Combustion Products: Aldehydes, Oxides of carbon, Smoke, Fume, Sulfur oxides, Incomplete combustion products

FLAMMABILITY PROPERTIES
Flash Point [Method]: >282C (540F) [ASTM D-92]
Flammable Limits (Approximate volume % in air): LEL: 0.9 UEL: 7.0
Autoignition Temperature: N/D

SECTION 6 ACCIDENTAL RELEASE MEASURES

NOTIFICATION PROCEDURES
In the event of a spill or accidental release, notify relevant authorities in accordance with all applicable regulations. U.S. regulations require reporting releases of this material to the environment which exceed the reportable quantity or oil spills which could reach any waterway including intermittent dry creeks. The National Response Center can be reached at (800)424-8802.

SPILL MANAGEMENT
Land Spill: Stop leak if you can do it without risk. Recover by pumping or with suitable absorbent.

Water Spill: Stop leak if you can do it without risk. Confine the spill immediately with booms. Warn other shipping. Remove from the surface by skimming or with suitable absorbents. Seek the advice of a specialist before using dispersants.

Water spill and land spill recommendations are based on the most likely spill scenario for this material; however, geographic conditions, wind, temperature, (and in the case of a water spill) wave and current direction and speed may greatly influence the appropriate action to be taken. For this reason, local experts should be consulted. Note: Local regulations may prescribe or limit action to be taken.

ENVIRONMENTAL PRECAUTIONS

Large Spills: Dike far ahead of liquid spill for later recovery and disposal. Prevent entry into waterways, sewers, basements or confined areas.

SECTION 7 HANDLING AND STORAGE

HANDLING

Prevent small spills and leakage to avoid slip hazard.

Static Accumulator: This material is a static accumulator.

STORAGE

Do not store in open or unlabelled containers.

SECTION 8 EXPOSURE CONTROLS / PERSONAL PROTECTION

Exposure limits/standards for materials that can be formed when handling this product: When mists / aerosols can occur, the following are recommended: 5 mg/m³ - ACGIH TLV, 10 mg/m³ - ACGIH STEL, 5 mg/m³ - OSHA PEL.

NOTE: Limits/standards shown for guidance only. Follow applicable regulations.

ENGINEERING CONTROLS

The level of protection and types of controls necessary will vary depending upon potential exposure conditions. Control measures to consider:

No special requirements under ordinary conditions of use and with adequate ventilation.

PERSONAL PROTECTION

Personal protective equipment selections vary based on potential exposure conditions such as applications, handling practices, concentration and ventilation. Information on the selection of protective equipment for use with this material, as provided below, is based upon intended, normal usage.

Respiratory Protection: If engineering controls do not maintain airborne contaminant concentrations at a level which is adequate to protect worker health, an approved respirator may be appropriate. Respirator selection, use, and maintenance must be in accordance with regulatory requirements, if applicable. Types of respirators to be considered for this material include:

No special requirements under ordinary conditions of use and with adequate ventilation.

For high airborne concentrations, use an approved supplied-air respirator, operated in positive pressure mode. Supplied air respirators with an escape bottle may be appropriate when oxygen levels are inadequate,

gas/vapor warning properties are poor, or if air purifying filter capacity/rating may be exceeded.

Hand Protection: Any specific glove information provided is based on published literature and glove manufacturer data. Work conditions can greatly effect glove durability; inspect and replace worn or damaged gloves. The types of gloves to be considered for this material include:
No protection is ordinarily required under normal conditions of use.

Eye Protection: If contact is likely, safety glasses with side shields are recommended.

Skin and Body Protection: Any specific clothing information provided is based on published literature or manufacturer data. The types of clothing to be considered for this material include:
No skin protection is ordinarily required under normal conditions of use. In accordance with good industrial hygiene practices, precautions should be taken to avoid skin contact.

Specific Hygiene Measures: Always observe good personal hygiene measures, such as washing after handling the material and before eating, drinking, and/or smoking. Routinely wash work clothing and protective equipment to remove contaminants. Discard contaminated clothing and footwear that cannot be cleaned. Practice good housekeeping.

ENVIRONMENTAL CONTROLS
See Sections 6, 7, 12, 13.

SECTION 9 PHYSICAL AND CHEMICAL PROPERTIES

Typical physical and chemical properties are given below. Consult the Supplier in Section 1 for additional data.

GENERAL INFORMATION
Physical State: Liquid
Color: Brown
Odor: Characteristic
Odor Threshold: N/D

IMPORTANT HEALTH, SAFETY, AND ENVIRONMENTAL INFORMATION
Relative Density (at 15 C): 0.9
Flash Point [Method]: >282C (540F) [ASTM D-92]
Flammable Limits (Approximate volume % in air): LEL: 0.9 UEL: 7.0
Autoignition Temperature: N/D
Boiling Point / Range: > 316C (600F)
Vapor Density (Air = 1): > 2 at 101 kPa
Vapor Pressure: < 0.013 kPa (0.1 mm Hg) at 20 C
Evaporation Rate (n-butyl acetate = 1): N/D
pH: N/A
Log Pow (n-Octanol/Water Partition Coefficient): > 3.5
Solubility in Water: Negligible
Viscosity: 375 cSt (375 mm2/sec) at 40 C | 28 cSt (28 mm2/sec) at 100C
Oxidizing Properties: See Sections 3, 15, 16.

OTHER INFORMATION
Freezing Point: N/D
Melting Point: N/A

ExxonMobil

Product Name: MOBIL 600 W CYLINDER OIL
Revision Date: 12Sep2006
Page 5 of 8

Pour Point: -9°C (16°F)
DMSO Extract (mineral oil only), IP-346: < 3 %wt

SECTION 10 STABILITY AND REACTIVITY

STABILITY: Material is stable under normal conditions.

CONDITIONS TO AVOID: Excessive heat. High energy sources of ignition.

MATERIALS TO AVOID: Strong oxidizers

HAZARDOUS DECOMPOSITION PRODUCTS: Material does not decompose at ambient temperatures.

HAZARDOUS POLYMERIZATION: Will not occur.

SECTION 11 TOXICOLOGICAL INFORMATION

ACUTE TOXICITY

Route of Exposure	Conclusion / Remarks
Inhalation	
Toxicity (Rat): LC50 > 5000 mg/m3	Minimally Toxic. Based on test data for structurally similar materials.
Irritation: No end point data.	Negligible hazard at ambient/normal handling temperatures. Based on assessment of the components.
Ingestion	
Toxicity (Rat): LD50 > 2000 mg/kg	Minimally Toxic. Based on test data for structurally similar materials.
Skin	
Toxicity (Rabbit): LD50 > 2000 mg/kg	Minimally Toxic. Based on test data for structurally similar materials.
Irritation (Rabbit): Data available.	Negligible irritation to skin at ambient temperatures. Based on test data for structurally similar materials.
Eye	
Irritation (Rabbit): Data available.	May cause mild, short-lasting discomfort to eyes. Based on test data for structurally similar materials.

CHRONIC/OTHER EFFECTS

Contains:
Base oil severely refined: Not carcinogenic in animal studies. Representative material passes IP-346, Modified Ames test, and/or other screening tests. Dermal and inhalation studies showed minimal effects; lung non-specific infiltration of immune cells, oil deposition and minimal granuloma formation. Not sensitizing in test animals.

Additional information is available by request.

The following ingredients are cited on the lists below: None.

--REGULATORY LISTS SEARCHED--

ExxonMobil

Product Name: MOBIL 600 W CYLINDER OIL
Revision Date: 12Sep2006
Page 6 of 8

1 = NTP CARC	3 = IARC 1	5 = IARC 2B
2 = NTP SUS	4 = IARC 2A	6 = OSHA CARC

SECTION 12 ECOLOGICAL INFORMATION

The information given is based on data available for the material, the components of the material, and similar materials.

ECOTOXICITY

Material -- Not expected to be harmful to aquatic organisms.

MOBILITY

Base oil component -- Low solubility and floats and is expected to migrate from water to the land. Expected to partition to sediment and wastewater solids.

PERSISTENCE AND DEGRADABILITY

Biodegradation:

Base oil component -- Expected to be inherently biodegradable

BIOACCUMULATION POTENTIAL

Base oil component -- Has the potential to bioaccumulate, however metabolism or physical properties may reduce the bioconcentration or limit bioavailability.

SECTION 13 DISPOSAL CONSIDERATIONS

Disposal recommendations based on material as supplied. Disposal must be in accordance with current applicable laws and regulations, and material characteristics at time of disposal.

DISPOSAL RECOMMENDATIONS

Product is suitable for burning in an enclosed controlled burner for fuel value or disposal by supervised incineration at very high temperatures to prevent formation of undesirable combustion products.

REGULATORY DISPOSAL INFORMATION

RCRA Information: The unused product, in our opinion, is not specifically listed by the EPA as a hazardous waste (40 CFR, Part 261D), nor is it formulated to contain materials which are listed as hazardous wastes. It does not exhibit the hazardous characteristics of ignitability, corrosivity or reactivity and is not formulated with contaminants as determined by the Toxicity Characteristic Leaching Procedure (TCLP). However, used product may be regulated.

Empty Container Warning PRECAUTIONARY LABEL TEXT: Empty containers may retain residue and can be dangerous. DO NOT PRESSURIZE, CUT, WELD, BRAZE, SOLDER, DRILL, GRIND OR EXPOSE SUCH CONTAINERS TO HEAT, FLAME, SPARKS, STATIC ELECTRICITY, OR OTHER SOURCES OF IGNITION; THEY MAY EXPLODE AND CAUSE INJURY OR DEATH. Do not attempt to refill or clean container since residue is difficult to remove. Empty drums should be completely drained, properly bunged and promptly returned to a drum reconditioner. All containers should be disposed of in an environmentally safe manner and in accordance with governmental regulations.

SECTION 14 TRANSPORT INFORMATION

ExxonMobil

Product Name: MOBIL 600 W CYLINDER OIL
Revision Date: 12Sep2006
Page 7 of 8

LAND (DOT) : Not Regulated for Land Transport

LAND (TDG) : Not Regulated for Land Transport

SEA (IMDG) : Not Regulated for Sea Transport according to IMDG-Code

AIR (IATA) : Not Regulated for Air Transport

SECTION 15 REGULATORY INFORMATION

OSHA HAZARD COMMUNICATION STANDARD: When used for its intended purposes, this material is not classified as hazardous in accordance with OSHA 29 CFR 1910.1200.

NATIONAL CHEMICAL INVENTORY LISTING: AICS, DSL, EINECS, KECI, PICCS, TSCA

EPCRA: This material contains no extremely hazardous substances.

SARA (311/312) REPORTABLE HAZARD CATEGORIES: None.

SARA (313) TOXIC RELEASE INVENTORY: This material contains no chemicals subject to the supplier notification requirements of the SARA 313 Toxic Release Program.

The Following Ingredients are Cited on the Lists Below:

Chemical Name	CAS Number	List Citations
OILS, LARD	8016-28-2	18

--REGULATORY LISTS SEARCHED--

1 = ACGIH ALL	6 = TSCA 5a2	11 = CA P65 REPRO	16 = MN RTK
2 = ACGIH A1	7 = TSCA 5e	12 = CA RTK	17 = NJ RTK
3 = ACGIH A2	8 = TSCA 6	13 = IL RTK	18 = PA RTK
4 = OSHA Z	9 = TSCA 12b	14 = LA RTK	19 = RI RTK
5 = TSCA 4	10 = CA P65 CARC	15 = MI 293	

Code key: CARC=Carcinogen; REPRO=Reproductive

SECTION 16 OTHER INFORMATION

N/D = Not determined, N/A = Not applicable

THIS SAFETY DATA SHEET CONTAINS THE FOLLOWING REVISIONS:
No revision information is available.

The information and recommendations contained herein are, to the best of ExxonMobil's knowledge and belief, accurate and reliable as of the date issued. You can contact ExxonMobil to insure that this document is the most current

ExxonMobil

Product Name: MOBIL 600 W CYLINDER OIL
Revision Date: 12Sep2006
Page 8 of 8

available from ExxonMobil. The information and recommendations are offered for the user's consideration and examination. It is the user's responsibility to satisfy itself that the product is suitable for the intended use. If buyer repackages this product, it is the user's responsibility to insure proper health, safety and other necessary information is included with and/or on the container. Appropriate warnings and safe-handling procedures should be provided to handlers and users. Alteration of this document is strictly prohibited. Except to the extent required by law, re-publication or retransmission of this document, in whole or in part, is not permitted. The term, "ExxonMobil" is used for convenience, and may include any one or more of ExxonMobil Chemical Company, Exxon Mobil Corporation, or any affiliates in which they directly or indirectly hold any interest.

Internal Use Only
MHC: 0, 0, 0, 0, 0, 0 PPEC: A

DGN: 2007400XUS (547818)

Copyright 2002 Exxon Mobil Corporation, All rights reserved

11.5.10 MOBIL DTE 21

Mobil

Mobil DTE Oil Named Series

Premium Performance Circulating Lubricants

Product Description

The Mobil DTE Oil Named Series of lubricants are premium performance circulating lubricants designed for applications including steam and hydro turbine sets and other systems where long lubricant service life is required. Mobil DTE Oil Named Series lubricants are formulated from highly refined base stocks and an additive system which provide an extremely high level of chemical and thermal stability, rapid and complete separation from water and a high resistance to emulsification. They provide excellent protection against rust and corrosion, including resistance to salt water, and good antiwear properties. They have a high viscosity index which ensures minimum variation of film thickness with temperature and minimum power loss during the warm up period. These grades have excellent air release properties which allow entrained air to separate, thus avoiding pump cavitation and erratic operation.

Mobil DTE Oil Named are the lubricants of choice for many users because of their reputation for long life, excellent equipment protection and outstanding versatility in the wide variety of industrial applications. DTE Oil Named lubricants are used widely in steam turbines and hydroturbines with splash, bath and ring-oiling arrangements, and all other continuous circulation methods involving pumps, valves and ancillary equipment. This product series is recommended for continous service in the lubrication of plain and rolling bearings and parallel shaft gearing. They have also been used successfully in rotary air compressor applications and reciprocating natural gas compressors as well as vacuum pumps. Their reputation is based on many decades of successful service and satisfied users.

Features and Benefits

The Mobil DTE family of products is well known and highly regarded worldwide based on their outstanding performance and the RandD expertise and the global technical support which stand behind the brand. The highly versatile performance of Mobil DTE Oil Named oils has made them the oil of choice for a multitude of industrial equipment applications around the world.

Mobil DTE Named oils enjoy an excellent reputation in the lubrication of the circulation systems of steam turbines and hydro turbines, including geared turbines, plus a wide variety of ancillary equipment. As designs change and increase in severity, it is the challenge of our formulation scientists to understand the effect of these changes on the lubricant and to formulate these products for the broad versatility they are recognised for.

For the Mobil DTE Oil Named Series of lubricants, this process has resulted in the use of special base stocks for outstanding oxidation stability, plus a unique additive combination to ensure the excellent, wide-ranging performance of these oils. A review of the features, advantages and potential benefits of the product are shown below.

Features	Advantages and Potential Benefits
Very high level of chemical and thermal stability and resistance to sludging and varnishing	Long oil charge life in circulation systems and reduced oil replacement costs
	Less unplanned downtime and reduced maintenance costs
Excellent water release properties	Improved operating efficiency
Very good antiwear protection	Longer equipment life, reduced maintenance and downtime
Long term protection against rust and corrosion	Longer equipment life, reduced maintenance and downtime
High resistance to foaming and excellent air release	Avoids pump cavitation, noisy and erratic operation

Features	Advantages and Potential Benefits
Highly versatile - multiple applications	Rationalize inventory, reduced inventory costs

Applications

The Mobil DTE Oil Named Series of lubricants are premium performance circulating lubricants designed for applications where long lubricant service life is required. Specific applications include:

- Land-based and marine steam turbine, hydro turbine and some gas turbine circulation systems, including pumps, valves and other ancillary equipment
- Continuous service in plain and roller bearings and parallel shaft gearing
- Turbines with oil supplied by splash, bath, ring oiling or other mechanical means
- Moderate severity hydraulic pumps
- Compressors and vacuum pumps handling air, natural gas, and inert gases, and with discharge temperatures not exceeding 150C

Specifications and Approvals

Mobil DTE Named Series meets or exceeds the requirements of:	Mobil DTE Light	Mobil DTE Medium	Mobil DTE Heavy Medium	Mobil DTE Heavy
DIN 51515-1 L-TD (2001)	X	X		X
DIN 51517 CL (1989)	X	X		X
DIN 51515-1: 2010-02			X	
DIN 51517-2: 2009-06			X	
DIN 51524-1: 2006-09			X	
GE GEK 46506D	X			
GE GEK 27070	X			
GE GEK 28143A	X	X		

According to ExxonMobil, Mobil DTE Named Series is of the following quality level:	Mobil DTE Light	Mobil DTE Medium	Mobil DTE Heavy Medium	Mobil DTE Heavy
DIN 51524 HL (1985)	X	X		X

Typical Properties

Mobil DTE Named Series	Mobil DTE Light	Mobil DTE Medium	Mobil DTE Heavy Medium	Mobil DTE Heavy
ISO Viscosity Grade	32	46	68	100
Viscosity, ASTM D 445				
cSt @ 40° C	31.0	44.5	65.1	95.1
cSt @ 100° C	5.5	6.9	8.7	10.9
Viscosity Index, ASTM D 2270	102	98	95	92
Pour Point, °C, ASTM D 97	-18	-15	-15	-15
Flash Point, °C, ASTM D 92	218	221	223	237
Density @15° C kg/l, ASTM D 4052	0.85	0.86	0.87	0.88

Mobil DTE Named Series	Mobil DTE Light	Mobil DTE Medium	Mobil DTE Heavy Medium	Mobil DTE Heavy
TOST, ASTM D 943, Hours to 2 NN	5000	4500	3500	2800
FZG Scuffing, D51354, Fail Stage	8	9	10	10
Rust Prevention, ASTM D 665:				
Distilled Water	Pass	Pass	Pass	Pass
Sea Water	Pass	Pass	Pass	Pass
Water Seperability, ASTM D 1401,Min. to 3 ml emulsion @ 54ºC	15	15	20	30
Copper Strip Corrosion, ASTM D 130,3 hrs @ 121º C	1B	1B	1B	1B
Foam Test, ASTM D 892, Seq I Tendency/stability, ml/ml	20/0	50/0	50/0	50/0
Air Release, ASTM D 3427, 50º C, min.	2	3	4	8

Health and Safety

Based on available information, this product is not expected to produce adverse effects on health when used for the intended application and the recommendations provided in the Material Safety Data Sheet (MSDS) are followed. MSDS's are available upon request through your sales contract office, or via the Internet. This product should not be used for purposes other than its intended use. If disposing of used product, take care to protect the environment.

The Mobil logotype, the Pegasus design and DTE are trademarks of ExxonMobil Corporation, or one of its subsidiaries.

11-2011

Exxon Mobil Corporation
3225 Gallows Road
Fairfax, VA 22037

1-800-ASK MOBIL (275-6624)

Typical Properties are typical of those obtained with normal production tolerance and do not constitute a specification. Variations that do not affect product performance are to be expected during normal manufacture and at different blending locations. The information contained herein is subject to change without notice. All products may not be available locally. For more information, contact your local ExxonMobil contact or visit www.exxonmobil.com
ExxonMobil is comprised of numerous affiliates and subsidiaries, many with names that include Esso, Mobil, or ExxonMobil. Nothing in this document is intended to override or supersede the corporate separateness of local entities. Responsibility for local action and accountability remains with the local ExxonMobil-affiliate entities.

© 2001-2011 Exxon Mobil Corporation. All rights reserved..

ExxonMobil

Product Name: MOBIL DTE 21
Revision Date: 13 Dec 2012
Page 1 of 10

MATERIAL SAFETY DATA SHEET

SECTION 1 PRODUCT AND COMPANY IDENTIFICATION

PRODUCT

Product Name: **MOBIL DTE 21**
Product Description: Base Oil and Additives
Product Code: 201560102005, 602599-00, 970840
Intended Use: Hydraulic fluid

COMPANY IDENTIFICATION

Supplier: EXXON MOBIL CORPORATION
3225 GALLOWS RD.
FAIRFAX, VA. 22037 USA

24 Hour Health Emergency	609-737-4411
Transportation Emergency Phone	800-424-9300
ExxonMobil Transportation No.	281-834-3296
Product Technical Information	800-662-4525, 800-947-9147
MSDS Internet Address	http://www.exxon.com, http://www.mobil.com

SECTION 2 COMPOSITION / INFORMATION ON INGREDIENTS

Reportable Hazardous Substance(s) or Complex Substance(s)

Name	CAS#	Concentration*
SOLVENT REFINED LIGHT PARAFFINIC DISTILLATE (PETROLEUM)	64741-89-5	80 - 90%
STRAIGHT-RUN MIDDLE DISTILLATES	64741-44-2	10 - 20%

* All concentrations are percent by weight unless material is a gas. Gas concentrations are in percent by volume.

SECTION 3 HAZARDS IDENTIFICATION

This material is considered to be hazardous according to regulatory guidelines (see (M)SDS Section 15).

POTENTIAL HEALTH EFFECTS

If swallowed, may be aspirated and cause lung damage. Frequent or prolonged contact may defat and dry the skin, leading to discomfort and dermatitis. May be irritating to the eyes, nose, throat, and lungs. High-pressure injection under skin may cause serious damage.

Target Organs: Skin |

NFPA Hazard ID:	Health:	0	Flammability:	1	Reactivity:	0
HMIS Hazard ID:	Health:	0*	Flammability:	1	Reactivity:	0

NOTE: This material should not be used for any other purpose than the intended use in Section 1 without expert advice. Health studies have shown that chemical exposure may cause potential human health risks which may vary from person to person.

SECTION 4 FIRST AID MEASURES

INHALATION

Remove from further exposure. For those providing assistance, avoid exposure to yourself or others. Use adequate respiratory protection. If respiratory irritation, dizziness, nausea, or unconsciousness occurs, seek immediate medical assistance. If breathing has stopped, assist ventilation with a mechanical device or use mouth-to-mouth resuscitation.

SKIN CONTACT

Wash contact areas with soap and water. Remove contaminated clothing. Launder contaminated clothing before reuse. If product is injected into or under the skin, or into any part of the body, regardless of the appearance of the wound or its size, the individual should be evaluated immediately by a physician as a surgical emergency. Even though initial symptoms from high pressure injection may be minimal or absent, early surgical treatment within the first few hours may significantly reduce the ultimate extent of injury.

EYE CONTACT

Flush thoroughly with water. If irritation occurs, get medical assistance.

INGESTION

Seek immediate medical attention. Do not induce vomiting.

NOTE TO PHYSICIAN

If ingested, material may be aspirated into the lungs and cause chemical pneumonitis. Treat appropriately.

SECTION 5 FIRE FIGHTING MEASURES

EXTINGUISHING MEDIA

Appropriate Extinguishing Media: Use water fog, foam, dry chemical or carbon dioxide (CO2) to extinguish flames.

Inappropriate Extinguishing Media: Straight Streams of Water

FIRE FIGHTING

Fire Fighting Instructions: Evacuate area. Prevent runoff from fire control or dilution from entering streams, sewers, or drinking water supply. Firefighters should use standard protective equipment and in enclosed spaces, self-contained breathing apparatus (SCBA). Use water spray to cool fire exposed surfaces and to protect personnel.

Unusual Fire Hazards: Pressurized mists may form a flammable mixture.

Hazardous Combustion Products: Smoke, Fume, Aldehydes, Sulfur oxides, Incomplete combustion products, Oxides of carbon

FLAMMABILITY PROPERTIES

Flash Point [Method]: >166°C (331°F) [ASTM D-92]
Flammable Limits (Approximate volume % in air): LEL: 0.9 UEL: 7.0

ExxonMobil

Product Name: MOBIL DTE 21
Revision Date: 13 Dec 2012
Page 3 of 10

Autoignition Temperature: N/D

SECTION 6 ACCIDENTAL RELEASE MEASURES

NOTIFICATION PROCEDURES

In the event of a spill or accidental release, notify relevant authorities in accordance with all applicable regulations. US regulations require reporting releases of this material to the environment which exceed the applicable reportable quantity or oil spills which could reach any waterway including intermittent dry creeks. The National Response Center can be reached at (800)424-8802.

PROTECTIVE MEASURES

Avoid contact with spilled material. Warn or evacuate occupants in surrounding and downwind areas if required due to toxicity or flammability of the material. See Section 5 for fire fighting information. See the Hazard Identification Section for Significant Hazards. See Section 4 for First Aid Advice. See Section 8 for advice on the minimum requirements for personal protective equipment. Additional protective measures may be necessary, depending on the specific circumstances and/or the expert judgment of the emergency responders.

For emergency responders: Respiratory protection: respiratory protection will be necessary only in special cases, e.g., formation of mists. Half-face or full-face respirator with filter(s) for dust/organic vapor or Self Contained Breathing Apparatus (SCBA) can be used depending on the size of spill and potential level of exposure. If the exposure cannot be completely characterized or an oxygen deficient atmosphere is possible or anticipated, SCBA is recommended. Work gloves that are resistant to hydrocarbons are recommended. Gloves made of polyvinyl acetate (PVA) are not water-resistant and are not suitable for emergency use. Chemical goggles are recommended if splashes or contact with eyes is possible. Small spills: normal antistatic work clothes are usually adequate. Large spills: full body suit of chemical resistant, antistatic material is recommended.

SPILL MANAGEMENT

Land Spill: Stop leak if you can do it without risk. Recover by pumping or with suitable absorbent.

Water Spill: Stop leak if you can do it without risk. Confine the spill immediately with booms. Warn other shipping. Remove from the surface by skimming or with suitable absorbents. Seek the advice of a specialist before using dispersants.

Water spill and land spill recommendations are based on the most likely spill scenario for this material; however, geographic conditions, wind, temperature, (and in the case of a water spill) wave and current direction and speed may greatly influence the appropriate action to be taken. For this reason, local experts should be consulted. Note: Local regulations may prescribe or limit action to be taken.

ENVIRONMENTAL PRECAUTIONS

Large Spills: Dike far ahead of liquid spill for later recovery and disposal. Prevent entry into waterways, sewers, basements or confined areas.

SECTION 7 HANDLING AND STORAGE

HANDLING

Avoid contact with skin. Prevent small spills and leakage to avoid slip hazard. Material can accumulate static charges which may cause an electrical spark (ignition source). When the material is handled in bulk, an electrical spark could ignite any flammable vapors from liquids or residues that may be present (e.g., during switch-loading operations). Use proper bonding and/or ground procedures. However, bonding and grounds

may not eliminate the hazard from static accumulation. Consult local applicable standards for guidance. Additional references include American Petroleum Institute 2003 (Protection Against Ignitions Arising out of Static, Lightning and Stray Currents) or National Fire Protection Agency 77 (Recommended Practice on Static Electricity) or CENELEC CLC/TR 50404 (Electrostatics - Code of practice for the avoidance of hazards due to static electricity).

Static Accumulator: This material is a static accumulator.

STORAGE

The container choice, for example storage vessel, may effect static accumulation and dissipation. Do not store in open or unlabelled containers. Keep away from incompatible materials.

SECTION 8 EXPOSURE CONTROLS / PERSONAL PROTECTION

EXPOSURE LIMIT VALUES

Exposure limits/standards (Note: Exposure limits are not additive)

Source	Form	Limit / Standard			NOTE	Source
SOLVENT REFINED LIGHT PARAFFINIC DISTILLATE (PETROLEUM)	Mist.	TWA	5 mg/m3		N/A	OSHA Z1
SOLVENT REFINED LIGHT PARAFFINIC DISTILLATE (PETROLEUM)	Inhalable fraction.	TWA	5 mg/m3		N/A	ACGIH
SOLVENT REFINED LIGHT PARAFFINIC DISTILLATE (PETROLEUM)	Mist.	TWA	5 mg/m3		N/A	ACGIH
STRAIGHT-RUN MIDDLE DISTILLATES	Stable Aerosol.	TWA	5 mg/m3		N/A	ExxonMobil
STRAIGHT-RUN MIDDLE DISTILLATES	Vapor.	TWA	200 mg/m3		N/A	ExxonMobil

Exposure limits/standards for materials that can be formed when handling this product: When mists/aerosols can occur the following are recommended: 5 mg/m³ - ACGIH TLV (inhalable fraction), 5 mg/m³ - OSHA PEL.

NOTE: Limits/standards shown for guidance only. Follow applicable regulations.

ENGINEERING CONTROLS

The level of protection and types of controls necessary will vary depending upon potential exposure conditions. Control measures to consider:

No special requirements under ordinary conditions of use and with adequate ventilation.

PERSONAL PROTECTION

Personal protective equipment selections vary based on potential exposure conditions such as applications, handling practices, concentration and ventilation. Information on the selection of protective equipment for use with this material, as provided below, is based upon intended, normal usage.

Respiratory Protection: If engineering controls do not maintain airborne contaminant concentrations at a

level which is adequate to protect worker health, an approved respirator may be appropriate. Respirator selection, use, and maintenance must be in accordance with regulatory requirements, if applicable. Types of respirators to be considered for this material include:
No special requirements under ordinary conditions of use and with adequate ventilation.

For high airborne concentrations, use an approved supplied-air respirator, operated in positive pressure mode. Supplied air respirators with an escape bottle may be appropriate when oxygen levels are inadequate, gas/vapor warning properties are poor, or if air purifying filter capacity/rating may be exceeded.

Hand Protection: Any specific glove information provided is based on published literature and glove manufacturer data. Glove suitability and breakthrough time will differ depending on the specific use conditions. Contact the glove manufacturer for specific advice on glove selection and breakthrough times for your use conditions. Inspect and replace worn or damaged gloves. The types of gloves to be considered for this material include:
If prolonged or repeated contact is likely, chemical resistant gloves are recommended. If contact with forearms is likely, wear gauntlet style gloves.

Eye Protection: If contact is likely, safety glasses with side shields are recommended.

Skin and Body Protection: Any specific clothing information provided is based on published literature or manufacturer data. The types of clothing to be considered for this material include:
If prolonged or repeated contact is likely, chemical, and oil resistant clothing is recommended.

Specific Hygiene Measures: Always observe good personal hygiene measures, such as washing after handling the material and before eating, drinking, and/or smoking. Routinely wash work clothing and protective equipment to remove contaminants. Discard contaminated clothing and footwear that cannot be cleaned. Practice good housekeeping.

ENVIRONMENTAL CONTROLS

Comply with applicable environmental regulations limiting discharge to air, water and soil. Protect the environment by applying appropriate control measures to prevent or limit emissions.

SECTION 9 PHYSICAL AND CHEMICAL PROPERTIES

Note: Physical and chemical properties are provided for safety, health and environmental considerations only and may not fully represent product specifications. Contact the Supplier for additional information.

GENERAL INFORMATION

Physical State: Liquid
Color: Amber
Odor: Characteristic
Odor Threshold: N/D

IMPORTANT HEALTH, SAFETY, AND ENVIRONMENTAL INFORMATION

Relative Density (at 15 °C): 0.845
Flash Point [Method]: >166°C (331°F) [ASTM D-92]
Flammable Limits (Approximate volume % in air): LEL: 0.9 UEL: 7.0
Autoignition Temperature: N/D
Boiling Point / Range: > 232°C (450°F)
Vapor Density (Air = 1): > 2 at 101 kPa

Vapor Pressure: < 0.013 kPa (0.1 mm Hg) at 20 °C
Evaporation Rate (n-butyl acetate = 1): N/D
pH: N/A
Log Pow (n-Octanol/Water Partition Coefficient): > 3.5
Solubility in Water: Negligible
Viscosity: 9 cSt (9 mm2/sec) at 40 °C | 2.7 cSt (2.7 mm2/sec) at 100°C
Oxidizing Properties: See Hazards Identification Section.

OTHER INFORMATION

Freezing Point: N/D
Melting Point: N/A
Pour Point: -24°C (-11°F)
DMSO Extract (mineral oil only), IP-346: < 3 %wt

SECTION 10 STABILITY AND REACTIVITY

STABILITY: Material is stable under normal conditions.

CONDITIONS TO AVOID: Excessive heat. High energy sources of ignition.

MATERIALS TO AVOID: Strong oxidizers

HAZARDOUS DECOMPOSITION PRODUCTS: Material does not decompose at ambient temperatures.

HAZARDOUS POLYMERIZATION: Will not occur.

SECTION 11 TOXICOLOGICAL INFORMATION

ACUTE TOXICITY

Route of Exposure	Conclusion / Remarks
Inhalation	
Toxicity: No end point data for material.	Minimally Toxic. Based on assessment of the components.
Irritation: No end point data for material.	Elevated temperatures or mechanical action may form vapors, mist, or fumes which may be irritating to the eyes, nose, throat, or lungs. Based on assessment of the components.
Ingestion	
Toxicity: No end point data for material.	Minimally Toxic. Based on assessment of the components.
Skin	
Toxicity: No end point data for material.	Minimally Toxic. Based on assessment of the components.
Irritation: No end point data for material.	Negligible irritation to skin at ambient temperatures. Based on assessment of the components.
Eye	
Irritation: No end point data for material.	May cause mild, short-lasting discomfort to eyes. Based on assessment of the components.

CHRONIC/OTHER EFFECTS

For the product itself:

Repeated and/or prolonged exposure may cause irritation to the skin, eyes, or respiratory tract. Small amounts of liquid aspirated into the lungs during ingestion or from vomiting may cause chemical pneumonitis or

pulmonary edema.
Contains:
Base oil severely refined: Not carcinogenic in animal studies. Representative material passes IP-346, Modified Ames test, and/or other screening tests. Dermal and inhalation studies showed minimal effects; lung non-specific infiltration of immune cells, oil deposition and minimal granuloma formation. Not sensitizing in test animals.

Additional information is available by request.

The following ingredients are cited on the lists below: None.

--REGULATORY LISTS SEARCHED--

1 = NTP CARC	3 = IARC 1	5 = IARC 2B
2 = NTP SUS	4 = IARC 2A	6 = OSHA CARC

SECTION 12 ECOLOGICAL INFORMATION

The information given is based on data available for the material, the components of the material, and similar materials.

ECOTOXICITY
Material -- Not expected to be harmful to aquatic organisms.

MOBILITY
Base oil component -- Low solubility and floats and is expected to migrate from water to the land. Expected to partition to sediment and wastewater solids.

PERSISTENCE AND DEGRADABILITY
Biodegradation:
Base oil component -- Expected to be inherently biodegradable

BIOACCUMULATION POTENTIAL
Base oil component -- Has the potential to bioaccumulate, however metabolism or physical properties may reduce the bioconcentration or limit bioavailability.

OTHER ECOLOGICAL INFORMATION
VOC: 14 G/L [ASTM E1868-10]

SECTION 13 DISPOSAL CONSIDERATIONS

Disposal recommendations based on material as supplied. Disposal must be in accordance with current applicable laws and regulations, and material characteristics at time of disposal.

DISPOSAL RECOMMENDATIONS

ExxonMobil

Product Name: MOBIL DTE 21
Revision Date: 13 Dec 2012
Page 8 of 10

Product is suitable for burning in an enclosed controlled burner for fuel value or disposal by supervised incineration at very high temperatures to prevent formation of undesirable combustion products. Protect the environment. Dispose of used oil at designated sites. Minimize skin contact. Do not mix used oils with solvents, brake fluids or coolants.

REGULATORY DISPOSAL INFORMATION

RCRA Information: The unused product, in our opinion, is not specifically listed by the EPA as a hazardous waste (40 CFR, Part 261D), nor is it formulated to contain materials which are listed as hazardous wastes. It does not exhibit the hazardous characteristics of ignitability, corrositivity or reactivity and is not formulated with contaminants as determined by the Toxicity Characteristic Leaching Procedure (TCLP). However, used product may be regulated.

Empty Container Warning Empty Container Warning (where applicable): Empty containers may contain residue and can be dangerous. Do not attempt to refill or clean containers without proper instructions. Empty drums should be completely drained and safely stored until appropriately reconditioned or disposed. Empty containers should be taken for recycling, recovery, or disposal through suitably qualified or licensed contractor and in accordance with governmental regulations. DO NOT PRESSURISE, CUT, WELD, BRAZE, SOLDER, DRILL, GRIND, OR EXPOSE SUCH CONTAINERS TO HEAT, FLAME, SPARKS, STATIC ELECTRICITY, OR OTHER SOURCES OF IGNITION. THEY MAY EXPLODE AND CAUSE INJURY OR DEATH.

SECTION 14 TRANSPORT INFORMATION

LAND (DOT): Not Regulated for Land Transport

LAND (TDG): Not Regulated for Land Transport

SEA (IMDG): Not Regulated for Sea Transport according to IMDG-Code

AIR (IATA): Not Regulated for Air Transport

SECTION 15 REGULATORY INFORMATION

OSHA HAZARD COMMUNICATION STANDARD: When used for its intended purpose, this material is classified as hazardous in accordance with OSHA 29CFR 1910.1200.

Complies with the following national/regional chemical inventory requirements:: AICS, DSL, ENCS, IECSC, KECI, PICCS, TSCA

EPCRA SECTION 302: This material contains no extremely hazardous substances.

SARA (311/312) REPORTABLE HAZARD CATEGORIES: Delayed Health.

SARA (313) TOXIC RELEASE INVENTORY: This material contains no chemicals subject to the supplier notification requirements of the SARA 313 Toxic Release Program.

The following ingredients are cited on the lists below:

Chemical Name	CAS Number	List Citations
SOLVENT REFINED LIGHT PARAFFINIC DISTILLATE (PETROLEUM)	64741-89-5	1, 4, 17, 18, 19
ZINC ALKYL DITHIOPHOSPHATE	68649-42-3	15

--REGULATORY LISTS SEARCHED--

1 = ACGIH ALL	6 = TSCA 5a2	11 = CA P65 REPRO	16 = MN RTK
2 = ACGIH A1	7 = TSCA 5e	12 = CA RTK	17 = NJ RTK
3 = ACGIH A2	8 = TSCA 6	13 = IL RTK	18 = PA RTK
4 = OSHA Z	9 = TSCA 12b	14 = LA RTK	19 = RI RTK
5 = TSCA 4	10 = CA P65 CARC	15 = MI 293	

Code key: CARC=Carcinogen; REPRO=Reproductive

SECTION 16 OTHER INFORMATION

N/D = Not determined, N/A = Not applicable

THIS SAFETY DATA SHEET CONTAINS THE FOLLOWING REVISIONS:
No revision information is available.

PRECAUTIONARY LABEL TEXT:
Contains: SOLVENT REFINED LIGHT PARAFFINIC DISTILLATE (PETROLEUM); STRAIGHT-RUN MIDDLE DISTILLATES
CAUTION!
HEALTH HAZARDS
Repeated exposure may cause skin dryness or cracking. If swallowed, may be aspirated and cause lung damage.
Target Organs: Skin |

FIRST AID
Eye: Flush thoroughly with water. If irritation occurs, get medical assistance.

Oral: Seek immediate medical attention. Do not induce vomiting.

Skin: Wash contact areas with soap and water. Remove contaminated clothing. Launder contaminated clothing before reuse. If product is injected into or under the skin, or into any part of the body, regardless of the appearance of the wound or its size, the individual should be evaluated immediately by a physician as a surgical emergency. Even though initial symptoms from high pressure injection may be minimal or absent, early surgical treatment within the first few hours may significantly reduce the ultimate extent of injury.

FIRE FIGHTING MEDIA
Use water fog, foam, dry chemical or carbon dioxide (CO2) to extinguish flames.

SPILL/LEAK
Land Spill: Stop leak if you can do it without risk. Recover by pumping or with suitable absorbent.

Water Spill: Stop leak if you can do it without risk. Confine the spill immediately with booms. Warn other shipping.

Remove from the surface by skimming or with suitable absorbents. Report spills as required to appropriate authorities. Seek the advice of a specialist before using dispersants.

Use

Not intended or suitable for use in or around a household or dwelling.

The information and recommendations contained herein are, to the best of ExxonMobil's knowledge and belief, accurate and reliable as of the date issued. You can contact ExxonMobil to insure that this document is the most current available from ExxonMobil. The information and recommendations are offered for the user's consideration and examination. It is the user's responsibility to satisfy itself that the product is suitable for the intended use. If buyer repackages this product, it is the user's responsibility to insure proper health, safety and other necessary information is included with and/or on the container. Appropriate warnings and safe-handling procedures should be provided to handlers and users. Alteration of this document is strictly prohibited. Except to the extent required by law, re-publication or retransmission of this document, in whole or in part, is not permitted. The term, "ExxonMobil" is used for convenience, and may include any one or more of ExxonMobil Chemical Company, Exxon Mobil Corporation, or any affiliates in which they directly or indirectly hold any interest.

Internal Use Only

MHC: 2A, 0B, 0, 0, 0, 1 PPEC: C

DGN: 2025222XUS (547054)

Copyright 2002 Exxon Mobil Corporation, All rights reserved

11.5.11 CRC QUICKCLEAN HEAVY DUTY DEGREASER

CRC Industries, Inc.
885 Louis Drive • Warminster PA • 18974

Technical Data Sheet

Quick Clean™
Heavy Duty Degreaser

I. Product Description

CRC Quick Clean™ is a non-flammable, chlorinated, non-ozone depleting degreaser for use on industrial equipment. It provides an economical and aggressive reduced VOC alternative to 1,1,1. It dissolves grease, oil and sludge quickly for more efficient operation of mechanical equipment. **Quick Clean™** is chemically stable, non-conductive and non-corrosive.

II. Applications

Recommended for the removal of grease, oil, grime, sludge and corrosion from motors, air tools, mechanical brakes, clutches, chains, wire rope, machinery, parts, bearings, generators, compressors, pumps, hoists, lifts, dies, molds and a wide variety of other industrial and electrical equipment. Safe for use on oxygen systems*.

III. Features & Benefits

- **Non-Flammable**. Significantly reduces the risk of fire caused by incidental contact of liquid with live equipment or solvents trapped by insulating materials.
- **Fast Evaporation**. Reduces down-time.
- **Leaves No Residue.** Prevents harmful build-up on equipment and eliminates wiping in most applications.
- **No Class I or II Ozone Depleting Chemicals**. Provides an alternative to 1,1,1-Trichloroethane products while complying with the EPA regulations on the use of ozone depleting chemicals.
- **M.S.D.[L.]™-Material Safety Data Label**. Provides instant access to current safety information should an accident or OSHA inspection occur. Helps comply **with OSHA Hazard Communications Standard 29 CFR 1910.1200**.

IV. Physical Properties without propellant

Flash Point	None	**Boiling Point**	250°F (initial)
Odor	Strong in high concentrations	**Solubility**	Slight in water
Appearance	Colorless liquid	**% Volatile**	100
Vapor Density	5.76 (air=1)	**Specific Gravity**	1.619 @ 25°C
VOC Content (Fed)	Exempt (0 g/L)	**Surface Tension**	32.32 dynes/cm
Sara Title III, Sect. 313 Chemicals	Yes	**Propellant**	CO_2
Prop 65	Yes		

V. Specifications and Approvals

- NSF K2 Registered for use in meat and poultry plants.

*Post-test and cleanliness inspection procedures should be followed before re-introduction of oxygen to the system.

Quick Clean™ Heavy Duty Degreaser

VI. Performance Characteristics

ASTM D-56 (Flash Point)	None
ASTM D-877 (Dielectric Strength)	37,500 volts
ASTM D-1130 (KB Value)	95
Surface Tension	32.32 dynes/CM

VII. Directions

- Do not use on polycarbonate plastics such as LEXAN®. If in doubt, call the manufacturer of the equipment. MAY ALSO BE HARMFUL TO OTHER PLASTICS.
- Protect all rubber parts, plastic parts, and painted surfaces from overspray. DO NOT spray directly on painted surfaces.
- Remove access plates to expose equipment interior. For hard to reach areas, use extension tube.
- Spray until clean.
- Air dry or dry with a clean, absorbent cloth.
- Heavy deposits may require scraping and repeated applications.
- **FOR PERSONAL SAFETY DO NOT APPLY WHILE EQUIPMENT IS ENERGIZED.**
- Not for use on sensitive electronic equipment such as tape decks, VCRs, computers, etc. Use a plastic safe CRC Precision Cleaner for those applications.
- Avoid contact with aluminum and its' alloys.

VIII. Package Description

Part Number	Container Size
03180	20 oz Aerosol
03183	5 Gallon Pail
03184	55 Gallon Drum

IX. Disposal

Disposal requirements vary by state and local jurisdiction. All used and unused product should be disposed of in conformance with local, state and federal regulations.

X. Special Use Warnings

Aerosol Cans
Do not puncture, incinerate or store above 120°F. Exposure to high temperatures may cause can to burst. Do not place in direct sunlight or near any heat source. Aerosol cans will conduct electricity. Keep away from all live electrical sources including battery terminals, solenoids, electrical panels and other electronic components. Failure to observe this warning may result in serious injury from flash fire and/or electrical shock.

General
Use only in well ventilated area. Ventilation may be improved by opening a window or door or providing mechanical assistance. Avoid continuous breathing of vapor and spray mist. Avoid contact with skin and eyes. If ventilation is not adequate, respiratory protection should be worn. For more information regarding short term and long term exposure, review this product's Material Safety Data Sheet.

DISCLAIMER: This information is accurate to the best of CRC Industries' knowledge or obtained from sources believed by CRC to be accurate. Before using any product, read all warnings and directions on the label. All products should be tested for suitability on a particular application prior to actual use. CRC Industries, Inc. makes no representations or warranties of any kind concerning this data.

CRC Industries, Inc. *Industrial Products Division* *Warminster, PA 18974*
Technical Service: (800)521-3168 *Customer Service: (800)272-4620* *CRC On-Line: (215)442-6260*

Literature Reorder #TDS186 ***CRC On-Line # 186*** ***REV. 11/11***

CRC MATERIAL SAFETY DATA SHEET

Section 1: Product & Company Identification

Product Name: **Quick Clean™** (aerosol)

Product Number (s): **03180**

Product Use: General purpose degreaser

Manufacturer / Supplier Contact Information:

In United States:
CRC Industries, Inc.
885 Louis Drive
Warminster, PA 18974
www.crcindustries.com
1-215-674-4300 (General)
(800) 521-3168 (Technical)
(800) 272-4620 (Customer Service)

In Canada:
CRC Canada Co.
2-1246 Lorimar Drive
Mississauga, Ontario L5S 1R2
www.crc-canada.ca
1-905-670-2291

In Mexico:
CRC Industries Mexico
Av. Benito Juárez 4055 G
Colonia Orquídea
San Luís Potosí, SLP CP 78394
www.crc-mexico.com
52-444-824-1666

24-Hr Emergency – CHEMTREC: (800) 424-9300 or (703) 527-3887

Section 2: Hazards Identification

Emergency Overview

DANGER: Vapor Harmful. Contents Under Pressure.
Appearance & Odor: Colorless liquid, irritating odor at high concentrations.

Potential Health Effects:

ACUTE EFFECTS:

EYE: May cause slight temporary eye irritation. Vapors may irritate the eyes at concentrations of 100 ppm.

SKIN: Short single exposure may cause skin irritation. Prolonged exposure may cause severe skin irritation, even a burn. A single prolonged exposure is not likely to result in the material being absorbed through the skin in harmful amounts.

INHALATION: Dizziness may occur at concentrations of 200 ppm. Progressively higher levels may also cause nasal irritation, nausea, incoordination, and drunkenness. Very high levels or prolonged exposure could lead to unconsciousness and death.

INGESTION: Single dose oral toxicity is considered to be extremely low. Swallowing large amounts may cause injury if aspirated into the lungs. This may be rapidly absorbed through the lungs and result in injury to other body systems.

CHRONIC EFFECTS: Repeated contact with skin may cause drying or flaking of skin. Excessive or long term exposure to vapors may increase sensitivity to epinephrine and increase myocardial irritability.

TARGET ORGANS: Central nervous system, possibly liver and kidney

Medical Conditions Aggravated by Exposure: None known.

See Section 11 for toxicology and carcinogenicity information on product ingredients.

Page 1 of 7

Product Name: Quick Clean™ (aerosol)
Product Number (s): 03180

Section 3: Composition/Information on Ingredients

COMPONENT	CAS NUMBER	% by Wt.
Tetrachloroethylene (PERC)	127-18-4	> 95
Carbon Dioxide	124-38-9	< 5

Section 4: First Aid Measures

Eye Contact: Immediately flush with plenty of water for 15 minutes. Call a physician if irritation persists.

Skin Contact: Remove contaminated clothing and wash affected area with soap and water. Call a physician if irritation persists. Wash contaminated clothing prior to re-use.

Inhalation: Remove person to fresh air. Keep person calm. If not breathing, give artificial respiration. If breathing is difficult give oxygen. Call a physician.

Ingestion: Do NOT induce vomiting. Call a physician immediately.

Note to Physicians: Because rapid absorption may occur through lungs if aspirated and cause systemic effects, the decision of whether to induce vomiting or not should be made by a physician. If lavage is performed, suggest endotracheal and/or esophageal control. If burn is present, treat as any thermal burn, after decontamination. Exposure may increase myocardial irritability. Do not administer sympathomimetic drugs unless absolutely necessary. No specific antidote.

Section 5: Fire-Fighting Measures

Flammable Properties: This product is nonflammable in accordance with aerosol flammability definitions. (See 16 CFR 1500.3(c)(6))

Flash Point: None (TCC) Upper Explosive Limit: None
Autoignition Temperature: None Lower Explosive Limit: None

Fire and Explosion Data:

Suitable Extinguishing Media: This material does not burn. Use extinguishing agent suitable for surrounding fire.

Products of Combustion: Hydrogen chloride. Trace amounts of phosgene and chlorine.

Explosion Hazards: Aerosol containers, when exposed to heat from fire, may build pressure and explode.

Protection of Fire-Fighters: Firefighters should wear self-contained, NIOSH-approved breathing apparatus for protection against suffocation and possible toxic decomposition products. Proper eye and skin protection should be provided. Use water spray to keep fire-exposed containers cool and to knock down vapors which may result from product decomposition.

Section 6: Accidental Release Measures

Personal Precautions: Use personal protection recommended in Section 8. Do not breathe vapors.

Environmental Precautions: Take precautions to prevent contamination of ground and surface waters. Do not flush into sewers or storm drains.

Methods for Containment & Clean-up: Dike area to contain spill. Ventilate the area with fresh air. If in confined space or limited air circulation area, clean-up workers should wear appropriate

Page 2 of 7

Product Name: Quick Clean™ (aerosol)
Product Number (s): 03180

respiratory protection. Recover or absorb spilled material using an absorbent designed for chemical spills. Place used absorbents into proper waste containers.

Section 7: Handling and Storage

Handling Procedures: Vapors of this product are heavier than air and will collect in low areas. Make sure ventilation removes vapors from low areas. Do not eat, drink or smoke while using this product. Use caution around energized equipment. The metal container will conduct electricity if it contacts a live source. This may result in injury to the user from electrical shock and/or flash fire. For product use instructions, please see the product label.

Storage Procedures: Store in a cool dry area out of direct sunlight. Aerosol cans must be maintained below 120°F / 49°C to prevent cans from rupturing.

Aerosol Storage Level: I

Section 8: Exposure Controls/Personal Protection

Exposure Guidelines:

	OSHA		ACGIH		OTHER		
COMPONENT	TWA	STEL	TWA	STEL	TWA	SOURCE	UNIT
Tetrachloroethylene	100	N.E.	25	100	N.E.		ppm
Carbon dioxide	5000	30000 v	5000	30,000	N.E.		ppm
N.E. – Not Established (c) – ceiling (s) – skin (v) – vacated							

Controls and Protection:

Engineering Controls: Area should have ventilation to provide fresh air. Local exhaust ventilation is generally preferred because it can control the emissions of the contaminant at the source, preventing dispersion into the general work area. Use mechanical means if necessary to maintain vapor levels below the exposure guidelines. If working in a confined space, follow applicable OSHA regulations.

Respiratory Protection: None required for normal work where adequate ventilation is provided. If engineering controls are not feasible or if exposure exceeds the applicable exposure limits, use a NIOSH-approved cartridge respirator with organic vapor cartridge. Air monitoring is needed to determine actual employee exposure levels. Use a self-contained breathing apparatus in confined spaces and for emergencies.

Eye/face Protection: For normal conditions, wear safety glasses. Where there is reasonable probability of liquid contact, wear splash-proof goggles.

Skin Protection: Use protective gloves such as PVA, Teflon, or Viton. Also, use full protective clothing if there is prolonged or repeated contact of liquid with skin.

Section 9: Physical and Chemical Properties

Physical State: liquid
Color: colorless
Odor: irritating odor
Odor Threshold: 50 ppm
Specific Gravity: 1.619

Page 3 of 7

Product Name: Quick Clean™ (aerosol)
Product Number (s): 03180

Initial Boiling Point: 250°F / 121°C
Freezing Point: ND
Vapor Pressure: 13 mmHg @ 68°F / 20°C
Vapor Density: 5.76 (air = 1)
Evaporation Rate: very fast
Solubility: 0.015 g / 100 g @ 77°F / 25°C in water
Coefficient of water/oil distribution (log P_{ow}): 2.88
pH: NA
Volatile Organic Compounds: wt %: 0 g/L: 0 lbs./gal: 0

Section 10: Stability and Reactivity

Stability: Stable

Conditions to Avoid: Avoid direct sunlight or ultraviolet sources. Avoid open flames, welding arcs, and other high temperature sources which induce thermal decomposition.

Incompatible Materials: Avoid contact with metals such as: aluminum powders, magnesium powders, potassium, sodium, and zinc powder. Avoid unintended contact with amines. Avoid contact with strong bases and strong oxidizers.

Hazardous Decomposition Products: Hydrogen chloride, trace amounts of chlorine and phosgene

Possibility of Hazardous Reactions: No

Section 11: Toxicological Information

Long-term toxicological studies have not been conducted for this product. The following information is available for components of this product.

Acute Toxicity:

Component	Oral LD50 (rat)	Dermal LD50 (rabbit)	Inhalation LC50 (rat)
Tetrachloroethylene	2629 mg/kg	3228 mg/kg	5200 mg/kg/4H
Carbon dioxide	No data	No data	470,000 ppm/30M

Chronic Toxicity:

Component	OSHA Carcinogen	IARC Carcinogen	NTP Carcinogen	Irritant	Sensitizer
Tetrachloroethylene	No	Group 2A	Reasonably Anticipated to be a Carcinogen	Skin	No
Carbon dioxide	No	No	No	No	No

Reproductive Toxicity: No information available
Teratogenicity: No information available
Mutagenicity: Tetrachloroethylene: In vitro studies were negative
Animal studies were negative
Synergistic Effects: No information available

Section 12: Ecological Information

Ecological studies have not been conducted for this product. The following information is available for components of this product.

Page 4 of 7

Product Name: Quick Clean™ (aerosol)
Product Number (s): 03180

Ecotoxicity:	Tetrachloroethylene -- 96 Hr LC50 Rainbow Trout: 5.28 mg/L (static) 96 Hr LC50 Fathead minnow: 13.4 mg/L (flow-through)
Persistence / Degradability:	Biodegradation under aerobic conditions is below detectable limits. Biodegradation may occur under anaerobic conditions. Biodegradation rate may increase in soil and/or water with acclimation.
Bioaccumulation / Accumulation:	Bioconcentration potential is low (BCF less than 100).
Mobility in Environment:	Potential for mobility in soil is medium.

Section 13: Disposal Considerations

Waste Classification: The dispensed liquid product is a RCRA hazardous waste for toxicity with the following potential waste codes: U210, F001, F002, D039. (See 40 CFR Part 261.20 – 261.33)
Empty aerosol containers may be recycled. Any liquid product should be managed as a hazardous waste.

All disposal activities must comply with federal, state, provincial and local regulations. Local regulations may be more stringent than state, provincial or national requirements.

Section 14: Transport Information

US DOT (ground):	UN1950, Aerosols, non-flammable, 2.2 (6.1), Limited Quantity**
ICAO/IATA (air):	UN1950, Aerosols, non-flammable, containing substances in Division 6.1, Packing Group III, 2.2 (6.1), Limited Quantity
IMO/IMDG (water):	UN1950, Aerosols, 2.2 (6.1)
Special Provisions:	Marine Pollutant **This product can be classified and labeled as 'Consumer Commodity, ORM-D' for domestic ground shipping until January 1, 2014. If shipping as limited quantity by ground, note that shipping papers are not required.

Section 15: Regulatory Information

U.S. Federal Regulations:

Toxic Substances Control Act (TSCA):
All ingredients are either listed on the TSCA inventory or are exempt.

Comprehensive Environmental Response, Compensation and Liability Act (CERCLA):
Reportable Quantities (RQ's) exist for the following ingredients: Tetrachloroethylene (100 lbs)

Spills or releases resulting in the loss of any ingredient at or above its RQ require immediate notification to the National Response Center (800-424-8802) and to your Local Emergency Planning Committee.

Superfund Amendments Reauthorization Act (SARA) Title III:
Section 302 Extremely Hazardous Substances (EHS): None

Section 311/312 Hazard Categories:	Fire Hazard	No
	Reactive Hazard	No
	Release of Pressure	Yes
	Acute Health Hazard	Yes
	Chronic Health Hazard	Yes

Product Name: Quick Clean™ (aerosol)
Product Number (s): 03180

Section 313 Toxic Chemicals: This product contains the following substances subject to the reporting requirements of Section 313 of Title III of the Superfund Amendments and Reauthorization Act of 1986 and 40 CFR Part 372:
tetrachloroethylene (98%)

Clean Air Act:
Section 112 Hazardous Air Pollutants (HAPs): tetrachloroethylene

Occupational Safety and Health Administration:
This product is regulated by the Hazard Communications Standard.

U.S. State Regulations:

California Safe Drinking Water and Toxic Enforcement Act (Prop 65):
This product may contain the following chemicals known to the state of California to cause cancer, birth defects or other reproductive harm: tetrachloroethylene

Consumer Products VOC Regulations: This product is not compliant to be sold for use in California, Connecticut, Delaware, The District of Columbia, Illinois, Indiana, Maine, Maryland, Massachusetts, Michigan, New Jersey, New York, and Rhode Island. In other states with Consumer Products VOC regulations, this product is compliant as a General Purpose Degreaser.

State Right to Know:

New Jersey:	127-18-4, 124-38-9
Pennsylvania:	127-18-4, 124-38-9
Massachusetts:	127-18-4, 124-38-9
Rhode Island :	127-18-4, 124-38-9

Canadian Regulations:

Controlled Products Regulations:
This product has been classified in accordance with the hazard criteria of the Controlled Products Regulations and the MSDS contains all the information required by the Controlled Products Regulations.

WHMIS Hazard Class: A, D1B, D2A, D2B

Canadian DSL Inventory: All ingredients are either listed on the DSL Inventory or are exempt.

European Union Regulations:

RoHS Compliance: This product is compliant with Directive 2002/95/EC of the European Parliament and of the Council of 27 January 2003. This product does not contain any of the restricted substances as listed in Article 4(1) of the RoHS Directive.

Additional Regulatory Information: None

Page 6 of 7

Product Name: Quick Clean™ (aerosol)
Product Number (s): 03180

Section 16: Other Information

HMIS® (II)	
Health:	2
Flammability:	0
Reactivity:	0
PPE:	B

NFPA

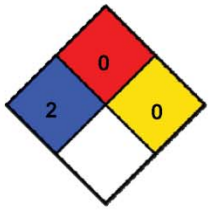

Ratings range from 0 (no hazard) to 4 (severe hazard)

Prepared By: Michelle Rudnick
CRC #: 491G
Revision Date: 07/24/2012

Changes since last revision: Section 14: Transport Information

The information contained in this document applies to this specific material as supplied. It may not be valid for this material if it is used in combination with any other materials. This information is accurate to the best of CRC Industries' knowledge or obtained from sources believed by CRC to be accurate. Before using any product, read all warnings and directions on the label. For further clarification of any information contained on this MSDS consult your supervisor, a health & safety professional, or CRC Industries.

ACGIH: American Conference of Governmental Industrial Hygienists
CAS: Chemical Abstract Service
CFR: Code of Federal Regulations
DOT: Department of Transportation
DSL: Domestic Substance List
g/L: grams per Liter
HMIS: Hazardous Materials Identification System
IARC: International Agency for Research on Cancer
IATA: International Air Transport Association
ICAO: International Civil Aviation Organization
IMDG: International Maritime Dangerous Goods
IMO: International Maritime Organization
lbs./gal: pounds per gallon
LC: Lethal Concentration
LD: Lethal Dose

NA: Not Applicable
ND: Not Determined
NIOSH: National Institute of Occupational Safety & Health
NFPA: National Fire Protection Association
NTP: National Toxicology Program
OSHA: Occupational Safety and Health Administration
PMCC: Pensky-Martens Closed Cup
PPE: Personal Protection Equipment
ppm: Parts per Million
RoHS: Restriction of Hazardous Substances
STEL: Short Term Exposure Limit
TCC: Tag Closed Cup
TWA: Time Weighted Average
WHMIS: Workplace Hazardous Materials Information System

11.5.12 CAIG LABORATORIES DEOXIT D5 CONTACT CLEANER

Since 1956
CAIG LABORATORIES, INC.

DATA SHEET

Our products make your products perform!

DeoxIT® D5 Spray, D-Series
Contact Cleaner & Rejuvenator

Part No.: D5S-6

Container Size: 142 g, adjustable valve (L-M-H)

Product Description:

Unique contact cleaner, rejuvenator, conductivity enhancer and lubricant; dissolves oxidation and corrosion on metal surfaces, fills in microscopic gaps and reseals surface for better contact to enhance flow of electricity. Improves connector performance/reliability. Temperature range: -34 to +200°C.

Features/Benefits:

Spray, adjustable valve (L-M-H) - Flushing Action, and Safe on Plastics.
DeoxIT® D100L concentrate has approximately 20% chemical cleaning action.
Excellent cleaning/deoxidizing, good protection, no ozone depletion.
Improves conductivity and reduces intermittent connections.
Reduces arcing, RFI, wear and abrasion.
Cleaner Audio - Clearer Video - Reliable Data.

Formulation:

5%	DeoxIT® D100L
75%	odorless mineral spirits (64742-88-7)
20%	DIFLUOROETHANE (75-37-6)

VOC COMPLIANT RoHS COMPLIANT

DeoxIT® - Product Selection Guide

	DeoxIT®	DeoxIT® GOLD	DeoxIT® GOLD Gxl	DeoxIT® GOLD Gx2	DeoxIT® SHIELD	DeoxIT® FaderLube
New Surfaces		✔	✔	✔	✔	✔
* In Service / Used	✔					✔
Gold surfaces		✔	✔	✔		
Oxidation / corrosion visible	✔					
Conductive plastics						✔
** Outdoor / Severe environments	✔					✔
Deoxidizing / cleaning properties	20%	0.1%	0.1%	0.0%	0.0%	0.0%
Metal / Plastic surfaces	Yes	Yes	Yes	Yes	Yes	
Plastics compatibility	Excellent	Excellent	Excellent	Excellent	Excellent	Excellent
Temperature range (°C)	-34/200	-45/240	-45/310	-45/500	-34/210	-26/150
Stationary & moving surfaces	Yes	Yes	Yes	Yes	Yes	Yes
Seals & protects base metals	Good	Excellent	Excellent	Excellent	Good	No

✔ All products are Nonflammable and RoHs Compliant
* In Service: Clean with DeoxIT®. For added protection, follow with DeoxIT® GOLD (indoors), DeoxIT® SHIELD (outdoors) or DeoxIT® Grease (additional barrier).
** Severe environments: Pre-clean with DeoxIT®. Follow with DeoxIT® SHIELD or DeoxIT® Grease.

DeoxIT® - Spray Selection Guide

Product Series	FP	QD	NF	PC	VOC
Standard - 5% solution D5S-6, D5MS-15, G5S-6, G5MS-15, S5S-6, S5MS-15, F5S-6, F5MS-15	✔			✔	75
N Series - 5% solution DN5S-6N, DN5MS-15, GN5S-6N, GN5MS-15, SN5S-6, SN5MS-15		✔	✔	✔	20
X Series - 5% solution GX5S-6N		✔	✔	✔	20
100 Series - 100% solution D100S-2, G100S-2, F100S-2			✔	✔	0

FP = Flushing properties QD = Quick dry / non drip NF = Nonflammable
PC = Plastics compatibility VOC = VOC (%)

Page 1

Other Applicators:

D5MS-15	5%	mini-spray	14 g	flammable
DN5S-6N	5%	spray	163 g	nonflammable
DN5MS-15	5%	mini-spray	14 g	nonflammable
D100S-2	100%	spray	57g	nonflammable
D100P	100%	pen	6 mL	nonflammable
D50W	100%	wipes	50 count	nonflammable
D100L-2DB	100%	brush	7.4 mL	nonflammable
D100L-25C	100%	needle dispenser	25 mL	nonflammable
D100L (bulk)	100%	bottle/drum	assort.	nonflammable
D5L (bulk)	5%	bottle/drum	assort.	flammable

DeoxIT® Essential Reference:

DeoxIT® D-Series - *Brings old systems back to life!*
DeoxIT® Gold G-Series - *Maintains new system performance!*
DeoxIT® Shield S-Series - *Maintains new system performance for severe environments!*

Shipping and Additional Information:

Hazardous: ORMD
VOC (%): 75%

Other Information:

RoHS Compliant:	YES
D5S-6 MSDS Link:	http://store.caig.com/
DeoxIT® Product Sheet:	http://store.caig.com/
MentorCard Link:	http://store.caig.com/
WHY DeoxIT® is Different:	http://store.caig.com/

MANUFACTURER DISCLAIMER:

To the best of our knowledge, the information contained herein is accurate. However, neither CAIG Laboratories, Inc., or any of its subsidiaries assumes any liability whatsoever for the accuracy or completeness of the information contained herein. All materials may present unknown hazards and should be used with caution. In particular, improper use of our products and their inappropriate combination with other products and substances may produce harmful results which cannot be anticipated. Final determination of the suitability of any material is the sole responsibility of the user. Although certain hazards are described herein, we cannot guarantee that these are the only hazards that may exist. All service performed on internal parts and equipment should be provided by qualified technicians.

Contact Information:

Since 1956 CAIG LABORATORIES, INC.

North America
CAIG Laboratories, Inc.
12200 Thatcher Court
Poway, CA 92064 USA
Tel: (858) 486-8388
Fax: (858) 486-8398

Website
www.caig.com
www.deoxit.com

General email
info@caig.com

Technical email
tech@caig.com

Page 2

CAIG LABORATORIES, INC.

SAFETY DATA SHEET

Page 1 of 6
MSDS-E-D5S-A

Prepared to OSHA, ACC, ANSI, NOHSC, WHMIS, 2001/58/EC & 1272/2008/EC Standards | MSDS Revision: 3.0 | MSDS Revision Date: 08/22/2012

1. PRODUCT IDENTIFICATION

1.1	Product Name:	**DeoxIT® D-Series, 5% Spray, (P/N D5S-6), 142 g**
1.2	Chemical Name:	**See ingredients listed in section 3**
1.3	Synonyms:	**DeoxIT®, D5S-6, 5% Spray**
1.4	Trade Names:	**DeoxIT®, D5S-6, 5% Spray**
1.5	Product Use:	**Clean, deoxidize & improve electrical contacts & connectors**
1.6	Manufacturer's Name:	**CAIG Laboratories, Inc.**
1.7	Manufacturer's Address:	**12200 Thatcher Court, Poway, CA 92064-6876 USA**
1.8	Emergency Phone:	**CHEMTREC: +1 (703) 527-3887 / +1 (800) 424-3887**
1.9	Business Phone:	**+1 (800)-224-4123**
1.10	Other Product Names:	**DeoxIT®, D5MS-15, 5% Spray, 14 g**

2. HAZARD IDENTIFICATION

2.1 Hazard Identification:

This product is classified as a HAZARDOUS SUBSTANCE but not as DANGEROUS GOODS according to the classification criteria of NOHSC: 1008(2004) and ADG Code (Australia).
WARNING! Flammable aerosol. Colorless, volatile liquid with ethereal and faint sweetish odor. Overexposure may cause dizziness and loss of concentration. At higher levels, CNS depression and cardiac arrhythmia may result from exposure. Vapors displace air and can cause asphyxiation in confined spaces.
Hazard Statements (H): H223 – Flammable aerosol.
Precautionary Statements (P): P210 – Keep away from heat/sparks/open flames/hot surfaces. P211 – Do not spray on an open flame or other ignition source. P251 – Pressurized container. Do not pierce or burn, even after use. P280 – Wear protective gloves and eyewear. P302 + P352 – IF ON SKIN – Wash with plenty of soap and water. P312 – Call a Poison Control Center or doctor/physician if you feel unwell. P333 + P313 – If skin irritation or rash occurs, get medical advise/attention. P321 – Refer to section 4 of this Safety Data Sheet (First Aid). P305+P351+P338 – IF IN EYES - Rinse continuously with water for several minutes. Remove contact lenses if present and easy to do – continue rinsing. P501 – Dispose of contents/container through licensed treatment, storage or disposal facility.

2.2 Routes of Entry:	Inhalation:	YES	Absorption:	YES	Ingestion:	YES

2.3 Effects of Exposure:

EYES:	**Mild to moderate irritation.**
SKIN:	**Irritant and potential skin sensitizer. Prolonged or repeated contact may cause contact dermatitis (localized redness or rash).**
INGESTION:	**Gastrointestinal irritation and central nervous system depression.**
INHALATION:	**Central nervous system depressant. Irritating to the upper respiratory tract.**

2.4 Symptoms of Overexposure:

EYES:	**Mild irritation, redness, and watering.**
SKIN:	**Contact dermatitis, characterized by localized red or puffy dry skin and itching.**
INGESTION:	**Nausea, vomiting, and diarrhea.**
INHALATION:	**Mouth, nose, and throat irritation, dizziness, nausea, light-headedness, drunkenness, and loss of coordination.**

2.5 Acute Health Effects:

INGESTION:	**Gastrointestinal irritation and central nervous system depression.**
EYES:	**Mild to moderate irritation.**
SKIN:	**Irritant and potential skin sensitizer. Prolonged or repeated contact may cause contact dermatitis (e.g., localized redness and/or rash).**
INGESTION:	**Gastrointestinal irritation and central nervous system depression.**
INHALATION:	**Central nervous system depressant. Irritating to the upper respiratory tract.**

2.6 Chronic Health Effects:

EYES:	**Mild to moderate irritation.**
SKIN:	**Irritant and potential skin sensitizer. Prolonged or repeated contact may cause contact dermatitis (e.g., localized redness and/or rash).**
INGESTION:	**Gastrointestinal irritation and central nervous system depression.**
INHALATION:	**Central nervous system depressant. Irritating to the upper respiratory tract.**

2.7 Target Organs:

Eyes, skin and respiratory system.

NA = Not Available; ND = Not Determined; NE = Not Established; C = Ceiling Limit; See Section 16 for Additional Definitions of Terms Used
NOTE: all WHMIS required information is included. It is located in appropriate sections based on the ANSI Z400.1-2010 format.

CAIG LABORATORIES, INC.

SAFETY DATA SHEET

Page 2 of 6
MSDS-E-D5S-A

Prepared to OSHA, ACC, ANSI, NOHSC, WHMIS, 2001/58/EC & 1272/2008/EC Standards | MSDS Revision: 3.0 | MSDS Revision Date: 08/22/2012

3. COMPOSITION & INGREDIENT INFORMATION

CHEMICAL NAME(S)	CAS No.	RTECS No.	EINECS No.	%	EXPOSURE LIMITS IN AIR (mg/m³) ACGIH ppm TLV	ACGIH ppm STEL	NOHSC ppm ES-TWA	NOHSC ppm ES-STEL	NOHSC ppm ES-PEAK	OSHA ppm PEL	OSHA ppm STEL	OSHA ppm IDLH	OTHER
PETROLEUM NAPHTHA	64742-88-7	XS5250000	265-191-7	40-70	100	NE	100	NE	NE	NA	NE	NE	
DIFLUOROETHANE (R-152a)	75-37-6	KI4100000	200-866-1	10-30	1000	NA	1000	NA	NA	NE	NA	NA	SKIN
DeoxIT® D-Series, D100L	TRADE SECRET			3-7	NA	NA	NA	NA	NA	15	NA	NA	

4. FIRST AID MEASURES

4.1 First Aid:

EYES: Flush eyes thoroughly with copious amounts of water for at least 15 minutes, holding eyelid(s) open to ensure complete flushing. If irritation persists, seek immediate medical attention.

SKIN: Remove contaminated clothing and wash affected areas with soap and water. If irritation persists, seek prompt medical attention. Do not wear contaminated clothing until after it has been properly cleaned.

INGESTION: Drink plenty of water. If irritation persists, contact a physician.

INHALATION: Remove victim to fresh air at once. If breathing is difficult, administer supplemental oxygen and seek immediate medical attention. If breathing stops, perform artificial respiration.

4.2 Medical Conditions Aggravated by Exposure:
None reported by the manufacturer.

HEALTH	1
FLAMMABILITY	2
PHYSICAL HAZARDS	0
PROTECTIVE EQUIPMENT	B
EYES	SKIN

5. FIREFIGHTING MEASURES

5.1 Flashpoint & Method:
48.8 °C - 54.4 °C (120 °F – 130 °F).

5.2 Autoignition Temperature:
NA

5.3 Flammability Limits: Lower Explosive Limit (LEL): NA Upper Explosive Limit (UEL): NA

5.4 Fire & Explosion Hazards:
Level 2 aerosol. Carbon dioxide, carbon monoxide, hydrocarbons.

5.5 Extinguishing Methods:
CO_2, Alcohol foam, Dry Chemical, Water Fog

5.6 Firefighting Procedures:
Wear NIOSH/MSHA approved self-contained breathing apparatus and protective clothing. Use a water spray to cool containers involved in fire. Do not use direct water stream. Container storage areas exposed to direct flame contact should be cooled with large quantities of water as needed to prevent weakening of container structure. Keep containers cool until well after the fire is out to prevent rupture. Prevent runoff from fire control or dilution from entering sewers, drains, drinking water supply, or any natural waterway.

6. ACCIDENTAL RELEASE MEASURES

6.1 Spills:
Secure spill area and deny entry to all unprotected individuals. Individuals involved in the cleanup should wear appropriate personal protective equipment. Area may become slippery. Absorb product onto porous material, such as sand, clay, diatomaceous earth or commercial absorbent material. Place into leak-proof, U.S. DOT-approved containers. If necessary, cover all drains and dike well ahead of the spill to prevent runoff into sewers, drains, and all waterways. Contact appropriate local or provincial authorities for assistance and/or reporting requirements.

CAIG LABORATORIES, INC.

SAFETY DATA SHEET

Page 3 of 6
MSDS-E-D5S-A

Prepared to OSHA, ACC, ANSI, NOHSC, WHMIS, 2001/58/EC & 1272/2008/EC Standards | MSDS Revision: 3.0 | MSDS Revision Date: 08/22/2012

7. HANDLING & STORAGE INFORMATION

7.1	Work & Hygiene Practices: **Wash hands thoroughly after using this product and before eating, drinking, or smoking. Remove soiled clothing to prevent prolonged skin contact.**
7.2	Storage & Handling: **Store at temperatures between 59 °F and 95 °F (15 °C and 35 °C) in a dry, well-ventilated location. Keep away from heat, sparks, open flame, and other sources of ignition. Normal shelf-life: 2-3 years.**
7.3	Special Precautions: **Empty containers can contain flammable vapors. Do not cut, drill, grind, weld or perform similar operations on or near containers.**

8. EXPOSURE CONTROLS & PERSONAL PROTECTION

8.1	Ventilation & Engineering Controls: **Use with adequate ventilation (e.g., open doors and windows, local exhaust ventilation). Ensure appropriate decontamination equipment is available (e.g., sink, safety shower, eye-wash station).**
8.2	Respiratory Protection: **None required, when used with adequate ventilation.**
8.3	Eye Protection: **Wear safety glasses with side shields (ANSI Z87) under normal use conditions.**
8.4	Hand Protection: **None required under normal conditions of use. However, may cause skin irritation in some sensitive individuals. In such cases, wear rubber or impervious plastic gloves.**
8.5	Body Protection: **Use as necessary to prevent skin contact.**

9. PHYSICAL & CHEMICAL PROPERTIES

9.1	Density:	0.75
9.2	Boiling Point:	171.1 °C – 204 °C @ 760 mmHg
9.3	Melting Point:	NA
9.4	Evaporation Rate:	0.11 (n-Butyl Acetate = 1.0)
9.5	Vapor Pressure:	35 psig @ 20 °C, 50 psig @ 50 °C
9.6	Molecular Weight:	NA
9.7	Appearance & Color:	Light red, aerosol
9.8	Odor Threshold:	Ethereal/hydrocarbon odor
9.9	Solubility:	Not soluble in water
9.10	pH	ND
9.11	Viscosity:	10.0 cps
9.12	VOC (grams/liters)	588 g/l
9.13	Other information:	Vapor Density = 4.9 (air = 1.0)

10. STABILITY & REACTIVITY

10.1	Stability: **Stable under normal conditions of use (see section 7).**
10.2	Hazardous Decomposition Products: **Change in color signifies exposure to ultraviolet light or exceeding shelf life. Will not degrade to unstable products. Discard solution.**
10.3	Hazardous Polymerization: **Will not occur.**
10.4	Conditions to Avoid: **Use or storage near open flames, sparks, high heat (>100 °F) or other heat sources, and proximity to incompatible substances and heavily trafficked areas.**
10.5	Incompatible Substances: **Strong oxidizers.**

CAIG LABORATORIES, INC.

SAFETY DATA SHEET

Page 4 of 6
MSDS-E-D5S-A

Prepared to OSHA, ACC, ANSI, NOHSC, WHMIS, 2001/58/EC & 1272/2008/EC Standards | MSDS Revision: 3.0 | MSDS Revision Date: 08/22/2012

11. TOXICOLOGICAL INFORMATION

11.1	Toxicity Data:	This product has not been tested on animals to obtain toxicological data. There are toxicology data for the components of this product, which are found in the scientific literature. These data have not been presented in this document.
11.2	Acute Toxicity:	See section 3.5
11.3	Chronic Toxicity:	See section 3.6
11.4	Suspected Carcinogen:	NE
11.5	This product is not reported to produce reproductive toxicity in humans.	
	Mutagenicity:	This product is not reported to produce mutagenic effects in humans.
	Embryotoxicity:	This product is not reported to produce embryotoxic effects in humans.
	Teratogenicity:	This product is not reported to produce teratogenic effects in humans.
	Reproductive Toxicity:	This product is not reported to produce reproductive effects in humans.
11.6	Irritancy of Product:	See Section 2.3
11.7	Biological Exposure Indices:	NE
11.8	Physician Recommendations:	Treat symptomatically.

12. ECOLOGICAL INFORMATION

12.1	Environmental Stability:	This product will slowly volatile from soil. Components of this product will slowly decompose into organic compounds.
12.2	Effects on Plants & Animals:	There is no specific data available for this product.
12.3	Effects on Aquatic Life:	Releases of large volumes of this product are expected to be harmful or fatal to overexposed aquatic life.
12.4	Environmental Impact (Percent by Weight):	CFC: 0.0% HCFC: 0.0% HFC: 20.0% Chlorinated Solvent: 0.0% VOC: 75.0% ODP: 0.0%

13. DISPOSAL CONSIDERATIONS

13.1	Waste Disposal:	Dispose of in accordance with federal, state or local regulations.
13.2	Special Considerations:	EPA Waste Code: D001 (characteristic – ignitability)

14. TRANSPORTATION INFORMATION

The basic description (ID Number, proper shipping name, hazard class & division, packing group) is shown for each mode of transportation. Additional descriptive information may be required by 49 CFR, IATA/ICAO, IMDG and the CTDGR.

14.1	49 CFR (GND):	CONSUMER COMMODITY, ORM-D (until 12/31/2013) UN1950, AEROSOLS, 2.1, LTD QTY (IP VOL ≤ 1.0 L)
14.2	IATA (AIR):	CONSUMER COMMODITY, 9, ID8000 (≤ 500 ml) UN1950, AEROSOLS, 2.1 (> 500 ml)
14.3	IMDG (OCN):	UN1950, AEROSOLS, 2.1, LTD QTY (IP VOL ≤ 1.0 L)
14.4	TDGR (Canadian GND):	MARK PACKAGE "LIMITED QUANTITY" or "QUANTITÉ LIMITÉE" or "LTD QTY" or "QUANT LTÉE" (≤ 1.0 L)
14.5	ADR/RID (EU):	UN1950, AEROSOLS, 2.1, LTD QTY (IP VOL ≤ 1.0 L)
14.6	SCT (Mexico):	UN1950, AEROSOLES, 2.1, CANTIDAD LIMITADA (IP VOL ≤ 1.0 L)
14.7	ADGR (Australia):	UN1950, AEROSOLS, 2.1, LTD QTY (IP VOL ≤ 1.0 L)

CAIG LABORATORIES, INC.

SAFETY DATA SHEET

Page 5 of 6
MSDS-E-D5S-A

Prepared to OSHA, ACC, ANSI, NOHSC, WHMIS, 2001/58/EC & 1272/2008/EC Standards | MSDS Revision: 3.0 | MSDS Revision Date: 08/22/2012

15. REGULATORY INFORMATION

15.1 SARA Reporting Requirements:
NA

15.2 SARA Threshold Planning Quantity:
NA

15.3 TSCA Inventory Status:
All chemical substances of this product are listed on the TSCA inventory or are otherwise exempt from inventory status.

15.4 CERCLA Reportable Quantity (RQ):
NA

15.5 Other Federal Requirements:
NA

15.6 Other Canadian Regulations
This product has been classified according to the hazard criteria of the Controlled Products Regulations (CPR) and the MSDS contains all of the information required by the CPR. The components of this product are listed on the DSL/NDSL. None of the components of this product are listed on the Priorities Substances List.

15.7 State Regulatory Information:
The primary component of this product is not listed on the following state lists: California OSHA; California Proposition 65; Massachusetts Right to Know List of Chemicals; New Jersey Right to Know List 8:59 Appendix A; Pennsylvania Hazardous Substances List 34 323 Appendix A; Wisconsin Hazardous Substances List NR 605.09; Minnesota Hazardous Substances List; and Florida Toxic Substances List.

15.8 67/548/EEC (European Union) Requirements:
The primary component of this product is listed in Annex I of EU Directive 67/548/EEC:
Petroleum Naphtha: Flammable, Harmful (F, Xn). Risk Phrases (R): 10-65 – Flammable. Harmful: may cause lung damage if swallowed. Safety Phrases (S): 2-23-24-62 – Keep away from children. Do not breathe gas, fumes, vapor or spray. Avoid contact with skin. If swallowed, do not induce vomiting: seek medical advice immediately and show this MSDS or the container label. WARNING! Flammable aerosol. Colorless, volatile liquid with ethereal and faint sweetish odor. Overexposure may cause dizziness and loss of concentration. At higher levels, CNS depression and cardiac arrhythmia may result from exposure. Vapors displace air and can cause asphyxiation in confined spaces.
Hazard Statements (H): H223 – Flammable aerosol.
Precautionary Statements (P): P210 – Keep away from heat/sparks/open flames/hot surfaces. P211 – Do not spray on an open flame or other ignition source. P251 – Pressurized container. Do not pierce or burn, even after use. P280 – Wear protective gloves and eyewear. P302 + P352 – IF ON SKIN – Wash with plenty of soap and water. P312 – Call a Poison Control Center or doctor/physician if you feel unwell. P333 + P313 – If skin irritation or rash occurs, get medical advise/attention. P321 – Refer to section 4 of this Safety Data Sheet (First Aid). P305+P351+P338 – IF IN EYES - Rinse continuously with water for several minutes. Remove contact lenses if present and easy to do – continue rinsing. P501 – Dispose of contents/container through licensed treatment, storage or disposal facility.

16. OTHER INFORMATION

16.1 Other Information:
NA

16.2 Terms & Definitions:
See last page of this MSDS.

16.3 Disclaimer:
This Material Safety Data Sheet is offered pursuant to OSHA's Hazard Communication Standard, 29 CFR §1910.1200. Other government regulations must be reviewed for applicability to this product. To the best of ShipMate's & CAIG Laboratories, Inc.'s knowledge, the information contained herein is reliable and accurate as of this date; however, accuracy, suitability or completeness are not guaranteed and no warranties of any type, either expressed or implied, are provided. The information contained herein relates only to the specific product(s). If this product(s) is combined with other materials, all component properties must be considered. Data may be changed from time to time. Be sure to consult the latest edition.

16.4 Prepared for:
CAIG Laboratories, Inc.
12200 Thatcher Court
Poway, CA 92064-6876
Tel: +1 (800) CAIG-123 (244-4123)
Fax: +1 (858) 486-8398 fax
http://www.caig.com/

CAIG LABORATORIES, INC.

16.5 Prepared by:
ShipMate, Inc.
P.O. Box 787
780 Buckaroo Trail Suite D
Sisters, OR 97759
Tel: +1 (310) 370-3600
Fax: +1 (310) 370-5700
http://www.shipmate.com

ShipMate
Dangerous Goods Training & Consulting

CAIG LABORATORIES, INC.

SAFETY DATA SHEET

Page 6 of 6
MSDS-E-D5S-A

Prepared to OSHA, ACC, ANSI, NOHSC, WHMIS, 2001/58/EC & 1272/2008/EC Standards | MSDS Revision: 3.0 | MSDS Revision Date: 08/22/2012

DEFINITION OF TERMS

A large number of abbreviations and acronyms appear on a MSDS. Some of these that are commonly used include the following:

GENERAL INFORMATION:

CAS No.	Chemical Abstract Service Number

EXPOSURE LIMITS IN AIR:

ACGIH	American Conference on Governmental Industrial Hygienists
TLV	Threshold Limit Value
OSHA	U.S. Occupational Safety and Health Administration
PEL	Permissible Exposure Limit
IDLH	Immediately Dangerous to Life and Health

FIRST AID MEASURES:

CPR	Cardiopulmonary resuscitation - method in which a person whose heart has stopped receives manual chest compressions and breathing to circulate blood and provide oxygen to the body.

HAZARDOUS MATERIALS IDENTIFICATION SYSTEM: HMIS

HEALTH, FLAMMABILITY & REACTIVITY RATINGS:

0	Minimal Hazard
1	Slight Hazard
2	Moderate Hazard
3	Severe Hazard
4	Extreme Hazard

HEALTH
FLAMMABILITY
PHYSICAL HAZARDS
PERSONAL PROTECTION

PERSONAL PROTECTION RATINGS:

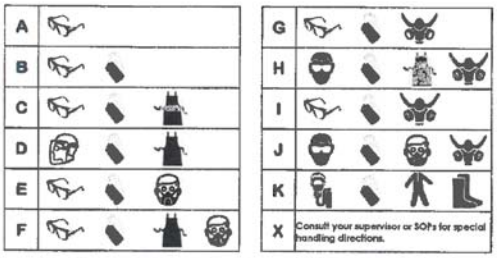

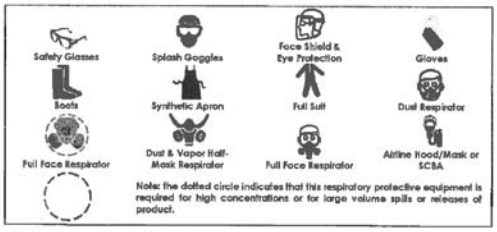

OTHER STANDARD ABBREVIATIONS:

NA	Not Available
NR	No Results
NE	Not Established
ND	Not Determined
ML	Maximum Limit
SCBA	Self-Contained Breathing Apparatus

NATIONAL FIRE PROTECTION ASSOCIATION: NFPA

FLAMMABILITY LIMITS IN AIR:	
Autoignition Temperature	Minimum temperature required to initiate combustion in air with no other source of ignition
LEL	Lower Explosive Limit - lowest percent of vapor in air, by volume, that will explode or ignite in the presence of an ignition source
UEL	Upper Explosive Limit - highest percent of vapor in air, by volume, that will explode or ignite in the presence of an ignition source

HAZARD RATINGS:

0	Minimal Hazard
1	Slight Hazard
2	Moderate Hazard
3	Severe Hazard
4	Extreme Hazard
ACD	Acidic
ALK	Alkaline
COR	Corrosive
W	Use No Water
OX	Oxidizer
TREFOIL	Radioactive

TOXICOLOGICAL INFORMATION:

LD_{50}	Lethal Dose (solids & liquids) which kills 50% of the exposed animals s
LC_{50}	Lethal concentration (gases) which kills 50% of the exposed animal
ppm	Concentration expressed in parts of material per million parts
TD_{Lo}	Lowest dose to cause a symptom
TC_{Lo}	Lowest concentration to cause a symptom
TD_{Lo}, LD_{Lo}, & LD_{0} or TC, TC_{Lo}, LC_{50}, & LC_{0}	Lowest dose (or concentration) to cause lethal or toxic effects
IARC	International Agency for Research on Cancer
NTP	National Toxicology Program
RTECS	Registry of Toxic Effects of Chemical Substances
BCF	Bioconcentration Factor
T_{lm}	Median threshold limit
log K_{OW} or log K_{OC}	Coefficient of Oil/Water Distribution

REGULATORY INFORMATION:

WHMIS	Canadian Workplace Hazardous Material Information System
DOT	U.S. Department of Transportation
TC	Transport Canada
EPA	U.S. Environmental Protection Agency
DSL	Canadian Domestic Substance List
NDSL	Canadian Non-Domestic Substance List
PSL	Canadian Priority Substances List
TSCA	U.S. Toxic Substance Control Act
EU	European Union (European Union Directive 67/548/EEC)
WGK	Wassergefährdungsklassen (German Water Hazard Class)

WORKPLACE HAZARDOUS MATERIALS IDENTIFICATION (WHMIS) SYSTEM:

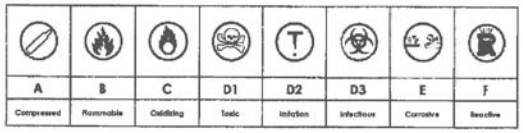

A	B	C	D1	D2	D3	E	F
Compressed	Flammable	Oxidizing	Toxic	Infection	Infectious	Corrosive	Reactive

EC (67/548/EEC) INFORMATION:

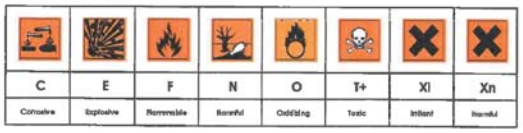

C	E	F	N	O	T+	Xi	Xn
Corrosive	Explosive	Flammable	Harmful	Oxidizing	Toxic	Irritant	Harmful

CLP/GHS (1272/2008/EC) PICTOGRAMS:

GHS01	GHS02	GHS03	GHS04	GHS05	GHS06	GHS07	GHS08	GHS09
Explosive	Flammable	Oxidizer	Pressurized	Corrosive	Toxic	Harmful Irritating	Health Hazard	Environment

11.6 COMPONENT MANUFACTURER LIST

MECHANICAL COMPONENTS			
Span Drive Machinery			
Section	**Description**	**Model No.**	**Manufacturer**
11.7.1	Auxiliary Air Motor	34RB029	Ingersoll Rand
11.7.2	Auxiliary Air Motor Filter	Particulate Filter F30	Wilkerson Corp.
11.7.3	Auxiliary Air Motor Regulator	Regulator R30	Wilkerson Corp.
11.7.4	Auxiliary Air Motor Lubricator	Lubricator L30 EconOmist	Wilkerson Corp.
	Auxiliary Air Motor Control Valve	PT-64501-300	Bosch Rexroth
11.7.5	Motor Brake	10MBTE-ED23/5S	Mondel/Magnetek
11.7.6	Machinery Brake	13MST/E-ED80/6S	Mondel/Magnetek
11.7.7	Auxiliary Air Motor Disconnect Coupling	FCCM, Size 1 1/2	Fast's
11.7.8	Gear Coupling	1020G51	Falk
	Jaw Coupling	FC15 – 3/4	Boston Gear
11.7.9	Tapered Roller Bearing	RPB-212-4C	Sealmaster
11.7.9	Tapered Roller Bearing	RPB-215-4C	Sealmaster
11.7.10	Spherical Roller Bearing	USRB5000AE-108	Sealmaster
11.7.11	Spherical Roller Bearing	SAFS 23024K FXOP (Assembly) 23024KEJW33C3 (Bearing only)	Timken

TRAFFIC CONTROL DEVICES			
Warning Gates			
Section	**Description**	**Model No.**	**Manufacturer**
	Traffic Gate Arm	Contact Manufacturer	B&B Roadway
	Far Side Traffic Gate Arm Lights	L4-120 Volt	B&B Roadway
	Near Side Traffic Gate Arm Lights	C-4	B&B Roadway
	Near Side Traffic Gate Motor	O6T17NC167A	B&B Roadway
	Far Side Traffic Gate Motor	C6T174K1K	Leeson
	Warning Bell	G-6	B&B Roadway
	Traffic Gate Flasher	FL-120	B&B Roadway
	Traffic Gate Door Switch	E19-00M	Cherry Corp
	Far Side Traffic Gate Hand Crank Limit Switch		Microswitch
	Traffic Gate Limit Switch	LS-8	B&B Roadway
	Traffic Gate 5A Fuse	FMN-5	Cooper Bussman
	Traffic Gate 2A Fuse	FMN-5	Cooper Bussman
	Traffic Gate Disconnect Switch	OT25F3	ABB
Traffic Signals			
	W3-6 Advanced Warning Sign	W3-6	US Barricades
	Warning Beacon	Beacon 12	US Barricades

TRAFFIC CONTROL DEVICES (cont.)

Navigation Lights

Section	Description	Model No.	Manufacturer
	Fender Navigation Lights	PL -LED	B&B Roadway
	Span Navigation Lights	BS - LED	B&B Roadway

ELECTRICAL COMPONENTS

Control Desk Components

Section	Description	Model No./Description	Manufacturer
	Voltmeter		
	Ammeter		
	Footswitch	531-SWH	Linemaster
	Control Relay (2NO/2NC)	8501XDO22V62	Schneider Electric
	Contact Block for Control Relay	8501-XC1	Schneider Electric
	GP Control Relay		
	Control Relay (C5/C6)		
	GP Control Relay Socket		
	On-Delay Timer		
	Off-Delay Timer FVR	MS4SC	Schneider Electric
	Nema Size 1 FVR Starter	AN56DNOAB	Eaton
	Near Side Traffic Gate Heater for Overload Relay	H2007B-3	Eaton
	Far Side Traffic Gate Heater for Overload Relay	H2008B-3	Eaton
	Pilot Light	9001-KP38	Schneider Electric
	Amber Lens	9001-A9	Schneider Electric
	Green Lens	9001-G9	Schneider Electric
	Red Lens	9001-R9	Schneider Electric
	Push-button	9001-KR1U	Schneider Electric
	Push-button Contact (NO/NC)	9001-KA1	Schneider Electric
	Push-button Contact (NO)	9001-KA2	Schneider Electric
	Push-button Contact (NC)	9001-KA3	Schneider Electric
	Two Position Key Switch	9001-KS11K1	Schneider Electric
	Selector Switch Contact	9003-K2B001UA	Schneider Electric
	Selector Switch Handle	9003-KAD1C	Schneider Electric
	Drum Controller	HC4216000012	Hubbell
	Span Position Display	1995-A6MX4A	Ametek/Gemco

ELECTRICAL COMPONENTS (cont.)			
Control Cabinet			
Section	**Description**	**Model No./Description**	**Manufacturer**
	Main Circuit Breaker	HJL36100M73	Schneider Electric
	Control Circuit Breaker	HDL26100 (C)	Schneider Electric
	Overload	SE012	Schneider Electric
	Thermal Unit for Overload	CC545	Schneider Electric
	Fuse (FU1 & FU2)	NON-5	Bussman
	Current Transformer (200:5A)	5NR-201	Schneider Electric
	Fuse (FU4 & FU5)		
	DC Relay	CAD32UD	Schneider Electric
	Frequency Relay	RM35H221FM	Schneider Electric
	Transformer (230 -255)	Custom (Contact Manufacturer)	Marcus
	FVNR Nema 1 Contactor	8502SCG3V02	Schneider Electric
11.9.2	Nema Size 2 AC Contactor	MXD01	EC&M
11.9.2	Mechanical Interlock	MM1	EC&M
11.9.2	Tie bar	MT1	EC&M
11.9.2	Electrical Interlock	MX11	EC&M
11.9.2	Rectifier	27907-34220	EC&M
	Timer	KS01630/5350-48424-001	SSAC/Hubbell
Field Components			
11.9.1	Span Drive Motor	0150F-2AAN-0029	Reuland
	240V, 200A Manual Transfer Switch	DT224URKPS	Eaton
	Fully Closed Limit Switch	780	Namco
	Machinery Brake Limit Switch		
	Motor Brake Limit Switch		
	Rotary Cam Limit Switch	1980	Gemco
	Secondary Resistors		
	240V, 225A Panelboard	NQODQ2	Schneider Electric
	1P, 20A, Circuit breaker		
	3P, 20A, Circuit breaker		
	2P, 25A, Circuit breaker		
	3P, 150A, Circuit breaker		
	3P, 100A, Circuit breaker		
	Light Fixture		
	240V, 100A, Panelboard	FRL-1A	Eaton
	3P, 20A, Circuit breaker		
	Emergency Light Fixture		Emergi-Lite

ELECTRICAL COMPONENTS (cont.)	
Field Components (cont.)	
Heater	Q-Mark
Air Conditioner Condenser	
Air Conditioner Air Handler	
Sump Pump	
Photocell	

11.7 MECHANICAL EQUIPMENT MANUALS AND SPECIFICATIONS

11.7.1 AUXILIARY AIR MOTOR – INGERSOLL RAND 34RB029

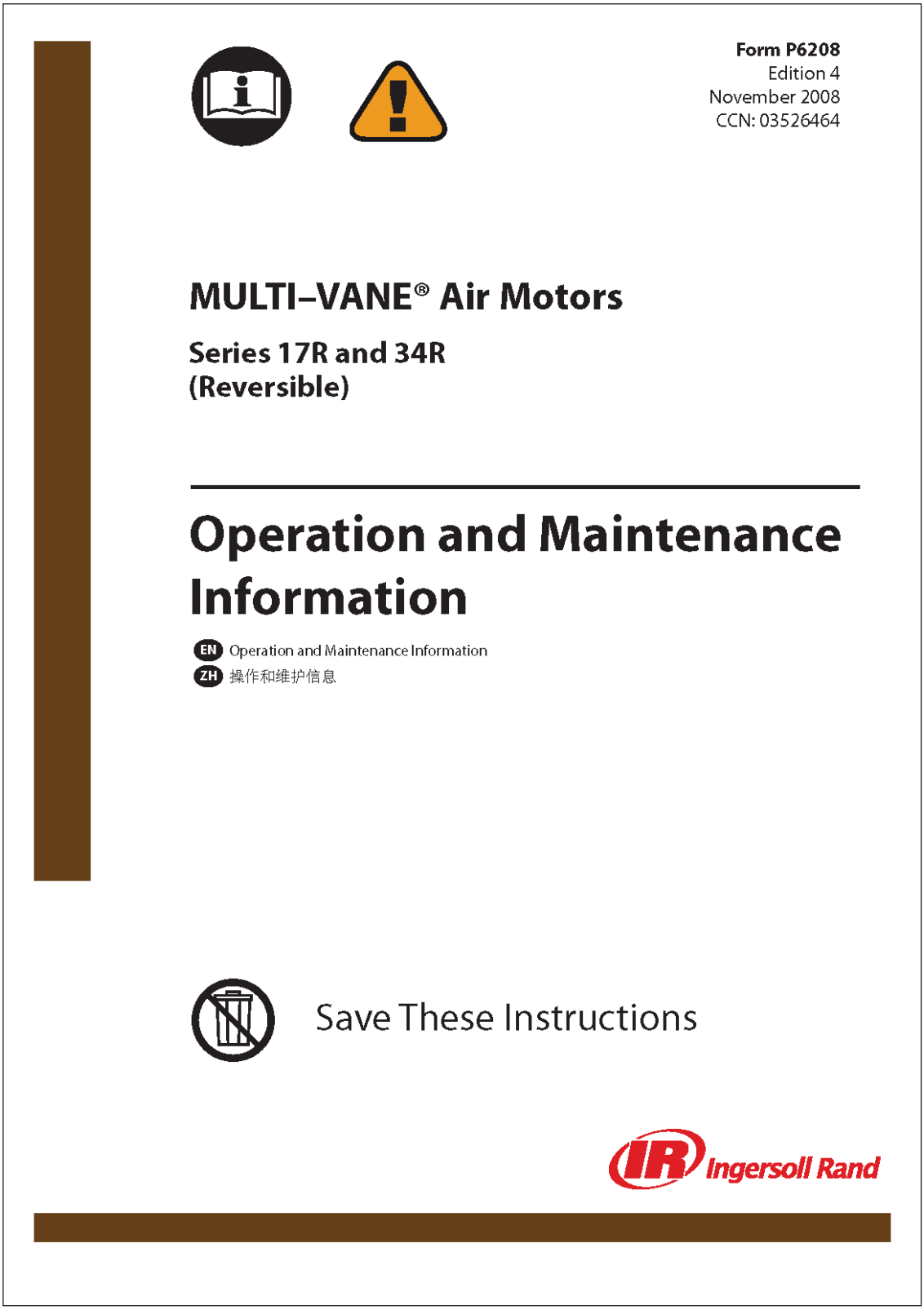

Form P6208
Edition 4
November 2008
CCN: 03526464

MULTI–VANE® Air Motors

Series 17R and 34R
(Reversible)

Operation and Maintenance Information

EN Operation and Maintenance Information
ZH 操作和维护信息

Save These Instructions

Ingersoll Rand

EN

WARNING

General Product Safety Information

- **Read and understand this manual before operating this product.**
- **It is your responsibility to make this safety information available to others that will operate this product.**
- **Failure to observe the following warnings could result in injury.**

WARNING

- Always operate, inspect and maintain this motor in accordance with American National Standards Institute Safety Code for Portable Air Tools (ANSI B186.1).
- For safety, top performance and maximum durability of parts, operate this motor at 90 psig (6.2 bar/620 Kpa) air pressure at the inlet with 5/8" air supply hose.
- Always turn off the air supply and disconnect the air supply hose before installing, removing or adjusting any accessory on this motor or before performing any maintenance on this motor.
- Do not use damaged, frayed or deteriorated air hoses and fittings.
- Keep hands, loose clothing and long hair away from rotating end of motor.
- Always wear eye protection when operating or performing maintenance on this motor.
- Always wear hearing protection when operating this motor.
- Anticipate and be alert for sudden changes in motion during start up and operation of any motor.
- Motor shaft may continue to rotate briefly after throttle is released.
- Do not lubricate motor with flammable or volatile liquids such as kerosene, diesel or jet fuel.
- Do not remove any labels. Replace any damaged label.
- Use accessories recommended by **Ingersoll Rand**.
- This motor is not designed for working in explosive atmospheres.
- This motor is not insulated against electric shock.

NOTICE

- The use of other than genuine **Ingersoll Rand** replacement parts may result in safety hazards, decreased Motor performance and increased maintenance, and may invalidate all warranties.
- **Ingersoll Rand** is not responsible for customer modification of motors for applications on which **Ingersoll Rand** was not consulted.
- Repairs should be made only by authorized, trained personnel. Consult your nearest **Ingersoll Rand** Authorized Servicenter.
- It is the responsibility of the employer to place the information in this manual into the hands of the operator.

Safety Symbol Identification

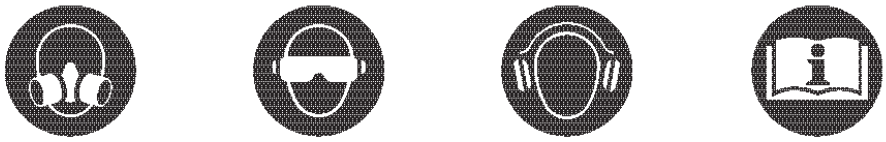

Wear Respiratory Protection | Wear Eye Protection | Wear Hearing Protection | Read Manuals Before Operating Product

(Dwg. MHP2598)

Safety Information - Explanation of Safety Signal Words

DANGER	Indicates an imminently hazardous situation which, if not avoided, will result in death or serious injury.
WARNING	Indicates a potentially hazardous situation which, if not avoided, could result in death or serious injury.
CAUTION	Indicates a potentially hazardous situation which, if not avoided, may result in minor or moderate injury or property damage.
NOTICE	Indicates information or a company policy that relates directly or indirectly to the safety of personnel or protection of property.

2 03526464_ed4

EN

Placing Tool in Service

Lubrication

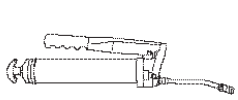

Ingersoll Rand No. 100
SAE 90 Gear Lubricant

Ingersoll Rand No. 50

We recommend using a Filter-Lubricator-Regulator Unit with these Motors. For Series 17R use No. C28241-800 (1/2" pipe tap inlet). For Series 34R use No. C31-08-G00 (3/4" tap inlet). Install the Unit as close to the Motor as practical. Keep the Lubricator filled with **Ingersoll Rand** No.50 Oil.

NOTICE

If a sight feed lubricator is used, adjust the lubricator to feed 60 drops per minute for continued duty operation. **Whenever the power unit is disassembled,** work some **Ingersoll Rand** No. 28 Grease into the Rear Rotor Shaft Bearing (2).

Use a good quality SAE 90 Gear Lubricant in the gear box. The amount of lubricant required is dependent upon the size of gear box and the mounting position of the Motor.

When lubricating the gear box, refer to the illustration showing the various mounting positions and the fill plugs, vent plug and drain plug. In each case, fill the gear chamber up to the "Level" plug. If the Vent Plug (40) is not located at the position indicated for a given mounting, relocate the Vent Plug by interchanging it with the pipe plug at that location. **Whenever a Series 17R or 34R Motor is mounted with the Motor Shaft (36) pointing toward the floor or ceiling,** you must install a gravity feed lubrication to make certain the gears in the upper portion of the gear box get adequate lubrication. To do this, remove one of the pipe plugs other than the Vent Plug from the upper side of the motor and connect an oil line from a gravity feed reservoir. Connect an over flow Line to the Level Plug opening and run it to a pump to return the lubricant to the gravity feed reservoir.

If the Motor is mounted in any position other than that illustrated, contact an **Ingersoll Rand** Representative for oil level and venting recommendations.

Lubrication Diagram

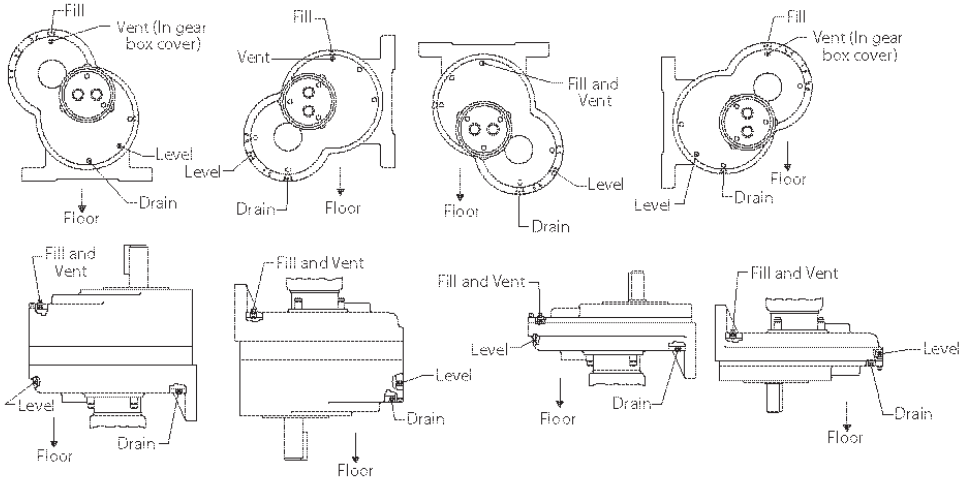

(Dwg. TP8490)

EN

Valve and Piping

NOTICE

When these Motors are used on applications requiring a reversible motor, a 4-way Throttle Valve or two 3-way Throttle Valves must be used in the air supply line in accordance with the following schematic diagram. When the application requires a non-reversible motor, a 2-way inline Valve can be used in the air supply line. In either case, the inlet and outlet of the Valve must be equal in size, and preferably one size larger, than the inlet of the Motor.

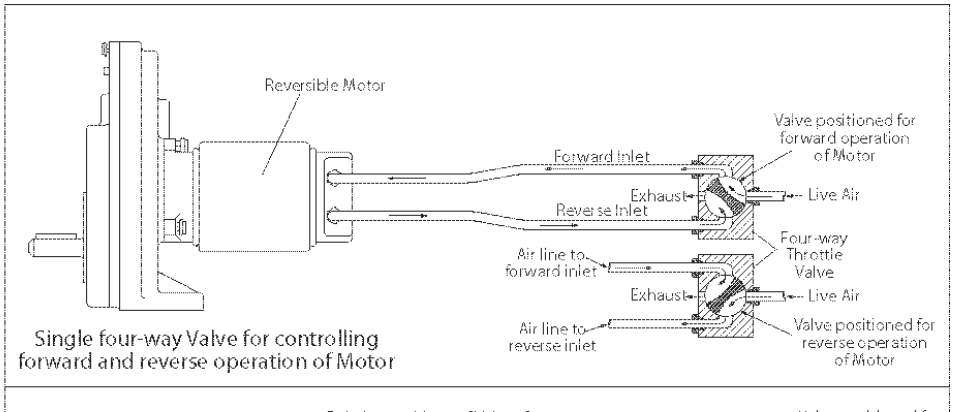

Single four-way Valve for controlling forward and reverse operation of Motor

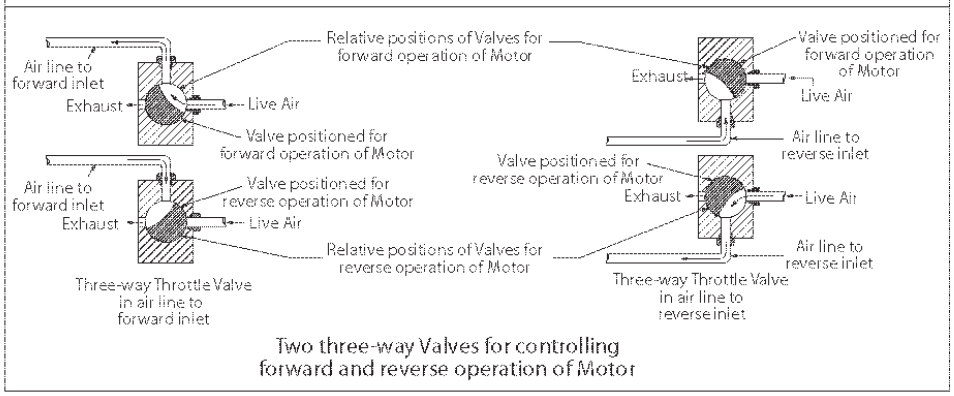

Two three-way Valves for controlling forward and reverse operation of Motor

(Dwg. TPB491)

Parts and Maintenance

When the life of the motor has expired, it is recommended that the motor be disassembled, degreased and parts be separated by material so that they can be recycled.

Manuals can be downloaded from www.irtools.com.

Refer all communications to the nearest **Ingersoll Rand** Office or Distributor.

EN

Valve and Piping

NOTICE

When these Motors are used on applications requiring a reversible motor, a 4-way Throttle Valve or two 3-way Throttle Valves must be used in the air supply line in accordance with the following schematic diagram. When the application requires a non-reversible motor, a 2-way inline Valve can be used in the air supply line. In either case, the inlet and outlet of the Valve must be equal in size, and preferably one size larger, than the inlet of the Motor.

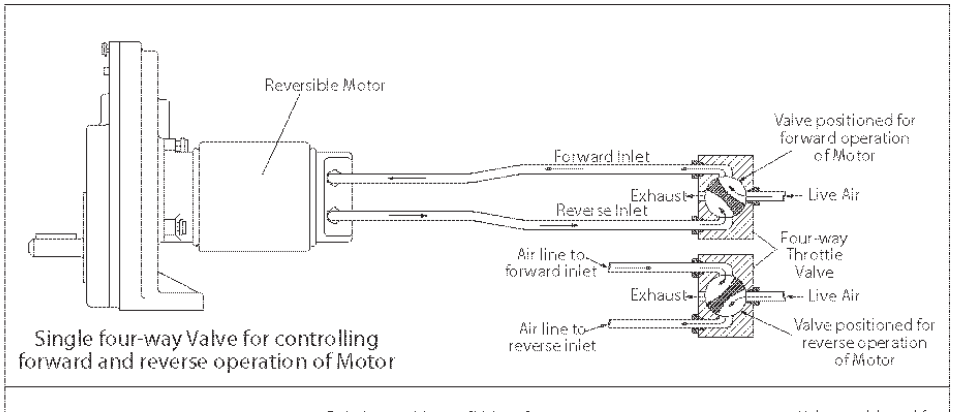

Single four-way Valve for controlling forward and reverse operation of Motor

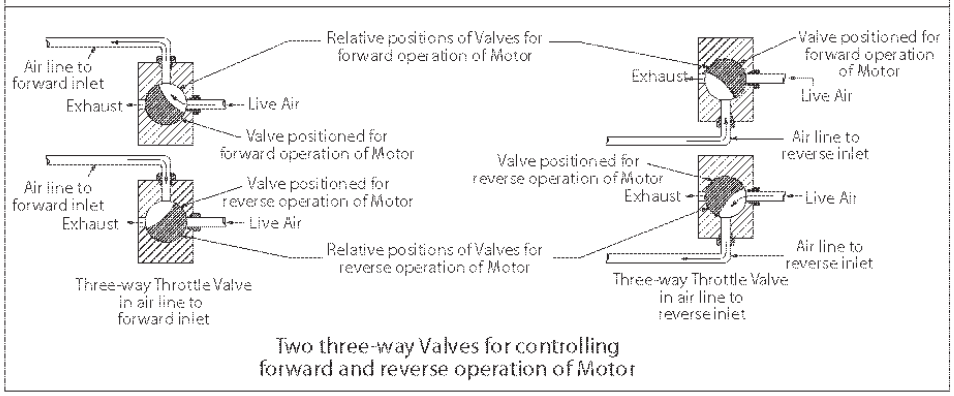

Two three-way Valves for controlling forward and reverse operation of Motor

(Dwg. TPB491)

Parts and Maintenance

When the life of the motor has expired, it is recommended that the motor be disassembled, degreased and parts be separated by material so that they can be recycled.

Manuals can be downloaded from www.irtools.com.

Refer all communications to the nearest **Ingersoll Rand** Office or Distributor.

Air Motor Exploded Diagram

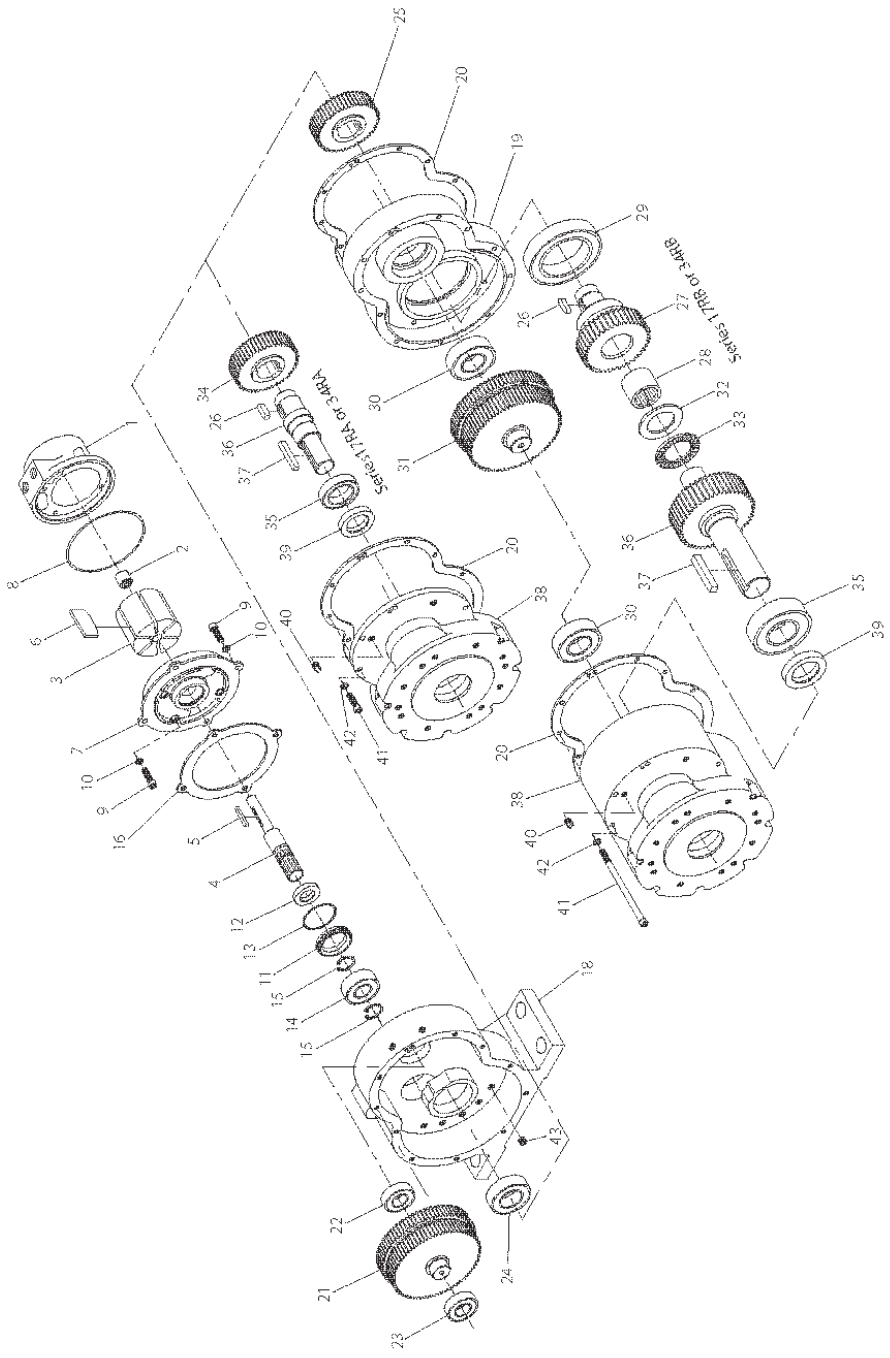

(Dwg. TPA553)

03526464_ed4 7

Air Motor Parts List

Item	Part Description	Part Number
1	Cylinder Assembly	
	for Series 17R	MVA017-A3
	for Series 34R	MVA034-A3
• 2	Rear Rotor Shaft Bearing	MVA008-22
3	Rotor	
	for Series 17R	MVA017-53
	for Series 34R	MVA034-53
4	Rotor Shaft	
	for Series 17R	17R-52
	for Series 34R	34R-52
5	Rotor Key	
	for Series 17R	J5-754
	for Series 34R	MVA034-610
• 6	Vane Packet (set of 6 Vanes)	
	for Series 17R	MVA017-42-6
	for Series 34R	MVA034-42-6
7	Front head Assembly	8R-A240
• 8	Front head Seal	MVA008-103
9	Front head Cap Screw (8)	510-638
10	1/4" Lock Washer (8)	8U-58
11	Rotor Bearing Spacer Assembly	92N-A65
• 12	Front Rotor Shaft Seal	48N-758
• 13	Bearing Spacer Seal	AF160-294
• 14	Front Rotor Bearing	T02-33
15	Rotor Shaft Retainer (2)	R380Q-6
• 16	Gear Case Gasket	8R-284
18	Gear Box	92NA-750
19	Gear Box Frame (for Series 17RB or 34RB)	48NB-763
• 20	Gear Box Gasket (2 for Series 17RB or 34RB; 1 for other)	48NA-752
21	First Stage Intermediate Gear	
	for Model 17RA005 or 34RA005	48NA-755-005
	for Model 17RA008 or 34RA008	48NA-755-008
	for Model 17RA011 or 34RA011	48NA-755-011
	for Model 17RA014 or 34RA014	48NA-755-014
	for Model 17RA017 or 34RA017	48NA-755-017
	for Model 17RA022 or 34RA022	48NA-755-022
	for Series 17RB or 34RB	48NA-755-022
• 22	First Stage Intermediate Gear Rear Bearing	R1AP-97
• 23	First Stage Intermediate Gear Front Bearing	R38P-97
• 24	Motor Shaft Rear Bearing or Intermediate Gear Pinion Rear Bearing	48NA-510
25	Second Stage Intermediate Gear (for Series 17RB or 34RB)	48NA-756-022
26	Second Stage Intermediate Gear Key or Motor Shaft Gear Key (2)	R4H-410
27	Intermediate Gear Pinion	
	for Model 17RB029 or 34RB029	48NB-760-029
	for Model 17RB036 or 34RB036	48NB-760-036
	for Model 17RB045 or 34RB045	48NB-760-045
	for Model 17RB078 or 34RB078	48NB-760-078

Item	Part Description	Part Number
• 28	Intermediate Gear Pinion Roller Bearing (for Series 17RB or 34RB)	48NB-765
• 29	Intermediate Gear Pinion Front Bearing (for Series 17RB or 34RB)	48NB-764
• 30	Third Stage Intermediate Gear Bearing (2) (for Series 17RB or 34RB)	C6H20A-518
31	Third Stage Intermediate Gear	
	for Model 17RB029 or 34RB029	48NB-761-029
	for Model 17RB036 or 34RB036	48NB-761-036
	for Model 17RB045 or 34RB045	48NB-761-045
	for Model 17RB078 or 34RB078	48NB-761-078
• 32	Motor Shaft Thrust Bearing Race (for Series 17RB or 34RB)	48NB-767
• 33	Motor Shaft Thrust Bearing (for Series 17RB or 34RB)	48NB-769
34	Motor Shaft Gear	
	for Model 17RA005 or 34RA005	48NA-756-005
	for Model 17RA008 or 34RA008	48NA-756-008
	for Model 17RA011 or 34RA011	48NA-756-011
	for Model 17RA014 or 34RA014	48NA-756-014
	for Model 17RA017 or 34RA017	48NA-756-017
	for Model 17RA022 or 34RA022	48NA-756-022
• 35	Motor Shaft Front Bearing	
	for Series 17RA or 34RA	C6H20A-518
	for Series 17RB or 34RB	48NB-766
36	Motor Shaft	
	for Series 17RA or 34RA	48NA-757-4
	for Model 17RB029, 34RB029, 17RB036 34RB036, 17RB045 or 34RB045	48NB-762-029
	for Model 17RB078 or 34RB078	48NB-762-078
37	Motor Shaft Key	
	for Series 17RA or 34RA	107-54
	for Series 17RB or 34RB	RSH51-768
38	Gear Box Cover Assembly	
	for Series 17RA or 34RA	48NA-A751
	for Series 17RB or 34RB	48NB-A751
• 39	Motor Shaft Seal	
	for Series 17RA or 34RA	48NA-759
	for Series 17RB or 34RB	48NB-759
40	Vent Plug	48NA-368
41	Gear Box Cover Cap Screw (11)	
	for Series 17RA or 34RA	R0H-354
	for Series 17RB or 34RB	48NB-354
42	1/4" Lock Washer (11)	8U-58
43	Oil Plug (10 for Series 17RB or 34RB; 9 for others)	R2-227

• To keep downtime to a minimum, it is desirable to have on hand certain repair parts. We recommend that you stock one (pair or set) of each part indicated by a bullet (•) for every four tools in service.

8 03526464_ed4

Maintenance Section

WARNING

Always use protective eyewear when performing maintenance on a motor or operating a motor. Always turn off the air supply and disconnect the air supply line before installing, removing or adjusting any accessory on this motor, or before performing maintenance on this motor. Failure to do so could result in injury.

Disassembly

General Instructions

1. Do not disassemble the motor any further than necessary to replace or repair damaged parts.
2. Do not remove any part which is a press fit in or on a subassembly unless the removal of that part is necessary for repairs or replacement.
3. Whenever grasping a motor or part in a vise, always use leather-covered or copper-covered vise jaws to protect the surface of the part or motor and help prevent distortion. This is particularly true of threaded members and housings.
4. Do not press any needle bearing from a part unless you have a new needle bearing on hand for installation. Needle bearings are always damaged during the removal process.
5. If it is necessary to remove a needle bearing, make certain you have a new bearing on hand for replacement. These bearings are always damaged during the removal process.

Disassembly of the Motor

1. Remove the Vent Plug (40) and position the motor so that the oil will drain into a container. Remove the Drain Plug (43) and drain the oil from the Gear Box (18).
2. Unscrew and remove the four Fronthead Cap Screws (9) and Lock Washers (10) that hold the Cylinder Assembly (1) against the Gear Box. Pull the assembled motor away from the Gear Box.
3. Remove the Gear Case Gasket (16).
4. Remove the four Fronthead Cap Screws and Lock Washers that secure the Fronthead Assembly (7) to the Cylinder Assembly and pull the Cylinder Assembly away from the Fronthead.
5. Remove the Fronthead Seal (8).
6. If the Rear Rotor Shaft Bearing (2) must be replaced, pull it from the Cylinder.
7. Remove the Vanes (6) from the Rotor (3) and slide the Rotor off the Rotor Shaft (4). Remove the Rotor Key (5) from the Shaft.
8. Grasp the Front Rotor Bearing (14) and the front of the Rotor Shaft and pull the assembled Rotor Shaft out of the Fronthead.
9. Using snap ring pliers, remove the gear end Rotor Shaft Retainer (15) and slide the Front Rotor Bearing off the Rotor Shaft. Use the same snap ring pliers to remove the remaining Retainer.
10. Pull the Rotor Bearing Spacer Assembly (11), and Front Rotor Shaft Seal (12) off the Shaft.

Disassembly of Series 17RA and 34RA Gearing

1. Unscrew and remove the eleven Gear Box Cover Cap Screws (41) and Lock Washers (42).
2. Remove the Motor Shaft Key (37) and lay the assembled Gear Box on a workbench with the Motor Shaft (36) upward.
3. Carefully separate the Gear Box Cover Assembly (38) from the Gear Box (18) and set it aside. If the Intermediate Gear (21) remains with the Gear Box Cover, make certain it does not drop onto any hard surfaces or other gearing.
4. Remove the Gear Box Gasket (20).
5. Lift the Intermediate Gear out of the Gear Box. Pull the First Stage Intermediate Gear Rear Bearing (22) and First Stage Intermediate Gear Front Bearing (23) off the hubs of the Intermediate Gear. If the Bearings are frozen on the hubs, use a bearing puller to remove them.
6. Push the assembled Motor Shaft out of the Gear Box Cover Assembly.
7. Pull the Motor Shaft Rear Bearing (24) off the rear hub of the Motor Shaft.
8. Pull the Motor Shaft Front Bearing (35) off the front hub of the Motor Shaft.
9. Using a gear puller, pull the Motor Shaft Gear (34) off the rear of the Motor Shaft. Remove the two Shaft Keys (26).
10. Using a hooked tool, pull the Motor Shaft Seal (39) out of the Gear Box Cover.

Disassembly of Series 17RB and 34RB Gearing

1. Unscrew and remove the eleven Gear Box Cover Cap Screws (41) and Lock Washers (42).
2. Remove the Motor Shaft Key (37) and lay the assembled Gear Box on a workbench with the Motor Shaft (36) upward.
3. Grasp the Gear Box Frame (19) and carefully separate the assembled Frame and Gear Box Cover Assembly (38) from the Gear Box (18) and set it aside. If the First Stage Intermediate Gear (21) remains with the Gear Box Frame, make certain it does not drop onto any hard surfaces or other gearing.
4. Remove the Gear Box Gasket (20).
5. Lift the First Stage Intermediate Gear out of the Gear Box. Pull the First Stage Intermediate Gear Rear Bearing (22) and First Stage Intermediate Gear Front Bearing (23) off the hubs of the Intermediate Gear. If the Bearings are frozen on the hubs, use a bearing puller to remove them.
6. Carefully separate the Gear Box Cover Assembly from the Gear Box Frame and remove the Gear Case Gasket. Be careful not to allow the Motor Shaft Thrust Bearing Race (32) or the Motor Shaft Thrust Bearing (33) to slide off the Motor Shaft and become damaged.
7. Remove the Third Stage Intermediate Gear (31) and the two Third Stage Intermediate Gear Bearings (30) from either the Gear Box Frame or the Gear Box Cover Assembly. Pull the two Bearings from the shafts of the Gear. If the Bearings are frozen on the shafts, use a bearing puller to remove them.
8. Pull the Intermediate Gear Pinion Rear Bearing (24) off the rear hub of the Intermediate Gear Pinion (27).
9. Using a gear puller, pull the Second Stage Intermediate Gear (25) from the rear hub of the Intermediate Gear Pinion. Remove the two Shaft Keys (26).
10. Push the Intermediate Gear Pinion out the motor shaft end of the Gear Box Frame.
11. Pull the Intermediate Gear Pinion Front Bearing (29) off the Pinion and if the Intermediate Gear Pinion Roller Bearing (28) must be replaced, pull it from the Pinion.
12. If the Motor Shaft Thrust Bearing and Bearing Race have not been removed, remove them from the Shaft.
13. Push the assembled Motor Shaft out of the Gear Box Cover Assembly.
14. Pull the Motor Shaft Front Bearing (35) off the front hub of the Motor Shaft.
15. Using a hooked tool, pull the Motor Shaft Seal (39) out of the Gear Box Cover.

Assembly

General Instructions

1. Always press on the **Inner** ring of a ball-type bearing when installing the bearing on a shaft.
2. Always press on the **Outer** ring of a ball-type bearing when pressing the bearing into a bearing recess.
3. Whenever grasping a tool or part in a vise, always use leather-covered or copper-covered vise jaws. Take extra care not to damage threads or distort housings.
4. Clean every part and wipe every part with a thin film of oil before installation.
5. Check every bearing for roughness. If an open bearing must be cleaned, wash it thoroughly with a clean suitable solution and dry with a clean cloth. **Sealed or shielded bearings should not be cleaned.** Work grease into every bearings before installation.
6. Apply a film of O-ring lubricant to every O-ring before installation.

03526464_ed4

9

7. Unless otherwise noted, always press on the stamped end of a needle bearing when installing a needle bearing into a recess. Use a bearing inserting tool similar to the one shown in drawing below :

Needle Bearing inserting tool

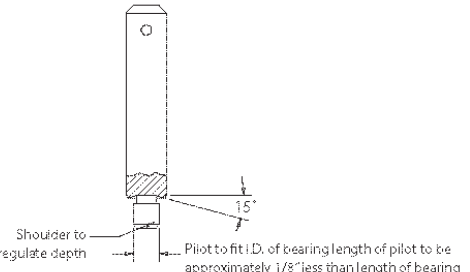

(Dwg. TPD786)

Assembly of Series 17RB and 34RB Gearing

1. Using a bearing inserting tool, press the Intermediate Gear Pinion Roller Bearing (28) into the Intermediate Gear Pinion (27).
2. Using a piece of tubing that contacts the outer ring of the Intermediate Gear Pinion Bearing (29). Press the Bearing into the large Bearing recess in the spindle side of the Gear Box Frame (19).
3. Insert the shaft of the Intermediate Gear Pinion through the Bearing and Frame, and rest the assembly on the table of an arbor press with the pinion shaft upward and the gear end face of the Pinion supported.
4. Insert the two Second Stage Intermediate Gear Keys (26) into the slots in the shaft and press the Second Stage Intermediate Gear (25) onto the Pinion shaft capturing the Gear Box Frame within the assembly.
5. Using a piece of tubing that contacts the inner ring of the Third Stage Intermediate Gear Bearing (30), press a Bearing onto each shaft of the Third Stage intermediate Gear (31).
6. Place the assembled Gear Box Frame on a workbench with the roller bearing end of the Pinion upward.
7. Position the Bearing nearest the large spline on the shaft of Third Stage Intermediate Gear above the bearing recess in the Gear Box Frame. Engage the large spline of the Gear with the spline of the Pinion while pushing the Bearing into the recess.
8. Using a piece of tubing that contacts the inner ring of the Motor Shaft Front Bearing (35), press the Bearing onto the output end of the Motor Shaft (36).
9. Install the Motor Shaft Thrust Bearing (33) followed by the Motor Shaft Thrust Bearing Race (32) onto the opposite end of the Motor Shaft and insert the assembled Shaft, Bearing Race leading into the Pinion Roller Bearing.
10. Place one of the Gear Box Gaskets (20) onto the Gear Box Frame making certain the Gasket fits over the alignment pin in the Frame and fits well around the large, raised alignment hub.
11. Using a dowel, push the Motor Shaft Seal (39), small opening leading, into the recess in the Gear Box Cover Assembly (38).
12. Position the Cover over the Box Frame and install the Seal on the Motor Shaft by bringing the Cover down against the Gasket. Make certain the alignment pin and hub on the Frame enter the hole and recess in the Cover.
13. Turn the assembly over so that the output end of the Motor Shaft is downward.
14. Using a piece of tubing that contacts the inner ring of the First Stage Intermediate Gear Front Bearing (23), press the Bearing onto the shaft adjacent to the small spline of the First Stage Intermediate Gear (21).
15. Using a piece of tubing that contacts the inner ring of the First Stage Intermediate Gear Rear Bearing (22), press the Bearing onto the shaft adjacent to the large spline of the First Stage Intermediate Gear (21).
16. Position the Bearing nearest the smaller spline on the shaft of the First Stage Intermediate Gear above the bearing recess in the Gear Box Frame. Engage the smaller spline of the Gear with the spline of the Second Stage Intermediate Gear while pushing the Bearing into the recess.
17. Using a piece of tubing that contacts the inner ring of the Intermediate Gear Pinion Rear Bearing (24), press a Bearing onto the shaft of the Intermediate Gear Pinion.
18. Place the remaining Gear Box Gasket onto the Gear Box Frame making certain the Gasket fits over the alignment pin in the Frame and fits well around the large, raised alignment hub.
19. Position the Gear Box (18) over the assembly and bring the Gear Box down against the Gasket while making sure the Bearings enter the bearing recesses in the Gear Box. Make certain the alignment pin and hub on the Frame enter the hole and recess in the Gear Box.
20. While keeping the assembly together, turn it over and insert the eleven Gear Box Cover Cap Screws (41) with their Lock Washers (42) through the holes of the Cover and Frame and into the Gear Box. Tighten the Screws evenly, a little at a time, using an alternating pattern. Use the Screws to draw the assembly together without distortion and without binding.

Assembly of Series 17RA and 34RA Gearing

1. Insert the two Motor Shaft Gear Keys (26) into the slots in the Motor Shaft (36) and press the Motor Shaft Gear (34) onto the Motor Shaft.
2. Using a dowel, push the Motor Shaft Seal (39), small opening leading, into the recess in the Gear Box Cover Assembly (38).
3. Using a piece of tubing that contacts the inner ring of the Motor Shaft Front Bearing (35), press the Bearing onto the output end of the Motor Shaft.
4. Using a piece of tubing that contacts the inner ring of the Motor Shaft Rear Bearing (24), press a Bearing onto the motor end of the Motor Shaft.
5. Insert the output end of the Motor Shaft through the Motor Shaft Seal and push it into the gear Box Cover Assembly until the Motor Shaft Front Bearing seats in the bearing recess.
6. Using a piece of tubing that contacts the inner ring of the First Stage Intermediate Gear Front Bearing (23), press the Bearing onto the shaft adjacent to the small spline of the First Stage Intermediate Gear (21).
7. Using a piece of tubing that contacts the inner ring of the First Stage Intermediate Gear Rear Bearing (22), press the Bearing onto the shaft adjacent to the large spline of the First Stage Intermediate Gear (21).
8. Place the Gear Box Cover Assembly on a workbench with the output end of the Motor Shaft downward.
9. Position the Bearing nearest the smaller spline on the shaft of the First Stage Intermediate Gear above the bearing recess in the Gear Box Cover. Engage the smaller spline of the Gear with the spline of the Motor Shaft Gear while pushing the Bearing into the recess.
10. Place the Gear Box Gasket (20) onto the Gear Box Cover making certain the Gasket fits over the alignment pin in the Cover and fits well around the large, raised alignment hub.
11. Position the Gear Box (18) over the assembly and bring the Gear Box down against the Gasket while making sure the Bearings enter the bearing recesses in the Gear Box. Make certain the alignment pin and hub on the Frame enter the hole and recess in the Gear Box.
12. While keeping the assembly together, turn it over and insert the eleven Gear Box Cover Cap Screws (41) with their Lock Washers (42) through the holes of the Cover into the Gear Box. Tighten the Screws evenly, a little at a time, using an alternating pattern. Use the Screws to draw the assembly together without distortion and without binding.

Assembly of the Motor

1. If the Rear Rotor Shaft Bearing (2) was removed, use a bearing inserting tool to press it into the central opening of the Cylinder Assembly (1).

2. Slide the Front Rotor Shaft Seal, large opening leading, onto the spline end of the Rotor Shaft (4) and move it to a position beyond the two snap ring grooves.
3. Using snap ring pliers, install one of the Rotor Shaft Retainers (15) on the Rotor Shaft. Install it in the groove nearest the small shaft with the key slot.
4. Slide the Front Rotor Bearing (14) onto the spline end of the Rotor Shaft until it contacts the Retainer. Install the remaining Retainer behind it to capture it in position on the Shaft.
5. Slide the installed Front Rotor Shaft Seal toward the Bearing until it contacts the Retainer.
6. Install the Bearing Spacer Seal (13) in the groove around the outside of the Rotor Bearing Spacer Assembly (11).
7. From the small end of the Rotor Shaft and with the large bevelled end leading, install the Spacer on the Shaft. Make certain the central opening of the Spacer fits onto the Front Rotor Shaft Seal and the Spacer makes contact with the face of the Rotor Bearing.
8. Insert the small end of the Rotor Shaft through the hole in the Fronthead Assembly (7) from the side having the large central hub.
9. Install the Rotor Shaft Key (5) in the key slot on the Rotor Shaft to keep the assembled Shaft in the Fronthead.
10. Slide the Rotor (3) onto the Rotor Shaft and install a Vane (6) into each of the vane slots in the Rotor.
11. Install the Fronthead Seal (8) on the large hub of the Fronthead.
12. Slide the Cylinder over the Rotor and bring it into contact with the Fronthead. Make certain the Rotor Shaft enter the Rear Rotor Shaft Bearing and the tapped holes in the face of the Cylinder align with the bolt holes in the face of the Fronthead.
13. Thread four of the Fronthead Cap Screws (9) and Lock Washers (10) into the Cylinder through the face of the Fronthead. Tighten the Screws evenly, a little at a time, using an alternating pattern. Use the Screws to draw the assembly together without binding or without damaging the Seals.
14. Position the Gear Case Gasket (16) over the large hub on the face of the Fronthead and insert the remaining four Screws and Lock Washers through the Fronthead and Gasket from the Cylinder end of the assembly.
15. Insert the spline of the Rotor Shaft through the face of the Gear Box (15) making sure the spline engages the gearing in the Gear Box. Bring the face of the Fronthead with the Gasket against the face of the Gear box and thread the Screws into the Gear box. Tighten the Screws evenly, a little a time, using an alternating pattern.

03526464_ed4

11

11.7.2 AUXILIARY AIR MOTOR FILTER – WILKERSON F30

WILKERSON®

Richland, MI 49083 Tel: (269) 629-5000

Installation & Service Instructions
84-016-000

Filter Model F30
with Variations and Accessories

ISSUED: August, 2006
Supersedes: February, 2006

Doc. #84016000, ECN# 060830, Rev. 4

⚠ WARNING

To avoid unpredictable system behavior that can cause personal injury and property damage:

- **Disconnect electrical supply (when necessary) before installation, servicing, or conversion.**
- **Disconnect air supply and depressurize all air lines connected to this product before installation, servicing, or conversion.**
- **Operate within the manufacturer's specified pressure, temperature, and other conditions listed in these instructions.**
- **Medium must be moisture-free if ambient temperature is below freezing.**
- **Service according to procedures listed in these instructions.**
- **Installation, service, and conversion of these products must be performed by knowledgeable personnel who understand how pneumatic products are to be applied.**
- **After installation, servicing, or conversion, air and electrical supplies (when necessary) should be connected and the product tested for proper function and leakage. If audible leakage is present, or the product does not operate properly, do not put into use.**
- **Warnings and specifications on the product should not be covered by paint, etc. If masking is not possible, contact your local representative for replacement labels.**

⚠ CAUTION

Polycarbonate bowls, being transparent and tough, are ideal for use with Filters and Lubricators. They are suitable for use in normal industrial environments, but should not be located in areas where they could be subjected to direct sunlight, an impact blow, nor temperatures outside of the rated range. As with most plastics, some chemicals can cause damage. Polycarbonate bowls should not be exposed to chlorinated hydrocarbons, ketones, esters and certain alcohols. They should not be used in air systems where compressors are lubricated with fire-resistant fluids such as phosphate ester and diester types.

Metal bowls are recommended where ambient and/or media conditions are not compatible with polycarbonate bowls. Metal bowls resist the action of most such solvents, but should not be used where strong acids or bases are present or in salt laden atmospheres. Consult the factory for specific recommendations where these conditions exist.

TO CLEAN POLYCARBONATE BOWLS USE MILD SOAP AND WATER ONLY! DO NOT use cleansing agents such as acetone, benzene, carbon tetrachloride, gasoline, toluene, etc., which are damaging to this plastic.

Bowl guards are recommended for added protection of polycarbonate bowls where chemical attack may occasionally occur.

⚠ WARNING

To avoid polycarbonate bowl rupture that can cause personal injury or property damage, do not exceed bowl pressure or temperature ratings. Polycarbonate bowls have a 150 PSIG pressure rating and a maximum temperature rating of 125°F.

INSTALLATION

1. Refer to WARNINGS and CAUTIONS.
2. Install as close as possible to the equipment which requires filtered air.
3. Install the unit with air flowing through the body in the direction indicated by the arrow.
4. Install a unit with the same pipe-size as the one in use. Avoid using fittings, couplings, etc., that restrict the airflow.
5. Do not install this filter on any application where the pressure drop will exceed 20 psi. Downstream from a quick opening valve, for example, could cause a momentary pressure drop in excess of 20 psi.
6. The drain line connection is dependent on the type of drain that is selected.
7. Maximum pressure rating is 150 psig (10.3 bar) for transparent plastic bowls, and 200 psig (14 bar) for metal bowls. Temperature range is 32°F to 125°F (0°C to 52°C) for transparent plastic bowls, and 32°F to 150°F (0°C to 65.5°C) for metal bowls.
8. Install unit in a vertical position.

MAINTENANCE

INSPECT UNIT DAILY AND SERVICE AT LEAST EVERY 6 MONTHS

1. EACH TIME BOWL IS CLEANED OR FILTER ELEMENT REPLACED:
   A. Depressurize unit.
   B. Inspect seals and replace crazed, cracked, damaged or deteriorated seals and bowls with original manufacturer's approved seals.
2. A. IF UNIT HAS A RIGID ELEMENT, replace and clean periodically by tapping on hard surface and blowing off with air gun.
   B. IF UNIT HAS OIL REMOVING CLOTH ELEMENT, replace with a new one at least every six months, or sooner if it appears dirty or causes excessive pressure drop (10 psi or more at rated flow).
3. Before placing unit in service be sure that the bowl and bowl guard are reinstalled and the clamp ring is securely locked in position.

REPAIR KITS AND REPLACEMENT PARTS

Repair Kit (Type A Element)	**FRP-95-209**
Bowl O-Ring Kit (Nitrile)	**GRP-95-256**
Bulk Pak Kit (Type A)	**FRP-95-271**
Bulk Pak Element Kit (Oil Removing)	**FRP-95-272**
Baffle Kit	**FRP-95-062**
Bowl Assembly Kit - No Guard	**FRP-96-315**
Clamp Ring Assembly	**GRP-96-404**
Plastic Bowl Kits:	
with Automatic Drain and Bowl Guard	**FRP-95-775**
with Flexible Drain and Bowl Guard	**FRP-95-832**
Metal Bowl Kits:	
Metal Gauge Bowl with Petcock	**GRP-95-676**
with Petcock	**FRP-95-593**
with Automatic Drain and Fluorocarbon Seals	**GRP-95-908**
Drains Kits:	
Flex-Drain™	**FRP-95-610**
Automatic Drain, w/ Nitrile Seals	**GRP-95-973**
Automatic Drain w/ Fluorocarbon Seals	**GRP-95-981**
Bowl Guard	**GRP-95-808**

ACCESSORIES

Sight Gauge Kit (for Metal Bowl)	**LRP-95-771**

⚠ WARNING

FAILURE OR IMPROPER SELECTION OR IMPROPER USE OF THE PRODUCTS AND/OR SYSTEMS DESCRIBED HEREIN OR RELATED ITEMS CAN CAUSE DEATH, PERSONAL INJURY AND PROPERTY DAMAGE.

This document and other information from The Company, its subsidiaries and authorized distributors provide product and/or system options for further investigation by users having technical expertise. It is important that you analyze all aspects of your application, including consequences of any failure and review the information concerning the product or systems in the current product catalog. Due to the variety of operating conditions and applications for these products or systems, the user, through its own analysis and testing, is solely responsible for making the final selection of the products and systems and assuring that all performance, safety and warning requirements of the application are met.

The products described herein, including without limitation, product features, specifications, designs, availability and pricing, are subject to change by The Company and its subsidiaries at any time without notice.

EXTRA COPIES OF THESE INSTRUCTIONS ARE AVAILABLE FOR INCLUSION IN EQUIPMENT / MAINTENANCE MANUALS THAT UTILIZE THESE PRODUCTS. CONTACT YOUR LOCAL REPRESENTATIVE.

- **Filter Model F30 with Variations and Accessories**
- **Filtre modèle F30 avec variations et accessoires**
- **Filtro Modelo F30 con Variaciones y Accesorios**

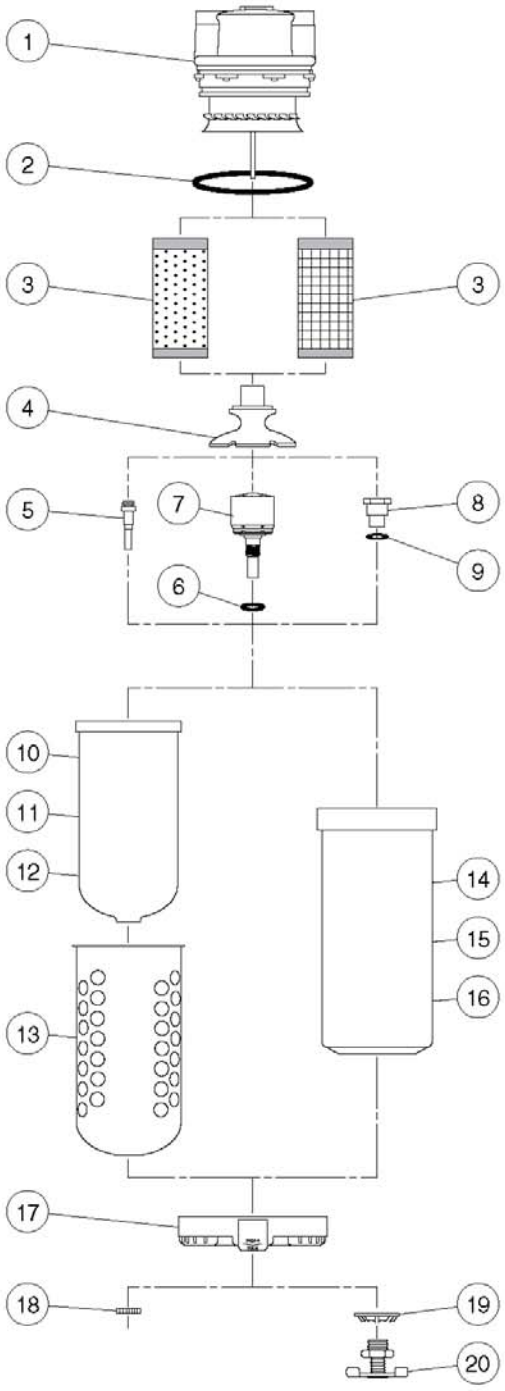

1. COVER
   COUVERCLE
   CUBIERTA
2. BOWL O-RING
   JOINT TORIQUE DE BOL
   JUNTA TORICA DE LA TAZA
3. ELEMENT
   ÉLÉMENT
   ELEMENTO
4. BAFFLE
   RACCORD DE BOL
   DESVIADOR
5. FLEX-DRAIN™
   (Plastic Bowls Only)
   FLEX-DRAIN™ (Bols en Plastique Seulement)
   FLEX-DRAIN™ (Tazas de Plástico Solamente)
6. O-RING
   JOINT TORIQUE
   JUNTA TORICA
7. AUTOMATIC MECHANICAL DRAIN
   DISPOSITIF DE VIDANGE AUTO. MÉCANIQUE
   DRENAJE MECANICO AUTOMATICO
8. BOWL INSERT
   RACCORD DE BOL
   PIEZA DE INSERCION DE LA TAZA
9. O-RING
   JOINT TORIQUE
   JUNTA TORICA
10. BOWL ASSEMBLY (No Guard)
    ENSEMBLE DE BOL (sans Protège-bol)
    ENSAMBLE DE LA TAZA (Sin Protector)
11. PLASTIC BOWL (with Mechanical Drain and Bowl Guard)
    BOL EN PLASTIQUE (avec Vidange Mécanique et Protège-bol)
    TAZA DE PLASTICO (con Drenaje Mecánico y Protector de la Taza)
12. PLASTIC BOWL (with Flex-Drain™ and Bowl Guard)
    BOL EN PLASTIQUE (avec Flex-Drain™ et Protège-bol)
    TAZA DE PLASTICO (con Flex-Drain™ y Protector de la Taza)
13. BOWL GUARD
    PROTÈGE-BOL
    PROTECTOR DE LA TAZA
14. METAL BOWL (with Manual Petcock)
    BOL EN MÉTAL (avec Robinet Manuel)
    TAZA DE METAL (con Llave de Escape Manual)
15. METAL BOWL (with Sight Gauge and Manual Petcock)
    BOL EN MÉTAL (avec Jauge Visuelle et Robinet Manuel)
    TAZA DE METAL (con Indicador Visual de Nivel y Llave de Escape Manual)
16. METAL BOWL (with Mechanical Drain)
    BOL EN MÉTAL (avec disp. de Vidange Mécanique)
    TAZA DE METAL (con Drenaje Mecánico)
17. CLAMP RING ASSEMBLY
    ENSEMBLE D'ANNEAU DE FIXATION
    ENSAMBLE DEL ANILLO ABRAZADERA
18. NUT (for use with Automatic Mechanical Drain)
    ÉCROU (pour disp. de Vidange Automatique Mécanique)
    TUERCA (para uso con el Drenaje Mecánico Automático)
19. INSERT RETAINER
    RETENUE
    RETEN DE INSERCION
20. PETCOCK
    (for Metal Bowls Only)
    ROBINET (pour Bols en Métal Seulement)
    LLAVE DE ESCAPE (para Tazas de Metal Solamente)

11.7.3 AUXILIARY AIR MOTOR REGULATOR – WILKERSON R30

WILKERSON®

Richland, MI 49083 Tel: (269) 629-5000

Installation & Service Instructions
84-007-000
Regulator Model R30
With Variations and Accessories
ISSUED: April, 2006
Supersedes: May, 2004
Doc.# 84007000, ECN# 060299, Rev. 5

⚠ WARNING

To avoid unpredictable system behavior that can cause personal injury and property damage:

- **Disconnect electrical supply (when necessary) before installation, servicing, or conversion.**
- **Disconnect air supply and depressurize all air lines connected to this product before installation, servicing, or conversion.**
- **Operate within the manufacturer's specified pressure, temperature, and other conditions listed in these instructions.**
- **Medium must be moisture-free if ambient temperature is below freezing.**
- **Service according to procedures listed in these instructions.**
- **Installation, service, and conversion of these products must be performed by knowledgeable personnel who understand how pneumatic products are to be applied.**
- **After installation, servicing, or conversion, air and electrical supplies (when necessary) should be connected and the product tested for proper function and leakage. If audible leakage is present, or the product does not operate properly, do not put into use.**
- **Warnings and specifications on the product should not be covered by paint, etc. If masking is not possible, contact your local representative for replacement labels.**

⚠ WARNING

Product rupture can cause serious injury.
Do not connect regulator to bottled gas.
Do not exceed maximum primary pressure rating.

⚠ WARNING

FAILURE OR IMPROPER SELECTION OR IMPROPER USE OF THE PRODUCTS AND/OR SYSTEMS DESCRIBED HEREIN OR RELATED ITEMS CAN CAUSE DEATH, PERSONAL INJURY AND PROPERTY DAMAGE.

This document and other information from The Company, its subsidiaries and authorized distributors provide product and/or system options for further investigation by users having technical expertise. It is important that you analyze all aspects of your application, including consequences of any failure and review the information concerning the product or systems in the current product catalog. Due to the variety of operating conditions and applications for these products or systems, the user, through its own analysis and testing, is solely responsible for making the final selection of the products and systems and assuring that all performance, safety and warning requirements of the application are met.

The products described herein, including without limitation, product features, specifications, designs, availability and pricing, are subject to change by The Company and its subsidiaries at any time without notice.

EXTRA COPIES OF THESE INSTRUCTIONS ARE AVAILABLE FOR INCLUSION IN EQUIPMENT / MAINTENANCE MANUALS THAT UTILIZE THESE PRODUCTS. CONTACT YOUR LOCAL REPRESENTATIVE.

INSTALLATION

1. Refer to WARNING prior to installation.
2. Maximum pressure rating is 300 psig (21 bar). Temperature range is 32°F to 150°F (0°C to 66°C).
3. Install the unit ahead of and as close as possible to where regulated air is needed.
4. Install the unit with the air flowing through the body in the direction indicated by the arrow.
5. Install the same pipe size unit as the pipe size in use. Avoid using fittings, couplings etc. that restrict the airflow, unless maximum flow is not needed.
6. Regulator may be installed so that adjusting handle is in any position. Attach gauge to one 1/4" gauge port and plug the other 1/4" gauge port.
7. Turning the adjusting screw clockwise raises the regulated pressure, and turning it counterclockwise lowers the regulated pressure.

MAINTENANCE

1. At least every six months remove bottom plug and clean plug, body and valve.
2. TO DISASSEMBLE: Shut off air supply and vent air lines on both sides of regulator. Turn adjusting screw counterclockwise to relieve compression or spring. Remove cover, retaining ring, bonnet, spring disc, and piston. By removing bottom plug and spring, the valve can be removed from the bottom of the regulator.
3. TO ASSEMBLE: Relubricate all seals and sealing surfaces with lubricant. Replace valve, bottom spring, and bottom plug. Insert piston into body, place spring, spring disc, and bonnet in position, and install retaining ring and cover. RETAINING RING MUST BE FULLY SEATED IN GROOVE.
4. IF UNIT WILL NOT REGULATE TO PRESSURE NEEDED, OR IF PRESSURE DROP BECOMES EXCESSIVE: Remove bottom plug, spring and valve. Clean and check o-rings, valve and valve seat for wear or damage. Relubricate o-rings with lubricant. Replace worn or damaged parts.

REPAIR KITS AND REPLACEMENT PARTS

Repair kit — self-relieving	**RRP-95-159**
High-pressure spring (0-180 psi)	**RRP-95-220**
Standard-pressure spring (0-125 psi)	**RRP-95-226**
Standard-pressure gauge (0-160 psi)	**K4520N14160**
High-pressure gauge (0-300 psig)	**K4520N14300**
Piston kit — nonrelieving	**RRP-95-451**
Pipe-mounting bracket	**GRP-95-734**

84-007-000

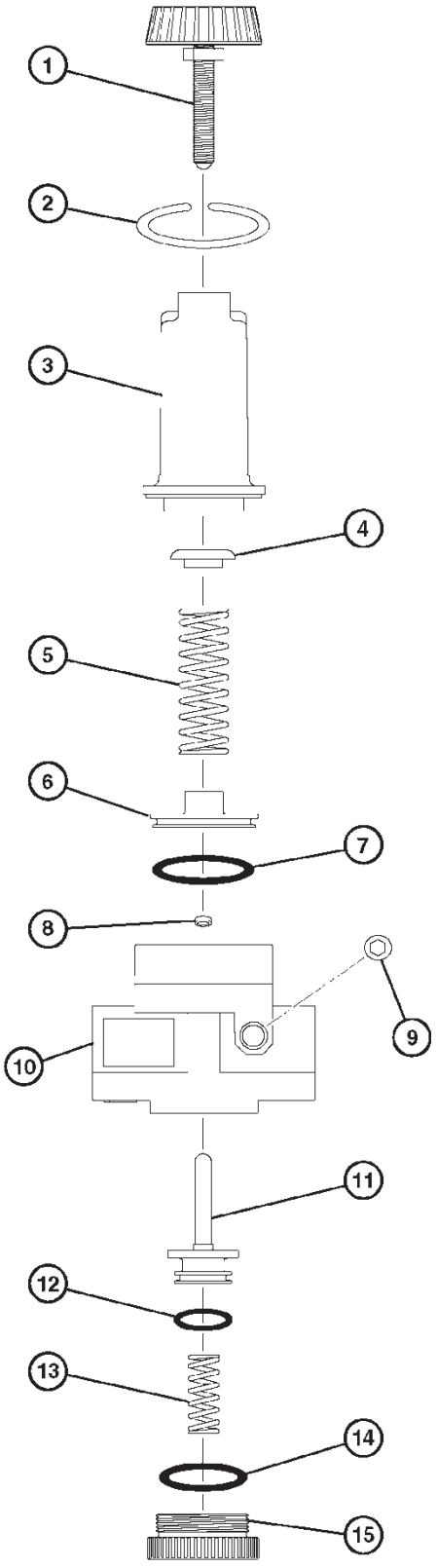

1. ADJUSTING KNOB (NNR)
   BOUCHON DE RÉGLAGE (NNR)
   PERILLA DE AJUSTE (NNR)
2. RETAINING RING
   BAGUE DE RETENUE
   ANILLO DE FIJACION
3. BONNET (NNR)
   CHAPEAU (NNR)
   SOMBRERETE (NNR)
4. SPRING DISC (NNR)
   DISQUE-RESSORT (NNR)
   DISCO DEL RESORTE (NNR)
5. REGULATING SPRING
   RESSORT RÉGULATEUR
   RESORTE DE REGULACION
6. PISTON (NNR)
   PISTON (NNR)
   PISTON (NNR)
7. O-RING
   JOINT TORIQUE
   JUNTA TORICA
8. DISC SEAL
   JOINT DE DISQUE
   SELLO DEL DISCO
9. PIPE PLUG (1 required)
   BOUCHON DE TUYAU (1 nécessaire)
   TAPON DEL TUBO (se requiere 1)
10. BODY (NNR)
    CORPS (NNR)
    CUERPO (NNR)
11. VALVE ASSEMBLY
    ENSEMBLE DE SOUPAPE
    ENSAMBLE DE LA VALVULA
12. O-RING
    JOINT TORIQUE
    JUNTA TORICA
13. VALVE SPRING
    RESSORT DE SOUPAPE
    RESORTE DE LA VÁLVULA
14. O-RING
    JOINT TORIQUE
    JUNTA TORICA
15. BOTTOM PLUG (NNR)
    BOUCHON INFÉRIEUR (NNR)
    TAPON INFERIOR (NNR)

NNR= NOT NORMALLY REPLACED
NORMALEMENT NON REMPLACÉ
NORMALMENTE NO SE REEMPLAZA

11.7.4 AUXILIARY AIR MOTOR LUBRICATOR – WILKERSON L30 ECONOMIST

WILKERSON®
Richland, MI 49083 Tel: (269) 629-5000

Installation & Service Instructions
83-159-000
Lubricator Model L30 with Variations and Accessories
ISSUED: December, 2004
Supersedes: August, 2002
Doc.# 83-159-000, Rev. 2

⚠ WARNING

To avoid unpredictable system behavior that can cause personal injury and property damage:

- **Disconnect electrical supply (when necessary) before installation, servicing, or conversion.**
- **Disconnect air supply and depressurize all air lines connected to this product before installation, servicing, or conversion.**
- **Operate within the manufacturer's specified pressure, temperature, and other conditions listed in these instructions.**
- **Medium must be moisture-free if ambient temperature is below freezing.**
- **Service according to procedures listed in these instructions.**
- **Installation, service, and conversion of these products must be performed by knowledgeable personnel who understand how pneumatic products are to be applied.**
- **After installation, servicing, or conversion, air and electrical supplies (when necessary) should be connected and the product tested for proper function and leakage. If audible leakage is present, or the product does not operate properly, do not put into use.**
- **Warnings and specifications on the product should not be covered by paint, etc. If masking is not possible, contact your local representative for replacement labels.**

INSTALLATION

1. Refer to WARNING.
2. Install as close as possible to the equipment which is being lubricated.
3. Install the unit with the air flowing through the body in the direction indicated.
4. Install a unit with the same pipe size as the line in use.
5. The lubricator may be filled under pressure by removing the fill plug and pouring the oil into the bowl through the fill port. The bowl may be taken off after the fill plug is removed if a more rapid fill is required. Do not replace the fill plug until the bowl is in position and the clamp ring is securely locked in place.
   NOTE: As the fill plug is removed, the air pressure in the bowl will be released.
6. Use clean oil, preferably SAE 10 or lighter weight. The rate of oil delivery may be controlled by turning the adjusting screw counterclockwise for more and clockwise for less oil delivered. This L30 lubricator delivers all the oil downstream that passes through the sight dome. The oil delivery rate will change automatically to deliver more oil during higher airflows and less oil for airflows lower than the one at which the setting was made.

⚠ CAUTION

Polycarbonate bowls, being transparent and tough, are ideal for use with Filters and Lubricators. They are suitable for use in normal industrial environments, but should not be located in areas where they could be subjected to direct sunlight, an impact blow, nor temperatures outside of the rated range. As with most plastics, some chemicals can cause damage. Polycarbonate bowls should not be exposed to chlorinated hydrocarbons, ketones, esters and certain alcohols. They should not be used in air systems where compressors are lubricated with fire-resistant fluids such as phosphate ester and di-ester types.

Metal bowls are recommended where ambient and/or media conditions are not compatible with polycarbonate bowls. Metal bowls resist the action of most such solvents, but should not be used where strong acids or bases are present or in salt laden atmospheres. Consult the factory for specific recommendations where these conditions exist.

TO CLEAN POLYCARBONATE BOWLS USE MILD SOAP AND WATER ONLY! DO NOT use cleansing agents such as acetone, benzene, carbon tetrachloride, gasoline, toluene, etc., which are damaging to this plastic.

Bowl guards are recommended for added protection of polycarbonate bowls where chemical attack may occur.

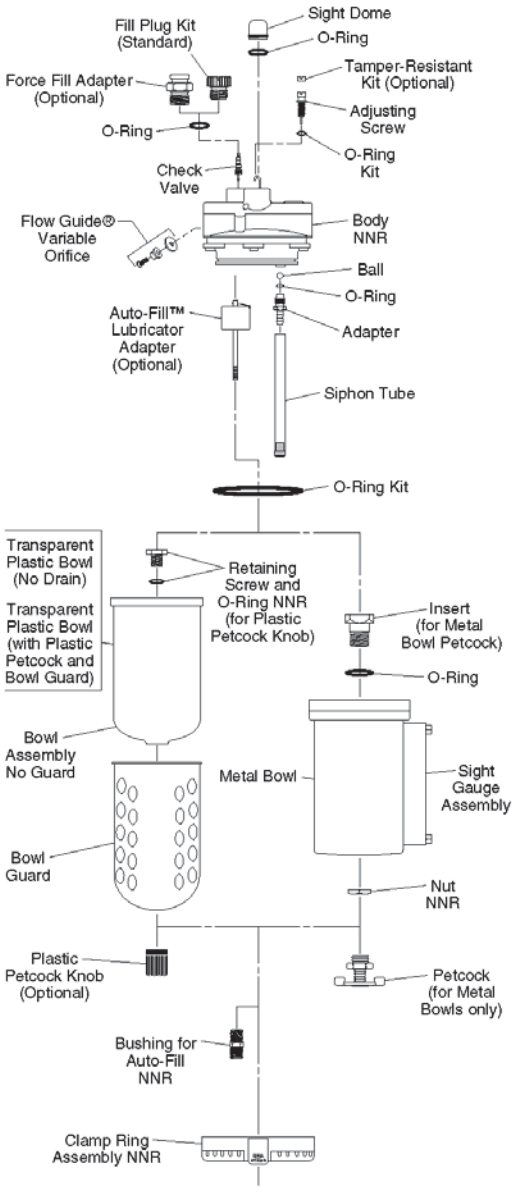

NNR-NOT NORMALLY REPLACED

MAINTENANCE

1. The lubricator should remain trouble-free given clean operating conditions. Contaminants from dirty oil can collect on bottom of bowl or on siphon tube inlet filter. After tapping filter or bowl on a hard surface, use an air gun to blow out residual dirt.
2. IF OIL DELIVERY RATE DROPS, clean lubricator. Shut off air supply and reduce pressure inside lubricator to zero. Remove Flow-Guide® variable orifice screw and clean its passage with a small wire. Check orifice screw's bore for contaminants and clean it if necessary. Be sure that passage downward from sight dome cavity into Flow-Guide® variable orifice post is open. Remove adjusting screw, clean needle and seat in body. Inspect and clean passage from needle seat to siphon tube adapter.
3. Drain off contaminants that collect in bottom of bowl.

REPAIR KITS AND REPLACEMENT PARTS

O-Ring Repair Kit	**LRP-95-058**
Liquid Level Switch Kit	**LRP-95-093**
Bowl Assembly — No Guard	**LRP-96-160**
Plastic Petcock Kit	**LRP-95-181**
Siphon Tube Assembly Kit	**LRP-96-182**
Flow-Guide® Variable Orifice Kit (3/4" Models)	**LRP-95-189**
Flow-Guide® Variable Orifice Kit (1" Models)	**LRP-95-190**
Sight Dome Kit	**LRP-95-249**
Fill Plug Kit	**LRP-95-253**
O-Ring Kit for Adjusting Screw	**GRP-95-255**
Bowl O-Ring Kit	**GRP-95-256**
Force-Fill Adapter	**GRP-96-394**
Clamp Ring Assembly	**GRP-96-404**
Tamper-Resistant Kit	**LRP-95-587**
Metal Gauge Bowl with Petcock	**GRP-95-676**
Sight Gauge Kit	**LRP-95-771**
Bowl Guard	**GRP-95-808**
Plastic Bowl with Plastic Petcock and Bowl Guard	**LRP-95-830**
Plastic Bowl — No Drain	**LRP-96-940**
Auto-Fill™ Lubricator Adapter (includes plastic bowl assembly)	**LRP-95-698**
Check Ball and O-ring Kit	**LRP-95-310**

⚠ WARNING

FAILURE OR IMPROPER SELECTION OR IMPROPER USE OF THE PRODUCTS AND/OR SYSTEMS DESCRIBED HEREIN OR RELATED ITEMS CAN CAUSE DEATH, PERSONAL INJURY AND PROPERTY DAMAGE.

This document and other information from The Company, its subsidiaries and authorized distributors provide product and/or system options for further investigation by users having technical expertise. It is important that you analyze all aspects of your application, including consequences of any failure and review the information concerning the product or systems in the current product catalog. Due to the variety of operating conditions and applications for these products or systems, the user, through its own analysis and testing, is solely responsible for making the final selection of the products and systems and assuring that all performance, safety and warning requirements of the application are met.

The products described herein, including without limitation, product features, specifications, designs, availability and pricing, are subject to change by The Company and its subsidiaries at any time without notice.

EXTRA COPIES OF THESE INSTRUCTIONS ARE AVAILABLE FOR INCLUSION IN EQUIPMENT / MAINTENANCE MANUALS THAT UTILIZE THESE PRODUCTS. CONTACT YOUR LOCAL REPRESENTATIVE.

11.7.5 MOTOR BRAKE – MONDEL MBT/E-ED23/5S

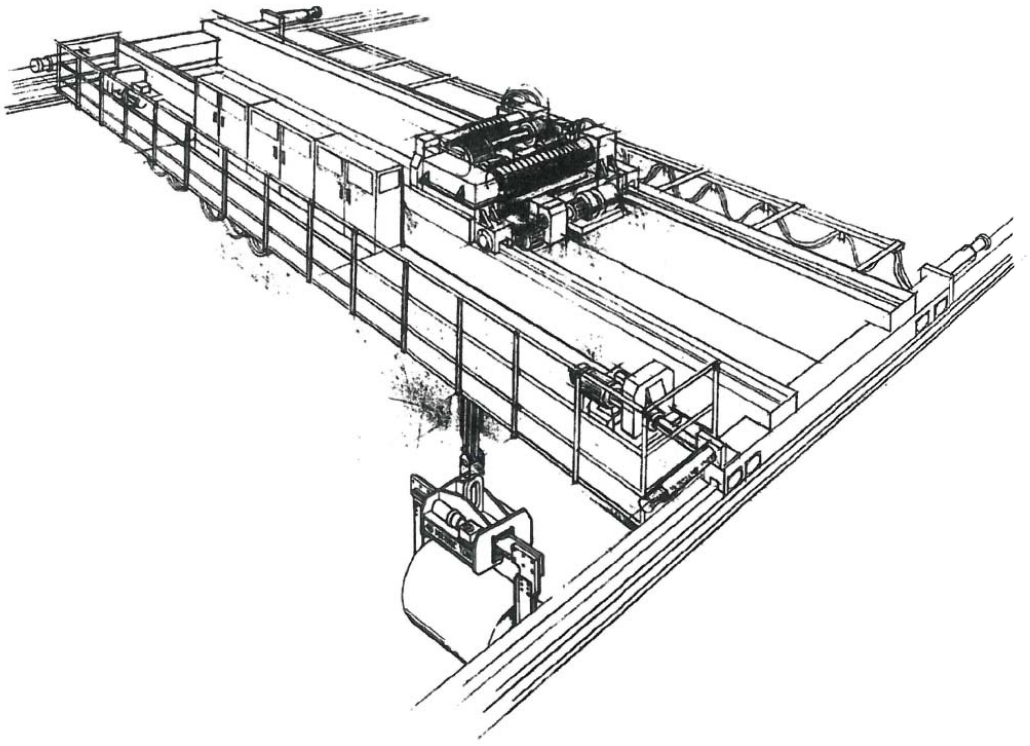

MBT/E Electric Shoe Brakes

Mondel MBT/E Electric Shoe Brakes Instruction Manual

MAGNETEK
MATERIAL HANDLING

Mondel

Part Number: 560002-R3
January 2006
© Copyright 2006 Magnetek Material Handling

MAGNETEK
MATERIAL HANDLING

Mondel

Installation and Maintenance Instructions

MBT/E Electric Shoe Brakes

SUPPLEMENTS FORMING PART OF THIS MANUAL:

DATE OF MANUFACTURE:	
APPLICABLE DIMENSION PRINT:	
EXPLODED VIEW:	
PARTS LIST:	

Table of Contents

Chapter 1.0: MBT/E Electric Shoe Brakes Warnings and Cautions 4
Chapter 2.0: General Description 7
Chapter 3.0: Application 9
Chapter 4.0: Description of Operation 10
Chapter 5.0: Installation 13
Chapter 6.0: Adjustment 15
Chapter 7.0: Electrical Detail 22
Chapter 8.0: Operational Test 23
Chapter 9.0: Maintenance and Repair 25
Chapter 10.0: Replacement Parts 32
Chapter 11.0: Long Term Storage 33

Table of Contents

Chapter 1.0: MBT/E Electric Shoe Brakes Warnings and Cautions 4
Chapter 2.0: General Description 7
Chapter 3.0: Application 9
Chapter 4.0: Description of Operation 10
Chapter 5.0: Installation 13
Chapter 6.0: Adjustment 15
Chapter 7.0: Electrical Detail 22
Chapter 8.0: Operational Test 23
Chapter 9.0: Maintenance and Repair 25
Chapter 10.0: Replacement Parts 32
Chapter 11.0: Long Term Storage 33

Chapter 1.0: MBT/E Electric Shoe Brakes Warnings and Cautions

Read and Understand All Warnings And Cautions Printed In This Manual Before Commencing Installation, Adjustment Or Repair.

Chapter 5: INSTALLATION – Warnings and Cautions

Anyone involved in the installation or service of this brake must have:

- **Received specific training.**
- **Had experience on similar equipment.**
- **Knowledge of the equipment on which the brake is installed.**
- **The ability to understand the terminology.**
- **The ability to understand the diagrams.**

Do not proceed unless technically qualified for the work involved.

Never lift the brake assembly by the brake rod. The weight of the brake can irreversibly damage the rod leading to fracture and total loss of braking torque.

The integrity of the brake may be compromised or replacement parts may not fit if alterations are made to the brake to achieve required alignment.

If the alterations to the brake supporting structure are required, they must be done under the direction of a competent authority.

On a hoist, chock the drum to prevent any rotation due to the effect of gravity on the hook block etc.

Competent personnel must disconnect all electrical power to this equipment. Consult specific wiring diagrams to identify and isolate all live power inputs to the equipment.

Unexpected movement or hazardous voltage can cause injury or death. Disconnect, lock out, and tag out the power source that feeds this device to prevent power from being applied while inspection and repairs are being performed. Before beginning repairs, try the operational controls to verify that the intended power source is disconnected.

Disconnect, lock out, and tag out the disconnect switch which feeds the brake and related equipment to prevent power from being applied while service is being performed.

On the travel motion subject to the effect of wind or camber gradient, apply the wind anchors or otherwise secure the equipment against inadvertent movement when the brake is being worked on or is removed entirely.

Failure to properly install the brake wheel will result in the brake wheel working its way off the motor shaft, resulting in total loss of braking. Do not operate this brake unless the wheel has been secured to the motor shaft.

Failure to properly center the brake and obtain uniform lining contact results in localized heating and, ultimately, reduced torque, which can cause injury or death.

Chapter 6: ADJUSTMENT – Warnings and Cautions

Protect against the possibility of movement due to the effects of gravity, wind or other source of energy, which has the potential to create a hazard when the brake is being worked on or is removed entirely.

If the brake is arranged to operate in manual mode, the actuator "reserve stroke" must be monitored and adjusted to be within the range of 30 to 35% of full stroke with the brake applied.

An actuator reserve stroke of zero will result in total loss of brake torque.

Under no circumstances should the brake be allowed to function with zero reserve stroke. Such operation results in loss of load control, which can result in injury or death.

Always replace the caps on the actuator once adjustments are complete. This will prevent entry of contaminants.

The optional automatic adjustment mechanism uses a one-way clutch to adjust brake shoe clearance. It is located inside the clutch ring (R) shown in Fig.2A. Never disassemble this clutch. Incorrect reassembly will render the auto-adjust feature inoperative. This can lead to loss of load control and result in damage, injury or death.

If it is necessary to use a wrench to adjust the reserve stroke of a brake with auto-adjust, first withdraw the drive pin (E) shown in Fig.2A and rotate the mechanism in the required direction. Do not disturb the factory set pre-load, which is secured by set screws in nut (F). Releasing the brake will take the load off of the brake rod thread and make it easier to turn.

The two setscrews used to lock nut (F), see Fig. 2A, to the clutch drive shaft, are factory set. Do not loosen these setscrews or change the position of nut (F) with respect to the assembly. Failure to observe this warning can cause the automatic adjustment feature to become inoperative. This can lead to loss of load control and result in damage, injury or death.

Chapter 7: ELECTRICAL DETAIL – Warnings and Cautions

The actuator motor must be connected to its electrical supply through a flexible cable or sealed flexible conduit. This will allow the actuator to move during brake operation and prevent contaminant entry.

To avoid contact with live terminals and to prevent contaminant entry, replace the terminal box cover as soon as connections are complete.

Chapter 8: OPERATIONAL TEST – Warnings and Cautions

Always perform an operational test of the brake after any replacement, adjustment, or repair. Read and understand the intent of the warnings published in this document – if in doubt, ask.

Before conducting an operational test, remove all tools, chocks and other equipment, which may create a hazard when the machine is operated.

Following any repair or adjustment, and before conducting an operational test, verify that all brake adjustments are complete in accordance with Chapter 6.

In a hoist application, post observers to monitor the position of the hook if it travels out of sight of the operator.

Before attempting to operate any motion in any application, advise and account for the location and security of all personnel involved.

Chapter 9: MAINTENANCE AND REPAIR – Warnings and Cautions

When replacing a brake wheel or associated drive line components on an existing installation, verify that the brake is centered with uniform lining contact as described under the topic "Brake Installation". Incorrect repair or replacement can result in death or injury to personnel.

During operation, the actuator's internal temperature and pressure will increase. This is normal but presents a risk of burns and scalds if the filler plug is removed while the actuator is hot. Switch off power to the actuator and allow it to cool to ambient temperature before checking, topping off, or draining hydraulic fluid.

Improper brake operation and loss of load control due to incorrect brake adjustment can result in death or injury to personnel. Do not allow the actuator to bottom out when it retracts as this will lead to total loss of brake torque.

Chapter 2.0: General Description

2.1: Mondel type MBT/E spring applied, Hy-Thrust actuated brakes are designed for use on cranes and other severe braking applications in heavy industry. They can be used in conjunction with any drive type applied to hoisting or horizontal travel motions.

2.2: There are two basic models of this versatile, high-speed, AC operated brake: Type MBT with a fixed value internal torque spring, and type MBT/E with an adjustable external torque spring.

2.3: Construction and operation of both models is similar; they are available in all Association of Iron and Steel Engineers, (AISE) ratings and dimensions. A limited range of shunt-wound DC motor actuators is available.

2.4: A wide range of options is available.

2.5: The type MBT and MBT/E brakes are manufactured in accordance with AISE and NEMA standards. Electrical components have both CSA and UL approvals.

2.6: When the load cycle requires a larger than normal size, as is frequently the case with crane bridge drives, type MBT and MBT/E brakes can be provided with torque ratings lower than traditional for a given wheel size.

Except when specifically engineered and used in conjunction with Mondel Braketronic Controllers, type MBT/E are more suited to crane bridge brakes.

2.7: The type MBT and MBT/E brakes can be supplied as "drop-ins", with footprints and shaft heights, to replace a wide range of competitor's brakes, including some metric sizes.

2.8: Major pivot points use self-lubricated composite bearings. Periodic lubrication is not required.

2.9: The standard actuator is weatherproof and dust proof. The electric motor is TENV construction, and the hydraulic section is fully sealed and self-contained. Electric motors for certain hazardous areas are available as options.

2.10: An optional breather valve can be installed to replace the standard filler plug for environments, which experience large temperature swings. The breather prevents pressure build-up within the actuator.

2.11: For highly corrosive applications, special hardware, enclosures, and surface treatments are available.

IF YOU HAVE AN UNUSUAL APPLICATION, OR REQUIRE A RECOMMENDATION FOR A BRAKE SIZE AND TYPE, CONTACT MAGNETEK.

Figure 1

General Arrangement
MBT/E Electric Shoe Brake

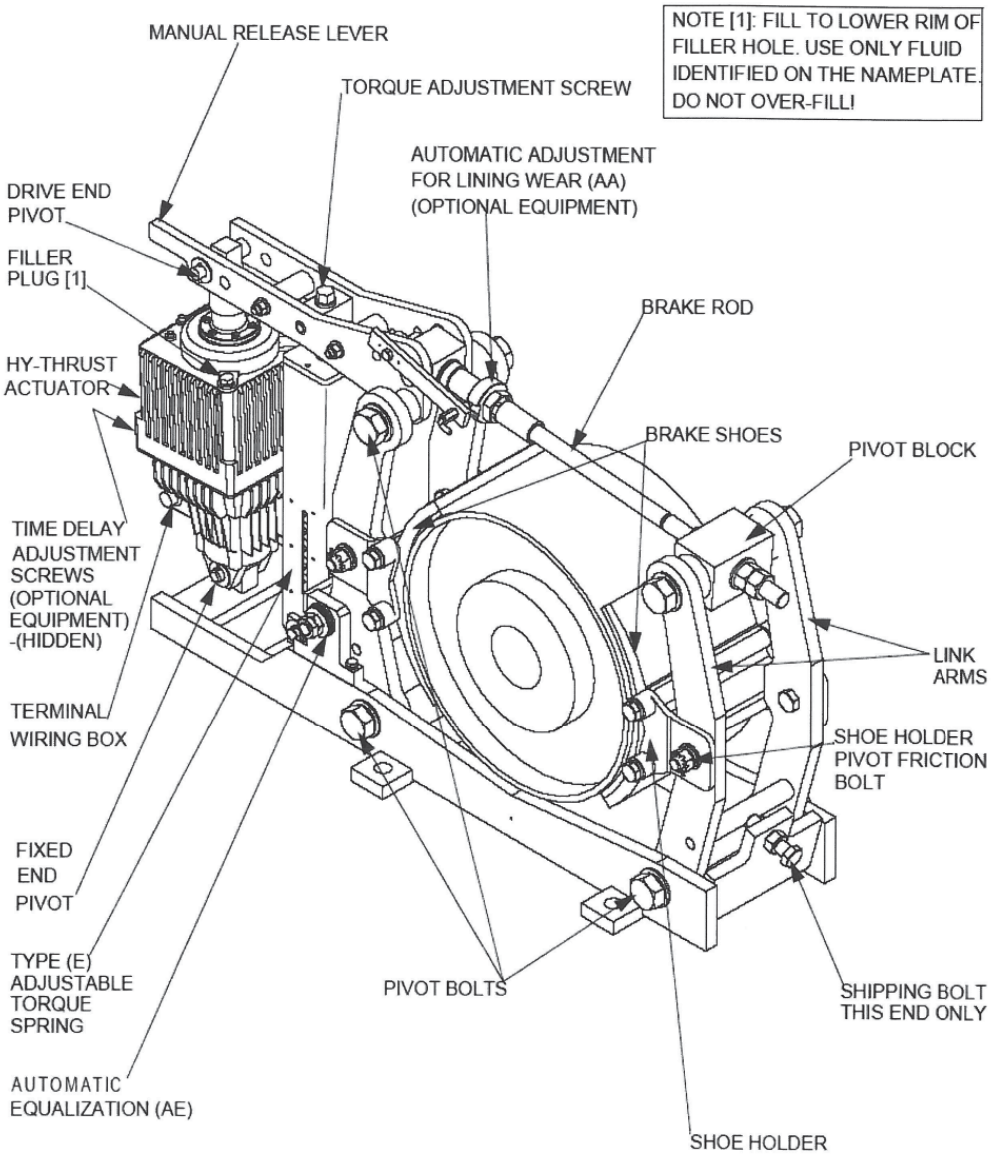

6/7/2006 Page 8 of 33 MBT/E Electric Shoe Brakes Manual
560002-R3

Chapter 3.0: Application

3.1: The brake covered by this manual is type MBT/E. This brake has an adjustable external torque spring and is generally applied on installations where the required torque cannot be pre-determined within well-defined limits.

3.2: For a given wheel diameter, the Association of Iron and Steel Engineers (AISE) determines the prescribed torque when applied to 30 and 60 minute rated motors in steel mill applications.

3.3: When applied to four quadrant drives or other applications where wheel heating can be accurately predicted, type MBT/E brakes can be provided with torque values in excess of the AISE standard.

3.4: When the load cycle requires a larger than normal wheel size, as is frequently the case on crane bridge drives, MBT/E brakes can be provided with torques lower than AISE standard for a given wheel size.

3.5: For applications where larger than normal running clearance is required, a larger actuator can be applied to a given brake. Typical would be severe applications where wheel expansion can be considerable or where excessive wheel run-out can be expected.

Chapter 4.0: Description of Operation

4.1: The brake is spring applied and actuator released. A heavy-duty compression spring, external to the actuator, pulls down on the brake lever and forces the shoes against the wheel.

4.2: The actuator piston rod extends when power is applied, the brake-shoe pressure removed, and running shoe clearance established.

4.3: Subject to the effect of brake geometry, braking torque depends upon three major factors:

4.3.(a): The diameter of the wheel.

4.3.(b): The coefficient of friction of the lining material.

4.3.(c): The force with which the linings are applied to the wheel.

4.4: Power applied to the actuator cancels the brakes ability to apply torque.

4.5: The force with which the linings are applied to the wheel depends on the spring length and characteristics. Spring length increases as linings wear (unless automatic adjustment is used).

4.6: When the brake is released, Automatic Equalization of shoe clearance ensures equal clearance between each shoe and the wheel.

4.7: Because the applied brake shoe force is proportional to the compressed length of the torque spring, a slight decrease in brake torque occurs as linings wear (unless automatic adjustment is used).

4.8: Re-adjustment of the reserve stroke to its specified setting restores the required spring force and torque.

NEMA states: "The torque ratings apply at a worn lining condition defined as the point where re-adjustment is required as recommended by the manufacturer".

4.9: Automatic Equalization (AE) is standard on all brakes of this class.

4.10: To understand how the automatic equalization works, it is important to recognize that the total available shoe clearance is directly related to the length of active stroke and that the actuators "Fully Released" position is the only consistent value for actuator stroke. The "Brake Applied" position varies as the linings wear, resulting in a reduced "Reserve Stroke". The "Brake Applied" position also varies due to wheel expansion caused by temperature increase; this results in an increased "Reserve Stroke".

4.11: On brakes without Automatic Adjustment, after some significant lining wear and the brake wheel close to ambient temperature, a reduction in the "Reserve Stroke" and a corresponding increase in the "Active Stroke", will be noticed. Corrective action will be necessary to ensure the minimum reserve stroke. (See Chapter 6: "Actuator Stroke Adjustment / Brakes without Automatic Adjustment).

4.12: On brakes equipped with the Automatic Adjustment (AA) option, the reserve stroke is maintained by a one-way clutch mechanism arranged to shorten the effective brake rod length – but only when adjustment is required – as follows:

4.12.(a): A retractable pin mounted on the brake lever, oscillates within a slot in the (AA) clutch ring. (See Fig. 2A).

4.12.(b): When the angle, through which the pin moves within the slot, does not allow contact with the sides of the slot, nothing happens!

4.12.(c): When the brake applies, after some minimal amount of lining wear, the pin will contact the side of the slot in the collar, which will advance the ratcheting mechanism and prepare for adjustment the next time the brake is released.

4.12.(d): When the brake is next released and the load on the thread is minimal, the free wheel set-up referred to in the previous paragraph will result in an advance on the thread when the pin engages the other side of the slot in the collar.

4.12.(e): The ratcheting advancement will continue, a little at a time, until the pre-determined reserve stroke is reached.

4.13: When the brake is released, the shoes are moved apart to provide running clearance from the wheel. The actuator's active stroke establishes the total clearance available for both shoes.

4.13.(a): As the brake releases, the shoe nearest to the actuator has been biased to open first. This is done during manufacture, by inclining the actuator away from the nearest shoe (See Fig. 2).

4.13.(b): Clearance provided to the nearest shoe is restricted by the (AE) mechanism – located on the base – which transfers the remaining clearance to the other shoe.

4.13.(c): As shoe wear occurs the friction bolt in the (AE) mechanism relocates to provide a new reference point for the brake shoe on the actuator side of the brake.

4.13.(c).(i): The total available shoe clearance is determined by the active stroke.

4.13.(c).(ii): The clearance between the friction bolt and holes in the actuator links through which it passes, determines the "actuator side" shoe clearance.

4.14: Various optional features are available, including latching hand release mechanisms, limit switches, hydraulic and pneumatic overrides, etc. If the brake covered by this manual has any of the optional features, they will be listed on the front page of this manual and covered by supplementary instructions.

4.15: The actuator for this series of Mondel Brakes can be supplied with optional, factory installed time delays.

Figure 2

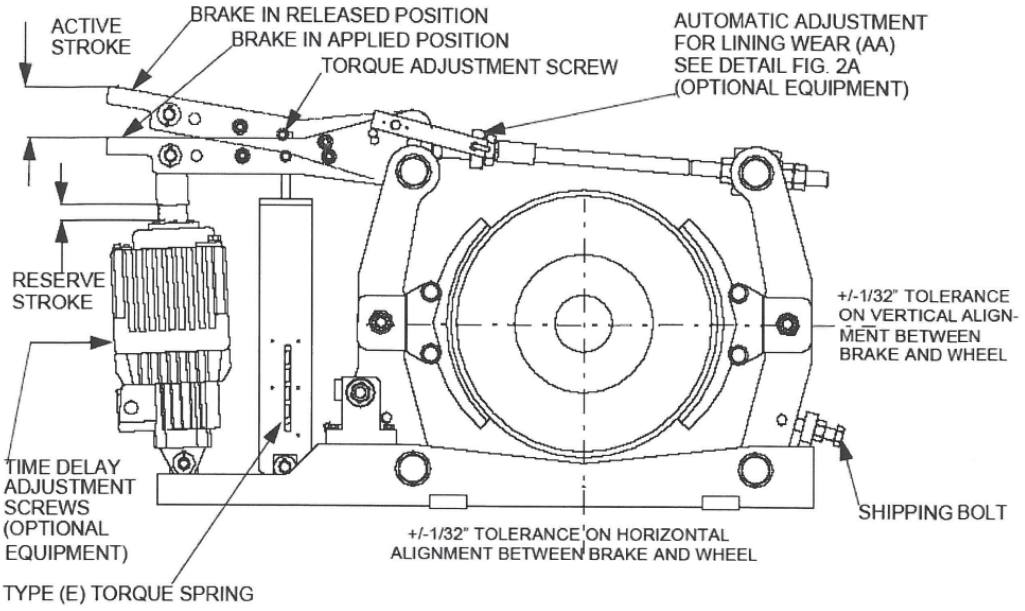

Figure 2A

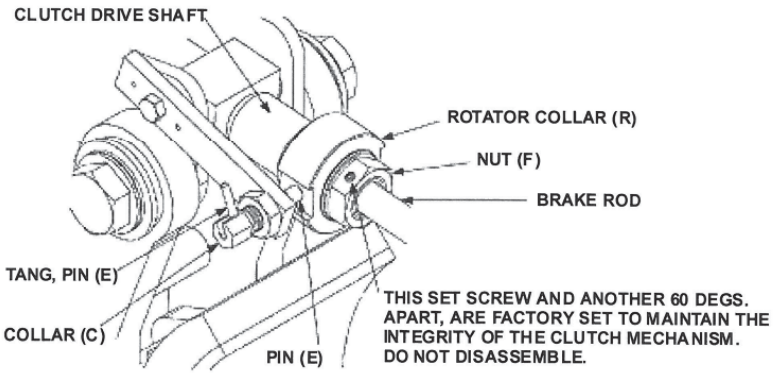

NOTE: TABLE 5 LISTS THE NEMA MINIMUM RECOMMENDED LINING THICKNESS.

6/7/2006 Page 12 of 33 MBT/E Electric Shoe Brakes Manual 560002-R3

Chapter 5.0: Installation

5.1: After unpacking, visually inspect the brake assembly to ensure that damage has not occurred during shipment and that there are no loose or missing parts.

5.2: Remove and discard any shipping bolts (See Fig. 2 for location) or wedges used to secure the brake against vibration during transportation.

5.3: Prepare the brake support structure and install the brake assembly subject to the following:

5.3.(a): Allow adequate clearance to adjacent obstructions. This will ensure the minimum practical access for adjustments and maintenance.

5.3.(b): Whether mounting a brake in a new or existing installation, the base mounting bolts need a reasonable clearance in the base mounting holes, to allow the brake to be aligned for full contact between the brake linings and the wheel.

5.3.(c): Circumstances may determine the best order of installation for the brake and the wheel. This may be due to the available space or handling facilities on site; generally the wheel is installed first.

5.3.(d): Center the brake shoes across the width of the brake wheel. This avoids ridge formation and the possible creation of a dangerous situation as the linings wear.

5.4: Alternatively, it may be necessary to introduce the brake to the brake wheel from one side of the wheel. In this case partial dismantling of the brake may be required depending on the circumstances. Refer to the general arrangement and exploded view drawings in this manual to evaluate the options.

5.4.(a): After installing the brake and wheel, make preliminary adjustments to apply sufficient shoe pressure to raise the actuator piston rod ½" above its fully retracted position.

5.4.(b): This will apply the brake at approximately rated torque, causing the brake to square itself to the wheel if the mounting bolts are loose and the bolt hole clearance will permit. This will maximize the shoe contact area.

5.4.(c): When the brake assembly is correctly aligned and clamped to the wheel, remove each of the securing bolts in turn and verify clearance in the base mounting holes. This will ensure tolerance to allow minor adjustment to the brake alignment to accommodate future relined shoes.

5.4.(d): Magnetek does not recommend "Dowelling" or "Keeper Plates" to maintain alignment.

5.5: Type MBT/E brakes are generally installed with the base horizontal and the brake wheel shaft horizontal.

5.6: In most applications the brake can be installed from one side of the brake wheel. Alternatively it may be necessary to partially dismantle the brake.

5.7: Type MBT/E brakes can also be wall mounted, with the brake wheel shaft horizontal. This is only possible if the actuator pump suction is flooded, which will be the case if the actuator hydraulic section filler plug is at the highest point possible with the actuator horizontal. For this mounting arrangement the actuator is best located above the wheel.

5.8: Type MBT/E brakes can also be wall mounted with the brake wheel shaft vertical. Again this requires the actuator hydraulic section filler plug to be at the highest point possible with the

actuator horizontal. For this mounting arrangement factory modifications are necessary to ensure equal shoe clearance.

5.9: For any other mounting arrangements consult factory.

5.10: The brake assembly must always be square and aligned to the brake wheel within a maximum of ± 1/32 inch, in all three axes (horizontal, vertical, and longitudinal).

5.11: Adjust the brake support bracket to achieve the specified horizontal and longitudinal alignment. For best performance, the brake base should be flat and parallel to the wheel rim or motor shaft. It may be necessary to release and re-apply the brake pressure several times to achieve optimum alignment. Shim under the brake base for the vertical alignment.

5.11.(a): When the brake assembly is correctly aligned and clamped to the wheel, check the securing bolt clearance in each of the brake base holes. There must be clearance in the base and through the brake support bracket to allow minor adjustments. Be sure that the brake shoes are still aligned parallel to the face of the brake and that each brake shoe is fully secured to its link arm.

5.11.(b): With the brake fully applied, verify that the shoes are centered on the wheel face and that lining contact is within adequate bedding range.

5.12: When the brake is correctly aligned in all three axes, tighten the brake mounting bolts and re-check the alignment.

5.13: Connect the actuator to the electrical supply using a flexible, sealed conductor, suitable for the rated temperature. Use type "S0", or higher temperature, cable. The actuator must be allowed few degrees of movement without the risk of dirt or moisture entering the terminal box. Chapter 7 provides all necessary electrical details.

Chapter 6.0: Adjustment

6.1: Following any adjustment or repair of the brake, test operation of the brake as described under "Operational test", Chapter 8.

6.2: Complete adjustment is required following any rework where any settings were disturbed.

Table 1

BRAKE WHEEL SIZES (Inches)	TYPICAL RUNNING CLEARANCE BETWEEN LINING AND BRAKE WHEEL (Inches)	MAXIMUM FULL SPEED BRAKE WHEEL run-out (Inches)
6	0.014	0.006
8	0.016	0.008
10	0.020	0.010
13	0.026	0.013
16	0.032	0.016
19	0.038	0.019
23	0.046	0.023
30	0.060	0.030

Notes:
1. Refer to "Brake Installation" and "Replacing the Brake Shoes" for adjustment instructions.
2. Evaluate brake wheel run-out at full speed. It must not exceed value shown in this table.

6.3: Manual Operation

6.3.(a): Brake installation, shoe replacement, and actuator replacement, described elsewhere, require the brake to be released and reapplied without energizing the actuator. When type "S" Latching Hand Release is fitted, it can be used; or it can be manually over-ridden as follows:

6.3.(b): Brakes without Automatic Adjustment:

6.3.(b).(i): To manually release the brake: Adjust the brake rod hex-nuts – to increase the brake rod length – reducing the "reserve stroke" until the piston rod is no longer visible. Continue adjustment until there is sufficient lining to brake wheel clearance.

6.3.(c): To manually apply the brake: Adjust the brake rod hex-nuts – to decrease the brake rod length – increasing the "reserve stroke" until the linings contact the brake wheel. Continue until the brake release lever begins to rise. Proceed to "Actuator Stroke Adjustment".

6.3.(d): Brakes with Automatic Adjustment:

6.3.(e): To manually release the brake: Refer to Fig. 2A, withdraw drive pin (E), then carefully rotate the mechanism by hand to increase the brake rod length and, at the same time, reduce the reserve stroke until the piston rod is no longer visible. Continue adjustment until there is sufficient shoe/wheel clearance.

6.3.(f): To manually apply the brake: Refer to Fig. 2A and withdraw drive pin (E), then rotate the mechanism by hand to decrease the effective brake rod length until the linings contact the wheel and the brake lever begins to rise. Proceed to "Actuator Stroke Adjustment".

6.4: Actuator Stroke Adjustment

6.4.(a): When power is applied to the actuator the piston will be caused to extend. This will compress the external spring and raise the brake lever to provide operating clearance between the shoes and the wheel.

6.4.(b): When power is removed from the actuator, the spring will retract the lever until the shoe pressure on the wheel prevents any further lever movement as the reserve stroke setting is attained and the intended brake torque achieved.

6.4.(c): Brakes without Automatic Adjustment:

6.4.(d): Adjust the brake rod nuts until the brake release lever raises the piston rod to the specified reserve stroke, (Table 2). Re-secure the brake rod nuts against the pivot block.

6.4.(e): Brakes with Automatic Adjustment:

6.4.(f): To make initial adjustment before engaging the auto adjust (AA), refer to Fig. 2A and withdraw pin (E). Rotate the mechanism by hand to decrease the brake rod length until the linings contact the wheel and the brake lever begins to rise. Continue adjustment until the required reserve stroke is about 1/8" less than specified. Re-engage pin (E) allowing the (AA) mechanism to complete the final stage of the adjustment process. This will verify that the mechanism is operating correctly.

6.4.(g): Energize the actuator several times until the rotating collar (R) is no longer turned by the (AA) drive pin (E). Verify that the reserve stroke is still at the desired value per Table 2.

6.5: Torque Adjustment

6.5.(a): Torque adjustment for Mondel MBT/E brakes is adjustable on site. Tighten or loosen torque adjustment screw, see Fig. 2, to set the torque within the prescribed range shown on the scale. The torque setting is obtained by matching the top of the spring-block to a line on the spring scale.

Table 2

Stroke Length Setting In Inches

ACTUATOR	MAX STROKE (inches)	ACTIVE STROKE (inches) Without Auto Adjust	DESIRED RESERVE STROKE (inches)	
			WITHOUT AUTO ADJUST	WITH AUTO ADJUST
Ed23/5	1.97	1.27	0.7	0.6
Ed30/5	1.97	1.27	0.7	0.6
Ed50/6	2.36	1.56	0.8	0.7
Ed80/6	2.36	1.56	0.8	0.7
Ed121/6	2.36	1.56	0.8	0.7

The rated torque will be developed when the following conditions are met:

6.5.(a).(i): The brake is applied and aligned properly.

6.5.(a).(ii): The actuator stroke is correct.

6.5.(a).(iii): The correct linings are fitted.

6.5.(a).(iv): The linings are in good condition and bedding is completed.

6.5.(a).(v): The brake wheel is aligned and in good condition.

6.6: Automatic Equalization Assembly

6.6.(a): The total available shoe clearance is determined by the active stroke of the actuator. Distribution of the resulting clearance is determined by two factors.

6.6.(a).(i): As the brake releases under power, the shoe nearest to the actuator has been biased to open first. This is done during manufacture by inclining the actuator away from the nearest shoe. (Fig. 2).

6.6.(a).(ii): Clearance provided to the nearest shoe is restricted by the (AE) mechanism located on the base. The clearance between the friction bolt and holes in the actuator links, through which it passes, determines the "actuator side" shoe clearance.

6.6.(b): When the predetermined "actuator side" shoe clearance has been established, the remaining clearance is transferred to the "non-actuator side" shoe.

6.6.(c): As lining wear occurs, the friction bolt in the (AE) mechanism is dragged to a new location, to provide the reference point for the shoe clearance on the "actuator side" of the brake.

6.6.(d): The (AE) friction bolt mechanism is self-compensating after initial adjustments are completed as follows:

6.6.(d).(i): Release the brake and, using a soft-faced mallet if necessary, force the actuator side link away from the wheel. This will set the actuator side (inner) shoe to the maximum available clearance.

6.6.(e): The actual clearance which will be allowed to the "actuator side" shoe is determined by the difference in diameter between the friction bolt shank and the holes in the links, through which it passes.

6.6.(f): The friction bolt assembly is pre-tensioned at the factory. If the friction bolt assembly is disturbed for any reason it can be retensioned as follows:

6.6.(g): Refer to Fig. 3A: Install a castellated hex-nut, secured by a cotter pin, on one end of the friction bolt. Add a stack of three Belleville washers in series, (inner rim against the nut), followed by a plain washer.

6.6.(g).(i): Insert the partially assembled friction bolt into the (AE) assembly on the brake.

6.6.(g).(ii): Assemble one plain washer and a Belleville washer (outer rim against the washer), on the free end of the friction bolt. Follow with a castellated hex-nut. Tighten the nut until the Belleville washers just flatten out; do not over tighten. From that position loosen the hex nut three flats (one-half turn). Then loosen or tighten the nut only enough to align the nearest cotter pin slot and hole. Install the cotter pin. This completes the assembly.

Figure 3A

Type AE Automatic Equalization Mechanism Assembly

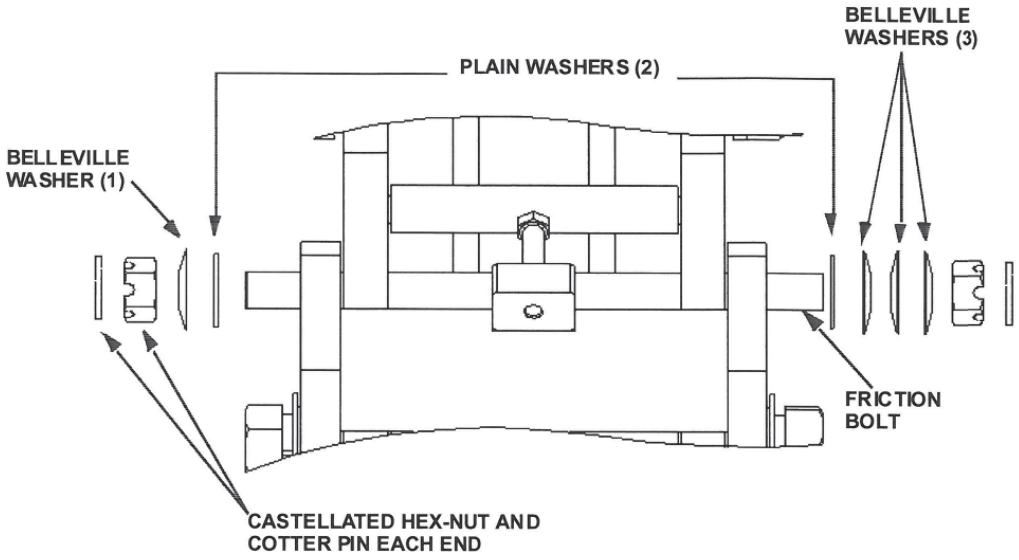

6.7: Parallel Shoe Gap Adjustment

6.7.(a): For optimum lining wear distribution, brake shoes have controlled freedom to align with the wheel contour as the linings wear.

6.7.(b): Each brake shoe holder pivots on its link arm. Its freedom to rotate under gravity is controlled by a shoe holder friction mechanism, similar to the one in the (AE) mechanism.

6.7.(c): To align shoes to the wheel, apply the brake at the applied torque and make the following initial adjustments:

6.7.(c).(i): Release the brake manually or under power.

6.7.(c).(ii): With the brake released, use a soft-faced mallet to tap the upper edge of each brake shoe in, towards the wheel, in the direction it would rotate under gravity. The friction bolt mechanism will be forced to follow the arc the shoe holder describes as it is forced down.

6.7.(c).(iii): Re-apply the brake and the shoes will be forced to align with the wheel and will force the friction bolt back to optimize parallel clearance with the wheel.

6.7.(d): If the shoe holder pivot tension adjustment is lost, it can be re-established as follows:

6.7.(d).(i): Install a Belleville washer on the friction bolt hex cap screw, (inner rim against the head of the cap screw), followed by a plain washer. (Fig. 3B).

6.7.(d).(ii): Insert the partially assembled friction bolt through the shoe holder into the link arm.

6.7.(d).(iii): Place a plain washer on the free end of the friction bolt. Follow with a castellated hex-nut. Tighten the nut until the Belleville washers just flatten out; do not over-tighten. From that position loosen the hex-nut three flats (one-half turn). Then loosen or tighten the nut only enough to align the nearest cotter pin slot and hole. Install the cotter pin. This completes the assembly. Repeat for each friction bolt.

Figure 3B

Shoe Holder Pivot Tension Mechanism Assembly

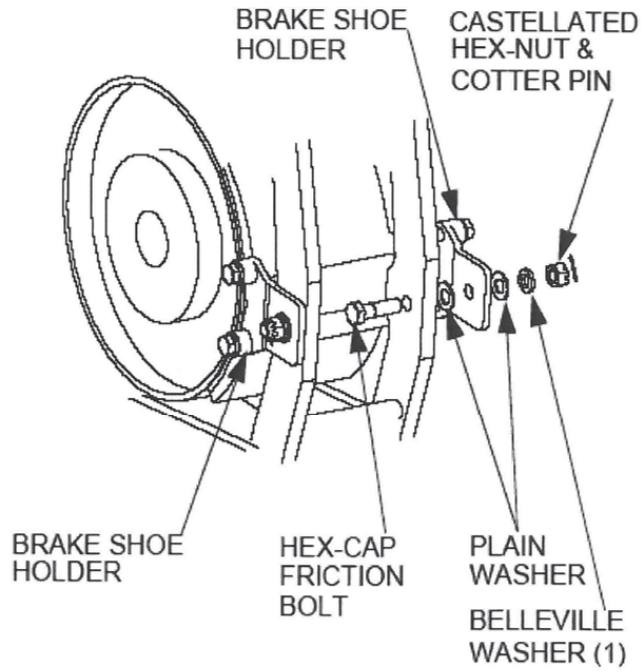

6.8: Time Delay Adjustment

6.8.(a): The actuator nameplate will indicate when optional time delay valves are installed.

6.8.(a).(i): Letter "**S**" indicates an adjustable piston retract, (brake application), time delay.

6.8.(a).(ii): Letter "**H**" indicates an adjustable piston extend, (brake release), time delay.

6.8.(a).(iii): If both letters "**S**" and "**H**" are present, then the actuator is equipped with adjustable time delay valves independently controlling both the piston extend and retract times.

6.8.(a).(iv): When time delay valves are not fitted, the actuator response time to extend or retract, is between 0.4 and 0.8 seconds depending on actuator size.

6.8.(a).(v): With time delay valve(s) installed, the extend and/or retract times are adjustable between approximately 0.5 and 10 seconds depending on actuator size.

6.8.(b): Remove the delay valve protective cap to expose the adjustment screw. For minimum delay, set the screw head flush with the housing. Figs. 1 and 2 show valve location.

6.8.(c): Turn the screw clockwise to increase and counter clockwise to decrease the delay.

Note: The standard actuator has the shortest response time. An actuator fitted with delay(s) provides longer response times, even when the delay(s) are adjusted for minimum effect.

Chapter 7.0: Electrical Detail

7.1: Operation of the actuator is not dependant on the direction of motor rotation. The cable leads can be connected to the U1, V1 and W1 (T1, T2, T3) terminals, in any phase sequence.

7.2: The motor leaves the factory already arranged for the specified voltage, which is also shown on the nameplate.

7.3: If the motor was specified for a nominal 460 volts supply, it will be connected with nine terminals and the links arranged as shown in Fig. 4. If at some future date the motor is required to operate from a 230 volts supply, re-arrangement of the links is required as shown.

Figure 4

Electrical Connections

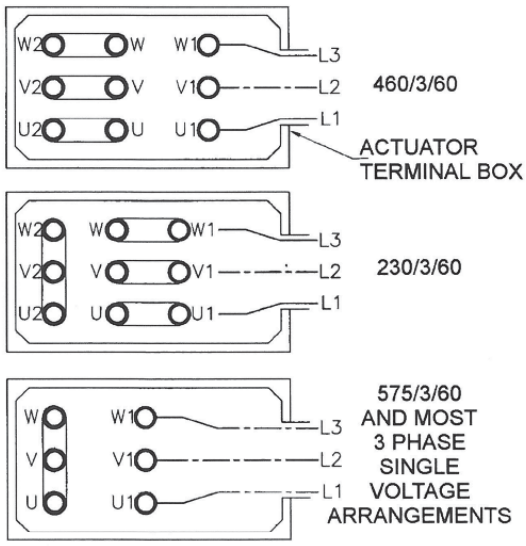

7.4: When specified for operation on 575 volts or other single voltage, it will be connected with six terminals, and the links arranged as shown in Fig. 4. The winding will not be capable of re-connection for any other voltage.

7.5: Explosion proof actuators are only arranged for the terminal voltage shown on the nameplate. Three terminal posts will be visible when the cover plate is removed under the required conditions. No provision is made for external re-connection to any other voltage.

7.6: A wiring diagram showing the possible terminal link arrangements is fastened inside the actuator terminal box cover.

Chapter 8.0: Operational Test

8.1: Heed all warnings and cautions in addition to the owners' safety procedures.

8.2: Follow all standards and local statutes.

8.3: Remove any drum chocks on a hoist application.

8.4: As a preliminary test of the brake without load, energize the actuator for one short jog. If the brake fails to stop and hold the motion stationary, repair or re-adjust the brake as necessary. Visually inspect the brake during operation to ensure all adjustments are correct. If successful, continue with longer duration jogs until confident that the brake is operating satisfactorily.

8.5: A minimum of 60% contact between lining and wheel on each shoe is required before subjecting the brake to its rated capacity.

8.6: If re-lined shoes have been fitted, or the brake alignment has been altered or is otherwise suspect, you may have to realign the brake. This will minimize the bedding needed to obtain the necessary 60% of brake lining to wheel contact.

8.7: The required lining contact is seldom achieved without "bedding", but time spent to achieve satisfactory bedding will be rewarded with a considerably longer life for the lining.

8.8: Modern linings, although hard wearing, are difficult to "bed" when the area in contact with the wheel cannot support the heat energy transferred to the brake. As a result the linings will become "glazed" where in contact with the wheel. "Glazing" is the name applied to a condition where the lining has been heated beyond its working temperature range and is no longer capable of its designed coefficient of friction. "Glazing" will seldom be removed by further braking operations as any increase in area of lining contact will immediately be glazed.

8.9: "Glazing" can be prevented by ensuring a minimum of 60% contact area before placing the brake in service.

8.10: On hoists, well-spaced, short bursts of energy, such as an E.Stop at high speed with no load are best to achieve initial "bedding". This will limit the energy input while the wheel is monitored for temperature.

8.11: A distinct advantage of the type MBT/E brakes is that the actuator can be easily over-ridden while the drive is operating. This can be accomplished with a short length of pipe fitted over the "manual release lever extension". See Fig. 1. When circumstances permit, pressure can be applied to force the shoes against the wheel while the drive is operating. Care must be taken to achieve the minimum 60% contact between lining and wheel on each shoe without exceeding the maximum of 150° C.

8.12: Bedding is just as important when the brake is applied with a four-quadrant drive and not subjected to dynamic loading, except under emergency conditions.

8.13: The following are the key steps to satisfactory "bedding" to extend lining life.

8.13.(a): Use only genuine Mondel lined brake shoes. This will maintain specified brake performance and ensure that the braking torque is neither more nor less than the specified rating.

8.13.(a).(i): Linings thicker than the original equipment may result in contact with the wheel only at the tips.

8.13.(a).(ii): Linings thinner than the original equipment may result in contact with the wheel only across the middle and cause vibration during stops.

8.13.(b): Do not use re-lined shoes where the castings are damaged, worn or distorted.

8.13.(c): Square the brake to the wheel for optimum contact between the linings and the wheel.

8.13.(d): Type **MBT and MBT/E** brakes incorporate a mechanism to equalize brake shoe clearance; ensure that it is correctly adjusted in accordance with Chapter 6.

8.13.(e): Type **MBT and MBT/E** brakes incorporate a mechanism to keep brake shoe clearance parallel to the wheel; ensure that it is correctly adjusted in accordance with Chapter 6.

8.14: Wheel run-out must be within the allowable tolerance; see Table 1. Any unnecessary lining drag will result in excessive heat in the wheel and lining deterioration.

8.15: Every operational test should include verification of brake wheel run-out as follows:

8.15.(a): At all speeds, verify that the linings are clear of the wheel. Take steps to correct wheel run-out, imbalance, or the effects of critical speed.

8.15.(b): If necessary, check low speed brake wheel run-out as follows:

8.15.(b).(i): Using a run-out gauge, verify that radial run-out does not exceed 0.001" per inch of brake wheel diameter. Refer to Table 1 for brake wheel run-out allowance. Lifting the brake wheel with a suitable lever while observing the dial gauge is another way to check bearing play.

Chapter 9.0: Maintenance and Repair

NEMA recommends that brakes be fitted with new or re-lined shoes before the lining material is worn excessively. Refer to Table 5 for minimum thickness.

9.1: Replacing the Brake Shoes

9.1.(a): Remove and install the brake shoes as follows:

9.1.(a).(i): On a hoist, lower the load to the floor and disconnect the load from the bottom block.

9.1.(a).(ii): Reset the bottom block on the floor or on a suitable support. Chock drum to prevent rotation of the drum.

9.1.(b): Refer to Chapter 6 and manually release the brake to provide sufficient clearance between the brake linings and the brake wheel.

9.1.(b).(i): Loosen and back-out shoe holder screws (J) until free of the clearance holes. See Fig. 5.

9.1.(b).(ii): Rotate one shoe holder out of the way from the "horizontal" position to the "up" or "down" position. Remove the shoe from this side.

9.1.(b).(iii): Additional clearance will be required to insert the new shoes. Adjust brake rod as required. (See Chapter 6 "Manually Releasing The Brake").

9.1.(b).(iv): Before starting shoe installation, check that the brake surface of the wheel is clean and free from oil and grease.

9.1.(b).(v): Next, verify that the lining surface will be true to the wheel when the shoe is installed. Carefully check lining contact with the wheel. Remove any high spots with emery paper to ensure 60% contact between the lining and the wheel.

9.1.(c): Ensure adequate clearance will be available and install the replacement shoe assemblies in the reverse order.

9.1.(d): Rotate the shoe holder back into the "up" position and turn the shoe holder screws in until seated in the clearance holes in the side of the brake shoe.

9.1.(e): Ensure that the brake shoe is fully seated and the clearance holes in both sides engage the shoe holder screws. Finally, secure the screws tight against the holder.

9.1.(f): Whenever brake service requires loosening of the pivot bolts, ensure that the reinstalled pivot bolts are tightened to the torque values listed in Table 3.

Table 3: Recommended Pivot Bolt Torque

Brake Dia. Inches)	5	8	10	13	16	19	23	30
Torque (ft-lb)	25	80	90	130	230	400	500	600

9.1.(g): The braking surface of the wheel must be clean and free from any oil or grease contamination, which may have occurred during servicing.

9.1.(h): Re-apply the brake and make all adjustments covered in Chapter 6.

NOTE: The brake can be damaged if the brake shoes are not properly aligned. Do not operate the brake unless the brake shoes are in their correct position and all shoe holder-mounting screws are fully tightened.

9.1.(i): Newly lined shoes seldom fit perfectly with the contour of an existing brake wheel, particularly if the wheel is worn or undersized. If the brake has been moved, realignment of the brake with the wheel may be necessary. Refer to the topic "Brake Installation" for the correct alignment and bedding procedure.

9.1.(j): Refer to Chapter 6 and adjust the reserve stroke as required. Observe instructions for adjusting the optional (AA) feature when provided.

9.1.(k): Refer to Chapter 6 and adjust the torque as required.

9.1.(l): Refer to Chapter 6 and adjust the brake shoe clearance as required.

9.1.(m): Refer to Chapter 6 and adjust the (AE) mechanism as required.

9.1.(n): Refer to Chapter 8; bed and test the brake as described.

Figure 5

Brake Shoe Removal/Replacement

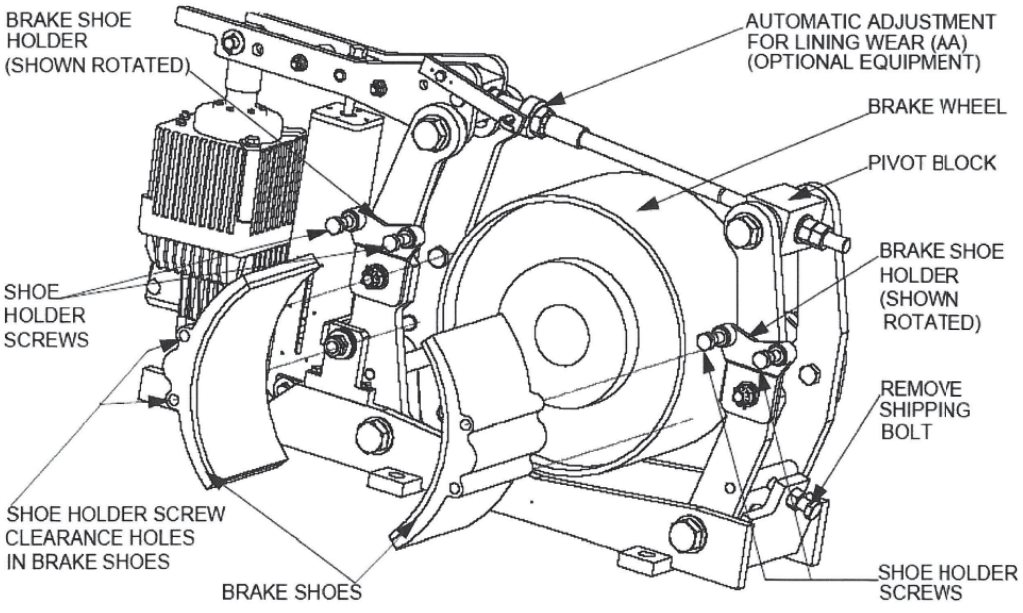

9.2: Removing The Actuator

9.2.(a): Secure against any possibility of an unexpected movement when the actuator is removed.

9.2.(b): Lower the load to the floor and disconnect the load from the bottom block.

9.2.(c): Reset the bottom block on the floor or on a suitable support. Chock the drum to prevent rotation.

9.2.(d): Disconnect and remove electrical wiring and conduit to the actuator.

9.2.(e): Before attempting to remove the actuator, release the brake. See Chapter 6: "Manually Releasing the Brake".

9.2.(f): Secure or support the actuator before attempting to remove the pivot pins.

9.2.(g): Refer to Fig. 6: remove the cotter pins etc., which secure the actuator to the brake assembly.

9.2.(h): Remove the complete actuator using appropriate lifting devices.

9.2.(i): Should service be required, return the actuator to Magnetek for repairs or service. Identify the actuator with the original brake serial number.

9.3: Re-Installing The Actuator

9.3.(a): Verify adequate means are still in place to protect unexpected movement when the actuator is replaced.

9.3.(b): Position the actuator within the lever and attach to the base. Use a lifting device as necessary.

9.3.(c): Attach and secure the actuator using the correct pivot pins, etc. Check for wear prior to re-fitting.

9.3.(d): Refer to Chapter 6 and adjust the reserve stroke as required. Observe instructions for adjusting the optional (AA) feature when provided.

9.3.(e): Refer to Chapter 6 and adjust the torque as required.

9.3.(f): Refer to Chapter 6 and adjust the brake shoe clearance as required.

9.3.(g): Refer to Chapter 6 and adjust the (AE) mechanism as required.

9.3.(h): Refer to Chapter 8; bed and test the brake as described.

Figure 6

Actuator Removal and/or Replacement

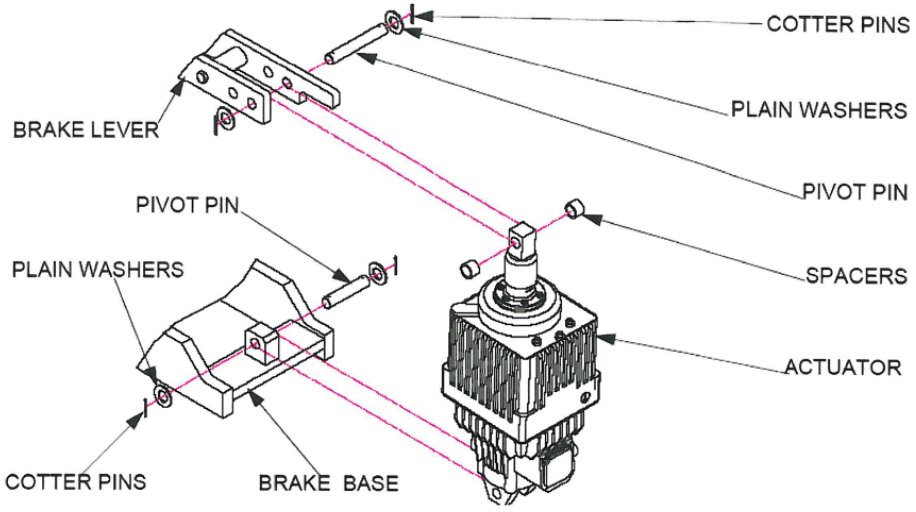

9.4: Fitting Relined Brake Shoes

It is not recommended that shoes be relined in the field. New bonded shoe assemblies can be ordered as repair parts. Factory rebuilt shoes are also available from Magnetek. Under this program, credit will be allowed for old shoes in usable condition.

9.5: Removal and Installation of Motor and Brake Wheel as an Assembly

9.5.(a): Quick replacement of the drive motor and brake wheel, as an assembly, can be accomplished with minimum disturbance to the brake.

9.5.(b): Disconnect, lock out, and tag out the disconnect switch that feeds this equipment to prevent power from being applied while service is being performed.

9.5.(c): Remove both shoe assemblies as described under the topic, "Replacing the Brake Shoes". If the shoes will not be replaced as part of this work order, identify the shoes in order that they can be re-fitted without having to be re-bedded.

9.5.(d): Disconnect the brake rod from the brake lever.

9.5.(e): Swing the entire brake rod assembly clear to permit unobstructed vertical withdrawal of the brake wheel without damage.

9.5.(f): Remove the motor and brake wheel by lifting straight up until the wheel clears the brake.

9.5.(g): Do not disturb the position of the brake rod by turning it into or out of the pivot link. Doing so will alter the brake rod adjustment.

9.5.(h): Install the motor, with brake wheel installed, by lowering it into place.

9.5.(i): Reinstall the shoe assemblies as described under the topic "Replacing the Brake Shoes".

9.5.(j): Re-attach the brake rod to the brake lever.

9.5.(k): Ensure that all shoe holder mounting screws are correctly tightened (Fig. 5).

9.5.(l): Test the operation of the brake as described under the topic "Operational Test".

9.5.(m): Install the brake wheel as described elsewhere.

9.5.(n): Verify the brake is still properly centered over the wheel. Make any adjustments as required. See Chapter 5, "Brake Installation".

9.5.(o): Maintenance and inspection periods depend on operating conditions. High duty cycle applications obviously require more frequent inspections than brakes operating on low duty cycle applications. In either case, Magnetek recommends a general inspection every 100 operating hours or every month as a minimum.

9.6: Inspection

9.6.(a): Electrical connections and mechanical fasteners should be checked for tightness. Inspect the brake wheel to ensure that it is neither damaged nor loose. Inspect the brake mounting bolts for tightness, and that brake shoe clearance settings are within specifications.

9.6.(b): Inspect the brake wheel for unusual scoring, signs of over-heating, cracking or wear. Replace any damaged, cracked or excessively worn brake wheels.

9.6.(c): Inspect the condition of the bearings and bushings as well as the electrical and mechanical integrity of the complete braking system. Make any repairs or adjustments that may be required to ensure proper brake system operation.

9.6.(d): Check the brake wheel run-out at all speeds. See Chapter 8 "Operational Test".

9.6.(e): Correct operation of the motor can be determined by measuring its operating current. Refer to Motor Nameplate for rated value.

9.7: Lubrication

9.7.(a): Periodic lubrication is not required on these brakes. Major pivot points are equipped with bearings, which do not require lubrication. Oil or any other lubricant applied to any part of the brake may trap airborne contaminants.

9.8: Actuator Working Fluid

9.8.(a): The actuator leaves the factory correctly filled with the fluid and seals for the specified operating temperature range.

9.8.(b): The fluid will not deteriorate in service, and if there are no tell-tale signs of leakage, no additional fluid will be required.

9.8.(c): The actuator working fluid should be checked periodically, but must not be over-filled to ensure an adequate air space is retained to allow for fluid expansion. See Fig. 1 for plug location and proper fluid level.

9.8.(d): If additional fluid is necessary for any reason, use only the fluid identified on the nameplate to ensure compatibility with the installed seals and the specified operating temperature range. **DO NOT OVER-FILL.**

9.8.(e): Table 4 specifies Hydraulic Fluid types for a range of ambient temperatures.

9.9: Brake Adjustments

9.9.(a): Wear will be more rapid when the linings are new, while the high spots are wearing down as the bedding process takes place. Adjustment will be required soon after the brake has been put into service.

9.9.(b): On units without automatic adjustment, brake release lever travel increases with lining wear. This decreases the reserve stroke. Carry out periodic maintenance to reset the reserve stroke as described in Chapter 6 "Actuator Stroke Adjustment".

9.9.(c): Brake torque decreases as the brake lever drops. On critical applications, such as hoists, brake adjustment should be performed frequently enough so that the torque loss does not result in loss of load control. In no event should the actuator or lever be allowed to "bottom out". This results in total loss of braking torque and could result in death or injury to personnel.

Following any adjustment, maintenance, or repair on the brake, fully test its operation as described under topic "Operational Test".

Table 4: Recommended Hydraulic Fluids

Ambient Temperature				Hydraulic Fluid
Lower Limit ^0F	Upper Limit ^0F	Lower Limit ^0C	Upper Limit ^0C	
-13	+122	-25	+50	C-10 (1)
+32	+176	0	+80	C-46 (1)
-31	+104	-35	+40	Aero 41 (2)
-76	+140	-60	+60	M-20 (3)

(1) C-10 and C-46 are Shell Morlina® products.
(2) Aero 41 is a Shell® product.
(3) M-20 is a Bayer® Baysilone product.
All hydraulic fluids are obtainable from Magnetek.

Chapter 10.0: Replacement Parts

10.1: Brake Lining Replacement

10.1.(a): As a general guide, Magnetek recommends that brake linings be replaced when the linings wear down to 1/16" minimum thickness. Table 5, shows NEMA's recommended range of minimum lining thickness for bonded and riveted linings on brake wheels from 8" to 30" diameter...

Table 5

Wheel Diameter (Inches)	Maximum RPM Ductile Iron	Minimum Wheel Dia. (Inches) (1)	Lining Thickness (Inches) (2)	
			Riveted (3)	Bonded
8	5000	7.94	0.010	0.016
10	4000	9.92	0.010	0.020
13	3300	12.90	0.010	0.026
16	2600	15.87	0.015	0.032
19	2300	18.87	0.015	0.038
23	1900	22.87	0.015	0.046
30	1340	29.87	0.015	0.060

(1) Minimum after re-machining.
(2) Minimum permissible prior to replacement.
(3) Above rivet head at maximum wear point.

10.2: Detailed procedures for brake shoe replacement and actuator removal and installation are covered earlier in this manual.

10.3: For other parts replacement or complete disassembly and rebuild, refer to the exploded view attached to this manual.

10.4: Before returning a brake to service after major repairs or overhaul, carry out all adjustments outlined in this manual followed by a complete operational test.

10.5: Ordering Parts

10.5.(a): For part number and identification refer to the Exploded View and Bill of Material forming part of this manual.

10.5.(b): Always quote the Magnetek Serial Number when ordering parts.

10.5.(c): For optimum brake life and performance use only genuine Mondel parts.

Chapter 11.0: Long Term Storage

11.1: If a brake assembly will not be installed immediately, it can be stored indoors, in a dry location indefinitely, or outdoors for a reasonable time if adequately protected from moisture and corrosive atmosphere. The brake assembly must always be protected from direct exposure to the elements unless specifically treated at the factory for use in that environment. Covering with plastic sheeting is not acceptable unless provision is made to prevent condensation under the plastic.

11.2: During storage, rust may form on the surface of the brake wheel. This is not usually a problem with ductile iron wheels nor is it necessary to clean the wheel before placing the wheel in service. The first few brake applications will polish the wheel.

11.3: Steel wheels may form scale when corroded, and the braking surface may have to be re-machined to remove the scale. See Table 5 for machining limits. Dynamic balance may be affected.

11.4: Before painting a brake, protect all pivot points, self-adjusting mechanism, pull-rod, actuator piston, brake drum and linings, etc.

11.4.(a): Data plates and labels must not be removed or painted over.

11.7.6 MACHINERY BRAKE – MONDEL 13MST/E-ED80/6S

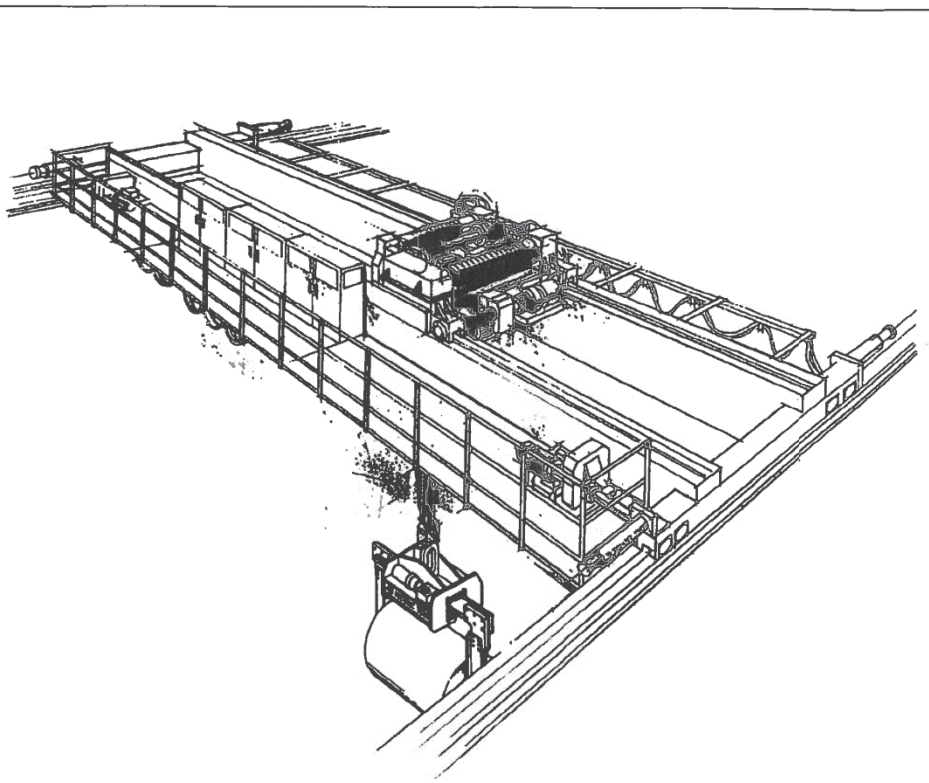

MST/E Electric Shoe Brakes

Mondel MST/E Electric Shoe Brakes Instruction Manual

MAGNETEK
MATERIAL HANDLING

Mondel

Part Number: 560022-R6
July 2006
© Copyright 2006 Magnetek Material Handling

MAGNETEK
MATERIAL HANDLING

Mondel

Installation and Maintenance Instructions

MST/E Electric Shoe Brakes

SUPPLEMENTS FORMING PART OF THIS MANUAL:

DATE OF MANUFACTURE:	
APPLICABLE DIMENSION PRINT:	
EXPLODED VIEW:	
PARTS LIST:	

Table of Contents

Chapter 1.0: MST/E Electric Shoe Brakes Warnings and Cautions 4
Chapter 2.0: General Description 7
Chapter 3.0: Application 10
Chapter 4.0: Description of Operation 11
Chapter 5.0: Installation 14
Chapter 6.0: Adjustment 16
Chapter 7.0: Electrical Detail 23
Chapter 8.0: Operational Test 24
Chapter 9.0: Maintenance and Repair 26
Chapter 10.0: Replacement Parts 32
Chapter 11.0: Long Term Storage 33

Chapter 1.0: MST/E Electric Shoe Brakes Warnings and Cautions

Read and Understand All Warnings And Cautions Printed In This Manual Before Commencing Installation, Adjustment Or Repair

Chapter 5: INSTALLATION – Warnings and Cautions

Anyone involved in the installation or service of this brake must have:

- **Received specific training.**
- **Had experience on similar equipment.**
- **Knowledge of the equipment on which the brake is installed.**
- **The ability to understand the terminology.**
- **The ability to understand the diagrams.**

Do not proceed unless technically qualified for the work involved.

The integrity of the brake may be compromised or a replacement part may not fit if alterations are made to the brake to achieve required alignment.

If the alterations to the brake supporting structure are required, they must be done under the direction of a competent authority.

All electrical power to this equipment must be disconnected by competent personnel. Consult specific wiring diagrams to identify and isolate all live power inputs to the equipment.

Unexpected movement or hazardous voltage can cause injury or death. Disconnect, lock out, and tag out the power source that feeds this device to prevent power from being applied while inspection and repairs are being performed. Before beginning repairs, try the operational controls to verify that the intended power source is disconnected.

On a hoist, chock the drum to prevent any rotation, due to the effect of gravity on the hook block etc.

On the travel motion subject to the effect of wind or camber gradient, apply the wind anchors or otherwise secure the equipment against inadvertent movement when the brake is being worked on or is removed entirely.

Never lift the brake assembly by the brake rod. The weight of the brake can irreversibly damage the rod leading to fracture and total loss of braking effect.

Failure to install the brake wheel correctly may result in total loss of braking. Do not operate the brake unless the wheel is secured to the shaft.

8/17/2006 Page 4 of 33 MST/E Electric Shoe Brakes Manual 560022-R6

Failure to properly center the brake and obtain uniform lining contact results in localized heating and, ultimately, reduced torque, which can cause injury or death.

Chapter 6: ADJUSTMENT – Warnings and Cautions

Protect against the possibility of movement due to the effects of gravity, wind or other source of energy, which has the potential to create a hazard when the brake is being worked on or is removed entirely.

If the brake is arranged to operate in manual mode, the actuator "reserve stroke" must be monitored and adjusted to be within the range of 30 to 35% of full stroke with the brake applied.

An actuator reserve stroke of zero will result in total loss of brake torque.

Under no circumstances should the brake be allowed to function with zero reserve stroke. Such operation results in loss of load control, which can result in injury or death.

Always replace the caps on the actuator once adjustments are complete. This will prevent entry of contaminants.

The optional automatic adjustment mechanism uses a one-way clutch to adjust brake shoe clearance. It is located inside the clutch ring (R) shown in Fig.2A. Never disassemble this clutch. Incorrect reassembly will render the auto-adjust feature inoperative. This can lead to loss of load control and result in damage, injury or death.

If it is necessary to use a wrench to adjust the reserve stroke of a brake with auto-adjust, first withdraw the drive pin (E) shown in Fig.2A and rotate the mechanism in the required direction. Do not disturb the factory set pre-load, which is secured by set screws in nut (F). Releasing the brake will take the load off of the brake rod thread and make it easier to turn.

The two setscrews used to lock nut (F), see Fig. 2A, to the clutch drive shaft, are factory set. Do not loosen these setscrews or change the position of nut (F) with respect to the assembly. Failure to observe this warning can cause the automatic adjustment feature to become inoperative. This can lead to loss of load control and result in damage, injury or death.

Chapter 7: ELECTRICAL DETAIL – Warnings and Cautions

The actuator motor must be connected to its supply through a flexible cable or sealed flexible conduit. This is required to ensure that contaminants will not enter the motor through the wiring and junction box.

Avoid contact with "live" terminals and prevent contaminant entry. Replace the terminal box cover as soon as connections are complete.

Chapter 8: OPERATIONAL TEST – Warnings and Cautions

Always perform an operational test of the brake after any replacement, adjustment, or repair. Read and understand the intent of the warnings published in this document – if in doubt, ask.

In a hoist application, post observers to monitor the position of the hook if it travels out of sight of the operator.

Before conducting an operational test, remove all tools, chocks and other equipment, which may create a hazard when the machine is operated.

Following any repair or adjustment, and before conducting an operational test, verify that all brake adjustments are complete in accordance with Chapter 6.

Before attempting to operate any motion in any application, advise and account for the location and security of all personnel involved.

Chapter 9: MAINTENANCE AND REPAIR – Warnings and Cautions

When replacing a brake wheel or associated drive line components on an existing installation, verify that the brake is centered with uniform lining contact as described under the topic "Brake Installation". Incorrect repair or replacement can result in death or injury to personnel.

During operation, the actuator's internal temperature and pressure will increase. This is normal but presents a risk of burns and scalds if the filler plug is removed while the actuator is hot. Switch off power to the actuator and allow it to cool to ambient temperature before checking, topping off, or draining hydraulic fluid.

Improper brake operation and loss of load control due to incorrect brake adjustment can result in death or injury to personnel. Under no circumstances is it permissible to allow the brake release lever to bottom out against the hydraulic actuator.

Chapter 2.0: General Description

2.1: Mondel type MST/E spring applied, Hy-Thrust actuated general purpose brakes are designed for use on cranes and other severe braking applications in heavy industry. They can be used with any drive type applied to hoisting or horizontal travel motions.

2.2: There are two basic models of this versatile, high-speed, AC operated brake: Type MST with fixed value internal torque spring, and Type MST/E with an adjustable external torque spring.

2.3: The type MST brake spring is contained within the actuator. The brake can be arranged to deliver a percentage of the maximum torque by rearranging the brake pivot pins to provide a different lever ratio.

2.4: The type MST/E has an external torque spring, which is infinitely adjustable down to less than 50% of maximum torque.

2.5: Construction and operation of both models is similar; they are available for wheel sizes 6" to 16". A limited range of shunt-wound DC motor actuators is available.

2.6: A wide range of options is available; consult factory.

2.7: When the load cycle requires a larger than normal size, as is frequently the cause on crane bridge drives, type MST and MST/E brakes can be provided with torques lower than traditional for a given wheel size.

Except when specifically engineered and used in conjunction with Mondel Braketronic Controllers, type MST/E are more suited to crane bridge brakes.

2.8: The type MST and MST/E brakes can be supplied as "drop-ins", with footprints and shaft heights, to replace a wide range of competitor's brakes, including some metric sizes.

2.9: The standard actuator is weatherproof and dust proof. The electric motor is TENV construction, and the hydraulic section is fully sealed and self-contained. Electric motors for certain hazardous areas are available as options.

2.10: An optional breather unit can be installed to replace the standard filler plug for environments, which experience large temperature swings. The breather prevents pressure build-up within the actuator.

2.11: For more demanding environments, special hardware, enclosures, paint and surface treatments are available.

IF YOU HAVE AN UNUSUAL APPLICATION, OR REQUIRE A RECOMMENDATION FOR A BRAKE SIZE AND TYPE CONTACT MAGNETEK.

Figure 1

General Arrangement
MST/E Electric Shoe Brake

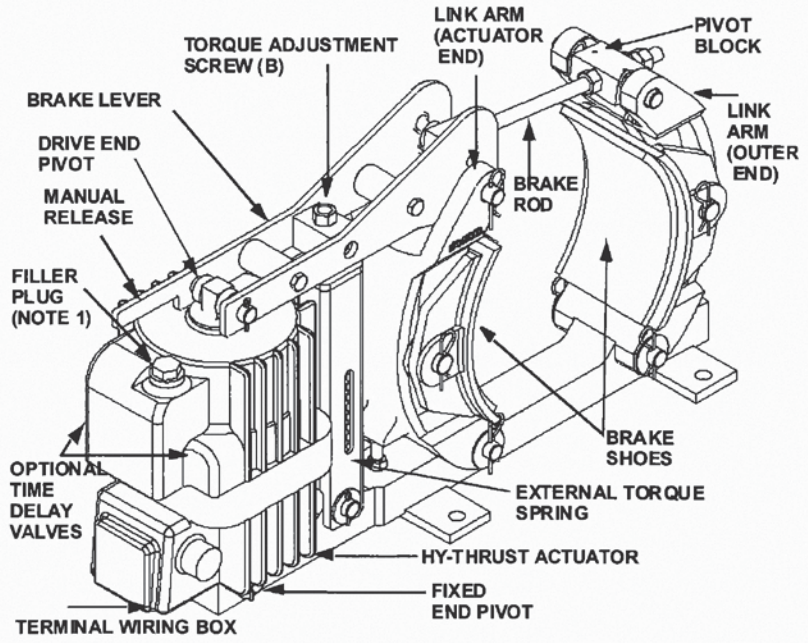

NOTE 1: FILL TO LOWER RIM OF FILLER HOLE. USE ONLY FLUID IDENTIFIED ON THE ACTUATOR NAMEPLATE. DO NOT OVER-FILL

Figure 1a

General Arrangement
MST/E Electric Shoe Brake
With Automatic-Adjustment and Automatic-Equalization

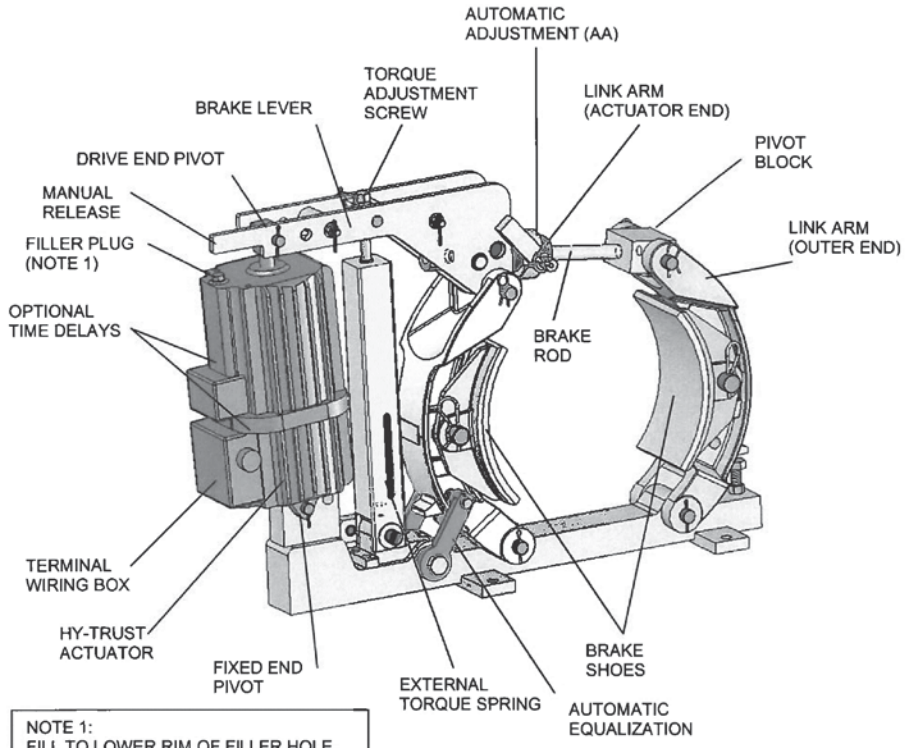

NOTE 1:
FILL TO LOWER RIM OF FILLER HOLE. USE ONLY FLUID IDENTIFIED ON THE ACTUATOR NAMEPLATE. DO NOT OVERFILL.

8/17/2006 Page 9 of 33 MST/E Electric Shoe Brakes Manual
560022-R6

Chapter 3.0: Application

3.1: The brake covered by this manual is type MST/E. This brake has an adjustable external torque spring and is generally applied on installations where the required torque cannot be pre-determined within well defined limits.

3.2: For a given wheel diameter the Association of Iron and Steel Engineers (AISE) determines the prescribed torque, when applied to 30 and 60 minute rated motors in steel mill applications.

3.3: When applied to four quadrant drives or other applications where wheel heating can be accurately predicted, type MST/E brakes can be provided with torque values in excess of the AISE recommendations.

3.4: When the load cycle requires a larger than normal wheel size, as is frequently the case on crane bridge drive, MST/E brakes can be provided with torques lower than AISE for a given wheel size.

3.5: For applications where larger than normal running clearance is required, a larger actuator can be applied to a given brake. Typical would be severe applications where wheel expansion can be considerable or where excessive wheel run-out can be expected.

Chapter 4.0: Description of Operation

4.1: The brake is spring applied and actuator released. A heavy-duty compression spring within the actuator pulls down on the brake lever and forces the shoes against the wheel.

4.2: The actuator piston rod extends when power is applied, the brake-shoe pressure removed and running shoe clearance established.

4.3: Subject to the effect of brake geometry, braking torque depends upon three major factors:

4.3.(a): The diameter of the wheel.

4.3.(b): The coefficient of friction of the lining material.

4.3.(c): The force with which the linings are applied to the wheel.

4.4: Power applied to the actuator cancels the brakes ability to apply torque.

4.5: The force with which the linings are applied to the wheel depends on the spring length and characteristics. Spring length increases as linings wear.

4.6: When the brake is released, Automatic Equalization of shoe clearance ensures equal clearance between each shoe and the wheel.

4.7: Because the applied brake shoe force is proportional to the compressed length of the torque spring, a slight decrease in brake torque occurs as linings wear (unless automatic adjustment is used).

4.8: Adjusting the reserve stroke to its specified setting, restores the required spring force.

NEMA states: "The torque ratings apply at a worn lining condition defined as the point where re-adjustment is required as recommended by the manufacturer".

4.9: Automatic Equalization (AE) is available on all brakes of this class.

4.10: To understand how the automatic equalization works, it is important to recognize that the total available shoe clearance is directly related to the length of active stroke and that the actuators "Fully Released" position is the only consistent value for actuator stroke. The "Brake Applied" position varies as the linings wear, resulting in a reduced "Reserve Stroke". The "Brake Applied" position also varies due to wheel expansion caused by temperature increase; this results in an increased "Reserve Stroke".

4.11: On brakes without Automatic Adjustment, after some significant lining wear and the brake wheel close to ambient temperature, a reduction in the "Reserve Stroke" and a corresponding increase in the "Active Stroke", will be noticed. Corrective action will be necessary to ensure the minimum reserve stroke. (See Chapter 6: "Actuator Stroke Adjustment / Brakes without Automatic Adjustment).

4.12: On brakes equipped with the Automatic Adjustment (AA) option, the reserve stroke is maintained by a one-way clutch mechanism arranged to shorten the effective brake rod length – but only when adjustment is required – as follows:

4.12.(a): A retractable pin mounted on the brake lever, oscillates within a slot in the (AA) clutch ring. (See Fig. 2A).

4.12.(b): When the angle, through which the pin moves within the slot, does not allow contact with the sides of the slot, nothing happens!

4.12.(c): When the brake applies, after some minimal amount of lining wear, the pin will contact the side of the slot in the collar, which will advance the ratcheting mechanism and prepare for adjustment the next time the brake is released.

4.12.(d): When the brake is next released and the load on the thread is minimal, the free wheel set-up referred to in the previous paragraph will result in an advance on the thread when the pin engages the other side of the slot in the collar.

4.12.(e): The ratcheting advancement will continue, a little at a time, until the pre-determined reserve stroke is reached.

4.13: When the brake is released, the shoes are moved apart to provide running clearance from the wheel. The actuator's active stroke establishes the total clearance available for both shoes.

4.13.(a): As the brake releases, the shoe nearest to the actuator has been biased to open first. This is done during manufacture, by inclining the actuator away from the nearest shoe (See Fig. 2).

4.13.(b): Clearance provided to the nearest shoe is restricted by the (AE) mechanism – located on the base – which transfers the remaining clearance to the other shoe.

4.13.(c): As shoe wear occurs the friction bolt in the (AE) mechanism relocates to provide a new reference point for the brake shoe on the actuator side of the brake.

4.13.(c).(i): The total available shoe clearance is determined by the active stroke.

4.13.(c).(ii): The clearance between the friction bolt and holes in the actuator links through which it passes, determines the "actuator side" shoe clearance.

4.14: Various optional features are available, including latching hand release mechanisms, limit switches, hydraulic and pneumatic overrides, etc. If the brake covered by this manual has any of the optional features, they will be listed on the front page of this manual and covered by supplementary instructions.

4.15: The actuator for this series of Mondel Brakes can be supplied with optional, factory installed time delays.

Figure 2

MST/E Brake Shown With Typical Brake Release Lever Without Automatic Adjustment and Automatic Equalization

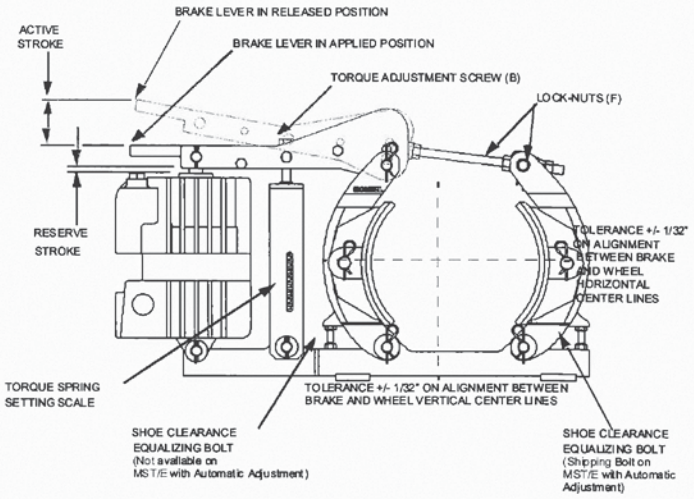

Figure 2A

MST/E Brake Shown With Typical Brake Release Lever With Automatic Adjustment and Automatic Equalization

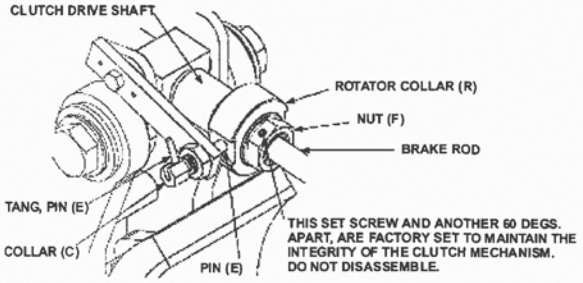

NOTE: TABLE 5 LISTS THE NEMA MINIMUM RECOMMENDED LINING THICKNESS.

8/17/2006 Page 13 of 33 MST/E Electric Shoe Brakes Manual 560022-R6

Chapter 5.0: Installation

5.1: After unpacking, visually inspect the brake assembly to ensure that damage has not occurred during shipment and that there are no loose or missing parts.

5.2: Prepare the brake support structure and install the brake assembly subject to the following:

5.2.(a): Allow adequate clearance between the brake and adjacent obstructions to allow access for adjustment and maintenance.

Brake shoe replacement requires space for complete withdrawal of the link arm pivot pins.

5.2.(b): Whether mounting a brake in a new or existing installation, the base mounting bolts need a reasonable clearance in the base mounting holes to allow the brake to be aligned for full contact between the brake linings and the wheel.

5.2.(c): Circumstances may determine the best order of installation for the brake and the wheel. This may be due to the available space or handling facilities on site; generally the wheel is installed first.

5.2.(d): Center the brake shoes across the width of the brake wheel. This avoids ridge formation and the possible creation of a dangerous situation as the linings wear.

5.3: Alternatively, it may be necessary to introduce the brake to the brake wheel from one side of the wheel. In this case partial dismantling of the brake may be required depending on the circumstances. Refer to the general arrangement and exploded view drawings in this manual to evaluate the options.

5.3.(a): After installing the brake and wheel, make preliminary adjustments to apply sufficient shoe pressure to raise the actuator piston rod ½" above its fully retracted position.

5.3.(b): This will apply the brake at approximately rated torque, causing the brake to square itself to the wheel and maximize the shoe contact area, providing the bolt hole clearance will permit.

5.3.(c): When the brake assembly is correctly aligned and clamped to the wheel, loosen each of the securing bolts in turn and verify clearance in the base mounting holes. This will ensure tolerance to allow minor adjustment to the brake alignment to accommodate future relined shoes.

5.3.(d): For the reason identified in the previous paragraph Magnetek does not recommend "Dowelling" or "Keeper Plates" to maintain alignment.

5.4: Type MST/E brakes are generally installed with the base horizontal and the brake wheel shaft horizontal.

5.5: In most applications the brake can be installed from one side of the brake wheel. Alternatively it may be necessary to partially dismantle the brake.

5.6: Type MST/E brakes can also be wall mounted, with the brake wheel shaft horizontal. This is only possible if the actuator pump suction is flooded, which will be the case if the actuator hydraulic section filler plug is at the highest point possible with the actuator horizontal. For this mounting arrangement the actuator is best located above the wheel. The equalizing bolt opposite the actuator will be most effective in ensuring equal shoe clearance.

5.7: Type MST/E brakes can also be wall mounted with the brake wheel shaft vertical. Again this requires the actuator hydraulic section filler plug to be at the highest point possible with the actuator horizontal. For this mounting arrangement both equalizing bolts may be required to ensure equal shoe clearance.

5.8: For any other mounting arrangements consult factory.

5.9: The brake assembly must always be square and aligned to the brake wheel within a maximum of ± 1/32 inch, in three axes (horizontal, vertical, and longitudinal).

5.9.(a): Adjust the brake support bracket to achieve the specified horizontal and longitudinal alignment. For best performance, the brake base should be flat and parallel to the wheel rim or motor shaft. It may be necessary to release and re-apply the brake pressure several times to achieve optimum alignment. Shim under the brake base for the vertical alignment.

5.9.(b): When the brake assembly is correctly aligned and clamped to the wheel, check the securing bolt clearance in each of the brake base holes. There must be clearance in the base and through the brake support bracket to allow minor adjustments. Be sure that the brake shoes are still aligned parallel to the face of the brake and that each brake shoe is fully secured to its link arm.

5.9.(c): With the brake fully applied, verify that the shoes are centered on the wheel face and that lining contact is within adequate bedding range.

5.9.(d): When the brake is correctly aligned in all three axes, tighten the brake mounting bolts and re-check the alignment.

5.10: Connect the actuator to the electrical supply using a flexible, sealed conductor, suitable for the rated temperature. Use type "S0", or higher temperature, cable. The actuator must be allowed few degrees of movement without the risk of dirt or moisture entering the terminal box. Chapter 7 provides all necessary electrical details.

Chapter 6.0: Adjustment

6.1: Following any adjustment or repair of the brake, test operation of the brake as described under "Operational test", Chapter 8.

6.2: Complete adjustment is required following any rework where any settings were disturbed.

Table 1

BRAKE WHEEL SIZES (Inches)	TYPICAL RUNNING CLEARANCE BETWEEN LINING AND BRAKE WHEEL (Inches)	MAXIMUM FULL SPEED BRAKE WHEEL run-out (Inches)
6	0.014	0.006
8	0.016	0.008
10	0.020	0.010
13	0.026	0.013
16	0.032	0.016
19	0.038	0.019

Notes:
1. Refer to "Brake Installation" and "Replacing the Brake Shoes" for adjustment instructions.
2. Evaluate brake wheel run-out at full speed. It must not exceed value shown in this table.

6.3: Manual Operation

6.3.(a): Brake installation, shoe replacement, and actuator replacement, described elsewhere, require the brake to be released and reapplied without energizing the actuator. When type "S" Latching Hand Release is fitted, it can be used; or it can be manually over-ridden as follows:

6.3.(b): Brakes without Automatic Adjustment:

6.3.(b).(i): To manually release the brake: Adjust the brake rod hex-nuts – to increase the brake rod length – reducing the "reserve stroke" until the piston rod is no longer visible. Continue adjustment until there is sufficient lining to brake wheel clearance.

6.3.(c): To manually apply the brake: Adjust the brake rod hex-nuts – to decrease the brake rod length – increasing the "reserve stroke" until the linings contact the brake wheel. Continue until the brake release lever begins to rise. Proceed to "Actuator Stroke Adjustment".

6.3.(d): Brakes with Automatic Adjustment:

6.3.(e): To manually release the brake: Refer to Fig. 2A, withdraw drive pin (E), then carefully rotate the mechanism by hand to increase the brake rod length and, at the same time, reduce the reserve stroke until the piston rod is no longer visible. Continue adjustment until there is sufficient shoe/wheel clearance.

6.3.(f): To manually apply the brake: Refer to Fig. 2A and withdraw drive pin (E), then rotate the mechanism by hand to decrease the effective brake rod length until the linings contact the wheel and the brake lever begins to rise. Proceed to "Actuator Stroke Adjustment".

6.4: Actuator Stroke Adjustment

6.4.(a): When power is applied to the actuator the piston will be caused to extend. This will compress the external spring and raise the brake lever to provide operating clearance between the shoes and the wheel.

6.4.(b): When power is removed from the actuator, the spring will retract the lever until the shoe pressure on the wheel prevents any further lever movement as the reserve stroke setting is attained and the intended brake torque achieved.

6.4.(c): Brakes without Automatic Adjustment:

6.4.(d): Adjust the brake rod nuts until the brake release lever raises the piston rod to the specified reserve stroke, (Table 2). Re-secure the brake rod nuts against the pivot block.

6.4.(e): Brakes with Automatic Adjustment:

6.4.(f): To make initial adjustment before engaging the auto adjust (AA), refer to Fig. 2A and withdraw pin (E). Rotate the mechanism by hand to decrease the brake rod length until the linings contact the wheel and the brake lever begins to rise. Continue adjustment until the required reserve stroke is about 1/8" less than specified. Re-engage pin (E) allowing the (AA) mechanism to complete the final stage of the adjustment process. This will verify that the mechanism is operating correctly.

6.4.(g): Energize the actuator several times until the rotating collar (R) is no longer turned by the (AA) drive pin (E). Verify that the reserve stroke is still at the desired value per Table 2.

Table 2

ACTUATOR	MAX STROKE (inches)	ACTIVE STROKE (inches)	DESIRED RESERVE STROKE (inches)
Ed23/5	1.97	1.27	0.7
Ed30/5	1.97	1.27	0.7
Ed50/6	2.36	1.56	0.8
Ed80/6	2.36	1.56	0.8
Ed121/6	2.36	1.56	0.8

6.5: Torque Adjustment

6.5.(a): The rated torque, as shown on the nameplate, will be developed when the following conditions are met:

6.5.(a).(i): The brake is applied and aligned properly.

6.5.(a).(ii): The actuator stroke is correct.

6.5.(a).(iii): The correct linings are fitted.

6.5.(a).(iv): The linings are in good condition and bedding is completed.

6.5.(a).(v): The brake wheel is aligned and in good condition.

6.5.(b): Torque adjustment for Mondel MST/E brakes is adjustable on site. Tighten or loosen screw (B), see Fig. 2, to set the torque within the prescribed range shown on the scale. The torque setting is obtained by matching the top of the spring-block to a line on the spring scale.

6.6: Automatic Equalization Assembly

6.6.(a): The total available shoe clearance is determined by the active stroke of the actuator. Distribution of the resulting clearance is determined by two factors.

6.6.(a).(i): As the brake releases under power, the shoe nearest to the actuator has been biased to open first. This is done during manufacture by inclining the actuator away from the nearest shoe. (Fig. 2).

6.6.(a).(ii): Clearance provided to the nearest shoe is restricted by the (AE) mechanism located on the base. The clearance between the friction bolt and holes in the base, through which it passes, determines the "actuator side" shoe clearance.

6.6.(b): When the predetermined "actuator side" shoe clearance has been established, the remaining clearance is transferred to the "non-actuator side" shoe.

6.6.(c): As lining wear occurs, the friction bolt in the (AE) mechanism is dragged to a new location, to provide the reference point for the shoe clearance on the "actuator side" of the brake.

6.6.(d): The (AE) friction bolt mechanism is self-compensating after initial adjustments are completed as follows:

6.6.(d).(i): Release the brake and, using a soft-faced mallet if necessary, force the actuator side link away from the wheel. This will set the actuator side (inner) shoe to the maximum available clearance.

6.6.(e): The actual clearance which will be allowed to the "actuator side" shoe is determined by the difference in diameter between the friction bolt shank and the holes in the links, through which it passes.

6.6.(f): The friction bolt assembly is pre-tensioned at the factory. **DO NOT FIELD ADJUST.** If the friction bolt assembly is disturbed for any reason it can be retensioned as follows:

6.6.(g): Refer to Fig. 3a: Install friction bolt through Automatic Equalization arms and base. Add, onto the end of the friction bolt, a stack of three Belleville washers in series, (as indicated below), followed by a plain flat washer.

6.6.(g).(i): Install a castle nut, tighten nut until the flat washer is FLUSH with the side of the Automatic Equalization arm. Loosen or tighten the nut no more than 1/8 of a turn, only enough to align the nearest cotter pin slot and hole. Install the cotter pin. This completes the assembly.

6.7: Shoe Clearance Adjustment

6.7.(a): The total available shoe clearance is determined by the active stroke of the actuator and the brake lever ratio. Distribution of the resulting clearance is determined by the setting of the active shoe clearance equalizing bolt (Fig. 2).

6.7.(b): Generally only one of the two equalizing bolts will be effective depending on the lever ratio arrangement and subject to the brake being installed horizontally or vertically.

6.7.(c): The "active" equalizing bolt will be evident after energizing the actuator.

6.7.(d): To equalize the brake shoe running clearance:

6.7.(d).(i): Back-off both equalizing bolts and energize the actuator allowing the shoes to move away from the wheel.

6.7.(d).(ii): Adjust the active side equalizing bolt to limit the travel of that shoe; this moves the other shoe away from the wheel. Continue adjustment until wheel clearance is equal for both shoes.

6.7.(d).(iii): Set the non-active side equalizing bolt so that shoe travel is not restricted; lock both equalizing bolts with jam-nuts.

6.8: Parallel Shoe Gap Adjustment

6.8.(a): For optimum lining wear distribution, brake shoes have controlled freedom to align with the wheel contour as the linings wear.

6.8.(b): Each brake shoe holder pivots on its link arm. Its freedom to rotate under gravity is controlled by a shoe holder friction mechanism.

6.8.(c): Spring loaded pins in each link arm bear against the inside of the shoe (Fig. 3). This provides tension to maintain shoe alignment when the brake is released. The tension is not adjustable. When a shoe is replaced make sure that both shoe alignment tension mechanisms are re-installed.

6.8.(d): To align shoes with the wheel, apply the brake at the rated torque and make the following initial adjustments:

6.8.(d).(i): Release the brake manually or under power.

6.8.(d).(ii): With the brake released, use a soft-faced mallet to tap the upper edge of each brake shoe, in towards the wheel, in the direction it would rotate under gravity.

6.8.(d).(iii): Re-apply the brake, and the shoes will be forced to align with the wheel to optimize parallel clearance with the wheel.

6.9: Time Delay Adjustment

6.9.(a): The actuator nameplate will indicate when optional time delay valves are installed.

6.9.(a).(i): Letter "**S**" indicates an adjustable piston retract, (brake application), time delay.

6.9.(a).(ii): Letter "**H**" indicates an adjustable piston extend, (brake release), time delay.

6.9.(a).(iii): If both letters "**S**" and "**H**" are present, then the actuator is equipped with adjustable time delay valves independently controlling both the piston extend and retract times.

6.9.(a).(iv): When time delay valves are not fitted, the actuator response time to extend or retract, is between 0.4 and 0.8 seconds depending on actuator size

6.10: With time delay valve(s) installed, the extend and/or retract times are adjustable between approximately 0.5 and 10 seconds depending on actuator size.

6.10.(a): Remove the delay valve protective cap to expose the adjustment screw. For minimum delay set the screw head flush with the housing. Fig. 1 shows valve location.

6.10.(a).(i): Turn the screw clockwise to increase, and counter clockwise to decrease the delay.

Note: The standard actuator has the shortest response time. An actuator fitted with delay(s) provides longer response times, even when the delay(s) are adjusted for minimum effect.

Figure 3

Section Through Shoe And Link Arm
Drawn To Reveal Tension Device

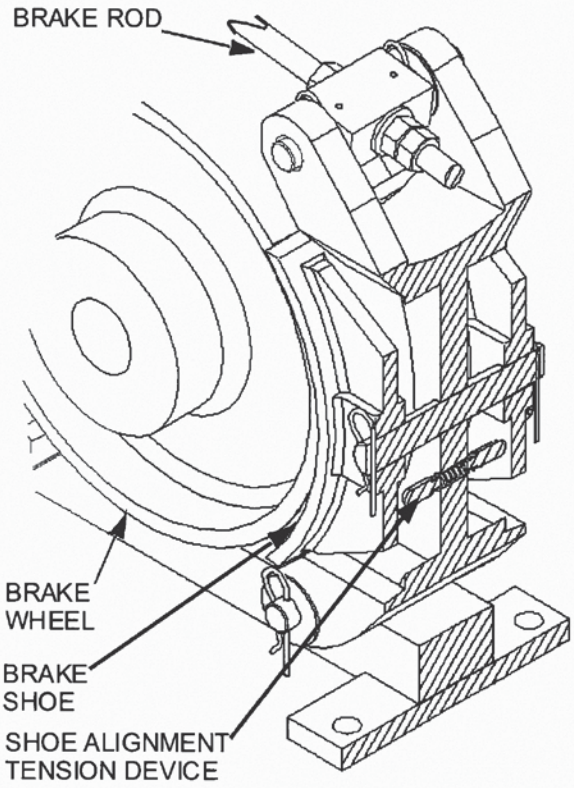

8/17/2006 Page 21 of 33 MST/E Electric Shoe Brakes Manual
560022-R6

Figure 3A

Type AE Automatic Equalization Mechanism Assembly

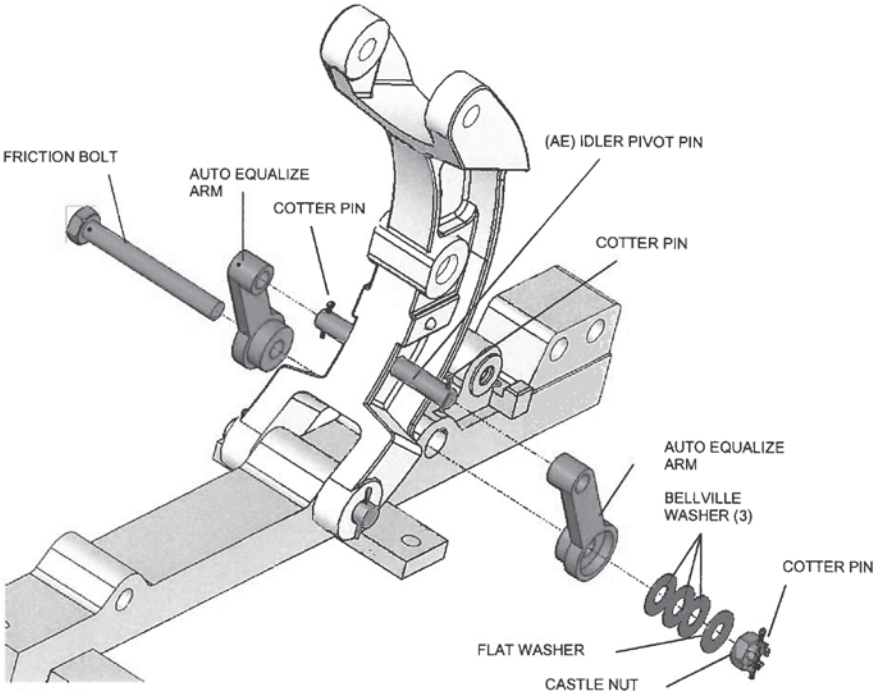

8/17/2006 Page 22 of 33 MST/E Electric Shoe Brakes Manual 560022-R6

Chapter 7.0: Electrical Detail

7.1: Operation of the actuator is not dependant of the direction of motor rotation. The cable leads can be connected to the U1, V1 and W1, (T1, T2, T3), terminals in any phase sequence.

Figure 4

Electrical Connections

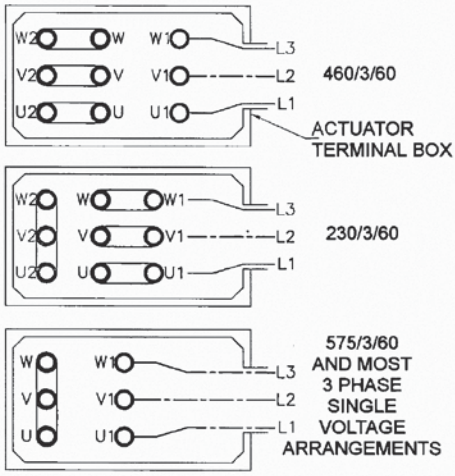

7.2: The motor leaves the factory already arranged for the specified voltage, which is also shown on the nameplate.

7.3: If the motor was specified for a nominal 460 volts supply, it will be connected with nine terminals and the links arranged as shown in Fig. 4. If at some future date the motor is required to operate from a 230 volts supply, re-arrangement of the links is required as shown.

7.4: When specified for operation on 575 Volts or other single voltage, it will be connected with six terminals, the links arranged as shown in Fig. 4. The winding will not be capable of re-connection for any other voltage.

7.5: Explosion Proof actuators are only arranged for the terminal voltage shown on the nameplate. Three terminal posts will be visible when the cover plate is removed under the required conditions. No provision is made for external re-connection to any other voltage.

7.6: A wiring diagram showing the possible terminal link arrangements is fastened inside the actuator terminal box cover.

Chapter 8.0: Operational Test

8.1: Heed all warnings and cautions in addition to the owners' safety procedures.

8.2: Follow all standards and local statutes.

8.3: Remove any drum chocks on a hoist application.

8.4: As a preliminary test of the brake without load, energize the actuator for one short jog. If the brake fails to stop and hold the motion stationary, repair or re-adjust the brake as necessary. Visually inspect the brake during operation to ensure all adjustments are correct. If successful, continue with longer duration jogs until confident that the brake is operating satisfactorily.

8.5: A minimum of 60% contact between lining and wheel on each shoe is required before subjecting the brake to its rated capacity.

8.6: If re-lined shoes have been fitted, or the brake alignment has been altered or is otherwise suspect, you may have to realign the brake. This will minimize the bedding needed to obtain the necessary 60% of brake lining to wheel contact.

8.7: The required lining contact is seldom achieved without "bedding", but time spent to achieve satisfactory bedding will be rewarded with a considerably longer life for the lining.

8.8: Modern linings, although hard wearing, are difficult to "bed" when the area in contact with the wheel cannot support the heat energy transferred to the brake. As a result the linings will become "glazed" where in contact with the wheel. "Glazing" is the name applied to a condition where the lining has been heated beyond its working temperature range and is no longer capable of its designed coefficient of friction. "Glazing" will seldom be removed by further braking operations as any increase in area of lining contact will immediately be glazed.

8.9: "Glazing" can be prevented by ensuring a minimum of 60% contact area before placing the brake in service.

8.10: On hoists, well spaced, short bursts of energy, such as an E.Stop at high speed with no load are best to achieve initial "bedding". This will limit the energy input while the wheel is monitored for temperature.

8.11: A distinct advantage of the type MST/E brakes is that the actuator can be easily overridden while the drive is operating. This can be accomplished with a short length of pipe fitted over the "manual release lever extension", Fig. 1. When circumstances permit, pressure can be applied to force the shoes against the wheel while the drive is operating. Care must be taken to achieve the minimum 60% contact between lining and wheel on each shoe, without exceeding the maximum of 150°C.

8.12: Bedding is just as important when the brake is applied with a four quadrant drive, and not subjected to dynamic loading, except under emergency conditions.

8.13: The following are the key steps to satisfactory "bedding" to extend lining life.

8.13.(a): Use only genuine Mondel lined brake shoes. This will maintain specified brake performance and ensure that the braking torque is neither more nor less than the specified rating.

8.13.(a).(i): Linings thicker than the original equipment may result in contact with the wheel only at the tips.

8.13.(a).(ii): Linings thinner than the original equipment may result in contact with the wheel only across the middle and cause vibration during stops.

8.13.(b): Do no use re-lined shoes where the castings are damaged, worn or distorted.

8.13.(c): Square the brake to the wheel for optimum contact between the linings and the wheel.

8.13.(d): Type **MST/E** brakes utilize shoe clearance equalizing bolts to equalize brake shoe clearance; ensure that they are correctly adjusted in accordance with Chapter 6.

8.13.(e): Type **MST/E** brakes incorporate a mechanism to keep brake shoe clearance parallel to the wheel; ensure that it is correctly adjusted in accordance with Chapter 6.

8.14: Wheel run-out must be within the allowable tolerance; see Table 1. Any unnecessary lining drag will result in excessive heat in the wheel and lining deterioration.

8.15: Every operational test should include verification of brake wheel run-out as follows:

8.15.(a): At all speeds, verify that the linings are clear of the wheel. Take steps to correct wheel run-out, imbalance or the effects of critical speed.

8.15.(b): If necessary, check low speed brake wheel run-out as follows:

8.15.(c): Using a run-out gauge, verify that radial run-out does not exceed 0.001" per inch of brake wheel diameter. Refer to Table 1 for brake wheel run-out allowance. Bearing play can also be checked by lifting the brake wheel with a suitable lever while observing the dial gauge.

Chapter 9.0: Maintenance and Repair

NEMA Standard ICS 9-1993, Part 1 recommends that brakes be fitted with new or re-lined shoes before the lining material is worn excessively. Refer to Table 4 for minimum thickness.

9.1: Replacing the Brake Shoes

9.1.(a): Remove and reinstall the brake shoes as follows. Use a lifting devise as necessary.

9.1.(a).(i): On a hoist lower the load to the floor and disconnect the load from the bottom block.

9.1.(a).(ii): Reset the bottom block on the floor, or on a suitable support. Chock drum to prevent rotation of the drum.

9.1.(a).(iii): Refer to Fig. 5.

9.1.(a).(iv): (1) Manually release the brake as instructed in Chapter 6.

9.1.(a).(v): (2) Remove cotter pin and withdraw the actuator drive end pivot pin.

9.1.(a).(vi): (3) Remove hitch pin at the active upper end of each link arm; withdraw the pivot pins.

9.1.(a).(vii): (4) Lift the brake rod and lever assembly clear of the brake body.

9.1.(a).(viii): (5) Remove hitch pin at the fixed lower end of each link arm; withdraw the pivot pins.

9.1.(a).(ix): (6) Lift out the link arm/brake shoe assemblies.

9.1.(a).(x): (7) Remove hitch pins and withdraw the shoe pivot pins.

9.1.(a).(xi): (8) Brake shoes can now be removed for service. To avoid loss, restrain the spring loaded shoe alignment tension device when removing a shoe.

Figure 5

Brake Shoe Removal

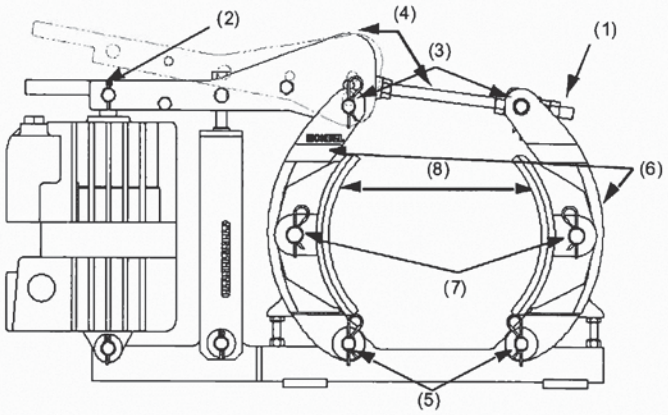

9.1.(a).(xii): Before starting shoe installation, check that the brake surface of the wheel is clean and free from oil and grease.

9.1.(a).(xiii): Next, verify that the lining surface will be true to the wheel when the shoe is installed. Carefully check lining contact with the wheel. Remove any high spots with emery paper to ensure 60% contact between the lining and the wheel.

9.1.(b): Ensure adequate clearance will be available and install the replacement shoe assemblies in the reverse order.

9.1.(c): Replace all pivot, cotter and hitch pins.

9.1.(d): Re-apply the brake and make all adjustments covered in Chapter 6.

NOTE: The brake can be damaged if the brake shoes are not accurately aligned. Do not operate the brake unless the brake shoes are in their normal position and all pivot, cotter and hitch pins are fully installed.

9.1.(e): Newly lined shoes seldom fit perfectly with the contour of an existing brake wheel, particularly if the wheel is worn or undersized. If the brake has been moved, realignment of the brake with the wheel may be necessary. Refer to the topic "Brake Installation" for the correct alignment and bedding procedure.

9.1.(f): Refer to Chapter 6 and adjust the reserve stroke as required.

9.1.(g): Refer to Chapter 6 and adjust the torque as required.

9.1.(h): Refer to Chapter 6 and adjust the brake shoe clearance as required.

9.1.(i): Refer to Chapter 8; bed and test the brake as described.

9.2: Removing The Actuator

9.2.(a): Secure against any possibility of an unexpected movement when the actuator is removed.

9.2.(b): Lower the load to the floor and disconnect the load from the bottom block.

9.2.(c): Reset the bottom block on the floor, or on a suitable support. Chock the drum to prevent rotation.

9.2.(d): Disconnect and remove electrical wiring and conduit to the actuator.

9.2.(e): Before attempting to remove the actuator, release the brake. See Chapter 6: "Manually Releasing the Brake".

Figure 6

Actuator Removal and/or Replacement

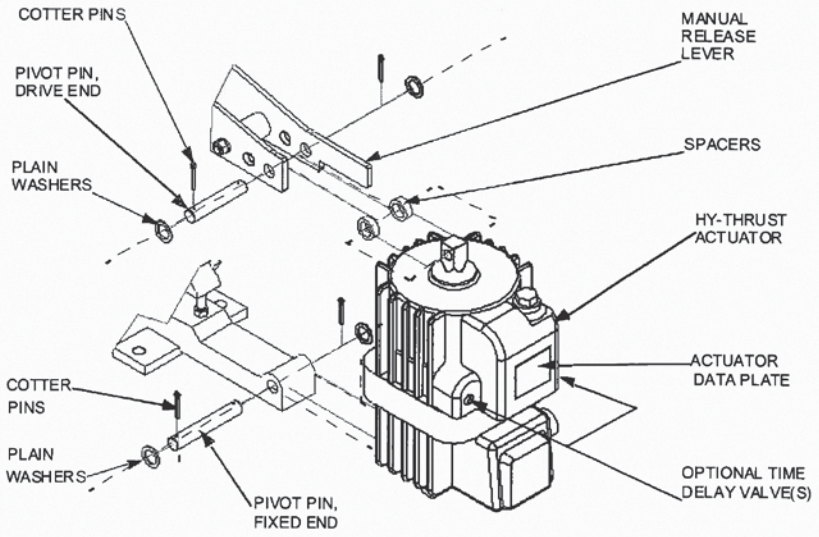

9.2.(f): Secure or support the actuator before attempting to remove the pivot pins.

9.2.(g): Refer to Fig. 6: remove the cotter pins and withdraw the pivot pins attaching the actuator to the brake body.

9.2.(h): Remove the complete actuator using appropriate lifting devices.

9.2.(i): Should service be required, return the actuator to Magnetek for repairs.

9.3: Re-Installing The Actuator

9.3.(a): Verify adequate means are still in place to protect unexpected movement when the actuator is replaced.

9.3.(b): Position the actuator within the lever and attach to the base. Use a lifting device as necessary.

9.3.(c): Attach and secure the actuator using the correct pivot pins, etc. Check for wear prior to re-fitting, Fig. 6.

9.3.(d): Refer to Chapter 6 and adjust the reserve stroke as required.

9.3.(e): Refer to Chapter 6 and adjust the torque as required.

9.3.(f): Refer to Chapter 6 and adjust the brake shoe clearance as required.

9.3.(g): Re-connect the actuator wiring, as required, and replace the terminal box cover.

9.3.(h): Refer to Chapter 8; bed and test the brake as described.

9.4: Re-lining The Brake Shoes

We do not recommend that shoes be re-lined in the field. New bonded shoe assemblies can be ordered as repair parts. Factory rebuilt shoes are also available from Magnetek. Under this program, credit will be allowed for old shoes in usable condition.

9.5: Removal and Installation of Motor and Brake Wheel as an Assembly

9.5.(a): Quick replacement of the drive motor and brake wheel, as an assembly, can be accomplished with minimum disturbance to the brake.

9.5.(b): Disconnect, lock out, and tag out the disconnect switch that feeds this equipment to prevent power from being applied while service is being performed.

9.5.(c): Remove both shoe assemblies as described under the topic, "Replacing the Brake Shoes". If the shoes will not be replaced as part of this work order, identify the shoes in order that they can be re-fitted without having to be re-bedded.

9.5.(d): Swing the entire brake rod assembly clear to permit unobstructed vertical withdrawal of the brake wheel without damage.

9.5.(e): Remove the motor and brake wheel by lifting straight up until the wheel clears the brake.

9.5.(f): Install the motor and brake wheel by lowering it into place.

9.5.(g): Re-install the shoe assemblies as described under the topic "Replacing the Brake Shoes".

9.5.(h): Re-attach the brake rod to the brake lever.

9.5.(i): Ensure that all shoe holder pivot and hitch pins are correctly installed.

9.5.(j): Test the operation of the brake as described under the topic "Operational Test".

9.5.(k): Install the brake wheel as described elsewhere.

9.5.(l): Verify the brake is still properly centered over the wheel. Make any adjustments as required. See Chapter 5, "Brake Installation".

9.5.(m): Maintenance and inspection periods depend on operating conditions. High duty cycle applications obviously require more frequent inspections than brakes operating on low duty cycle applications. In either case, we recommend a general inspection every 100 operating hours or every month minimum.

9.6: Inspection

9.6.(a): Electrical connections and mechanical fasteners should be checked for tightness. Inspect the brake wheel to ensure that it is neither damaged nor loose. Inspect the brake mounting bolts for tightness, and that brake shoe clearance settings are within specifications.

9.6.(b): Inspect the brake wheel for unusual scoring, signs of over-heating, cracking or wear. Replace any damaged, cracked or excessively worn brake wheels.

9.6.(c): Inspect the condition of the bearings and bushings as well as the electrical and mechanical integrity of the complete braking system. Make any repairs or adjustments that may be required to ensure proper brake system operation.

9.6.(d): Check the brake wheel run-out at all speeds. See Chapter 8, "Operational Test".

9.6.(e): Correct operation of the motor can be determined by measuring its operating current. Refer to motor nameplate for rated value.

9.7: Lubrication

9.7.(a): Periodic lubrication is not required on these brakes. Oil or any other lubricant applied to any part of the brake may trap airborne contaminants.

9.8: Actuator Working Fluid

9.8.(a): The actuator leaves the factory correctly filled with the fluid and seals for the specified operating temperature range.

9.8.(b): The fluid will not deteriorate in service, and if there are no tell-tale signs of leakage, no additional fluid will be required.

9.8.(c): The actuator working fluid should be checked periodically, but must not be overfilled to ensure an adequate air space is retained to allow for fluid expansion. See Fig. 1 for plug location and proper fluid level.

9.8.(d): If additional fluid is necessary for any reason, use only the fluid identified on the nameplate to ensure compatibility with the installed seals and the specified operating temperature range. **DO NOT OVER-FILL.**

9.8.(e): Table 3 specifies Recommended Hydraulic Fluid types for a range of ambient temperatures.

Table 3: Recommended Hydraulic Fluids

Ambient Temperature				Hydraulic Fluid
Lower Limit ^{0}F	Upper Limit ^{0}F	Lower Limit ^{0}C	Upper Limit ^{0}C	
-13	+122	-25	+50	C-10 (1)
+32	+176	0	+80	C-46 (1)
-31	+104	-35	+40	Aero 41 (2)
-76	+140	-60	+60	M-20 (3)

(1) C-10 and C-46 are Shell Tellus® products.
(2) Aero 41 is a Shell® product.
(3) M-20 is a Bayer® Baysilone product.
All hydraulic fluids are obtainable from Magnetek.

9.9: Brake Adjustments

9.9.(a): Wear will be more rapid when the linings are new, while the high spots are wearing down as the bedding process takes place. Adjustment will be required soon after the brake has been put into service.

9.9.(b): Brake release lever travel increases with lining wear. This decreases the reserve stroke. Carry out periodic maintenance to reset the reserve stroke as described in Chapter 6 "Actuator Stroke Adjustment".

9.9.(c): Brake torque decreases as the brake lever drops. On critical applications, such as hoists, brake adjustment should be performed frequently enough so that the torque loss does not result in loss of load control. In no event should the lever be allowed to "bottom out". This results in total loss of braking torque and could result in death or injury to personnel.

Following any adjustment, maintenance or repair on the brake, fully test its operation as described under topic "Operational Test".

Chapter 10.0: Replacement Parts

10.1: Brake Lining Replacement

10.1.(a): As a general guide, Magnetek recommends that brake linings be replaced when the linings wear down to 1/16" minimum thickness. Table 4, taken from standard ICS 9-1993, Part 1: Electromagnetic Brakes, shows NEMA's recommended range of minimum lining thickness for bonded and riveted linings on brake wheels from 8" to 19" diameter...

Table 4

Wheel Diameter (Inches)	Maximum RPM Ductile Iron	Minimum Wheel Dia. (Inches) (1)	Lining Thickness (Inches) (2)	
			Riveted (3)	Bonded
8	5000	7.94	0.010	0.016
10	4000	9.92	0.010	0.020
13	3300	12.90	0.010	0.026
16	2600	15.87	0.015	0.032
19	2300	18.87	0.015	0.038

(1) Minimum after re-machining.
(2) Minimum permissible prior to replacement.
(3) Above rivet head at maximum wear point.

10.2: Detailed procedures for brake shoe replacement and actuator removal and installation are covered earlier in this manual.

10.3: For other parts replacement or complete disassembly and rebuild, refer to the exploded view attached to this manual.

10.4: Before returning a brake to service after major repairs or overhaul, carry out all adjustments outlined in this manual followed by a complete operational test.

10.5: Ordering Parts

10.5.(a): For part number and identification refer to the Exploded View and Bill of Material forming part of this manual.

10.5.(b): Always quote the Magnetek Serial Number when ordering parts.

10.5.(c): For optimum brake life and performance use only genuine Mondel parts.

Chapter 11.0: Long Term Storage

11.1: If a brake assembly will not be installed immediately, it can be stored indoors in a dry location indefinitely or outdoors for a reasonable time if adequately protected from moisture and corrosive atmosphere. The brake assembly must always be protected from direct exposure to the elements unless specifically treated at the factory for use in that environment. Covering with plastic sheeting is not acceptable unless provision is made to prevent condensation under the plastic.

11.2: During storage, rust may form on the surface of the brake wheel. This is not usually a problem with ductile iron wheels nor is it necessary to clean the wheel before placing the wheel in service. The first few brake applications will polish the wheel.

11.3: Steel wheels may form scale when corroded, and the braking surface may have to be re-machined to remove the scale. See Table 4 for machining limits. Dynamic balance may be affected.

11.4: Before painting a brake, protect all pivot points, pull-rod, actuator piston, brake wheel and linings, etc.

11.4.(a): Data plates and labels must not be removed or painted over.

11.7.7 AUXILIARY AIR MOTOR DISCONNECT COUPLING – KOPFLEX TYPE FCC

Fast's® Couplings

Service Manual
Form 1900-01
Revised October 2007

KOP-FLEX.
Emerson Power Transmission

Kop-Flex, Inc., P.O. Box 1696, Baltimore Maryland 21203, 410-768-2000
Kop-Flex Canada, Ltd., 19 Meteor Drive, Rexdale, Ontario, Canada M9W-1A3, 416-675-7144

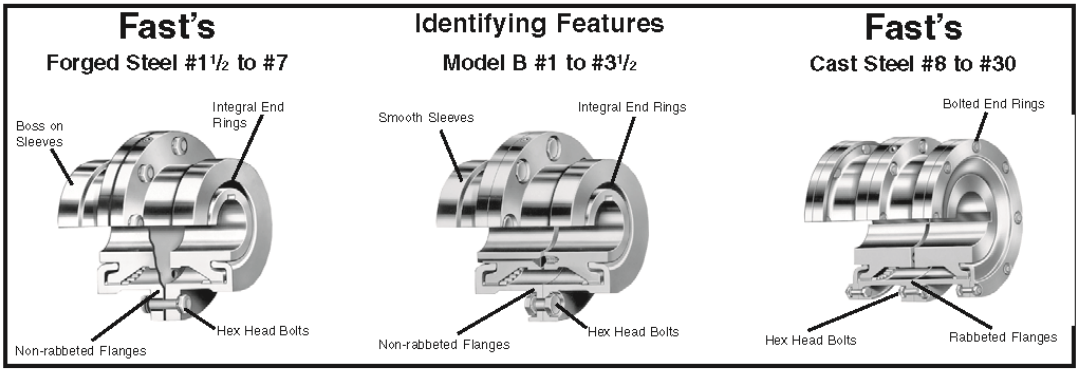

Installation and Alignment Instructions

These instructions generally apply to forged steel, model B, and cast steel couplings. For modifications and variations of these couplings, this sheet may be supplemented by special instructions supplied with the couplings. Always use caution when working on rotating equipment. Be sure to lock out the starting switch of the prime mover so the equipment cannot be started until work is complete, checked, and personnel are safely away.

Lubrication Interval

Coupling lubrication is critical. The use of proper and sufficient lubricant is part of a successful installation. Lubricants should be checked to see the proper level is maintained and that the lubricant is free of contaminants. If continual operation periods are expected to exceed six months, a coupling grease is recommended. The coupling should be checked for lubricant contamination and replenished with the proper volume every twelve months. Conditions such as very slow speed, reversing drives, high heat, and severe environments may require more frequent lubrication.

Recommended Lubrication Kop-Flex® KSG Coupling Grease

This grease is specifically compounded for standard couplings to provide improved lubrication and resistance to centrifugal separation. When KSG grease is used, lubrication intervals may be extended, based upon operating experience. Balanced couplings or others operating at speeds above 3500 rpm can benefit from Kop-Flex KHP coupling grease. Both KSG and KHP coupling greases are available from Kop-Flex or authorized distributors of Kop-Flex power transmission products.
If the coupling is mounted on a reciprocating machine, or if recurrent reverse loading is experienced, a heavy viscous lubricant, similar to Texaco® Crater Compound #0 or Gulf Lubecoat #0 may be required for damping characteristics.

Oils

Use a mineral oil of a viscosity no less than 150 SSU (Saybolt Seconds Universal) and no more than 1000 SSU at 210 F. Example: SAE 140 Gear Oil (AGMA #8).

Note: Do Not use oil in Model B couplings. The model B is designed to use grease only.

Other Greases

Alternate lubricating greases should equal or exceed the specifications for Kop-Flex KSG and KHP coupling greases. (Specification sheet 3532 is available upon request.) Greases other than KSG or KHP, should meet these minimum specifications:
Grade: NLGI #1
Base oil Viscosity: Min.:
3000 SSU at 100° F
160 SSU at 210° F
Dropping Point, Min.: 190° F
Four Ball Wear, ASTM D-2266:
.500mm Maximum
Base oil content: 87% Minimum
K36 Factor, ASTM d-4425
KSG: K36= 8/24 = .33
Required:
Rust and Oxidation
Inhibitors
E.P. Additives

The most reliable test of a suitable lubricant is often the result of user experience and satisfaction. If a lubricant has been known to sludge, separate into heavy components or dry out, consider the use of Kop-Flex greases or one meeting the minimum specifications.

EMERSON.
Industrial Automation

Preparation

Coat the sleeve teeth with coupling grease. Place the coupling sleeve over shaft end as shown (for bolted end ring couplings, first place end ring over shaft). If using a keyed connection apply a suitable anti-galling compound to the shaft. For keyless hub-to-shaft connections, follow the equipment manufacturers instructions.

Place keys in shaft keyways with a snug side-to-side fit, and slight clearance top to bottom.

Clean the shaft and hub. Straight bored hubs may be coated with a suitable anti-galling lubricant. Taper bored hubs must be installed without lubricant.

Expand hub in an oven until the bore is substantially larger than the shaft diameter. Straight bored hubs are normally bored for an interference fit of approximately 0.0005 in/in of shaft diameter. For most values of interference, this will require a hub temperature of about 300˚ (150˚C). **Never exceed** 600˚F (300˚C).

⚠WARNING To avoid the risk of explosion, fire, damage to coupling and equipment, and /or injury to personnel, **do not** use an open flame or oil bath to expand the hub.

Properly orienting the hubs, slip them over the shafts and keys. Hub faces are normally mounted flush with shaft end.

On bolted end ring couplings such as the Fast's cast steel, the sleeves are bolted to the end rings after placing the gasket between the flanges.

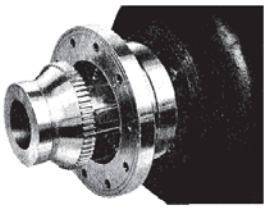

Mounting of Tapered Bored Hubs

Select the unheated taper bored hub. Mount the hub hand tight on its shaft and lightly rap it with a soft mallet to establish the initial line-to-line fit. Draw the hub up an additional distance to obtain the desired interference fit for the connection. In some cases the hub may require heating to achieve desired fit. (The required amount of axial movement is dependent upon the bore diameter and taper angle).
Install the hub retention means (locknut etc.) provided with the shaft, and **securely** lock the retainer into place. For most installations, the hub face will project slightly beyond the shaft end after hub pull-up.

Check Angular Alignment

For normal hub separation, use a feeler gauge at 4 points 90˚ apart, or for best accuracy, a dial indicator.

Position machines to obtain best alignment. Normal variation should not exceed .001 inches (0.025mm) times coupling size. Maintain correct hub separation referring to the "C" dimension shown in tabulations on page 4.

For greater hub separation than standard (such as spacer and floating shaft couplings), use micrometers or other suitable alignment fixtures to span the separation and measure the four 90˚ points.

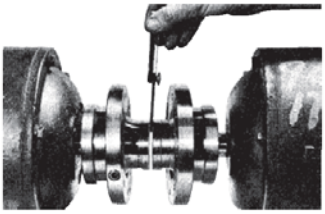

Offset Alignment Instrument Method

Note: For maximum coupling life, the Instrument Method of coupling alignment is recommended.

Attach a dial indicator bracket to one hub with dial indicator probe contacting the opposite hub's alignment surface. Rotate the hub on which the dial indicator is attached, and take readings at 4 points 90˚ apart. The offset (TIR) should be less than .002 inches times the coupling size. For greater hub separation than standard (such as spacer or floating shaft couplings) use suitable fixtures to span the separation and measure the four 90˚ points. Shim either machine until best possible alignment is obtained.

Recheck angular alignment and hub separation.

Offset Alignment Visual Method

Shim one machine and align shafts using a straight edge until it appears to be at right angles to the shafts. Repeat at three additional points 90˚ apart.

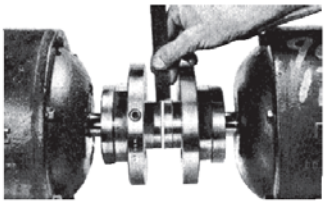

Recheck angular alignment and hub separation.

Coupling Assembly

Check to insure the center flange gasket (o-ring) is not damaged. Clean the flange faces and place the gasket in place. For spacer couplings or other arrangements, a gasket must be placed between **each** set of flanges.

Draw flanges together, positioning lube holes 180˚ apart on the model B, and 90˚ apart on the Fast's forged steel couplings. (Note that the cast steel coupling has two lube plugs in the male sleeve only).

Align the gasket with the flange bolt holes, insert the fitted bolts, lockwashers and nuts. Tighten all fasteners to the torque value shown on page 4.

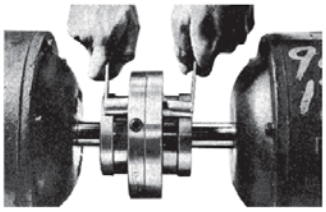

Lubrication

The coupling **must be** lubricated **before** operation.

Remove two fittings 180˚ apart. Rotate the coupling to place the bottom hole 45˚ off horizontal. Pump or pour lubricant into the top hole until excess appears at the bottom hole. Sufficient lubricant has now been added. (Hand packing of grease in **each** half of the coupling is recommended). After lubrication, tighten lube plugs to the specified torque value shown on page 4.

The trademarks Kop-Flex and Fast's are registered trademarks of Kop-Flex, Inc.
The Emerson logo is a trademark and a service mark of Emerson Electric Co.
Texaco is believed to be a trade name and/or trademark of Chevron Products Company and is NOT owned or controlled by Emerson Power Transmission.
Emerson Power Transmission Corporation cannot and does not represent or warrant the accuracy of this information.

© 2002, 2007 Emerson Power Transmission, All Rights Reserved.

Note: Spacer; limited end float; floating shaft couplings, and some other styles, require each end to be separately lubricated.

Lubricant capacities for each size and coupling style are given on page 4.

Dynamically Balanced Couplings

In addition to the previous instructions, certain other precautions must be followed to insure coupling dynamic balance at assembly.

1. Replace each nut, and lock-washer on its own bolt as they have been weight balanced as a set. The set can be used in any bolt hole. **2.** Fit the shaft keys precisely to fill the keyway with a tight fit only on the sides. Key weight should equal the weight of metal removed from shaft and hub keyways. **3.** Position each sleeve with it's hub; noting any match marks on either the sleeve or hub. Keep match marks in line as final assembly is completed. **4.** Position all other parts such as spacer, floating shaft, etc., properly aligning any match marks. **5.** Lubricate the coupling.

Note: Use an adapter plate only with half-coupling of the same serial number.

Finish Boring and Keyways

Coupling hubs are often furnished with a "rough stock bore". This rough bore is not necessarily concentric to other hub diameters.

To prepare for boring, set up and indicate the hub as shown by the illustration.

Bore sizing and recommended fit:
Finish bore size should be based on the actual shaft dimension measured, regardless of whether straight or taper shaft.

A light interference fit based on a nominal interference of .0005 in. per inch of shaft diameter is suggested, or refer to published AMA standards.

Do not exceed an interference fit of .0012 per inch of shaft diameter for Fast's forged steel model B, and for the cast steel.

Alternate fits:
If other than a light interference fit is desired, please consult the published AGMA boring and keyway standards, or contact our engineering department for specific recommendations.

Recommended Set-up Method for Boring

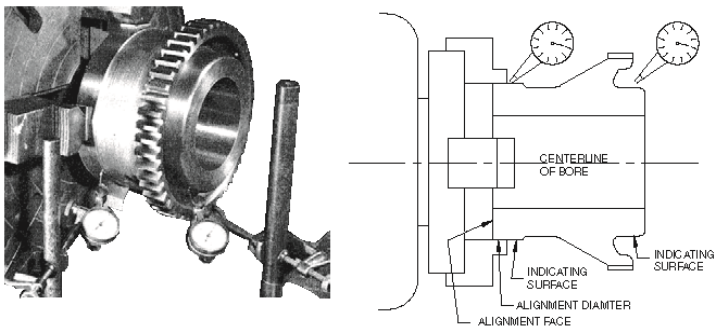

The alignment diameter of the hub should be chucked in the boring lathe and dial indicated as shown, so that run-out is as near zero as possible. It is essential that the finished bore be concentric with the two indicating surfaces.

Keyways

Keyways should be cut to give a tight fit on the sides, and slight clearance over or under the key. Keyways should not have sharp corners. Refer to published AGMA standards for specific dimensioning of coupling bores and keyways.

⚠WARNING
Failure to observe safety precautions could cause personal injury or equipment damage.

Important Safety Instructions
Before start-up . . . for reasons of safety and to extend shaft coupling life, follow these requirements.

1. Coupling guards protect personnel. **All couplings must be covered with a guard as per OSHA requirements.**
2. Recheck alignment after all foundation bolts and mechanical connections are tightened.
3. Make sure all fasteners are properly installed and tightened.
4. Take the time to double check your work.
5. Only authorized Kop-Flex replacement parts are to be used.
6. Call Kop-Flex for any clarification or questions.

⚠WARNING **Disconnect all power before adjusting units.**

© 2002, 2007 Emerson Power Transmission, All Rights Reserved.

Forged Steel and Mill Motor

Coupling Size		1 1/2	2	2 1/2	3	3 1/2	4	4 1/2	5	5 1/2	6	7
Hub Separation - "C" (inches)		1/8	1/8	3/16	3/16	1/4	1/4	5/16	5/16	5/16	5/16	3/8
Hub Separation - "Cfr" (inches)		5/32	5/32	3/16	3/16	7/32	5/16	11/32	11/32	13/32	13/32	1/2
Hub Length - "E" (inches)												
Hub Length - "Efr" (inches)												
Flange O.D. - "A" (inches)		5	7	8 3/8	6 3/8	11	12 1/2	13 5/8	15 5/16	16 3/4	18	20 3/4
Grease Capacity (LB.-Oz.)	Full Flex	0-0	0-7	0-14	1-0	2-0	3-0	4-1	5-6	8-9	11-4	14-14
	Flex-Rigid	0-2	0-4	0-7	0-11	1-3	1-11	2-9	2-11	4-2	5-13	7-7
	Spacer Only (per in. of length)	0-0	0-0	0-2	0-3	0-4	0-5	0-8	0-9	0-13	0-15	1-5
Oil Capacity (U.S. Pints) SAE #140	Full Flex	1/8	3/16	5/16	1/2	3/4	1 1/4	1 1/2	2	3 1/8	3 7/8	5 3/4
	Flex-Rigid	1/16	3/32	5/32	1/4	3/8	5/8	3/4	1	1 1/2	2	2 1/2
	Spacer Only (per in. of length)	.02	.04	.05	.07	.09	.12	.15	.18	.22	.25	.35
Bolt Tightening Torque (Lb. Ft.)	Exposed	20	50	100		175			165			250
	Shrouded	20		55		110			195	-		
Lube Plug Tightening Torque (Lb. Ft.)		20	50									

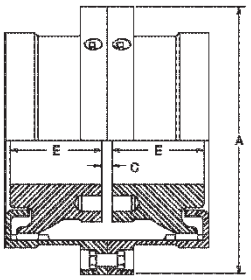

Full-Flex Coupling

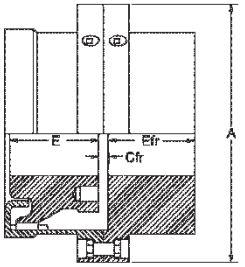

Flex-Rigid Coupling

Model B and Model B Mill Motor

Coupling Size		1	1 1/2	2	2 1/2	3	3 1/2
Hub Separation - "C"		1/8	1/8	1/8	1/8	3/16	3/16
Hub Separation - "Cfr" (inches)		1/8	1/8	5/32	5/32	3/16	3/16
Flange O.D. - "A" (inches)		4	5	6	7	8 3/8	9 7/16
Grease Capacity (Lb.-Oz.) (Pc.r of use oil)	Full Flex	0-2	0-3	0-5	0-7	0-13	1-1
	Flex-Rigid	0-1	0-2	0-2	0-4	0-7	0-9
	Spacer Only (per in. of length)	0-1	0-1	0-2	0-2	0-3	0-4
Bolt Tightening Torque (Lb.Ft.)		8	12	20		50	
Lube Plug Tightening Torque (Lb.Ft.)		15	20			30	

When a spacer is used (to increase shaft separation), additional lubricant is necessary. To the amount required for the Full Flex coupling, add the amount required for spacer only multiplied by the length of spacer in inches. For spacer with limited end float thrust plates and for floating shaft arrangements, each end must be separately lubricated. The capacity at each end is the same as the capacity for a flex-rigid coupling.

Do not use oil with Model B couplings.

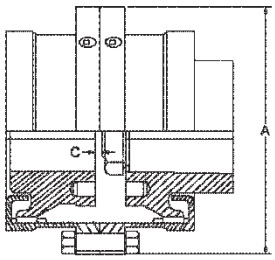

Mill Motor Coupling

Cast Steel

Coupling Size		8	9	10	11	12	13	14	15	16	18	20	22	24	26	28	30
Hub Separation - "C" (inches)		5/8	1/2	1/2	1/2	1/2	3/4	3/4	3/4	1	1	1	1	1	1	1	1
Hub Separation - "Cfr" (inches)		1/2	9/16	5/8	5/8	5/8	3/4	3/4	3/4	1	1	1	1 1/8	1 1/8	1 1/8	1 1/8	1 1/8
Hub Length - "E" (inches)																	
Hub Length - "Efr" (inches)																	
Flange O.D. - "A" (inches)		23 1/4	25	28	30 1/2	33	35 3/4	38	40 1/2	43	47 1/2	53 1/2	58	64 1/2	68 1/2	75 3/4	78
Grease Capacity (LB.)	Full Flex	14	24	29	40	43	50	60	70	75	90	125	150	190	200	215	230
	Flex-Rigid	7	12	14	20	21	25	30	35	40	50	65	80	95	100	105	115
	Spacer Capacities Dependent on Individual Design																
Oil Capacity (U.S. Gallon SAE #140	Full Flex	3/4	1 1/4	1 1/2	2	2 1/4	2 3/4	3 1/4	4 1/2	5 1/2	8	9 1/2	11 1/4	13 1/2	15	16 1/2	19
	Flex-Rigid	3/8	5/8	3/4	1	1 1/8	1 3/8	1 5/8	2 1/4	2 3/4	3	4 3/4	5 3/4	6 3/4	7 1/2	8 1/4	9 1/2
	Spacer Only	Spacer Capacities Dependent on Individual Design															
Tightening Torque (Lb. Ft.)		330	360	600	670		1110	1270		2010	3010	4120	5630		7030		
Lube Plug Tightening Torque (Lb. Ft.)		350									575						

Note: Use of excessive amounts of lubricant can impair operation of coupling. Excess lubricant will usually be thrown from the coupling during operation.
Only Kop-Flex furnished replacement parts are approved for use.

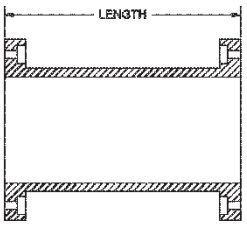

Spacer
Sacer Length + C = Hub Separation

⚠WARNING **Disconnect all power before adjusting units.**

© 2002, 2007 Emerson Power Transmission, All Rights Reserved.
Printed in U.S.
4

11.7.8 GEAR COUPLING – FALK TYPE G51, SIZE 1020

REXNORD

Falk™ Double & Single Engagement Gear Couplings • Install. & Maint.

Sizes 1010 thru 1070G & GP & Sizes 1 thru 7GF (Page 1 of 8)

How To Use This Manual

This manual provides detailed instructions on installation, maintenance, and parts identification for Falk Lifelign ® gear couplings, Types G & GF10, 20, 31, 32, 51, 52, & GP20 & GP52. Use the table of contents below to locate required information.

Table of Contents

Introduction . . . . . Page 1
Lube Fittings . . . . . Page 1
Limited End Float . . . . . Page 1
Lubrication . . . . . Pages 1-2
Balanced Couplings . . . . . Page 3
Bi-Annual & Annual Maintenance . . . . . Page 3
Installation & Alignment Instructions . . . . . Pages 3-6 & 7
Installation & Alignment Data . . . . . Page 6
Parts Identification & Parts Interchangeability. . . . . Page 7-8

CAREFULLY FOLLOW THE INSTRUCTIONS IN THIS MANUAL FOR OPTIMUM PERFORMANCE AND TROUBLE FREE SERVICE.

INTRODUCTION

This manual applies to standard coupling Types G & GF10, 31 and 51 with shrouded bolts, and G & GF20, 32, 52, and GP20 & GP52 with exposed bolts. For couplings furnished with special features, refer to assembly drawing furnished with coupling for proper assembly arrangement and any additional installation or maintenance requirements. Refer to the specific manuals for GV vertical gear couplings installation and maintenance.

IMPORTANT: Use G/GF51 & 52 couplings for floating shaft assemblies or as the fourth bearing in three bearing systems. When gear couplings are mounted on a horizontal floating shaft, use a gap disc in each coupling. Where limited end float is required or where sleeve bearing motors are used, consult the Factory. Type GP52 couplings are recommended for horizontal application only. Refer Type GP52 floating shaft applications to the Factory.

CAUTION: Consult applicable local and national safety codes for proper guarding of rotating members. Observe all safety rules when installing or servicing couplings.

WARNING: Lockout starting switch of prime mover and remove all external loads from drive before installing or servicing couplings.

LUBE FITTINGS

Sleeves have ⅛" NPT lube holes for sizes 1010G20 - 1035G20, 1GF20 - 7GF20, 1025G10 - 1035G10, and 2½GF10 - 5½ GF10. (Sizes 1010G10 - 1020G10 and 1GF10 - 2GF10 use ¼"-28 SAE LT automotive plugs and fittings.) Sizes 1040G thru 1070G have ¼" NPT holes. Use a standard grease gun and lube fittings.

LIMITED END FLOAT

Where limited end float is required or where sleeve bearing motors are used, consult the Factory.

LUBRICATION

Adequate lubrication is essential for satisfactory operation. Because of its superior lubricating characteristics and low centrifuge properties, Falk Long Term Grease (LTG) is highly recommended.

Type G/GP/GF20 Type G/GF32 Type G/GP/GF52

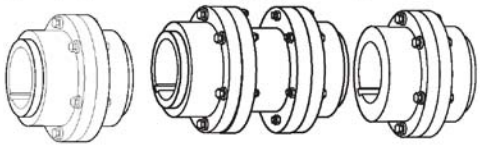

1000G Series Pictured

Gear couplings initially lubricated with Falk Long Term Grease (LTG) will not require re-lubrication for up to three years.

The use of general purpose grease requires re-lubrication of the coupling at least once every six months. If coupling leaks grease, is exposed to extreme temperatures, excessive moisture, experiences frequent reversals or axial movements; more frequent lubrication may be required.

USDA Approval

LTG has the United States Department of Agriculture Food Safety & Inspection Service approval for applications where there is no possibility of contact with edible products. (H-2 ratings.)

Long Term Grease (LTG)

The high centrifugal forces encountered in couplings separate the base oil and thickener of general purpose greases. Heavy thickener, which has no lubrication qualities, accumulates in the tooth mesh area of gear couplings resulting in premature mesh failure unless periodic lubrication cycles are maintained.

Falk Long Term Grease (LTG) was developed specifically for couplings. It resists separation of the oil and thickener. The consistency of Falk LTG changes with operating conditions. As manufactured, it is an NLGI #1/2 grade. Working of the lubricant under actual service conditions causes it to become semifluid, while the grease near the seals will set to a heavier grade, helping to prevent leakage.

LTG is highly resistant to separation, easily out performing all other lubricants tested. The resistance to separation allows the lubricant to be used for relatively long periods of time.

Although LTG grease is compatible with most other coupling greases, the mixing of greases may dilute the benefits of LTG.

CAUTION: Do not use LTG in bearings. Do not use LTG for low speed applications. Refer to Table 4, Page 6 for coupling speed range of LTG grease.

Packaging

14 oz. (0,4 Kg) CARTRIDGES — Individual or case lots of 10 or 30.

35 lb. (16 Kg) PAILS, 120 lb. (54 Kg) KEG & 400 lb. DRUMS.

Specifications — Falk LTG (Long Term Grease)

TEMPERATURE RANGE — –20°F (–29°C) to 250°F (121°C). Minimum pump = 20°F (–7°C).

MINIMUM BASE OIL VISCOSITY — 3300SSU (715cSt) @ 100°F (38°C).

THICKENER — Lithium soap/polymer.

Rexnord Industries, LLC, Coupling Group
5555 S. Moorland Rd., New Berlin, WI 53151-7953 USA Telephone : 262-796-4060
Fax: 262-796-4064 e-mail: info@rexnord.com web: www.rexnord.com

458-110
April 2005
Supersedes 6-02

Install. & Maint. • Falk™ Double & Single Engagement Gear Couplings

REXNORD

(Page 2 of 8) Sizes 1010 thru 1070G & GP & Sizes 1 thru 7GF

CENTRIFUGE SEPARATION CHARACTERISTICS — ASTM #D4425–84 (Centrifuge Test) — K36 = 2/24 max., very high resistance to centrifuging.

NLGI GRADE (ASTM D-217) — 1/2

CONSISTENCY (ASTM D-217) — 60 stroke worked penetration value in the range of 315 to 360 measured @ 77°F (25°C).

DROPPING POINT — 350°F (177°C) minimum.

MINIMUM TIMKEN EP O.K. LOAD — 40 lb. (18 kg).

ADDITIVES — Rust and oxidation inhibitors that do not corrode steel or swell or deteriorate synthetic seals.

General Purpose Grease

Bi-annual Lubrication — The following specifications and lubricants for general purpose grease apply to gear couplings that are lubricated bi-annually and operate within ambient temperatures of –30°F (–34°C) to 200°F (93°C). For temperatures beyond this range, consult Factory. For normal service, use a NLGI #1 extreme pressure (EP) grease EXCEPT when the coupling speed is less than the minimum specified in Table 4, Page 6. At these lower speeds, use a NLGI #0 extreme pressure (EP) grease. When one or more gear couplings in an application require NLGI #0 grease, the same grease may be used in all of the couplings. DO NOT use cup grease.

If coupling leaks grease, is exposed to extreme temperatures, excessive moisture or experiences frequent reversals or axial movements; more frequent lubrication may be required.

Lubricants listed in Tables 1, 2 & 3 are typical products only and should not be construed as exclusive recommendations.

Specifications — General Purpose Coupling Lubricants

COUPLING SPEED RANGE — See Table 4, Page 6.

TEMPERATURE RANGE — –30°F to +200°F(–34°C to +93°C)

WORKED PENETRATION AT 77°F(25°C) —
NLGI #1 . . . . . 310-340 (See Table 1)
NLGI #0 . . . . . 355-385 (See Table 2)

DROPPING POINT — 300°F(149°C) or higher

TEXTURE — Smooth or fibrous

MINIMUM TIMKEN O.K. LOAD — 30 lb.

SEPARATION AND RESISTANCE — Low oil separation rate and high resistance to separation from centrifuging.

LIQUID CONSTITUENT — Possess good lubricating properties . . . equivalent to a high quality, well refined petroleum oil with EP additives.

INACTIVE — Must not corrode steel or cause swelling or deterioration of synthetic seals.

Oil Lubrication

EP oils may be a more effective lubricant than grease when the required coupling speed is one half of the minimum speed range of NLGI #1 grease listed in Table 4, Page 6 (Minimum rpm ÷ 2). Oil lubricated couplings must be sealed to prevent leakage, i.e. keyways, etc. Couplings must be drained and refilled with new oil every six months for operating temperatures up to 160°F (71°C) and every three months for couplings operating at temperatures of 160°F (71°C) up to 200°F (93°C).

For temperatures beyond this range, consult Facotyr. The minimum operating temperature must not be lower than the pour point of the oil. The specified amount of grease listed in Table 4, Page 6, is in pounds and also applies to the volume of oil in pints.

Specifications

Type: Mild EP gear oil that meets AGMA Specifications 250.04.

Grade: AGMA #8EP (ISO VG 680).

Viscosity: 612-748 cSt @ 104°F (40°C).

Pour Point: 20°F (–7°C) Maximum.

Must not corrode steel or swell or deteriorate synthetic seals.

TABLE 1 — NLGI #1 Grease

Manufacturer	Lubricant ★
Amoco Oil Co.	Rykon Grease #1 EP
BP Oil Co.	Energrease LS-EP1
Chevron U.S.A., Inc.	Dura-Lith EP1
Citgo Petroleum Corp	Premium Lithium Grease EP1
Conoco Inc.	EP Conolith Grease #1
Exxon Company, U.S.A..	Lidok EP1
Imperial Oil Ltd.	Ronex EP1
Kendall Refining Co.	Lithium Grease L-416
Keystone Div., Pennwalt Corp.	Zeniplex-1
Lyondell Lubricants	Litholine Complex EP1
Mobil Oil Corp..	Mobilux EP1
Petro-Canada Products	Multipurpose EP1
Phillips 66 Co.	Philube Blue EP
Shell Oil Co.	Alvania EP Grease 1
Shell Canada Ltd.	Alvania Grease EP1
Sun Oil Co.	Sun Prestige 741 EP
Texaco Lubricants	Multifak EP1
Unocal 76 (East & West)	Unoba EP1

TABLE 2 — NLGI #0 EP Grease

Manufacturer	Lubricant ★
Amoco Oil Co.	Rykon Premium Grease 0 EP
BP Oil Co.	Energrease LS-EP 0
Chevron U.S.A., Inc.	Dura-Lith EP 0
Citgo Petroleum Corp	Premium Lithium Grease EP 0
Conoco Inc.	EP Conolith Grease #0
Imperial Oil Ltd.	Unirex EP0
Exxon Company, U.S.A..	Lidok EP 0
Kendall Refining Co.	Lithium Grease L-406
Keystone Div., Pennwalt Corp.	Zeniplex-0
Mobil Oil Corp..	Mobilux EP 0
Petro-Canada Products	Multipurpose Lotemp EP Grease
Phillips 66 Co.	Philube Blue EP
Shell Oil Co.	Alvania EP Grease RO
Shell Canada Ltd.	Alvania Grease EPW
Sun Oil Co.	Sun Prestige 740 EP
Texaco Lubricants	Multifak EP 0
Unocal 76 (East & West)	Unoba EP 0

TABLE 3 — Oil Lubricants

Manufacturer	Lubricant ★
Amoco	Permagear EP 160
Chevron, U.S.A.	NL Gear Compound 680
Exxon Co., U.S.A.	Spartan EP680
Gulf Oil Co.	EP Lubricant HD 680
Mobil Oil Co.	Mobilgear 636
Shell Oil Co.	Omala Oil 680
Texaco Inc.	Meropa 680
Union Oil Co. of Calif.	Extra Duty NL Gear Lube 8EP

★ Lubricants listed may not be suitable for use in the food processing industry; check with lube manufacturer for approved lubricants.

458-110
April 2005
Supersedes 6-02

Rexnord Industries, LLC, Coupling Group
5555 S. Moorland Rd., New Berlin, WI 53151-7953 USA Telephone : 262-796-4060
Fax: 262-796-4064 e-mail: info@rexnord.com web: www.rexnord.com

REXNORD

Falk™ Double & Single Engagement Gear Couplings • Install. & Maint.

Sizes 1010 thru 1070G & GP & Sizes 1 thru 7GF (Page 3 of 8)

HORIZONTAL COUPLING INSTALLATION, ALL TYPES

Only standard mechanics tools, torque wrenches, inside micrometer, dial indicator, straight edge, spacer bar, and feeler gauges are required to install gear couplings. Clean all parts using a non-flammable solvent. Check hubs, shafts, and keyways for burrs. DO NOT heat clearance fit hubs. Use a lubricant that meets the specifications on Page 2. Pack sleeve teeth with grease and lightly coat seals with grease BEFORE assembly. The required amount of grease is listed in Table 4. Make certain flange fasteners are tightened to the required torque listed in Table 4.

Interference Fit Hubs — Unless otherwise specified, gear couplings are furnished for an interference fit without setscrews. Heat hubs to 275°F(135°C) using an oven, torch, induction heater, or an oil bath.

CAUTION: To prevent seal damage DO NOT heat hubs beyond a maximum temperature of 400°F (205°C) for Type G and 500°F (260°C) for Type GF.

When an oxy-acetylene or blow torch is used, use an excess acetylene mixture. Mark hubs near the center of their length in several places on hub body with a temperature sensitive crayon, 275°F (135°C) melt temperature. Direct flame towards hub bore using constant motion to avoid overheating an area.

WARNING: If an oil bath is used, the oil must have a flash point of 350°F (177°C) or higher. Do not rest hubs on the bottom of the container. Do not use an open flame in a combustible atmosphere or near combustible materials.

Maximize Performance & Life

The performance and life of couplings depend largely upon how you install and maintain them. Before installing couplings, make certain that foundations of equipment to be connected meet manufacturers' requirements. Check for soft foot. The use of stainless steel shims is recommended. Measuring misalignment and positioning equipment within alignment tolerances is simplified with an alignment computer. These calculations can also be done graphically or mathematically, and allow the incorporation of "cold offsets", which will compensate for shaft position changes due to thermal growth.

Balanced Couplings

The fasteners provided are matched sets and must not be mixed or substituted. Assembly balanced couplings are match marked and must be assembled with mating match marks aligned. In some sizes, the flanges are not match marked. Coupling flanges must be assembled with O.D.'s aligned to within .002" (0,05 mm). Component parts of assembly balanced couplings must not be replaced without re-balancing the complete assembly.

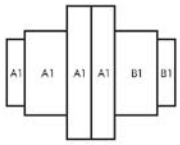

BI-ANNUAL MAINTENANCE

Re-lubricate coupling if using general purpose grease. If coupling leaks grease, is exposed to extreme temperatures, excessive moisture or frequent reversals; more frequent lubrication may be required.

ANNUAL MAINTENANCE

For extreme or unusual operating conditions, check coupling more frequently.

1. Check alignment per Step 7, Page 7. If the maximum operating misalignment values are exceeded, realign the coupling to the recommended installation values. See Table 4, for installation and maximum operating misalignment values.
2. Check tightening torques of all fasteners.
3. Inspect seal ring and gasket to determine if replacement is required.
4. Re-lubricate coupling if using general purpose grease.

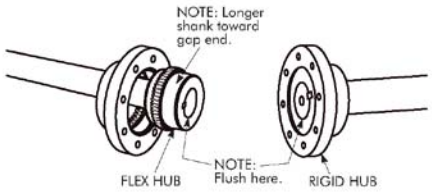

ALL TYPES G/GF/GP HORIZONTAL COUPLING INSTALLATION

1 — Mount Flanged Sleeves, Seals & Hubs

Place the flanged sleeves WITH seal rings on shafts BEFORE mounting flex hubs. Mount flex or rigid hubs on their respective shafts, as shown above, so that each face is flush with the end of its shaft. Allow hubs to cool before proceeding. Seal keyways to prevent leakage. Insert setscrews (if required) and tighten. Position equipment in approximate alignment with approximate hub gap.

For Type G/GF10 & 20 and GP20, position equipment in approximate alignment with gap equal to that given in Table 4.

For Type G/GF31 & 32 spacer and G/GF/GP51 & 52 floating shaft, with rigid hubs on floating shaft, position equipment in approximate alignment with approximate distance between shafts per Step 4A, Figure 2 on Page 5.

For G/GF/GP51 & 52 with flex hubs on the floating shaft, refer to Step 4A, Figure 1 on Page 5, to determine distance between shafts.

Rexnord Industries, LLC, Coupling Group
5555 S. Moorland Rd., New Berlin, WI 53151-7953 USA Telephone : 262-796-4060
Fax: 262-796-4064 e-mail: info@rexnord.com web: www.rexnord.com

458-110
April 2005
Supersedes 6-02

Install. & Maint. • Falk™ Double & Single Engagement Gear Couplings

(Page 4 of 8) Sizes 1010 thru 1070G & GP & Sizes 1 thru 7GF

REXNORD

2 — Gap & Angular Alignment for Close Coupled, Spacer, Short Floating Shaft, and Insulated Couplings

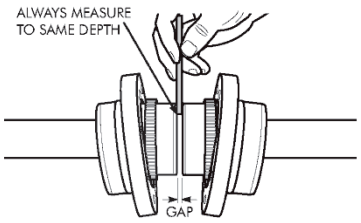

2A — Type G/GF10 & 20 & GP20

Use a spacer bar equal in thickness to gap specified in Table 4. Insert bar, as shown above, to same depth at 90° intervals and measure clearance between bar and hub face with feelers. The difference in minimum and maximum measurements must not exceed the INSTALLATION ANGULAR limit specified in Table 4.

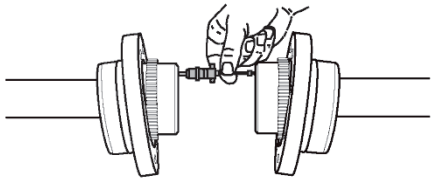

2B — G/GF31 & 32 (Spacer), and Type G/GF51 & 52 (Short Floating Shaft, See Step 4 for Long Floating Shaft)

Use an inside micrometer as shown above and at 90° intervals to measure the distance between hubs. The difference in minimum and maximum measurements should not exceed the INSTALLATION ANGULAR limit specified in Table 4.

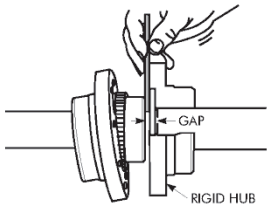

2C — G/GF51 & 52 & GP52 (As Fourth Bearing in Three Bearing System)

Use a spacer bar equal in thickness to the "X" dimension specified in Table 4. Insert bar, as shown above to same depth at 90° intervals and measure clearance between bar and hub face with feelers. The difference in minimum and maximum measurements must not exceed the INSTALLATION ANGULAR limit specified in Table 4.

3 — Offset Alignment for Close Coupled, Spacer, Short Floating Shaft, and Insulated Couplings

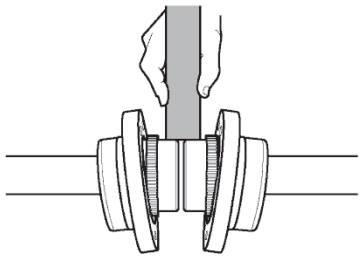

3A — Type G/GF10 & 20 & GP20

Align so that a straight edge rests squarely on both hubs as shown above and also at 90° intervals. Check with feelers. The clearance should not exceed the INSTALLATION OFFSET limit specified in Table 4. Tighten foundation bolts and repeat Steps 2A and 3A. Realign coupling if necessary. Use a dial indicator if hub extension is too short for accurate use of a straight edge.

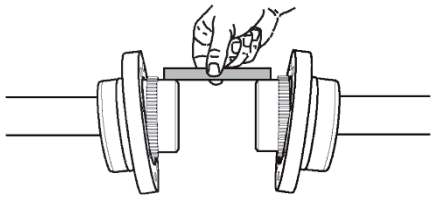

3B — Type G/GF31 & 32 (Spacer), and Type G/GF51 & 52 (Short Floating Shaft, See Step 4 for Long Floating Shaft)

Align so that a straight edge rests squarely (or within the limits specified in Table 4) on both hubs as shown above and also at 90° intervals. Check with feelers. The clearance should not exceed the INSTALLATION OFFSET limit specified. Tighten all foundation bolts and repeat Steps 2B and 3B. Realign coupling if necessary.

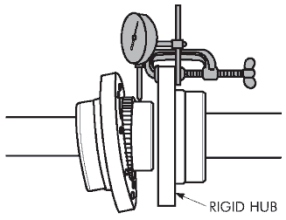

3C — Type G/GF51 & 52 & GP52 (As Fourth Bearing in Three Bearing System)

Clamp a dial indicator to the rigid hub as shown and rotate the rigid hub one complete turn. The total indicator reading DIVIDED by two must not exceed the INSTALLATION OFFSET limit specified in Table 4. Tighten all foundation bolts and repeat

458-110
April 2005
Supersedes 6-02

Rexnord Industries, LLC, Coupling Group
5555 S. Moorland Rd., New Berlin, WI 53151-7953 USA Telephone : 262-796-4060
Fax: 262-796-4064 e-mail: info@rexnord.com web: www.rexnord.com

REXNORD

Falk™ Double & Single Engagement Gear Couplings • Install. & Maint.

Sizes 1010 thru 1070G & GP & Sizes 1 thru 7GF (Page 5 of 8)

Steps 2C and 3C. Realign coupling if necessary.

4 — Type G/GF/GP51 & 52 With Long Floating

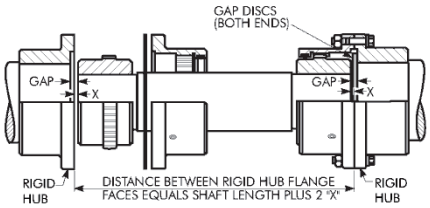

Figure 1

Shaft

4A — Determine Distance Between Shafts

For Figure 1 above, measure the length of the floating shaft and add 2 times the gap dimension from Table 4 to get the distance between the shafts to be coupled.

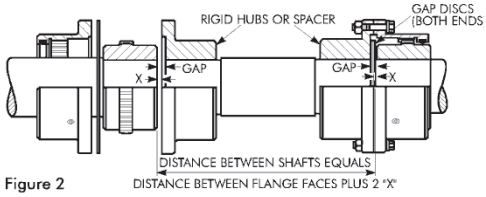

Figure 2

For Figure 2 above, measure the overall floating shaft or spacer assembly length from flange to flange and add 2 times the "X" dimension from Table 4 to get the distance between the shafts to be coupled.

4B — Position First Drive & Floating Shaft

Set the drive most difficult to move to true level and bolt it in place. Set the floating shaft on V-blocks. Then align coupling on fixed drive as follows:

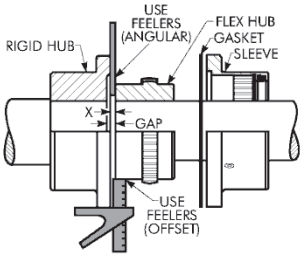

Figure 3

4B1 — Refer to Figure 3

Use a spacer bar equal in thickness to the "X" dimension specified in Table 4. Insert the bar to the same depth at 90° intervals and measure the clearance between the bar and hub face with feelers as shown. The difference in minimum and maximum measurements should not exceed the INSTALLATION ANGULAR limit specified in Table 4.

4B2 — Refer to Figure 3

Align coupling & floating shaft so that, with the square head (or depth micrometer) resting squarely on the flange, equal clearance measurements are obtained between flange and the hub O.D. in four places 90° apart. The difference between minimum and maximum feeler readings should not exceed the INSTALLATION OFFSET limit in Table 4 divided by 2. The above measurement is TIR.

4C — Position Second Drive

Position second drive for the correct "X" dimension and align per Steps 4B1 & 4B2. DO NOT move the floating shaft. Bolt drive in place and recheck alignment and gap. Realign if necessary. For greater accuracy, check alignment with a depth micrometer or dial indicator.

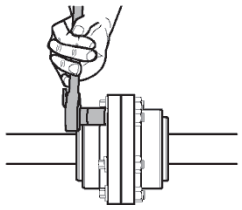

5 —Assemble Coupling — G and GF Only

Insert gasket between flanges and gap disc into counterbore of each rigid hub for floating shaft assemblies and bolt flanges together. Use only the fasteners furnished with the coupling. IMPORTANT: Tighten fasteners to torque specified in Table 4.

5A — Assemble Coupling – Insert Insulator Parts and Join Flanged Sleeves (GP20 & GP52)

Clean flange faces and coat with Permatex #2 or equivalent. DO NOT install gaskets. Insert insulator bushings into flanged holes. Draw one sleeve onto hub and position insulator center plate on flange face. Draw other sleeve onto hub and assemble fasteners with insulator washers. Use only fasteners furnished with coupling. IMPORTANT: Tighten fasteners to torque specified in Table 4.

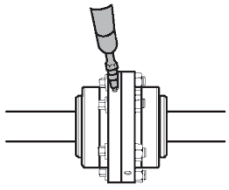

6 — Lubricate

Remove all grease plugs and fill with recommended grease until an excess appears at an open hole; then insert plug. Continue procedure until all plugs have been inserted.
CAUTION: *Remove grease fitting and make certain all plugs are inserted after lubricating.*

Rexnord Industries, LLC, Coupling Group
5555 S. Moorland Rd., New Berlin, WI 53151-7953 USA Telephone : 262-796-4060
Fax: 262-796-4064 e-mail: info@rexnord.com web: www.rexnord.com

458-110
April 2005
Supersedes 6-02

Install. & Maint. • Falk™ Double & Single Engagement Gear Couplings

REXNORD

(Page 6 of 8) Sizes 1010 thru 1070G & GP & Sizes 1 thru 7GF

TABLE 4 — Installation & Alignment Data For Types G/GF10, 20, 31, 32, 51, 52 & GP20 & GP52 ★ — Dimensions – Inches (Metric – mm)

COUPLING SIZE				1010G 1GF	1015G 1-½GF	1020G 2GF	1025G 2-½GF	1030G 3GF	1035G 3-½GF	1040G 4GF	1045G 4-½GF	1050G 5GF	1055G 5-½GF	1060G 6GF	1070G 7GF
Gap		G/GF10 & 20		.125 (3)	.125 (3)	.125 (3)	.188 (5)	.188 (5)	.250 (6)	.250 (6)	.312 (8)	.312 (8)	.312 (8)	.312 (8)	.375 (10)
		GP20		...	...	...	.325 (8)	.325 (8)	.385 (10)	.385 (10)	.450 (11)	.450 (11)	.450 (11)	.450 (11)	.510 (13)
		G/GF51 & 52		.156 (4)	.156 (4)	.156 (4)	.188 (5)	.188 (5)	.218 (6)	.281 (7)	.312 (8)	.344 (9)	.344 (9)	.406 (10)	.500 (13)
		GP52		...	...	...	.325 (8)	.325 (8)	.350 (9)	.420 (11)	.450 (11)	.480 (12)	.480 (12)	.540 (14)	.635 (16)
"X" Dimension		G/GF51 & 52		.056 (1)	.056 (1)	.056 (1)	.088 (2)	.088 (2)	.118 (3)	.121 (3)	.162 (4)	.144 (4)	.144 (4)	.146 (4)	.170 (4)
		GP52		...	...	...	.215 (5)	.215 (5)	.245 (6)	.246 (6)	.280 (7)	.270 (7)	.270 (7)	.270 (7)	.295 (8)
Installation Limits	G/GF10, 20, 31, 32, 51 & 52 & GP20 & GP52		Angular	.006 (0,15)	.007 (0,19)	.009 (0,23)	.011 (0,28)	.013 (0,33)	.015 (0,39)	.018 (0,46)	.020 (0,51)	.022 (0,55)	.024 (0,61)	.026 (0,66)	.031 (0,78)
	G/GF10 & 20 & GP20		Offset	.002 (0,05)	.003 (0,07)	.003 (0,8)	.004 (0,10)	.005 (0,13)	.006 (0,15)	.007 (0,18)	.008 (0,20)	.009 (0,23)	.010 (0,26)	.011 (0,28)	.013 (0,33)
	G/GF51 & 52 & GP52		Offset	.001 (0,03)	.001 (0,03)	.001 (0,03)	.002 (0,04)	.002 (0,05)	.002 (0,05)	.003 (0,06)	.003 (0,08)	.003 (0,08)	.003 (0,08)	.004 (0,10)	.005 (0,11)
	GP52		Offset	.006 (0,14)	.006 (0,16)	.007 (0,17)	.008 (0,20)	.009 (0,23)	.011 (0,28)	.012 (0,30)	.013 (0,32)	.015 (0,38)	.016 (0,41)	.017 (0,43)	.017 (0,44)
"W"†	Installation Check		All Types	.006 (0,15)	.007 (0,19)	.009 (0,23)	.011 (0,28)	.013 (0,33)	.015 (0,39)	.018 (0,46)	.020 (0,51)	.022 (0,55)	.024 (0,61)	.026 (0,66)	.031 (0,78)
	Operating Limit Check		All Types	.035 (0,90)	.045 (1,15)	.054 (1,38)	.067 (1,71)	.079 (2,00)	.092 (2,33)	.108 (2,74)	.121 (3,08)	.131 (3,33)	.144 (3,66)	.157 (3,99)	.183 (4,66)
Coupling Speed Range (rpm)	G10, 20, 51, 52 & GP20 & GP52	NLGI #0 Grease-Max. ‡		7000	6000	5000	4750	4400	3900	3600	3200	3000	2650	2450	2150
		Falk LTG or NLGI #1 Grease	Min.	1050	700	550	480	380	330	270	230	230	210	190	160
			Allow.	8000	6500	5500	5000	4400	3900	3600	3200	2900	2650	2450	2150
	G51 & 52	NLGI #0 Grease-Max. ‡		7000	5500	4500	4000	3600	3100	2800	2600	2400	2200	2100	1800
		Falk LTG or NLGI #1 Grease	Min.	1050	700	550	480	380	330	270	230	230	210	190	160
			Allow.	7000	5500	4500	4000	3600	3100	2800	2600	2400	2200	2100	1800
Grease - pounds (kg)	G10 & 20			.09 (0,041)	.16 (0,073)	.25 (0,11)	.50 (0,23)	.80 (0,36)	1.20 (0,54)	2.00 (0,91)	2.30 (1,0)	3.90 (1,8)	4.90 (2,2)	7.00 (3,2)	9.60 (4,4)
	G51 & 52			.05 (0,023)	.09 (0,041)	.15 (0,068)	.26 (0,12)	.40 (0,18)	.60 (0,27)	1.03 (0,47)	1.25 (0,57)	2.00 (0,91)	2.50 (1,1)	3.75 (1,7)	5.00 (2,3)
	G51 & 52 per in. Spacer Length			....	....	.03 (0,014)	.06 (0,027)	.06 (0,027)	.12 (0,054)	.20 (0,091)	.20 (0,091)	.20 (0,091)	.20 (0,091)	.20 (0,091)	.20 (0,091)
	G51 & 52 Less Spacer			.09 (0,041)	.16 (0,073)	.25 (0,11)	.50 (0,23)	.80 (0,36)	1.20 (0,54)	2.00 (0,91)	2.30 (1,0)	3.90 (1,8)	4.90 (2,2)	7.00 (3,2)	9.60 (4,4)
	GP10 & 20			.09 (0,039)	.15 (0,068)	.27 (0,12)	.47 (0,21)	.74 (0,33)	.88 (0,40)	1.48 (0,67)	2.62 (1,2)	2.87 (1,3)	4.44 (2,0)	4.95 (2,2)	6.79 (3,1)
	GP20			...	...	...	.50 (0,227)	.80 (0,363)	1.20 (0,544)	2.00 (0,907)	2.30 (1,04)	3.90 (1,77)	4.90 (2,22)	7.00 (3,18)	9.60 (4,35)
	GF51 & 52			.06 (0,025)	.09 (0,042)	.15 (0,070)	.27 (0,12)	.41 (0,19)	.50 (0,23)	.87 (0,40)	1.46 (0,66)	1.65 (0,75)	2.47 (1,1)	2.93 (1,3)	4.27 (1,9)
	GP52			...	...	...	.26 (0,118)	.40 (0,181)	.60 (0,272)	1.03 (0,467)	1.25 (0,567)	2.00 (0,907)	2.50 (1,13)	3.75 (1,70)	5.00 (2,27)
	GF51 & 52 per in. Spacer Length			.06 (0,027)	.07 (0,032)	.07 (0,032)	.08 (0,037)	.02 (0,009)	.16 (0,072)	.21 (0,095)	.12 (0,053)	.13 (0,059)	.14 (0,065)	.71 (0,322)	.91 (0,413)
	GF51 & 52 Less Spacer			.09 (0,039)	.15 (0,068)	.27 (0,12)	.47 (0,21)	.74 (0,33)	.88 (0,40)	1.48 (0,67)	2.62 (10,2)	2.87 (1,3)	4.44 (2,0)	4.95 (2,2)	6.97 (3,2)
Flange Bolt Torque - lb-in (Nm)	G/GF10, 31 & 51			108 (12)	372 (42)	372 (42)	900 (102)	900 (102)	1800 (203)	1800 (203)	1800 (203)	3000 (339)	3000 (339)	....	....
	G/GF20, 32 & 52			108 (12)	372 (42)	900 (102)	1800 (203)	1800 (203)	3000 (339)	3000 (339)	3000 (339)	3000 (339)	3000 (339)	3000 (339)	3000 (339)
	GP20 & GP52			...	...	...	420 (47,5)	420 (47,5)	840 (94,9)	840 (94,9)	840 (94,9)	1440 (162,7)	1440 (162,7)	1440 (162,7)	1800 (203,4)

★ Refer to Selection Guide for maximum bores and Manual 427-108 for reboring instructions.

† Flexible couplings are designed to accommodate changes in operating conditions. Coupling life expectancy between initial alignment and maximum operating limits is a function of load, speed and lubrication. Application requirements in excess of 3/4° misalignment per flex half coupling should be referred to the Factory for review.

‡ Couplings with NLGI #0 grease may be operated at any speed between zero and the maximum shown.

458-110
April 2005
Supersedes 6-02

Rexnord Industries, LLC, Coupling Group
5555 S. Moorland Rd., New Berlin, WI 53151-7953 USA Telephone : 262-796-4060
Fax: 262-796-4064 e-mail: info@rexnord.com web: www.rexnord.com

REXNORD

Falk™ Double & Single Engagement Gear Couplings • Install. & Maint.

Sizes 1010 thru 1070G & GP & Sizes 1 thru 7GF (Page 7 of 8)

7 — Assembled Coupling Alignment Check – All Styles

The alignment can be checked without disassembling the coupling as shown at left. Determine "W" by measuring distances "W"max. and "W"min. between flex hub and sleeve using a depth micrometer or feeler gauges. The difference between "W"max. and "W"min. must not exceed the "W" value given in Table 4. Check "W" at each coupling end.

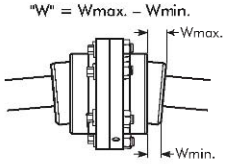

Check "W" at each flexible hub.

PARTS IDENTIFICATION AND PART NUMBER LOCATION

Coupling parts have identifying size and part numbers as illustrated below. When ordering parts, always SPECIFY SIZE, TYPE, HUB BORE, KEYWAY, and PART NUMBER found on each item.

Contact your Rexnord Distributor or Rexnord for price and availability.

EXAMPLE:
Complete 1050G20 Gear Coupling
Consisting of:
2 – 1050G20 Sleeves
(Includes: Gasket & Seal)
2 – 1050G Flex Hubs
Bore: 6.750 Keyway: 1.750 x .750
Bore: 7.375 Keyway: 1.750 x .750
1 – Fastener Set

TYPE G/GF10 & 20

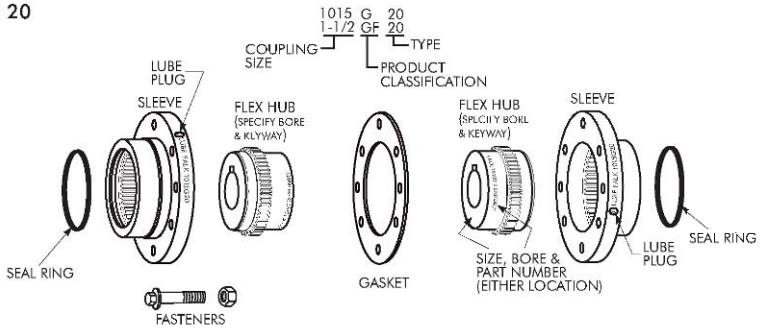

TYPE G/GF31 & 32

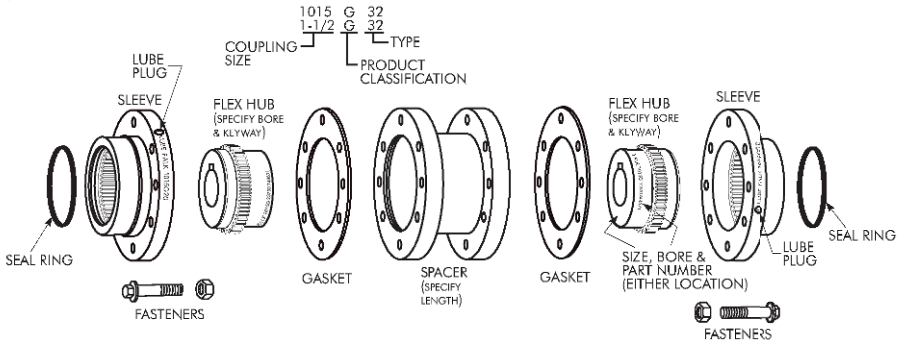

Rexnord Industries, LLC, Coupling Group
5555 S. Moorland Rd., New Berlin, WI 53151-7953 USA Telephone : 262-796-4060
Fax: 262-796-4064 e-mail: info@rexnord.com web: www.rexnord.com

458-110
April 2005
Supersedes 6-02

Install. & Maint. • Falk™ Double & Single Engagement Gear Couplings

REXNORD

(Page 8 of 8) Sizes 1010 thru 1070G & GP & Sizes 1 thru 7GF

TYPE G/GF51 & 52

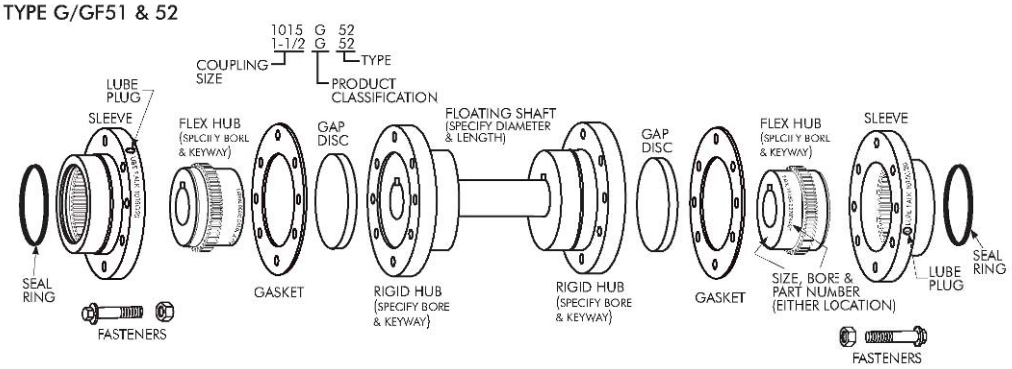

TYPE GP20

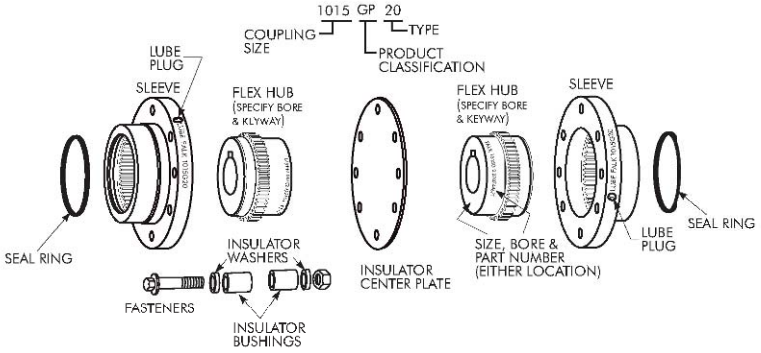

TYPE GP52

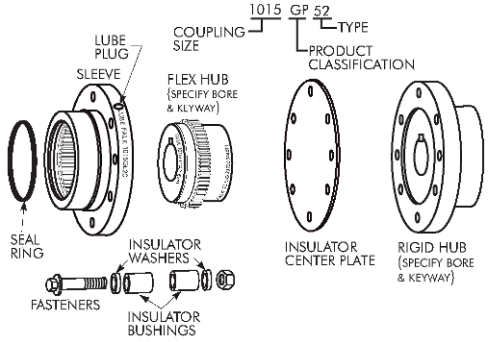

458-110
April 2005
Supersedes 6-02

Rexnord Industries, LLC, Coupling Group
5555 S. Moorland Rd., New Berlin, WI 53151-7953 USA Telephone : 262-796-4060
Fax: 262-796-4064 e-mail: info@rexnord.con web: www.rexnord.com

11.7.9 TAPERED ROLLER BEARINGS – SEALMASTER RPB BEARINGS

SEALMASTER

Roller Bearings
Installation & Maintenance

Emerson Industrial Automation
7120 New Buffington Road
Florence, KY 41042
Application Engineering: 800 626 2093
www.emerson-ept.com

FORM
PS-740-0021
9579E
Revised
June 2012

⚠ WARNING

- Read and follow all instructions carefully.
- Disconnect and lock-out power before installation and maintenance. Working on or near energized equipment can result in severe injury or death.
- Do not operate equipment without guards in place. Exposed equipment can result in severe injury or death.

⚠ CAUTION

- Periodic inspections should be performed. Failure to perform proper maintenance can result in premature product failure and personal injury.

BORE AND SHAFT TOLERANCES

All SEALMASTER roller bearing races have bore diameters for a sliding or snug fit over the shaft. They are locked to the shaft by means of locking collars with double cup point setscrews. Bearing bore and shaft tolerances are shown in Table 1.

Table I

Recommended Shaft Tolerance		
Shaft Diameters (Inches)	**Bearing Bore Tolerance**	**Recommended Shaft Tolerance**
1 3/16 - 1 7/16	+.0010 - .0000	+.0000 - .0005
1 1/2 - 3	+.0010 - .0000	+.0000 - .0010
3 - 3 15/16	+.0020 - .0000	+.0000 - .0010
4 - 4 15/16	+.0020 - .0000	+.0000 - .0015

MOUNTING INSTRUCTIONS

Prior to securing the unit to the shaft, make certain that shafting is free of burrs. Slide the unit onto the shaft to the point desired for mounting and bolt the unit to the supporting base. To prevent bearing damage avoid hammering on the ends of the inner race. After bolting the unit to the support, tighten the self-locking setscrews securely onto the shaft. Recommended torques for tightening the setscrews are shown in Table 2.

Table 2

Note: Bearing Design will allow up to 3° misalignment.

Installation at higher than 3° will lead to premature bearing failure

RPB LOCKING COLLAR SET SCREW TIGHTENING TORQUE			
Shaft Diameters (Inches)	**Set Screw Size**	**Tightening Torque**	
		inch-pounds	**foot-pounds**
1 3/16 - 1 11/16	5/16 - 24	110 - 140	9 - 11.5
1 3/4 - 2 1/2	3/8 - 24	180 - 230	15 - 19
2 11/16 - 3 1/2	1/2 - 20	400 - 525	33 - 43
3 15/16 - 4	5/8 - 18	875 - 1000	73 - 83
4 7/16 - 4 15/16	3/4 - 16	1450 - 1850	120 - 155

CARTRIDGE INSERT

General: This cartridge is for use in SEALMASTER housing or in SEALMASTER approved OEM applications only. No other use is authorized.

Removal & Replacement: To remove the cartridge from the housing, remove the housing assembly cap bolts and lift off the top housing half so that the shaft plane can be adjusted to allow removal of the cartridge. When replacing the cartridge insert, first check to assure that the rubber grommet is properly seated in the lube hole. Then position the cartridge lock pin so that it lines up with the lock pin slot in the housing. BE SURE the lock pin is not put in the lube hole. The shaft can be returned to its normal position and the housing can then be reassembled by tightening the cap bolts. Cap bolt tightening torques are shown in Tables 3, 4,5, & 6. Locking collars can be reaffixed to the shaft by tightening the setscrews to the torques shown above. (See Table 2.)

Emerson, Emerson Industrial Automation and Sealmaster are trademarks of Emerson Electric Co. or one of its affiliated companies.
©2002, 2012 Emerson Power Transmission Corp., All Rights Reserved.
MCIM12245E • Form# 9579E • Printed in USA

EMERSON.
Industrial Automation

BORE AND SHAFT TOLERANCES

Table 3

PILLOW BLOCK HOUSING		
Shaft Size (Inches)	Tightening Torque	
	(Lbs. Inches)	(Lbs. Feet)
1 3/16 - 1 1/4	204	17
1 3/8 - 2 3/16	372	31
2 1/4 - 3	900	75
3 3/16 - 4 1/2	3192	266
4 15/16 - 5	4728	394

Table 4

FLANGE BEARING HOUSING		
Shaft Size (Inches)	Tightening Torque	
	(Lbs. Inches)	(Lbs. Feet)
1 3/16 - 2	372	31
2 3/16 - 3	900	75
3 7/16 - 3 15/16	1800	150

Table 5

PILOTED FLANGE HOUSING				
Shaft Size (Inches)	Outside Bolts		Inside Bolts	
	(Lbs. Inches)	(Lbs. Feet)	(Lbs. Inches)	(Lbs. Feet)
1 3/16 - 2	204	17	48	4
2 3/16 - 3	588	49	96	8
3 3/16 - 4	900	75	204	17
4 7/16 - 5	1800	150	900	75

Table 6

EXPANSION PILLOW BLOCKS		
Shaft Size (Inches)	Tightening Torque	
	(Lbs. Inches)	(Lbs. Feet)
1 3/4 - 2 3/16	372	31
2 1/4 - 3	900	75
3 3/16 - 3 1/2	3192	266
3 15/16 - 4 1/2	1800	150
4 15/16 - 5	3192	266

LUBRICATION

All SEALMASTER roller bearings are prelubricated at the factory with a lithium soap grease which is compatible with multi-purpose grease readily available from local suppliers. The factory lubrication conforms to NLGI grade 2 consistency and is suitable for an operating temperature range of -20° F. to 250° F.

Examples: Texaco Multifak EP2
Exxon Lidok EP2
Mobil Mobilith AW2
Shell Alvania EP2
Chevron Dura-lith EP2
Amoco Amolith 2EP

For extremely dirty or wet applications with shaft speeds below 200 RPM, completely fill the bearing prior to running. Proper relubrication is important to the life of the bearing. A general relubrication guide is shown in Table 8. This can be used as a starting point for relubrication frequency. Experience will dictate if changes are needed to optimize the relubrication frquency. The bearing should be relubricated while rotating, the grease pumped in slowly until a bead forms around the seals. If necessary to relubricate while idle, refer to relubrication Table 7 for maximum grease capacity for various size bearings.

Table 7

LUBRICATION OF SEALMASTER ROLLER BEARINGS	
Shaft Size (Inches)	Recommended Relube Grease Charge (ozs.)
1 3/16 - 1 1/4	.10
1 3/8 - 1 7/16	.22
1 1/2 - 1 11/16	.32
1 3/4 - 2	.50
2 3/16	.55
2 1/4 - 2 1/2	.65
2 11/16 - 3	.85
3 3/16 - 3 1/2	1.25
3 15/16 - 4	2.50
4 7/16 - 4 1/2	3.10
4 15/16	4.75

Emerson, Emerson Industrial Automation and Sealmaster are trademarks of Emerson Electric Co. or one of its affiliated companies.
©2002, 2012 Emerson Power Transmission Corp., All Rights Reserved.
MCIM12245E • Form# 9579E • Printed in USA

2

EMERSON.
Industrial Automation

11.7.10 SPHERICAL ROLLER BEARINGS – SEALMASTER SLEEVLOC BEARINGS

SEALMASTER

Performance Spherical Roller Bearing Installation Instructions
1 1/8" – 5"

Emerson Industrial Automation
7120 New Buffington Road
Florence, KY 41042
Application Engineering: 800 626 2093
www.emerson-ept.com

FORM
PN 787410, PS-740-0001
9568E
Revised
June 2012

⚠ WARNING

- Read and follow all instructions carefully.
- Disconnect and lock-out power before installation and maintenance. Working on or near energized equipment can result in severe injury or death.
- Do not operate equipment without guards in place. Exposed equipment can result in severe injury or death.

⚠ CAUTION

- Periodic inspections should be performed. Failure to perform proper maintenance can result in premature product failure and personal injury.

Mounting Lock Collar Units:

Step 1: Inspect Shaft and Bore-
Shaft should be within tolerance range shown in Table I, clean and free of nicks and burrs. Mount bearings on unused section of shafting or repair/ replace shafting as required. Inspect both the shaft and the bearing bore for debris or contaminants. Wipe clean as necessary.

Table I

Recommended Shaft Tolerance	
Nominal Shaft Diameter	**Tolerance (inches)**
1 3/8 - 2	-0.0005
2 7/16 - 4	-0.0010

Step 2: Check Support Surfaces:
Make sure the base of the housing and the support surfaces are clean and free from burrs. If the housing elevation is adjusted with shims these must cover the entire contact area between the housing and the support surface.

Step 3: Install Unit:
To aid installation, keep weight off bearing during mounting. Slide unit onto the shaft by pushing on the inner ring. If it is difficult to mount bearing on shaft, use a piece of emery cloth to reduce any high spots on the shaft.

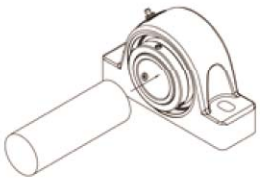

Step 4: Fasten Unit In Place:
Install housing mounting bolts and check bearing alignment. Align the bearing units as closely as possible. Tighten mounting bolts to recommended fastener torques. Check the shaft for freedom of rotation by rotating shaft with hand in both directions.

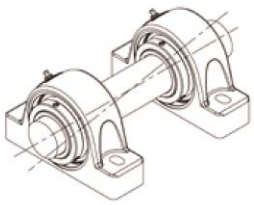

Step 5: Position Insert:
Expansion units must be located in the housing to allow axial shaft expansion and/or contraction. Position bearing insert to obtain the required axial expansion in the desired directions. It may be necessary to unload the bearing while moving the assembly.

Step 6: Tighten Setscrews:
Setscrews in multiple bearing applications should be aligned as seen in Figure 1. Tighten the bearing units to the shaft as follows:

a) Torque the first setscrew to one half of the recommended torque in Table II.
b) Torque the second setscrew to the full torque. Go back to the first setscrew and tighten to the full torque.

If the bearing unit has two lock collars, one on either end, repeat the same procedure for the second lock collar. Check shaft again for freedom of rotation and then tighten second bearing unit in the same fashion. When all bearings are tightened, perform a final check to the shaft for freedom of rotation.

Figure 1

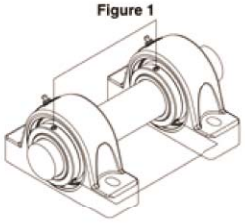

Table II

Lock Collar Setscrew Information	
Shaft Size	**Foot-Pounds**
1 3/8 - 1 3/4	14
1 15/16 - 2 1/2	25
2 15/16 - 3 1/2	55
3 15/16 - 4 1/2	120
4 15/16	180

Emerson, Emerson Industrial Automation and Sealmaster are trademarks of Emerson Electric Co. or one of its affiliated companies.
©2008, 2012 Emerson Power Transmission Corp., All Rights Reserved.
MCIM12236E • Form# 9568E • Printed in USA
1

EMERSON
Industrial Automation

Mounting Adapter Lock Units:

Step 1: **Inspect Shaft and Bore-**

Shaft should be within tolerance range shown in Table III, clean and free of nicks and burrs. Mount bearings on unused section of shafting or repair/replace shafting as required. Inspect both the shaft and the adapter bore for debris or contaminants. Wipe clean as necessary.

Notice: Do not apply any additional lubricant (ex. Grease, oil, or anti-seize compound) to bearing tapered surfaces, bore or shafting. Bearing components have a light oil, rust preventative coating that should not be removed. Application of additional lubricant may cause reduction in bearing performance and may lead to equipment failure and/or personal injury.

Table III

Recommended Shaft Tolerance (Adapter Lock)	
Nominal Shaft Diameter	**Tolerance (inches)**
1 3/8 - 2	-0.003
2 7/16 - 4	-0.004
4 7/16 - 5 15/16	-0.005

Step 2: **Check Support Surfaces:**

Make sure the base of the housing and the support surfaces are clean and free from burrs. If the housing elevation is adjusted with shims these must cover the entire contact area between the housing and the support surface.

Step 3: **Install Unit:**

Notice: One expansion unit is to be used in conjunction with one non-expansion unit for applications using an adapter lock unit. Failure to utilize one expansion and one non-expansion unit is likely to result in reduced bearing performance.

To aid installation, keep weight off bearing during mounting. Slide unit onto the shaft by pushing on the inner ring. If it is difficult to mount bearing on shaft, use a piece of emery cloth to reduce any high spots on the shaft.

Step 4: **Fasten Unit In Place:**

Install housing mounting bolts and check bearing alignment. Align the bearing units as closely as possible.

Tighten mounting bolts to recommended fastener torques. Check the shaft for freedom of rotation by rotating shaft with hand in both directions.

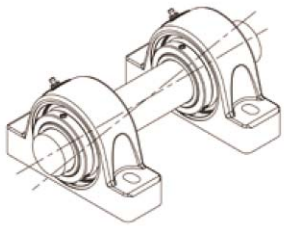

Step 5: **Position Insert:**

Expansion inserts must be located in the housing. If the direction of shaft growth is in the direction seen in Figure 2, align the bearing as shown. If the direction of shaft growth is opposite to that shown in Figure 2, center the insert in the housing.

Figure 2

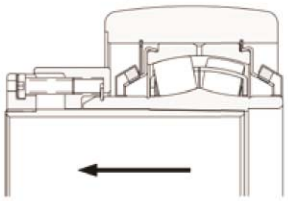

Step 6: **Shaft Lock:**

Tighten the cap screws in the specified order as seen in Figure 3. Continue tightening until all cap screws have become snug. Using a torque wrench, tighten each cap screw to one half of the appropriate torque value in Table IV. In the same order, repeat the procedure tightening each cap screw to the full appropriate value. Once complete, follow the same pattern and verify each cap screw has met the appropriate torque value and all cap screws have achieved equivalent resistance. Repeat step 6 for other bearing(s). Rotate the shaft by hand to check for freedom of rotation.

Figure 3

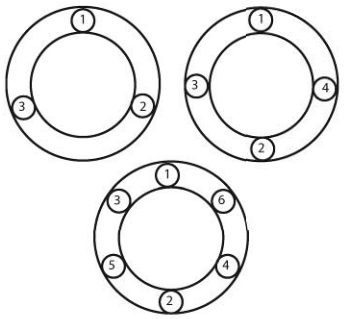

Table IV

Adapter Lock Cap Screw Information			
Nominal Shaft Diameter.	**Inch-Pounds**	**Hex Size**	**# Cap Screws**
1 3/8 - 1 1/2	45	1/8	3
1 15/16 - 2	30	1/8	3
2 7/16 - 2 1/2	60	1/8	4
2 15/16 - 3	55	1/8	4
3 7/16 - 3 1/2	80	3/16	4
3 15/16 - 4	80	3/16	4
4 7/16 - 4 1/2	115	3/16	4
4 15/16 - 5	130	3/16	6

2

Replacing Existing Sealmaster Inserts:

Step 1: **Remove Bearing from Shaft:**
Remove housing mounting bolts. For set screw units, loosen the set screws and slide the bearing off the shaft. For adapter lock units, loosen cap screws in the specified order as seen in Figure 3 and slide the bearing off the shaft.

Step 2: **Remove Bearing:**
Carefully remove retaining ring and spacer (non-expansion units) from housing bore. Clean rings before reuse. Remove insert from housing.

Step 3: **Inspect Shaft and Bore:**
Shaft should be within tolerance range, clean and free of nicks and burrs. Mount bearings on unused section of shafting or repair/replace shafting as required. Inspect both the shaft and the bearing bore for debris or contaminants. Also be sure to inspect the housing bore and the stabilizing ring. Wipe clean as necessary.

Step 4: **Load New Insert:**
Slide the bearing into the housing.

Step 5: **Secure Bearing in Housing:**
Be sure to check the bearing inserts for proper alignment. Align the bearing.

Replace spacer into housing (nonexpansion units only). Install retaining rings into the grooves in the housing bore.

Step 6: **Refer to the Previous Installation Sections for the Respective Shaft Locking Mechanism**

Pre-Mounting Checklist:

Lubrication:

All Sealmaster Spherical Roller Bearings are delivered with a high quality lithium complex base grease with an EP additive. The bearing is ready for use with no initial lubrication required. The grease is a lithium complex base, mineral oil, NLGI grade 2 consistency, with a base oil viscosity of ISO VG 220.

Compatibility of grease is critical; therefore consult with Sealmaster Application Engineering and your grease supplier to insure greases are compatible. For best performance it is recommended to relubricate with lithium complex thickened grease with a comparable NLGI consistency and base oil viscosity.

Relubricatable Sealmaster bearings are supplied with grease fittings or zerks for ease of lubrication with hand or automatic grease guns. Always wipe the fitting and grease nozzle clean.

Notice: If possible, it is recommended to lubricate the bearing while rotating, until grease purge is seen from the seals. If this is not an option due to safety reasons, follow the alternate lubrication procedure below.

Alternate Lubrication Procedure:

Stop rotating equipment. Add one half the recommended amount shown in Table VI. Start the bearing and run for a few minutes. Stop bearing and add the second half of the recommended amount. A temperature rise after lubrication, sometimes 30°F (17°C), is normal. Bearing should operate at temperatures less than 200°F (94°C) and should not exceed 250°F (121°C) for intermittent operation. For lubrication guides, see Tables VII and VIII.

Note: Tables VI & VII are general recommendations. Experience and testing may be required for specific applications.

Table V

Grease Charge for Relubrication	
Shaft Size (Inches)	**Grease Charge (Ounces)**
1 1/8 - 1 1/2	0.20
1 11/16 - 1 3/4	0.20
1 15/16 - 2	0.25
2 3/16	0.40
2 7/16 - 2 1/2	0.60
2 11/16 - 3	0.75
3 3/16 - 3 1/2	1.25
3 11/16 - 4	2.00
4 7/16 - 4 1/2	2.75
4 15/16 - 5	6.00

Table VI

Relubrication Recommendations			
Environment	**Temperature (°F)**	**Speed (% Catalog Max)**	**Frequency**
Dirty	-20 to 250	0 - 100 %	Daily to 1 week
Clean	-20 to 125	0 - 25%	4 to 10 months
		26 - 50%	1 to 4 months
		51 - 75%	1 week to 1 month
		76 - 100%	Daily to 1 week
	125 to 175	0 - 25%	2 to 6 weeks
		26 - 50%	1 week to 1 month
		51 - 75%	Daily to 1 week
		76 - 100%	Daily to 1 week
	175 to 250	0 - 100 %	Daily to 1 week

Table VII

Maximum Operational Speed		
Shaft Size (Inches)	**Felt (rpm)**	**Contact (rpm)**
1 3/8 - 1 1/2	4000	3000
1 15/16 - 2	4000	2500
2 7/16 - 2 1/2	3250	1750
2 15/16 - 3	3000	1600
3 7/16 - 3 1/2	2500	1350
3 15/16 - 4	2250	1200
4 7/16 - 4 1/2	2000	1100
4 15/16 - 5	1750	900

Expansion Bearing Applications:

Before installation, make certain proper expansion is accounted for. Expansion units should be placed in a location where relative movement between the bearing insert and the housing can be tolerated. For most applications using expansion type units, the fixed unit (non-expansion unit) is placed at the drive end of the shaft. Use TableVIII to review the total available bearing expansion. If the application requires additional expansion, consult engineering.

Notice: One expansion unit must be used in conjunction with one non-expansion unit for applications using an adapter lock unit. Failure to utilize one expansion and one non-expansion unit is likely to result in reduced bearing performance.

Table VIII

Total Available Housing Expansion		
Nominal Shaft Diameter	**Setscrew**	**Adapter Lock**
1 1/8 - 1 1/2	3/16"	5/32"
1 11/16 - 3 1/2	1/4"	7/32"
3 11/16 - 4	5/16"	1/4"
4 7/16 - 5	3/8"	9/32"

11.7.11 SPHERICAL ROLLER BEARING – TIMKEN BEARINGS

SPHERICAL ROLLER BEARING MOUNTING, FITTING, SETTING AND INSTALLATION

MOUNTING

Spherical roller bearings can be mounted individually, but most often are mounted in combination with another spherical roller bearing or a cylindrical roller bearing.

With spherical roller bearings, typically one bearing is fixed axially and the other is mounted with loose fits and axial space. This allows movement or float for environmental conditions such as uneven thermal growth between shaft and housing.

Fig. 11 shows a typical gearbox application using two spherical roller bearings where one bearing is free to float and the other bearing is fixed axially.

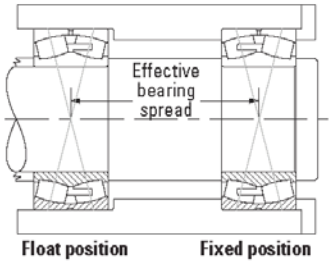

Fig. 11. Spherical roller bearing direct mounting.

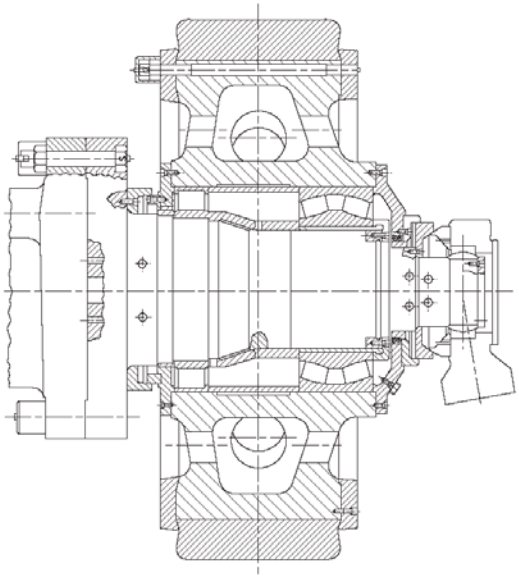

Fig. 12. Pulverizer wheel assembly.

Fig. 12 shows a pulverizer wheel assembly where a double-row spherical roller bearing is mounted in combination with a cylindrical roller bearing. In this application, the cylindrical roller bearing allows the shaft to float relative to the housing.

FITTING PRACTICE

Tables 6-12 on pages 25-41 list the recommended fitting practice for spherical roller bearings. The tables assume:

- The bearing is of normal precision.
- The housing is thick and made from steel or cast iron.
- The shaft is solid and made from steel.
- The bearing seats are ground or accurately turned to less than approximately 1.6 Ra finish.

The suggested fit symbols are in accordance with ISO 286. For help with recommended fitting practice, contact your Timken engineer.

As a general guideline, rotating inner rings should be applied with an interference fit. Loose fits may permit the inner rings to creep or turn, and wear the shaft and the backing shoulder. This wear may result in excessive bearing looseness and possible bearing and shaft damage. Additionally, abrasive metal particles resulting from creep or turning may enter into the bearing and cause damage and vibration.

Stationary inner-ring fitting practice depends on the loading of the application. The load conditions and bearing envelope dimensions should be used to select the suggested shaft fit from the tables.

Similarly, rotating outer-ring applications should use an interference fit between the outer ring and housing.

Stationary outer rings are generally mounted with loose fits to permit assembly and disassembly. The loose fit also permits axial movement when a spherical bearing is mounted in the float position.

Thin-walled housings, light-alloy housings, or hollow shafts must use press fits tighter than those required for thick-walled housings, steel, or cast iron housings or solid shafts. Tighter fits also are required when mounting the bearing on relatively rough, or unground surfaces.

⚠ WARNING
Failure to observe the following warnings could create a risk of death or serious injury.

Proper maintenance and handling practices are critical. Always follow installation instructions and maintain proper lubrication.

Never spin a bearing with compressed air. The rollers may be forcefully expelled.

TAPERED BORE DESIGNS

Typically, tapered bore bearings are selected to simplify shaft mounting and dismounting. Since the spherical roller bearing is not separable, mounting can be simplified by use of an adapter sleeve with a cylindrical bore and tapered O.D. A tapered bore roller bearing also can be mounted directly onto a tapered shaft.

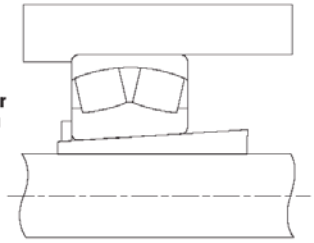

Fig. 13. Spherical roller bearing mounted with an adapter sleeve.

Bearings with a tapered bore typically require a tighter fit on the shaft than bearings with a cylindrical bore. A locknut is typically used to drive the inner ring up a tapered shaft sleeve. The locknut position is then secured by use of a lockwasher or lockplate. Timken offers a wide range of accessories to ease the assembly of spherical roller bearings with a tapered bore (see page 21). For approximating the clearance loss for axial drive-up, an 85 percent radial loss approximation can be used. That is, the radial clearance loss per axial drive-up can roughly be approximated as 71 µm/mm for a 1:12 tapered bore and 28 µm/mm for a 1:30 tapered bore. Table 5 on page 20 provides a direct relation between suggested RIC (radial internal clearance) reduction due to installation and the corresponding axial displacement of the inner ring.

SETTING

To achieve appropriate operation clearance, attention must be paid to the effects that fitting practice and thermal gradients have within the bearing.

FITTING PRACTICE

- An interference fit between the inner ring and a solid steel shaft will reduce the radial clearance within the bearing by approximately 80 percent of the fit.
- Interference fits between the outer ring and steel or cast iron housing will reduce radial clearance by approximately 60 percent.
- Spherical roller bearings with a tapered bore require a slightly greater interference fit on the shaft than a cylindrical bore bearing. It is critical to select the RIC that allows for this reduction.

THERMAL GRADIENTS

- Thermal gradients within the bearing are primarily a function of the bearing rotational speed. As speed increases, thermal gradients increase, thermal growth occurs and the radial clearance is reduced.
- As a rule of thumb, radial clearance should be increased for speeds in excess of 70 percent of the speed rating.

For help selecting the correct radial internal clearance for your application, consult with your Timken engineer.

Radial internal clearance tolerances are listed in tables 4 and 5 for spherical roller bearings.

Spherical roller bearings are ordered with a specified standard or non-standard radial internal clearance value. The standard radial internal clearances are designated as C2, C0 (normal), C3, C4 or C5 and are in accordance with ISO 5753. C2 represents the minimum clearance and C5 represents the maximum clearance. Non-standardized values also are available by special request.

The clearance required for a given application depends on the desired operating precision, the rotational speed of the bearing, and the fitting practice used. Most applications use a normal or C3 clearance. Typically, larger clearance reduces the operating load zone of the bearing, increases the maximum roller load, and reduces the bearing's expected life. However, a spherical roller bearing that has been put into a preload condition can experience premature bearing damage caused by excessive heat generation and/or material fatigue. As a general guideline, spherical roller bearings should not operate in a preloaded condition.

TAPERED BORE DESIGNS

Typically, tapered bore bearings are selected to simplify shaft mounting and dismounting. Since the spherical roller bearing is not separable, mounting can be simplified by use of an adapter sleeve with a cylindrical bore and tapered O.D. A tapered bore roller bearing also can be mounted directly onto a tapered shaft.

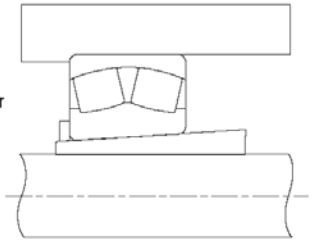

Fig. 13. Spherical roller bearing mounted with an adapter sleeve.

Bearings with a tapered bore typically require a tighter fit on the shaft than bearings with a cylindrical bore. A locknut is typically used to drive the inner ring up a tapered shaft sleeve. The locknut position is then secured by use of a lockwasher or lockplate. Timken offers a wide range of accessories to ease the assembly of spherical roller bearings with a tapered bore (see page 21). For approximating the clearance loss for axial drive-up, an 85 percent radial loss approximation can be used. That is, the radial clearance loss per axial drive-up can roughly be approximated as 71 µm/mm for a 1:12 tapered bore and 28 µm/mm for a 1:30 tapered bore. Table 5 on page 20 provides a direct relation between suggested RIC (radial internal clearance) reduction due to installation and the corresponding axial displacement of the inner ring.

SETTING

To achieve appropriate operation clearance, attention must be paid to the effects that fitting practice and thermal gradients have within the bearing.

FITTING PRACTICE

- An interference fit between the inner ring and a solid steel shaft will reduce the radial clearance within the bearing by approximately 80 percent of the fit.
- Interference fits between the outer ring and steel or cast iron housing will reduce radial clearance by approximately 60 percent.
- Spherical roller bearings with a tapered bore require a slightly greater interference fit on the shaft than a cylindrical bore bearing. It is critical to select the RIC that allows for this reduction.

THERMAL GRADIENTS

- Thermal gradients within the bearing are primarily a function of the bearing rotational speed. As speed increases, thermal gradients increase, thermal growth occurs and the radial clearance is reduced.
- As a rule of thumb, radial clearance should be increased for speeds in excess of 70 percent of the speed rating.

For help selecting the correct radial internal clearance for your application, consult with your Timken engineer.

Radial internal clearance tolerances are listed in tables 4 and 5 for spherical roller bearings.

Spherical roller bearings are ordered with a specified standard or non-standard radial internal clearance value. The standard radial internal clearances are designated as C2, C0 (normal), C3, C4 or C5 and are in accordance with ISO 5753. C2 represents the minimum clearance and C5 represents the maximum clearance. Non-standardized values also are available by special request.

The clearance required for a given application depends on the desired operating precision, the rotational speed of the bearing, and the fitting practice used. Most applications use a normal or C3 clearance. Typically, larger clearance reduces the operating load zone of the bearing, increases the maximum roller load, and reduces the bearing's expected life. However, a spherical roller bearing that has been put into a preload condition can experience premature bearing damage caused by excessive heat generation and/or material fatigue. As a general guideline, spherical roller bearings should not operate in a preloaded condition.

TABLE 4. RADIAL INTERNAL CLEARANCE LIMITS – SPHERICAL ROLLER BEARINGS – CYLINDRICAL BORE

Bore (Nominal)		Cylindrical Bore						Suggested Reduction of RIC Due to Installation		Suggested RIC After Installation
			Normal C0		C4					
			Min.	Max.	Min.	Max.				
		C2		C3		C5				
Over	Incl.	Min.	Max.	Min.	Max.	Min.	Max.	Min.	Max.	Min.
mm in.	mm in.	mm in.	mm in.	mm in.	mm in.	mm in.	mm in.	mm in.	mm in.	mm in.
20 0.9449	30 1.1811	0.015 0.0006	0.025 0.001	0.04 0.0016	0.055 0.0022	0.075 0.003	0.095 0.0037	0.015 0.0006	0.02 0.0008	0.015 0.0006
30 1.1811	40 1.5748	0.015 0.0006	0.03 0.0012	0.045 0.0018	0.06 0.0024	0.08 0.0031	1 0.0039	0.02 0.0008	0.025 0.001	0.015 0.0006
40 1.5748	50 1.9685	0.02 0.0008	0.035 0.0014	0.055 0.0022	0.075 0.003	0.1 0.0039	0.125 0.0049	0.025 0.001	0.03 0.0012	0.02 0.0008
50 1.9685	65 2.5591	0.02 0.0008	0.04 0.0016	0.065 0.0026	0.09 0.0035	0.12 0.0047	0.15 0.0059	0.03 0.0012	0.038 0.0015	0.025 0.001
65 2.5591	80 3.1496	0.03 0.0012	0.05 0.002	0.08 0.0031	0.11 0.0043	0.145 0.0057	0.18 0.0071	0.038 0.0015	0.051 0.002	0.025 0.001
80 3.1496	100 3.9370	0.035 0.0014	0.06 0.0024	0.1 0.0039	0.135 0.0053	0.18 0.0071	0.225 0.0089	0.046 0.0018	0.064 0.0025	0.036 0.0014
100 3.9370	120 4.7244	0.04 0.0016	0.075 0.003	0.12 0.0047	0.16 0.0063	0.21 0.0083	0.26 0.0102	0.051 0.002	0.071 0.0028	0.051 0.002
120 4.7244	140 5.5118	0.05 0.002	0.095 0.0037	0.145 0.0057	0.19 0.0075	0.24 0.0094	0.3 0.0118	0.064 0.0025	0.089 0.0035	0.056 0.0022
140 5.5118	160 6.2992	0.06 0.0024	0.11 0.0043	0.17 0.0067	0.22 0.0087	0.28 0.011	0.35 0.0138	0.076 0.003	0.102 0.004	0.056 0.0022
160 6.2992	180 7.0866	0.065 0.0026	0.12 0.0047	0.18 0.0071	0.24 0.0094	0.31 0.0122	0.39 0.0154	0.076 0.003	0.114 0.0045	0.061 0.0024
180 7.0866	200 7.8740	0.07 0.0028	0.13 0.0051	0.2 0.0079	0.26 0.0102	0.34 0.0134	0.43 0.0169	0.089 0.0035	0.127 0.005	0.071 0.0028
200 7.8740	225 8.8582	0.08 0.0031	0.14 0.0055	0.22 0.0087	0.29 0.0114	0.38 0.015	0.47 0.0185	0.102 0.004	0.14 0.0055	0.076 0.003
225 8.8582	250 9.8425	0.09 0.0035	0.15 0.0059	0.24 0.0094	0.32 0.0126	0.42 0.0165	0.52 0.0205	0.114 0.0045	0.152 0.006	0.089 0.0035
250 9.8425	280 11.0236	0.1 0.0039	0.17 0.0067	0.26 0.0102	0.35 0.0138	0.46 0.0181	0.57 0.0224	0.114 0.0045	0.165 0.0065	0.102 0.004
280 11.0236	315 12.4016	0.11 0.0043	0.19 0.0075	0.28 0.011	0.37 0.0146	0.5 0.0197	0.63 0.0248	0.127 0.005	0.178 0.007	0.102 0.004
315 12.4016	355 13.9764	0.12 0.0047	0.2 0.0079	0.31 0.0122	0.41 0.0161	0.55 0.0217	0.69 0.0272	0.14 0.0055	0.19 0.0075	0.114 0.0045
355 13.9764	400 15.7480	0.13 0.0051	0.22 0.0087	0.34 0.0134	0.45 0.0177	0.6 0.0236	0.75 0.0295	0.152 0.006	0.203 0.008	0.127 0.005
400 15.7480	450 17.7165	0.14 0.0055	0.24 0.0094	0.37 0.0146	0.5 0.0197	0.66 0.026	0.82 0.0323	0.165 0.0065	0.216 0.0085	0.152 0.006
450 17.7165	500 19.6850	0.14 0.0055	0.26 0.0102	0.41 0.0161	0.55 0.0217	0.72 0.0283	0.9 0.0354	0.178 0.007	0.229 0.009	0.165 0.0065
500 19.6850	560 22.0472	0.15 0.0059	0.28 0.011	0.44 0.0173	0.6 0.0236	0.78 0.0307	1 0.0394	0.203 0.008	0.254 0.01	0.178 0.007
560 22.0472	630 24.8031	0.17 0.0067	0.31 0.0122	0.48 0.0189	0.65 0.0256	0.85 0.0335	1.1 0.0433	0.229 0.009	0.279 0.011	0.203 0.008
630 24.8031	710 27.9528	0.19 0.0075	0.35 0.0138	0.53 0.0209	0.7 0.0276	0.92 0.0362	1.19 0.0469	0.254 0.01	0.305 0.012	0.203 0.008
710 27.9528	800 31.4961	0.21 0.0083	0.39 0.0154	0.58 0.0228	0.77 0.0303	1.01 0.0398	1.3 0.0512	0.279 0.011	0.356 0.014	0.229 0.009
800 31.4961	900 35.4331	0.23 0.0091	0.43 0.0169	0.65 0.0256	0.86 0.0339	1.12 0.0441	1.44 0.0567	0.305 0.012	0.381 0.015	0.252 0.01
900 35.4331	1000 39.3701	0.26 0.0102	0.48 0.0189	0.71 0.028	0.93 0.0366	1.22 0.048	1.57 0.0618	0.356 0.014	0.432 0.017	0.279 0.011

ENGINEERING

MOUNTING, FITTING, SETTING AND INSTALLATION

TABLE 5. RADIAL INTERNAL CLEARANCE LIMITS – SPHERICAL ROLLER BEARINGS – TAPERED BORE

Bore (Nominal)		Tapered Bore						Suggested Reduction of RIC Due to Installation		Axial Displacement of Inner Ring for RIC Reduction – Tapered Shaft[1][2]				Suggested RIC After Installation[1]
			Normal C0		C4									
			Min.	Max.	Min.	Max.								
		C2		C3		C5								
Over	Incl.	Min.	Max.	Min.	Max.	Min.	Max.	Min.	Max.	Min.	Max.	Min.	Max.	Min.
mm in.	mm in.	mm in.	mm in.	mm in.	mm in.	mm in.	mm in.	mm in.	mm in.	mm in.	mm in.	mm in.	mm in.	mm in.
20 0.9449	30 1.1811	0.02 0.0008	0.03 0.0012	0.04 0.0016	0.055 0.0022	0.075 0.003	0.095 0.0037	0.015 0.0006	0.02 0.0008	0.30 0.0118	0.23 0.0091	– –	– –	0.015 0.0006
30 1.1811	40 1.5748	0.025 0.001	0.035 0.0014	0.05 0.002	0.065 0.0026	0.085 0.0033	0.105 0.0041	0.02 0.0008	0.025 0.001	0.38 0.0150	0.30 0.0118	– –	– –	0.015 0.0006
40 1.5748	50 1.9685	0.03 0.0012	0.045 0.0018	0.06 0.0024	0.08 0.0031	0.1 0.0039	0.13 0.0051	0.025 0.001	0.03 0.0012	0.46 0.0181	0.38 0.0150	– –	– –	0.02 0.0008
50 1.9685	65 2.5591	0.04 0.0016	0.055 0.0022	0.075 0.003	0.095 0.0037	0.12 0.0047	0.16 0.0063	0.03 0.0012	0.038 0.0015	0.56 0.0220	0.46 0.0181	– –	– –	0.025 0.001
65 2.5591	80 3.1496	0.05 0.002	0.07 0.0028	0.095 0.0037	0.12 0.0047	0.15 0.0059	0.2 0.0079	0.038 0.0015	0.051 0.002	0.76 0.0299	0.56 0.0220	– –	– –	0.025 0.001
80 3.1496	100 3.9370	0.055 0.0022	0.08 0.003	0.11 0.0043	0.14 0.0055	0.18 0.0071	0.23 0.0091	0.046 0.0018	0.064 0.0025	0.97 0.0382	0.68 0.0268	– –	– –	0.036 0.0014
100 3.9370	120 4.7244	0.065 0.0026	0.1 0.0039	0.135 0.0053	0.17 0.0067	0.22 0.0087	0.28 0.011	0.051 0.002	0.071 0.0028	1.07 0.0421	0.76 0.0299	2.54 0.1000	1.90 0.0748	0.051 0.002
120 4.7244	140 5.5118	0.08 0.0031	0.12 0.0047	0.16 0.0063	0.2 0.0079	0.26 0.0102	0.33 0.013	0.064 0.0025	0.089 0.0035	1.27 0.0500	0.89 0.0350	3.05 0.1201	2.29 0.0902	0.056 0.0022
140 5.5118	160 6.2992	0.09 0.0035	0.13 0.0051	0.18 0.0071	0.23 0.0091	0.3 0.0118	0.38 0.015	0.076 0.003	0.102 0.004	1.52 0.0598	1.14 0.0449	3.43 0.1350	2.67 0.1051	0.056 0.0022
160 6.2992	180 7.0866	0.1 0.0039	0.14 0.0055	0.2 0.0079	0.26 0.0102	0.34 0.0134	0.43 0.0169	0.076 0.003	0.114 0.0045	1.65 0.0650	1.14 0.0449	4.06 0.1598	2.67 0.1051	0.061 0.0024
180 7.0866	200 7.8740	0.11 0.0043	0.16 0.0063	0.22 0.0087	0.29 0.0114	0.37 0.0146	0.47 0.0185	0.089 0.0035	0.127 0.005	1.90 0.0748	1.40 0.0551	4.45 0.1752	3.05 0.1201	0.071 0.0028
200 7.8740	225 8.8582	0.12 0.0047	0.18 0.0071	0.25 0.0098	0.32 0.0126	0.41 0.0161	0.52 0.0205	0.102 0.004	0.14 0.0055	2.03 0.0799	1.52 0.0598	4.83 0.1902	3.56 0.1402	0.076 0.003
225 8.8582	250 9.8425	0.14 0.0055	0.2 0.0079	0.27 0.0106	0.35 0.0138	0.45 0.0177	0.57 0.0224	0.114 0.0045	0.152 0.006	2.29 0.0902	1.78 0.0701	5.33 0.2098	4.06 0.1598	0.089 0.0035
250 9.8425	280 11.0236	0.15 0.0059	0.22 0.0087	0.3 0.0118	0.39 0.0154	0.49 0.0193	0.62 0.0244	0.114 0.0045	0.165 0.0065	2.54 0.1000	1.78 0.0701	5.84 0.2299	4.06 0.1598	0.102 0.004
280 11.0236	315 12.4016	0.17 0.0067	0.24 0.0094	0.33 0.013	0.43 0.0169	0.54 0.0213	0.68 0.0268	0.127 0.005	0.178 0.007	2.67 0.1051	1.90 0.0748	6.22 0.2449	4.45 0.1752	0.102 0.004
315 12.4016	355 13.9764	0.19 0.0075	0.27 0.0106	0.36 0.0142	0.47 0.0185	0.59 0.0232	0.74 0.0291	0.14 0.0055	0.19 0.0075	2.79 0.1098	2.03 0.0799	6.60 0.2598	4.83 0.1902	0.114 0.0045
355 13.9764	400 15.7480	0.21 0.0083	0.3 0.0118	0.4 0.0157	0.52 0.0205	0.65 0.0256	0.82 0.0323	0.152 0.006	0.203 0.008	3.05 0.1201	2.29 0.0902	7.11 0.2799	5.33 0.2098	0.127 0.005
400 15.7480	450 17.7165	0.23 0.0091	0.33 0.013	0.44 0.0173	0.57 0.0224	0.72 0.0283	0.91 0.0358	0.165 0.0065	0.216 0.0085	3.3 0.1299	2.54 0.1000	7.62 0.3000	5.84 0.2299	0.152 0.006
450 17.7165	500 19.6850	0.26 0.0102	0.37 0.0146	0.49 0.0193	0.63 0.0248	0.79 0.0311	1 0.0394	0.178 0.007	0.229 0.009	3.43 0.1350	2.67 0.1051	8.00 0.3150	6.22 0.2449	0.165 0.0065
500 19.6850	560 22.0472	0.29 0.0114	0.41 0.0161	0.54 0.0213	0.68 0.0268	0.87 0.0343	1.1 0.0433	0.203 0.008	0.254 0.01	3.81 0.1500	3.05 0.1201	8.89 0.3500	7.11 0.2799	0.178 0.007
560 22.0472	630 24.8031	0.32 0.0126	0.46 0.0181	0.6 0.0236	0.76 0.0299	0.98 0.0386	1.23 0.0484	0.229 0.009	0.279 0.011	4.19 0.1650	3.43 0.1350	9.78 0.3850	8.00 0.3150	0.203 0.008
630 24.8031	710 27.9528	0.35 0.0138	0.51 0.0201	0.67 0.0264	0.85 0.0335	1.09 0.0429	1.36 0.0535	0.254 0.01	0.305 0.012	4.57 0.1799	3.81 0.1500	10.67 0.4201	8.89 0.3500	0.203 0.008
710 27.9528	800 31.4961	0.39 0.0154	0.57 0.0224	0.75 0.0295	0.96 0.0378	1.22 0.048	1.5 0.0591	0.279 0.011	0.356 0.014	5.33 0.2098	4.19 0.1650	12.45 0.4902	9.78 0.3850	0.229 0.009
800 31.4961	900 35.4331	0.44 0.0173	0.64 0.0252	0.84 0.0331	1.07 0.0421	1.37 0.0539	1.69 0.0665	0.305 0.012	0.381 0.015	5.72 0.2252	4.57 0.1799	13.33 0.5248	10.67 0.4201	0.252 0.01
900 35.4331	1000 39.3701	0.49 0.0193	0.71 0.028	0.93 0.0366	1.19 0.0469	1.52 0.0598	1.86 0.0732	0.356 0.014	0.432 0.017	6.48 0.2551	5.33 0.2100	15.11 0.5949	12.45 0.4902	0.279 0.011

Note: Axial displacement values apply to solid steel shafts or hollow shafts with bore diameter less than half the shaft diameter. For shaft materials other than steel, or for thin-walled shafts, please consult your Timken engineer.

[1]This displacement is valid for assembly of tapered bore bearings and is measured starting from a line-to-line fit of the bearing bore to the tapered shaft.

[2]1:12 Taper used for 222, 223, 230, 231, 232, 233, 239 series. 1:30 Taper used for 240, 241, 242 series. For sleeve mounting, multiply axial displacement values by 1.1 for 1:12 Taper or by 1.05 for 1:30 Taper. For questions on tapered shaft data, consult your Timken engineer.

EXAMPLE #1 –
Calculating RIC Reduction Using a Spherical Roller Bearing with Tapered Bore

Given bearing number 22328K C3 (140 mm bore with C3 clearance) is to be mounted on a tapered shaft. Using a set of feeler gages, RIC is found to be –

RIC = 0.178 mm (0.007 in.)

Suggested reduction of RIC due to installation = 0.064 to 0.089 mm (0.0025 in. to 0.0035 in.), found in table 5 on page 20.

Calculate the clearance after mounting –

0.178 mm - 0.076 mm = 0.102 mm *or*

0.007 in. - 0.003 in. = 0.004 in.

For this example, the value of 0.076 mm (0.003 in.) was obtained by taking the mid-range value of the upper and lower limits found in the tables on pages 19-20.

Fig. 14. Measure RIC before installation.

Fig. 15. During mounting, the RIC should be checked at the unloaded roller.

Therefore, the locknut should be tightened until RIC reaches 0.102 mm (0.004 in.).

It also should be noted that the value obtained by reading the suggested RIC after installation directly from the table is 0.056 mm (0.0022 in.). This differs from the value calculated in the above example. The value taken directly from the table is provided as a minimum value. It is not suggested to use a calculated value that falls below this minimum.

EXAMPLE #2 –
Calculating RIC Reduction Using a Spherical Roller Bearing with Cylindrical Bore

Observations:

- Bearing 22230EM, nominal 150 mm (5.0955 in.) bore and 270 mm (10.6299 in.) O.D., standard class, operating at 1200 RPM.
- Float bearing position so the stationary O.D. should be free to move in housing, or loose fit.
- With shaft/inner ring rotation and the moderate loading 0.09C, the bore should be tight fit.

We can use the nominal fit charts on page 25 (shaft fit) and 26 (housing fit) to help guide our ISO fit selection.

Shaft Fit (page 25) at 150 mm Bore: ISO p6

From the shaft fit chart at 150 mm nominal bore at p6 (page 32), the shaft tolerance is nominal +0.043 to +0.068 mm (+0.0017 to +0.0027 in.). Therefore we have the following bore range:

max. shaft = 150.068 mm (5.0955 in.)

min. shaft = 150.043 mm (5.0945 in.)

This yields a shaft fit:

max. fit = max. shaft - min. bore
= 150.068 - 149.075
= 0.093 mm (0.0037 in.) tight

min. fit = min. shaft - max. bore
= 150.043 - 150.000
= 0.043 mm (0.0017 in.) tight

Housing Fit (page 26) at 270 mm O.D.: ISO H8

From the housing fit chart at 270 mm nominal O.D. at H8 (table 11), the housing bore tolerance is nominal +0.000 to +0.081 mm (+0.0000 in., +0.0032 in.). Therefore, we have the following bore range:

max. housing bore = 270.081 mm (10.6331 in.)

min. housing bore = 270.000 mm (10.6299 in.)

This yields an O.D. fit:

max. fit = max. housing bore - min O.D.
= 270.081 - 269.965
= 0.116 mm (0.0046 in.) loose

min. fit = min. housing bore - max. O.D.
= 270.000 - 270.000
= 0.000 mm (0.0000 in.) loose

EXAMPLE #2 – *continued*

For the primary selection of RIC, the major parameters are the bearing speed and the fits. For our example, we know that the shaft fit is 0.043 mm (0.0017 in.) tight to 0.093 mm (0.0037 in.) tight. We know the housing fit is 0 mm to 0.116 mm (0.0046 in.) loose. We also know that the bearing speed is 1200 RPM or 60 percent of the speed rating.

As a general rule of thumb, we bump the clearance up to operating speeds that exceed 70 percent of the speed rating, due to concerns over internal heat generation and thermal growth. In this case, we are at 60 percent of the speed rating, so normal clearance, ISO C_0 or C_o, can be selected.

Observing the RIC chart on page 19, we find for 150 mm nominal bore at C_o, the RIC will be 0.110 mm to 0.170 mm (0.0043 in. to 0.0067 in.). We also note that the minimum recommended RIC (installed) is 0.056 mm (0.0022 in.).

Also from page 19, we note that we get an approximate reduction of RIC that is 80 percent of interference fit on a solid shaft and 60 percent of the O.D. interference fit in a steel or cast iron housing. Since we have a loose housing fit, there will be no RIC reduction from that fit.

Shaft fit RIC reductions and clearance:

For a 150 mm nominal bore at C3, the RIC will be 0.115 to 0.165 mm (0.0045 to 0.0065 in.). Recalculating shaft fit RIC reduction and clearance:

max. clearance = max. RIC - min. fit reduction
= 0.165 - 0.034 = 0.131 mm (0.0052 in.)

min. clearance = min. RIC - max. fit reduction
= 0.115 - 0.074 = 0.041 mm (0.0016 in.)

Since the minimum mounted clearance is less than the minimum suggested RIC of 0.056 mm (0.0022 in.), the C3 RIC clearance limit needs to be reevaluated.

INSTALLATION

When using a tight fit inner ring, the method of assembly will depend on whether the bearing has a cylindrical or tapered bore.

CLEANLINESS

- Choose a clean environment, free from dust and moisture.
- The installer should make every effort to ensure cleanliness by use of protective screens and clean cloths.

PLAN THE WORK

- Know your plans in advance and have the necessary tools at hand. This reduces the amount of time for the job and decreases the chance for dirt to get into the bearing.

INSPECTION AND PREPARATION

- All component parts of the machine should be on hand and thoroughly cleaned before proceeding.
- Housings should be cleaned, including blowing out the oil holes.
- Do not use air hose on bearings.
- If blind holes are used, insert a magnetic rod to remove metal chips that might be lodged there during fabrication.
- Shaft shoulders and spacer rings contacting the bearing should be square with the shaft axis.
- The shaft fillet must be small enough to clear the radius of the bearing.
- On original installations, all component parts should be checked against the detail specification prints for dimensional accuracy. Shaft and housing should be carefully checked for size and form (roundness, etc.).

SHAFT AND HOUSING FINISH

- Shaft surfaces on which the bearing will be mounted must be clean and free from nicks and burrs.
- For applications with stationary housing and rotating shaft, it is suggested that the bearing seat on the shaft be ground to 1.6 µm (65 µin.) Ra maximum.
- If it is impractical to use a ground finish, a machined finish of 3.2 µm (125 µin.) Ra is acceptable in many cases, but the amount of interference fit should be slightly increased.
- Housing bores should be finished to 3.2 µm (125 µin) Ra maximum.

Note: *Do not remove the bearing from its wrapping until you are ready to mount it.*

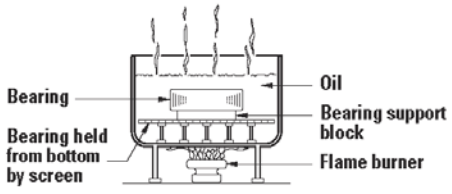

Fig. 16. Heat expansion method.

INSTALLING CYLINDRICAL BORE BEARINGS

Heat expansion method

- Most applications require a tight interference fit on the shaft.
- Mounting is simplified by heating the bearing to expand it sufficiently to slide easily onto the shaft.
- Two methods of heating are commonly used:
  - Tank of heated oil.
  - Induction heating.
- The first is accomplished by heating the bearing in a tank of oil that has a high flash point.
- The oil temperature should not be allowed to exceed 121° C (250° F). A temperature of 93° C (200° F) is sufficient for most applications.
- The bearing should be heated for 20 or 30 minutes, or until it is expanded sufficiently to slide onto the shaft easily.
- The induction heating process can be used for mounting bearings.
- Induction heating is rapid. Care must be taken to prevent bearing temperature from exceeding 93° C (200° F).
- Trial runs with the unit and bearing are usually necessary to obtain proper timing.
- Thermal crayons melted at predetermined temperatures can be used to check the bearing temperature.
- While the bearing is hot, it should be positioned squarely against the shoulder.
- Lockwashers and locknuts or clamping plates are then installed to hold the bearing against the shoulder of the shaft.
- As the bearing cools, the locknut or clamping plate should be tightened.
- In cases of outer ring rotation, where the outer ring is a tight fit in the housing, the housing member can be expanded by heating.
- The oil bath is shown in fig. 16. The bearing should not be in direct contact with the heat source.
- The usual arrangement is to have a screen several inches from the bottom of the tank. Small support blocks separate the bearing from the screen.
- It is important to keep the bearing away from any localized high-heat source that may raise its temperature excessively, resulting in ring hardness reduction.
- Flame-type burners are commonly used. An automatic device for temperature control is desirable.
- If safety regulations prevent the use of an open heated oil bath, a mixture of 15 percent soluble-oil water may be used. This mixture may be heated to a maximum of 93° C (200° F) without being flammable.

GREASE LUBRICATION

Grease lubrication is generally applicable to low-to-moderate speed applications that have operating temperatures within the limits of the grease. There is no universal antifriction bearing grease. Each grease has limiting properties and characteristics.

Greases consist of a base oil, a thickening agent and additives. Conventionally, bearing greases have consisted of petroleum base oils thickened to the desired consistency by some form of metallic soap. More recently synthetic base oils have been used with organic and inorganic thickeners. Table 20 summarizes the composition of typical lubricating greases.

TABLE 20. COMPOSITION OF GREASES

Base Oil	+	Thickening Agents	+	Additives	=	Lubricating Grease
Mineral oil Synthetic hydrocarbon Esters Perflironiated oil Silicone		Soaps and complex soaps lithium, aluminum, barium, calcium Non-Soap (inorganic) microgel (clay), carbon black, silica-gel, PTFE Non-Soap (organic) Urea compounds		Rust inhibitors Dyes Tactifiers Metal deactivates Oxidation inhibitors Anti-wear EP		

Calcium- and aluminum-based greases have excellent water resistance and are used in industrial applications where water ingress is an issue. Lithium-based greases are multi-purpose and are used in industrial applications and wheel bearings.

Synthetic base oils such as esters, organic esters and silicones used with conventional thickeners and additives typically have higher maximum operating temperatures than petroleum-based greases. Synthetic greases can be designed to operate in temperatures from -73° C (-100° F) to 288° C (550° F).

Below are the general characteristics of common thickeners used with petroleum base oils.

TABLE 21. GENERAL CHARACTERISTICS OF THICKENERS USED WITH PETROLEUM-BASED OILS

Thickener	Typical Dropping Point		Maximum Temperature		Typical Water Resistance
	°C	°F	°C	°F	
Lithium soap	193	380	121	250	Good
Lithium complex	260+	500+	149	300	Good
Aluminum complex	249	480	149	300	Excellent
Calcium sulfonate	299	570	177	350	Excellent
Polyurea	260	500	149	300	Good

Use of the thickeners in table 21 with synthetic hydrocarbon or ester base oils increases the maximum operating temperature by approximately 10° C (50° F).

Using polyurea as a thickener for lubricating fluids is one of the most significant lubrication developments in more than 30 years. Polyurea grease performance is outstanding in a wide range of bearing applications and, in a relatively short time, it has gained acceptance as a factory-packed lubricant for ball bearings.

LOW TEMPERATURES

Starting torque in a grease-lubricated bearing at low temperatures can be critical. Some greases may function adequately as long as the bearing is operating, but resistance to initial movement may be excessive. In certain smaller machines, starting may be impossible when very cold. Under such operating circumstances, greases containing low-temperature characteristic oils are generally required.

If the operating temperature range is wide, synthetic greases offer advantages. Synthetic greases are available to provide very low starting and running torque at temperatures as low as -73° C (-100° F). In certain instances, these greases perform better in this respect than oil.

An important point concerning lubricating greases is that the starting torque is not necessarily a function of the consistency or the channel properties of the grease. Starting torque is more a function of the individual rheological properties of a particular grease and is best evaluated by application experience.

HIGH TEMPERATURES

The high temperature limit for lubricating greases is generally a function of the thermal and oxidation stability of the fluid and the effectiveness of the oxidation inhibitors. Grease temperature ranges are defined by both the dropping point of the grease thickener and composition of the base oil. Table 22 shows the temperature ranges of various base oils used in grease formulations.

A rule of thumb, developed from years of testing grease-lubricated bearings, indicates that grease life is halved for every 10° C (50° F) increase in temperature. For example, if a particular grease provides 2000 hours of life at 90° C (194° F), by raising the temperature to 100° C (212° F), reduction in life to approximately 1000 hours would result. On the other hand, 4000 hours could be expected by lowering the temperature to 80° C (176° F).

Thermal stability, oxidation resistance and temperature limitations must be considered when selecting greases for high-temperature applications. In non-relubricatable applications, highly refined mineral oils or chemically stable synthetic fluids are required as the oil component of greases for operation at temperatures above 121° C (250° F).

TABLE 22. TEMPERATURE RANGES FOR BASE OILS USED IN LUBRICATING GREASES

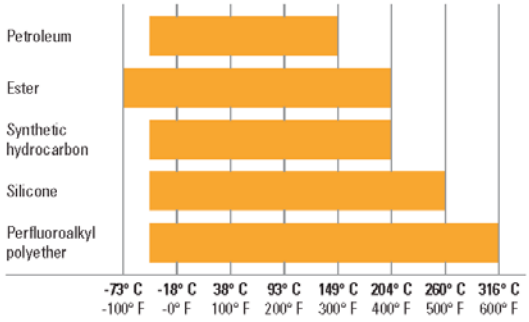

CONTAMINATION

Abrasive Particles

When roller bearings operate in a clean environment, the primary cause of damage is the eventual fatigue of the surfaces where rolling contact occurs. However, when particle contamination enters the bearing system, it is likely to cause damage such as bruising, which can shorten bearing life.

When dirt from the environment or metallic wear debris from some component in the application are allowed to contaminate the lubricant, wear can become the predominant cause of bearing damage. If bearing wear becomes significant, changes will occur to critical bearing dimensions that could adversely affect machine operation.

Bearings operating in a contaminated lubricant exhibit a higher initial rate of wear than those running in an uncontaminated lubricant. With no further contaminant ingress, this wear rate quickly diminishes. The contamination particles are reduced in size as they pass through the bearing contact area during normal operation.

Water

Water and moisture can be particularly conducive to bearing damage. Lubricating greases may provide a measure of protection from this contamination. Certain greases, such as calcium and aluminum-complex, are highly water-resistant.

Sodium-soap greases are water-soluble and should not be used in applications involving water.

Either dissolved or suspended water in lubricating oils can exert a detrimental influence on bearing fatigue life. Water can cause bearing etching that also can reduce bearing fatigue life. The exact mechanism by which water lowers fatigue life is not fully understood. It has been suggested that water enters micro-cracks in the bearing rings that are caused by repeated stress cycles. This leads to corrosion and hydrogen embrittlement in the micro-cracks, reducing the time required for these cracks to propagate to an unacceptable-sized spall.

Water-based fluids, such as water glycol and invert emulsions, also have shown a reduction in bearing fatigue life. Although water from these sources is not the same as contamination, the results support the previous discussion concerning water-contaminated lubricants.

GREASE SELECTION

The successful use of bearing grease depends on the physical and chemical properties of the lubricant as well as application and environmental conditions. Because the choice of grease for a particular bearing under certain service conditions is often difficult to make, you should consult with your lubricant supplier or equipment maker for specific questions about lubrication requirements for your application. You also can contact your Timken engineer for general lubrication guidelines for any application.

Grease must be carefully selected with regard to its consistency at operating temperature. It should not exhibit thickening, separation of oil, acid formation or hardening to any marked degree. It should be smooth, non-fibrous and entirely free from chemically active ingredients. Its dropping point should be considerably higher than the operating temperature.

ENGINEERING

LUBRICATION

Timken® application-specific lubricants were developed by leveraging our knowledge of tribology and antifriction bearings, and how these two elements affect overall system performance. Timken lubricants help bearings and related components operate effectively in demanding industrial operations. High-temperature, anti-wear and water-resistant additives offer superior protection in challenging environments. Table 23 provides an overview of the Timken greases available for general applications. Contact your Timken engineer for a more detailed publication on Timken lubrication solutions.

TABLE 23. GREASE LUBRICATION SELECTION GUIDE

ENVIRONMENT		APPLICATION
High Wear • Moderate Loads Moderate Speeds Moderate Temperatures	Timken Premium All-Purpose Industrial Grease	Agriculture • Bushings/Ball Joints Truck and Auto Wheel Bearings Heavy-Duty Industrial
Extreme Heat • Heavy Loads High Sliding Wear Dirty Environments Slow Speeds • Shock Loading	Timken Construction and Off-Highway Grease	Agriculture/Mining • Cement Plants Construction/Off Road • Rock Quarry Earth-Moving Equipment Fleet Equipment • Heavy Industry Pivot Pins/Splined Shafts
Wet and Corrosive Conditions Quiet Environments • Light Loads Moderate to High Speeds Moderate Temperatures Light Load Moderate Water	Timken Ball Bearing Pillow Block Grease	Lightly Loaded Pillow Blocks Idler Pulleys • Oven Conveyors Electric Motors • Fans • Pumps Alternators • Generators
Corrosive Media • Extreme Heat Heavy Loads • Wet Conditions Slow to Moderate Speeds	Timken Mill Grease	Aluminum Mills • Paper Mills Steel Mills • Offshore Rigs Power Generation
Incidental Food Contact Hot and Cold Temperatures Moderate to High Speeds Medium Loads	Timken Food Safe Grease	Food and Beverage Industries Pharmaceuticals
Extreme Low and High Temperatures Severe Loads Corrosive Media Slow to Moderate Speeds	Timken Synthetic Industrial Grease	Wind Energy Main Bearing Pulp and Paper Machines General Heavy Industry Marine Applications Centralized Grease Systems
Moderate Speeds Light to Moderate Loads Moderate Temperatures Moderate Water	Timken Multi-Use Lithium Grease	General Industrial Applications Pins and Bushings • Track Rollers Water Pumps Plain and Antifriction Bearings

This selection guide is not intended to replace the specifications by the equipment builder, who is responsible for its performance.

Many bearing applications require lubricants with special properties or lubricants formulated specifically for certain environments, such as:

- Friction oxidation (fretting corrosion).
- Chemical and solvent resistance.
- Food handling.

For assistance with these or other areas requiring special lubricants, consult your Timken engineer.

TIMKEN SPHERICAL ROLLER BEARING CATALOG 53

GREASE USE GUIDELINES

It is important to use the proper amount of grease in the application. In typical industrial applications, the bearing cavity should be kept approximately one-third to one-half full. Less grease may result in the bearing being starved for lubrication. More grease may result in churning. Both conditions may result in excessive temperature. As the grease temperature rises, viscosity decreases and the grease becomes thinner. This can reduce the lubricating effect and increase leakage of the grease from the bearing. It also may cause the grease components to separate, leading to a general breakdown of the lubricant properties. As the grease breaks down, bearing torque increases. In the case of excess grease resulting in churning, torque may also increase due to the resistance caused by the grease.

For best results, there should be ample space in the housing to allow room for excess grease to be thrown from the bearing. However, it is equally important that the grease be retained all around the bearing. If a large void exists between the bearings, grease closures should be used to prevent the grease from leaving the bearing area.

Only in low-speed applications may the housing be entirely filled with grease. This method of lubrication is a safeguard against the entry of foreign matter, where sealing provisions are inadequate for exclusion of contaminants or moisture.

During periods of non-operation, it is often wise to completely fill the housings with grease to protect the bearing surfaces. Prior to restarting operation, remove the excess grease and restore the proper level.

Applications utilizing grease lubrication should have a grease fitting and a vent at opposite ends of the housing near the top. A drain plug should be located near the bottom of the housing to allow the old grease to purge from the bearing.

Bearings should be relubricated at regular intervals to prevent damage. Relubrication intervals are difficult to determine. If plant practice or experience with other applications is not available, consult your lubricant supplier.

Timken offers a range of lubricants to help bearings and related components operate effectively in demanding industrial operations. High-temperature, anti-wear and water-resistant additives offer greater protection in challenging environments. Timken also offers a line of single- and multi-point lubricators to simplify grease delivery.

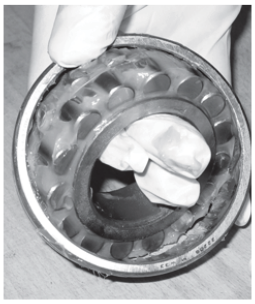

Fig. 21. Grease can easily be packed by hand.

Fig. 22. Mechanical grease packer.

Grease application methods

Grease, in general, is easier to use than oil in industrial bearing lubrication applications. Most bearings that are initially packed with grease require periodic relubrication to operate efficiently.

Grease should be packed into the bearing so that it gets between the rolling elements – the rollers or balls. For tapered roller bearings, forcing grease through the bearing from the large end to the small end will ensure proper distribution.

Grease can be easily packed into small- and medium-size bearings by hand (fig. 21). In shops where bearings are frequently regreased, a mechanical grease packer that forces grease through the bearing under pressure may be appropriate (fig. 22). Regardless of the method, after packing the internal areas of the bearing, a small amount of grease also should be smeared on the outside of the rollers or balls.

The two primary considerations that determine the relubrication cycle are operating temperature and sealing efficiency. High-operating-temperature applications generally require more frequent regreasing. The less efficient the seals, the greater the grease loss and the more frequently grease must be added.

Grease should be added any time the amount in the bearing falls below the desired amount. The grease should be replaced when its lubrication properties have been reduced through contamination, high temperature, water, oxidation or any other factors. For additional information on appropriate regreasing cycles, consult with the equipment manufacturer or your Timken engineer.

CONSISTENCY

Greases may vary in consistency from semi-fluids that are hardly thicker than a viscous oil to solid grades almost as hard as a soft wood.

Consistency is measured by a penetrometer in which a standard weighted cone is dropped into the grease. The distance the cone penetrates (measured in tenths of a millimeter in a specific time) is the penetration number.

The National Lubricating Grease Institute (NLGI) classification of grease consistency is shown below:

TABLE 24. NLGI CLASSIFICATIONS

NLGI Grease Grades	Penetration Number
0	355-385
1	310-340
2	265-295
3	220-250
4	175-205
5	130-160
6	85-115

Grease consistency is not fixed; it normally becomes softer when sheared or "worked." In the laboratory, this "working" is accomplished by forcing a perforated plate up and down through a closed container of grease. This "working" does not compare with the violent shearing action that takes place in a bearing and does not necessarily correlate with actual performance.

TIMKEN GREASE INTERCHANGE GUIDE

TIMKEN

Timken Premium All Purpose Industrial LC-2 Grease	Timken Construction and Off-Highway Grease	Timken Ball Bearing Pillow Block Grease	Timken Mill Grease	Timken Multi-Use Lithium EP1 and EP2 Grease
Castrol 4020/220-2™	Castrol Moly 860-2ES™	Conoco Phillips Polyurea 2™	Castrol Molub-Alloy 777-2ES™	Castrol Longtime™ PD
Castrol 8060/220-2™	Castrol Contractor Grease 2™	Chevron SRI™	Chem & Lube Black Magic™	Castrol Spheerol EPL
Chevron Delo® EP 2	Conoco Phillips Super Lube M EP™	Citgo Polyurea 2™	Chevron Ulti-Plex EP 2™	Conoco Phillips Conolit EP
Chevron RPM Automotive LC Grease EP-2™	D.A. Stuart Molyplex EP 2™	Citgo Polyurea MP2™	Conoco Phillips HD Calcium™	Dow Molykote® BR2
Citgo Lithoplex MP2™	Exxon Mobil Centaur Moly	Conoco Phillips Polyurea 2™	Conoco Phillips Milube™	Exxon Mobil Beacon EP
Citgo Premium Lithium EP 2™	Exxon Mobil Ronex Extra Duty Moly™	Exxon Mobil Polyrex® EM	Exxon Mobil Ronex Extra Duty 2™	76® Unoba EP
Conoco Phillips Super-STA® 2	Fuchs Moreplex 2™	Exxon Mobil Unirex N™	FAG Arcanol Load 400™	CITGO Premium Lithium EP-2
Exxon Mobil Ronex MP™	LUBRIPLATE® 3000	LUBRIPLATE® Poly HP-2 Grease	Kyodo Yushi Palmax RBG™	Chevron Multifak® EP
Exxon Mobil Unirex EP 2™	Mobilgrease® Moly 52	Mobilgrease® AW2	Loctite ViperLube™	Fina Lithium EP
FAG LOAD220™	Mystik® Tetrimoly® Extreme	Petro-Canada EMB™	LUBRIPLATE® 1444	Chevron Dura-Lith® EP
Fuchs (Century) Univrl 2™	Pennzoil® Multipurpose EP 302	Shell Alvania RL3™	Shell Retinax® Grease HD	FAG® Arcanol-MULTI2™
Lubrication Engineers Almagard® 3752	Pennzoil® Premium Lithium Complex 2 with Moly	Shell Dolium® BRB	SKF LGHB2™	LUBRIPLATE® 1200-2
LUBRIPLATE® 1552	Petro-Canada Precision Moly EP 2™	SKF LGHP2™		LUBRIPLATE® 1241, 1242
Mobilgrease® XHP 222	Schaeffer Moly Ultra Supreme 238™	Unocal 76 Unolife Grease™		LUBRIPLATE® 630-AA
Pennzoil® Pennlith® EP 712	Shell Retinax CMX 2™			SKF® LGMT2
Pennzoil® Premium Lithium Complex 2	Texaco Starplex® Moly MPGM2			SKF® LGEP2
Petro-Canada Multipurpose EP 2™	Unocal 76 Megaplex™			Shell® Alvania EP
Royal Purple® Ultra-Performance® 2				Mobilux® EP
Shell Albida® LC 2				
Shell Retinax® LC 2				
SKF LGWA2™				
SKF LGEP2™				
Texaco Starplex® 2				
Unocal 76 Multiplex Red™				

Timken Synthetic Industrial LC-1.5 Grease	Timken Food Safe Grease
Mobilith SHC™ 460	SKF LGFP2™
Chevron Ulti-Plex Synthetic Grease EP™	FAG Arcanol FOOD2™
Conoco Phillips SynCon Extra Long Life™	Keystone Nevastane HT/AW2™
Exxon Mobil SHC® PM	LE 4025 H1 Quinplex™
Shell Albida® 460	LPS ThermaPlex Foodlube ™
Texaco Starfak® PM	LUBRIPLATE® FGL-2
	Mobilgrease® FM 102
	Petro-Canada Purity FG™
	Royal Purple® Ultra-Performance® Clear FDA Grease

⚠ WARNING

Failure to observe the following warnings could create a risk of death or serious injury.

Proper maintenance and handling practices are critical. Failure to follow installation instructions and to maintain proper lubrication can result in equipment failure, creating a risk of serious bodily harm.

All products and company names on this document are trademarks or registered trademarks of the respective owners.

www.timken.com

Timken® is a registered trademark of The Timken Company.

©2012 The Timken Company
Printed in U.S.A.
04-12: 29 Order No. 7557

11.8 TRAFFIC CONTROL EQUIPMENT MANUALS AND SPECIFICATIONS

11.8.1 WARNING GATE – B&B ROADWAY VW-5

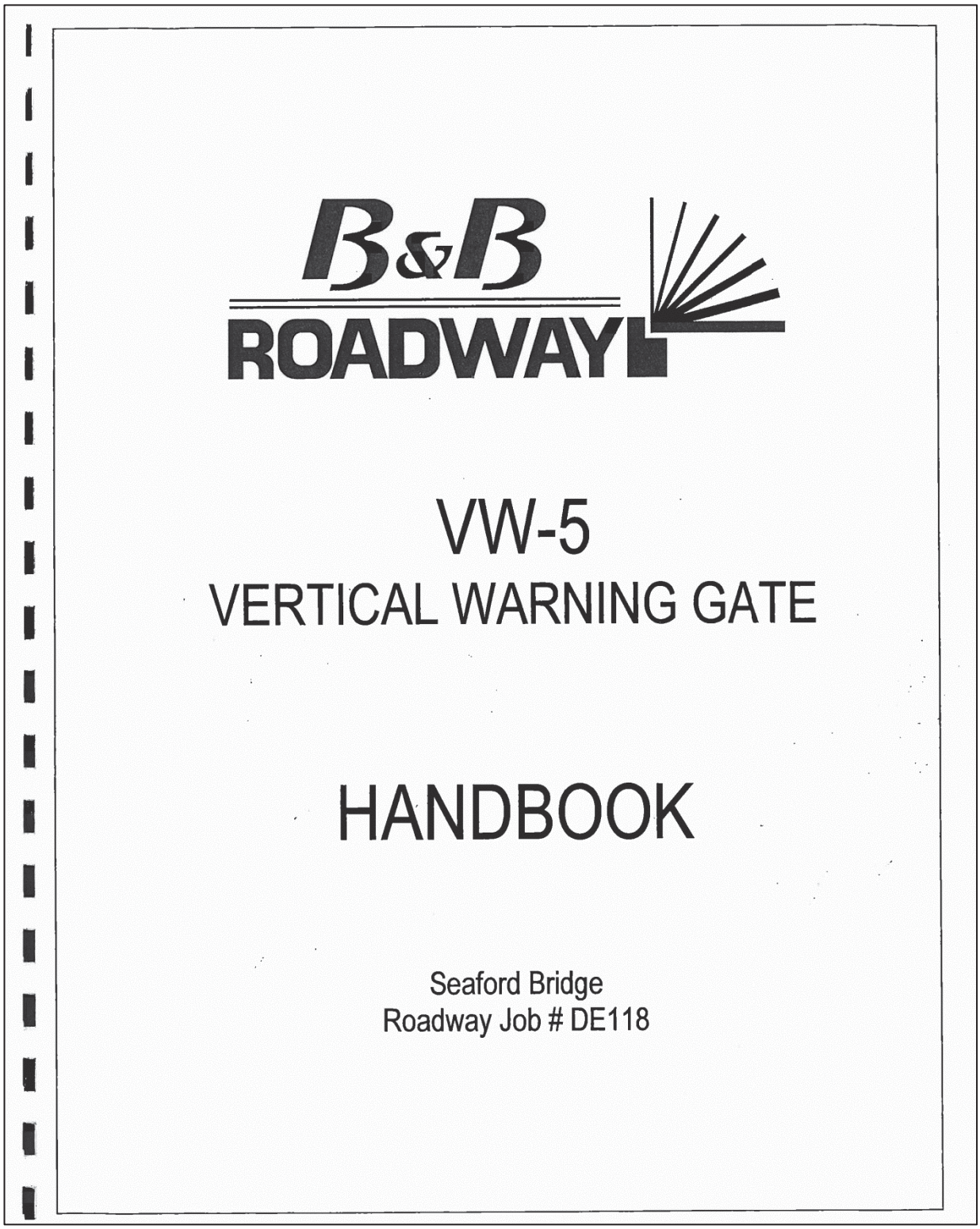

VW-5 VERTICAL WARNING GATE HANDBOOK

TABLE OF CONTENTS

Roadway Job #: DE118

Location: Seaford Bridge

Section 1: Installation Instructions

Section 2: Manual Operation Instructions

Section 3: Maintenance Guidelines

Section 4: Basic Assembly Drawings
BV5-A003 Operator Assembly
ALS-A012 Limit Switch Assembly

Section 5: Accessories Specifications
Arm Lights
Flasher
Limit Switch

Section 6: Drawings and Specifications Pertaining to This Installation
VW-5 Specifications for Job DE118
BV5-E313 Wiring Diagram
BV5-I029 Installation Drawing

Section 7: Warranty

PLEASE NOTE:: *Save time* and prevent potential damage to your barrier gate. Read all pertinent instructions before beginning a task. If you do not understand an instruction, require spare parts, or need technical assistance on a detail not covered by the handbook, please contact the factory.

Roadway Manufacturing
15191 Hwy 243
Russellville, AL 35654

(888) 560-2060 toll free
(256) 332-4036 fax

VW-5 Handbook Table of Contents

Section 1

Installation Instructions

VW-5 VERTICAL WARNING GATE HANDBOOK

INSTALLATION INSTRUCTIONS

BEFORE YOU BEGIN: You will *save time* and prevent potential damage to the gate by reading all instructions before beginning installation. Follow instructions carefully and in order. If you do not understand an instruction, you can obtain assistance by calling the factory toll free at (888) 560-2060.

Preparation:

1. **Prepare the gate foundation** according to the plans prepared by the project engineer. If installing as a replacement using the existing foundation, double check the anchor bolt size and pattern to be sure they will work with the new equipment. (See installation drawing following for dimensions.)
2. **Arrange to have necessary equipment available during installation**. A forklift, hoist or other lifting equipment will be required. You will also need standard tools (wrenches, screw drivers, etc.) and some apparatus to prop or hold the arm up at the correct height (closed to traffic position) until the counterweights are installed (such as a pair of sawhorses and shimming blocks). A *reversible*, electric (if power will be available) or battery-powered drill is very useful for manually operating the gate and is recommended.

Installation:

CAUTION: Do NOT install the arm or counterweights until *Step 9*!

3. Carefully **set the operator housing over the anchor bolts**. Add flat washers and tighten the nuts. Seal between the base and the foundation with silicon caulking.

   NOTE: Be sure the operator is turned with the roadway side toward the roadway. The main arm shaft (extending out of the housing near the top) will be offset toward the roadway. Refer to the installation drawing included in this handbook.

4. Test the gate's basic operation. **Manually operate the gate** with the hand crank or drill adapter included (mounted inside the housing). Refer to MANUAL OPERATION PROCEDURE in this handbook if you are not certain of the procedure.

   IMPORTANT: The limit switch has been pre-set during testing at the factory and the gate is shipped with the mechanism in the OPEN-TO-TRAFFIC (i.e. RAISED) position. Be sure to crank in the proper direction ("lower / close" direction first) to avoid getting the mechanism out of synchronization with the limit switch settings. If you do inadvertently crank the mechanism the wrong way, simply reverse the cranking direction (manually) until you get back to the correct synchronization.

HINT: If your gate does not have a gong or other equipment mounted directly to the top cover, manual operation will be more convenient with the top cover of the housing removed.

5. **Wire the gate** according to the wiring diagram. A copy of the wiring diagram for this gate is included in this installation handbook. The wiring diagram is also mounted inside the access door of the gate. **This must be done by a qualified electrician!** *Do not run the gate yet*!
6. **Initially test** the gate as follows.
   A) First, **manually crank the gate to an intermediate position** between full open and full close.
   B) **Reconnect power**. Be ready to break the circuit (issue a "stop" signal or disconnect power) in case the gate functions differently than expected.
   C) **Give the gate a signal to "open"** (i.e. raise the arm).

   NOTE: If your gate has a crank safety switch, the circuit is disabled whenever the hand crank or drill crank adapter is in place on the shaft extending through the motor brake. Or, if your gate has door safety switches, opening either access door disables the control circuit, preventing automatic operation. The door safety switches have a "pull-to-override" feature for testing purposes. Pull the plunger on the switch to enable the circuit.

   HINT: If the gate operates opposite of that expected (i.e. it "closes/lowers" when it is supposed to "open/raise" or the reverse) check the following:

   a - If your gate uses three phase power, reverse any two of the three incoming power leads to the motor.

   b - Manually operate the gate to see if the gate was cranked backwards in step 2 above - if it was, it will also appear to have incorrect limit switch settings (i.e. not stopping at the correct positions automatically, refusing to operate, etc.). Correct this by manually operating the gate until the transmission crank is again positioned within the correct range of rotation. See drawing following, illustrating the correct rotation range.

   NOTE: Each gate is fully tested through a minimum of 20 complete cycles at the factory before shipping. The limit switch cams were preset during factor testing and should not require significant adjustment, if any adjustment at all! *Please contact the factory before adjusting limit switch cams at (888) 560-2060.*

VW-5 Installation Instructions Page 1-2

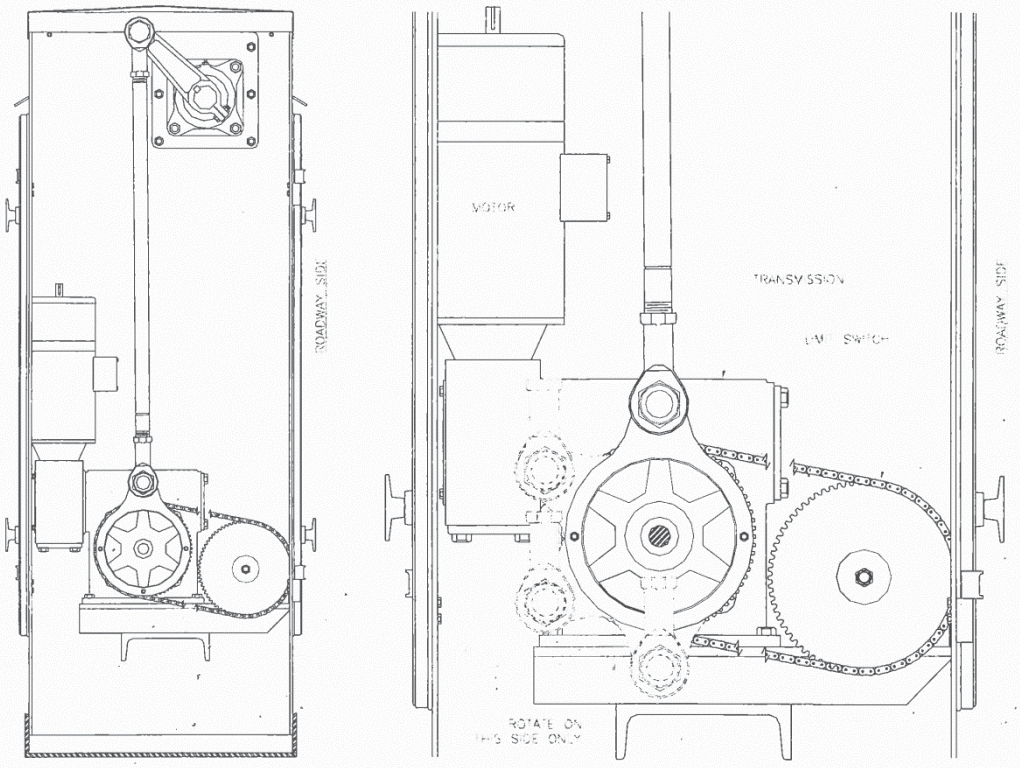

7. **Continue testing** by issuing a "close/lower" signal and continuing through all other operation sequences, including emergency reverse (i.e. issue an "open/raise" signal while the gate is closing).
8. **Operate the gate to the fully "closed" (down) position**, allowing it to stop automatically.
9. **DISCONNECT POWER**.
10. **Remove the bolt connecting the main arm crank to the upper rod end**. See next page illustration.

VW-5 Installation Instructions Page 1-3

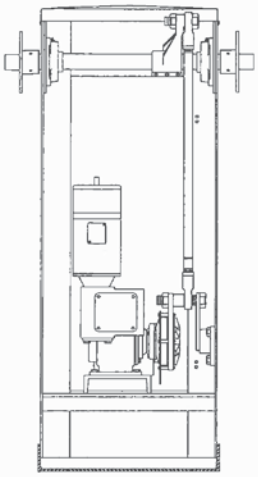

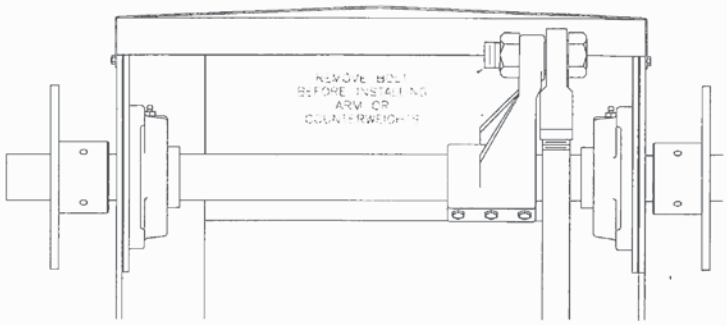

11. **Install the gate arm**. *IMPORTANT: Keep the arm propped up until the counterweights are installed*. Slide the arm over the base and fasten with the bolts provided. Refer back to the arm assembly drawing in this handbook. If your arm uses truss cables, attach the cables using the turnbuckles and tighten to remove slack. Do not leave slack, allowing the arm to droop, and do not tighten excessively, flexing the arm upward. Do NOT unfasten the bumper rod yet.
12. **Install the counterweights**. Balance the counterweights between each side arm channel. Refer to the drawing or photo following to determine the correct arrangement for your gate.
13. **Check and adjust the balance of the arm and counterweights**. Carefully remove the props. Adjust by turning the jackbolt to slide the counterweights until the arm is balanced. Tighten the bolts securely to hold the counterweights in place.
14. **Replace and tighten the bolt to connect the crank and rod end**.
15. The total swing angle of the arm is 90 degrees. This total swing angle can not be adjusted unless your gate was ordered with a special adjustable length crank. However, the positions of the extreme ends of travel can be adjusted (cocked a few degrees from vertica and horizontal). This may be desirable if you wish to have the closed/down position of the arm parallel to a sloping roadway, for example. First, operate the gate to the position you wish to align (i.e. raised or lowered). Loosen the nuts at each end of the connecting rod where it screws into the rod ends. Twist the connecting rod, observing the change in arm position. The new raised and lowered positions of the arm will be approximately 90 degrees apart.

VW-5 Installation Instructions Page 1-4

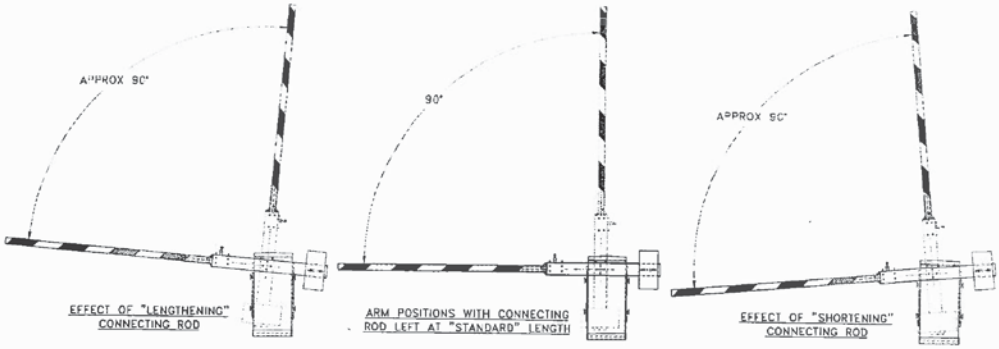

16. Check to be sure that power is still disconnected. **Then connect wiring for the arm lights**.
17. Install or wire any additional optional equipment.
18. **Retest the operator under power** with all equipment installed.
19. With the gate in the lowered position, **unfasten bumper rod (if your gate has one). Shorten or lengthen as required by loosening the jam nuts and turning the threaded portion**. Retighten the jam nuts after adjustment. The arm should rest on the bumper rod, but not prevent the arm from traveling to the fully closed position, thereby jarring the arm and possibly even causing damage to the bumper rod.

Roadway Manufacturing
15191 Hwy 243
Russellville, AL 35654

(888) 560-2060 toll free
(256) 332-4036 fax

Section 2

Manual Operation Instructions

VW-5 VERTICAL WARNING GATE HANDBOOK

MANUAL OPERATION PROCEDURES

NOTE: Follow instructions carefully and in order. If you do not understand an instruction, you can obtain assistance by calling the factory toll free at (888) 560-2060.

SUGGESTION: It is recommended that a fully charged, battery powered drill be kept in the control house for the purpose of more quickly and easily manually operating the gates. Also, if the gates have lockable doors, a key will be required to gain access to the mechanism for manual operation.

Manual or Emergency Operation:

1. As a precaution, **DISCONNECT POWER** (flip power switch off) to prevent any possible unexpected automatic operation during manual operation.
2. **Release the motor brake**. The brake is on top of the electric motor. It is released by rotating the knob on top of the cover about 90 degrees.

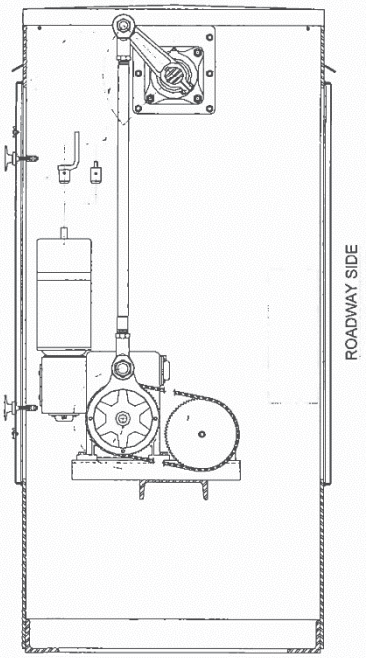

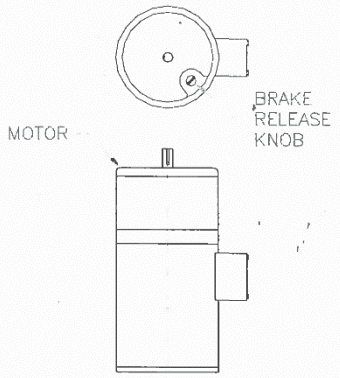

VW-5 Manual Operation Procedure Page 2-1

3. **Locate the drill crank adapter or hand crank.** These accessories are mounted on the wall inside each gate housing.

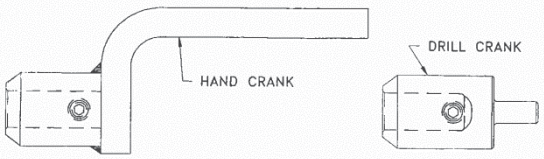

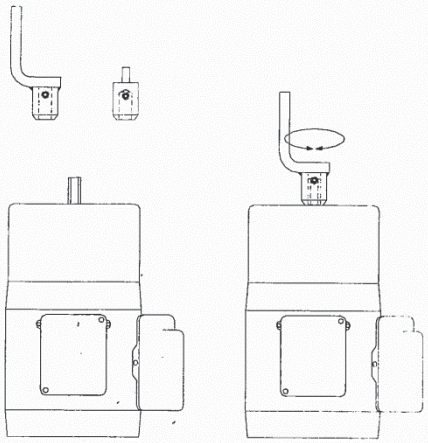

4. **Place the drill crank adapter or hand crank over the shaft** extending through the brake on top of the electric motor.

5. **Check the label on the brake cover to determine the correct cranking rotation** to operate the gate in the desired direction.

IMPORTANT: Be sure to crank in the proper direction. Cranking in the wrong direction will appear to operate the gate correctly, but the transmission crank will be in the wrong rotation range, causing the mechanism to be out of synchronization with the limit switch. (See sketch below.) If you do inadvertently crank the mechanism the wrong way, simply reverse the cranking direction until the transmission crank is again operating in the

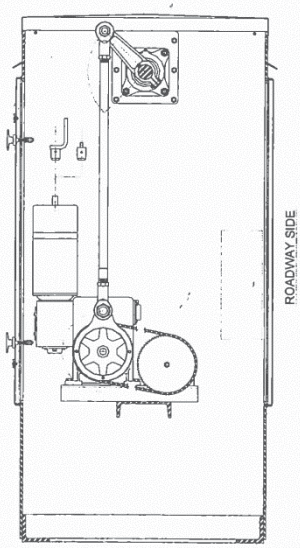

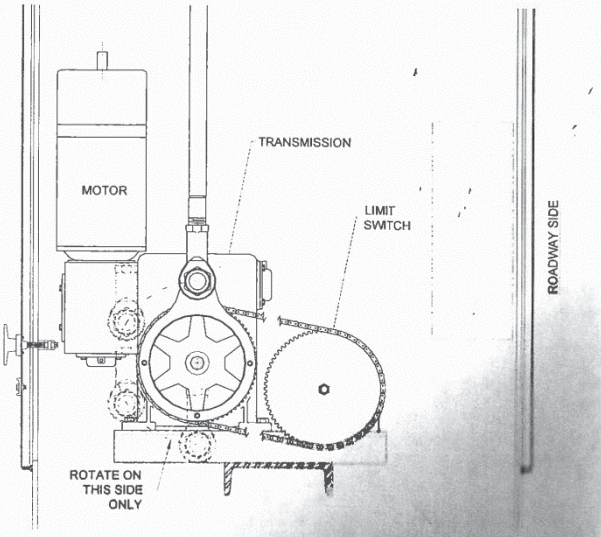

VW-5 Manual Operation Procedure

correct rotation range and the mechanism is again synchronized with the limit switch. DO NOT ATTEMPT TO CORRECT BY ADJUSTING LIMIT SWITCHES!

6. **Crank the gate** to the desired position.

   HINT: If you anticipate a need to manually operate the gate several times and your gate does not have a gong or other equipment mounted directly to the top cover, manual operation will be more convenient with the top cover of the housing removed.

7. **Reset the brake.**
8. **Remove the hand crank or drill crank adapter.**
9. **Reconnect power** (flip power switch on).
10. **Close (and lock) the gate.** Never leave the gate unsecured and/or the mechanism exposed to the weather.

Roadway Manufacturing
15191 Hwy 243
Russellville, AL 35654

(888) 560-2060 toll free
(256) 332-4036 fax

Section 3

Maintenance Guidelines

VW-5 VERTICAL WARNING GATE HANDBOOK

MAINTENANCE GUIDELINES

If you have questions regarding maintenance procedures or recommendations, you can obtain assistance by calling the factory toll free at (888) 560-2060.

CAUTION: ALWAYS DISCONNECT POWER BEFORE SERVICING EQUIPMENT!

NOTE: Automatic operation is disabled any time the drill crank adapter or the hand crank is in place on the shaft through the brake, if your gate has a crank safety switch. You must remove the hand crank or drill crank adapter to allow normal automatic operation. Also, if your gate was ordered with optional door safety switches, when either access door is opened for service, the gate is disabled from automatic operation. The door safety switch is a white, plunger-type switch mounted at the top of each door. These switches have a pull-to-override feature if you find it necessary to operate the gate under power during service. The door switches will reset automatically when the doors are closed.

NOTE: For typical applications, perform the following maintenance procedures *after the first month of service and at 6 month intervals thereafter*.

Transmission:

GENERAL: The double reduction worm gear transmission used on the VW-5 has two compartments. The objective of the maintenance procedure and schedule is to monitor and maintain the oil level in each compartment to ensure smooth operation and long life.

IMPORTANT*: *Use a multi-viscosity synthetic oil with an EP additive (such as Mobil SHC 629). The transmission is shipped filled with Mobil SHC 629 in both cases. If you intend to change to a different oil, you should drain all old oil first and flush with a light flushing oil to avoid mixing the oils unless the lubricant manufacturer has specifically given other instructions.

1. **Open the access door on the roadway side and DISCONNECT POWER** using the disconnect switch.
2. **Check the oil level** in each case section through the oil level plugs (see drawing on page 3-2 to locate level and fill plugs).
3. **If the oil has become discolored, milky, or dirty, change the oil**. Drain the old oil, flush with a light flushing oil and refill to the oil level. Cycle the operator a few times and recheck the level before leaving. Do not overfill. *Be sure to use the correct oil in each case (see above).*
4. **If the oil level is low, remove the fill plugs and add oil** to bring it to the proper level at the level plugs. (Note: Very little, if any, oil will normally be required to top off the level. If

the oil level is very low, check for leaks.) Do NOT overfill (higher than level plugs) - this can cause overheating. *Be sure to use the correct oil in each case (see above).*

5. **Reconnect power.**

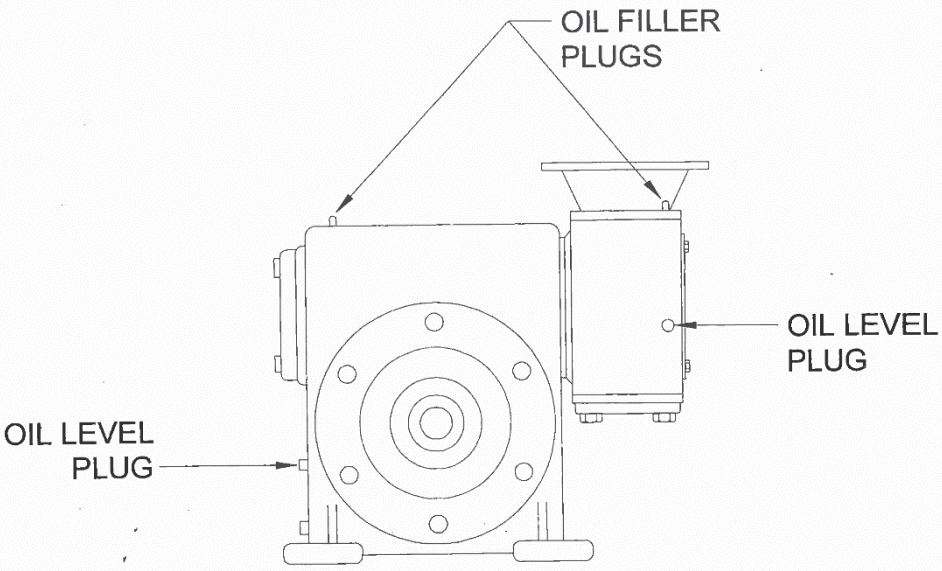

Arm Shaft Bearings and Rod Ends:

GENERAL: The main purpose of this procedure is to keep the operating mechanism well lubricated to ensure smooth operation. Ball bearings and rod ends have zerk type grease fittings for relubrication. (See illustration on page 3-3) Use a grease lubricant such as Texaco Marfak 2.

1. **Open the access door on the roadway side and DISCONNECT POWER** using the disconnect switch.
2. **Grease the shaft bearings**. The main arm shaft is mounted in a pair of ball bearings and, if your unit has a sidewalk arm, the sidewalk arm shaft is also mounted in a pair of bearings. The bearings are inside the housing, mounted on the side walls near the top of the operator.

   NOTE: The 3-bolt-mounted bronze spherical bearing used for the auxiliary crank is permanently lubricated and does not require routine lubrication.
3. **Grease the rod ends**. The rod ends used on each end of the connecting rod must also be greased. The connecting rod is the vertical round rod inside the housing, which connects the main arm crank (upper) and transmission crank plate (lower).
4. **Reconnect power.**

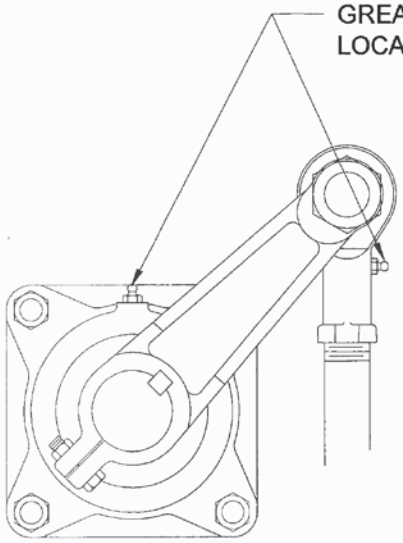

Limit Switch:

GENERAL: The objective of this maintenance procedure is to prevent corrosion and seizing of the limit switch chain and to prevent excessive slack in the chain (possibly resulting in the limit switch becoming out of sync with the mechanism, causing poor operation).

1. **Open the access door on the roadway side and DISCONNECT POWER** using the disconnect switch.
2. **Lubricate the roller chain**. IMPORTANT: Use a lubricant intended for roller chain.

   NOTE: Chain lubricant is available in spray cans and is convenient for this procedure.
3. **Check the roller chain tension**. Roller chain stretches over time. There should be no slack in the chain. **If the chain is loose, tighten it** by moving the limit switch as follows. The limit switch is mounted to the cross channel with 4 bolts. The mounting holes are slotted. Loosen the nuts on these bolts slightly and pull the limit switch toward you to tighten the chain. Retighten the nuts. Be sure to tighten the nuts enough to prevent slipping.
4. **If you can not pull the limit switch toward you far enough to tighten the chain, you have probably reached the end of the slot. In this case, you will need to shorten the chain.** First, locate the master link in the chain. Using a chain breaking tool, remove one or two regular links next to the master link. Reconnect the chain with the master link. Then tighten the chain as described above. Cycle the gate manually to check the limit switch settings (be sure the gate arm stop and start positions are accurate, etc.).

VW-5 Maintenance Guidelines Page 3-3

NOTES: Manually operate the gate using the drill crank adapter (recommended if you have a drill) or the hand crank. **If you are not fully familiar with the procedure for manual operation, refer to MANUAL OPERATION PROCEDURE in this handbook.** *Be sure to remove the drill crank adapter or hand crank when you are done or the gate will not operate automatically.*

5. **Reconnect power**.

Clutch:

GENERAL: The objective of this procedure is to adjust the pressure applied by the clutch to prevent slipping during ***normal*** operating conditions. This is not a routine maintenance procedure. ONLY use this procedure to correct slippage problems occurring during normal operating conditions.

If the gate appears to hesitate or will not move under NORMAL OPERATING CONDITIONS, perform the following.

1. **Carefully open either access door partway (no more than 90 degrees)**. Opening the door further can result in the sidearms crushing the door as the gate moves.
2. **Locate the stop button and/or disconnect switch and be prepared to disable the barrier.**
3. **Put the safety switch in the "test" position** by pulling the white plunger out to the extended position. NOTE: If your gate has this device, it is located at the top of the door opening. If your gate has this device and you do not put the switch in the "test" position, the gate will not operate.
4. Operate the gate and **observe whether the teardrop-shaped crank plate slips significantly during operation** (i.e. does not turn or hesitates intermittently when the transmission operates).
5. **If the clutch is slipping, tighten the 4 bolts**, which adjust the clutch tension to increase the pressure and "hold" of the clutch. Tighten bolts evenly, a fraction of a turn at a time.
6. **Rerun gate after each adjustment until satisfactory operation is achieved.**
7. **Close and lock doors.** Safety switches will reset automatically.

Roadway Manufacturing
15191 Highway 243
Russellville, AL 35654

(888) 560-2060 toll free
(256) 332-4036 fax

Section 4

Basic Assembly Drawings

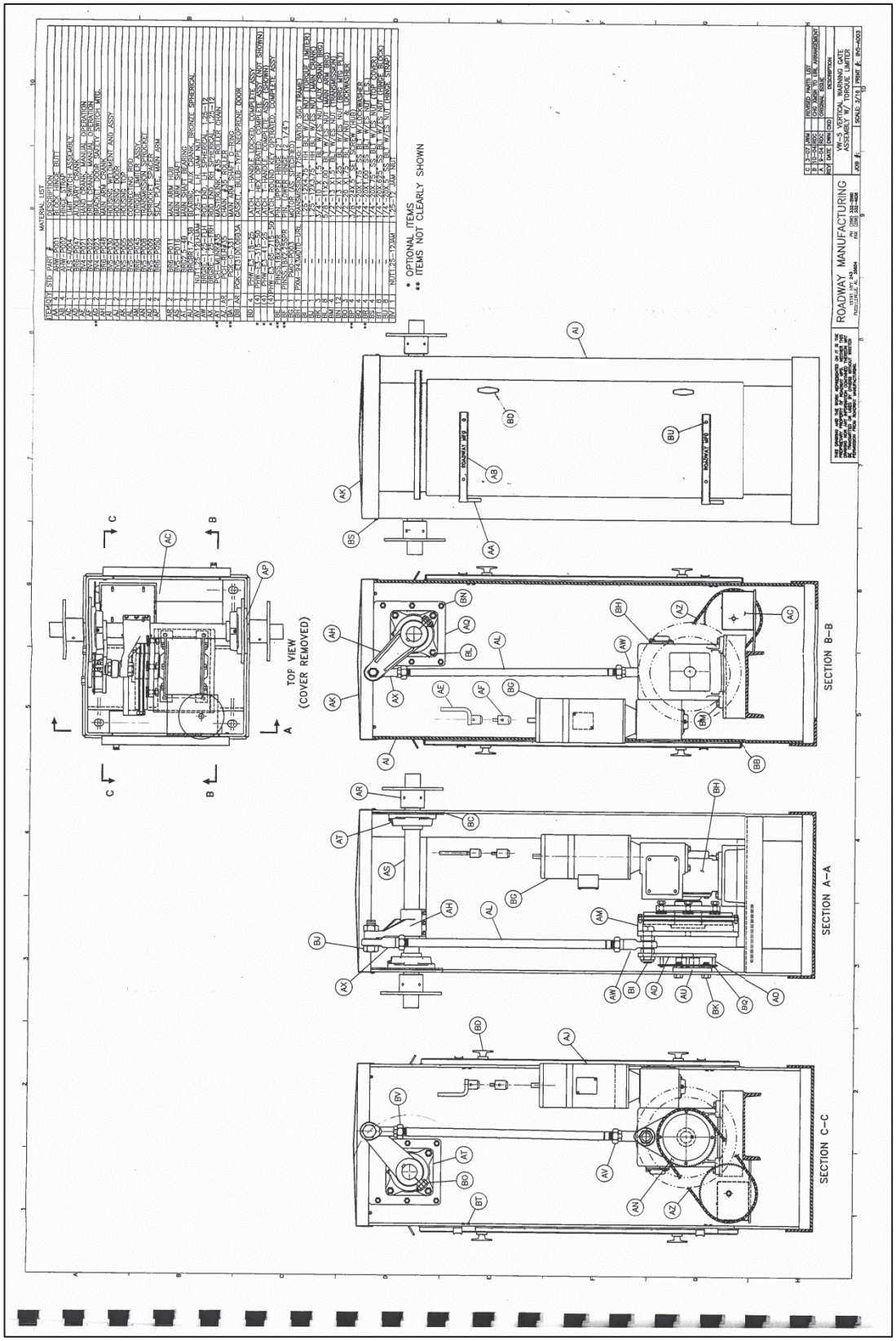
ROADWAY MANUFACTURING
SECTION B–B
SECTION A–A
SECTION C–C
TOP VIEW
(COVER REMOVED)
* OPTIONAL ITEMS
** ITEMS NOT CLEARLY SHOWN

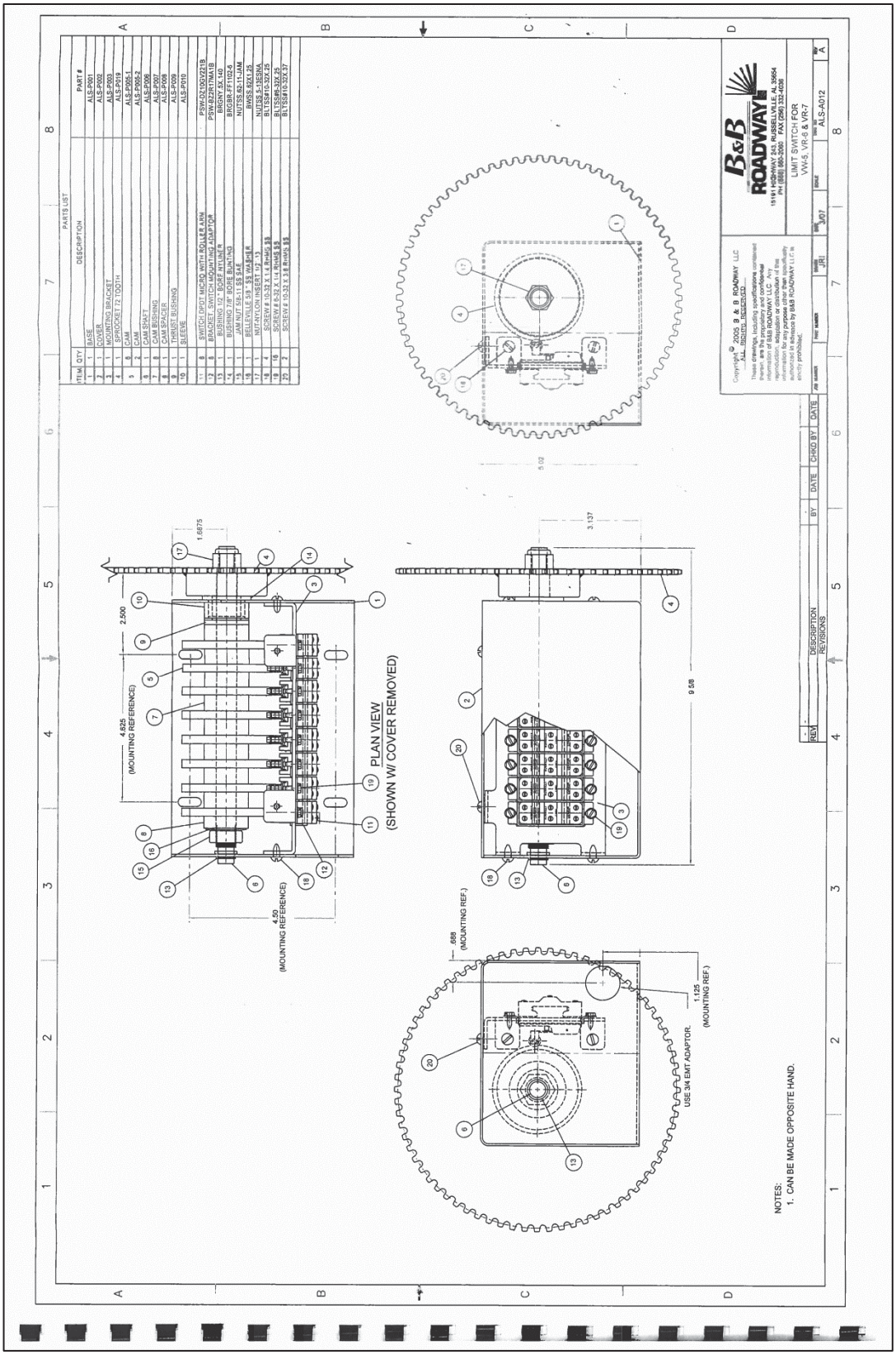
PARTS LIST
ITEM QTY DESCRIPTION PART #
1 1 BASE ALS-P001
2 1 COVER ALS-P002
3 1 MOUNTING BRACKET ALS-P003
4 1 SPROCKET 72 TOOTH ALS-P019
5 8 CAM ALS-P005-1
6 2 CAM ALS-P005-2
7 8 CAM SHAFT ALS-P006
8 8 CAM BUSHING ALS-P007
9 1 CAM SPACER ALS-P008
10 1 BRONZE BUSHING ALS-P009
11 1 BEARING ALS-P010
12 8 SWITCH CIPDT MICRO WITH ROLLER ARM PSW-D21GV2219
13 6 BRACKET, SWITCH MOUNTING ADAPTOR PSW-B2R17MA1B
14 1 BUSHING 1/2" BORE B NICHIFI BRSM-FX-1008
15 1 BUSHING 1" BORE B NICHIFI BRSM-FX-1016
16 1 JAM NUT 5/8-11 SS SAE NUTSS.62-11-JAM
17 1 BELLEVILLE 5/8 " SS WASHER BWSS.62X1.25
18 1 NUT-NYLON INSERT 1/2 -13 NUTSS.5-13ESNA
19 4 SCREW # 10-32 X 1 1/4 Phillips SS BLTSS#10-32X1.25
20 16 SCREW # 10-32 X 3/4 Phillips SS BLTSS#10-32X.75
25 2 SCREW # 10-32 X 3/8 Phillips SS BLTSS#10-32X.37
PLAN VIEW
(SHOWN W/ COVER REMOVED)
(MOUNTING REFERENCE)
USE 3/4 EMT ADAPTOR.
NOTES:
1. CAN BE MADE OPPOSITE HAND.
B&B ROADWAY LLC
LIMIT SWITCH FOR
VW-5, VR-6 & VR-7
ALS-A012
Copyright © 2005 B & B ROADWAY LLC
ALL RIGHTS RESERVED

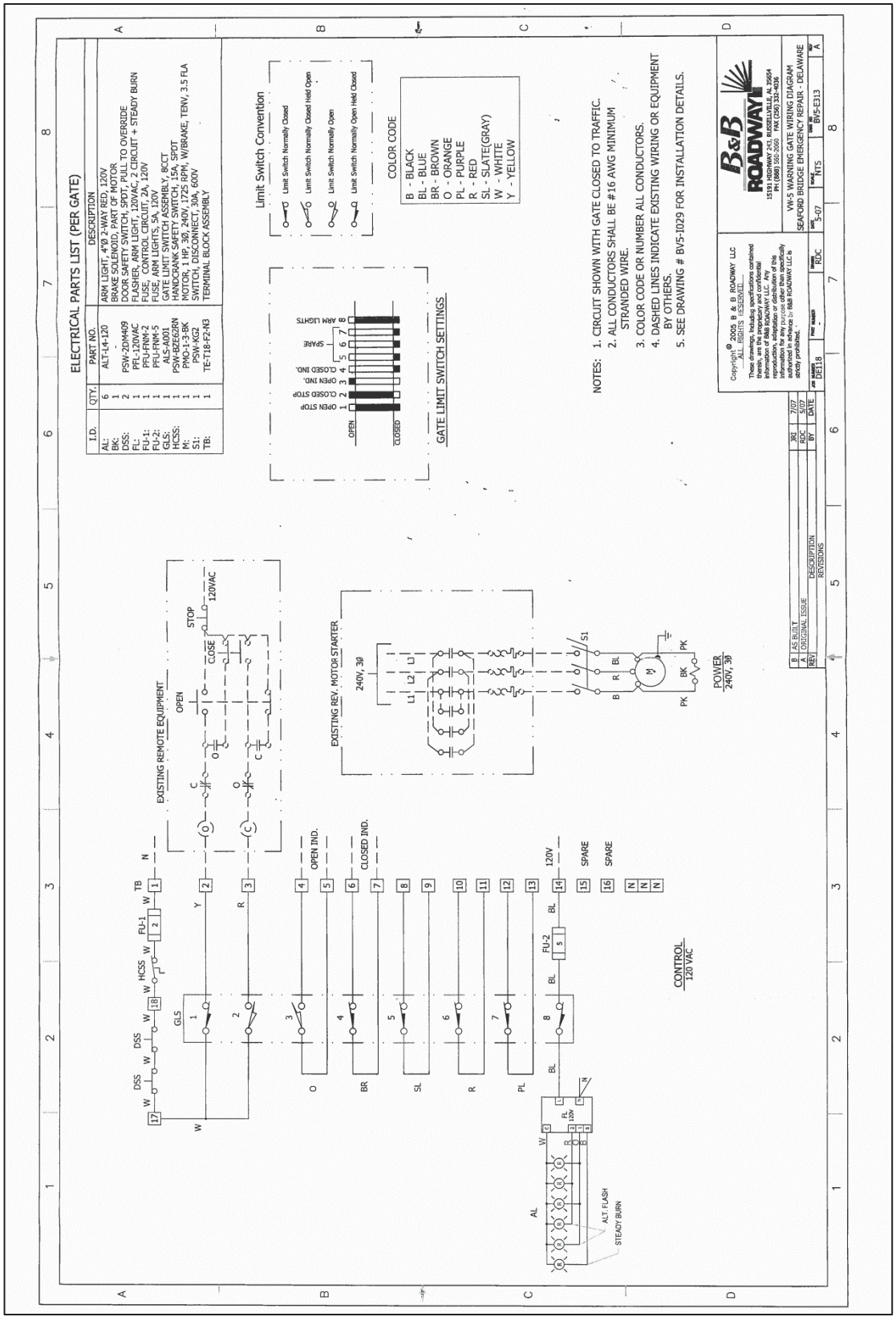
ELECTRICAL PARTS LIST (PER GATE)
I.D. | QTY. | PART NO. | DESCRIPTION
AL: 6 ALT-14-120 ARM LIGHT, 4"Ø 2-WAY RED, 120V
BK: 1 - BRAKE SOLENOID, PART OF MOTOR
DSS: 2 PSW-2DYM09 DOOR SAFETY SWITCH, PLL TO OVERRIDE
FU: 1 PFU-12VAC FLASHER, ARM LIGHT, 120VAC, 2 CIRCUIT + STEADY BURN
FU-1: 1 PFU-FNM-2 FUSE, CONTROL CIRCUIT, 2A, 120V
FU-2: 1 PFU-FNM-5 FUSE, ARM LIGHTS, 5A, 120V
GLS: 1 ALS-A001 GATE LIMIT SWITCH ASSEMBLY, 8CCT
HCSS: 1 PSW-BZE62RN HANDCRANK SAFETY SWITCH, 15A, SPDT
M: 1 PMO-1-3-BK MOTOR, 1 HP, 3Ø, 240V, 1725 RPM, W/BRAKE, TENV, 3.5 FLA
S1: 1 PSW-KG2 SWITCH, DISCONNECT, 30A, 600V
TB: 1 TE-T18-F2-N3 TERMINAL BLOCK ASSEMBLY
Limit Switch Convention
Limit Switch Normally Closed
Limit Switch Normally Closed Held Open
Limit Switch Normally Open
Limit Switch Normally Open Held Closed
GATE LIMIT SWITCH SETTINGS
OPEN STOP
CLOSED STOP
OPEN IND.
CLOSED IND.
SPARE
ARM LIGHTS
OPEN
CLOSED
COLOR CODE
B - BLACK
BL - BLUE
BR - BROWN
O - ORANGE
PL - PURPLE
R - RED
SL - SLATE(GRAY)
W - WHITE
Y - YELLOW
NOTES: 1. CIRCUIT SHOWN WITH GATE CLOSED TO TRAFFIC.
2. ALL CONDUCTORS SHALL BE #16 AWG MINIMUM STRANDED WIRE.
3. COLOR CODE OR NUMBER ALL CONDUCTORS.
4. DASHED LINES INDICATE EXISTING WIRING OR EQUIPMENT BY OTHERS.
5. SEE DRAWING # BV5-1029 FOR INSTALLATION DETAILS.
EXISTING REMOTE EQUIPMENT
OPEN
STOP
CLOSE
120VAC
EXISTING REV. MOTOR STARTER
240V, 3Ø
POWER
240V, 3Ø
CONTROL
120 VAC
OPEN IND.
CLOSED IND.
SPARE
SPARE
120V
ALT FLASH
STEADY BURN
B&B ROADWAY
15191 HIGHWAY 243, RUSSELLVILLE, AL 35654
PH: (866) 350-2666 FAX: (256) 332-4036
VW-5 WARNING GATE WIRING DIAGRAM
SEAFORD BRIDGE EMERGENCY REPAIR - DELAWARE
BV5-E313
B AS BUILT
A ORIGINAL ISSUE
DESCRIPTION
REVISIONS

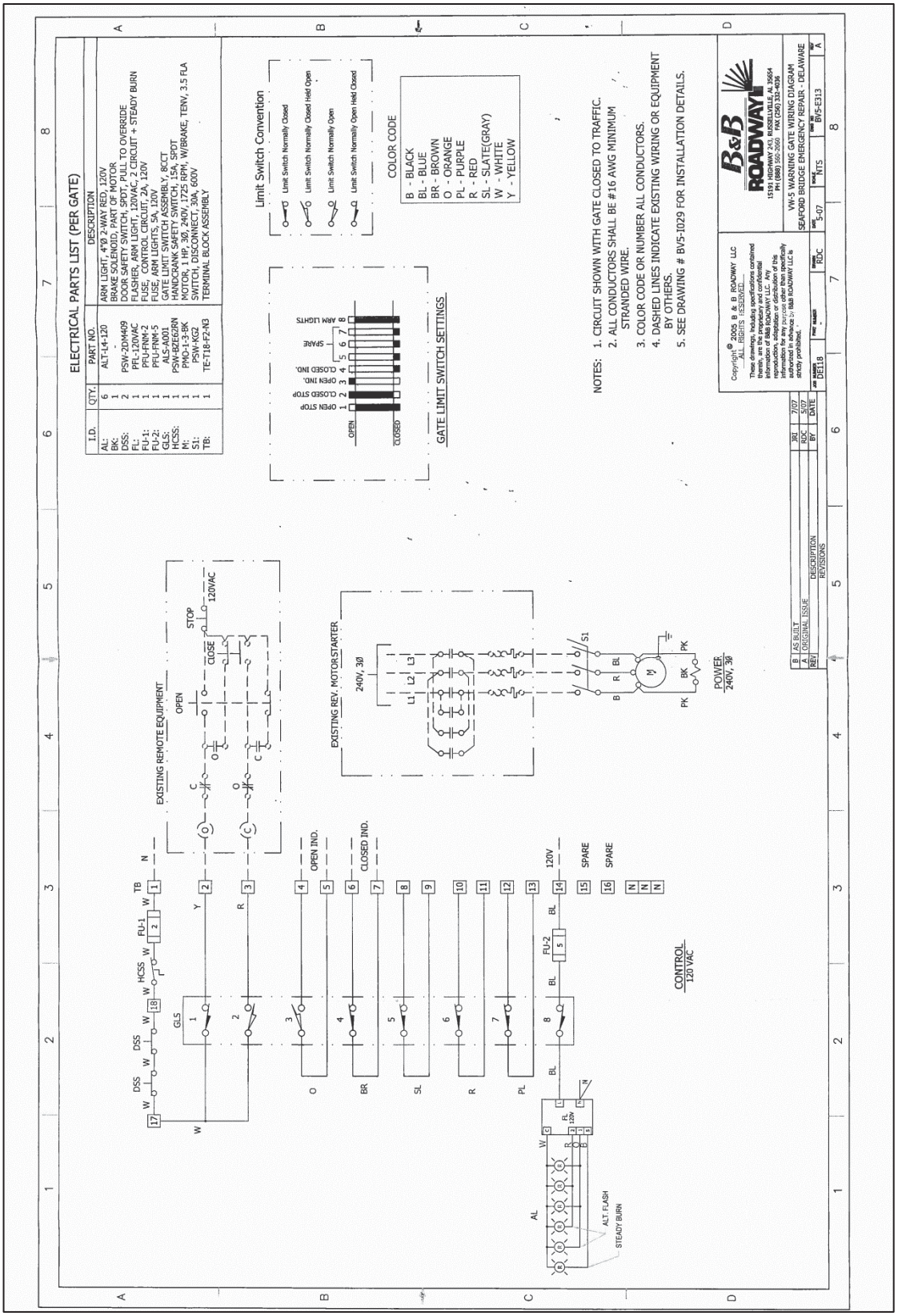
ELECTRICAL PARTS LIST (PER GATE)
I.D. | QTY. | PART NO. | DESCRIPTION
AL: 6 ALT-L4-120 ARM LIGHT, 4"Ø, 2-WAY RED, 120V
BK: 1 BRAKE SOLENOID, PART OF MOTOR
DSS: 2 PSW-2DM409 DOOR SAFETY SWITCH, SPDT, PULL TO OVERRIDE
FL: 1 PFL-120VAC FLASHER, ARM LIGHT, 120VAC, 2 CIRCUIT + STEADY BURN
FU-1: 1 PFU-FNM-2 FUSE, CONTROL CIRCUIT, 2A, 120V
FU-2: 1 PFU-FNM-5 FUSE, ARM LIGHTS, 5A, 120V
GLS: 1 ALS-A001 GATE LIMIT SWITCH ASSEMBLY, BCCT
HCSS: 1 PSW-BZE6JRN HANDCRANK SAFETY SWITCH, 15A, SPDT
M: 1 PMO-1-3-BK MOTOR, 1 HP, 3Ø, 240V, 1725 RPM, W/BRAKE, TENV, 3.5 FLA
S1: 1 PSW-KG2 SWITCH, DISCONNECT, 30A, 600V
TB: 1 TE-T18-F2-N3 TERMINAL BLOCK ASSEMBLY
Limit Switch Convention
Limit Switch Normally Closed
Limit Switch Normally Closed Held Open
Limit Switch Normally Open
Limit Switch Normally Open Held Closed
COLOR CODE
B - BLACK
BL - BLUE
BR - BROWN
O - ORANGE
PL - PURPLE
R - RED
SL - SLATE(GRAY)
W - WHITE
Y - YELLOW
GATE LIMIT SWITCH SETTINGS
OPEN
CLOSED
OPEN STOP
CLOSED STOP
OPEN IND.
CLOSED IND.
SPARE
ARM LIGHTS
NOTES:
1. CIRCUIT SHOWN WITH GATE CLOSED TO TRAFFIC.
2. ALL CONDUCTORS SHALL BE #16 AWG MINIMUM STRANDED WIRE.
3. COLOR CODE OR NUMBER ALL CONDUCTORS.
4. DASHED LINES INDICATE EXISTING WIRING OR EQUIPMENT BY OTHERS.
5. SEE DRAWING # BVS-I029 FOR INSTALLATION DETAILS.
EXISTING REMOTE EQUIPMENT
OPEN
CLOSE
STOP
120VAC
EXISTING REV. MOTOR STARTER
240V, 3Ø
POWER
240V, 3Ø
CONTROL
120 VAC
OPEN IND.
CLOSED IND.
SPARE
SPARE
120V
ALT. FLASH
STEADY BURN
B&B
ROADWAY
15191 HIGHWAY 243, RUSSELLVILLE, AL 35654
PH: (888) 550-2660 FAX: (256) 332-4036
VW-5 WARNING GATE WIRING DIAGRAM
SEAFORD BRIDGE EMERGENCY REPAIR - DELAWARE
BV5-E313
B AS BUILT JRJ 7/07
A ORIGINAL ISSUE RDC 5/07
REVISIONS
Copyright © 2005 B & B ROADWAY LLC
ALL RIGHTS RESERVED

11.9 ELECTRICAL EQUIPMENT MANUALS AND SPECIFICATIONS

11.9.1 SPAN MOTOR – REULAND ELECTRIC

REULAND ELECTRIC

Typical Report of Test Form for Induction Machines

Name of Manufacturer: REULAND ELECTRIC
Purchaser: TRANS SOLUTIONS BRIDGE DESIGN
Address of Manufacturer: Industry, CA 91749
Product Number: 0150F-2AAN-0029
Serial No. 13-1197A
Date of Test: 5-15-13
Model Number: 27171
Purchaser's Order No. STATE-0000172435

Nameplate Rating

Rated Hp	Service Factor	Rated Speed r/min	Phase	Frequency Hz	Volts	Amperes	Type	Frame
15	1.0	900	3	60	240	53.5	AOOO	324U

Temperature Rise

Conditions of Test				Temperature Rise _____ °C					
				Stator		Rotor			
					Windings		Windings		
Hours Run	Line Volts	Line Amperes	Cooling Air, °C		*By RESISTANCE Method		*By Method		
1	240	53.5	23.0		56.8				

Characteristics

Rated Slip, %	No-Load Line Current, Amperes	Secondary Volts at Standstill	Secondary Amperes per Ring at Rated Load	Resistance at 25 °C (between lines), ohms	
5.8	38.7	235	-	Primary	.118
				Secondary	.075

Torque and Starting Current

Break-Down Torque in lb-ft__ † with 100 % volts applied	Locked-Rotor Torque in lb-ft__ † with 100% volts applied	Starting Current Amperes (locked rotor) with 100 % volts applied
291.0	174.4	242.0

High Potential Tests

Volts ac for 60 Sec.	
Stator	Rotor
1776	

Efficiencies and Power Factor

Efficiency, Percent			Power Factor, Percent		
Rated Load	75% Load	50 % Load	Rated Load	75% Load	50% Load
84.0	83.8	81.7	59.7	51.3	39.8

Notes:

Data on test from THIS machine
(this or duplicate)

Approved by: J. Lapastora **Date:** 5-16-13

* Indicate method as: Thermometer, Thermocouple, Resistance, or Embedded Detector
† Indicate torque units as N-m or lb-ft

The information contained in this drawing/document is the proprietary and confidential information of Reuland Electric Co. Reproduction in any form, in whole or in part, without the written permission of Reuland Electric Co. is prohibited.

REULAND ELECTRIC

Typical Report of Test Form for Induction Machines

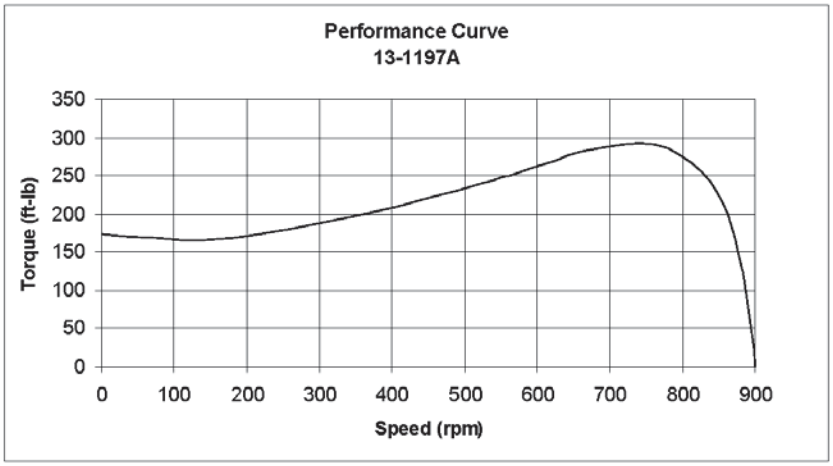

The information contained in this drawing/document is the proprietary and confidential information of Reuland Electric Co. Reproduction in any form, in whole or in part, without the written permission of Reuland Electric Co. is prohibited.

11.9.2 AC CONTACTOR – SQUARE D CLASS 8503 TYPE MXDO-1

SERVICE BULLETIN **8503-17**
June, 1981 **Page 1**

CLASS 8503 TYPE MXDO-1 NEMA SIZE 2, 50 AMPERE, AC CONTACTOR SINGLE POLE, NORMALLY OPEN, SERIES A

DESCRIPTION

The Class 8503 Type MX contactor is an ac magnetic, mill type, clapper device and is designed to meet NEMA Standards. The double pole contactor consists of two single pole contactors mechanically tied together with the dc operating coils connected in series.

CONTACTOR RATINGS - MAXIMUM

600 volts ac 60 Hertz 40°C Ambient

Open 8 Hour Ratings	Enclosed Ratings		Crane Ratings	
AC Amperes	AC Amperes	AC Motor Horsepower 460 vac	AC Amperes	AC Motor Horsepower 460 vac
50	45	25	67	40

OPERATING COIL DATA

DC Voltage Rating	Coil Part No.	Nominal OHMS At 20°C
115 / 120	D5-1015-056-51	543

The operating coils are designed in accordance with NEMA Standards to withstand 110% of rated voltage continuously and to operate the contactor successfully at 80% of rated voltage. Standard coil voltages are 115/120 volt dc. For other available coil voltages refer to Class 9998 Coil Data Catalog Sheet.

ELECTRICAL INTERLOCKS

Electrical interlocks are rated in accordance with NEMA Standard ICS-2-125 (A600 and N600 Table Ratings).

A600	Maximum Continuous Amperes	Maximum Make and Break Current Amperes							
		120V		240V		480V		600V	
		Make	Break	Make	Break	Make	Break	Make	Break
AC	10	60	6	30	3	15	1.5	12	1.2

N600	Maximum Continuous Amperes	Maximum Make and Break Current Amperes					
		125V		250V		600V	
		Make	Break	Make	Break	Make	Break
DC	10	2.2	2.2	1.1	1.1	.4	.4

Electrical interlocks consist of stationary contacts mounted on the contactor base (36) and movable contacts attached to the bottom of the contact arm assembly (17). A set of electrical interlocks contains one normally open and one normally closed double break contacts. Make and break ratings apply for double throw contacts only when both the normally open and normally closed contacts are connected to the same polarity.

CONTACT TIPS

Copper power contact tips are standard. Silver faced power contact tips are available and are recommended for applications where the contactors remain closed for long periods of time. Silver faced contact tips are optional on dc starters.

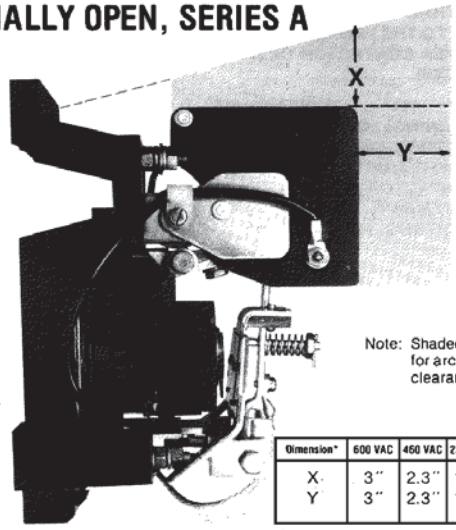

Note: Shaded area for arcing clearances.

Dimension*	600 VAC	460 VAC	230 VAC
X	3"	2.3"	1.7"
Y	3"	2.3"	1.7"

Figure 1

* To grounded, uninsulated panel

Electrical Clearances

INSTALLATION

1. Unpack contactor carefully. Remove shipping tape (if used).
2. Check nameplate data for correct equipment. Check that the contactor operating coil (32) is the correct voltage.
3. Check that all parts are undamaged and secure.
4. Mount the contactor vertically on a rigid support and fasten down tightly using a plain washer against the contactor base. Provide the clearance shown in Fig. 1 above the top of the contactor and in front of the arc chute for pivoting or removal of the arc chute and for electrical clearances.
5. With all power removed, mount auxiliary devices such as mechanical or electrical interlocks, if used, on contactor. Install and adjust these auxiliary devices by the procedure in the instruction sheets provided with the devices.
6. With all power removed, pivot the arc chute upwards and operate the contactor by hand. Check the alignment of the contact tips (14A & 14B) by the procedure in the ADJUSTMENT—Contact Tip Alignment instructions in this Service Bulletin.
7. Pivot the arc chute back to its proper position.

CAUTION: DO NOT OPERATE THE CONTACTOR UNDER LOAD UNLESS THE ARC CHUTE IS PIVOTED TO THE FULLY DOWN POSITION.

NEW SHEET PRINTED IN U.S.A.

SQUARE D COMPANY 3M
P O Box 9247
Columbia, S C 29290

Page 2

8. Check the wiring diagram before connecting the contactor coil leads, power contact leads, and interlock leads. The operating coil circuit voltage may be different from the power circuit voltage.

CAUTION: FAILURE TO CONNECT THE OPERATING COIL TO THE PROPER VOLTAGE MAY RESULT IN IMPROPER CONTACTOR OPERATION OR DAMAGE TO THE COIL.

WARNING: ALL METAL PARTS OF THE CONTACTOR MAY BE AT LINE VOLTAGE. ALL POWER MUST BE DISCONNECTED FROM THE CONTACTOR BEFORE PERFORMING ANY ADJUSTMENT, MAINTENANCE OR TROUBLESHOOTING PROCEDURES.

ADJUSTMENT

CONTACT TIP ALIGNMENT

1. With all power removed, pivot the arc chute upward.
2. Check that the movable contact tip is securely fastened to the contact arm assembly (17) with the contact arm spring, cup washer and cotter pin and that the movable contact tip is properly seated in the slot in the contact arm assembly (Fig. 2).

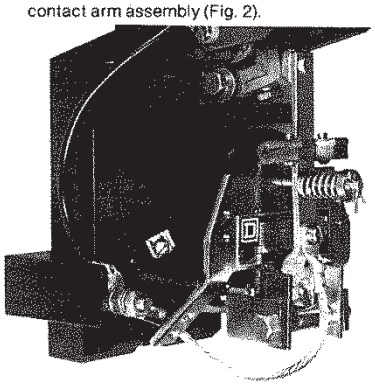

Figure 2

3. Check that the stationary contact tip is properly seated against the stationary support of the contactor (Fig. 2).
4. Pivot the arc chute back to its proper position.

CAUTION: DO NOT OPERATE THE CONTACTOR UNDER LOAD UNLESS THE ARC CHUTE IS PIVOTED TO THE FULLY DOWN POSITION.

ELECTRICAL INTERLOCKS

1. With all power removed, check that the electrical interlock (43) has the proper follow-up. With new electrical interlock contacts, the moving contacts (46) should provide at least 1/16" follow-up on each stationary contact when the contact arm reaches its limit of travel; either completely closed or completely opened (Fig. 3).

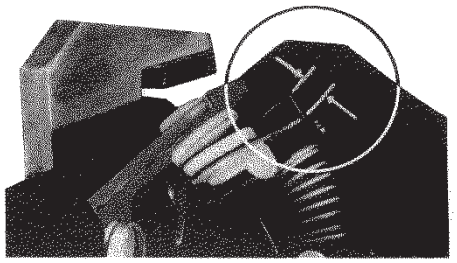

Figure 3

2. Check that the normally closed electrical interlock contacts open before the power contact tips close.
3. Electrical interlock follow-up can be adjusted by bending the stationary contacts (50 & 51).

MECHANICAL INTERLOCK

1. With all power removed, check that the mechanical interlock allows the contact arm of either contactor to reach its limit of travel, either completely closed or completely open, without binding.
2. Hold the contact arm of the left contactor fully closed and push closed the contact arm of the right contactor until stopped by the mechanical interlock. With new contact tips, check that there is a gap of at least 3/16" but not more than 1/4" between the contact tips. (Fig. 4).

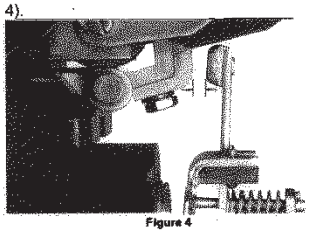

Figure 4

3. If the gap is not within the limits, adjust the mechanical interlock as follows: Loosen the two hex head screws that hold the mechanical interlock to the contactor and move the mechanical interlock until the desired gap is achieved.
4. Repeat steps 2 and 3 above holding the right contactor in the fully closed position.
5. Push in one contactor to the kiss position and check that the other contactor does not come to the kiss position at the same time.
6. If both contactors come to the kiss position at the same time, repeat steps 2 to 5 decreasing the gap but not increasing it past 1/4".
7. Again check that the mechanical interlock allows the contact arm of either contactor to reach its limit of travel, either completely closed or completely open, without binding.

CONTACT ARM GAP

1. Contact arm gap is factory adjusted. Do not change the setting of the adjusting screw (27).

2. Should the setting be inadvertently changed, readjust the contact arm gap by turning the adjusting screw (27) located on the bottom of the contact arm (Fig. 1) until a contact tip gap of 5/16" is achieved (Fig. 4).
3. Retighten the locking nut (28) which holds the adjusting screw.

WARNING: ALL METAL PARTS OF THE CONTACTOR MAY BE AT LINE VOLTAGE. ALL POWER MUST BE DISCONNECTED FROM THE CONTACTOR BEFORE PERFORMING ANY ADJUSTMENT, MAINTENANCE OR TROUBLESHOOTING PROCEDURES.

MAINTENANCE

LUBRICATION

No lubrication is required.

CONTACT TIP INSPECTION

The contact tips should be replaced when the contact follow-up is less than 1/32" (Fig. 5).

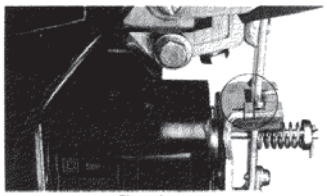

Figure 5

CONTACT TIP REPLACEMENT

1. With all power removed, pivot the arc chute upward.
2. Remove the shunt (25) by removing the 8-32 x 1/4" pan head screw (22), lockwasher (23), and washer (24) which holds it to the contact tip.
3. Remove the spring (18) by removing the cotter pin (20), cup washer (19), and the spring (18).
4. Remove the movable contact tip by lifting it over the clevis pin.
5. Remove the stationary contact tip by removing the silicon bronze hex head cap screw (15) and lockwasher (16).
6. Install the new stationary contact tip using the silicon bronze hex head cap screw and lockwasher.
7. Install the new movable contact tip over the clevis pin by inserting the lower end tang in the slot in the contact arm.
8. Replace the spring using the cup washer and cotter pin.
9. Replace the shunt using 8-32 x 1/4" pan head screw, lockwasher and washer.
10. Manually operate the contactor and check the contact tips for alignment, by the procedure in the ADJUSTMENT—Contact Tip Alignment instruction in this Service Bulletin.

CAUTION: CHECK THE ADJUSTMENT OF THE MECHANICAL INTERLOCK.

11. Pivot the arc chute back to its proper position.

CAUTION: DO NOT OPERATE THE CONTACTOR UNDER LOAD UNLESS THE ARC CHUTE IS PIVOTED TO THE FULLY DOWN POSITION.

COIL REPLACEMENT

1. With all power removed, disconnect the coil leads.
2. Remove top end of shunt (25) by removing pan head screw (22), lockwasher (23), and washer (24).
3. Remove shoulder screw (21), washer (7), lockwasher (8) and nut (9), which secure contact arm assembly (17) to magnet frame (35).
4. Remove the contact arm assembly and opening spring (26).
5. Remove cotter pin (30), coil retainer (31) and coil (32).
6. Install the new coil using the coil retainer and cotter pin.
7. Replace the contact arm assembly and opening spring using the shoulder screw, washer, lockwasher and nut.
8. Replace the top end of shunt using pan head screw, lockwasher, and washer.
9. Reconnect the coil leads.

CAUTION: CHECK CONTACT TIP ALIGNMENT AND THE ADJUSTMENT OF THE MECHANICAL INTERLOCK.

ARC CHUTE REPLACEMENT

1. With all power removed, pivot the arc chute upward.
2. Remove the stationary contact tip (14A) by removing the silicon bronze hex head cap screw (15) and lockwasher (16).

CAUTION: STATIONARY CONTACT TIP MUST BE REMOVED BEFORE ARC CHUTE CAN BE REMOVED.

3. Remove the arc chute wire by removing the bottom end of the shunt (25), two lockwashers (12) and two nuts (39) which secure arc chute wire to contactor base (Fig. 6).
4. Remove the arc chute by removing the pan head screw (5), washer (7), lockwasher (8) and nut (9).
5. Install the new arc chute using pan head screw, washer, lockwasher and nut.
6. Reconnect arc chute wire and the bottom end of the shunt (25) to the contactor base using the lockwashers and nuts (Fig. 6).
7. Reinstall the stationary contact tip using the silicon bronze hex head cap screw and lockwasher.
8. Pivot the arc chute back to its proper position.

CAUTION: DO NOT OPERATE THE CONTACTOR UNDER LOAD UNLESS THE ARC CHUTE IS PIVOTED TO THE FULLY DOWN POSITION.

SHUNT REPLACEMENT

The shunt (25) should be replaced when the flexible braided wires are broken or burned or if the wires are loose in the terminal connectors on either end of the shunt.

Page 4

1. With all power removed, disconnect the bottom end of the shunt (25) by removing the two lockwashers (12) and two hex nuts (39) (Fig. 6).
2. Disconnect the top end of the shunt by removing the pan head screw (22), lockwasher (23) and washer (24) (Fig. 2).
3. Install the new shunt using the pan head screw, lockwasher and washer on the top of the shunt.
4. Reconnect the arc chute wire and the bottom end of the shunt (25) to the contactor base using the lockwashers and nuts (Fig. 6).

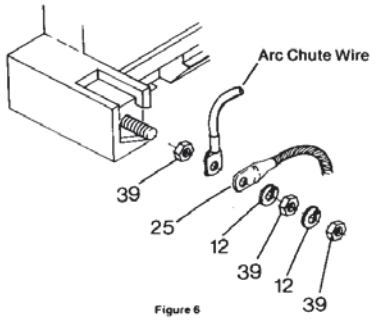

Figure 6

5. Pivot the arc chute back to its proper position.

CAUTION: DO NOT OPERATE THE CONTACTOR UNDER LOAD UNLESS THE ARC CHUTE IS PIVOTED TO THE FULLY DOWN POSITION.

ELECTRICAL INTERLOCK REPLACEMENT

The electrical interlock contact tips should be replaced when inspection of the contacts shows that they are burned or badly pitted. It is recommended that the entire electrical interlock assembly be replaced from a kit. However, the contact tips only can also be replaced. Note position of the leads so they can be replaced.

Electrical Interlock Assembly Replacement

1. With all power removed, loosen terminal clamps and screws and remove terminal leads from the stationary contact assembly. Note position of the leads so they can be properly replaced.
2. Remove the movable contact assembly by removing the slotted screw (44), lockwasher (45) and washer (53).
3. Remove the stationary contact assembly by removing the slotted screw (49).
4. Install new stationary contact assembly by replacing the stationary contact assembly slotted screw making sure to position stationary contact assembly as shown on the exploded view drawing.
5. Install new movable contact assembly by replacing the washers, lockwashers and slotted screws making sure to position movable contact assembly as shown on exploded view drawing.
6. Manually operate the contactor and check the moving contacts for follow-up by the procedure in the ADJUSTMENT—Electrical Interlock instructions in this Service Bulletin.
7. Replace the terminal leads.

Electrical Interlock Contact Tip Replacement

1. After the electrical interlock assembly has been removed from the contactor, the contact tips can be replaced.
2. Remove both sets of movable contact tips (46) from the movable contact assembly by compressing the spring (48) and retainers (47) and sliding out the movable contact tips.
3. Install both sets of new movable contact tips by compressing the spring and retainers and sliding in the movable contact tips.
4. Remove both top stationary contact tips (51) from the stationary contact assembly by removing the screws and washers which hold them in place.
5. Remove the terminal clamps and screws from the top stationary contact tips (51).
6. Install both new top stationary contact tips by replacing the top stationary contact tips, screws, and terminal clamps and screws.
7. Remove both bottom stationary contact tips (50) from the stationary contact assembly by removing the screws and terminal clamps.
8. Install both new bottom stationary contact tips by replacing the bottom stationary contact tips, terminal clamps and screws.
9. Install the stationary and movable contact assemblies and manually operate the contactor and check the moving contacts for follow-up by the procedure in the ADJUSTMENT—Electrical Interlock instructions in this Service Bulletin.
10. Replace the terminal leads.

OPENING SPRING REPLACEMENT

1. With all power removed, pivot the arc chute upwards.
2. With all power removed, disconnect the top end of shunt by removing pan head screw (22), lockwasher (23), and washer (24).
3. Remove shoulder screw (21), washer (7), lockwasher (8) and nut (9) which secure contact arm assembly to magnet frame.
4. Remove contact arm assembly (17) and opening spring (26).
5. Install new opening spring in the slot at the bottom of the contact arm assembly.
6. Replace contact arm assembly and new opening spring using shoulder screw, washer, lockwasher and nut.
7. Replace top end of shunt using pan head screw, lockwasher, and washer.

CAUTION: CHECK CONTACT TIP ALIGNMENT AND THE ADJUSTMENT OF THE MECHANICAL INTERLOCK.

8. Pivot the arc chute back to its proper position.

CAUTION: DO NOT OPERATE THE CONTACTOR UNDER LOAD UNLESS THE ARC CHUTE IS PIVOTED TO THE FULLY DOWN POSITION.

SQUARE D COMPANY

WARNING: ALL METAL PARTS OF THE CONTACTOR MAY BE AT LINE VOLTAGE. ALL POWER MUST BE DISCONNECTED FROM THE CONTACTOR BEFORE PERFORMING ANY ADJUSTMENT, MAINTENANCE OR TROUBLESHOOTING PROCEDURES.

TROUBLESHOOTING

Refer to the Operating Coil Table in this bulletin for coil ratings.
Refer to Contactor Ratings in this bulletin for contactor ratings.

TROUBLE	POSSIBLE CAUSE	REMEDY
Contacts will not close or operation is sluggish	1. Improper or defective operating coil.	1. Check coil part number and resistance to determine if coil is defective.
	2. Low control circuit voltage.	2. Check that control circuit voltage is a minimum of 80% of rated coil voltage. If it is zero, the problem is elsewhere in the circuit.
	3. Loose connection in control circuit.	3. Check connections and tighten if loose.
	4. Mechanical interference or binding.	4. Check for mechanical interference or binding: a. Check mechanical interlock interference by disconnecting it from the contactor that is binding. Refer to ADJUSTMENT—Mechanical Interlock instructions in this Service Bulletin. b. Check that the tie bar is not causing binding.
Contact tips overheating, short contact tip life.	1. Loose connections.	1. Check contact tips and shunt connections and tighten if loose.
	2. Movable or stationary contact tip not properly aligned.	2. Check the alignment of the contact tips by the procedure listed in the ADJUSTMENT—Contact Tip Alignment instructions in this Service Bulletin.
	3. Foreign matter on contact surfaces.	3. Remove foreign matter.
	4. Contact tips worn beyond recommended limits.	4. Check for contact wear by the procedure listed in the MAINTENANCE—Contact Tip Replacement instructions in this Service Bulletin.
	5. Contact surfaces severely scored or burned.	5. Inspect contact surfaces and dress with a file as required. Check that the arc chute wire is connected to the lower power terminal and is not broken
	6. Arc chute not properly installed.	6. Check that arc chute is pivoted to the fully down position.
	7. Defective opening spring.	7. Replace the spring.
Operating Coil Overheats	1. Improper or defective coil.	1. Check coil part number and resistance to determine if coil is defective.
	2. High voltage condition on coil.	2. Check that control circuit voltage does not exceed 110% of rated coil voltage.
	3. Loose connection at coil terminals.	3. Check connection and tighten if loose.

Page 6

PARTS LIST FOR CLASS 8503 TYPE MXDO-1 NEMA SIZE 2, 50 AMPERE, AC CONTACTOR SINGLE POLE, NORMALLY OPEN, SERIES A

Item No.	Part No. ■	Description
1	C51016-221-50	Arc Chute
2	B51016-213-50	Blowout Coil Assembly
3	A51016-217-01	Blowout Mounting Bracket
4	A51016-231-01	Blowout Core
5		10 - 24 x 1¾ Pan Head Screw
6	25901-11080	Cable Clamp
7		#10 Plain washer (2 Req'd)
8		#10 Lockwasher (2 Req'd)
9		#10-24 Hex Head Nut (2 Req'd)
10	B51016-209-02	Stationary Contact Support
11		1/4 - 20 x 7/8 Hex Head Machine Screw (2 Req'd)
12		1/4 Lockwasher (7 Req'd)
13		1/4 Plain Washer (5 Req'd)
†14	Class 9998 Type MD-1 or Class 9998 Type MD-2	Contact Tip Kit (Copper) Consisting of 2 Sets of Tips and Hardware Contact Tip Kit (Silver) Consisting of 2 Sets of Silver Tips and Hardware
†14A	B50005-072-02	Stationary Contact Tip (Copper)
†14B	B51016-225-50	Movable Contact Tip (Copper)
15	21407-20160	1/4 - 20 x 1/2 Silicon Bronze Hex Head Cap Screw
16	23711-22000	1/4 Silicon Bronze Lockwasher
17	B51016-224-50	Contact Arm Assembly
18	B50502-602-39	Contact Arm Spring
19	306-D1-X1	Cup Washer
20		1/16 x 1/2 Cotter Pin
21	A51016-218-01	Shoulder Screw
22		8 - 32 x 1/4 Pan Head Screw
23		#8 Lockwasher
24		#8 Plain Washer
25	B51016-220-50	Shunt (Connector)
26	B50502-602-40	Opening Spring
27	A51016-232-01	Adjusting Screw
28		1/4 - 20 Hex Nut
29	B51139-242-05	Nameplate
30		5/64 x 1½ Cotter Pin
31	B50502-006-28	Coil Retainer
†32	D51015-056-51	Operating Coil (115/120 vdc)
33	A51017-041-01	Spring Washer
34	A51016-210-01	Coil Core
35	C51016-211-01	Magnet Frame
36	D51016-215-50	Contactor Base
37		1/4 - 20x 2½ Round Head Machine Screw
38		10 - 24 x 1/2 Pan Head Screw
39		1/4 - 20 Hex Nut (5 Req'd)
40		1/4 - 20 x 3/4 Hex Head Machine Screw
41		1/4 - 20 x 1 Hex Head Machine Screw
42		#6 - 32 x 1/4 Tapping Screw (2 Req'd)
†43	Class 9999 Type MX-11 or C51075-038-54	Bulk Pack of 5-Sets of Replacement Electrical Interlock Contacts Consisting of 10-Movable Contact Tip (Item 46) 10-Bottom Stationary Contact Tip (Item 50) 10-Top Stationary Contact Tip (Item 51) 4-Spring Retainer (Item 47) 2-Spring (Item 48)
44		#10-24 x 1 Pan Head Screw (2 Req'd)
45		#10 Lockwasher (2 Req'd)
46		Movable contact tip (2 Req'd)
47		Spring Retainer (2 Req'd)
48		Spring
49		#10 - 24 x ½ Pan Head Screw With Captive Lockwasher
50		Bottom Stationary Contact Tip (2 Req'd)
51		Top Stationary Contact Tip (2 Req'd)
52		#10 - 24 x ½ Captive Screw With Long Shank and Captive Lockwasher
53		#10 Plain Washer (3 Req'd)

The following User Modification Kits are also available for this contactor:

Class 9999 Type MM-1	Mechanical Interlock Kit for 2 - S.P.N.O. or 2 - D.P.N.O. Contactors
Class 9999 Type MT-1	Tie Bar Kit for 2 - S.P.N.O. Contactors
Class 9999 Type MK-1	Pneumatic Timer Kit

■ Standard hardware, listed without Square D Part Number, should be obtained from a local hardware supplier.
† Parts Recommended for General Maintenance.

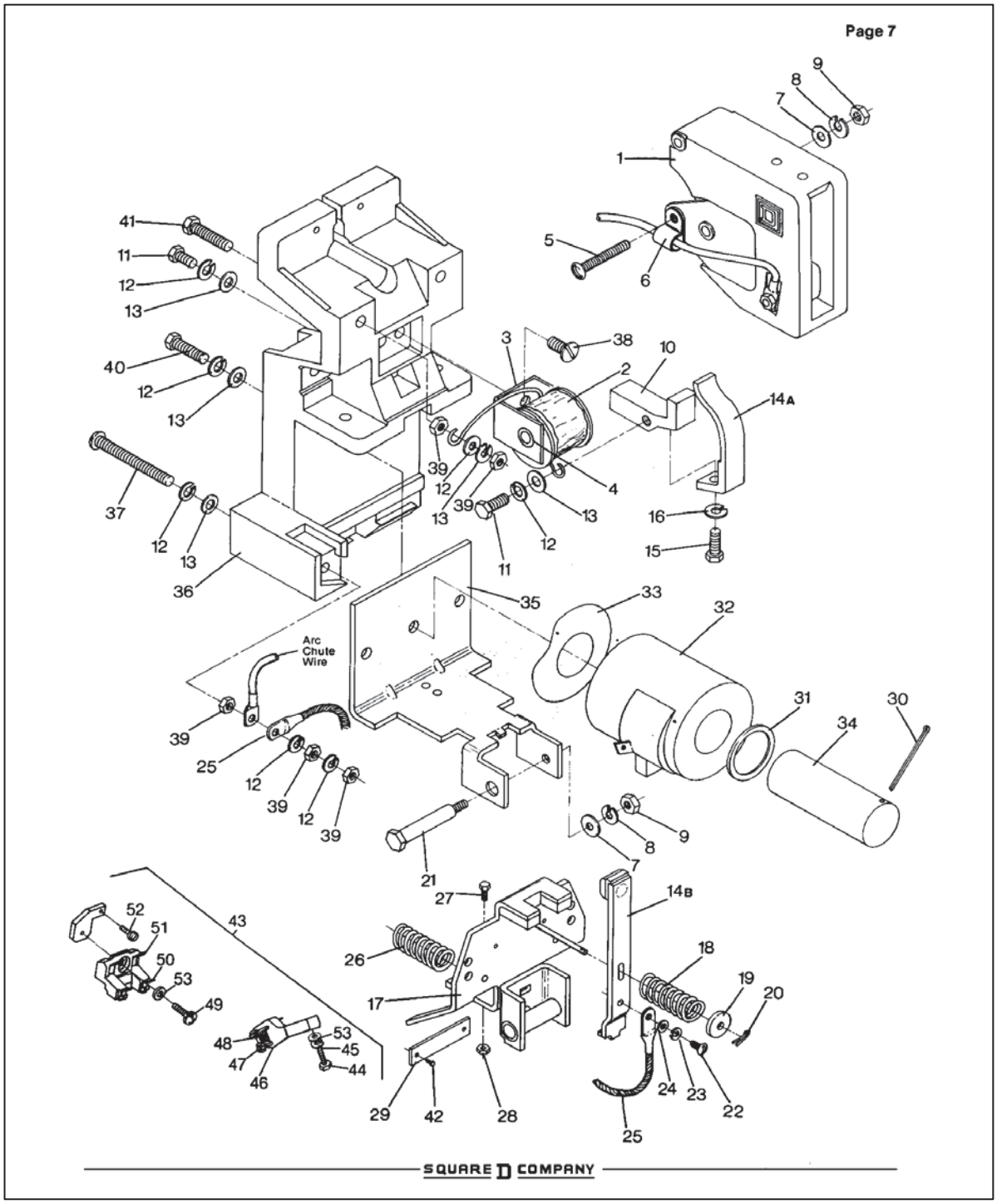
Page 7
Arc Chute Wire
SQUARE D COMPANY

THIS PAGE INTENTIONALLY LEFT BLANK

CHAPTER 12 - CONTACTS, TELEPHONE NUMBERS AND EMERGENCY CALL OUTS

12.1 CONTACTS AND TELEPHONE NUMBERS

Delaware State Police.....302.739.5901

United States Coast Guard.....757.398.6390

Delaware Department of Transportation (Maintenance).....302.853.1305

Delaware Department of Transportation (General)..... 302.760.2080

Fire Department (Seaford) 302.629.9355

Front Street Bridge.....302.629.4547

NOAA (National Oceanic and Atmospheric Administration) 206.526.6317

12.2 EMERGENCY CALL OUT PROCEDURES

During emergency situations, the following procedures and protocols should be followed.

12.2.1 MALFUNCTION (FAILURE TO OPEN OR CLOSE)

During maintenance inspection or marine vessel openings, if the bridge cannot be opened or closed contact order should be as follows:

1) Area Supervisor
2) Area Foreman
3) Delaware State Police (only if traffic needs to be detoured)

12.2.2 DAMAGE TO BRIDGE FROM VESSEL OR VEHICLE

When damage to the bridge is observed or detected, contact order should be as follows:

12.2.2.1 MINOR DAMAGE

When damage will not hamper normal bridge operation, perform the following:

1) Log in log book
2) Notify Area Supervisor or Foreman at earliest convenience.

12.2.2.2 MAJOR DAMAGE

When damage may hamper normal bridge operation, perform the following:

1) Notify Area Supervisor or Foreman immediately.
2) Notify Delaware State Police
3) Log in log book

12.2.3 VEHICLE ACCIDENT OR DISABLED VEHICLE ON BRIDGE

When an accident occurs on the bridge or a disabled vehicle is observed, perform the following:

1) If accident, check about possible injuries, notify Delaware State Police.
2) DO NOT operate the bridge if an accident or disabled vehicle is within the operational area of the bridge.
3) If it is an injury accident before or after the operational area of the bridge, contact emergency services (911) before proceeding with an opening.
4) If unable to open the bridge due to an accident or disabled vehicle notify any waiting vessels and the Coast Guard.

12.2.4 MARINE RELATED EMERGENCIES

For a marine related accident or emergency contact the following:

1) US Coast Guard
2) Area Supervisor or Foreman

12.2.5 WEATHER RELATED EMERGENCIES

For weather related accident or emergencies contact the following:

1) Delaware State Police and NOAA
2) Area Supervisor or Foreman

Bridge #3-164

SR 36 Bridge
over Cedar Creek

Prepared by:

Hardesty & Hanover

MAINTENANCE MANUAL – VOLUME II

DelDOT

Prepared for:

AECOM

Published: March 2015

Updated: July 2018 (Replacement Chapter 8)

VOLUME 2: MAINTENANCE - TABLE OF CONTENTS

CHAPTER 6 - PURPOSE AND SCOPE OF MAINTENANCE MANUAL 6-1
6.1 PURPOSE OF MAINTENANCE MANUAL 6-1
6.2 LAYOUT OF MAINTENANCE MANUAL 6-1
6.3 REFERENCES 6-1

CHAPTER 7 - MAINTENANCE POLICIES 7-1
7.1 INTRODUCTION 7-1
7.2 MAINTENANCE TECHNICIAN TRAINING 7-1
7.2.1 BRIDGE LAYOUT 7-1
7.2.2 BRIDGE OPERATION 7-1
7.2.3 TROUBLESHOOTING AND EMERGENCY SITUATIONS 7-1
7.2.4 BRIDGE MAINTENANCE 7-1
7.3 LOCKOUT/TAGOUT PROCEDURE 7-1
7.4 PERSONAL PROTECTIVE EQUIPMENT 7-1
7.5 MAINTENANCE ACCESS 7-1
7.5.1 OPERATOR'S CONTROL ROOM 7-2
7.5.2 UTILITY ROOM 7-2
7.5.3 STORAGE ROOM 7-2
7.5.4 ELECTRICAL CONTROL EQUIPMENT AREA 7-2
7.5.5 WEST ABUTMENT 7-2
7.5.6 PIVOT PIER 7-2
7.5.7 REST PIER 7-3
7.5.8 FENDERS 7-3
7.6 STAND-BY GENERATOR MAINTENANCE 7-3
7.7 MAINTENANCE OPENINGS 7-3
7.8 MAINTENANCE AND BRIDGE OPERATORS DURING OPENINGS 7-3
7.9 MAINTENANCE FORMS 7-4
7.10 MAINTENANCE REPORTING PROCEDURES 7-4

CHAPTER 8 - ELECTRICAL AND MECHANICAL MAINTENANCE 8-1
8.1 SPAN SUPPORT SYSTEM AND COUNTERWEIGHT 8-1
8.1.1 PIVOT BEARING 8-1
8.1.2 BEARING WHEELS 8-2
8.1.3 BALANCE WHEELS 8-3
8.1.4 PASSIVE LIVE LOAD BEARINGS 8-4

8.1.5 END SCREW JACK SPEED REDUCER 8-5
8.1.6 END SCREW JACK COUPLINGS 8-6
8.1.7 END SCREW JACKS 8-7
8.1.8 COUNTERWEIGHT AND BALANCE PLATES 8-9
8.1.9 LUBRICATION LINES 8-9
8.2 TURNING MACHINERY 8-10
8.2.1 MOTOR BRAKE 8-10
8.2.2 COUPLINGS 8-12
8.2.3 TURNING MACHINERY SPEED REDUCER 8-13
8.2.4 BEARINGS 8-14
8.2.5 OPEN GEARING 8-15
8.2.6 INSTRUMENTATION GEAR BOX 8-16
8.3 SPAN LOCK MACHINERY AND RIGID STOPS 8-17
8.3.1 LOCK BAR, GUIDES AND RECEIVER 8-17
8.3.2 SPAN LOCK OPEN GEARING 8-18
8.3.3 RIGID STOPS 8-19
8.4 TRAFFIC GATES 8-20
8.4.1 TRAFFIC GATES 8-20
8.5 ELECTRICAL POWER SYSTEMS 8-21
8.5.1 MOTOR CONTROL ENCLOSURES 8-21
8.5.2 SPAN CONTROL CABINET AND RESISTOR ENCLOSURE 8-22
8.5.3 PANELBOARDS 8-24
8.5.4 STAND-BY GENERATOR 8-25
8.5.5 SAFETY (MANUAL TRANSFER) AND DISCONNECT SWITCHES 8-26
8.5.6 ELECTRICAL CONDUCTORS 8-27
8.5.7 DRAG CABLES 8-28
8.5.8 AERIAL CABLES 8-28
8.6 LIGHTING SYSTEMS 8-29
8.6.1 NAVIGATION LIGHTS 8-29
8.6.2 INTERIOR/EXTERIOR LIGHTS 8-30
8.6.3 TRAFFIC SIGNALS 8-30
8.6.4 TRAFFIC GATE ARM LIGHTS 8-31
8.7 ELECTRIC MOTORS 8-32
8.7.1 SPAN LOCK GEAR MOTOR 8-32
8.7.2 TURNING MACHINERY (SPAN) MOTOR 8-33

8.7.3 END SCREW JACK MOTOR 8-34
8.7.4 TRAFFIC GATE MOTORS 8-36
8.8 CONTROL SYSTEM 8-37
8.8.1 CONTROL CONSOLE 8-37
8.8.2 LIMIT SWITCHES 8-38
8.9 MISCELLANEOUS EQUIPMENT 8-40
8.9.1 HEATING AND AIR CONDITIONING SYSTEMS 8-40
8.9.2 SUMP PUMP 8-41
8.9.3 HOT WATER HEATER 8-41
8.9.4 PIERS AND PLATFORMS 8-42
8.9.5 CONDUIT/WIREWAY 8-43

CHAPTER 9 - PHOTOS & TABLE OF CONTENTS 9-1
9.1 SPAN SUPPORT SYSTEM AND COUNTERWEIGHT 9-4
9.2 SPAN DRIVE MACHINERY 9-13
9.3 SPAN LOCK MACHINERY AND RIGID SUPPORTS 9-16
9.4 TRAFFIC CONTROL DEVICES AND NAVIGATION LIGHTS 9-19
9.5 POWER DISTRIBUTION EQUIPMENT 9-22
9.6 CONTROL EQUIPMENT 9-24
9.7 MISCELLANEOUS EQUIPMENT 9-34

CHAPTER 10 - MAINTENANCE FORMS & TABLE OF CONTENTS 10-1
10.1 MECHANICAL AND ELECTRICAL MAINTENANCE CHECKLISTS 10-1
10.1.1 FORM 10-1 – SPAN SUPPORT SYSTEM AND COUNTERWEIGHT 10-2
10.1.2 FORM 10-2 – TURNING MACHINERY 10-4
10.1.3 FORM 10-3 – SPAN LOCK MACHINERY AND RIGID STOPS 10-6
10.1.4 FORM 10-4 – TRAFFIC GATES 10-7
10.1.5 FORM 10-5 – ELECTRICAL POWER SYSTEMS 10-8
10.1.6 FORM 10-6 – LIGHTING SYSTEMS 10-12
10.1.7 FORM 10-7 – ELECTRIC MOTORS 10-13
10.1.8 FORM 10-8 – CONTROL SYSTEM 10-15
10.1.9 FORM 10-9 – MISCELLANEOUS EQUIPMENT 10-16

CHAPTER 11 - SUPPLEMENTAL INFORMATION AND SPECIFICATIONS & TABLE OF CONTENTS 11-1
11.1 COMPONENT IDENTIFICATION CHARTS AND DIAGRAMS 11-4
11.1.1 SWING SPAN SUPPORT SYSTEM COMPONENT IDENTIFICATION 11-4
11.1.2 TURNING MACHINERY & SPAN LOCK MACHINERY COMPONENT IDENTIFICATION .. 11-5

11.1.3 WARNING GATE MACHINERY COMPONENT IDENTIFICATION 11-6
11.2 MACHINERY LUBRICATION SCHEMATICS 11-7
11.2.1 SWING SPAN SUPPORT SYSTEM LUBRICATION SCHEMATIC 11-7
11.2.2 TURNING MACHINERY & SPAN LOCK MACHINERY LUBRICATION SCHEMATIC 11-8
11.2.3 WARNING GATE MACHINERY LUBRICATION SCHEMATIC 11-9
11.3 MACHINERY LUBRICATION PLANNING TABLES 11-10
11.3.1 MACHINERY LUBRICATION SCHEDULE 11-10
11.3.2 LUBRICANT AND MATERIAL INVENTORY FORM 11-14
11.4 BRIDGE MAINTENANCE PERFORMANCE STANDARDS (PLATES) 11-15
11.4.1 SLEEVE BEARING AND BALANCE WHEEL BEARING LUBRICATION 11-15
11.4.2 MOTOR BRAKE MAINTENANCE 11-16
11.4.3 COUPLING LUBRICATION 11-18
11.4.4 SPEED REDUCER LUBRICATION 11-20
11.4.5 OPEN GEARING LUBRICATION 11-23
11.4.6 MOTOR BEARING LUBRICATION 11-24
11.4.7 PIVOT BEARING AND BEARING WHEEL LUBRICATION 11-26
11.4.8 END SCREW JACK LUBRICATION 11-28
11.4.9 SPAN LOCK MACHINERY LUBRICATION 11-29
11.4.9.1 SPAN LOCK OPEN GEARING LUBRICATION 11-29
11.4.9.2 SPAN LOCK BAR LUBRICATION 11-30
11.4.9.3 SPAN LOCK GEAR MOTOR LUBRICATION 11-31
11.5 MATERIAL DATA SHEETS 11-33
11.5.1 MOBIL MOBILUX EP-0, EP-2 11-33
11.5.2 MOBIL UNIREX N2 11-52
11.5.3 MOBIL MOBILGEAR 600 XP 68, 100, AND 150 11-62
11.5.4 MOBIL 600W SUPER CYLINDER OIL 11-93
11.5.5 FALK LONG TERM GREASE 11-104
11.5.6 MOBIL DTE 21 11-112
11.5.7 MOBIL MOBILTAC 325 NC 11-125
11.5.8 MOBIL SHC 629 11-139
11.5.9 CRC TAC 2 ADHESIVE CHAIN LUBRICANT 11-152
11.5.10 PERMATEX GEAR OIL RTV SEALANT 11-161
11.5.11 WD-40 SPECIALIST MACHINE & ENGINE DEGREASER 11-166
11.5.12 CAIG LABORATORIES DEOXIT D5 CONTACT CLEANER 11-170
11.5.13 3-IN-ONE MULTI-PURPOSE OIL 11-178

11.6 COMPONENT MANUFACTURER LIST 11-182
11.7 MECHANICAL EQUIPMENT MANUALS AND SPECIFICATIONS 11-186
11.7.1 END SCREW JACK SPEED REDUCER – FOOTE JONES TYPE BHE 11-186
11.7.2 TURNING MACHINERY SPEED REDUCER – FALK TYPE CB 11-202
11.7.3 SPAN LOCK GEAR MOTOR – SUMITOMO SM-CYCLO 11-214
11.7.4 INSTRUMENTATION GEAR BOX – PEERLESS WINSMITH TYPE DBD 11-220
11.7.5 END SCREW JACK – DUFF-NORTON TYPE M9099 11-226
11.7.6 END SCREW JACK GEAR COUPLING – FALK TYPE G51 11-234
11.7.7 END SCREW JACK MOTOR COUPLING – FALK STEELFLEX TYPE T10 11-242
11.7.8 TURNING MACHINERY GRID COUPLING – FALK STEELFLEX TYPE T20 11-248
11.7.9 MOTOR BRAKE – MONDEL WST/E 11-254
11.7.10 PIVOT BEARING – TORRINGTON THRUST SPHERICAL ROLLER BEARING 11-287
11.8 TRAFFIC CONTROL EQUIPMENT MANUALS AND SPECIFICATIONS 11-294
11.8.1 TRAFFIC GATE – B&B ROADWAY VT-40 11-294
11.9 ELECTRICAL EQUIPMENT MANUALS AND SPECIFICATIONS 11-297
11.9.1 DISCONNECT SWITCH – HUBBELL 11-297
11.9.2 LIMIT SWITCH – NAMCO 11-298
11.10 LOCKOUT/TAGOUT PROCEDURE FOR SR 36 (CEDAR CREEK) 11-302
11.10.1 PURPOSE 11-302
11.10.2 RESPONSIBILITY 11-302
11.10.3 PREPARATION FOR LOCKOUT OF DE-ENERGIZED EQUIPMENT 11-302
11.10.4 INDIVIDUAL EMPLOYEE CONTROL PROCEDURE 11-303
11.10.5 SIMPLE LOCKOUT 11-303
11.10.6 COMPLEX LOCKOUT 11-303
11.10.7 SEQUENCE OF LOCKOUT SYSTEM PROCEDURES 11-304
11.10.8 RESTORING THE EQUIPMENT TO NORMAL CONDITION 11-305
11.10.9 UNATTENDED LOCKOUTS 11-306
11.10.10 TYPES OF DISCONNECTS 11-306
11.10.11 SIGNAGE 11-307
11.10.12 DISCIPLINE 11-307
11.10.13 EQUIPMENT 11-307
11.10.14 REVIEW 11-308
11.10.15 ASSOCIATED DOCUMENTS 11-308
11.10.16 LOCKOUT PROCEDURE TRAINING 11-308
11.10.17 LOCKOUT/TAGOUT LOG SHEET 11-310

11.10.18 LOCKOUT/TAGOUT INSTRUCTION FORM 11-311

CHAPTER 12 - CONTACTS, TELEPHONE NUMBERS AND EMERGENCY CALL OUTS 12-1

12.1 CONTACTS AND TELEPHONE NUMBERS 12-1

12.2 EMERGENCY CALL OUT PROCEDURES 12-1

12.2.1 MALFUNCTION (FAILURE TO OPEN OR CLOSE) 12-1

12.2.2 DAMAGE TO BRIDGE FROM VESSEL OR VEHICLE 12-1

12.2.3 VEHICLE ACCIDENT OR DISABLED VEHICLE ON BRIDGE 12-2

12.2.4 MARINE RELATED EMERGENCIES 12-2

12.2.5 WEATHER RELATED EMERGENCIES 12-2

Refer to Volume 1 – Operations Manual for Chapters 1-5

Refer to Volume 3 – As-Built Drawings for Chapters 13-14

CHAPTER 6 - PURPOSE AND SCOPE OF MAINTENANCE MANUAL

6.1 PURPOSE OF MAINTENANCE MANUAL

Schedules and procedures are established for the inspection, replacement, cleaning, adjustment, and general maintenance of the mechanical and electrical equipment used to operate the bridge. The frequency of maintenance is based on recommendations by the manufacturers and guidelines established by AASHTO Movable Bridge Inspection, Evaluation and Maintenance Manual. All maintenance forms and activities are to be recorded and maintained by the Maintenance Supervisor.

6.2 LAYOUT OF MAINTENANCE MANUAL

The maintenance section is divided into subsections that group equipment by type. Each subsection describes an equipment item, the number of such items, location, the maintenance frequency, and describes maintenance procedures. Photo references are included in Chapter 9. In Chapter 10 Maintenance Forms are identified for the specific equipment.

6.3 REFERENCES

- AASHTO Movable Highway Bridge Design Specifications
- AASHTO Movable Bridge Inspection, Evaluation, and Maintenance Manual
- Manual on Uniform Traffic Control Devices (MUTCD)
- Drawbridge Operation Regulations 33CFR Part 117
- National Electrical Code (NEC)
- National Fire Protection Association (NFPA) 70E - Standard for Electrical Safety in the Workplace
- Cedar Creek Bridge Rehabilitation (1998) Maintenance and Operation Manual

THIS PAGE INTENTIONALLY LEFT BLANK

CHAPTER 7 - MAINTENANCE POLICIES

7.1 INTRODUCTION

This chapter describes minimum qualifications for maintenance technicians and provides detailed information for maintenance personnel to properly maintain the bridge in accordance with AASHTO guidelines.

7.2 MAINTENANCE TECHNICIAN TRAINING

Maintenance technicians must be familiar with the layout of the bridge and all associated electrical and mechanical equipment and must be trained in all areas detailed in Chapter 7. Training shall be scheduled and conducted by Delaware Department of Transportation.

7.2.1 BRIDGE LAYOUT

Each maintenance technician must be able to locate any piece of equipment of the bridge by name and designation (i.e. span lock motor). He or she must have an in-depth understanding of the electrical and mechanical systems and understand the functions of these systems.

7.2.2 BRIDGE OPERATION

Maintenance technicians must be able to operate the bridge and all ancillary devices in a safe manner as described herein. Each maintenance technician must be trained on all modes of operation and have a basic understanding of operation of the bridge.

7.2.3 TROUBLESHOOTING AND EMERGENCY SITUATIONS

Maintenance personnel must be trained in emergency situations and be capable to perform troubleshooting as described in this manual. In the event of an emergency, the operator must have knowledge of proper procedures described herein.

7.2.4 BRIDGE MAINTENANCE

Maintenance technicians must be trained in bridge maintenance activities as specified herein.

7.3 LOCKOUT/TAGOUT PROCEDURE

No electrical apparatus or electrically driven apparatus should be worked on while energized unless otherwise noted. The appropriate circuit breakers and/or disconnect handles for the equipment being worked on shall be locked in the open (off) position and tagged in accordance with Section 11.10 of this manual. Where work on energized equipment is required the proper PPE equipment and procedures shall be followed in accordance with the bridge arc flash analysis manual located on the bridge.

7.4 PERSONAL PROTECTIVE EQUIPMENT

Appropriate Personal Protective Equipment (PPE) should be utilized when performing all maintenance tasks. Refer to Section 11.5 “Material Data Sheets” for material information (including MSDS sheets) which indicate recommended PPE when handling specific materials. Appropriate PPE should also be used when working on electrical components.

7.5 MAINTENANCE ACCESS

Maintenance personnel can access the bridge equipment by following the information provided below.

7.5.1 OPERATOR'S CONTROL ROOM

The control room is located on the upper level of the control house and is accessible from the southwest side of the bridge. See Section 1.3.4.1 for the control house upper level layout schematic.

A control desk is installed in the control room, and contains pilot devices and indicating lights to operate traffic signals, turning machinery, end screw jack machinery, span lock machinery, traffic gates, and navigation lights.

7.5.2 UTILITY ROOM

The utility room is located on the upper level of the control house and contains a manual transfer switch and a panelboard. A hatch in the floor of the utility room provides access to the storage room. See Section 1.3.4.1 for the control house upper level layout schematic.

7.5.3 STORAGE ROOM

The storage room is located on the lower level of the control house and is accessible from an access hatch in the floor of the utility room. The storage room contains a termination cabinet, main incoming circuit breaker, sump pump, furnace, hot water tank, and holding tank. See Section 1.3.4.2 for the storage room layout schematic.

7.5.4 ELECTRICAL CONTROL EQUIPMENT AREA

The electrical control equipment area is located adjacent to the control house entrance. Individual starter cabinets for the span lock motor, motor brake, end screw jack motor, and traffic gates are installed outside the control house. A motor control enclosure, secondary resistor enclosure, and a generator enclosure are located adjacent to the starter cabinets and the AC Condenser.

7.5.5 WEST ABUTMENT

The west abutment is located below the west end of the swing span. The pivot pier access ladder and platform provide access to the west abutment.

The following equipment is located underneath the west abutment:

- End screw jack motor, end screw jack speed reducer, end screw jacks, couplings, shafts, and limit switches
- Fully closed rigid stop
- Balance wheels and balance wheel track
- Balance plates
- Fender Navigation Lights

The span lock machinery is located on the north side of the west abutment.

7.5.6 PIVOT PIER

The pivot pier is located below the swing span. The pivot pier access ladder and platform provide access to the pivot pier from the roadway.

The following equipment is located at the pivot pier:

- Turning machinery motor, brake, turning machinery speed reducer, rack and pinion, bearings, couplings, instrumentation gear box, rotary cam limit switch, brake limit switches, fully open and overtravel limit switches, span red/green navigation lights, and turning machinery motor disconnect switch
- Pivot bearing, passive live load bearings, balance wheels, and balance wheel track
- Balance plates
- Drag cables and drag cable terminal box
- Span mounted navigation lights

7.5.7 REST PIER

The rest pier is located at the east end of the span and can be accessed from the roadway by partially opening the swing span.

The following equipment is located at the rest pier.

- Fully closed limit switch
- Fender navigation lights
- Bearing wheel track

7.5.8 FENDERS

The west fender can be accessed from the pivot pier access ladder and platform on the north side of the west abutment. The east fender can be accessed from the rest pier. Fenders provide access to the fender navigation lights.

7.6 STAND-BY GENERATOR MAINTENANCE

All recommended generator maintenance specified shall be performed by DelDOT's generator maintenance and repair subcontractor under contract No. DOT1213-Gen_Repair or subsequent contract. Maintenance technicians as specified above are not permitted to directly perform maintenance on this equipment.

For any issues related to generator operation maintenance technicians should contact the contractor on record for this work as specified under the above referenced contact.

All forms provided in this manual shall be completed by DelDOT's maintenance technicians based on the reports provided by the generator maintenance contractor.

7.7 MAINTENANCE OPENINGS

For the requirements on maintenance openings, refer to Sections 2.6 and 2.7.

7.8 MAINTENANCE AND BRIDGE OPERATORS DURING OPENINGS

The bridge must be staffed with the following personnel unless otherwise noted during all maintenance openings:

- Trained Bridge Operator
- Maintenance Technicians (not required for vessel openings)

The bridge operator shall be stationed in the control room of the control house. During emergency situations where the bridge and/or ancillary devices malfunction, one of the trained technicians shall be capable of relocating to the pivot pier, rest pier, or west abutment as required.

The maintenance technicians shall be stationed in the vicinity of the electrical control equipment area and capable of relocating as directed by the operator.

7.9 MAINTENANCE FORMS

Maintenance personnel are required to complete maintenance forms provided in Chapter 10.

7.10 MAINTENANCE REPORTING PROCEDURES

All maintenance shall be conducted in accordance with procedures and protocols defined herein and in accordance with the latest edition of the AASHTO Movable Bridge Inspection, Evaluation and Maintenance Manual.

All maintenance activities shall be documented using forms provided in Chapter 10 of this manual. Record copies of maintenance forms shall be kept and filed by the supervisor.

CHAPTER 8 - ELECTRICAL AND MECHANICAL MAINTENANCE

Each section of Chapter 8 is to be used in conjunction with Chapter 11 providing additional details on each component to be maintained.

8.1 SPAN SUPPORT SYSTEM AND COUNTERWEIGHT

The span support system consists of the pivot bearing, bearing wheels, balance wheels, passive live load bearings, end screw jack machinery, and a counterweight. The end screw jack machinery consists of one 5 HP electric motor (23A, 900 RPM) with an internal brake, speed reducer, end screw jacks, couplings and shafting. The AC brake motor has a full load torque of 29 lb-ft. The following outlines the basic maintenance of these items.

8.1.1 PIVOT BEARING

8.1.1.1 DESCRIPTION

The pivot bearing assembly supports the swing span and provides the rotation point for operation of the swing span. The pivot bearing is supported by the pivot pier.

The pivot bearing is a Torrington Type TSR thrust spherical roller bearing with a thin dense chrome coating (P/N 29364W8). The bearing is located between the upper bearing housing and the lower bearing housing and is sealed with a Garlock seal Model 59 (P/N 0420). The upper bearing housing is made of American Society for Testing and Materials (ASTM) A36M steel and connected to the underside of the pivot girder. The lower housing is made of ASTM A36M steel and connected to the pivot pier.

The pivot bearing has one grease fitting and piping that is located in the upper bearing housing. The grease is purged through two purge plugs located in the lower bearing housing located 180 degrees apart from each other.

Refer to Photo numbered 9.1A.

Refer to Sections 11.1.2 (ID # 28, 29, 30, 31, and 32) for component identification and 11.2.2 for lubrication schematics. Refer to Section 11.7.10 for manufacturer's literature.

8.1.1.2 NUMBER OF ITEMS AND LOCATION

There is one pivot bearing. The pivot bearing is located at the center of the pivot pier.

8.1.1.3 MAINTENANCE AND SCHEDULE

!!! WARNING !!!

Use EXTREME CARE and ALWAYS REMOVE POWER from all pertinent electrical equipment, which includes multiple power sources, before beginning maintenance. Refer to Section 7.3, "Lockout/Tagout Procedure."

Document completed maintenance tasks on Form 10-1 – Span Support System and Counterweight.

CHAPTER 8 - ELECTRICAL AND MECHANICAL MAINTENANCE

Each section of Chapter 8 is to be used in conjunction with Chapter 11 providing additional details on each component to be maintained.

8.1 SPAN SUPPORT SYSTEM AND COUNTERWEIGHT

The span support system consists of the pivot bearing, bearing wheels, balance wheels, passive live load bearings, end screw jack machinery, and a counterweight. The end screw jack machinery consists of one 5 HP electric motor (23A, 900 RPM) with an internal brake, speed reducer, end screw jacks, couplings and shafting. The motor has a full load torque of 29 lb-ft. The following outlines the basic maintenance of these items.

8.1.1 PIVOT BEARING

8.1.1.1 DESCRIPTION

The pivot bearing assembly supports the swing span and provides the rotation point for operation of the swing span. The pivot bearing is supported by the pivot pier.

The pivot bearing is a Torrington Type TSR thrust spherical roller bearing with a thin dense chrome coating (P/N 29364W8) (ID # 29). The bearing is located between the upper bearing housing (ID # 28) and the lower bearing housing (ID # 32) and is sealed with a Garlock seal Model 59 (P/N 0420) (ID # 30). The upper bearing housing is made of American Society for Testing and Materials (ASTM) A36M steel and connected to the underside of the pivot girder. The lower housing is made of ASTM A36M steel and connected to the pivot pier.

The pivot bearing has one grease fitting located at the roadway level lubrication bracket at the west end of the swing span. A lubrication line connects the grease fitting to the upper bearing housing. The grease is purged through two purge plugs located in the lower bearing housing located 180 degrees apart from each other.

Refer to Photo numbered 9.1A.

Refer to Sections 11.1.2 for component identification and 11.2.2 for lubrication schematics. Refer to Section 11.7.10 for manufacturer's literature.

8.1.1.2 NUMBER OF ITEMS AND LOCATION

There is one pivot bearing. The pivot bearing is located at the center of the pivot pier.

8.1.1.3 MAINTENANCE AND SCHEDULE

!!! WARNING !!!

Use EXTREME CARE and ALWAYS REMOVE POWER from all pertinent electrical equipment, which includes multiple power sources, before beginning maintenance. Refer to Section 7.3, "Lockout/Tagout Procedure."

Use EXTREME CARE and CAUTION around moving components (including the swing span) when observing machinery during operation.

Document completed maintenance tasks on the maintenance checklists included in Appendix B of the Contract.

MONTHLY (Refer to Section 11.4.7 for Bridge Maintenance Performance Standard)	• Lubricate pivot bearing with Mobil Mobilux EP-2 or equivalent using the grease fitting. Notify the supervisor immediately if water is purged from the bearing during lubrication.
ANNUALLY	• Check upper and lower housing and supporting frame for signs of corrosion. Clean and spot paint the housing, support frame, and fasteners if corroded. • Check upper and lower housing fasteners for tightness. Tighten loose fasteners. • Observe the pivot bearing during opening and closing operations of the span. Note any abnormal sounds. • Inspect the pivot bearing pedestal for cracking and evidence of deterioration.

8.1.2 BEARING WHEELS

8.1.2.1 DESCRIPTION

The bearing wheels support the swing span arm between the pivot pier and east rest pier as well as live load forces when the bridge is in the closed position. The bearing wheels are supported by a steel track located on the rest pier. When the bridge is operating, the bearing wheels roll along the track until the swing span rotates away from the rest pier.

The bearing wheel housing (ID # 20) is made of ASTM A709 Grade 345 steel which supports the bearing wheel shaft. The bearing wheel shaft (ID # 17) is made of ASTM A576 Grade HR 1045 steel. The bearing wheel shaft is supported by a SKF spherical plain bearing (P/N GE 200 ES) (ID # 18). The bearing wheel (ID # 16) is made of ASTM A668M Class D forged steel. When the bearing wheel rotates, the shaft remains stationary and the bearing wheel rotates about the shaft. Each bearing wheel also has two Garlock Model 54 Klozure seals (P/N 54x6021) (ID # 19) to retrain grease and prevent contaminants from entering the bearing.

The bearing wheels are mounted to the bottom flange of Floor Beam 1.

Each bearing wheel has one grease fitting located at the roadway level lubrication bracket at the east end of the swing span. A lubrication line connects each grease fitting to the centerline of one of the bearing wheel shaft to provide grease to the sealed bearing. Grease is purged through the bearing wheel seals.

Refer to Photos numbered 9.1B and 9.1C.

Refer to Sections 11.1.1 for component identification and 11.2.1 for lubrication schematics.

8.1.2.2 NUMBER OF ITEMS AND LOCATION

There are two bearing wheels mounted to the bottom flange of Floor Beam 1 located at the east rest pier.

8.1.2.3 MAINTENANCE AND SCHEDULE

!!! WARNING !!!

Use EXTREME CARE and ALWAYS REMOVE POWER from all pertinent electrical equipment, which includes multiple power sources, before beginning maintenance. Refer to Section 7.3, "Lockout/Tagout Procedure."

Document completed maintenance tasks on the maintenance checklists included in Appendix B of the Contract.

THREE MONTHS (Refer to Section 11.4.7 for Bridge Maintenance Performance Standard)	• Lubricate bearing wheel bearings with Mobil Mobilux EP-2 or equivalent. • Clean debris from track.
ANNUALLY	• Check the bearing wheel base fasteners and end cap fasteners are secure. Tighten loose fasteners. • Check the bearing wheels and track for any signs of distress. • Inspect bearing wheel track grout for cracking and evidence of deterioration.

8.1.3 BALANCE WHEELS

8.1.3.1 DESCRIPTION

The balance wheels at the pivot pier support the swing span from any imbalance or wind loading applied to the bridge during operations. The balance wheels are supported by a steel track mounted to the top of the pivot pier.

The balance wheels at the west abutment support the swing span during operations until the swing span rotates away from the abutment. The balance wheels are supported by a steel track mounted to the top of the west abutment.

The balance wheel bases consist of two sleeve bearings that support the balance wheel shaft assembly. The balance wheel bearings (ID # 23) consist of split bronze bushings mounted into the cap and base. The bushings are made of ASTM B22 Alloy C91100 bronze. The bearing housing is made of ASTM A36M steel. As the bronze bushings wear, laminated liners are located between the bearing cap and base, can be removed to reduce the clearance.

Each balance wheel shaft assembly consists of a balance wheel (ID # 21) keyed to the balance wheel shaft (ID # 22). The balance wheel shaft is made of ASTM A675 Class HR 1045 steel while the balance wheel is made of ASTM A148 Grade 90/60 cast steel.

Each balance wheel bearing has one grease fitting located at the roadway level lubrication bracket at the west end of the swing span. A lubrication line connects each grease fitting to one of the balance wheel bearing bases. Grease is purged through the shaft/bushing interface.

Refer to Photos numbered 9.1D, 9.1E, and 9.1H.

Refer to Sections 11.1.1 for component identification and 11.2.1 for lubrication schematics.

8.1.3.2 NUMBER OF ITEMS AND LOCATION

There are a total of ten balance wheels and two balance wheel tracks. One balance wheel track and eight balance wheels are located on the pivot pier. One balance wheel track and two balance wheels are located at the west abutment.

8.1.3.3 MAINTENANCE AND SCHEDULE

!!! WARNING !!!

Use EXTREME CARE and ALWAYS REMOVE POWER from all pertinent electrical equipment, which includes multiple power sources, before beginning maintenance. Refer to Section 7.3, "Lockout/Tagout Procedure."

Document completed maintenance tasks on the maintenance checklists included in Appendix B of the Contract.

MONTHLY (Refer to Section 11.4.1 for Bridge Maintenance Performance Standard)	• Lubricate balance wheel sleeve bearings with Mobil Mobilux EP-2 or equivalent. • Clean debris from the balance wheel tracks.
ANNUALLY	• Check the balance wheel base, balance wheel cap, and balance wheel track fasteners are secure. Tighten loose fasteners. • Check the balance wheels and tracks for any signs of distress. • Inspect balance wheel track grout for cracking and evidence of deterioration.

8.1.4 PASSIVE LIVE LOAD BEARINGS

8.1.4.1 DESCRIPTION

The passive live load bearings provide live load support at the pivot pier.

The passive live load bearings consist of an upper and lower stainless steel weldment and two live load shoes. The upper weldment (ID # 24) is mounted to the bottom of the pivot girder while the lower weldment (ID # 27) is mounted to the pivot pier with anchor bolts. The upper live load shoes (ID # 25) are made of stainless steel. The lower live load shoes (ID # 26) are manufactured by Lubrite Technologies and are made from Alloy 196 with Type G1 lubricant.

Shims are located beneath both live load shoes to adjust the clearance between the shoes. The original design drawing indicated a 0.003" nominal clearance between the upper and lower shoes with the end jacks driven.

The passive live load bearings do not require lubrication.

Refer to Photos numbered 9.1F and 9.1G.

Refer to Section 11.1.1 for component identification.

8.1.4.2 NUMBER OF ITEMS AND LOCATION

There are two passive live load bearings. One bearing is located on the north side of the pivot pier and the other is located on the south side of the pivot pier.

8.1.4.3 MAINTENANCE AND SCHEDULE

!!! WARNING !!!

Use EXTREME CARE and ALWAYS REMOVE POWER from all pertinent electrical equipment, which includes multiple power sources, before beginning maintenance. Refer to Section 7.3, "Lockout/Tagout Procedure."

Document completed maintenance tasks on the maintenance checklists included in Appendix B of the Contract.

ANNUALLY	• Check that the upper and lower weldment fasteners and the live load shoe fasteners are secure. Tighten loose fasteners. • With the span closed and the end jacks driven, check the clearance at both passive live load bearing locations to ensure the clearances are 0.003". • Inspect lower support weldment grout for cracking and evidence of deterioration.

8.1.5 END SCREW JACK SPEED REDUCER

8.1.5.1 DESCRIPTION

The end screw jack speed reducer is operated to increase torque and reduce speed from the input shaft to the output shaft through internal gearing.

The end screw jack speed reducer (ID # 3), manufactured by Foote-Jones, is a right angle speed reducer. The end screw jack speed reducer is model number BHE 0703. The serial number for the speed reducer is 6C72911M and should be referenced if an inquiry to the manufacturer is ever required. Under normal operation, the end screw jack speed reducer intermediate shaft is driven by the end screw jack motor. Under this configuration, the end screw jack speed reducer has a gear ratio of 16.8056:1. Emergency operation of the end screw jack speed reducer is achieved via a capstan driven manual operation input shaft located at the top of the speed reducer. The manual operation input shaft is accessed by removal of a hatch in the roadway. When driven by the capstan, the end screw jack speed reducer has a gear ratio of 30.6884:1.

The end screw jack speed reducer is an oil lubricated enclosed speed reducer. An oil pump, driven by the motor input shaft, pumps oil from the bottom of the reducer housing to the capstan input and motor input shaft bearings. The other shaft bearings are splash lubricated or submerged in the oil within the reducer housing.

Refer to Photos numbered 9.1H, 9.1I, and 9.1J.

Refer to Sections 11.1.1 for component identification and 11.2.1 for lubrication schematics. Refer to Section 11.7.1 for the manufacturer's maintenance manual.

8.1.5.2 NUMBER OF ITEMS AND LOCATION

There is one end screw jack speed reducer on the swing span. The end screw jack machinery speed reducer is located below the deck at the west end of the swing span.

8.1.5.3 MAINTENANCE AND SCHEDULE

!!! WARNING !!!

Use EXTREME CARE and ALWAYS REMOVE POWER from all pertinent electrical equipment, which includes multiple power sources, before beginning maintenance. Refer to Section 7.3, "Lockout/Tagout Procedure."

Use EXTREME CARE and CAUTION around moving components (including the swing span) when observing machinery during operation.

Document completed maintenance tasks on the maintenance checklists included in Appendix B of the Contract.

MONTHLY (Refer to Section 11.4.4 for Bridge Maintenance Performance Standard)	• Visually inspect the reducer oil level in the sight glass before operating the end screw jacks. Add make up oil (Mobil Mobilgear 600 XP 100) if the oil level is more than ¼" below the oil level line on the lubrication plate. • Listen for unusual noises during operation of the machinery. • Inspect breather condition. Replace breather if it is saturated or damaged. • Inspect the oil pump piping pressure gage. Replace if damaged. Record oil pressure during operation of the end screw jack machinery. • Inspect oil pump and oil pump piping for leaks.
ANNUALLY	• Check for oil leakage at the seals. • Check fasteners for tightness. Tighten loose fasteners.
FIVE YEARS (Refer to Section 11.4.4 for Bridge Maintenance Performance Standard)	• Flush and replace oil in the speed reducer housing with Mobil Mobilgear 600 XP 100 or equivalent.

8.1.6 END SCREW JACK COUPLINGS

8.1.6.1 DESCRIPTION

Each coupling transfers torque from one shaft to another.

A grid coupling (ID # 2), manufactured by Falk, is used to transmit torque between the end screw jack motor and the end screw jack speed reducer. The grid coupling is type T10, size 1040. The grid coupling has one grease fitting and one purge plug in the coupling cover.

Gear couplings (ID # 4, 6, 13, and 15), manufactured by Falk, are used to transmit the torque between the end screw jack speed reducer and the end jacks. The gear couplings are type G51, size 1015. The gear couplings have grease fittings/purge plugs located in the flange of the coupling.

Refer to Photos numbered 9.1I and 9.1K.

Refer to Sections 11.1.1 for component identification and 11.2.1 for lubrication schematics. Refer to Sections 11.7.6 and 11.7.7 for the manufacturer's maintenance manuals.

8.1.6.2 NUMBER OF ITEMS AND LOCATION

The end screw jack machinery has one grid coupling. The grid coupling connects the end screw jack motor shaft to the end screw jack speed reducer intermediate input shaft.

The end screw jack machinery has four gear couplings. Two gear couplings connect the end screw jack speed reducer output shafts to floating shafts. One gear coupling connects each floating shaft to an end screw jack input shaft

8.1.6.3 MAINTENANCE AND SCHEDULE

!!! WARNING !!!

Use EXTREME CARE and ALWAYS REMOVE POWER from all pertinent electrical equipment, which includes multiple power sources, before beginning maintenance. Refer to Section 7.3, "Lockout/Tagout Procedure."

Use EXTREME CARE and CAUTION around moving components (including the swing span) when observing machinery during operation.

Document completed maintenance tasks on the maintenance checklists included in Appendix B of the Contract.

MONTHLY	• Inspect keys and keyways at all couplings for grease leakage, tightness and cracking. Check coupling flange bolts for corrosion and tightness. Per the manufacturer's installation instructions, the end screw jack motor coupling bolts should be torqued to 100 in-lbs and the end screw jack gear coupling bolts should be torqued to 372 in-lbs. • Inspect for leaks at seals and gaskets. If the seal is leaking, inspect seal for damage. Notify the Engineer if the seal is damaged. If coupling covers are removed, replace lubricant.
SIX MONTHS (Refer to Section 11.4.3 for Bridge Maintenance Performance Standard)	• For gear couplings, replace lubricant with Mobil Mobilux EP-0 or equivalent.
ANNUALLY (Refer to Section 11.4.3 for Bridge Maintenance Performance Standard)	• For the end screw jack motor coupling, replace lubricant with Falk Long Term Grease (LTG) or equivalent.

8.1.7 END SCREW JACKS

8.1.7.1 DESCRIPTION

Two end screw jacks support the swing span arm between the pivot pier and west abutment as well as the live load forces when the bridge is in the closed position.

The end screw jacks (ID # 7) were manufactured by Duff-Norton. Each end jack, model M-9099, is rated to provide up to 100 tons of lifting force. The serial number for the north and south end screw jacks are LM-10099-11B and LM-10099-10B, respectively. The serial number should be referenced if an inquiry to the manufacturer is ever required.

The end screw jacks are worm gear driven actuators. The torque transmitted from the end screw jack floating shafts drives and retracts the end screw jacks. The end screw jacks have a gear ratio of 12:1. The end screw jack shoes have a maximum travel distance of 3 inches.

An end screw jack bearing plate (ID # 8) is fastened to the underside of each end screw jack shoe. The end screw jack bearing plates have a 14 inch diameter, a thickness of 1 inch, and are made of ASTM B22 Alloy C90500 bronze.

Each end screw jack bearing plate contacts an end screw jack masonry plate. The end screw jack masonry plates (ID # 9) are made of ASTM A668 Class G steel.

The end screw jack gearing is grease lubricated.

Refer to Photos numbered 9.1H and 9.1K.

Refer to Sections 11.1.1 for component identification and 11.2.1 for lubrication schematics. Refer to Section 11.7.5 for the manufacturer's maintenance manual.

8.1.7.2 NUMBER OF ITEMS AND LOCATION

There are two end screw jacks located at the west end of the swing span. The end screw jack masonry plates are anchored to the west abutment.

8.1.7.3 MAINTENANCE AND SCHEDULE

!!! WARNING !!!

Use EXTREME CARE and ALWAYS REMOVE POWER from all pertinent electrical equipment, which includes multiple power sources, before beginning maintenance. Refer to Section 7.3, "Lockout/Tagout Procedure."

Use EXTREME CARE and CAUTION around moving components (including the swing span) when observing machinery during operation.

Document completed maintenance tasks on the maintenance checklists included in Appendix B of the Contract.

THREE MONTHS	• Check end screw jack protective boot for rips or leaks. • Clean debris from end screw jack masonry plates. • Observe end screw jacks during operation for any unusual noises or observations.
ANNUALLY (Refer to Section 11.4.8 for Bridge Maintenance Performance Standard)	• Replace the end screw jacks lubricant with Mobil Mobilux EP-2 or equivalent. • Check that all fasteners are tight and end screw jack components are corrosion free. Tighten loose fasteners. Clean and spot paint areas of corrosion on the end screw jacks. Do not paint the bearing plate contacting surfaces. • Check the contacting surfaces between the end screw jack bearing plates and masonry plates for deformations and wear. There should be no corrosion on the contact areas of either plate. If corrosion is present, clean the plate surfaces. • Inspect masonry plate grout for cracking and evidence of deterioration.

8.1.8 COUNTERWEIGHT AND BALANCE PLATES

8.1.8.1 DESCRIPTION

Since the arms of the swing span are of unequal length, the shorter (west) arm has a counterweight to balance the span about the pivot bearing. The counterweight consists of the concrete filled deck on a portion of the swing span. Balance plates are located below the deck of the west arm of the swing span, and allow for adjustment of the span balance. Balance plates are located on the bottom flanges of structural steel members on the west end of the swing span.

Refer to Photos numbered 9.1L, 9.1M, and 9.1N.

8.1.8.2 NUMBER OF ITEMS AND LOCATION

There is one counterweight located on the west arm of the swing span. Balance plates are located on the flanges of structural steel members throughout the west arm of the swing span.

8.1.8.3 MAINTENANCE AND SCHEDULE

!!! WARNING !!!

Use EXTREME CARE and ALWAYS REMOVE POWER from all pertinent electrical equipment, which includes multiple power sources, before beginning maintenance. Refer to Section 7.3, "Lockout/Tagout Procedure."

Document completed maintenance tasks on the maintenance checklists included in Appendix B of the Contract.

ANNUALLY	• Check counterweight balance plate locations for proper drainage and clean out debris. • Check for concrete spalling, cracks, and signs of structural distress. Check adjacent structural supports for signs of distress. • Check for shifting of balance plates. Neatly restack plates that have fallen over or shifted out of position.

8.1.9 LUBRICATION LINES

8.1.9.1 DESCRIPTION

The lubrication lines allow grease to be pumped to components from the roadway. Brackets at the roadway level support grease fittings which are connected to lubrication lines. The lubrication lines are comprised of Parker Paraflex HLB02 hoses and fittings to connect the grease fittings at the roadway level to the balance wheels, bearing wheels, and pivot bearing. Lubrication line supports are used to secure the lubrication lines to the swing span to prevent the lubrication lines from being damaged.

Refer to Photos numbered 9.1A, 9.1B, 9.1C, 9.1D, 9.1O, and 9.1P.

8.1.9.2 NUMBER OF ITEMS AND LOCATION

Two lubrication line brackets are located at the south side of the west end of the swing span. A grease fitting for each balance wheel bearing and the pivot bearing (a total of 21 grease fittings and lubrication lines) are mounted to the west end lubrication brackets. One lubrication line bracket is located at the south side of the east end of the swing span. A grease fitting for each bearing wheel (2 grease fittings and lubrication lines) are mounted to the east lubrication line bracket.

8.1.9.3 MAINTENANCE AND SCHEDULE

!!! WARNING !!!

Use EXTREME CARE and ALWAYS REMOVE POWER from all pertinent electrical equipment, which includes multiple power sources, before beginning maintenance. Refer to Section 7.3, "Lockout/Tagout Procedure."

Use EXTREME CARE and CAUTION around moving components (including the swing span) when observing machinery during operation.

Document completed maintenance tasks on the maintenance checklists included in Appendix B of the Contract.

MONTHLY	• Check the lubrication lines and fittings for damage prior to use. • After use of the lubrication lines, check lubrication lines for leaks and verify that components (balance wheel bearings, pivot bearing, and/or bearing wheel bearings) have been adequately lubricated. • Check the condition of the lubrication line supports. Tighten loose fasteners. • Verify that lubrication lines are secure and clear of the balance wheels and balance wheel track during operation of the span.

8.2 TURNING MACHINERY

The turning machinery is located below the deck of the swing span and on the pivot pier. The turning machinery consists of one 5 HP electric motor, one motor brake, one speed reducer, rack and pinion set, shaft bearings, couplings, and shafting. The motor has a full load torque of 30 lb-ft at a speed of 865 RPM, and full load current of 17.8 Amperes.

8.2.1 MOTOR BRAKE

8.2.1.1 DESCRIPTION

The motor brake is used to brake the span for normal and emergency stopping during bridge operations.

The brake (ID # 39) was manufactured by Mondel and is an electric shoe brake. The motor brake model number is 6WST/E-ED23/5S. The motor brake has a 6" diameter brakewheel coupling and a braking torque of 25 ft-lbs. The brake is spring set and electro-hydraulically released, as commanded by the bridge control system.

Refer to Photos numbered 9.2A, 9.2B, and 9.2C.

Refer to Section 11.1.2 for component identification. Refer to Section 11.7.9 for the manufacturer's maintenance manual.

8.2.1.2 NUMBER OF ITEMS AND LOCATION

The swing span is equipped with one motor brake.

The motor brake is located between turning machinery motor and the turning machinery speed reducer housing.

8.2.1.3 MAINTENANCE AND SCHEDULE

!!! WARNING !!!

Use EXTREME CARE and ALWAYS REMOVE POWER from all pertinent electrical equipment, which includes multiple power sources, before beginning maintenance. Refer to Section 7.3, "Lockout/Tagout Procedure."

Use EXTREME CARE and CAUTION around moving components (including the swing span) when observing machinery during operation.

Document completed maintenance tasks on the maintenance checklists included in Appendix B of the Contract.

GENERAL	• In the event that brakes require the following items, refer to the Manufacturer's Operation and Maintenance Manuals for detailed instructions. • Motor brake actuator repairs should be performed by a Mondel authorized specialist. Replacement thruster oil shall be provided by the Mondel authorized specialist. The motor brake frame shall be adjusted by the Contractor.
ANNUALLY (Refer to Section 11.4.2 for Bridge Maintenance Performance Standard)	• Inspect the brake shoes and brakewheel for wear, dust, dirt, grease, and proper adjustment. Check the brake pad thickness. Notify the Engineer if the remaining thickness is less than 1/16 inch. • Check clearance between the brake shoe and brakewheel. The measured gap shall have a minimum of $^{1}/_{64}$" clearance between brake shoe and brakewheel when hand released. If clearances need to be adjusted, the linkages shall be adjusted in accordance with Section 11.7.9. If adjustments are made to the linkages, the reserve stroke and torque setting should be verified and adjusted as well. Adjustment procedures are located within Section 11.7.9. • Inspect the mechanical linkages for wear, broken parts, and tightness of nuts and bolts. Check for freedom of moving parts (no binding or sticking). Check the brake housing and linkages for corrosion and signs of water dripping onto the brake. Seal or repair overhead components or hatches if water is found dripping on the brake. • Check for excessive heating of parts evident by discoloration of metal parts. • Check operation of the brake during test operations of the bridge. Check for any unusual odor and excessive vibration. • Check adjustment of limit switches and hand release device and adjust for proper operation. When the motor brake hand release lever is pulled up, the brake pads should release from the brakewheel. The motor brake has two limit switches. Verify brake limit switches provide proper indication at the control desk when the brake is set, released via the control system, and hand released. Adjust limit switch lever arms if proper indication is not observed at the control desk.

- Check brake reserve stroke height with a scale. The reserve stroke height of the motor brake should be 0.7" +/- 1/16". The reserve stroke refers to the exposed thruster rod length, measured from the top of the thruster cover to the bottom of the lug at the end of the thruster rod (refer to Figure 2 of Section 11.7.9). As the brake pads wear, the reserve stroke becomes shorter. If the reserve stroke requires adjustment, adjust linkages as specified in Section 11.7.9.
- Check the motor brake spring tension via the brake torque gauge located near the thruster of the brake. The motor brake should be set to provide a braking torque of 25 ft-lbs. The torque is read by matching the top of the spring block to the corresponding torque value on the scale. To adjust the brake torque, turn the torque adjustment screw until the top of the spring block is at the appropriate torque setting on the scale. Perform Item 5 above (observing brake operation during test operations of the bridge) to confirm proper operation of the motor brake after adjustment.
- Check for loose brake terminations. Tighten loose connections.
- During winter months, verify that the brake pads are not frozen to the brakewheel.

8.2.2 COUPLINGS

8.2.2.1 DESCRIPTION

Each coupling transfers torque from one shaft to another.

The brakewheel coupling (ID # 38) is a double engagement gear coupling, manufactured by Mondel, and is used to transmit the torque between the turning machinery motor and turning machinery speed reducer. The brakewheel coupling is type G62, size 1010. The brakewheel coupling has grease fitting(s)/purge plug(s) located in the coupling cover.

The turning machinery grid coupling (ID # 41), manufactured by Falk, transmits torque through the turning machinery. The grid coupling is type T20, size 1110. The grid coupling has grease fitting(s)/purge plug(s) located in the coupling cover.

Couplings, manufactured by Lovejoy, are used to connect the instrumentation equipment to the turning machinery equipment (ID # 34 and 36). The instrumentation couplings are Delta flex Type 1, size 40, flexible couplings. The instrumentation couplings do not require lubrication.

Refer to Photos numbered 9.2B, 9.2D, and 9.2E.

Refer to Sections 11.1.2 for component identification and 11.2.2 for lubrication schematics. Refer to Section 11.7.8 for the manufacturer's maintenance manual for the turning machinery grid coupling.

8.2.2.2 NUMBER OF ITEMS AND LOCATION

One brakewheel coupling connects the turning machinery motor front output shaft to the turning machinery speed reducer input shaft.

One grid coupling connects the turning machinery speed reducer output shaft to the main pinion shaft.

One instrumentation coupling connects the turning machinery motor rear output shaft to the instrumentation gear box input shaft. A second instrumentation coupling connects the instrumentation gear box output shaft to the rotary cam limit switch input shaft.

8.2.2.3 MAINTENANCE AND SCHEDULE

!!! WARNING !!!

Use EXTREME CARE and ALWAYS REMOVE POWER from all pertinent electrical equipment, which includes multiple power sources, before beginning maintenance. Refer to Section 7.3, "Lockout/Tagout Procedure."

Use EXTREME CARE and CAUTION around moving components (including the swing span) when observing machinery during operation.

Document completed maintenance tasks on the maintenance checklists included in Appendix B of the Contract.

MONTHLY	• Inspect keys and keyways at all couplings for grease leakage, tightness and cracking. Check coupling flange bolts for corrosion and tightness. Per the manufacturer's installation instructions, the turning machinery grid coupling bolts should be torqued to 260 in-lbs. • Inspect for leaks at seals and gaskets. If the seal is leaking, inspect seal for damage. Notify the Engineer if the seal is damaged. If coupling covers are removed, replace lubricant. • Inspect instrumentation couplings for cracking or damage.
SIX MONTHS (Refer to Section 11.4.3 for Bridge Maintenance Performance Standard)	• Replace lubricant within the brakewheel coupling with Mobil Mobilux EP-0 or equivalent. • Replace lubricant within the turning machinery grid coupling with Falk Long Term Grease or equivalent.

!!! WARNING !!!

Use EXTREME CARE and VERIFY that no grease gets on the brakewheel surface as this may cause the brakewheel to slip within the brake shoes which may decrease the overall braking capacity.

8.2.3 TURNING MACHINERY SPEED REDUCER

8.2.3.1 DESCRIPTION

The turning machinery speed reducer is operated to increase torque and reduce speed from the input shaft to the output shaft through internal gearing.

The turning machinery speed reducer (ID # 40) was manufactured by Falk. The turning machinery speed reducer is a right angle reducer, model number 6CB4-12BS, and has a gear ratio of 110.6:1. The M.O. number for the speed reducer is 97-032067 and should be referenced if an inquiry to the manufacturer is ever required.

Emergency operation of the turning machinery speed reducer (and the span) is achieved via a capstan driven manual operation input shaft located at the top of the speed reducer. The manual operation input shaft is accessed by removal of a hatch in the roadway.

The turning machinery speed reducer is an oil lubricated enclosed speed reducer. The upper and lower output shaft bearings are grease lubricated. The remaining speed reducer bearings are splash lubricated from oil within the reducer housing.

Refer to Photos numbered 9.2A, 9.2C, and 9.2D.

Refer to Sections 11.1.2 for component identification and 11.2.2 for lubrication schematics. Refer to Section 11.7.2 for the manufacturer's maintenance manual.

8.2.3.2 NUMBER OF ITEMS AND LOCATION

There is one turning machinery speed reducer on the swing span. The turning machinery speed reducer is fastened to the swing span, above the pivot pier.

8.2.3.3 MAINTENANCE AND SCHEDULE

!!! WARNING !!!

Use EXTREME CARE and ALWAYS REMOVE POWER from all pertinent electrical equipment, which includes multiple power sources, before beginning maintenance. Refer to Section 7.3, "Lockout/Tagout Procedure."

Use EXTREME CARE and CAUTION around moving components (including the swing span) when observing machinery during operation.

Document completed maintenance tasks on the maintenance checklists included in Appendix B of the Contract.

MONTHLY (Refer to Section 11.4.4 for Bridge Maintenance Performance Standard)	• Visually inspect the oil level by temporarily loosening / removing the oil level plug and check the oil level inside the reducer housing. Add oil to the reducer if the oil level is more than ¼" below the oil level plug. • Listen for unusual noises during operation of the machinery. Report any unusual noises to bridge management. • Inspect the condition of the breather. Replace the breather if it is damaged or saturated.
SIX MONTHS (Refer to Section 11.4.4 for Bridge Maintenance Performance Standard)	• For the upper and lower output shaft bearings, lubricate bearings with Mobil Mobilux EP-2 or equivalent.
ANNUALLY	• Check for oil leakage at the seals. • Check fasteners for tightness. Tighten loose fasteners.
FIVE YEARS (Refer to Section 11.4.4 for Bridge Maintenance Performance Standard)	• Flush and replace oil in the speed reducer with Mobil Mobilgear 600 XP 150.

8.2.4 BEARINGS

8.2.4.1 DESCRIPTION

Sleeve bearings (ID # 42 and 43) support the main pinion shaft.

The sleeve bearing housings contain a split ASTM B22 Alloy C91100 bronze bushings secured to the cap and base. A grease fitting is located in the bearing cap and grease is purged through the shaft/bushing interface. Laminated brass liners are located between the bearing cap and base for adjustment due to wear of the bronze bushing.

Refer to Photo numbered 9.2D.

Refer to Sections 11.1.2 for component identification and 11.2.2 for lubrication schematics.

8.2.4.2 NUMBER OF ITEMS AND LOCATION

Two sleeve bearings support the main pinion shaft located on the west side of the pivot pier.

8.2.4.3 MAINTENANCE AND SCHEDULE

!!! WARNING !!!

Use EXTREME CARE and ALWAYS REMOVE POWER from all pertinent electrical equipment, which includes multiple power sources, before beginning maintenance. Refer to Section 7.3, "Lockout/Tagout Procedure."

Document completed maintenance tasks on the maintenance checklists included in Appendix B of the Contract.

MONTHLY (Refer to Section 11.4.1 for Bridge Maintenance Performance Standard)	• Lubricate the sleeve bearings with Mobil Mobilux EP-2 or equivalent. .
ANNUALLY	• Check bearing cap and base fasteners for tightness. Tighten loose fasteners.

8.2.5 OPEN GEARING

8.2.5.1 DESCRIPTION

The open gear set increases torque and reduces rotational speed to operate the bridge. Rotation of the main pinion about the rack rotates the span about the pivot bearing.

The main pinion (ID # 44) is a 13 tooth spur gear with an 8.276 inch (210.205mm) pitch diameter and 20° full depth involute tooth profile with a face width of 5.512 inches (140.00mm). The mating rack (ID # 45) is a 98 tooth rack with a 206.291 inch (5239.795mm) pitch diameter, and 20° full depth involute tooth profile with a face width of 5 inches (127mm). The main pinion is made of ASTM A291 Class 4 forged steel with a Brinell hardness of 248-293. The rack is made of ASTM A668 Class H forged steel with a Brinell hardness of 187-235.

All open gearing is lubricated with grease that must be brushed onto the gear teeth manually as described below.

Refer to Photo numbered 9.2D.

Refer to Sections 11.1.2 for component identification and 11.2.2 for lubrication schematics.

8.2.5.2 NUMBER OF ITEMS AND LOCATION

The swing span turning machinery has one main pinion and rack.

The main pinion shaft is supported in sleeve bearings secured to the swing span. The rack is fastened to the pivot pier with anchor bolts.

8.2.5.3 MAINTENANCE AND SCHEDULE

!!! WARNING !!!

Use EXTREME CARE and ALWAYS REMOVE POWER from all pertinent electrical equipment, which includes multiple power sources, before beginning maintenance. Refer to Section 7.3, "Lockout/Tagout Procedure."

Use EXTREME CARE and CAUTION around moving components (including the swing span) when observing machinery during operation.

Document completed maintenance tasks on the maintenance checklists included in Appendix B of the Contract.

MONTHLY (Refer to Section 11.4.5 for Bridge Maintenance Performance Standard)	• For all gears, remove any debris, including leaves, sand, dirt, and bird debris from the gear teeth and surrounding area. • Remove any lubricant that has been displaced to non-contacting surfaces with scrapers and rags. • For all gears, lubricate teeth using Mobil Mobiltac 325 NC or equivalent grease.
ANNUALLY (Refer to Section 11.4.5 for Bridge Maintenance Performance Standard)	• Remove, clean, and replace open gear lubricant using Mobil Mobiltac 325 NC or equivalent. • Observe the open gearing during opening and closing operations. Note excessive vibrations, binding, and unusual noises. • Inspect rack grout for cracking and evidence of deterioration.

8.2.6 INSTRUMENTATION GEAR BOX

8.2.6.1 DESCRIPTION

The instrumentation gear box transfers the rotation of the turning machinery motor rear output shaft to the rotary cam limit switch.

The instrumentation gear box (ID # 35) was manufactured by Peerless-Winsmith. The gear box is a parallel shaft reducer, model number 917DBD, and has a gear ratio of 750:1.

The input shaft is connected to the turning machinery motor rear output shaft via an instrumentation coupling. The output shaft is connected to the rotary cam limit switch input shaft via an instrumentation coupling.

Two of the instrumentation gear box bearings require grease be pumped into grease fittings to lubricate the bearings. The other instrumentation gear box bearings are lubricated by the oil inside of the gear box.

Refer to Photo numbered 9.2E.

Refer to Sections 11.1.2 for component identification and 11.2.2 for lubrication schematics. Refer to Section 11.7.4 for the manufacturer's maintenance manual.

8.2.6.2 NUMBER OF ITEMS AND LOCATION

One instrumentation gear box is located below the deck of the swing span adjacent to the turning machinery motor.

8.2.6.3 MAINTENANCE AND SCHEDULE

!!! WARNING !!!

Use EXTREME CARE and ALWAYS REMOVE POWER from all pertinent electrical equipment, which includes multiple power sources, before beginning maintenance. Refer to Section 7.3, "Lockout/Tagout Procedure."

Document completed maintenance tasks on the maintenance checklists included in Appendix B of the Contract.

ANNUALLY	• Check instrumentation gear box oil level. If the oil level is low, fill the gear box with Mobil 600 W Super Cylinder Oil or equivalent up to the proper level. • Clean the grease fittings and pump fresh grease into the bearings with grease fittings slowly with a hand grease gun. Use Mobil Mobilux EP-2 or equivalent. • Check gear box fasteners for tightness. Tighten loose fasteners.
FIVE YEARS	• Drain, flush, and refill the instrumentation gear box up to the appropriate level with Mobil 600 W Super Cylinder Oil or equivalent.

8.3 SPAN LOCK MACHINERY AND RIGID STOPS

The span lock machinery provides a locking mechanism for the span. There is one span lock system comprised of a ¼ HP gear motor, rack and pinion set, lock bar, guides, and a receiver. The gear motor has a full load torque of 0.76 lb-ft at a speed of 1730 RPM and full load current of 1.1 Amperes.

Rigid stops are used to prevent the span from over traveling during opening and closing operations.

8.3.1 LOCK BAR, GUIDES AND RECEIVER

8.3.1.1 DESCRIPTION

The span lock machinery electrically operates a lock bar that provides a locking mechanism for the swing span.

The span lock machinery retracts and extends a lock bar through the front and rear guides and into and out of the receiver. The guides support the lock bar.

The receiver (ID # 51) is a steel weldment with a wear plate fastened to the northwest corner or the swing span. The guides (ID # 49 and 50) are steel weldments with upper, lower, and side wear plates, which are fastened to the guides. The wear plates were manufactured by Lubrite Technologies and are Alloy 196 with type G1 lubricant.

The lock bar (ID # 48) requires grease to be brushed onto the sliding surfaces of the lock bar.

Refer to Photos numbered 9.3A, 9.3B, and 9.3C.

Refer to Sections 11.1.2 for component identification and 11.2.2 for lubrication schematics.

8.3.1.2 NUMBER OF ITEMS AND LOCATION

There is one span lock system on the bridge, with one lock bar, one receiver, and two guides. The lock bar guides are mounted to the north side of the west abutment. The receiver is mounted to Stringer S1 at the northwest corner of the swing span.

8.3.1.3 MAINTENANCE AND SCHEDULE

!!! WARNING !!!

Use EXTREME CARE and ALWAYS REMOVE POWER from all pertinent electrical equipment, which includes multiple power sources, before beginning maintenance. Refer to Section 7.3, "Lockout/Tagout Procedure."

Document completed maintenance tasks on the maintenance checklists included in Appendix B of the Contract.

MONTHLY (Refer to Section 11.4.9.2 for Bridge Maintenance Performance Standard)	• Remove existing lubricant and brush or swab the lock bar sliding surfaces with Mobil Mobilux EP-2 or equivalent. • Visually inspect receiver, guides, lock bar, and fasteners for excessive wear, fit or damage.
ANNUALLY	• Visually inspect all lock bar guides and receiver weldments for cracks, corrosion and section loss. Mounting connections should be checked for corrosion and tightness. Tighten loose fasteners. All components should have flaking paint and corrosion brushed clean and spot painted with matching paint. Do not paint contacting surfaces.

8.3.2 SPAN LOCK OPEN GEARING

8.3.2.1 DESCRIPTION

The span lock rack and pinion set converts the rotary motion from the span lock gear motor output shaft into linear motion to drive and pull the lock bar.

The pinion (ID # 47) is an 18 tooth spur gear with a 5 inch pitch diameter, 20° full depth involute tooth profile, and a face width of 1 inch. The rack (ID # 48) has a 20° full depth involute tooth profile with a face width of 3/4 inch. The pinion is made of ASTM 668 Class G steel.

All open gearing is lubricated with grease that must be brushed onto the gear teeth manually as described below.

Refer to Photos numbered 9.3A, 9.3B, and 9.3D.

Refer to Sections 11.1.2 for component identification and 11.2.2 for lubrication schematics.

8.3.2.2 NUMBER OF ITEMS AND LOCATION

There is one span lock rack and pinion set on the bridge. The pinion is secured to the output shaft of the span lock gear motor. The rack is machined into the underside of the lock bar.

8.3.2.3 MAINTENANCE AND SCHEDULE

!!! WARNING !!!

Use EXTREME CARE and ALWAYS REMOVE POWER from all pertinent electrical equipment, which includes multiple power sources, before beginning maintenance. Refer to Section 7.3, "Lockout/Tagout Procedure."

Use EXTREME CARE and CAUTION around moving components (including the swing span) when observing machinery during operation.

Document completed maintenance tasks on the maintenance checklists included in Appendix B of the Contract.

MONTHLY (Refer to Section 11.4.9.1 for Bridge Maintenance Performance Standard)	• Remove any debris, including leaves, sand, dirt, and bird debris, from the gear teeth and surrounding area. • Remove any lubricant that has been displaced to non-contacting surfaces with scrapers and rags. • Lubricate teeth using Mobil Mobiltac 325 NC or equivalent grease.
ANNUALLY (Refer to Section 11.4.9.1 for Bridge Maintenance Performance Standard)	• Remove, clean, and replace open gear lubricant using Mobil Mobiltac 325 NC or equivalent. • Visually inspect the key and keyway for cracking. Verify the key is secure within the keyways. • Observe the open gearing during operations of the span lock machinery. Note excessive vibrations, binding, and unusual noises.

8.3.3 RIGID STOPS

8.3.3.1 DESCRIPTION

The fully closed rigid stop prevents the span from over traveling during the closing operation. The fully closed rigid stop base is comprised of a stationary ASTM A668 Class G steel weldment. As the span reaches the closed position, a neoprene block affixed to the swing span, contacts the base and prevents the span from further rotation in the closing direction.

The overtravel bumper block consists of a stationary timber block secured to the wood platform adjacent to the control house. The wood block prevents the span from over traveling in the opening direction and prevents the span from striking the control house.

Refer to Photos numbered 9.3E and 9.3F.

8.3.3.2 NUMBER OF ITEMS AND LOCATION

There is one fully closed rigid stop and one overtravel bumper block on the bridge.

The fully closed rigid stop is located on the west abutment. The overtravel bumper block is located on the east side of the wood platform adjacent to the control house.

8.3.3.3 MAINTENANCE AND SCHEDULE

!!! WARNING !!!

Use EXTREME CARE and ALWAYS REMOVE POWER from all pertinent electrical equipment, which includes multiple power sources, before beginning maintenance. Refer to Section 7.3, "Lockout/Tagout Procedure."

Document completed maintenance tasks on the maintenance checklists included in Appendix B of the Contract.

ANNUALLY	• Inspect the condition of the fully closed rigid stop and overtravel bumper block components. • Inspect rigid stop components for corrosion and fasteners for tightness. Clean and spot paint areas of corrosion. Tighten loose fasteners. • Inspect fully closed rigid stop grout for cracking and evidence of deterioration.

8.4 TRAFFIC GATES

Traffic gates are located on the approaches and are used to stop traffic prior to a bridge opening.

8.4.1 TRAFFIC GATES

8.4.1.1 DESCRIPTION

Traffic gates signal on and off going traffic to stop for a bridge opening. The gate support stand is mounted adjacent to the roadway.

Refer to Photos numbered 9.4A, 9.4B, 9.4C, 9.4D, and 9.4F.

Refer to Sections 11.1.3 (ID # 56, 58, 60, 63, and 65) for component identification, 11.2.3 for lubrication schematic, and 11.6 for component manufacturer list. See Section 11.8.1 for manufacturer's literature for the unit.

8.4.1.2 NUMBER OF ITEMS AND LOCATION

There are two traffic gates. One is located on both the East (far) and West (near) sides of the swing span. The traffic gate machinery is located within each traffic gate housing.

8.4.1.3 MAINTENANCE AND SCHEDULE

!!! WARNING !!!

Use EXTREME CARE and ALWAYS REMOVE POWER from all pertinent electrical equipment, which includes multiple power sources, before beginning maintenance. Refer to Section 7.3, "Lockout/Tagout Procedure."

Document completed maintenance tasks on the maintenance checklists included in Appendix B of the Contract.

SIX MONTHS	• Verify bumper rods are properly adjusted and make contact with roadway when lowered. • Verify stay cables are properly adjusted and taut at all times. • Check the transmission oil level in both sections of the transmission housing. If oil is low, check seals for evidence of leaks and add oil until the oil level is up to the oil level plug or sight gage. If oil is cloudy or dirty, drain, flush, and refill the unit with Mobil SHC 629 or equivalent. Use Mobil Mobilgear SHC 629 or equivalent compatible oil for flushing the housing. • Lubricate pivot shaft bearings and rod ends until clean grease is purged from the bearing or rod end. Use Mobil Mobilux EP-2 or equivalent. • Lubricate the rotary cam limit switch roller chain with CRC TAC 2 Adhesive Chain Lubricant or equivalent. • Check the roller chain tension and adjust tension if needed. The roller chain sag should be 1/4" +/- 1/8"
ANNUALLY	• Check hardware for damage and corrosion. Replace damaged hardware. • Check electrical connections and tighten loose connections. • Remove excess grease, oil and debris from equipment. • Check gate housing for corrosion. Clean and spot paint areas of corrosion on the housing. • Check condition of gaskets and replace if damaged.

8.5 ELECTRICAL POWER SYSTEMS

8.5.1 MOTOR CONTROL ENCLOSURES

8.5.1.1 DESCRIPTION

Motor control enclosures/starter cabinets enclosures are shown in the diagram in Section 1.3.1 containing house motor controllers, contactors, overload relays, over-current protection, etc. to control and operate the bridge and all ancillary devices.

Refer to Photos numbered 9.6A, 9.6B, 9.6B1, 9.6R and 9.6S.

8.5.1.2 NUMBER OF ITEMS AND LOCATION

Eight motor control enclosures/starter cabinets, shown in the diagram in Section 1.3.1, are installed and grouped together just outside the control house entrance door.

8.5.1.3 MAINTENANCE AND SCHEDULE

!!! WARNING !!!

Use EXTREME CARE and ALWAYS REMOVE POWER from all pertinent electrical equipment, which includes multiple power sources, before beginning maintenance. Refer to Section 7.3, Lockout/Tagout Procedure.

Document completed maintenance tasks on the maintenance checklists included in Appendix B of the Contract.

THREE MONTHS	• Open and clean with a vacuum cleaner in the interior of each enclosure. • Remove accumulation of dirt, grease, and gum with DeoxIT D5 contact cleaner or equivalent from relays, terminals, surfaces, wiring, contacts, etc. • Check for corrosion and moisture. Replace corroded hardware. • Examine connections for poor or loose connections and evidence of overheating. • Lubricate door hinges and latches with 3-IN-ONE Multipurpose Oil. • Inspect terminal block screws and hand tighten all connections. • Inspect wiring from unit terminal blocks for deterioration of insulation. • Inspect all circuit breakers. Verify with a meter that continuity is broken on trip or switch off conditions. With the circuit breaker in the OFF position, use a multimeter to measure the current and voltage on the load side conductors. The multimeter should read 0 amps and 0 volts. • Check all starter contacts in each enclosure. Note when nearly all the silver tip is gone and the contact tip support is exposed. Do not file the contacts. Filing or otherwise dressing the contacts only results in lost tip material and reduces starter life. • Check the condition of gaskets and replace if damaged.
ANNUALLY	• Check for discolored connections on terminals, contact supports, bus bars, or connectors. Discoloration usually indicates that overheating has occurred, probably because of loose connections. Clean connection points that are discolored. Tighten all loose hardware. Check wires and connectors for damage. • Operate the motor controller/contactor without load (turn circuit breakers off) and observe contact operation to be sure it opens and closes cleanly and that the contacts are fully sealed in the closed position. In order to manually operate a motor controller/contactor without load, remove power to the MCC cabinet and with a non-conductive screwdriver, press the button on the contactor. The button is usually located on the front or bottom of the housing (see Photo 9.6B and 9.6B1). • Operate the motor controller/contactor under load and check for loud noise and arcing, both on opening and on closing. A loud noise and arcing on closing is usually due to contact bounce.

8.5.2 SPAN CONTROL CABINET AND RESISTOR ENCLOSURE

8.5.2.1 DESCRIPTION

The span drive cabinet/resistor enclosure is a free standing enclosure which houses the span motor control equipment such as control relays, contactors, circuit breakers, fuses, and terminal blocks and is shown in the diagram in Section 1.3.1.

The resistor enclosure is a free standing enclosure which houses the secondary resistors for the span motor.

Refer to Photos numbered 9.6A, 9.6C, 9.6D, and 9.6L.

8.5.2.2 NUMBER OF ITEMS AND LOCATION

One resistor enclosure/span drive cabinet, shown in the diagram in Section 1.3.1 is the last cabinet outside the control house entrance door. The secondary resistor enclosure is located behind the span motor control enclosure outside of the control house.

8.5.2.3 MAINTENANCE AND SCHEDULE

!!! WARNING !!!

Use EXTREME CARE and ALWAYS REMOVE POWER from all pertinent electrical equipment, which includes multiple power sources, before beginning maintenance. Refer to Section 7.3, "Lockout/Tagout Procedure."

Document completed maintenance tasks on the maintenance checklists included in Appendix B of the Contract.

THREE MONTHS	• Open and clean enclosure resistor and span drive enclosure with a vacuum cleaner. Clean resistors, contactors, relays, wiring, terminal, lugs, etc. of dirt, dust, grease of unwanted debris. • Remove accumulation of dirt, grease, and gum with DeoxIT D5 contact cleaner or equivalent from relays, terminals, surfaces, wiring, contacts, etc. • Check for corrosion and moisture. • Lubricate door hinges and latches with 3-IN-ONE Multipurpose Oil. • Inspect terminal block screws for tightness. Hand tighten all loose connections. • Inspect wiring from unit terminal blocks for deterioration of insulation. • Inspect all circuit breakers. Verify with a meter that continuity is broken on trip or switch off conditions. With the circuit breaker in the OFF position, use a multimeter to measure the current and voltage on the load side conductors. The multimeter should read 0 amps and 0 volts. • Inspect all fuses with a meter and verify continuity. For fuse replacement, always install the same type and rating fuses furnished with the motor control center. Evolution in fuse design has produced fuses that are mechanically equivalent but not electrically equivalent. They may not have the same short-circuit withstand ability and current limiting ability. • Inspect all relays and tighten loose connections. • Check all starter contacts. Note when nearly all of the silver tip is gone and the contact tip support is exposed. Do not file the contacts. Filing or otherwise dressing the contacts only results in lost tip material and reduces starter life.

ANNUALLY	• Clean out filters with vacuum. Replace filters if damaged or dirty. • Check for discolored connections on terminals, contact supports, bus bars, or connectors. Discoloration usually indicates that overheating has occurred, probably because of loose connections. Clean connection points that are discolored. Tighten all loose hardware. Check wires and connectors for damage. • Operate the motor controller/contactor without load (turn circuit breakers off) and observe contact operation to be sure it opens and closes cleanly and that the contacts are fully sealed in the closed position. In order to manually operate a motor controller/contactor without load, remove power to the MCC cabinet and with a non-conductive screwdriver, press the button on the contactor. The button is usually located on the front or bottom of the housing (see Photo 9.6C and 9.6L). • Operate the motor controller/contactor under load and check for loud noise and arcing, both on opening and on closing. A loud noise and arcing on closing is usually due to contact bounce.

8.5.3 PANELBOARDS

8.5.3.1 DESCRIPTION

Lighting and distribution panels, also known as panelboards, are assemblies of bus bars and main/branch circuit breakers. The circuit breakers provide over-current protection as well as a means of turning on and off electrical distribution circuits.

Refer to Photos numbered 9.5D and 9.6H.

8.5.3.2 NUMBER OF ITEMS AND LOCATION

The distribution panelboard is located in the Control House under the control desk. The lighting panelboard is located inside the control house in the storage room above the access hatch to the lower level.

8.5.3.3 MAINTENANCE AND SCHEDULE

!!! WARNING !!!

Use EXTREME CARE and ALWAYS REMOVE POWER from all pertinent electrical equipment, which includes multiple power sources, before beginning maintenance. Refer to Section 7.3, "Lockout/Tagout Procedure."

Document completed maintenance tasks on the maintenance checklists included in Appendix B of the Contract.

ANNUALLY	• Open panel board cover and clean interior with a vacuum cleaner. • Remove accumulation of dirt, grease, and gum with DeoxIT D5 contact cleaner or equivalent from, terminals, surfaces, wiring, circuit breakers, etc. • Check for moisture and corrosion. Replace corroded hardware. • Examine bus bar connections for poor or loose connections and evidence of overheating. If necessary, pop out, but do not disconnect the circuit breakers. • Lubricate door hinges and latches with 3-IN-ONE Multipurpose Oil. • Inspect all circuit breakers. Verify with a meter that continuity is broken on trip or switch off conditions. With the circuit breaker in the OFF position, use a multimeter to measure the current and voltage on the load side conductors. The multimeter should read 0 amps and 0 volts. • Measure resistance to ground at each panelboard using a clamp on ground resistance tester. Confirm that the main electrical service to the bridge is off before performing any test. Follow the meter manufacturer's recommendations for isolating the grounding electric. With the meter clamped around the grounding electrode, verify resistance is 25 ohms or less.

8.5.4 STAND-BY GENERATOR

8.5.4.1 DESCRIPTION

A stand-by generator is installed to power the bridge and ancillary equipment should utility power become unavailable.

Refer to Photo numbered 9.5C.

8.5.4.2 NUMBER OF ITEMS AND LOCATION

There is one generator located adjacent to the control house to be used as a stand-by power source. Additional maintenance requirements may be required if used as the prime power source.

8.5.4.3 MAINTENANCE AND SCHEDULE

!!! WARNING !!!

Use EXTREME CARE and ALWAYS REMOVE POWER from all pertinent electrical equipment, which includes multiple power sources, before beginning maintenance. Refer to Section 7.3, "Lockout/Tagout Procedure."

Document completed maintenance tasks on the maintenance checklists included in Appendix B of the Contract.

All daily, weekly, and monthly maintenance tasks specified under this item shall be performed by DelDOT personnel. All other maintenance tasks shall be performed by the repair subcontractor under Contract No. GSS 14679-GEN_PM_REP or subsequent contract. All materials, including manufacture brands and specifications are supplied by the repair subcontractor.

MONTHLY	• Perform visual inspection of the generator components (including belts, hoses, fasteners, etc.) for signs of damage. • Check for air cleaner restrictions. • Check coolant level, oil level and fuel level. • Check for oil, coolant, and fuel leaks. • Check battery and battery charger for proper operation. • Check electrical safety controls and alarms. • Perform all pre-operation inspections. • Start and run generators for 15 minutes with no load and check for proper alternator voltage. • Perform all post operation inspections as specified in Section 4.2.2.1 Testing under No Load.
ANNUALLY	• Check the condition of all filters and breathers and note if dirty, clogged, or damaged. • Check the fuel tanks for water and sediment. • Verify fasteners are secure. Tighten loose fasteners. • Check operation of manual transfer switch located in the control house. • Start and run generator under load for one complete bridge opening.
FIVE YEARS	• Perform one hour load bank testing and monitor operation. • Perform two hour test without load and monitor operation.

8.5.5 SAFETY (MANUAL TRANSFER) AND DISCONNECT SWITCHES

8.5.5.1 DESCRIPTION

Switches are devices for making, breaking, or changing connections in an electric circuit under the conditions of the load for which it is rated. There are various types of switches; some of the more common are main circuit breakers and motor disconnect switches.

Refer to Photos numbered 9.2F, 9.4C, 9.5B, 9.6A, 9.6E, 9.6F, 9.7F, and 9.7H.

8.5.5.2 NUMBER OF ITEMS AND LOCATION

Numerous switches are located throughout the bridge and are individually mounted as main circuit breakers, disconnect switches, and motor disconnect switches. One manual transfer switch is located in the storage room of the control house adjacent to the lighting panelboard.

8.5.5.3 MAINTENANCE AND SCHEDULE

!!! WARNING !!!

Use EXTREME CARE and ALWAYS REMOVE POWER from all pertinent electrical equipment, which includes multiple power sources, before beginning maintenance. Refer to Section 7.3, "Lockout/Tagout Procedure."

Use proper personal protective equipment when working on energized equipment. Arc flash and other dangers are present and may result in injury or death.

Document completed maintenance tasks on the maintenance checklists included in Appendix B of the Contract.

ANNUALLY	• Open and clean enclosure with a vacuum cleaner. Clean wiring, terminal, lugs, etc. of dirt, dust, grease of unwanted debris. • Remove accumulation of dirt, grease, and gum with DeoxIT D5 contact cleaner or equivalent from wiring, terminals, surfaces, contacts, etc. • Check for corrosion and moisture. Replace corroded hardware. • Lubricate door hinges and latches with 3-IN-ONE Multipurpose Oil. • Examine for excessive heating of parts, discoloration of metal parts, charred insulation, odor, or blistering. • Check for freedom of moving parts. • Check for worn or broken mechanical parts. • Tighten loose mountings and connections. • Check contacts for wear and pitting. Clean bolted connections where possible with contact cleaner. • Check for excessive arcing. • Check condition of gaskets (for dust-tight or watertight units). Replace damaged gaskets. • For fused units, inspect all circuit breakers. Verify with a meter that continuity is broken on trip or switch off conditions. With the circuit breaker in the OFF position, use a multimeter to measure the current and voltage on the load side conductors. The multimeter should read 0 amps and 0 volts. • Test the manual transfer switch with operation of the generator.

8.5.6 ELECTRICAL CONDUCTORS

8.5.6.1 DESCRIPTION

Conductors may be stranded single-conductor or multiple-conductor cable.

8.5.6.2 NUMBER OF ITEMS AND LOCATION

Numerous electrical conductors are located throughout the bridge.

8.5.6.3 MAINTENANCE AND SCHEDULE

!!! WARNING !!!

Use EXTREME CARE and ALWAYS REMOVE POWER from all pertinent electrical equipment, which includes multiple power sources, before beginning maintenance. Refer to Section 7.3, "Lockout/Tagout Procedure."

Document completed maintenance tasks on the maintenance checklists included in Appendix B of the Contract.

ANNUALLY	• Visually inspect terminations and splices for cracks, deterioration, corrosion, discoloring, or any other abnormalities. • Check tightness at each conductor termination at each terminal box. Tighten loose connections. • Check the strain relief fittings for signs of distress. • Inspect wires and electrical cables for grease and oil contamination, fraying, abrasions, sweating, cracked, melted or overheated blue tinted insulation. Clean the insulation of moisture, grease and oil after removing power sources if present.

8.5.7 DRAG CABLES

8.5.7.1 DESCRIPTION

Drag cables provide power and control to the end screw jack motor, span motor, limit switches and span navigation lights

Refer to Photo numbered 9.6J.

8.5.7.2 NUMBER OF ITEMS AND LOCATION

Four drag cables are routed through the center pivot pier to the terminal cabinet mounted to swing span.

8.5.7.3 MAINTENANCE AND SCHEDULE

!!! WARNING !!!

Use EXTREME CARE and ALWAYS REMOVE POWER from all pertinent electrical equipment, which includes multiple power sources, before beginning maintenance. Refer to Section 7.3, "Lockout/Tagout Procedure."

Document completed maintenance tasks on the maintenance checklists included in Appendix B of the Contract.

ANNUALLY	• Visually inspect terminations and splices for cracks, deterioration, corrosion, discoloring, or any other abnormalities. • Check tightness of each conductor termination at each terminal box. Hand tighten loose connections. • Check the strain relief fittings for signs of distress. • Check cables for any wear or abrasions on the outer jacket. • Inspect wires and electrical cables for grease and oil contamination, fraying, abrasions, sweating, cracked, melted or overheated blue tinted insulation. Clean the insulation of moisture, grease and oil after removing power sources if present.

8.5.8 AERIAL CABLES

8.5.8.1 DESCRIPTION

The aerial cables route power and control from the motor control cabinet and control desk to the traffic gates, navigation lights and associated controls on the far side of the bridge.

Refer to Photos numbered 9.4A, 9.4B, and 9.6I.

8.5.8.2 NUMBER OF ITEMS AND LOCATION

Two aerial cables are suspended across the channel via steel poles and terminated at termination boxes.

The far side terminal enclosure is located at the base of the far side steel pole. The near side terminal enclosure is located in the lower level of the control house.

8.5.8.3 MAINTENANCE AND SCHEDULE

!!! WARNING !!!

Use EXTREME CARE and ALWAYS REMOVE POWER from all pertinent electrical equipment, which includes multiple power sources, before beginning maintenance. Refer to Section 7.3, "Lockout/Tagout Procedure."

Document completed maintenance tasks on the maintenance checklists included in Appendix B of the Contract.

ANNUALLY	• Visually inspect terminations and splices for cracks, deterioration, corrosion, discoloring, or any other abnormalities. • Check tightness of each conductor termination at each terminal box. Hand tighten loose connections. • Check the strain relief fittings for signs of distress. • Check cables for any wear or abrasions on the outer jacket. • Inspect wires and electrical cables for grease and oil contamination, fraying, abrasions, sweating, cracked, melted or overheated blue tinted insulation. Clean the insulation of moisture, grease and oil after removing power sources if present.

8.6 LIGHTING SYSTEMS

8.6.1 NAVIGATION LIGHTS

8.6.1.1 DESCRIPTION

Fender lights are red lighting fixtures. Their function is to enhance visibility of the piers and locate the channel for marine vessels.

The red/green swing span navigation lights are divided fixtures, with portions that are red and portions that are green. When the swing span is fully open, the lights are green. When the swing span is not fully open, the lights are red.

Refer to Photo numbered 9.4E.

8.6.1.2 NUMBER OF ITEMS AND LOCATION

Navigation lights are located on the fenders and on the swing span of the bridge. Three red fender lights are located on each fender ring. There are six swing span navigation lights.

8.6.1.3 MAINTENANCE AND SCHEDULE

!!! WARNING !!!

Use EXTREME CARE and ALWAYS REMOVE POWER from all pertinent electrical equipment, which includes multiple power sources, before beginning maintenance. Refer to Section 7.3, "Lockout/Tagout Procedure."

Document completed maintenance tasks on the maintenance checklists included in Appendix B of the Contract.

MONTHLY	• Check navigation lights for proper operation. • Replace lamps if damaged or nonfunctional.
ANNUALLY	• Check gaskets. Replace damaged gaskets. • Tighten loose connections. • Check for corrosion of metal parts. Replace corroded hardware. • Check for worn or broken mechanical parts. Check for cracked lenses. • Replace lamps.

8.6.2 INTERIOR/EXTERIOR LIGHTS

8.6.2.1 DESCRIPTION

Light fixtures are installed in the control house. The lighting panelboard is located in the storage closet above the access hatch to the lower level.

Refer to Photos numbered 9.7A and 9.7E.

8.6.2.2 NUMBER OF ITEMS AND LOCATION

There are numerous lights located throughout the control house.

8.6.2.3 MAINTENANCE AND SCHEDULE

!!! WARNING !!!

Use EXTREME CARE and ALWAYS REMOVE POWER from all pertinent electrical equipment, which includes multiple power sources, before beginning maintenance. Refer to Section 7.3, Lockout/Tagout Procedure.

Document completed maintenance tasks on the maintenance checklists included in Appendix B of the Contract.

MONTHLY	• Check for burned out lamps. Replace burned out lamps. Verify light switches function properly.
ANNUALLY	• Clean luminaire lenses, interior surfaces, and weep holes (where applicable). • Check gaskets. Replace damaged gaskets. • Tighten loose connections. • Inspect for corrosion of metal parts. Spot paint corroded components. • Check parts for wear or damage. • Test emergency light fixtures and batteries, replace batteries if not operational.

8.6.3 TRAFFIC SIGNALS

8.6.3.1 DESCRIPTION

Traffic signals caution roadway traffic before and during periods of span operation.

Refer to Photo numbered 9.4A.

8.6.3.2 NUMBER OF ITEMS AND LOCATION

There are two three section traffic signals on each on-coming approach mounted to a signal pole ahead of the traffic gates.

For maintenance of intersection traffic signals, contact DelDOT Traffic Management Center (TMC) (Refer to Chapter 12 for contact phone number).

8.6.3.3 MAINTENANCE AND SCHEDULE

!!! WARNING !!!

Use EXTREME CARE and ALWAYS REMOVE POWER from all pertinent electrical equipment, which includes multiple power sources, before beginning maintenance. Refer to Section 7.3, "Lockout/Tagout Procedure."

Document completed maintenance tasks on the maintenance checklists included in Appendix B of the Contract.

MONTHLY	• Check lights for proper illumination and replace burned out bulbs. • Verify proper operation during marine and maintenance openings. • Check traffic signal pole hardware connections. Tighten loose connections.
ANNUALLY	• Clean all reflectors, lenses and spot paint heads.

8.6.4 TRAFFIC GATE ARM LIGHTS

8.6.4.1 DESCRIPTION

Gate arm lights caution roadway traffic before and during periods of span operation.

Refer to Photos numbered 9.4A and 9.4B.

8.6.4.2 NUMBER OF ITEMS AND LOCATION

There are red flashing gate arm lights mounted on the two traffic gate arms.

8.6.4.3 MAINTENANCE AND SCHEDULE

!!! WARNING !!!

Use EXTREME CARE and ALWAYS REMOVE POWER from all pertinent electrical equipment, which includes multiple power sources, before beginning maintenance. Refer to Section 7.3, "Lockout/Tagout Procedure."

Document completed maintenance tasks on the maintenance checklists included in Appendix B of the Contract.

MONTHLY	• Check traffic gate arm lights for proper operation. Replace burned out bulbs.
THREE MONTHS	• Replace blown or damaged fuses. For fuse replacement, always install the same type and rating fuses furnished with the motor control center. Evolution in fuse design has produced fuses that are mechanically equivalent but not electrically equivalent. They may not have the same short-circuit withstand ability and current limiting ability.
SIX MONTHS	• Check gate arm lights and wiring for damage.

8.7 ELECTRIC MOTORS

8.7.1 SPAN LOCK GEAR MOTOR

8.7.1.1 DESCRIPTION

The electric span lock gear motor (ID # 46) transforms electric power to mechanical power to drive and pull the lock bars. The gear motor, manufactured by Sumitomo, is directly connected to a speed reducer.

The gear motor speed reducer is operated to increase torque and reduce speed from the input shaft to the output shaft through internal gearing. The speed reducer is a "SM-Bevel Buddybox" speed reducer, manufactured by Sumitomo. The speed reducer is a right angle reducer and has a gear ratio of 206.5:1.

The span lock speed reducer is an oil lubricated enclosed speed reducer. The input shaft and lower output shaft bearings are splash lubricated from oil within the reducer housing.

Refer to Photos numbered 9.3A, 9.3B, 9.3C, and 9.3D.

Refer to Sections 11.1.2 for component identification and 11.2.2 for lubrication schematics. Refer to Section 11.7.3 for the manufacturer's maintenance manual for similar units.

8.7.1.2 NUMBER OF ITEMS AND LOCATION

One ¼ HP span lock gear motor is located on the north side of the west abutment.

8.7.1.3 MAINTENANCE AND SCHEDULE

!!! WARNING !!!

Use EXTREME CARE and ALWAYS REMOVE POWER from all pertinent electrical equipment, which includes multiple power sources, before beginning maintenance. Refer to Section 7.3, "Lockout/Tagout Procedure."

Use EXTREME CARE and CAUTION around moving components (including the swing span) when observing machinery during operation.

DO NOT USE WATER TO HOSE DOWN THE MOTOR HOUSING

Document completed maintenance tasks on the maintenance checklists included in Appendix B of the Contract.

MONTHLY (Refer to Section 11.4.9.3 for Bridge Maintenance Performance Standard)	Speed Reducer	• Visually inspect the oil level is up to the oil level plug for before operating the span lock. Add make up oil (Mobil Mobilgear 600 XP 100) if the oil level is low. • Listen for unusual noises during operation of the machinery. Report any unusual noises to bridge management.

ANNUALLY	Motor	• Verify that shaft end-play is normal by moving the motor shaft by hand (with power off) and determining whether movement is excessive (more than 1/16 inch). • Inspect and tighten loose electrical connections on the motor. • Verify that all keys, bolts, and pins are in their proper position. Check all bolts for tightness. If loose, tighten. • During operation, examine motor for smooth running and absence of vibration. • During operation, measure and record the motor housing and bearing temperatures with an infrared thermometer. Notify bridge management if the measured temperatures are above 100° F. • Check painted surfaces for signs of corrosion. Clean surfaces of corrosion and spot paint with matching paint. Do not paint nameplates. • Check the phase currents flowing in the motor under loaded conditions with a clamp-on ammeter. Utilize a true RMS ammeter. Compare the measured current with the nameplate data. Record values in the "Notes" sections of the maintenance checklist.
	Solenoid Brake	• Check electrical connections and tighten loose connections. • Check components for wear or damage. Check for loose fasteners. Tighten loose fasteners. Check for freedom of moving parts (parts are free of binding and sticking). • Check for excessive heating of parts evidenced by discoloration of metal parts, charred insulation, or odor. Check for collections of dirt or gum, evidence of water dripping, or corrosion. Clean the solenoid brake components of dirt, gum, water, and corrosion. • Observe the brake during operation of the span lock. Check for excessive vibration or unusual noise during operation.
	Speed Reducer	• Check for excessive leakage at the seals. • Check fastener tightness and tighten loose fasteners.
FIVE YEARS	Motor	• Clean and paint the motor. Do not paint the nameplate.
	Speed Reducer (Refer to Section 11.4.9.3 for Bridge Maintenance Performance Standard)	• Drain, flush and replace oil in the speed reducer housing with Mobil Mobilgear 600 XP 100 or equivalent.

8.7.2 TURNING MACHINERY (SPAN) MOTOR

8.7.2.1 DESCRIPTION

The turning machinery motor (ID # 37) transforms electric power to mechanical power to open and close the span.

Refer to Photos numbered 9.2A, 9.2B, 9.2C, and 9.2E.

Refer to Sections 11.1.2 for component identification and 11.2.2 for lubrication schematic.

8.7.2.2 NUMBER OF ITEMS AND LOCATION

One 5 HP turning machinery motor is secured to the swing span at the pivot pier.

8.7.2.3 MAINTENANCE AND SCHEDULE

!!! WARNING !!!

Use EXTREME CARE and ALWAYS REMOVE POWER from all pertinent electrical equipment, which includes multiple power sources, before beginning maintenance. Refer to Section 7.3, "Lockout/Tagout Procedure."

Use EXTREME CARE and CAUTION around moving components (including the swing span) when observing machinery during operation.

DO NOT USE WATER TO HOSE DOWN THE MOTOR HOUSING

Document completed maintenance tasks on the maintenance checklists included in Appendix B of the Contract.

ANNUALLY (Refer to Section 11.4.6 for Bridge Maintenance Performance Standard)	• Check for leakage around bearings. Clean off excess grease and dirt using a rag and WD-40 Specialist Machine & Engine Degreaser or equivalent. • Verify that shaft end-play is normal by moving the motor shaft by hand (with power off) and determining whether movement is excessive (more than 1/16 inch). • Inspect and tighten loose electrical connections on motor. • Verify that all keys, bolts, and pins are in their proper position. Check all bolts for tightness. If loose, tighten. • During operation, examine motor for smooth running and absence of vibration. • During operation, measure and record the motor housing and bearing temperatures with an infrared thermometer. Notify bridge management if the measured temperatures are above 100° F. • Lubricate turning machinery motor bearings. Use Mobil Unirex N2 or equivalent. • Check painted surfaces for signs of corrosion. Clean surfaces of corrosion and spot paint with matching paint. Do not paint nameplates. • Check the phase currents flowing in the motor under loaded conditions with a clamp-on ammeter. Utilize a true RMS ammeter. Compare the measured current with the nameplate data. Record values in the "Notes" sections of the maintenance checklist.
FIVE YEARS	• Clean and paint the motor. Do not paint nameplates.

8.7.3 END SCREW JACK MOTOR

8.7.3.1 DESCRIPTION

The end screw jack motor (ID #1) transforms electric power to mechanical power to drive and retract the end screw jacks.

Refer to Photos numbered 9.1H, 9.1I, and 9.1Q.

Refer to Sections 11.1.1 for component identification and 11.2.1 for lubrication schematic.

8.7.3.2 NUMBER OF ITEMS AND LOCATION

One 5 HP end screw jack motor is secured to the swing span at the west abutment.

8.7.3.3 MAINTENANCE AND SCHEDULE

!!! WARNING !!!

Use EXTREME CARE and ALWAYS REMOVE POWER from all pertinent electrical equipment, which includes multiple power sources, before beginning maintenance. Refer to Section 7.3, "Lockout/Tagout Procedure."

Use EXTREME CARE and CAUTION around moving components (including the swing span) when observing machinery during operation.

DO NOT USE WATER TO HOSE DOWN THE MOTOR HOUSING

Document completed maintenance tasks on the maintenance checklists included in Appendix B of the Contract.

ANNUALLY Refer to Section 11.4.6 for Bridge Maintenance Performance Standard)	Motor	• Check for leakage around bearings. Clean off excess grease and dirt. • Verify that shaft end-play is normal by moving the motor shaft by hand (with power off) and determining whether movement is excessive (more than 1/16 inch). • Inspect and tighten loose electrical connections on the motor. • Verify that all keys, bolts, and pins are in their proper position. Check all bolts for tightness. If loose, tighten. • During operation, examine motor for smooth running and absence of vibration. • During operation, measure and record the motor housing and bearing temperatures with an infrared thermometer. Notify bridge management if the measured temperatures are above 100° F. • Check painted surfaces for signs of corrosion. Clean surfaces of corrosion and spot paint with matching paint. Do not paint nameplates. • Lubricate end screw jack motor bearings. Use Mobil Unirex N2 or equivalent. • Check the phase currents flowing in the motor under loaded conditions with a clamp-on ammeter. Utilize a true RMS ammeter. Compare the measured current with the nameplate data. Record values in the "Notes" sections of the maintenance checklist.

	Solenoid Brake	• Check electrical connections and tighten loose connections. • Check components for wear or damage. Check for loose fasteners. Tighten loose fasteners. Check for freedom of moving parts (parts are free of binding and sticking). • Check for excessive heating of parts evidenced by discoloration of metal parts, charred insulation, or odor. Check for collections of dirt or gum, evidence of water dripping, or corrosion. Clean the solenoid brake components of dirt, gum, water, and corrosion. • Observe the brake during operation of the end screw jack. Check for excessive vibration or unusual noise during operation.
FIVE YEARS		• Clean and paint the motor. Do not paint nameplates.

8.7.4 TRAFFIC GATE MOTORS

8.7.4.1 DESCRIPTION

The electric motors (ID # 55) for the traffic gates transform electric power to mechanical power to operate each traffic gate. Each gate motor is provided with a solenoid brake (ID # 54) to provide holding torque on the specific device.

Refer to Photos numbered 9.4C, 9.4D, and 9.4F.

Refer to Section 11.1.3 for component identification.

8.7.4.2 NUMBER OF ITEMS AND LOCATION

One 3/4 HP traffic gate motor is located inside of each traffic gate housing.

8.7.4.3 MAINTENANCE AND SCHEDULE

!!! WARNING !!!

Use EXTREME CARE and ALWAYS REMOVE POWER from all pertinent electrical equipment, which includes multiple power sources, before beginning maintenance. Refer to Section 7.3, "Lockout/Tagout Procedure."

Use CAUTION and VERIFY gate arm travel areas are clear of personnel and all obstructions prior to operating the traffic gates for maintenance to prevent injury or damage to equipment. To observe the traffic gate components within the housing during operation with the housing door open, the traffic gate door limit switch must be manually depressed while the traffic gate is operating.

DO NOT USE WATER TO HOSE DOWN THE MOTOR HOUSING

Document completed maintenance tasks on the maintenance checklists included in Appendix B of the Contract.

ANNUALLY	Motors	• Check for leakage around bearings. Clean off excess grease and dirt using a rag and WD-40 Specialist Machine & Engine Degreaser or equivalent. • Inspect and tighten loose electrical connections on motor. • Verify that all keys, bolts, and pins are in their proper position. Check all bolts for tightness. If loose, tighten. • During operation, examine motor for smooth running and absence of vibration. • During operation, measure and record the motor housing and bearing temperatures with an infrared thermometer. Notify bridge management if the measured temperatures are above 100° F. • Check the phase currents flowing in motors under loaded conditions with a clamp-on ammeter for all motors. Utilize a true RMS ammeter. Compare the measured current with the nameplate data. Record values in the "Notes" sections of the maintenance checklist.
	Solenoid Brakes	• Check electrical connections and tighten loose connections. • Check components for wear or damage. Check for loose fasteners. Tighten loose fasteners. Check for freedom of moving parts (parts are free of binding and sticking). • Check for excessive heating of parts evidenced by discoloration of metal parts, charred insulation, or odor. Check for collections of dirt or gum, evidence of water dripping, or corrosion. Clean the solenoid brake components of dirt, gum, water, and corrosion. • Observe the brake during operation of the gate. Check for excessive vibration or unusual noise during operation.

8.8 CONTROL SYSTEM

8.8.1 CONTROL CONSOLE

8.8.1.1 DESCRIPTION

The control console is fabricated from an individual free standing cabinet which house indicating lights, selector switches, pushbuttons, and meters.

Refer to Photos numbered 9.6G and 9.6H.

8.8.1.2 NUMBER OF ITEMS AND LOCATION

The control console is located in the control house.

8.8.1.3 MAINTENANCE AND SCHEDULE

!!! WARNING !!!

Use EXTREME CARE and ALWAYS REMOVE POWER from all pertinent electrical equipment, which includes multiple power sources, before beginning maintenance. Refer to Section 7.3, "Lockout/Tagout Procedure."

Document completed maintenance tasks on the maintenance checklists included in Appendix B of the Contract.

THREE MONTHS	• Open and clean the control console interior with a vacuum cleaner including relays, terminal blocks, wiring, etc. • Remove accumulation of dirt, grease, and gum with DeoxIT D5 contact cleaner or equivalent from surfaces, relays, terminals, surfaces, wiring, contacts, etc. • Check for corrosion and moisture. Replace corroded hardware. • Lubricate door hinges and latches with 3-IN-ONE Multipurpose Oil. • Inspect terminal block screws and tighten all loose connections. • Inspect wiring from unit terminal blocks for deterioration of insulation. • Check all pushbuttons, selector switches, and meters for damage and proper operation. • Check all indicating lights by pressing on the head of each pilot light to verify each lamp illuminates. Replace bulbs if damaged or nonfunctional. • Check condition of gaskets and replace if damaged.
ANNUALLY	• Check for discolored connections on terminals, contact supports, bus bars, or connectors. Discoloration usually indicates that overheating has occurred, probably because of loose connections. Clean connections points that are discolored. Tighten all loose hardware. Check wires and connectors for damage. • Manually operate each relay and contactor with associated circuit breakers off and observe contact operation to be sure it opens and closes cleanly and that the contacts are fully sealed in the closed position. In order to manually operate a relay or contactor with the associated circuit breaker off, verify that power is off, and with a non-conductive screwdriver, press the button on the relay or contactor. The button is located as shown in Photo 9.6H. • Monitor relay and contactor operation during normal operation and check for loud noise and arcing, both on opening and on closing. A loud noise and arcing on closing is usually due to contact bounce.

8.8.2 LIMIT SWITCHES

8.8.2.1 DESCRIPTION

A limit switch is a switching device that provides feedback in an electrical circuit. When actuated, this device will restrict or initiate an operation. The limit switches control and interlock the traffic gates, span lock, end screw jacks, span motor and the brake.

Refer to Photos numbered 9.1J, 9.1K, 9.2A, 9.2B, 9.2C, 9.2E, 9.3A, 9.4C, 9.4D, 9.4F, 9.6K, 9.6M, 9.6N, and 9.6O.

Refer to Sections 11.1.1, 11.1.2, and 11.1.3 for component identification.

8.8.2.2 NUMBER OF ITEMS AND LOCATION

Limit switches are located as follows:

- Span Control
    - Eight Circuit Span Position Rotary Cam Limit Switch (ID # 33) (1) – One secured to the underside of the swing span (9.2E)
    - Brake Limit Switches (ID # 39) (2) – Two located on the brake frame (9.2A & 9.2B)
    - Span Fully Closed Limit Switch (1) – One located on the south side of the east rest pier (9.6N)

- Span Open Limit Switch (1) – One located on the underside of the swing span, above the pivot pier (9.6M)
- Span Overtravel Limit Switch (1) – One located on the underside of the swing span, above the pivot pier (9.6M)
- Manual Operation Limit Switch (ID # 40) (1) – One located near the turning machinery speed reducer manual operation input shaft (9.2C & 9.6O)

- Lock Control
  - Span Lock Driven Limit Switch (ID # 53) (1) – One located below the span lock bar (9.3A)
  - Span Lock Pulled Limit Switch (ID # 52) (1) – One located below the span lock bar (9.3A)
  - Manual Operation Limit Switch (ID # 46) (1) – One located at the rear of the span lock motor (9.3A)
- End Screw Jack Control
  - End Screw Jack Rotary Cam Limit Switch (ID # 12) (2) – One located on each end screw jack (9.1K & 9.6K)
  - End Screw Jack Position Limit Switch (ID # 11) (2) – One located on each end screw jack (9.1K & 9.6K)
  - Manual Operation Limit Switch (ID #3) (1) – One located near the end screw jack speed reducer manual operation input shaft (9.1J)
- Traffic Control
  - Eight Circuit Traffic Gate Rotary Cam Limit Switch (ID # 66) (2) – One located inside each traffic gate housing (9.4C)
  - Traffic Gate Manual Operation Limit Switch (ID # 68) (2) – One located in each traffic gate housing (9.4C, 9.4D, & 9.4F)
  - Traffic Gate Door Limit Switches (ID # 69) (4) – Two located in each traffic gate housing (9.4C & 9.4D)

8.8.2.3 MAINTENANCE AND SCHEDULE

!!! WARNING !!!

Use EXTREME CARE and ALWAYS REMOVE POWER from all pertinent electrical equipment, which includes multiple power sources, before beginning maintenance. Refer to Section 7.3, "Lockout/Tagout Procedure."

Document completed maintenance tasks on the maintenance checklists included in Appendix B of the Contract.

ANNUALLY	All Limit Switches	• Inspect all limit switches for wear. • Remove accumulated dust, dirt, and moisture on housing. Use a brush, soft cloth, or vacuum cleaner. • Remove accumulated dust, dirt, and moisture from all shafts, keeping it clean and free of galling. • Inspect latches, mounting hardware and seals to ensure proper seal of housing. • Inspect all fasteners and tighten loose connections. Replace corroded hardware. • If accessible, remove the cover and visually inspect condition of all internal parts. • Inspect limit switch wiring for deterioration. • Check for worn or broken mechanical parts.
	Rotary Cam Limit Switches	• Inspect the rotary cam limit switch cams and rollers for wear, corrosion and good contact between the fixed and movable parts.
	Lever Arm Limit Switches	• Inspect snap action contact blocks and all internal component connections. Hand tighten loose connections. • Inspect all wiring from snap action contact blocks for deterioration. • Cycle lever arm several times.

8.9 MISCELLANEOUS EQUIPMENT

8.9.1 HEATING AND AIR CONDITIONING SYSTEMS

8.9.1.1 DESCRIPTION

HVAC systems provide heating and air conditioning service for the control house.

Refer to Photos numbered 9.7F, 9.7G, and 9.7I.

8.9.1.2 NUMBER OF ITEMS AND LOCATION

An air handler is located in the lower level of the control house and a heat pump is located adjacent to the steps outside of the control house.

8.9.1.3 MAINTENANCE AND SCHEDULE

!!! WARNING !!!

Use EXTREME CARE and ALWAYS REMOVE POWER from all pertinent electrical equipment, which includes multiple power sources, before beginning maintenance. Refer to Section 7.3, "Lockout/Tagout Procedure."

Document completed maintenance tasks on the maintenance checklists included in Appendix B of the Contract.

MONTHLY	• Visually inspect all air filters. Replace dirty or damaged filters. • Check all cooling coils, seals, fittings, ducting connections and pipelines for leaks. • Inspect the condition of the contactor inside the HVAC unit for signs of overheating. • Check electrical connections inside the HVAC unit. Tighten loose connections. • Check the performance of all equipment related to temperature and humidity control.

8.9.2 SUMP PUMP

8.9.2.1 DESCRIPTION

A sump pump system is used to remove water from the lower level of the control house.

Refer to Photo numbered 9.7D.

8.9.2.2 NUMBER OF ITEMS AND LOCATION

One sump pump system is located in the lower level of the control house.

8.9.2.3 MAINTENANCE AND SCHEDULE

!!! WARNING !!!

Use EXTREME CARE and ALWAYS REMOVE POWER from all pertinent electrical equipment, which includes multiple power sources, before beginning maintenance. Refer to Section 7.3, "Lockout/Tagout Procedure."

Document completed maintenance tasks on the maintenance checklists included in Appendix B of the Contract.

MONTHLY	• Check that the motor is free of all debris. • Dump buckets of water or run water from a hose into the sump to test the pump's response and look for leaks. Verify that water is pumped out from the sump and there is no back-flow. Do no flood the surrounding floor or area. • During operation, examine motor for smooth running and absence of excessive vibration. The sump pump should not be operated without water in the sump wet well.

8.9.3 HOT WATER HEATER

8.9.3.1 DESCRIPTION

A hot water heater is used to supply the sink in the bathroom with hot water.

Refer to Photo number 9.7C and 9.7H.

8.9.3.2 NUMBER OF ITEMS AND LOCATION

A single hot water heater is located in the lower level of the control house.

8.9.3.3 MAINTENANCE AND SCHEDULE

!!! WARNING !!!

Use EXTREME CARE and ALWAYS REMOVE POWER from all pertinent electrical equipment, which includes multiple power sources, before beginning maintenance. Refer to Section 7.3, "Lockout/Tagout Procedure."

Document completed maintenance tasks on the maintenance checklists included in Appendix B of the Contract.

MONTHLY	• Check the unit and associated piping for leaks. • Turn the hot water on at the bathroom sink and verify that the water turns hot.

8.9.4 PIERS AND PLATFORMS

8.9.4.1 DESCRIPTION

A ladder on the north side of the west abutment and the pivot pier access platform provides access to west abutment and pivot pier from the roadway. The pivot pier, rest pier, and west abutment support and provide access to various electrical and mechanical components.

Refer to Photos numbered 9.1A, 9.1B, 9.1C, 9.1D, 9.1E, 9.1F, 9.1G, 9.1H, 9.1I, 9.1O, 9.3E, 9.4E, 9.6J, 9.6K, and 9.6M.

8.9.4.2 NUMBER OF ITEMS AND LOCATION

One pivot pier, rest pier, and west abutment are located below the swing span. The pivot pier access platform is located on the north side of the pivot pier and west abutment.

8.9.4.3 MAINTENANCE AND SCHEDULE

!!! WARNING !!!

Use EXTREME CARE and ALWAYS REMOVE POWER from all pertinent electrical equipment, which includes multiple power sources, before beginning maintenance. Refer to Section 7.3, "Lockout/Tagout Procedure."

!!! WARNING !!!

Use EXTREME CARE and VERIFY that electrical components and enclosures do not get wet.

Document completed maintenance tasks on the maintenance checklists included in Appendix B of the Contract.

SIX MONTHS	• Clean and power wash the pivot pier, rest pier, west abutment, and pivot pier access platform of dirt and debris. Electrical equipment must be protected prior to power washing to prevent water from entering any electrical component. Water intrusion may cause failure to components.

8.9.5 CONDUIT/WIREWAY

8.9.5.1 DESCRIPTION

Conduit is installed throughout the span for protection and routing of electrical wiring to electrical equipment.

Refer to Photos numbered 9.1B, 9.1D, 9.1H, 9.1I, 9.1K, 9.1M, 9.2A, 9.3A, 9.3C, 9.3E, 9.4E, 9.5A, 9.6A, 9.6E, 9.6I, 9.6J, 9.6K, 9.6M, 9.6N, 9.6Q, and 9.7B.

NUMBER OF ITEMS AND LOCATION

Conduit is installed throughout the span and houses field wiring for electrical equipment. Wireway is installed below the exterior motor control enclosures, located adjacent to the control house.

8.9.5.2 MAINTENANCE AND SCHEDULE

!!! WARNING !!!

Use EXTREME CARE and ALWAYS REMOVE POWER from all pertinent electrical equipment, which includes multiple power sources, before beginning maintenance. Refer to Section 7.3, "Lockout/Tagout Procedure."

Document completed maintenance tasks on the maintenance checklists included in Appendix B of the Contract.

ANNUALLY	• Open and clean boxes with a vacuum cleaner. • Remove accumulation of dirt, grease, and gum from conduit. • Check for corrosion and moisture. Check conduit for cracking or other damage. Replace corroded hardware. • Tighten loose mountings and connections. • Check condition of gaskets in boxes and replace gaskets if damaged. • Lubricate door hinges and latches, where provided, with 3-IN-ONE Multi-Purpose Oil. • Check and clean all drain holes and fittings.
FIVE YEARS	• Clean and paint all corrosion and oxidation from steel conduit and supports. • Where PVC coated steel conduit is installed, apply touch up compound to cracks and/or cuts in coating.

CHAPTER 9 - PHOTOS & TABLE OF CONTENTS

GUIDE TO PHOTOS

9.1 Span Support System and Counterweight

9.1A – Pivot Bearing 9-4
9.1B – Bearing Wheels 9-4
9.1C – Typical Bearing Wheel 9-5
9.1D – Typical Balance Wheel and Track 9-5
9.1E – West End Balance Wheel Track (Bridge Partially Open) 9-6
9.1F – Typical Passive Live Load Bearing 9-6
9.1G – Typical Passive Live Load Bearing Lower Shoe (Span Open) 9-7
9.1H – End Screw Jack Machinery 9-7
9.1I – End Screw Jack Motor and Speed Reducer 9-8
9.1J – End Screw Jack Speed Reducer Manual Operation Input Shaft Guard and Oil Pump 9-8
9.1K – Typical End Screw Jack 9-9
9.1L – Counterweight Arm 9-9
9.1M – Balance Material at the West End of the Span 9-10
9.1N – Balance Material below the Deck at the West End of the Span 9-10
9.1O – West End Lubrication Line Brackets (Bridge Partially Open) 9-11
9.1P – East End Lubrication Line Bracket (Bridge Partially Open) 9-11

9.2 Span Drive Machinery

9.2A – Turning Machinery Motor and Motor Brake (Side View) 9-12
9.2B – Turning Machinery Motor Brake (Roadway Hatch Open) 9-12
9.2C – Turning Machinery Speed Reducer (Roadway Hatch Open) 9-13
9.2D – Turning Machinery Speed Reducer Output Machinery 9-13
9.2E – Span Position Instrumentation Machinery 9-14
9.2F – Turning Machinery Disconnect Switch 9-14

9.3 Span Lock Machinery and Rigid Supports

9.3A – Span Lock Machinery 9-15
9.3B – Span Lock Rack and Pinion 9-15
9.3C – Span Lock Receiver 9-16
9.3D – Span Lock Speed Reducer 9-16
9.3E – Fully Closed Rigid Stop 9-17

9.3F – Overtravel Bumper Block 9-17

9.4 Traffic Control Devices and Navigation Lights

9.4A – Typical Traffic Control Equipment 9-18
9.4B – Typical Traffic Gate 9-18
9.4C – Typical Traffic Gate Equipment (Front of VT-40) 9-19
9.4D – Typical Traffic Gate Equipment (Back of VT-40) 9-19
9.4E – Typical Navigation Lights 9-20

9.5 Power Distribution Equipment

9.5A – Main Incoming Service 9-21
9.5B – Manual Transfer Switch 9-21
9.5C – Stand-by Generator 9-22
9.5D – Utility Room Panelboard 9-22

9.6 Control Equipment

9.6A – Control Enclosures 9-23
9.6B – Typical Starter Enclosure – Type 1 (Open) 9-23
9.6B1 – Typical Starter Enclosure – Type 2 (Open) 9-24
9.6C – Turning Machinery Motor Control Enclosure (Open) 9-24
9.6D – Secondary Resistor Enclosure (Open) 9-25
9.6E – Span Lock Motor Disconnect Switch 9-25
9.6F – End Screw Jack Motor Disconnect Switch (Open) 9-26
9.6G – Control Desk 9-26
9.6H – Control Desk Interior 9-27
9.6I – Far Side Aerial Cable Terminal Box (Open) 9-27
9.6J – Drag Cables 9-28
9.6K – End Screw Jack Limit Switches 9-28
9.6L – Turning Machine Motor Control Enclosure Contactors 9-29
9.6M – Fully Open and Overtravel Limit Switches (Lever Style) 9-29
9.6N – Fully Closed Limit Switch (Lever Style) 9-30
9.6O – Turning Machinery Manual Operation Limit Switch (Lever Style) 9-30
9.6P – Drag Cable Termination Box 9-31
9.6Q – Main Circuit Breaker 9-31

9.7 Miscellaneous Equipment

9.7A – Typical Service Light Fixtures....9-32
9.7B – Pressurized Holding Tank....9-32
9.7C – Water Heater....9-33
9.7D – Sump Pump....9-33
9.7E – Emergency Light Fixture....9-34
9.7F – HVAC Outdoor Unit....9-34
9.7G – Furnace Unit....9-35
9.7H – Hot Water Heater Disconnect Switch....9-35

9.1 SPAN SUPPORT SYSTEM AND COUNTERWEIGHT

PHOTO 9.1A – PIVOT BEARING

PHOTO 9.1B – BEARING WHEELS

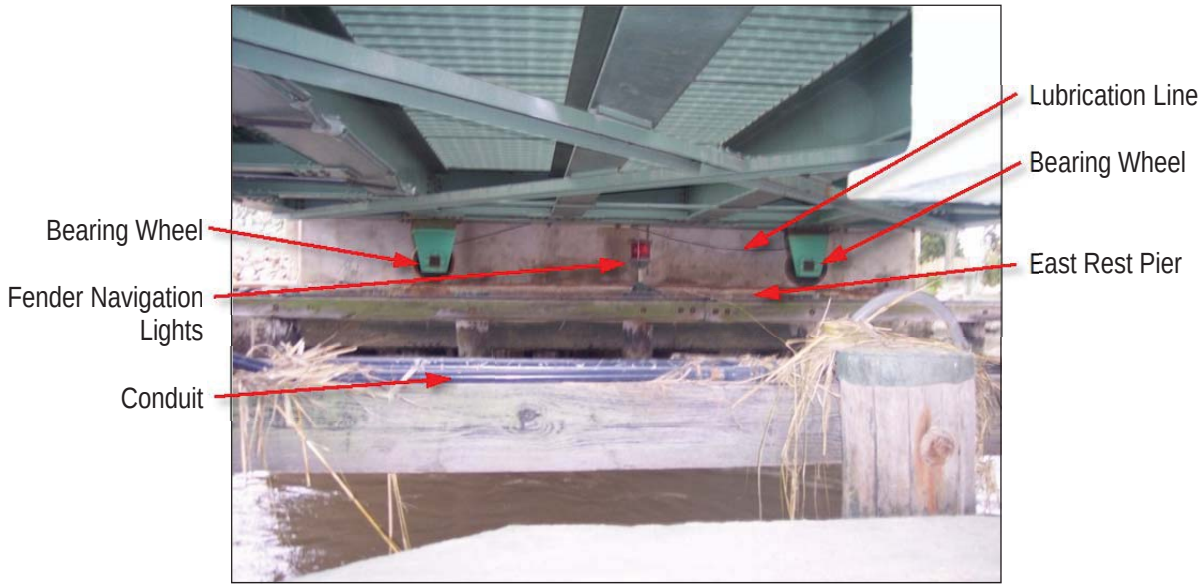

PHOTO 9.1C – TYPICAL BEARING WHEEL

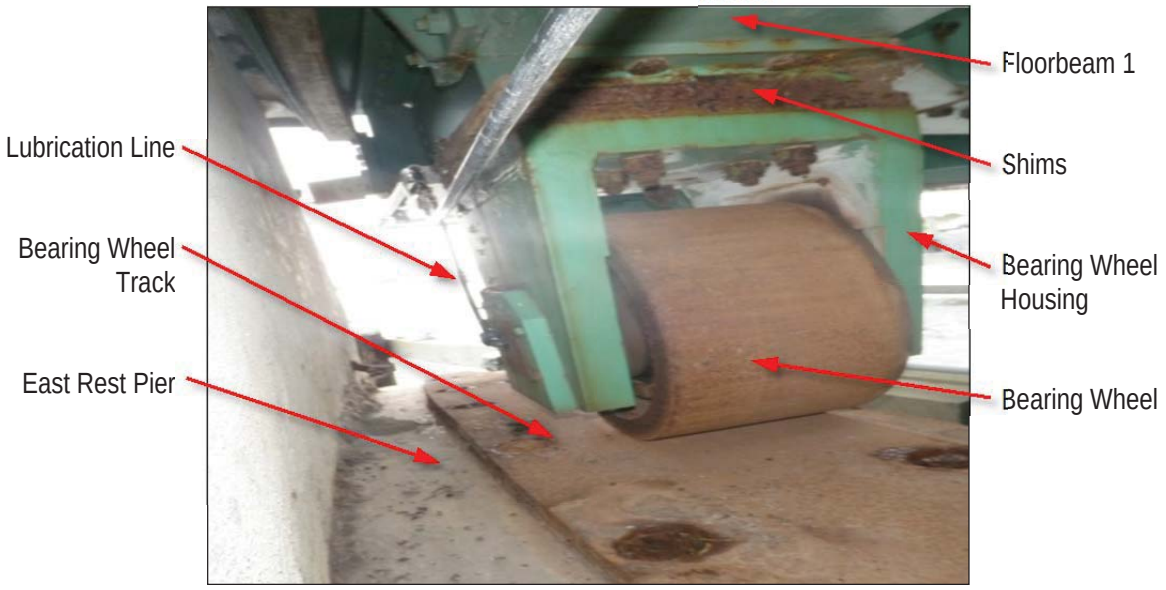

PHOTO 9.1D – TYPICAL BALANCE WHEEL AND TRACK

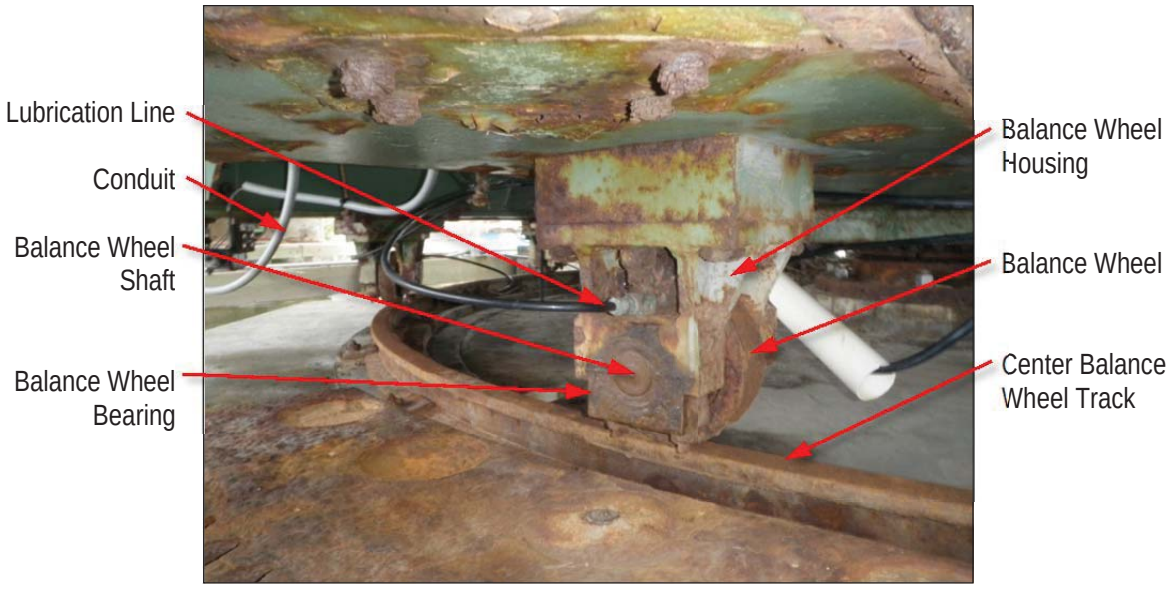

PHOTO 9.1E – WEST END BALANCE WHEEL TRACK (BRIDGE PARTIALLY OPEN)

PHOTO 9.1F – TYPICAL PASSIVE LIVE LOAD BEARING

PHOTO 9.1G – TYPICAL PASSIVE LIVE LOAD BEARING LOWER SHOE (SPAN OPEN)

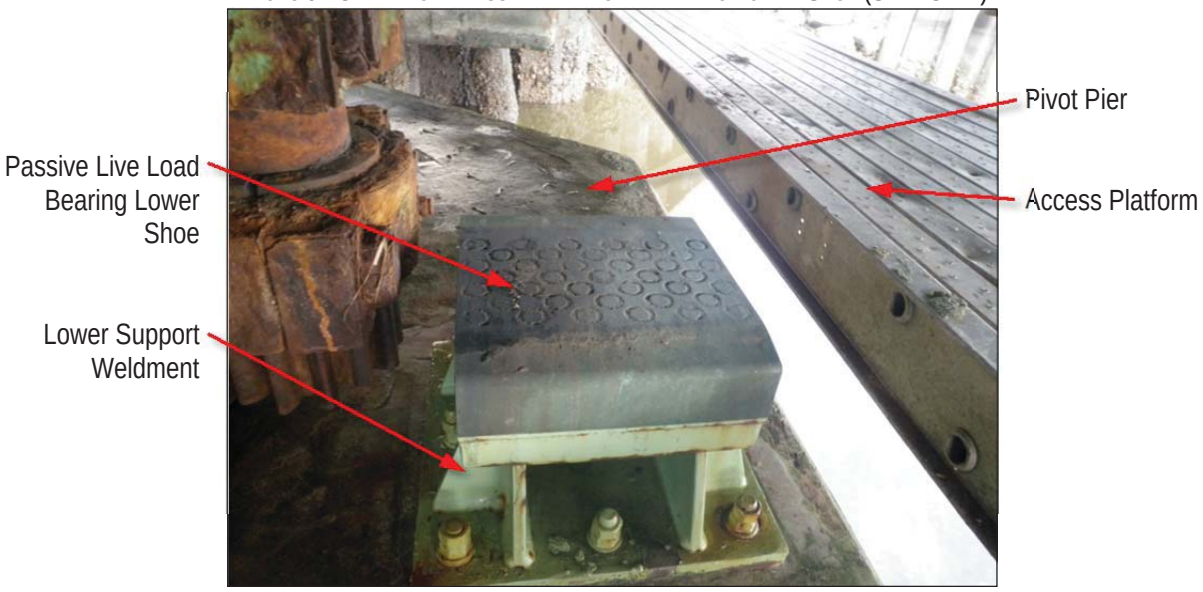

PHOTO 9.1H – END SCREW JACK MACHINERY

PHOTO 9.1I – END SCREW JACK MOTOR AND SPEED REDUCER

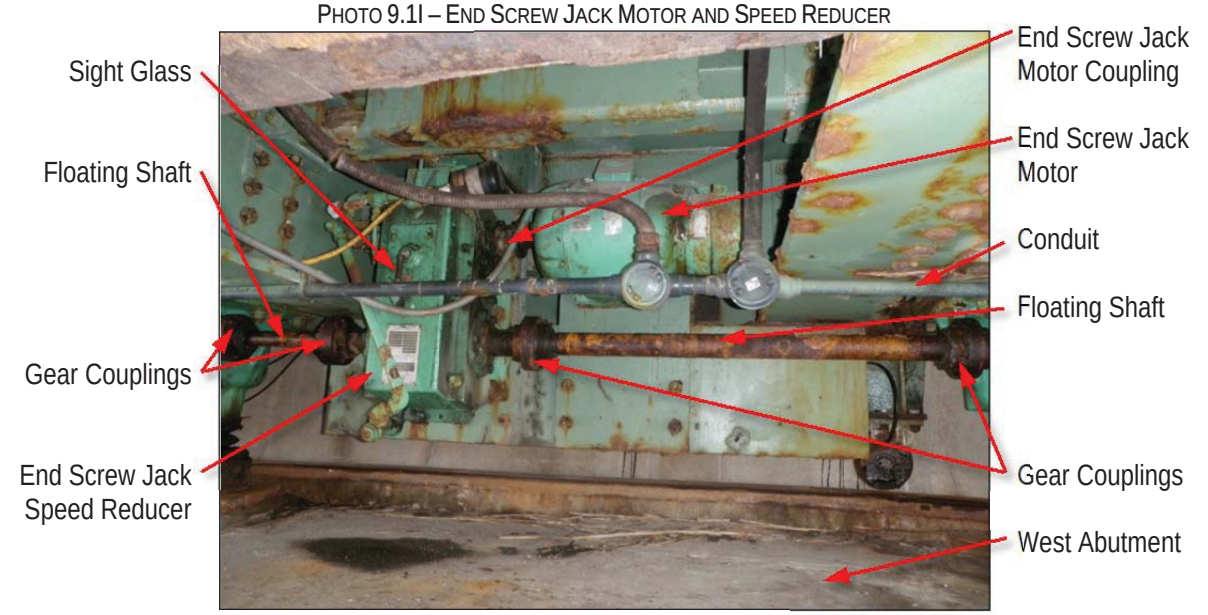

PHOTO 9.1J – END SCREW JACK SPEED REDUCER MANUAL OPERATION INPUT SHAFT GUARD AND OIL PUMP

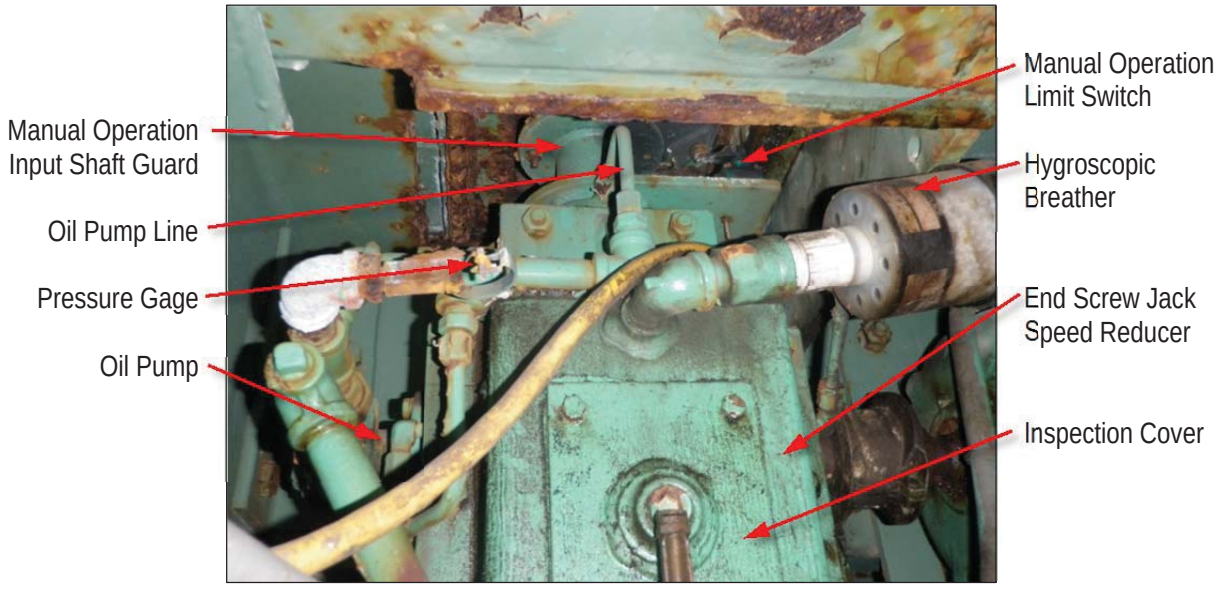

PHOTO 9.1K – TYPICAL END SCREW JACK

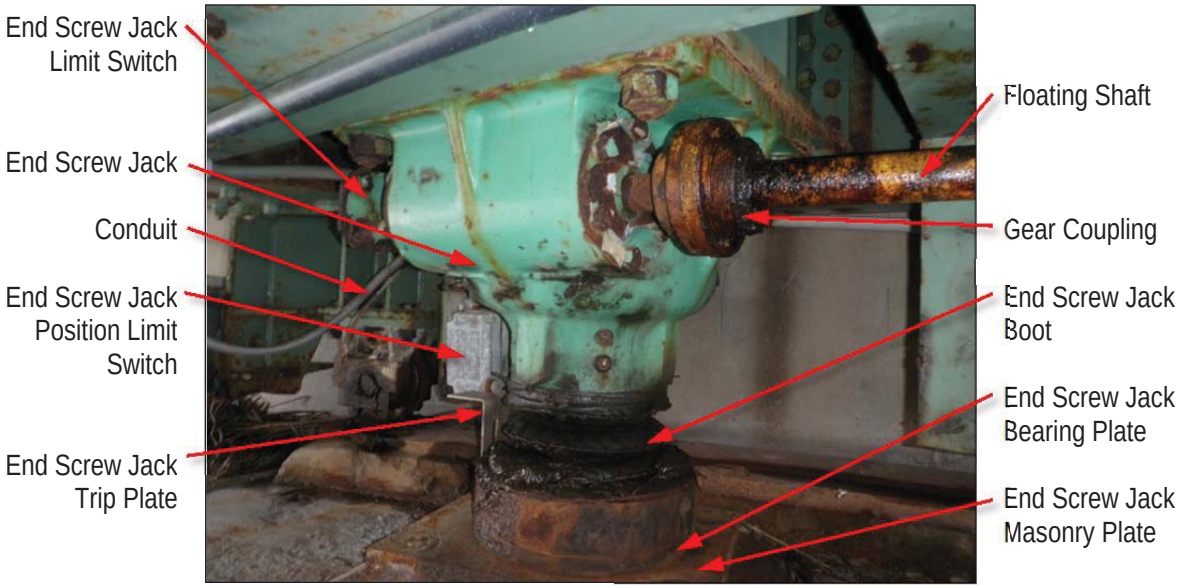

PHOTO 9.1L – COUNTERWEIGHT ARM

PHOTO 9.1M – BALANCE MATERIAL AT THE WEST END OF THE SPAN

PHOTO 9.1N – BALANCE MATERIAL BELOW THE DECK AT THE WEST END OF THE SPAN

PHOTO 9.1O – WEST END LUBRICATION LINE BRACKETS BRIDGE PARTIALLY OPEN)

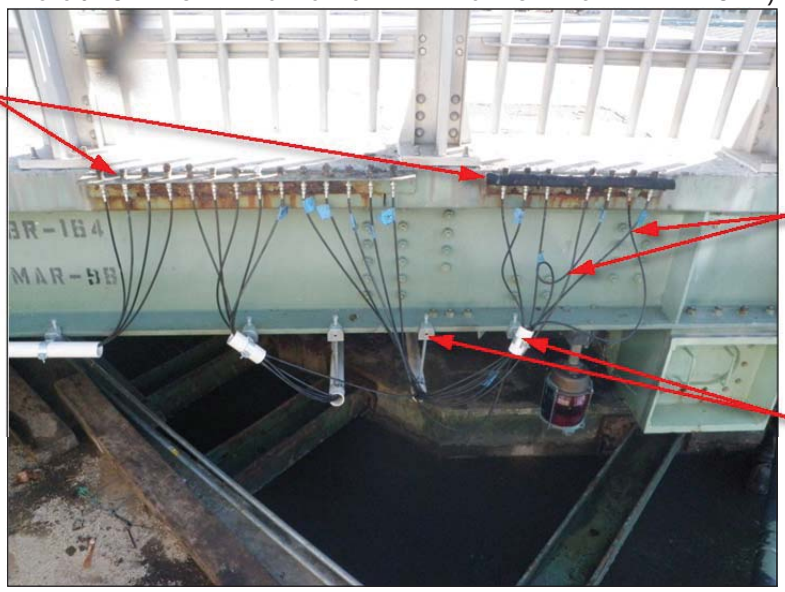

PHOTO 9.1P – EAST END LUBRICATION LINE BRACKET (BRIDGE PARTIALLY OPEN)

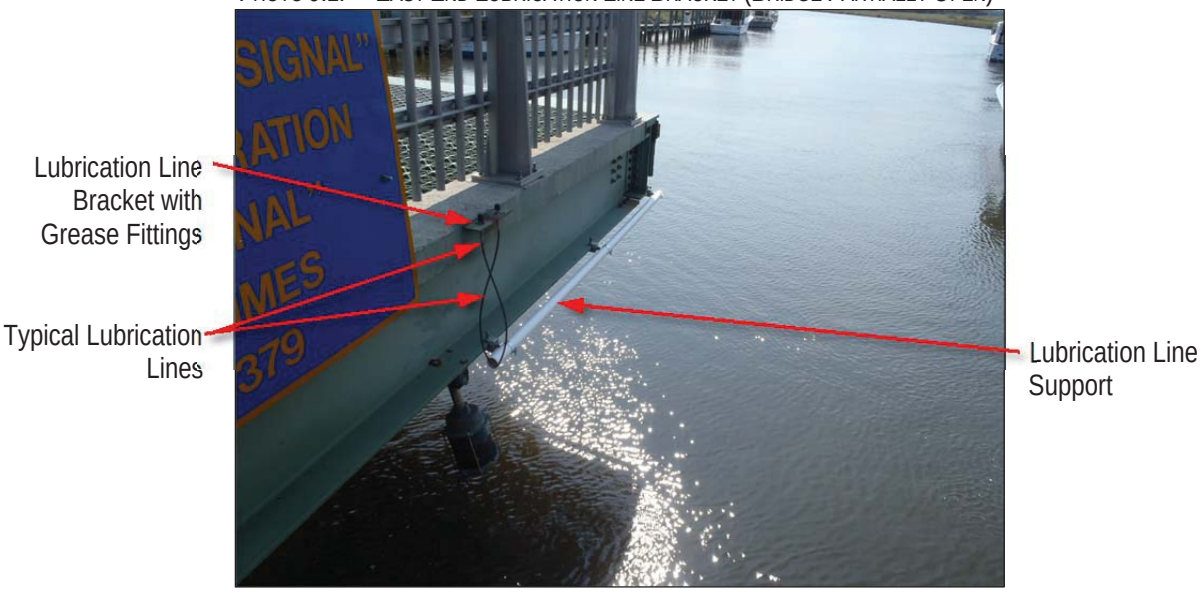

9.2 SPAN DRIVE MACHINERY

PHOTO 9.2A – TURNING MACHINERY MOTOR AND MOTOR BRAKE (SIDE VIEW)

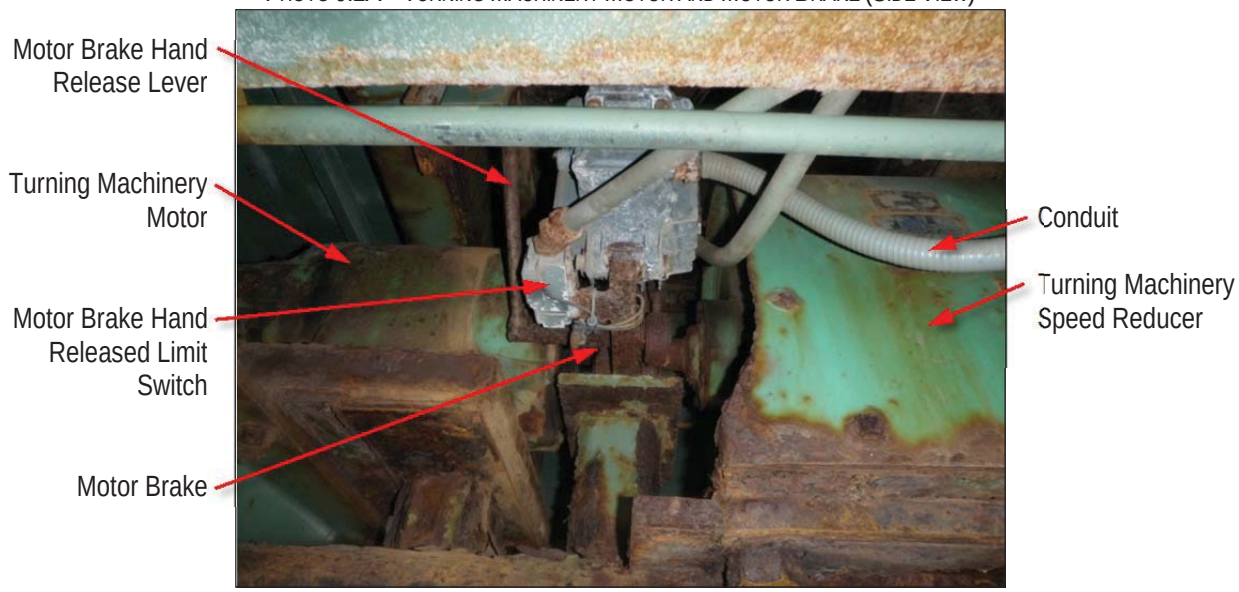

PHOTO 9.2B – TURNING MACHINERY MOTOR BRAKE (ROADWAY HATCH OPEN)

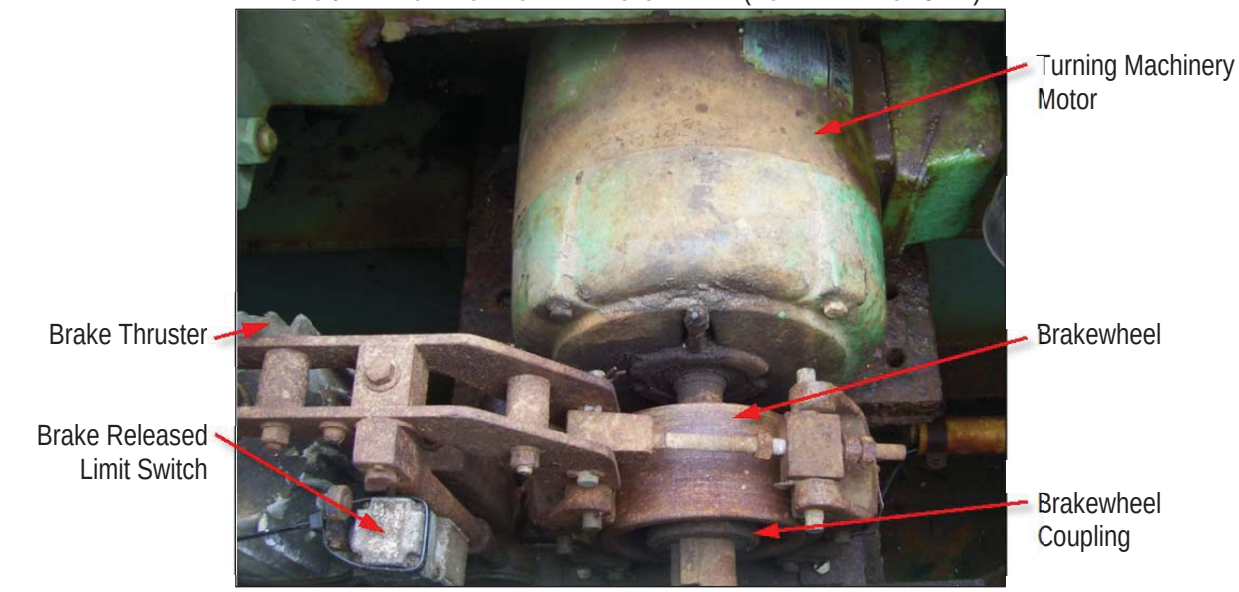

PHOTO 9.2C – TURNING MACHINERY SPEED REDUCER (ROADWAY HATCH OPEN)

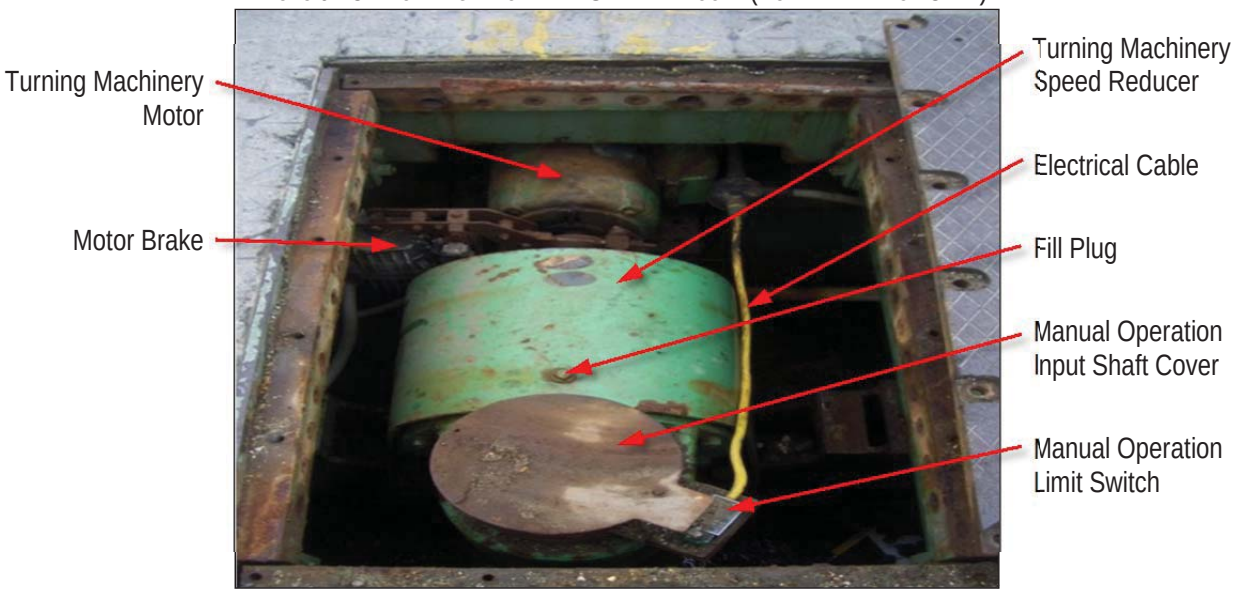

PHOTO 9.2D – TURNING MACHINERY SPEED REDUCER OUTPUT MACHINERY

PHOTO 9.2E – SPAN POSITION INSTRUMENTATION MACHINERY

PHOTO 9.2F – TURNING MACHINERY DISCONNECT SWITCH

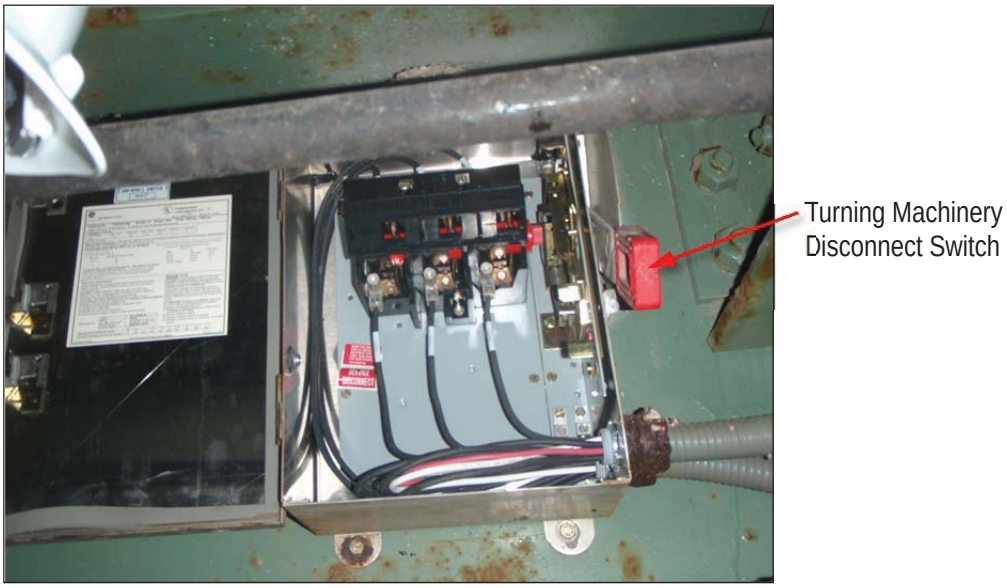

9.3 SPAN LOCK MACHINERY AND RIGID SUPPORTS

PHOTO 9.3A – SPAN LOCK MACHINERY

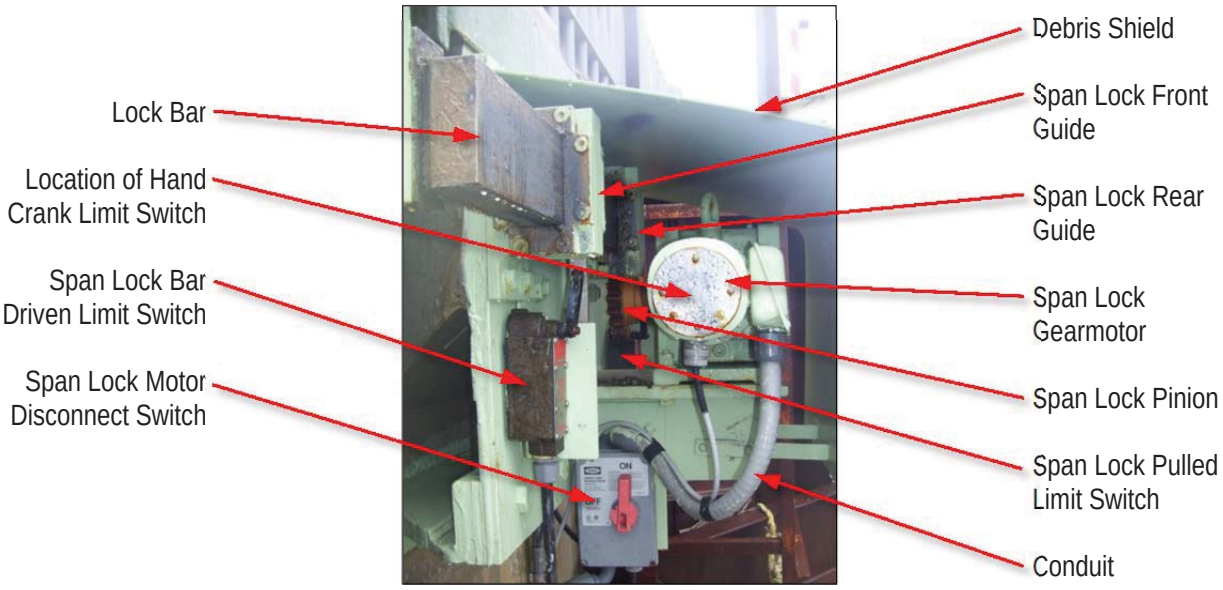

PHOTO 9.3B – SPAN LOCK RACK AND PINION

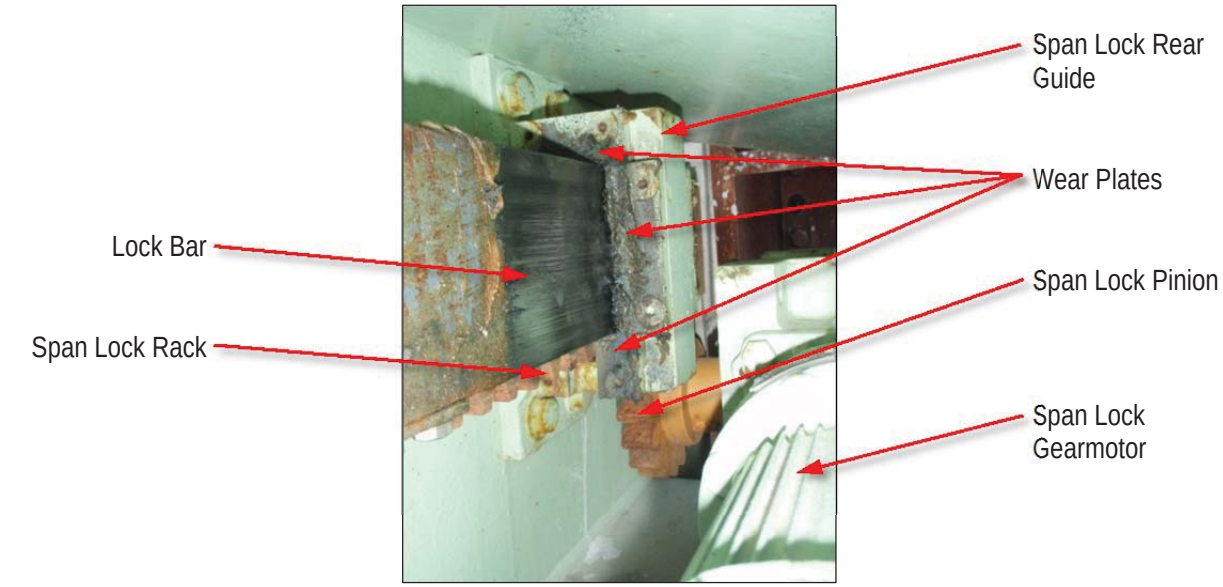

PHOTO 9.3C – SPAN LOCK RECEIVER

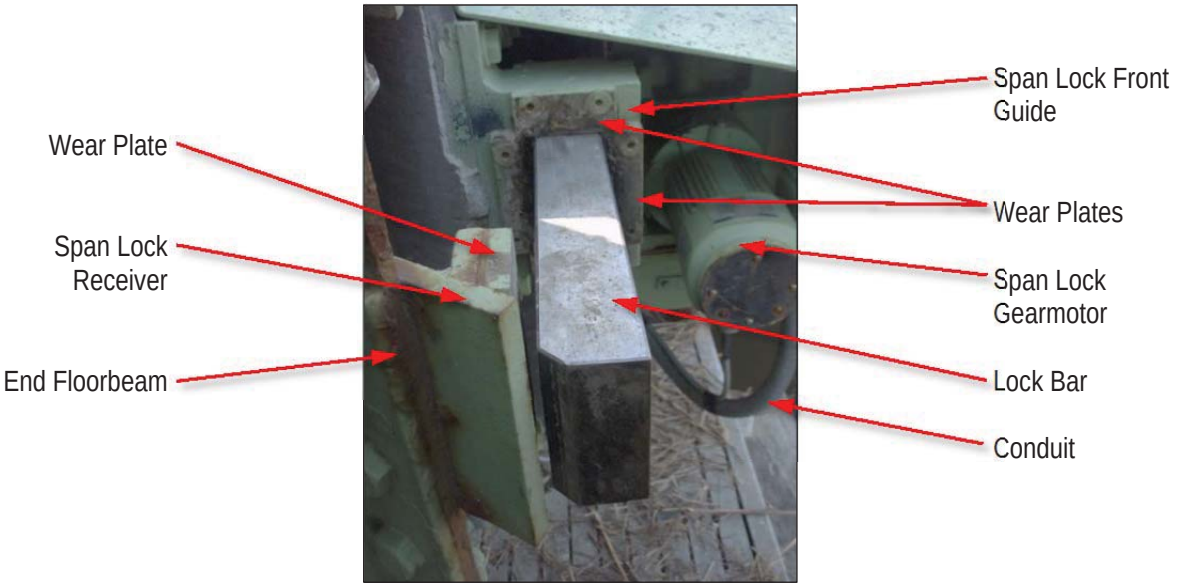

PHOTO 9.3D –SPAN LOCK SPEED REDUCER

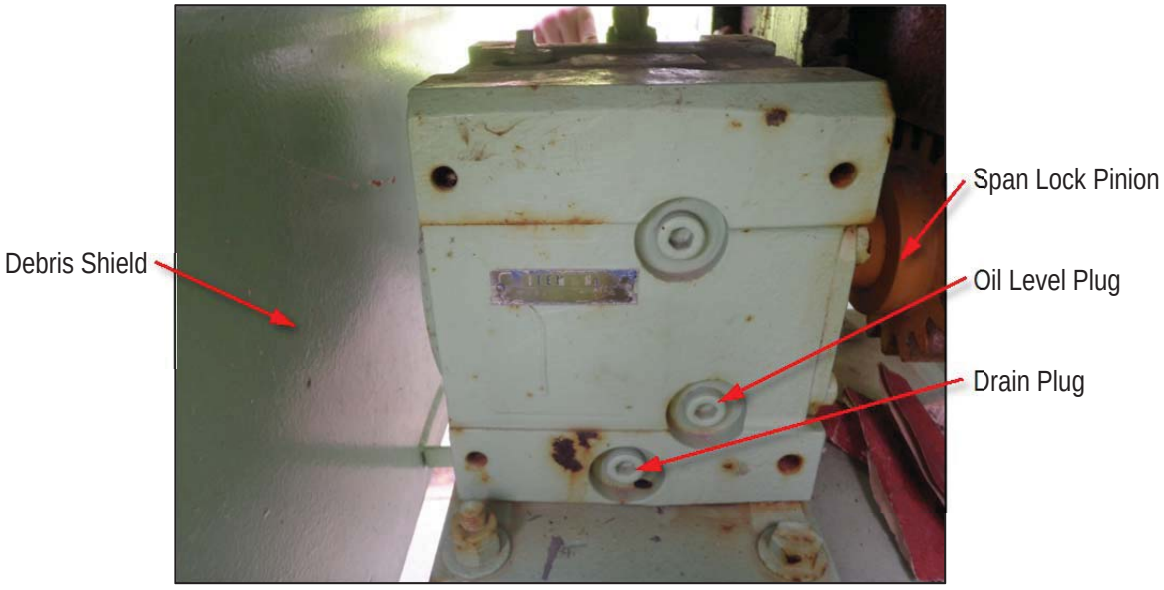

PHOTO 9.3E –FULLY CLOSED RIGID STOP

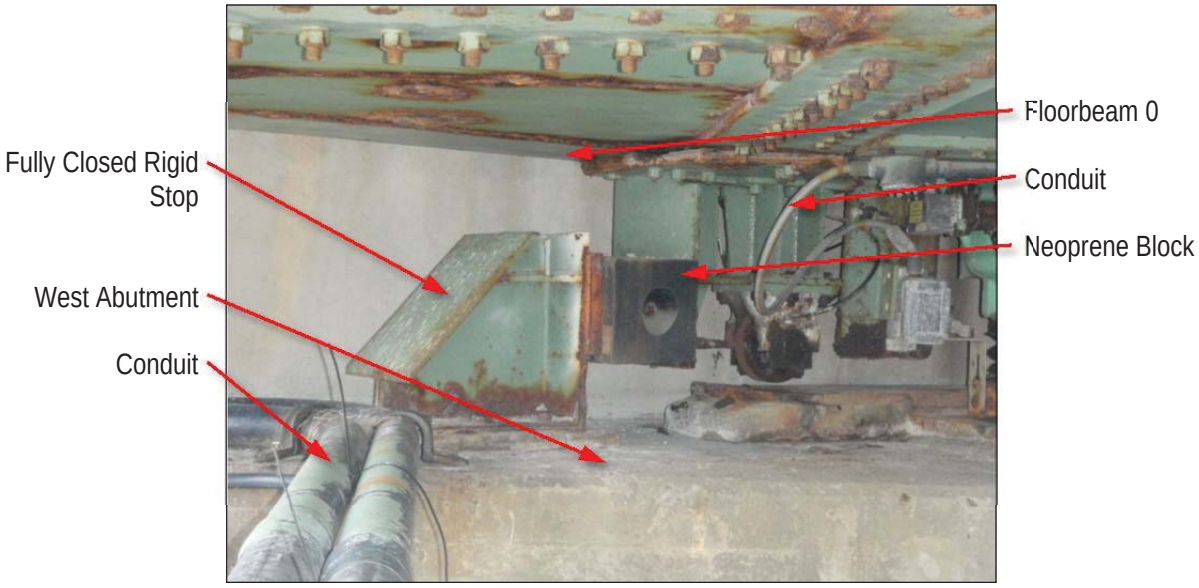

PHOTO 9.3F – OVERTRAVEL BUMPER BLOCK

9.4 TRAFFIC CONTROL DEVICES AND NAVIGATION LIGHTS

PHOTO 9.4A – TYPICAL TRAFFIC CONTROL EQUIPMENT

PHOTO 9.4B – TYPICAL TRAFFIC GATE

PHOTO 9.4C – TYPICAL TRAFFIC GATE EQUIPMENT (FRONT OF VT-40)

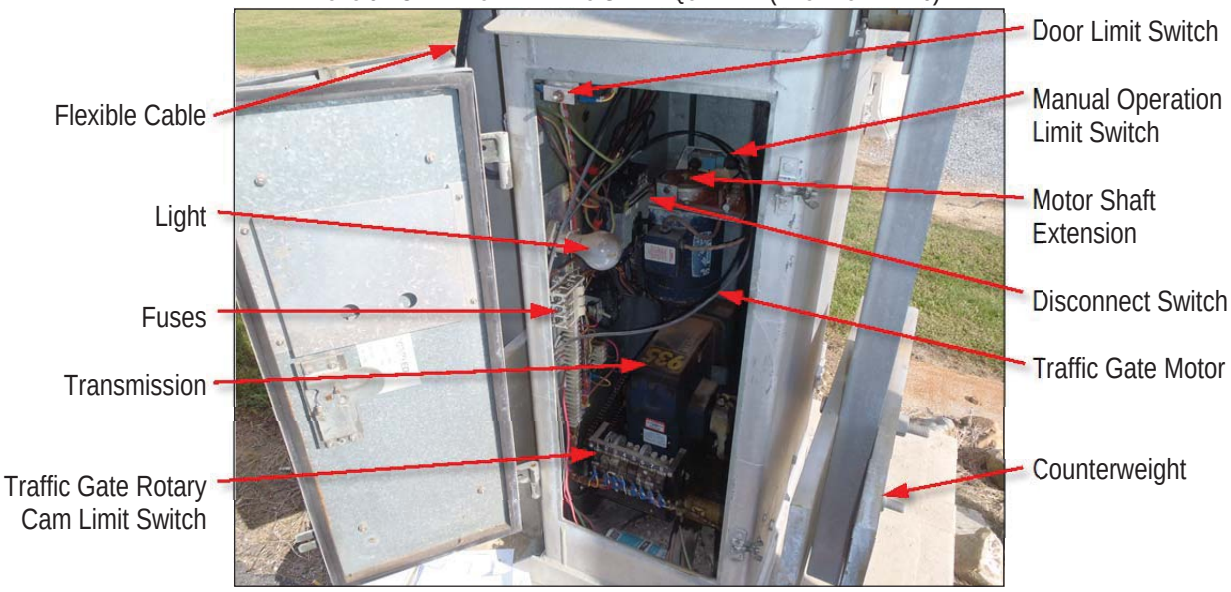

PHOTO 9.4D – TYPICAL TRAFFIC GATE EQUIPMENT (BACK OF VT-40)

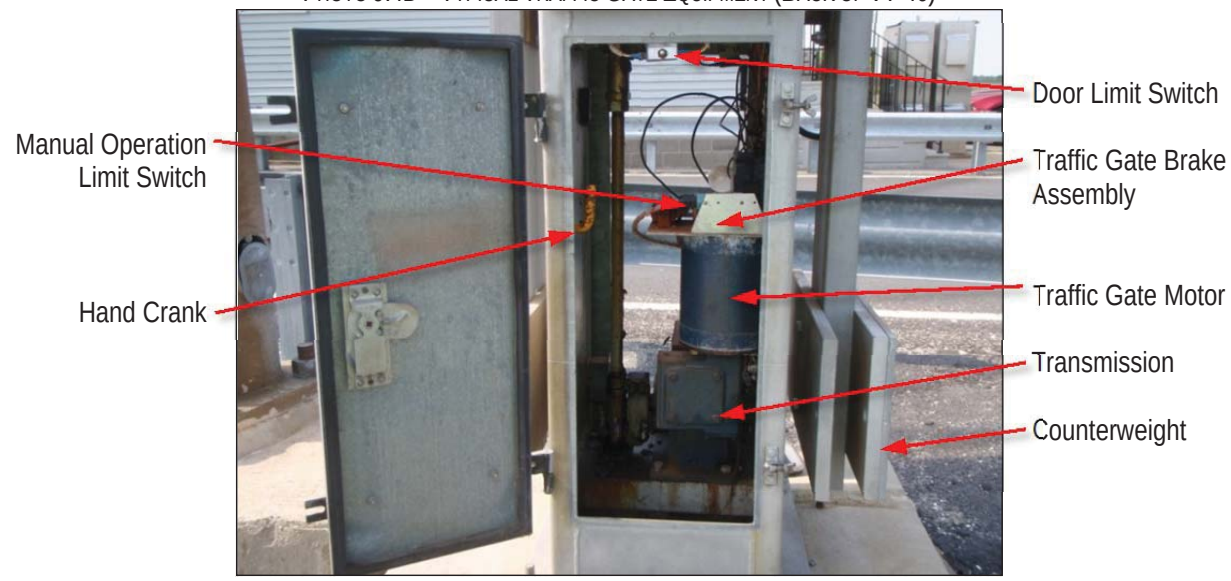

PHOTO 9.4E – TYPICAL NAVIGATION LIGHTS

9.5 POWER DISTRIBUTION EQUIPMENT

PHOTO 9.5A – MAIN INCOMING SERVICE

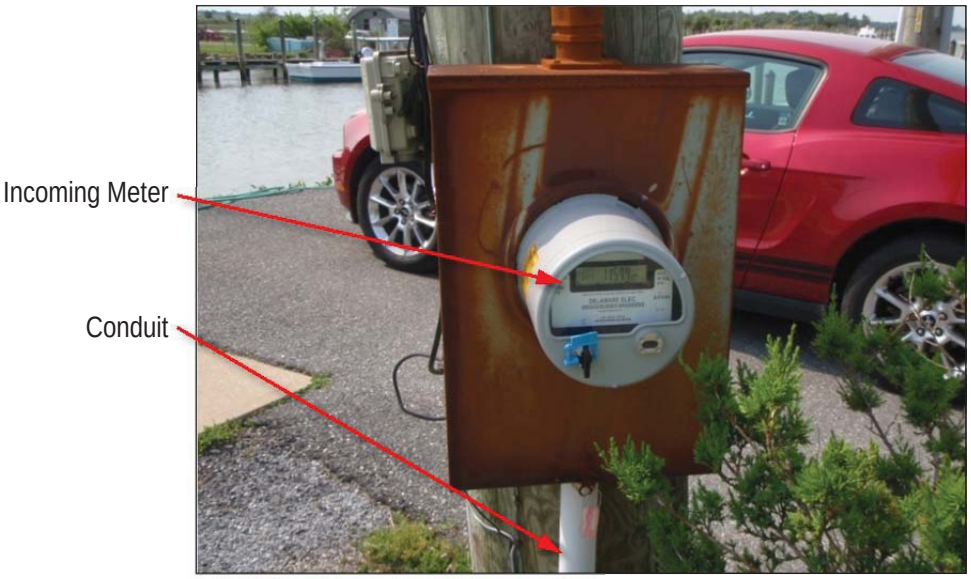

PHOTO 9.5B – MANUAL TRANSFER SWITCH

PHOTO 9.5C – STAND-BY GENERATOR

PHOTO 9.5D – UTILITY ROOM PANELBOARD

9.6 CONTROL EQUIPMENT

PHOTO 9.6A – CONTROL ENCLOSURES

PHOTO 9.6B – TYPICAL STARTER ENCLOSURE –TYPE 1 (OPEN)

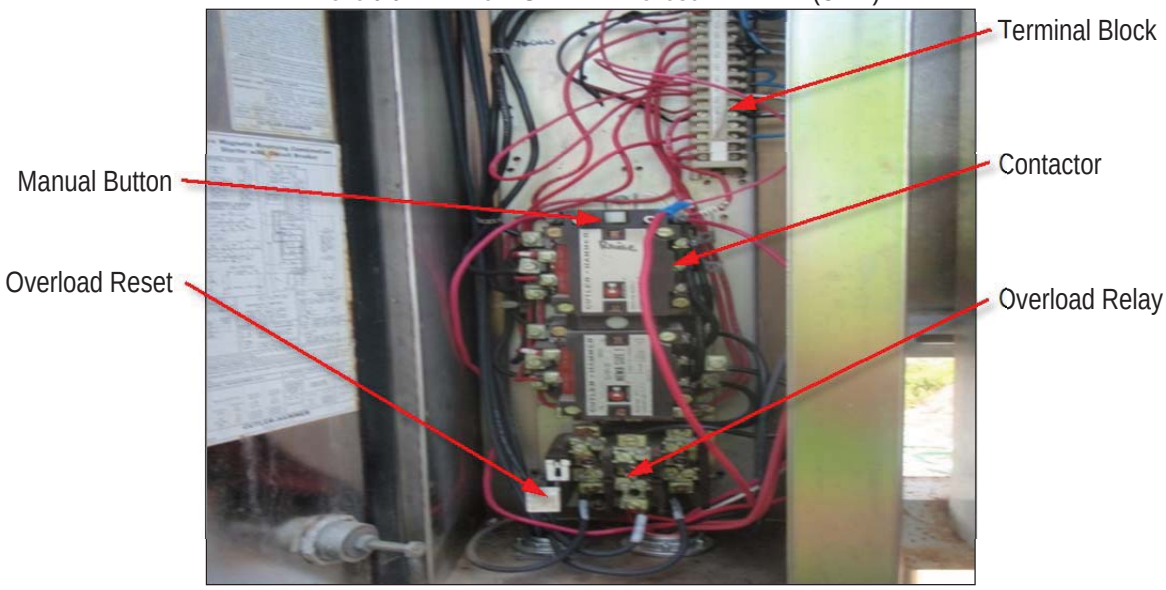

PHOTO 9.6B1 – TYPICAL STARTER ENCLOSURE –TYPE 2 (OPEN)

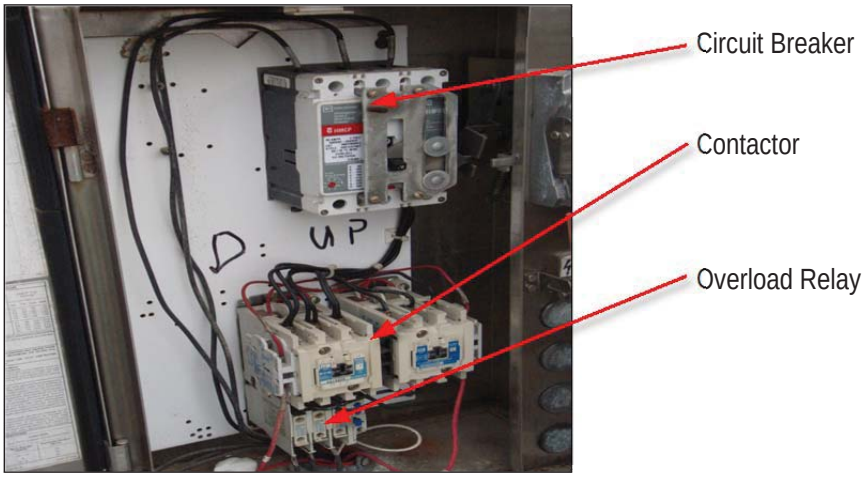

PHOTO 9.6C – TURNING MACHINERY MOTOR CONTROL ENCLOSURE (OPEN)

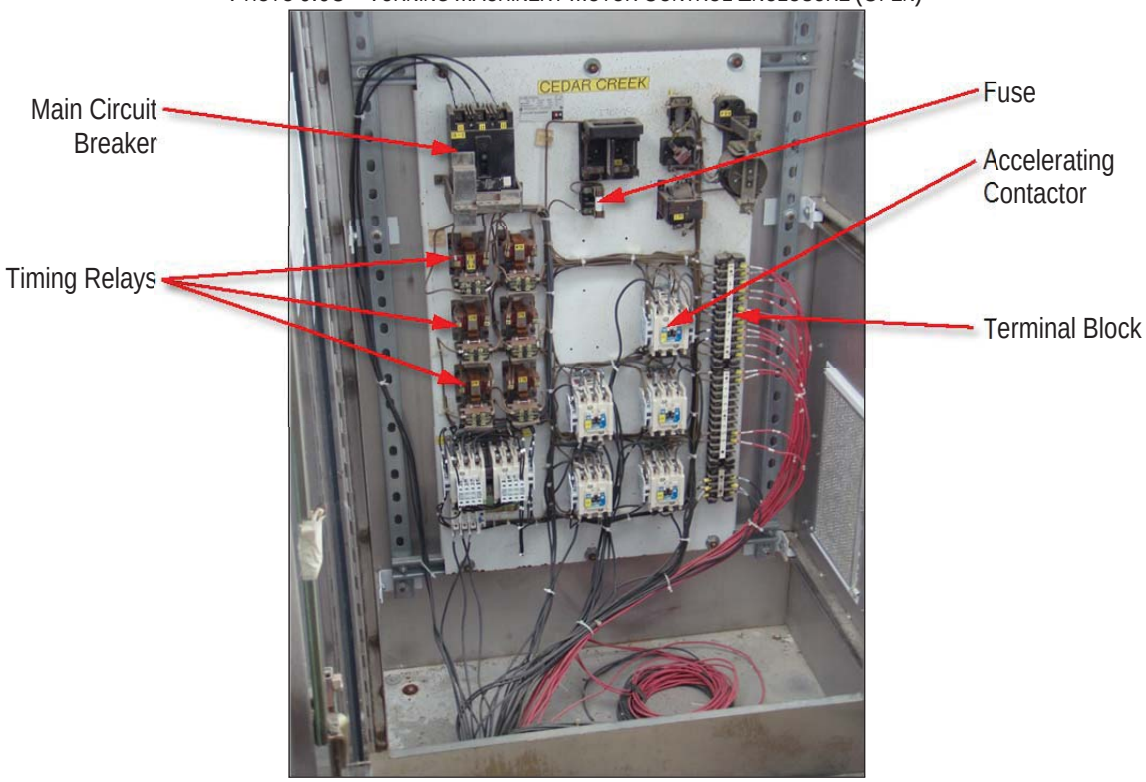

PHOTO 9.6D – SECONDARY RESISTOR ENCLOSURE (OPEN)

PHOTO 9.6E – SPAN LOCK MOTOR DISCONNECT SWITCH

PHOTO 9.6F SCREW JACK MOTOR DISCONNECT SWITCH (OPEN)

PHOTO 9.6G – CONTROL DESK

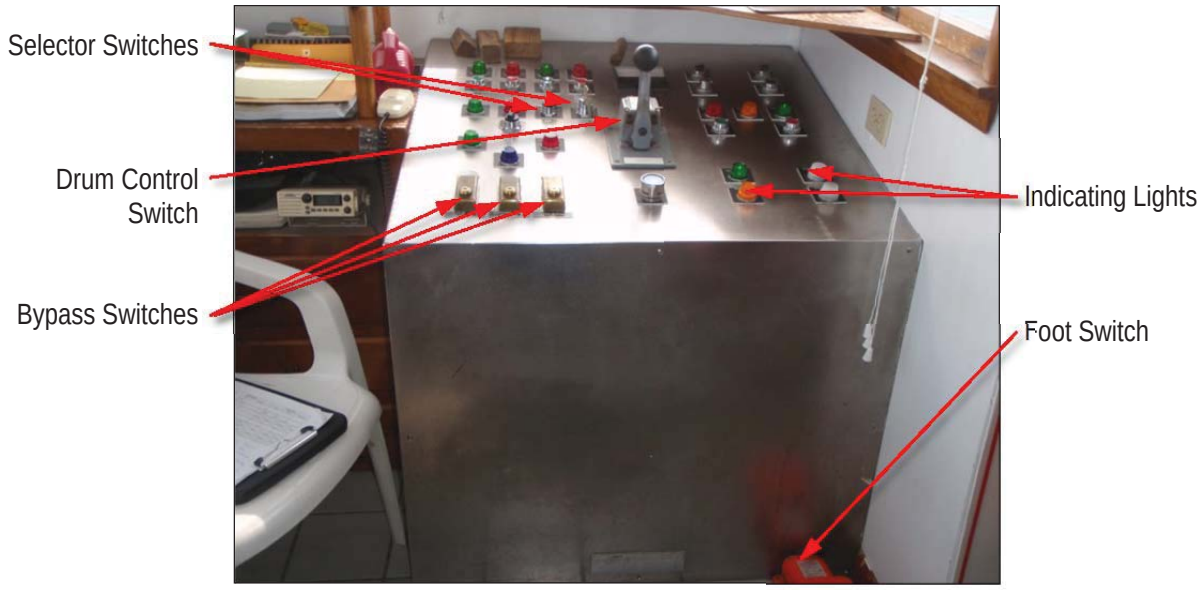

PHOTO 9.6H – CONTROL DESK INTERIOR

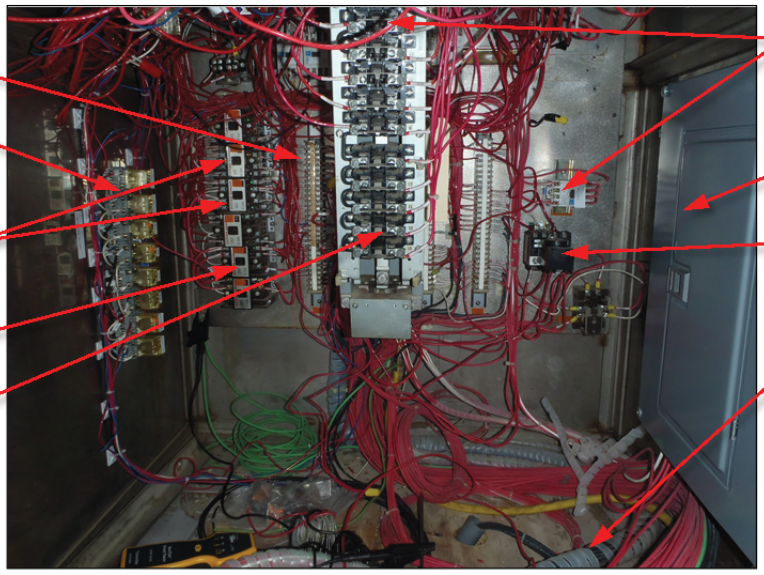

PHOTO 9.6I – FAR SIDE AERIAL CABLE TERMINAL BOX (OPEN)

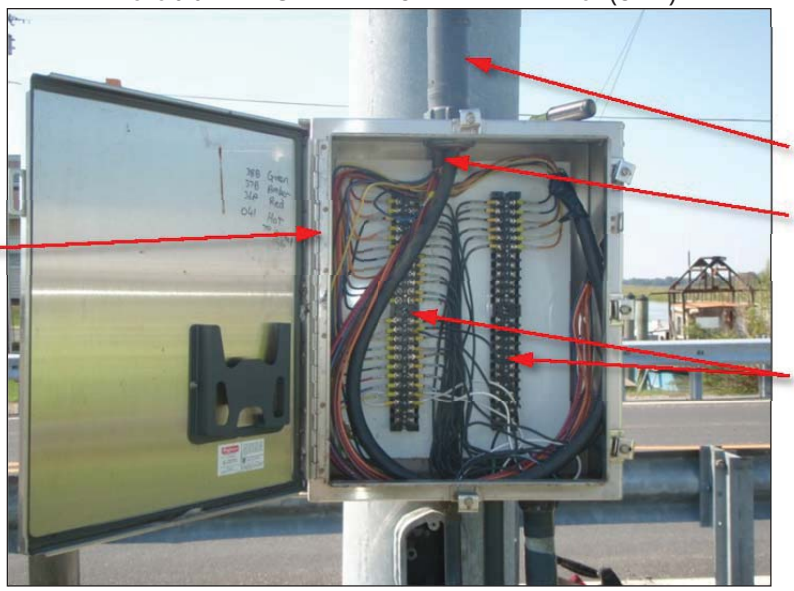

PHOTO 9.6J – DRAG CABLES

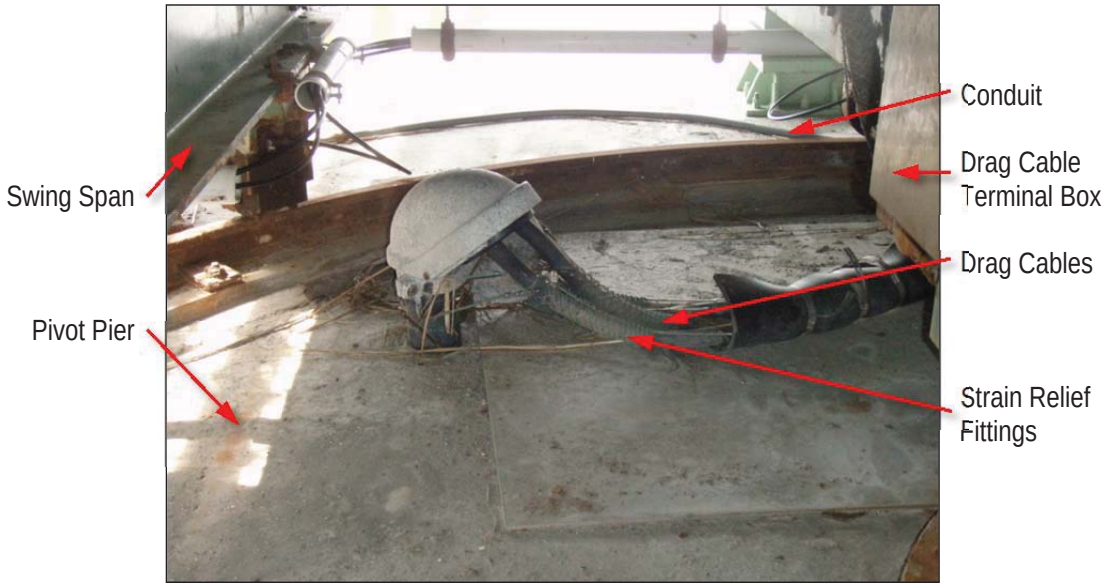

PHOTO 9.6K – END SCREW JACK LIMIT SWITCHES

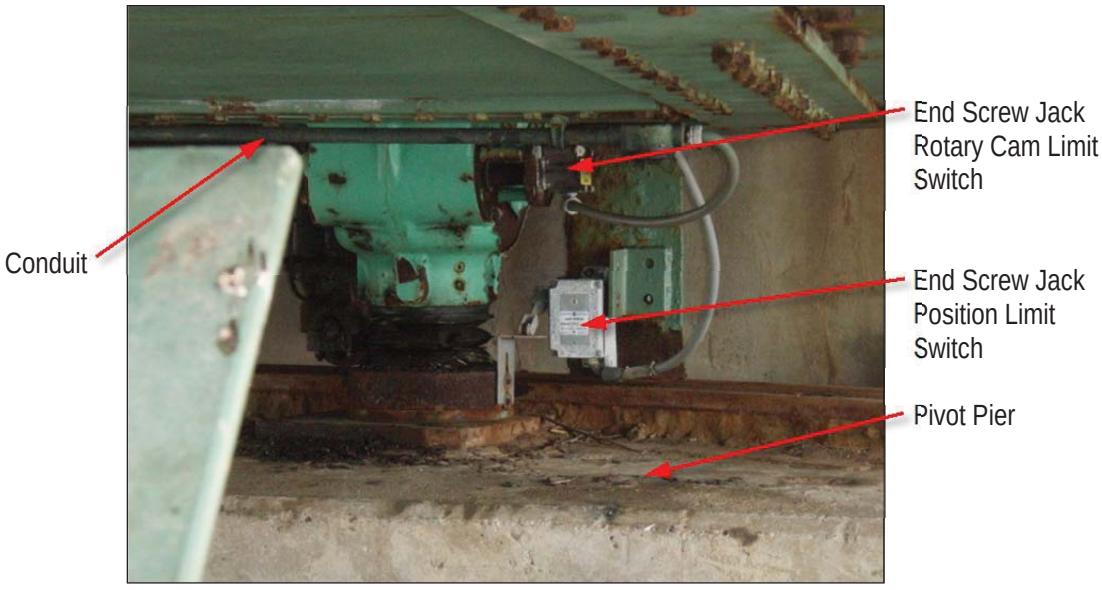

PHOTO 9.6L – TURNING MACHINERY MOTOR CONTROL ENCLOSURE CONTACTORS

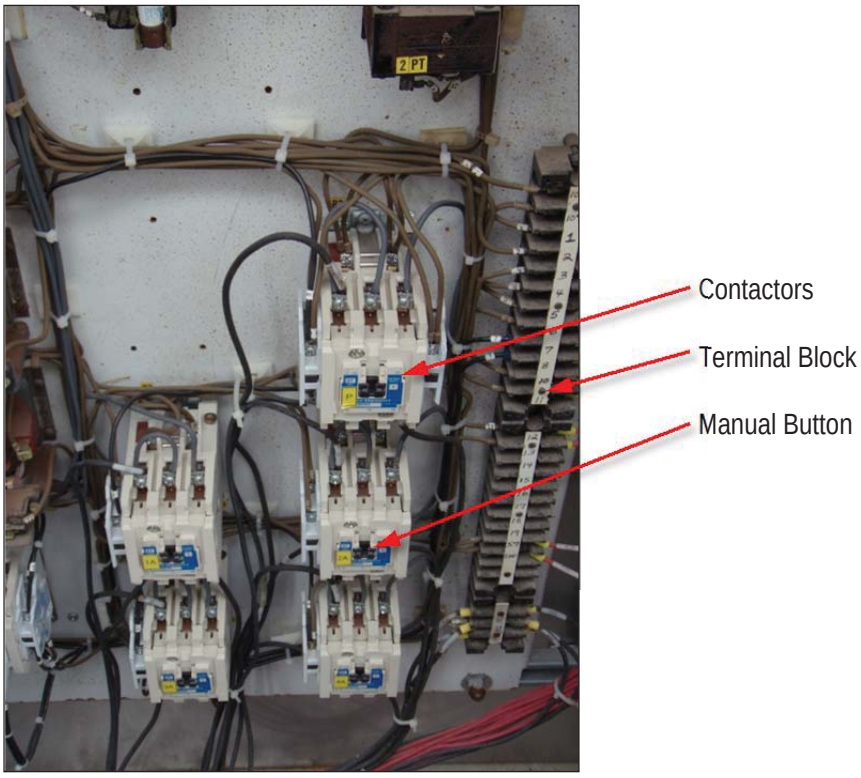

PHOTO 9.6M – FULLY OPEN AND OVERTRAVEL LIMIT SWITCHES (LEVER STYLE)

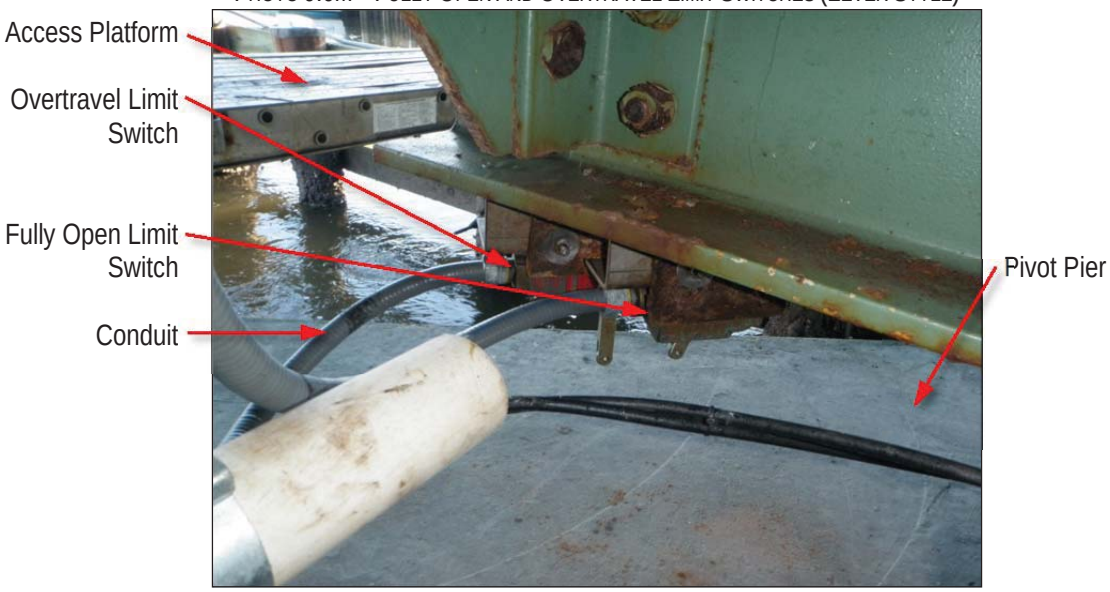

PHOTO 9.6N – FULLY CLOSED LIMIT SWITCH (LEVER STYLE)

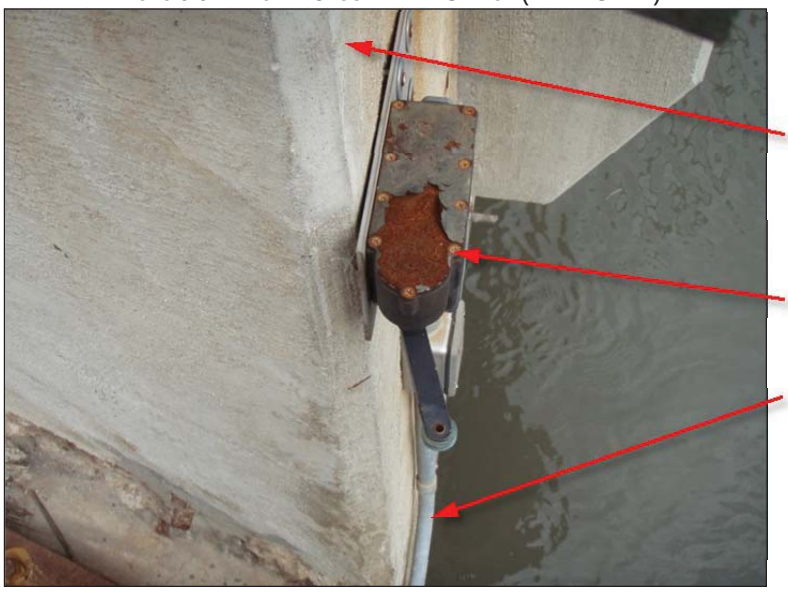

PHOTO 9.6O – TURNING MACHINERY MANUAL OPERATION LIMIT SWITCH (LEVER STYLE)

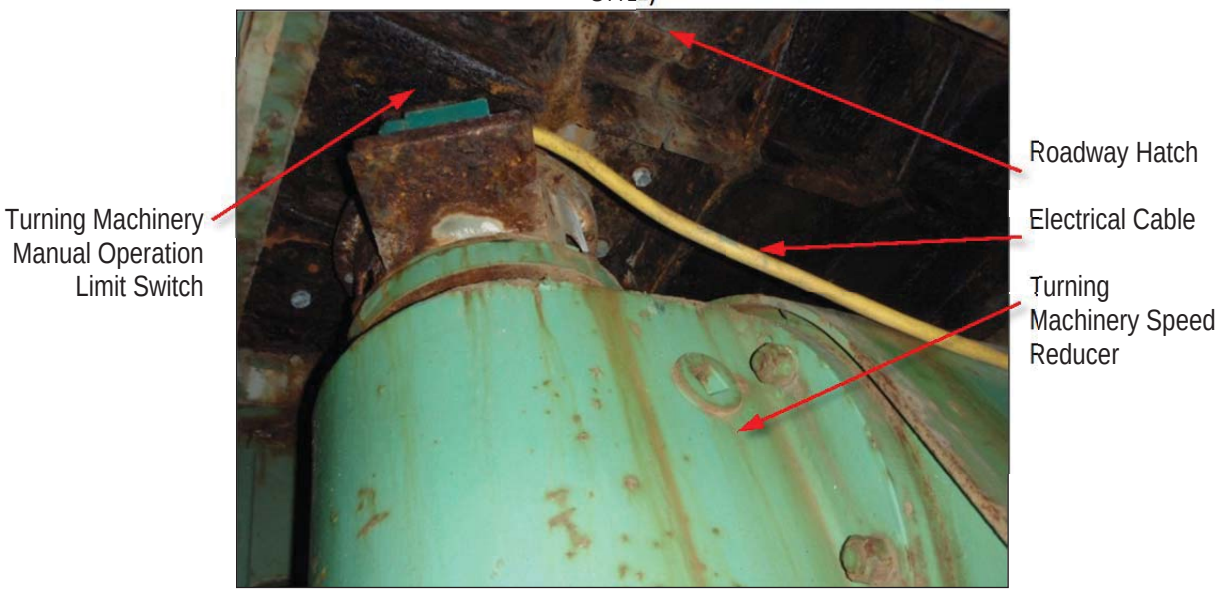

PHOTO 9.6P – DRAG CABLE TERMINATION BOX

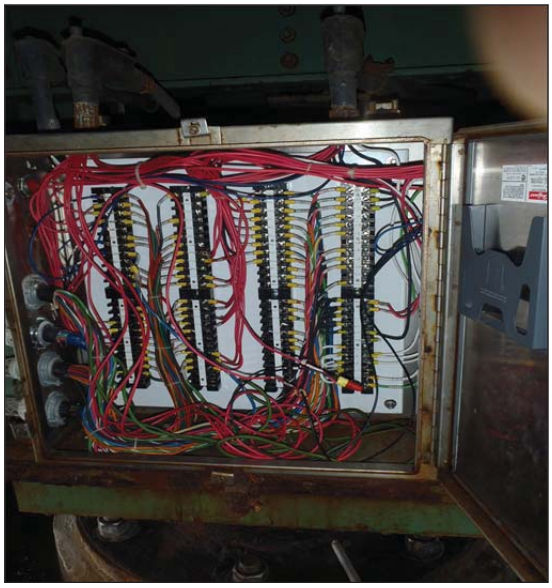

PHOTO 9.6Q – MAIN CIRCUIT BREAKER

9.7 MISCELLANEOUS EQUIPMENT

PHOTO 9.7A – TYPICAL SERVICE LIGHT FIXTURES

PHOTO 9.7B – PRESSURIZED HOLDING TANK

PHOTO 9.7C – WATER HEATER

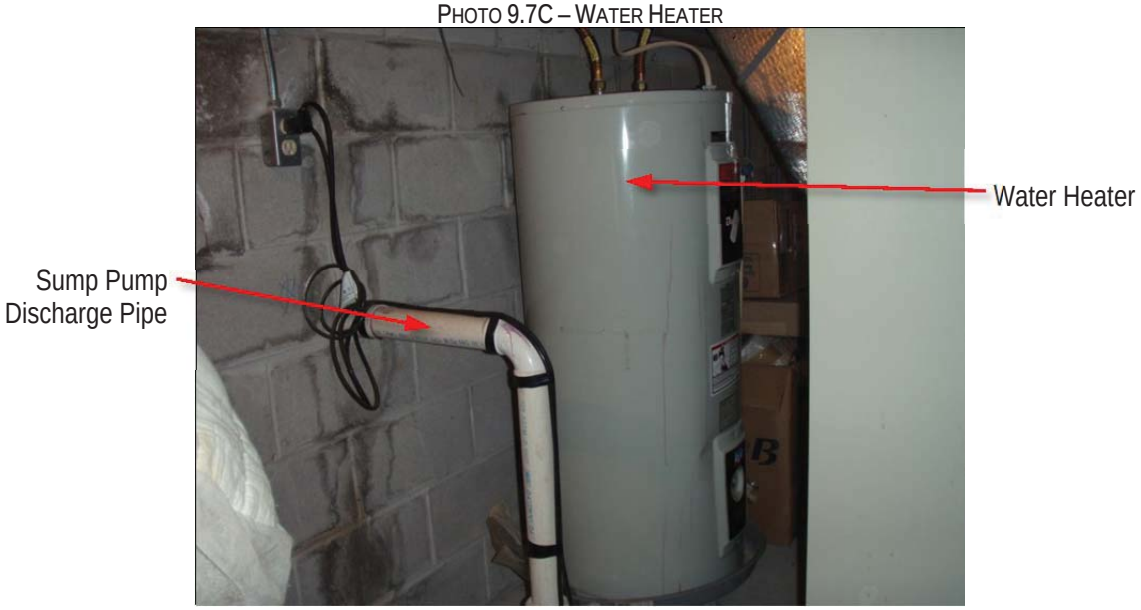

PHOTO 9.7D – SUMP PUMP

PHOTO 9.7E – EMERGENCY LIGHT FIXTURE

PHOTO 9.7F – HVAC OUTDOOR UNIT

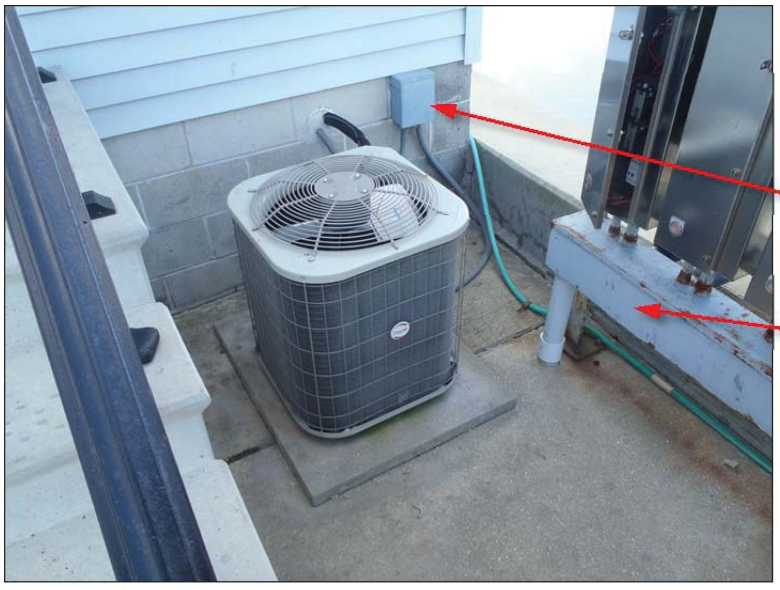

PHOTO 9.7G – FURNACE UNIT

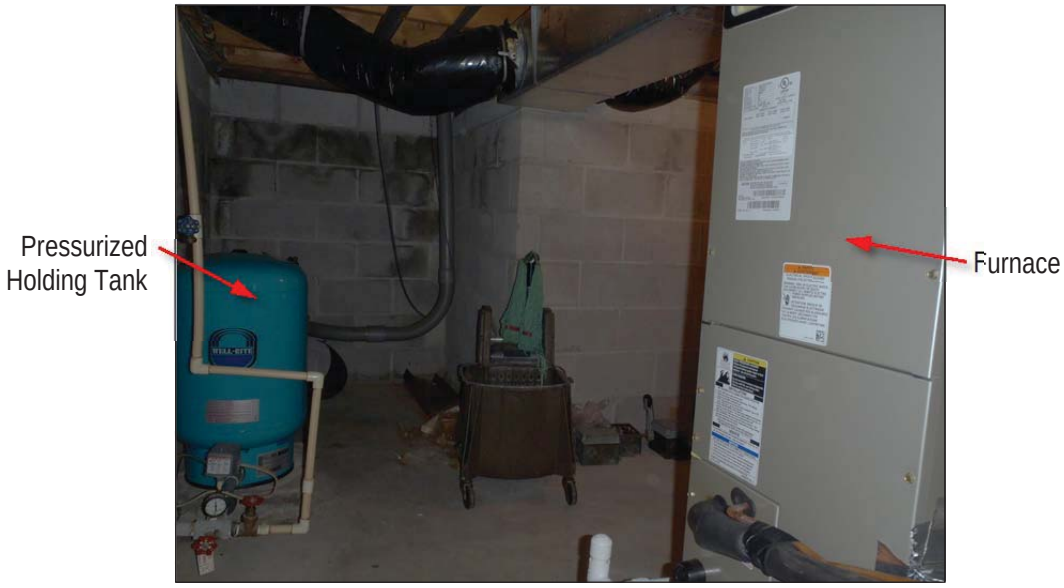

PHOTO 9.7H – HOT WATER HEATER DISCONNECT SWITCH

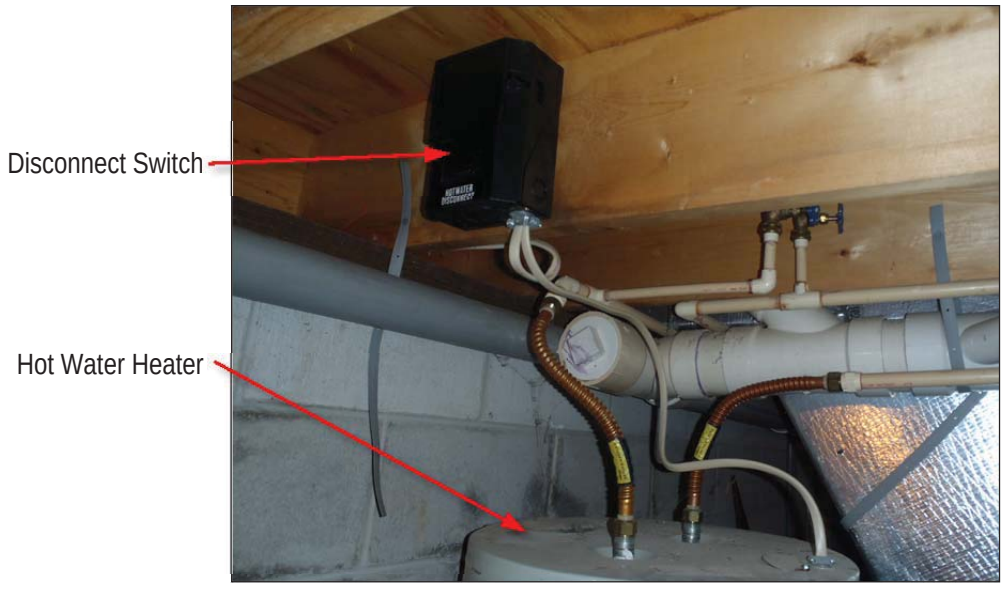

THIS PAGE INTENTIONALLY LEFT BLANK

CHAPTER 10 - MAINTENANCE FORMS & TABLE OF CONTENTS

10.1 MECHANICAL AND ELECTRICAL MAINTENANCE CHECKLISTS

10.1.1 Form 10-1 – Span Support System and Counterweight 10-2
10.1.2 Form 10-2 – Turning Machinery 10-4
10.1.3 Form 10-3 – Span Lock Machinery and Rigid Stops 10-6
10.1.4 Form 10-4 – Traffic Gates 10-7
10.1.5 Form 10-5 – Electrical Power Systems 10-8
10.1.6 Form 10-6 – Lighting Systems 10-12
10.1.7 Form 10-7 – Electric Motors 10-13
10.1.8 Form 10-8 – Control System 10-15
10.1.9 Form 10-9 – Miscellaneous Equipment 10-16

10.1.1 FORM 10-1 – SPAN SUPPORT SYSTEM AND COUNTERWEIGHT

	Maintenance Tasks To Be Performed:				
	Monthly	Three Month	Six Month	Annual	Five Year
Date: _____ Maintenance Personnel: _____	☐	☐	☐	☐	☐

	Maintenance Tasks Completed				
Maintenance Tasks	**Monthly**	**Three Month**	**Six Month**	**Annual**	**Five Year**
Pivot Bearing - Sections 8.1.1, 11.1.2 (Component ID # 28, 29, 30 ,31, & 32), 11.2.2, 11.4.7, & 11.7.10					
Lubricate the pivot bearing.	☐				
Check housing, support frame, and fasteners for corrosion. Clean housing, support frame, and fasteners of corrosion and spot paint.				☐	
Check upper and lower housing fasteners for tightness. Tighten loose fasteners.				☐	
Observe the pivot bearing during opening and closing operations of the span.				☐	
Inspect the pivot bearing pedestal for cracking and evidence of deterioration.				☐	
Bearing Wheels - Sections 8.1.2, 11.1.1 (Component ID # 16, 17, 18, 19, & 20), 11.2.1, & 11.4.7					
Lubricate bearing wheel bearings.		☐			
Clean debris from track.		☐			
Verify the bearing wheel base fasteners and end cap fasteners are secure. Tighten loose fasteners.				☐	
Check the bearing wheels and track for any signs of distress.				☐	
Inspect the bearing wheel track grout for cracking and evidence of deterioration.				☐	
Balance Wheels - Sections 8.1.3, 11.1.1 (Component ID # 21, 22, & 23), 11.2.1, & 11.4.1					
Lubricate the balance wheel sleeve bearings.	☐				
Clean debris from the balance wheel tracks.	☐				
Check the balance wheel base, balance wheel cap, and balance wheel track fasteners are secure. Tighten loose fasteners.				☐	
Check the balance wheels and balance wheel tracks for any signs of distress.				☐	
Inspect the bearing wheel track grout for cracking and evidence of deterioration.				☐	
Passive Live Load Bearings – Sections 8.1.4 & 11.1.1 (Component ID # 24, 25, 26, & 27)					
Verify the upper and lower weldment fasteners and the live load shoe fasteners are secure. Tighten loose fasteners.				☐	
Check the clearance at both passive live load bearing locations is 0.003”.				☐	
Inspect the lower support weldment grout for cracking and evidence of deterioration.				☐	
End Screw Jack Speed Reducer - Sections 8.1.5, 11.1.1 (Component ID # 3), 11.2.1, 11.4.4, & 11.7.1					
Visually inspect the oil level in the sight glass before operating the end screw jacks. Add oil if the oil level is low.	☐				
Listen for unusual noises during operation of the machinery.	☐				
Inspect hygroscopic breather condition. Replace breather if saturated.	☐				
Inspect the oil pump piping pressure gage. Replace if damaged. Record oil pressure during operation of the end screw jack machinery.	☐				
Inspect oil pump and oil pump piping for leaks.	☐				
Check for oil leakage at the seals.				☐	

Maintenance Tasks	Maintenance Tasks Completed				
	Monthly	Three Month	Six Month	Annual	Five Year
End Screw Jack Speed Reducer - Sections 8.1.5, 11.1.1 (Component ID # 3), 11.2.1, 11.4.4, & 11.7.1 (cont.)					
Check fasteners for tightness.				☐	
Replace oil in the speed reducer housing.					☐
End Screw Jack Couplings - Sections 8.1.6, 11.1.1 (Component ID # 2, 4, 6, 13, & 15), 11.2.1, 11.4.3, 11.7.6, & 11.7.7					
Inspect keys and keyways at all couplings for grease leakage, tightness and cracking. Check coupling flange bolts for corrosion and tightness.	☐				
Inspect for leaks at seals and gaskets. Replace damaged seals and gaskets.	☐				
Lubricate gear couplings.			☐		
Lubricate end screw jack motor coupling.				☐	
End Screw Jacks - Sections 8.1.7, 11.1.1 (Component ID # 7, 8, & 9), 11.2.1, 11.4.8 , & 11.7.5					
Check end screw jack protective boot for rips or leaks.		☐			
Clean debris from end screw jack masonry plates.		☐			
Observe end screw jacks during operation for any unusual noises or observations.		☐			
Lubricate the end screw jacks.				☐	
Check that all fasteners are tight and corrosion free.				☐	
Check the contacting surfaces between the end screw jack bearing plates and masonry plates for deformations and wear. Clean plate contacting surfaces of corrosion.				☐	
Inspect the masonry plate grout for cracking and evidence of deterioration.				☐	
Counterweight and Balance Plates - Section 8.1.8					
Check counterweight balance plate locations for proper drainage and clean out debris.				☐	
Check for concrete spalling, cracks, and signs of structural distress. Check adjacent structural supports for signs of distress.				☐	
Check for shifting of balance plates during span operation.				☐	
Lubrication Lines - Section 8.1.9					
Check lubrication lines and fittings for damage prior to use. Replace damaged lubrication lines and fittings.	☐				
After use of the lubrication lines, inspect lubrication lines for leaks and verify that components (balance wheel bearings, pivot bearing, and/or bearing wheel bearings) have been adequately lubricated.	☐				
Check the condition of the lubrication line supports. Replace or repair damaged supports.	☐				
Verify that lubrication lines are secure and free of the balance wheels and balance wheel track during operation of the span.	☐				

Refer to Section 8.1 "Span Support System and Counterweight" for details, quantities, and additional maintenance information. Component ID # corresponds to component location shown on the diagrams in Sections 11.1 and 11.2.

Notes:

10.1.2 FORM 10-2 – TURNING MACHINERY

	Maintenance Tasks To Be Performed:			
	Monthly	Six Month	Annual	Five Year
Date: _____ Maintenance Personnel: _____	☐	☐	☐	☐

	Maintenance Tasks Completed			
Maintenance Tasks	**Monthly**	**Six Month**	**Annual**	**Five Year**
Motor Brake - Sections 8.2.1, 11.1.2 (Component ID # 39), 11.2.2, 11.4.2, & 11.7.9				
Inspect brake shoes and brakewheel. Inspect brake pad thickness. Replace excessively worn pads.			☐	
Check the clearances between the brakes shoes and the brakewheel.			☐	
Inspect mechanical linkages and fasteners. Check for freedom of moving parts. Check the brake housing and linkages for evidence of water dripping on the brake and corrosion.			☐	
Check for excessive heating of parts evident by discoloration of metal parts.			☐	
Check operation of the brake during test operations of the bridge.			☐	
Check adjustment of limit switches and hand release device.			☐	
Check brake actuator reserve stroke.			☐	
Check the motor brake spring tension.			☐	
Couplings - Sections 8.2.2, 11.1.2 (Component ID # 34, 36, 38, 41), 11.2.2, 11.4.3, & 11.7.8				
Inspect keys and keyways. Inspect flange bolts for corrosion and tightness.	☐			
Inspect seals and gaskets for leaks. Replace damaged seals and gaskets.	☐			
Inspect instrumentation couplings for cracking or damage.	☐			
Replace brakewheel coupling lubricant.		☐		
Replace grid coupling lubricant.		☐		
Turning Machinery Speed Reducer - Sections 8.2.3, 11.1.2 (Component ID # 40), 11.2.2, 11.4.4, & 11.7.2				
Visually inspect the oil level. Add oil if oil level is low.	☐			
Listen for unusual noises during operation of the machinery.	☐			
Lubricate the upper and lower output shaft bearings.		☐		
Check for oil leakage at the seals.			☐	
Check fasteners for tightness.			☐	
Replace oil in the speed reducer housing.				☐
Bearings - Sections 8.2.4, 11.1.2 (Component ID # 42 & 43), & 11.2.2				
Lubricate sleeve bearings.	☐			
Check bearing cap and base fasteners for tightness. Tighten loose fasteners.			☐	
Open Gearing - Sections 8.2.5, 11.1.2 (Component ID # 44 & 45), 11.2.2, & 11.4.5				
Remove debris from gear teeth and surrounding area.	☐			
Remove lubricant that has been displaced to non-contacting surfaces.	☐			
Lubricate open gear teeth.	☐			
Replace open gear lubricant.			☐	

Maintenance Tasks	Maintenance Tasks Completed			
	Monthly	Six Month	Annual	Five Year
Open Gearing - Sections 8.2.5, 11.1.2 (Component ID # 44 & 45), 11.2.2, & 11.4.5 (cont.)				
Observe the open gearing during opening and closing operations.			☐	
Inspect rack grout for cracking and evidence of deterioration.			☐	
Instrumentation Gear Box - Sections 8.2.6, 11.1.2 (Component ID # 35), 11.2.2, & 11.7.4				
Check instrumentation gear box oil level. Add oil if the oil level is low.			☐	
Lubricate bearings.			☐	
Check gear box fasteners for tightness. Tighten loose fasteners.			☐	

Refer to Section 8.2 "Turning Machinery" for details, quantities, and additional maintenance information. Component ID # corresponds to component location shown on the diagrams in Sections 11.1 and 11.2.

Notes:

10.1.3 FORM 10-3 – SPAN LOCK MACHINERY AND RIGID STOPS

Form 10-3 Page 1 of 1

	Maintenance Tasks To Be Performed:	
	Monthly	**Annual**
Date: _____ Maintenance Personnel: _____	☐	☐

Maintenance Tasks	Maintenance Tasks Completed	
	Monthly	**Annual**
Lock Bar, Guides, and Receiver - Sections 8.3.1, 11.1.2 (Component ID # 48, 49, 50, & 51), 11.2.2, & 11.4.9.2		
Lubricate lock bar sliding surfaces.	☐	
Inspect guides, receiver, lock bar, and fasteners for excessive wear, fit or damage.	☐	
Inspect lock bar guides and receiver weldments and connections. Clean components of flaking paint and corrosion and spot paint with matching paint.		☐
Span Lock Open Gearing - Sections 8.3.2, 11.1.2 (Component ID # 47 & 48A), 11.2.2, & 11.4.9.1		
Remove any debris from gear teeth and the surrounding area.	☐	
Remove lubricant that has been displaced to non-contacting surfaces.	☐	
Lubricate open gearing teeth.	☐	
Replace open gearing lubricant.		☐
Inspect the key and keyways for tightness and cracking.		☐
Observe the open gearing during operation of the span lock machinery.		☐
Rigid Stops - Section 8.3.3		
Inspect the condition of the fully open rigid stop and overtravel bumper block components.		☐
Inspect fasteners for corrosion and tightness.		☐
Inspect fully closed rigid stop grout for cracking and evidence of deterioration.		☐

Refer to Section 8.3 "Span Lock Machinery and Rigid Stops" for details, quantities, and additional maintenance information. Component ID # corresponds to component location shown on the diagrams in Sections 11.1 and 11.2.

Notes:

10.1.4 FORM 10-4 – TRAFFIC GATES

Date: _____ Maintenance Personnel: _____	Maintenance Tasks To Be Performed:	
	Six Month	Annual
	☐	☐

Maintenance Tasks	Maintenance Tasks Completed	
	Six Month	Annual
Traffic Gates - Sections 8.4.1, 11.1.3 (Component ID # 56, 58, 60, 63, & 65), 11.2.3, & 11.8.1		
Verify bumper rods are properly adjusted and make contact with the roadway when lowered.	☐	
Verify stay cables are properly adjusted and taught at all times.	☐	
Check the transmission oil levels. Add oil if either oil level is low. Replace oil if dirty or cloudy.	☐	
Lubricate pivot shaft bearings and rod ends.	☐	
Lubricate the rotary cam limit switch roller chain.	☐	
Check the roller chain tension.	☐	
Lubricate instrumentation open gearing.	☐	
Replace instrumentation open gearing lubricant.		☐

Refer to Section 8.4 "Traffic Gates" for component details, and additional maintenance information. Component ID # corresponds to component location shown on the diagrams in Sections 11.1 and 11.2.

Notes:

10.1.5 FORM 10-5 – ELECTRICAL POWER SYSTEMS

	Maintenance Tasks To Be Performed:								
	Week 1	**Week 2**	**Week 3**	**Week 4**	**Week 5**	**Monthly**	**Three Month**	**Annual**	**Five Year**
Date: _____ Maintenance Personnel: _____	☐	☐	☐	☐	☐	☐	☐	☐	☐
Date: _____ Maintenance Personnel: _____	☐	☐	☐	☐	☐	☐	☐	☐	☐
Date: _____ Maintenance Personnel: _____	☐	☐	☐	☐	☐	☐	☐	☐	☐
Date: _____ Maintenance Personnel: _____	☐	☐	☐	☐	☐	☐	☐	☐	☐
Date: _____ Maintenance Personnel: _____	☐	☐	☐	☐	☐	☐	☐	☐	☐

Daily Maintenance

Maintenance Task	**Daily Maintenance Tasks Completed**							
Stand-by Emergency Generator - Section 8.5.4	1	2	3	4	5	6	7	8
Check generator for oil, coolant, and fuel leaks								
	9	10	11	12	13	14	15	16
Check operation of engine coolant heaters.								
	17	18	19	20	21	22	23	24
Check battery and battery charger.								
	25	26	27	28	29	30	31	
Note: Initial date box when daily maintenance tasks have been completed.								

Maintenance Tasks	Maintenance Tasks Completed								
	Week 1	**Week 2**	**Week 3**	**Week 4**	**Week 5**	**Monthly**	**Three Month**	**Annual**	**Five Year**
Motor Control Enclosures - Section 8.5.1									
Open and clean enclosures with a vacuum cleaner.							☐		
Remove accumulation of dirt, grease, and gum with contact cleaner.							☐		
Inspect enclosures for corrosion and moisture.							☐		
Examine connections for poor or loose connections and evidence of overheating.							☐		
Lubricate door hinges and latches.							☐		
Inspect terminal block screws for tightness. Hand tighten all loose connections.							☐		
Inspect wiring from unit terminal bocks for deterioration of insulation.							☐		
Inspect all circuit breakers. Verify with meter that continuity is broken on trip or switch off conditions.							☐		
Check all starter contacts. Replace contacts when nearly all the silver tip is gone and contact tip support is exposed.							☐		
Check for discolored connections on terminals, contact supports, bus bars, or connectors. Clean discolored connection points. Tighten all loose hardware. Replace or repair heat-damaged wires and connectors.								☐	
Operate the motor controller/contactor without load and observe contact operation to be sure it opens and closes cleanly and that the contacts are fully sealed in the closed position.								☐	
Operate the motor controller/contactor under load and check for loud noise and arcing.								☐	
Span Control Cabinet and Resistor Enclosure - Section 8.5.2									
Open and clean enclosures with a vacuum cleaner.							☐		
Remove accumulation of dirt, grease, and gum with contact cleaner.							☐		
Inspect enclosures for corrosion and moisture.							☐		

Maintenance Tasks	Maintenance Tasks Completed								
	Week 1	Week 2	Week 3	Week 4	Week 5	Monthly	Three Month	Annual	Five Year
Span Control Cabinet and Resistor Enclosure - Section 8.5.2 (cont.)									
Lubricate door hinges and latches.							□		
Inspect terminal block screws for tightness. Hand tighten all loose connections.							□		
Inspect wiring from unit terminal bocks for deterioration of insulation.							□		
Inspect all circuit breakers. Verify with meter that continuity is broken on trip or switch off conditions.							□		
Inspect all fuses with meter and verify continuity. Replace blown or damaged fuses.							□		
Inspect all relays and tighten loose connections.							□		
Clean filters with a vacuum or replace if damaged or if filter can not be cleaned.								□	
Check for discolored connections on terminals, contact supports, bus bars, or connectors. Tighten all loose hardware. Replace or repair damaged wires and connectors.								□	
Operate the motor controller/contactor without load and observe contact operation.								□	
Operate the motor controller/contactor under load and check for loud noise and arcing.								□	
Panelboards - Section 8.5.3									
Open and clean with a vacuum cleaner.								□	
Remove accumulation of dirt, grease, and gum with contact cleaner.								□	
Check for corrosion and moisture.								□	
Examine bus bar connections for poor or loose connections and evidence of overheating.								□	
Lubricate door hinges and latches.								□	
Inspect all circuit breakers. Verify with meter that continuity is broken on trip or switch off conditions.								□	
Measure resistance to ground at each panelboard using a ground test kit. Add grounding electrodes if measurements exceed 25 ohms.								□	
Stand-by Generator - Section 8.5.4									
Perform all pre-operation inspections and maintenance.	□	□	□	□	□				
Check drive belt tension	□	□	□	□	□				
Start and run generator for 15 minutes with no load and check for proper alternator voltage.	□	□	□	□	□				
Perform all post-operation inspections and maintenance.	□	□	□	□	□				
Check for air cleaner restrictions.						□			
Check coolant level, oil level, and fuel level.						□			
Drain and replenish oil and oil filters.								□	
Perform coolant PH test and add or replace necessary coolant.								□	
Change the filters in the coolant conditioner circuit if applicable.								□	
Clean or replace the crankcase breather filter(s).								□	
Replace the fuel filter(s) and air cleaner, drain sediment from fuel tanks, and check flexible fuel hoses for cuts and abrasions.								□	
Drain condensation drip legs.								□	
Clean battery posts, reconnect battery cables, and spray terminals with corrosion inhibit sealant.								□	

Maintenance Tasks	Maintenance Tasks Completed								
	Week 1	Week 2	Week 3	Week 4	Week 5	Monthly	Three Month	Annual	Five Year
Stand-by Generator - Section 8.5.4 (cont.)									
Check electrical safety controls and alarms.								□	
Clean accumulations of grease, oil, and dirt on the generator.								□	
Check wiring, connections, frame grounding points, and circuit breakers.								□	
Check the fan hub, pulleys, and water pump.								□	
Check the fuel tank breather.								□	
Tighten loose exhaust manifold and turbocharge fasteners.								□	
Check all mounting hardware.								□	
Check operation of the Manual Transfer Switch.								□	
Start and run generator under load for one complete bridge opening.								□	
Check engine oil and oil filters, take oil sample, and send out for analysis.									□
Perform one hour load bank testing and monitor operation.									□
Perform two hour test without load and monitor operation.									□
Safety and Disconnect Switches - Section 8.5.5									
Remove accumulation of dirt, grease, and gum with contact cleaner.								□	
Check for corrosion and moisture.								□	
Examine for excessive heating of parts, discoloration of metal parts, charred insulation, odor, or blistering.								□	
Check for freedom of moving parts.								□	
Check for worn or broken mechanical parts.								□	
Tighten loose mountings and connections.								□	
Replace pitted or worn contacts or replace entire unit if needed.								□	
Check for excessive arcing.								□	
Check condition of gaskets (for dust-tight or watertight units).								□	
Electrical Conductors - Section 8.5.6									
Visually inspect terminations and splices for cracks, deterioration, corrosion, discoloring, or any other abnormalities.								□	
Check tightness of each conductor termination at each terminal box.								□	
Check the strain relief fittings for signs of distress.								□	
Inspect wires and electrical cables for grease and oil contamination, fraying, abrasions, sweating, cracked, melted or overheated blue tinted insulation. After removing power sources, clean insulation of moisture, grease, and oil. If the conductor can not be cleaned or damage is significant, replace the conductor in kind.								□	
Drag Cables - Section 8.5.7									
Visually inspect terminations and splices for cracks, deterioration, corrosion, discoloring, or any other abnormalities.								□	
Check tightness of each conductor termination at each terminal box.								□	
Check the strain relief fittings for signs of distress.								□	
Check cables for any wear or abrasions on the outer jacket.								□	
Inspect wires and electrical cables for grease and oil contamination, fraying, abrasions, sweating, cracked, melted or overheated blue tinted insulation. After removing power sources, clean insulation of moisture, grease, and oil. If the conductor can not be cleaned or damage is significant, replace the conductor in kind.								□	

Maintenance Tasks	Maintenance Tasks Completed								
	Week 1	Week 2	Week 3	Week 4	Week 5	Monthly	Three Month	Annual	Five Year
Aerial Cables - Section 8.5.8									
Visually inspect terminations and splices for cracks, deterioration, corrosion, discoloring, or any other abnormalities.								□	
Check tightness of each conductor termination at each terminal box.								□	
Check the strain relief fittings for signs of distress.								□	
Check cables for any wear or abrasions on the outer jacket.								□	
Inspect wires and electrical cables for grease and oil contamination, fraying, abrasions, sweating, cracked, melted or overheated blue tinted insulation. After removing power sources, clean insulation of moisture, grease, and oil. If the conductor can not be cleaned or damage is significant, replace the conductor in kind.								□	

Refer to Section 8.5 "Electrical Power Systems" for details, quantities, and additional maintenance information.

Notes:

10.1.6 FORM 10-6 – LIGHTING SYSTEMS

Form 10-6 Page 1 of 1

	Maintenance Tasks To Be Performed:								
	Week 1	Week 2	Week 3	Week 4	Week 5	Monthly	Three Month	Six Month	Annual
Date: _____ Maintenance Personnel: _____	☐	☐	☐	☐	☐	☐	☐	☐	☐
Date: _____ Maintenance Personnel: _____	☐	☐	☐	☐	☐	☐	☐	☐	☐
Date: _____ Maintenance Personnel: _____	☐	☐	☐	☐	☐	☐	☐	☐	☐
Date: _____ Maintenance Personnel: _____	☐	☐	☐	☐	☐	☐	☐	☐	☐
Date: _____ Maintenance Personnel: _____	☐	☐	☐	☐	☐	☐	☐	☐	☐

	Maintenance Tasks Completed								
Maintenance Tasks	Week 1	Week 2	Week 3	Week 4	Week 5	Monthly	Three Month	Six Month	Annual
Navigation Lights - Section 8.6.1									
Check navigation lights for proper operation.	☐	☐	☐	☐	☐				
Replace burned out lamps or damaged fixtures.	☐	☐	☐	☐	☐				
Check gaskets.									☐
Tighten loose connections.									☐
Inspect for corrosion of metal parts.									☐
Replace worn or broken mechanical parts.									☐
Replace lamps.									☐
Interior/Exterior Lights - Section 8.6.2									
Check for burned out lamps. Replace burned out lamps.	☐	☐	☐	☐	☐				
Clean luminaire lenses, interior surfaces, and weep holes (where applicable).									☐
Check gaskets and replace if damaged.									☐
Tighten loose connections.									☐
Inspect for corrosion of metal parts. Spot paint corroded components.									☐
Replace worn or broken parts.									☐
Test emergency light fixtures and batteries, replace batteries if not operational.									☐
Traffic Signals - Section 8.6.3									
Check lights for proper illumination. Replace burned out bulbs.						☐			
Verify proper operation of the traffic signals and gongs during openings.						☐			
Check traffic signal pole hardware for tight connections.						☐			
Clean reflectors and lenses. Spot paint the heads.									☐
Traffic Gate Arm Lights - Section 8.6.4									
Check gate arm lights for proper operation. Replace burned out bulbs.	☐	☐	☐	☐	☐				
Replace blown or damaged fuses.							☐		
Replace gate arm light lamps and wiring that is non-functional or damaged.								☐	

Refer to Section 8.6 "Lighting Systems" for details, quantities, and additional maintenance information.

Notes:

10.1.7 FORM 10-7 – ELECTRIC MOTORS

Date: _____ Maintenance Personnel: _____	Maintenance Tasks To Be Performed:			
	Monthly	Annual	Five Year	Six Year
	☐	☐	☐	☐

Maintenance Tasks	Maintenance Tasks Completed			
	Monthly	Annual	Five Year	Six Year
Span Lock Gear Motor -Sections 8.7.1, 11.1.2 (Component ID # 46), 11.2.2, & 11.7.3				
Visually inspect the speed reducer oil level. Add oil if the oil level is low.	☐			
Observe for speed reducer for unusual noises during operation.	☐			
Verify that shaft end-play is normal.		☐		
Inspect and tighten loose electrical connections on motor.		☐		
Verify that all keys, bolts, and pins are in their proper position. Check all bolts for tightness. Tighten loose fasteners.		☐		
During operation, examine motor for smooth running and absence of vibration.		☐		
During operation, measure and record the motor housing and bearing temperatures with an infrared thermometer.		☐		
Check painted surfaces for signs of corrosion. Clean surfaces of corrosion and spot paint with matching paint.		☐		
Perform a general visual inspection of the solenoid brake while stationary and during lock operation.		☐		
Check solenoid brake electrical connections and tighten loose connections.		☐		
Inspect solenoid brake mechanical parts for wear, damage, and bolt and nut tightness. Check freedom of moving parts.		☐		
Check solenoid brake for excessive heating of parts. Check for collections of dirt or gum, evidence of water dripping, or corrosion. Clean solenoid brake components of dirt, gum, water, and corrosion.		☐		
Check solenoid brakes for excessive vibration or noise during operation.		☐		
Check speed reducer for excessive leakage at the seals.		☐		
Check speed reducer fasteners for tightness.		☐		
Replace oil in the speed reducer housing.			☐	
Repaint motor.				☐
Turning Machinery (Span) Motor - Section 8.7.2, 11.1.2 (Component ID # 37), 11.2.2, & 11.4.6				
Verify that shaft is free of oil and grease.		☐		
Check for leakage around bearings. Clean off excess grease and dirt.		☐		
Verify that shaft end-play is normal.		☐		
Inspect and tighten loose electrical connections on motor.		☐		
Verify that all keys, bolts, and pins are in their proper position. Check all bolts for tightness. Tighten loose fasteners.		☐		
During operation, examine motor for smooth running and absence of vibration.		☐		
During operation, measure and record the motor housing and bearing temperatures with an infrared thermometer.		☐		
Lubricate motor bearings.		☐		
Check painted surfaces for signs of corrosion. Clean surfaces of corrosion and spot paint with matching paint.		☐		
Repaint motor.				☐
End Screw Jack Motor - Section 8.7.3, 11.1.1 (Component ID # 1), 11.2.1, & 11.4.6				
Verify that the motor shaft is free of oil and grease from bearings.		☐		

Maintenance Tasks	Maintenance Tasks Completed			
	Monthly	Annual	Five Year	Six Year
End Screw Jack Motor - Section 8.7.3, 11.1.1 (Component ID # 1), 11.2.1, & 11.4.6 (cont.)				
Check for leakage around motor bearings. Clean off excess grease and dirt.		□		
Verify that motor shaft end-play is normal.		□		
Inspect and tighten loose electrical connections on motor.		□		
Verify that all keys, bolts, and pins are in their proper position. Check all bolts for tightness. Tighten loose fasteners.		□		
During operation, examine motor for smooth running and absence of vibration.		□		
During operation, measure and record the motor housing and bearing temperatures with an infrared thermometer.		□		
Check painted surfaces for signs of corrosion. Clean surfaces of corrosion and spot paint with matching paint.		□		
Lubricate the end screw jack motor bearings.		□		
Perform a general visual inspection of the solenoid brake while stationary and during end screw jack operation.		□		
Check solenoid brake electrical connections and tighten loose connections.		□		
Inspect solenoid brake mechanical parts for wear, damage, and bolt and nut tightness. Check freedom of moving parts.		□		
Check solenoid brake components for excessive heating of parts. Check for collections of dirt or gum, evidence of water dripping, or corrosion. Clean solenoid brake components of dirt, gum, water, and corrosion.		□		
Check solenoid brake for excessive vibration or noise during operation.		□		
Repaint motor.				□
Traffic Gate Motors - Section 8.7.4, 11.1.3 (Component ID # 54 & 55), & 11.2.3				
Check for leakage around bearings. Clean off excess grease and dirt.		□		
Inspect and tighten loose electrical connections on motor.		□		
Verify that all keys, bolts, and pins are in their proper position. Check all bolts for tightness. Tighten loose fasteners.		□		
During operation, examine motor for smooth running and absence of vibration.		□		
During operation, measure and record the motor housing and bearing temperatures with an infrared thermometer.		□		
Visually inspect solenoid brake while stationary and during gate operation.		□		
Check solenoid brake electrical connections and tighten loose connections.		□		
Inspect solenoid brake for wear, damage, and bolt and nut tightness. Check for freedom of moving parts.		□		
Check solenoid brake components for evidence of excessive heating of parts. Check for accumulation of dirt or gum, evidence of water dripping, or corrosion. Clean solenoid brake components of dirt, gum, water, and corrosion.		□		
Check solenoid brake for excessive vibration or noise during operation.		□		

Refer to Section 8.7 "Electric Motors" for details, quantities, and additional maintenance information. Component ID # corresponds to component location shown on the diagrams in Sections 11.1 and 11.2.

Notes:

10.1.8 FORM 10-8 – CONTROL SYSTEM

	Maintenance Tasks To Be Performed:	
	Three Month	Annual
Date: _____ Maintenance Personnel: _____	☐	☐

Maintenance Tasks	Maintenance Tasks Completed	
	Three Month	Annual
Control Console - Section 8.8.1		
Open and clean with a vacuum cleaner.	☐	
Remove accumulation of dirt, grease, and gum with contact cleaner.	☐	
Check for corrosion and moisture.	☐	
Lubricate door hinges and latches.	☐	
Inspect terminal block screws and tighten all connections.	☐	
Inspect wiring from unit terminal blocks for deterioration of insulation.	☐	
Check all pushbuttons, selector switches and meters and replace if damaged or nonfunctional.	☐	
Check all indicating lights. Replace burned out or nonfunctional bulbs.	☐	
Check for discolored connections on terminals, contact supports, bus bars, or connectors. Clean connection points that are discolored. Tighten all loose hardware. Replace or repair heat damaged wires and connectors.		☐
Manually operate each relay with associated circuit breakers off and observe contact operation to be sure it opens and closes cleanly and that the contacts are sealed when in the closed position.		☐
Monitor relay and contactor operations during normal operation and check for loud noise and arcing, during opening and on closing operations.		☐
Limit Switches - Sections 8.8.2, 11.1.1 (Component ID # 3, 11, &12), 11.1.2 (Component ID # 33, 39, 40 ,46, 52, & 53), & 11.1.3 (Component ID # 66, 68, & 69)		
Inspect all limit switches for wear.		☐
Remove accumulated dust, dirt, and moisture on housing.		☐
Remove accumulated dust, dirt, and moisture from all shafts.		☐
Inspect latches, mounting hardware, and seals.		☐
Inspect all screws and tighten loose connections.		☐
Remove the cover and visually inspect the condition of all internal parts.		☐
Inspect limit switch wiring for deterioration.		☐
Inspect the rotary cam limit switch cams, switches, and rollers for wear, corrosion, and good contact between the fixed and movable parts.		☐
Inspect lever limit switches snap action contact blocks and all internal component connections. Tighten loose connections.		☐
Inspect lever limit switches wiring from snap action contact blocks for deterioration.		☐
Cycle lever arm several times.		☐

Refer to Section 8.8 "Control System" for details, quantities, and additional maintenance information. Component ID # corresponds to component location shown on the diagrams in Section 11.1.

Notes:

10.1.9 FORM 10-9 – MISCELLANEOUS EQUIPMENT

	Maintenance Tasks To Be Performed:								
	Week 1	Week 2	Week 3	Week 4	Week 5	Monthly	Six Month	Annual	Six Year
Date: _____ Maintenance Personnel: _____	☐	☐	☐	☐	☐	☐	☐	☐	☐
Date: _____ Maintenance Personnel: _____	☐	☐	☐	☐	☐	☐	☐	☐	☐
Date: _____ Maintenance Personnel: _____	☐	☐	☐	☐	☐	☐	☐	☐	☐
Date: _____ Maintenance Personnel: _____	☐	☐	☐	☐	☐	☐	☐	☐	☐
Date: _____ Maintenance Personnel: _____	☐	☐	☐	☐	☐	☐	☐	☐	☐

	Maintenance Tasks Completed								
Maintenance Tasks	**Week 1**	**Week 2**	**Week 3**	**Week 4**	**Week 5**	**Monthly**	**Six Month**	**Annual**	**Six Year**
Heating and Air Conditioning Systems - Section 8.9.1									
Check all air filters. Replace dirty or damaged filters.						☐			
Check all cooling coils, seals, fittings, ducting connections, and pipelines for leaks. Seal any leaks or replace components if damaged.						☐			
Inspect the condition of all safety devices for deterioration.						☐			
Check the performance of all equipment related to temperature and humidity control. Repair or replace defective equipment.						☐			
Sump Pump - Section 8.9.2									
Check that the motor is free of debris.						☐			
Dump buckets of water or run water from a hose into the sump to test the pump's response and look for leaks. Verify that water is pumped out from the sump and there is no back-flow. Do no flood the surrounding floor or area.						☐			
During operation, examine motor for smooth running and absence of excessive vibration.						☐			
Hot Water Heater - Section 8.9.3									
Check the unit and associated piping for leaks.						☐			
Turn the hot water on at the bathroom sink and verify that the water turns hot.						☐			
Piers and Platforms - Section 8.9.4									
Clean and power wash the piers and platforms of dirt and debris.							☐		
Conduit- Section 8.9.5									
Open and clean boxes with a vacuum cleaner.								☐	
Remove accumulation of dirt, grease, and gum from conduit.								☐	
Check for corrosion and moisture.								☐	
Tighten loose mountings and connections.								☐	
Check condition of gaskets in boxes.								☐	
Lubricate door hinges and latches, where provided, with 3-IN-ONE Multi-Purpose Oil.								☐	

Maintenance Tasks	Maintenance Tasks Completed								
	Week 1	Week 2	Week 3	Week 4	Week 5	Monthly	Six Month	Annual	Six Year
Conduit- Section 8.9.5 (cont.)									
Check and clean all drain holes and fittings.								□	
Clean and paint all corrosion and oxidation from steel conduit and supports.									□
Where PVC coated steel conduit is installed apply touch up compound to cracks and/or cuts in coating.									□
Replace cracked sections of PVC conduit.									□

Refer to Section 8.9 "Miscellaneous Equipment" for details, quantities, and additional maintenance information.

Notes:

THIS PAGE INTENTIONALLY LEFT BLANK

CHAPTER 11 - SUPPLEMENTAL INFORMATION AND SPECIFICATIONS & TABLE OF CONTENTS

CONTENTS

11.1 COMPONENT IDENTIFICATION CHARTS AND DIAGRAMS ..... …11-4
11.2 MACHINERY LUBRICATION SCHEMATICS ..... …11-7
11.3 MACHINERY LUBRICATION PLANNING TABLES ..... …11-10
11.3.1 MACHINERY LUBRICATION SCHEDULE ..... …11-10
11.3.2 LUBRICANT AND MATERIAL INVENTORY FORM ..... …11-14
11.4 BRIDGE MAINTENANCE PERFORMANCE STANDARDS (PLATES) ..... …11-15
11.4.1 SLEEVE BEARING AND BALANCE WHEEL BEARING LUBRICATION ..... …11-15
11.4.2 MOTOR BRAKE MAINTENANCE ..... …11-16
11.4.3 COUPLING LUBRICATION ..... …11-18
11.4.4 SPEED REDUCER LUBRICATION ..... …11-20
11.4.5 OPEN GEARING LUBRICATION ..... …11-23
11.4.6 MOTOR BEARING LUBRICATION ..... …11-24
11.4.7 PIVOT BEARING AND BEARING WHEEL BEARING LUBRICATION ..... …11-26
11.4.8 END SCREW JACK LUBRICATION ..... …11-28
11.4.9 SPAN LOCK MACHINERY LUBRICATION ..... …11-29
11.4.9.1 SPAN LOCK OPEN GEARING LUBRICATION ..... …11-29
11.4.9.2 SPAN LOCK BAR LUBRICATION ..... …11-30
11.5 MATERIAL DATA SHEETS ..... …11-31
11.5.1 MOBIL MOBILUX EP-0, EP-2 ..... …11-31
11.5.2 MOBIL UNIREX N2 ..... …11-50
11.5.3 MOBIL MOBILGEAR 600 XP 68, 100, AND 150 ..... …11-60
11.5.4 MOBIL 600W SUPER CYLINDER OIL ..... …11-91
11.5.5 FALK LONG TERM GREASE ..... …11-102
11.5.6 MOBIL DTE 21 ..... …11-110
11.5.7 MOBIL MOBILTAC 325 NC ..... …11-123
11.5.8 MOBIL SHC 629 11-137
11.5.9 CRC TAC 2 ADHESIVE CHAIN LUBRICANT 11-150
11.5.10 PERMATEX GEAR OIL RTV SEALANT 11-159
11.5.11 WD-40 SPECIALIST MACHINE AND ENGINE DEGREASER 11-164
11.5.12 CAIG LABORATORIES DEOXIT D5 CONTACT CLEANER 11-168

11.5.13 3-IN-ONE MULTI-PURPOSE OIL ... 11-176
11.6 COMPONENT MANUFACTURER LIST ... 11-180
11.7 MECHANICAL EQUIPMENT MANUALS AND SPECIFICATIONS ... 11-184
11.7.1 END SCREW JACK SPEED REDUCER – FOOTE JONES TYPE BHE ... 11-184
11.7.2 TURNING MACHINERY SPEED REDUCER – FALK TYPE CB ... 11-200
11.7.3 SPAN LOCK GEARMOTOR – SUMITOMO SM-CYCLO ... 11-212
11.7.4 INSTRUMENTATION GEAR BOX – PEERLESS WINSMITH TYPE DBD ... 11-218
11.7.5 END SCREW JACK – DUFF NORTON TYPE M9099 ... 11-224
11.7.6 END SCREW JACK GEAR COUPLING – FALK TYPE G51 ... 11-232
11.7.7 END SCREW JACK MOTOR COUPLING – FALK STEELFLEX TYPE T10 ... 11-240
11.7.8 TURNING MACHINERY COUPLING – FALK STEELFLEX TYPE T20 ... 11-246
11.7.9 MOTOR BRAKE – MONDEL WST/E ... 11-252
11.7.10 PIVOT BEARING – TORRINGTON THRUST SPHERICAL ROLLER BEARING ... 11-285
11.8 TRAFFIC CONTROL EQUIPMENT MANUALS AND SPECIFICATIONS ... 11-295
11.8.1 TRAFFIC GATE – B&B Roadway VT-40 ... 11-295
11.9 ELECTRICAL EQUIPMENT MANUALS AND SPECIFICATIONS ... 11-299
11.9.1 DISCONNECT SWITCH - HUBBELL ... 11-299
11.9.3 LIMIT SWITCH - NAMCO ... 11-300
11.10 LOCKOUT/TAGOUT PROCEDURE FOR SR 36 (CEDAR CREEK) ... 11-304
11.10.1 PURPOSE ... 11-304
11.10.2 RESPONSIBILITY ... 11-304
11.10.3 PREPARATION FOR LOCKOUT OF DE-ENERGIZED EQUIPMENT ... 11-304
11.10.4 INDIVIDUAL EMPLOYEE CONTROL PROCEDURE ... 11-305
11.10.5 SIMPLE LOCKOUT ... 11-305
11.10.6 COMPLEX LOCKOUT ... 11-305
11.10.7 SEQUENCE OF LOCKOUT SYSTEM PROCEDURES ... 11-306
11.10.8 RESTORING THE EQUIPMENT TO NORMAL CONDITION ... 11-307
11.10.9 UNATTENDED LOCKOUTS ... 11-308
11.10.10 TYPES OF DISCONNECTS ... 11-308
11.10.11 SIGNAGE ... 11-309
11.10.12 DISCIPLINE ... 11-309
11.10.13 EQUIPMENT ... 11-309
11.10.14 REVIEW ... 11-310
11.10.15 ASSOCIATED DOCUMENTS ... 11-310
11.10.16 LOCKOUT PROCEDURE TRAINING ... 11-310

11.10.17 LOCKOUT/TAGOUT LOG SHEET 11-311
11.10.18 LOCKOUT/TAGOUT INSTRUCTION FORM.....11-312

THIS PAGE INTENTIONALLY LEFT BLANK

11.1 COMPONENT IDENTIFICATION CHARTS AND DIAGRAMS

PASSIVE LIVE LOAD BEARING, BEARING WHEEL, BALANCE WHEEL, AND END SCREW JACK MACHINERY		
ID NUMBER	DESCRIPTION	SECTION
1	END SCREW JACK MOTOR	8.7.3
2	END SCREW JACK MOTOR COUPLING	8.1.6
3	END SCREW JACK SPEED REDUCER AND MANUAL OPERATION LIMIT SWITCH	8.1.5 & 8.8.2
4	END SCREW JACK SPEED REDUCER NORTH OUTPUT SHAFT GEAR COUPLING	8.1.6
5	FLOATING SHAFT	-
6	END SCREW JACK NORTH INPUT SHAFT GEAR COUPLING	8.1.6
7	END SCREW JACK	8.1.7
8	END SCREW JACK BEARING PLATE	8.1.7
9	END SCREW JACK MASONRY PLATE	8.1.7
10	END SCREW JACK POSITION LIMIT SWITCH STRIKE PLATE	-
11	END SCREW JACK POSITION LIMIT SWITCH	8.8.2
12	END SCREW JACK LIMIT SWITCH	8.8.2
13	END SCREW JACK SPEED REDUCER SOUTH OUTPUT SHAFT GEAR COUPLING	8.1.6
14	FLOATING SHAFT	-
15	END SCREW JACK SOUTH INPUT SHAFT GEAR COUPLING	8.1.6
16	BEARING WHEEL	8.1.2
17	BEARING WHEEL SHAFT	8.1.2
18	BEARING WHEEL BEARING	8.1.2
19	BEARING WHEEL SEAL	8.1.2
20	BEARING WHEEL HOUSING	8.1.2
21	BALANCE WHEEL	8.1.3
22	BALANCE WHEEL SHAFT	8.1.3
23	BALANCE WHEEL BEARING	8.1.3
24	PASSIVE LIVE LOAD BEARING UPPER WELDMENT SUPPORT	8.1.4
25	PASSIVE LIVE LOAD BEARING UPPER SHOE	8.1.4
26	PASSIVE LIVE LADD BEARING LOWER SHOE	8.1.4
27	PASSIVE LIVE LOAD BEARING LOWER WELDMENT SUPPORT	8.1.4

NOTES:
1. REFER TO SECTION 7.3 FOR "LOCKOUT/TAGOUT PROCEDURE"
2. REFER TO SECTION 11.2.1 FOR "SWING SPAN SUPPORT SYSTEM LUBRICATION SCHEMATIC"
3. REFER TO SECTION 11.3.1 FOR "MACHINERY LUBRICATION SCHEDULE"
4. REFER TO SECTION 11.4 FOR "BRIDGE MAINTENANCE PERFORMANCE STANDARDS"
5. REFER TO SECTION 11.6 FOR "COMPONENT MANUFACTURER LIST"
6. DO NOT DISASSEMBLE COUPLINGS UNLESS SHAFTS ARE PROPERLY SUPPORTED.
7. APPROXIMATE CAPACITY OF LUBRICANT FOR COMPONENTS IS A ROUGH ESTIMATE. AMOUNT OF LUBRICANT REQUIRED MAY VARY.

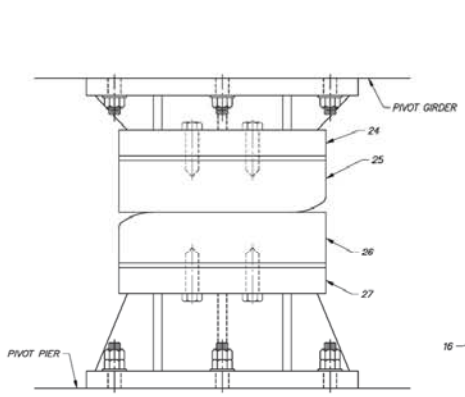

PASSIVE LIVE LOAD BEARING – ELEVATION
SCALE: NTS

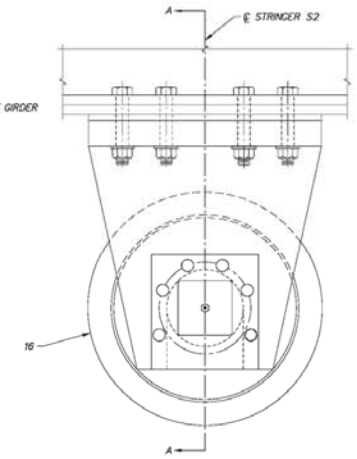

BEARING WHEEL – ELEVATION
SCALE: NTS

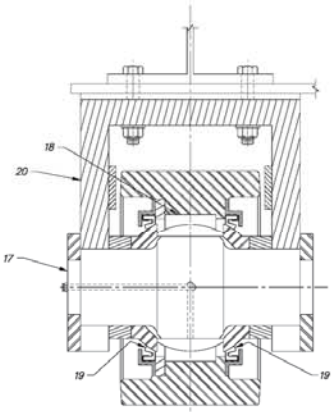

VIEW A–A
SCALE: NTS

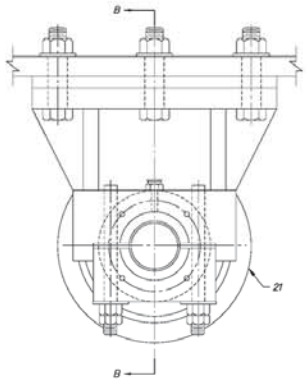

BALANCE WHEEL – ELEVATION
SCALE: NTS

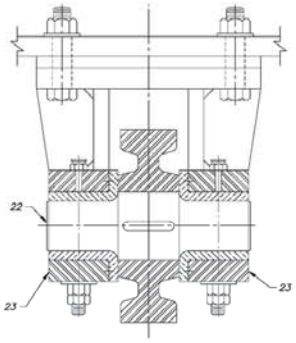

VIEW B–B
SCALE: NTS

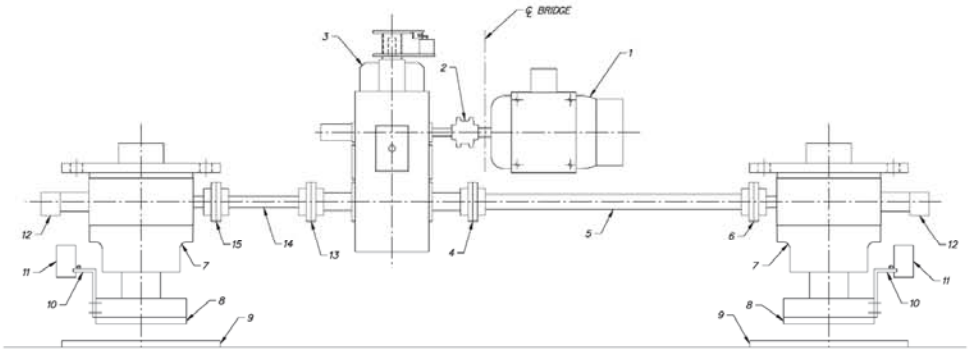

END SCREW JACK MACHINERY – ELEVATION
SCALE: NTS
NOTE: END SCREW JACKS SHOWN IN RETRACTED POSITION

DELAWARE DEPARTMENT OF TRANSPORTATION	ADDENDUMS / REVISIONS	SR 36 BRIDGE OPERATIONS AND MAINTENANCE MANUAL	CONTRACT - / COUNTY SUSSEX	BRIDGE NO. 3–164 / DRAWN BY: JAB / CHECKED BY: DJM	SWING SPAN SUPPORT SYSTEM COMPONENT IDENTIFICATION	SECTION NO. 11.1.1 / PAGE NO. 11-4

THIS PAGE INTENTIONALLY LEFT BLANK

PIVOT BEARING, SPAN LOCK, AND TURNING MACHINERY		
ID NUMBER	DESCRIPTION	SECTION
28	UPPER BEARING HOUSING	8.1.1
29	PIVOT BEARING	8.1.1
30	PIVOT BEARING SEAL	8.1.1
31	PIVOT BEARING SEAL RING	8.1.1
32	LOWER BEARING HOUSING	8.1.1
33	SPAN POSITION ROTARY CAM LIMIT SWITCH	8.8.2
34	INSTRUMENTATION COUPLING	8.2.2
35	INSTRUMENTATION GEAR BOX	8.2.6
36	INSTRUMENTATION COUPLING	8.2.2
37	TURNING MACHINERY MOTOR	8.7.2
38	BRAKEWHEEL COUPLING	8.2.3
39	MOTOR BRAKE W/ 2 LIMIT SWITCHES	8.2.1 & 8.8.2
40	TURNING MACHINERY SPEED REDUCER W/ MANUAL OPERATION LIMIT SWITCH	8.2.3 & 8.8.2
41	GRID COUPLING	8.2.2
42	SLEEVE BEARING	8.2.4
43	SLEEVE BEARING	8.2.4
44	MAIN PINION	8.2.9
45	RACK	8.2.5
46	SPAN LOCK GEARMOTOR W/ MANUAL OPERATION LIMIT SWITCH	8.7.1 & 8.8.2
47	SPAN LOCK PINION	8.3.2
48	LOCK BAR W/ LOCK BAR RACK	8.3.1 & 8.3.2
49	SPAN LOCK REAR GUIDE	8.3.1
50	SPAN LOCK FRONT GUIDE	8.3.1
51	SPAN LOCK RECEIVER	8.3.1
52	LOCK BAR PULLED LIMIT SWITCH	8.8.2
53	LOCK BAR DRIVEN LIMIT SWITCH	8.8.2

NOTES:
1. REFER TO SECTION 7.3 FOR "LOCKOUT/TAGOUT PROCEDURE"
2. REFER TO SECTION 11.2.2 FOR "CENTER LOCK MACHINERY COMPONENT IDENTIFICATION"
3. REFER TO SECTION 11.3.1 FOR "MACHINERY LUBRICATION SCHEDULE"
4. REFER TO SECTION 11.4 FOR "BRIDGE MAINTENANCE PERFORMANCE STANDARDS"
5. REFER TO SECTION 11.6 FOR "COMPONENT MANUFACTURER LIST"
6. DO NOT DISASSEMBLE COUPLINGS UNLESS SHAFTS ARE PROPERLY SUPPORTED.
7. APPROXIMATE CAPACITY OF LUBRICANT FOR COMPONENTS IS A ROUGH ESTIMATE. AMOUNT OF LUBRICANT REQUIRED MAY VARY.

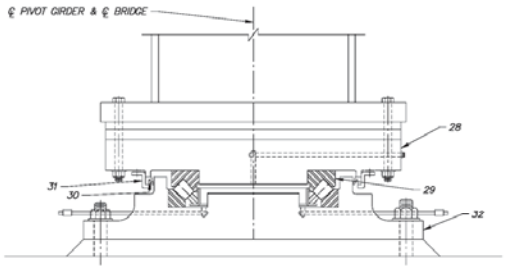

PIVOT BEARING – ELEVATION
SCALE: NTS

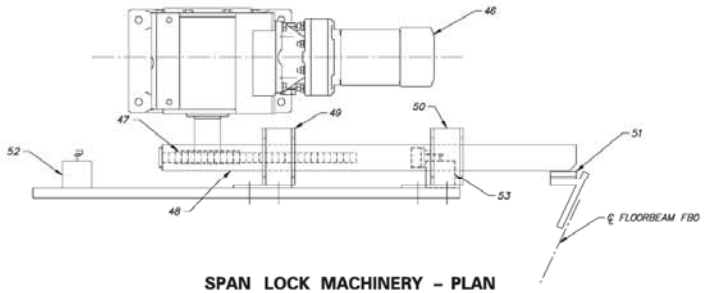

SPAN LOCK MACHINERY – PLAN
SCALE: NTS
NOTE: DEBRIS SHIELDS NOT SHOWN FOR CLARITY

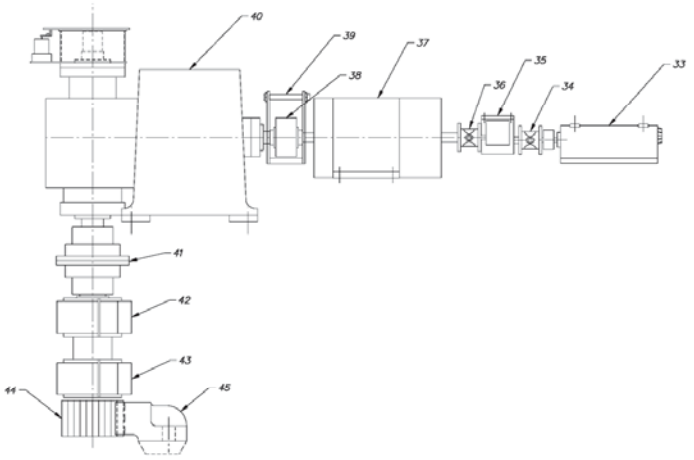

TURNING MACHINERY – ELEVATION
SCALE: NTS

DELAWARE DEPARTMENT OF TRANSPORTATION	ADDENDUMS / REVISIONS	SR 36 BRIDGE OPERATIONS AND MAINTENANCE MANUAL	CONTRACT -	BRIDGE NO. 3–164	TURNING MACHINERY & SPAN LOCK MACHINERY COMPONENT IDENTIFICATION	SECTION NO. 11.1.2
			COUNTY SUSSEX	DRAWN BY: JAB		PAGE NO. 11-5
				CHECKED BY: DJM		

THIS PAGE INTENTIONALLY LEFT BLANK

WARNING GATE MACHINERY		
ID NUMBER	DESCRIPTION	SECTION
54	WARNING GATE SOLENOID BRAKE	8.7.4
55	WARNING GATE MOTOR	8.7.4
56	WARNING GATE TRANSMISSION	8.4.1
57	WARNING GATE TRANSMISSION CRANK	8.4.1
58	WARNING GATE ROD END	8.4.1
59	WARNING GATE CONNECTING ROD	8.4.1
60	WARNING GATE ROD END	8.4.1
61	WARNING GATE PIVOT SHAFT CRANK	8.4.1
62	WARNING GATE PIVOT SHAFT	8.4.1
63	WARNING GATE PIVOT SHAFT BEARING	8.4.1
64	WARNING GATE TRANSMISSION OUTPUT SPROCKET	8.4.1
65	WARNING GATE ROLLER CHAIN	8.4.1
66	WARNING GATE ROTARY CAM LIMIT SWITCH	8.8.2
67	WARNING GATE MANUAL OPERATION HAND CRANK	8.4.1
68	WARNING GATE MANUAL OPERATION LIMIT SWITCH	8.8.2
69	WARNING GATE DOOR SWITCH	8.8.2

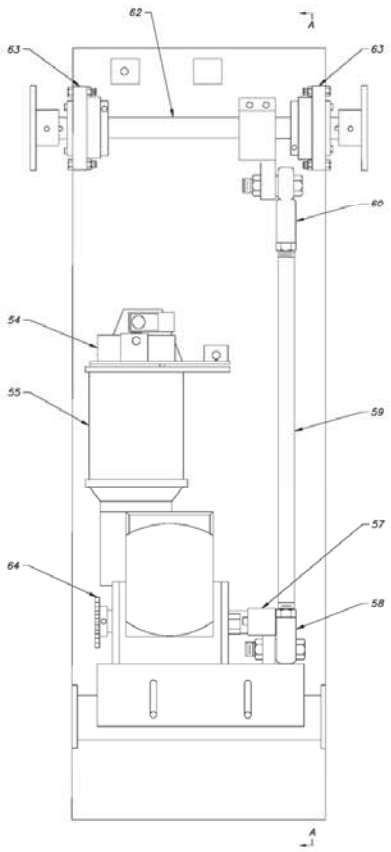

WARNING GATE MACHINERY
(B&B ROADWAY VT-40) – ELEVATION
SCALE: NTS
NOTE: ROTARY CAM LIMIT SWITCH NOT SHOWN FOR CLARITY

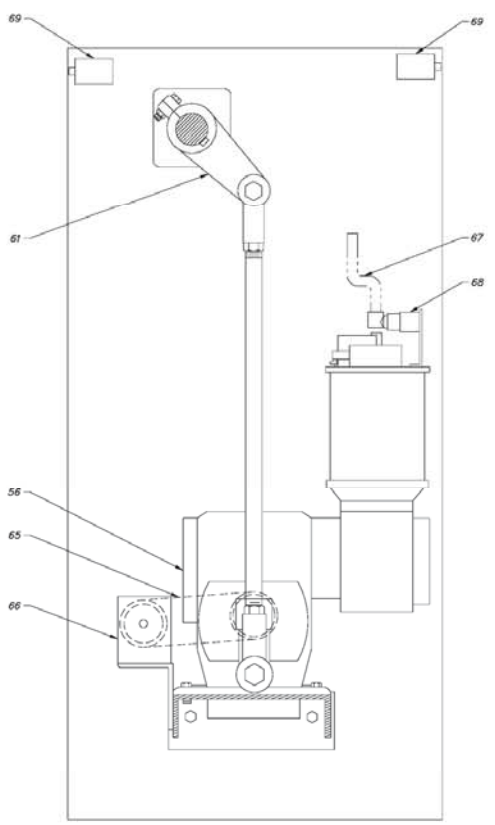

SECTION A–A
SCALE: NTS

NOTES:
1. REFER TO SECTION 7.3 FOR "LOCKOUT/TAGOUT PROCEDURE"
2. REFER TO SECTION 11.1.3 FOR "WARNING GATE MACHINERY LUBRICATION SCHEMATIC"
3. REFER TO SECTION 11.3.1 FOR "MACHINERY LUBRICATION SCHEDULE"
4. REFER TO SECTION 11.4 FOR "BRIDGE MAINTENANCE PERFORMANCE STANDARDS"
5. REFER TO SECTION 11.6 FOR "COMPONENT MANUFACTURER LIST"
6. DO NOT DISASSEMBLE COUPLINGS UNLESS SHAFTS ARE PROPERLY SUPPORTED.
7. APPROXIMATE CAPACITY OF LUBRICANT FOR COMPONENTS IS A ROUGH ESTIMATE. AMOUNT OF LUBRICANT REQUIRED MAY VARY.

DELAWARE DEPARTMENT OF TRANSPORTATION	ADDENDUMS / REVISIONS	SR 36 BRIDGE OPERATIONS AND MAINTENANCE MANUAL	CONTRACT - / COUNTY SUSSEX	BRIDGE NO. 3-164 / DRAWN BY: JAB / CHECKED BY: DJM	WARNING GATE MACHINERY COMPONENT IDENTIFICATION	SECTION NO. 11.1.3 / PAGE NO. 11-6

THIS PAGE INTENTIONALLY LEFT BLANK

11.2 MACHINERY LUBRICATION SCHEMATICS

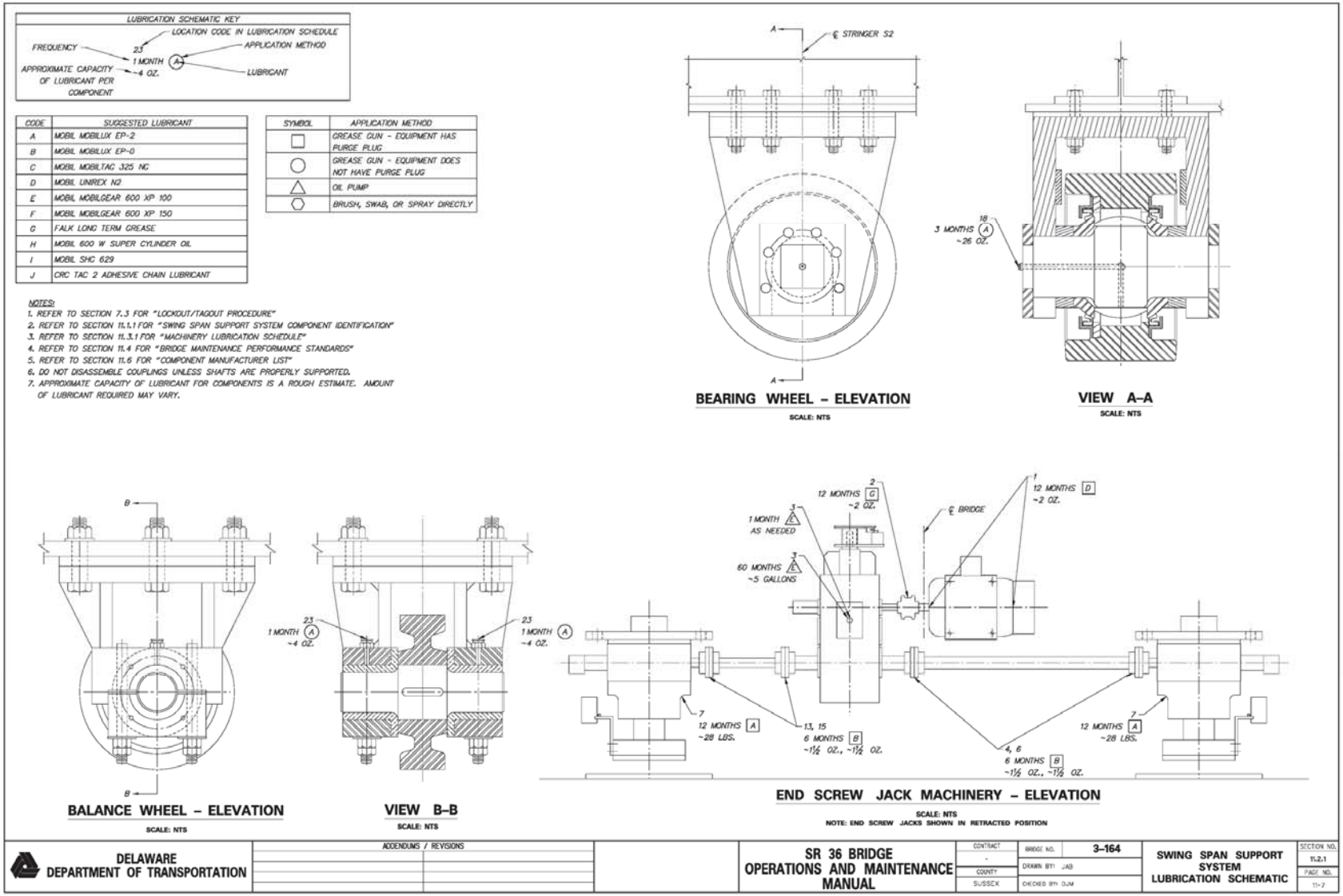

THIS PAGE INTENTIONALLY LEFT BLANK

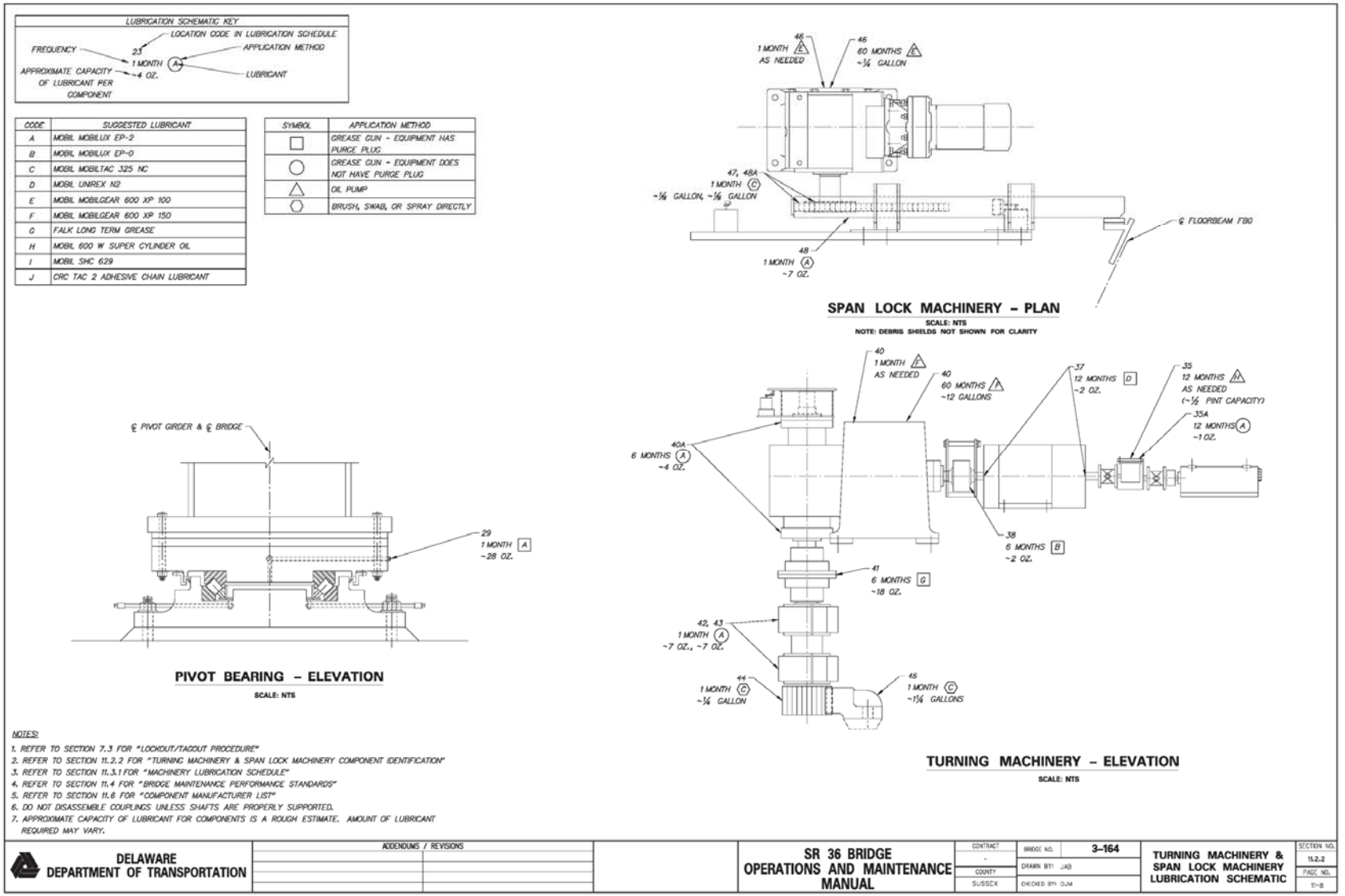
LUBRICATION SCHEMATIC KEY
LOCATION CODE IN LUBRICATION SCHEDULE
FREQUENCY
23
APPLICATION METHOD
1 MONTH
A
~4 OZ.
APPROXIMATE CAPACITY OF LUBRICANT PER COMPONENT
LUBRICANT
CODE | SUGGESTED LUBRICANT
A | MOBIL MOBILUX EP-2
B | MOBIL MOBILUX EP-0
C | MOBIL MOBILTAC 325 NC
D | MOBIL UNIREX N2
E | MOBIL MOBILGEAR 600 XP 100
F | MOBIL MOBILGEAR 600 XP 150
G | FALK LONG TERM GREASE
H | MOBIL 600 W SUPER CYLINDER OIL
I | MOBIL SHC 629
J | CRC TAC 2 ADHESIVE CHAIN LUBRICANT
SYMBOL | APPLICATION METHOD
GREASE GUN - EQUIPMENT HAS PURGE PLUG
GREASE GUN - EQUIPMENT DOES NOT HAVE PURGE PLUG
OIL PUMP
BRUSH, SWAB, OR SPRAY DIRECTLY
46
1 MONTH E AS NEEDED
46
60 MONTHS E ~¼ GALLON
47, 48A
1 MONTH C ~⅛ GALLON, ~⅛ GALLON
48
1 MONTH A ~7 OZ.
℄ FLOORBEAM FB0
SPAN LOCK MACHINERY – PLAN
SCALE: NTS
NOTE: DEBRIS SHIELDS NOT SHOWN FOR CLARITY
℄ PIVOT GIRDER & ℄ BRIDGE
29
1 MONTH A ~28 OZ.
PIVOT BEARING – ELEVATION
SCALE: NTS
40
1 MONTH E AS NEEDED
40
60 MONTHS F ~12 GALLONS
37
12 MONTHS D ~2 OZ.
35
12 MONTHS H AS NEEDED (~½ PINT CAPACITY)
35A
12 MONTHS A ~1 OZ.
40A
6 MONTHS A ~4 OZ.
38
6 MONTHS B ~2 OZ.
41
6 MONTHS G ~18 OZ.
42, 43
1 MONTH A ~7 OZ., ~7 OZ.
44
1 MONTH C ~¼ GALLON
45
1 MONTH C ~1¼ GALLONS
TURNING MACHINERY – ELEVATION
SCALE: NTS
NOTES:
1. REFER TO SECTION 7.3 FOR "LOCKOUT/TAGOUT PROCEDURE"
2. REFER TO SECTION 11.2.2 FOR "TURNING MACHINERY & SPAN LOCK MACHINERY COMPONENT IDENTIFICATION"
3. REFER TO SECTION 11.3.1 FOR "MACHINERY LUBRICATION SCHEDULE"
4. REFER TO SECTION 11.4 FOR "BRIDGE MAINTENANCE PERFORMANCE STANDARDS"
5. REFER TO SECTION 11.6 FOR "COMPONENT MANUFACTURER LIST"
6. DO NOT DISASSEMBLE COUPLINGS UNLESS SHAFTS ARE PROPERLY SUPPORTED.
7. APPROXIMATE CAPACITY OF LUBRICANT FOR COMPONENTS IS A ROUGH ESTIMATE. AMOUNT OF LUBRICANT REQUIRED MAY VARY.
DELAWARE DEPARTMENT OF TRANSPORTATION
ADDENDUMS / REVISIONS
SR 36 BRIDGE OPERATIONS AND MAINTENANCE MANUAL
CONTRACT -
COUNTY SUSSEX
BRIDGE NO. 3–164
DRAWN BY: JAB
CHECKED BY: DJM
TURNING MACHINERY & SPAN LOCK MACHINERY LUBRICATION SCHEMATIC
SECTION NO. 11.2.2
PAGE NO. 11-8

THIS PAGE INTENTIONALLY LEFT BLANK

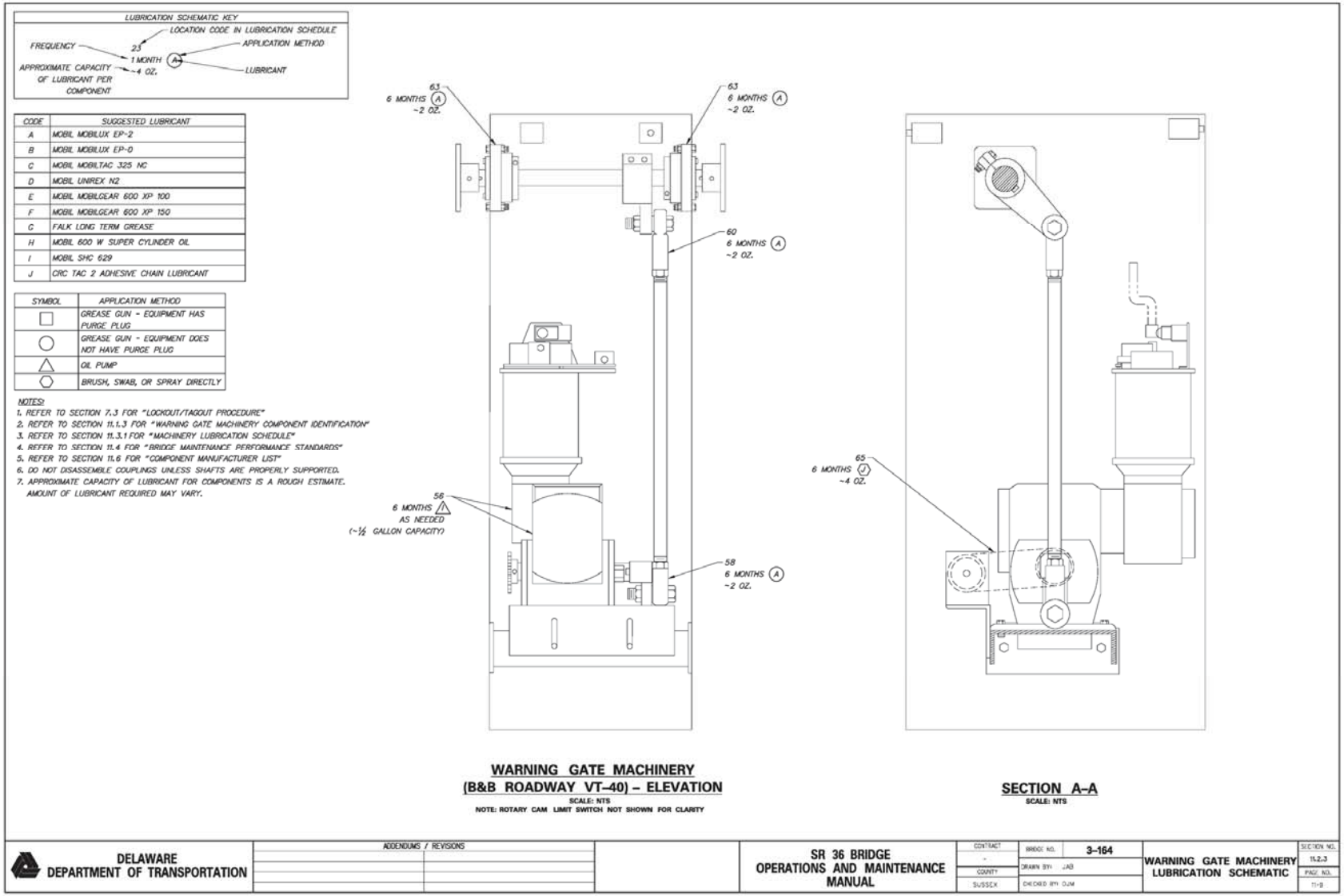
LUBRICATION SCHEMATIC KEY
LOCATION CODE IN LUBRICATION SCHEDULE
FREQUENCY
23
APPLICATION METHOD
1 MONTH
A
APPROXIMATE CAPACITY OF LUBRICANT PER COMPONENT
~4 OZ.
LUBRICANT
CODE | SUGGESTED LUBRICANT
A | MOBIL MOBILUX EP-2
B | MOBIL MOBILUX EP-0
C | MOBIL MOBILTAC 325 NC
D | MOBIL UNIREX N2
E | MOBIL MOBILGEAR 600 XP 100
F | MOBIL MOBILGEAR 600 XP 150
G | FALK LONG TERM GREASE
H | MOBIL 600 W SUPER CYLINDER OIL
I | MOBIL SHC 629
J | CRC TAC 2 ADHESIVE CHAIN LUBRICANT
SYMBOL | APPLICATION METHOD
GREASE GUN - EQUIPMENT HAS PURGE PLUG
GREASE GUN - EQUIPMENT DOES NOT HAVE PURGE PLUG
OIL PUMP
BRUSH, SWAB, OR SPRAY DIRECTLY
NOTES:
1. REFER TO SECTION 7.3 FOR "LOCKOUT/TAGOUT PROCEDURE"
2. REFER TO SECTION 11.1.3 FOR "WARNING GATE MACHINERY COMPONENT IDENTIFICATION"
3. REFER TO SECTION 11.3.1 FOR "MACHINERY LUBRICATION SCHEDULE"
4. REFER TO SECTION 11.4 FOR "BRIDGE MAINTENANCE PERFORMANCE STANDARDS"
5. REFER TO SECTION 11.6 FOR "COMPONENT MANUFACTURER LIST"
6. DO NOT DISASSEMBLE COUPLINGS UNLESS SHAFTS ARE PROPERLY SUPPORTED.
7. APPROXIMATE CAPACITY OF LUBRICANT FOR COMPONENTS IS A ROUGH ESTIMATE. AMOUNT OF LUBRICANT REQUIRED MAY VARY.
63
6 MONTHS A
~2 OZ.
63
6 MONTHS A
~2 OZ.
60
6 MONTHS A
~2 OZ.
56
6 MONTHS
AS NEEDED
(~½ GALLON CAPACITY)
58
6 MONTHS A
~2 OZ.
65
6 MONTHS J
~4 OZ.
WARNING GATE MACHINERY
(B&B ROADWAY VT-40) – ELEVATION
SCALE: NTS
NOTE: ROTARY CAM LIMIT SWITCH NOT SHOWN FOR CLARITY
SECTION A-A
SCALE: NTS
DELAWARE
DEPARTMENT OF TRANSPORTATION
ADDENDUMS / REVISIONS
SR 36 BRIDGE
OPERATIONS AND MAINTENANCE
MANUAL
CONTRACT
-
COUNTY
SUSSEX
BRIDGE NO. 3-164
DRAWN BY: JAB
CHECKED BY: DJM
WARNING GATE MACHINERY
LUBRICATION SCHEMATIC
SECTION NO.
11.2.3
PAGE NO.
11-9

THIS PAGE INTENTIONALLY LEFT BLANK

11.3 MACHINERY LUBRICATION PLANNING TABLES

11.3.1 MACHINERY LUBRICATION SCHEDULE

Loc. Code	Section	Machinery	Application Method	Specified Grade	Lubrication Type	Mfr. Spec.	Freq. (Mo.)	Total Qty. (Approx.)
END SCREW JACK MACHINERY								
1	8.7.3	END SCREW JACK MOTOR BEARINGS	GREASE GUN, REMOVE PLUG, FILL WITH GREASE, REPLACE PLUG	NLGI #2	GREASE	MOBIL UNIREX N2	12	4 OZ.
2	8.1.6	END SCREW JACK MOTOR COUPLING	GREASE GUN, REMOVE PLUG, FILL WITH GREASE, REPLACE PLUG	NLGI #1/2	GREASE	FALK LONG TERM GREASE	12	2 OZ.
3	8.1.5	END SCREW JACK SPEED REDUCER	CHECK AND TOP OFF OIL LEVEL	AGMA #3EP	OIL	MOBIL MOBILGEAR 600 XP 100	1	AS NEEDED
			OIL PUMP – REMOVE PLUGS, DRAIN OIL, REMOVE INSPECTION COVER, FLUSH, REPLACE PLUG, REPLACE INSPECTION COVER, FILL	AGMA #2EP	OIL	MOBIL MOBILGEAR 600 XP 68	60	5 GAL.
				AGMA #3EP	OIL	MOBIL MOBILGEAR 600 XP 100	60	5 GAL.
4	8.1.6	END SCREW JACK SPEED REDUCER OUTPUT SHAFT GEAR COUPLING	GREASE GUN, REMOVE PLUG, FILL WITH GREASE, REPLACE PLUG	NLGI #0	GREASE	MOBIL MOBILUX EP-0	6	1½ OZ.
5	-	FLOATING SHAFT	LUBRICATION NOT REQUIRED					
6	8.1.6	END SCREW JACK INPUT SHAFT GEAR COUPLING	GREASE GUN, REMOVE PLUG, FILL WITH GREASE, REPLACE PLUG	NLGI #0	GREASE	MOBIL MOBILUX EP-0	6	1½ OZ.
7	8.1.7	END SCREW JACK	GREASE GUN, REMOVE PLUG, FILL WITH GREASE, REPLACE PLUG	NLGI #2	GREASE	MOBIL MOBILUX EP-2	12	56 LBS
8	8.1.7	END SCREW JACK BEARING PLATE	LUBRICATION NOT REQUIRED					
9	8.1.7	END SCREW JACK MASONRY PLATE	LUBRICATION NOT REQUIRED					
10	-	END SCREW JACK POSITION LIMIT SWITCH STRIKE PLATE	LUBRICATION NOT REQUIRED					
11	8.8.2	END SCREW JACK POSITION LIMIT SWITCH	LUBRICATION NOT REQUIRED					
12	8.8.2	END SCREW JACK LIMIT SWITCH	LUBRICATION NOT REQUIRED					
13	8.1.6	END SCREW JACK SPEED REDUCER OUTPUT SHAFT COUPLING	GREASE GUN, REMOVE PLUG, FILL WITH GREASE, REPLACE PLUG	NLGI #0	GREASE	MOBIL MOBILUX EP-0	6	1½ OZ.
14	-	FLOATING SHAFT	LUBRICATION NOT REQUIRED					
15	8.1.6	END SCREW JACK INPUT SHAFT COUPLING	GREASE GUN, REMOVE PLUG, FILL WITH GREASE, REPLACE PLUG	NLGI #0	GREASE	MOBIL MOBILUX EP-0	6	1½ OZ.

Loc. Code	Section	Machinery	Application Method	Specified Grade	Lubrication Type	Mfr. Spec.	Freq. (Mo.)	Total Qty. (Approx.)
BEARING WHEEL COMPONENTS								
16	8.1.2	BEARING WHEEL	LUBRICATION NOT REQUIRED					
17	8.1.2	BEARING WHEEL SHAFT	LUBRICATION NOT REQUIRED					
18	8.1.2	BEARING WHEEL BEARING	GREASE GUN, GREASE FITTING	NLGI #2	GREASE	MOBIL MOBILUX EP-2	3	52 OZ.
19	8.1.2	BEARING WHEEL SEAL	LUBRICATION NOT REQUIRED					
20	8.1.2	BEARING WHEEL HOUSING	LUBRICATION NOT REQUIRED					
BALANCE WHEEL COMPONENTS								
21	8.1.3	BALANCE WHEEL	LUBRICATION NOT REQUIRED					
22	8.1.3	BALANCE WHEEL SHAFT	LUBRICATION NOT REQUIRED					
23	8.1.3	BALANCE WHEEL BEARING	GREASE GUN, GREASE FITTING	NLGI #2	GREASE	MOBIL MOBILUX EP-2	1	80 OZ.
PASSIVE LIVE LOAD BEARING COMPONENTS								
24	8.1.4	PASSIVE LIVE LOAD BEARING UPPER WELDMENT SUPPORT	LUBRICATION NOT REQUIRED					
25	8.1.4	PASSIVE LIVE LOAD BEARING UPPER SHOE	LUBRICATION NOT REQUIRED					
26	8.1.4	PASSIVE LIVE LOAD BEARING LOWER SHOE	LUBRICATION NOT REQUIRED					
27	8.1.4	PASSIVE LIVE LOAD BEARING LOWER WELDMENT SUPPORT	LUBRICATION NOT REQUIRED					
28	**8.1.1**	UPPER BEARING HOUSING	LUBRICATION NOT REQUIRED					
PIVOT BEARING COMPONENTS								
29	8.1.1	PIVOT BEARING	GREASE GUN, REMOVE PLUG, FILL WITH GREASE, REPLACE PLUG	NLGI #2	GREASE	MOBIL MOBILUX EP-2	1	28 OZ.
30	8.1.1	PIVOT BEARING SEAL	LUBRICATION NOT REQUIRED					
31	8.1.1	PIVOT BEARING SEAL RING	LUBRICATION NOT REQUIRED					
32	8.1.1	LOWER BEARING HOUSING	LUBRICATION NOT REQUIRED					
SPAN DRIVE MACHINERY								
33	8.8.2	ROTARY CAM LIMIT SWITCH	LUBRICATION NOT REQUIRED					
34	8.2.2	INSTRUMENTATION COUPLING	LUBRICATION NOT REQUIRED					
35	8.2.6	INSTRUMENTATION GEAR BOX	OIL PUMP - REMOVE PLUG, FILL AND REPLACE PLUG	N/A	OIL	MOBIL 600W SUPER CYLINDER OIL	12	AS NEEDED (~1/2 PINT. CAPACITY)
35A	8.2.6	INSTRUMENTATION GEAR BOX BEARINGS	GREASE GUN, GREASE FITTING	NLGI #2	GREASE	MOBIL MOBILUX EP-2	12	2 OZ.
36	8.2.2	INSTRUMENTATION COUPLING	LUBRICATION NOT REQUIRED					

Loc. Code	Section	Machinery	Application Method	Specified Grade	Lubrication Type	Mfr. Spec.	Freq. (Mo.)	Total Qty. (Approx.)
37	8.7.2	TURNING MACHINERY MOTOR BEARINGS	GREASE GUN, REMOVE PLUG, FILL WITH GREASE, REPLACE PLUG	NLGI #2	GREASE	MOBIL UNIREX N2	12	4 OZ.
38	8.2.2	BRAKEWHEEL COUPLING	GREASE GUN, REMOVE PLUG, FILL WITH GREASE, REPLACE PLUG	NLGI #0	GREASE	MOBIL MOBILUX EP-0	6	2 OZ.
39	8.2.1	MOTOR BRAKE	LUBRICATION NOT REQUIRED					
40	8.2.3	TURNING MACHINERY SPEED REDUCER	CHECK AND TOP OFF OIL LEVEL	AGMA #4EP	OIL	MOBIL MOBILGEAR 600 XP 150	1	AS NEEDED
			OIL PUMP - REMOVE PLUG, DRAIN, FLUSH, FILL AND REPLACE PLUG	AGMA #2EP	OIL	MOBIL MOBILGEAR 600 XP 68	60	5 GAL.
				AGMA #4EP	OIL	MOBIL MOBILGEAR 600 XP 150	60	12 GAL.
40A	8.2.3	TURNING MACHINERY SPEED REDUCER BEARINGS	GREASE GUN, GREASE FITTING	NLGI #2	GREASE	MOBIL MOBILUX EP-2	6	8 OZ.
41	8.2.2	GRID COUPLING	GREASE GUN, REMOVE PLUG, FILL WITH GREASE, REPLACE PLUG	NLGI # 1/2	GREASE	FALK LONG TERM GREASE	6	18 OZ.
42	8.2.4	SLEEVE BEARING	GREASE GUN, GREASE FITTING	NLGI #2	GREASE	MOBIL MOBILUX EP-2	1	7 OZ.
43	8.2.4	SLEEVE BEARING	GREASE GUN, GREASE FITTING	NLGI #2	GREASE	MOBIL MOBILUX EP-2	1	7 OZ.
44	8.2.5	MAIN PINION	BRUSH OR SWAB	N/A	GREASE	MOBIL MOBILTAC 325 NC	1	¼ GAL.
45	8.2.5	RACK	BRUSH OR SWAB	N/A	GREASE	MOBIL MOBILTAC 325 NC	1	1¼ GAL.
SPAN LOCK MACHINERY								
46	8.7.1	SPAN LOCK GEARMOTOR SPEED REDUCER	CHECK AND TOP OFF OIL LEVEL	AGMA #3EP	OIL	MOBIL MOBILGEAR 600 XP 100	1	AS NEEDED
			OIL PUMP - REMOVE PLUG, DRAIN, FLUSH, FILL AND REPLACE PLUG	AGMA #2EP	OIL	MOBIL MOBILGEAR 600 XP 68	60	¼ GAL.
				AGMA #3EP	OIL	MOBIL MOBILGEAR 600 XP 100	60	¼ GAL.
47	8.3.2	SPAN LOCK PINION	BRUSH OR SWAB	N/A	GREASE	MOBIL MOBILTAC 325 NC	1	1/16 GAL.
48	8.3.1	LOCK BAR	BRUSH OR SWAB	N/A	GREASE	MOBIL MOBILUX EP-2	1	7 OZ.
48A	8.3.2	LOCK BAR RACK	BRUSH OR SWAB	N/A	GREASE	MOBIL MOBILTAC 325 NC	1	1/16 GAL.
49	8.3.1	SPAN LOCK REAR GUIDE	LUBRICATION NOT REQUIRED					
50	8.3.1	SPAN LOCK FRONT GUIDE	LUBRICATION NOT REQUIRED					
51	8.3.1	SPAN LOCK RECEIVER	LUBRICATION NOT REQUIRED					
52	8.8.2	LOCK BAR PULLED LIMIT SWITCH	LUBRICATION NOT REQUIRED					

Loc. Code	Section	Machinery	Application Method	Specified Grade	Lubrication Type	Mfr. Spec.	Freq. (Mo.)	Total Qty. (Approx.)
53	8.8.2	LOCK BAR DRIVEN LIMIT SWITCH	LUBRICATION NOT REQUIRED					
TRAFFIC GATE MACHINERY								
54	8.7.4	TRAFFIC GATE SOLENOID BRAKE	LUBRICATION NOT REQUIRED					
55	8.7.4	TRAFFIC GATE MOTOR	LUBRICATION NOT REQUIRED					
56	8.4.1	TRAFFIC GATE TRANSMISSION	OIL PUMP - REMOVE PLUG, FILL AND REPLACE PLUG	N/A	OIL	MOBIL SHC 629	6	AS NEEDED (~2 GAL. CAPACITY)
57	8.4.1	TRAFFIC GATE TRANSMISSION CRANK	LUBRICATION NOT REQUIRED					
58	8.4.1	TRAFFIC GATE ROD END	GREASE GUN, GREASE FITTING	NLGI #2	GREASE	MOBIL MOBILUX EP-2	6	4 OZ.
59	8.4.1	TRAFFIC GATE CONNECTING ROD	LUBRICATION NOT REQUIRED					
60	8.4.1	TRAFFIC GATE ROD END	GREASE GUN, GREASE FITTING	NLGI #2	GREASE	MOBIL MOBILUX EP-2	6	4 OZ.
61	8.4.1	TRAFFIC GATE PIVOT SHAFT CRANK	LUBRICATION NOT REQUIRED					
62	8.4.1	TRAFFIC GATE PIVOT SHAFT	LUBRICATION NOT REQUIRED					
63	8.4.1	TRAFFIC GATE PIVOT SHAFT BEARING	GREASE GUN, GREASE FITTING	NLGI #2	GREASE	MOBIL MOBILUX EP-2	6	8 OZ.
64	8.4.1	TRAFFIC GATE TRANSMISSION OUTPUT SPROCKET	LUBRICATION NOT REQUIRED					
65	8.4.1	TRAFFIC GATE ROLLER CHAIN	SPRAY DIRECTLY	N/A	GREASE	CRC TAC 2 ADHESIVE CHAIN LUBRICANT	6	8 OZ.
66	8.8.2	TRAFFIC GATE ROTARY CAM LIMIT SWITCH	LUBRICATION NOT REQUIRED					
67	8.4.1	TRAFFIC GATE MANUAL OPERATION HAND CRANK	LUBRICATION NOT REQUIRED					
68	8.8.2	TRAFFIC GATE MANUAL OPERATION LIMIT SWITCH	LUBRICATION NOT REQUIRED					
69	8.8.2	TRAFFIC GATE DOOR SWITCH	LUBRICATION NOT REQUIRED					

11.3.2 LUBRICANT AND MATERIAL INVENTORY FORM

Freq.	Section	Mfr. Spec.	Lubrication Type	Specified Grade	Approx. Qty. Needed	In Stock	To Order
MONTHLY	11.5.1	MOBIL MOBILUX EP-2	GREASE	NLGI #2	9½ – 14 OZ. TUBES		
	11.5.3	MOBIL MOBILGEAR 600 XP 100	OIL	AGMA #3EP	AS NEEDED		
	11.5.3	MOBIL MOBILGEAR 600 XP 150	OIL	AGMA #4EP	AS NEEDED		
	11.5.7	MOBIL MOBILTAC 325 NC	GREASE	N/A	2 GAL.		
3 MONTHS	11.5.1	MOBIL MOBILUX EP-2	GREASE	NLGI #2	4 – 14 OZ. TUBES		
6 MONTH	11.5.1	MOBIL MOBILUX EP-0	GREASE	NLGI #0	1 – 14 OZ. TUBE		
	11.5.1	MOBIL MOBILUX EP-2	GREASE	NLGI #2	2 – 14 OZ. TUBES		
	11.5.5	FALK LONG TERM GREASE	GREASE	NLGI #½	1 ½ - 14 OZ. TUBES		
	11.5.8	MOBIL SHC 629	OIL	N/A	AS NEEDED (~2 GAL. CAPACITY)		
	11.5.9	CRC TAC 2 ADHESIVE CHAIN LUBRICANT	GREASE	N/A	1 – 10 OZ. CAN		
ANNUAL	11.5.1	MOBIL MOBILUX EP-2	GREASE	NLGI #2	64 ½ - 14 OZ. TUBES		
	11.5.2	MOBIL UNIREX N2	GREASE	NLGI #2	1 -14 OZ. TUBE		
	11.5.5	FALK LONG TERM GREASE	GREASE	NLGI #½	½ - 14 OZ. TUBE		
	11.5.4	MOBIL 600W SUPER CYLINDER OIL	OIL	N/A	AS NEEDED (~½ PINT CAPACITY)		
5 YEAR	11.5.3	MOBIL MOBILGEAR 600 XP 68	OIL	AGMA #2EP	10 ½ GAL.		
	11.5.3	MOBIL MOBILGEAR 600 XP 100	OIL	AGMA #3EP	5 ½ GAL.		
	11.5.3	MOBIL MOBILGEAR 600 XP 150	OIL	AGMA #4EP	12 GAL.		

Note: Mobil DTE 21 (Section 11.5.6) or equivalent shall be provided by brake technician and not listed on the table above.

Materials	In Stock	To Order
BAGS OF RAGS		
PERMATEX GEAR OIL RTV SEALANT (SECTION 11.5.10)		
WD-40 SPECIALIST MACHINE AND ENGINE DEGREASER (SECTION 11.5.11)		
SEAL AND GASKET KIT FOR FALK 1040T10 GRID COUPLING		
SEAL AND GASKET KIT FOR FALK 1015G51 GEAR COUPLING		
SEAL AND GASKET KIT FOR FALK 1110T20 GRID COUPLING		
SEAL AND GASKET KIT FOR MONDEL 1010G62 BRAKEWHEEL COUPLING		

11.4 BRIDGE MAINTENANCE PERFORMANCE STANDARDS (PLATES)

11.4.1 SLEEVE BEARING AND BALANCE WHEEL BEARING LUBRICATION

DELAWARE DEPARTMENT OF TRANSPORTATION **BRIDGE MANAGEMENT SECTION** **BRIDGE MAINTENANCE PERFORMANCE STANDARD**	**BRIDGE NUMBER** 3-164
	BMS ACTIVITY CODE B065-S2J
	EFFECTIVE DATE

ACTIVITY TITLE:	**UNIT OF MEASUREMENT:**
Sleeve Bearings and Balance Wheel Bearing Lubrication	Number of Sleeve and Balance Wheel Bearings

PROCEDURE DESCRIPTION:

WARNING

Use EXTREME CARE and ALWAYS REMOVE POWER from all pertinent electrical equipment, which includes multiple power sources, before beginning maintenance. Refer to Section 7.3, "Lockout/Tagout Procedure" in the Operations and Maintenance Manual.

Monthly:

Sleeve Bearings and Balance Wheel Bearings (Component ID # 23, 42, & 43)

1. Clean grease fittings of dirt, debris, old grease, and any other potential contaminants with a rag and WD-40 Specialist Machine & Engine Degreaser or equivalent. Inspect the grease fittings and replace any cracked or broken grease fittings. Each balance wheel bearing has one grease fitting located at the roadway level lubrication line bracket. A lubrication line connects each balance wheel bearing grease fitting to a fitting in the bearing base. Each turning machinery sleeve bearing has one grease fitting in the bearing cap.
2. Insert grease gun tip onto the grease fitting and pump Mobil Mobilux EP-2 or equivalent into the bearing until fresh grease appears along the bearing shaft. Catch old grease in a catch basin.
3. For the balance wheel bearings, rotate the balance wheels to distribute the grease within the bearing.
4. Wipe excess grease from the bearing with a rag and solvent cleaner.
5. Inspect bearings for any unusual defects that may have occurred.

Refer to Sections 8.1.3, 8.2.4, 11.5.1, and 11.5.11 for additional component and material information. For lubrication details, refer to Section 11.2 "Machinery Lubrication Schematics" in the Operations and Maintenance Manual.

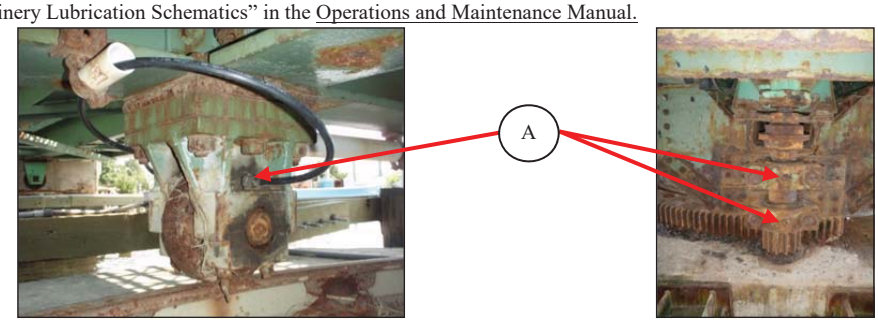

Balance Wheel Bearing **Turning Machinery Sleeve Bearings**

SCHEDULING CONSIDERATIONS:

Turning machinery sleeve bearings and balance wheel bearings should be lubricated every month.

Also, inspect and lubricate the turning machinery sleeve bearings and balance wheel bearings after flooding submerges the bearings or after an overstress situation such as a pinched span.

WORK AREA, ACTIVITY DESCRIPTION & REQUIREMENTS:

Two turning machinery sleeve bearings are located at the west side of the pivot pier. Two balance wheel sleeve bearings are located at each balance wheel location. Eight balance wheels are located at the pivot pier and two balance wheels are located at the west abutment. Tasks include locating, inspecting, and lubricating all turning machinery sleeve bearings and balance wheel bearings on the bridge. Lockout/Tagout is required prior to performing any maintenance on this equipment. Report any significant defects to bridge management.

Qty	EQUIPMENT	Qty	EQUIPMENT	Qty	MATERIAL
1	Grease gun	1/Person	Set of chemical resistant gloves	~7 – 14 oz. Tubes	Mobil Mobilux EP-2 or equivalent (Section 11.5.1)
22	Grease fittings	1/Person	Coveralls		
1	Catch basin	1/Person	Eye protection	~3 – 18 oz. Cans	WD-40 Specialist Machine & Engine Degreaser or equivalent (Section 11.5.11)
1	Bag of rags	1/Person	Chemical respirator		

11.4.2 MOTOR BRAKE MAINTENANCE

DELAWARE DEPARTMENT OF TRANSPORTATION BRIDGE MANAGEMENT SECTION BRIDGE MAINTENANCE PERFORMANCE STANDARD	BRIDGE NUMBER 3-164
	BMS ACTIVITY CODE B067-S2J Page 1 of 2
	EFFECTIVE DATE

ACTIVITY TITLE:	UNIT OF MEASUREMENT:
Motor Brake Maintenance	Number of Brakes

PROCEDURE DESCRIPTION:

WARNING

Use EXTREME CARE and ALWAYS REMOVE POWER from all pertinent electrical equipment, which includes multiple power sources, before beginning maintenance. Refer to Section 7.3, "Lockout/Tagout Procedure" in the Operations and Maintenance Manual.

Annually:

Motor Brake (Component ID # 39)

1. Inspect brake shoes and drums for wear, dust, dirt, grease, and proper adjustment. Check the brake pad thickness. Replace pads when the remaining thickness is less than $^{1}/_{16}$ inch. Brake pads should be replaced by a qualified technician with experience in installation and maintenance of hydraulic brake systems. If the pads are replaced, verify clearance between the brake pads and brakewheel, torque setting, and reserve stroke and adjust according to Section 11.7.9.
2. Check clearances between the brake shoes and brakewheel. The measured gap shall have a minimum of $^{1}/_{64}$ inch clearance between the brake shoe and brakewheel when hand released. If clearances need to be adjusted, the linkages shall be adjusted in accordance with Section 11.7.9. If adjustments are made to the linkages, the reserve stroke and torque setting should be verified and adjusted as well. Adjustment procedures are located within Section 11.7.9.
3. Inspect mechanical linkages for wear, broken parts, and tightness of nuts and bolts. Check for freedom of moving parts (no binding or sticking). Check the brake housing and linkages for evidence of water dripping on the brake and corrosion.
4. Check for excessive heating of parts evident by discoloration of metal parts.
5. Check operation of the brake during test operations of the bridge. Check for any unusual odor and excessive vibration.
6. Check adjustment of limit switches and hand release device. When the motor brake hand release lever is pulled up, the brake pads should release from the brakewheel. The motor brake has two limit switches. Verify brake limit switches provide proper indication at the control desk when the brake is set, released via the control system, and hand released. Adjust limit switch lever arms if proper indication is not observed at the control desk.
7. Check the brake reserve stroke height with a scale. The reserve stroke height of the motor brake should be 0.7 inch +/- $^{1}/_{16}$ inch. The reserve stroke refers to the exposed thruster rod length, measured from the top of the thruster cover to the bottom of the lug at the end of the thruster rod (refer to Figure 2 of Section 11.7.9). As the brake pads wear, the reserve stroke becomes shorter. If the reserve stroke requires adjustment, adjust linkages as specified in Section 11.7.9.
8. Check the motor brake spring tension via the brake torque gauge located near the thruster. The motor brake should be set to provide a braking torque of 25 ft-lbs. The torque is read by matching the top of the spring block to the corresponding torque value on the scale. To adjust the brake torque, turn the torque adjustment screw until the top of the spring block is at the appropriate torque setting on the scale. Perform Item 5 to confirm proper operation of the motor brake after adjustment.

Refer to Sections 8.2.1, 11.5.6, and 11.7.9 for additional component and material information.

Motor Brake - Top

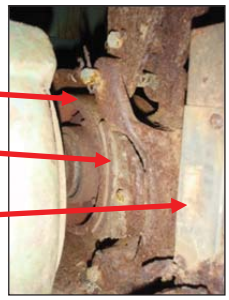

Motor Brake - Side

DELAWARE
DEPARTMENT OF TRANSPORTATION
BRIDGE MANAGEMENT SECTION
BRIDGE MAINTENANCE PERFORMANCE STANDARD

BRIDGE NUMBER
3-164

BMS ACTIVITY CODE
B067-S2J Page 2 of 2

EFFECTIVE DATE

ACTIVITY TITLE:
Motor Brake Maintenance

UNIT OF MEASUREMENT:
Number of Brakes

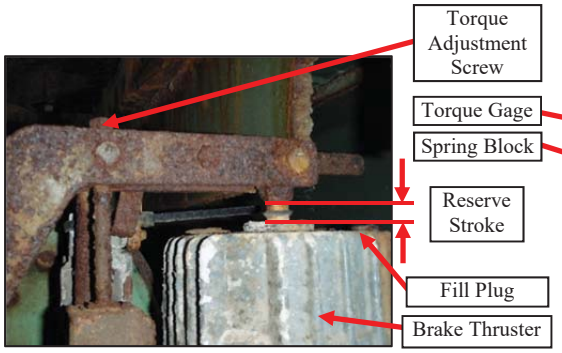

Motor Brake Thruster

Motor Brake Torque Gage

SCHEDULING CONSIDERATIONS:

The district shall coordinate and schedule times for inspection and maintenance of the brake so that the brake is adjusted at regular intervals of less than or equal to one year. If thruster maintenance or repairs are needed, the brake technician should be scheduled to perform the necessary work.

Also, inspect the brake when the bridge opens more than 150 times between Spring and Fall maintenance routines.

WORK AREA, ACTIVITY DESCRIPTION & REQUIREMENTS:

The motor brake is located between the turning machinery motor and the turning machinery speed reducer at the pivot pier. Tasks include locating and inspecting the brake. Lockout/Tagout is required prior to performing any maintenance on this equipment. Report any significant defects to bridge management.

Qty	EQUIPMENT	Qty	EQUIPMENT	Qty	MATERIAL
1	Feeler gauge set		Misc. Tools	~1/2 gallon	Mobil DTE 21 or equivalent (for thruster if oil needs to be replaced) (Section 11.5.6)
2	Adjustable wrenches	1/Person	Tyvek suit		
1	Scale (with graduations of 1/16")	1/Person	Set of chemical resistant gloves		
		1/Person	Eye protection		

11.4.3 COUPLING LUBRICATION

DELAWARE DEPARTMENT OF TRANSPORTATION BRIDGE MANAGEMENT SECTION BRIDGE MAINTENANCE PERFORMANCE STANDARD	BRIDGE NUMBER 3-164
	BMS ACTIVITY CODE B068-S2J Page 1 of 2
	EFFECTIVE DATE

ACTIVITY TITLE:	UNIT OF MEASUREMENT:
Coupling Lubrication	Number of Couplings (with Grease Fittings)

PROCEDURE DESCRIPTION:

WARNING

Use EXTREME CARE and ALWAYS REMOVE POWER from all pertinent electrical equipment, which includes multiple power sources, before beginning maintenance. Refer to Section 7.3, "Lockout/Tagout Procedure" in the Operations and Maintenance Manual.

WARNING

Do not disassemble couplings until shafts are properly supported.

Six Months:

Turning Machinery Brakewheel Coupling and End Screw Jack Gear Couplings (Component ID # 4, 6, 13, 15, & 38)

1. Clean the coupling of dirt, debris, old grease, and any other potential contaminants with a rag.
2. Check the coupling for any excessive misalignment that may have occurred and notify bridge management if such misalignment exists.
3. Inspect the condition and tightness of the fasteners. Inspect the seal ring to see if it is leaking. If it is leaking, replace seal according to manufacturer specifications.
4. Clean the grease fitting of dirt, old grease, and any other contaminants with a rag. Inspect the grease fitting and replace if cracked or broken. Remove the lube plug.
5. Fill with Mobil Mobilux EP-0 or equivalent until fresh grease appears at the lower port. Catch old grease in a catch basin.
6. Reinstall plug into coupling. Wipe off excess grease. **MAKE CERTAIN ALL PLUGS HAVE BEEN INSERTED AFTER LUBRICATION**.

WARNING

Use EXTREME CARE and ALWAYS VERIFY that no grease gets on the brakewheel surfaces as this may cause the brakewheel to slip within the brake shoes as the brake is activated, which may decrease the overall braking capacity.

Turning Machinery Grid Coupling (Component ID # 41)

1. Clean the grid coupling and grease fittings of dirt, debris, old grease, and any other potential contaminants with a rag. Inspect the grease fittings and replace if cracked or broken.
2. Remove coupling cover from the grid coupling. Remove existing grease from coupling components.
3. Inspect gasket between the coupling cover and the coupling seal for damage while the coupling cover is removed. Replace gasket and seal if damaged.
4. Fill coupling with grease prior to reinstalling coupling cover. Reinstall coupling cover. Remove the grease fitting or lube plug in the lower most port. Pump Falk Long Term Grease or equivalent into the coupling until the grease purges through the lower most port. Reinstall the grease fitting or lube plug. Tighten coupling cover fasteners and torque to 260 in-lbs. **MAKE CERTAIN ALL FITTINGS AND PLUGS HAVE BEEN INSERTED AFTER LUBRICATION.**

Annually:

End Screw Jack Motor Coupling (Component ID # 2)

1. Clean the end screw jack motor coupling and grease fittings of dirt, debris, old grease, and any other potential contaminants with a rag. Inspect the grease fitting and replace if cracked or broken.
2. Remove coupling cover from the motor coupling. Remove existing grease from coupling components.
3. Inspect gasket between the coupling cover and the coupling seals for damage while the coupling cover is removed. Replace gasket and seals if damaged.
4. Fill the coupling with grease prior to reinstalling coupling cover. Reinstall coupling cover. Remove the purge plug in the coupling cover. Pump Falk Long Term Grease or equivalent into the coupling until the grease purges through the port. Reinstall the purge plug. Tighten coupling cover fasteners and torque to 100 in-lbs. **MAKE CERTAIN THE PURGE PLUG HAS BEEN INSERTED AFTER LUBRICATION.**

DELAWARE
DEPARTMENT OF TRANSPORTATION
BRIDGE MANAGEMENT SECTION
BRIDGE MAINTENANCE PERFORMANCE STANDARD

BRIDGE NUMBER
3-164

BMS ACTIVITY CODE
B068-S2J Page 2 of 2

EFFECTIVE DATE

ACTIVITY TITLE:
Coupling Lubrication

UNIT OF MEASUREMENT:
Number of Couplings (with Grease Fittings)

Refer to Sections 8.1.6, 8.2.2, 11.5.1, 11.5.5, 11.7.6, 11.7.7, and 11.7.8 for additional component and material information. For lubrication details, refer to Section 11.2, "Machinery Lubrication Schematics" in the Operations and Maintenance Manual. Instrumentation couplings (Component ID # 34 & 36) do not require lubrication.

End Screw Jack Gear Coupling

Turning Machinery Brakewheel Coupling

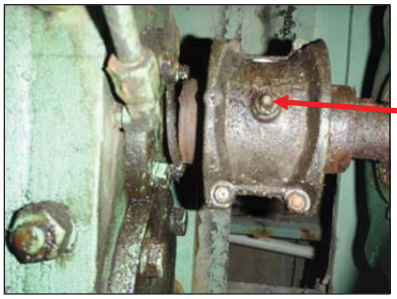

End Screw Jack Motor Coupling

Turning Machinery Grid Coupling

SCHEDULING CONSIDERATIONS:

The brakewheel coupling and end screw jack couplings should be lubricated every six months. The turning machinery grid coupling lubricant should be replaced every six months or whenever the coupling is disassembled. The end screw jack motor coupling grease should be replaced annually or whenever the coupling is disassembled.

Also, inspect and lubricate couplings with grease fittings when the bridge opens more than 150 times between Spring and Fall maintenance routines, after an overstress situation such as a pinched span, or after submersion due to flooding.

WORK AREA, ACTIVITY DESCRIPTION & REQUIREMENTS:

Couplings requiring lubrication are located at the pivot pier and west abutment. Tasks include locating, inspecting, and lubricating all couplings with grease fittings on the bridge with the appropriate lubricant. Lockout/Tagout is required prior to performing any maintenance on this equipment. Report any significant defects to bridge management.

Qty	EQUIPMENT	Qty	EQUIPMENT	Qty	MATERIAL
1	Grease gun	1	Catch basin	~1 $^{1}/_{2}$ – 14 oz. Tubes	Falk Long Term Grease or equivalent (End Screw Jack Motor Coupling and Turning Machinery Grid Coupling) (Section 11.5.5)
1	End screw jack motor coupling grease fitting	1	Ratchet set	~$^{1}/_{2}$ – 14 oz. Tube	Mobil Mobilux EP-0 or equivalent (End Screw Jack Gear Couplings and Brakewheel Coupling) (Section 11.5.1)
4	End screw jack gear coupling grease fittings		Misc. small tools	1	Seal and Gasket Kit for Falk 1040T10 Grid Coupling
1	Brakewheel coupling grease fitting	1/Person	Tyvek suit	4	Seal and Gasket Kit for Falk 1015G51 Gear Coupling
1	Turning machinery grid coupling grease fitting	1/Person	Set of nitrile gloves	1	Seal and Gasket Kit for Falk 1110T20 Grid Coupling
1	Bag of rags	1/Person	Eye protection	1	Seal and Gasket Kit for Mondel 1010G62 Brakewheel Coupling

11.4.4 SPEED REDUCER LUBRICATION

DELAWARE DEPARTMENT OF TRANSPORTATION BRIDGE MANAGEMENT SECTION BRIDGE MAINTENANCE PERFORMANCE STANDARD	BRIDGE NUMBER 3-164
	BMS ACTIVITY CODE B069-S2J Page 1 of 3
	EFFECTIVE DATE

ACTIVITY TITLE:	UNIT OF MEASUREMENT:
Speed Reducer Lubrication	Number of Speed Reducers

PROCEDURE DESCRIPTION:

WARNING

Use EXTREME CARE and ALWAYS REMOVE POWER from all pertinent electrical equipment, which includes multiple power sources, before beginning maintenance. Refer to Section 7.3, "Lockout/Tagout Procedure" in the Operations and Maintenance Manual.

Monthly:

Turning Machinery Speed Reducer and End Screw Jack Speed Reducer (Component ID # 3 & 40)

1. Check the speed reducer oil level. For the turning machinery speed reducer, the oil level should be up to the oil level plug located on the side of the housing. For the end screw jack speed reducer, the oil level can be observed via the sight glass near the inspection cover. The oil level for the end screw jack speed reducer should be at the oil level line on the lubrication plate located on the inspection cover.
2. If the oil level is more than ¼" below the appropriate oil level, oil should be added. Clean the speed reducer housing around the fill plug. For the turning machinery reducer, traffic may need to be stopped and the roadway hatch above the turning machinery speed reducer removed in order access the fill plug. Remove the fill plug.
3. Fill the speed reducer with oil to the appropriate oil level. For the turning machinery speed reducer, fill the housing reservoir with Mobil Mobilgear 600 XP 150 or equivalent. For the end screw jack speed reducer, fill the housing reservoir with Mobil Mobilgear 600 XP 100 or equivalent. **DO NOT OVERFILL THE UNITS AS LEAKAGE OR OVERHEATING MAY OCCUR.**
4. Reinstall the fill plug.
5. Wipe up any spilled oil on the housing or surrounding area.

Six Months:

Turning Machinery Speed Reducer (Component ID # 40)

1. Clean the turning machinery speed reducer output shaft bearing grease fittings of dirt, debris, and any other potential contaminants with a rag.
2. Pump fresh Mobil Mobilux EP-2 into the bearing.
3. Repeat for the other turning machinery speed reducer output shaft bearing.

Five Years:

Turning Machinery Speed Reducer and End Screw Jack Speed Reducer (Component ID # 3 & 40)

1. Clean the speed reducer housing around the inspection cover and fill plug of dirt, debris, etc.
2. Place oil catch basin or bucket under the drain plug.
3. Remove the fill plug. For the turning machinery speed reducer, traffic may need to be stopped and the roadway hatch above the turning machinery reducer removed in order to access the turning machinery speed reducer fill plug.
4. Remove the drain plug to drain oil from the speed reducer. Flush the reducers with Mobil Mobilgear 600 XP 68 or equivalent compatible oil with permanent oil used in the reducers to remove contaminants in the reducer housing.
5. Reinstall the drain plug.
6. For the end screw jack speed reducer, remove the inspection cover and inspect the internal components of the reducer for unusual wear on the gear teeth. Reinstall the inspection cover with new sealant between the cover and housing.
7. Fill the speed reducer with the appropriate oil up to the appropriate oil level. The turning machinery speed reducer should be filled until the oil level is at the fill plug hole. The end screw jack machinery should be filled until the oil level in the sight glass is at the line on the lubrication plate, located on the inspection cover. For the turning machinery speed reducer, fill the housing reservoir with Mobil Mobilgear 600 XP 150 or equivalent. For the end screw jack speed reducer, fill the housing reservoir with Mobil Mobilgear 600 XP 100 or equivalent. **DO NOT OVERFILL THE UNITS AS LEAKAGE OR OVERHEATING MAY OCCUR.**
8. Reinstall the fill plug. Wipe up any spilled oil on the housing or surrounding area.

Refer to Sections 8.1.5, 8.2.3, 11.5.1, 11.5.3, 11.5.10, 11.7.1, and 11.7.2 for additional component and material information. For lubrication details, refer to Section 11.2, "Machinery Lubrication Schematics" in the Operations and Maintenance Manual.

DELAWARE
DEPARTMENT OF TRANSPORTATION
BRIDGE MANAGEMENT SECTION
BRIDGE MAINTENANCE PERFORMANCE STANDARD

BRIDGE NUMBER
3-164

BMS ACTIVITY CODE
B069-S2J Page 2 of 3

EFFECTIVE DATE

ACTIVITY TITLE:
Speed Reducer Lubrication

UNIT OF MEASUREMENT:
Number of Speed Reducers

Turning Machinery Speed Reducer - Side

Turning Machinery Speed Reducer - Top

Turning Machinery Speed Reducer Manual Operation Shaft

Turning Machinery Speed Reducer Output Shaft

End Screw Jack Speed Reducer

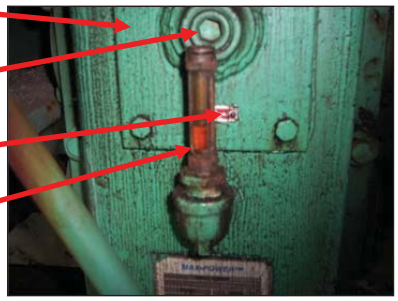

End Screw Jack Speed Reducer Inspection Cover

SCHEDULING CONSIDERATIONS:

Oil levels should be inspected monthly, with oil added as needed to maintain the proper oil level. The speed reducers should be drained, inspected, and lubricated every five years. The turning machinery speed reducer bearings should be lubricated every six months.

Also, inspect speed reducers when the bridge opens more than 150 times between Spring and Fall maintenance routines or after an overstress situation such as a pinched span. The speed reducers should be drained, inspected, and lubricated after they are submerged due to flooding.

DELAWARE
DEPARTMENT OF TRANSPORTATION
BRIDGE MANAGEMENT SECTION
BRIDGE MAINTENANCE PERFORMANCE STANDARD

BRIDGE NUMBER
3-164

BMS ACTIVITY CODE
B069-S2J Page 3 of 3

EFFECTIVE DATE

ACTIVITY TITLE:
Speed Reducer Lubrication

UNIT OF MEASUREMENT:
Number of Speed Reducers

WORK AREA, ACTIVITY DESCRIPTION & REQUIREMENTS:

Speed reducers are secured to the swing span, below the deck. The turning machinery speed reducer is located at the pivot pier. The end screw jack speed reducer is located at the west abutment. Tasks include locating, inspecting, and lubricating all speed reducers on the bridge. Lockout/Tagout is required prior to performing any maintenance on this equipment. Report any significant defects to bridge management.

Qty	EQUIPMENT	Qty	EQUIPMENT	Qty	MATERIAL
1	Grease gun	1	Scraper	~1 – 5 Gallon Bucket	Mobil Mobilgear 600 XP 100 or equivalent (permanent oil for end screw jack speed reducer) (Section 11.5.3)
2	Grease fittings	1	Ratchet Set		
3	Empty 5 gallon bucket or container	1	Adjustable wrench	~2 1/2 – 5 Gallon Buckets	Mobil Mobilgear 600 XP 150 or equivalent (permanent oil for turning machinery speed reducer) (Section 11.5.3)
6	Oil absorbent pads		Misc. small tools		
1	Bag of rags	1/Person	Coveralls	~2 – 5 Gallon Buckets	Mobil Mobilgear 600 XP 68 or equivalent (for flushing) (Section 11.5.3)
1	Funnel	1/Person	Set of nitrile gloves		
1	Holding/storage tank(s) for transportation of used oil (30 gallon capacity)	1/Person	Eye protection	~1/2 – 14 oz. Tube	Mobil Mobilux EP-2 or equivalent (Section 11.5.1)
				~1 – 5 oz. Tube	Permatex Gear Oil RTV Sealant (Section 11.5.10)

11.4.5 OPEN GEARING LUBRICATION

DELAWARE DEPARTMENT OF TRANSPORTATION BRIDGE MANAGEMENT SECTION BRIDGE MAINTENANCE PERFORMANCE STANDARD	**BRIDGE NUMBER** 3-164
	BMS ACTIVITY CODE B070-S2J
	EFFECTIVE DATE

ACTIVITY TITLE:	**UNIT OF MEASUREMENT:**
Open Gearing Lubrication	Number of Open Gears

PROCEDURE DESCRIPTION:

WARNING

Use EXTREME CARE and ALWAYS REMOVE POWER from all pertinent electrical equipment, which includes multiple power sources, before beginning maintenance. Refer to Section 7.3, "Lockout/Tagout Procedure" in the Operations and Maintenance Manual.

Monthly:

Open Gearing (Component ID # 44 & 45)

1. Remove any debris observed in the open gear teeth.
2. Using a brush, evenly coat all gear tooth surfaces with Mobil Mobiltac 325 NC or equivalent lubricant.

Annually:

1. Observe displacement patterns in open gearing lubricant for evidence of misalignment.
2. Remove old lubricant and debris by scraping the gear tooth surfaces and disposing of the lubricant in a tray or pan.
3. Apply WD-40 Specialist Machine & Engine Degreaser or equivalent to remove existing lubrication on the gear teeth.
4. With the use of a scraper and rags, remove the remaining grease and solvent and properly dispose of materials.
5. Re-inspect the gears for signs of abnormal wear or misalignment.
6. Using a brush, evenly coat all gear tooth surfaces with Mobil Mobiltac 325 NC or equivalent lubricant.

Refer to Sections 8.2.5, 11.5.7, and 11.5.11 for additional component and material information. For lubrication details, refer to Section 11.2, "Machinery Lubrication Schematics" in the Operations and Maintenance Manual.

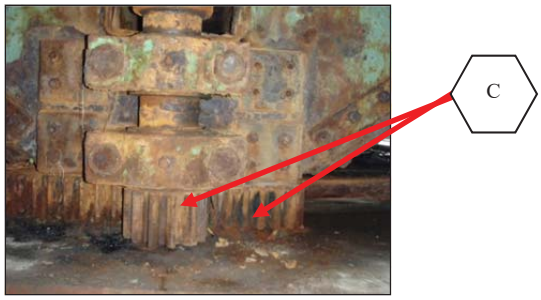

Rack and Pinion

SCHEDULING CONSIDERATIONS:

Debris should be removed from all open gearing and all gear teeth lubricated monthly. Open gearing should be cleaned, inspected, and lubricated annually.

Inspect and lubricate open gearing when the bridge opens more than 150 times between Spring and Fall maintenance routines or after an overstress situation such as a pinched span. Debris should be removed from open gearing and gear teeth lubricated after submersion due to flooding.

WORK AREA, ACTIVITY DESCRIPTION & REQUIREMENTS:

Open gearing is located in the pivot pier. Tasks include locating, inspecting and lubricating all open gearing on the bridge. Lockout/Tagout is required prior to performing any maintenance on this equipment. Report any significant defects to bridge management.

Qty	EQUIPMENT	Qty	EQUIPMENT	Qty	MATERIAL
2	Bag of rags	1/Person	Tyvek suit	~½ – 5 Gallon Bucket	Mobil Mobiltac 325 NC or equivalent (Section 11.5.7)
2	Scrapers	1/Person	Set of chemical resistant gloves		
2	Brushes	1/Person	Chemical goggles and face shield	~3 – 18 oz. Cans	WD-40 Specialist Machine & Engine Degreaser or equivalent (Section 11.5.11)
2	Trays or pans	1/Person	Chemical respirator		

11.4.6 MOTOR BEARING LUBRICATION

DELAWARE DEPARTMENT OF TRANSPORTATION BRIDGE MANAGEMENT SECTION BRIDGE MAINTENANCE PERFORMANCE STANDARD	BRIDGE NUMBER 3-164
	BMS ACTIVITY CODE B066-S2J Page 1 of 2
	EFFECTIVE DATE

ACTIVITY TITLE:	UNIT OF MEASUREMENT:
Motor Bearing Lubrication	Number of Motors

PROCEDURE DESCRIPTION:

WARNING

Use EXTREME CARE and ALWAYS REMOVE POWER from all pertinent electrical equipment, which includes multiple power sources, before beginning maintenance. Refer to Section 7.3, "Lockout/Tagout Procedure" in the Operations and Maintenance Manual.

Annually:

Motors (Component ID # 1 & 37)

1. Clean the grease fitting of dirt, debris, and any other potential contaminants with a rag.
2. Remove the lube plugs. Install a grease fitting into the uppermost port. Place a catch basin below the lower port to catch old grease.
3. Purge old grease from the bearing by slowly pumping in fresh grease into the bearing until fresh grease flows out along the shaft or through the lower port. For the turning machinery motor bearings and end screw jack motor bearings, use Mobil Unirex N2 or equivalent lubricant. **PUMPING GREASE INTO THE MOTOR BEARINGS WITHOUT REMOVING THE PURGE PLUG WILL RESULT IN DAMAGE TO THE SEAL AND GREASE ENTERING THE MOTOR WINDINGS.**
4. Perform one complete operation cycle of the motor (opening and closing of the span for the turning machinery motor and retracting and driving the end screw jacks for the end screw jack motor) prior to reinstalling the purge plugs to remove excess grease.
5. Reinstall the lube plugs and wipe excess grease from the motor housing with a rag.
6. Repeat for the bearing at the other end of the motor.

Refer to Sections 8.7.2, 8.7.3, and 11.5.2 for additional component and material information. For lubrication details, refer to Section 11.2, "Machinery Lubrication Schematics" in the Operations and Maintenance Manual.

Front of Turning Machinery Motor

Rear of Turning Machinery Motor

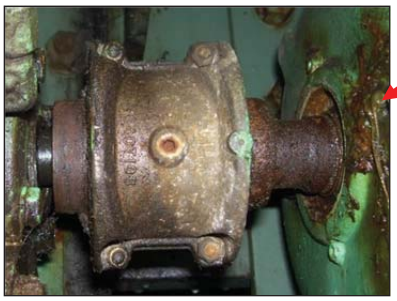

Front of End Screw Jack Motor

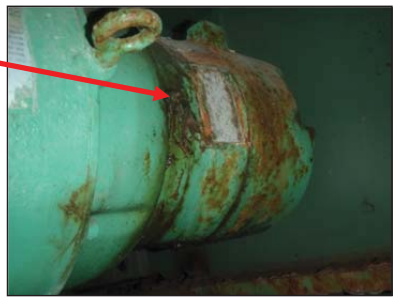

Rear of End Screw Jack Motor

DELAWARE **DEPARTMENT OF TRANSPORTATION** **BRIDGE MANAGEMENT SECTION** **BRIDGE MAINTENANCE PERFORMANCE STANDARD**	**BRIDGE NUMBER** 3-164
	BMS ACTIVITY CODE B066-S2J Page 2 of 2
	EFFECTIVE DATE

ACTIVITY TITLE:	**UNIT OF MEASUREMENT:**
Motor Bearing Lubrication	Number of Motors

SCHEDULING CONSIDERATIONS:

Motor bearings should be lubricated annually.

Also, inspect motor bearings when the bridge opens more than 150 times between Spring and Fall maintenance routines or after an overstress situation such as a pinched span.

WORK AREA, ACTIVITY DESCRIPTION & REQUIREMENTS:

The turning machinery motor and end screw jack motor are secured to the swing span, below the deck. The turning machinery motor and end screw jack motor are located at the pivot pier and west abutment, respectively. Each motor has bearings at the front and rear end of the motor. Tasks include locating, inspecting, and lubricating the turning machinery motor bearings and end screw jack motor bearings on the bridge. Lockout/Tagout is required prior to performing any maintenance on this equipment. Report any significant defects to bridge management.

Qty	EQUIPMENT	Qty	EQUIPMENT	Qty	MATERIAL
1	Grease gun		Miscellaneous small tools	~1/2 – 14 oz. Tube	Mobil Unirex N2 or equivalent (Section 11.5.2)
4	Grease fittings				
1	Bag of rags	1/Person	Coveralls		
1	Catch basin	1/Person	Set of chemical resistant gloves		
1	Adjustable wrench	1/Person	Eye protection		

11.4.7 PIVOT BEARING AND BEARING WHEEL BEARING LUBRICATION

DELAWARE DEPARTMENT OF TRANSPORTATION BRIDGE MANAGEMENT SECTION BRIDGE MAINTENANCE PERFORMANCE STANDARD	**BRIDGE NUMBER** 3-164
	BMS ACTIVITY CODE B076-S2J Page 1 of 2
	EFFECTIVE DATE

ACTIVITY TITLE:	**UNIT OF MEASUREMENT:**
Pivot Bearing and Bearing Wheel Bearing Lubrication	Number of Pivot Bearing and Bearing Wheel Bearings

PROCEDURE DESCRIPTION:

WARNING

Use EXTREME CARE and ALWAYS REMOVE POWER from all pertinent electrical equipment, which includes multiple power sources, before beginning maintenance. Refer to Section 7.3, "Lockout/Tagout Procedure" in the Operations and Maintenance Manual.

Monthly:

Pivot Bearing (Component ID # 29)

1. Clean the pivot bearing and grease fitting of dirt, debris, old grease, and any other potential contaminants with a rag. Inspect the grease fitting and replace if cracked or broken. The pivot bearing grease fitting is located at a roadway level lubrication line bracket. A lubrication line connects the pivot bearing grease fitting to a fitting in the upper bearing housing.
2. Remove the two purge plugs located on the lower bearing housing.
3. Purge old grease from the bearing by pumping in fresh Mobil Mobilux EP-2 via the grease fitting until fresh grease begins to exit each purge port. **PUMPING GREASE INTO THE PIVOT BEARING WITHOUT REMOVING THE PURGE PLUGS MAY RESULT IN DAMAGE TO THE SEAL.** Catch old grease in a catch basin. Notify bridge management immediately if existing grease shows evidence of water intrusion or if water is purged from the pivot bearing.
4. Reinstall the purge plugs and wipe excess grease from the bearing.

Three Months:

Bearing Wheel Bearings (Component ID # 18)

1. Clean the grease fitting of dirt, debris, old grease, and any other potential contaminants with a rag. Inspect the grease fitting and replace if cracked or broken. Each bearing wheel has one grease fitting located at a roadway level lubrication line bracket. A lubrication line connects each bearing wheel grease fitting to a fitting in the bearing wheel shaft.
2. Purge old grease from the bearing by pumping in fresh Mobil Mobilux EP-2 via the grease fitting located at the top of the bearing cap. Catch old grease in a catch basin.
3. Wipe excess grease from the bearing.

Refer to Sections 8.1.1, 8.1.2, 11.5.1, and 11.7.10 for additional component and material information. For lubrication details, refer to Section 11.2, "Machinery Lubrication Schematics" in the Operations and Maintenance Manual.

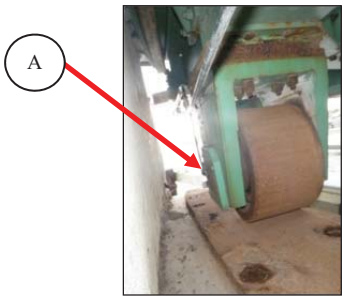

Bearing Wheel

DELAWARE
DEPARTMENT OF TRANSPORTATION
BRIDGE MANAGEMENT SECTION
BRIDGE MAINTENANCE PERFORMANCE STANDARD

BRIDGE NUMBER
3-164

BMS ACTIVITY CODE
B076-S2J Page 2 of 2

EFFECTIVE DATE

ACTIVITY TITLE:
Pivot Bearing and Bearing Wheel Bearing Lubrication

UNIT OF MEASUREMENT:
Number of Pivot Bearing and Bearing Wheel Bearings

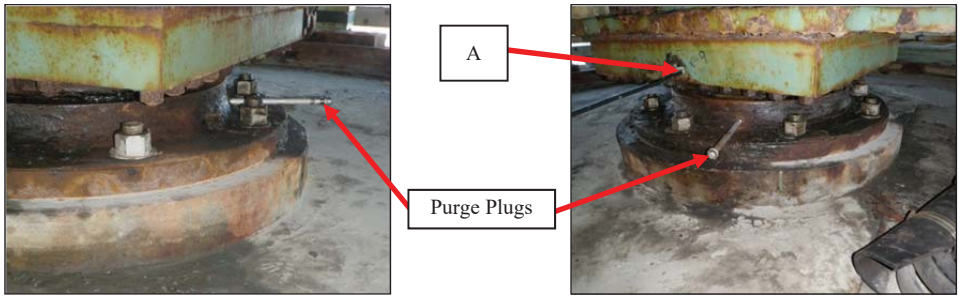

East Side of Pivot Bearing **West Side of Pivot Bearing**

SCHEDULING CONSIDERATIONS:

The pivot bearing should be lubricated monthly. The bearing wheel bearings should be lubricated every three months.

Also, inspect and lubricate the bearing wheel bearings and pivot bearing when the bridge opens more than 150 times between Spring and Fall maintenance routines, after an overstress situation such as a pinched span, or after submersion due to flooding. Notify bridge management immediately if water is purged from the pivot bearing.

WORK AREA, ACTIVITY DESCRIPTION & REQUIREMENTS:

The pivot bearing is located at the pivot pier. Two bearing wheels are located at the rest pier. Tasks include locating, inspecting, and lubricating the pivot bearing and bearing wheel bearings with the appropriate lubricant. Lockout/Tagout is required prior to performing any maintenance on this equipment. Report any significant defects to bridge management.

Qty	EQUIPMENT	Qty	EQUIPMENT	Qty	MATERIAL
1	Grease gun		Miscellaneous small tools	~4 – 14 oz. Tubes (for bearing wheels) ~2 – 14 oz. Tubes (for pivot bearing)	Mobil Mobilux EP-2 or equivalent (Section 11.5.1)
3	Grease fittings	1/Person	Coveralls		
1	Bag of rags	1/Person	Set of chemical resistant gloves		
1	Catch basin	1/Person	Eye protection	~1 – 18 oz. Can	WD-40 Specialist Machine & Engine Degreaser or equivalent (Section 11.5.11)
1	Adjustable wrench	1/Person	Chemical respirator		

11.4.8 END SCREW JACK LUBRICATION

DELAWARE DEPARTMENT OF TRANSPORTATION BRIDGE MANAGEMENT SECTION BRIDGE MAINTENANCE PERFORMANCE STANDARD	**BRIDGE NUMBER** 3-164
	BMS ACTIVITY CODE B083-S2J
	EFFECTIVE DATE

ACTIVITY TITLE:	**UNIT OF MEASUREMENT:**
End Screw Jack Lubrication	Number of End Screw Jacks

PROCEDURE DESCRIPTION:

WARNING

Use EXTREME CARE and ALWAYS REMOVE POWER from all pertinent electrical equipment, which includes multiple power sources, before beginning maintenance. Refer to Section 7.3, "Lockout/Tagout Procedure" in the Operations and Maintenance Manual.

Annually:

End Screw Jack (Component ID # 7)

1. Clean the end screw jack grease fittings of dirt, debris, old grease, and any other potential contaminants with a rag. Inspect the grease fittings and replace if cracked or broken.
2. Remove the plug located on the side of the end screw jack.
3. Purge old grease from the end screw jack by pumping in fresh Mobil Mobilux EP-2 via the grease fittings until fresh grease is purged from the purge port. Catch old grease in a catch basin.
4. Perform one complete operation cycle of the end screw jack (retracting and driving) prior to reinstalling the plug to remove excess grease.
5. Reinstall the plug and wipe the end screw jack of excess grease.
6. Inspect end screw jack protective boot for rips or leaks.
7. Clean debris from end screw jack masonry plate.

Refer to Sections 8.1.7, 11.5.1, and 11.5.11, and 11.7.5 for additional component and material information. For lubrication details, refer to Section 11.2, "Machinery Lubrication Schematics" in the Operations and Maintenance Manual.

End Screw Jack - Front

End Screw Jack – Side with Span Partially Open

SCHEDULING CONSIDERATIONS:

End screw jacks should be lubricated annually.

Also, inspect and lubricate the end screw jacks when the bridge opens more than 150 times between Spring and Fall maintenance routines or after submersion due to flooding.

WORK AREA, ACTIVITY DESCRIPTION & REQUIREMENTS:

Two end screw jacks are secured to the underside of the swing at the west abutment. Tasks include locating, inspecting, and lubricating both end screw jacks on the bridge with the appropriate lubricant. Lockout/Tagout is required prior to performing any maintenance on this equipment. Report any significant defects to bridge management.

Qty	EQUIPMENT	Qty	EQUIPMENT	Qty	MATERIAL
1	Bag of rags	1/Person	Coveralls	~70 – 14 oz. Tubes	Mobil Mobilux EP-2 or equivalent (Section 11.5.1)
4	Grease fittings	1/Person	Set of chemical resistant gloves		
1	Catch basin	1/Person	Eye protection	~1 – 18 oz. Can	WD-40 Specialist Machine & Engine Degreaser or equivalent (Section 11.5.11)
1	Adjustable wrench	1/Person	Chemical respirator		

11.4.9 SPAN LOCK MACHINERY LUBRICATION

11.4.9.1 SPAN LOCK OPEN GEARING LUBRICATION

DELAWARE DEPARTMENT OF TRANSPORTATION BRIDGE MANAGEMENT SECTION BRIDGE MAINTENANCE PERFORMANCE STANDARD	**BRIDGE NUMBER** 3-164
	BMS ACTIVITY CODE B070-S2J
	EFFECTIVE DATE

ACTIVITY TITLE:	**UNIT OF MEASUREMENT:**
Span Lock Open Gearing Lubrication	Number of Span Lock Open Gears

PROCEDURE DESCRIPTION:

WARNING

Use EXTREME CARE and ALWAYS REMOVE POWER from all pertinent electrical equipment, which includes multiple power sources, before beginning maintenance. Refer to Section 7.3, "Lockout/Tagout Procedure" in the Operations and Maintenance Manual.

Monthly:

Span Lock Open Gearing (Component ID # 47 an 48A)

1. Remove any debris observed in the open gear teeth.
2. Using a brush, evenly coat all gear tooth surfaces with Mobil Mobiltac 325 NC or equivalent lubricant.

Annually:

1. Observe displacement patterns in open gearing lubricant for evidence of misalignment.
2. Remove old lubricant and debris by scraping the gear tooth surfaces and disposing of the lubricant in a tray or pan.
3. Apply WD-40 Specialist Machinery & Engine Degreaser or equivalent to remove existing lubrication on the gear teeth.
4. With the use of a scraper and rags, remove the remaining grease and solvent and properly dispose of materials.
5. Re-inspect the gears for signs of abnormal wear or misalignment.
6. Using a brush, evenly coat all gear tooth surfaces with Mobil Mobiltac 325 NC or equivalent lubricant.

Refer to Sections 8.3.2, 11.5.7, and 11.5.11 for additional component and material information. For lubrication details, refer to Section 11.2, "Machinery Lubrication Schematics" in the Operations and Maintenance Manual.

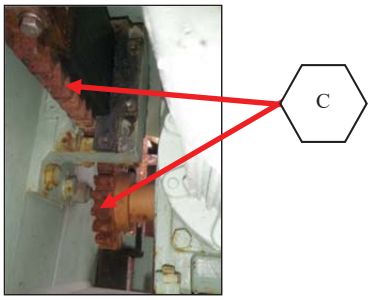

Span Lock Rack and Pinion

SCHEDULING CONSIDERATIONS:

Debris should be removed from all open gearing and all gear teeth lubricated monthly. Span lock open gearing should be cleaned, inspected, and lubricated annually.

Inspect and lubricate open gearing when the bridge opens more than 150 times between Spring and Fall maintenance routines or after an overstress situation such as bound lock bar.

WORK AREA, ACTIVITY DESCRIPTION & REQUIREMENTS:

Span lock open gearing is located at the north side of the west abutment. Tasks include locating, inspecting and lubricating all span lock open gearing on the bridge. Lockout/Tagout is required prior to performing any maintenance on this equipment. Report any significant defects to bridge management.

Qty	EQUIPMENT	Qty	EQUIPMENT	Qty	MATERIAL
1	Bag of rags	1/Person	Tyvek suit	~1/40 – 5 Gallon Bucket	Mobil Mobiltac 325 NC or equivalent (Section 11.5.7)
1	Scrapers	1/Person	Set of chemical resistant gloves		
1	Brushes	1/Person	Chemical goggles and face shield	~1 – 18 oz. Can	WD-40 Specialist Machine & Engine Degreaser or equivalent (Section 11.5.11)
1	Trays or pans	1/Person	Chemical respirator		

11.4.9.2 SPAN LOCK BAR LUBRICATION

DELAWARE DEPARTMENT OF TRANSPORTATION BRIDGE MANAGEMENT SECTION BRIDGE MAINTENANCE PERFORMANCE STANDARD	**BRIDGE NUMBER** 3-164
	BMS ACTIVITY CODE B078-S2J
	EFFECTIVE DATE

ACTIVITY TITLE:	**UNIT OF MEASUREMENT:**
Span Lock Bar Lubrication	Number of Lock Bars

PROCEDURE DESCRIPTION:

WARNING

Use EXTREME CARE and ALWAYS REMOVE POWER from all pertinent electrical equipment, which includes multiple power sources, before beginning maintenance. Refer to Section 7.3, "Lockout/Tagout Procedure" in the Operations and Maintenance Manual.

Monthly:

Lock Bar (Component ID # 48)

1. Remove debris and existing lubricant from the lock bar.
2. Visually inspect the guides, receiver, and fasteners for excessive wear or damage.
3. Brush or swab the sliding surfaces of the lock bar with Mobil Mobilux EP-2 or equivalent.

Refer to Sections 8.3.1, 11.5.1, and 11.5.11 for additional component and material information. For lubrication details, refer to Section 11.2, "Machinery Lubrication Schematics" in the Operations and Maintenance Manual.

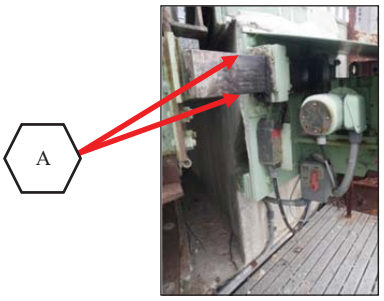

Lock Bar

SCHEDULING CONSIDERATIONS:

Fresh grease should be applied to the lock bar monthly.

Inspect and lubricate the lock bar when the span lock machinery has an overstress situation such as a bound lock bar.

WORK AREA, ACTIVITY DESCRIPTION & REQUIREMENTS:

The span lock machinery is located on the north side of the west abutment. Tasks include locating, inspecting and lubricating the span lock bar on the bridge. Lockout/Tagout is required prior to performing any maintenance on this equipment. Report any significant defects to bridge management.

Qty	EQUIPMENT	Qty	EQUIPMENT	Qty	MATERIAL
1	Brush or swab	1/Person	Coveralls	~1/2 – 14 oz. Tube	Mobil Mobilux EP-2 or equivalent (Section 11.5.1)
1	Bag of rags	1/Person	Set of chemical resistant gloves		
1	Scraper	1/Person	Eye protection	~1/4 – 18 oz. Can	WD-40 Specialist Machine & Engine Degreaser or equivalent (Section 11.5.11)
1	Catch basin	1/Person	Chemical respirator		

11.5 MATERIAL DATA SHEETS

11.5.1 MOBIL MOBILUX EP-0, EP-2

Mobil

Mobilux EP 0, 1, 2, 3, 460, 004 and 023

Grease

Product Description

Mobilux EP 0, 1, 2, 3, 460, 004 and 023 products are a high performance family of five general-purpose industrial greases and two special-duty semi-fluid greases. These lithium hydroxystearate greases are formulated to provide extra protection against wear, rusting and water washout. They are available in NLGI grades ranging from 00 to 3, with base oil viscosities ISO VG 150, 320 and 460.

Mobilux EP 0, 1, 2, 3 and 460 greases are recommended for most types of industrial applications including heavy-duty applications where high unit pressures or shock loads are present. These greases provide excellent protection against rust and corrosion and resist water wash-out which makes them particularly suitable for equipment where moist or wet conditions are common. Mobilux EP 0 and 1 are suitable for centralised systems. Mobilux EP 2 and 3 are general-purpose greases and Mobilux EP 460 is used in heavy-duty applications such as the wet ends of paper machines. The recommended operating temperature range is from -20°C to 130°C (0°C to 130°C for Mobilux EP 460) but they may be used at higher temperatures if the lubrication frequency is increased accordingly.

Mobilux EP 004 and Mobilux EP 023 are particularly suitable for the lubrication of enclosed gears and bearings in poorly sealed gear cases they can also be used in many other industrial applications where conventional gear oils cannot be retained in gear cases, chain cases, etc. because of leakage due to worn or missing seals. The recommended operating temperature range is -25 to 120°C for Mobilux EP 004 and -15 to 120°C for Mobilux EP 023.

Features and Benefits

Mobilux EP greases have a long history of proven performance and have demonstrated superior performance versus competitive products in the areas of corrosion protection, low temperature pumpability and high temperature service life. A Timken OK load of 40 lb illustrates their load carrying and extreme pressure capability.

- Reduced wear under heavy or shock loading and vibration for good equipment reliability and availability
- Protection against rust and corrosion and resistance to water washout for equipment protection and good lubrication even in presence of water
- Extended bearing life potential in wet environments for reduced bearing costs and unanticipated downtime
- Good pumpability in centralised systems (Mobilux EP 0 and 1)
- Effective leakage control (Mobilux EP 004 and Mobilux EP 023)

Applications

- Mobilux EP 0 and EP 1 provide good low temperature pumpability and are suitable for centralised lubrication systems and other applications where low temperature performance is required.
- Mobilux EP 2 is recommended for multipurpose applications in antifriction and plain bearings, bushings and pins under normal operating conditions.
- Mobilux EP 3 is a stiffer NLGI grade 3 grease recommended for applications where maximum protection against penetration of water or solid contaminants is required.

- Mobilux EP 460 is recommended for the lubrication of low to moderate speed, heavily loaded bearings including those subject to high unit pressures or shock loads. These include steel and paper mills, underground mining, tunnelling, ore crushing plants and other heavy-duty applications where moist or wet conditions are common.
- Mobilux EP 004 and Mobilux EP 023 are particularly suitable for the lubrication of enclosed gears and bearings in poorly sealed gear cases on most underground mining machinery with the exception of electric motor gearings. Mobilux EP 004 and Mobilux EP 023 can also be used in many other industrial applications where conventional gear oils cannot be retained in equipment such as gear cases, chain cases, because of leakage due to worn or missing seals. Mobilux EP 004 passes the SEW 1008 hour gear test requirement DR.EM.203 mod.

Specifications and Approvals

Mobilux EP meets or exceeds the requirements of:	Mobilux EP 0	Mobilux EP 1	Mobilux EP 2	Mobilux EP 3	Mobilux EP 460	Mobilux EP 004	Mobilux EP 023
DIN 51825: (2004-06)		KP1K-30	KP2K-30	KP3K-20	KP2K-20		
DIN 51826: (2005-01)	GP0G-20					GP00G-20	GP000G-20

Mobilux EP has the following builder approvals	Mobilux EP 0	Mobilux EP 1	Mobilux EP 2	Mobilux EP 3	Mobilux EP 460	Mobilux EP 004	Mobilux EP 023
SEW R32/302						X	

Typical Properties

	Mobilux EP 0	Mobilux EP 1	Mobilux EP 2	Mobilux EP 3	Mobilux EP 460	Mobilux EP 004	Mobilux EP 023
NLGI Grade	0	1	2	3	2	00	000
Thickener Type	Lithium	Lithium	Lithium	Lithium	Lithium	Lithium	Lithium
Color, Visual	Brown	Brown	Brown	Brown	Brown	Brown	Brown
Penetration, Worked, 25°C, ASTM D 217	370	325	280	235	280	415	460
Viscosity of Oil, ASTM D 445							
cSt @ 40°C	160	160	160	160	460	160	320
Timken OK Load, ASTM D 2509, lb	40	40	40	40	40	40	40
4-Ball Wear, ASTM D 2266, Scar, mm	0.4	0.4	0.4	0.4	0.4	0.5	0.4
4-Ball Weld Load, ASTM D 2596, Kg	250	250	250	250	250	250	250
Dropping Point, D 2265, C	190	190	190	190	190		
Rust Protection, ASTM D 6138, Distilled Water	0-0	0-0	0-0	0-0	0-0	0-0	0-0

Health and Safety

Based on available information, this product is not expected to produce adverse effects on health when used for the intended application and the recommendations provided in the Material Safety Data Sheet (MSDS) are followed. MSDS's are available upon request through your sales contract office, or via the Internet. This product should not be used for purposes other than its intended use. If disposing of used product, take care to protect the environment.

ExxonMobil

Product Name: MOBILUX EP 0
Revision Date: 30May2007
Page 1 of 8

MATERIAL SAFETY DATA SHEET

SECTION 1 PRODUCT AND COMPANY IDENTIFICATION

PRODUCT

Product Name: **MOBILUX EP 0**
Product Description: Base Oil and Additives
Product Code: 2015A0208030, 641290-00, 971553
Intended Use: Grease

COMPANY IDENTIFICATION

Supplier: **EXXON MOBIL CORPORATION**
3225 GALLOWS RD.
FAIRFAX, VA. 22037 USA

24 Hour Health Emergency	609-737-4411
Transportation Emergency Phone	800-424-9300
ExxonMobil Transportation No.	281-834-3296
MSDS Requests	713-613-3661
Product Technical Information	800-662-4525, 800-947-9147
MSDS Internet Address	http://www.exxon.com, http://www.mobil.com

SECTION 2 COMPOSITION / INFORMATION ON INGREDIENTS

Reportable Hazardous Substance(s) or Complex Substance(s)

Name	CAS#	Concentration*
ZINC DITHIOPHOSPHATE	68649-42-3	< 2.5%

* All concentrations are percent by weight unless material is a gas. Gas concentrations are in percent by volume.

SECTION 3 HAZARDS IDENTIFICATION

This material is not considered to be hazardous according to regulatory guidelines (see (M)SDS Section 15).

POTENTIAL HEALTH EFFECTS

Low order of toxicity. Excessive exposure may result in eye, skin, or respiratory irritation. High-pressure injection under skin may cause serious damage.

NFPA Hazard ID:	Health:	0	Flammability:	1	Reactivity:	0
HMIS Hazard ID:	Health:	0	Flammability:	1	Reactivity:	0

NOTE: This material should not be used for any other purpose than the intended use in Section 1 without expert advice. Health studies have shown that chemical exposure may cause potential human health risks which may vary from person to person.

SECTION 4 FIRST AID MEASURES

INHALATION

Under normal conditions of intended use, this material is not expected to be an inhalation hazard.

SKIN CONTACT

Wash contact areas with soap and water. If product is injected into or under the skin, or into any part of the body, regardless of the appearance of the wound or its size, the individual should be evaluated immediately by a physician as a surgical emergency. Even though initial symptoms from high pressure injection may be minimal or absent, early surgical treatment within the first few hours may significantly reduce the ultimate extent of injury.

EYE CONTACT

Flush thoroughly with water. If irritation occurs, get medical assistance.

INGESTION

First aid is normally not required. Seek medical attention if discomfort occurs.

SECTION 5 FIRE FIGHTING MEASURES

EXTINGUISHING MEDIA

Appropriate Extinguishing Media: Use water fog, foam, dry chemical or carbon dioxide (CO2) to extinguish flames.

Inappropriate Extinguishing Media: Straight Streams of Water

FIRE FIGHTING

Fire Fighting Instructions: Evacuate area. Prevent runoff from fire control or dilution from entering streams, sewers, or drinking water supply. Firefighters should use standard protective equipment and in enclosed spaces, self-contained breathing apparatus (SCBA). Use water spray to cool fire exposed surfaces and to protect personnel.

Hazardous Combustion Products: Aldehydes, Oxides of carbon, Smoke, Fume, Sulfur oxides, Incomplete combustion products

FLAMMABILITY PROPERTIES

Flash Point [Method]: >204C (400F) [EST. FOR OIL, ASTM D-92 (COC)]
Flammable Limits (Approximate volume % in air): LEL: N/D UEL: N/D
Autoignition Temperature: N/D

SECTION 6 ACCIDENTAL RELEASE MEASURES

NOTIFICATION PROCEDURES

In the event of a spill or accidental release, notify relevant authorities in accordance with all applicable regulations. In the event of a spill or accidental release, notify relevant authorities in accordance with all applicable regulations. US regulations require reporting releases of this material to the environment which exceed the applicable reportable quantity or oil spills which could reach any waterway including intermittent dry creeks. The National Response Center can be reached at (800)424-8802.

SPILL MANAGEMENT

Land Spill: Allow spilled material to solidify and scrape up with shovels into a suitable container for recycle or disposal. Scrape up spilled material with shovels into a suitable container for recycle or disposal.

Water Spill: Stop leak if you can do it without risk. Confine the spill immediately with booms. Warn other shipping. Skim from surface.

Water spill and land spill recommendations are based on the most likely spill scenario for this material; however, geographic conditions, wind, temperature, (and in the case of a water spill) wave and current direction and speed may greatly influence the appropriate action to be taken. For this reason, local experts should be consulted. Note: Local regulations may prescribe or limit action to be taken.

ENVIRONMENTAL PRECAUTIONS

Prevent entry into waterways, sewers, basements or confined areas.

SECTION 7 HANDLING AND STORAGE

HANDLING

Prevent small spills and leakage to avoid slip hazard.

Static Accumulator: This material is not a static accumulator.

STORAGE

Do not store in open or unlabelled containers.

SECTION 8 EXPOSURE CONTROLS / PERSONAL PROTECTION

EXPOSURE LIMIT VALUES

NOTE: Limits/standards shown for guidance only. Follow applicable regulations.

ENGINEERING CONTROLS

The level of protection and types of controls necessary will vary depending upon potential exposure conditions. Control measures to consider:

No special requirements under ordinary conditions of use and with adequate ventilation.

PERSONAL PROTECTION

Personal protective equipment selections vary based on potential exposure conditions such as applications, handling practices, concentration and ventilation. Information on the selection of protective equipment for use with this material, as provided below, is based upon intended, normal usage.

Respiratory Protection: If engineering controls do not maintain airborne contaminant concentrations at a level which is adequate to protect worker health, an approved respirator may be appropriate. Respirator selection, use, and maintenance must be in accordance with regulatory requirements, if applicable. Types of

respirators to be considered for this material include:
No protection is ordinarily required under normal conditions of use and with adequate ventilation.

For high airborne concentrations, use an approved supplied-air respirator, operated in positive pressure mode. Supplied air respirators with an escape bottle may be appropriate when oxygen levels are inadequate, gas/vapor warning properties are poor, or if air purifying filter capacity/rating may be exceeded.

Hand Protection: Any specific glove information provided is based on published literature and glove manufacturer data. Work conditions can greatly affect glove durability; inspect and replace worn or damaged gloves. The types of gloves to be considered for this material include:
No protection is ordinarily required under normal conditions of use.

Eye Protection: If contact is likely, safety glasses with side shields are recommended.

Skin and Body Protection: Any specific clothing information provided is based on published literature or manufacturer data. The types of clothing to be considered for this material include:
No skin protection is ordinarily required under normal conditions of use. In accordance with good industrial hygiene practices, precautions should be taken to avoid skin contact.

Specific Hygiene Measures: Always observe good personal hygiene measures, such as washing after handling the material and before eating, drinking, and/or smoking. Routinely wash work clothing and protective equipment to remove contaminants. Discard contaminated clothing and footwear that cannot be cleaned. Practice good housekeeping.

ENVIRONMENTAL CONTROLS
See Sections 6, 7, 12, 13.

SECTION 9 PHYSICAL AND CHEMICAL PROPERTIES

Typical physical and chemical properties are given below. Consult the Supplier in Section 1 for additional data.

GENERAL INFORMATION
Physical State: Solid
Form: Semi-fluid
Color: Brown
Odor: Characteristic
Odor Threshold: N/D

IMPORTANT HEALTH, SAFETY, AND ENVIRONMENTAL INFORMATION
Relative Density (at 15 C): 0.918
Flash Point [Method]: >204C (400F) [EST. FOR OIL, ASTM D-92 (COC)]
Flammable Limits (Approximate volume % in air): LEL: N/D UEL: N/D
Autoignition Temperature: N/D
Boiling Point / Range: > 316C (600F)
Vapor Density (Air = 1): N/D
Vapor Pressure: < 0.013 kPa (0.1 mm Hg) at 20 C
Evaporation Rate (n-butyl acetate = 1): N/D
pH: N/A
Log Pow (n-Octanol/Water Partition Coefficient): > 3.5
Solubility in Water: Negligible

Viscosity: 150 cSt (150 mm2/sec) at 40 C
Oxidizing Properties: See Sections 3, 15, 16.

OTHER INFORMATION
Freezing Point: N/D
Melting Point: N/D
DMSO Extract (mineral oil only), IP-346: < 3 %wt

NOTE: Most physical properties above are for the oil component in the material.

SECTION 10 STABILITY AND REACTIVITY

STABILITY: Material is stable under normal conditions.

CONDITIONS TO AVOID: Excessive heat. High energy sources of ignition.

MATERIALS TO AVOID: Strong oxidizers

HAZARDOUS DECOMPOSITION PRODUCTS: Material does not decompose at ambient temperatures.

HAZARDOUS POLYMERIZATION: Will not occur.

SECTION 11 TOXICOLOGICAL INFORMATION

ACUTE TOXICITY

Route of Exposure	Conclusion / Remarks
Inhalation	
Toxicity (Rat): LC50 > 5000 mg/m3	Minimally Toxic. Based on assessment of the components.
Irritation: No end point data.	Negligible hazard at ambient/normal handling temperatures. Based on assessment of the components.
Ingestion	
Toxicity (Rat): LD50 > 2000 mg/kg	Minimally Toxic. Based on test data for structurally similar materials.
Skin	
Toxicity (Rabbit): LD50 > 2000 mg/kg	Minimally Toxic. Based on test data for structurally similar materials.
Irritation (Rabbit): Data available.	Negligible irritation to skin at ambient temperatures. Based on assessment of the components.
Eye	
Irritation (Rabbit): Data available.	May cause mild, short-lasting discomfort to eyes. Based on assessment of the components.

CHRONIC/OTHER EFFECTS
Contains:
Base oil severely refined: Not carcinogenic in animal studies. Representative material passes IP-346, Modified Ames test, and/or other screening tests. Dermal and inhalation studies showed minimal effects; lung non-specific infiltration of immune cells, oil deposition and minimal granuloma formation. Not sensitizing in test animals.

Additional information is available by request.

The following ingredients are cited on the lists below: None.

--REGULATORY LISTS SEARCHED--

1 = NTP CARC	3 = IARC 1	5 = IARC 2B
2 = NTP SUS	4 = IARC 2A	6 = OSHA CARC

SECTION 12 ECOLOGICAL INFORMATION

The information given is based on data available for the material, the components of the material, and similar materials.

ECOTOXICITY

Material -- Not expected to be harmful to aquatic organisms.

MOBILITY

Base oil component -- Low solubility and floats and is expected to migrate from water to the land. Expected to partition to sediment and wastewater solids.

PERSISTENCE AND DEGRADABILITY

Biodegradation:

Base oil component -- Expected to be inherently biodegradable

BIOACCUMULATION POTENTIAL

Base oil component -- Has the potential to bioaccumulate, however metabolism or physical properties may reduce the bioconcentration or limit bioavailability.

SECTION 13 DISPOSAL CONSIDERATIONS

Disposal recommendations based on material as supplied. Disposal must be in accordance with current applicable laws and regulations, and material characteristics at time of disposal.

DISPOSAL RECOMMENDATIONS

Product is suitable for burning in an enclosed controlled burner for fuel value or disposal by supervised incineration at very high temperatures to prevent formation of undesirable combustion products.

REGULATORY DISPOSAL INFORMATION

RCRA Information: The unused product, in our opinion, is not specifically listed by the EPA as a hazardous waste (40 CFR, Part 261D), nor is it formulated to contain materials which are listed as hazardous wastes. It does not exhibit the hazardous characteristics of ignitability, corrosivity or reactivity and is not formulated with contaminants as determined by the Toxicity Characteristic Leaching Procedure (TCLP). However, used product may be regulated.

Empty Container Warning Empty Container Warning (where applicable): Empty containers may contain residue and can be dangerous. Do not attempt to refill or clean containers without proper instructions. Empty drums should be completely drained and safely stored until appropriately reconditioned or disposed. Empty containers should be taken

for recycling, recovery, or disposal through suitably qualified or licensed contractor and in accordance with governmental regulations. DO NOT PRESSURISE, CUT, WELD, BRAZE, SOLDER, DRILL, GRIND, OR EXPOSE SUCH CONTAINERS TO HEAT, FLAME, SPARKS, STATIC ELECTRICITY, OR OTHER SOURCES OF IGNITION. THEY MAY EXPLODE AND CAUSE INJURY OR DEATH.

SECTION 14 TRANSPORT INFORMATION

LAND (DOT) : Not Regulated for Land Transport

LAND (TDG) : Not Regulated for Land Transport

SEA (IMDG) : Not Regulated for Sea Transport according to IMDG-Code

AIR (IATA) : Not Regulated for Air Transport

SECTION 15 REGULATORY INFORMATION

OSHA HAZARD COMMUNICATION STANDARD: When used for its intended purposes, this material is not classified as hazardous in accordance with OSHA 29 CFR 1910.1200.

NATIONAL CHEMICAL INVENTORY LISTING: DSL, EINECS, KECI, PICCS, TSCA

Special Cases:

Inventory	Status
AICS	Restrictions Apply

EPCRA: This material contains no extremely hazardous substances.

SARA (311/312) REPORTABLE HAZARD CATEGORIES: None.

SARA (313) TOXIC RELEASE INVENTORY:

Chemical Name	CAS Number	Typical Value
ZINC DITHIOPHOSPHATE	68649-42-3	< 2.5%

The Following Ingredients are Cited on the Lists Below:*

Chemical Name	CAS Number	List Citations
DIPHENYLAMINE	122-39-4	5, 9, 18
PHOSPHORUS	7723-14-0	1, 4
ZINC DITHIOPHOSPHATE	68649-42-3	13, 15, 17

--REGULATORY LISTS SEARCHED--

1 = ACGIH ALL	6 = TSCA 5a2	11 = CA P65 REPRO	16 = MN RTK
2 = ACGIH A1	7 = TSCA 5e	12 = CA RTK	17 = NJ RTK
3 = ACGIH A2	8 = TSCA 6	13 = IL RTK	18 = PA RTK
4 = OSHA Z	9 = TSCA 12b	14 = LA RTK	19 = RI RTK

5 = TSCA 4 10 = CA P65 CARC 15 = MI 293

Code key: CARC=Carcinogen; REPRO=Reproductive

* EPA recently added new chemical substances to its TSCA Section 4 test rules. Please contact the supplier to confirm whether the ingredients in this product currently appear on a TSCA 4 or TSCA 12b list.

SECTION 16 OTHER INFORMATION

N/D = Not determined, N/A = Not applicable

THIS SAFETY DATA SHEET CONTAINS THE FOLLOWING REVISIONS:

Revision Changes:
Section 13: Empty Container Warning was modified.
Section 08: Hand Protection was modified.
Section 06: Notification Procedures was modified.
Section 02: Primary Ingredient Name was deleted.
Section 02: CAS Number was deleted.
Section 02: Concentration - Header was deleted.
Section 02: Constituents Table - Header was deleted.
Section 02: Component table was deleted.
Section 08: Exposure Limits Table was deleted.
Section 08: OEL Table - Form Column - Header was deleted.
Section 08: OEL Table - Limit Column - Header was deleted.
Section 08: OEL Table - Notation Column - Header was deleted.
Section 08: OEL Table - Source Column - Header was deleted.
Section 08: Exposure Limit Values - Header was deleted.

The information and recommendations contained herein are, to the best of ExxonMobil's knowledge and belief, accurate and reliable as of the date issued. You can contact ExxonMobil to insure that this document is the most current available from ExxonMobil. The information and recommendations are offered for the user's consideration and examination. It is the user's responsibility to satisfy itself that the product is suitable for the intended use. If buyer repackages this product, it is the user's responsibility to insure proper health, safety and other necessary information is included with and/or on the container. Appropriate warnings and safe-handling procedures should be provided to handlers and users. Alteration of this document is strictly prohibited. Except to the extent required by law, re-publication or retransmission of this document, in whole or in part, is not permitted. The term, "ExxonMobil" is used for convenience, and may include any one or more of ExxonMobil Chemical Company, Exxon Mobil Corporation, or any affiliates in which they directly or indirectly hold any interest.

Internal Use Only
MHC: 0, 0, 0, 0, 0, 0 PPEC: A

DGN: 2009904XUS (553448)

Copyright 2002 Exxon Mobil Corporation, All rights reserved

ExxonMobil

Product Name: MOBILUX EP 2
Revision Date: 21 Jul 2009
Page 1 of 9

MATERIAL SAFETY DATA SHEET

SECTION 1 PRODUCT AND COMPANY IDENTIFICATION

PRODUCT

Product Name: **MOBILUX EP 2**
Product Description: Base Oil and Additives
Product Code: 641274-00, 970717
Intended Use: Grease

COMPANY IDENTIFICATION

Supplier: **EXXON MOBIL CORPORATION**
3225 GALLOWS RD.
FAIRFAX, VA. 22037 USA

24 Hour Health Emergency	609-737-4411
Transportation Emergency Phone	800-424-9300
ExxonMobil Transportation No.	281-834-3296
Product Technical Information	800-662-4525, 800-947-9147
MSDS Internet Address	http://www.exxon.com, http://www.mobil.com

SECTION 2 COMPOSITION / INFORMATION ON INGREDIENTS

Reportable Hazardous Substance(s) or Complex Substance(s)

Name	CAS#	Concentration*
ZINC DITHIOPHOSPHATE	68649-42-3	< 2.5%

* All concentrations are percent by weight unless material is a gas. Gas concentrations are in percent by volume.

SECTION 3 HAZARDS IDENTIFICATION

This material is not considered to be hazardous according to regulatory guidelines (see (M)SDS Section 15).

POTENTIAL HEALTH EFFECTS

Low order of toxicity. Excessive exposure may result in eye, skin, or respiratory irritation. High-pressure injection under skin may cause serious damage.

NFPA Hazard ID:	Health:	0	Flammability:	1	Reactivity:	0
HMIS Hazard ID:	Health:	0	Flammability:	1	Reactivity:	0

NOTE: This material should not be used for any other purpose than the intended use in Section 1 without expert advice. Health studies have shown that chemical exposure may cause potential human health risks which may vary from person to person.

SECTION 4 FIRST AID MEASURES

Inhalation
Under normal conditions of intended use, this material is not expected to be an inhalation hazard.

SKIN CONTACT
Wash contact areas with soap and water. If product is injected into or under the skin, or into any part of the body, regardless of the appearance of the wound or its size, the individual should be evaluated immediately by a physician as a surgical emergency. Even though initial symptoms from high pressure injection may be minimal or absent, early surgical treatment within the first few hours may significantly reduce the ultimate extent of injury.

EYE CONTACT
Flush thoroughly with water. If irritation occurs, get medical assistance.

Ingestion
First aid is normally not required. Seek medical attention if discomfort occurs.

SECTION 5 FIRE FIGHTING MEASURES

EXTINGUISHING MEDIA
Appropriate Extinguishing Media: Use water fog, foam, dry chemical or carbon dioxide (CO2) to extinguish flames.

Inappropriate Extinguishing Media: Straight Streams of Water

FIRE FIGHTING
Fire Fighting Instructions: Evacuate area. Prevent runoff from fire control or dilution from entering streams, sewers, or drinking water supply. Firefighters should use standard protective equipment and in enclosed spaces, self-contained breathing apparatus (SCBA). Use water spray to cool fire exposed surfaces and to protect personnel.

Hazardous Combustion Products: Smoke, Fume, Aldehydes, Sulfur Oxides, Incomplete combustion products, Oxides of carbon

FLAMMABILITY PROPERTIES
Flash Point [Method]: >204C (400F) [EST. FOR OIL, ASTM D-92 (COC)]
Flammable Limits (Approximate volume % in air): LEL: N/D UEL: N/D
Autoignition Temperature: N/D

SECTION 6 ACCIDENTAL RELEASE MEASURES

NOTIFICATION PROCEDURES
In the event of a spill or accidental release, notify relevant authorities in accordance with all applicable regulations. US regulations require reporting releases of this material to the environment which exceed the applicable reportable quantity or oil spills which could reach any waterway including intermittent dry creeks. The National Response Center can be reached at (800)424-8802.

SPILL MANAGEMENT

Land Spill: Allow spilled material to solidify and scrape up with shovels into a suitable container for recycle or disposal. Scrape up spilled material with shovels into a suitable container for recycle or disposal.

Water Spill: Stop leak if you can do it without risk. Confine the spill immediately with booms. Warn other shipping. Skim from surface.

Water spill and land spill recommendations are based on the most likely spill scenario for this material; however, geographic conditions, wind, temperature, (and in the case of a water spill) wave and current direction and speed may greatly influence the appropriate action to be taken. For this reason, local experts should be consulted. Note: Local regulations may prescribe or limit action to be taken.

ENVIRONMENTAL PRECAUTIONS

Prevent entry into waterways, sewers, basements or confined areas.

SECTION 7 HANDLING AND STORAGE

HANDLING

Prevent small spills and leakage to avoid slip hazard.

Static Accumulator: This material is not a static accumulator.

STORAGE

Do not store in open or unlabelled containers.

SECTION 8 EXPOSURE CONTROLS / PERSONAL PROTECTION

EXPOSURE LIMIT VALUES

NOTE: Limits/standards shown for guidance only. Follow applicable regulations.

ENGINEERING CONTROLS

The level of protection and types of controls necessary will vary depending upon potential exposure conditions. Control measures to consider:

No special requirements under ordinary conditions of use and with adequate ventilation.

PERSONAL PROTECTION

Personal protective equipment selections vary based on potential exposure conditions such as applications, handling practices, concentration and ventilation. Information on the selection of protective equipment for use with this material, as provided below, is based upon intended, normal usage.

Respiratory Protection: If engineering controls do not maintain airborne contaminant concentrations at a level which is adequate to protect worker health, an approved respirator may be appropriate. Respirator selection, use, and maintenance must be in accordance with regulatory requirements, if applicable. Types of respirators to be considered for this material include:

No protection is ordinarily required under normal conditions of use and with adequate ventilation.

For high airborne concentrations, use an approved supplied-air respirator, operated in positive pressure mode. Supplied air respirators with an escape bottle may be appropriate when oxygen levels are inadequate, gas/vapor warning properties are poor, or if air purifying filter capacity/rating may be exceeded.

Hand Protection: Any specific glove information provided is based on published literature and glove manufacturer data. Glove suitability and breakthrough time will differ depending on the specific use conditions. Contact the glove manufacturer for specific advice on glove selection and breakthrough times for your use conditions. Inspect and replace worn or damaged gloves. The types of gloves to be considered for this material include:

No protection is ordinarily required under normal conditions of use.

Eye Protection: If contact is likely, safety glasses with side shields are recommended.

Skin and Body Protection: Any specific clothing information provided is based on published literature or manufacturer data. The types of clothing to be considered for this material include:

No skin protection is ordinarily required under normal conditions of use. In accordance with good industrial hygiene practices, precautions should be taken to avoid skin contact.

Specific Hygiene Measures: Always observe good personal hygiene measures, such as washing after handling the material and before eating, drinking, and/or smoking. Routinely wash work clothing and protective equipment to remove contaminants. Discard contaminated clothing and footwear that cannot be cleaned. Practice good housekeeping.

ENVIRONMENTAL CONTROLS

See Sections 6, 7, 12, 13.

SECTION 9 PHYSICAL AND CHEMICAL PROPERTIES

Typical physical and chemical properties are given below. Consult the Supplier in Section 1 for additional data.

GENERAL INFORMATION

Physical State: Solid
Form: semi-fluid
Color: brown
Odor: Characteristic
Odor Threshold: N/D

IMPORTANT HEALTH, SAFETY, AND ENVIRONMENTAL INFORMATION

Relative Density (at 15 C): 0.92
Flash Point [Method]: >204C (400F) [EST. FOR OIL, ASTM D-92 (COC)]
Flammable Limits (Approximate volume % in air): LEL: N/D UEL: N/D
Autoignition Temperature: N/D
Boiling Point / Range: > 316C (600F)
Vapor Density (Air = 1): N/D
Vapor Pressure: < 0.013 kPa (0.1 mm Hg) at 20 C
Evaporation Rate (N-Butyl Acetate = 1): N/D
pH: N/A
Log Pow (n-Octanol/Water Partition Coefficient): > 3.5

Solubility in Water: Negligible
Viscosity: 150 cSt (150 mm²/sec) at 40 C
Oxidizing Properties: See Sections 3, 15, 16.

OTHER INFORMATION
Freezing Point: N/D
Melting Point: N/D
DMSO Extract (mineral oil only), IP-346: < 3 %wt

NOTE: Most physical properties above are for the oil component in the material.

SECTION 10 STABILITY AND REACTIVITY

STABILITY: Material is stable under normal conditions.

CONDITIONS TO AVOID: Excessive heat. High energy sources of ignition.

MATERIALS TO AVOID: Strong oxidizers

HAZARDOUS DECOMPOSITION PRODUCTS: Material does not decompose at ambient temperatures.

HAZARDOUS POLYMERIZATION: Will not occur.

SECTION 11 TOXICOLOGICAL INFORMATION

ACUTE TOXICITY

Route of Exposure	Conclusion / Remarks
Inhalation	
Toxicity: No end point data.	Minimally Toxic. Based on assessment of the components.
Irritation: No end point data.	Negligible hazard at ambient/normal handling temperatures. Based on assessment of the components.
Ingestion	
Toxicity (Rat): LD50 > 5000 mg/kg	Minimally Toxic. Based on test data for structurally similar materials.
Skin	
Toxicity (Rabbit): LD50 > 5000 mg/kg	Minimally Toxic. Based on test data for structurally similar materials.
Irritation (Rabbit): Data available.	Negligible irritation to skin at ambient temperatures. Based on assessment of the components.
Eye	
Irritation (Rabbit): Data available.	May cause mild, short-lasting discomfort to eyes. Based on assessment of the components.

CHRONIC/OTHER EFFECTS
Contains:
Base oil severely refined: Not carcinogenic in animal studies. Representative material passes IP-346, Modified Ames test, and/or other screening tests. Dermal and inhalation studies showed minimal effects; lung non-specific infiltration of immune cells, oil deposition and minimal granuloma formation. Not sensitizing in test animals.

Additional information is available by request.

The following ingredients are cited on the lists below: None.

--REGULATORY LISTS SEARCHED--

1 = NTP CARC	3 = IARC 1	5 = IARC 2B
2 = NTP SUS	4 = IARC 2A	6 = OSHA CARC

SECTION 12 ECOLOGICAL INFORMATION

The information given is based on data available for the material, the components of the material, and similar materials.

ECOTOXICITY

Material -- Not expected to be harmful to aquatic organisms.

MOBILITY

Base oil component -- Low solubility and floats and is expected to migrate from water to the land. Expected to partition to sediment and wastewater solids.

PERSISTENCE AND DEGRADABILITY

Biodegradation:

Base oil component -- Expected to be inherently biodegradable

BIOACCUMULATION POTENTIAL

Base oil component -- Has the potential to bioaccumulate, however metabolism or physical properties may reduce the bioconcentration or limit bioavailability.

SECTION 13 DISPOSAL CONSIDERATIONS

Disposal recommendations based on material as supplied. Disposal must be in accordance with current applicable laws and regulations, and material characteristics at time of disposal.

DISPOSAL RECOMMENDATIONS

Product is suitable for burning in an enclosed controlled burner for fuel value or disposal by supervised incineration at very high temperatures to prevent formation of undesirable combustion products.

REGULATORY DISPOSAL INFORMATION

RCRA Information: The unused product, in our opinion, is not specifically listed by the EPA as a hazardous waste (40 CFR, Part 261D), nor is it formulated to contain materials which are listed as hazardous wastes. It does not exhibit the hazardous characteristics of ignitability, corrosivity or reactivity and is not formulated with contaminants as determined by the Toxicity Characteristic Leaching Procedure (TCLP). However, used product may be regulated.

Empty Container Warning Empty Container Warning (where applicable): Empty containers may contain residue and can be dangerous. Do not attempt to refill or clean containers without proper instructions. Empty drums should be

completely drained and safely stored until appropriately reconditioned or disposed. Empty containers should be taken for recycling, recovery, or disposal through suitably qualified or licensed contractor and in accordance with governmental regulations. DO NOT PRESSURISE, CUT, WELD, BRAZE, SOLDER, DRILL, GRIND, OR EXPOSE SUCH CONTAINERS TO HEAT, FLAME, SPARKS, STATIC ELECTRICITY, OR OTHER SOURCES OF IGNITION. THEY MAY EXPLODE AND CAUSE INJURY OR DEATH.

SECTION 14 TRANSPORT INFORMATION

LAND (DOT) : Not Regulated for Land Transport

LAND (TDG) : Not Regulated for Land Transport

SEA (IMDG) : Not Regulated for Sea Transport according to IMDG-Code

AIR (IATA) : Not Regulated for Air Transport

SECTION 15 REGULATORY INFORMATION

OSHA HAZARD COMMUNICATION STANDARD: When used for its intended purposes, this material is not classified as hazardous in accordance with OSHA 29 CFR 1910.1200.

NATIONAL CHEMICAL INVENTORY LISTING: AICS, IECSC, DSL, EINECS, KECI, PICCS, TSCA

EPCRA: This material contains no extremely hazardous substances.

SARA (311/312) REPORTABLE HAZARD CATEGORIES: None.

SARA (313) TOXIC RELEASE INVENTORY:

Chemical Name	CAS Number	Typical Value
ZINC DITHIOPHOSPHATE	68649-42-3	< 2.5%

The following ingredients are cited on the lists below:

Chemical Name	CAS Number	List Citations
DIPHENYLAMINE	122-39-4	5, 18
ZINC DITHIOPHOSPHATE	68649-42-3	13, 15, 17

--REGULATORY LISTS SEARCHED--

1 = ACGIH ALL	6 = TSCA 5a2	11 = CA P65 REPRO	16 = MN RTK
2 = ACGIH A1	7 = TSCA 5e	12 = CA RTK	17 = NJ RTK
3 = ACGIH A2	8 = TSCA 6	13 = IL RTK	18 = PA RTK
4 = OSHA Z	9 = TSCA 12b	14 = LA RTK	19 = RI RTK
5 = TSCA 4	10 = CA P65 CARC	15 = MI 293	

Code key: CARC=Carcinogen; REPRO=Reproductive

SECTION 16 OTHER INFORMATION

N/D = Not determined, N/A = Not applicable

THIS SAFETY DATA SHEET CONTAINS THE FOLLOWING REVISIONS:

Revision Changes:
Section 04: First Aid Inhalation - Header was modified.
Section 04: First Aid Ingestion - Header was modified.
Section 04: First Aid Inhalation was modified.
Section 06: Notification Procedures - Header was modified.
Section 10 Stability and Reactivity - Header was modified.
Section 13: Disposal Recommendations - Note was modified.
Section 13: Empty Container Warning was modified.
Section 09: Physical State was modified.
Section 09: Color was modified.
Section 09: Boiling Point C(F) was modified.
Section 09: Evaporation Rate - Header was modified.
Section 08: Personal Protection was modified.
Section 08: Hand Protection was modified.
Section 09: Vapor Pressure was modified.
Section 07: Handling and Storage - Handling was modified.
Hazard Identification: Health Hazards was modified.
Section 11: Dermal Lethality Test Data was modified.
Section 11: Oral Lethality Test Data was modified.
Section 11: Inhalation Lethality Test Data was modified.
Section 05: Hazardous Combustion Products was modified.
Section 06: Accidental Release - Spill Management - Land was modified.
Section 06: Accidental Release - Spill Management - Water was modified.
Section 09: Relative Density - Header was modified.
Section 09: Flash Point C(F) was modified.
Section 09: Viscosity was modified.
Section 15: List Citations Table was modified.
Section 15: List Citation Table - Header was modified.
Section 11: Skin Irritation Conclusion was modified.
Section 11: Inhalation Lethality Test Comment was modified.
Section 15: National Chemical Inventory Listing was modified.
Section 16: Code to MHCs was modified.
Section 15: OSHA Hazard Communication Standard was modified.
Hazard Identification: OSHA - May be Hazardous Statement was modified.
Section 06: Notification Procedures was modified.
Section 01: Company Contact Methods Sorted by Priority was modified.
Section 08: Exposure Limit Values - Header was added.
Section 08: Exposure limits/standards was deleted.
Section 15: Special Cases - Header was deleted.
Section 15: Special Cases Table was deleted.
Section 15: Inventory - Header was deleted.
Section 15: Status - Header was deleted.

Product Name: MOBILUX EP 2
Revision Date: 21 Jul 2009
Page 9 of 9

The information and recommendations contained herein are, to the best of ExxonMobil's knowledge and belief, accurate and reliable as of the date issued. You can contact ExxonMobil to insure that this document is the most current available from ExxonMobil. The information and recommendations are offered for the user's consideration and examination. It is the user's responsibility to satisfy itself that the product is suitable for the intended use. If buyer repackages this product, it is the user's responsibility to insure proper health, safety and other necessary information is included with and/or on the container. Appropriate warnings and safe-handling procedures should be provided to handlers and users. Alteration of this document is strictly prohibited. Except to the extent required by law, re-publication or retransmission of this document, in whole or in part, is not permitted. The term, "ExxonMobil" is used for convenience, and may include any one or more of ExxonMobil Chemical Company, Exxon Mobil Corporation, or any affiliates in which they directly or indirectly hold any interest.

Internal Use Only
MHC: 0B, 0B, 0, 0, 0, 0 PPEC: A

DGN: 2009877XUS (539035)

Copyright 2002 Exxon Mobil Corporation, All rights reserved

11.5.2 MOBIL UNIREX N2

Mobil

UNIREX N

High Temperature Bearing Grease

Product Description

UNIREX N greases are premium-quality, lithium-complex products suitable for high-temperature service in rolling-element bearings. These versatile greases can be used in a wide range of industrial applications and are particularly recommended for electric-motor lubrication.

Unirex N 2 in an NLGI No. 2 grade and is preferred in most cases for application by hand packing or by grease gun. UNIREX N 3 is an NLGI No. 3 grade often used for special applications such as sealed-for-life electric motor bearings, vertically mounted bearings, and higher-speed applications. UNIREX N greases are not intended to be used under extreme pressure conditions where extra anti-welding properties are required.

UNIREX N 2 meets the requirements of Lubricating Grease DIN 51825 - K2N - 30L and ISO L-XBDHA 2.

UNIREX N 3 meets the requirements of Lubricating Grease DIN 51825 - K3N - 20 and ISO L-XBDHA 3.

Features and Benefits

Unirex N greases exhibit excellent high and low temperature performance, resistance to water and corrosion, and long service life in a range of bearing applications.

Features	Advantages and Potential Benefits
Excellent high-temperature performance	Lithium-complex thickener resists softening / running out of bearings at temperatures up to 190°C
Outstanding grease life	Laboratory bearing rig tests show outstanding continuous lubrication performance at bearing temperatures of up to 140°C
Very good low-temperature characteristics	Start-up power requirements are low at temperatures down to at least -20°C and may be suitable at temperatures down to -30°C in those applications where torque is not limiting. Meets DIN 51825 low temperature torque requirements at -20°C.
Excellent mechanical stability	Exhibits excellent resistance to softening due to mechanical working
Excellent water and corrosion resistance	Resists water washout and protects bearings against corrosion
Excellent performance in high-speed applications	Channelling characteristics provide excellent performance in high-speed deep-groove ball bearings. Unirex N3 is recommended where DmN (mean bearing diameter X rpm) exceeds 360,000.

Applications

Because of their outstanding oxidation stability and resistance to softening at high temperatures, UNIREX N greases may be used in many applications such as oven-conveyor bearings, dryer-roller bearings, rotary steam joints, kiln-car bearings, induced-draft fan bearings, and equipment adjacent to high radiant heat such as ovens, soaking pits, etc.

UNIREX N 2 is an NLGI No. 2 grade and is preferred in most cases for application by hand-packing or by grease gun. UNIREX N 2 is recommended for the lubrication of electric motors. It is suitable for NEMA (National Electric Manufacturer's Association) Insulation Class A, B, and F motors.

UNIREX N 3 is an NLGI No. 3 grade and is used for special applications such as sealed-for-life bearings, vertically-mounted bearings, and higher-speed bearings.

Most of the uses for UNIREX N involve manual methods of application. Although UNIREX N 2 is suitable for use in automatic centralized systems, equipment served by these systems would normally not require the long-life properties of UNIREX N, since one of the functions of automatic systems is to replenish the lubricant at relatively short time intervals. UNIREX N 3 should not be used in such systems.

Regardless of the level of oxidation stability of a grease, an increase in temperature will affect the rate of oxidation and thermal deterioration. Consequently, more frequent relubrication is required at higher temperatures. For UNIREX N greases, it is recommended that relubrication intervals not exceed one week of continuous service at 175°C. As temperatures approach 190°C, relubrication intervals should be daily or every shift. Relubrication intervals will, of course, vary widely with the type of service and should be based primarily on the recommendations of the motor manufacturer.

Specifications and Approvals

Unirex N Series meets or exceeds the requirements of:	2	3
DIN 51825: (2004-06)	K2N-30L	K3N-20

Typical Properties

UNIREX N	2	3
Thickener Type	Lithium-complex	Lithium-complex
NLGI Grade	2	3
Color, Visual	Green	Green
Texture	Smooth, Buttery	Smooth, Buttery
Dropping Point, ASTM D 2265, °C	230	230
Base Oil Viscosity, ASTM D 445, cSt @ 40°C	115	115
Base Oil Viscosity Index, ASTM D 2270	95	95
Penetration, worked 60 stokes, ASTM D 217, mm/10	280	235
Penetration change after 100,000 strokes, ASTM D 217, mm/10	25	30
Oil Separation, ASTM D 6184, mass % @100°C / 30 hrs	1.5	0.6
EMCOR Corrosion , ASTM D 6138 (Distilled Water), rating	0,1	0,1
Water Washout @ 79°C, ASTM D 1264, mass %	3.7	3.5
Grease life, DIN 51821 (FE-9), L50 hrs @ 140°C	283	448

Health and Safety

Based on available information, this product is not expected to produce adverse effects on health when used for the intended application and the recommendations provided in the Material Safety Data Sheet (MSDS) are followed. MSDS's are available upon request through your sales contract office, or via the Internet. This product should not be used for purposes other than its intended use. If disposing of used product, take care to protect the environment.

Mobil, the Mobil logotype and the Pegasus design are registered trademarks of Exxon Mobil Corporation, or one of its subsidiaries.

12-2010

Exxon Mobil Corporation

ExxonMobil

Product Name: UNIREX N 2
Revision Date: 07 Jul 2009
Page 1 of 8

MATERIAL SAFETY DATA SHEET

SECTION 1 PRODUCT AND COMPANY IDENTIFICATION

PRODUCT

Product Name: **UNIREX N 2**
Product Description: Base Oil and Additives
Product Code: 2015A0207220, 644351-00, 97N713
Intended Use: Grease

COMPANY IDENTIFICATION

Supplier: **EXXON MOBIL CORPORATION**
3225 GALLOWS RD.
FAIRFAX, VA. 22037 USA

24 Hour Health Emergency	609-737-4411
Transportation Emergency Phone	800-424-9300
ExxonMobil Transportation No.	281-834-3296
Product Technical Information	800-662-4525, 800-947-9147
MSDS Internet Address	http://www.exxon.com, http://www.mobil.com

SECTION 2 COMPOSITION / INFORMATION ON INGREDIENTS

No Reportable Hazardous Substance(s) or Complex Substance(s).

SECTION 3 HAZARDS IDENTIFICATION

This material is not considered to be hazardous according to regulatory guidelines (see (M)SDS Section 15).

POTENTIAL HEALTH EFFECTS

Low order of toxicity. Excessive exposure may result in eye, skin, or respiratory irritation. High-pressure injection under skin may cause serious damage.

NFPA Hazard ID:	Health:	0	Flammability:	1	Reactivity:	0
HMIS Hazard ID:	Health:	0	Flammability:	1	Reactivity:	0

NOTE: This material should not be used for any other purpose than the intended use in Section 1 without expert advice. Health studies have shown that chemical exposure may cause potential human health risks which may vary from person to person.

SECTION 4 FIRST AID MEASURES

Inhalation

Under normal conditions of intended use, this material is not expected to be an inhalation hazard.

SKIN CONTACT

Wash contact areas with soap and water. If product is injected into or under the skin, or into any part of the body, regardless of the appearance of the wound or its size, the individual should be evaluated immediately by a physician as a surgical emergency. Even though initial symptoms from high pressure injection may be minimal or absent, early surgical treatment within the first few hours may significantly reduce the ultimate extent of injury.

EYE CONTACT

Flush thoroughly with water. If irritation occurs, get medical assistance.

Ingestion

First aid is normally not required. Seek medical attention if discomfort occurs.

SECTION 5 FIRE FIGHTING MEASURES

EXTINGUISHING MEDIA

Appropriate Extinguishing Media: Use water fog, foam, dry chemical or carbon dioxide (CO2) to extinguish flames.

Inappropriate Extinguishing Media: Straight Streams of Water

FIRE FIGHTING

Fire Fighting Instructions: Evacuate area. Prevent runoff from fire control or dilution from entering streams, sewers, or drinking water supply. Firefighters should use standard protective equipment and in enclosed spaces, self-contained breathing apparatus (SCBA). Use water spray to cool fire exposed surfaces and to protect personnel.

Hazardous Combustion Products: Smoke, Fume, Aldehydes, Sulfur Oxides, Incomplete combustion products, Oxides of carbon

FLAMMABILITY PROPERTIES

Flash Point [Method]: >200C (392F) [EST. FOR OIL, ASTM D-92 (COC)]
Flammable Limits (Approximate volume % in air): LEL: N/D UEL: N/D
Autoignition Temperature: N/D

SECTION 6 ACCIDENTAL RELEASE MEASURES

NOTIFICATION PROCEDURES

In the event of a spill or accidental release, notify relevant authorities in accordance with all applicable regulations. US regulations require reporting releases of this material to the environment which exceed the applicable reportable quantity or oil spills which could reach any waterway including intermittent dry creeks. The National Response Center can be reached at (800)424-8802.

SPILL MANAGEMENT

Land Spill: Scrape up spilled material with shovels into a suitable container for recycle or disposal.

Water Spill: Stop leak if you can do it without risk. Confine the spill immediately with booms. Warn other

shipping. Skim from surface.

Water spill and land spill recommendations are based on the most likely spill scenario for this material; however, geographic conditions, wind, temperature, (and in the case of a water spill) wave and current direction and speed may greatly influence the appropriate action to be taken. For this reason, local experts should be consulted. Note: Local regulations may prescribe or limit action to be taken.

ENVIRONMENTAL PRECAUTIONS

Prevent entry into waterways, sewers, basements or confined areas.

SECTION 7 HANDLING AND STORAGE

HANDLING

Prevent small spills and leakage to avoid slip hazard.

Static Accumulator: This material is not a static accumulator.

STORAGE

Do not store in open or unlabelled containers.

SECTION 8 EXPOSURE CONTROLS / PERSONAL PROTECTION

NOTE: Limits/standards shown for guidance only. Follow applicable regulations.

ENGINEERING CONTROLS

The level of protection and types of controls necessary will vary depending upon potential exposure conditions. Control measures to consider:

No special requirements under ordinary conditions of use and with adequate ventilation.

PERSONAL PROTECTION

Personal protective equipment selections vary based on potential exposure conditions such as applications, handling practices, concentration and ventilation. Information on the selection of protective equipment for use with this material, as provided below, is based upon intended, normal usage.

Respiratory Protection: If engineering controls do not maintain airborne contaminant concentrations at a level which is adequate to protect worker health, an approved respirator may be appropriate. Respirator selection, use, and maintenance must be in accordance with regulatory requirements, if applicable. Types of respirators to be considered for this material include:

No protection is ordinarily required under normal conditions of use and with adequate ventilation.

For high airborne concentrations, use an approved supplied-air respirator, operated in positive pressure mode. Supplied air respirators with an escape bottle may be appropriate when oxygen levels are inadequate, gas/vapor warning properties are poor, or if air purifying filter capacity/rating may be exceeded.

Hand Protection: Any specific glove information provided is based on published literature and glove manufacturer data. Glove suitability and breakthrough time will differ depending on the specific use conditions. Contact the glove manufacturer for specific advice on glove selection and breakthrough times for your use conditions. Inspect and replace worn or damaged gloves. The types of gloves to be considered for this material include:

No protection is ordinarily required under normal conditions of use.

Eye Protection: If contact is likely, safety glasses with side shields are recommended.

Skin and Body Protection: Any specific clothing information provided is based on published literature or manufacturer data. The types of clothing to be considered for this material include:

No skin protection is ordinarily required under normal conditions of use. In accordance with good industrial hygiene practices, precautions should be taken to avoid skin contact.

Specific Hygiene Measures: Always observe good personal hygiene measures, such as washing after handling the material and before eating, drinking, and/or smoking. Routinely wash work clothing and protective equipment to remove contaminants. Discard contaminated clothing and footwear that cannot be cleaned. Practice good housekeeping.

ENVIRONMENTAL CONTROLS

See Sections 6, 7, 12, 13.

SECTION 9 PHYSICAL AND CHEMICAL PROPERTIES

Typical physical and chemical properties are given below. Consult the Supplier in Section 1 for additional data.

GENERAL INFORMATION

Physical State: Solid
Form: semi-fluid
Color: green
Odor: Characteristic
Odor Threshold: N/D

IMPORTANT HEALTH, SAFETY, AND ENVIRONMENTAL INFORMATION

Relative Density (at 15 C): 0.93
Flash Point [Method]: >200C (392F) [EST. FOR OIL, ASTM D-92 (COC)]
Flammable Limits (Approximate volume % in air): LEL: N/D UEL: N/D
Autoignition Temperature: N/D
Boiling Point / Range: N/D
Vapor Density (Air = 1): N/D
Vapor Pressure: < 0.013 kPa (0.1 mm Hg) at 20 C
Evaporation Rate (N-Butyl Acetate = 1): N/D
pH: N/A
Log Pow (n-Octanol/Water Partition Coefficient): N/D
Solubility in Water: Negligible
Viscosity: 113 cSt (113 mm²/sec) at 40 C [Base oil]
Oxidizing Properties: See Sections 3, 15, 16.

OTHER INFORMATION

Freezing Point: N/D
Melting Point: >219°C (426°F)
DMSO Extract (mineral oil only), IP-346: < 3 %wt

NOTE: Most physical properties above are for the oil component in the material.

SECTION 10 STABILITY AND REACTIVITY

STABILITY: Material is stable under normal conditions.

CONDITIONS TO AVOID: Excessive heat. High energy sources of ignition.

MATERIALS TO AVOID: Strong oxidizers

HAZARDOUS DECOMPOSITION PRODUCTS: Material does not decompose at ambient temperatures.

HAZARDOUS POLYMERIZATION: Will not occur.

SECTION 11 TOXICOLOGICAL INFORMATION

ACUTE TOXICITY

Route of Exposure	Conclusion / Remarks
Inhalation	
Toxicity: No end point data.	Minimally Toxic. Based on assessment of the components.
Irritation: No end point data.	Negligible hazard at ambient/normal handling temperatures. Based on assessment of the components.
Ingestion	
Toxicity (Rat): LD50 > 5000 mg/kg	Minimally Toxic. Based on test data for structurally similar materials.
Skin	
Toxicity (Rabbit): LD50 > 5000 mg/kg	Minimally Toxic. Based on test data for structurally similar materials.
Irritation (Rabbit): Data available.	Negligible irritation to skin at ambient temperatures. Based on assessment of the components.
Eye	
Irritation (Rabbit): Data available.	May cause mild, short-lasting discomfort to eyes. Based on assessment of the components.

CHRONIC/OTHER EFFECTS

For the product itself:

Component concentrations in this formulation would not be expected to cause skin sensitization, based on tests of the components or similar formulations.

Contains:

Base oil severely refined: Not carcinogenic in animal studies. Representative material passes IP-346, Modified Ames test, and/or other screening tests. Dermal and inhalation studies showed minimal effects; lung non-specific infiltration of immune cells, oil deposition and minimal granuloma formation. Not sensitizing in test animals.

Additional information is available by request.

The following ingredients are cited on the lists below: None.

--REGULATORY LISTS SEARCHED--

1 = NTP CARC	3 = IARC 1	5 = IARC 2B
2 = NTP SUS	4 = IARC 2A	6 = OSHA CARC

SECTION 12 ECOLOGICAL INFORMATION

The information given is based on data available for the material, the components of the material, and similar materials.

ECOTOXICITY

Material -- Not expected to be harmful to aquatic organisms.

MOBILITY

Base oil component -- Low solubility and floats and is expected to migrate from water to the land. Expected to partition to sediment and wastewater solids.

PERSISTENCE AND DEGRADABILITY

Biodegradation:

Base oil component -- Expected to be inherently biodegradable

BIOACCUMULATION POTENTIAL

Base oil component -- Has the potential to bioaccumulate, however metabolism or physical properties may reduce the bioconcentration or limit bioavailability.

SECTION 13 DISPOSAL CONSIDERATIONS

Disposal recommendations based on material as supplied. Disposal must be in accordance with current applicable laws and regulations, and material characteristics at time of disposal.

DISPOSAL RECOMMENDATIONS

Product is suitable for burning in an enclosed controlled burner for fuel value or disposal by supervised incineration at very high temperatures to prevent formation of undesirable combustion products.

REGULATORY DISPOSAL INFORMATION

RCRA Information: Disposal of unused product may be subject to RCRA regulations (40 CFR 261). Disposal of the used product may also be regulated due to ignitability, corrosivity, reactivity or toxicity as determined by the Toxicity Characteristic Leaching Procedure (TCLP). Potential RCRA characteristics:
TCLP (BARIUM)

Empty Container Warning Empty Container Warning (where applicable): Empty containers may contain residue and can be dangerous. Do not attempt to refill or clean containers without proper instructions. Empty drums should be completely drained and safely stored until appropriately reconditioned or disposed. Empty containers should be taken for recycling, recovery, or disposal through suitably qualified or licensed contractor and in accordance with governmental regulations. DO NOT PRESSURISE, CUT, WELD, BRAZE, SOLDER, DRILL, GRIND, OR EXPOSE

SUCH CONTAINERS TO HEAT, FLAME, SPARKS, STATIC ELECTRICITY, OR OTHER SOURCES OF IGNITION. THEY MAY EXPLODE AND CAUSE INJURY OR DEATH.

SECTION 14 TRANSPORT INFORMATION

LAND (DOT) : Not Regulated for Land Transport

LAND (TDG) : Not Regulated for Land Transport

SEA (IMDG) : Not Regulated for Sea Transport according to IMDG-Code

AIR (IATA) : Not Regulated for Air Transport

SECTION 15 REGULATORY INFORMATION

OSHA HAZARD COMMUNICATION STANDARD: When used for its intended purposes, this material is not classified as hazardous in accordance with OSHA 29 CFR 1910.1200.

NATIONAL CHEMICAL INVENTORY LISTING: IECSC, DSL, EINECS, TSCA
Special Cases:

Inventory	Status
KECI	Restrictions Apply

EPCRA: This material contains no extremely hazardous substances.

SARA (311/312) REPORTABLE HAZARD CATEGORIES: None.

SARA (313) TOXIC RELEASE INVENTORY: This material contains no chemicals subject to the supplier notification requirements of the SARA 313 Toxic Release Program.

The following ingredients are cited on the lists below:

Chemical Name	CAS Number	List Citations
DIPHENYLAMINE	122-39-4	5

--REGULATORY LISTS SEARCHED--

1 = ACGIH ALL	6 = TSCA 5a2	11 = CA P65 REPRO	16 = MN RTK
2 = ACGIH A1	7 = TSCA 5e	12 = CA RTK	17 = NJ RTK
3 = ACGIH A2	8 = TSCA 6	13 = IL RTK	18 = PA RTK
4 = OSHA Z	9 = TSCA 12b	14 = LA RTK	19 = RI RTK
5 = TSCA 4	10 = CA P65 CARC	15 = MI 293	

Code key: CARC=Carcinogen; REPRO=Reproductive

SECTION 16 OTHER INFORMATION

N/D = Not determined, N/A = Not applicable

THIS SAFETY DATA SHEET CONTAINS THE FOLLOWING REVISIONS:

Revision Changes:
Section 04: First Aid Inhalation - Header was modified.
Section 04: First Aid Ingestion - Header was modified.
Section 10 Stability and Reactivity - Header was modified.
Section 13: Disposal Recommendations - Note was modified.
Section 09: Physical State was modified.
Section 09: Color was modified.
Section 09: Evaporation Rate - Header was modified.
Section 08: Personal Protection was modified.
Section 07: Handling and Storage - Handling was modified.
Section 05: Hazardous Combustion Products was modified.
Section 09: Relative Density - Header was modified.
Section 09: Viscosity was modified.
Section 15: List Citation Table - Header was modified.
Section 15: National Chemical Inventory Listing was modified.
Section 15: OSHA Hazard Communication Standard was modified.
Hazard Identification: OSHA - May be Hazardous Statement was modified.
Section 08: Exposure limits/standards was deleted.

The information and recommendations contained herein are, to the best of ExxonMobil's knowledge and belief, accurate and reliable as of the date issued. You can contact ExxonMobil to insure that this document is the most current available from ExxonMobil. The information and recommendations are offered for the user's consideration and examination. It is the user's responsibility to satisfy itself that the product is suitable for the intended use. If buyer repackages this product, it is the user's responsibility to insure proper health, safety and other necessary information is included with and/or on the container. Appropriate warnings and safe-handling procedures should be provided to handlers and users. Alteration of this document is strictly prohibited. Except to the extent required by law, re-publication or retransmission of this document, in whole or in part, is not permitted. The term, "ExxonMobil" is used for convenience, and may include any one or more of ExxonMobil Chemical Company, Exxon Mobil Corporation, or any affiliates in which they directly or indirectly hold any interest.

Internal Use Only
MHC: 0B, 0B, 0, 0, 0, 0 PPEC: A

DGN: 2031341XUS (553418)

Copyright 2002 Exxon Mobil Corporation, All rights reserved

11.5.3 MOBIL MOBILGEAR 600 XP 68, 100, AND 150

Mobil

Mobilgear 600 XP Series

Gear Oil

Product Description

The Mobilgear 600 XP Series are extra high performance gear oils having outstanding extreme pressure characteristics and load-carrying properties, intended for use in all types of enclosed gear drives with circulation or splash lubrication systems. Mobilgear 600 XP Series is designed to stay ahead of the changing needs of gearbox technology. Gearbox technology design trends are towards smaller units with similar power throughput. This increase in power density places increased demands on gear oils. Mobilgear 600 XP Series oils are formulated to meet the stress by providing extra protection for gears, bearings and seals.

Mobilgear 600 XP Series is formulated to protect gear teeth from wear at its earliest stages. Microscopic wear, called micropitting, can lead to significant gear tooth damage. Mobilgear 600 XP Series exceeds the industry requirement for bearing wear protection. In fact, Mobilgear 600 XP Series provides up to 15 times the wear protection as measured by the industry standard FAG FE 8 test. Mobilgear 600 XP Series' balanced formulation is able to provide maximum wear and corrosion protection while maintaining compatibility with common gearbox seal materials. Mobilgear 600 XP helps to maintain gearbox seal integrity thereby preventing oil leaks and keeping contamination out. By protecting the gears, bearings and seals, Mobilgear 600 XP can improve equipment reliability and increase productivity.

Mobilgear 600 XP Series oils are recommended for industrial spur, helical and bevel enclosed gears with circulation or splash lubrication, operating at bulk oil temperatures up to 100ºC. They are particularly suitable for gear sets working under heavy or shock loads. Mobilgear 600 XP oils also find broad application in marine gearing applications. They may also be used in non-gear applications include highly loaded and slow speed plain and rolling contact bearings.

Features and Benefits

Mobilgear 600 XP Series products are a leading member of the Mobil brand of industrial lubricants that enjoy a reputation for innovation and high performance capability. These mineral-based products are designed to provide high quality industrial gear oils, meeting the latest industry standards and with high versatility to lubricate a broad range of industrial and marine equipment.

Mobilgear 600 XP Series products offer the following features and potential benefits:

Features	Advantages and Potential Benefits
Enhanced gear wear protection from micropitting	Less gear and bearing wear resulting in less unexpected downtime
Reduced debris denting from generated wear particles	Up to 22% improvement in bearing life reducing bearing replacement costs and improving productivity
Improved bearing wear protection	Improved bearing life resulting in higher productivity
Outstanding compatibility with a range of seal materials	Reduced leakage, oil consumption and contamination ingress helping to reduce maintenance, extend gearbox reliability and higher productivity
Excellent resistance to oil oxidation and thermal degradation	Helps extend lubricant life with lower lubricant and lubrication costs and reduced scheduled downtime.
High resistance to sludge and deposit formation	Cleaner systems and reduced maintenance
Wide range of applications	Fewer grades of lubricant required because of wide range of application, leading to lower purchase and

Features	Advantages and Potential Benefits
	storage costs and less danger of using wrong lubricant
Optimised resistance to rust and corrosion of steel and corrosion of copper and soft metal alloys	Excellent protection of machine parts, with reduced maintenance and repair costs
Resistance to foaming and emulsion formation	Effective lubrication and problem free operation in the presence of water contamination or in equipment prone to oil foaming

Applications

Mobilgear 600 XP lubricants are used in a wide range of industrial and marine applications, especially spur, helical, bevel and worm gearing. Specific applications include:

- Industrial gearing for conveyers, agitators, dryers, extruders, fans, mixers, presses, pulpers, pumps (including oil well pumps), screens, extruders and other heavy duty applications
- Marine gearing including main propulsion, centrifuges, deck machinery such as winches, windlasses, cranes, turning gears, pumps, elevators and rudder carriers
- Non-gear applications include shaft couplings, screws and heavily loaded plain and rolling contact bearings operating at slow speeds.
- Mobilgear 600 XP 100, 150, 220, 320, 460, and 680 are approved by Siemens for use in Flender gearboxes

Specifications and Approvals

Mobilgear 600 XP meets or exceeds the requirements of:	Mobilgear 600 XP 68	Mobilgear 600 XP 100	Mobilgear 600 XP 150	Mobilgear 600 XP 220	Mobilgear 600 XP 320	Mobilgear 600 XP 460	Mobilgear 600 XP 680
AGMA 9005-E02	2 EP	3 EP	4 EP	5 EP	6 EP	7 EP	-
DIN 51517-3: 2009-06	X	X	X	X	X	X	X
ISO 12925-1 Typ	CKD 68	CKD 100	CKD 150	CKD 220	CKD 320	CKC 460	CKC 680

Mobilgear 600 XP has the following builder approvals:	Mobilgear 600 XP 68	Mobilgear 600 XP 100	Mobilgear 600 XP 150	Mobilgear 600 XP 220	Mobilgear 600 XP 320	Mobilgear 600 XP 460	Mobilgear 600 XP 680
Siemens T 7300, Table A-1, Revision 13, FLENDER Code No.:	-	A17	A16	A15	A14	A13	A12
Mueller Weingarten DT 55 005		CLP 100	CLP 150	CLP 220	CLP 320	CLP 460	

Typical Properties

Mobilgear 600 XP	68	100	150	220	320	460	680
ISO Viscosity Grade	68	100	150	220	320	460	680
Viscosity, ASTM D 445							
mm²/s @ 40ºC	68	100	150	220	320	460	680
mm²/s @ 100ºC	8.8	11.2	14.7	19.0	24.1	30.6	39.2
Viscosity Index, ASTM D 2270	101	97	97	97	97	96	90
Pour Point, ºC, ASTM D 97	-27	-24	-24	-24	-24	-15	-9
Flash Point, ºC, ASTM D 92	230	230	230	240	240	240	285
Density @15.6 ºC, ASTM D 4052, kg/l	0.88	0.88	0.89	0.89	0.90	0.90	0.91

Mobilgear 600 XP	68	100	150	220	320	460	680
FZG Micropitting, FVA 54, Fail Stage / Rating		10 / High	10 / High	10 / High	10 / High	10 / High	10 / High
FE 8 wear test, DIN 51819-3, D7,5/80-80. Roller wear, mg	2	2	2	2	2	2	2
Timken OK Load, ASTM D 2782, lb	65	65	65	65	65	65	65
4-Ball EP test, ASTM D 2783,							
Weld Load, kg	200	200	250	250	250	250	250
Load Wear Index, kgf	47	47	47	48	48	48	48
FZG Scuffing, Fail Stage							
A/8.3/90	12+	12+	12+	12+	12+	12+	12+
A/16.6/90		12+	12+	12+	12+	12+	12+
Rust protection, ASTM D 665, Sea Water	Pass	Pass	Pass	Pass	Pass	Pass	Pass
Copper Strip Corrosion, ASTM D 130, 3 hrs @ 100ºC	1B	1B	1B	1B	1B	1B	1B
Demulsibility, ASTM D 1401, Time to 3ml emulsion, minutes @ 82ºC	30	30	30	30	30	30	30
Foam Test, ASTM D 892, Tendency/Stability, ml/ml Sequence 1	0/0	0/0	0/0	0/0	0/0	0/0	0/0
Sequence 2	30/0	30/0	30/0	30/0	30/0	30/0	30/0

Health and Safety

Based on available information, this product is not expected to produce adverse effects on health when used for the intended application, following the recommendations provided in the Material Safety Data Sheet (MSDS). MSDSs are available upon request through your sales contract office, or via the Internet on http://www.exxonmobil.com. This product should not be used for purposes other than its intended use. If disposing of used product, take care to protect the environment.

All trademarks used herein are trademarks or registered trademarks of Exxon Mobil Corporation or one of its subsidiaries unless indicated otherwise.

7-2011

Exxon Mobil Corporation
3225 Gallows Road
Fairfax, VA 22037

1-800-ASK MOBIL (275-6624)

Typical Properties are typical of those obtained with normal production tolerance and do not constitute a specification. Variations that do not affect product performance are to be expected during normal manufacture and at different blending locations. The information contained herein is subject to change without notice. All products may not be available locally. For more information, contact your local ExxonMobil contact or visit www.exxonmobil.com
ExxonMobil is comprised of numerous affiliates and subsidiaries, many with names that include Esso, Mobil, or ExxonMobil. Nothing in this document is intended to override or supersede the corporate separateness of local entities. Responsibility for local action and accountability remains with the local ExxonMobil-affiliate entities.

© 2001-2011 Exxon Mobil Corporation. All rights reserved..

ExxonMobil

Product Name: MOBILGEAR 600 XP 68
Revision Date: 13 Sep 2013
Page 1 of 10

MATERIAL SAFETY DATA SHEET

SECTION 1 PRODUCT AND COMPANY IDENTIFICATION

PRODUCT

Product Name: **MOBILGEAR 600 XP 68**
Product Description: Base Oil and Additives
Product Code: 201560401205, 613604-00, 97AE96
Intended Use: Gear oil

COMPANY IDENTIFICATION

Supplier: EXXON MOBIL CORPORATION
3225 GALLOWS RD.
FAIRFAX, VA. 22037 USA

24 Hour Health Emergency	609-737-4411
Transportation Emergency Phone	800-424-9300
ExxonMobil Transportation No.	281-834-3296
Product Technical Information	800-662-4525, 800-947-9147
MSDS Internet Address	http://www.exxon.com, http://www.mobil.com

SECTION 2 COMPOSITION / INFORMATION ON INGREDIENTS

No Reportable Hazardous Substance(s) or Complex Substance(s).

SECTION 3 HAZARDS IDENTIFICATION

This material is not considered to be hazardous according to regulatory guidelines (see (M)SDS Section 15).

POTENTIAL HEALTH EFFECTS

Excessive exposure may result in eye, skin, or respiratory irritation. High-pressure injection under skin may cause serious damage.

NFPA Hazard ID:	Health:	0	Flammability:	1	Reactivity:	0
HMIS Hazard ID:	Health:	0	Flammability:	1	Reactivity:	0

NOTE: This material should not be used for any other purpose than the intended use in Section 1 without expert advice. Health studies have shown that chemical exposure may cause potential human health risks which may vary from person to person.

SECTION 4 FIRST AID MEASURES

INHALATION

Remove from further exposure. For those providing assistance, avoid exposure to yourself or others. Use

adequate respiratory protection. If respiratory irritation, dizziness, nausea, or unconsciousness occurs, seek immediate medical assistance. If breathing has stopped, assist ventilation with a mechanical device or use mouth-to-mouth resuscitation.

SKIN CONTACT

Wash contact areas with soap and water. If product is injected into or under the skin, or into any part of the body, regardless of the appearance of the wound or its size, the individual should be evaluated immediately by a physician as a surgical emergency. Even though initial symptoms from high pressure injection may be minimal or absent, early surgical treatment within the first few hours may significantly reduce the ultimate extent of injury.

EYE CONTACT

Flush thoroughly with water. If irritation occurs, get medical assistance.

INGESTION

First aid is normally not required. Seek medical attention if discomfort occurs.

SECTION 5 FIRE FIGHTING MEASURES

EXTINGUISHING MEDIA

Appropriate Extinguishing Media: Use water fog, foam, dry chemical or carbon dioxide (CO2) to extinguish flames.

Inappropriate Extinguishing Media: Straight Streams of Water

FIRE FIGHTING

Fire Fighting Instructions: Evacuate area. Prevent runoff from fire control or dilution from entering streams, sewers, or drinking water supply. Firefighters should use standard protective equipment and in enclosed spaces, self-contained breathing apparatus (SCBA). Use water spray to cool fire exposed surfaces and to protect personnel.

Hazardous Combustion Products: Smoke, Fume, Aldehydes, Sulfur oxides, Incomplete combustion products, Oxides of carbon

FLAMMABILITY PROPERTIES

Flash Point [Method]: >185°C (365°F) [ASTM D-92]
Flammable Limits (Approximate volume % in air): LEL: 0.9 UEL: 7.0
Autoignition Temperature: N/D

SECTION 6 ACCIDENTAL RELEASE MEASURES

NOTIFICATION PROCEDURES

In the event of a spill or accidental release, notify relevant authorities in accordance with all applicable regulations. US regulations require reporting releases of this material to the environment which exceed the applicable reportable quantity or oil spills which could reach any waterway including intermittent dry creeks. The National Response Center can be reached at (800)424-8802.

PROTECTIVE MEASURES

Avoid contact with spilled material. See Section 5 for fire fighting information. See the Hazard Identification Section for Significant Hazards. See Section 4 for First Aid Advice. See Section 8 for advice on the minimum requirements for personal protective equipment. Additional protective measures may be necessary, depending on the specific circumstances and/or the expert judgment of the emergency responders.

For emergency responders: Respiratory protection: respiratory protection will be necessary only in special cases, e.g., formation of mists. Half-face or full-face respirator with filter(s) for dust/organic vapor or Self Contained Breathing Apparatus (SCBA) can be used depending on the size of spill and potential level of exposure. If the exposure cannot be completely characterized or an oxygen deficient atmosphere is possible or anticipated, SCBA is recommended. Work gloves that are resistant to hydrocarbons are recommended. Gloves made of polyvinyl acetate (PVA) are not water-resistant and are not suitable for emergency use. Chemical goggles are recommended if splashes or contact with eyes is possible. Small spills: normal antistatic work clothes are usually adequate. Large spills: full body suit of chemical resistant, antistatic material is recommended.

SPILL MANAGEMENT

Land Spill: Stop leak if you can do it without risk. Recover by pumping or with suitable absorbent.

Water Spill: Stop leak if you can do it without risk. Confine the spill immediately with booms. Warn other shipping. Remove from the surface by skimming or with suitable absorbents. Seek the advice of a specialist before using dispersants.

Water spill and land spill recommendations are based on the most likely spill scenario for this material; however, geographic conditions, wind, temperature, (and in the case of a water spill) wave and current direction and speed may greatly influence the appropriate action to be taken. For this reason, local experts should be consulted. Note: Local regulations may prescribe or limit action to be taken.

ENVIRONMENTAL PRECAUTIONS

Large Spills: Dike far ahead of liquid spill for later recovery and disposal. Prevent entry into waterways, sewers, basements or confined areas.

SECTION 7 HANDLING AND STORAGE

HANDLING

Prevent small spills and leakage to avoid slip hazard. Material can accumulate static charges which may cause an electrical spark (ignition source). When the material is handled in bulk, an electrical spark could ignite any flammable vapors from liquids or residues that may be present (e.g., during switch-loading operations). Use proper bonding and/or ground procedures. However, bonding and grounds may not eliminate the hazard from static accumulation. Consult local applicable standards for guidance. Additional references include American Petroleum Institute 2003 (Protection Against Ignitions Arising out of Static, Lightning and Stray Currents) or National Fire Protection Agency 77 (Recommended Practice on Static Electricity) or CENELEC CLC/TR 50404 (Electrostatics - Code of practice for the avoidance of hazards due to static electricity).

Static Accumulator: This material is a static accumulator.

STORAGE

The container choice, for example storage vessel, may effect static accumulation and dissipation. Do not store in open or unlabelled containers.

SECTION 8 EXPOSURE CONTROLS / PERSONAL PROTECTION

Exposure limits/standards for materials that can be formed when handling this product: When mists/aerosols can occur the following are recommended: 5 mg/m³ - ACGIH TLV (inhalable fraction), 5 mg/m³ - OSHA PEL.

NOTE: Limits/standards shown for guidance only. Follow applicable regulations.

ENGINEERING CONTROLS

The level of protection and types of controls necessary will vary depending upon potential exposure conditions. Control measures to consider:
No special requirements under ordinary conditions of use and with adequate ventilation.

PERSONAL PROTECTION

Personal protective equipment selections vary based on potential exposure conditions such as applications, handling practices, concentration and ventilation. Information on the selection of protective equipment for use with this material, as provided below, is based upon intended, normal usage.

Respiratory Protection: If engineering controls do not maintain airborne contaminant concentrations at a level which is adequate to protect worker health, an approved respirator may be appropriate. Respirator selection, use, and maintenance must be in accordance with regulatory requirements, if applicable. Types of respirators to be considered for this material include:
No special requirements under ordinary conditions of use and with adequate ventilation.

For high airborne concentrations, use an approved supplied-air respirator, operated in positive pressure mode. Supplied air respirators with an escape bottle may be appropriate when oxygen levels are inadequate, gas/vapor warning properties are poor, or if air purifying filter capacity/rating may be exceeded.

Hand Protection: Any specific glove information provided is based on published literature and glove manufacturer data. Glove suitability and breakthrough time will differ depending on the specific use conditions. Contact the glove manufacturer for specific advice on glove selection and breakthrough times for your use conditions. Inspect and replace worn or damaged gloves. The types of gloves to be considered for this material include:
No protection is ordinarily required under normal conditions of use.

Eye Protection: If contact is likely, safety glasses with side shields are recommended.

Skin and Body Protection: Any specific clothing information provided is based on published literature or manufacturer data. The types of clothing to be considered for this material include:
No skin protection is ordinarily required under normal conditions of use. In accordance with good industrial hygiene practices, precautions should be taken to avoid skin contact.

Specific Hygiene Measures: Always observe good personal hygiene measures, such as washing after handling the material and before eating, drinking, and/or smoking. Routinely wash work clothing and protective equipment to remove contaminants. Discard contaminated clothing and footwear that cannot be cleaned. Practice good housekeeping.

ENVIRONMENTAL CONTROLS

Comply with applicable environmental regulations limiting discharge to air, water and soil. Protect the environment by applying appropriate control measures to prevent or limit emissions.

SECTION 9 PHYSICAL AND CHEMICAL PROPERTIES

Note: Physical and chemical properties are provided for safety, health and environmental considerations only and may not fully represent product specifications. Contact the Supplier for additional information.

GENERAL INFORMATION

Physical State: Liquid
Color: Amber
Odor: Characteristic
Odor Threshold: N/D

IMPORTANT HEALTH, SAFETY, AND ENVIRONMENTAL INFORMATION

Relative Density (at 15 °C): 0.88
Flash Point [Method]: >185°C (365°F) [ASTM D-92]
Flammable Limits (Approximate volume % in air): LEL: 0.9 UEL: 7.0
Autoignition Temperature: N/D
Boiling Point / Range: > 316°C (600°F)
Vapor Density (Air = 1): > 2 at 101 kPa
Vapor Pressure: < 0.013 kPa (0.1 mm Hg) at 20 °C
Evaporation Rate (n-butyl acetate = 1): N/D
pH: N/A
Log Pow (n-Octanol/Water Partition Coefficient): N/D
Solubility in Water: Negligible
Viscosity: 68 cSt (68 mm2/sec) at 40 °C | 8.8 cSt (8.8 mm2/sec) at 100°C
Oxidizing Properties: See Hazards Identification Section.

OTHER INFORMATION

Freezing Point: N/D
Melting Point: N/A
Pour Point: -15°C (5°F)
DMSO Extract (mineral oil only), IP-346: < 3 %wt
Decomposition Temperature: N/D

SECTION 10 STABILITY AND REACTIVITY

STABILITY: Material is stable under normal conditions.

CONDITIONS TO AVOID: Excessive heat. High energy sources of ignition.

MATERIALS TO AVOID: Strong oxidizers

HAZARDOUS DECOMPOSITION PRODUCTS: Material does not decompose at ambient temperatures.

HAZARDOUS POLYMERIZATION: Will not occur.

SECTION 11 TOXICOLOGICAL INFORMATION

ACUTE TOXICITY

Route of Exposure	Conclusion / Remarks
Inhalation	
Toxicity (Rat): LC50 > 5000 mg/m3	Minimally Toxic. Based on test data for structurally similar materials.
Irritation: Data available.	Negligible hazard at ambient/normal handling temperatures. Based on assessment of the components.
Ingestion	
Toxicity (Rat): LD50 > 2000 mg/kg	Minimally Toxic. Based on test data for structurally similar materials.
Skin	
Toxicity (Rabbit): LD50 > 2000 mg/kg	Minimally Toxic. Based on test data for structurally similar materials.
Irritation (Rabbit): Data available.	Negligible irritation to skin at ambient temperatures. Based on test data for structurally similar materials.
Eye	
Irritation (Rabbit): Data available.	May cause mild, short-lasting discomfort to eyes. Based on test data for structurally similar materials.

CHRONIC/OTHER EFFECTS

For the product itself:

Repeated and/or prolonged exposure may cause irritation to the skin, eyes, or respiratory tract.

Contains:

Base oil severely refined: Not carcinogenic in animal studies. Representative material passes IP-346, Modified Ames test, and/or other screening tests. Dermal and inhalation studies showed minimal effects; lung non-specific infiltration of immune cells, oil deposition and minimal granuloma formation. Not sensitizing in test animals.

The following ingredients are cited on the lists below: None.

--REGULATORY LISTS SEARCHED--

1 = NTP CARC	3 = IARC 1	5 = IARC 2B
2 = NTP SUS	4 = IARC 2A	6 = OSHA CARC

SECTION 12 ECOLOGICAL INFORMATION

The information given is based on data available for the material, the components of the material, and similar materials.

ECOTOXICITY

Material -- Not expected to be harmful to aquatic organisms.

MOBILITY

Base oil component -- Low solubility and floats and is expected to migrate from water to the land. Expected to partition to sediment and wastewater solids.

PERSISTENCE AND DEGRADABILITY

Biodegradation:

Base oil component -- Expected to be inherently biodegradable

BIOACCUMULATION POTENTIAL

Base oil component -- Has the potential to bioaccumulate, however metabolism or physical properties may reduce the bioconcentration or limit bioavailability.

SECTION 13 DISPOSAL CONSIDERATIONS

Disposal recommendations based on material as supplied. Disposal must be in accordance with current applicable laws and regulations, and material characteristics at time of disposal.

DISPOSAL RECOMMENDATIONS

Product is suitable for burning in an enclosed controlled burner for fuel value or disposal by supervised incineration at very high temperatures to prevent formation of undesirable combustion products. Protect the environment. Dispose of used oil at designated sites. Minimize skin contact. Do not mix used oils with solvents, brake fluids or coolants.

REGULATORY DISPOSAL INFORMATION

RCRA Information: The unused product, in our opinion, is not specifically listed by the EPA as a hazardous waste (40 CFR, Part 261D), nor is it formulated to contain materials which are listed as hazardous wastes. It does not exhibit the hazardous characteristics of ignitability, corrosivity or reactivity and is not formulated with contaminants as determined by the Toxicity Characteristic Leaching Procedure (TCLP). However, used product may be regulated.

Empty Container Warning Empty Container Warning (where applicable): Empty containers may contain residue and can be dangerous. Do not attempt to refill or clean containers without proper instructions. Empty drums should be completely drained and safely stored until appropriately reconditioned or disposed. Empty containers should be taken for recycling, recovery, or disposal through suitably qualified or licensed contractor and in accordance with governmental regulations. DO NOT PRESSURISE, CUT, WELD, BRAZE, SOLDER, DRILL, GRIND, OR EXPOSE SUCH CONTAINERS TO HEAT, FLAME, SPARKS, STATIC ELECTRICITY, OR OTHER SOURCES OF IGNITION. THEY MAY EXPLODE AND CAUSE INJURY OR DEATH.

SECTION 14 TRANSPORT INFORMATION

LAND (DOT): Not Regulated for Land Transport

LAND (TDG): Not Regulated for Land Transport

SEA (IMDG): Not Regulated for Sea Transport according to IMDG-Code

AIR (IATA): Not Regulated for Air Transport

SECTION 15 REGULATORY INFORMATION

OSHA HAZARD COMMUNICATION STANDARD: When used for its intended purposes, this material is not classified as hazardous in accordance with OSHA 29 CFR 1910.1200.

Complies with the following national/regional chemical inventory requirements: AICS, KECI, PICCS, TSCA
Special Cases:

Inventory	Status
ENCS	Restrictions Apply
NDSL	Restrictions Apply

EPCRA SECTION 302: This material contains no extremely hazardous substances.

SARA (311/312) REPORTABLE HAZARD CATEGORIES: None.

SARA (313) TOXIC RELEASE INVENTORY: This material contains no chemicals subject to the supplier notification requirements of the SARA 313 Toxic Release Program.

The following ingredients are cited on the lists below: None.

--REGULATORY LISTS SEARCHED--

1 = ACGIH ALL	6 = TSCA 5a2	11 = CA P65 REPRO	16 = MN RTK
2 = ACGIH A1	7 = TSCA 5e	12 = CA RTK	17 = NJ RTK
3 = ACGIH A2	8 = TSCA 6	13 = IL RTK	18 = PA RTK
4 = OSHA Z	9 = TSCA 12b	14 = LA RTK	19 = RI RTK
5 = TSCA 4	10 = CA P65 CARC	15 = MI 293	

Code key: CARC=Carcinogen; REPRO=Reproductive

SECTION 16 OTHER INFORMATION

N/D = Not determined, N/A = Not applicable

THIS SAFETY DATA SHEET CONTAINS THE FOLLOWING REVISIONS:
Revision Changes:
Section 06: Notification Procedures - Header information was modified.
Section 13: Disposal Considerations - Disposal Recommendations information was modified.
Section 01: Product Code information was modified.
Section 10 Stability and Reactivity - Header information was modified.

Section 13: Disposal Recommendations - Note information was modified.
Section 09: Phys/Chem Properties Note information was modified.
Section 09: Boiling Point C(F) information was modified.
Section 09: Pour Point C(F) information was modified.
Section 08: Comply with applicable regulations phrase information was modified.
Section 08: Personal Protection information was modified.
Section 08: Hand Protection information was modified.
Section 09: Vapor Pressure information was modified.
Section 07: Handling and Storage - Handling information was modified.
Section 07: Handling and Storage - Storage Phrases information was modified.
Hazard Identification: Health Hazards information was modified.
Section 05: Hazardous Combustion Products information was modified.
Section 06: Accidental Release - Spill Management - Water information was modified.
Section 09: Relative Density - Header information was modified.
Section 09: Flash Point C(F) information was modified.
Section 09: Viscosity information was modified.
Section 09: Viscosity information was modified.
Section 14: Sea (IMDG) - Header information was modified.
Section 14: Air (IATA) - Header information was modified.
Section 14: LAND (TDG) - Header information was modified.
Section 14: LAND (DOT) - Header information was modified.
Section 15: List Citation Table - Header information was modified.
Section 14: LAND (DOT) - Default information was modified.
Section 14: LAND (TDG) Default information was modified.
Section 14: Sea (IMDG) - Default information was modified.
Section 14: Air (IATA) - Default information was modified.
Section 15: National Chemical Inventory Listing - Header information was modified.
Section 15: National Chemical Inventory Listing information was modified.
Section 15: Community RTK - Header information was modified.
Section 11: Additional Health Information information was modified.
Section 16: MSN, MAT ID information was modified.
Section 08: Exposure limits/standards information was modified.
Section 15: Special Cases Table information was modified.
Hazard Identification: OSHA - May be Hazardous Statement information was modified.
Section 06: Notification Procedures information was modified.
Section 09: Oxidizing Properties information was modified.
Section 01: Company Contact Methods Sorted by Priority information was modified.
Section 06: Protective Measures information was added.
Section 06: Accidental Release - Protective Measures - Header information was added.
Section 09: Decomposition Temperature information was added.
Section 09: Decomposition Temp - Header information was added.

The information and recommendations contained herein are, to the best of ExxonMobil's knowledge and belief, accurate and reliable as of the date issued. You can contact ExxonMobil to insure that this document is the most current available from ExxonMobil. The information and recommendations are offered for the user's consideration and examination. It is the user's responsibility to satisfy itself that the product is suitable for the intended use. If buyer repackages this product, it is the user's responsibility to insure proper health, safety and other necessary information is included with and/or on the container. Appropriate warnings and safe-handling procedures should be provided to handlers and users. Alteration of this document is strictly prohibited. Except to the extent required by law, re-publication or retransmission of this document, in whole or in part, is not permitted. The term, "ExxonMobil" is used for convenience, and may include any one or more of ExxonMobil Chemical Company, Exxon Mobil Corporation, or any

affiliates in which they directly or indirectly hold any interest.

Internal Use Only
MHC: 0, 0, 0, 0, 0, 0 PPEC: A

DGN: 7077857XUS (1012009)

Copyright 2002 Exxon Mobil Corporation, All rights reserved

ExxonMobil

Product Name: MOBILGEAR 600 XP 100
Revision Date: 13 Sep 2013
Page 1 of 9

MATERIAL SAFETY DATA SHEET

SECTION 1 PRODUCT AND COMPANY IDENTIFICATION

PRODUCT

Product Name: **MOBILGEAR 600 XP 100**
Product Description: Base Oil and Additives
Product Code: 201560401210, 613612-00, 97AE97
Intended Use: Gear oil

COMPANY IDENTIFICATION

Supplier: EXXON MOBIL CORPORATION
3225 GALLOWS RD.
FAIRFAX, VA. 22037 USA

24 Hour Health Emergency	609-737-4411
Transportation Emergency Phone	800-424-9300
ExxonMobil Transportation No.	281-834-3296
Product Technical Information	800-662-4525, 800-947-9147
MSDS Internet Address	http://www.exxon.com, http://www.mobil.com

SECTION 2 COMPOSITION / INFORMATION ON INGREDIENTS

No Reportable Hazardous Substance(s) or Complex Substance(s).

SECTION 3 HAZARDS IDENTIFICATION

This material is not considered to be hazardous according to regulatory guidelines (see (M)SDS Section 15).

POTENTIAL HEALTH EFFECTS

Excessive exposure may result in eye, skin, or respiratory irritation. High-pressure injection under skin may cause serious damage.

NFPA Hazard ID:	Health:	0	Flammability:	1	Reactivity:	0
HMIS Hazard ID:	Health:	0	Flammability:	1	Reactivity:	0

NOTE: This material should not be used for any other purpose than the intended use in Section 1 without expert advice. Health studies have shown that chemical exposure may cause potential human health risks which may vary from person to person.

SECTION 4 FIRST AID MEASURES

INHALATION

Remove from further exposure. For those providing assistance, avoid exposure to yourself or others. Use

adequate respiratory protection. If respiratory irritation, dizziness, nausea, or unconsciousness occurs, seek immediate medical assistance. If breathing has stopped, assist ventilation with a mechanical device or use mouth-to-mouth resuscitation.

SKIN CONTACT

Wash contact areas with soap and water. If product is injected into or under the skin, or into any part of the body, regardless of the appearance of the wound or its size, the individual should be evaluated immediately by a physician as a surgical emergency. Even though initial symptoms from high pressure injection may be minimal or absent, early surgical treatment within the first few hours may significantly reduce the ultimate extent of injury.

EYE CONTACT

Flush thoroughly with water. If irritation occurs, get medical assistance.

INGESTION

First aid is normally not required. Seek medical attention if discomfort occurs.

SECTION 5 FIRE FIGHTING MEASURES

EXTINGUISHING MEDIA

Appropriate Extinguishing Media: Use water fog, foam, dry chemical or carbon dioxide (CO2) to extinguish flames.

Inappropriate Extinguishing Media: Straight Streams of Water

FIRE FIGHTING

Fire Fighting Instructions: Evacuate area. Prevent runoff from fire control or dilution from entering streams, sewers, or drinking water supply. Firefighters should use standard protective equipment and in enclosed spaces, self-contained breathing apparatus (SCBA). Use water spray to cool fire exposed surfaces and to protect personnel.

Hazardous Combustion Products: Smoke, Fume, Aldehydes, Sulfur oxides, Incomplete combustion products, Oxides of carbon

FLAMMABILITY PROPERTIES

Flash Point [Method]: >200°C (392°F) [ASTM D-92]
Flammable Limits (Approximate volume % in air): LEL: 0.9 UEL: 7.0
Autoignition Temperature: N/D

SECTION 6 ACCIDENTAL RELEASE MEASURES

NOTIFICATION PROCEDURES

In the event of a spill or accidental release, notify relevant authorities in accordance with all applicable regulations. US regulations require reporting releases of this material to the environment which exceed the applicable reportable quantity or oil spills which could reach any waterway including intermittent dry creeks. The National Response Center can be reached at (800)424-8802.

PROTECTIVE MEASURES

Avoid contact with spilled material. See Section 5 for fire fighting information. See the Hazard Identification Section for Significant Hazards. See Section 4 for First Aid Advice. See Section 8 for advice on the minimum requirements for personal protective equipment. Additional protective measures may be necessary, depending on the specific circumstances and/or the expert judgment of the emergency responders.

For emergency responders: Respiratory protection: respiratory protection will be necessary only in special cases, e.g., formation of mists. Half-face or full-face respirator with filter(s) for dust/organic vapor or Self Contained Breathing Apparatus (SCBA) can be used depending on the size of spill and potential level of exposure. If the exposure cannot be completely characterized or an oxygen deficient atmosphere is possible or anticipated, SCBA is recommended. Work gloves that are resistant to hydrocarbons are recommended. Gloves made of polyvinyl acetate (PVA) are not water-resistant and are not suitable for emergency use. Chemical goggles are recommended if splashes or contact with eyes is possible. Small spills: normal antistatic work clothes are usually adequate. Large spills: full body suit of chemical resistant, antistatic material is recommended.

SPILL MANAGEMENT

Land Spill: Stop leak if you can do it without risk. Recover by pumping or with suitable absorbent.

Water Spill: Stop leak if you can do it without risk. Confine the spill immediately with booms. Warn other shipping. Remove from the surface by skimming or with suitable absorbents. Seek the advice of a specialist before using dispersants.

Water spill and land spill recommendations are based on the most likely spill scenario for this material; however, geographic conditions, wind, temperature, (and in the case of a water spill) wave and current direction and speed may greatly influence the appropriate action to be taken. For this reason, local experts should be consulted. Note: Local regulations may prescribe or limit action to be taken.

ENVIRONMENTAL PRECAUTIONS

Large Spills: Dike far ahead of liquid spill for later recovery and disposal. Prevent entry into waterways, sewers, basements or confined areas.

SECTION 7 HANDLING AND STORAGE

HANDLING

Prevent small spills and leakage to avoid slip hazard. Material can accumulate static charges which may cause an electrical spark (ignition source). When the material is handled in bulk, an electrical spark could ignite any flammable vapors from liquids or residues that may be present (e.g., during switch-loading operations). Use proper bonding and/or ground procedures. However, bonding and grounds may not eliminate the hazard from static accumulation. Consult local applicable standards for guidance. Additional references include American Petroleum Institute 2003 (Protection Against Ignitions Arising out of Static, Lightning and Stray Currents) or National Fire Protection Agency 77 (Recommended Practice on Static Electricity) or CENELEC CLC/TR 50404 (Electrostatics - Code of practice for the avoidance of hazards due to static electricity).

Static Accumulator: This material is a static accumulator.

STORAGE

The container choice, for example storage vessel, may effect static accumulation and dissipation. Do not store in open or unlabelled containers. Keep away from incompatible materials.

SECTION 8 EXPOSURE CONTROLS / PERSONAL PROTECTION

Exposure limits/standards for materials that can be formed when handling this product: When mists/aerosols can occur the following are recommended: 5 mg/m³ - ACGIH TLV (inhalable fraction), 5 mg/m³ - OSHA PEL.

NOTE: Limits/standards shown for guidance only. Follow applicable regulations.

ENGINEERING CONTROLS

The level of protection and types of controls necessary will vary depending upon potential exposure conditions. Control measures to consider:
No special requirements under ordinary conditions of use and with adequate ventilation.

PERSONAL PROTECTION

Personal protective equipment selections vary based on potential exposure conditions such as applications, handling practices, concentration and ventilation. Information on the selection of protective equipment for use with this material, as provided below, is based upon intended, normal usage.

Respiratory Protection: If engineering controls do not maintain airborne contaminant concentrations at a level which is adequate to protect worker health, an approved respirator may be appropriate. Respirator selection, use, and maintenance must be in accordance with regulatory requirements, if applicable. Types of respirators to be considered for this material include:
No special requirements under ordinary conditions of use and with adequate ventilation.

For high airborne concentrations, use an approved supplied-air respirator, operated in positive pressure mode. Supplied air respirators with an escape bottle may be appropriate when oxygen levels are inadequate, gas/vapor warning properties are poor, or if air purifying filter capacity/rating may be exceeded.

Hand Protection: Any specific glove information provided is based on published literature and glove manufacturer data. Glove suitability and breakthrough time will differ depending on the specific use conditions. Contact the glove manufacturer for specific advice on glove selection and breakthrough times for your use conditions. Inspect and replace worn or damaged gloves. The types of gloves to be considered for this material include:
No protection is ordinarily required under normal conditions of use.

Eye Protection: If contact is likely, safety glasses with side shields are recommended.

Skin and Body Protection: Any specific clothing information provided is based on published literature or manufacturer data. The types of clothing to be considered for this material include:
No skin protection is ordinarily required under normal conditions of use. In accordance with good industrial hygiene practices, precautions should be taken to avoid skin contact.

Specific Hygiene Measures: Always observe good personal hygiene measures, such as washing after handling the material and before eating, drinking, and/or smoking. Routinely wash work clothing and protective equipment to remove contaminants. Discard contaminated clothing and footwear that cannot be cleaned. Practice good housekeeping.

ENVIRONMENTAL CONTROLS

Comply with applicable environmental regulations limiting discharge to air, water and soil. Protect the environment by applying appropriate control measures to prevent or limit emissions.

SECTION 9 PHYSICAL AND CHEMICAL PROPERTIES

Note: Physical and chemical properties are provided for safety, health and environmental considerations only and may not fully represent product specifications. Contact the Supplier for additional information.

GENERAL INFORMATION

Physical State: Liquid
Color: Brown
Odor: Characteristic
Odor Threshold: N/D

IMPORTANT HEALTH, SAFETY, AND ENVIRONMENTAL INFORMATION

Relative Density (at 15 °C): 0.884
Flash Point [Method]: >200°C (392°F) [ASTM D-92]
Flammable Limits (Approximate volume % in air): LEL: 0.9 UEL: 7.0
Autoignition Temperature: N/D
Boiling Point / Range: > 316°C (600°F)
Vapor Density (Air = 1): > 2 at 101 kPa
Vapor Pressure: < 0.013 kPa (0.1 mm Hg) at 20 °C
Evaporation Rate (n-butyl acetate = 1): N/D
pH: N/A
Log Pow (n-Octanol/Water Partition Coefficient): N/D
Solubility in Water: Negligible
Viscosity: 100 cSt (100 mm2/sec) at 40 °C | 11.2 cSt (11.2 mm2/sec) at 100°C
Oxidizing Properties: See Hazards Identification Section.

OTHER INFORMATION

Freezing Point: N/D
Melting Point: N/A
Pour Point: -12°C (10°F)
DMSO Extract (mineral oil only), IP-346: < 3 %wt
Decomposition Temperature: N/D

SECTION 10 STABILITY AND REACTIVITY

STABILITY: Material is stable under normal conditions.

CONDITIONS TO AVOID: Excessive heat. High energy sources of ignition.

MATERIALS TO AVOID: Strong oxidizers

HAZARDOUS DECOMPOSITION PRODUCTS: Material does not decompose at ambient temperatures.

HAZARDOUS POLYMERIZATION: Will not occur.

ExxonMobil

Product Name: MOBILGEAR 600 XP 100
Revision Date: 13 Sep 2013
Page 6 of 9

SECTION 11 TOXICOLOGICAL INFORMATION

ACUTE TOXICITY

Route of Exposure	Conclusion / Remarks
Inhalation	
Toxicity: No end point data for material.	Minimally Toxic. Based on assessment of the components.
Irritation: No end point data for material.	Negligible hazard at ambient/normal handling temperatures.
Ingestion	
Toxicity: No end point data for material.	Minimally Toxic. Based on assessment of the components.
Skin	
Toxicity: No end point data for material.	Minimally Toxic. Based on assessment of the components.
Irritation: No end point data for material.	Negligible irritation to skin at ambient temperatures. Based on assessment of the components.
Eye	
Irritation: No end point data for material.	May cause mild, short-lasting discomfort to eyes. Based on assessment of the components.

CHRONIC/OTHER EFFECTS

For the product itself:

Repeated and/or prolonged exposure may cause irritation to the skin, eyes, or respiratory tract.

Contains:

Base oil severely refined: Not carcinogenic in animal studies. Representative material passes IP-346, Modified Ames test, and/or other screening tests. Dermal and inhalation studies showed minimal effects; lung non-specific infiltration of immune cells, oil deposition and minimal granuloma formation. Not sensitizing in test animals.

The following ingredients are cited on the lists below: None.

--REGULATORY LISTS SEARCHED--

1 = NTP CARC	3 = IARC 1	5 = IARC 2B
2 = NTP SUS	4 = IARC 2A	6 = OSHA CARC

SECTION 12 ECOLOGICAL INFORMATION

The information given is based on data available for the material, the components of the material, and similar materials.

ECOTOXICITY

Material -- Not expected to be harmful to aquatic organisms.

MOBILITY

Base oil component -- Low solubility and floats and is expected to migrate from water to the land. Expected to partition to sediment and wastewater solids.

PERSISTENCE AND DEGRADABILITY
Biodegradation:
Base oil component -- Expected to be inherently biodegradable

BIOACCUMULATION POTENTIAL
Base oil component -- Has the potential to bioaccumulate, however metabolism or physical properties may reduce the bioconcentration or limit bioavailability.

SECTION 13 DISPOSAL CONSIDERATIONS

Disposal recommendations based on material as supplied. Disposal must be in accordance with current applicable laws and regulations, and material characteristics at time of disposal.

DISPOSAL RECOMMENDATIONS
Product is suitable for burning in an enclosed controlled burner for fuel value or disposal by supervised incineration at very high temperatures to prevent formation of undesirable combustion products. Protect the environment. Dispose of used oil at designated sites. Minimize skin contact. Do not mix used oils with solvents, brake fluids or coolants.

REGULATORY DISPOSAL INFORMATION
RCRA Information: The unused product, in our opinion, is not specifically listed by the EPA as a hazardous waste (40 CFR, Part 261D), nor is it formulated to contain materials which are listed as hazardous wastes. It does not exhibit the hazardous characteristics of ignitability, corrosivity or reactivity and is not formulated with contaminants as determined by the Toxicity Characteristic Leaching Procedure (TCLP). However, used product may be regulated.

Empty Container Warning Empty Container Warning (where applicable): Empty containers may contain residue and can be dangerous. Do not attempt to refill or clean containers without proper instructions. Empty drums should be completely drained and safely stored until appropriately reconditioned or disposed. Empty containers should be taken for recycling, recovery, or disposal through suitably qualified or licensed contractor and in accordance with governmental regulations. DO NOT PRESSURISE, CUT, WELD, BRAZE, SOLDER, DRILL, GRIND, OR EXPOSE SUCH CONTAINERS TO HEAT, FLAME, SPARKS, STATIC ELECTRICITY, OR OTHER SOURCES OF IGNITION. THEY MAY EXPLODE AND CAUSE INJURY OR DEATH.

SECTION 14 TRANSPORT INFORMATION

LAND (DOT): Not Regulated for Land Transport

LAND (TDG): Not Regulated for Land Transport

SEA (IMDG): Not Regulated for Sea Transport according to IMDG-Code

AIR (IATA): Not Regulated for Air Transport

SECTION 15 REGULATORY INFORMATION

OSHA HAZARD COMMUNICATION STANDARD: When used for its intended purposes, this material is not classified as hazardous in accordance with OSHA 29 CFR 1910.1200.

Complies with the following national/regional chemical inventory requirements: AICS, KECI, PICCS, TSCA
Special Cases:

Inventory	Status
NDSL	Restrictions Apply

EPCRA SECTION 302: This material contains no extremely hazardous substances.

SARA (311/312) REPORTABLE HAZARD CATEGORIES: None.

SARA (313) TOXIC RELEASE INVENTORY: This material contains no chemicals subject to the supplier notification requirements of the SARA 313 Toxic Release Program.

The following ingredients are cited on the lists below: None.

--REGULATORY LISTS SEARCHED--

1 = ACGIH ALL	6 = TSCA 5a2	11 = CA P65 REPRO	16 = MN RTK
2 = ACGIH A1	7 = TSCA 5e	12 = CA RTK	17 = NJ RTK
3 = ACGIH A2	8 = TSCA 6	13 = IL RTK	18 = PA RTK
4 = OSHA Z	9 = TSCA 12b	14 = LA RTK	19 = RI RTK
5 = TSCA 4	10 = CA P65 CARC	15 = MI 293	

Code key: CARC=Carcinogen; REPRO=Reproductive

SECTION 16 OTHER INFORMATION

N/D = Not determined, N/A = Not applicable

THIS SAFETY DATA SHEET CONTAINS THE FOLLOWING REVISIONS:
Revision Changes:
Section 13: Disposal Considerations - Disposal Recommendations information was modified.
Section 09: Phys/Chem Properties Note information was modified.
Section 09: Boiling Point C(F) information was modified.
Section 09: Pour Point C(F) information was modified.
Section 08: Comply with applicable regulations phrase information was modified.
Section 09: Vapor Pressure information was modified.
Hazard Identification: Health Hazards information was modified.
Section 11: Dermal Lethality Test Data information was modified.
Section 11: Dermal Lethality Test Comment information was modified.

Section 11: Oral Lethality Test Data information was modified.
Section 11: Inhalation Lethality Test Data information was modified.
Section 11: Dermal Irritation Test Data information was modified.
Section 11: Eye Irritation Test Data information was modified.
Section 11: Oral Lethality Test Comment information was modified.
Section 11: Inhalation Lethality Test Comment information was modified.
Section 11: Dermal Irritation Test Comment information was modified.
Section 11: Eye Irritation Test Comment information was modified.
Section 11: Inhalation Irritation Test Data information was modified.
Section 09: Relative Density - Header information was modified.
Section 09: Flash Point C(F) information was modified.
Section 09: Viscosity information was modified.
Section 09: Viscosity information was modified.
Section 14: LAND (TDG) - Header information was modified.
Section 11: Inhalation Lethality Test Comment information was modified.
Section 15: National Chemical Inventory Listing - Header information was modified.
Section 15: National Chemical Inventory Listing information was modified.
Section 15: Community RTK - Header information was modified.
Section 11: Additional Health Information information was modified.
Section 16: MSN, MAT ID information was modified.
Section 08: Exposure limits/standards information was modified.
Section 15: Special Cases Table information was modified.
Section 01: Company Contact Methods Sorted by Priority information was modified.
Section 06: Protective Measures information was added.
Section 06: Accidental Release - Protective Measures - Header information was added.
Section 09: Decomposition Temperature information was added.
Section 09: Decomposition Temp - Header information was added.

The information and recommendations contained herein are, to the best of ExxonMobil's knowledge and belief, accurate and reliable as of the date issued. You can contact ExxonMobil to insure that this document is the most current available from ExxonMobil. The information and recommendations are offered for the user's consideration and examination. It is the user's responsibility to satisfy itself that the product is suitable for the intended use. If buyer repackages this product, it is the user's responsibility to insure proper health, safety and other necessary information is included with and/or on the container. Appropriate warnings and safe-handling procedures should be provided to handlers and users. Alteration of this document is strictly prohibited. Except to the extent required by law, re-publication or retransmission of this document, in whole or in part, is not permitted. The term, "ExxonMobil" is used for convenience, and may include any one or more of ExxonMobil Chemical Company, Exxon Mobil Corporation, or any affiliates in which they directly or indirectly hold any interest.

Internal Use Only
MHC: 0B, 0B, 0, 0, 0, 0 PPEC: A

DGN: 7077870XUS (1012011)

Copyright 2002 Exxon Mobil Corporation, All rights reserved

ExxonMobil

Product Name: MOBILGEAR 600 XP 150
Revision Date: 13 Sep 2013
Page 1 of 9

MATERIAL SAFETY DATA SHEET

SECTION 1 PRODUCT AND COMPANY IDENTIFICATION

PRODUCT

Product Name: **MOBILGEAR 600 XP 150**
Product Description: Base Oil and Additives
Product Code: 201560401215, 613620-00, 97AE98
Intended Use: Gear oil

COMPANY IDENTIFICATION

Supplier: EXXON MOBIL CORPORATION
3225 GALLOWS RD.
FAIRFAX, VA. 22037 USA

24 Hour Health Emergency	609-737-4411
Transportation Emergency Phone	800-424-9300
ExxonMobil Transportation No.	281-834-3296
Product Technical Information	800-662-4525, 800-947-9147
MSDS Internet Address	http://www.exxon.com, http://www.mobil.com

SECTION 2 COMPOSITION / INFORMATION ON INGREDIENTS

No Reportable Hazardous Substance(s) or Complex Substance(s).

SECTION 3 HAZARDS IDENTIFICATION

This material is not considered to be hazardous according to regulatory guidelines (see (M)SDS Section 15).

POTENTIAL HEALTH EFFECTS

Excessive exposure may result in eye, skin, or respiratory irritation. High-pressure injection under skin may cause serious damage.

NFPA Hazard ID:	Health:	0	Flammability:	1	Reactivity:	0
HMIS Hazard ID:	Health:	0	Flammability:	1	Reactivity:	0

NOTE: This material should not be used for any other purpose than the intended use in Section 1 without expert advice. Health studies have shown that chemical exposure may cause potential human health risks which may vary from person to person.

SECTION 4 FIRST AID MEASURES

INHALATION

Remove from further exposure. For those providing assistance, avoid exposure to yourself or others. Use

adequate respiratory protection. If respiratory irritation, dizziness, nausea, or unconsciousness occurs, seek immediate medical assistance. If breathing has stopped, assist ventilation with a mechanical device or use mouth-to-mouth resuscitation.

SKIN CONTACT

Wash contact areas with soap and water. If product is injected into or under the skin, or into any part of the body, regardless of the appearance of the wound or its size, the individual should be evaluated immediately by a physician as a surgical emergency. Even though initial symptoms from high pressure injection may be minimal or absent, early surgical treatment within the first few hours may significantly reduce the ultimate extent of injury.

EYE CONTACT

Flush thoroughly with water. If irritation occurs, get medical assistance.

INGESTION

First aid is normally not required. Seek medical attention if discomfort occurs.

SECTION 5 FIRE FIGHTING MEASURES

EXTINGUISHING MEDIA

Appropriate Extinguishing Media: Use water fog, foam, dry chemical or carbon dioxide (CO2) to extinguish flames.

Inappropriate Extinguishing Media: Straight Streams of Water

FIRE FIGHTING

Fire Fighting Instructions: Evacuate area. Prevent runoff from fire control or dilution from entering streams, sewers, or drinking water supply. Firefighters should use standard protective equipment and in enclosed spaces, self-contained breathing apparatus (SCBA). Use water spray to cool fire exposed surfaces and to protect personnel.

Hazardous Combustion Products: Smoke, Fume, Aldehydes, Sulfur oxides, Incomplete combustion products, Oxides of carbon

FLAMMABILITY PROPERTIES

Flash Point [Method]: >200°C (392°F) [ASTM D-92]
Flammable Limits (Approximate volume % in air): LEL: 0.9 UEL: 7.0
Autoignition Temperature: N/D

SECTION 6 ACCIDENTAL RELEASE MEASURES

NOTIFICATION PROCEDURES

In the event of a spill or accidental release, notify relevant authorities in accordance with all applicable regulations. US regulations require reporting releases of this material to the environment which exceed the applicable reportable quantity or oil spills which could reach any waterway including intermittent dry creeks. The National Response Center can be reached at (800)424-8802.

PROTECTIVE MEASURES

Avoid contact with spilled material. See Section 5 for fire fighting information. See the Hazard Identification Section for Significant Hazards. See Section 4 for First Aid Advice. See Section 8 for advice on the minimum requirements for personal protective equipment. Additional protective measures may be necessary, depending on the specific circumstances and/or the expert judgment of the emergency responders.

For emergency responders: Respiratory protection: respiratory protection will be necessary only in special cases, e.g., formation of mists. Half-face or full-face respirator with filter(s) for dust/organic vapor or Self Contained Breathing Apparatus (SCBA) can be used depending on the size of spill and potential level of exposure. If the exposure cannot be completely characterized or an oxygen deficient atmosphere is possible or anticipated, SCBA is recommended. Work gloves that are resistant to hydrocarbons are recommended. Gloves made of polyvinyl acetate (PVA) are not water-resistant and are not suitable for emergency use. Chemical goggles are recommended if splashes or contact with eyes is possible. Small spills: normal antistatic work clothes are usually adequate. Large spills: full body suit of chemical resistant, antistatic material is recommended.

SPILL MANAGEMENT

Land Spill: Stop leak if you can do it without risk. Recover by pumping or with suitable absorbent.

Water Spill: Stop leak if you can do it without risk. Confine the spill immediately with booms. Warn other shipping. Remove from the surface by skimming or with suitable absorbents. Seek the advice of a specialist before using dispersants.

Water spill and land spill recommendations are based on the most likely spill scenario for this material; however, geographic conditions, wind, temperature, (and in the case of a water spill) wave and current direction and speed may greatly influence the appropriate action to be taken. For this reason, local experts should be consulted. Note: Local regulations may prescribe or limit action to be taken.

ENVIRONMENTAL PRECAUTIONS

Large Spills: Dike far ahead of liquid spill for later recovery and disposal. Prevent entry into waterways, sewers, basements or confined areas.

SECTION 7 HANDLING AND STORAGE

HANDLING

Prevent small spills and leakage to avoid slip hazard. Material can accumulate static charges which may cause an electrical spark (ignition source). When the material is handled in bulk, an electrical spark could ignite any flammable vapors from liquids or residues that may be present (e.g., during switch-loading operations). Use proper bonding and/or ground procedures. However, bonding and grounds may not eliminate the hazard from static accumulation. Consult local applicable standards for guidance. Additional references include American Petroleum Institute 2003 (Protection Against Ignitions Arising out of Static, Lightning and Stray Currents) or National Fire Protection Agency 77 (Recommended Practice on Static Electricity) or CENELEC CLC/TR 50404 (Electrostatics - Code of practice for the avoidance of hazards due to static electricity).

Static Accumulator: This material is a static accumulator.

STORAGE

The container choice, for example storage vessel, may effect static accumulation and dissipation. Do not store in open or unlabelled containers. Keep away from incompatible materials.

SECTION 8 EXPOSURE CONTROLS / PERSONAL PROTECTION

Exposure limits/standards for materials that can be formed when handling this product: When mists/aerosols can occur the following are recommended: 5 mg/m³ - ACGIH TLV (inhalable fraction), 5 mg/m³ - OSHA PEL.

NOTE: Limits/standards shown for guidance only. Follow applicable regulations.

ENGINEERING CONTROLS

The level of protection and types of controls necessary will vary depending upon potential exposure conditions. Control measures to consider:
No special requirements under ordinary conditions of use and with adequate ventilation.

PERSONAL PROTECTION

Personal protective equipment selections vary based on potential exposure conditions such as applications, handling practices, concentration and ventilation. Information on the selection of protective equipment for use with this material, as provided below, is based upon intended, normal usage.

Respiratory Protection: If engineering controls do not maintain airborne contaminant concentrations at a level which is adequate to protect worker health, an approved respirator may be appropriate. Respirator selection, use, and maintenance must be in accordance with regulatory requirements, if applicable. Types of respirators to be considered for this material include:
No special requirements under ordinary conditions of use and with adequate ventilation.

For high airborne concentrations, use an approved supplied-air respirator, operated in positive pressure mode. Supplied air respirators with an escape bottle may be appropriate when oxygen levels are inadequate, gas/vapor warning properties are poor, or if air purifying filter capacity/rating may be exceeded.

Hand Protection: Any specific glove information provided is based on published literature and glove manufacturer data. Glove suitability and breakthrough time will differ depending on the specific use conditions. Contact the glove manufacturer for specific advice on glove selection and breakthrough times for your use conditions. Inspect and replace worn or damaged gloves. The types of gloves to be considered for this material include:
No protection is ordinarily required under normal conditions of use.

Eye Protection: If contact is likely, safety glasses with side shields are recommended.

Skin and Body Protection: Any specific clothing information provided is based on published literature or manufacturer data. The types of clothing to be considered for this material include:
No skin protection is ordinarily required under normal conditions of use. In accordance with good industrial hygiene practices, precautions should be taken to avoid skin contact.

Specific Hygiene Measures: Always observe good personal hygiene measures, such as washing after handling the material and before eating, drinking, and/or smoking. Routinely wash work clothing and protective equipment to remove contaminants. Discard contaminated clothing and footwear that cannot be cleaned. Practice good housekeeping.

ENVIRONMENTAL CONTROLS

Comply with applicable environmental regulations limiting discharge to air, water and soil. Protect the environment by applying appropriate control measures to prevent or limit emissions.

SECTION 9 PHYSICAL AND CHEMICAL PROPERTIES

Note: Physical and chemical properties are provided for safety, health and environmental considerations only and may not fully represent product specifications. Contact the Supplier for additional information.

GENERAL INFORMATION

Physical State: Liquid
Color: Amber
Odor: Characteristic
Odor Threshold: N/D

IMPORTANT HEALTH, SAFETY, AND ENVIRONMENTAL INFORMATION

Relative Density (at 15 °C): 0.888
Flash Point [Method]: >200°C (392°F) [ASTM D-92]
Flammable Limits (Approximate volume % in air): LEL: 0.9 UEL: 7.0
Autoignition Temperature: N/D
Boiling Point / Range: > 316°C (600°F)
Vapor Density (Air = 1): > 2 at 101 kPa
Vapor Pressure: < 0.013 kPa (0.1 mm Hg) at 20 °C
Evaporation Rate (n-butyl acetate = 1): N/D
pH: N/A
Log Pow (n-Octanol/Water Partition Coefficient): > 3.5
Solubility in Water: Negligible
Viscosity: 150 cSt (150 mm2/sec) at 40 °C | 14.7 cSt (14.7 mm2/sec) at 100°C
Oxidizing Properties: See Hazards Identification Section.

OTHER INFORMATION

Freezing Point: N/D
Melting Point: N/A
Pour Point: -9°C (16°F)
DMSO Extract (mineral oil only), IP-346: < 3 %wt
Decomposition Temperature: N/D

SECTION 10 STABILITY AND REACTIVITY

STABILITY: Material is stable under normal conditions.

CONDITIONS TO AVOID: Excessive heat. High energy sources of ignition.

MATERIALS TO AVOID: Strong oxidizers

HAZARDOUS DECOMPOSITION PRODUCTS: Material does not decompose at ambient temperatures.

HAZARDOUS POLYMERIZATION: Will not occur.

ExxonMobil

Product Name: MOBILGEAR 600 XP 150
Revision Date: 13 Sep 2013
Page 6 of 9

SECTION 11 TOXICOLOGICAL INFORMATION

ACUTE TOXICITY

Route of Exposure	Conclusion / Remarks
Inhalation	
Toxicity: No end point data for material.	Minimally Toxic. Based on assessment of the components.
Irritation: No end point data for material.	Negligible hazard at ambient/normal handling temperatures.
Ingestion	
Toxicity: No end point data for material.	Minimally Toxic. Based on assessment of the components.
Skin	
Toxicity: No end point data for material.	Minimally Toxic. Based on assessment of the components.
Irritation: No end point data for material.	Negligible irritation to skin at ambient temperatures. Based on assessment of the components.
Eye	
Irritation: No end point data for material.	May cause mild, short-lasting discomfort to eyes. Based on assessment of the components.

CHRONIC/OTHER EFFECTS

For the product itself:

Repeated and/or prolonged exposure may cause irritation to the skin, eyes, or respiratory tract.

Contains:

Base oil severely refined: Not carcinogenic in animal studies. Representative material passes IP-346, Modified Ames test, and/or other screening tests. Dermal and inhalation studies showed minimal effects; lung non-specific infiltration of immune cells, oil deposition and minimal granuloma formation. Not sensitizing in test animals.

The following ingredients are cited on the lists below: None.

--REGULATORY LISTS SEARCHED--

1 = NTP CARC	3 = IARC 1	5 = IARC 2B
2 = NTP SUS	4 = IARC 2A	6 = OSHA CARC

SECTION 12 ECOLOGICAL INFORMATION

The information given is based on data available for the material, the components of the material, and similar materials.

ECOTOXICITY

Material -- Not expected to be harmful to aquatic organisms.

MOBILITY

Base oil component -- Low solubility and floats and is expected to migrate from water to the land. Expected to partition to sediment and wastewater solids.

PERSISTENCE AND DEGRADABILITY
Biodegradation:
Base oil component -- Expected to be inherently biodegradable

BIOACCUMULATION POTENTIAL
Base oil component -- Has the potential to bioaccumulate, however metabolism or physical properties may reduce the bioconcentration or limit bioavailability.

SECTION 13 DISPOSAL CONSIDERATIONS

Disposal recommendations based on material as supplied. Disposal must be in accordance with current applicable laws and regulations, and material characteristics at time of disposal.

DISPOSAL RECOMMENDATIONS
Product is suitable for burning in an enclosed controlled burner for fuel value or disposal by supervised incineration at very high temperatures to prevent formation of undesirable combustion products. Protect the environment. Dispose of used oil at designated sites. Minimize skin contact. Do not mix used oils with solvents, brake fluids or coolants.

REGULATORY DISPOSAL INFORMATION
RCRA Information: The unused product, in our opinion, is not specifically listed by the EPA as a hazardous waste (40 CFR, Part 261D), nor is it formulated to contain materials which are listed as hazardous wastes. It does not exhibit the hazardous characteristics of ignitability, corrosivity or reactivity and is not formulated with contaminants as determined by the Toxicity Characteristic Leaching Procedure (TCLP). However, used product may be regulated.

Empty Container Warning Empty Container Warning (where applicable): Empty containers may contain residue and can be dangerous. Do not attempt to refill or clean containers without proper instructions. Empty drums should be completely drained and safely stored until appropriately reconditioned or disposed. Empty containers should be taken for recycling, recovery, or disposal through suitably qualified or licensed contractor and in accordance with governmental regulations. DO NOT PRESSURISE, CUT, WELD, BRAZE, SOLDER, DRILL, GRIND, OR EXPOSE SUCH CONTAINERS TO HEAT, FLAME, SPARKS, STATIC ELECTRICITY, OR OTHER SOURCES OF IGNITION. THEY MAY EXPLODE AND CAUSE INJURY OR DEATH.

SECTION 14 TRANSPORT INFORMATION

LAND (DOT): Not Regulated for Land Transport

LAND (TDG): Not Regulated for Land Transport

SEA (IMDG): Not Regulated for Sea Transport according to IMDG-Code

AIR (IATA): Not Regulated for Air Transport

SECTION 15 REGULATORY INFORMATION

OSHA HAZARD COMMUNICATION STANDARD: When used for its intended purposes, this material is not classified as hazardous in accordance with OSHA 29 CFR 1910.1200.

Complies with the following national/regional chemical inventory requirements: AICS, KECI, PICCS, TSCA
Special Cases:

Inventory	Status
NDSL	Restrictions Apply

EPCRA SECTION 302: This material contains no extremely hazardous substances.

SARA (311/312) REPORTABLE HAZARD CATEGORIES: None.

SARA (313) TOXIC RELEASE INVENTORY: This material contains no chemicals subject to the supplier notification requirements of the SARA 313 Toxic Release Program.

The following ingredients are cited on the lists below: None.

--REGULATORY LISTS SEARCHED--

1 = ACGIH ALL	6 = TSCA 5a2	11 = CA P65 REPRO	16 = MN RTK
2 = ACGIH A1	7 = TSCA 5e	12 = CA RTK	17 = NJ RTK
3 = ACGIH A2	8 = TSCA 6	13 = IL RTK	18 = PA RTK
4 = OSHA Z	9 = TSCA 12b	14 = LA RTK	19 = RI RTK
5 = TSCA 4	10 = CA P65 CARC	15 = MI 293	

Code key: CARC=Carcinogen; REPRO=Reproductive

SECTION 16 OTHER INFORMATION

N/D = Not determined, N/A = Not applicable

THIS SAFETY DATA SHEET CONTAINS THE FOLLOWING REVISIONS:
Revision Changes:
Section 13: Disposal Considerations - Disposal Recommendations information was modified.
Section 09: Phys/Chem Properties Note information was modified.
Section 09: Boiling Point C(F) information was modified.
Section 09: Pour Point C(F) information was modified.
Section 08: Comply with applicable regulations phrase information was modified.
Section 09: Vapor Pressure information was modified.
Hazard Identification: Health Hazards information was modified.
Section 11: Dermal Lethality Test Data information was modified.
Section 11: Dermal Lethality Test Comment information was modified.

Section 11: Oral Lethality Test Data information was modified.
Section 11: Inhalation Lethality Test Data information was modified.
Section 11: Dermal Irritation Test Data information was modified.
Section 11: Eye Irritation Test Data information was modified.
Section 11: Oral Lethality Test Comment information was modified.
Section 11: Inhalation Lethality Test Comment information was modified.
Section 11: Dermal Irritation Test Comment information was modified.
Section 11: Eye Irritation Test Comment information was modified.
Section 11: Inhalation Irritation Test Data information was modified.
Section 09: Relative Density - Header information was modified.
Section 09: Flash Point C(F) information was modified.
Section 09: Viscosity information was modified.
Section 09: Viscosity information was modified.
Section 14: LAND (TDG) - Header information was modified.
Section 11: Inhalation Lethality Test Comment information was modified.
Section 15: National Chemical Inventory Listing - Header information was modified.
Section 15: National Chemical Inventory Listing information was modified.
Section 15: Community RTK - Header information was modified.
Section 11: Additional Health Information information was modified.
Section 16: MSN, MAT ID information was modified.
Section 08: Exposure limits/standards information was modified.
Section 15: Special Cases Table information was modified.
Section 01: Company Contact Methods Sorted by Priority information was modified.
Section 06: Protective Measures information was added.
Section 06: Accidental Release - Protective Measures - Header information was added.
Section 09: Decomposition Temperature information was added.
Section 09: Decomposition Temp - Header information was added.

The information and recommendations contained herein are, to the best of ExxonMobil's knowledge and belief, accurate and reliable as of the date issued. You can contact ExxonMobil to insure that this document is the most current available from ExxonMobil. The information and recommendations are offered for the user's consideration and examination. It is the user's responsibility to satisfy itself that the product is suitable for the intended use. If buyer repackages this product, it is the user's responsibility to insure proper health, safety and other necessary information is included with and/or on the container. Appropriate warnings and safe-handling procedures should be provided to handlers and users. Alteration of this document is strictly prohibited. Except to the extent required by law, re-publication or retransmission of this document, in whole or in part, is not permitted. The term, "ExxonMobil" is used for convenience, and may include any one or more of ExxonMobil Chemical Company, Exxon Mobil Corporation, or any affiliates in which they directly or indirectly hold any interest.

Internal Use Only
MHC: 0B, 0B, 0, 0, 0, 0 PPEC: A

DGN: 7077871XUS (1012016)

Copyright 2002 Exxon Mobil Corporation, All rights reserved

11.5.4 MOBIL 600W SUPER CYLINDER OIL

Mobil

Mobil Cylinder Oils

Gear and Cylinder Oils

Product Description

Mobil Cylinder oils are extra high performance high viscosity oils designed for use in enclosed worm gears operating at moderate to high speeds and temperatures, and where heavy loads, slow speeds or high temperatures demand high viscosity oils. They are also intended for use in all steam engine applications They are formulated from high quality base stocks that are resistant to oxidation and thermal degradation, and the build-up of harmful deposits caused by the high operating temperatures of steam cylinders. They protect against rust and corrosion and provide good film strength and excellent lubricity and they are resistant to water washout.

Mobil 600W Cylinder Oil, Mobil 600W Super Cylinder Oil and Mobil Extra Hecla Super Cylinder Oil are additized to enhance their frictional and load-carrying properties. All four members of the product family are widely used in worm gear applications, couplings and bearings, with viscosity grade depending on operating conditions. In steam applications Mobil 600W Super Cylinder Oil is recommended for saturated and superheated steam up to a temperature of 260ºC. Mobil Extra Hecla Super Cylinder Oil and Mobil Extra Hecla Super Cylinder Oil Mineral may be used with superheated steam above 260ºC. Mobil Extra Hecla Super Cylinder Oil Mineral has good demulsibility. Mobil Cylinder Oils can be applied both by drip feed cups and force feed mechanical lubricating devices.

Mobil Cylinder Oils are the benchmark mineral product for worm gear OEMs and users, and are still recognised as leading products for steam cylinder applications.

Features and Benefits

The Mobil Cylinder Oil brand of lubricants represents the earliest lubricant product marketed by our Corporation's predecessor companies. 600W Cylinder Oil was produced by the Vacuum Oil Company in the second half of the 19th century and was a breakthrough product of its time. Continual upgrading and application of the latest base oil and additive technology has maintained this product series as a leader in its application areas. While steam cylinder applications are now less common, the reputation of Mobil Cylinder Oils in worm gear applications remains unmatched among mineral-based products. Mobil Cylinder Oils offer the following features and potential benefits:

Features	Advantages and Potential Benefits
Excellent film integrity at high temperatures	Excellent equipment protection at high temperatures occasioned by variable load conditions, avoiding unexpected downtime and equipment replacement
	Provision of good sealing film round rods and in glands in steam applications
Excellent resistance to deposit formation at high temperatures	Resistant to deposits on areas subject to high spot temperatures, maintaining cleaner systems, requiring less maintenance
Excellent anti-wear and low friction properties	Additized grades give reduced wear and high efficiency
Very good water separation in absence of additives	Non-additized grade gives ready separation from condensate
High quality and built in performance features	Results in fewer unplanned stoppages and reduced maintenance costs

Applications

Mobil 600W Cylinder Oil is recommended for the following applications:

- The splash lubrication of enclosed worm gears operating at moderate to high speeds and temperatures. (Mobil 600 W Cylinder Oil)
- Steam cylinders, couplings, bearings, and break-in of compressor cylinders (Mobil 600 W Cylinder Oil)
- Mobil 600W Super Cylinder Oil and Mobil Extra Hecla Super Cylinder Oil are recommended for the above applications but under higher temperature and load conditions
- Mobil Extra Hecla Super Cylinder Mineral is recommended where ready separation from condensate is essential, for example, where exhaust steam is used for process work
- Mobil Extra Hecla Super Cylinder Mineral may also be used as a tempering oil for bath temperatures up to 290C

Typical Properties

Mobil Cylinder Oils	Mobil 600 W Cylinder Oil	Mobil 600 W Super Cylinder Oil	Mobil Extra Hecla Super Cylinder Oil	Mobil Extra Hecla Super Cylinder Oil Mineral
ISO Viscosity Grade	--	460	680	1000
Viscosity, ASTM D 445				
cSt @ 40ºC	375	460	680	1000
cSt @ 100ºC	27.0	30.5	35.8	43.0
Viscosity Index, ASTM D 2270	95	95	85	80
Pour Point, ºC, ASTM D 97	-9	-6	0	3
Flash Point, ºC, ASTM D 92	282	282	282	288
Density,ASTM D4052 @15.6º C kg/l,	0.90	0.91	0.92	0.92
Copper Strip Corrosion, ASTM D 130,3 hrs @ 100º C	1B	1B	1B	1B

Health and Safety

Based on available information, this product is not expected to produce adverse effects on health when used for the intended application and the recommendations provided in the Material Safety Data Sheet (MSDS) are followed. MSDS's are available upon request through your sales contract office, or via the Internet. This product should not be used for purposes other than its intended use. If disposing of used product, take care to protect the environment.

The Mobil logotype, the Pegasus design are trademarks of Exxon Mobil Corporation, or one of its subsidiaries.

Exxon Mobil Corporation
3225 Gallows Road
Fairfax, VA 22037

1-800-ASK MOBIL (275-6624)

Typical Properties are typical of those obtained with normal production tolerance and do not constitute a specification. Variations that do not affect product performance are to be expected during normal manufacture and at different blending locations. The information contained herein is subject to change without notice. All products may not be available locally. For more information, contact your local ExxonMobil contact or visit www.exxonmobil.com
ExxonMobil is comprised of numerous affiliates and subsidiaries, many with names that include Esso, Mobil, or ExxonMobil. Nothing in this document is intended to override or supersede the corporate separateness of local entities. Responsibility for local action and accountability remains with the local ExxonMobil-affiliate entities.

Copyright © 2001-2013 Exxon Mobil Corporation. All rights reserved..

ExxonMobil

Product Name: MOBIL 600 W SUPER CYLINDER OIL
Revision Date: 28 Apr 2011
Page 1 of 9

MATERIAL SAFETY DATA SHEET

SECTION 1 PRODUCT AND COMPANY IDENTIFICATION

PRODUCT

Product Name: **MOBIL 600 W SUPER CYLINDER OIL**
Product Description: Base Oil and Additives
Product Code: 601211-00, 970121
Intended Use: Cylinder oil

COMPANY IDENTIFICATION

Supplier: EXXON MOBIL CORPORATION
3225 GALLOWS RD.
FAIRFAX, VA. 22037 USA

24 Hour Health Emergency	609-737-4411
Transportation Emergency Phone	800-424-9300
ExxonMobil Transportation No.	281-834-3296
Product Technical Information	800-662-4525, 800-947-9147
MSDS Internet Address	http://www.exxon.com, http://www.mobil.com

SECTION 2 COMPOSITION / INFORMATION ON INGREDIENTS

No Reportable Hazardous Substance(s) or Complex Substance(s).

SECTION 3 HAZARDS IDENTIFICATION

This material is not considered to be hazardous according to regulatory guidelines (see (M)SDS Section 15).

POTENTIAL HEALTH EFFECTS

Low order of toxicity. Excessive exposure may result in eye, skin, or respiratory irritation.

NFPA Hazard ID:	Health:	0	Flammability:	1	Reactivity:	0
HMIS Hazard ID:	Health:	0	Flammability:	1	Reactivity:	0

NOTE: This material should not be used for any other purpose than the intended use in Section 1 without expert advice. Health studies have shown that chemical exposure may cause potential human health risks which may vary from person to person.

SECTION 4 FIRST AID MEASURES

INHALATION

Remove from further exposure. For those providing assistance, avoid exposure to yourself or others. Use adequate respiratory protection. If respiratory irritation, dizziness, nausea, or unconsciousness occurs, seek

immediate medical assistance. If breathing has stopped, assist ventilation with a mechanical device or use mouth-to-mouth resuscitation.

SKIN CONTACT
Wash contact areas with soap and water.

EYE CONTACT
Flush thoroughly with water. If irritation occurs, get medical assistance.

INGESTION
First aid is normally not required. Seek medical attention if discomfort occurs.

SECTION 5 FIRE FIGHTING MEASURES

EXTINGUISHING MEDIA
Appropriate Extinguishing Media: Use water fog, foam, dry chemical or carbon dioxide (CO2) to extinguish flames.

Inappropriate Extinguishing Media: Straight Streams of Water

FIRE FIGHTING
Fire Fighting Instructions: Evacuate area. Prevent runoff from fire control or dilution from entering streams, sewers, or drinking water supply. Firefighters should use standard protective equipment and in enclosed spaces, self-contained breathing apparatus (SCBA). Use water spray to cool fire exposed surfaces and to protect personnel.

Hazardous Combustion Products: Smoke, Fume, Aldehydes, Sulfur oxides, Incomplete combustion products, Oxides of carbon

FLAMMABILITY PROPERTIES
Flash Point [Method]: >282C (540F) [ASTM D-92]
Flammable Limits (Approximate volume % in air): LEL: 0.9 UEL: 7.0
Autoignition Temperature: N/D

SECTION 6 ACCIDENTAL RELEASE MEASURES

NOTIFICATION PROCEDURES
In the event of a spill or accidental release, notify relevant authorities in accordance with all applicable regulations. US regulations require reporting releases of this material to the environment which exceed the applicable reportable quantity or oil spills which could reach any waterway including intermittent dry creeks. The National Response Center can be reached at (800)424-8802.

PROTECTIVE MEASURES
Avoid contact with spilled material. See Section 5 for fire fighting information. See the Hazard Identification Section for Significant Hazards. See Section 4 for First Aid Advice. See Section 8 for advice on the minimum requirements for personal protective equipment. Additional protective measures may be necessary, depending on the specific circumstances and/or the expert judgment of the emergency responders. For emergency

responders: Respiratory protection: respiratory protection will be necessary only in special cases, e.g., formation of mists. Half-face or full-face respirator with filter(s) for dust/organic vapor or Self Contained Breathing Apparatus (SCBA) can be used depending on the size of spill and potential level of exposure. If the exposure cannot be completely characterized or an oxygen deficient atmosphere is possible or anticipated, SCBA is recommended. Work gloves that are resistant to hydrocarbons are recommended. Gloves made of polyvinyl acetate (PVA) are not water-resistant and are not suitable for emergency use. Chemical goggles are recommended if splashes or contact with eyes is possible. Small spills: normal antistatic work clothes are usually adequate. Large spills: full body suit of chemical resistant, antistatic material is recommended.

SPILL MANAGEMENT

Land Spill: Stop leak if you can do it without risk. Recover by pumping or with suitable absorbent.

Water Spill: Stop leak if you can do it without risk. Confine the spill immediately with booms. Warn other shipping. Remove from the surface by skimming or with suitable absorbents. Seek the advice of a specialist before using dispersants.

Water spill and land spill recommendations are based on the most likely spill scenario for this material; however, geographic conditions, wind, temperature, (and in the case of a water spill) wave and current direction and speed may greatly influence the appropriate action to be taken. For this reason, local experts should be consulted. Note: Local regulations may prescribe or limit action to be taken.

ENVIRONMENTAL PRECAUTIONS

Large Spills: Dike far ahead of liquid spill for later recovery and disposal. Prevent entry into waterways, sewers, basements or confined areas.

SECTION 7 HANDLING AND STORAGE

HANDLING

Prevent small spills and leakage to avoid slip hazard. Material can accumulate static charges which may cause an electrical spark (ignition source). When the material is handled in bulk, an electrical spark could ignite any flammable vapors from liquids or residues that may be present (e.g., during switch-loading operations). Use proper bonding and/or ground procedures. However, bonding and grounds may not eliminate the hazard from static accumulation. Consult local applicable standards for guidance. Additional references include American Petroleum Institute 2003 (Protection Against Ignitions Arising out of Static, Lightning and Stray Currents) or National Fire Protection Agency 77 (Recommended Practice on Static Electricity) or CENELEC CLC/TR 50404 (Electrostatics - Code of practice for the avoidance of hazards due to static electricity).

Static Accumulator: This material is a static accumulator.

STORAGE

The container choice, for example storage vessel, may effect static accumulation and dissipation. Do not store in open or unlabelled containers. Keep away from incompatible materials.

SECTION 8 EXPOSURE CONTROLS / PERSONAL PROTECTION

Exposure limits/standards for materials that can be formed when handling this product: When mists / aerosols

can occur, the following are recommended: 5 mg/m³ - ACGIH TLV, 10 mg/m³ - ACGIH STEL, 5 mg/m³ - OSHA PEL.

NOTE: Limits/standards shown for guidance only. Follow applicable regulations.

ENGINEERING CONTROLS

The level of protection and types of controls necessary will vary depending upon potential exposure conditions. Control measures to consider:
No special requirements under ordinary conditions of use and with adequate ventilation.

PERSONAL PROTECTION

Personal protective equipment selections vary based on potential exposure conditions such as applications, handling practices, concentration and ventilation. Information on the selection of protective equipment for use with this material, as provided below, is based upon intended, normal usage.

Respiratory Protection: If engineering controls do not maintain airborne contaminant concentrations at a level which is adequate to protect worker health, an approved respirator may be appropriate. Respirator selection, use, and maintenance must be in accordance with regulatory requirements, if applicable. Types of respirators to be considered for this material include:
No special requirements under ordinary conditions of use and with adequate ventilation.

For high airborne concentrations, use an approved supplied-air respirator, operated in positive pressure mode. Supplied air respirators with an escape bottle may be appropriate when oxygen levels are inadequate, gas/vapor warning properties are poor, or if air purifying filter capacity/rating may be exceeded.

Hand Protection: Any specific glove information provided is based on published literature and glove manufacturer data. Glove suitability and breakthrough time will differ depending on the specific use conditions. Contact the glove manufacturer for specific advice on glove selection and breakthrough times for your use conditions. Inspect and replace worn or damaged gloves. The types of gloves to be considered for this material include:
No protection is ordinarily required under normal conditions of use.

Eye Protection: If contact is likely, safety glasses with side shields are recommended.

Skin and Body Protection: Any specific clothing information provided is based on published literature or manufacturer data. The types of clothing to be considered for this material include:
No skin protection is ordinarily required under normal conditions of use. In accordance with good industrial hygiene practices, precautions should be taken to avoid skin contact.

Specific Hygiene Measures: Always observe good personal hygiene measures, such as washing after handling the material and before eating, drinking, and/or smoking. Routinely wash work clothing and protective equipment to remove contaminants. Discard contaminated clothing and footwear that cannot be cleaned. Practice good housekeeping.

ENVIRONMENTAL CONTROLS
See Sections 6, 7, 12, 13.

SECTION 9 PHYSICAL AND CHEMICAL PROPERTIES

Typical physical and chemical properties are given below. Consult the Supplier in Section 1 for additional data.

GENERAL INFORMATION

Physical State: Liquid
Color: Brown
Odor: Characteristic
Odor Threshold: N/D

IMPORTANT HEALTH, SAFETY, AND ENVIRONMENTAL INFORMATION

Relative Density (at 15 C): 0.907
Flash Point [Method]: >282C (540F) [ASTM D-92]
Flammable Limits (Approximate volume % in air): LEL: 0.9 UEL: 7.0
Autoignition Temperature: N/D
Boiling Point / Range: > 316C (600F)
Vapor Density (Air = 1): > 2 at 101 kPa
Vapor Pressure: < 0.013 kPa (0.1 mm Hg) at 20 C
Evaporation Rate (n-butyl acetate = 1): N/D
pH: N/A
Log Pow (n-Octanol/Water Partition Coefficient): > 3.5
Solubility in Water: Negligible
Viscosity: 460 cSt (460 mm2/sec) at 40 C | 30.5 cSt (30.5 mm2/sec) at 100C
Oxidizing Properties: See Hazards Identification Section.

OTHER INFORMATION

Freezing Point: N/D
Melting Point: N/A
Pour Point: -6°C (21°F)
DMSO Extract (mineral oil only), IP-346: < 3 %wt

SECTION 10 STABILITY AND REACTIVITY

STABILITY: Material is stable under normal conditions.

CONDITIONS TO AVOID: Excessive heat. High energy sources of ignition.

MATERIALS TO AVOID: Strong oxidizers

HAZARDOUS DECOMPOSITION PRODUCTS: Material does not decompose at ambient temperatures.

HAZARDOUS POLYMERIZATION: Will not occur.

SECTION 11 TOXICOLOGICAL INFORMATION

ACUTE TOXICITY

Route of Exposure	Conclusion / Remarks
Inhalation	
Toxicity (Rat): LC50 > 5000 mg/m3	Minimally Toxic. Based on test data for structurally similar materials.
Irritation: No end point data.	Negligible hazard at ambient/normal handling temperatures. Based on assessment of the components.

Ingestion	
Toxicity (Rat): LD50 > 5000 mg/kg	Minimally Toxic. Based on test data for structurally similar materials.
Skin	
Toxicity (Rabbit): LD50 > 5000 mg/kg	Minimally Toxic. Based on test data for structurally similar materials.
Irritation (Rabbit): Data available.	Negligible irritation to skin at ambient temperatures. Based on test data for structurally similar materials.
Eye	
Irritation (Rabbit): Data available.	May cause mild, short-lasting discomfort to eyes. Based on test data for structurally similar materials.

CHRONIC/OTHER EFFECTS

Contains:

Base oil severely refined: Not carcinogenic in animal studies. Representative material passes IP-346, Modified Ames test, and/or other screening tests. Dermal and inhalation studies showed minimal effects; lung non-specific infiltration of immune cells, oil deposition and minimal granuloma formation. Not sensitizing in test animals.

Additional information is available by request.

The following ingredients are cited on the lists below: None.

--REGULATORY LISTS SEARCHED--

1 = NTP CARC	3 = IARC 1	5 = IARC 2B
2 = NTP SUS	4 = IARC 2A	6 = OSHA CARC

SECTION 12 ECOLOGICAL INFORMATION

The information given is based on data available for the material, the components of the material, and similar materials.

ECOTOXICITY

Material -- Not expected to be harmful to aquatic organisms.

MOBILITY

Base oil component -- Low solubility and floats and is expected to migrate from water to the land. Expected to partition to sediment and wastewater solids.

PERSISTENCE AND DEGRADABILITY

Biodegradation:

Base oil component -- Expected to be inherently biodegradable

BIOACCUMULATION POTENTIAL

Base oil component -- Has the potential to bioaccumulate, however metabolism or physical properties may reduce the bioconcentration or limit bioavailability.

SECTION 13 DISPOSAL CONSIDERATIONS

Disposal recommendations based on material as supplied. Disposal must be in accordance with current applicable laws and regulations, and material characteristics at time of disposal.

DISPOSAL RECOMMENDATIONS

Product is suitable for burning in an enclosed controlled burner for fuel value or disposal by supervised incineration at very high temperatures to prevent formation of undesirable combustion products. Protect the environment. Dispose of used oil at designated sites. Minimize skin contact. Do not mix used oils with solvents, brake fluids or coolants.

REGULATORY DISPOSAL INFORMATION

RCRA Information: The unused product, in our opinion, is not specifically listed by the EPA as a hazardous waste (40 CFR, Part 261D), nor is it formulated to contain materials which are listed as hazardous wastes. It does not exhibit the hazardous characteristics of ignitability, corrosivity or reactivity and is not formulated with contaminants as determined by the Toxicity Characteristic Leaching Procedure (TCLP). However, used product may be regulated.

Empty Container Warning Empty Container Warning (where applicable): Empty containers may contain residue and can be dangerous. Do not attempt to refill or clean containers without proper instructions. Empty drums should be completely drained and safely stored until appropriately reconditioned or disposed. Empty containers should be taken for recycling, recovery, or disposal through suitably qualified or licensed contractor and in accordance with governmental regulations. DO NOT PRESSURISE, CUT, WELD, BRAZE, SOLDER, DRILL, GRIND, OR EXPOSE SUCH CONTAINERS TO HEAT, FLAME, SPARKS, STATIC ELECTRICITY, OR OTHER SOURCES OF IGNITION. THEY MAY EXPLODE AND CAUSE INJURY OR DEATH.

SECTION 14 TRANSPORT INFORMATION

LAND (DOT): Not Regulated for Land Transport

LAND (TDG): Not Regulated for Land Transport

SEA (IMDG): Not Regulated for Sea Transport according to IMDG-Code

AIR (IATA): Not Regulated for Air Transport

SECTION 15 REGULATORY INFORMATION

OSHA HAZARD COMMUNICATION STANDARD: When used for its intended purposes, this material is not classified as hazardous in accordance with OSHA 29 CFR 1910.1200.

Complies with the following national/regional chemical inventory requirements:: KECI, PICCS, AICS, ENCS, IECSC, TSCA, EINECS, DSL

EPCRA: This material contains no extremely hazardous substances.

SARA (311/312) REPORTABLE HAZARD CATEGORIES: None.

SARA (313) TOXIC RELEASE INVENTORY: This material contains no chemicals subject to the supplier notification requirements of the SARA 313 Toxic Release Program.

The following ingredients are cited on the lists below: None.

--REGULATORY LISTS SEARCHED--

1 = ACGIH ALL	6 = TSCA 5a2	11 = CA P65 REPRO	16 = MN RTK
2 = ACGIH A1	7 = TSCA 5e	12 = CA RTK	17 = NJ RTK
3 = ACGIH A2	8 = TSCA 6	13 = IL RTK	18 = PA RTK
4 = OSHA Z	9 = TSCA 12b	14 = LA RTK	19 = RI RTK
5 = TSCA 4	10 = CA P65 CARC	15 = MI 293	

Code key: CARC=Carcinogen; REPRO=Reproductive

SECTION 16 OTHER INFORMATION

N/D = Not determined, N/A = Not applicable

THIS SAFETY DATA SHEET CONTAINS THE FOLLOWING REVISIONS:
Revision Changes:
Section 15: National Chemical Inventory Listing was modified.
Section 06: Protective Measures was added.
Section 15: TSCA Class 2 Statement was deleted.
Section 13: Disposal Considerations - Disposal Recommendations was modified.
Section 10 Stability and Reactivity - Header was modified.
Section 06: Accidental Release - Protective Measures - Header was added.
Section 13: Disposal Recommendations - Note was modified.
Section 13: Empty Container Warning was modified.
Section 08: Personal Protection was modified.
Section 08: Hand Protection was modified.
Section 07: Handling and Storage - Handling was modified.
Section 07: Handling and Storage - Storage Phrases was modified.
Section 11: Dermal Lethality Test Data was modified.
Section 11: Oral Lethality Test Data was modified.
Section 05: Hazardous Combustion Products was modified.
Section 06: Accidental Release - Spill Management - Water was modified.
Section 09: Relative Density - Header was modified.
Section 09: Flash Point C(F) was modified.
Section 09: Viscosity was modified.
Section 14: Sea (IMDG) - Header was modified.
Section 14: Air (IATA) - Header was modified.
Section 14: LAND (TDG) - Header was modified.
Section 14: LAND (DOT) - Header was modified.
Section 15: Chemical Name - Header was deleted.

Section 15: CAS Number - Header was deleted.
Section 15: List Citations - Header was deleted.
Section 15: List Citations Table was deleted.
Section 15: List Citation Table - Header was modified.
Section 14: LAND (DOT) - Default was modified.
Section 14: LAND (TDG) Default was modified.
Section 14: Sea (IMDG) - Default was modified.
Section 14: Air (IATA) - Default was modified.
Section 15: National Chemical Inventory Listing - Header was modified.
Section 16: Code to MHCs was modified.
Section 08: Exposure limits/standards was modified.
Hazard Identification: OSHA - May be Hazardous Statement was modified.
Section 06: Notification Procedures was modified.
Section 09: Oxidizing Properties was modified.
Section 01: Company Contact Methods Sorted by Priority was modified.
Section 06: Notification Procedures - Header was modified.

The information and recommendations contained herein are, to the best of ExxonMobil's knowledge and belief, accurate and reliable as of the date issued. You can contact ExxonMobil to insure that this document is the most current available from ExxonMobil. The information and recommendations are offered for the user's consideration and examination. It is the user's responsibility to satisfy itself that the product is suitable for the intended use. If buyer repackages this product, it is the user's responsibility to insure proper health, safety and other necessary information is included with and/or on the container. Appropriate warnings and safe-handling procedures should be provided to handlers and users. Alteration of this document is strictly prohibited. Except to the extent required by law, re-publication or retransmission of this document, in whole or in part, is not permitted. The term, "ExxonMobil" is used for convenience, and may include any one or more of ExxonMobil Chemical Company, Exxon Mobil Corporation, or any affiliates in which they directly or indirectly hold any interest.

Internal Use Only
MHC: 0B, 0B, 0, 0, 0, 0 PPEC: A

DGN: 2007381XUS (547803)

Copyright 2002 Exxon Mobil Corporation, All rights reserved

11.5.5 FALK LONG TERM GREASE

FALK®

LONG TERM GREASE LTG

High Speed Grease Centrifuge

Typical Grease After Centrifuging

Facts on Lubrication

Separation Grease is a blend of oil and a thickener or soap. These compounds are not very stable and will eventually bleed or separate under the high centrifugal forces generated in many coupling applications. Once a grease begins to separate, the thickener accumulates in the areas where lubrication is required, and rapid wear of the contacting surfaces occurs. The oil is now free to leak out of the coupling past the seals, causing premature failure of the coupling.

Service Intervals for All-Purpose Greases It is common practice to lubricate all rotating equipment with one or two all purpose greases.

Most greases which are used as coupling lubricants were initially developed as bearing lubricants.

Bearing greases have a low viscosity and high bleed rate which is desirable to avoid heat caused by rolling friction. However, rolling friction is not present in couplings where the only movement is a sliding action caused by misalignment of shafts or thermal growth.

Bearing lubricants are adequate if the coupling manufacturer's service intervals are followed. These intervals are usually six (6) months for gear couplings and one (1) year for grid couplings.

Maintenance & Downtime In today's industrial plants the cost of equipment downtime for servicing can easily exceed hundreds of dollars per hour. So rather than shutting down this critical equipment, the connecting shaft couplings are frequently allowed to run until failure occurs or until the more expensive drive components in the system require maintenance.

In an attempt to hold the line of high maintenance costs, some users have switched to non-lubricated coupling designs. This switch seldom works out for the best however, since many elastomer designs have a short life expectancy and they induce problems elsewhere in the drive system. When they do fail, the connected equipment often has to be moved to replace the element.

Now LTG — What is it?

Our engineers have spent years measuring the wear rates on coupling components using various lubricants and coatings. Virtually every common industrial lubricant has been centrifuged under laboratory conditions per ASTM standard test methods for "Oil Separation from Lubricating Grease by Centrifuging." The results of extensive research indicated that greases with high viscosities and low bleed rates produce the longest life.

Falk LTG is specially formulated to provide superior lubrication for flexible shaft couplings.

How does it work?

The consistency of Falk LTG changes with operating conditions. As manufactured it is an NLGI #1/2 grade. Working of the lubricant under actual service conditions causes it to become semifluid while the grease near the seals will set to a heavier grade, helping to prevent leakage.

LTG is highly resistant to separation, easily out performing all other lubricants tested. The resistance to separation allows the lubricant to be used for relatively long periods of time.

Benefits for your Application

- **Increased coupling life.**
- **Significantly extended re-lubrication intervals.**
- **Reduced maintenance costs.**
- **Reduced downtime.**
- **Superior lubrication.**
- **High load carrying capabilities.**
- **Usable up to 250°F (121°C).**

USDA Approval

LTG has the United States Department of Agriculture Food Safety & Inspection Service approval for applications where there is no possibility of contact with edible products (H-2 rating).

Compatibility

Falk LTG grease is compatible with most coupling lubricants. For optimum performance it is recommended that couplings be cleaned of old grease before packing with LTG.

Extended Maintenance Intervals

Steelflex® When Steelflex couplings are initially lubricated with LTG, scheduled periodic maintenance is not needed. You can now get the superior protective features of the Steelflex, plus the toughness of steel, and eliminate periodic maintenance expense. Falk recommends that such couplings be inspected and re-lubed only when the connected equipment is being serviced or the coupling is opened for alignment checks.

Lifelign® Gear Couplings Re-lube intervals for sensitive gear couplings have been extended from six (6) months to three (3) years.

Specifications

Thickener . . . . . Lithium Soap/Polymer

Base Oil . . . . . Highly Refined Mineral Oil
Viscosity @ 100°F (38°C) 3300SSU (715cSt)
Viscosity @ 210°F (99°C) 163SSU (33cSt)

NLGI Grade . . . . . ½

Consistency (ASTM D-217) 60 stroke worked penetration value in the range of 315-360 measured at 77°F (25°C).

Minimum Timken EP O.K. Load (ASTM D 2509) . . . . . 40 lbs.

Four Ball EP (ASTM D 2596)
Load Wear Index . . . . . 46 kgf
Weld Point . . . . . 250 kgf

Four Ball Wear, Scar (ASTM D 2266) . . . . . .66 mm

Dropping Point . . . . . 350°F (177°C) min.

Flash Point . . . . . 450°F (232°C)

Oxidation and Rust Inhibitors . . . . . Yes

Centrifugal Separation
(ASTM D 4425-84) . . . . . K36# 2/24 max.

Color . . . . . Dark brown

Operating Range . . . . . 20°F (29°C) to 250°F (121°C)

Minimum Pump . . . . . 20°F (-7°C)

Operating Speed Range
Steelflex Couplings . . . . . All Speeds
Gear Couplings . . . . . See Service Manual 458-110

Material Safety Data Sheet

(Form 950401) Available upon request.

5 Year Warranty

A new Steelflex coupling initially lubricated with the proper amount of LTG as described in the service manual, operated within the specified ambient temperature range and installed and aligned within the limits specified in the installation manual is warranted for five (5) years against lubrication related grid member failure.

Packaging

Falk LTG is packaged to suit every need.

Polybags
Included with Sizes 1020-1090T couplings for initial handpacking at installation.

14 ounce cartridges
For use in standard industrial lubrication guns.

35 pound pails

120 pound kegs
For plants with many small couplings or large size couplings. Best for hand packing.

400 pound drums
For plants with a pressurized lubrication system.

A 10-pack of 14 oz. cartridges or a case of 3-10 packs of 14 oz. cartridges.
Ideal for distributor stocks.

Steelflex Coupling Size	Required Lube wt-lbs (kg)	Gear Coupling Size ★	Required Lube wt-lbs (kg)	GC 02 Coupling Size	Required Lube wt-lbs (kg)
1020T	.06 (.027)				
1030T	.09 (.040)	1010G	.09 (.041)	1010G	.025 (.011)
1040T	.12 (.055)				
1050T	.15 (.068)	1015G	.16 (.073)	1015G	.063 (.0283)
1060T	.19 (.086)				
1070T	.25 (.114)	1020G	.25 (.11)	1020G	.094 (.042)
1080T	.38 (.173)	1025G	.50 (.23)	1025G	.144 (.065)
1090T	.56 (.255)	1030G	.80 (.36)	1030G	.201 (.093)
1100T	.94 (427)	1035G	2.00 (.91)	1035G	.269 (.122)
1110T	1.12 (.509)	1040G	2.50 (1.14)		
1120T	1.62 (.736)	1045G	3.00 (6.6)		
1130T	2.0 (.909)	1050G	3.50 (1.59)		
1140T	2.5 (1.136)	1055G	4.00 (1.81)		
1150T	4.3 (1.955)	1060G	4.50 (2.05)		
1160T	6.2 (2.818)	1070G	5.00 (2.27)		
1170T	7.7 (3.5)	1080G	21 (9.55)		
1180T	8.3 (3.773)	1090G	27		
1190T	9.7 (4.409)	1100G	33		
1200T	12.4 (5.636)	1110G	39		
1210T	23.2 (10.55)	1120G	46		
1220T	35.4 (16.09)	1130G	72		
1230T	53.0 (24.09)	1140G	73		
1240T	74.5 (33.86)	1150G	90		
1250T	110.5 (50.23)	1160G	95		
1260T	148.1 (67.32)	1180G	110		
		1200G	150		

★ Refer to Selection Guide 451-110 for larger sizes.

REXNORD

REXNORD INDUSTRIES, LLC • MILWAUKEE, WISCONSIN
FORM 840201D
September 2002, supersedes 9/97

MATERIAL SAFETY DATA SHEET FOR FALK™ LONG TERM GREASE (LTG)

SECTION 1 — PRODUCT AND COMPANY IDENTIFICATION

PRODUCT: Falk™ Long Term Grease

SYNONYMS/Other: NONE
MSDS NUMBER: 950401
PRODUCT TYPE: Multipurpose Grease
PREPARATION/REVISION DATE: 01/03/2012

Please note: Blank spaces are not permitted. If any item is not applicable, or no information is available, the space must be marked.

MANUFACTURER

Lubrication Technologies, Inc.
900 Mendelssohn Avenue North
Golden Valley, MN
55427-4309

TELEPHONE NUMBERS

Emergency Telephone Number: 800-424-9300

SECTION 2 — PRODUCT/INGREDIENTS

INGREDIENTS	CAS #	%	OSHA TWA	OSHA STEL	ACGIH TWA	SKIN
Asphalt (Petroleum)	8052-42-4	5-10%	5 mg/m (PEL)	10 mg/m^3	5 mg/m^3 (TVL)	NO
Phosphorodithoic Acid, O,O-DI C1-14-ALKYL ESTERS, ZINC SALTS (2:1) (ZDDP)	68649-42-3	1-5%	–	–	–	NO

Comments: (TWA) — Time Weighted Average is the employee's average airborne exposure in any 8-hour work shift of a 40-hour work week which shall not be exceeded.
(STEL) — Short Term Exposure Limit is the employee's 15-minute time weighted average exposure which shall not be exceeded at any time during a work day unless another time limit is specified.

J Applicable to Oil Mist, not defined for base oils.

SECTION 3 — HAZARDS IDENTIFICATION

WARNING: *MAY CAUSE EYE IRRITATION*
MAY CAUSE SKIN IRRITATION

Eye Contact: Direct contact may cause irritation, redness, tearing, and blurred vision. Avoid prolonged skin contact. This product contains materials that may cause skin irritation. Prolonged or repeated contact may result in dermatitis (dryness, chapping and reddening of skin). High-pressure grease injection due to break in high pressure lines or via grease gun may not be visible, may cause delayed soft-tissue damage. Delay in treatment may result in discoloration of tissue, leading to loss of body part.

Inhalation: This material has a low vapor pressure and as such is not expected to present an inhalation hazard at ambient temperature. Should heated or misted material lead to overexposure by inhalation, may cause nonspecific discomfort, such as nausea, headache, or weakness.

Ingestion: Do not ingest. Product is expected to be relatively non-toxic unless lung aspiration occurs. Aspiration is not expected with this material due to thickness of product. Coughing, choking, and gagging are often noted at the time of aspiration should it occur. This product has laxative properties and may result in abdominal cramps and diarrhea.

Other: Not applicable.

SECTION 4 — FIRST AID MEASURES

Eye Contact: Flush immediately with large amounts of water for at least 15 minutes. Eyelids should be held away from the

Date Issued: January 2012 — 1 — Form 950401

MATERIAL SAFETY DATA SHEET FOR FALK™ LONG TERM GREASE (LTG)

	eyeball to ensure thorough rinsing. Get medical attention if irritation persists. If material is hot, treat for thermal burns and take victim to hospital immediately.
Skin Contact:	Remove contaminated clothing. Wash contaminated area thoroughly with soap and water. If redness or irritation occurs, seek medical attention. If material is hot, submerge injured area in cold water. If victim is severely burned, remove to a hospital immediately. Wash contaminated clothing before reuse.
	Of special caution is sub-cutaneous grease injection due to high pressure. Victim may not be aware of injected material. Contact a physician as soon as possible for removal of the injected grease.
Inhalation:	If overcome by inhalation of hot vapors, remove to fresh air. Use oxygen if there is difficulty breathing or artificial respiration if breathing has stopped. Do not leave victim unattended. Seek immediate medical attention if necessary.
Ingestion:	Do not induce vomiting. If spontaneous vomiting occurs, keep head below hips to prevent aspiration and monitor for breathing difficulty. Gastric lavage should be performed only by qualified medical personnel. Keep affected person warm and at rest. Seek immediate medical attention.
Other:	Not applicable.

SECTION 5 — FIRE FIGHTING MEASURES

Flash Point:	218°C (425°F) by ASTM D 92.
Flammable Limits:	Not determined.
Extinguishing media:	Use water spray, dry chemical, alcohol foam, all purpose AFFF, or carbon dioxide to extinguish fire. Water may cause frothing.
Special Fire Fighting Procedures:	Evacuate area and fight fire from a safe distance. If leak or spill has not ignited, ventilate area and use water spray to disperse gas or vapor and to protect personnel attempting to stop a leak.
	Use water spray to cool adjacent structures and to protect personnel. Shut off source of flow if possible (safely). Stay away from storage tank ends. Withdraw immediately in case of rising sound from venting safety device or any discoloration of storage tank due to fire.
	Fire fighters must wear MSHA/NIOSH approved positive pressure breathing apparatus (SCBA) with full face mask and full protective equipment.
Unusual Fire & Explosion Hazards:	Dense smoke may be generated while burning. Toxic fumes, gases, or vapors may evolve on burning. Heavy flammable vapors may settle along ground level and low spots to create an invisible fire hazard. The vapors may extend to sources of ignition and flash back.
Byproducts of Combustion:	Fires involving this product may release oxides of carbon, nitrogen, sulfur, phosphorus and metals; reactive hydrocarbons and irritating vapors.
Autoignition Temperature:	Not determined.
Explosion Data:	Not Determined. Care should always be exercised in dust/mist areas.
Other:	Not applicable.

SECTION 6 — ACCIDENTAL RELEASE MEASURES

Spill Control Procedures (Land):	Personnel wearing proper protective equipment should contain spill immediately with inert materials (sand, earth, chemical spill pads of cotton) by forming dikes. Dikes should be placed to contain spill in a manner that will prevent material from entering sewers and waterways. Large spill, once contained, may be picked up using explosion proof, non-sparking vacuum pumps, shovels, or buckets, and disposed of in suitable containers for disposal. If a large spill occurs, notify appropriate authorities. In case of an accident or road spill, contact Chemtrec at 800-424-9300.
Spill Control Procedures (Water):	Remove from surface by skimming or with suitable absorbents. If a large spill occurs, notify appropriate authorities (normally the National Response Center or Coast Guard at 800-424-8802).
Waste Disposal Method:	Most oil based products are incinerated, land-filled, or reclaimed. All disposals must comply with federal, state, and local regulations. The material, if spilled or discarded, may be a regulated waste. Refer to state and local regulations. Department of Transportation (DOT) regulations may apply for transporting this material when spilled. See Section 14.
Other:	***CAUTION:*** *If spilled material is cleaned up using a regulated solvent, the resulting waste mixture will be regulated.*

Form 950401 — 2 — Date Issued: January 2012

MATERIAL SAFETY DATA SHEET FOR FALK™ LONG TERM GREASE (LTG)

SECTION 7 — HANDLING AND STORAGE

Handling Procedures: Keep containers closed when not in use. Do not transfer to unmarked containers. Fire extinguishers should be kept readily available. See NFPA 30 and OSHA 1910.106 — Flammable and Combustible Liquids. Empty containers retain product residue which may exhibit hazards of material, therefore do not pressurize, cut, glaze, weld, or use for any other purposes. Return drums to reclamation centers for proper cleaning and reuse.

Storage Procedures: Store containers away from heat, sparks, open flame, or oxidizing materials.

Additional Information: No additional information.

SECTION 8 — EXPOSURE CONTROLS/PERSONAL PROTECTION

Personal Protection: Applicable mainly to persons in repeated contact situations such as packaging or product, service/maintenance, and cleanup/spill control personnel.

Respiratory Protection: Under conditions of normal use, no respiratory protection is required. Should product misting occur due to use or handling, ensure airborne concentrations are maintained below threshold limits listed on Page One. Otherwise, a respiratory protection program meeting OHSH 1910.134 and ANSI Z88.2 requirements must be followed. Where misting may occur, wear an MSHA/NIOSH approved (or equivalent) half-mask form dust/mist air purifying respirator.

Eye Protection: Under conditions of normal use, eye protection is not necessary. If material is handled such that it could be splashed into the eyes, wear safety glasses with side shields or vented/splash proof goggles (ANSI Z87.1 or approved equivalent).

Hand Protection: Impervious gloves such as neoprene or nitrile rubber to avoid skin sensitization and absorption.

Other Protection: Use of an apron and overboots of chemically impervious materials such as neoprene or nitrile rubber is recommended to avoid skin sensitization and absorption. If handling hot material use insulated protective equipment. Launder soiled clothes. Properly dispose of contaminated leather articles and other material which cannot be decontaminated.

Local Control Measures: Use adequate ventilation when working with material in an enclosed area. Mechanical methods such as fume hoods or area fans may be used to reduce localized vapor/mist areas. If vapor or mist is generated when the material is handled, adequate ventilation in accordance with good engineering practice must be provided to maintain concentrations below the specified exposure levels listed on Page One.

Other: Consumption of food and drink should be avoided in work areas where product is present. Always wash hands and face with soap and water before eating, drinking, or smoking.

SECTION 9 — PHYSICAL AND CHEMICAL PROPERTIES

Vapor Pressure: 0.1 mm Hg at 20°C (68°F).

Specific Gravity: 0.909 at 15.6°C (60.0°F)

Density: 7.57 lb/gal at 15.6°C (30.0°F).

Solubility: Negligible in water, miscible inmost petroleum solvents.

Percent volatile: Negligible.

Vapor density (air=1): >2.

Evaporation rate (n-Butyl Acetate=1) Negligible.

Odor: Mild, greasy odor.

Appearance: Dark Brown semi-solid (grease).

Viscosity: 680cSt at 40°C (104°F).

Pour Point: -15°C (5°F).

Other: Melting point is 215°C (419°F).

SECTION 10 — STABILITY AND REACTIVITY

Stability: Material is stable at room temperatures and pressure.

Date Issued: January 2012 — 3 — Form 950401

MATERIAL SAFETY DATA SHEET FOR FALK™ LONG TERM GREASE (LTG)

Conditions to avoid:	Avoid high temperatures and product contamination.
Incompatibility with other Materials:	Avoid contact with acids and oxidizing materials.
Decomposition Products:	Smoke, carbon monoxide and dioxide, and other aldehydes of incomplete combustion. Oxides of carbon, nitrogen, sulfur, phosphorus, and metals; reactive hydrocarbons, and irritating vapors.
Hazardous Polymerization:	Will not occur.
Other:	Not applicable.

SECTION 11 — TOXICOLOGICAL INFORMATION

Oral Toxicity:	Not determined.
Dermal Toxicity:	Not determined.
Inhalation Toxicity:	On rare occasions, prolonged and repeated exposure to oil mist poses a risk of pulmonary disease such as chronic lung inflammation. This condition is usually asymptotic as a result of repeated small aspirations. Shortness of breath and cough are the most common symptoms. Based on data from similar materials.
Dermal sensitization:	Not determined.
Chronic Toxicity:	Not determined.
Carcinogenicity:	Not determined.
Mutagenicity:	Not determined.
Reproductive Toxicity:	Not determined.
Other:	This product contains petroleum base oils which may be refined by various processes including severe solvent extraction, severe hydrocracking, or severe hydrotreating. None of the oils require a cancer warning under the OSHA Hazard Communication Standard (29 CFR 1910.1200). These oils have not been listed in the National Toxicology Program (NTP) Annual Report nor have they been classified by the International Agency for Research on Cancer (IARC) as: carcinogenic to humans (Group 1), probably carcinogenic to humans (Group 2A), or possibly carcinogenic to humans (Group 2B).

SECTION 12 — ECOLOGICAL INFORMATION

Environmental Toxicity:	This material may be toxic to aquatic organisms and should be kept out of sewage and drainage systems and all bodies of water.
Environmental Fate:	Not determined.
Other:	Not applicable.

SECTION 13 — DISPOSAL CONSIDERATIONS

Waste Disposal:	Under RCRA, it is the responsibility of the user of the product to determine at the time of disposal whether the product meets RCRA criteria for hazardous waste. This product, unadulterated by other material, may be classified as a non-regulated waste in some areas – but still needs to be disposed of at approved facilities. Waste management should be in full compliance with federal, state, and local laws.
Disposal Consideration:	Most used and non-use oils and greases are incinerated by licensed burner facilities for heat value, or reclaimed by oil recycling services. Look in a local telephone directory or internet for headings under, "Waste", "Waste Services", "Waste Disposal: for companies licensed to handle such material. Additional information can be obtained from local EPA, DNR, Sewer and Land-Fill sites. Unused, packaged fluids may be donated to other companies or charities, (fluids MUST be unused).
Other:	the transportation, storage, treatment, and disposal of RCRA waste material must be conducted in compliance with 40 CFR 262, 263, 264, and 270. Disposal can only occur improperly permitted facilities. Check state and local regulations for any additional requirements as these may be more restrictive than federal laws and regulations. Chemical additions, processing, or otherwise altering this material may make the waste management information presented in the MSDS incomplete, inaccurate, or otherwise inappropriate. Disposal of this material must be conducted in compliance with all federal, state, and local regulations.

Form 950401 — 4 — Date Issued: January 2012

MATERIAL SAFETY DATA SHEET FOR FALK™ LONG TERM GREASE (LTG)

SECTION 14 — TRANSPORT INFORMATION

U.S. DOT Shipping Description:	Not regulated by DOT.
U.S. DOT Identification Number:	Not regulated by DOT.
U.S. DOT Hazard Classification:	Not Applicable.
Packaging Class:	Not Applicable.
Other:	Not Applicable.

SECTION 15 — REGULATORY INFORMATION

Clean water act/oil Pollution Act: Under Section 311, of the Clean Water Act (40 CFR 110) and the Oil Pollution Act of 1990, this material is considered an oil. Any spill or discharges that produce a visible sheen or film on surface of water, or in waterways, ditches, or sewers leading to surface water must be reported. Contact the National Response Center at 800-424-8802.

This product contains zinc compounds, a class of Clean Water Act Priority Pollutants.

This product contains antimony compounds, a class of Clean Water Act Priority Pollutants.

TSCA: All components of this material are listed in the U.S. TSCA Inventory.

Other TSCA: Not Applicable.

SARA Title III: Section 302/304 extremely hazardous substances:
This product does not contain greater than 0.1% of any chemical substance on this list.

Section 311, 312 hazard categorization:

Acute (immediate health effects):	NO
Chronic (delayed health effects):	NO
Fire (hazard):	NO
Reactivity (hazard):	NO
Pressure (sudden release hazard):	NO

Section 313 toxic chemicals:

Zinc alkyldithiophosphate
(CAS 68649-42-3)
1-5% wt.

Asphalt (petroleum) CAS 8052-42-4)
1, 13, 16, 17, 18, 19.

Phosphorodithoic Acid (CAS 68649-4-3) 13, 15, 17

CERCLA: For stationary sources – reportable quantity:
Exempt due to petroleum exclusion.

For moving sources – reportable quantity:
Exempt due to petroleum exclusion.

Other: A release of this product, as supplied, is exempt from reporting under the Comprehensive Environmental Response Compensation and Liability Act (CERCLA) by the petroleum exclusion. However, releases may be reportable to the Nation Response Center under the Clean Water Act, 33 U.S.C. 1321(b)(3) and (5) – see head of Section 15. Failure to report may result in substantial civil and criminal penalties.

Recommend contacting the local authorities in the event of any type of spill to determine local reporting requirements and also to aid in the cleanup.

Antimony compounds appear on the following lists:

Pennsylvania Hazardous Substances (environmental).

Massachusetts Hazardous Substances.

Date Issued: January 2012 — 5 — Form 950401

MATERIAL SAFETY DATA SHEET FOR FALK™ LONG TERM GREASE (LTG)

SECTION 16 — OTHER INFORMATION

	NFPA 704	NPCA-HMIS	KEY
HEALTH:	0	0	0 = Minimal
FIRE:	1	1	1 = Slight
REACTIVITY:	0	0	2 = Moderate
SPECIFIC HAZARD:	NONE	N/A	3 = Serious
PROTECTION INDEX:	N/A	B	4 = Severe
Precautionary Labels:	MAY CAUSE EYE IRRITATION MAY CAUSE SKIN IRRITATION		

This product may be formulated in part with components purchased from other companies. In many instances, especially when proprietary or trade secret materials are used. Lube-Tech must rely upon information provided by those materials manufacturers or distributors.

Version: 1

INFORMATION PROVIDED IN THIS MSDS IS CONSIDERED ACCURATE AND RELIABLE BASED ON INFORMATION ISSUED FROM INTERNAL AND OUTSIDE SOURCES TO THE BEST OF LUBE-TECH'S KNOWLEDGE. HOWEVER, LUBE-TECH MAKES NO REPRESENTATIONS, GUARANTEES OR WARRANTIES, EXPRESSED OR IMPLIED, OF MERCHANTABILITY OR FITNESS FOR THE PARTICULAR PURPOSE, REGARDING THE ACCURACY OF SUCH INFORMATION OR THE RESULT TO BE OBTAINED FROM THE USE THEREOF, OR AS TO THE SUFFICIENCY OF THE INFORMATION HEREIN PRESENTED. LUBE-TECH ASSUMES NO RESPONSIBILITY FOR INJURY TO RECIPIENT OR TO THIRD PERSONS OR FOR ANY DAMAGE TO ANY PROPERTY AND RECIPIENT ASSUMES ALL SUCH RISKS.

Revisions / Comments:

REXNORD

Form 950401 — 6 — Date Issued: January 2012

11.5.6 MOBIL DTE 21

Mobil

Mobil DTE 20 Series

Hydraulic Oils

Product Description

Mobil DTE 20 Series oils are supreme performance anti-wear hydraulic oils designed to satisfy a wide range of hydraulic equipment requirements. They provide long oil/filter life and optimum equipment protection reducing both maintenance costs and product disposal costs. They were developed in conjunction with the major builders to meet the stringent requirements of severe hydraulic systems using high pressure, high output pumps as well as handling the critical requirements of other hydraulic system components such as close clearance servo-valves and the high accuracy numerically controlled (NC) machine tools. These products meet the most rigorous performance requirements of a wide range of hydraulic system and component manufacturers using various multi-metallurgy designs allowing a single product with outstanding performance characteristics.

The DTE 20 Series oils are formulated with high quality base oils and a super-stabilised additive system that neutralises the formation of corrosive materials. They are designed to work with systems operating under severe conditions where high levels of antiwear and film strength protection are needed, yet they are formulated to work where non-antiwear hydraulic oils are generally recommended.

Features and Benefits

The Mobil DTE 20 Series hydraulic oils provide outstanding oxidation resistance allowing extension of oil and filter change intervals. Their high level of anti-wear properties and excellent film strength characteristics result in exceptional equipment performance that not only results in fewer breakdowns but helps improve production capacity. Their detergency and keep clean properties offer service over a wide range of system cleanlinesses while their controlled demulsibility permits the oils to work well in systems contaminated with small amounts of water yet readily separate large amounts of water.

Features	Advantages and Potential Benefits
Anti-wear	Helps reduce wear Protects systems using various metallurgy
Quality Reserve	Maintains performance features even under severe service conditions and extended drain intervals Helps improve system cleanliness
Oxidation Stability	Provides long oil and equipment life Helps extend filter life
Corrosion Protection	Prevents internal hydraulic system corrosion Helps reduce the negative effects of moisture in systems Provides corrosion protection of multi-metallurgy component designs
Meets a Wide Range of equipment requirements	One product can replace several products, minimizing inventory requirements Helps reduce potential for product misapplication
Air Separation Characteristics	Reduces foaming potential and it's negative effects
Water Separation	Protects systems where small quantities of moisture are present Readily separates larger quantities of water
Keep Clean Properties	Helps reduce system deposits and sludging helping to reduce maintenance costs Protects critical components such as servo-valves helping to

Features	Advantages and Potential Benefits
	extend equipment life
	Helps improve total system performance

Applications

- Hydraulic systems critical to deposit build-up such as sophisticated Numerically Controlled (NC) machines, particularly where close clearance servo-valves are used
- Where small amounts of water are unavoidable
- Applications where sludges and deposits form with conventional products
- In systems containing gears and bearings
- Systems requiring a high degree of load-carrying capability and anti-wear protection
- Applications where thin oil-film corrosion protection is an asset such as systems where small amounts of water are unavoidable
- Machines employing a wide range of components using various metallurgy

Specifications and Approvals

Mobil DTE 20 Series meets or exceeds the requirements of:	21	22	24	25	26	27	28
DIN 51524-2 2006-09	X	X	X	X	X		

Mobil DTE 20 Series has the following builder approvals	21	22	24	25	26	27	28
Cincinnati Machine							
P-68			X				
P-69					X		
P-70				X			
Vickers I-286-S			X	X	X		
Vickers M-2950-S			X	X	X		
Denison HF-0			X	X	X		

Typical Properties

Mobil DTE 20 Series	21	22	24	25	26	27	28
ISO Grade	10	22	32	46	68	100	150
Viscosity, ASTM D 445							
cSt @ 40° C	10.0	21.0	31.5	44.2	71.2	95.3	142.8
cSt @ 100° C	2.74	4.5	5.29	6.65	8.53	10.9	14.28
Viscosity Index, ASTM D 2270	98	98	98	98	98	98	98
Specific Gravity @ 15.6° C/15.6° C, ASTM D 1298	0.845	0.860	0.871	0.876	0.881	0.887	0.895
Copper Strip Corrosion, ASTM D 130, 3 hrs @ 100° C	1B	1B	1B	1B	1B	1B	1B
Rust Characteristics Proc B, ASTM D 665	Pass	Pass	Pass	Pass	Pass	Pass	Pass
Pour Point, °C, ASTM D 97	-30	-30	-27	-27	-21	-21	-15
Flash Point, °C, ASTM D 92	174	200	220	232	236	248	276

Mobil DTE 20 Series	21	22	24	25	26	27	28
FZG 4-Square Load Support, DIN 51354, Fail Stage	-	-	12	12	12	12	12
Foam Sequence I, II, III, ASTM D 892 , ml	20/0	20/0	20/0	20/0	20/0	20/0	20/0

Health and Safety

Based on available information, this product is not expected to produce adverse effects on health when used for the intended application and the recommendations provided in the Material Safety Data Sheet (MSDS) are followed. MSDS's are available upon request through your sales contract office, or via the Internet. This product should not be used for purposes other than its intended use. If disposing of used product, take care to protect the environment.

The Mobil logotype, the Pegasus design and DTE are trademarks of Exxon Mobil Corporation, or one of its subsidiaries.

11-2011

Exxon Mobil Corporation
3225 Gallows Road
Fairfax, VA 22037

1-800-ASK MOBIL (275-6624)

Typical Properties are typical of those obtained with normal production tolerance and do not constitute a specification. Variations that do not affect product performance are to be expected during normal manufacture and at different blending locations. The information contained herein is subject to change without notice. All products may not be available locally. For more information, contact your local ExxonMobil contact or visit www.exxonmobil.com
ExxonMobil is comprised of numerous affiliates and subsidiaries, many with names that include Esso, Mobil, or ExxonMobil. Nothing in this document is intended to override or supersede the corporate separateness of local entities. Responsibility for local action and accountability remains with the local ExxonMobil-affiliate entities.

© 2001-2011 Exxon Mobil Corporation. All rights reserved..

ExxonMobil

Product Name: MOBIL DTE 21
Revision Date: 13 Dec 2012
Page 1 of 10

MATERIAL SAFETY DATA SHEET

SECTION 1 PRODUCT AND COMPANY IDENTIFICATION

PRODUCT

Product Name: **MOBIL DTE 21**
Product Description: Base Oil and Additives
Product Code: 201560102005, 602599-00, 970840
Intended Use: Hydraulic fluid

COMPANY IDENTIFICATION

Supplier: **EXXON MOBIL CORPORATION**
3225 GALLOWS RD.
FAIRFAX, VA. 22037 USA

24 Hour Health Emergency	609-737-4411
Transportation Emergency Phone	800-424-9300
ExxonMobil Transportation No.	281-834-3296
Product Technical Information	800-662-4525, 800-947-9147
MSDS Internet Address	http://www.exxon.com, http://www.mobil.com

SECTION 2 COMPOSITION / INFORMATION ON INGREDIENTS

Reportable Hazardous Substance(s) or Complex Substance(s)

Name	CAS#	Concentration*
SOLVENT REFINED LIGHT PARAFFINIC DISTILLATE (PETROLEUM)	64741-89-5	80 - 90%
STRAIGHT-RUN MIDDLE DISTILLATES	64741-44-2	10 - 20%

* All concentrations are percent by weight unless material is a gas. Gas concentrations are in percent by volume.

SECTION 3 HAZARDS IDENTIFICATION

This material is considered to be hazardous according to regulatory guidelines (see (M)SDS Section 15).

POTENTIAL HEALTH EFFECTS

If swallowed, may be aspirated and cause lung damage. Frequent or prolonged contact may defat and dry the skin, leading to discomfort and dermatitis. May be irritating to the eyes, nose, throat, and lungs. High-pressure injection under skin may cause serious damage.

Target Organs: Skin |

NFPA Hazard ID:	Health:	0	Flammability:	1	Reactivity:	0
HMIS Hazard ID:	Health:	0*	Flammability:	1	Reactivity:	0

NOTE: This material should not be used for any other purpose than the intended use in Section 1 without expert advice. Health studies have shown that chemical exposure may cause potential human health risks which may vary from person to person.

SECTION 4 FIRST AID MEASURES

INHALATION

Remove from further exposure. For those providing assistance, avoid exposure to yourself or others. Use adequate respiratory protection. If respiratory irritation, dizziness, nausea, or unconsciousness occurs, seek immediate medical assistance. If breathing has stopped, assist ventilation with a mechanical device or use mouth-to-mouth resuscitation.

SKIN CONTACT

Wash contact areas with soap and water. Remove contaminated clothing. Launder contaminated clothing before reuse. If product is injected into or under the skin, or into any part of the body, regardless of the appearance of the wound or its size, the individual should be evaluated immediately by a physician as a surgical emergency. Even though initial symptoms from high pressure injection may be minimal or absent, early surgical treatment within the first few hours may significantly reduce the ultimate extent of injury.

EYE CONTACT

Flush thoroughly with water. If irritation occurs, get medical assistance.

INGESTION

Seek immediate medical attention. Do not induce vomiting.

NOTE TO PHYSICIAN

If ingested, material may be aspirated into the lungs and cause chemical pneumonitis. Treat appropriately.

SECTION 5 FIRE FIGHTING MEASURES

EXTINGUISHING MEDIA

Appropriate Extinguishing Media: Use water fog, foam, dry chemical or carbon dioxide (CO2) to extinguish flames.

Inappropriate Extinguishing Media: Straight Streams of Water

FIRE FIGHTING

Fire Fighting Instructions: Evacuate area. Prevent runoff from fire control or dilution from entering streams, sewers, or drinking water supply. Firefighters should use standard protective equipment and in enclosed spaces, self-contained breathing apparatus (SCBA). Use water spray to cool fire exposed surfaces and to protect personnel.

Unusual Fire Hazards: Pressurized mists may form a flammable mixture.

Hazardous Combustion Products: Smoke, Fume, Aldehydes, Sulfur oxides, Incomplete combustion products, Oxides of carbon

FLAMMABILITY PROPERTIES

Flash Point [Method]: >166°C (331°F) [ASTM D-92]
Flammable Limits (Approximate volume % in air): LEL: 0.9 UEL: 7.0

Autoignition Temperature: N/D

SECTION 6 ACCIDENTAL RELEASE MEASURES

NOTIFICATION PROCEDURES

In the event of a spill or accidental release, notify relevant authorities in accordance with all applicable regulations. US regulations require reporting releases of this material to the environment which exceed the applicable reportable quantity or oil spills which could reach any waterway including intermittent dry creeks. The National Response Center can be reached at (800)424-8802.

PROTECTIVE MEASURES

Avoid contact with spilled material. Warn or evacuate occupants in surrounding and downwind areas if required due to toxicity or flammability of the material. See Section 5 for fire fighting information. See the Hazard Identification Section for Significant Hazards. See Section 4 for First Aid Advice. See Section 8 for advice on the minimum requirements for personal protective equipment. Additional protective measures may be necessary, depending on the specific circumstances and/or the expert judgment of the emergency responders.

For emergency responders: Respiratory protection: respiratory protection will be necessary only in special cases, e.g., formation of mists. Half-face or full-face respirator with filter(s) for dust/organic vapor or Self Contained Breathing Apparatus (SCBA) can be used depending on the size of spill and potential level of exposure. If the exposure cannot be completely characterized or an oxygen deficient atmosphere is possible or anticipated, SCBA is recommended. Work gloves that are resistant to hydrocarbons are recommended. Gloves made of polyvinyl acetate (PVA) are not water-resistant and are not suitable for emergency use. Chemical goggles are recommended if splashes or contact with eyes is possible. Small spills: normal antistatic work clothes are usually adequate. Large spills: full body suit of chemical resistant, antistatic material is recommended.

SPILL MANAGEMENT

Land Spill: Stop leak if you can do it without risk. Recover by pumping or with suitable absorbent.

Water Spill: Stop leak if you can do it without risk. Confine the spill immediately with booms. Warn other shipping. Remove from the surface by skimming or with suitable absorbents. Seek the advice of a specialist before using dispersants.

Water spill and land spill recommendations are based on the most likely spill scenario for this material; however, geographic conditions, wind, temperature, (and in the case of a water spill) wave and current direction and speed may greatly influence the appropriate action to be taken. For this reason, local experts should be consulted. Note: Local regulations may prescribe or limit action to be taken.

ENVIRONMENTAL PRECAUTIONS

Large Spills: Dike far ahead of liquid spill for later recovery and disposal. Prevent entry into waterways, sewers, basements or confined areas.

SECTION 7 HANDLING AND STORAGE

HANDLING

Avoid contact with skin. Prevent small spills and leakage to avoid slip hazard. Material can accumulate static charges which may cause an electrical spark (ignition source). When the material is handled in bulk, an electrical spark could ignite any flammable vapors from liquids or residues that may be present (e.g., during switch-loading operations). Use proper bonding and/or ground procedures. However, bonding and grounds

may not eliminate the hazard from static accumulation. Consult local applicable standards for guidance. Additional references include American Petroleum Institute 2003 (Protection Against Ignitions Arising out of Static, Lightning and Stray Currents) or National Fire Protection Agency 77 (Recommended Practice on Static Electricity) or CENELEC CLC/TR 50404 (Electrostatics - Code of practice for the avoidance of hazards due to static electricity).

Static Accumulator: This material is a static accumulator.

STORAGE

The container choice, for example storage vessel, may effect static accumulation and dissipation. Do not store in open or unlabelled containers. Keep away from incompatible materials.

SECTION 8 EXPOSURE CONTROLS / PERSONAL PROTECTION

EXPOSURE LIMIT VALUES

Exposure limits/standards (Note: Exposure limits are not additive)

Source	Form	Limit / Standard			NOTE	Source
SOLVENT REFINED LIGHT PARAFFINIC DISTILLATE (PETROLEUM)	Mist.	TWA	5 mg/m3		N/A	OSHA Z1
SOLVENT REFINED LIGHT PARAFFINIC DISTILLATE (PETROLEUM)	Inhalable fraction.	TWA	5 mg/m3		N/A	ACGIH
SOLVENT REFINED LIGHT PARAFFINIC DISTILLATE (PETROLEUM)	Mist.	TWA	5 mg/m3		N/A	ACGIH
STRAIGHT-RUN MIDDLE DISTILLATES	Stable Aerosol.	TWA	5 mg/m3		N/A	ExxonMobil
STRAIGHT-RUN MIDDLE DISTILLATES	Vapor.	TWA	200 mg/m3		N/A	ExxonMobil

Exposure limits/standards for materials that can be formed when handling this product: When mists/aerosols can occur the following are recommended: 5 mg/m³ - ACGIH TLV (inhalable fraction), 5 mg/m³ - OSHA PEL.

NOTE: Limits/standards shown for guidance only. Follow applicable regulations.

ENGINEERING CONTROLS

The level of protection and types of controls necessary will vary depending upon potential exposure conditions. Control measures to consider:

No special requirements under ordinary conditions of use and with adequate ventilation.

PERSONAL PROTECTION

Personal protective equipment selections vary based on potential exposure conditions such as applications, handling practices, concentration and ventilation. Information on the selection of protective equipment for use with this material, as provided below, is based upon intended, normal usage.

Respiratory Protection: If engineering controls do not maintain airborne contaminant concentrations at a

level which is adequate to protect worker health, an approved respirator may be appropriate. Respirator selection, use, and maintenance must be in accordance with regulatory requirements, if applicable. Types of respirators to be considered for this material include:
No special requirements under ordinary conditions of use and with adequate ventilation.

For high airborne concentrations, use an approved supplied-air respirator, operated in positive pressure mode. Supplied air respirators with an escape bottle may be appropriate when oxygen levels are inadequate, gas/vapor warning properties are poor, or if air purifying filter capacity/rating may be exceeded.

Hand Protection: Any specific glove information provided is based on published literature and glove manufacturer data. Glove suitability and breakthrough time will differ depending on the specific use conditions. Contact the glove manufacturer for specific advice on glove selection and breakthrough times for your use conditions. Inspect and replace worn or damaged gloves. The types of gloves to be considered for this material include:
If prolonged or repeated contact is likely, chemical resistant gloves are recommended. If contact with forearms is likely, wear gauntlet style gloves.

Eye Protection: If contact is likely, safety glasses with side shields are recommended.

Skin and Body Protection: Any specific clothing information provided is based on published literature or manufacturer data. The types of clothing to be considered for this material include:
If prolonged or repeated contact is likely, chemical, and oil resistant clothing is recommended.

Specific Hygiene Measures: Always observe good personal hygiene measures, such as washing after handling the material and before eating, drinking, and/or smoking. Routinely wash work clothing and protective equipment to remove contaminants. Discard contaminated clothing and footwear that cannot be cleaned. Practice good housekeeping.

ENVIRONMENTAL CONTROLS
Comply with applicable environmental regulations limiting discharge to air, water and soil. Protect the environment by applying appropriate control measures to prevent or limit emissions.

SECTION 9 PHYSICAL AND CHEMICAL PROPERTIES

Note: Physical and chemical properties are provided for safety, health and environmental considerations only and may not fully represent product specifications. Contact the Supplier for additional information.

GENERAL INFORMATION
Physical State: Liquid
Color: Amber
Odor: Characteristic
Odor Threshold: N/D

IMPORTANT HEALTH, SAFETY, AND ENVIRONMENTAL INFORMATION
Relative Density (at 15 °C): 0.845
Flash Point [Method]: >166°C (331°F) [ASTM D-92]
Flammable Limits (Approximate volume % in air): LEL: 0.9 UEL: 7.0
Autoignition Temperature: N/D
Boiling Point / Range: > 232°C (450°F)
Vapor Density (Air = 1): > 2 at 101 kPa

Vapor Pressure: < 0.013 kPa (0.1 mm Hg) at 20 °C
Evaporation Rate (n-butyl acetate = 1): N/D
pH: N/A
Log Pow (n-Octanol/Water Partition Coefficient): > 3.5
Solubility in Water: Negligible
Viscosity: 9 cSt (9 mm2/sec) at 40 °C | 2.7 cSt (2.7 mm2/sec) at 100°C
Oxidizing Properties: See Hazards Identification Section.

OTHER INFORMATION

Freezing Point: N/D
Melting Point: N/A
Pour Point: -24°C (-11°F)
DMSO Extract (mineral oil only), IP-346: < 3 %wt

SECTION 10 STABILITY AND REACTIVITY

STABILITY: Material is stable under normal conditions.

CONDITIONS TO AVOID: Excessive heat. High energy sources of ignition.

MATERIALS TO AVOID: Strong oxidizers

HAZARDOUS DECOMPOSITION PRODUCTS: Material does not decompose at ambient temperatures.

HAZARDOUS POLYMERIZATION: Will not occur.

SECTION 11 TOXICOLOGICAL INFORMATION

ACUTE TOXICITY

Route of Exposure	Conclusion / Remarks
Inhalation	
Toxicity: No end point data for material.	Minimally Toxic. Based on assessment of the components.
Irritation: No end point data for material.	Elevated temperatures or mechanical action may form vapors, mist, or fumes which may be irritating to the eyes, nose, throat, or lungs. Based on assessment of the components.
Ingestion	
Toxicity: No end point data for material.	Minimally Toxic. Based on assessment of the components.
Skin	
Toxicity: No end point data for material.	Minimally Toxic. Based on assessment of the components.
Irritation: No end point data for material.	Negligible irritation to skin at ambient temperatures. Based on assessment of the components.
Eye	
Irritation: No end point data for material.	May cause mild, short-lasting discomfort to eyes. Based on assessment of the components.

CHRONIC/OTHER EFFECTS

For the product itself:

Repeated and/or prolonged exposure may cause irritation to the skin, eyes, or respiratory tract. Small amounts of liquid aspirated into the lungs during ingestion or from vomiting may cause chemical pneumonitis or

pulmonary edema.
Contains:
Base oil severely refined: Not carcinogenic in animal studies. Representative material passes IP-346, Modified Ames test, and/or other screening tests. Dermal and inhalation studies showed minimal effects; lung non-specific infiltration of immune cells, oil deposition and minimal granuloma formation. Not sensitizing in test animals.

Additional information is available by request.

The following ingredients are cited on the lists below: None.

--REGULATORY LISTS SEARCHED--

1 = NTP CARC	3 = IARC 1	5 = IARC 2B
2 = NTP SUS	4 = IARC 2A	6 = OSHA CARC

SECTION 12 ECOLOGICAL INFORMATION

The information given is based on data available for the material, the components of the material, and similar materials.

ECOTOXICITY
Material -- Not expected to be harmful to aquatic organisms.

MOBILITY
Base oil component -- Low solubility and floats and is expected to migrate from water to the land. Expected to partition to sediment and wastewater solids.

PERSISTENCE AND DEGRADABILITY
Biodegradation:
Base oil component -- Expected to be inherently biodegradable

BIOACCUMULATION POTENTIAL
Base oil component -- Has the potential to bioaccumulate, however metabolism or physical properties may reduce the bioconcentration or limit bioavailability.

OTHER ECOLOGICAL INFORMATION
VOC: 14 G/L [ASTM E1868-10]

SECTION 13 DISPOSAL CONSIDERATIONS

Disposal recommendations based on material as supplied. Disposal must be in accordance with current applicable laws and regulations, and material characteristics at time of disposal.

DISPOSAL RECOMMENDATIONS

Product is suitable for burning in an enclosed controlled burner for fuel value or disposal by supervised incineration at very high temperatures to prevent formation of undesirable combustion products. Protect the environment. Dispose of used oil at designated sites. Minimize skin contact. Do not mix used oils with solvents, brake fluids or coolants.

REGULATORY DISPOSAL INFORMATION

RCRA Information: The unused product, in our opinion, is not specifically listed by the EPA as a hazardous waste (40 CFR, Part 261D), nor is it formulated to contain materials which are listed as hazardous wastes. It does not exhibit the hazardous characteristics of ignitability, corrosivity or reactivity and is not formulated with contaminants as determined by the Toxicity Characteristic Leaching Procedure (TCLP). However, used product may be regulated.

Empty Container Warning Empty Container Warning (where applicable): Empty containers may contain residue and can be dangerous. Do not attempt to refill or clean containers without proper instructions. Empty drums should be completely drained and safely stored until appropriately reconditioned or disposed. Empty containers should be taken for recycling, recovery, or disposal through suitably qualified or licensed contractor and in accordance with governmental regulations. DO NOT PRESSURISE, CUT, WELD, BRAZE, SOLDER, DRILL, GRIND, OR EXPOSE SUCH CONTAINERS TO HEAT, FLAME, SPARKS, STATIC ELECTRICITY, OR OTHER SOURCES OF IGNITION. THEY MAY EXPLODE AND CAUSE INJURY OR DEATH.

SECTION 14 TRANSPORT INFORMATION

LAND (DOT): Not Regulated for Land Transport

LAND (TDG): Not Regulated for Land Transport

SEA (IMDG): Not Regulated for Sea Transport according to IMDG-Code

AIR (IATA): Not Regulated for Air Transport

SECTION 15 REGULATORY INFORMATION

OSHA HAZARD COMMUNICATION STANDARD: When used for its intended purpose, this material is classified as hazardous in accordance with OSHA 29CFR 1910.1200.

Complies with the following national/regional chemical inventory requirements:: AICS, DSL, ENCS, IECSC, KECI, PICCS, TSCA

EPCRA SECTION 302: This material contains no extremely hazardous substances.

SARA (311/312) REPORTABLE HAZARD CATEGORIES: Delayed Health.

SARA (313) TOXIC RELEASE INVENTORY: This material contains no chemicals subject to the supplier notification requirements of the SARA 313 Toxic Release Program.

The following ingredients are cited on the lists below:

Chemical Name	CAS Number	List Citations
SOLVENT REFINED LIGHT PARAFFINIC DISTILLATE (PETROLEUM)	64741-89-5	1, 4, 17, 18, 19
ZINC ALKYL DITHIOPHOSPHATE	68649-42-3	15

--REGULATORY LISTS SEARCHED--

1 = ACGIH ALL	6 = TSCA 5a2	11 = CA P65 REPRO	16 = MN RTK
2 = ACGIH A1	7 = TSCA 5e	12 = CA RTK	17 = NJ RTK
3 = ACGIH A2	8 = TSCA 6	13 = IL RTK	18 = PA RTK
4 = OSHA Z	9 = TSCA 12b	14 = LA RTK	19 = RI RTK
5 = TSCA 4	10 = CA P65 CARC	15 = MI 293	

Code key: CARC=Carcinogen; REPRO=Reproductive

SECTION 16 OTHER INFORMATION

N/D = Not determined, N/A = Not applicable

THIS SAFETY DATA SHEET CONTAINS THE FOLLOWING REVISIONS:
No revision information is available.

PRECAUTIONARY LABEL TEXT:
Contains: SOLVENT REFINED LIGHT PARAFFINIC DISTILLATE (PETROLEUM); STRAIGHT-RUN MIDDLE DISTILLATES
CAUTION!
HEALTH HAZARDS
Repeated exposure may cause skin dryness or cracking. If swallowed, may be aspirated and cause lung damage.
Target Organs: Skin |

FIRST AID
Eye: Flush thoroughly with water. If irritation occurs, get medical assistance.

Oral: Seek immediate medical attention. Do not induce vomiting.

Skin: Wash contact areas with soap and water. Remove contaminated clothing. Launder contaminated clothing before reuse. If product is injected into or under the skin, or into any part of the body, regardless of the appearance of the wound or its size, the individual should be evaluated immediately by a physician as a surgical emergency. Even though initial symptoms from high pressure injection may be minimal or absent, early surgical treatment within the first few hours may significantly reduce the ultimate extent of injury.

FIRE FIGHTING MEDIA
Use water fog, foam, dry chemical or carbon dioxide (CO2) to extinguish flames.

SPILL/LEAK
Land Spill: Stop leak if you can do it without risk. Recover by pumping or with suitable absorbent.

Water Spill: Stop leak if you can do it without risk. Confine the spill immediately with booms. Warn other shipping.

Remove from the surface by skimming or with suitable absorbents. Report spills as required to appropriate authorities. Seek the advice of a specialist before using dispersants.

Use

Not intended or suitable for use in or around a household or dwelling.

The information and recommendations contained herein are, to the best of ExxonMobil's knowledge and belief, accurate and reliable as of the date issued. You can contact ExxonMobil to insure that this document is the most current available from ExxonMobil. The information and recommendations are offered for the user's consideration and examination. It is the user's responsibility to satisfy itself that the product is suitable for the intended use. If buyer repackages this product, it is the user's responsibility to insure proper health, safety and other necessary information is included with and/or on the container. Appropriate warnings and safe-handling procedures should be provided to handlers and users. Alteration of this document is strictly prohibited. Except to the extent required by law, re-publication or retransmission of this document, in whole or in part, is not permitted. The term, "ExxonMobil" is used for convenience, and may include any one or more of ExxonMobil Chemical Company, Exxon Mobil Corporation, or any affiliates in which they directly or indirectly hold any interest.

Internal Use Only

MHC: 2A, 0B, 0, 0, 0, 1 PPEC: C

DGN: 2025222XUS (547054)

Copyright 2002 Exxon Mobil Corporation, All rights reserved

11.5.7 MOBIL MOBILTAC 325 NC

Mobil

Mobiltac 375 NC, 325 NC and 275 NC

Gear Oils

Product Description

Mobiltac 375 NC, 325 NC and 275 NC extra high performance non-leaded, diluent-type, heavy-bodied open gear lubricants designed for a wide variety of open gear and mining applications. They contain a non-chlorinated, volatile solvent that ensures fluidity during application, even at low temperatures. Once applied, the diluent evaporates and the lubricants take on a flexible, adhesive, high-strength consistency that is maintained throughout their service life. Mobiltac 375 NC, 325 NC and 275NC adhere strongly to gear teeth and other machine elements to resist excessive throw-off, thereby providing a wear-resistant, viscous, continuous film that lubricates well under boundary conditions. Mobiltac 275 NC also contains solid phase EP/anti-wear additive for added equipment protection

Mobiltac 375 NC, 325 NC and Mobiltac 275NC will not harden, chip, or flake in cold weather, are self-healing, and do not form a hard-packed buildup in gear-tooth roots. Dripping and throw-off are minimal, and the lubricants are easily cleaned up with a solvent-soaked rag. The lubricants provide resistance to rain, snow, and process water washing. Their flash points minimise the risk of fire. These new generation gear and mining lubricants are applied easily by hand or by automatic dispensers. Mobiltac NC technology has rapidly become a firm favourite among many open gear users and mine operators around the world

Features and Benefits

The Mobiltac NC Series of products are the most recent technology advance for the Mobiltac brand of products that have been used with great success in open gear and other mining applications for several decades. These new technology products provide significantly improved environmental and performance benefits over older diluent-type technologies. They offer the following features and potential benefits:

Features	Advantages and Potential Benefits
Excellent protection of gear teeth and other machine elements under boundary lubrication conditions	Less equipment wear and breakdown; lower replacement, downtime and maintenance costs
Excellent low-temperature pumpability	Easy start-up at low ambient and avoids cost of preheating
Excellent resistance to water washing	Maintains superb protection in wet environments; less unanticipated downtime
Minimal throw-off and dripping	Less product waste and new product cost
No chipping or flaking at low temperatures	Maintains protective lubricating film at low temperatures
Easy to clean up with rags and conventional solvents or cleaning fluids	Improved safety and reduced maintenance costs

Applications

Mobiltac 375 NC, 325 NC and Mobiltac 275NC are designed for use in a wide variety of open gear and mining applications:

- Mobiltac 375 NC, containing a high-viscosity base oil, is recommended for the lubrication of highly loaded open gears, including those that operate at high temperature, for example, ring gears on cement kilns and large gears on ore-processing mills
- Mobiltac 325 NC is recommended for the same applications as Mobiltac 375 NC. It contains more diluent and has a lower viscosity for ease of application at cooler temperatures
- Mobiltac 275 NC is designed for service as a lubricant for mine and quarry shovels, draglines, and related equipment; also open gears, racks and pinions, swing gears, booms and sticks

- Minimum operating temperature for Mobiltac 325 NC is -18 C, 375 NC is -1 C and 275 NC is -9 C

Typical Properties

Mobiltac NC	Mobiltac375 NC	Mobiltac325 NC	Mobiltac275 NC
Appearance	Viscous, semi-fluid, black	Viscous, semi-fluid, black	Viscous, semi-fluid, black
Viscosity, ASTM D 445			
cSt @ 40° C, with diluent	5000	1500	-
cSt @ 100° C, without diluent	1260	1000	-
Flash Point, °C, ASTM D 92	135	110	150
Specific Gravity, °C kg/l, ASTM D 1298	0.96	0.95	0.99
Maximum Temperature Use, °C	121	93	-

Health and Safety

Based on available information, this product is not expected to produce adverse effects on health when used for the intended application and the recommendations provided in the Material Safety Data Sheet (MSDS) are followed. MSDS's are available upon request through your sales contract office, or via the Internet. This product should not be used for purposes other than its intended use. If disposing of used product, take care to protect the environment.

The Mobil logotype, the Pegasus design are trademarks of Exxon Mobil Corporation, or one of its subsidiaries.

Exxon Mobil Corporation
3225 Gallows Road
Fairfax, VA 22037

1-800-ASK MOBIL (275-6624)

Typical Properties are typical of those obtained with normal production tolerance and do not constitute a specification. Variations that do not affect product performance are to be expected during normal manufacture and at different blending locations. The information contained herein is subject to change without notice. All products may not be available locally. For more information, contact your local ExxonMobil contact or visit www.exxonmobil.com
ExxonMobil is comprised of numerous affiliates and subsidiaries, many with names that include Esso, Mobil, or ExxonMobil. Nothing in this document is intended to override or supersede the corporate separateness of local entities. Responsibility for local action and accountability remains with the local ExxonMobil-affiliate entities.

© 2001-2011 Exxon Mobil Corporation. All rights reserved..

ExxonMobil

Product Name: MOBILTAC 325 NC
Revision Date: 27 Feb 2013
Page 1 of 12

MATERIAL SAFETY DATA SHEET

SECTION 1 PRODUCT AND COMPANY IDENTIFICATION

PRODUCT

Product Name: **MOBILTAC 325 NC**
Product Description: Hydrocarbons and Additives
Product Code: 201560404010, 611160-00, 976359
Intended Use: Gear oil

COMPANY IDENTIFICATION

Supplier: **EXXON MOBIL CORPORATION**
3225 GALLOWS RD.
FAIRFAX, VA. 22037 USA

24 Hour Health Emergency	609-737-4411
Transportation Emergency Phone	800-424-9300
ExxonMobil Transportation No.	281-834-3296
Product Technical Information	800-662-4525, 800-947-9147
MSDS Internet Address	http://www.exxon.com, http://www.mobil.com

SECTION 2 COMPOSITION / INFORMATION ON INGREDIENTS

Reportable Hazardous Substance(s) or Complex Substance(s)

Name	CAS#	Concentration*
ASPHALT (PETROLEUM)	8052-42-4	15 - 50%
HYDROTREATED LIGHT DISTILLATE	64742-47-8	8 - 14%
NAPHTHENIC ACIDS, ZINC SALTS	12001-85-3	3 - 6%
STRAIGHT-RUN MIDDLE DISTILLATES	64741-44-2	5 - 10%

* All concentrations are percent by weight unless material is a gas. Gas concentrations are in percent by volume.

SECTION 3 HAZARDS IDENTIFICATION

This material is considered to be hazardous according to regulatory guidelines (see (M)SDS Section 15).

POTENTIAL HEALTH EFFECTS

Irritating to eyes. Irritating to skin. Excessive exposure may result in eye, skin, or respiratory irritation. Under conditions of poor personal hygiene and prolonged repeated contact, some polycyclic aromatic compounds (PACs) have been suspected as a cause of skin cancer in humans. High-pressure injection under skin may cause serious damage.

Target Organs: Skin | Eye |

ENVIRONMENTAL HAZARDS

Harmful to aquatic organisms, may cause long-term adverse effects in the aquatic environment.

NFPA Hazard ID:	Health:	1	Flammability:	1	Reactivity:	0
HMIS Hazard ID:	Health:	1	Flammability:	1	Reactivity:	0

NOTE: This material should not be used for any other purpose than the intended use in Section 1 without expert advice. Health studies have shown that chemical exposure may cause potential human health risks which may vary from person to person.

SECTION 4 FIRST AID MEASURES

INHALATION

Remove from further exposure. For those providing assistance, avoid exposure to yourself or others. Use adequate respiratory protection. If respiratory irritation, dizziness, nausea, or unconsciousness occurs, seek immediate medical assistance. If breathing has stopped, assist ventilation with a mechanical device or use mouth-to-mouth resuscitation.

SKIN CONTACT

Wash contact areas with soap and water. Remove contaminated clothing. Launder contaminated clothing before reuse. If product is injected into or under the skin, or into any part of the body, regardless of the appearance of the wound or its size, the individual should be evaluated immediately by a physician as a surgical emergency. Even though initial symptoms from high pressure injection may be minimal or absent, early surgical treatment within the first few hours may significantly reduce the ultimate extent of injury.

EYE CONTACT

Flush thoroughly with water for at least 15 minutes. Get medical assistance.

INGESTION

First aid is normally not required. Seek medical attention if discomfort occurs.

SECTION 5 FIRE FIGHTING MEASURES

EXTINGUISHING MEDIA

Appropriate Extinguishing Media: Use water fog, foam, dry chemical or carbon dioxide (CO2) to extinguish flames.

Inappropriate Extinguishing Media: Straight Streams of Water

FIRE FIGHTING

Fire Fighting Instructions: Evacuate area. Prevent runoff from fire control or dilution from entering streams, sewers, or drinking water supply. Firefighters should use standard protective equipment and in enclosed spaces, self-contained breathing apparatus (SCBA). Use water spray to cool fire exposed surfaces and to protect personnel.

Unusual Fire Hazards: Hazardous material. Firefighters should consider protective equipment indicated in Section 8.

Hazardous Combustion Products: Hydrogen sulfide, Smoke, Fume, Aldehydes, Sulfur oxides, Incomplete combustion products, Oxides of carbon

FLAMMABILITY PROPERTIES

Flash Point [Method]: >97°C (207°F) [ASTM D-92]
Flammable Limits (Approximate volume % in air): LEL: N/D UEL: N/D
Autoignition Temperature: N/D

SECTION 6 ACCIDENTAL RELEASE MEASURES

NOTIFICATION PROCEDURES

In the event of a spill or accidental release, notify relevant authorities in accordance with all applicable regulations. US regulations require reporting releases of this material to the environment which exceed the applicable reportable quantity or oil spills which could reach any waterway including intermittent dry creeks. The National Response Center can be reached at (800)424-8802.

PROTECTIVE MEASURES

Avoid contact with spilled material. Warn or evacuate occupants in surrounding and downwind areas if required due to toxicity or flammability of the material. See Section 5 for fire fighting information. See the Hazard Identification Section for Significant Hazards. See Section 4 for First Aid Advice. See Section 8 for advice on the minimum requirements for personal protective equipment. Additional protective measures may be necessary, depending on the specific circumstances and/or the expert judgment of the emergency responders.

SPILL MANAGEMENT

Land Spill: Stop leak if you can do it without risk. Recover by pumping or with suitable absorbent.

Water Spill: Stop leak if you can do it without risk. Confine the spill immediately with booms. Warn other shipping. Remove from the surface by skimming or with suitable absorbents. Seek the advice of a specialist before using dispersants.

Water spill and land spill recommendations are based on the most likely spill scenario for this material; however, geographic conditions, wind, temperature, (and in the case of a water spill) wave and current direction and speed may greatly influence the appropriate action to be taken. For this reason, local experts should be consulted. Note: Local regulations may prescribe or limit action to be taken.

ENVIRONMENTAL PRECAUTIONS

Large Spills: Dike far ahead of liquid spill for later recovery and disposal. Prevent entry into waterways, sewers, basements or confined areas.

SECTION 7 HANDLING AND STORAGE

HANDLING

Avoid contact with skin. Avoid contact with eyes. Hydrogen sulfide (H2S) may be given off when this material is heated. Do not depend on sense of smell for warning. Prevent small spills and leakage to avoid slip hazard. Material can accumulate static charges which may cause an electrical spark (ignition source). When the material is handled in bulk, an electrical spark could ignite any flammable vapors from liquids or residues that may be present (e.g., during switch-loading operations). Use proper bonding and/or ground procedures. However, bonding and grounds may not eliminate the hazard from static accumulation. Consult local applicable standards for guidance. Additional references include American Petroleum Institute 2003 (Protection Against Ignitions Arising out of Static, Lightning and Stray Currents) or National Fire Protection

Agency 77 (Recommended Practice on Static Electricity) or CENELEC CLC/TR 50404 (Electrostatics - Code of practice for the avoidance of hazards due to static electricity).

Static Accumulator: This material is a static accumulator.

STORAGE

The container choice, for example storage vessel, may effect static accumulation and dissipation. Do not store in open or unlabelled containers.

SECTION 8 EXPOSURE CONTROLS / PERSONAL PROTECTION

EXPOSURE LIMIT VALUES

Exposure limits/standards (Note: Exposure limits are not additive)

Source	Form	Limit / Standard			NOTE	Source
ASPHALT (PETROLEUM) [benzene solubles]	Inhalable fraction.	TWA	0.5 mg/m3		N/A	ACGIH
HYDROTREATED LIGHT DISTILLATE [total hydrocarbon vapor]	Non-Aerosol	TWA	200 mg/m3		Skin	ACGIH
STRAIGHT-RUN MIDDLE DISTILLATES	Stable Aerosol.	TWA	5 mg/m3		N/A	ExxonMobil
STRAIGHT-RUN MIDDLE DISTILLATES	Vapor.	TWA	200 mg/m3		N/A	ExxonMobil
Hydrogen sulfide		Ceiling	20 ppm		N/A	OSHA Z2
Hydrogen sulfide		Maximum concentration	50 ppm		N/A	OSHA Z2
Hydrogen sulfide		STEL	14 mg/m3	10 ppm	N/A	ExxonMobil
Hydrogen sulfide		TWA	7 mg/m3	5 ppm	N/A	ExxonMobil
Hydrogen sulfide		STEL	5 ppm		N/A	ACGIH
Hydrogen sulfide		TWA	1 ppm		N/A	ACGIH

Exposure limits/standards for materials that can be formed when handling this product: When mists/aerosols can occur the following are recommended: 5 mg/m³ - ACGIH TLV (inhalable fraction), 5 mg/m³ - OSHA PEL.

NOTE: Limits/standards shown for guidance only. Follow applicable regulations.

ENGINEERING CONTROLS

The level of protection and types of controls necessary will vary depending upon potential exposure conditions. Control measures to consider:

No special requirements under ordinary conditions of use and with adequate ventilation.

PERSONAL PROTECTION

Personal protective equipment selections vary based on potential exposure conditions such as applications, handling practices, concentration and ventilation. Information on the selection of protective equipment for use with this material, as provided below, is based upon intended, normal usage.

Respiratory Protection: If engineering controls do not maintain airborne contaminant concentrations at a

level which is adequate to protect worker health, an approved respirator may be appropriate. Respirator selection, use, and maintenance must be in accordance with regulatory requirements, if applicable. Types of respirators to be considered for this material include:
No special requirements under ordinary conditions of use and with adequate ventilation.

For high airborne concentrations, use an approved supplied-air respirator, operated in positive pressure mode. Supplied air respirators with an escape bottle may be appropriate when oxygen levels are inadequate, gas/vapor warning properties are poor, or if air purifying filter capacity/rating may be exceeded.

Hand Protection: Any specific glove information provided is based on published literature and glove manufacturer data. Glove suitability and breakthrough time will differ depending on the specific use conditions. Contact the glove manufacturer for specific advice on glove selection and breakthrough times for your use conditions. Inspect and replace worn or damaged gloves. The types of gloves to be considered for this material include:
Chemical resistant gloves are recommended.

Eye Protection: Chemical goggles and face shield are recommended.

Skin and Body Protection: Any specific clothing information provided is based on published literature or manufacturer data. The types of clothing to be considered for this material include:
Chemical/oil resistant clothing is recommended.

Specific Hygiene Measures: Always observe good personal hygiene measures, such as washing after handling the material and before eating, drinking, and/or smoking. Routinely wash work clothing and protective equipment to remove contaminants. Discard contaminated clothing and footwear that cannot be cleaned. Practice good housekeeping.

ENVIRONMENTAL CONTROLS

Comply with applicable environmental regulations limiting discharge to air, water and soil. Protect the environment by applying appropriate control measures to prevent or limit emissions.

SECTION 9 PHYSICAL AND CHEMICAL PROPERTIES

Note: Physical and chemical properties are provided for safety, health and environmental considerations only and may not fully represent product specifications. Contact the Supplier for additional information.

GENERAL INFORMATION

Physical State: Liquid
Form: Semi-fluid
Color: Black
Odor: Characteristic
Odor Threshold: N/D

IMPORTANT HEALTH, SAFETY, AND ENVIRONMENTAL INFORMATION

Relative Density (at 15 °C): 0.96 [ASTM D1298]
Flash Point [Method]: >97°C (207°F) [ASTM D-92]
Flammable Limits (Approximate volume % in air): LEL: N/D UEL: N/D
Autoignition Temperature: N/D
Boiling Point / Range: > 174°C (345°F) [Estimated]
Vapor Density (Air = 1): > 2 at 101 kPa [Estimated]

Vapor Pressure: [N/D at 20 °C]
Evaporation Rate (n-butyl acetate = 1): N/D
pH: N/A
Log Pow (n-Octanol/Water Partition Coefficient): > 3.5 [Estimated]
Solubility in Water: Negligible
Viscosity: 1200 cSt (1200 mm2/sec) at 40 °C
Oxidizing Properties: See Hazards Identification Section.

OTHER INFORMATION
Freezing Point: N/D
Melting Point: N/A
Decomposition Temperature: N/D

SECTION 10 STABILITY AND REACTIVITY

STABILITY: Material is stable under normal conditions.

CONDITIONS TO AVOID: Excessive heat. High energy sources of ignition.

MATERIALS TO AVOID: Strong oxidizers

HAZARDOUS DECOMPOSITION PRODUCTS: Material does not decompose at ambient temperatures.

HAZARDOUS POLYMERIZATION: Will not occur.

SECTION 11 TOXICOLOGICAL INFORMATION

ACUTE TOXICITY

Route of Exposure	Conclusion / Remarks
Inhalation	
Toxicity: No end point data for material.	Minimally Toxic. Based on assessment of the components.
Irritation: No end point data for material.	Negligible hazard at ambient/normal handling temperatures. Based on assessment of the components.
Ingestion	
Toxicity: No end point data for material.	Minimally Toxic. Based on assessment of the components.
Skin	
Toxicity: No end point data for material.	Minimally Toxic. Based on assessment of the components.
Irritation: No end point data for material.	Irritating to the skin. Based on assessment of the components.
Eye	
Irritation: No end point data for material.	Irritating and will injure eye tissue. Based on assessment of the components.

CHRONIC/OTHER EFFECTS
For the product itself:
Repeated and/or prolonged exposure may cause irritation to the skin, eyes, or respiratory tract.
Contains:
Asphalt (bitumen): May contain low levels of polycyclic aromatic compounds (PACs), some of which are suspected of causing cancer under conditions of poor industrial hygiene and prolonged repeated contact.

These PACs may also be inhaled. Inhalation studies at high concentrations of fumes resulted in bronchitis, pneumonitis, fibrosis and cell damage. Avoid contact with the asphalt emissions.

The following ingredients are cited on the lists below: None.

--REGULATORY LISTS SEARCHED--

1 = NTP CARC	3 = IARC 1	5 = IARC 2B
2 = NTP SUS	4 = IARC 2A	6 = OSHA CARC

SECTION 12 ECOLOGICAL INFORMATION

The information given is based on data available for the material, the components of the material, and similar materials.

ECOTOXICITY

Material -- Expected to be harmful to aquatic organisms. May cause long-term adverse effects in the aquatic environment.

MOBILITY

More volatile component -- Highly volatile, will partition rapidly to air. Not expected to partition to sediment and wastewater solids.

High molecular wt. component -- Low solubility and floats and is expected to migrate from water to the land. Expected to partition to sediment and wastewater solids.

PERSISTENCE AND DEGRADABILITY

Biodegradation:

Low molecular wt. component -- Expected to be inherently biodegradable

High molecular wt. component -- Expected to be persistent.

Atmospheric Oxidation:

More volatile component -- Expected to degrade rapidly in air

BIOACCUMULATION POTENTIAL

Majority of components -- Has the potential to bioaccumulate, however metabolism or physical properties may reduce the bioconcentration or limit bioavailability.

SECTION 13 DISPOSAL CONSIDERATIONS

Disposal recommendations based on material as supplied. Disposal must be in accordance with current applicable laws and regulations, and material characteristics at time of disposal.

DISPOSAL RECOMMENDATIONS

Product is suitable for burning in an enclosed controlled burner for fuel value or disposal by supervised incineration at very high temperatures to prevent formation of undesirable combustion products. Protect the environment. Dispose of used oil at designated sites. Minimize skin contact. Do not mix used oils with solvents, brake fluids or coolants.

REGULATORY DISPOSAL INFORMATION

RCRA Information: The unused product, in our opinion, is not specifically listed by the EPA as a hazardous waste (40 CFR, Part 261D), nor is it formulated to contain materials which are listed as hazardous wastes. It does not exhibit the hazardous characteristics of ignitability, corrosivity or reactivity and is not formulated with contaminants as determined by the Toxicity Characteristic Leaching Procedure (TCLP). However, used product may be regulated.

Empty Container Warning Empty Container Warning (where applicable): Empty containers may contain residue and can be dangerous. Do not attempt to refill or clean containers without proper instructions. Empty drums should be completely drained and safely stored until appropriately reconditioned or disposed. Empty containers should be taken for recycling, recovery, or disposal through suitably qualified or licensed contractor and in accordance with governmental regulations. DO NOT PRESSURISE, CUT, WELD, BRAZE, SOLDER, DRILL, GRIND, OR EXPOSE SUCH CONTAINERS TO HEAT, FLAME, SPARKS, STATIC ELECTRICITY, OR OTHER SOURCES OF IGNITION. THEY MAY EXPLODE AND CAUSE INJURY OR DEATH.

SECTION 14 TRANSPORT INFORMATION

LAND (DOT): Not Regulated for Land Transport

LAND (TDG): Not Regulated for Land Transport

SEA (IMDG): Not Regulated for Sea Transport according to IMDG-Code

AIR (IATA): Not Regulated for Air Transport

SECTION 15 REGULATORY INFORMATION

OSHA HAZARD COMMUNICATION STANDARD: When used for its intended purpose, this material is classified as hazardous in accordance with OSHA 29CFR 1910.1200.

Complies with the following national/regional chemical inventory requirements:: AICS, DSL, ENCS, IECSC, KECI, PICCS, TSCA

EPCRA SECTION 302: This material contains no extremely hazardous substances.

SARA (311/312) REPORTABLE HAZARD CATEGORIES: Immediate Health.

SARA (313) TOXIC RELEASE INVENTORY:

Chemical Name	CAS Number	Typical Value

NAPHTHENIC ACIDS, ZINC SALTS	12001-85-3	3 - 6%

The following ingredients are cited on the lists below:

Chemical Name	CAS Number	List Citations
ASPHALT (PETROLEUM)	8052-42-4	1, 13, 16, 17, 18, 19
HYDROTREATED LIGHT DISTILLATE	64742-47-8	1, 17, 18, 19
NAPHTHENIC ACIDS, ZINC SALTS	12001-85-3	13, 15, 17

--REGULATORY LISTS SEARCHED--

1 = ACGIH ALL	6 = TSCA 5a2	11 = CA P65 REPRO	16 = MN RTK
2 = ACGIH A1	7 = TSCA 5e	12 = CA RTK	17 = NJ RTK
3 = ACGIH A2	8 = TSCA 6	13 = IL RTK	18 = PA RTK
4 = OSHA Z	9 = TSCA 12b	14 = LA RTK	19 = RI RTK
5 = TSCA 4	10 = CA P65 CARC	15 = MI 293	

Code key: CARC=Carcinogen; REPRO=Reproductive

SECTION 16 OTHER INFORMATION

N/D = Not determined, N/A = Not applicable

THIS SAFETY DATA SHEET CONTAINS THE FOLLOWING REVISIONS:

Revision Changes:
Section 04: First Aid Skin was modified.
Section 04: First Aid Eye was modified.
Section 06: Notification Procedures - Header was modified.
Section 11: Eye Irritation Conclusion was modified.
Section 11: Skin Irritation Conclusion was modified.
Section 13: Disposal Considerations - Disposal Recommendations was modified.
Section 10 Stability and Reactivity - Header was modified.
Section 13: Disposal Recommendations - Note was modified.
Section 13: Empty Container Warning was modified.
Section 09: Phys/Chem Properties Note was modified.
Section 09: Boiling Point C(F) was modified.
Section 09: Flash Point C(F) was modified.
Section 09: n-Octanol/Water Partition Coefficient was modified.
Section 08: Comply with applicable regulations phrase was modified.
Section 08: Personal Protection was modified.
Section 08: Hand Protection was modified.
Section 09: Vapor Pressure was modified.
Section 07: Handling and Storage - Handling was modified.
Section 07: Handling and Storage - Storage Phrases was modified.
Hazard Identification: Health Hazards was modified.
Section 11: Dermal Lethality Test Data was modified.
Section 11: Dermal Lethality Test Comment was modified.
Section 11: Oral Lethality Test Data was modified.

ExxonMobil

Product Name: MOBILTAC 325 NC
Revision Date: 27 Feb 2013
Page 10 of 12

Section 11: Inhalation Lethality Test Data was modified.
Section 11: Dermal Irritation Test Data was modified.
Section 11: Eye Irritation Test Data was modified.
Section 11: Oral Lethality Test Comment was modified.
Section 11: Inhalation Irritation Test Data was modified.
Section 05: Hazardous Combustion Products was modified.
Section 06: Accidental Release - Spill Management - Water was modified.
Section 09: Relative Density - Header was modified.
Section 09: Flash Point C(F) was modified.
Section 09: Viscosity was modified.
Section 08: Hand Protection was modified.
Section 08: Eye Protection was modified.
Section 08: Skin and Body Protection was modified.
Section 14: Sea (IMDG) - Header was modified.
Section 14: Air (IATA) - Header was modified.
Section 14: LAND (TDG) - Header was modified.
Section 14: LAND (DOT) - Header was modified.
Composition: Component table was modified.
Section 15: List Citations Table was modified.
Section 15: List Citation Table - Header was modified.
Section 14: LAND (DOT) - Default was modified.
Section 14: LAND (TDG) Default was modified.
Section 14: Sea (IMDG) - Default was modified.
Section 14: Air (IATA) - Default was modified.
Section 15: SARA (311/312) REPORTABLE HAZARD CATEGORIES was modified.
Section 15: National Chemical Inventory Listing - Header was modified.
Section 15: SARA (313) TOXIC RELEASE INVENTORY - Table was modified.
Section 15: National Chemical Inventory Listing was modified.
Section 16: Code to MHCs was modified.
Section 09: Relative Density was modified.
Section 15: Community RTK - Header was modified.
Section 11: Additional Health Information was modified.
Section 16: Code to PPEs was modified.
Section 08: Exposure limits/standards was modified.
Section 15: OSHA Hazard Communication Standard was modified.
Section 06: Notification Procedures was modified.
Section 08: Exposure Limits Table was modified.
Section 11: Chronic Tox - Component was modified.
Section 09: Oxidizing Properties was modified.
Section 08: OEL Table - Notation Column - Header was modified.
Section 08: Exposure Limit Values - Header was modified.
Section 01: Company Contact Methods Sorted by Priority was modified.
Section 05: Fire Fighting Measures - Unusual Fire Hazards was added.
Section 05: Fire Fighting Measures - Unusual Fire Hazards - Header was added.
Section 06: Protective Measures was added.
Section 06: Accidental Release - Protective Measures - Header was added.
Section 09: Form - Header was added.
Section 09: Physical State was added.
Hazard Identification: Health Hazards was added.
Hazard Identification: Emergency Overview Target Organs was added.
Hazard Identification: Emergency Overview Target Organ - Header was added.
Section 16: Precautionary Label Text - Header was added.

ExxonMobil

Product Name: MOBILTAC 325 NC
Revision Date: 27 Feb 2013
Page 11 of 12

Section 16: Signal Word was added.
Section 16: Health Hazards was added.
Section 16: Health Hazards - Header was added.
Section 16: Precautions was added.
Section 16: Precautions - Header was added.
Section 16: First Aid - Header was added.
Section 16: First Aid Eye - Header was added.
Section 16: First Aid Eye was added.
Section 16: First Aid Skin was added.
Section 16: First Aid Skin - Header was added.
Section 16: Fire Fighting Media - Header was added.
Section 16: Fire Fighting Media - Header was added.
Section 16: Spill - Header was added.
Section 16: Water Spill - Header was added.
Section 16: Water Spill was added.
Section 16: Land Spill was added.
Section 16: Land Spill - Header was added.
Section 16: Labeling Use was added.
Section 16: Labeling Use - Header was added.
Section 16: Target Organs was added.
Section 16: Target Organ - Header was added.
Section 16: NA Contains was added.
Section 16: NA Contains - Header was added.
Section 09: Decomposition Temperature was added.
Section 09: Decomposition Temp - Header was added.
Hazard Identification: OSHA - Hazards Statement was added.
Hazard Identification: OSHA - May be Hazardous Statement was deleted.
Hazard Identification: OSHA - Not Hazardous Statement was deleted.
Section 15: TSCA Class 2 Statement was deleted.

PRECAUTIONARY LABEL TEXT:
Contains: HYDROTREATED LIGHT DISTILLATE; STRAIGHT-RUN MIDDLE DISTILLATES
WARNING!
HEALTH HAZARDS
Irritating to eyes. Irritating to skin.
Target Organs: Skin | Eye |

PRECAUTIONS
Avoid contact with skin. Avoid contact with eyes.

FIRST AID
Eye: Flush thoroughly with water for at least 15 minutes. Get medical assistance.

Skin: Wash contact areas with soap and water. Remove contaminated clothing. Launder contaminated clothing before reuse. If product is injected into or under the skin, or into any part of the body, regardless of the appearance of the wound or its size, the individual should be evaluated immediately by a physician as a surgical emergency. Even though initial symptoms from high pressure injection may be minimal or absent, early surgical treatment within the first few hours may significantly reduce the ultimate extent of injury.

FIRE FIGHTING MEDIA
Use water fog, foam, dry chemical or carbon dioxide (CO2) to extinguish flames.

ExxonMobil

Product Name: MOBILTAC 325 NC
Revision Date: 27 Feb 2013
Page 12 of 12

SPILL/LEAK
Land Spill: Stop leak if you can do it without risk. Small Spills: Absorb with earth, sand or other non-combustible material and transfer to containers for later disposal. Recover by pumping or with suitable absorbent.

Water Spill: Stop leak if you can do it without risk. Confine the spill immediately with booms. Warn other shipping. Remove from the surface by skimming or with suitable absorbents. Report spills as required to appropriate authorities. Seek the advice of a specialist before using dispersants.
Use
Not intended or suitable for use in or around a household or dwelling.

The information and recommendations contained herein are, to the best of ExxonMobil's knowledge and belief, accurate and reliable as of the date issued. You can contact ExxonMobil to insure that this document is the most current available from ExxonMobil. The information and recommendations are offered for the user's consideration and examination. It is the user's responsibility to satisfy itself that the product is suitable for the intended use. If buyer repackages this product, it is the user's responsibility to insure proper health, safety and other necessary information is included with and/or on the container. Appropriate warnings and safe-handling procedures should be provided to handlers and users. Alteration of this document is strictly prohibited. Except to the extent required by law, re-publication or retransmission of this document, in whole or in part, is not permitted. The term, "ExxonMobil" is used for convenience, and may include any one or more of ExxonMobil Chemical Company, Exxon Mobil Corporation, or any affiliates in which they directly or indirectly hold any interest.

Internal Use Only
MHC: 0, 0, 0, 2, 4, 0 PPEC: D

DGN: 2009222XUS (1012316)

Copyright 2002 Exxon Mobil Corporation, All rights reserved

11.5.8 MOBIL SHC 629

Mobil

Mobil SHC 600 Series

Supreme Performance Gear and Bearing Oils

Product Description

Mobil SHC 600 Series lubricants are supreme performance gear and bearing oils designed to provide outstanding service in terms of equipment protection, oil life and problem-free operation enabling increased customer productivity. These scientifically engineered oils are formulated from base fluids with an inherently high viscosity index and a unique, proprietary, additive system which enables these products to provide outstanding performance in extreme service applications at high and low temperatures, well beyond the capabilities of mineral oils. These products are resistant to mechanical shear, even in heavily loaded gear and high shear bearing applications, so that there is virtually no loss of viscosity.

The Mobil SHC 600 Series products have low traction coefficients, which derive from the molecular structure of the base stocks used. This results in low fluid friction in the load zone of non-conforming surfaces such as gears and rolling contact bearings. Low fluid friction produces lower operating temperatures and improved gear efficiency, which translates into reduced power consumption. It also results in extended parts life and allows for more economical equipment design. The base oils used in the Mobil SHC 600 Series have outstanding response to antioxidant additives resulting in superior resistance to oxidation and sludging, especially at high temperatures. The additive combination used in these oils also provides exceptional resistance to rusting and corrosion, very good antiwear, demulsibility, foam control and air release properties, as well as multimetal compatibility. The Mobil SHC 600 Series oils are also compatible with the same seal and other construction materials used in equipment normally lubricated with mineral oils.

The leading edge technology on which Mobil SHC 600 Series lubricants have always been based has made these the products of choice for operators of a wide range of equipment, worldwide. While initially recognized as a high temperature problem solver, these products are now used in many industrial applications because of the range of benefits they offer.

Features and Benefits

The Mobil SHC brand of lubricants are recognized and appreciated around the world for their innovation and outstanding performance. These molecular designed synthetic products, pioneered by our research scientists, symbolize the continuing commitment to using advanced technology to provide outstanding lubricant products. A key factor in the development of Mobil SHC 600 Series were the close contacts between our scientists and application specialists with key OEMs to ensure that our product offerings will provide exceptional performance in the continually evolving industrial equipment designs.

Our work with equipment builders has helped confirm the results from our own laboratory tests showing the exceptional performance of the Mobil SHC 600 Series lubricants. Not least among the benefits, shown in work with OEMs, is the potential for significant efficiency improvements in changing from mineral oil. These benefits are particularly evident in equipment which, by design, cannot avoid low overall efficiency, such as high ratio worm gears.

To combat high thermal exposure of the oil, our product formulation scientists chose select base oils for Mobil SHC 600 Series oils because of their exceptional thermal/oxidative resistance potential. Our formulators chose specific additives which would maximize the benefits of the base oils to provide excellent oil life and deposit control and resistance to thermal/oxidative and chemical degradation. This formulation approach provides low temperature fluidity characteristics unmatched by mineral products and is a key benefit for remote, low ambient temperature applications. The Mobil SHC 600 Series oils offer the following features and potential benefits:

Features	Advantages and Potential Benefits
Superb high temperature thermal/oxidation resistance	Extends equipment high temperature operating capability
	Long oil life, reduced need and costs for oil change outs
	Minimizes sludge and deposits for trouble-free operation and long filter life
High Viscosity Index and absence of wax	Maintains viscosity and film thickness at high temperatures

High viscosity index and absence of wax	Maintains viscosity and film thickness at high temperatures
	Exceptional low temperature performance, including start-up
Low traction coefficient	Reduces overall friction and can increase efficiency in sliding mechanisms such as gearing, with potential for reduced power consumption and lower steady-state operating temperatures.
	Minimizes effects of micro slip in rolling contact bearings for longer rolling-element life potential
High load carrying capability	Protects equipment and extends life; minimizes unexpected downtime and extends service periods
Balanced additive combination	Provides excellent performance in terms of rust and corrosion prevention, water separability, foam control, air release performance ensuring problem-free operation in a wide range of industrial applications and reduced operating costs

Applications

While Mobil SHC 600 Series are compatible with mineral oil based products, admixture may detract from their performance. Consequently it is recommended that before changing a system to one of the Mobil SHC 600 Series, it should be thoroughly cleaned out and flushed to achieve the maximum performance benefits. The Mobil SHC 600 Series oils are compatible with the following seal materials: fluorocarbon, polyacrylate, polyurethane ether, some silicone, ethylene/acrylic, chlorinated polyethylene, polysulfide, and some nitrile rubbers. There is the potential for substantial variations in the elastomers being used today. For best results, consult your equipment supplier, seal manufacturer, or your local Mobil representative to verify compatibility.

Mobil SHC 600 Series lubricants are recommended for use in a wide variety of gear and bearing applications where high or low temperatures are encountered or where operating temperatures or bulk oil temperatures are such that conventional lubricants give unsatisfactory life, or where improved efficiency is needed. They are particularly effective in applications where the maintenance costs of component replacement, system cleaning and lubricant changes are high. Specific applications include:

- Filled for life gearboxes, especially high ratio/ low-efficiency worm gears
- Remotely located gearboxes, where oil change-out is difficult
- Low temperature applications, such as ski lifts where seasonal oil changes can be avoided
- Mixer roll bearings and roll neck bearings where high temperatures are encountered
- Plastic calendars
- Severe centrifuge applications, including marine centrifuges
- Railroad A/C Traction Drives
- Mobil SHC 625*, 627, 629 and 630 are suitable for Oil Flooded Rotary Screw Compressors compressing natural gas, field gas gathering, CO2 and other process gasses used in the natural gas industry

Specifications and Approvals

Mobil SHC 600 Series has the following builder approvals:	**624**	**625**	**626**	**627**	**629**	**630**	**632**	**634**	**636**	**639**
ABB TURBO HZTL 90572			X							
ABB TURBO HZTL 90617			X							
CINCINNATI MACHINE P-34									X	
CINCINNATI MACHINE P-35								X		
CINCINNATI MACHINE P-59							X			

P-59						X				
CINCINNATI MACHINE P-74						X				
CINCINNATI MACHINE P-78										X
CINCINNATI MACHINE P-80			X							
FLENDER BA 7300 table A					X					X
FLENDER BA 7300 table A and C						X	X	X		

Typical Properties

Mobil SHC 600 Series	**624**	**625 (1)**	**626**	**627**	**629**	**630**	**632**	**634**	**636**	**639**
ISO Viscosity Grade	32	46	68	100	150	220	320	460	680	1000
Viscosity, ASTM D 445										
cSt @ 40° C	31.0	46.0	66.0	97.0	149	222	320	454	652	968
cSt @ 100° C	5.8	7.7	10.3	13.7	19.0	25.7	35.0	46.5	61.2	78.5
Viscosity Index, ASTM D 2270	133	136	144	144	144	147	154	161	163	159
Pour Point, °C, ASTM D 97	-51	-48	-48	-45	-45	-42	-40	-40	-39	-33
Flash Point, °C, ASTM D 92	237	242	231	228	235	240	236	234	240	235
Specific Gravity, ASTM D 4052, 15° C/15° C	0.85	0.85	0.86	0.86	0.86	0.87	0.87	0.87	0.87	0.87
Appearance, visual	Orange	Orange	Orange	Orange	Orange	Orange	Orange	Orange	Orange	Orange
TOST, ASTM D 943, Hours to 2 NN	10,000+	10,000+	10,000+	10,000+	10,000+	10,000+	10,000+	10,000+	10,000+	10,000+
RBOT, ASTM D 2272, min.	1750	1750	1750	1750	1750	1750	1750	1750	1750	1750
Rust protection, ASTM D665, Sea Water	Pass	Pass	Pass	Pass	Pass	Pass	Pass	Pass	Pass	Pass
Water Seperability, ASTM D 1401,Min. to 37 ml water @ 54° C	20	20	20	-	-	-	-	-	-	-
Water Seperability, ASTM D 1401,Min. to 37 ml water @ 82° C	-	-	-	15	15	15	25	25	30	40
Copper Corrosion, ASTM D130, 24 hrs @ 121° C	1B	1B	1B	1B	1B	1B	1B	1B	1B	1B
Foam Test, ASTM D 892, Seq I,II,IIITendency / Stability, ml/ml	0/0, 20/0, 0/0	0/0, 0/0, 0/0	0/0, 0/0, 0/0	0/0, 0/0,0/0	0/0, 0/0,0/0	0/0, 0/0,0/0	0/0,0/0,0/0	0/0, 20/0,0/0	0/0,0/0,0/0	0/0, 0/0, 0/0
FZG scuffing test, DIN 51534 (mod), A/16.6/90, Failure Stage	10	11	11	13	13	13+	13+	13+	13+	13+
(1) 625 is available only in the USA										

Health and Safety

Based on available information, this product is not expected to produce adverse effects on health when used for the intended application and the recommendations provided in the Material Safety Data Sheet (MSDS) are followed. MSDS's are available upon request through your sales contract office, or via the Internet. This product should not be used for purposes other than its intended use. If disposing of used product, take care to protect the environment.

All products may not be available locally.

Note for Canadian users: Mobil SHC 600 Series is not controlled under Canadian WHMIS legislation.

The Mobil logotype, the Pegasus design and SHC are trademarks of ExxonMobil Corporation, or one of its subsidiaries.

11-2010

Exxon Mobil Corporation
3225 Gallows Road
Fairfax, VA 22037

1-800-ASK MOBIL (275-6624)

Typical Properties are typical of those obtained with normal production tolerance and do not constitute a specification. Variations that do not affect product performance are to be expected during normal manufacture and at different blending locations. The information contained herein is subject to change without notice. All products may not be available locally. For more information, contact your local ExxonMobil contact or visit www.exxonmobil.com
ExxonMobil is comprised of numerous affiliates and subsidiaries, many with names that include Esso, Mobil, or ExxonMobil. Nothing in this document is intended to override or supersede the corporate separateness of local entities. Responsibility for local action and accountability remains with the local ExxonMobil-affiliate entities.

Copyright © 2001-2013 Exxon Mobil Corporation. All rights reserved..

ExxonMobil

Product Name: MOBIL SHC 629
Revision Date: 11 May 2012
Page 1 of 9

MATERIAL SAFETY DATA SHEET

SECTION 1 PRODUCT AND COMPANY IDENTIFICATION

PRODUCT

Product Name: **MOBIL SHC 629**
Product Description: Synthetic Base Stocks and Additives
Product Code: 201560500540, 602946-00, 970114
Intended Use: Circulating/gear oil

COMPANY IDENTIFICATION

Supplier: EXXON MOBIL CORPORATION
3225 GALLOWS RD.
FAIRFAX, VA. 22037 USA

24 Hour Health Emergency	609-737-4411
Transportation Emergency Phone	800-424-9300
ExxonMobil Transportation No.	281-834-3296
Product Technical Information	800-662-4525, 800-947-9147
MSDS Internet Address	http://www.exxon.com, http://www.mobil.com

SECTION 2 COMPOSITION / INFORMATION ON INGREDIENTS

No Reportable Hazardous Substance(s) or Complex Substance(s).

SECTION 3 HAZARDS IDENTIFICATION

This material is not considered to be hazardous according to regulatory guidelines (see (M)SDS Section 15).

POTENTIAL HEALTH EFFECTS

Low order of toxicity. Excessive exposure may result in eye, skin, or respiratory irritation. High-pressure injection under skin may cause serious damage.

NFPA Hazard ID:	Health:	0	Flammability:	1	Reactivity:	0
HMIS Hazard ID:	Health:	0	Flammability:	1	Reactivity:	0

NOTE: This material should not be used for any other purpose than the intended use in Section 1 without expert advice. Health studies have shown that chemical exposure may cause potential human health risks which may vary from person to person.

SECTION 4 FIRST AID MEASURES

INHALATION

Remove from further exposure. For those providing assistance, avoid exposure to yourself or others. Use

adequate respiratory protection. If respiratory irritation, dizziness, nausea, or unconsciousness occurs, seek immediate medical assistance. If breathing has stopped, assist ventilation with a mechanical device or use mouth-to-mouth resuscitation.

SKIN CONTACT

Wash contact areas with soap and water. If product is injected into or under the skin, or into any part of the body, regardless of the appearance of the wound or its size, the individual should be evaluated immediately by a physician as a surgical emergency. Even though initial symptoms from high pressure injection may be minimal or absent, early surgical treatment within the first few hours may significantly reduce the ultimate extent of injury.

EYE CONTACT

Flush thoroughly with water. If irritation occurs, get medical assistance.

INGESTION

First aid is normally not required. Seek medical attention if discomfort occurs.

SECTION 5 FIRE FIGHTING MEASURES

EXTINGUISHING MEDIA

Appropriate Extinguishing Media: Use water fog, foam, dry chemical or carbon dioxide (CO2) to extinguish flames.

Inappropriate Extinguishing Media: Straight Streams of Water

FIRE FIGHTING

Fire Fighting Instructions: Evacuate area. Prevent runoff from fire control or dilution from entering streams, sewers, or drinking water supply. Firefighters should use standard protective equipment and in enclosed spaces, self-contained breathing apparatus (SCBA). Use water spray to cool fire exposed surfaces and to protect personnel.

Hazardous Combustion Products: Smoke, Fume, Aldehydes, Sulfur oxides, Incomplete combustion products, Oxides of carbon

FLAMMABILITY PROPERTIES

Flash Point [Method]: >210°C (410°F) [ASTM D-92]
Flammable Limits (Approximate volume % in air): LEL: 0.9 UEL: 7.0
Autoignition Temperature: N/D

SECTION 6 ACCIDENTAL RELEASE MEASURES

NOTIFICATION PROCEDURES

In the event of a spill or accidental release, notify relevant authorities in accordance with all applicable regulations. US regulations require reporting releases of this material to the environment which exceed the applicable reportable quantity or oil spills which could reach any waterway including intermittent dry creeks. The National Response Center can be reached at (800)424-8802.

PROTECTIVE MEASURES

Avoid contact with spilled material. See Section 5 for fire fighting information. See the Hazard Identification Section for Significant Hazards. See Section 4 for First Aid Advice. See Section 8 for advice on the minimum requirements for personal protective equipment. Additional protective measures may be necessary, depending on the specific circumstances and/or the expert judgment of the emergency responders.

SPILL MANAGEMENT

Land Spill: Stop leak if you can do it without risk. Recover by pumping or with suitable absorbent.

Water Spill: Stop leak if you can do it without risk. Confine the spill immediately with booms. Warn other shipping. Remove from the surface by skimming or with suitable absorbents. Seek the advice of a specialist before using dispersants.

Water spill and land spill recommendations are based on the most likely spill scenario for this material; however, geographic conditions, wind, temperature, (and in the case of a water spill) wave and current direction and speed may greatly influence the appropriate action to be taken. For this reason, local experts should be consulted. Note: Local regulations may prescribe or limit action to be taken.

ENVIRONMENTAL PRECAUTIONS

Large Spills: Dike far ahead of liquid spill for later recovery and disposal. Prevent entry into waterways, sewers, basements or confined areas.

SECTION 7 HANDLING AND STORAGE

HANDLING

Prevent small spills and leakage to avoid slip hazard. Material can accumulate static charges which may cause an electrical spark (ignition source). When the material is handled in bulk, an electrical spark could ignite any flammable vapors from liquids or residues that may be present (e.g., during switch-loading operations). Use proper bonding and/or ground procedures. However, bonding and grounds may not eliminate the hazard from static accumulation. Consult local applicable standards for guidance. Additional references include American Petroleum Institute 2003 (Protection Against Ignitions Arising out of Static, Lightning and Stray Currents) or National Fire Protection Agency 77 (Recommended Practice on Static Electricity) or CENELEC CLC/TR 50404 (Electrostatics - Code of practice for the avoidance of hazards due to static electricity).

Static Accumulator: This material is a static accumulator.

STORAGE

The container choice, for example storage vessel, may effect static accumulation and dissipation. Do not store in open or unlabelled containers.

SECTION 8 EXPOSURE CONTROLS / PERSONAL PROTECTION

Exposure limits/standards for materials that can be formed when handling this product: When mists/aerosols can occur the following are recommended: 5 mg/m³ - ACGIH TLV (inhalable fraction), 5 mg/m³ - OSHA PEL.

NOTE: Limits/standards shown for guidance only. Follow applicable regulations.

ENGINEERING CONTROLS

The level of protection and types of controls necessary will vary depending upon potential exposure conditions. Control measures to consider:
No special requirements under ordinary conditions of use and with adequate ventilation.

PERSONAL PROTECTION

Personal protective equipment selections vary based on potential exposure conditions such as applications, handling practices, concentration and ventilation. Information on the selection of protective equipment for use with this material, as provided below, is based upon intended, normal usage.

Respiratory Protection: If engineering controls do not maintain airborne contaminant concentrations at a level which is adequate to protect worker health, an approved respirator may be appropriate. Respirator selection, use, and maintenance must be in accordance with regulatory requirements, if applicable. Types of respirators to be considered for this material include:
No special requirements under ordinary conditions of use and with adequate ventilation.

For high airborne concentrations, use an approved supplied-air respirator, operated in positive pressure mode. Supplied air respirators with an escape bottle may be appropriate when oxygen levels are inadequate, gas/vapor warning properties are poor, or if air purifying filter capacity/rating may be exceeded.

Hand Protection: Any specific glove information provided is based on published literature and glove manufacturer data. Glove suitability and breakthrough time will differ depending on the specific use conditions. Contact the glove manufacturer for specific advice on glove selection and breakthrough times for your use conditions. Inspect and replace worn or damaged gloves. The types of gloves to be considered for this material include:
No protection is ordinarily required under normal conditions of use.

Eye Protection: If contact is likely, safety glasses with side shields are recommended.

Skin and Body Protection: Any specific clothing information provided is based on published literature or manufacturer data. The types of clothing to be considered for this material include:
No skin protection is ordinarily required under normal conditions of use. In accordance with good industrial hygiene practices, precautions should be taken to avoid skin contact.

Specific Hygiene Measures: Always observe good personal hygiene measures, such as washing after handling the material and before eating, drinking, and/or smoking. Routinely wash work clothing and protective equipment to remove contaminants. Discard contaminated clothing and footwear that cannot be cleaned. Practice good housekeeping.

ENVIRONMENTAL CONTROLS

Comply with applicable environmental regulations limiting discharge to air, water and soil. Protect the environment by applying appropriate control measures to prevent or limit emissions.

SECTION 9 PHYSICAL AND CHEMICAL PROPERTIES

Note: Physical and chemical properties are provided for safety, health and environmental considerations only

and may not fully represent product specifications. Contact the Supplier for additional information.

GENERAL INFORMATION

Physical State: Liquid
Color: Orange
Odor: Characteristic
Odor Threshold: N/D

IMPORTANT HEALTH, SAFETY, AND ENVIRONMENTAL INFORMATION

Relative Density (at 15 °C): 0.864
Flash Point [Method]: >210°C (410°F) [ASTM D-92]
Flammable Limits (Approximate volume % in air): LEL: 0.9 UEL: 7.0
Autoignition Temperature: N/D
Boiling Point / Range: > 316°C (600°F)
Vapor Density (Air = 1): > 2 at 101 kPa
Vapor Pressure: < 0.013 kPa (0.1 mm Hg) at 20 °C
Evaporation Rate (n-butyl acetate = 1): N/D
pH: N/A
Log Pow (n-Octanol/Water Partition Coefficient): > 3.5
Solubility in Water: Negligible
Viscosity: 150 cSt (150 mm2/sec) at 40 °C | 20.8 cSt (20.8 mm2/sec) at 100°C
Oxidizing Properties: See Hazards Identification Section.

OTHER INFORMATION

Freezing Point: N/D
Melting Point: N/A
Pour Point: -39°C (-38°F)

SECTION 10 STABILITY AND REACTIVITY

STABILITY: Material is stable under normal conditions.

CONDITIONS TO AVOID: Excessive heat. High energy sources of ignition.

MATERIALS TO AVOID: Strong oxidizers

HAZARDOUS DECOMPOSITION PRODUCTS: Material does not decompose at ambient temperatures.

HAZARDOUS POLYMERIZATION: Will not occur.

SECTION 11 TOXICOLOGICAL INFORMATION

ACUTE TOXICITY

Route of Exposure	Conclusion / Remarks
Inhalation	
Toxicity (Rat): LC50 > 5000 mg/m3	Minimally Toxic. Based on test data for structurally similar materials.
Irritation: No end point data.	Negligible hazard at ambient/normal handling temperatures. Based on assessment of the components.
Ingestion	

Toxicity (Rat): LD50 > 5000 mg/kg	Minimally Toxic. Based on test data for structurally similar materials.
Skin	
Toxicity (Rabbit): LD50 > 5000 mg/kg	Minimally Toxic. Based on test data for structurally similar materials.
Irritation (Rabbit): Data available.	Negligible irritation to skin at ambient temperatures. Based on test data for structurally similar materials.
Eye	
Irritation (Rabbit): Data available.	May cause mild, short-lasting discomfort to eyes. Based on test data for structurally similar materials.

CHRONIC/OTHER EFFECTS

Contains:

Synthetic base oils: Not expected to cause significant health effects under conditions of normal use, based on laboratory studies with the same or similar materials. Not mutagenic or genotoxic. Not sensitizing in test animals and humans.

Additional information is available by request.

The following ingredients are cited on the lists below: None.

--REGULATORY LISTS SEARCHED--

1 = NTP CARC	3 = IARC 1	5 = IARC 2B
2 = NTP SUS	4 = IARC 2A	6 = OSHA CARC

SECTION 12 ECOLOGICAL INFORMATION

The information given is based on data available for the material, the components of the material, and similar materials.

ECOTOXICITY

Material -- Not expected to be harmful to aquatic organisms.

Material -- Not expected to demonstrate chronic toxicity to aquatic organisms.

MOBILITY

Base oil component -- Low solubility and floats and is expected to migrate from water to the land. Expected to partition to sediment and wastewater solids.

SECTION 13 DISPOSAL CONSIDERATIONS

Disposal recommendations based on material as supplied. Disposal must be in accordance with current applicable laws and regulations, and material characteristics at time of disposal.

DISPOSAL RECOMMENDATIONS

Product is suitable for burning in an enclosed controlled burner for fuel value or disposal by supervised incineration at very high temperatures to prevent formation of undesirable combustion products. Protect the environment. Dispose of used oil at designated sites. Minimize skin contact. Do not mix used oils with solvents, brake fluids or coolants.

REGULATORY DISPOSAL INFORMATION

RCRA Information: The unused product, in our opinion, is not specifically listed by the EPA as a hazardous waste (40 CFR, Part 261D), nor is it formulated to contain materials which are listed as hazardous wastes. It does not exhibit the hazardous characteristics of ignitability, corrosivity or reactivity and is not formulated with contaminants as determined by the Toxicity Characteristic Leaching Procedure (TCLP). However, used product may be regulated.

Empty Container Warning Empty Container Warning (where applicable): Empty containers may contain residue and can be dangerous. Do not attempt to refill or clean containers without proper instructions. Empty drums should be completely drained and safely stored until appropriately reconditioned or disposed. Empty containers should be taken for recycling, recovery, or disposal through suitably qualified or licensed contractor and in accordance with governmental regulations. DO NOT PRESSURISE, CUT, WELD, BRAZE, SOLDER, DRILL, GRIND, OR EXPOSE SUCH CONTAINERS TO HEAT, FLAME, SPARKS, STATIC ELECTRICITY, OR OTHER SOURCES OF IGNITION. THEY MAY EXPLODE AND CAUSE INJURY OR DEATH.

SECTION 14 TRANSPORT INFORMATION

LAND (DOT): Not Regulated for Land Transport

LAND (TDG): Not Regulated for Land Transport

SEA (IMDG): Not Regulated for Sea Transport according to IMDG-Code

AIR (IATA): Not Regulated for Air Transport

SECTION 15 REGULATORY INFORMATION

OSHA HAZARD COMMUNICATION STANDARD: When used for its intended purposes, this material is not classified as hazardous in accordance with OSHA 29 CFR 1910.1200.

Complies with the following national/regional chemical inventory requirements:: TSCA
Special Cases:

Inventory	Status
AICS	Restrictions Apply
ELINCS	Restrictions Apply
KECI	Restrictions Apply

EPCRA: This material contains no extremely hazardous substances.

SARA (311/312) REPORTABLE HAZARD CATEGORIES: None.

SARA (313) TOXIC RELEASE INVENTORY: This material contains no chemicals subject to the supplier notification requirements of the SARA 313 Toxic Release Program.

The following ingredients are cited on the lists below:

Chemical Name	CAS Number	List Citations
PHENOL, 4,4-METHYLENEBIS(2,6-BIS(1,1-DIMETHYLETHYL)-	118-82-1	5

--REGULATORY LISTS SEARCHED--

1 = ACGIH ALL	6 = TSCA 5a2	11 = CA P65 REPRO	16 = MN RTK
2 = ACGIH A1	7 = TSCA 5e	12 = CA RTK	17 = NJ RTK
3 = ACGIH A2	8 = TSCA 6	13 = IL RTK	18 = PA RTK
4 = OSHA Z	9 = TSCA 12b	14 = LA RTK	19 = RI RTK
5 = TSCA 4	10 = CA P65 CARC	15 = MI 293	

Code key: CARC=Carcinogen; REPRO=Reproductive

SECTION 16 OTHER INFORMATION

N/D = Not determined, N/A = Not applicable

THIS SAFETY DATA SHEET CONTAINS THE FOLLOWING REVISIONS:

Revision Changes:
Section 13: Disposal Considerations - Disposal Recommendations was modified.
Section 10 Stability and Reactivity - Header was modified.
Section 13: Disposal Recommendations - Note was modified.
Section 09: Phys/Chem Properties Note was modified.
Section 09: Boiling Point C(F) was modified.
Section 08: Comply with applicable regulations phrase was modified.
Section 08: Personal Protection was modified.
Section 01: Product Intended Use was modified.
Section 09: Vapor Pressure was modified.
Section 07: Handling and Storage - Handling was modified.
Section 07: Handling and Storage - Storage Phrases was modified.
Section 06: Accidental Release - Spill Management - Water was modified.
Section 09: Relative Density - Header was modified.
Section 09: Flash Point C(F) was modified.
Section 09: Viscosity was modified.
Section 14: Sea (IMDG) - Header was modified.
Section 14: Air (IATA) - Header was modified.
Section 14: LAND (TDG) - Header was modified.
Section 14: LAND (DOT) - Header was modified.

Section 15: List Citation Table - Header was modified.
Section 14: LAND (DOT) - Default was modified.
Section 14: LAND (TDG) Default was modified.
Section 14: Sea (IMDG) - Default was modified.
Section 14: Air (IATA) - Default was modified.
Section 15: National Chemical Inventory Listing - Header was modified.
Section 15: National Chemical Inventory Listing was modified.
Section 08: Exposure limits/standards was modified.
Section 15: Special Cases Table was modified.
Hazard Identification: OSHA - May be Hazardous Statement was modified.
Section 09: Oxidizing Properties was modified.
Section 06: Protective Measures was added.
Section 06: Accidental Release - Protective Measures - Header was added.
Section 09: Viscosity was added.
Section 09: DMSO IP was deleted.
Section 09: DMSO IP - Header was deleted.

The information and recommendations contained herein are, to the best of ExxonMobil's knowledge and belief, accurate and reliable as of the date issued. You can contact ExxonMobil to insure that this document is the most current available from ExxonMobil. The information and recommendations are offered for the user's consideration and examination. It is the user's responsibility to satisfy itself that the product is suitable for the intended use. If buyer repackages this product, it is the user's responsibility to insure proper health, safety and other necessary information is included with and/or on the container. Appropriate warnings and safe-handling procedures should be provided to handlers and users. Alteration of this document is strictly prohibited. Except to the extent required by law, re-publication or retransmission of this document, in whole or in part, is not permitted. The term, "ExxonMobil" is used for convenience, and may include any one or more of ExxonMobil Chemical Company, Exxon Mobil Corporation, or any affiliates in which they directly or indirectly hold any interest.

Internal Use Only
MHC: 0B, 0B, 0, 0, 0, 0 PPEC: A

DGN: 2007961XUS (1013314)

Copyright 2002 Exxon Mobil Corporation, All rights reserved

11.5.9 CRC TAC 2 ADHESIVE CHAIN LUBRICANT

CRC Industries, Inc.
885 Louis Drive • Warminster PA • 18974

Technical Data Sheet

TAC 2™ Adhesive Chain Lubricant

I. Product Description

CRC TAC 2™ is an exceptional lubricant, with a tough adhesive quality, which will bond to chain/wear surfaces to keep them in peak operating condition by reducing friction and wear that cause metal fatigue. **CRC TAC 2™** contains a tackifier that enables the lubricant to cling tenaciously to metal surfaces without increasing the viscosity. Regular use of **CRC TAC 2™** will help inhibit corrosion, reduce load stress and help increase chain life.

II. Applications

Recommended for use as a lubricant and corrosion inhibitor on all types of drive chains, open gears, hoists, winches, pulleys, fork lifts, rollers, garage doors, bushings, seals, o-rings, and wire ropes.

III. Features & Benefits

- **Low Viscosity**. Provides the ability to penetrate and thoroughly coat vital chain pin and bushing areas.
- **Contains Molybdenum**. Provides cling ability to avoid sling-off or excess dripping.
- **High Temperature Stability**. Operates effectively in temperatures up to 350° F continuous, equivalent to many grease products. Covers wide range of applications.
- **Blue Color** allows easy identification of lubricated parts and equipment.
- **No Known Ozone Depleting Chemicals**. Offers effective performance while complying with the EPA regulations on the use of ozone depleting chemicals.
- **M.S.D.[L.]™-Material Safety Data Label**. Provides instant access to current safety information should an accident or OSHA inspection occur. Helps comply **with OSHA Hazard Communications Standard 29 CFR 1910.1200**.

IV. Physical Properties without propellant

Flash Point	<0ºF TCC	**Boiling Point**	140°F
Odor	Mild petroleum	**Solubility**	Negligible in water
Appearance	Blue liquid	**% Volatile**	81.3%
Vapor Density	>1 (air=1)	**Specific Gravity**	0.710
VOC Content (Fed)	577.2 g/L	**Temperature Range**	350°F (Continuous)
Shelf Life	2 years	**Propellant**	Hydrocarbon
Sara Title III, Sect. 313 Chemicals	Yes		
Prop 65	No		

V. Specifications and Approvals

- NSF Registration # 144243, Category Code (H2) for use in federally inspected meat and poultry plants.

TAC 2™ Adhesive Chain Lubricant

VI. Performance Characteristics

Type of Film	Non-drying
Base Type	Organic Molybdenum
ASTM D-3233 (Falex Load Test)	1,500 lbs.

VII. Directions

1. Do not apply while equipment is energized.
2. Shake well before use.
3. Spray upper edges of overlapping chain side plates and allow lubricant to set up before re-energizing.

VIII. Package Description

Part Number	Container Size
03076	16 oz Aerosol

IX. Disposal

Disposal requirements vary by state and local jurisdiction. All used and unused product should be disposed of in conformance with local, state and federal regulations.

X. Special Use Warnings

Aerosol Cans
Do not puncture, incinerate or store above 120°F. Exposure to high temperatures may cause can to burst. Do not place in direct sunlight or near any heat source. Use only in well ventilated area. Avoid continuous breathing of vapor and spray mist. Avoid contact with skin and eyes. If ventilation is not adequate, respiratory protection should be worn. Aerosol cans will conduct electricity. Keep away from all live electrical sources including battery terminals, solenoids, electrical panels and other electronic components. Failure to observe this warning may result in serious injury from flash fire and/or electrical shock.

Bulk
Product is extremely flammable and should be kept from all flames and other ignition sources. Vapors are heavier than air and can collect in low-lying areas.

General
Use only in well ventilated area. Ventilation may be improved by opening a window or door or providing mechanical assistance. Avoid continuous breathing of vapor and spray mist. Avoid contact with skin and eyes. If ventilation is not adequate, respiratory protection should be worn. For more information regarding short term and long term exposure, review this product's Material Safety Data Sheet.

DISCLAIMER: This information is accurate to the best of CRC Industries' knowledge or obtained from sources believed by CRC to be accurate. Before using any product, read all warnings and directions on the label. All products should be tested for suitability on a particular application prior to actual use. CRC Industries, Inc. makes no representations or warranties of any kind concerning this data.

CRC Industries, Inc. *Industrial Products Division* *Warminster, PA 18974*
Technical Service: (800)521-3168 *Customer Service: (800)272-4620* *CRC On-Line: (215)442-6260*

Literature Reorder #TDS343 ***CRC On-Line # 343*** ***REV. 9/11***

CRC MATERIAL SAFETY DATA SHEET

Section 1: Product & Company Identification

Product Name: **TAC 2™ Adhesive Chain Lube** (aerosol)

Product Number (s): **03076**

Product Use: industrial chain lubricant

Manufacturer / Supplier Contact Information:

In United States:
CRC Industries, Inc.
885 Louis Drive
Warminster, PA 18974
www.crcindustries.com
1-215-674-4300 (General)
(800) 521-3168 (Technical)
(800) 272-4620 (Customer Service)

In Canada:
CRC Canada Co.
2-1246 Lorimar Drive
Mississauga, Ontario L5S 1R2
www.crc-canada.ca
1-905-670-2291

In Mexico:
CRC Industries Mexico
Av. Benito Juárez 4055 G
Colonia Orquídea
San Luís Potosí, SLP CP 78394
www.crc-mexico.com
52-444-824-1666

24-Hr Emergency – CHEMTREC: (800) 424-9300 or (703) 527-3887

Section 2: Hazards Identification

Emergency Overview

DANGER: Extremely Flammable. Harmful or Fatal if Swallowed. Contents Under Pressure.
As defined by OSHA's Hazard Communication Standard, this product is hazardous.
Appearance & Odor: Blue liquid with mild petroleum odor

Potential Health Effects:

ACUTE EFFECTS:

EYE: May cause mild irritation including stinging and redness, but does not injure eye.

SKIN: Single, brief exposures may cause mild irritation. Frequent or prolonged contact may cause more severe irritation, defatting of the skin, and dermatitis.

INHALATION: High vapor concentrations are irritating to the respiratory tract and may cause headaches, dizziness, anesthesia, drowsiness, unconsciousness, and other central nervous system effects, including death. May cause peripheral nervous system disorder and/or damage.

INGESTION: Low order of toxicity by ingestion. Main hazard is aspiration into the lungs during swallowing or vomiting. Small amounts aspirated into the respiratory system may cause bronchopneumonia or pulmonary adema, possibly progressing to death.

CHRONIC EFFECTS: Overexposure to n-hexane may cause progressive and potentially irreversible damage to the peripheral nervous system, particularly in the arms and legs.

TARGET ORGANS: Central nervous system, peripheral nervous system, respiratory system

Medical Conditions Aggravated by Exposure: skin and respiratory conditions

See Section 11 for toxicology and carcinogenicity information on product ingredients.

Page 1 of 7

Product Name: TAC 2™ Adhesive Chain Lube (aerosol)
Product Number (s): 03076

Section 3: Composition/Information on Ingredients

COMPONENT	CAS NUMBER	% by Wt.
Hexane isomers	107-83-5 / 64742-49-0	50 - 60
Liquefied petroleum gas	68476-86-8	25 - 35
Acrylic copolymer	proprietary	5 - 15
Petrolatum	8009-03-8	5 - 10
n-Hexane	110-54-3	1.6

Section 4: First Aid Measures

Eye Contact: Immediately flush with plenty of water for 15 minutes. Call a physician if irritation persists.

Skin Contact: Remove contaminated clothing and wash affected area with soap and water. Call a physician if irritation persists. Wash contaminated clothing prior to re-use.

Inhalation: Remove person to fresh air. Keep person calm. If not breathing, give artificial respiration. If breathing is difficult give oxygen. Call a physician.

Ingestion: Do NOT induce vomiting. Contact a physician immediately.

Note to Physicians: Treat symptomatically. Gastric lavage using a cuffed endotracheal tube may be performed at your discretion.

Section 5: Fire-Fighting Measures

Flammable Properties: This product is extremely flammable in accordance with aerosol flammability definitions. (See 16 CFR 1500.3(c)(6)).

Flash Point: < 0°F (TCC) Upper Explosive Limit: 9.0
Autoignition Temperature: 489°F Lower Explosive Limit: 1.7

Fire and Explosion Data:

Suitable Extinguishing Media: Class B fire extinguishers, dry chemical, foam or CO_2

Products of Combustion: Fumes, smoke and carbon monoxide

Explosion Hazards: Aerosol containers, when exposed to heat from fire, may build pressure and explode. Vapors may accumulate in a confined space and create a flammable atmosphere.

Protection of Fire-Fighters: Firefighters should wear self-contained, NIOSH-approved breathing apparatus for protection against suffocation and possible toxic decomposition products. Proper eye and skin protection should be provided. Use water spray to keep fire-exposed containers cool and to knock down vapors which may result from product decomposition. Do not spray water directly on fire; product will float and could be reignited on surface of water.

Section 6: Accidental Release Measures

Personal Precautions: Use personal protection recommended in Section 8.

Product Name: TAC 2™ Adhesive Chain Lube (aerosol)
Product Number (s): 03076

Environmental Precautions: Take precautions to prevent contamination of ground and surface waters. Do not flush into sewers or storm drains.

Methods for Containment & Clean-up: Dike area to contain spill. Remove all sources of ignition. Ventilate the area with fresh air. If in confined space or limited air circulation area, clean-up workers should wear appropriate respiratory protection. Recover or absorb spilled material using an absorbent designed for chemical spills. Place used absorbents into proper waste containers.

Section 7: Handling and Storage

Handling Procedures: Use proper grounding and bonding procedures for transferring materials. Do not use product near any source of ignition. Avoid contact with eyes and skin. Avoid breathing vapors. Use caution around energized equipment. The metal container will conduct electricity if it contacts a live source. This may result in injury to the user from electrical shock and/or flash fire. For product use instructions, please see the product label.

Storage Procedures: Store in a cool dry area out of direct sunlight. Aerosol cans must be maintained below 120 F to prevent cans from rupturing.

Aerosol Storage Level: III

Section 8: Exposure Controls/Personal Protection

Exposure Guidelines:

	OSHA		ACGIH		OTHER		
COMPONENT	TWA	STEL	TWA	STEL	TWA	SOURCE	UNIT
Hexane isomers	500(v)	1000(v)	500	1000	NE		ppm
Liquefied petroleum gas	1000	NE	1000	NE	NE		ppm
Acrylic copolymer	NE	NE	NE	NE	NE		
Petrolatum	NE	NE	NE	NE	NE		
n-Hexane	500	NE	50(s)	NE	NE		ppm
N.E. – Not Established (c) – ceiling (s) – skin (v) – vacated							

Controls and Protection:

Engineering Controls: Area should have ventilation to provide fresh air. Local exhaust ventilation is generally preferred because it can control the emissions of the contaminant at the source, preventing dispersion into the general work area. Use mechanical means if necessary to maintain vapor levels below the exposure guidelines. If working in a confined space, follow applicable OSHA regulations.

Respiratory Protection: None required for normal work where adequate ventilation is provided. If engineering controls are not feasible or if exposure exceeds the applicable exposure limits, use a NIOSH-approved cartridge respirator with organic vapor cartridge. Air monitoring is needed to determine actual employee exposure levels. Use a self-contained breathing apparatus in confined spaces and for emergencies.

Eye/face Protection: For normal conditions, wear safety glasses. Where there is reasonable probability of liquid contact, wear splash-proof goggles.

Skin Protection: Use protective gloves such as nitrile, PVC or Viton. Also, use full protective clothing if there is prolonged or repeated contact of liquid with skin.

Product Name: TAC 2™ Adhesive Chain Lube (aerosol)
Product Number (s): 03076

Section 9: Physical and Chemical Properties

Physical State: liquid
Color: blue
Odor: mild petroleum
Odor Threshold: ND
Specific Gravity: 0.710
Initial Boiling Point: 140°F
Freezing Point: < -76°F
Vapor Pressure: 160 mmHg @ 68°F
Vapor Density: > 1 (air = 1)
Evaporation Rate: fast
Solubility: negligible in water
Coefficient of water/oil distribution: ND
pH: NA
Volatile Organic Compounds: wt %: 81.3 g/L: 577.2 lbs./gal: 4.8

Section 10: Stability and Reactivity

Stability: Stable

Conditions to Avoid: Sources of ignition, temperature extremes

Incompatible Materials: Strong oxidizers

Hazardous Decomposition Products: Oxides of carbon

Possibility of Hazardous Reactions: No

Section 11: Toxicological Information

Long-term toxicological studies have not been conducted for this product. The following information is available for components of this product.

Acute Toxicity:

Component	Oral LD50 (rat)	Dermal LD50 (rabbit)	Inhalation LC50 (rat)
Hexane isomers	No data	No data	No data
Liquefied petroleum gas	No data	No data	No data
Acrylic copolymer	No data	No data	No data
Petrolatum	> 5 g/kg	> 2 g/kg	No data
n-Hexane	28,710 mg/kg	3000 mg/kg	48,000 ppm/4H

Page 4 of 7

Product Name: TAC 2™ Adhesive Chain Lube (aerosol)
Product Number (s): 03076

Chronic Toxicity:

Component	OSHA Carcinogen	IARC Carcinogen	NTP Carcinogen	Irritant	Sensitizer
Hexane isomers	No	No	No	E & S (mild)	Unknown
Liquefied petroleum gas	No	No	No	No	No
Acrylic copolymer	No	No	No	E & S (mild)	Unknown
Petrolatum	No	No	No	No	Unknown
n-Hexane	No	No	No	E, S & R (moderate)	Unknown

E – Eye S – Skin R - Respiratory

Reproductive Toxicity: No information available
Teratogenicity: No information available
Mutagenicity: No information available
Synergistic Effects: No information available

Section 12: Ecological Information

Ecological studies have not been conducted for this product. The following information is available for components of this product.

Ecotoxicity: n-hexane - 48 Hr EC50 water flea: 3.87 mg/L
96 Hr LC50 Lepomis macrochirus: 4.12 mg/L
Persistence / Degradability: No information available
Bioaccumulation / Accumulation: No information available
Mobility in Environment: No information available

Section 13: Disposal Considerations

Waste Classification: The dispensed liquid product is a RCRA hazardous waste for the characteristic of ignitability with a waste code of D001. (See 40 CFR Part 261.20 – 261.33)
Aerosol should be fully emptied and depressurized before disposal. Empty containers may be recycled.

All disposal activities must comply with federal, state, provincial and local regulations. Local regulations may be more stringent than state, provincial or national requirements.

Section 14: Transport Information

US DOT (ground): Consumer Commodity, ORM-D

ICAO/IATA (air): Consumer Commodity, ID8000, 9

IMO/IMDG (water): Aerosols, UN1950, 2.1, Limited Quantity

Special Provisions: None

Section 15: Regulatory Information

Product Name: TAC 2™ Adhesive Chain Lube (aerosol)
Product Number (s): 03076

U.S. Federal Regulations:

Toxic Substances Control Act (TSCA):
All ingredients are either listed on the TSCA inventory or are exempt.

Comprehensive Environmental Response, Compensation and Liability Act (CERCLA):
Reportable Quantities (RQ's) exist for the following ingredients: n-hexane (5000 lbs)

Spills or releases resulting in the loss of any ingredient at or above its RQ require immediate notification to the National Response Center (800-424-8802) and to your Local Emergency Planning Committee.

Superfund Amendments Reauthorization Act (SARA) Title III:
Section 302 Extremely Hazardous Substances (EHS): None

Section 311/312 Hazard Categories:		
	Fire Hazard	Yes
	Reactive Hazard	No
	Release of Pressure	Yes
	Acute Health Hazard	Yes
	Chronic Health Hazard	No

Section 313 Toxic Chemicals: This product contains the following substances subject to the reporting requirements of Section 313 of Title III of the Superfund Amendments and Reauthorization Act of 1986 and 40 CFR Part 372:
n-hexane (1.6%)

Clean Air Act:
Section 112 Hazardous Air Pollutants (HAPs): n-hexane

U.S. State Regulations:

California Safe Drinking Water and Toxic Enforcement Act (Prop 65):
This product may contain the following chemicals known to the state of California to cause cancer, birth defects or other reproductive harm: None

Consumer Products VOC Regulations: This product is not regulated.

State Right to Know:

New Jersey:	75-83-2, 110-54-3, 79-29-8, 68476-86-8
Pennsylvania:	107-83-5, 75-83-2, 110-54-3, 79-29-8, 68476-86-8
Massachusetts:	107-83-5, 75-83-2, 110-54-3, 79-29-8, 68476-86-8
Rhode Island :	110-54-3, 68476-86-8

Canadian Regulations:

Controlled Products Regulations:
This product has been classified in accordance with the hazard criteria of the Controlled Products Regulations and the MSDS contains all the information required by the Controlled Products Regulations.

WHMIS Hazard Class: A, B5

Canadian DSL Inventory: All ingredients are either listed on the DSL Inventory or are exempt.

European Union Regulations:

RoHS Compliance: This product is compliant with Directive 2002/95/EC of the European Parliament and of the Council of 27 January 2003. This product does not contain any of the restricted substances as listed in Article 4(1) of the RoHS Directive.

Additional Regulatory Information: None

Page 6 of 7

Product Name: TAC 2™ Adhesive Chain Lube (aerosol)
Product Number (s): 03076

Section 16: Other Information

HMIS® (II)	
Health:	2
Flammability:	3
Reactivity:	0
PPE:	B

NFPA

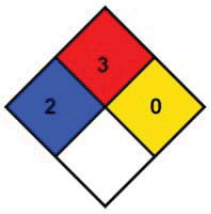

Ratings range from 0 (no hazard) to 4 (severe hazard)

Prepared By: Michelle Rudnick
CRC #: 932A/B
Revision Date: 11/11/2010

Changes since last revision: new product

The information contained in this document applies to this specific material as supplied. It may not be valid for this material if it is used in combination with any other materials. This information is accurate to the best of CRC Industries' knowledge or obtained from sources believed by CRC to be accurate. Before using any product, read all warnings and directions on the label. For further clarification of any information contained on this MSDS consult your supervisor, a health & safety professional, or CRC Industries.

ACGIH: American Conference of Governmental Industrial Hygienists
CAS: Chemical Abstract Service
CFR: Code of Federal Regulations
DOT: Department of Transportation
DSL: Domestic Substance List
g/L: grams per Liter
HMIS: Hazardous Materials Identification System
IARC: International Agency for Research on Cancer
IATA: International Air Transport Association
ICAO: International Civil Aviation Organization
IMDG: International Maritime Dangerous Goods
IMO: International Maritime Organization
lbs./gal: pounds per gallon
LC: Lethal Concentration
LD: Lethal Dose

NA: Not Applicable
ND: Not Determined
NIOSH: National Institute of Occupational Safety & Health
NFPA: National Fire Protection Association
NTP: National Toxicology Program
OSHA: Occupational Safety and Health Administration
PMCC: Pensky-Martens Closed Cup
PPE: Personal Protection Equipment
ppm: Parts per Million
RoHS: Restriction of Hazardous Substances
STEL: Short Term Exposure Limit
TCC: Tag Closed Cup
TWA: Time Weighted Average
WHMIS: Workplace Hazardous Materials Information System

11.5.10 PERMATEX GEAR OIL RTV SEALANT

Toll Free: 87 PERMATEX
(877-376-2839)

10 Columbus Blvd., Hartford,
Connecticut 06106

6875 Parkland Boulevard, Solon
Ohio 44139

Technical Data Sheet

Permatex® Gear Oil RTV Sealant

AAM Revised 02/09

PRODUCT DESCRIPTION

Permatex® Gear Oil RTV Sealant is a single component, room temperature, vulcanizing, gasketing compound designed to provide reliable "formed-in-place" gaskets for mechanical assemblies. The product has been specially formulated to withstand the harsh gear oil environment found in many differentials and transfer cases that destroys normal RTV materials. Normal RTV's are broken down by friction modifiers found in many gear oils and causes leaks and seepage. This specialty RTV has been tested to stringent OEM specifications to ensure complete sealing as a gasket maker. It seeks and seals leak paths that cut and molded gaskets cannot. This product can be used to seal cut gaskets. This material cures on exposure to moisture in the air to form a tough, flexible, silicone rubber gasket. The product resists aging, weathering and thermal cycling without hardening, shrinking or cracking.

PRODUCT BENEFITS

- Maximum gear oil resistance
- Safe for use with friction modifiers
- Sensor safe, non-corrosive
- Good adhesion and flexibility
- Replaces most cut gaskets
- Can be used as a gasket maker or dressing
- Non-flammable
- Low odor

TYPICAL APPLICATIONS

- Specially designed and formulated for differentials and transfer cases

DIRECTIONS FOR USE

For assembly as a form-in-place gasket

1. Remove all previous material from mating surfaces. Permatex® Gasket Remover is recommended for most materials but not for plastics or painted surfaces.
2. For best results, clean and dry all surfaces with a residue-free solvent, such as Permatex® Brake and Parts Cleaner
3. Cut nozzle to desired bead size, 1/16" to 1/4" in diameter. A 1/8" bead is usually sufficient for most applications.
4. Remove cap, puncture tube seal and attach extension nozzle.
5. Apply a continuous and even bead of silicone to one surface, first tracing the internal areas of the gasket configuration, then all surrounding bolt holes.
6. Assemble parts immediately while silicone is still wet.
7. Finger tighten flange until material begins to seep out the sides of the flange.
8. Allow to set for at least one hour and re-torque one quarter to one half turn.
9. For best results, allow to cure overnight.

For assembly as a gasket dressing

1. Repeat steps 1 through 4 as in previous section.
2. Apply a thin film of silicone to one flange surface to be sealed.
3. Place the pre-cut gasket onto silicone film.
4. Apply a second thin film to pre-cut gasket surface.
5. Remove any excess and assemble parts immediately.
   Note: Product is not recommended for use as a cylinder head gasket or head gasket sealant.

Storage of Unused Product

1. Create a "Silicone Plug" by allowing excess material to extend beyond the extension nozzle or aerosol tip to cure, sealing and protecting the remaining product from moisture. For reuse, slowly pull the cured product from the tip.

For Cleanup

1. Remove uncured product from parts and hand-tools with Permatex® Fast Orange® Wipes or Fast Orange® Hand Cleaners. If skinned over, break film with a dry cloth to remove as much as possible. Remove the remaining material with Permatex® Gasket Remover.
2. Clean hands with a dry cloth or Permatex® Fast Orange® Hand Cleaner.

PROPERTIES OF UNCURED MATERIAL

	Typical Value
Chemical Type	Oxime silicone
Appearance	Grey metallic paste
Odor	Mild
Specific Gravity	1.45
Viscosity	Thixotropic paste
Flash Point °C (°F)	>93 (>200)

TYPICAL CURING PERFORMANCE

Permatex® Gear Oil RTV Sealant cures on exposure to moisture in the air. The product dries tack free in two hours and fully cures in 24 hours. Cure times will vary with temperature, humidity and gap.

PERFORMANCE OF CURED MATERIAL

After 7 days at 25°C (77°F). 50% Relative Humidity

	Typical Values	
Hardness (Shore A)	67	
Elongation, %*	200	
Tensile Strength, N/mm² (psi)**	1.7	(250)
Gap Fill, inch	0.25	

*Material will stretch 2 times its original length before breaking.

**Amount of force required to break material.

NOT FOR PRODUCT SPECIFICATIONS
THE TECHNICAL DATA CONTAINED HEREIN ARE INTENDED AS REFERENCE ONLY.
PLEASE CONTACT PERMATEX, INC., TECHNICAL SERVICE DEPARTMENT FOR ASSISTANCE AND RECOMMENDATIONS FOR YOUR SPECIFIC APPLICATION.
PERMATEX, INC., HARTFORD SQUARE NORTH, 10 COLUMBUS BOULEVARD, HARTFORD, CT 06106 PHONE – (1-87PERMATEX)

Technical Data Sheet Gear Oil RTV Sealant

TYPICAL ENVIRONMENTAL RESISTANCE

Temperature Resistance	Typical Values	
Continuous, °C (°F)	-54 to 232	(-65 to 450)
Intermittent, °C (°F)	-54 to 260	(-65 to 500)

Chemical / Solvent Resistance
The product retains effective properties in contact with gear oil fluids. Note: Not recommended for parts in contact with gasoline.

GENERAL INFORMATION
This product is not recommended for use in pure oxygen and/or oxygen rich systems and should not be selected as a sealant for chlorine or other strong oxidizing materials.

For safe handling information on this product, consult the Material Safety Data Sheet, (MSDS).

ORDERING INFORMATION

81182	3 oz. tube
81184	5 fl. oz. cartridge

STORAGE
Products shall be ideally stored in a cool, dry location in unopened containers at a temperature between 8° and 28°C (46° and 82°F) unless otherwise labeled. Optimal storage is at the lower half of this temperature range. To prevent contamination of unused product, do not return any material to its original container.

NOTE
The data contained herein are furnished for information only and are believed to be reliable. We cannot assume responsibility for the results obtained by others over whose methods we have no control. **ITW Permatex, Inc. specifically disclaims all warranties expressed or implied, including warranties of merchantability or fitness for a particular purpose, arising from sale or use of Permatex, Inc. products and disclaims any liability for consequential or incidental damages of any kind, including lost profits.** This product may be covered by one or more United States or foreign patents or patent applications.

Permatex and Fast Orange are trademarks of Illinois Tool Works, Inc. © Copyright 2009 Permatex. Inc. All rights reserved

ITW Permatex
10 Columbus Blvd.
Hartford, CT 06106 USA
Telephone: 1-87-Permatex
(877) 376-2839
Emergency: 800-255-3924 (ChemTel)
International Emergency: +01-813-248-0585

Material Safety Data Sheet

1. PRODUCT IDENTIFICATION

Product Name: **RTV GEAR OIL SILICONE 3 OZ**
Item No: **81182**
Product Type: **Elastomeric rubber**

2. COMPOSITION/INFORMATION ON INGREDIENTS

Component	Weight%	ACGIH; TLV-TWA	OSHA PEL
POLY (DIMETHYLSILOXANE), HYDROXY TERMINATED 70131-67-8	30-50	Not listed	Not listed
CALCIUM CARBONATE 471-34-1	10-30	10 mg/m^3	Not listed
GARNET MINERAL 1302-62-1	10-30	Not listed	Not listed
VINYL OXIMINOSILANE 2224-33-1	<10	Not listed	Not listed
MODIFIED SILICON DIOXIDE 68611-44-9	<5	Not listed	Not listed
2-BUTANONE OXIME 96-29-7	0.5-2.0	Not listed	Not listed

3. HAZARDS IDENTIFICATION

Toxicity: May cause eye and skin irritation. May cause skin sensitization. May be harmful if swallowed. May irritate lips, gums, tongue, mouth, nose and throat. When this product if exposed to moisture, butanone oxime may be formed.
Primary Routes of Entry: Eye and skin contact, ingestion, inhalation
Signs and Symptoms of Exposure: Butanone oxime produced during curing is toxic and irritates eyes, nose and throat. Overexposure to the silane may cause coma and respiratory failure.
Aggravated Medical Condition: Preexisting skin disorders.

4. FIRST AID MEASURES

Ingestion: Rinse mouth. If swallowed, DO NOT induce vomiting. Keep individual calm. Obtain medical attention.
Inhalation: Move to fresh air in case of accidental inhalation of vapours. If not breathing, give artificial respiration. Obtain medical attention.
Skin Contact: Wipe off paste with paper towel or cloth. Wash exposed area with soap and water. Seek medical attention if irritation persists.
Eye Contact: In case of contact, immediately flush eyes with plenty of water for at least 15 minutes and get medical attention if irritation persists.

5. FIRE FIGHTING MEASURES

Flash Point °F(C°): >200°F TCC
Recommended Extinguishing Media: Carbon Dioxide, Dry Chemicals, Foam.
Special Fire-Fighting Procedures: Water spray may be ineffective on flames but should be used to keep fire-exposed containers cool.
Hazardous Products of Combustion: Oxides of carbon, Oxides of nitrogen, Methyl ethyl ketone, possibly methyl ethyl ketoxime, Silica fume, Aldehydes, Formaldehyde, Ammonia
Unusual Fire/Explosion Hazards: None.
Lower Explosive Limit: Not determined
Upper Explosive Limit: Not determined

Product Name: RTV GEAR OIL SILICONE 3 OZ **Item No.** 81182

6. ACCIDENTAL RELEASE MEASURES

Spill Procedures: Wipe or scrape up spill material. Maintain good ventilation for large spills. Place scrap material in a well-ventilated area and allow to cure to rubber. Clean up spills thoroughly as residue is slippery.

7. HANDLING AND STORAGE

Storage: Store in a dry area below 90 degrees F. Keep container closed when not in use.
Handling: Do not inhale vapors. Avoid contact with skin and eyes. Wash hands before eating and smoking.

8. EXPOSURE CONTROLS/PERSONAL PROTECTION

Eyes: Safety glasses. Avoid contact lenses.
Skin: Neoprene or nitrile gloves recommended.
Ventilation: General; local exhaust ventilation as necessary to control any air contaminants to within their exposure limits (or to the lowest feasible levels when limits have not been established) during the use of this product.
Respiratory Protection: Not normally necessary. In case of insufficient ventilation, wear suitable respiratory equipment.

Comments: When heated to temperatures above 300 degrees F. in the presence of air, this product can form formaldehyde vapors. Formaldehyde is a potential cancer hazard and a known skin and respiratory sensitizer. Safe handling conditions may be maintained by keeping vapor concentrations below the OSHA permissible limit for formaldehyde

9. PHYSICAL AND CHEMICAL PROPERTIES

Appearance: Gray paste
Odor: Mild
Boiling Point: Not applicable, polymeric material
pH: Does not apply
Solubility in Water: Polymerized
Specific Gravity: 1.45
VOC(Wt.%): <3%
Vapor Pressure: <5 mm Hg
Vapor Density (Air=1): Heavier than air
Evaporation Rate: Not Determined

10. STABILITY AND REACTIVITY

Chemical Stability: Stable at normal conditions
Hazardous Polymerization: Will not occur
Incompatabilities: Polymerized by contact with moisture., Strong oxidizers, Acids, Reactive metals (e.g. Na, Ca, zinc), Peroxides
Conditions to Avoid: Exposure to moisture.
Hazardous Products of Combustion: Oxides of carbon, Oxides of nitrogen, Methyl ethyl ketone, possibly methyl ethyl ketoxime, Silica fume, Aldehydes, Formaldehyde, Ammonia

11. TOXICOLOGICAL INFORMATION

See Section 3

12. ECOLOGICAL INFORMATION

No data available

13. DISPOSAL CONSIDERATIONS

Recommended Method of Disposal: Disposal should be made in accordance with federal, state and local regulations.
US EPA Waste Number: NH - Not a RCRA Hazardous Waste Material

14. TRANSPORTATION INFORMATION

DOT (49CFR 172)
U.S. Department of Transportation - DOT - 49 CFR (Ground)
DOT Shipping Name: Not regulated
Hazard Class: None
UN/ID Number: None
IATA (Air)
Proper Shipping Name: Not regulated
Class or Division: None
UN/ID Number: None

Product Name: RTV GEAR OIL SILICONE 3 OZ **Item No.** 81182

IMDG (Vessel)

Proper Shipping Name:	Not regulated
Hazard Class:	None
UN Number:	None
Marine Pollutant:	None

15. REGULATORY INFORMATION

SARA 313 Chemicals: The following component(s) is listed as a SARA Section 313 Toxic Chemical.

NONE

California Proposition 65: No California Prop 65 chemicals are known to be present at or above the No Significant Risk Level

TSCA Inventory Status: All components of this product are listed (or exempt) on the EPA TSCA inventory.

16. OTHER INFORMATION

Estimated NFPA Rating: HEALTH 2, FLAMMABILITY 1 , REACTIVITY 0.
Estimated HMIS Classification: HEALTH 2, FLAMMABILILTY 1, PHYSICAL HAZARD 0
(NFPA is a registered trademark of the National Fire Protection Association)
HMIS is a registered trademark of the National Paint and Coatings Association

Prepared By: Denise Boyd, Manager-Environmental, Health & Safety
Company: ITW Permatex 10 Columbus Blvd. Hartford, CT USA 06106
Telephone No.: 1-87-Permatex (877) 376-2839

Revision Date: April 03, 2012
Revision Number: 2

11.5.11 WD-40 SPECIALIST MACHINE & ENGINE DEGREASER

Material Safety Data Sheet

1 - Chemical Product and Company Identification

Manufacturer: WD-40 Company **Address: 1061 Cudahy Place (92110)** **P.O. Box 80607** **San Diego, California, USA** **92138 –0607** **Telephone:** **Emergency only: 1-888-324-7596 (PROSAR)** **Information: 1-888-324-7596** **Chemical Spills: 1-800-424-9300 (Chemtrec)** **1-703-527-3887 (International Calls)**	**Trade Name: WD-40 Specialist Machine & Engine Degreaser Foam** **Chemical Name: Organic Mixture** **Product Use: Cleaner, Degreaser** **MSDS Date Of Preparation: 08/29/12**

2 – Hazards Identification

Emergency Overview:
WARNING! Contents under pressure. Flammable liquid and vapor. May be irritating to eyes. Use with adequate ventilation. Keep away from heat, sparks, flames and all other sources of ignition. Avoid eye contact and inhalation.

Symptoms of Overexposure:
Inhalation: Excessive inhalation can cause headache, drowsiness, and nausea. Can cause irritation of respiratory tract. Intentional abuse may be harmful or fatal.
Skin Contact: Prolonged contact may cause defatting, dermatitis, and drying of the skin.
Eye Contact: May cause eye irritation with redness, tearing and blurred vision.
Ingestion: Swallowing may cause gastrointestinal irritation. Not expected to be acutely toxic.
Chronic Effects: 2-(2-Butoxyethoxy) ethanol has caused effects on the liver and kidneys in studies with laboratory animals.
Medical Conditions Aggravated by Exposure: Pre-existing skin and eye disorders.

Suspected Cancer Agent:
Yes No X

3 - Composition/Information on Ingredients

Ingredient	CAS #	Weight Percent
Surfactants	Proprietary	1-5%
Isopropanol	67-63-0	1-5%
2-(2-Butoxyethoxy)ethanol (Glycol Ether DB)	112-34-5	5-10%
Liquefied Petroleum Gas (propane, n-butane)	68476-86-8	1-5%
or Isobutane propellant	75-28-5	
Non-hazardous Ingredients	Mixture	Balance

See Section 8 for Exposure Limits

4 – First Aid Measures

Ingestion (Swallowed): Do not induce vomiting. Call a physician, poison control center, or the WD-40 Safety Hotline at 1-888-324-7596. Rinse mouth with water and give one eight-ounce glass of water to drink if the patient if conscious and responsive. Never give anything by mouth to an unconscious person.
Eye Contact: Immediately flush eyes with plenty of water for at least 15 minutes, lifting upper and lower eyelids occasionally. Get medical attention if irritation persists.
Skin Contact: Wash with soap and water. Remove contaminated clothing and wash before reuse. Get medical attention if irritation persists or symptoms of exposure develop.
Inhalation (Breathing): Remove to fresh air. Get medical attention if irritation or symptoms persist.

Page 1 of 4

5 – Fire Fighting Measures

Extinguishing Media: Use water fog, dry chemical, carbon dioxide or foam.
Special Fire Fighting Procedures: Firefighters should always wear positive pressure self-contained breathing apparatus and full protective clothing. Cool fire-exposed containers with water. Use shielding to protect from bursting cans.
Unusual Fire and Explosion Hazards: Contents under pressure. Keep away from ignition sources and open flames. Exposure of containers to extreme heat and flames can cause them to rupture often with violent force. Concentrate is a flammable liquid. Vapors are heavier than air and may travel to remote ignition sources and flash back. A vapor and air mixture can create an explosion hazard in confined spaces.

6 – Accidental Release Measures

Remove personnel from general area. Wear appropriate protective clothing (see Section 8). Ventilate the area and eliminate all sources of heat. Contain and collect liquid with an inert absorbent and place in a container for disposal. Clean spill area thoroughly. Report spills to authorities as required.

7 – Handling and Storage

Handling: Avoid contact with eyes. Avoid prolonged contact with skin. Avoid breathing vapors or aerosols. Use with adequate ventilation. Keep away from heat, sparks, pilot lights, hot surfaces and open flames. Unplug electrical tools, motors and appliances before spraying or bringing the can near any source of electricity. Electricity can burn a hole in the can and cause contents to burst into flames. To avoid serious burn injury, do not let the can touch battery terminals, electrical connections on motors or appliances or any other source of electricity. Wash thoroughly with soap and water after handling. Keep containers closed when not in use. Keep out of the reach of children. Do not puncture, crush or incinerate containers, even when empty.
Storage: Store in a cool, well-ventilated area, away from incompatible materials and heat, sparks or open flame. Do not store in direct sunlight or above 120°F. U.F.C (NFPA 30B) Level 1 Aerosol.

8 – Exposure Controls/Personal Protection

Chemical	Occupational Exposure Limits
Surfactants	None Established
Isopropanol	200 ppm TWA, 400 ppm STEL ACGIH-TLV 400 ppm TWA OSHA PEL
2-(2-Butoxyethoxy) ethanol	35 ppm TWA manufacturer recommended
Propane	1000 ppm TWA ACGIH TLV 1000 ppm TWA OSHA PEL
n-Butane	1000 ppm TWA ACGIH TLV
Isobutane	1000 ppm TWA ACGIH TLV
Non-hazardous Ingredients	None Established

The Following Controls are Recommended for Normal Consumer Use of this Product
Engineering Controls: Use in a well-ventilated area.
Personal Protection:
Eye Protection: Avoid eye contact. Always spray product away from your face.
Skin Protection: Avoid prolonged or repeated skin contact. Chemical resistant gloves recommended for operations where skin contact is likely.
Respiratory Protection: None needed for normal use with adequate ventilation.

For Bulk Processing or Workplace Use the Following Controls are Recommended
Engineering Controls: Use adequate general and local exhaust ventilation to maintain exposure levels below that occupational exposure limits.
Personal Protection:
Eye Protection: Safety goggles recommended where eye contact is possible.

Page 2 of 4

Skin Protection: Wear chemical resistant gloves.
Respiratory Protection: None required if ventilation is adequate. If the occupational exposure limits are exceeded, wear a NIOSH approved respirator. Respirator selection and use should be based on contaminant type, form and concentration. Follow OSHA 1910.134, ANSI Z88.2 and good Industrial Hygiene practice.
Work/Hygiene Practices: Wash with soap and water after handling.

9 – Physical and Chemical Properties

Boiling Point:	212°F (100°C)(concentrate)	Specific Gravity:	1.0 kg/L (concentrate) 0.955 kg/L (with propellant)
Solubility in Water:	Complete	pH:	10.5-11.5
Vapor Pressure:	Not Determined	Vapor Density:	Not Determined
Percent Volatile:	>95%	VOC:	6.5% (33.4 g/L)
Coefficient of Water/ Oil Distribution:	Not Determined	Appearance/ Odor:	Clear colorless liquid with a citrus odor.
Flash Point:	<0°F (propellant) 59°F (15°C)(concentrate with propellant ASTM D3828/US 16CFR 1500.45) >212°F (100°C) (concentrate only)	Flammable Limits:	LEL: 1.8% UEL: 9.5% (propellant)

10 – Stability and Reactivity

Stability: Stable
Hazardous Polymerization: Will not occur.
Conditions to Avoid: Extreme heat, sources of ignition, physical damage to aerosol can.
Incompatibilities: Strong oxidizers.
Hazardous Decomposition Products: Thermal decomposition may yield carbon monoxide, carbon dioxide.

11 – Toxicological Information

Surfactant: Oral rat LD50: 412-2394 mg/kg, Dermal rabbit LD50: 1127-2395 mg/kg, Inhalation rat LC50: 1.06 mg/L/4 hr
Isopropanol: Inhalation rat LC50: 16,000 ppm/8 hr, Oral rat LD50: 5045 mg/kg, Dermal rabbit LD50: 12,800 mg/kg
2-(2-Butoxyethoxy)ethanol: Oral rat LD50: 5660 mg/kg; Dermal rabbit LD50: 4000 mg/kg
Liquefied Petroleum Gas: No toxicity data is available
Isobutane: Inhalation rat LC50: 570000 ppm/15 min.
None of the components of this product is listed as a carcinogen or suspected carcinogen or is considered a reproductive hazard.

12 – Ecological Information

No data is currently available.

13 - Disposal Considerations

Aerosol containers should not be punctured, compacted in home trash compactors or incinerated. Empty containers may be disposed of through normal waste management options. Dispose of all waste product, absorbents, and other materials in accordance with applicable Federal, state and local regulations.

14 – Transportation Information_

DOT Surface Shipping Description: Consumer Commodity, ORM-D
After 1/1/2014 UN1950, Aerosols, 2.1 Ltd. Qty (Note: Shipping Papers are not required for Limited Quantities unless transported by air or vessel – each package must be marked with the Limited Quantity Mark)
IMDG Shipping Description: UN1950, Aerosols, 2.1, LTD QTY

ICAO Shipping Description: UN1950, Aerosols, flammable, 2.1 NOTE: WD-40 does not test aerosol cans to assure that they meet the pressure and other requirements for transport by air. We do not recommend that our aerosol products be transported by air.

15 – Regulatory Information

U.S. Federal Regulations:
CERCLA 103 Reportable Quantity: This product is not subject to CERCLA reporting requirements, however, many states have more stringent release reporting requirements. Report spills required under federal, state and local regulations.
SARA TITLE III:
Hazard Category For Section 311/312: Acute Health, Chronic Health, Fire Hazard, Sudden Release of Pressure
Section 313 Toxic Chemicals: This product contains the following chemicals subject to SARA Title III Section 313 Reporting requirements: 2-(2-Butoxyethoxy)ethanol 5-10% (glycol ether compound)
Section 302 Extremely Hazardous Substances (TPQ): None
EPA Toxic Substances Control Act (TSCA) Status: All of the components of this product are listed on the TSCA inventory
Canadian Environmental Protection Act: All of the ingredients are listed on the Canadian Domestic Substances List or exempt from notification
Canadian WHMIS Classification: Class A (Compressed Gas), Class B-2 (Flammable Liquid), Class D-2-B (A toxic material causing other harmful effects)
This MSDS has been prepared according to the criteria of the Controlled Products Regulation (CPR) and the MSDS contains all of the information required by the CPR.

16 – Other Information:

HMIS Hazard Rating:
Health – 1 (slight hazard), Fire Hazard – 2 (moderate hazard), Physical Hazard – 0 (minimal hazard)

Prepared by: Industrial Health & Safety Consultants, Inc, Shelton, CT

SIGNATURE:_____ TITLE: Adm. Scientific Manager

REVISION DATE: August 2012 SUPERSEDES: New

1006100

11.5.12 CAIG LABORATORIES DEOXIT D5 CONTACT CLEANER

Since 1956
CAIG LABORATORIES, INC.

DATA SHEET

Our products make your products perform!

DeoxIT® D5 Spray, D-Series
Contact Cleaner & Rejuvenator

Part No.: D5S-6

Container Size: 142 g, adjustable valve (L-M-H)

Product Description:

Unique contact cleaner, rejuvenator, conductivity enhancer and lubricant; dissolves oxidation and corrosion on metal surfaces, fills in microscopic gaps and reseals surface for better contact to enhance flow of electricity. Improves connector performance/reliability. Temperature range: -34 to +200°C.

Features/Benefits:

Spray, adjustable valve (L-M-H) - Flushing Action, and Safe on Plastics.
DeoxIT® D100L concentrate has approximately 20% chemical cleaning action.
Excellent cleaning/deoxidizing, good protection, no ozone depletion.
Improves conductivity and reduces intermittent connections.
Reduces arcing, RFI, wear and abrasion.
Cleaner Audio - Clearer Video - Reliable Data.

Formulation:

5%	DeoxIT® D100L
75%	odorless mineral spirits (64742-88-7)
20%	DIFLUOROETHANE (75-37-6)

VOC COMPLIANT RoHS COMPLIANT

DeoxIT® - Product Selection Guide

	DeoxIT®	DeoxIT® GOLD	DeoxIT® GOLD Gx1	DeoxIT® GOLD Gx2	DeoxIT® SHIELD	DeoxIT® FaderLube
New Surfaces		✔	✔	✔	✔	✔
* In Service / Used	✔					✔
Gold surfaces		✔	✔	✔		
Oxidation / corrosion visible	✔					
Conductive plastics						✔
** Outdoor / Severe environments	✔					✔
Deoxidizing / cleaning properties	20%	0.1%	0.1%	0.0%	0.0%	0.0%
Metal / Plastic surfaces	Yes	Yes	Yes	Yes	Yes	
Plastics compatibility	Excellent	Excellent	Excellent	Excellent	Excellent	Excellent
Temperature range (°C)	-34/200	-45/240	-45/310	-45/500	-34/210	-26/150
Stationary & moving surfaces	Yes	Yes	Yes	Yes	Yes	Yes
Seals & protects base metals	Good	Excellent	Excellent	Excellent	Good	No

✔ All products are Nonflammable and RoHs Compliant
* In Service: Clean with DeoxIT®. For added protection, follow with DeoxIT® GOLD (indoors), DeoxIT® SHIELD (outdoors) or DeoxIT® Grease (additional barrier).
** Severe environments: Pre-clean with DeoxIT®. Follow with DeoxIT® SHIELD or DeoxIT® Grease.

DeoxIT® - Spray Selection Guide

Product Series	FP	QD	NF	PC	VOC
Standard - 5% solution D5S-6, D5MS-15, G5S-6, G5MS-15, S5S-6, S5MS-15, F5S-6, F5MS-15	✔			✔	75
N Series - 5% solution DN5S-6N, DN5MS-15, GN5S-6N, GN5MS-15, SN5S-6, SN5MS-15		✔	✔	✔	20
X Series - 5% solution GX5S-6N		✔	✔	✔	20
100 Series - 100% solution D100S-2, G100S-2, F100S-2			✔	✔	0

FP = Flushing properties QD = Quick dry / non drip NF = Nonflammable
PC = Plastics compatibility VOC = VOC (%)

Page 1

Other Applicators:

D5MS-15	5%	mini-spray	14 g	flammable
DN5S-6N	5%	spray	163 g	nonflammable
DN5MS-15	5%	mini-spray	14 g	nonflammable
D100S-2	100%	spray	57g	nonflammable
D100P	100%	pen	6 mL	nonflammable
D50W	100%	wipes	50 count	nonflammable
D100L-2DB	100%	brush	7.4 mL	nonflammable
D100L-25C	100%	needle dispenser	25 mL	nonflammable
D100L (bulk)	100%	bottle/drum	assort.	nonflammable
D5L (bulk)	5%	bottle/drum	assort.	flammable

DeoxIT® Essential Reference:

DeoxIT® D-Series - *Brings old systems back to life!*
DeoxIT® Gold G-Series - *Maintains new system performance!*
DeoxIT® Shield S-Series - *Maintains new system performance for severe environments!*

Shipping and Additional Information:

Hazardous: ORMD
VOC (%): 75%

Other Information:

RoHS Compliant:	YES
D5S-6 MSDS Link:	http://store.caig.com/
DeoxIT® Product Sheet:	http://store.caig.com/
MentorCard Link:	http://store.caig.com/
WHY DeoxIT® is Different:	http://store.caig.com/

MANUFACTURER DISCLAIMER:

To the best of our knowledge, the information contained herein is accurate. However, neither CAIG Laboratories, Inc., or any of its subsidiaries assumes any liability whatsoever for the accuracy or completeness of the information contained herein. All materials may present unknown hazards and should be used with caution. In particular, improper use of our products and their inappropriate combination with other products and substances may produce harmful results which cannot be anticipated. Final determination of the suitability of any material is the sole responsibility of the user. Although certain hazards are described herein, we cannot guarantee that these are the only hazards that may exist. All service performed on internal parts and equipment should be provided by qualified technicians.

Contact Information:

Since 1956 CAIG LABORATORIES, INC.

North America
CAIG Laboratories, Inc.
12200 Thatcher Court
Poway, CA 92064 USA
Tel: (858) 486-8388
Fax: (858) 486-8398

Website
www.caig.com
www.deoxit.com

General email
info@caig.com

Technical email
tech@caig.com

Page 2

CAIG LABORATORIES, INC.

SAFETY DATA SHEET

Page 1 of 6
MSDS-E-D5S-A

Prepared to OSHA, ACC, ANSI, NOHSC, WHMIS, 2001/58/EC & 1272/2008/EC Standards | MSDS Revision: 3.0 | MSDS Revision Date: 08/22/2012

1. PRODUCT IDENTIFICATION

1.1	Product Name: **DeoxIT® D-Series, 5% Spray, (P/N D5S-6), 142 g**
1.2	Chemical Name: **See ingredients listed in section 3**
1.3	Synonyms: **DeoxIT®, D5S-6, 5% Spray**
1.4	Trade Names: **DeoxIT®, D5S-6, 5% Spray**
1.5	Product Use: **Clean, deoxidize & improve electrical contacts & connectors**
1.6	Manufacturer's Name: **CAIG Laboratories, Inc.**
1.7	Manufacturer's Address: **12200 Thatcher Court, Poway, CA 92064-6876 USA**
1.8	Emergency Phone: **CHEMTREC: +1 (703) 527-3887 / +1 (800) 424-3887**
1.9	Business Phone: **+1 (800)-224-4123**
1.10	Other Product Names: **DeoxIT®, D5MS-15, 5% Spray, 14 g**

2. HAZARD IDENTIFICATION

2.1 Hazard Identification:

This product is classified as a HAZARDOUS SUBSTANCE but not as DANGEROUS GOODS according to the classification criteria of NOHSC: 1008(2004) and ADG Code (Australia).
WARNING! Flammable aerosol. Colorless, volatile liquid with ethereal and faint sweetish odor. Overexposure may cause dizziness and loss of concentration. At higher levels, CNS depression and cardiac arrhythmia may result from exposure. Vapors displace air and can cause asphyxiation in confined spaces.
Hazard Statements (H): H223 – Flammable aerosol.
Precautionary Statements (P): P210 – Keep away from heat/sparks/open flames/hot surfaces. P211 – Do not spray on an open flame or other ignition source. P251 – Pressurized container. Do not pierce or burn, even after use. P280 – Wear protective gloves and eyewear. P302 + P352 – IF ON SKIN – Wash with plenty of soap and water. P312 – Call a Poison Control Center or doctor/physician if you feel unwell. P333 + P313 – If skin irritation or rash occurs, get medical advise/attention. P321 – Refer to section 4 of this Safety Data Sheet (First Aid). P305+P351+P338 – IF IN EYES - Rinse continuously with water for several minutes. Remove contact lenses if present and easy to do – continue rinsing. P501 – Dispose of contents/container through licensed treatment, storage or disposal facility.

2.2 Routes of Entry:	Inhalation:	YES	Absorption:	YES	Ingestion:	YES

2.3 Effects of Exposure:

EYES:	**Mild to moderate irritation.**
SKIN:	**Irritant and potential skin sensitizer. Prolonged or repeated contact may cause contact dermatitis (localized redness or rash).**
INGESTION:	**Gastrointestinal irritation and central nervous system depression.**
INHALATION:	**Central nervous system depressant. Irritating to the upper respiratory tract.**

2.4 Symptoms of Overexposure:

EYES:	**Mild irritation, redness, and watering.**
SKIN:	**Contact dermatitis, characterized by localized red or puffy dry skin and itching.**
INGESTION:	**Nausea, vomiting, and diarrhea.**
INHALATION:	**Mouth, nose, and throat irritation, dizziness, nausea, light-headedness, drunkenness, and loss of coordination.**

2.5 Acute Health Effects:

INGESTION:	**Gastrointestinal irritation and central nervous system depression.**
EYES:	**Mild to moderate irritation.**
SKIN:	**Irritant and potential skin sensitizer. Prolonged or repeated contact may cause contact dermatitis (e.g., localized redness and/or rash).**
INGESTION:	**Gastrointestinal irritation and central nervous system depression.**
INHALATION:	**Central nervous system depressant. Irritating to the upper respiratory tract.**

2.6 Chronic Health Effects:

EYES:	**Mild to moderate irritation.**
SKIN:	**Irritant and potential skin sensitizer. Prolonged or repeated contact may cause contact dermatitis (e.g., localized redness and/or rash).**
INGESTION:	**Gastrointestinal irritation and central nervous system depression.**
INHALATION:	**Central nervous system depressant. Irritating to the upper respiratory tract.**

2.7 Target Organs:
Eyes, skin and respiratory system.

NA = Not Available; ND = Not Determined; NE = Not Established; C = Ceiling Limit; See Section 16 for Additional Definitions of Terms Used
NOTE: all WHMIS required information is included. It is located in appropriate sections based on the ANSI Z400.1-2010 format.

CAIG LABORATORIES, INC.

SAFETY DATA SHEET

Page 2 of 6
MSDS-E-D5S-A

Prepared to OSHA, ACC, ANSI, NOHSC, WHMIS, 2001/58/EC & 1272/2008/EC Standards | MSDS Revision: 3.0 | MSDS Revision Date: 08/22/2012

3. COMPOSITION & INGREDIENT INFORMATION

CHEMICAL NAME(S)	CAS No.	RTECS No.	EINECS No.	%	EXPOSURE LIMITS IN AIR (mg/m³) ACGIH ppm TLV	ACGIH ppm STEL	NOHSC ppm ES-TWA	NOHSC ppm ES-STEL	NOHSC ppm ES-PEAK	OSHA ppm PEL	OSHA ppm STEL	OSHA ppm IDLH	OTHER
PETROLEUM NAPHTHA	64742-88-7	XS5250000	265-191-7	40-70	100	NE	100	NE	NE	NA	NE	NE	
DIFLUOROETHANE (R-152a)	75-37-6	KI4100000	200-866-1	10-30	1000	NA	1000	NA	NA	NE	NA	NA	SKIN
DeoxIT® D-Series, D100L	TRADE SECRET			3-7	NA	NA	NA	NA	NA	15	NA	NA	

4. FIRST AID MEASURES

4.1 First Aid:

EYES: Flush eyes thoroughly with copious amounts of water for at least 15 minutes, holding eyelid(s) open to ensure complete flushing. If irritation persists, seek immediate medical attention.

SKIN: Remove contaminated clothing and wash affected areas with soap and water. If irritation persists, seek prompt medical attention. Do not wear contaminated clothing until after it has been properly cleaned.

INGESTION: Drink plenty of water. If irritation persists, contact a physician.

INHALATION: Remove victim to fresh air at once. If breathing is difficult, administer supplemental oxygen and seek immediate medical attention. If breathing stops, perform artificial respiration.

4.2 Medical Conditions Aggravated by Exposure:

None reported by the manufacturer.

HEALTH	1
FLAMMABILITY	2
PHYSICAL HAZARDS	0
PROTECTIVE EQUIPMENT	B
EYES	SKIN

5. FIREFIGHTING MEASURES

5.1 Flashpoint & Method:
48.8 °C - 54.4 °C (120 °F – 130 °F).

5.2 Autoignition Temperature:
NA

5.3 Flammability Limits: Lower Explosive Limit (LEL): NA Upper Explosive Limit (UEL): NA

5.4 Fire & Explosion Hazards:
Level 2 aerosol. Carbon dioxide, carbon monoxide, hydrocarbons.

5.5 Extinguishing Methods:
CO_2, Alcohol foam, Dry Chemical, Water Fog

5.6 Firefighting Procedures:
Wear NIOSH/MSHA approved self-contained breathing apparatus and protective clothing. Use a water spray to cool containers involved in fire. Do not use direct water stream. Container storage areas exposed to direct flame contact should be cooled with large quantities of water as needed to prevent weakening of container structure. Keep containers cool until well after the fire is out to prevent rupture. Prevent runoff from fire control or dilution from entering sewers, drains, drinking water supply, or any natural waterway.

6. ACCIDENTAL RELEASE MEASURES

6.1 Spills:
Secure spill area and deny entry to all unprotected individuals. Individuals involved in the cleanup should wear appropriate personal protective equipment. Area may become slippery. Absorb product onto porous material, such as sand, clay, diatomaceous earth or commercial absorbent material. Place into leak-proof, U.S. DOT-approved containers. If necessary, cover all drains and dike well ahead of the spill to prevent runoff into sewers, drains, and all waterways. Contact appropriate local or provincial authorities for assistance and/or reporting requirements.

CAIG LABORATORIES, INC.

SAFETY DATA SHEET

Page 3 of 6
MSDS-E-D5S-A

Prepared to OSHA, ACC, ANSI, NOHSC, WHMIS, 2001/58/EC & 1272/2008/EC Standards | MSDS Revision: 3.0 | MSDS Revision Date: 08/22/2012

7. HANDLING & STORAGE INFORMATION

7.1	Work & Hygiene Practices: **Wash hands thoroughly after using this product and before eating, drinking, or smoking. Remove soiled clothing to prevent prolonged skin contact.**
7.2	Storage & Handling: **Store at temperatures between 59 °F and 95 °F (15 °C and 35 °C) in a dry, well-ventilated location. Keep away from heat, sparks, open flame, and other sources of ignition. Normal shelf-life: 2-3 years.**
7.3	Special Precautions: **Empty containers can contain flammable vapors. Do not cut, drill, grind, weld or perform similar operations on or near containers.**

8. EXPOSURE CONTROLS & PERSONAL PROTECTION

8.1	Ventilation & Engineering Controls: **Use with adequate ventilation (e.g., open doors and windows, local exhaust ventilation). Ensure appropriate decontamination equipment is available (e.g., sink, safety shower, eye-wash station).**
8.2	Respiratory Protection: **None required, when used with adequate ventilation.**
8.3	Eye Protection: **Wear safety glasses with side shields (ANSI Z87) under normal use conditions.**
8.4	Hand Protection: **None required under normal conditions of use. However, may cause skin irritation in some sensitive individuals. In such cases, wear rubber or impervious plastic gloves.**
8.5	Body Protection: **Use as necessary to prevent skin contact.**

9. PHYSICAL & CHEMICAL PROPERTIES

9.1	Density:	0.75
9.2	Boiling Point:	171.1 °C – 204 °C @ 760 mmHg
9.3	Melting Point:	NA
9.4	Evaporation Rate:	0.11 (n-Butyl Acetate = 1.0)
9.5	Vapor Pressure:	35 psig @ 20 °C, 50 psig @ 50 °C
9.6	Molecular Weight:	NA
9.7	Appearance & Color:	Light red, aerosol
9.8	Odor Threshold:	Ethereal/hydrocarbon odor
9.9	Solubility:	Not soluble in water
9.10	pH	ND
9.11	Viscosity:	10.0 cps
9.12	VOC (grams/liters)	588 g/l
9.13	Other information:	Vapor Density = 4.9 (air = 1.0)

10. STABILITY & REACTIVITY

10.1	Stability: **Stable under normal conditions of use (see section 7).**
10.2	Hazardous Decomposition Products: **Change in color signifies exposure to ultraviolet light or exceeding shelf life. Will not degrade to unstable products. Discard solution.**
10.3	Hazardous Polymerization: **Will not occur.**
10.4	Conditions to Avoid: **Use or storage near open flames, sparks, high heat (>100 °F) or other heat sources, and proximity to incompatible substances and heavily trafficked areas.**
10.5	Incompatible Substances: **Strong oxidizers.**

CAIG LABORATORIES, INC.

SAFETY DATA SHEET

Page 4 of 6
MSDS-E-D5S-A

Prepared to OSHA, ACC, ANSI, NOHSC, WHMIS, 2001/58/EC & 1272/2008/EC Standards | MSDS Revision: 3.0 | MSDS Revision Date: 08/22/2012

11. TOXICOLOGICAL INFORMATION

11.1	Toxicity Data:	This product has not been tested on animals to obtain toxicological data. There are toxicology data for the components of this product, which are found in the scientific literature. These data have not been presented in this document.
11.2	Acute Toxicity:	See section 3.5
11.3	Chronic Toxicity:	See section 3.6
11.4	Suspected Carcinogen:	NE
11.5	This product is not reported to produce reproductive toxicity in humans.	
	Mutagenicity:	This product is not reported to produce mutagenic effects in humans.
	Embryotoxicity:	This product is not reported to produce embryotoxic effects in humans.
	Teratogenicity:	This product is not reported to produce teratogenic effects in humans.
	Reproductive Toxicity:	This product is not reported to produce reproductive effects in humans.
11.6	Irritancy of Product:	See Section 2.3
11.7	Biological Exposure Indices:	NE
11.8	Physician Recommendations:	Treat symptomatically.

12. ECOLOGICAL INFORMATION

12.1	Environmental Stability:	This product will slowly volatile from soil. Components of this product will slowly decompose into organic compounds.
12.2	Effects on Plants & Animals:	There is no specific data available for this product.
12.3	Effects on Aquatic Life:	Releases of large volumes of this product are expected to be harmful or fatal to overexposed aquatic life.
12.4	Environmental Impact (Percent by Weight):	CFC: 0.0% HCFC: 0.0% HFC: 20.0% Chlorinated Solvent: 0.0% VOC: 75.0% ODP: 0.0%

13. DISPOSAL CONSIDERATIONS

13.1	Waste Disposal:	Dispose of in accordance with federal, state or local regulations.
13.2	Special Considerations:	EPA Waste Code: D001 (characteristic – ignitability)

14. TRANSPORTATION INFORMATION

The basic description (ID Number, proper shipping name, hazard class & division, packing group) is shown for each mode of transportation. Additional descriptive information may be required by 49 CFR, IATA/ICAO, IMDG and the CTDGR.

14.1	49 CFR (GND):	CONSUMER COMMODITY, ORM-D (until 12/31/2013) UN1950, AEROSOLS, 2.1, LTD QTY (IP VOL ≤ 1.0 L)
14.2	IATA (AIR):	CONSUMER COMMODITY, 9, ID8000 (≤ 500 ml) UN1950, AEROSOLS, 2.1 (> 500 ml)
14.3	IMDG (OCN):	UN1950, AEROSOLS, 2.1, LTD QTY (IP VOL ≤ 1.0 L)
14.4	TDGR (Canadian GND):	MARK PACKAGE "LIMITED QUANTITY" or "QUANTITÉ LIMITÉE" or "LTD QTY" or "QUANT LTÉE" (≤ 1.0 L)
14.5	ADR/RID (EU):	UN1950, AEROSOLS, 2.1, LTD QTY (IP VOL ≤ 1.0 L)
14.6	SCT (Mexico):	UN1950, AEROSOLES, 2.1, CANTIDAD LIMITADA (IP VOL ≤ 1.0 L)
14.7	ADGR (Australia):	UN1950, AEROSOLS, 2.1, LTD QTY (IP VOL ≤ 1.0 L)

CAIG LABORATORIES, INC.

SAFETY DATA SHEET

Page 5 of 6
MSDS-E-D5S-A

Prepared to OSHA, ACC, ANSI, NOHSC, WHMIS, 2001/58/EC & 1272/2008/EC Standards | MSDS Revision: 3.0 | MSDS Revision Date: 08/22/2012

15. REGULATORY INFORMATION

15.1 SARA Reporting Requirements:
NA

15.2 SARA Threshold Planning Quantity:
NA

15.3 TSCA Inventory Status:
All chemical substances of this product are listed on the TSCA inventory or are otherwise exempt from inventory status.

15.4 CERCLA Reportable Quantity (RQ):
NA

15.5 Other Federal Requirements:
NA

15.6 Other Canadian Regulations
This product has been classified according to the hazard criteria of the Controlled Products Regulations (CPR) and the MSDS contains all of the information required by the CPR. The components of this product are listed on the DSL/NDSL. None of the components of this product are listed on the Priorities Substances List.

15.7 State Regulatory Information:
The primary component of this product is not listed on the following state lists: California OSHA; California Proposition 65; Massachusetts Right to Know List of Chemicals; New Jersey Right to Know List 8:59 Appendix A; Pennsylvania Hazardous Substances List 34 323 Appendix A; Wisconsin Hazardous Substances List NR 605.09; Minnesota Hazardous Substances List; and Florida Toxic Substances List.

15.8 67/548/EEC (European Union) Requirements:
The primary component of this product is listed in Annex I of EU Directive 67/548/EEC:
Petroleum Naphtha: Flammable, Harmful (F, Xn). Risk Phrases (R): 10-65 – Flammable. Harmful: may cause lung damage if swallowed. Safety Phrases (S): 2-23-24-62 – Keep away from children. Do not breathe gas, fumes, vapor or spray. Avoid contact with skin. If swallowed, do not induce vomiting: seek medical advice immediately and show this MSDS or the container label. WARNING! Flammable aerosol. Colorless, volatile liquid with ethereal and faint sweetish odor. Overexposure may cause dizziness and loss of concentration. At higher levels, CNS depression and cardiac arrhythmia may result from exposure. Vapors displace air and can cause asphyxiation in confined spaces.
Hazard Statements (H): H223 – Flammable aerosol.
Precautionary Statements (P): P210 – Keep away from heat/sparks/open flames/hot surfaces. P211 – Do not spray on an open flame or other ignition source. P251 – Pressurized container. Do not pierce or burn, even after use. P280 – Wear protective gloves and eyewear. P302 + P352 – IF ON SKIN – Wash with plenty of soap and water. P312 – Call a Poison Control Center or doctor/physician if you feel unwell. P333 + P313 – If skin irritation or rash occurs, get medical advise/attention. P321 – Refer to section 4 of this Safety Data Sheet (First Aid). P305+P351+P338 – IF IN EYES - Rinse continuously with water for several minutes. Remove contact lenses if present and easy to do – continue rinsing. P501 – Dispose of contents/container through licensed treatment, storage or disposal facility.

16. OTHER INFORMATION

16.1 Other Information:
NA

16.2 Terms & Definitions:
See last page of this MSDS.

16.3 Disclaimer:
This Material Safety Data Sheet is offered pursuant to OSHA's Hazard Communication Standard, 29 CFR §1910.1200. Other government regulations must be reviewed for applicability to this product. To the best of ShipMate's & CAIG Laboratories, Inc.'s knowledge, the information contained herein is reliable and accurate as of this date; however, accuracy, suitability or completeness are not guaranteed and no warranties of any type, either expressed or implied, are provided. The information contained herein relates only to the specific product(s). If this product(s) is combined with other materials, all component properties must be considered. Data may be changed from time to time. Be sure to consult the latest edition.

16.4 Prepared for:
CAIG Laboratories, Inc.
12200 Thatcher Court
Poway, CA 92064-6876
Tel: +1 (800) CAIG-123 (244-4123)
Fax: +1 (858) 486-8398 fax
http://www.caig.com/

CAIG LABORATORIES, INC.

16.5 Prepared by:
ShipMate, Inc.
P.O. Box 787
780 Buckaroo Trail Suite D
Sisters, OR 97759
Tel: +1 (310) 370-3600
Fax: +1 (310) 370-5700
http://www.shipmate.com

ShipMate
Dangerous Goods Training & Consulting

CAIG LABORATORIES, INC.

SAFETY DATA SHEET

Page 6 of 6
MSDS-E-DSS-A

Prepared to OSHA, ACC, ANSI, NOHSC, WHMIS, 2001/58/EC & 1272/2008/EC Standards | MSDS Revision: 3.0 | MSDS Revision Date: 08/22/2012

DEFINITION OF TERMS

A large number of abbreviations and acronyms appear on a MSDS. Some of these that are commonly used include the following:

GENERAL INFORMATION:

CAS No.	Chemical Abstract Service Number

EXPOSURE LIMITS IN AIR:

ACGIH	American Conference on Governmental Industrial Hygienists
TLV	Threshold Limit Value
OSHA	U.S. Occupational Safety and Health Administration
PEL	Permissible Exposure Limit
IDLH	Immediately Dangerous to Life and Health

FIRST AID MEASURES:

CPR	Cardiopulmonary resuscitation - method in which a person whose heart has stopped receives manual chest compressions and breathing to circulate blood and provide oxygen to the body.

HAZARDOUS MATERIALS IDENTIFICATION SYSTEM: HMIS

HEALTH, FLAMMABILITY & REACTIVITY RATINGS:

0	Minimal Hazard
1	Slight Hazard
2	Moderate Hazard
3	Severe Hazard
4	Extreme Hazard

HEALTH
FLAMMABILITY
PHYSICAL HAZARDS
PERSONAL PROTECTION

PERSONAL PROTECTION RATINGS:

A	Safety Glasses	Gloves	Boots
B	Safety Glasses, Gloves, Boots, Synthetic Apron		
C	Safety Glasses, Gloves, Boots, Synthetic Apron, Dust & Vapor Half-Mask Respirator		
D	Safety Glasses, Gloves, Boots, Synthetic Apron, Full Face Respirator		
E	Safety Glasses, Gloves, Boots, Dust & Vapor Half-Mask Respirator		
F	Safety Glasses, Gloves, Boots, Synthetic Apron, Full Face Respirator		
G	Safety Glasses, Splash Goggles, Gloves, Boots, Synthetic Apron		
H	Safety Glasses, Splash Goggles, Gloves, Boots, Full Suit, Dust Respirator		
I	Safety Glasses, Face Shield & Eye Protection, Gloves, Boots, Synthetic Apron		
J	Safety Glasses, Splash Goggles, Gloves, Boots, Full Suit, Full Face Respirator		
K	Safety Glasses, Face Shield & Eye Protection, Gloves, Boots, Full Suit, Airline Hood/Mask or SCBA		
X	Consult your supervisor or SOPs for special handling directions.		

Safety Glasses, Splash Goggles, Face Shield & Eye Protection, Gloves, Boots, Synthetic Apron, Full Suit, Dust Respirator, Full Face Respirator, Dust & Vapor Half-Mask Respirator, Full Face Respirator, Airline Hood/Mask or SCBA

Note: the dotted circle indicates that this respiratory protective equipment is required for high concentrations or for large volume spills or releases of product.

OTHER STANDARD ABBREVIATIONS:

NA	Not Available
NR	No Results
NE	Not Established
ND	Not Determined
ML	Maximum Limit
SCBA	Self-Contained Breathing Apparatus

NATIONAL FIRE PROTECTION ASSOCIATION: NFPA

FLAMMABILITY LIMITS IN AIR:	
Autoignition Temperature	Minimum temperature required to initiate combustion in air with no other source of ignition
LEL	Lower Explosive Limit - lowest percent of vapor in air, by volume, that will explode or ignite in the presence of an ignition source
UEL	Upper Explosive Limit - highest percent of vapor in air, by volume, that will explode or ignite in the presence of an ignition source

HAZARD RATINGS:

0	Minimal Hazard
1	Slight Hazard
2	Moderate Hazard
3	Severe Hazard
4	Extreme Hazard
ACD	Acidic
ALK	Alkaline
COR	Corrosive
W	Use No Water
OX	Oxidizer
TREFOIL	Radioactive

TOXICOLOGICAL INFORMATION:

LD_{50}	Lethal Dose (solids & liquids) which kills 50% of the exposed animals
LC_{50}	Lethal concentration (gases) which kills 50% of the exposed animal
ppm	Concentration expressed in parts of material per million parts
TD_{Lo}	Lowest dose to cause a symptom
TC_{Lo}	Lowest concentration to cause a symptom
TD_{Lo}, LD_{Lo}, & LD_0 or TC, TC_{Lo}, LC_{50}, & LC_0	Lowest dose (or concentration) to cause lethal or toxic effects
IARC	International Agency for Research on Cancer
NTP	National Toxicology Program
RTECS	Registry of Toxic Effects of Chemical Substances
BCF	Bioconcentration Factor
TL_m	Median threshold limit
log K_{OW} or log K_{OC}	Coefficient of Oil/Water Distribution

REGULATORY INFORMATION:

WHMIS	Canadian Workplace Hazardous Material Information System
DOT	U.S. Department of Transportation
TC	Transport Canada
EPA	U.S. Environmental Protection Agency
DSL	Canadian Domestic Substance List
NDSL	Canadian Non-Domestic Substance List
PSL	Canadian Priority Substances List
TSCA	U.S. Toxic Substance Control Act
EU	European Union (European Union Directive 67/548/EEC)
WGK	Wassergefährdungsklassen (German Water Hazard Class)

WORKPLACE HAZARDOUS MATERIALS IDENTIFICATION (WHMIS) SYSTEM:

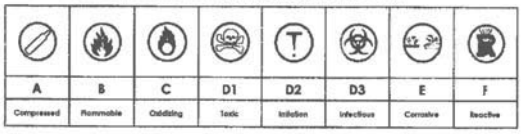

A	B	C	D1	D2	D3	E	F
Compressed	Flammable	Oxidizing	Toxic	Irritation	Infectious	Corrosive	Reactive

EC (67/548/EEC) INFORMATION:

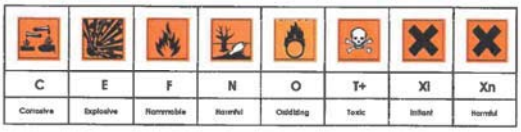

C	E	F	N	O	T+	Xi	Xn
Corrosive	Explosive	Flammable	Harmful	Oxidizing	Toxic	Irritant	Harmful

CLP/GHS (1272/2008/EC) PICTOGRAMS:

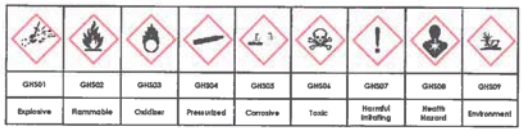

GHS01	GHS02	GHS03	GHS04	GHS05	GHS06	GHS07	GHS08	GHS09
Explosive	Flammable	Oxidizer	Pressurized	Corrosive	Toxic	Harmful Irritating	Health Hazard	Environment

11.5.13 3-IN-ONE MULTI-PURPOSE OIL

3-IN-ONE.

WD-40 COMPANY

Material Safety Data Sheet

1 - Chemical Product and Company Identification

Manufacturer: WD-40 Company **Address: 1061 Cudahy Place (92110)** **P.O. Box 80607** **San Diego, California, USA** **92138 –0607** **Telephone:** **Emergency only: 1-888-324-7596 (PROSAR)** **Information: 1-888-324-7596** **Chemical Spills: 1-800-424-9300 (Chemtrec)** **1-703-527-3887 (International Calls)**	**Chemical Name: Organic Mixture** **Trade Name: 3-IN-ONE Multi-Purpose Oil** **Product Use: Lubricant** **MSDS Date Of Preparation: February 2012**

2 - Composition/Information on Ingredients

Ingredient	CAS #	Weight Percent
Severely Hydrotreated Heavy Naphthenic Oil	64742-52-5	>97
Naphtha, petroleum	64742-47-8	<2
Non-Hazardous Ingredients	Mixture	<3

See Section 8 for Exposure Limits

3 – Hazards Identification

Emergency Overview:
CAUTION! May cause eye irritation. Prolonged or repeated skin contact may cause mild irritation and defatting dermatitis. Avoid eye contact. Avoid prolonged or repeated contact with skin and clothing.

Symptoms of Overexposure:
Inhalation: High concentrations of oil mists may cause nasal and respiratory irritation.
Skin Contact: Prolonged and/or repeated contact may produce mild irritation and defatting with possible dermatitis.
Eye Contact: Contact may be irritating to eyes. May cause redness and tearing.
Ingestion: This product has low oral toxicity. Swallowing may cause gastrointestinal irritation, nausea, vomiting and diarrhea. Aspiration into the lungs during swallowing or vomiting may cause chemical pneumonitis.
Chronic Effects: None expected.
Medical Conditions Aggravated by Exposure: Preexisting eye, skin and respiratory conditions may be aggravated by exposure.

Suspected Cancer Agent:
Yes No X

4 – First Aid Measures

Ingestion (Swallowed): Possible Aspiration Hazard. DO NOT induce vomiting. Call physician, poison control center or the WD-40 Safety Hotline at 1-888-324-7596 immediately.
Eye Contact: Flush thoroughly with water. Get medical attention if irritation persists.
Skin Contact: Wash with soap and water. If irritation develops and persists, get medical attention.
Inhalation (Breathing): If irritation is experienced, move to fresh air. Get medical attention if irritation or other symptoms develop and persist.

5 – Fire Fighting Measures

Extinguishing Media: Use water fog, dry chemical, carbon dioxide or foam. Do not use water jet or flooding amounts of water. Burning product will float on the surface and spread fire.

Page 1 of 4

Special Fire Fighting Procedures: Firefighters should always wear positive pressure self-contained breathing apparatus and full protective clothing in areas where chemicals are used and stored. Cool fire-exposed containers with water.
Unusual Fire and Explosion Hazards: Slightly combustible liquid. If heated above the flashpoint, will release flammable vapors that can present a fire or explosion hazard

6 – Accidental Release Measures

Wear appropriate protective clothing (see Section 8). Eliminate all sources of ignition and ventilate area. Contain and collect liquid with an inert absorbent and place in a container for disposal. Clean spill area thoroughly. Report spills to authorities as required.

7 – Handling and Storage

Handling: Avoid contact with eyes. Avoid prolonged contact with skin. Avoid breathing oil mists. Use with adequate ventilation. Keep away from heat, hot surfaces and open flames. Wash thoroughly with soap and water after handling. Keep containers closed when not in use. Keep out of the reach of children.
Storage: Store in a cool, well-ventilated area, away from incompatible materials. NFPA 30 Class IIIB Liquid.

8 – Exposure Controls/Personal Protection

Chemical	Occupational Exposure Limits
Severely Hydrotreated Heavy Naphthenic Oil	5 mg/m^3 TWA ACGIH TLV (Inhalable) 5 mg/m^3 TWA OSHA PEL
Naphtha, petroleum	1200 mg/m^3 TWA Manufacturer recommended
Proprietary Additive	None Established

The Following Controls are Recommended for Normal Consumer Use of this Product
Engineering Controls: Use in a well-ventilated area.
Personal Protection:
Eye Protection: Avoid eye contact.
Skin Protection: Avoid prolonged skin contact. Wash hands with soap and water after use.
Respiratory Protection: None needed for normal use with adequate ventilation.

For Bulk Processing or Workplace Use the Following Controls are Recommended
Engineering Controls: Use adequate general and local exhaust ventilation to maintain exposure levels below that occupational exposure limits.
Personal Protection:
Eye Protection: Safety goggles recommended where eye contact is possible.
Skin Protection: Wear chemical resistant gloves.
Respiratory Protection: None required if ventilation is adequate. If the occupational exposure limits are exceeded, wear a NIOSH approved respirator. Respirator selection and use should be based on contaminant type, form and concentration. Follow OSHA 1910.134, ANSI Z88.2 and good Industrial Hygiene practice.
Work/Hygiene Practices: Wash with soap and water after handling.

9 – Physical and Chemical Properties

Boiling Point:	>550°F	Specific Gravity:	0.866-0.923 @ 20°C
Solubility in Water:	Insoluble	pH:	Not Applicable
Vapor Pressure:	Not Determined	Vapor Density:	Not Determined
Percent Volatile:	Nil	VOC:	0%
Coefficient of Water/Oil Distribution:	Not Determined	Appearance/Odor	Clear amber liquid with a faint citronella odor
Flash Point:	Greater than 305°F Tag Open Cup	Flammable Limits:	Not determined
Viscosity	112 SUS (23.31 cSt) @ 100°F		

Page 2 of 4

10 – Stability and Reactivity

Stability: Stable
Hazardous Polymerization: Will not occur.
Conditions to Avoid: Avoid heat, flames and other sources of ignition.
Incompatibilities: Strong oxidizing agents.
Hazardous Decomposition Products: Carbon monoxide and carbon dioxide.

11 – Toxicological Information

The oral toxicity of this product is estimated to be greater than 5,000 mg/kg based on an assessment of the ingredients. This product is not classified as toxic by established criteria.
None of the components of this product is listed as a carcinogen or suspected carcinogen or is considered a reproductive hazard.

12 – Ecological Information

No data is currently available.

13 - Disposal Considerations

If this product becomes a waste, it would not be expected to meet the criteria of a RCRA of a hazardous waste. However, it is the responsibility of the generator to determine at the time of disposal the proper classification and method of disposal. Dispose in accordance with federal, state, and local regulations.

14 – Transportation Information_

DOT Surface Shipping Description: Not Regulated
IMDG Shipping Description: Not Regulated

15 – Regulatory Information

U.S. Federal Regulations:
CERCLA 103 Reportable Quantity: This product is not subject to CERCLA reporting requirements, however, oil spills are reportable to the National Response Center under the Clean Water Act and many states have more stringent release reporting requirements. Report spills required under federal, state and local regulations.
SARA TITLE III:
Hazard Category For Section 311/312: Non-Hazardous.
Section 313 Toxic Chemicals: This product contains the following chemicals subject to SARA Title III Section 313 Reporting requirements: None
Section 302 Extremely Hazardous Substances (TPQ): None
EPA Toxic Substances Control Act (TSCA) Status: All of the components of this product are listed on the TSCA inventory
California Safe Drinking Water and Toxic Enforcement Act (Proposition 65): This product does not contain chemicals regulated under California Proposition 65.
VOC Regulations: This product complies with the consumer product VOC limits of CARB, the US EPA and states adopting the OTC VOC rules.
Canadian Environmental Protection Act: All of the ingredients are listed on the Canadian Domestic Substances List, Canadian Non-Domestic Substances List, or exempt from notification
Canadian WHMIS Classification: Not a controlled product.
This MSDS has been prepared according to the criteria of the Controlled Products Regulation (CPR) and the MSDS contains all of the information required by the CPR.

Page 3 of 4

16 – Other Information:

HMIS Hazard Rating:
Health – 1 (slight hazard), Fire Hazard – 1 (slight hazard), Reactivity – 0 (minimal hazard)

SIGNATURE:_____ TITLE:Director of Global Consumer Relations and Regulatory Affairs

REVISION DATE:February 2012 SUPERSEDES:April 2011

Page 4 of 4

11.6 COMPONENT MANUFACTURER LIST

MECHANICAL COMPONENTS (Refer to Volume 3 for As-Built Drawings)			
Span Support and Balance Machinery			
Section[2]	**Description**	**Model No.**	**Manufacturer**
11.7.1	End Screw Jack Speed Reducer	Model No. 0703-BHE, Serial No. 6C72911M	Foote-Jones
11.7.5	End Screw Jack	Model No. M-9099, Serial No. LM-10099-10B & LM-10099-11B	Duff Norton
11.7.6	Gear Couplings	1015G51	Rexnord Falk
11.7.7	End Screw Jack Motor Coupling	1040T10	Rexnord Falk
11.7.10	Pivot Bearing	Torrington No. 29364W8	Timken
	Bearing Wheel Bearing	GE200ES	SKF
	Bearing Wheel Bearing Seal	Model 54 Klosure, Part No. 54x6021	Garlock
	Pivot Bearing Seal	Model 59 , Part No. 0420	Garlock
Turning Machinery			
11.7.2	Turning Machinery Speed Reducer	Model No. 6CB4-12BS, M.O. No. 97-032067	Rexnord Falk
11.7.4	Instrumentation Gear Box	Model No. 917DBD, Part No. 917XDBD7X000P5	Peerless Winsmith
11.7.8	Grid Coupling	1110T20	Rexnord Falk
	Brakewheel Coupling	1010G62	Mondel
	Instrumentation Couplings	Deltaflex Type 1	Lovejoy
11.7.9	Motor Brake	6WST/E-ED23/5S	Mondel
Turning Machinery			
11.7.3	Span Lock Gearmotor	TC-F/R6-02A (Motor), LHHM 02-2A105RK-Y3-B-207 (Speed Reducer)	Sumitomo

TRAFFIC CONTROL DEVICES (Refer to Volume 3 for As-Built Drawings)			
Section[2]	**Description**	**Model No.**	**Manufacturer**
	Fender Navigation Lights	PL	B&B Roadway
	Span Navigation Lights	SS-4	B&B Roadway
	Traffic Gate Arm	*Contact Manufacturer*	B&B Roadway
	Traffic Gate Arm Lights	C4	B&B Roadway
	Traffic Gate Motor	C6717NC199A	Leeson
	Traffic Gate Motor Brake Assembly	*Contact Manufacturer*	B&B Roadway
	Traffic Gate Door Switch	1200	Pass & Seymore
	Traffic Gate Limit Switch	LS series	B&B Roadway
	Traffic Gate Manual Operation Limit Switch	DTE6-LRN80	Microswitch
	Traffic Gate Flasher	FL12	B&B Roadway
	Traffic Gate Gongs	G12	B&B Roadway
	Main Disconnect Switch	2510	Square D
	Arm light Fuse/ Gong Fuse	FNM-5	Bussman

ELECTRICAL COMPONENTS (Refer to Volume 3 for As-Built Drawings)			
Starter Panels			
Section[2]	**Description**	**Model No./Description**	**Manufacturer**
	Fuses	Varies - See as-built dwgs	Bussman
	Fuse Holder	3743	Bussman
	Circuit Breaker (CB-JSC, JNC)	HMCP015E0C	Cutler Hammer
	Circuit Breaker (CB-JWE)	HMCP030H1C	Cutler Hammer
	Circuit Breaker (CB-GNE, GNW)	FD3015	Cutler Hammer
	Circuit Breaker (CB-B)	FD3015	Cutler Hammer
	Contactor Size 1 (M-JSC, JNC, JWE, GNE)	CN16DN3	Cutler Hammer
	FVR Starter Size 1 (M-B, GNW)	*AN16DN0*	Cutler Hammer
	Heater Element (OL-GNW)	H1028	Cutler Hammer
	Heater Element (OL-JSC, JNC)	H2009B	Cutler Hammer
	Heater Element (OL-JWE)	H2013B	Cutler Hammer
	Overload Relays (OL-JSC, JNC, JWE)	C306GN3	Cutler Hammer
	Machine Tool Relays (R1, R2, R4, R5)	Type M	Cutler Hammer
	Machine Tool Relays (JWED, JWER, FC, NAV)	D15CR40	Cutler Hammer
	Timing Relays	10337H192B	Cutler Hammer

Control Desk			
Section[2]	**Description**	**Model No./Description**	**Manufacturer**
	Span Control Master Switch		
	Voltmeter	*Contact Manufacturer*	Simpson
	Control Desk Indicating Light	FVLU120LR / FVLU120LW	C3 Controls
	Control Desk Pushbutton	*10250T23*	*Eaton*
	Control Desk Selector Switch		
	Control Desk Keyed Switch		
	Foot Switch	Hercules Footswitch 511-B30	Linear Master Switch
Field Equipment			
Section[2]	**Description**	**Model No./Description**	**Manufacturer**
11.9.1	Span Lock Disconnect Switches	HBLDS3	Hubbell
	Manual Operation Limit Switch		Allen Bradley
	Rotary Cam Limit Switch	1980	Gemco
	End Jack Limit Switch	SKA6000	Duff Norton
	End Jack Position Limit Switch	IC9445	General Electric
11.9.3	Fully Open / Overtravel/ Fully Closed Limit Switches	780-20100	Namco
	Resistors	*Contact Manufacturer*	Post Glover
	Terminal Block	28112	Buchanan
	Power Terminal Block	68013	Taylor
	Power Distribution Block	68063/ 60073	Taylor
	Panelboard lighting	CH7GC	Square D
	Panelboard Fuses (6)	OT100	Gould
	HVAC circuit Breaker	2 poles, 60 Amp	
	Storage Room and Lower Level Lights Circuit Breaker	1 pole, 20 Amp	
	HVAC Outdoor Circuit Breaker	2 pole, 30 Amp	
	Bathroom GFI Circuit Breaker	1 pole, 20 Amp	
	Control Receptacle Circuit Breaker	1 pole, 20 Amp	
	Sub Control Desk Cabinet Circuit Breaker	3 pole, 40 Amp	
	Tank Circuit Breaker	2 pole, 20 Amp	
	Water Heater Circuit Breaker	2 pole, 30 Amp	
	Span Drive Cabinet Circuit Breaker	3 pole, 60 Amp	
	Receptacle In Control Room Circuit Breaker	1 pole, 20 Amp	
	Manual Transfer Switch	100Amp, 240V	Cutler Hammer
	Holding Tank Alarm	A4-2	S.J. Electrosystem
	Transformer	C-4230	Ran Transformer
	End Screw Jack Motor	ID No. 0050F-1AAB-0024	Reuland
	Turning Machinery Motor	AHNV	Westinghouse

Drive Control Cabinet			
Section[2]	**Description**	**Model No./Description**	**Manufacturer**
	Cabinet	HFWS40550226	Hubble
	Timing Relay	10337H192B	Cutler Hammer
	Circuit Breaker (3P, 20A)	FD3020	Cutler Hammer
	Auxiliary Contact (O-S, C-S)	C320KGT15	Cutler Hammer
	Auxiliary Contacts	C320KGS6	Cutler Hammer
	Contactor Size 1 (1A, 2A,4A,P)	CN15DN3	Cutler Hammer
	Auxiliary Contacts (2A, 1A)	C320KGS3	Cutler Hammer
	Auxiliary Contacts (P)	C320KGS1	Cutler Hammer
	Auxiliary Contacts (4A)	C320KGS2	Cutler Hammer
	Relay (2PT)	48-C8-11	Cutler Hammer
	Fuse	NLN30	Littelfuse

Notes:

1. Where part numbers and/or manufactures are obsolete and no longer available an alternate part number and/or manufacturer is listed in *italics*. These identified components must be replaced as a whole and therefore individual component part numbers for existing equipment such as contacts, coils, overload heaters, etc. are not provided.
2. Section reference is only provided for equipment currently installed. For items where the components manufacturers list indicates an alternate part number the table does not indicate the appropriate section reference.
3. For additional details on components refer to Volume 3 As-Built drawings.
4. Replacement components noted may have different interrupting capacity than the existing. Contact DelDOT engineering before component replacement.

11.7 MECHANICAL EQUIPMENT MANUALS AND SPECIFICATIONS

11.7.1 END SCREW JACK SPEED REDUCER – FOOTE JONES TYPE BHE

MM6105-B
DECEMBER 1996
INSTALLATION
LUBRICATION
OPERATION
MAINTENANCE INSTRUCTIONS
PRICE $2.00

FOOTE-JONES
A REGAL-BELOIT Company
2914 Industrial Ave. • Aberdeen, SD 57402-1089

SPIRAL BEVEL HELICAL REDUCER

TABLE OF CONTENTS

STORAGE . . . . . Front cover
INSTALLATION. 1
OPERATION 2
MAINTENANCE 3
RECOMMENDED LUBRICANTS 7
OIL CAPACITIES 9
DISASSEMBLY. 10
REASSEMBLY 11
COMPONENT INSPECTION & EVALUATION. 12
PARTS LISTS. 15

SAFETY
Rotary equipment is dangerous unless adequately guarded. The user is responsible for complying with all applicable safety regulations. Adequate safety instructions must be given by the user to personnel directly responsible for the installation, maintenance, and operation of the equipment. The gear unit must not be operated above its service rating.

DAMAGE IN SHIPMENT
The equipment should be inspected immediately upon receipt of shipment for indications of rough handling or damage. Report to the carrier any apparent or suspected damage.

STORAGE

NORMAL PREPARATION
Prior to shipment, all gear units are tested with a rust inhibiting oil that covers all interior surfaces. Shaft extensions and external machined surfaces are coated with a drying-film rust-preventive material. These measures constitute the normal preparation for shipment and for temporary delays during installation, and will provide some protection, for some period of time, depending on the ambient conditions. **Outdoor, unprotected storage is not recommended.** The table below shows **approximate** storage periods.

APPROXIMATE STORAGE PERIODS		
Type of Preparation	Outdoor*	Indoor**
Normal	2 Months	6 Months
Long Term	12 Months	24 Months

* Unit stored on blocks and covered with a tarpaulin in a protected area.
** Dry building with reasonably constant temperature.

PREPARATION FOR LONG-TERM STORAGE
If the storage period provided by normal preparation is not adequate, the gear unit must be prepared for long term storage.

Protection of gear units against corrosion of internal surfaces during long-term storage is best accomplished by submerging the internals in oil and limiting the entry of air into any remaining space over the oil. The major problem in the preparation of the unit is to prevent leakage of the oil, which would (1) lower the oil level and leave surfaces exposed and (2) contaminate the storage area. Despite careful preparation by the manufacturer, some oil seepage can be expected. The gear unit should be located in the storage area so as to avoid damage to other equipment and the surroundings.

It is preferable that long-term preparation be done at the factory but, if this is not possible, the following procedure is recommended:

1. Place the gear unit on wooden blocks.
2. Tighten all bolts on the housing and all pipe connections such as plugs, standpipes, dipstick caps, and heaters. Replace the breather with a pressure-relief valve having a 1 PSI setting.
3. Clean the outside diameter surfaces of the bearing covers and the adjacent surfaces of the bearing blocks with solvent. Apply a fillet of adhesive sealant such as General Electric RTV-102 around the junction of these surfaces.
4. All exposed unpainted parts such as shafts should be coated thoroughly with a corrosion preventative compound, solvent cut back type, leaving a firm film. Use Nox Rust No. 369 (Daubert Chemical Co.) or equivalent.
5. Completely fill the gear unit with the type of lubricant specified for operation, and tighten the fill-hole plug.
6. Protect other Buyer's or Seller's vendor-furnished items in accordance with the manufacturer's recommended storage procedures.
7. Cover the gear unit with tarpaulins.
8. It is recommended that the input shaft of every reducer be rotated once a month enough turns to produce one complete turn on the output shaft to prevent Water Etching or False Brinelling of the bearings and seizure of the Elastomeric Seal Lip Material on the shaft.
9. The gear unit should be inspected every three months. If oil has leaked out, it should be replaced. Breaks in the paint or in the protective film should be repaired. If the unit is outdoors, its shelter should be renovated as required.

INSTALLATION

FOUNDATION
The equipment should be mounted on a rigid foundation. This is to prevent flexing, vibration and/or misalignment of shafting under all conditions of normal loading. All components of the drive including the motor, the reducer and the driven load should be securely bolted in place after proper alignment and leveling of all elements.

If the above procedure is not followed, noise and unsatisfactory operation may result.

ERECTION
CAUTION should be used in handling the equipment to prevent damage from striking another object. This could result in internal damage to gears or bearings, broken housings and bent shafting.

Lift only at eye bolts or lifting lugs provided on unit. Do not place sling around shafts.

CARE should be taken in installation to insure that all components are properly shimmed or grouted in place. Failure to shim properly may result in deflection and misalignment when base mounting bolts are tightened.

If fitted base mounting bolts (bolts tight fitting in mounting holes) are not used, it is recommended that the components be doweled in place or shear blocks added at sides and ends of mounting flange. A dowel in each of two diagonally opposed corners provides adequate holding and an easy means of accurate realignment in the event of removal for repairs.

Base mounting bolts should be rechecked for alignment and coupling gap after installation, leveling, and permanent mounting of the bedplate. Then proceed as above.

CONNECTIONS
COUPLINGS - A gear-type flexible coupling is recommended. The correct coupling gap should be provided by shifting the most convenient drive element. This is most important in allowing the shafts of all components to float free, to center themselves without restriction and to prevent abnormal thrust loading. The gap (shown in coupling manufacturers catalog) should be set with the reducer input shaft in its neutral or loaded running position and the motor shaft and rotor at its magnetic center or running position.

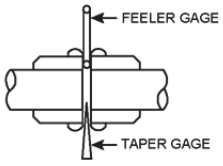

Angular Alignment

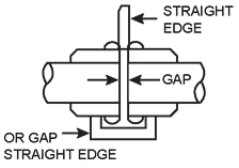

Parallel Alignment

Proper alignment of coupling halves is required to prevent side-loading of the shafts and excessive wear in the coupling. Misalignment, both angular and parallel, must not exceed .005" (.127mm). The sketches (top right) show methods of checking alignment with a feeler gage and a straight-edge; measurements are taken at four positions 90 degrees apart.

SPROCKETS, SHEAVES AND EXTERNAL GEARING
In mounting these items the center of the load should be located no farther out than the center of the shaft extension key seat. Otherwise, excessive overhung loading could exist resulting in early failures to bearings, gears or shafts. Refer to the product catalog for applicable overhung load rating capacity.

These elements should also be properly aligned. In the case of sprockets and sheaves, a steel straight edge or tape layed across the ends will aid in squaring up. See below.

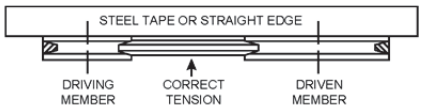

The straight edge should lay evenly across both members with no gapping. CAUTION: Belts or chains should not be too tight as this can place undue loading on the connected elements.

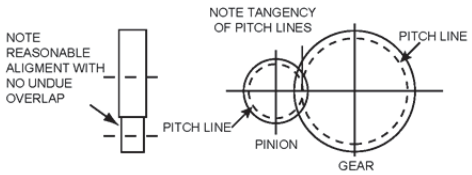

NOTE TANGENCY OF PITCH LINES

External gearing should be set to the correct center distance and alignment. In some cases gear tooth pitch lines are scribed in one or both end faces of the gear and pinion. It is intended that they be matched to a point of tangency. This can also be done by checking backlash with a feeler gage. Bluing in the teeth with prussian blue will check for squareness in alignment. Contact should be as close as possible to 100% across the tooth face. This should be done both a no load and under load to determine if proper alignment has been attained.

GENERAL
When couplings, sheaves, sprockets and external gearing are furnished with reducers, they are generally mounted at the factory.

If it is necessary to mount these items in the field, it is important that extreme care be used. It is quite easy to damage internal members by heavy blows used in trying to drive on one of these parts. It is recommended that a bore be selected to give a tapping or light driving fit. If necessary, the bore should be enlarged to provide this class of fit. If it is a requirement to have a press fit it is suggested that the external element be heated to insure an easy assembly. Heating beyond 250° F (121.1° C) is not recommended, as heat conducted along the shaft may damage the shaft seal.

CAUTION - For safety, purchaser or user should provide protective guards over shaft extensions and any couplings, sheaves and belts, sprockets and chains, open gearing, etc., mounted thereon.

LEVELLING

To achieve alignment in the horizontal plane, it is necessary to place the shims between the gear unit and the base. Care must be taken to make the shim-stack firm to prevent distortion of either the housing or the foundation when the foundation bolts are tightened later on. The gear unit may then be moved horizontally to achieve alignment in the other plane.

After correct alignment has been achieved, the foundation bolts should be torqued to the value shown in this table.

RECOMMENDED BOLT TIGHTENING TORQUES* (lb-ft)

BOLT SIZE	GRADES III & V	GRADE VIII, STUDS, & SOC. HD. SCREWS
1/4	9	13
5/16	18	28
3/8	31	46
7/16	50	75
1/2	75	115
9/16	110	165
5/8	150	225
3/4	250	370
7/8	380	590
1	585	895
1-1/8	780	1410
1-1/4	1100	1960
1-3/8	1460	2630
1-1/2	1750	3150
1-5/8	2390	4310
1-3/4	3110	5610
1-7/8	4190	7550
2	4500	8100
2-1/4	6500	11,700
2-1/2	7140	16,200

*Maximum torque values are shown. Use 90% to 100% of these values.

It is important that bolts and studs be tightened to the above values. If mechanical means are not available to develop the high torques required for the larger sizes, thermal means may be used. By this method, bolts or studs are expanded by heating in accordance with the table below. They are then installed quickly and torqued snugly before significant cooling can occur. The shrinkage produces the desired tension in the bolt or stud without heavy torquing. Bolts and studs should be heated in a temperature-controlled oven.

TEMPERATURE DIFFERENTIAL FOR THERMAL TENSIONING

Grade or Type	II	III & V	VIII, STUDS SOC. HD. SCRS.
Temperature above ambient	240° F (115° C)	400° F (200° C)	635° F (335° C)
Tensile stress in bolt or stud when cool (psi)	45,000	75,000	120,000

LUBRICATION

GEAR UNITS ARE SHIPPED WITHOUT OIL. Before startup, fill the unit to the indicated level with the grade and type of oil shown on the nameplate for the ambient temperature. Suitable oils are listed in a chart in this manual. If the unit will be operated at ambient temperatures outside the range shown on the nameplate, consult the factory for recommendations. Special lubricants, oil coolers, or sump heaters may be required.

Do not overfill; a high oil level will generate heat through churning. To ensure proper lubrication of all moving parts, do not underfill or let the oil level drop more than 1/4" (6 mm) below the indicated level.

The initial oil fill should be changed after two weeks of operation. Thereafter, the oil should be changed every six months or seasonally if viscosity changes are required.

OPERATION

START-UP

1. After the installation has been completed, but before the initial startup, the following checks should be made.
   A. Verify the rating of the reducer, (indicated on the nameplate and certified print) to be sure the service rating, RPM or speed range, thermal rating, and any overhung or thrust loading are not exceeded in actual operation.
   B. Make sure reducer is filled with the correct lubricant to the proper level. Too much oil in the reducer causes churning and excessive heat generated by fluid friction. Likewise, an insufficient amount of oil will make the reducer operate at higher temperatures.

      Make sure all oil passages are clear and permit free flow of the lubricant. Refer to section of this bulletin on lubrication and/or the nameplate affixed to the reducer.
   C. On vertical units, prime pump and check for oil flow.
   D. Lubricate couplings with manufacturer's recommended lubricant.
   E. If backstop is used make sure it is filled to the oil level mark with the proper lubricant.
   F. Fan - On units equipped with a fan check the air supply for proper fan circulation. Avoid high surrounding ambient temperatures.
2. Check for free rotation of all elements. In many cases, the input shaft of the reducer can be turned by hand even with a connected load.
3. Check all bolts and capscrews to make sure they are tight.
4. Check belts and/or chains for proper tension.
5. After energizing motive power, if any undue noise occurs, shut off power immediately.
6. Observe temperature rise. This may take up to two hours to stabilize. In some instances depending on ratio, size and input speed the temperature in the oil sump may rise as much as 100° F (55.6° C) above the ambient. Actual operating temperature will vary with the reducer size, ratio, type and operating conditions. Under no circumstances should the oil bath temperature exceed 200°F (93.3° C), consult the factory. The housing and shaft adjacent to the high speed seal may show temperatures significantly above 200° F (93.3° C). This will diminish as the seal and shaft sealing area wear in. Application of oil at this area during the break-in period will help in assisting this process. Many times the reducer temperature is judged by the touch of hand and may be considered to be quite hot. The only positive method is to use a surface temperature measuring instrument such as a

7. Bearings can produce localized heating from cramping either radial or axial. Check for insufficient end play.

8. CAUTION: Do not operate this unit beyond its service rating as any failure resulting could cause damage to property or life and limb.

9. CAUTION: The system of connected rotating parts must be free from critical speed, torsional or other type vibration, no matter how induced. The responsibility for this system analysis lies with the purchaser of the speed reducer.

MAINTENANCE CHECK POINTS

For optimum protection and preventative maintenance it is recommended that the reducer be inspected daily. Points to cover are:

1. OIL LEAKAGE at oil seal, housing split, bearing cap shims, pipe fittings. Tighten housing bolts, bearing cap bolts and pipe fittings and/or replace oil seal if leakage is sufficient to cause rapid drop in oil level. It may be necessary to add sealant between bearing cap shim packs and the housing.

2. OIL LEVEL - Any undue drop in oil level is an indication of oil leakage from some point on the reducer and should be corrected. If backstop is used, check oil level also.

3. TEMPERATURE - Check the actual temperature of the oil bath, gear case, and shafts at various points. This should be done after the unit has been in operation at least two hours. The average oil bath temperature is 140° F (60° C), however, the range can vary from 100° F to 200° F (37.8° to 93.3° C). Bearings can produce localized heating from cramping either radial or axial. Check for insufficient end play. Any undue rise in temperature above that normally encountered and not accountable for by a rise in the ambient should be investigated. Low oil level, abnormal loading, thickening of lubricant, bearing seizure are possible sources. If in a particular bearing, the heat would be localized in the housing area adjacent to the bearing.

4. SOUND LEVEL - A sudden change in the sound level is a possible indication of low oil level, undue thinning out of lubricant, abnormal loading, worn coupling or deterioration of internal parts.

   Noise is usually difficult to isolate because sound can travel throughout the entire drive system. A noise can be pin-pointed to a specific area by determining its approximate frequency and if it is at accurate regular intervals.

5. LUBRICANT CONDITION - A change of color in the oil or thickening or unexplainable corrosion of internal parts is an indication that it has deteriorated and should be changed.

6. LOADING - Periodic load checks are valuable in making sure that reducer rating is not exceeded.

7. OIL BREATHER - Must be kept clean.

8. VIBRATION - A change in the vibration normally associated with the system can indicate worn couplings or internal reducer parts.

9. DIRT ACCUMULATION - Any undue accumulation of dirt on the reducer or in fan components where fans are used will affect proper cooling of the unit.

10. BACKSTOPS - Check oil level and for any sudden increase in sound level. There should be no undue radial play and the torque arm should move freely within the limits of its stop.

11. GREASE PURGED OIL SEALS - Grease should be applied once a week to the Alemite fitting on the open bearing caps until it escapes from the Alemite relief fitting on the opposite side of the cap or from the outer seal lip. Use a good Lithium base grease (NLGI No. 2 consistency) should be used.

12. PUMP (VHLD & VHLE or VBHC & VBHE Only) - A decrease or increase in oil line pressure indicates that the pump is not functioning properly. The possible causes for pump failure are listed below.

    SYSTEM PROBLEM
    High Oil Pressure
    POSSIBLE CAUSES
    Closed or block in orifice, or crimp in tubing. Drive speed increased substantially, axial spring force too high.
    SYSTEM PROBLEM
    Low or No Oil Pressure
    POSSIBLE CAUSES
    Seal Leaks
    Break In Line
    Enlarged Orifice
    Pump Running In Relief

13. COUPLINGS - If noisy, check for lubrication.

14. REPAIR PARTS - Keep recommended spare parts, oil seals, and bearings on hand to reduce down time.

BACKSTOP MAINTENANCE

1. To take off the backstop, drain oil from the reservoir and remove it by unscrewing cap screws holding it to the backstop body. Bend back locking tab on lock washer and unscrew locknut. The backstop and torque arm can be pulled off by prying between the torque arm and the housing or by use of a gear puller. The manufacturer does not recommend repair in the field nor attempting to change direction of rotation in the field. In either case the backstop should be returned to the factory.

2. Clean off all sealant from the shaft surfaces as well as the key, keyways and backstop bore. Flush out backstop with Mobil Oil Solvosol or equivalent. Do not use Carbon Tetrachloride. Clean the breather also with the same solvent. (See Fig. 6)

3. IMPORTANT: Prior to replacing the backstop coat thoroughly the shaft surface under the backstop, the shaft keyway, the backstop bore and its keyway and the key with an adhesive sealant such as General Electric RTV-102 or Permatex No. 2 (Non-Hardening).

   This is to prevent oil leakage from the reservoir back along the shaft.

4. Balance of reassembly is reverse of disassembly. Check torque arm for free movement. It must not bind in bottom of its stop.

5. Fill backstop to indicated level with proper oil. (See section under lubrication).

6. Flushing is recommended every six months for up to 12 hours per day operation and every three months for 12 to 24 hours per day operation. Drain oil from reservoir fill with Mobil Oil Solvosol or equivalent and run for several minutes. Then drain after removing both the plug in the housing and the plug in the reservoir. Add fresh oil (see section under lubrication). For extremely dusty or dirty operating conditions, it may be necessary to change oil at more frequent intervals or often enough to keep oil clean. When the oil becomes contaminated or oxidized (dark colored), it should be flushed and changed.

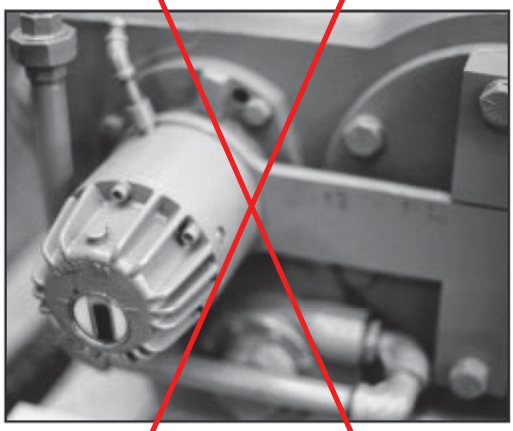

Fig. 6

BACKSTOP INSPECTION

The backstop must be periodically inspected by the manufacturer and reconditioned, if necessary, to insure satisfactory performance. These units should be returned to the Formsprag Company according to the following schedule.

Shaft Speed	Inspection Interval
900 to 1800 RPM	2 Years
below 900 RPM	3 Years

NOTE: Disassembly and repair of the backstop in the field is not recommended.

OIL SEALS

All oil seals used in these units have a synthetic elastomer dual lip seal. They are provided with a spring back of the inner lip which exerts constant pressure and keeps the lip in contact with the shaft.

1. In any disassembly of the reducer or removal of bearing caps it is recommended that all oil seals be replaced.

2. Examine the new oil seal for cuts or imperfections in the lip. The lip should have a smooth and uninterrupted edge with no flashes from moulding. The O.D. of the seal should be free of scratches and burrs. Test the seal for grip on the shaft upon which it is to run; it should not be loose but should offer some drag to axial movement. If the seal if not satisfactory, discard it and try another one.

3. Clean the bearing cap seal bore and remove any burrs; coat the cap bore and the seal O.D. with an adhesive sealant such as General Electric RTV-102 or Permatex No. 2.

4. The shaft in the seal area should be examined for score marks, scratching or grooving. First try polishing out the imperfections with a fine grade of Emery (No. 240). The polishing motion should not be axial or spiral in direction but circumferential. If the shaft surface can not be reconditioned sufficiently by polishing to remove all imperfections, it may be possible to shift the seal position sufficiently to escape this area. The inner lip with the spring in back of it is the important one to consider. The other alternative is to metallize the shaft and regrind to a surface finish of 10 to 20 RMS.

5. Wrap .005" (.127 mm) plastic shim stock around the shaft to cover up the keyway and any shoulders. Wipe oil or grease on the seal lip to facilitate assembly. Slip the seal on the shaft up to the bearing cap with the lip and spring facing in toward the reducer. Using the end of a piece of wood about 1 x 2", drive the seal in tapping first on one side then the other. (See Fig. 7) The seal should be flush with bearing cap outer face and square with the shaft. Remove the shim stock. If steel or brass shim stock is used, make sure all burrs on the edge are removed to avoid cutting the seal. For maximum protection, lay a strip of scotch tape along the exposed edge.

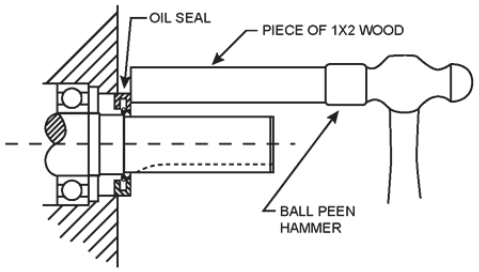

Fig. 7

6. On those units using two seals, the inner seal should be pressed in until the open depth remaining is the thickness of one seal. The outer seal is pressed down on top of it and should come flush with the bearing cap outer face. Pack grease between the two seals. Use a high quality Lithium base grease NLGI consistency No. 2.

7. CHANGING SEALS ON THE UNIT

A. It will be necessary to shift the driving motor and remove coupling if coupling is used. If belt drive, only the sheave need be removed.

B. Drill two holes in the seal face 180° apart. Insert large sheet metal screws and leave about 3/16" (4.76 mm) length of screw under the head protruding. Use a pry bar with the notch at one end under the screw head to lift the seal out. (See Fig. 8)

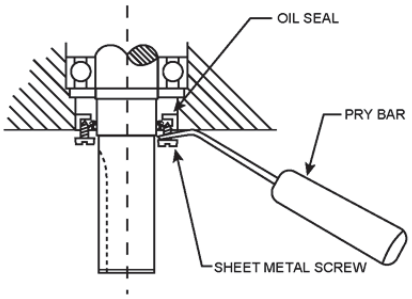

Fig. 8

C. Take care not to damage the seal bore in the bearing cap or the shaft surface.

D. Proceed as outlined previously in Paragraphs 2, 3, 4, 5, & 6.

8. GREASE BARRIER OIL SEALS

Some units on special order are furnished with grease purged high speed and low speed oil seals for use in areas subjected to a considerable accumulation of external foreign matter. This consists of two oil seals with a grease chamber in between. An Alemite pressure fitting and relief fitting are mounted on the bearing cap 180° apart. The seals are mounted as shown in Fig. 9. In reassembly, prepack with grease in between the two seals.

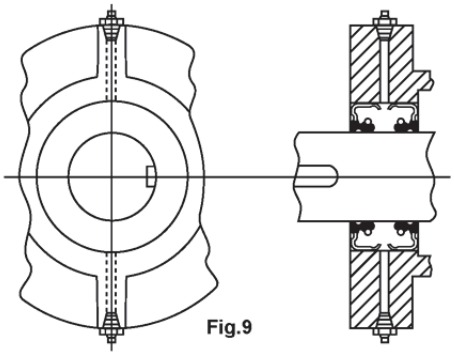

Fig.9

FANS

Some units may be equipped with a fan or fans for cooling. If the fan is on the end of the shaft opposite the drive end, a shaft guard is provided. The fan guard is split in two pieces as is the mounting plate which fastens to the housing through the bearing cap bolt holes. The fan hub is split in the center hub and clamps to the shaft with bolts through the hub split. In reassembly, make sure that the fan is in its original position and does not rub against either the fan guard, mounting plate, or bolt heads. If two fans are used, make certain that the mounting plate goes back on the same side as originally installed. The hole openings are different for the right and left sides. Openings in the fan guard and support plate should be kept free of dirt accumulation to permit proper air flow. See Fig. 10.

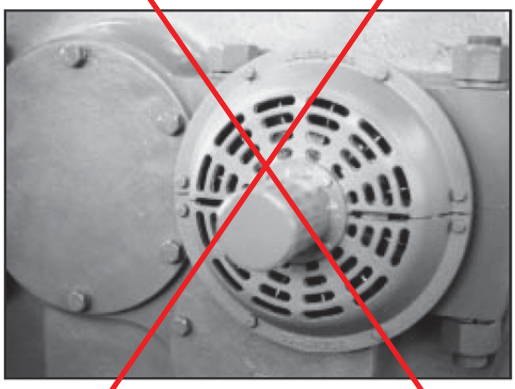

Fig. 10

HEAT EXCHANGER

Some units will incorporate a heat exchanger and a pump to circulate the lubricant. Before placing the exchanger in operation initially, or after a service inspection be sure that the unit is clean and full of fluid.

Oil Pump

Units furnished with heat exchangers are equipped with an oil pump mounted externally to the high speed shaft. When starting up the unit recheck the lubrication system to be sure it is functioning properly.

Heat Exchanger

To insure satisfactory performance the exchanger should be inspected periodically.

A. Remove the bonnets. Inspect all tubes carefully for possible erosion, corrosion, or foreign material.
B. Inspect all zincs to be sure they are neither excessively corroded. Scrape to a bright surface.
C. Inspect filters to prevent foreign matter from entering exchanger.
D. The interior of the tubes may be flushed by directing a stream of water through them. More stubborn deposits may require brushes, rods, or other cleaning tools.
E. The unit can be cleaned by circulating a mild alkaline cleaning solution, such as okite or an equal.

Oil Filter

Units furnished with heat exchangers are equipped with an oil filter. The filter should be cleaned after every change of lubricant. Remove filter elements and immerse in any non-caustic cleaning solvent for a short period of time.

A stiff brush may be used, if necessary, to remove impacted deposits between serrations. If compressed air is available, blow dry from inside out.

LUBRICATION
WARNING - This unit is shipped DRY! Oil must be added prior to operation. Any couplings attached are also DRY! and must be lubricated prior to operation. Manufacturer's recommendations should be followed.

The oil used should be a high quality product, having rust and oxidation inhibitors, anti-foaming agent, a high viscosity index (preferably above 90) and a low acid content. It should be neutral in reaction, free from girt or abrasives and non-corrosive to gears or bearings.

CAUTION - LOW TEMPERATURE OPERATION

1. The pour point of the oil should not exceed and preferably should be 5 to 10 degrees Fahrenheit (2.8° to 5.6° C) below the lowest ambient starting temperature.

2. When temperatures are below 15 degrees Fahrenheit, (-9.4° C) please refer to the factory for recommendations giving ambient temperature expected and operating cycle.

3. On vertical units or special horizontal units equipped with pumps, the viscosity can be critical at Low Temperatures in effecting proper operation of the pump. The oil viscosity in a pump driven lube system should not exceed 15,000 SUS. High viscosity lubricants may cause cavitation.

Prime pump with appropriate lubricant and check for oil flow.

For recommendations, refer to the factory giving full particulars of the lowest ambient temperatures affected and the operation cycle.

CHANGE CYCLE
We recommend changing oil every 2,500 hours or six months whichever occurs first. Make certain to be guided by seasonal temperature variations and change oil accordingly. Operating conditions can vary this guide line. Abnormal temperatures and contamination can seriously affect the lubricant causing early sludging, oxidation and acid formation. Under these conditions, a sample of the lubricant should be submitted to the petroleum supplier at periodic intervals. This will enable the establishment of a change cycle which would provide for renewal of the oil prior to its degradation. After the initial fill, the first oil change should be made after two weeks, or 100 hours of operation.

FOOD AND DRUG INDUSTRY
Some operations in the Food and Drug Industry require special lubrication considerations in view of possible toxicity from contamination by the oil or grease used in the equipment. Some EP products contain Lead Naphthenate, Phosphorus, or Chlorine which are toxic and could be harmful.

CAUTION: In the Food (including animal food) and Drug Industry, consult the petroleum supplier for recommendations of lubricants which are acceptable to the Food and Drug Administration and/or other authoritative bodies having jurisdiction.

COUPLINGS
Each coupling shipped with a reducer is tagged with a list of the proper lubricants and an outline of the correct lubrication practice to follow. They should be relubricated at regular intervals and not allowed to go dry.

BREATHER
Each unit is equipped with a breather. This should be cleaned at intervals to insure that it is working.

GREASE PURGED SEALS
Lubricate once a week with a high quality Lithium base grease NLGI No. 2 consistency.

GREASE LUBRICATION - VERTICAL REDUCER
Grease lubricate the lower output shaft bearings once a week at the Alemite grease fitting. A good grade of antifriction bearing grease or its equivalent should be used. It should have neutral and channeling characteristics with a consistency of NLGI #2. It should not be subject to excessive bleeding or deterioration.

NLGI #2 GREASE FOR REDUCERS

SUPPLIER	LUBRICANT
Amoco	Amolith EP2
BP Oil	Energrease LS EP2
Castrol	Molub-Alloy 860/150-2
Chevron Oil Co.	Chevron Ultra-Duty EP2
Citgo	Lithoplex #2
Conoco	EP Conalith
Exxon	Lidok EP2 or Unirex N2
Keystone	81EP2 or 84EP2
Lubriplate	No. 1200-2
Mobil Oil Co.	Mobilux EP-2
Pennzoil	Premium Lithium Complex 2
Phillips	Philube L+EP
Shell Oil Co.	Alvania #2 or EP-2
Sun Oil Co.	Ultra Prestige EP2
Texaco	Starplex 2
Unocal	Unoba EP2

6

RECOMMENDED LUBRICANTS

MANUFACTURE	3 (ISO 100)	3EP (ISO 100)	4 (ISO 150)	4EP (ISO 150)	5 (ISO 220)	5EP (ISO 220)	6 (ISO 320)	6EP (ISO 320)
Amoco Oil Co.	American Ind. Oil 100 (-15)	Permagear EP 100 (0)	American Ind. Oil 150 (-10)	Permagear EP150 (0)	American Ind. Oil 220 (-15)	Permagear EP220 (0)	American Ind. Oil 320 (-15)	Permagear EP 320 (+10)
Ashland Oil	Valvoline R&O 100 (-5)	Valvoline AGMA 3EP (-12)	Valvoline R&O 150 (-5)	Valvoline AGMA 4EP (-12)	Valvoline R&O 220 (0)	Valvoline AGMA 5EP (-9)	Valvoline R&O 320 (+5)	Valvoline AGMA 6EP (-9)
Bp Oil		Energear EP100 (+10)		Energear EP150 (+10)		Energear EP220 (+16)		Energear EP320 (+16)
Castrol Performance Lubes	Tribol 1100/100 (-8)	Tribol 1100/100 (-8)	Tribol 1100/150 (-8)	Tribol 1100/150 (-8)	Tribol 1100/220 (-8)	Tribol 1100/220 (0)	Tribol 1100/320 (0)	Tribol 1100/320 (0)
Chevron USA, Inc.	AW Machine Oil 100 (+5)		AW Machine Oil 150 (+10)	Ultra Gear 150 (-17)	AW Machine Oil 220 (+10)	Ultra Gear 220 (0)	AW Machine Oil 320 (+5)	Ultra Gear 320 (0)
Citgo Petroleum	Pacemaker 100 (+10)	Citgear EP100 (0)	Pacemaker 150 (+10)	Citgear EP150 (0)	Pacemaker 220 (+10)	Citgear EP220 (0)	Pacemaker 320 (+10)	Citgear EP320 (0)
Conoco Inc.	Dectol R&O 100	Gear 100	Dectol R&O 150	Gear 150	Dectol R&O 220	Gear 220	Dectol R&O 320	Gear 320
Exxon Co. USA	Teresstic 100 (0)	Spartan EP100 (0)	Teresstic 150 (0)	Spartan EP150 (0	Teresstic 220 (0)	Spartan EP220 (0)	Teresstic 320 (+16)	Spartan EP320 (+16)
Keystone Div. Penwalt Corp.	KLC-30 (+5)		KLC-40 (+5)	Keygear 90 (+5)	KLC-50 (+5)			Keygear 110 (+10)
Lubrication Engineers	Monolec Turbine 6404 (-10)	Almasol Gear 606 (-15)	Monolec Turbine 6405 (-10)	Almasol Turbine 604 (-10)	Monolec Turbine 6406 (-10)	Almasol Turbine 607 (-10)	Monolec Turbine 6407 (0)	Almasol Turbine 605 (0)
Lubriplate	SPO-233 (-35)	APG-80W-90 (-35)	SPO-244 (-25)	APG-90 (-20)	SPO-255 (-10)		SPO-266 (+10)	APG-80W-140 (-25)
Lyondell Oil	Duro 100 (+10)		Duro 150 (+15)	Pennant NL 150 (-10)	Duro 220 (+15)	Pennant NL 220 (0)	Duro 320 (+15)	Pennant NL320 (+10)
Mobil Oil Corp.	DTE 18-M (-20)	Mobilgear 627 (-10)	DTE Oil Extra Heavy (+25)	Mobilgear 629 (-10)	DTE Oil BB (+25)	Mobilgear 630 (0)	DTE Oil AA (+25)	Mobilgear 632 (0)
Pennzoil Co.	Pennzbell R&O 100 (-10)	Super Maxol EP100 (-5)	Pennzbell R&O 150 (+10)	Super Maxol EP150 (+10)	Pennzbell R&O 220 (+15)	Super Maxol EP220 (+15)	Pennzbell R&O 320 (+15)	Super Maxol EP320 (+10)
Phillips Petroleum Co.	Magnus 100 (-15)		Magnus 150 (-15)	Philgear 150 (+5)	Magnus 220 (-12)	Philgear 220 (+10)	Magnus 320 (-15)	Philgear 320 (+10)
Shell Oil Co.	Morlina 100 (0)	Omala 100 (-10)	Morlina 150 (0)	Omala 150 (0)	Morlina 220 (+10)	Omala 220 (+10)	Morlina 320	Omala 320
Sun Oil Co.	Sunvis 9100 (+10)	Sunep 100	Sunvis 9150 (+10)	Sunep 150 (+10)	Sunvis 9220 (+10)	Sunep 220 (+10)	Sunvis 9320	Sunep 320
Texaco Lubricants	Regal R&O 100 (+15)	Meropa 100 (-25)	Regal R&O 150 (+15)	Meropa 150 (-25)	Regal R&O 220 (+15)	Meropa 220 (-10)	Regal R&O 320 (+20)	Meropa 320 (-15)
Unocal		Extra Duty NL 3EP (+5)		Extra Duty NL 4EP (0)		Extra Duty NL 5EP (+10)		Extra Duty NL 6EP (+5)

Numbers parenthesis are pour points of the lubricant in degrees fahrenheit.

LUBRICATION

Lubricant Numbers for Spiral Bevel Helical Reducers

SIZE AND TYPE OF UNIT	AGMA LUBRICANT NUMBER AMBIENT TEMP. IN DEGREES FAHR			
	15° to 60° F (-9.4° to 15.6° C)		50° to 125° F (10° to 51.7° C)	
	Type of Service			
	Normal	Heavy Duty	Normal	Heavy Duty
Parallel Shaft Reducers				
0702, 0802, 0703, 0803 BHC, VBHC, BHE, VBHE	3	3EP	4	4EP
0902, 1002, 0903, 1003 BHC, VBHC, BHE, VBHE	3	3EP	5	5EP
*1102 through 4002 BHC, VBHC, BHE, VBHE 1103 through 2003 BHC, VBHC, BHE, VBHE	3	3EP	5	5EP
*2103 through 4003 BHC, VBHC, BHE, VBHE	4	4EP	6	6EP
*EP oils cannot be used in units containing internal backstops - Sizes 2102 to 3202, 2103 to 3203 BHC, VBHC, BHE, VBHE				

VISCOSITY RANGES FOR AGMA LUBRICANTS

Rust and oxidation inhibited gear oils	Viscosity range	Equivalent ISO grade	Extreme pressure gear lubricants	Synthetic gear oils
AGMA Lubricant No.	mm 2/s (cSt) at 40° C		AGMA Lubricant No.	AGMA Lubricant No.
3	90 to 110	100	3EP	3S
4	135 to 165	150	4EP	4S
5	198 to 242	220	5EP	5S
6	288 to 352	320	6EP	6S

BACKSTOP LUBRICATION

Temperature Range	+20° F to +150° F (Maximum permissible ambient temp.)	-10° F to +20° F	-40° F to +150° F
Recommended Lubricant	Mobil DTE Heavy Medium Any Automatic Transmission Fluid (high grade only) Texaco Regal R & O #68 Shell Turbo Oil #68 Gulf Harmony #68 Amoco Industrial Oil #68 Exxon Terresco Oil #68 Sunoco Sunvis 931	Mobile Gargoyle Arctic "C" Heavy Texaco Regal R & O #46 Any Automatic Transmission Fluid (high grade only) Sunoco Sunvis 921 Chevron GST Oil 931	Mobil Jet Oil #2 Shell Turbine Oil #500 Exxon Turbo Oil #2389 Standard Esso Turbo Oil #2389 Military Oils MIL-L-7808 or MIL-L-23699

CAUTION: Do not use lubricants of the E.P. type (extreme pressure characteristics), or those containing slippery additives in backstops.

8

DISASSEMBLY

NOTE: Do not disassemble reducers without first disconnecting driving and driven equipment.

A) HORIZONTAL (BHC & BHE) UNITS:

1. Drain oil from reducer and remove breather and inspection cover taking care not to damage the gasket under the cover.

2. Remove bolts holding upper and lower housing together and the two dowel pins located at each end of the housing.

3. Remove bearing cover bolts holding the covers to the upper housing. Back the bearing cover bolts in the lower housing out 3/16" (4.76 mm) and move covers away from the housing taking care not to damage shims. Shims may stick to housing. If so, loosen with sharp flat tool such as a knife or putty knife. Tie each shim pack to its respective cover to prevent damage.

4. Lift off upper housing.

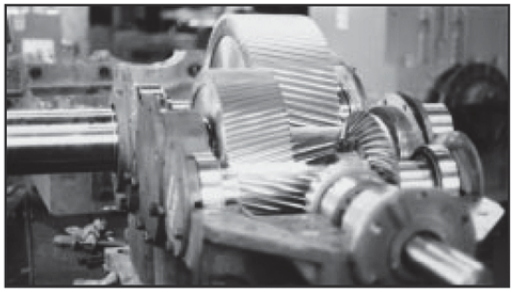

(Upper Housing Removed)

NOTE:
Input shaft bearings on all double and triple reduction units are mounted in bearing retainers. (See Fig. 1) With the exception of Style IV Reducers, output shaft bearing cups on Size 1402 through 2002 and 1403 through 2003 units are mounted in the bearing covers. Style IV units have their output shafts mounted directly in the housing bores.

All sizes 2102 through 3202, and 2103 through 3203, have their output shaft bearings mounted in bearing retainers.

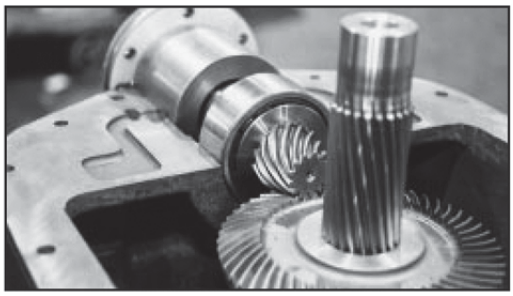

Fig. 11

5. Remove remaining bearing cover bolts and lift out all bearing cups. The weight of each shaft must be supported with a sling to prevent damage to bearing cone assemblies. (Should shaft weight be allowed to push aside bearing cups, cone assemblies will drop into housing bores.) Lift out each shaft assembly starting with the input shaft and set aside making sure that bearing cone assemblies are not resting on the ground or carrying the weight of their shafts. Take care to keep each shim pack intact and with its respective bearing cover.

6. For all bearings, cone assemblies are press fit on shafts and cups are push fit in housings, bearing covers, or bearing retainers. Should it become necessary to remove a bearing cone assembly, a conventional bearing or gear puller can be used. Grip cone shoulder with puller fingers making certain that puller arms clear the bearing assembly. A small press may also be used to remove bearings by supporting the shaft assembly on the cone shoulder. Keep bearings off of floors and away from dirt.

NOTE:
The input shaft assembly on sizes 0702 through 2003 consists of one straight roller bearing and two tapered roller bearings mounted in a bearing retainer and secured by means of a locknut and lockwasher. On sizes 2102-2103 through 3202-3203 the input shaft assembly consists of two double row tapered roller bearings.

7. Should it become necessary to examine the tapered roller bearings, remove locknut and lockwasher and press input shaft from bearing retainer. Do not support the bearing retainer on its flange while pressing the input shaft. Support across the surface nearest the straight roller bearing. Once the shaft has been removed the bearings can be drawn from the retainer. In an effort to prevent damage to bearings never support any weight on cage or rollers. (i.e. cone assembly)

8. All gears are press fit on their respective shafts. A press is desirable for their removal.

9. All oil seals are press fit into their respective bearing covers. Oil seals should be driven from bearing covers using a piece of wood so as to avoid damaging the seal bore surface in the cover.

B) VERTICAL (VBHC & VBHE) UNITS:

1. Drain oil from reducer and remove breather and inspection cover taking care not to damage the gasket under the cover.

2. Remove pump adaptor bearing cover from upper housing and lift out pump and pump spring.

NOTE:
Pump cap need not be removed from bearing cover.

3. Remove bolts holding upper and lower housing together and the two dowel pins located at each end of the housing.

4. Remove the bolts holding the input shaft bearing cover to the upper housing. Back the remaining input bearing cover bolts out 3/16" (4.76 mm) and move cover and retainer away from housing taking care not to damage shims.

5. Lift off upper housing.

NOTE:
Input shaft bearings on all double and triple reduction units are mounted in bearing retainers. With the exception of style IV reducers, output shaft bearing cups on size 1402 through 2002 and 1403 through 2003 units are mounted in the bearing covers. (All 2102-2103 through 3202-3203 and all units designated style IV have their output shaft bearings mounted directly in the housing bores.)

6. On units where the output shaft extends downward a dry well and umbrella are employed. The dry well is fastened to the inside of the lower housing at the output shaft bore while the umbrella is assembled on the output shaft.

7. After removing the input shaft bearing cover, lift out each shaft assembly starting with the input shaft on double reduction units and the first intermediate shaft on triple reduction units. Set each shaft assembly aside making sure that bearing cone assemblies are not resting on the ground or supporting the weight of the shaft.

8. Remove bearing covers from upper and lower housing taking care to keep shim packs intact. Should shims stick to housing, loosen with sharp instrument. Tie each shim pack to its respective cover to prevent damage.

9. Follow steps 6 through 9 in horizontal (BHC & BHE) disassembly.

CLEANING:
All parts, including housing, should be thoroughly washed with kerosene or a mineral solvent. All accumulations of sludge and corrosion deposits should be removed. Do not use a wire brush on bearing or gear tooth surfaces. Avoid scratching these areas. All old sealant should be scraped from mating flange surfaces of housing and bearing covers.

REASSEMBLY
HORIZONTAL (BHC & BHE) AND VERTICAL (VBHC & VBHE) UNITS:
1. Reassembly is basically the reverse of the disassembly procedure.

2. Install new oil seals in the open end input shaft and output shaft bearing covers. (See special instructions under oil seals.)

3. Bearing cones may be heated to facilitate assembly onto shafts. Heating can be done with an infra-red lamp, a heated oil bath, or an oven. If an oil bath or oven is used take care to support the bearing away from the bottom and sides of the container so as to avoid direct contact between bearing and areas of localized heat (heating element or flame).

CAUTION: Heating beyond 250°F (121.1°C) may tend to draw back the bearing hardness. Do not exceed this temperature. If heating facilities are not available it will be necessary to use a press. Before pressing check shaft shoulders for burrs or dirt. Remove them is present; otherwise, bearing and gears will not seat squarely. In pushing bearing cone onto shaft make sure that
no force is exerted on cage or rollers. Apply anti-seize compound to bearing seat prior to pressing. Press only on cone shoulder making certain that cone seats flush with shaft shoulder. In supporting shaft make sure that point of support is on the shaft and not on bearing cone assembly.

4. To reassemble the input shaft assembly first seat the inside bearing cup in the bearing retainer then pass the input shaft through the retainer. Press both bearing cone assemblies onto the input shaft and insert the outside bearing cup in the retainer. Put spacer in place and secure with locknut and lockwasher.

5. Shafts with bearings and gears installed along with bearing covers and shim packs should be placed back in the housing in the reverse order of disassembly. Coat bearings with film of oil prior to assembly into housing. A sealant such as General Electric RTV-102 or Permatex No. 2 should be applied to the housing split and to the bearing cover flange surfaces of the housing and the bearing cover flanges.

6. All bearing covers should be mounted with their original shim packs in position. In mounting the open covers with oil seals care must be taken not to damage the seals. Wrap .005" (.127 mm) plastic shim stock around shaft extensions over keyseats and/or shoulders to protect the seal lip. Slide seal along shaft extension gently to prevent dislocation of the spring behind the seal lip. Align housing halves with dowels and tighten housing bolts evenly to prevent warping of the housing. Bearing cover bolts should be tightened last.

NOTE:
Apply a silicone sealant such as Dow Corning RTV 732 or an equivalent to the bearing cover gaskets on VBHC & VBHE units. Failure to do so will result in oil leakage.

RECOMMENDED BOLT TIGHTENING TORQUES* (lb-ft)

BOLT SIZE	GRADE	GRADES	GRADE VIII, STUDS, & SOC. HD. SCREWS
1/4	6	9	13
5/16	11	18	28
3/8	19	31	46
7/16	30	50	75
1/2	45	75	115
9/16	66	110	165
5/8	93	150	225
3/4	150	250	370
7/8	200	380	590
1	300	585	895
1-1/8	475	780	1410
1-1/4	660	1100	1960
1-3/8	885	1460	2630
1-1/2	1060	1750	3150
1-5/8	1450	2390	4310
1-3/4	1880	3110	5610
1-7/8	2340	4190	7550
2	2720	4500	8100
2-1/4	3420	6500	11,700
2-1/2	4380	7140	16,200

*Maximum torque values are shown. Use 90% to 100% of these values.

It is important that bolts and studs be tightened to the above values. If mechanical means are not available to develop the high torques required for the larger sizes, thermal means may be used. By this method, bolts or studs are expanded by heating in
accordance with the table below. They are then installed quickly and torqued snugly before significant cooling can occur. The shrinkage produces the desired tension in the bolt or stud without heavy torquing. Bolts and studs should be heated in a

PATTERNING OF SPIRAL BEVEL GEAR SET:

To insure the proper functioning of spiral bevel gear sets correct tooth contact must be maintained. The desired tooth contact is shown in Fig. 12. To achieve this contact, the following procedure is recommended.

1. Adjust gear and pinion so that the surface designated "P" and "G" in Fig. 12 lie in the same plane.

2. Coat bevel pinion teeth with prussian blue or red lead.

3. Rotate pinion while applying a slight drag to bevel gear. This will cause coating in areas of contact to rub onto mating gear leaving a clearly defined contact pattern.

The optimum pattern is called a "central toe pattern." In defining terminology toe is the thin while heel is the thick portion of the tooth. It is desirable to have the initial pattern begin slightly to the toe side of the midpoint of the tooth and extend over 50% to 60% of the face width (under moderate load).

Typical conditions that might be encountered in spiral bevel assemblies are shown in Figs. 12-14. The corrective action to be taken when these conditions are encountered is also indicated. In or out adjustment of the bevel pinion requires the addition or removal of shims between the input shaft bearing retainer and housing. When it is desired move the bevel gear in or out, shims from between the bearing cover and housing must be removed from one side of the reducer and added to the opposite side.

IMPORTANT: In addition to achieving the proper contact pattern on gear tooth surfaces, the correct backlash must be established. The backlash for each spiral bevel set is marked on both pinion and gear. To check backlash place pointer of dial indicator against tooth of bevel pinion. While holding bevel gear firmly in place, rotate pinion back and forth. Total deviation in indicator readings is the backlash (See Fig. 15). To increase backlash move bevel gear towards pinion, recheck pattern after setting backlash. Do not attempt to establish backlash by adjusting the bevel pinion as this will adversely affect the contact pattern. Inadequate backlash will result in abnormal wear of gear and pinion, thereby diminishing the life of the reducer.

Fig.15

TOOTH CONTACT PATTERN SPIRAL BEVEL GEARS – LH PINION PREFERRED CONTACT RESULTING FROM CORRECT MOUNTING POSITION

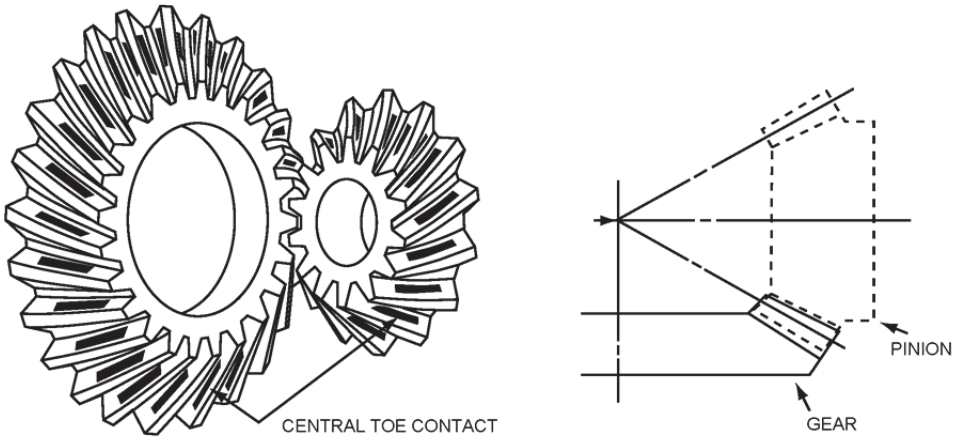

Fig. 12

TOOTH CONTACT PATTERN SPIRAL BEVEL GEARS – LH PINION HIGH OR LOW CONTACT RESULTING FROM PINION AXIAL POSITION ERROR

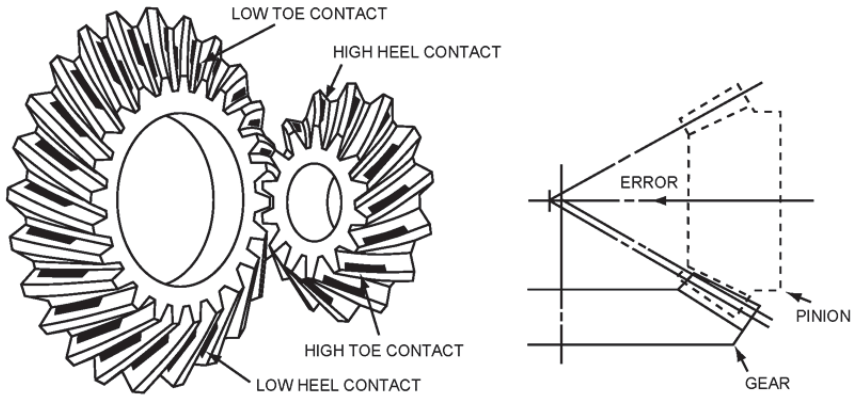

Fig. 13

If the contact pattern is high on the profile of the pinion and low on the profile of the gear, the pinion should be moved axially out of mesh.

Unlike straight bevel gears, the movement of the contact up and down the profile is accompanied by a movement along the length of the tooth caused by the lengthwise tooth curvature.

Generally, the contact will be near the toe on the convex side of the gear tooth and near heel on its concave side. When viewing the pinion, the opposite contact patterns will exist. (See Figure 13).

It may be necessary to move the gear axially into mesh until the required backlash and tooth-contact patterns are obtained.

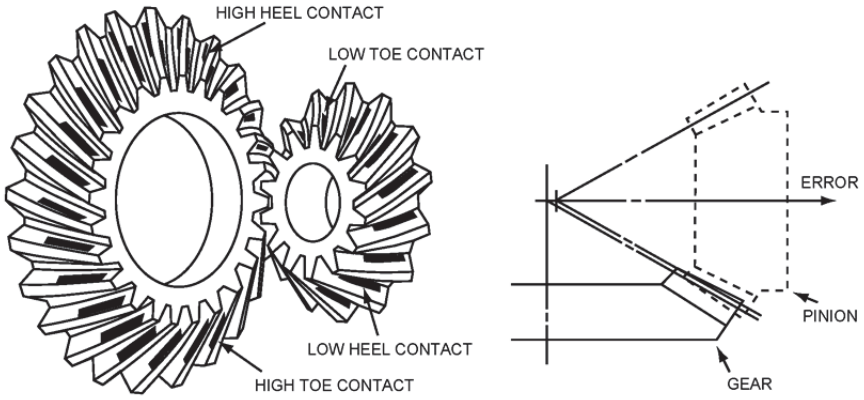

Fig. 14

If the contact pattern is low on the profile of the pinion and high on the profile of the gear, the pinion should be moved axially into mesh.

Unlike straight bevel gears, the movement of the contact up and down the profile is accomplished by a movement along the length of the tooth caused by the lengthwise tooth curvature.

Generally, the contact will be near the heel on the convex side of the gear tooth and near the toe on its concave side. When viewing the pinion the opposite contact patterns will exist. (See Figure 14).

It may be necessary to move the gear axially out of mesh until the required backlash and tooth-contact patterns are obtained.

BEARING ADJUSTMENT

H.S. SHAFT
0702-0703 through 2002-2003 BHC/BHE & VBHC/VBHE.
The H.S. Shaft consists of two tapered roller bearings & one straight roller bearing. Refer to the chart below to determine the proper axial endplay for the tapered roller bearings.

2102-2103 through 3202-3203? BHC/BHE & VBHC/VBHE.
The high speed bearings adjacent to the shaft extension on BHC and VBHC reducers have a specific endplay for each reducer. These bearings must be purchased from the factory. If bearings must be purchased from a supplier, specific ordering instructions must be obtained from the factory to insure correct assembly. Failure to do so will result in premature failure of gearing and/or bearings. The high speed double row tapered roller bearing adjacent to the pinion is preset at the factory and requires no endplay adjustment.

SINGLE ROW TAPERED ROLLER BEARINGS
All single row tapered roller type bearings require a specific axial endplay for each size.

Tabulated below is the allowable axial endplay for each shaft assembly. Before checking endplay rotate the input shaft until the output shaft has made two complete rotations. This is done to seat the bearing rollers. To check endplay, place a dial indicator pointer against shaft end or face of gear mounted on shaft and wedge shaft to its extreme opposite positions. The total dial variation is the shaft endplay. If the measured endplay does not fall within the limits specified above, it will be necessary to alter the shim packs accordingly. (Add shims to increase endplay, remove shims to decrease endplay). Rotate shafts each time shim packs are altered and recheck endplay. Access to shim packs is gained by removing bearing covers. When removing those covers that contain bearing cups, it will be necessary to support the shaft with a rope or sling.

SINGLE-ROW TAPERED ROLLER BEARING ENDPLAY

REDUCER SIZE	H.S. SHAFT	INT. SHAFT	2nd INT. SHAFT	L.S. SHAFT
0702	.003-.006	.002-.004	–	.002-.004
0703	.003-.006	.002.004	.002-.004	.002-.004
0802	.003-.006	.003-.005		.002-.004
0902	.003-.006	.003-.005	.002-.004	.002-.004
0903	.003-.006	.003-.005		.002-.004
0903	.003-.006	.003-.005	.002-.004	.002-.004
1002	.003-.006	.003-.005		.002-.004
1003	.003-.006	.003-.005	.002-.004	.002-.004
1102/1202	.004-.007	.004-.006		.002-.004
1103/1203	.004-.007	.004-.006	.002-.004	.002-.004
1302/1402	.004-.007	.005-.007	–	.002-.004
1303/1403	.004-.007	.005-.007	.003-.005	.002-.004
1503/1603	.004-.007	.005-.007		.002-.004
1503/1603	.004-.007	.005-.007	.003-.005	.002-.004
1703/1803	.005-.008	.006-.008		.002-.005
1703/1803	.005-.008	.006-.008	.004-.006	.003-.005
1902/2002	.005-.008	.007-.009		.002-.005
1903/2003	.005-.008	.007-.009	.004-.006	.002-.005

METRIC EQUIVALENTS

INCHES	MILLIMETERS	INCHES	MILLIMETERS
.002	.051	.006	.152
.003	.076	.007	.178
.004	.102	.008	.203
.005	.127	.009	.229

At all positions where double row tapered roller or spherical roller bearings are employed, no specific axial endplay is required. However, in reassembly, one bearing on each shaft must be allowed to float in the housing to allow for axial expansion of the shaft, the other bearing is to be fixed.

NOTE:
Plastic/Aluminum shims are used in original assembly. Use no substitutes. After setting the axial endplay, recheck the tooth contact on the spiral bevel pinion and gear.

BACKSTOPS
Only horizontal units may be equipped with a backstop. For 0702 through 2003 BHC's & BHE's the backstop is mounted on the low speed pinion and shaft extension on double reduction and on the first intermediate shaft extension on double reduction and on the first intermediate shaft extension on triple reduction. On 2102-2103 through 3202-3203 BHC's & BHE's the backstop is mounted internally on the high speed pinion shaft.

WARNING. The manufacturer does not recommend repair in the field nor attempting to change direction of rotation in the field. In either case, the backstop should be returned to the factory.

0702 through 2003 BHC & BHE
1. To take off the backstop, drain oil from the reservoir and remove it by unscrewing cap screws holding it to the backstop body. Bend back locking tab on lockwasher and unscrew locknut. The backstop and torque arm can be pulled off by prying between the torque arm and the housing or by use of a gear puller. The manufacturer does not recommend repair in the field nor attempting to change direction of rotation in the field. In either case, the backstop should be returned to the factory.

2. Clean off all sealant from the shaft surfaces as well as the key, keyways, and backstop bore. Flush out backstop with Mobil Oil Solvosol or equivalent. Do not use Carbon Tetrachloride. Clean the breather also with the same solvent. This is to prevent oil leakage from the reservoir back along the shaft.

3. Balance of reassembly is reverse of disassembly. Check torque arm for free movement. It must not bind in bottom of its stop.

4. Fill backstop to indicated level with proper oil. (See section under lubrication.)

5. Flushing is recommended every six months for up to 12 hours per day operation and every three months for 12 to 24 hours per day operation. Drain oil from reservoir fill with Mobil Oil Solvosol or equivalent and run for several minutes. Then drain after removing both the plug in the housing and the plug in the reservoir. Add fresh oil (see section under lubrication). For extremely dusty or dirty operating conditions, it may be necessary to change oil at more frequent intervals or often enough to keep oil clean. When oil becomes contaminated or oxidized (dark colored), it should be flushed and oil changed.

2102-2103 through 3202-3203 BHC & BHE
1. Follow steps 1 –4 on BHC & BHE disassembly, (0702 through 2003).

2. Remove remaining bearing cover bolts from the high speed bearing cover, and the four bolts holding the bearing support to the lower housing.

3. Lift high speed shaft assembly from lower housing. Remove locknut and lockwasher and press input shaft from bearing retainer.

4. Remove the backstop and torque arm from the input shaft.

5. Reassembly is reverse of disassembly. Check torque arm for free movement. It must not bind in bottom of its stop.

6. WARNING. Do not use lubricants of the EP type, (extreme pressure characteristics, or those containing slippery additives).

ASSEMBLY AND PARTS LIST DRAWING

SPIRAL BEVEL GEAR REDUCERS
TYPE BHC, BHE
DOUBLE REDUCTION

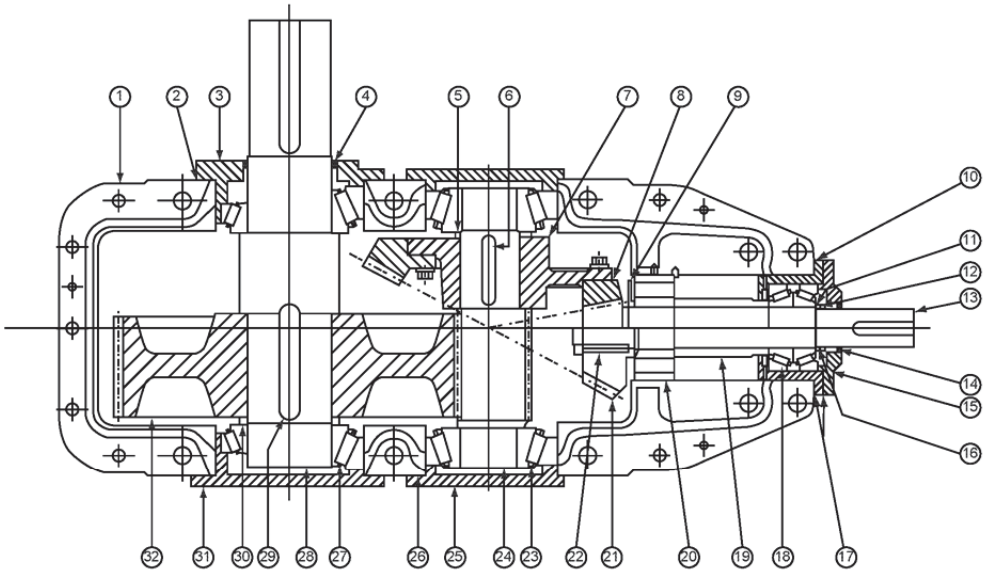

1. HOUSING, LOWER (UPPER NOT SHOWN)
2. LOW SPEED BEARING COVER SHIM
3. LOW SPEED BEARING COVER (OPEN)
4. LOW SPEED SHAFT OIL SEAL
5. LOW SPEED PINION AND SHAFT SPACER
6. LOW SPEED PINION AND SHAFT KEY
7. SPIRAL BEVEL GEAR SPIDER
8. SPIRAL BEVEL GEAR RING
9. HIGH SPEED OIL SLINGER
10. HIGH SPEED BEARING RETAINER
11. HIGH SPEED LOCKNUT SPACER
12. HIGH SPEED BEARING LOCKWASHER
13. HIGH SPEED SHAFT
14. HIGH SPEED SHAFT OIL SEAL
15. HIGH SPEED BEARING COVER (OPEN)
16. HIGH SPEED BEARING LOCKNUT
17. HIGH SPEED BEARING COVER SHIMS
18. HIGH SPEED TAPERED ROLLER BEARING
19. HIGH SPEED BEARING SPACER
20. HIGH SPEED STRAIGHT ROLLER BEARING
21. SPIRAL BEVEL PINION
22. HIGH SPEED PINION KEY
23. INTERMEDIATE BEARINGS
24. LOW SPEED PINION AND SHAFT
25. LOW SPEED PINION AND SHAFT BEARING COVER
26. INTERMEDIATE BEARING COVER SHIMS
27. LOW SPEED BEARINGS
28. LOW SPEED SHAFT
29. LOW SPEED SHAFT KEY
30. LOW SPEED SPACER
31. LOW SPEED BEARING COVER (CLOSED)
32. LOW SPEED GEAR

TYPICAL ON ALL PARTS LISTS.
NOTE: HIGH SPEED BEARINGS ON SIZE 2102 THROUGH 3202 ARE TAPERED ROLLER DESIGN. INTERMEDIATE BEARINGS MAY BE MOUNTED IN BEARING RETAINERS. REFER TO FACTORY WITH REDUCER SERIAL NUMBER FOR INFORMATION ON BEARINGS AND BEARING RETAINERS.

15

FOOTE-JONES

Custom Gearing

Bevels
Helical
Spurs
Racks
Herringbones
Worm Gearing
Splined Shafts

Enclosed Drives

Concentrics
Parallel Shafts
Spiral Bevels
Worms
Shaft Mounts
Screw Conveyor Drives

FOOTE-JONES
A REGAL-BELOIT Company

2914 Industrial Avenue • Aberdeen SD 57402-1089 • 605-225-0360 • Fax: 605-225-0567
1-800-482-2489 • www.footejones.com

Printed in U.S.A. 9917F/3M/1-97/CP/BH

11.7.2 TURNING MACHINERY SPEED REDUCER – FALK TYPE CB

REXNORD

Falk™ Enclosed Gear Drives • Installation and Maintenance

Types E & C • Sizes 1 thru 8 (Page 1 of 4)

Introduction

The following instructions apply to all standard Falk™ Type E Motoreducers and Type C Speed Reducers shown at right. If a drive is furnished with special features, refer to the supplementary instructions shipped with the drive.

Credit for long service and dependable operation of a gear drive is often given to the engineers who designed it, or the craftsmen who constructed it, or the sales engineer who recommended the type and size. Ultimate credit belongs to the mechanic on the job who worked to make the foundation rigid and level, who accurately aligned the shafts and carefully installed the accessories, and who made sure that the drive received regular lubrication. The details of this important job are the subject of this manual.

WARRANTY — Rexnord Industries (the "Company") warrants that, for a period of three years from the date of shipment, the product described herein will deliver successfully its rated output as indicated on the nameplate, provided, it is properly installed and maintained, correctly lubricated, and operated in the environment and within the limits of speed, torque or other load conditions for which it was sold. Such product is expressly not warranted against failure or unsatisfactory operation resulting from dynamic vibrations imposed upon it by the drive system in which it is installed unless the nature of such vibrations has been fully defined and expressly accepted in writing by the Company as a condition of operation.

CAUTION: *Consult applicable local and national safety codes for proper guarding of rotating members. Lock out power source and remove all external loads from drive before servicing drive or accessories.*

Installation Instructions

FOR SATISFACTORY PERFORMANCE, CAREFULLY FOLLOW THESE INSTRUCTIONS

WELDING — Do not weld the gear drive housing or accessories without prior approval from Rexnord Industries. Welding on the drive may cause distortion of the housing or damage to the bearings and gear teeth. Welding without prior approval could void the warranty.

NAMEPLATE — Operate drive only at horsepower, speed and ratio shown on nameplate. Before changing any one of these, submit complete nameplate data and new application conditions to the Factory for correct oil level, parts and application approval.

TIGHTENING TORQUES — Fasteners-See Page 2.

GREASE LUBRICATED BEARINGS — See Page 3.

STORED AND INACTIVE DRIVES — See Page 4.

MOUNT HORIZONTALLY — *CAUTION:* *Mount drive with base horizontal, unless it has been specifically ordered for mounting in another position. If it is necessary to mount the drive in a different position from that for which it was ordered, consult the Factory for changes necessary to provide proper lubrication.*

FOUNDATION, GENERAL —To facilitate oil drainage, elevate the drive foundation above the surrounding floor level as illustrated. If desired,replace the drive oil drain plug with a valve, but provide a guard to protect the valve from accidental breakage. When an outboard bearing is used, mount drive and outboard bearing on a continuous foundation or bedplate and dowel both in place.

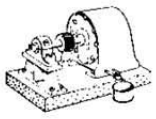

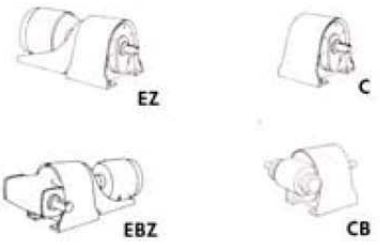

FOUNDATION, STEEL — When mounting drive on structural steel, it is recommended that an engineered design be utilized for a baseplate or bed to provide sufficient rigidity, to prevent induced loads from distorting the housing and causing gear misalignment. In the absence of an engineered design, it is recommended that a baseplate, with thickness equal to or greater than the thickness of the drive feet, be securely bolted to steel supports and extended under the entire drive as illustrated.

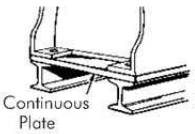

FOUNDATION, CONCRETE — If a concrete foundation is used, allow the concrete to set firmly before bolting down the drive. For the best type of mounting, grout structural steel mounting pads into the mounting base, as illustrated, rather than grouting the drive directly into the concrete.

Motors and other components (whether mounted on motor plates or motor brackets) may become misaligned during shipment. ALWAYS check alignment after installation. Refer to Page 2 for coupling alignment instructions.

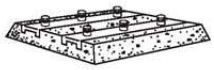

DRIVE ALIGNMENT — Align drive with driven equipment by placing broad, flat shims under all mounting pads. Start at the low speed shaft side and level across the length and then the width of the drive. Check with a feeler gauge to make certain that all pads are supported to prevent distortion of housing when drive is bolted down. After drive is aligned with driven machine and bolted down, align prime mover to drive input shaft. See Page 2 for coupling alignment.

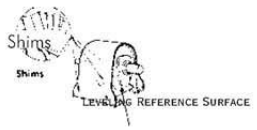

If equipment is received from Rexnord mounted on a bedplate, the components were accurately aligned at Rexnord with the bedplate mounted on a large, flat assembly plate. Shim under the bedplate foot pads until the bedplate is level and all feet are in the same plane.

Check the high speed shaft coupling alignment. If the coupling is misaligned, the bedplate is shimmed incorrectly. Reshim bedplate and recheck high speed coupling alignment. If necessary, realign motor.

Rexnord Industries, LLC, Gear Group
3001 W. Canal St., Milwaukee, WI 53208-4200 USA Telephone: 414-342-3131
Fax: 414-937-4359 e-mail: info@rexnord.com web: www.rexnord.com

128-050
October 2006
Supersedes 8-86

Installation and Maintenance • Falk™ Enclosed Gear Drives

REXNORD

(Page 2 of 4) Sizes 1 thru 8 • Types E & C

MOTOR BRACKETS — The weight, location and starting torque of the motor will cause some brackets to deflect downward and to twist. This movement is within allowable engineered limits for drive-motor selections from the Falk™ selection guide. If the customer considers the movement excessive, jackscrew supports for the bracket extension are available from Rexnord whether the motor was mounted by Rexnord or the customer. To compensate for deflection caused by heavy motors AND to get CORRECT COUPLING ALIGNMENT, use more shims under the rear motor feet than the front feet.

Motors and other components (whether mounted on motor plates or motor brackets) may become misaligned during shipment. ALWAYS check alignment after installation. Refer to coupling alignment instructions below.

SHAFT CONNECTIONS

COUPLING CONNECTION — The performance and life of any coupling depends largely upon how well the coupling is installed and serviced. Refer to the coupling manufacturer's manual for specific instructions.

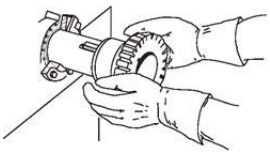

CORRECT METHOD

Heat interference fitted coupling hubs, pinions, sprockets or pulleys to a maximum of 275°F (135°C) and slide onto drive shaft.

—CAUTION—
DO NOT HAMMER

INCORRECT METHOD

DO NOT drive coupling hub, pinion, sprocket or pulley onto the shaft. An endwise blow on the shaft may damage gears and bearings.

Provide suitable guards in accordance with OSHA standards.

BACKSTOP— To prevent damage to backstops due to incorrect motor shaft rotation at startup, couplings are NOT assembled when drives are furnished with backstops. After completing the electrical connection, check motor and drive shaft rotations. Then complete alignment and assembly of coupling.

FALK™ COUPLINGS — Detailed installation manuals are available from the Factory and your local Rexnord Account Executive or Distributor – just provide size and type designations stamped on the coupling. Refer to Manual 428-010 for Steelflex® couplings and Manual 458-010 for Gear couplings for lubricant requirements and a listing of typical lubricants meeting Rexnord specifications.

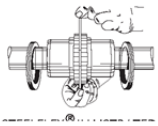

The following instructions apply to coupling alignment:

Gap and Angular Alignment — If possible, after mounting coupling hubs, position the driving and driven drives so that the distance between shaft ends is equal to the coupling gap. Align the shafts by placing a spacer block, equal in thickness to required gap, between hub faces, as shown above, and also at 90° intervals around the hub. Check with feelers.

Offset Alignment — Align shafts of driving and driven drives so that a straightedge will rest squarely on both coupling hubs as shown to the right and also at 90° intervals. Tighten foundation bolts of the connected equipment and recheck alignment and gap.

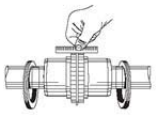

PINION MOUNTING — Mount the pinion as close to the drive as possible to avoid undue bearing load and shaft deflection. Refer to the Factory for pinion alignment instructions.

OUTBOARD BEARING — Mount the outboard bearing and drive on a common foundation so that they will shift as an assembly if settling should occur. Bring the outboard bearing to the correct horizontal position with broad flat shims under the mounting pad. Align accurately so that the load is equally divided between the two drive bearings and the outboard bearing. Mount a stop bar against the pillow block foot on the load side when large horizontal load components are exerted on the pillow block.

SPROCKET, PULLEY OR SHEAVE CONNECTION —Mount power take-offs as close to the gear drive housing as possible to avoid undue bearing load and shaft deflection.

Align the output shaft of the gear drive square and parallel with the driven shaft by placing a straightedge across the face of the sprockets or sheaves as illustrated.Check horizontal shaft alignment by placing one leg of a square against the face of the sheave or sprocket with the spirit level on the horizontal leg of the square.

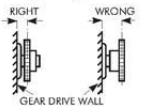

DO NOT over tighten belts or chains. Adjust chains to manufacturers' specifications. Adjust belts as follows:

The ideal tension is the lowest tension at which the belt will not slip under peak load conditions. Check the belt tension frequently during the first 24 to 48 hours of run-in operation. Over tightening belts shortens belt and bearing life. Keep belts free from foreign material which may cause slippage. Inspect the V–belt periodically; tighten the belts if they are slipping.

TIGHTENING TORQUES — Use the values specified in the table below for fastening motors and Falk™ drives and accessories to their mounting surfaces with SAE Grade 5 or ASTM A449 non-lubricated fasteners. DO NOT use these values for "torque locking" fasteners or for fastening components with aluminum feet or with soft gaskets or vibration dampers on the mounting surface. If the tightening torque exceeds the capacity of the torque wrench, use a torque multiplier.

Tightening Torques – lb-in – DO NOT LUBRICATE FASTENERS

Thread Dia-UNC	Metal to Metal	Metal to Concrete	Thread Dia-UNC	Metal to Meta	Metal to Concrete
.250-20	90	70	1.250-7	12600	10000
.3125-18	185	145	1.375-6	16500	13000
.375-16	330	255	1.500-6	22100	17500
.500-13	825	640	1.750-5	23700	18700
.625-11	1640	1280	2.000-4 1/2	37000	29000
.750-10	2940	2290	2.250-4 1/2	52000	41000
.875-9	4560	3750	2.500-4	72000	56000
1.000-8	6800	5600	2.750-4	98000	77000
1.125-7	8900	7000	3.000-4	125000	99000

128-050
October 2006
Supersedes 8-86

Rexnord Industries, LLC, Gear Group
3001 W. Canal St., Milwaukee, WI 53208-4200 USA Telephone: 414-342-3131
Fax: 414-937-4359 e-mail: info@rexnord.com web: www.rexnord.com

REXNORD

Falk™ Enclosed Gear Drives • Installation and Maintenance

Types E & C • Sizes 1 thru 8 (Page 3 of 4)

LUBRICATION

DRIVE LUBRICATION — Read and carry out all instructions on lubrication plate and heed all warning tags. Determine minimum and maximum ambient temperatures in which the drive is to operate and read the SAE or AGMA lubricant number for those temperature conditions from the lubrication plate on the drive. Select a lubricant from Manual 128-010 corresponding to the SAE or AGMA lubricant number.

OPERATING TEMPERATURE — If the drive is operated in an area where the temperatures vary with the season, change the oil viscosity to suit the season. For cold weather operation, use a light oil that will circulate freely at all times. The pour point of the oil should be less than the minimum external temperature encountered. During hot weather, use a high viscosity oil that will not thin out and lose its lubricating qualities.

If a drive operates in the sun at ambient temperatures over 100°F (38°C), then special measures should betaken to protect the drive from solar energy. This protection can consist of a canopy over the drive or reflective paint on the drive. If neither is possible, a heat exchanger or other cooling device may be required to prevent the sump temperature from exceeding the allowable maximum of 200°F (93°C).

EXTREME PRESSURE LUBRICANT — DO NOT use extreme pressure lubricant in drives equipped with an internal backstop. Drives sometimes are severely overloaded due to a change in design of the driven machine, or a change in the nature of the material that is being processed. This also occurs when power requirements are in excess of that originally estimated. As a result, the gear teeth may show signs of distress in the nature of scuffing, scoring or pitting. For applications of this nature, an extreme pressure lubricant is recommended. This gives added protection to the gear teeth and may retard scoring and scuffing. However, this is not a cure-all. Applications which are severely overloaded should be referred to the Factory for further study and recommendations. Extreme pressure lubricants are listed in Manual 128-010.

SYNTHETIC LUBRICANTS — Do not use synthetic lubricants in drives equipped with internal backstops. Synthetic lubricants of the polyalphaolefin type have been used successfully in gear drives to provide certain advantages beyond that available with Mineral Oil or Extreme Pressure Oil. Depending upon operating conditions, these advantages may include: longer service life between lubricant changes, elimination of need to change lubricant to suit the season, operating capabilities beyond the high and low temperature limits of Mineral or EP oils.

Select synthetic lubricants in accordance with specifications in Manual 128-010.

Splash Lubricated Drives — Standard Type E & C drives are splash lubricated. The lubricant is picked up by the revolving elements and distributed to all bearings and gear meshes.

OIL LEVELS — Fill the reducer with oil to the level indicated by the arrow on the side of the drive, on the vertical standpipe, or on the oil dipstick. Approximate oil capacities are shown at right.

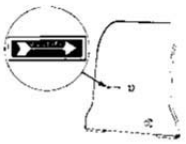

When an oil level standpipe is furnished and shipped separately, assemble the standpipe to the side of the drive so that the scribed line will be clearly visible for future service checks.

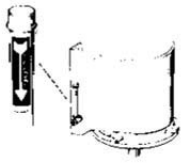

Before starting, if conditions permit, rotate the input shaft by hand to check for any obstruction. Then start the drive and allow it to run without a load for several minutes. **Shut down and recheck oil level. Add oil to compensate for cooler, filter, etc., oil capacities. If everything is satisfactory, the drive is ready for operation.**

GREASE LUBRICATED BEARINGS — When changing oil in the drive, grease bearings with a NLGI #2 bearing grease. Regrease these bearings as part of the standard maintenance program. Before installing a drive, note the location of all of the bearing grease fittings and grease labels for future maintenance reference. Note that some fittings may be ABOVE the oil level line and others BELOW. If a grease fitting will become inaccessible after the drive is installed, replace the fitting with a pipe extension (and the fitting) so that the grease fitting will be in an accessible location after the drive is installed.

DO NOT confuse the grease fittings for grease lubricated seals with those for grease lubricated bearings. If seal is inadvertently greased, grease will appear along the shaft at the shaft cover.

All right angle L.S.S. bearings are grease lubricated. Always remove the purge plug (when provided) when greasing bearings so that the old grease can escape. Wipe off purged grease and replace the plug after greasing bearings.

VERTICAL DRIVES — Fill the oil cup to a level slightly below the notch in the cup to lubricate the lower of the two low speed shaft seals.

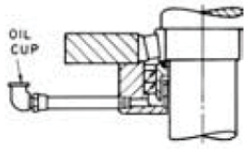

L.S.S. Seal for Vertical Units

The oil in the seal housing compartment is independent of the oil in the reducer housing; it is a lubricant reservoir for the lower seal and also a trap to protect the seals from direct contact with dust or dirt.

If both seals fail, oil from the reducer housing will pass into the oil compartment and then overflow through the notch in the oil cup

Rexnord Industries, LLC, Gear Group
3001 W. Canal St., Milwaukee, WI 53208-4200 USA Telephone: 414-342-3131
Fax: 414-937-4359 e-mail: info@rexnord.com web: www.rexnord.com

128-050
October 2006
Supersedes 8-86

Installation and Maintenance • Falk™ Enclosed Gear Drives

REXNORD

(Page 4 of 4) Sizes 1 thru 8 • Types E & C

OIL CAPACITIES — ADD OIL TO THE LEVEL MARKED ON THE DRIVE OR STANDPIPE.

MOTOREDUCERS AND SMALL SPEED REDUCERS — The table below lists approximate oil capacities for Type E & C drives. Always fill drive to oil level marked on housing or standpipe.

For Ordering Oil — Approximate Gallons

DRIVE SIZE	Standard Types E and C			Standard Types EB and CB		
	Double	Triple	Quad	Triple	Quad	Quint
1 & 15	1	1	...	1 3/4	1 3/4	2
2 & 25	1	1 7/8	1 7/8	1 3/4	1 3/4	2
3 & 35	1 7/8	2 7/8	2 7/8	2 7/8	2 7/8	3
4 & 45	2 7/8	4 7/8	4 7/8	5	5	5
5 & 55	4 7/8	7	7	8 1/8	8 1/8	8 1/8
6 & 65	7	10 1/2	10 1/2	11 1/4	11 3/4	11 3/4
7	12 1/4	12 1/4	13 1/2	17 1/4	17 1/4	17 1/4
75	12 1/4	17	17	21	21	21
8	12 1/4	17	17	...	...	...

† For double reductions drives with ratios LESS than 14.27:1 and input speeds MORE than 1400 rpm, use approximately 10 gallons and check low oil level plug indicated on drive housing.

PREVENTIVE MAINTENANCE

AFTER FIRST WEEK — Check alignment of the total system and realign where necessary. Also, tighten all external bolts and plugs where necessary. DO NOT readjust the internal gear or bearing settings in the reducer; these were permanently set at the Factory.

AFTER FIRST MONTH'S SERVICE — Proceed as follows:

1. Operate drive until old sump oil reaches normal operating temperature. Shut the drive down and drain immediately.
2. Immediately flush drive with an oil of the same type and viscosity grade as the original charge (warmed to approximately 100°F (38°C) in cold weather). Rapidly pour or pump a charge equal to 25-100% of the initial fill thru the drive or until clean oil flows thru the drain.
3. Close the drain and refill the drive to the correct level with new or reclaimed oil of the correct type and viscosity. If determined to be in good condition by the supplier, reclaimed oil may be reused if it is filtered thru a 40 micron or finer filter.

PERIODICALLY-Carefully check the oil level of the drive when it is stopped and at ambient temperature, add oil if needed. If the oil level is ABOVE the high level mark on the dipstick or the oil level plug, have the oil analyzed for water content. Moisture in the oil may indicate that the heat exchanger or a seal is leaking. If so, replace the defective part immediately and change the oil. DO NOT fill above mark indicated as leakage or undue heating may result. Also check coupling alignment to make certain that foundation settling has not caused excessive misalignment. If drive is equipped with a fan, periodically clean accumulated foreign matter from the fan, fan guard and deflector to allow adequate air flow.

OIL CHANGES — For normal operating conditions, change gear oils every b months or 2500 operating hours, whichever occurs first. Compounded oils may require more frequent changes. In dusty areas or where temperatures are high, more frequent changes may be required. Lubricant suppliers can test oil samples from the drive periodically and recommend economical change periods based on the rate of lubricant contamination and degradation.

If the drive is operated in an area where temperatures vary with the seasons, change the oil viscosity grade to suit the temperature.

Refer to Manual 128-010 for viscosity recommendations and typical lubricants meeting Rexnord specifications.

BEARINGS — Some drives have one or more grease lubricated bearings. See GREASE LUBRICATED BEARINGS, Page 3. When changing oil in the drive, grease bearings with a NLGI #2 grease.

COUPLINGS — Lubricate the Falk™ Steelflex® couplings in accordance with instructions in Manual 428-010 and Falk™ Gear couplings in accordance with instructions in Manual 458-010.

DISMANTLING — *CAUTION: Lockout power source and remove all external loads from drive before servicing drive or accessories.*

Service manuals and parts guides are available from the Factory and Rexnord Account Executive. When writing, please give complete data from the nameplate on the drive; Model, M.O., Date, RPM, and Ratio.

SPARE AND REPAIR PARTS — When ordering parts, always give complete data from the nameplate on the Falk™ drive. This complete nameplate data will assure you of receiving the correct parts. If a new nameplate is received with the new parts (for example, when the drive ratio is changed), replace the old nameplate on the drive with the new nameplate for future reference.

STORED AND INACTIVE DRIVES

Each drive is spin-tested with rust preventive oil that will protect parts against rust for a period of 4 months in an outdoor shelter or 12 months in a dry building after shipment from the Factory.

If a drive is to be stored, or is inactive after installation beyond the above periods, drain oil from housing and spray all internal parts with a rust preventive oil that is soluble in lubricating oil or add "Motorstor"* vapor phase rust inhibitor in the amounts tabulated below. Before operating, drives which have been stored or inactive must be filled to the proper level with oil meeting the specifications given in Manual 128-010.

Periodically inspect stored or inactive drives and spray, or add rust inhibitor, every six months or more often, if necessary. Indoor dry storage is recommended.

Drives ordered for extended storage can be treated at the Factory with a special preservative and sealed to rust-proof parts for periods longer than those cited above, if specified on the order.

The vent is replaced with a plug (vent is then attached to the drive) so that the protective rust inhibiting atmosphere is sealed inside the drive. Replace plug with vent when preparing drive for operation.

MOTORSTOR★ — Add to Stored or Inactive Drives

DRIVE TYPE	DRIVE SIZE	MOTORSTOR OUNCES PER DRIVE
All E types C types	1 thru 45	1
	5 thru 65	2
	7 thru 8	3

★ Product of Daubert Chemical Company, Chicago, IL. (Formerly known as "Nucle Oil")

128-050
October 2006
Supersedes 8-86

Rexnord Industries, LLC, Gear Group
3001 W. Canal St., Milwaukee, WI 53208-4200 USA Telephone: 414-342-3131
Fax: 414-937-4359 e-mail: info@rexnord.com web: www.rexnord.com

REXNORD **Falk™ Quadruple Reduction Motoreducers & Speed Reducers • Parts Guide**

Types EBZ & CB • Sizes 1 thru 6 (Page 1 of 4)

Introduction

This parts guide is designed to assist in ordering replacements parts for standard Type "EBZ" and "CB" quadruple reduction Motoreducers and Speed Reducers, Sizes 1 thru 6. Consult Factory for Type "EBF" and special or modified drives.

1. **IDENTIFY DRIVE** — Record Drive Model, Ratio and M.O. Number from nameplate.

Sample Nameplate

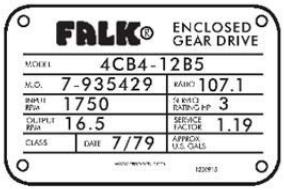

Gear Drive Identification

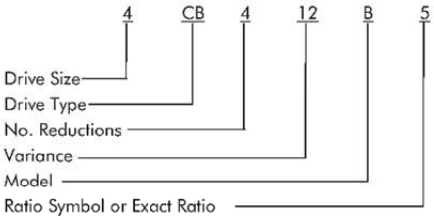

Variances

The primary variances for these units are low speed helical gear width (wide or narrow) and drives with backstops.

2. **IDENTIFY INDIVIDUAL PARTS** — Use exploded view on Pages 2 & 3 and Part Descriptions on Page 4 to determine Ref. No. of required parts.

Ref. No.	Part Description
1A3-1	Bearing
1A3-2	Bearing
1A3-3	Shaft
1A3-4	Pinion

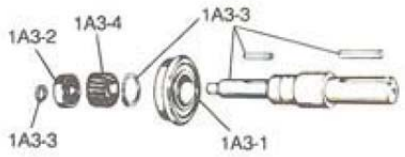

NOTE: Replace seals, shims, and gaskets whenever reassembling a drive. Shim-gaskets and fasteners are available only in kits as shown below.

SHIMS & GASKETS — See Kit Ref 108
FASTENERS — See Kit Ref 116

Corrosion Protection & Storage

CAUTION: Follow guidelines below to avoid damage to parts.

1. For domestic or indoor storage, Factory provides standard 24 month protection as boxed or optional 24 month protection for individual parts.
2. For export or outdoor storage, Factory provides optional 18 month protection.

CAUTION: This protection does not cover exposure to elements such as standing water, etc.

Rexnord Industries, LLC, Gear Group
3001 W. Canal St., Zip 53208-4200, Milwaukee, WI USA Telephone : 414-342-3131
Fax: 414-937-4359 e-mail: info@rexnord.com web: www.rexnord.com

333-344
October 1993 (.pdf revision)
Supersedes 4-72

Parts Guide • Falk™ Quadruple Reduction Motoreducers & Speed Reducers

REXNORD

(Page 2 of 4) Sizes 1 thru 6 • Types EBZ & CB

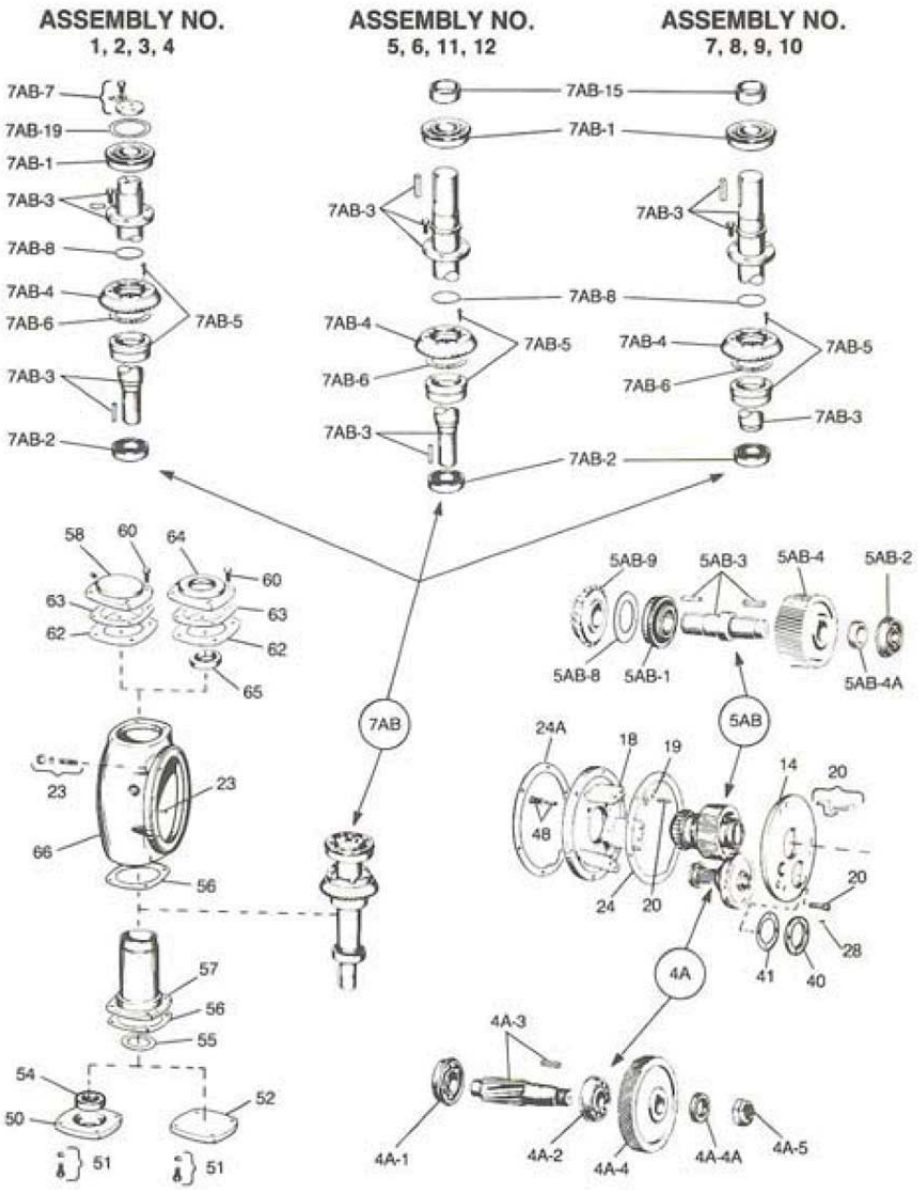

333-344
October 1993 (.pdf revision)
Supersedes 4-72

Rexnord Industries, LLC, Gear Group
3001 W. Canal St., Zip 53208-4200, Milwaukee, WI USA Telephone: 414-342-3131
Fax: 414-937-4359 e-mail: info@rexnord.com web: www.rexnord.com

REXNORD **Falk™ Quadruple Reduction Motoreducers & Speed Reducers • Parts Guide**

Types EBZ & CB • Sizes 1 thru 6 (Page 3 of 4)

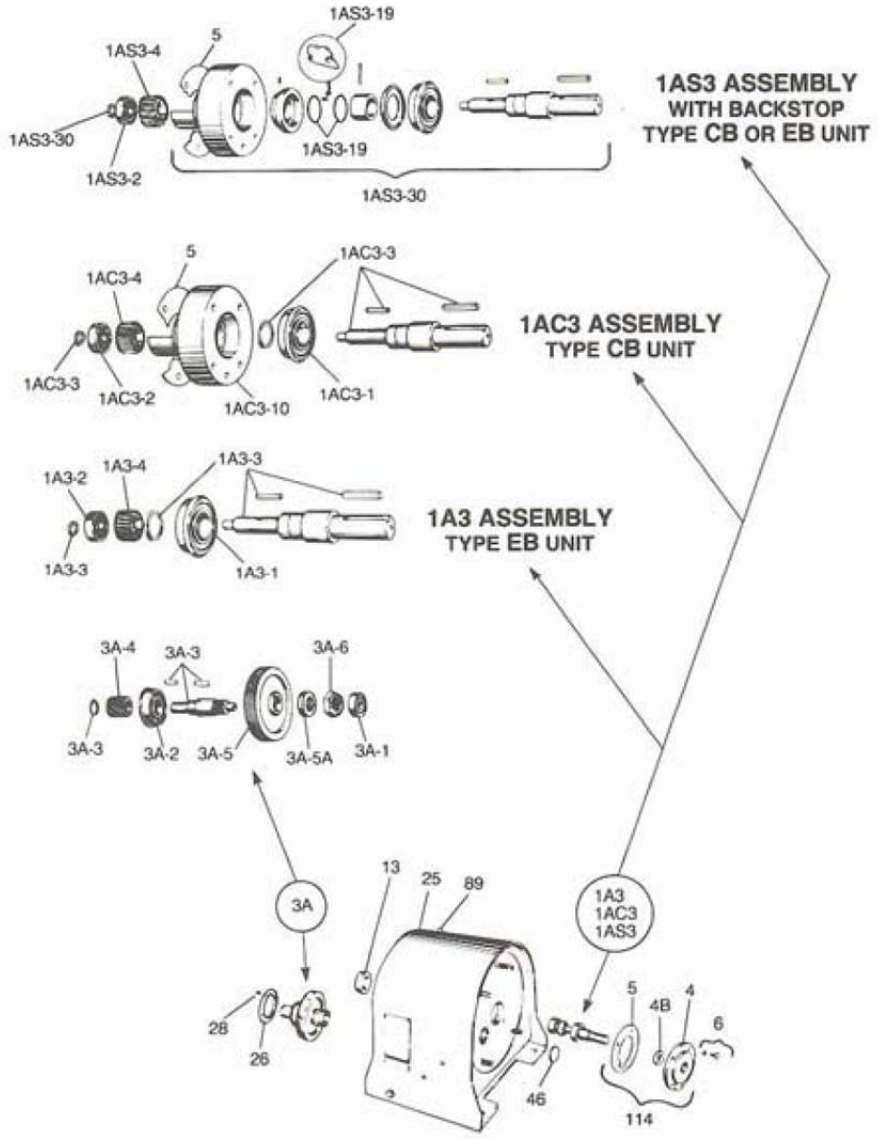

Rexnord Industries, LLC, Gear Group
3001 W. Canal St., Zip 53208-4200, Milwaukee, WI USA Telephone : 414-342-3131
Fax: 414-937-4359 e-mail: info@rexnord.com web: www.rexnord.com

333-344
October 1993 (.pdf revision)
Supersedes 4-72

Parts Guide • Falk™ Quadruple Reduction Motoreducers & Speed Reducers

(Page 4 of 4) Sizes 1 thru 6 • Types EBZ & CB

Ref. No.	Description
4	Seal Cage, Replace with Ref 114
4B	Seal
13	Bearing Cage
14/18	Head & Bearing Plate, Incls Ref 20 & 48
26	Thrust Plate
40	Thrust Plate
46	Expansion Plug
48	Oil Wiper Kit
50	Seal Cage (Size 3-6 Model A, Replace with Ref 150)
52	End Cover
54	Seal (Size 3-6 Model A, Replace with Ref 150)
55	Shield (Size 2-6)
57	Oil Dam (Size 4-6), Integral with Ref 66
58	End Cover
64	Seal Cage (Size 5 Model A, Replace with Ref 160)
65	Seal (Size 5 Model A, Replace with Ref 160)
66	Bevel Housing Incls Ref 55 & 57 for Size 2 & 3 Incls Ref 55 & 7AB-5 for Size 4, 5 & 6
89	Vent Plug
108	Shim-Gasket Kit Incls Ref 5, 19, 24, 24A, 56, 62, 63, 5AB-8, 7AB-6 for Sizes 2-5 Incls Ref 5, 19, 24, 24A, 41, 56, 62, 63, 5AB-8, 7AB-6 for Size 6
114	Seal Cage Assembly, Incls Ref 4, 4B & 5
116	Fastener Kit, Incls Ref 6, 20, 23, 28, 51 & 60
150	Seal Cage Assembly (Replaces Ref 50 & 54 for Size 3-6 Model A)
160	Seal Cage Assembly (Replaces Ref 64, 65 & 7AB-15 Size 5 Model A)

Ref. No.	Description
1A3	**Shaft Assembly, Incls Ref 1A3-1 thru 1A3-4**
1A3-1	Bearing
1A3-2	Bearing
1A3-3	Shaft
1A3-4	Pinion
1AC3	**Shaft Assembly, Incls Ref 1AC3-1 thru 1AC3-10**
1AC3-1	Bearing
1AC3-2	Bearing
1AC3-3	Shaft
1AC3-4	Pinion
1AC3-10	Bearing Cage
1AS3	**Shaft Assembly, Incls Ref 1AS3-1 thru 1AS3-30**
1AS3-2	Bearing
1AS3-4	Pinion
1AS3-19	Sprag & Spring Kit
1AS3-30	Backstop Sub-Assembly, Incls Ref 1AS3-19
3A	**Shaft Assembly, Incls Ref 3A-1 thru 3A-6**
3A-1	Bearing
3A-2	Bearing
3A-3	Shaft
3A-4	Pinion
3A-5	Gear
3A-5A	Spacer
3A-6	Locknut
4A	**Shaft Assembly, Incls Ref 4A-1 thru 4A-5**
4A-1	Bearing
4A-2	Bearing
4A-3	Pinion & Shaft
4A-4	Gear
4A-4A	Spacer
4A-5	Locknut
5AB	**Shaft Assembly, Excludes Ref 5AB-9**
5AB-1	Bearing
5AB-2	Bearing
5AB-3	Shaft
5AB-4	Gear
5AB-4A	Spacer
5AB-8	Shim, Included with Ref 108
5AB-9	Bevel Pinion, Replace with Ref 6AB
6AB	**Bevel Pinion/Gear Set**
7AB	**Shaft Assembly, Excludes Ref 7AB-4**
7AB-1	Bearing
7AB-2	Bearing
7AB-3	Shaft
7AB-4	Gear, Replace with Ref 6AB
7AB-5	Baffle
7AB-6	Gasket, Included with Ref 108
7AB-7	Keeper Plate
7AB-8	Seal Ring
7AB-15	Seal Sleeve, (Size 5 Model A, Replace with Ref 160)
7AB-19	Shield (Size 6)

333-344
October 1993 (.pdf revision)
Supersedes 4-72

Rexnord Industries, LLC, Gear Group
3001 W. Canal St., Zip 53208-4200, Milwaukee, WI USA Telephone: 414-342-3131
Fax: 414-937-4359 e-mail: info@rexnord.com web: www.rexnord.com

REXNORD

Falk™ Enclosed Gear Drives • Lubrication Recommendations

All Series C, E, F, G, J, P, Q, S, & Y (Page 1 of 4)

Introduction

Carefully follow lubrication instructions on the gear drive nameplate, warning tags and installation manuals furnished with the gear drive.

Lubricants listed in this manual are typical ONLY and should not be construed as exclusive recommendations. Industrial type petroleum based rust and oxidation inhibited (R & O) gear lubricants or industrial type sulfur-phosphorus extreme pressure (EP) gear lubricants are the recommended lubricants for ambient temperatures of 15° to 125°F(–9° to +52°C).

For drives operating outside the above temperature range refer to "Synthetic Lubricants" paragraphs. Synthetic lubricants can also be used in normal climates.

VISCOSITY (IMPORTANT) — For cold climate conditions refer to Table 4, Page 2, and the "Synthetic Lubricant" paragraphs. Select a lubricant which has a pour point at least 10°F (5.5°C) below the expected minimum ambient starting temperature. Usable temperature ranges can sometimes be widened if specific application conditions are known.

If a gear drive (excluding semi-high speed and high speed drives) operates in a typical indoor environment where the ambient temperature is within 70° to 125°F (21° to 52°C), the oil viscosity may be increased one AGMA grade above that shown for the 50° to 125°F(10° to 52°C) range. That is, an AGMA Number 6 or 7 should be substituted for a 5 or 6 respectively, under this ambient condition.

OIL PUMPS — When selecting a lubricant for a gear drive equipped with an oil pump, cold temperature oil viscosity is important. Lubricant viscosity at start-up generally should not exceed 1725 cSt (8,000 SSU). When exceeding this viscosity, pump cavitation is possible, preventing oil circulation. A sump heater may be required or it may be possible to use a lower viscosity oil to minimize pump cavitation, refer to Factory.

Petroleum Based Lubricants

R & O GEAR LUBRICANTS (Table 1 below) — Industrial type petroleum based rust and oxidation inhibited (R & O) gear lubricants are the most common and readily available general purpose gear lubricants.

EXTREME PRESSURE (EP) LUBRICANTS (Table 2, Page 2) — For highly loaded gear drives or drives loaded in excess of original estimates, industrial type petroleum extreme pressure lubricants are preferred. The EP lubricants currently recommended are of the sulfur-phosphorus type.

WARNING: EP LUBRICANTS IN FOOD PROCESSING INDUSTRY — *EP lubricants may contain toxic substances and should not be used in the food processing industry without the lubricant manufacturers' approval. Lubricants which meet USDA "H1" classification are suitable for food processing applications.*

CAUTION: EP LUBRICANTS & INTERNAL BACKSTOPS — *Do not use EP lubricants or lubricants with anti-wear additives or lubricant formulations including sulfur, phosphorus, chlorine, lead derivatives, graphite or molybdenum disulfides in drives equipped with internal cartridge type backstops. Some lubricants in Table 1 below, may contain anti-wear additives. Lubricants in Table 2, Page 2, do contain several of these additives.*

Synthetic Lubricants

Synthetic lubricants of the polyalphaolefin type are recommended for cold climate operation, high temperature applications, extended temperature range (all season) operation and/or extended lubricant change intervals. The proper viscosity grade of synthetic lubricant is given in Table 4, Page 2.

TABLE 1 — Petroleum Based R & O Gear Oils (Maximum operating temperature of lubricants 200°F (93°C)

AGMA Viscosity Grade		1	2	3	4	5	6	7
ISO Viscosity Grade		46	68	100	150	220	320	460
Viscosity	cSt @ 40°C	41.4-50.6	61.2-74.8	90-110	135-165	198-242	288-352	414-506
	SSU @ 100°F	193-235	284-347	417-510	626-765	918-1122	1335-1632	1919-2346
Manufacturer		Lubricant	Lubricant	Lubricant	Lubricant	Lubricant	Lubricant	Lubricant
Amoco Oil Co. BP Oil Co. Chevron U.S.A., Inc. Citgo Petroleum Corp.		Amer. Ind. Oil 46 Turbinol T-46 Hydraulic Oil AW 46 Citgo Pacemaker 46	Amer. Ind. Oil 68 Turbinol T-68 Hydraulic Oil AW 68 Citgo Pacemaker 68	Amer. Ind. Oil 100 Turbinol T-100 Machine Oil AW 100 Citgo Pacemaker 100	Amer. Ind. Oil 150 . . . . Machine Oil AW 150 Citgo Pacemaker 150	Amer. Ind. Oil 220 Energol HLP-HD 220 Machine Oil AW 220 Citgo Pacemaker 220	Amer. Ind. Oil 320 Machine Oil AW 320 Citgo Pacemaker 320	Amer. Ind. Oil 460 Citgo Pacemaker 460
Conoco Inc. Exxon Co., U.S.A. Houghton International Inc. Imperial Oil Ltd.		Dectol R & O Oil 46 Teresstic 46 Hydro-Drive HP-200 Teresso 46	Dectol R & O Oil 68 Teresstic 68 Hydro-Drive HP-300 Teresso 68	Dectol R & O Oil 100 Teresstic 100 Hydro-Drive HP-500 Teresso 100	Dectol R & O Oil 150 Teresstic 150 Hydro-Drive HP-750 Teresso 150	Dectol R & O Oil 220 Teresstic 220 Hydro-Drive HP-1000 Teresso 220	Dectol R & O Oil 320 Teresstic 320 Teresso 320	Dectol R & O Oil 460 Teresstic 460
Kendall Refining Co. Keystone Lubricants Lyondell Petrochemical (ARCO) Mobil Oil Corp.		Kenoil R & O AW 46 KLC-15 Duro 46 DTE Oil Medium	Kenoil R & O AW 68 KLC-20 Duro 68 DTE Oil Heavy Medium	Kenoil R & O AW 100 KLC-30 Duro 100 DTE Oil Heavy	Four Seasons AW 150 KLC-40 Duro 150 DTE Oil Extra Heavy	KLC-50 Duro 220 DTE Oil BB	Duro 320 DTE Oil AA	DTE Oil HH
Petro-Canada Prod. Phillips 66 Co. Shell Oil Co. Shell Canada Ltd.		Harmony 46 Magnus Oil 46 Turbo T46 Tellus 46	Harmony 68 Magnus Oil 68 Turbo T68 Tellus 68	Harmony 100 Magnus Oil 100 Morlina 100 Tellus 100	Harmony 150 or150D Magnus Oil 150 Morlina 150 Tellus 150	Harmony 220 Magnus Oil 220 Morlina 220 Tellus 220	Harmony 320 Magnus Oil 320 Morlina 320 Tellus 320	Morlina 460
Texaco Lubricants Unocal 76 (East) Unocal 76 (West) Valvoline Oil Co.		Regal Oil R & O 46 Unax RX 46 Turbine Oil 46 Valvoline AW ISO 46	Regal Oil R & O 68 Unax RX 68 Turbine Oil 68 Valvoline AW ISO 68	Regal Oil R & O 100 Unax RX 100 Turbine Oil 100 Valvoline AW ISO 100	Regal Oil R & O 150 Unax RX 150 Turbine Oil 150 Valvoline AW ISO 150	Regal Oil R & O 220 Unax RX 220 Turbine Oil 220 Valvoline AW ISO 220	Regal Oil R & O 320 Unax AW 320 Turbine Oil 320 Valvoline AW ISO 320	Regal Oil R & O 460 Turbine Oil 460 Turbine Oil 460

Rexnord Industries, LLC, Gear Group
3001 W. Canal St., Milwaukee, WI 53208-4200 USA Telephone: 414-342-3131
Fax: 414-937-4359 e-mail: info@rexnord.com web: www.rexnord.com

128-010
November 2000
Supersedes 4-94

Lubrication Recommendations • Falk™ Enclosed Gear Drives

(Page 2 of 4) All Series C, E, F, G, J, P, Q, S, & Y

REXNORD

COLD CLIMATE CONDITIONS — The proper viscosity grade of synthetic lubricant is given in Table 4 below. Usable temperature ranges can sometimes be widened if specific application conditions are known.

Synthetic lubricants may be used in gear drives with internal backstops operating in cold temperatures (–30° to +50°F or –34° to +10°C). Select proper lubricant grade from Table 4 below. Mobil 624 and SHC 626 provide proper backstop action under these conditions. Other synthetic lubricants may also be acceptable. DO NOT use synthetic lubricants in drives with backstops operating above +50°F (10°C).

NORMAL CLIMATE CONDITIONS — For temperatures of 15°F (–9°C) and above, use viscosity grades as recommended in Table 5, Page 4. Select a lubricant from Table 1, Page 1. Usable temperature ranges can sometimes be widened if specific application conditions are known.

WARNING: SYNTHETIC LUBRICANTS IN FOOD PROCESSING INDUSTRY — *Synthetic lubricants may contain toxic substances and should not be used in the food processing industry without the lubricant manufacturers' approval. Lubricants which meet USDA "H1" classification are suitable for food processing applications.*

CAUTION: SYNTHETIC LUBRICANTS & INTERNAL BACKSTOPS — *Synthetic lubricants may be used in gear drives with internal backstops operating only in cold temperatures –30° to +50°F (–34° to +10°C). Mobil SHC 624 and SHC 626 provide proper backstop action under these conditions. Other synthetic lubricants may also be acceptable. DO NOT use synthetic lubricants in drives with backstops operating in ambient temperatures above 50°F (10°C).*

TABLE 2 — Extreme Pressure Lubricants

Maximum Operating Temperature 200°F (93°C)

Manufacturer	Lubricant
Amoco Oil Co. BP Oil Co. Chevron U.S.A. Inc. Citgo Petroleum Corp.	Permagear/Amogear EP Energear EP Gear Compounds EP Citgo EP Compound
Conoco Inc. Exxon Co. U.S.A. E.F. Houghton & Co. Imperial Oil Ltd.	Gear Oil Spartan EP MP Gear Oil Spartan EP
Kendall Refining Co. Keystone Div., Pennwalt Corp. Lyondell Petrochemical (ARCO) Mobil Oil Corp.	Kendall NS-MP Keygear Pennant NL Mobilgear
Petro-Canada Products Phillips 66 Co. Shell Oil Co. Shell Canada Limited	Ultima EP Philgear Omala Oil Omala Oil
Sun Oil Co. Texaco Lubricants Unocal 76 (East & West) Valvoline Oil Co.	Sunep Meropa Extra Duty NL Gear Lube AGMA EP

TABLE 3 — Greases for Grease Lubricated Bearings & Grease Purged Seals

(0° to 200°F (-18° to +93°C)

Manufacturer	Lubricant
Amoco Oil Co. BP Oil Co. Chevron U.S.A., Inc. Citgo Petroleum Corp.	Amolith Grease No. 2 Energrease LS-EP2 Industrial Grease Medium Premium Lithium Grease No. 2
Conoco Inc. Exxon Company, U.S.A. E.F. Houghton & Co. Imperial Oil Ltd.	EP Conolith Grease No. 2 Unirex N2 Cosmolube 2 Unirex N2L
Kendall Refining Co. Keystone Div., Penwalt Corp. Lyondell Petrochemical (ARCO) Mobil Oil Corp.	Multi-Purpose Lithium Grease L421 Zeniplex 2 Litholine H EP 2 Grease Mobilith 22
Mobil Oil Corp. Petro-Canada Products Phillips 66 Co. Shell Oil Co.	Mobilith SHC 460 ★ Mulipurpose EP2 Philube Blue EP Alvania Grease 2
Shell Canada Limited Sun Oil Co. Texaco Lubricants	Alvania Grease 2 Ultra Prestige EP2 Premium RB Grease
Unocal 76 (East & West) Valvoline Oil Co.	Unoba EP2 Multilube Lithium EP Grease

★ High performance synthetic alternate.

TABLE 4 — Polyalphaolefin Type Synthetic Lubricants †

AGMA Viscosity Grade		...	2	4	5	6
ISO Viscosity Grade		32	68	150	220	320
Viscosity	cSt @ 40°C	28.8–35.2	61.2–74.8	135–165	198–242	288–352
	SSU @ 100°F	135–164	284–347	626–765	918–1122	1335–1632
Ambient Temperature Range°F ‡		–30 to +10	–15 to + 50	0 to + 80	+10 to +125	+ 20 to +125
Manufacturer		Lubricant				
Chevron U.S.A., Inc.		...	...	...	Syn. Gear Lube Tegra 220 •	...
Conoco, Inc.		Syncon 32	Syncon 68	...	...	...
CPI Engineering Services, Inc.		CP–4620–32	CP–4620–68	CP–4620–150	CP–4620–220	...
		CP–4630–32 •	CP–4630–68 •	CP–4630–150 •	CP–4630–220 •	...
Exxon Co. U.S.A.		...	...	Spartan Synthetic EP 150 •	Spartan Synthetic EP 220•	Spartan Synthetic EP 320 •
Mobil Oil Corp.		SHC 624	SHC 626	SHC 629	SHC 630	SHC 632
		...	...	Mobilgear SHC 150	Mobilgear SHC 220 •	Mobilgear SHC 320 •

† Minimum viscosity index of 130 (consult lubricant supplier/manufacturer for maximum operating temperature). Viscosity grade selections are not applicable to semi-high speed and high speed drives.

‡ With complete application information, temperature range can sometimes be extended, refer to Factory.

• Extreme pressure EP lubricants (contains sulfur phosphorus).

128-010
November 2000
Supersedes 4-94

Rexnord Industries, LLC, Gear Group
3001 W. Canal St., Milwaukee, WI 53208-4200 USA Telephone: 414-342-3131
Fax: 414-937-4359 e-mail: info@rexnord.com web: www.rexnord.com

REXNORD

Falk™ Enclosed Gear Drives • Lubrication Recommendations

All Series C, E, F, G, J, P, Q, S, & Y (Page 3 of 4)

Oil Levels

Prior to filling gear drives, remove the inspection cover (on drives so equipped) and flood the oil troughs with a generous flow of oil to the bearings. Fill the drive with oil to the level indicated on the oil dipstick or appropriate plug.

Lubricant Changes

OIL ANALYSIS REPORT — Checking oil condition at regular intervals is recommended. In the absence of more specific limits, the guidelines listed below may be used to indicate when to change oil:

1. Water content is greater than 0.05% (500 ppm).
2. Iron content exceeds 150 ppm.
3. Silicon (dust/dirt) exceeds 25 ppm.
4. Viscosity changes more than 15%.

PETROLEUM LUBRICANTS — For normal operating conditions, change gear oils every six months or 2500 operating hours, whichever occurs first. If the drive is operated in an area where temperatures vary with the seasons, change the oil viscosity grade to suit the temperature, refer to Table 1, Page 1. Lubricant suppliers can test oil from the drive periodically and recommend economical change schedules.

SYNTHETIC LUBRICANTS — Synthetic lube change intervals can be extended to 8000-10,000 hours depending upon operating temperatures and lubricant contamination. Laboratory analysis is recommended for optimum lubricant life and gear drive performance. Change lube with change in ambient temperature, if required. Refer to Table 4, Page 2.

Lubrication Systems

OIL PUMPS — Occasionally gear drives are equipped with oil pumps, either for special lubrication considerations or for external cooling. When so equipped, run the lubrication system for several minutes to fill the system components. Verify that the pump is circulating oil properly then recheck the oil level.

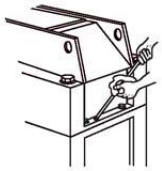

Before starting the gear drive, rotate the input shaft by hand to check for any obstruction. Then start the drive and allow it to run without a load for several minutes. Shut down and recheck oil level. Add oil to compensate for cooler, filter, etc., oil capacities. If everything is satisfactory, the drive is ready for operation.

CAUTION: *Refer to Factory for drives that use pumps to distribute lubricants with temperatures below 30°F(–1°C).*

Bearing & Seal Greases

Some gear drives have one or more grease lubricated bearings and grease purged seals. Whenever changing oil in the drive, grease the bearings and purge the seals with one of the NLGI #2 greases listed in Table 3, Page 2.

Some of these greases are of the EP type and may contain toxic substances not allowed in the food processing industry. A grease that meets the USDA "H1" classification is suitable for food processing applications.

GREASE LUBRICATED BEARINGS — Remove pressure relief plug when greasing bearing on vertical shaft drives. Pump grease into bearing cage until it appears at the plug. Replace pressure relief plug.

GREASE LUBRICATED SEALS — Most gear drives and all BIF pawl type backstops are furnished with grease purged seals which minimize the entry of contaminants and abrasive dusts into the drive or backstop. Gear drives and backstops are shipped with NLGI #2 grease in the seal housing cavities unless otherwise specified. If grease could contaminate the product, as in the food and drug industries, it should be removed. A grease that meets USDA "H1" classification is suitable for food processing applications.

Periodically (at least every six months) depending upon the frequency and degree of contamination, purge contaminated grease from seals by slowly pumping fresh bearing grease thru the seal, **WITH A HAND GREASE GUN**, until fresh grease flows out along the shaft. Wipe off purged grease.

CAUTION*: For Y-Type drives only, rapid regreasing with a power grease gun can force grease inward past the seals and plug the oil drain back system causing seal leaks.*

Rexnord Industries, LLC, Gear Group
3001 W. Canal St., Milwaukee, WI 53208-4200 USA Telephone: 414-342-3131
Fax: 414-937-4359 e-mail: info@rexnord.com web: www.rexnord.com

128-010
November 2000
Supersedes 4-94

Lubrication Recommendations • Falk™ Enclosed Gear Drives

(Page 4 of 4) All Series C, E, F, G, J, P, Q, S, & Y

REXNORD

TABLE 5 — Viscosity Recommendations ★

Drive Description	Classification Symbol (Drive Type)	Drive Size	Synthetic Lubricants – Cold Climates –30° to +10°F (–34° to –12°C) ISO-VG	AGMA	Synthetic Lubricants – Cold Climates –15° to +50°F (–26° to +10°C) ISO-VG	AGMA	R & O Petroleum Oils – Normal Climates 15° to 60°F (–9° to +16°C) ISO-VG	AGMA	R & O Petroleum Oils – Normal Climates 50° to 125°F (10° to 52°C) ISO-VG	AGMA
Parallel Shaft and Horizontal Right Angle ● Roller Bearings Fabricated Steel Housings	[illegible]	[illegible]	[illegible]	[illegible]	[illegible]	[illegible]	[illegible]	[illegible]	[illegible]	[illegible]
Vertical Right Angle ● Fabricated Steel Housings	[illegible]	[illegible]	[illegible]	[illegible]	[illegible]	[illegible]	[illegible]	[illegible]	[illegible]	[illegible]
Parallel Shaft ● Sleeve and Roller Bearings Cast Iron Housings	[illegible]	[illegible]	[illegible]	[illegible]	[illegible]	[illegible]	[illegible]	[illegible]	[illegible]	[illegible]
Right Angle ● Horizontal and Vertical Cast Iron Housings	[illegible]	[illegible]	[illegible]	[illegible]	[illegible]	[illegible]	[illegible]	[illegible]	[illegible]	[illegible]
Parallel Shaft Semi-High Speed ‡ ● Sleeve, Roller and Ball Bearings	[illegible]	[illegible]	[illegible]	[illegible]	[illegible]	[illegible]	[illegible]	[illegible]	[illegible]	[illegible]
Parallel Shaft High Speed ‡ ● Sleeve Bearings	[illegible]	[illegible]	[illegible]	[illegible]	[illegible]	[illegible]	[illegible]	[illegible]	[illegible]	[illegible]
Motoreducers Concentric Shaft Speed Reducers Shaft and Flange Mounted Drives	All F & E Types All FC & C Types All J Types	All Sizes	32	...	68	2	150	4	220	5

★ Refer to Factory for viscosity recommendations when ambient temperatures are higher than 125°F(52°C), or when drives are operating in extremely humid, chemical, or dust laden atmospheres.

† Lubricant inlet temperature to gear drive must not exceed 100°F(38°C) when using an AGMA No. 1 oil (193 to 235 SSU at 104°F; 41.5-50.6 cSt at 40°C) in a pressure lubrication system.

‡ Refer to Factory before substituting higher viscosity grades from those indicated in Table 5 above.

128-010
November 2000
Supersedes 4-94

Rexnord Industries, LLC, Gear Group
3001 W. Canal St., Milwaukee, WI 53208-4200 USA Telephone: 414-342-3131
Fax: 414-937-4359 e-mail: info@rexnord.com web: www.rexnord.com

11.7.3 SPAN LOCK GEARMOTOR – SUMITOMO SM-CYCLO

SM-BEVEL BUDDYBOX
SM-HELICAL BUDDYBOX

Right Angle & Parallel Offset
Cyclo Reducer and Gearmotor
Operating and Maintenance Manual

SM-BEVEL & HELICAL BUDDYBOX

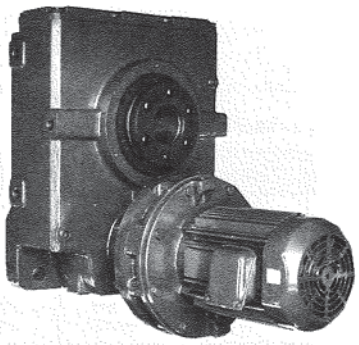

THE AVAILABLE SOLUTION, WORLDWIDE.

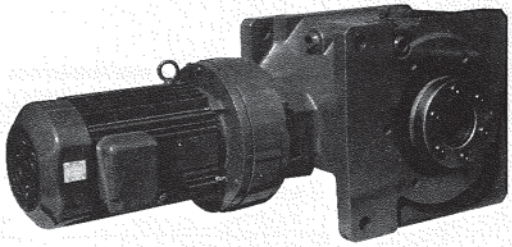

SUMITOMO
MACHINERY CORPORATION OF AMERICA

Manual
07.040.60.002

BEVEL PORTION LUBRICATION

SM-Bevel Buddybox (BBB Series "L") reducers and gearmotors are shipped without oil. Before running, they should be filled with the appropriate amount of the correct lubricant for their mounting position – see Tables 5 and 6. Please consult the factory for additional information not covered here.

Fig. 10 Mounting Positions

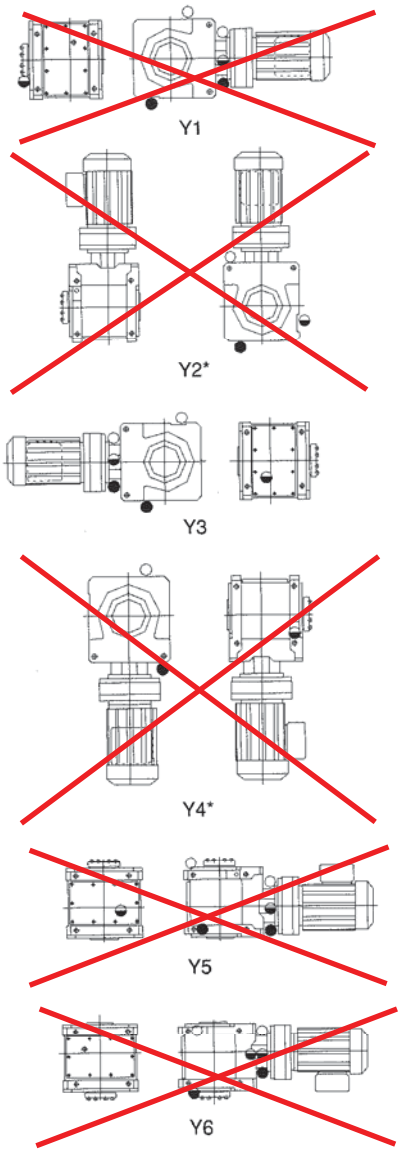

Table 5 Recommended Oil for SM-Bevel Buddybox & Cyclo

Ambient Temp.	14°F-32°F (-10°C-0°C)	32°F-95°F (0°C-35°C)	95°F-122°F (35°C-50°C)
Viscosity @ 104°F (40°C) cST	61.2 - 74.8	90 - 165	198 - 506
ISO Viscosity Grade	68	100 - 150	220 - 460
AGMA Viscosity Grade	2EP	3EP 4EP	5EP 7 EP
Viscosity @ 100°F (38°C) SSU	284 - 347	417 - 765	916 - 2719

Table 6 Oil Quantity (In gallons)

Bevel Buddybox size	Oil Quantity - gear						Oil Quantity - Cyclo					
	Y1	Y2	Y3	Y4	Y5	Y6	Y1	Y2	Y3	Y4	Y5	Y6
A	0.24	0.24	0.27	0.24	0.35	0.27	G	G	G	G	G	G
B	0.40	0.35	0.40	0.40	0.53	0.40	G	G	G	G	G	G
C	0.75	0.75	0.75	0.75	0.75	1.06	0.11	G	0.11	G	0.11	0.11
D	1.37	1.37	1.37	1.37	1.37	1.77	0.13	G	0.13	G	0.13	0.13
E	1.98	1.98	1.98	1.98	1.98	2.58	0.21	G	0.21	G	0.21	0.21

Oil Replenishment and Change Interval

a) Maintain proper oil levels at all times.

b) Check oil quantity every 2500 hours. If the oil is contaminated, burned or waxed, change the oil immediately and flush if necessary.

c) Under normal operating conditions, Sumitomo recommends an oil change every 5000 hours of operation. The intervals should not exceed 2 years.

d) An oil change after the first 500 hours of operation is highly recommended.

e) If the unit will be running in a high ambient, high humidity, or corrosive environment, the lubricant will have to be changed more frequently. Consult the factory for recommendations.

f) **NOTE: The Cyclo portion and Bevel portion, where applicable, must be filled with oil separately. Oil does not flow from one section to the other.**

* Consult factory for Y2 and Y4 mounting.

● Oil Drain Plug
◒ Oil Overflow Plug (Oil Level)
○ Oil Fill Plug

3

SM-BEVEL AND HELICAL BUDDYBOX TROUBLESHOOTING AND REPAIR

This troubleshooting guide is to help you identify and overcome common problems of reducers and motors. If you have a problem not listed below, please consult the factory.

PROBLEM WITH THE REDUCER		POSSIBLE CAUSES	SUGGESTED REMEDY
Runs Hot	Overloading	Load exceeds the capacity of the reducer	Check rated capacity of reducer, replace with unit of sufficient capacity or reduce load.
	Improper Lubrication	Insufficient lubrication	Check lubricant level and increase to recommended levels.
		Excessive lubrication	Check lubricant level and reduce to recommended level.
		Wrong lubricant	Flush out and refill with correct recommended lubricant.
Vibration or Noise	Loose Foundation Bolts	Weak mounting structure	Inspect mounting of reducer. Tighten loose bolts and/or reinforce mounting & structure.
		Loose hold down bolts	Tighten bolts.
	Worn Disc	Overloading unit may result in damage to disc	Disassemble and replace disc. Re-check rated capacity of reducer.
	Failure of Bearings	May be due to lack of lubricant	Replace bearing. Clean and flush reducer and fill with recommended lubricant.
		Overload	Check rated capacity of reducer, replace with unit of sufficient capacity or reduce load.
	Insufficient Lubricant	Level of lubricant in the reducer not properly maintained	Check lubricant level and adjust to factory-recommended level.
	Damaged Pins & Rollers	Overloading of reducer	Disassemble and replace ring gear pins and rollers. Check load on reducer.
Output Shaft Does Not Turn	Motor Shaft Broken	Overloading of reducer can cause damage	Replace broken shaft. Check rated capacity of reducer.
		Key missing or sheared off on imput shaft	Replace key.
	Eccentric Bearing Broken	Lack of lubricant	Replace eccentric bearing. Flush and refill with recommended lubricant.
	Motor Doesn't Turn	Motor	Refer to page 23.
Oil Leakage	Worn Seals	Caused by dirt or grit entering seal	Replace seals. Breather filter may be clogged. Replace or clean filter.
	Leakage Into Motor	Overfilled reducer	Check lubricant level and adjust to recommended level.
		Vent clogged	Clean or replace element, being sure to prevent any dirt from falling into the reducer.
		Improper mounting position, such as wall or ceiling mount of horizontal reducer	Mount horizontally or rework reducer to wall or ceiling mount.

22

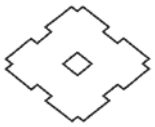

PROBLEM WITH THE MOTOR		POSSIBLE CAUSES	SUGGESTED REMEDY
Load is disconnected but motor doesn't rotate	Makes a groaning sound	Faulty switch contact	Adjust the contact.
		Blown fuse	Replace.
		One phase wire of the power supply open	Replace.
		Stator coil open	Repair by rewinding or replacing stator assembly.
		Stator and rotor touching due to bearing housing wear	Replace the bearing and bracket.
	Starts in either direction when turned by hand	Three-phase is operating as single-phase	Check the power source with a voltmeter.
	Doesn't make any noise	Stator coil open	Repair by rewinding or replacing stator assembly.
		Outside the motor: Power failure Open connection wire Faulty switch contact Faulty starter contact	Contact the power company. Check the source wiring. Adjust the contact.
Rotates with the load disconnected, but:	Rotates in the wrong direction	Connection error	Change any two of the three phase source.
	Fuse blows	Shorted lead wire	Replace.
	Speed doesn't increase	Faulty starter contact	Adjust.
	Groans	Overcurrent/ Overheating: Rotor and stator touching	Repair by rewinding or replacing stator assembly.
		Over-current: One phase of stator coil shorted	Replace the stator winding.
	Makes a high-pitched metallic noise	Faulty bearing	Replace the bearing.
Rotates when the load is disconnected but when the load is connected:	Switch overheated	Insufficient switch capacity	Replace with one having the rated capacity.
		Overload	Drop to the rated load.
	Fuse blows	Insufficient fuse capacity	Replace with one having the rated capacity.
	Overheats	Overload	Drop to the rated load.
		Voltage drop	Consult with the power company.
	Speed suddenly drops	Voltage drop	Consult with the power company.
		Overload	Drop to the rated load.
	Stops	Bearing damaged by overheat	Replace the bearing.

23

Headquarters and Manufacturing

Sumitomo Machinery Corporation of America
4200 Holland Boulevard, Chesapeake, VA 23323
(757) 485-3355 • FAX: (757) 485-3075
Toll Free: 1-800-SM-CYCLO (762-9256)
www.smcyclo.com • e-mail: smcamktg@series2000.com

North American Regional Offices Stocking & Assembly Facilities

Mid-West
Sumitomo Machinery Corporation of America
175 West Lake Drive
Glendale Heights, IL 60139
(630) 752-0200 • FAX: (630) 752-0208

West
Sumitomo Machinery Corporation of America
2375 Railroad Street
Corona, CA 91720
(909) 340-4100 • FAX: (909) 340-4108

Southwest
Sumitomo Machinery Corporation of America
1420 Halsey Way #130
Carrollton, TX 75007
(972) 323-9600 • FAX: (972) 323-9308

Southeast
Sumitomo Machinery Corporation of America
4200 Holland Boulevard
Chesapeake, VA 23323
(757) 485-3355 • FAX: (757) 487-3193

Canadian Stocking & Assembly Facilities

Toronto (East)
SM-Cyclo of Canada, Ltd.
870 A Equestrian Court
Oakville, Ontario, Canada L6L 6L7
(905) 469-1050 • FAX: (905) 469-1055

British Columbia (West)
SM-Cyclo of Canada, Ltd.
740 Chester Road, Annacis Island, Delta
B.C., Canada V3M 6J1
(604) 525-5403 • FAX: (604) 525-0879

Montreal
SM-Cyclo of Canada, Ltd.
226 Migneron Street
St. Laurent, Quebec, Canada H4T 1Y7
(514) 340-1300 • FAX: (514) 340-1343

Mexico

Monterrey
SM-Cyclo de Mexico, S.A. de C.V.
Calle "C" No. 506A
Parque Industrial Almacentro
Apodaca, N.L., Mexico 66600
Tel.: 011-52-8-369-3697/8 • FAX: 011-52-8-369-3699

Central & South America Sales, Engineering, Stocking & Assembly

Brazil
SM-Cyclo Redutores do Brasil Ltda.
Av. Dr. Ulysses Guimarães, 3533
09990-080 Diadema
São Paulo, Brazil
Tel.: 011-55-11-445-4388 • FAX: 011-55-11-456-2922

Chile
SM-Cyclo de Chile Ltda.
Avenida Zanartu #1231
Comuna Nunoa - Santiago, Chile
Tel.: 011-562-237-2407 • FAX: 011-562-237-0225

Other International Locations

Japan
Sumitomo Heavy Industries
Power Transmission & Controls Group
5-9-11, KITA-Shingawa Shinagawa-Ku
Tokyo 141-8686 Japan
Tel.: 011-813-5488-8363 • FAX: 011-813-5488-8355

United Kingdom
Sumitomo (SHI) Cyclo Drive Europe
Marfleet, Kingston upon Hull
HU9 5RA, United Kingdom
Tel.: 011-44-1482-788022 • FAX: 011-44-1482-713205

Southeast Asia
Sumitomo (SHI) Cyclo Drive Southeast Asia
No. 2 Tuas Link 2
Singapore 638551
Tel.: 011-65-863-2238 • FAX: 011-65-863-4238

Canadian Standards Association

Power Transmission Distributors Association

SPEED REDUCER
SM-CYCLO
Concentric
GEARMOTOR
SM-CYCLO
Concentric
SHAFT MOUNTED
GEARMOTOR
SM-HELICAL BUDDYBOX
Parallel Offset
BEVEL GEARMOTOR
SM-BEVEL BUDDYBOX
Right Angle
LOW RATIO PLANETARY
SM-CYCLO
Concentric
PRECISION CYCLO
Concentric
SUMITOMO
"QuaDelta" PROGRAM
Providing
THE AVAILABLE SOLUTION, WORLDWIDE
ALL DRIVES
GEAR BOXES
MOTORS
CONTROLLERS
ALL TYPES
CONCENTRIC
PARALLEL OFFSET
RIGHT ANGLE
ALL SPEEDS
CONSTANT SPEED
MECHANICAL VS
ELECTRICAL VS
WORLD-WIDE
THE AMERICAS
ASIA
EUROPE
MECHANICAL
VARIABLE SPEED
SM-BEIER
ELECTRICAL
VARIABLE SPEED
AF-3100α
AC Drive
NTAC-2000
AC Drive
SUMITOMO MACHINERY CORP. OF AMERICA
Power Transmission Products
4200 Holland Blvd., Chesapeake, VA 23323
(757) 485-3355 • FAX: (757) 485-3075
Toll Free: 1-800-SM-CYCLO
Web: http://www.smcyclo.com • E-mail: smcamktg@series2000.com
DISTRIBUTED BY:
HELICAL
GEAR REDUCER
PARAMAX
Parallel Offset
& Right Angle
SHAFT MOUNT
SPEED REDUCER
SM-SHAFT MOUNT
Parallel Offset
DOUBLE ENVELOPING
WORM GEAR
SM-HEDCON
Right Angle
SHAFT MOUNT
GEARMOTOR
SM-HYPONIC
Right Angle
WORM GEARMOTOR
SM-ULYSSES
Right Angle
PARTS & SERVICE
WORLDWIDE
Printed in U.S.A. 10M1299

11.7.4 INSTRUMENTATION GEAR BOX – PEERLESS WINSMITH TYPE DBD

ENGINEERING
SERVICE BULLETIN

ILD-99

WINSMITH
PEERLESS-WINSMITH, INC.

D-90® TYPE SE® SPEED REDUCERS

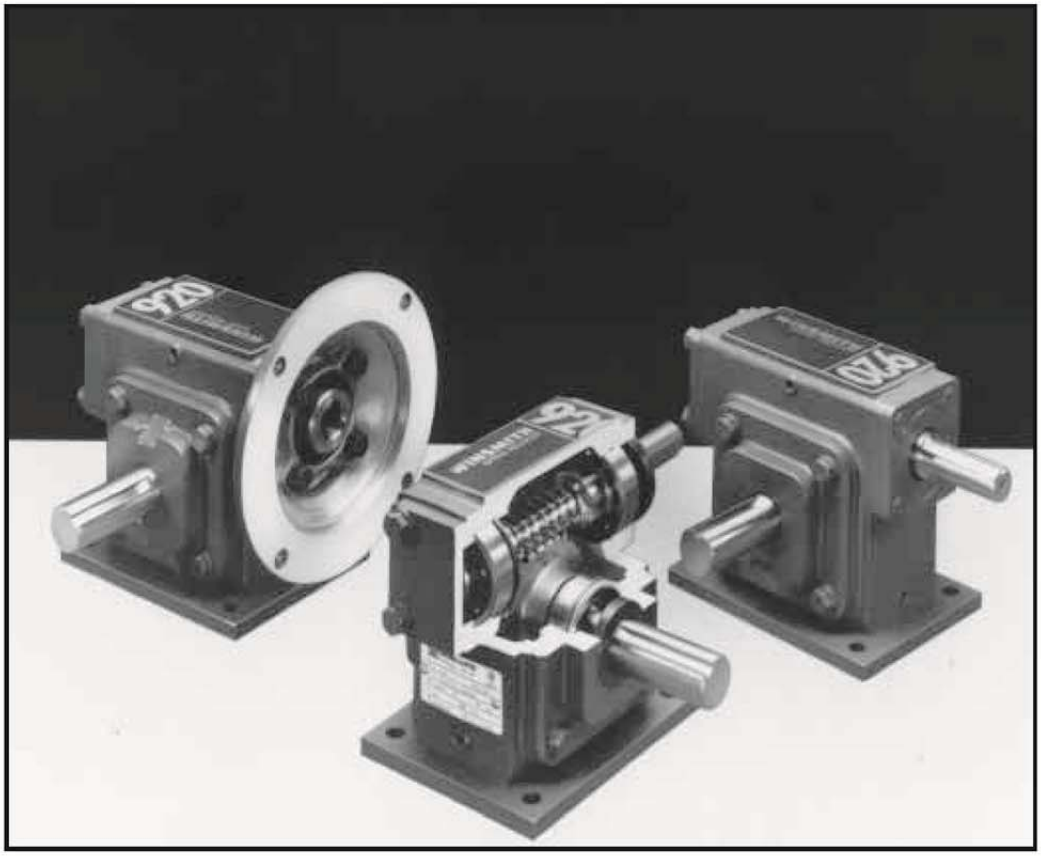

Installation, Operation, and Lubrication Instructions

This Engineering Service Bulletin is designed to enable users to obtain the best possible performance from their WINSMITH® Speed Reducers.

I. SELECTION

The selection of the appropriate speed reducer for a given application requires that all factors affecting the operation of the unit be given careful consideration. Service factors must be applied to catalog ratings depending on the type of prime mover used, severity of the application and duration of daily service. If you have any questions relative to the suitability of your WINSMITH® speed reducer for your particular application, refer to the selection section of the appropriate WINSMITH catalog, or contact your WINSMITH representative or distributor.

II. INSTALLATION

1. Shaft Alignment

A. The various drive members (motor, speed reducer, couplings, sprockets, sheaves, gears, etc.) should be aligned as accurately as possible to guard against unusual stresses and overloads imposed by misalignment.

B. If a prime mover shaft is to be directly connected to the high speed (input) shaft or if the slow speed (output) shaft is to be directly connected to the driven shaft, flexible couplings should be used. It should be remembered that even flexible couplings have limited ability to accommodate misalignment. Care must be taken at installation to insure that shaft alignments are within the limits recommended by the coupling manufacturer. Use of a rigid coupling to connect speed reducer shafts to other drive components is not recommended as it is almost impossible to obtain exact alignment between two shafts.

C. A common base plate supporting the motor and reducer will help preserve the original alignment between reducer and motor shafts. If a structural steel base is used, the plate should be at least equal in thickness to the diameter of the bolts used to fasten the speed reducer to the base plate. Also, for sufficient rigidity, the design in general including angle or channel members should be substantial enough to prevent flexing under vibration. After the first week or two of operation all of the bolts and nuts used to fasten the reducer and motor, pedestal, etc., to the base plate should be retightened. Vibration tends to loosen the nuts even if tight initially. Dowelling the motor and speed reducer to the base plate will help insure that alignment is maintained.

2. Mounting Positions

A. Single reduction units are designed to accommodate most standard mounting positions. Figure 1 illustrates the utility plug locations for each based on model. All standard single reduction models are equipped with an internal splash shield located near the worm. This shield deflects the oil from the vent, preventing leakage when the vent plug is adjacent to the worm (as on the DT or DV standard mounting). When this location is used as a drain (as on the DV sidewall, worm under), drainage will be better facilitated if done at or near the operating temperature. Filling from this location is not recommended, as the shield will impede the oil flow rate. Bearings are splash lubricated provided the input speed is 1160 RPM or greater. Contact the factory when input speeds fall below this.

B. Double reduction models are built to accommodate one mounting position as specified during order entry. Standard mounting positions, furnished unless otherwise specified, are shown in Figure 2 which also illustrates the utility plug locations. Note that the mounting position relates to the main housing orientation. Standard units have an oil level common to both housings and do not use an intermediate oil seal. The vent plug is located in the main housing where the slower worm speed eliminates the need for a vent shield. Grease fittings (not shown in Figure 2) are used to lubricate bearings when oil splash does not serve this purpose (as with the DV or DL upper slow speed bearing).

3. Venting

During operation, the heat generated by the gearbox will cause the air and lubricant inside the unit to expand. A vent plug is used to equalize the resulting pressure, the location of which is dependent on the model and mounting position. Before putting the unit into service, review Figures 1 and 2 and relocate the vent plug (if necessary) as shown for the appropriate model and mounting position. Double reduction models (Figure 2) are vented in the main housing only. To prevent loss of oil during shipment, the vent plug includes a brass pin which must be removed prior to operation. If a speed reducer is installed in an atmosphere containing exceptional amounts of moisture or dust, a shielded or hooded vent plug should be used. For intermittent duty applications, where the operating temperature does not rise more than about 20 degrees F. internal pressure build-up is minimal and venting is not necessary. Some models are available with an optional internal expansion chamber allowing units to be totally sealed. Contact us for more details.

4. C-Flange Motor Mounting Procedures

A. Mounting Motor to C-Flange Reducer With Hollow Input Shaft

Check motor and reducer mounting registers for nicks that would interfere with assembly. Remove if necessary.

Remove protective plastic plug from reducer input shaft. The bore has been coated with an anti-seize compound.

Align the motor shaft and key with keyway in bore and slide motor up to flange.

Position the motor conduit box as desired.

Using the fasteners supplied, secure the motor to the reducer. Draw down evenly so as not to bend the motor shaft. Tighten fasteners to 200 inch pounds.

B. Mounting Motor to C-Flange Reducer With Coupling Adaptor

Check motor and reducer mounting registers for nicks that would interfere with assembly. Remove if necessary.

When assembling the motor and coupling, the coupling halves should be equally spaced on each shaft to insure adequate engagement. The following describes a method for doing this.

First determine the assembled shaft clearance by measuring the distance from the C-Flange face to the reducer shaft end and subtracting the motor shaft length. Mount and secure the motor shaft coupling half with the spider end extending one half the clearance distance beyond the motor shaft. Mount the reducer coupling half and coupling spider on reducer shaft in its approximate position but do not secure.

Locate the motor conduit box in the desired position and secure the motor to the reducer flange using the fasteners provided. Tighten to about 200 inch pounds.

Using the access hole in the flange, slide the coupling together and tighten the set screw.

5. Unit Assembly/Disassembly Instructions

Contact the factory for an instruction manual.

III. LUBRICATION & MAINTENANCE

1. Factory Filling

WINSMITH speed reducers are oil filled at the factory to the proper level for the standard mounting position as shown in Figures 1 or 2. **The oil level should be checked and adjusted (if necessary) prior to operation, using the oil level plug provided and while the unit is oriented in its operating position.**

2. Ambient Temperature

If the operating ambient temperature is other than 51-95°F, then refer to lubrication chart and refill the unit with the correct grade based on actual ambient temperatures and operating speed. See item 3 for additional information regarding oil changes.

3. Oil Changing

When changing oil for any reason, it should be remembered that oils of various types may no be compatible. Therefore, when changing to a different oil, it is recommended that the housing be completely drained and thoroughly flushed with a light flushing oil prior to refilling with the appropriate lubricant. The oil level should be rechecked after a short period of operation and adjusted, if necessary. When changing double reduction models, each housing should be drained and filled independently, even though there may be a common level.

A. Initial Oil Change

The oil in a new speed reducer should be changed at the end of 250 hours of operation. (30 days for 8 hour per day service, 15 days for 16 hour service, 10 days for 24 hour service).

B. Subsequent Oil Changes

Under normal conditions, after the initial oil change, the oil should be changed after every 2500 hours of operation, or every six months, whichever occurs first. Under severe conditions (rapid temperature changes, moist, dirty or corrosive environment) it may be necessary to change oil at intervals of one to three months. Periodic examination of oil samples taken from the unit will help establish the appropriate interval.

C. Synthetic Oils

Synthetic lubricants can be advantageous over mineral oils in that they generally are more stable, have a longer life, and operate over a wider temperature range. These oils are appropriate for any application but are especially useful when units are subjected to low start-up temperatures or high operating temperatures. However, continuous operation above 225°F may cause damage to seals or other components. It is recommended that the initial oil be changed or filtered after the first 1500 hours of operation to remove metal particles that accumulate during break-in. Subsequent oil

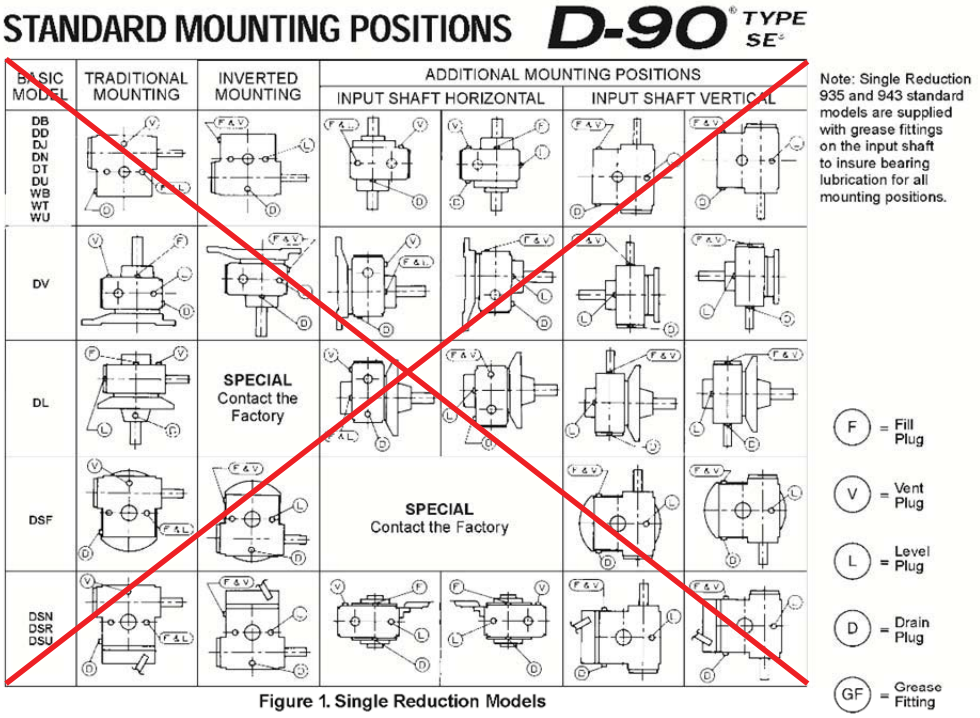

Figure 1. Single Reduction Models

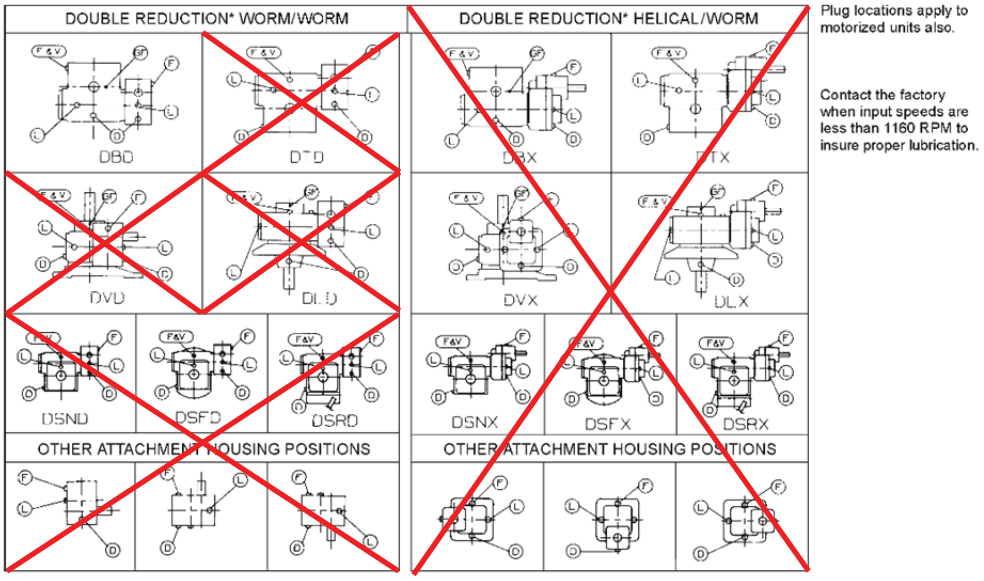

*Double Reduction units are not universal mounting. Mountings other than standard require a special outline.

Figure 2. Double Reduction Models

changes should be made after 5000 hours operation if units are operating in a clean environment. This can be extended to 10,000 hours if using new reformulated Mobil SHC lubricants (orange in color) and the lubricant remains free of contamination over this period. See comments under 3B for more severe ambient conditions.

4. Long Term Storage or Infrequent Operation

If a speed reducer is to stand idle for an extended period of time, either prior to installation or during use, it is recommended that the unit be filled completely with oil to protect interior parts from rust corrosion due to internal condensation. Be sure to drain the oil to the proper level before placing the speed reducer in service. A long term storage option is available on new units. Contact us for details.

5. Grease Fittings

Some units are equipped with grease fittings to lubricate bearings not adequately lubricated by the oil splash. These fittings must be lubricated every 3-6 months depending on operating conditions. Bearing greases must be compatible with the type of gear lubricant being used (ie. mineral, synthetic, food grade, etc.) For mineral oils, use a high quality lithium base NLGI #2 bearing grease. For synthetic oils, use a synthetic bearing grease such as Mobil Synthetic Universal grease, Mobilith SHC 100 or a suitable equivalent. For food grade lubricants, use Chevron FM grease, NLGI 2, or equivalent.

6. Low Input Speeds (Under 1160 RPM)

When input speeds are less than 1160 RPM, grease fittings will be required to lubricate any bearings not partially covered by the normal oil level. Such units are considered non-standard and necessitate factory modification. If this low speed operating condition exists and units are without the appropriate grease fittings, please contact the factory.

7. Oil Temperature

Speed reducers in normal operation can generate temperatures up to 200°F depending on the type of reducer and the severity of the application (loading, duration of service, ambient temperatures). Excessive oil temperatures may be the result of one or more of the following factors:

A. Overloads

Overloads may be due to the original unit selection being too small for the application, or increased loads on the speed reducer to a point where its rating is exceeded after it has been in service for a period of time. Always check the speed reducer rating when increasing driven loads or increasing the horsepower rating of the motor or other prime mover.

B. Overfilling or Underfilling

If a speed reducer is overfilled with oil, the energy used in churning the excessive oil can result in overheating. If this occurs, shut down the drive, remove the oil level plug and allow oil to drain until oil ceases to drain from the level hole, reinstall the oil level plug and restart the drive. If the speed reducer is underfilled, the resultant friction can cause overheating and possible damage. If this occurs, fill the speed reducer to the oil level plug hole and check the gearing for excessive wear.

C. Inadequate Cooling

In order to dissipate internally generated heat, the speed reducer must be installed in such a way that air can circulate freely. Tightly confined areas (inside cabinets, etc.) should be avoided. If this is not possible, forced air cooling by means of a separate blower should be used.

8. Oil Seals

Although WINSMITH uses high quality oil seals and precision ground shafts to provide a superior seal contact surface, it is possible that circumstances beyond WINSMITH's control can cause oil seal leakage (damage during shipment or installation, etc.). When replacing a shaft oil seal, using the following suggestions will help to insure leak-free operation and long seal life.

A. When installing a new seal, cover the keyway and any other surface discontinuity with smooth tape to protect the seal lip from being damaged.

B. A sealant should be used between the O.D. of the seal and the I.D. of the bore into which the seal is installed. The seal bore should also be free of any burrs, nicks, or scratches.

C. Be sure that the seal is not cocked in the seal bore. The outer face of the seal should be flush with the surface into which it is mounted.

Lubricants

Worm Gear Reducers

For special applications that involve severe ambient temperature extremes or a seasonal oil requirement, WINSMITH, based on extensive testing and field experience, recommends the use of Mobil SHC synthetic lubricants.

Ambient Temperature	-30 to 15°F	16 to 50°F	51 to 95°F	51 to 95°F	96 to 131°F	96 to 131°F
Final Stage Worm Speed*	up to 2000 FPM	up to 2000 FPM	up to 450 FPM	above 450 FPM	up to 450 FPM	above 450 FPM
ISO Viscosity Grade	220	460	680	460	680	460*
AGMA Lubricant No.	5S**	#7 Compounded***	#8 Compounded***	#7 Compounded***	8 S**	7S**

Mobil	SHC 630	600W Super Cylinder	Extra Hecla Super	600W Super Cylinder	SHC 636	SHC 634
American Lubricants	SHC-90W	AGMA #7 Gear Oil	AGMA #8 Gear Oil	AGMA #7 Gear Oil	N/A	N/A
Castrol	Tribol 800/220	Tribol 1105-7C	Tribol 1105-8C	Tribol 1105-7C	Tribol 800/680	Tribol 800/460
Chevron	Tegra 220	Cylinder Oil W460	Cylinder Oil W680	Cylinder Oil W460	Tregra 680	Tegra 460
Conoco	Syncon R & O 220	Inca Oil 460	Inca Oil 680	Inca Oil 460	N/A	Syncon R & O 460
Exxon (Esso)	Teresstic SHP 220	Spartan EP 460	Spartan EP 680	Spartan EP 460	Teresstic SHP 680	Teresstic SHP 460
Fiske Brothers	SPO-MG	SPO-277	SPO-288	SPO-277	N/A	N/A
Shell	Omala RL 220	Valvata J 460	Valvata J 680	Valvata J 460	Omala RL 680	Omala RL 460
Texaco	Pinnacle 220	Vanguard 460	Vanguard 680	Vanguard 460	Pinnacle 680	Pinnacle 460

**synthetic oil
***3% to 10% fatty or synthetic oils or mild EP additives

Lubricant selections are provided by the lubricant manufacturer based on AGMA recommended viscosity grades.
Viscosity grades are based on Lubrication Standard ANSI/AGMA 9005-D94.

*The sliding velocity in feet per minute (FPM) for standard ratios is determined by multiplying the speed of the worm in RPM by the factor from the following table. For selecting the proper lubricant, use the speed of the worm in the final stage (input RPM divided by the first stage ratio).

	Nominal Ratio											
SIZE	5	7.5	10	15	20	25	30	40	50	60	80	100
910	0.153	—	0.137	0.133	0.122	0.116	0.132	0.121	0.115	—	—	—
913	0.231	0.189	0.183	0.179	0.171	0.165	0.178	0.169	0.164	0.161	—	—
917	0.303	0.229	0.201	0.193	0.180	0.172	0.189	0.176	0.170	0.166	0.161	0.133
920	0.347	0.263	0.225	0.216	0.202	0.191	0.215	0.200	0.188	0.182	0.164	0.161
924	0.412	0.312	0.261	0.256	0.236	0.223	0.249	0.231	0.216	0.210	0.201	0.196
926	0.455	0.345	0.283	0.276	0.254	0.238	0.269	0.249	0.234	0.225	0.215	0.210
930	0.520	0.395	0.327	0.317	0.291	0.273	0.307	0.285	0.269	0.258	0.246	0.241
935	0.607	0.461	0.427	0.412	0.373	0.349	0.403	0.367	0.345	0.330	0.311	0.299
943	0.633	0.588	0.568	0.553	0.507	0.558	0.544	0.501	0.475	0.457	0.435	0.422

WINSMITH

PEERLESS–WINSMITH, INC.

SPRINGVILLE OPERATIONS • 172 EATON STREET, P.O. BOX 530, SPRINGVILLE, NY 14141-0530
PHONE: 716/592-9310 • FAX: 716/592-9546
http://www.winsmith.com e-mail=winsmith@winsmith.com

PEERLESS-WINSMITH, INC. ISO 9001 CERTIFIED

PEERLESS-WINSMITH, INC. MOTORS and GEARING

PWS 18560 August 1999 10M
Printed in U.S.A.

11.7.5 END SCREW JACK – DUFF-NORTON TYPE M9099

Duff-Norton
Actuators

Installation, Operation and Maintenance Instructions with Parts Lists

100-Ton
150-Ton
250-Ton
Models

Publication Part No. SK-2389-100

100,150 and 250-Ton Translating Machine Screw Actuators

Duff-Norton

CAUTION

This manual contains important information for the correct installation, operation and maintenance of the equipment described herein. All persons involved in such installation, operation and maintenance should be thoroughly familiar with the contents. To safeguard against the possibility of personal injury or property damage, follow the recommendations and instructions of this manual and keep it for further reference.

WARNING

The equipment shown in this manual is intended for industrial use only and should not be used to lift, support, or otherwise transport people.

Contents

Section I	General Information	4
1-1.	General	4
1-2.	Industrial Use Only	4
1-3.	Specifications	4
Table 1-1.	100 Ton, 150 Ton and 250 Ton Translating Machine Screw Actuators	4
Table 1-2.	Anti-Backlash Actuators	4
1-4	Important Precautions	4
1-5.	Warranty and Warranty Repair	5
Section II	Maintenance	5
2-1.	Lubrication	5
Table 2-1.	Maximum Free Vertical Movement Of Actuator Lifting Screw	6
Table 2-2.	Maximum Free Rotational Movement Of Actuator Worm Shaft	6
2-2	External Actuator Wear Measurements	6
2-3.	Rebuild Procedure	6
2-4	Required Tools	7
2-5.	Disassembly	7
2-6.	Cleaning	7
2-7	Inspection	7
Table 2-3.	Minimum Gear Internal Thread Thickness At ID Land	8
Table 2-4.	Minimum Gear Tooth Thickness At OD Land At Center	8
2-8.	Assembly (Refer to Figure 3-1)	8
2-9.	Anti-Backlash Nut Function	8
2-10.	Anti-Backlash Nut Adjustment	9
Section III	Illustrated Parts List	9
3-1.	General	9
Figure 2-1.	Anti-Backlash Nut Adjustment	9
3-2.	Parts List For 100-ton, 150-ton, and 250-ton Translating Machine Screw Actuators.	9
Figure 3-1.	Exploded Illustration 100-Ton, 150-Ton and 250-Ton Translating Machine Screw Actuators	10
Figure 6-1.	Limit Switch Wiring Diagram	11

Section I
General Information

1-1. General

This manual contains maintenance instructions for Duff Norton® 100-ton, 150-ton, and 250-ton translating machine screw actuators. It describes and details procedures for installation, disassembly, cleaning, inspection, rebuilding and assembly of these actuators.

1-2. Industrial Use Only

The actuators described and illustrated in this manual are intended for industrial use only and should not be used to lift, support or otherwise transport people unless you have a written statement from Duff-Norton Company which authorizes the specific actuator unit, as used in your application, as suitable for moving people.

1-3. Specifications

Table 1-1. 100 Ton, 150 Ton and 250 Ton Translating Machine Screw Actuators

Actuator Number		Rated Load (tons)	Diameter of Lifting Screw (in)	Closed Height ** (in)	Base Size (in)	Worm Gear Ratios		Turns of Worm For 1" Raise		Maximum HP Per Actuator		Torque at Full Load* (in-lbs)		Actuator Efficiency Rating (%)		Weight with Base Raise of 6" (lb)	Weight For Each Additional 1" Raise (lb)
Upright	Inverted					Std. Ratio	Optional	Std. Ratio	Optional	Std. Ratio	Optional	Std. Ratio	Optional	Std. Ratio	Optional		
9099	9098	100	6 .750 Pitch Square	24	20.75 X 24.5	12:1	36:1	16	48	25	11	16,000	8,600	13.0	8	1,200	9
[illegible]	[illegible]	[illegible]	7 [illegible] Square	[illegible]	20.75 X 24.5	[illegible]	[illegible]	[illegible]	[illegible]	[illegible]	[illegible]	[illegible]	[illegible]	[illegible]	[illegible]	[illegible]	[illegible]
[illegible]	[illegible]	[illegible]	8 [illegible] Square	[illegible]	[illegible]	[illegible]	[illegible]	[illegible]	[illegible]	[illegible]	[illegible]	[illegible]	[illegible]	[illegible]	[illegible]	[illegible]	[illegible]

* For loads of from 25% to 100% of Actuator load rating. Torque requirements are approximately proportional to the load.
** Closed heights are for standard upright top plate models and may vary with different screw ends, inverted models, or when bellows boot is used.

Table 1-2. Anti-Backlash Actuators

Actuator Number	Rated Load (tons)	Torque at Full Load (in-lbs)		Actuator Efficiency Rating %		Closed Height (in)	Weight with Base Raise of 6" (lb)
		Std. Ratio	Optional	Std. Ratio	Optional		
9499	100	[illegible]	9460	11.7	[illegible]	26.5	1325
48150	[illegible]	30900	17050	12.7	7.7	[illegible]	1475
[illegible]	250	22000	–	7.2	–	36.6	[illegible]

Note: Additional specifications are same as in Table 1.

1-4 Important Precautions

Actuator life is dependent on many factors such as loading, alignment, speed, lubrication, cleanliness of lubrication, side loading and heat. In order to ensure that maximum actuator operational life is achieved the following precautions should be taken:

1. The maximum load to which the actuator may be exposed does not exceed the actuator load rating.
2. The structure on which the actuator is mounted has ample strength to carry the maximum load and is rigid enough to prevent undue deflection or distortion of the actuator supporting members.
3. It is essential that the actuator be aligned during installation such that the lifting screw is vertically plumb and the connecting shafts are in line with the actuator worm shaft. The actuator lifting screw must pass freely through the housing without signs of rubbing or binding.
4. The actuator should have a greater raise than is needed in the application. Should it be necessary to operate the actuator at the extreme limits of travel, it should be done cautiously.

   Caution

   Travel beyond design closed height may result in serious damage to the actuator's internal mechanism.
5. Dust, dirt and other debris should not be allowed to accumulate on or around the actuator or its drive components as this will result in higher operating temperatures and possible damage to the actuator bellows boot. Cleaning should be done as necessary.
6. The actuator lifting screw should be kept free from dust, grit and other debris.

   Caution

   Where the actuator lifting screw is exposed to airborne dirt, dust, etc., a bellows boot should be used.
7. The actuator should be lubricated per Section II, paragraph 2-1. The actuator lifting screw must

be kept lubricated. Frequent inspections for proper lifting screw lubrication are recommended.

Caution

The actuator lifting screw should never be run dry.

8. The actuator should not be operated at a duty cycle which causes heat build-up beyond 200° Fahrenheit. It is recommended that the actuator temperature be monitored using a temperature probe located in the actuator grease in the vicinity of the worm.

Caution

It is especially important that the actuator temperature be monitored during the initial wear-in period as an abnormally high wear rate, due to high spots on the threads, causes a higher temperature. Depending on loading, this wear-in period could require several thousand inches of actuator travel.

9. Control limit switches should be checked monthly or more frequently for proper operating performance and to ensure that debris does not build up around them which might prevent proper performance.
10. All mounting bolts for the actuator and drive components should be tightened to proper assembly torque values monthly.
11. The bronze actuator worm gear is intended to be a replaceable wear member. The internal thread wears from working against the hardened steel lifting screw and the gear teeth wear from working against the hardened steel worm. External measurements for wear should be made on a periodic basis. The required frequency of measurements will vary with the application. It is recommended that, initially, wear measurements be performed on a monthly basis until a consistent wear rate pattern has developed. The wear measurements should be made per Section II, paragraph 2-2.

1-5. Warranty and Warranty Repair

Subject to the conditions stated herein, Duff-Norton will repair or replace, without charge, any parts proven to Duff-Norton's satisfaction to have been defective in material or workmanship. Claims must be made within one year after date of shipment. Duff-Norton will not repair or replace any parts that become inoperative because of improper maintenance, eccentric loading, overloading, chemical or abrasive action, excessive wear, or other abuse.

Equipment and accessories not of Duff-Norton's manufacture are warranted only to the extent that they are warranted by the manufacturer, and only if the claimed defect arose during normal use, applications and service. Equipment which has been altered or modified by anyone without Duff-Norton's authorization is not warranted by Duff-Norton. Except as stated herein, Duff-Norton makes no other warranties, express or implied, including warranties of merchantability and fitness for a particular purpose.

If you have any questions concerning warranty repair, please contact the Duff-Norton Company. Authorization for return must be received from the Duff-Norton Company before returning any equipment for inspection or warranty repair.

Section II

Maintenance

2-1. Lubrication

Unless otherwise specified, actuators are shipped packed with grease which should be sufficient for one month of normal operation. For normal operation, the actuator should be lubricated once a month using the following Extreme Pressure grease or its quivalent:

Shell Oil Co. ..... Shell Albida EP LC #2

For severe service conditions, the actuators should be lubricated more frequently using one of the above greases (daily to weekly depending upon the conditions). If duty is heavy, an automatic lubrication system is strongly recommended. If ambient temperatures exceed 200° F, consult lubricant manufacturers.

Note

Finely ground bronze particles in the actuator grease is the result of normal wear of the bronze worm gear. However, chips or shavings are an indication of abnormal wear, the cause of which should be immediately investigated. This could be caused by lack of lubrication, misalignment, jamming, contamination or overheating.

NOTE: Reference the maintenance plate (Section 11.4.8) for maintenance information

5

engage the threads of the lifting screw (1). Adjustment of backlash is made by running down on the shell cap of the actuator. This forces the anti-backlash nut threads into closer contact, reducing clearance and thus reducing backlash.

2-10. Anti-Backlash Nut Adjustment

1. To minimize backlash remove the two set screws (4) and tighten down on shell cap until the desired backlash is obtained. Spot drill top of shell through set screw holes, then replace set screws and tighten to prevent shell cap backing off.
2. To avoid binding and excessive wear, do not adjust lifting screw backlash to less than 0.0005 inch.
3. The clearance (A) designed into the worm gear and anti-backlash nut set is one-half the thread thickness. When adjustments have been made to use all this clearance replace the worm gear and anti-backlash nut as a set.

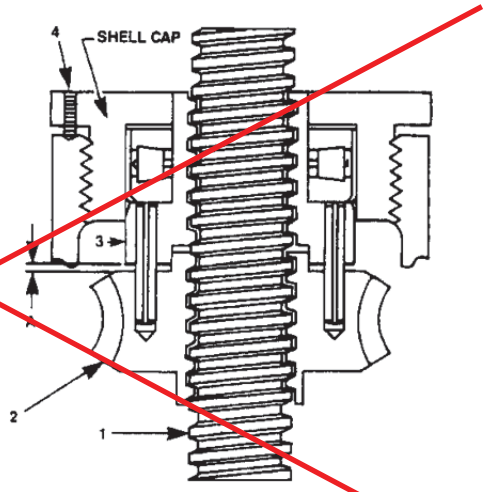

Figure 2-1. Anti-Backlash Nut Adjustment

Section III
Illustrated Parts List

3-1. General

This section contains an exploded illustration of the 100-ton, 150-ton, and 250-ton translating machine screw actuators. The number adjacent to each part on the illustration is the index number. Keyed to this index number on the parts list is the part name.

When ordering parts be sure to include:

1. The nameplate model of your unit.
2. Index number and name of part.

3-2. Parts List For 100-ton, 150-ton, and 250-ton Translating Machine Screw Actuators.

Index No.	Part Name	Qty. Req.
1	Bushing	1
2	Base Plate	1
3	Shell, Actuator	1
4	Pipe, Bottom	1
5	Screw , Lifting	1
6A	Worm Gear	1
6B	Worm Gear and Anti-backlash Nut Assembly (Mfg'd and sold in sets only)	1
7	Bearing, Bottom Load	1
8	Bearing, Top Load	1
9	Screw, Cap	12
10	Washer, Lock	12
11	Flange, Worm	2
12	Shim, Flange	2
13	Seal, Oil	2
14	Worm	1
15	Bearing, Worm	2
17	Grease Fitting	2
18	Lock Screw	1
19	Eye Bolt (250 Ton Only)	2
*	Shell Cap (Anti-Backlash Models)	1
*	Set Screw (Anti-Backlash Models)	2
*	Guide Bushing (Inverted Models)	1
*	Name Plate	1

* Items Not Shown

9

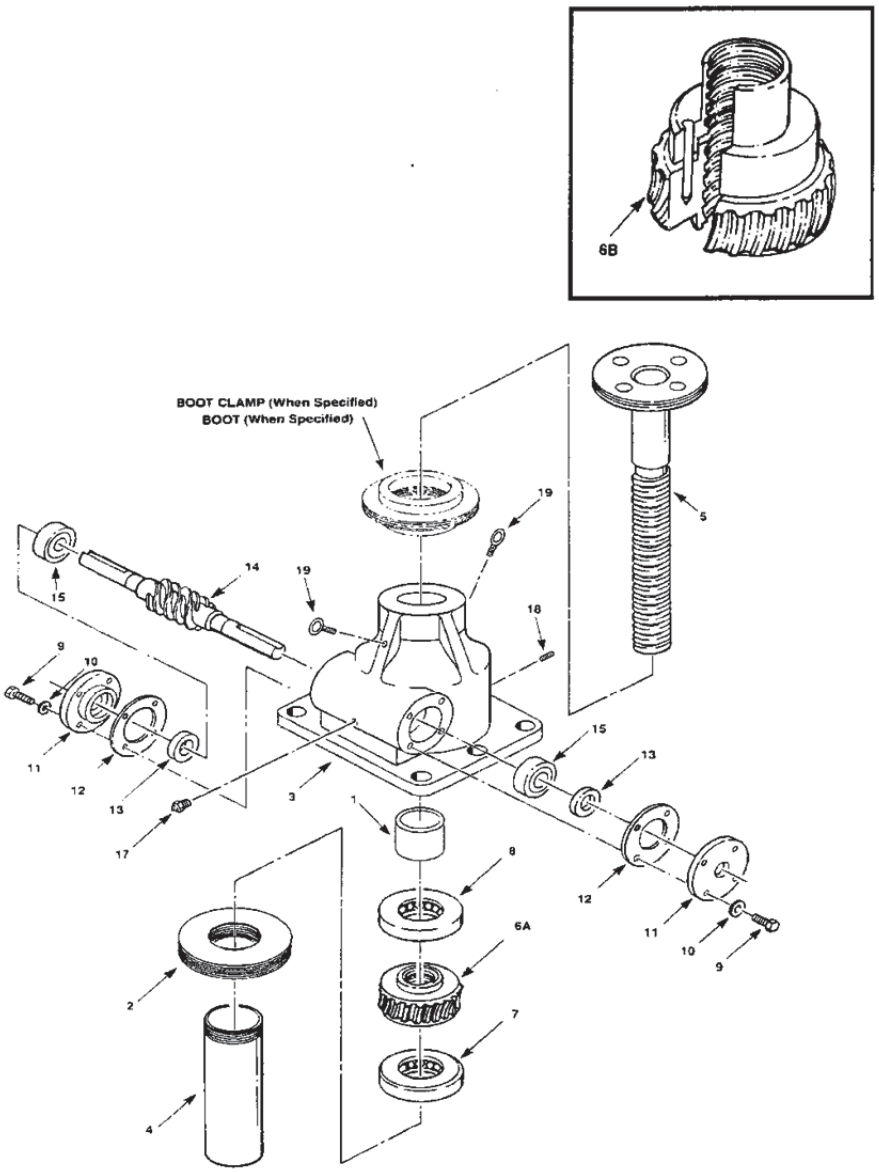

Figure 3-1. Exploded Illustration 100-Ton, 150-Ton and 250-Ton Translating Machine Screw Actuators

10

Duff-Norton

P.O. Box 7010
Charlotte, NC 28241-7010

General Office (704) 588-0510
Customer Service (800) 477-5002
Customer Service (704) 588-4610
FAX (704) 588-1994

SK-2389-100
1M196

11.7.6 END SCREW JACK GEAR COUPLING – FALK TYPE G51

REXNORD

Falk™ Double & Single Engagement Gear Couplings • Install. & Maint.

Sizes 1010 thru 1070G & GP & Sizes 1 thru 7GF (Page 1 of 8)

How To Use This Manual

This manual provides detailed instructions on installation, maintenance, and parts identification for Falk Lifelign ® gear couplings, Types G & GF10, 20, 31, 32, 51, 52, & GP20 & GP52. Use the table of contents below to locate required information.

Table of Contents

Introduction . . . . . Page 1
Lube Fittings . . . . . Page 1
Limited End Float . . . . . Page 1
Lubrication . . . . . Pages 1-2
Balanced Couplings . . . . . Page 3
Bi-Annual & Annual Maintenance . . . . . Page 3
Installation & Alignment Instructions . . . . . Pages 3-6 & 7
Installation & Alignment Data . . . . . Page 6
Parts Identification & Parts Interchangeability . . . . . Page 7-8

CAREFULLY FOLLOW THE INSTRUCTIONS IN THIS MANUAL FOR OPTIMUM PERFORMANCE AND TROUBLE FREE SERVICE.

INTRODUCTION

This manual applies to standard coupling Types G & GF10, 31 and 51 with shrouded bolts, and G & GF20, 32, 52, and GP20 & GP52 with exposed bolts. For couplings furnished with special features, refer to assembly drawing furnished with coupling for proper assembly arrangement and any additional installation or maintenance requirements. Refer to the specific manuals for GV vertical gear couplings installation and maintenance.

IMPORTANT: Use G/GF51 & 52 couplings for floating shaft assemblies or as the fourth bearing in three bearing systems. When gear couplings are mounted on a horizontal floating shaft, use a gap disc in each coupling. Where limited end float is required or where sleeve bearing motors are used, consult the Factory. Type GP52 couplings are recommended for horizontal application only. Refer Type GP52 floating shaft applications to the Factory.

CAUTION: Consult applicable local and national safety codes for proper guarding of rotating members. Observe all safety rules when installing or servicing couplings.

WARNING: Lockout starting switch of prime mover and remove all external loads from drive before installing or servicing couplings.

LUBE FITTINGS

Sleeves have ⅛" NPT lube holes for sizes 1010G20 - 1035G20, 1GF20 - 7GF20, 1025G10 - 1035G10, and 2½GF10 - 5½ GF10. (Sizes 1010G10 - 1020G10 and 1GF10 - 2GF10 use ¼"-28 SAE LT automotive plugs and fittings.) Sizes 1040G thru 1070G have ¼" NPT holes. Use a standard grease gun and lube fittings.

LIMITED END FLOAT

Where limited end float is required or where sleeve bearing motors are used, consult the Factory.

LUBRICATION

Adequate lubrication is essential for satisfactory operation. Because of its superior lubricating characteristics and low centrifuge properties, Falk Long Term Grease (LTG) is highly recommended.

Type G/GP/GF20 Type G/GF32 Type G/GP/GF52

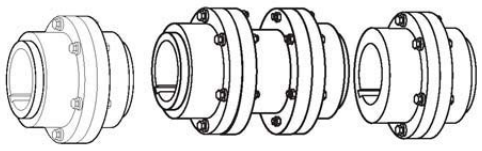

1000G Series Pictured

Gear couplings initially lubricated with Falk Long Term Grease (LTG) will not require re-lubrication for up to three years.

The use of general purpose grease requires re-lubrication of the coupling at least once every six months. If coupling leaks grease, is exposed to extreme temperatures, excessive moisture, experiences frequent reversals or axial movements; more frequent lubrication may be required.

USDA Approval

LTG has the United States Department of Agriculture Food Safety & Inspection Service approval for applications where there is no possibility of contact with edible products. (H-2 ratings.)

Long Term Grease (LTG)

The high centrifugal forces encountered in couplings separate the base oil and thickener of general purpose greases. Heavy thickener, which has no lubrication qualities, accumulates in the tooth mesh area of gear couplings resulting in premature mesh failure unless periodic lubrication cycles are maintained.

Falk Long Term Grease (LTG) was developed specifically for couplings. It resists separation of the oil and thickener. The consistency of Falk LTG changes with operating conditions. As manufactured, it is an NLGI #1/2 grade. Working of the lubricant under actual service conditions causes it to become semifluid, while the grease near the seals will set to a heavier grade, helping to prevent leakage.

LTG is highly resistant to separation, easily out performing all other lubricants tested. The resistance to separation allows the lubricant to be used for relatively long periods of time.

Although LTG grease is compatible with most other coupling greases, the mixing of greases may dilute the benefits of LTG.

CAUTION: Do not use LTG in bearings. Do not use LTG for low speed applications. Refer to Table 4, Page 6 for coupling speed range of LTG grease.

Packaging

14 oz. (0,4 Kg) CARTRIDGES — Individual or case lots of 10 or 30.

35 lb. (16 Kg) PAILS, 120 lb. (54 Kg) KEG & 400 lb. DRUMS.

Specifications — Falk LTG (Long Term Grease)

TEMPERATURE RANGE — –20°F (–29°C) to 250°F (121°C). Minimum pump = 20°F (–7°C).

MINIMUM BASE OIL VISCOSITY — 3300SSU (715cSt) @ 100°F (38°C).

THICKENER — Lithium soap/polymer.

Rexnord Industries, LLC, Coupling Group
5555 S. Moorland Rd., New Berlin, WI 53151-7953 USA Telephone : 262-796-4060
Fax: 262-796-4064 e-mail: info@rexnord.com web: www.rexnord.com

458-110
April 2005
Supersedes 6-02

Install. & Maint. • Falk™ Double & Single Engagement Gear Couplings

(Page 2 of 8) Sizes 1010 thru 1070G & GP & Sizes 1 thru 7GF

CENTRIFUGE SEPARATION CHARACTERISTICS — ASTM #D4425–84 (Centrifuge Test) — K36 = 2/24 max., very high resistance to centrifuging.

NLGI GRADE (ASTM D-217) — 1/2

CONSISTENCY (ASTM D-217) — 60 stroke worked penetration value in the range of 315 to 360 measured @ 77°F (25°C).

DROPPING POINT — 350°F (177°C) minimum.

MINIMUM TIMKEN EP O.K. LOAD — 40 lb. (18 kg).

ADDITIVES — Rust and oxidation inhibitors that do not corrode steel or swell or deteriorate synthetic seals.

General Purpose Grease

Bi-annual Lubrication — The following specifications and lubricants for general purpose grease apply to gear couplings that are lubricated bi-annually and operate within ambient temperatures of –30°F (–34°C) to 200°F (93°C). For temperatures beyond this range, consult Factory. For normal service, use a NLGI #1 extreme pressure (EP) grease EXCEPT when the coupling speed is less than the minimum specified in Table 4, Page 6. At these lower speeds, use a NLGI #0 extreme pressure (EP) grease. When one or more gear couplings in an application require NLGI #0 grease, the same grease may be used in all of the couplings. DO NOT use cup grease.

If coupling leaks grease, is exposed to extreme temperatures, excessive moisture or experiences frequent reversals or axial movements; more frequent lubrication may be required.

Lubricants listed in Tables 1, 2 & 3 are typical products only and should not be construed as exclusive recommendations.

Specifications — General Purpose Coupling Lubricants

COUPLING SPEED RANGE — See Table 4, Page 6.

TEMPERATURE RANGE — –30°F to +200°F(–34°C to +93°C)

WORKED PENETRATION AT 77°F(25°C) —
NLGI #1 . . . . . 310-340 (See Table 1)
NLGI #0 . . . . . 355-385 (See Table 2)

DROPPING POINT — 300°F(149°C) or higher

TEXTURE — Smooth or fibrous

MINIMUM TIMKEN O.K. LOAD — 30 lb.

SEPARATION AND RESISTANCE — Low oil separation rate and high resistance to separation from centrifuging.

LIQUID CONSTITUENT — Possess good lubricating properties . . . equivalent to a high quality, well refined petroleum oil with EP additives.

INACTIVE — Must not corrode steel or cause swelling or deterioration of synthetic seals.

Oil Lubrication

EP oils may be a more effective lubricant than grease when the required coupling speed is one half of the minimum speed range of NLGI #1 grease listed in Table 4, Page 6 (Minimum rpm ÷ 2). Oil lubricated couplings must be sealed to prevent leakage, i.e. keyways, etc. Couplings must be drained and refilled with new oil every six months for operating temperatures up to 160°F (71°C) and every three months for couplings operating at temperatures of 160°F (71°C) up to 200°F (93°C).

For temperatures beyond this range, consult Facotyr. The minimum operating temperature must not be lower than the pour point of the oil. The specified amount of grease listed in Table 4, Page 6, is in pounds and also applies to the volume of oil in pints.

Specifications

Type: Mild EP gear oil that meets AGMA Specifications 250.04.

Grade: AGMA #8EP (ISO VG 680).

Viscosity: 612-748 cSt @ 104°F (40°C).

Pour Point: 20°F (–7°C) Maximum.

Must not corrode steel or swell or deteriorate synthetic seals.

TABLE 1 — NLGI #1 Grease

Manufacturer	Lubricant ★
Amoco Oil Co.	Rykon Grease #1 EP
BP Oil Co.	Energrease LS-EP1
Chevron U.S.A., Inc.	Dura-Lith EP1
Citgo Petroleum Corp	Premium Lithium Grease EP1
Conoco Inc.	EP Conolith Grease #1
Exxon Company, U.S.A..	Lidok EP1
Imperial Oil Ltd.	Ronex EP1
Kendall Refining Co.	Lithium Grease L-416
Keystone Div., Pennwalt Corp.	Zeniplex-1
Lyondell Lubricants	Litholine Complex EP1
Mobil Oil Corp..	Mobilux EP1
Petro-Canada Products	Multipurpose EP1
Phillips 66 Co.	Philube Blue EP
Shell Oil Co.	Alvania EP Grease 1
Shell Canada Ltd.	Alvania Grease EP1
Sun Oil Co.	Sun Prestige 741 EP
Texaco Lubricants	Multifak EP1
Unocal 76 (East & West)	Unoba EP1

TABLE 2 — NLGI #0 EP Grease

Manufacturer	Lubricant ★
Amoco Oil Co.	Rykon Premium Grease 0 EP
BP Oil Co.	Energrease LS-EP 0
Chevron U.S.A., Inc.	Dura-Lith EP 0
Citgo Petroleum Corp	Premium Lithium Grease EP 0
Conoco Inc.	EP Conolith Grease #0
Imperial Oil Ltd.	Unirex EP0
Exxon Company, U.S.A..	Lidok EP 0
Kendall Refining Co.	Lithium Grease L-406
Keystone Div., Pennwalt Corp.	Zeniplex-0
Mobil Oil Corp..	Mobilux EP 0
Petro-Canada Products	Multipurpose Lotemp EP Grease
Phillips 66 Co.	Philube Blue EP
Shell Oil Co.	Alvania EP Grease RO
Shell Canada Ltd.	Alvania Grease EPW
Sun Oil Co.	Sun Prestige 740 EP
Texaco Lubricants	Multifak EP 0
Unocal 76 (East & West)	Unoba EP 0

TABLE 3 — Oil Lubricants

Manufacturer	Lubricant ★
Amoco	Permagear EP 160
Chevron, U.S.A.	NL Gear Compound 680
Exxon Co., U.S.A.	Spartan EP680
Gulf Oil Co.	EP Lubricant HD 680
Mobil Oil Co.	Mobilgear 636
Shell Oil Co.	Omala Oil 680
Texaco Inc.	Meropa 680
Union Oil Co. of Calif.	Extra Duty NL Gear Lube 8EP

★ Lubricants listed may not be suitable for use in the food processing industry; check with lube manufacturer for approved lubricants.

458-110
April 2005
Supersedes 6-02

Rexnord Industries, LLC, Coupling Group
5555 S. Moorland Rd., New Berlin, WI 53151-7953 USA Telephone : 262-796-4060
Fax: 262-796-4064 e-mail: info@rexnord.com web: www.rexnord.com

REXNORD

Falk™ Double & Single Engagement Gear Couplings • Install. & Maint.

Sizes 1010 thru 1070G & GP & Sizes 1 thru 7GF (Page 3 of 8)

HORIZONTAL COUPLING INSTALLATION, ALL TYPES

Only standard mechanics tools, torque wrenches, inside micrometer, dial indicator, straight edge, spacer bar, and feeler gauges are required to install gear couplings. Clean all parts using a non-flammable solvent. Check hubs, shafts, and keyways for burrs. DO NOT heat clearance fit hubs. Use a lubricant that meets the specifications on Page 2. Pack sleeve teeth with grease and lightly coat seals with grease BEFORE assembly. The required amount of grease is listed in Table 4. Make certain flange fasteners are tightened to the required torque listed in Table 4.

Interference Fit Hubs — Unless otherwise specified, gear couplings are furnished for an interference fit without setscrews. Heat hubs to 275°F(135°C) using an oven, torch, induction heater, or an oil bath.

CAUTION: To prevent seal damage DO NOT heat hubs beyond a maximum temperature of 400°F (205°C) for Type G and 500°F (260°C) for Type GF.

When an oxy-acetylene or blow torch is used, use an excess acetylene mixture. Mark hubs near the center of their length in several places on hub body with a temperature sensitive crayon, 275°F (135°C) melt temperature. Direct flame towards hub bore using constant motion to avoid overheating an area.

WARNING: If an oil bath is used, the oil must have a flash point of 350°F (177°C) or higher. Do not rest hubs on the bottom of the container. Do not use an open flame in a combustible atmosphere or near combustible materials.

Maximize Performance & Life

The performance and life of couplings depend largely upon how you install and maintain them. Before installing couplings, make certain that foundations of equipment to be connected meet manufacturers' requirements. Check for soft foot. The use of stainless steel shims is recommended. Measuring misalignment and positioning equipment within alignment tolerances is simplified with an alignment computer. These calculations can also be done graphically or mathematically, and allow the incorporation of "cold offsets", which will compensate for shaft position changes due to thermal growth.

Balanced Couplings

The fasteners provided are matched sets and must not be mixed or substituted. Assembly balanced couplings are match marked and must be assembled with mating match marks aligned. In some sizes, the flanges are not match marked. Coupling flanges must be assembled with O.D.'s aligned to within .002" (0,05 mm). Component parts of assembly balanced couplings must not be replaced without re-balancing the complete assembly.

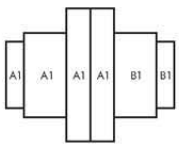

BI-ANNUAL MAINTENANCE

Re-lubricate coupling if using general purpose grease. If coupling leaks grease, is exposed to extreme temperatures, excessive moisture or frequent reversals; more frequent lubrication may be required.

ANNUAL MAINTENANCE

For extreme or unusual operating conditions, check coupling more frequently.

1. Check alignment per Step 7, Page 7. If the maximum operating misalignment values are exceeded, realign the coupling to the recommended installation values. See Table 4, for installation and maximum operating misalignment values.
2. Check tightening torques of all fasteners.
3. Inspect seal ring and gasket to determine if replacement is required.
4. Re-lubricate coupling if using general purpose grease.

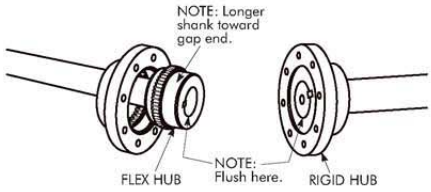

ALL TYPES G/GF/GP HORIZONTAL COUPLING INSTALLATION

1 — Mount Flanged Sleeves, Seals & Hubs

Place the flanged sleeves WITH seal rings on shafts BEFORE mounting flex hubs. Mount flex or rigid hubs on their respective shafts, as shown above, so that each face is flush with the end of its shaft. Allow hubs to cool before proceeding. Seal keyways to prevent leakage. Insert setscrews (if required) and tighten. Position equipment in approximate alignment with approximate hub gap.

For Type G/GF10 & 20 and GP20, position equipment in approximate alignment with gap equal to that given in Table 4.

For Type G/GF31 & 32 spacer and G/GF/GP51 & 52 floating shaft, with rigid hubs on floating shaft, position equipment in approximate alignment with approximate distance between shafts per Step 4A, Figure 2 on Page 5.

For G/GF/GP51 & 52 with flex hubs on the floating shaft, refer to Step 4A, Figure 1 on Page 5, to determine distance between shafts.

NOTE: Reference the maintenance plate (Section 11.4.3) for maintenance information

Rexnord Industries, LLC, Coupling Group
5555 S. Moorland Rd., New Berlin, WI 53151-7953 USA Telephone : 262-796-4060
Fax: 262-796-4064 e-mail: info@rexnord.com web: www.rexnord.com

458-110
April 2005
Supersedes 6-02

Install. & Maint. • Falk™ Double & Single Engagement Gear Couplings

REXNORD

(Page 4 of 8) Sizes 1010 thru 1070G & GP & Sizes 1 thru 7GF

2 — Gap & Angular Alignment for Close Coupled, Spacer, Short Floating Shaft, and Insulated Couplings

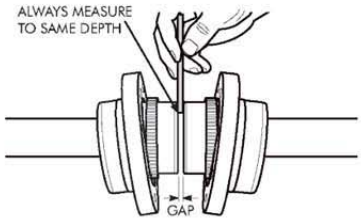

2A — Type G/GF10 & 20 & GP20

Use a spacer bar equal in thickness to gap specified in Table 4. Insert bar, as shown above, to same depth at 90° intervals and measure clearance between bar and hub face with feelers. The difference in minimum and maximum measurements must not exceed the INSTALLATION ANGULAR limit specified in Table 4.

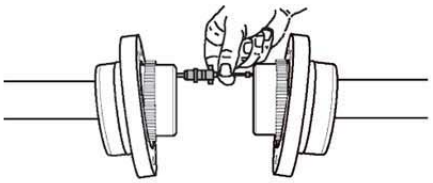

2B — G/GF31 & 32 (Spacer), and Type G/GF51 & 52 (Short Floating Shaft, See Step 4 for Long Floating Shaft)

Use an inside micrometer as shown above and at 90° intervals to measure the distance between hubs. The difference in minimum and maximum measurements should not exceed the INSTALLATION ANGULAR limit specified in Table 4.

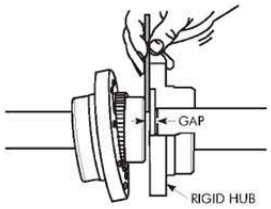

2C — G/GF51 & 52 & GP52 (As Fourth Bearing in Three Bearing System)

Use a spacer bar equal in thickness to the "X" dimension specified in Table 4. Insert bar, as shown above to same depth at 90° intervals and measure clearance between bar and hub face with feelers. The difference in minimum and maximum measurements must not exceed the INSTALLATION ANGULAR limit specified in Table 4.

3 — Offset Alignment for Close Coupled, Spacer, Short Floating Shaft, and Insulated Couplings

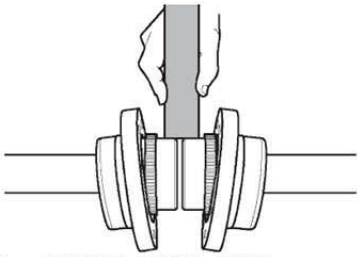

3A — Type G/GF10 & 20 & GP20

Align so that a straight edge rests squarely on both hubs as shown above and also at 90° intervals. Check with feelers. The clearance should not exceed the INSTALLATION OFFSET limit specified in Table 4. Tighten foundation bolts and repeat Steps 2A and 3A. Realign coupling if necessary. Use a dial indicator if hub extension is too short for accurate use of a straight edge.

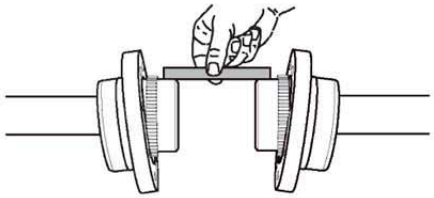

3B — Type G/GF31 & 32 (Spacer), and Type G/GF51 & 52 (Short Floating Shaft, See Step 4 for Long Floating Shaft)

Align so that a straight edge rests squarely (or within the limits specified in Table 4) on both hubs as shown above and also at 90° intervals. Check with feelers. The clearance should not exceed the INSTALLATION OFFSET limit specified. Tighten all foundation bolts and repeat Steps 2B and 3B. Realign coupling if necessary.

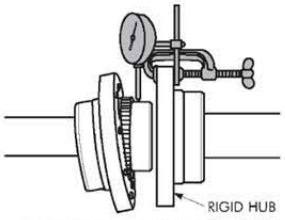

3C — Type G/GF51 & 52 & GP52 (As Fourth Bearing in Three Bearing System)

Clamp a dial indicator to the rigid hub as shown and rotate the rigid hub one complete turn. The total indicator reading DIVIDED by two must not exceed the INSTALLATION OFFSET limit specified in Table 4. Tighten all foundation bolts and repeat

458-110
April 2005
Supersedes 6-02

Rexnord Industries, LLC, Coupling Group
5555 S. Moorland Rd., New Berlin, WI 53151-7953 USA Telephone : 262-796-4060
Fax: 262-796-4064 e-mail: info@rexnord.com web: www.rexnord.com

REXNORD

Falk™ Double & Single Engagement Gear Couplings • Install. & Maint.

Sizes 1010 thru 1070G & GP & Sizes 1 thru 7GF (Page 5 of 8)

Steps 2C and 3C. Realign coupling if necessary.

4 — Type G/GF/GP51 & 52 With Long Floating

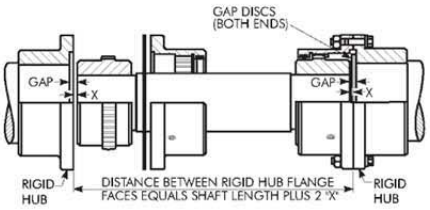

Figure 1

Shaft

4A — Determine Distance Between Shafts

For Figure 1 above, measure the length of the floating shaft and add 2 times the gap dimension from Table 4 to get the distance between the shafts to be coupled.

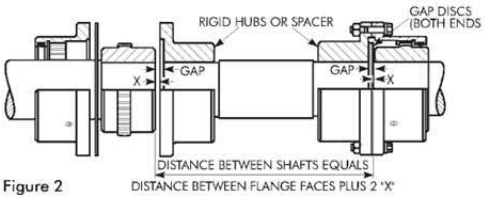

Figure 2

For Figure 2 above, measure the overall floating shaft or spacer assembly length from flange to flange and add 2 times the "X" dimension from Table 4 to get the distance between the shafts to be coupled.

4B — Position First Drive & Floating Shaft

Set the drive most difficult to move to true level and bolt it in place. Set the floating shaft on V-blocks. Then align coupling on fixed drive as follows:

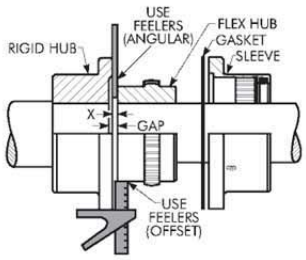

Figure 3

4B1 — Refer to Figure 3

Use a spacer bar equal in thickness to the "X" dimension specified in Table 4. Insert the bar to the same depth at 90° intervals and measure the clearance between the bar and hub face with feelers as shown. The difference in minimum and maximum measurements should not exceed the INSTALLATION ANGULAR limit specified in Table 4.

4B2 — Refer to Figure 3

Align coupling & floating shaft so that, with the square head (or depth micrometer) resting squarely on the flange, equal clearance measurements are obtained between flange and the hub O.D. in four places 90° apart. The difference between minimum and maximum feeler readings should not exceed the INSTALLATION OFFSET limit in Table 4 divided by 2. The above measurement is TIR.

4C — Position Second Drive

Position second drive for the correct "X" dimension and align per Steps 4B1 & 4B2. DO NOT move the floating shaft. Bolt drive in place and recheck alignment and gap. Realign if necessary. For greater accuracy, check alignment with a depth micrometer or dial indicator.

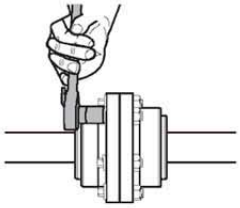

5 —Assemble Coupling — G and GF Only

Insert gasket between flanges and gap disc into counterbore of each rigid hub for floating shaft assemblies and bolt flanges together. Use only the fasteners furnished with the coupling. IMPORTANT: Tighten fasteners to torque specified in Table 4.

5A — Assemble Coupling – Insert Insulator Parts and Join Flanged Sleeves (GP20 & GP52)

Clean flange faces and coat with Permatex #2 or equivalent. DO NOT install gaskets. Insert insulator bushings into flanged holes. Draw one sleeve onto hub and position insulator center plate on flange face. Draw other sleeve onto hub and assemble fasteners with insulator washers. Use only fasteners furnished with coupling. IMPORTANT: Tighten fasteners to torque specified in Table 4.

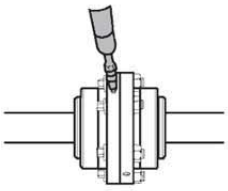

6 — Lubricate

Remove all grease plugs and fill with recommended grease until an excess appears at an open hole; then insert plug. Continue procedure until all plugs have been inserted.
CAUTION: *Remove grease fitting and make certain all plugs are inserted after lubricating.*

Rexnord Industries, LLC, Coupling Group
5555 S. Moorland Rd., New Berlin, WI 53151-7953 USA Telephone : 262-796-4060
Fax: 262-796-4064 e-mail: info@rexnord.com web: www.rexnord.com

458-110
April 2005
Supersedes 6-02

Install. & Maint. • Falk™ Double & Single Engagement Gear Couplings

REXNORD

(Page 6 of 8) Sizes 1010 thru 1070G & GP & Sizes 1 thru 7GF

TABLE 4 — Installation & Alignment Data For Types G/GF10, 20, 31, 32, 51, 52 & GP20 & GP52 ★ — Dimensions – Inches (Metric – mm)

COUPLING SIZE				1010G 1GF	1015G 1-½GF	1020G 2GF	1025G 2-½GF	1030G 3GF	1035G 3-½GF	1040G 4GF	1045G 4-½GF	1050G 5GF	1055G 5-½GF	1060G 6GF	1070G 7GF
Gap		G/GF10 & 20		.125 (3)	.125 (3)	.125 (3)	.188 (5)	.188 (5)	.250 (6)	.250 (6)	.312 (8)	.312 (8)	.312 (8)	.312 (8)	.375 (10)
		GP20		...	...	...	.325 (8)	.325 (8)	.385 (10)	.385 (10)	.450 (11)	.450 (11)	.450 (11)	.450 (11)	.510 (13)
		G/GF51 & 52		.156 (4)	.156 (4)	.156 (4)	.188 (5)	.188 (5)	.218 (6)	.281 (7)	.312 (8)	.344 (9)	.344 (9)	.406 (10)	.500 (13)
		GP52		...	...	...	.325 (8)	.325 (8)	.350 (9)	.420 (11)	.450 (11)	.480 (12)	.480 (12)	.540 (14)	.635 (16)
"X" Dimension		G/GF51 & 52		.054 (1)	.056 (1)	.056 (1)	.088 (2)	.088 (2)	.118 (3)	.121 (3)	.152 (4)	.144 (4)	.144 (4)	.146 (4)	.170 (4)
		GP52		...	...	...	.215 (5)	.215 (5)	.245 (6)	.244 (6)	.280 (7)	.270 (7)	.270 (7)	.270 (7)	.285 (8)
Installation Limits	G/GF10, 20, 31, 32, 51 & 52 & GP20 & GP52		Angular	.006 (0,15)	.007 (0,19)	.008 (0,23)	.011 (0,28)	.013 (0,33)	.015 (0,39)	.018 (0,46)	.020 (0,51)	.022 (0,55)	.024 (0,61)	.026 (0,66)	.031 (0,78)
	G/GF10 & 20 & GP20		Offset	.002 (0,05)	.003 (0,07)	.003 (0,8)	.004 (0,10)	.005 (0,13)	.006 (0,15)	.007 (0,18)	.008 (0,20)	.009 (0,23)	.010 (0,26)	.011 (0,28)	.013 (0,33)
	G/GF51 & 52 & GP52		Offset	.001 (0,03)	.001 (0,03)	.001 (0,03)	.002 (0,04)	.002 (0,05)	.002 (0,05)	.003 (0,06)	.003 (0,08)	.003 (0,08)	.003 (0,08)	.004 (0,10)	.005 (0,11)
	G/GF31 & 32		Offset	.006 (0,14)	.006 (0,16)	.007 (0,17)	.008 (0,20)	.009 (0,23)	.011 (0,28)	.012 (0,30)	.013 (0,32)	.015 (0,38)	.016 (0,41)	.017 (0,43)	.017 (0,44)
"W"†	Installation Check		All Types	.006 (0,15)	.007 (0,19)	.008 (0,23)	.011 (0,28)	.013 (0,33)	.015 (0,39)	.018 (0,46)	.020 (0,51)	.022 (0,55)	.024 (0,61)	.026 (0,66)	.031 (0,78)
	Operating Limit Check		All Types	.035 (0,90)	.045 (1,13)	.054 (1,38)	.067 (1,71)	.079 (2,00)	.092 (2,33)	.108 (2,74)	.121 (3,08)	.131 (3,33)	.144 (3,66)	.157 (3,99)	.183 (4,66)
Coupling Speed Range (rpm)	G10, 20, 51, 52 & GP20 & GP52	NLGI #0 Grease-Max. ‡		7000	6000	5000	4750	4400	3900	3800	3200	2900	2650	2450	2150
		Falk LTG or NLGI #1 Grease	Min.	1000	700	550	400	300	250	270	250	250	210	190	160
			Allow.	8000	6500	5600	5000	4400	3900	3800	3200	2900	2650	2450	2150
		NLGI #0 Grease-Max. ‡		7000	5500	4600	4000	3600	3100	2800	2600	2400	2200	2100	1800
	G51 & 52	Falk LTG or NLGI #1 Grease	Min.	1000	700	550	400	300	250	270	250	250	210	190	160
			Allow.	7000	5500	4600	4000	3600	3100	2800	2600	2400	2200	2100	1800
Grease - pounds (kg)	G10 & 20			.09 (0,041)	.16 (0,073)	.25 (0,11)	.50 (0,23)	.80 (0,36)	1.20 (0,54)	2.00 (0,91)	2.30 (1,0)	3.90 (1,8)	4.90 (2,2)	7.00 (3,2)	9.60 (4,4)
	G51 & 52			.05 (0,023)	.09 (0,041)	.15 (0,068)	.26 (0,12)	.40 (0,18)	.60 (0,27)	1.03 (0,47)	1.25 (0,57)	2.00 (0,91)	2.50 (1,1)	3.75 (1,7)	5.00 (2,3)
	G51 & 52 per in. Spacer Length			....	....	.03 (0,014)	.06 (0,027)	.06 (0,027)	.12 (0,054)	.20 (0,091)	.20 (0,091)	.20 (0,091)	.20 (0,091)	.20 (0,091)	.20 (0,091)
	G51 & 52 Less Spacer			.09 (0,041)	.16 (0,073)	.25 (0,11)	.50 (0,23)	.80 (0,36)	1.20 (0,54)	2.00 (0,91)	2.30 (1,0)	3.90 (1,8)	4.90 (2,2)	7.00 (3,2)	9.60 (4,4)
	GP10 & 20			.09 (0,039)	.15 (0,068)	.27 (0,12)	.47 (0,21)	.74 (0,33)	.88 (0,40)	1.48 (0,67)	2.62 (1,2)	2.87 (1,3)	4.44 (2,0)	4.95 (2,2)	6.79 (3,1)
	GP20			...	...	...	.50 (0,227)	.80 (0,363)	1.20 (0,544)	2.00 (0,907)	2.30 (1,04)	3.90 (1,77)	4.90 (2.22)	7.00 (3,18)	9.60 (4,35)
	G31 & 32			.06 (0,025)	.09 (0,042)	.15 (0,070)	.27 (0,12)	.41 (0,19)	.50 (0,23)	.87 (0,40)	1.46 (0,66)	1.66 (0,75)	2.47 (1,1)	2.93 (1,3)	4.27 (1,9)
	GP32			...	...	...	.26 (0,118)	.40 (0,181)	.60 (0,272)	1.03 (0,467)	1.25 (0,567)	2.00 (0,907)	2.50 (1,13)	3.75 (1,70)	5.00 (2,27)
	G51 & 52 per in. Spacer Length			.06 (0,027)	.07 (0,032)	.07 (0,032)	.08 (0,037)	.02 (0,009)	.16 (0,072)	.21 (0,095)	.12 (0,053)	.13 (0,059)	.14 (0,065)	.71 (0,322)	.91 (0,413)
	G51 & 52 Less Spacer			.09 (0,039)	.15 (0,068)	.27 (0,12)	.47 (0,21)	.74 (0,33)	.88 (0,40)	1.48 (0,67)	2.62 (10,2)	2.87 (1,3)	4.44 (2,0)	4.95 (2,2)	6.97 (3,2)
Flange Bolt Torque - lb-in (Nm)	G/GF10, 31 & 51			108 (12)	372 (42)	372 (42)	900 (102)	900 (102)	1800 (203)	1800 (203)	1800 (203)	3000 (339)	3000 (339)	....	....
	G/GF20, 32 & 52			108 (12)	372 (42)	900 (102)	1800 (203)	1800 (203)	3000 (339)	3000 (339)	3000 (339)	3000 (339)	3000 (339)	3000 (339)	3000 (339)
	GP20 & GP52			...	...	...	420 (47,5)	420 47.5)	840 (94,9)	840 (94,9)	840 (94,9)	1440 (162,7)	1440 (162,7)	1440 (162,7)	1800 (203,4)

★ Refer to Selection Guide for maximum bores and Manual 427-108 for reboring instructions.

† Flexible couplings are designed to accommodate changes in operating conditions. Coupling life expectancy between initial alignment and maximum operating limits is a function of load, speed and lubrication. Application requirements in excess of 3/4° misalignment per flex half coupling should be referred to the Factory for review.

‡ Couplings with NLGI #0 grease may be operated at any speed between zero and the maximum shown.

458-110
April 2005
Supersedes 6-02

Rexnord Industries, LLC, Coupling Group
5555 S. Moorland Rd., New Berlin, WI 53151-7953 USA Telephone : 262-796-4060
Fax: 262-796-4064 e-mail: info@rexnord.com web: www.rexnord.com

REXNORD

Falk™ Double & Single Engagement Gear Couplings • Install. & Maint.

Sizes 1010 thru 1070G & GP & Sizes 1 thru 7GF (Page 7 of 8)

7 — Assembled Coupling Alignment Check – All Styles

The alignment can be checked without disassembling the coupling as shown at left. Determine "W" by measuring distances "W"max. and "W"min. between flex hub and sleeve using a depth micrometer or feeler gauges. The difference between "W"max. and "W"min. must not exceed the "W" value given in Table 4. Check "W" at each coupling end.

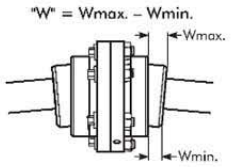

Check "W" at each flexible hub.

PARTS IDENTIFICATION AND PART NUMBER LOCATION

Coupling parts have identifying size and part numbers as illustrated below. When ordering parts, always SPECIFY SIZE, TYPE, HUB BORE, KEYWAY, and PART NUMBER found on each item.

Contact your Rexnord Distributor or Rexnord for price and availability.

EXAMPLE:
Complete 1050G20 Gear Coupling
Consisting of:
2 – 1050G20 Sleeves
(Includes: Gasket & Seal)
2 – 1050G Flex Hubs
Bore: 6.750 Keyway: 1.750 x .750
Bore: 7.375 Keyway: 1.750 x .750
1 – Fastener Set

TYPE G/GF10 & 20

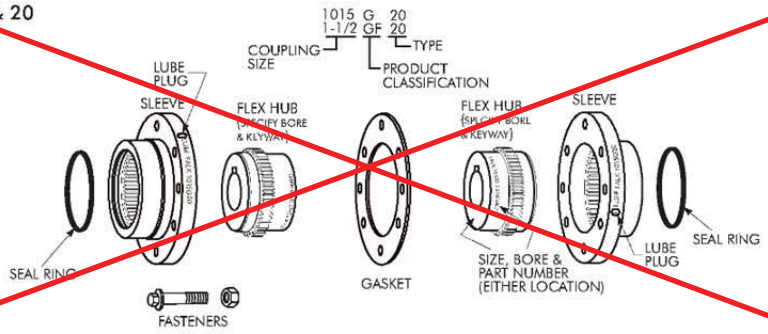

TYPE G/GF31 & 32

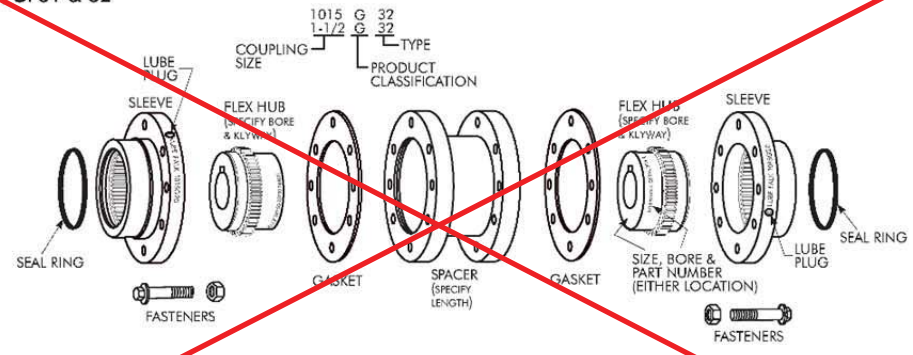

Rexnord Industries, LLC, Coupling Group
5555 S. Moorland Rd., New Berlin, WI 53151-7953 USA Telephone : 262-796-4060
Fax: 262-796-4064 e-mail: info@rexnord.com web: www.rexnord.com

458-110
April 2005
Supersedes 6-02

Install. & Maint. • Falk™ Double & Single Engagement Gear Couplings

REXNORD

(Page 8 of 8) Sizes 1010 thru 1070G & GP & Sizes 1 thru 7GF

TYPE G/GF51 & 52

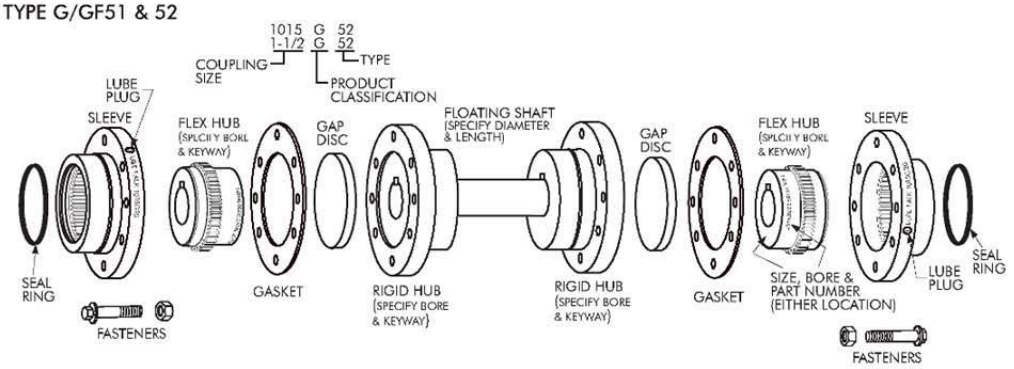

TYPE GP20

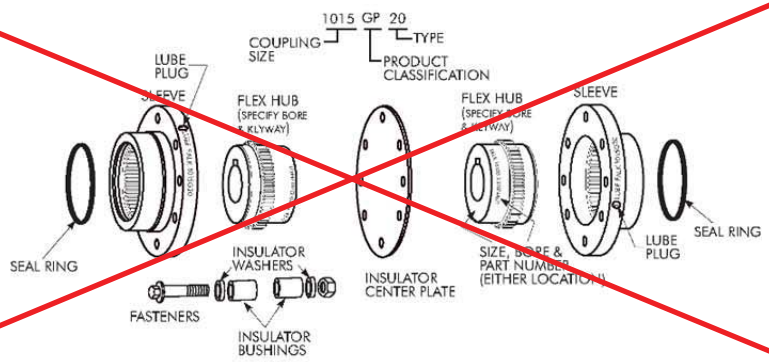

TYPE GP52

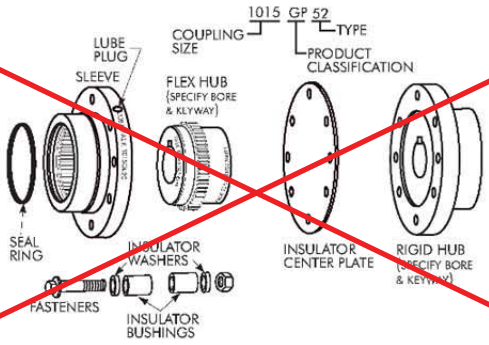

458-110
April 2005
Supersedes 6-02

Rexnord Industries, LLC, Coupling Group
5555 S. Moorland Rd., New Berlin, WI 53151-7953 USA Telephone : 262-796-4060
Fax: 262-796-4064 e-mail: info@rexnord.com web: www.rexnord.com

11.7.7 END SCREW JACK MOTOR COUPLING – FALK STEELFLEX TYPE T10

REXNORD

Falk™ Steelflex® Couplings • Installation and Maintenance

Type T10 • Sizes 1020–1140 & 20–140 (Page 1of 6)

How To Use This Manual

This manual provides detailed instructions on maintenance, lubrication, installation, and parts identification. Use the table of contents below to locate required information.

Table of Contents

Introduction . . . . . Page 1
Lube Fittings . . . . . Page 1
Limited End Float . . . . . Page 1
Lubrication . . . . . Pages 1-2
Installation & Alignment Instructions. . . . . Pages 2-4
Annual Maintenance, Relube & Disassembly . . . . . Page 4
Installation & Alignment Data . . . . . Page 5
Parts Identification & Parts Interchangeability . . . . . Page 6

CAREFULLY FOLLOW THE INSTRUCTIONS IN THIS MANUAL FOR OPTIMUM PERFORMANCE AND TROUBLE FREE SERVICE.

INTRODUCTION

This manual applies to Sizes 1020T thru 1140T and 20T thru 140T10 Falk Steelflex Tapered Grid Couplings. Unless otherwise stated, information for Sizes 1020T thru 1140T applies to Sizes 20T thru 140T respectively, e.g. 1020T = 20T, 1100T = 100T, etc. These couplings are designed to operate in either the horizontal or vertical position without modification. Beginning in year 1994 through 2003, these couplings were being supplied with one set of inch series fasteners and one set of Metric fasteners. Beginning in year 2004 only Metric fasteners are being supplied. Refer to Page 6 for part interchangeability.

The performance and life of the couplings depend largely upon how you install and service them.

CAUTION: Consult applicable local and national safety codes for proper guarding of rotating members. Observe all safety rules when installing or servicing couplings.

WARNING: Lockout starting switch of prime mover and remove all external loads from drive before installing or servicing couplings.

LUBE FITTINGS

Cover halves have $^1/_8$ NPT lube holes. Use a standard grease gun and lube fitting as instructed on Page 4.

LIMITED END FLOAT

When electric motors, generators, engines, compressors and other machines are fitted with sleeve or straight roller bearings, limited axial end float kits are recommended for protecting the bearings. Falk Steelflex couplings are easily modified to limit end float; refer to Manual 428-820 for instructions.

LUBRICATION

Adequate lubrication is essential for satisfactory operation. Page 2 provides a list of typical lubricants and specifications for general purpose and long term greases. Because of its superior lubricating characteristics and low centrifuge properties, Falk Long Term Grease (LTG) is highly recommended. Sizes 1020T to 1090T10 are furnished with a pre-measured amount of grease for each coupling. The grease can be ordered for larger size couplings.

TYPE T10 STEELFLEX COUPLING

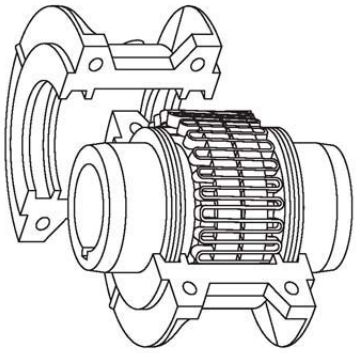

The use of general purpose grease requires re-lubrication of the coupling at least annually.

Long Term Grease (LTG)

The high centrifugal forces encountered in couplings separate the base oil and thickener of general purpose greases. Heavy thickener, which has no lubrication qualities, accumulates in the grid-groove area of Steelflex couplings resulting in premature hub or grid failure unless periodic lubrication cycles are maintained.

Falk Long Term Grease (LTG) was developed specifically for couplings. It resists separation of the oil and thickener. The consistency of Falk LTG changes with operating conditions. As manufactured it is an NLGI #1/2 grade. Working of the lubricant under actual service conditions causes it to become semifluid while the grease near the seals will set to a heavier grade, helping to prevent leakage.

LTG is highly resistant to separation, easily out performing all other lubricants tested. The resistance to separation allows the lubricant to be used for relatively long periods of time.

Steelflex couplings initially lubricated with LTG will not require re-lubrication until the connected equipment is stopped for servicing. If a coupling leaks grease, is exposed to extreme temperatures, excessive moisture, or experiences frequent reversals, more frequent lubrication may be required.

Although LTG grease is compatible with most other coupling greases, the mixing of greases may dilute the benefits of LTG.

USDA Approval

LTG has the United States Department of Agriculture Food Safety & Inspection Service approval for applications where there is no possibility of contact with edible products. (H-2 ratings).

CAUTION: Do not use LTG in bearings.

Rexnord Industries, LLC, Coupling Group
5555 S. Moorland Rd., New Berlin, WI 53151-7953 USA Telephone : 262-796-4060
Fax: 262-796-4064 e-mail: info@rexnord.com web: www.rexnord.com

428-110
May 2004
Supersedes 2-03

Specifications — Falk LTG

The values shown are typical and slight variations are permissible.

AMBIENT TEMPERATURE RANGE — -20°F (-29°C) to 250°F (121°C). Min. Pump = 20° F (-7° C).

MINIMUM BASE OIL VISCOSITY — 3300SSU (715cST) @ 100°F (38°C).

THICKENER — Lithium & soap/polymer.

CENTRIFUGE SEPARATION CHARACTERISTICS — ASTM #D4425 (Centrifuge Test) — K36 = 2/24 max., very high resistance to centrifuging.

NLGI GRADE (ASTM D-217) — $^1/_2$

CONSISTENCY (ASTM D-217) — 60 stroke worked penetration value in the range of 315 to 360 measured at 77°F (25°C)

MINIMUM DROPPING POINT — 350°F (177°C) minimum

MINIMUM TIMKEN O.K. LOAD — 40 lbs.

ADDITIVES — Rust and oxidation inhibitors that do not corrode steel or swell or deteriorate synthetic seals.

Packaging

14 oz. (0,4 kg) CARTRIDGES — Individual or case lots of 10 or 30.

35 lb. (16 kg)PAIL, 120 lb. (54 kg) KEG & 400 lb. (181 kg) DRUMS.

General Purpose Grease

Annual Lubrication — The following specifications and lubricants for general purpose grease apply to Falk Steelflex couplings that are lubricated annually and operate within ambient temperatures of 0°F to 150°F (-18°C to 66°C). For temperatures beyond this range (see Table 1), consult the Factory.

If a coupling leaks grease, is exposed to extreme temperatures, excessive moisture or experiences frequent reversals, more frequent lubrication may be required.

Specifications — General Purpose Coupling Lubricants

The values shown are typical and slight variations are permissible.

DROPPING POINT — 300°F (149°C) or higher.

CONSISTENCY — NLGI No. 2 with 60 stroke worked penetration value in the range of 250 to 300.

SEPARATION AND RESISTANCE — Low oil separation rate and high resistance to separation from centrifuging.

LIQUID CONSTITUENT — Possess good lubricating properties equivalent to a high quality, well refined petroleum oil.

INACTIVE — Must not corrode steel or cause swelling or deterioration of synthetic seals.

CLEAN — Free from foreign inclusions.

General Purpose Greases Meeting Rexnord Specifications

Lubricants listed below are typical products only and should not be construed as exclusive recommendations.

TABLE 1 — General Purpose Greases ★

Ambient Temperature Range	0°F to 150°F (-18°C to 66°C)	-30°F to 100°F (-34°C to 38°C)
Manufacturer	**Lubricant †**	**Lubricant †**
Amoco Oil Co.	Amolith Grease #2	Amolith Grease #2
BP Oil Co.	Energrease LS-EP2	Energrease LS-EP1
Chevron U.S.A. Inc.	Dura-Lith EP2	Dura-Lith EP1
Citgo Petroleum Corp.	Premium Lithium Grease EP2	Premium Lithium Grease EP1
Conoco Inc.	EP Conolith Grease #2	EP Conolith Grease #2
Exxon Company, USA	Unirex EP2	Unirex EP2
E.F. Houghton & Co.	Cosmolube 2	Cosmolube 1
Imperial Oil Ltd.	Unirex EP2	Unirex EP2
Kendall Refining Co.	Lithium Grease L421	Lithium Grease L421
Keystone Div. (Pennwalt)	81 EP-2	81 EP-1
Lyondell Petrochemical (ARCO)	Litholine H EP 2 Grease	Litholine H EP 2 Grease
Mobil Oil Corp.	Mobilux EP111	Mobilith AW1
Petro-Canada Products	Multipurpose EP2	Multipurpose EP1
Phillips 66 Co.	Philube Blue EP	Philube Blue EP
Shell Oil Co.	Alvania Grease 2	Alvania Grease 2
Shell Canada Ltd.	Alvania Grease 2	Alvania Grease 2
Sun Oil Co.	Ultra Prestige 2EP	Ultra Prestige 2EP
Texaco Lubricants	Starplex HD2	Multifak EP2
Unocal 76 (East & West)	Unoba EP2	Unoba EP2
Valvoline Oil Co.	Multilube Lithium EP Grease	. . .

★ Grease application or re-lubrication should be done at temperatures above 20°F (-7°C). If grease must be applied below 20°F (-7°C), consult the Factory.

† Lubricants listed may not be suitable for use in the food processing industry; check with lube manufacturer for approved lubricants.

INSTALLATION OF TYPE T10 STEELFLEX TAPERED GRID COUPLINGS

Installation

Only standard mechanics tools, wrenches, a straight edge and feeler gauges are required to install Falk Steelflex couplings. Coupling Sizes 1020T thru 1090T are generally furnished for CLEARANCE FIT with setscrew over the keyway. Sizes 1100T and larger are furnished for an INTERFERENCE FIT without a setscrew.

CLEARANCE FIT HUBS — Clean all parts using a non-flammable solvent. Check hubs, shafts and keyways for burrs. Do not heat clearance fit hubs. Install keys, mount hubs with flange face flush with shaft ends or as otherwise specified and tighten setscrews.

INTERFERENCE FIT HUBS — Furnished without setscrews. Heat hubs to a maximum of 275°F (135°C) using an oven, torch, induction heater or an oil bath. To prevent seal damage, DO NOT heat hubs beyond a maximum temperature of 400°F (205°C).

When an oxy-acetylene or blow torch is used, use an excess acetylene mixture. Mark hubs near the center of their length in several places on hub body with a temperature sensitive crayon, 275°F (135°C) melt temperature. Direct flame towards hub bore using constant motion to avoid overheating an area.

428-110
May 2004
Supersedes 2-03

Rexnord Industries, LLC, Coupling Group
5555 S. Moorland Rd., New Berlin, WI 53151-7953 USA Telephone : 262-796-4060
Fax: 262-796-4064 e-mail: info@rexnord.com web: www.rexnord.com

REXNORD

Falk™ Steelflex® Couplings • Installation and Maintenance

Type T10 • Sizes 1020–1140 & 20–140 (Page 3of 6)

WARNING: If an oil bath is used, the oil must have a flash point of 350°F (177°C) or higher. Do not rest hubs on the bottom of the container. Do not use an open flame in a combustible atmosphere or near combustible materials.

Heat hubs as instructed above. Mount hubs as quickly as possible with hub face flush with shaft end. Allow hubs to cool before proceeding. Insert setscrews (if required) and tighten.

Maximize Performance And Life

The performance and life of couplings depend largely upon how you install and maintain them. Before installing couplings, make certain that foundations of equipment to be connected meet manufacturers' requirements. Check for soft foot. The use of stainless steel shims is recommended. Measuring misalignment and positioning equipment within alignment tolerances is simplified with an alignment computer. These calculations can also be done graphically or mathematically.

Alignment is shown using spacer bar and straight edge. This practice has proven to be adequate for many industrial applications. However, for superior final alignment, the use of dial indicators (see Manual 458-834 for instructions), lasers, alignment computers or graphical analysis is recommended.

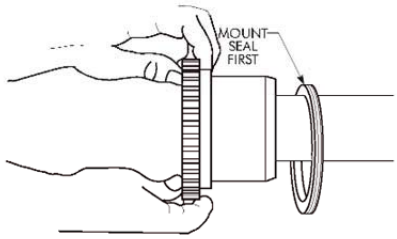

1— Mount Seals And Hubs

Lock out starting switch of prime mover. Clean all metal parts using a non-flammable solvent. Lightly coat seals with grease and place on shafts BEFORE mounting hubs. Heat interference fit hubs as previously instructed. Seal keyways to prevent leakage. Mount hubs on their respective shafts so the hub face is flush with the end of its shaft unless otherwise indicated. Tighten setscrews when furnished.

2 — Gap and Angular Alignment

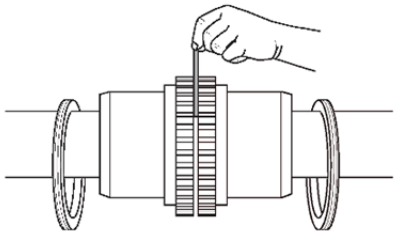

Use a spacer bar equal in thickness to the gap specified in Table 2, Page 5. Insert bar as shown below left, to same depth at 90° intervals and measure clearance between bar and hub face with feelers. The difference in minimum and maximum measurements must not exceed the ANGULAR installation limits specified in Table 2.

3 — Offset Alignment

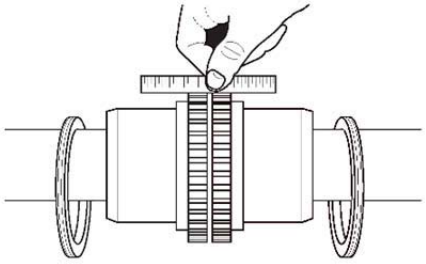

Align so that a straight edge rests squarely (or within the limits specified in Table 2) on both hubs as shown above and also at 90° intervals. Check with feelers. The clearance must not exceed the PARALLEL OFFSET installation limits specified in Table 2. Tighten all foundation bolts and repeat Steps 2 and 3. Realign coupling if necessary.

4 — Insert Grid

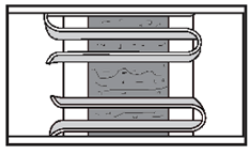

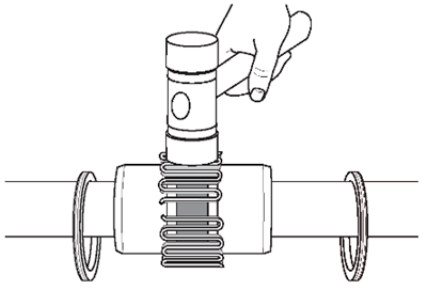

Pack gap and grooves with specified lubricant before inserting grid. When grids are furnished in two or more segments, install them so that all cut ends extend in the same direction (as detailed in the exploded view picture above); this will assure correct grid contact with non-rotating pin in cover halves. Spread the grid slightly to pass over the coupling teeth and seat with a soft mallet.

Rexnord Industries, LLC, Coupling Group
5555 S. Moorland Rd., New Berlin, WI 53151-7953 USA Telephone : 262-796-4060
Fax: 262-796-4064 e-mail: info@rexnord.com web: www.rexnord.com

428-110
May 2004
Supersedes 2-03

Installation and Maintenance • Falk™ Steelflex® Couplings

(Page 4 of 6) Type T10 • Sizes 1020–1140 & 20–140

REXNORD

5 — Pack With Grease And Assemble Covers

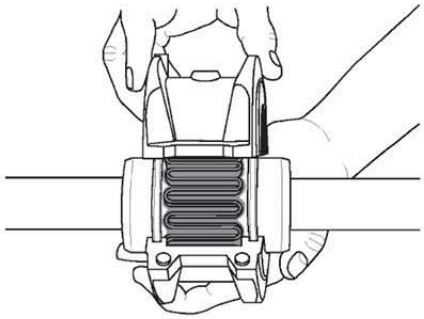

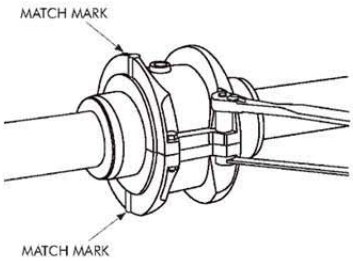

Pack the spaces between and around the grid with as much lubricant as possible and wipe off excess flush with top of grid. Position seals on hubs to line up with grooves in cover. Position gaskets on flange of lower cover half and assemble covers so that the match marks are on the same side (see above). If shafts are not level (horizontal) or coupling is to be used vertically, assemble cover halves with the lug and match

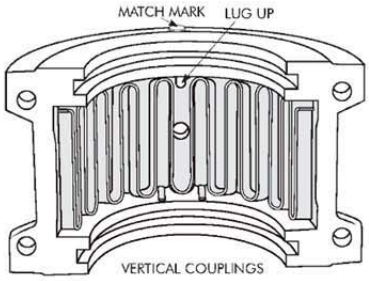

mark UP or on the high side. Push gaskets in until they stop against the seals and secure cover halves with fasteners, tighten to torque specified in Table 2. Make sure gaskets stay in position during tightening of fasteners. **CAUTION:** *Make certain lube plugs are installed before operating.*

ANNUAL MAINTENANCE

For extreme or unusual operating conditions, check coupling more frequently.

1. Check alignment per steps on Page 3. If the maximum operating misalignment limits are exceeded, realign the coupling to the recommended installation limits. See Table 2 for installation and operating alignment limits.
2. Check tightening torques of all fasteners.
3. Inspect seal ring and gasket to determine if replacement is required. If leaking grease, replace.
4. When connected equipment is serviced, disassemble the coupling and inspect for wear. Replace worn parts. Clean grease from coupling and repack with new grease. Install coupling using new gasket as instructed in this manual.

Periodic Lubrication

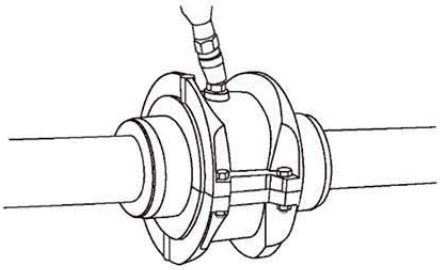

The required frequency of lubrication is directly related to the type of lubricant chosen, and the operating conditions. Steelflex couplings lubricated with common industrial lubricants, such as those shown in Table 1, should be relubed annually. The use of Falk Long Term Grease (LTG) will allow relube intervals to be extended to beyond five years. When relubing, remove both lube plugs and insert lube fitting. Fill with recommended lubricant until an excess appears at the opposite hole. **CAUTION:** Make certain all plugs have been inserted after lubricating.

Coupling Disassembly And Grid Removal

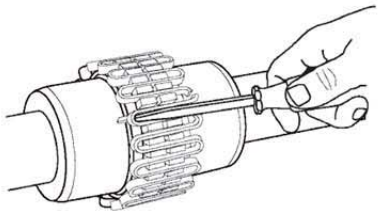

Whenever it is necessary to disconnect the coupling, remove the cover halves and grid. A round rod or screwdriver that will conveniently fit into the open loop ends of the grid is required. Begin at the open end of the grid section and insert the rod or screwdriver into the loop ends. Use the teeth adjacent to each loop as a fulcrum and pry the grid out radially in even, gradual stages, proceeding alternately from side to side.

428-110
May 2004
Supersedes 2-03

Rexnord Industries, LLC, Coupling Group
5555 S. Moorland Rd., New Berlin, WI 53151-7953 USA Telephone : 262-796-4060
Fax: 262-796-4064 e-mail: info@rexnord.com web: www.rexnord.com

NOTE: Reference the maintenance plate (Section 11.4.3) for maintenance information

REXNORD

Falk™ Steelflex® Couplings • Installation and Maintenance

Type T10 • Sizes 1020–1140 & 20–140 (Page 5of 6)

TYPE T COUPLING INSTALLATION & ALIGNMENT DATA

Maximum life and minimum maintenance for the coupling and connected machinery will result if couplings are accurately aligned. Coupling life expectancy between initial alignment and maximum operating limits is a function of load, speed and lubrication. Maximum operating values listed in Table 2 are based on cataloged allowable rpm.

Values listed are based upon the use of the gaps listed, standard coupling components, standard assemblies and cataloged allowable speeds.

Values may be combined for an installation or operating condition.

Example: 1060T max. operating misalignment is .016" parallel plus .018" angular.

NOTE: For applications requiring greater misalignment, refer application details to the Factory.

Angular misalignment is dimension X minus Y as illustrated below.

Parallel misalignment is distance P between the hub center lines as illustrated below.

End float (with zero angular and parallel misalignment) is the axial movement of the hubs(s) within the cover(s) measured from "0" gap.

ANGULAR MISALIGNMENT

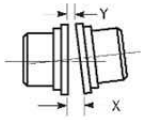

PARALLEL OFFSET MISALIGNMENT

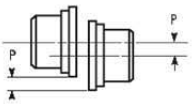

END FLOAT

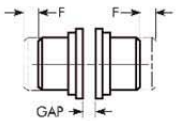

TABLE 2 — Misalignment & End Float

SIZE	Installation Limits						Operating Limits						Cover Fastener Tightening Torque Values Inch or Metric Series Fasteners		Allow Speed (rpm)	Lube Wt	
	Parallel Offset-P		Angular (x-y)		Hub Gap ± 10%		Parallel Offset-P		Angular (x-y)		End Float Physical Limit (Min) 2 x F						
	Max Inch	Max mm	Max Inch	Max mm	Inch	mm	Max Inch	Max mm	Max Inch	Max mm	Inch	mm	(lb-in)	(Nm)		lb	kg
1020T	.006	0,15	.002	0,05	.125	3	.012	0,30	.010	0,25	.218	5,53	100	11,3	4500	.06	0,03
1030T	.006	0,15	.003	0,08	.125	3	.012	0,30	.012	0,30	.196	4,98	100	11,3	4500	.09	0,04
1040T	.006	0,15	.003	0,08	.125	3	.012	0,30	.013	0,33	.211	5,36	100	11,3	4500	.12	0,05
1050T	.008	0,20	.004	0,10	.125	3	.016	0,41	.018	0,41	.212	5,38	200	22,6	4500	.13	0,07
1060T	.008	0,20	.005	0,13	.125	3	.016	0,41	.018	0,46	.256	6,53	200	22,6	4500	.17	0,07
1070T	.008	0,20	.005	0,13	.125	3	.016	0,41	.020	0,51	.259	6,56	200	22,6	4125	.23	0,11
1080T	.008	0,20	.006	0,15	.125	3	.016	0,41	.024	0,61	.286	7,32	200	22,6	3600	.36	0,17
1090T	.008	0,20	.007	0,18	.125	3	.016	0,41	.028	0,71	.286	7,26	200	22,6	3000	.50	0,23
1100T	.010	0,25	.008	0,20	.188	5	.020	0,51	.033	0,84	.427	10,76	312	35	2496	.74	0,34
1110T	.010	0,25	.009	0,23	.188	5	.020	0,51	.038	0,97	.427	10,76	312	35	2256	1.1	0,51
1120T	.011	0,28	.010	0,25	.250	6	.022	0,56	.040	1,02	.556	14,12	650	73	2025	1.6	0,74
1130T	.011	0,28	.012	0,30	.250	6	.022	0,56	.047	1,19	.551	14,00	650	73	1800	2.0	0,91
1140T	.011	0,28	.013	0,33	.250	6	.022	0,56	.055	1,39	.571	14,50	650	73	1650	2.5	1,14

TABLE 3 — Coupling Cover Fastener Identification

SIZE	Inch Series Fasteners				METRIC FASTENERS	
	Old Style		New Style			
1020-1070T10		SAE Grade 8 ★		SAE Grade 8	10.9	Property Class 10.9
1080-1090T10		SAE Grade 8		SAE Grade 8	10.9	Property Class 10.9
1100-1140T10		SAE Grade 5		SAE Grade 5	8.8	Property Class 8.8

★ Older style covers, Sizes 1020T10 thru 1070T10 must utilize socket head cap screws and locknuts held by the cover.

Rexnord Industries, LLC, Coupling Group
5555 S. Moorland Rd., New Berlin, WI 53151-7953 USA Telephone : 262-796-4060
Fax: 262-796-4064 e-mail: info@rexnord.com web: www.rexnord.com

428-110
May 2004
Supersedes 2-03

Installation and Maintenance • Falk™ Steelflex® Couplings

(Page 6 of 6) Type T10 • Sizes 1020–1140 & 20–140

REXNORD

PARTS IDENTIFICATION

All coupling parts have identifying part numbers as shown below. Parts 3 and 4 (Hubs and Grids), are the same for both Type T10 and T20 couplings. All other coupling parts are unique to Type T10. When ordering parts, always SPECIFY SIZE and TYPE shown on the COVER.

PARTS INTERCHANGEABILITY

Parts are interchangeable between Sizes 20T and 1020T, 30T and 1030T, etc. except as noted.

GRIDS — Size 1020T thru 1140T Steelflex couplings use blue or non-painted grids. Older models, 20T thru 140T, use orange grids.

CAUTION: Blue or non-painted grids may be used in all applications, but DO NOT substitute orange grids for blue or nonpainted.

COVERS — CAUTION: DO NOT mix cover halves of different designs. Sizes 1020T thru 1070T10 covers have been manufactured in several different two-rib designs and 80T thru 140T covers have been manufactured with two and three ribs.

HARDWARE — Older style covers, Sizes 1020T10 thru 1070T10, utilized socket head cap screws with captured locknuts. The new style covers use hex head cap screws (either inch or metric from year 1994 through 2003 and only Metric beginning in 2004). Specify the style cover when ordering replacement parts.

PART NUMBER LOCATION

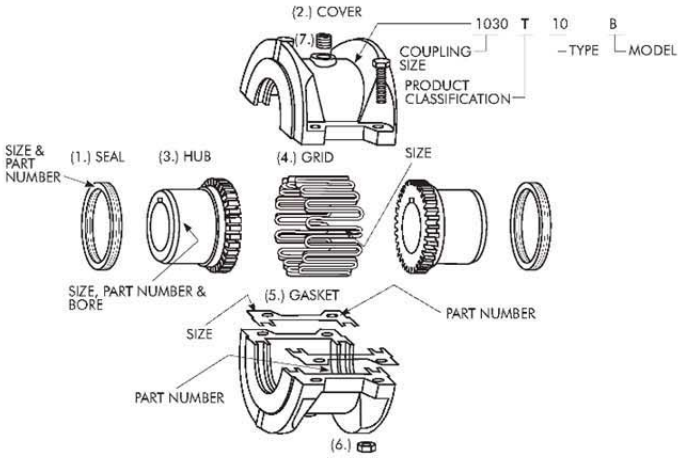

PART DESCRIPTION

1. Seal (T10)
2. Cover (T10)
3. Hub (Specify bore and keyway)
4. Grid
5. Gasket (T10)
6. Metric Fasteners (T10).
7. Lube Plug

ORDER INFORMATION

1. Identify part(s) required by name above.
2. Furnish the following information.

   EXAMPLE:
   Coupling Size: 1030
   Coupling Type: T10
   Model: B
   Bore: 1.375
   Keyway: .375 x .187
3. Contact your Rexnord Distributor or Rexnord for price and availability.

428-110
May 2004
Supersedes 2-03

Rexnord Industries, LLC, Coupling Group
5555 S. Moorland Rd., New Berlin, WI 53151-7953 USA Telephone : 262-796-4060
Fax: 262-796-4064 e-mail: info@rexnord.com web: www.rexnord.com

11.7.8 TURNING MACHINERY GRID COUPLING – FALK STEELFLEX TYPE T20

REXNORD

Falk™ Steelflex® Couplings • Installation and Maintenance

Type T20 • Sizes 1020–1170 & 20–170 (Page 1 of 6)

How To Use This Manual

This manual provides detailed instructions on maintenance, lubrication, installation, and parts identification. Use the table of contents below to locate required information.

Table of Contents

Introduction . . . . . Page 1
Lube Fittings . . . . . Page 1
Limited End Float . . . . . Page 1
Lubrication . . . . . Pages 1-2
Installation & Alignment Instructions. . . . . Pages 2-4
Annual Maintenance, Relube & Disassembly. . . . . Page 4
Installation & Alignment Data . . . . . Page 5
Parts Identification & Parts Interchangeability . . . . . Page 6

CAREFULLY FOLLOW THE INSTRUCTIONS IN THIS MANUAL FOR OPTIMUM PERFORMANCE AND TROUBLE FREE SERVICE.

Introduction

This manual applies to Sizes 1020T thru 1170T and 20T thru 170T20 Falk Steelflex Tapered Grid Couplings. Unless otherwise stated, information for Sizes 1020T thru 1170T applies to Sizes 20T thru 170T respectively, e.g. 1020T = 20T, 1100T = 100T, etc. These couplings are designed to operate in either the horizontal or vertical position without modification.

CAUTION: Consult applicable local and national safety codes for proper guarding of rotating members. Observe all safety rules when installing or servicing couplings. During assembly, seal keyways of vertical couplings to prevent leakage.

WARNING: Lockout starting switch of prime mover and remove all external loads from drive before installing or servicing couplings.

Lube Fittings

Depending on coupling size, cover halves have $^1/_8$ or $^3/_8$ NPT lube holes. Use a standard grease gun and lube fitting as instructed on Page 4.

Limited End Float

When electric motors, generators, engines, compressors, and other machines are fitted with sleeve or straight roller bearings, limited axial end float kits are recommended for protecting the bearings. Falk Steelflex couplings are easily modified to limit end float; refer to Manual 428-820 for instructions.

Lubrication

Adequate lubrication is essential for satisfactory operation. Page 2 provides a list of typical lubricants and specifications for general purpose and long term greases. Because of its superior lubricating characteristics and low centrifuge properties, Falk Long Term Grease (LTG) is highly recommended. Sizes 1020T to 1090T20 are furnished with a pre-measured amount of grease for each coupling. The grease can be ordered for larger size couplings.

The use of general purpose grease requires re-lubrication of the coupling at least annually.

TYPE T20 STEELFLEX COUPLING

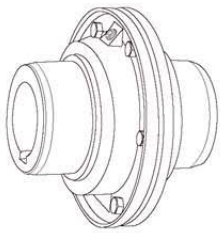

Long Term Grease (LTG)

The high centrifugal forces encountered in couplings separate the base oil and thickener of general purpose greases. Heavy thickener, which has no lubrication qualities, accumulates in the grid-groove area of Steelflex couplings resulting in premature hub or grid failure unless periodic lubrication cycles are maintained.

Falk Long Term Grease (LTG) was developed specifically for couplings. It resists separation of the oil and thickener. The consistency of Falk LTG changes with operating conditions. As manufactured it is an NLGI #1/2 grade. Working of the lubricant under actual service conditions causes it to become semifluid while the grease near the seals will set to a heavier grade, helping to prevent leakage.

LTG is highly resistant to separation, easily out performing all other lubricants tested. The resistance to separation allows the lubricant to be used for relatively long periods of time.

Steelflex couplings initially lubricated with LTG will not require re-lubrication until the connected equipment is stopped for servicing. If a coupling leaks grease, is exposed to extreme temperatures, excessive moisture, or experiences frequent reversals, more frequent lubrication may be required.

Although LTG grease is compatible with most other coupling greases, the mixing of greases may dilute the benefits of LTG.

USDA Approval

LTG has the United States Department of Agriculture Food Safety & Inspection Service approval for applications where there is no possibility of contact with edible products. (H-2 ratings).

CAUTION: Do not use LTG in bearings.

Rexnord Industries, LLC, Coupling Group
5555 S. Moorland Rd., New Berlin, WI 53151-7953 USA Telephone : 262-796-4060
Fax: 262-796-4064 e-mail: info@rexnord.com web: www.rexnord.com

428-210
March 2003 (9-05 Pdf Revision)
Supersedes 11-00

Installation and Maintenance • Falk™ Steelflex® Couplings

(Page 2 of 6) Type T20 • Sizes 1020–1170 & 20–170

REXNORD

Specifications — Falk LTG

The values shown are typical and slight variations are permissible.

AMBIENT TEMPERATURE RANGE — -20°F (-29°C) to 250°F (121°C). Min. Pump = 20° F (-7° C).

MINIMUM BASE OIL VISCOSITY — 3300SSU (715cST) @ 100°F (38°C).

THICKENER — Lithium & soap/polymer.

CENTRIFUGE SEPARATION CHARACTERISTICS — ASTM #D4425 (Centrifuge Test) — K36 = 2/24 max., very high resistance to centrifuging.

NLGI GRADE (ASTM D-217) — $^1/_2$

CONSISTENCY (ASTM D-217) — 60 stroke worked penetration value in the range of 315 to 360 measured at 77°F (25°C)

MINIMUM DROPPING POINT — 350°F (177°C) minimum

MINIMUM TIMKEN O.K. LOAD — 40 lbs.

ADDITIVES — Rust and oxidation inhibitors that do not corrode steel or swell or deteriorate synthetic seals.

Packaging

14 oz (0,4 kg) CARTRIDGES — Individual or case lots of 10 or 30.

35 lb (16 kg)PAIL, 120 lb (54 kg) KEG & 400 lb (181 kg) DRUMS.

General Purpose Grease

Annual Lubrication — The following specifications and lubricants for general purpose grease apply to Falk Steelflex couplings that are lubricated annually and operate within ambient temperatures of 0°F to 150°F (-18°C to 66°C). For temperatures beyond this range (see Table 1), refer to Falk.

If a coupling leaks grease, is exposed to extreme temperatures, excessive moisture, or experiences frequent reversals, more frequent lubrication may be required.

Specifications — General Purpose Coupling Lubricants

The values shown are typical and slight variations are permissible.

DROPPING POINT — 300°F (149°C) or higher.

CONSISTENCY — NLGI No. 2 with 60 stroke worked penetration value in the range of 250 to 300.

SEPARATION AND RESISTANCE — Low oil separation rate and high resistance to separation from centrifuging.

LIQUID CONSTITUENT — Possess good lubricating properties equivalent to a high quality, well refined petroleum oil.

INACTIVE — Must not corrode steel or cause swelling or deterioration of synthetic seals.

CLEAN — Free from foreign inclusions.

General Purpose Greases Meeting Falk Specifications

Lubricants listed below are typical products only and should not be construed as exclusive recommendations.

TABLE 1 — General Purpose Greases ★

Ambient Temperature Range	0°F to 150°F (-18°C to 66°C)	-30°F to 100°F (-34°C to 38°C)
Manufacturer	**Lubricant †**	**Lubricant †**
Amoco Oil Co.	Amolith Grease #2	Amolith Grease #2
BP Oil Co.	Energrease LS-EP2	Energrease LS-EP1
Chevron U.S.A. Inc.	Dura-Lith EP2	Dura-Lith EP1
Citgo Petroleum Corp.	Premium Lithium Grease EP2	Premium Lithium Grease EP1
Conoco Inc.	EP Conolith Grease #2	EP Conolith Grease #2
Exxon Company, USA	Unirex EP2	Unirex EP2
E.F. Houghton & Co.	Cosmolube 2	Cosmolube 1
Imperial Oil Ltd.	Unirex EP2	Unirex EP2
Kendall Refining Co.	Lithium Grease L421	Lithium Grease L421
Keystone Div. (Pennwalt)	81 EP-2	81 EP-1
Lyondell Petrochemical (ARCO)	Litholine H EP 2 Grease	Litholine H EP 2 Grease
Mobil Oil Corp.	Mobilux EP111	Mobilith AW1
Petro-Canada Products	Multipurpose EP2	Multipurpose EP1
Phillips 66 Co.	Philube Blue EP	Philube Blue EP
Shell Oil Co.	Alvania Grease 2	Alvania Grease 2
Shell Canada Ltd.	Alvania Grease 2	Alvania Grease 2
Sun Oil Co.	Ultra Prestige 2EP	Ultra Prestige 2EP
Texaco Lubricants	Starplex HD2	Multifak EP2
Unocal 76 (East & West)	Unoba EP2	Unoba EP2
Valvoline Oil Co.	Multilube Lithium EP Grease	. . .

★ Grease application or re-lubrication should be done at temperatures above 20°F (-7°C). If grease must be applied below 20°F (-7°C), consult the Factory.

† Lubricants listed may not be suitable for use in the food processing industry; check with lube manufacturer for approved lubricants.

Installation Of Type T20 Steelflex Tapered Grid Couplings

Installation

Only standard mechanics tools, wrenches, a straight edge, and feeler gauges are required to install Falk Steelflex couplings. Clean all parts using a non-flammable solvent. Check hubs, shafts and keyways for burrs. Coupling Sizes 1020T thru 1090T are generally furnished for CLEARANCE FIT with setscrew over the keyway. Sizes 1100T and larger are furnished for an INTERFERENCE FIT without a setscrew.

CLEARANCE FIT HUBS — Clean all parts using a non-flammable solvent. Check hubs, shafts, and keyways for burrs. Do not heat clearance fit hubs. Install keys, mount hubs with flange face flush with shaft ends or as otherwise specified and tighten setscrews.

INTERFERENCE FIT HUBS — Furnished without setscrews. Heat hubs to a maximum of 275°F (135°C) using an oven, torch, induction heater, or an oil bath. To prevent seal damage, DO NOT heat hubs beyond a maximum temperature of 400°F (205°C).

When an oxy-acetylene or blow torch is used, use an excess acetylene mixture. Mark hubs near the center of their length in several places on hub body with a temperature sensitive crayon, 275°F (135°C) melt temperature. Direct flame towards hub bore using constant motion to avoid overheating an area.

428-210
March 2003 (9-05 Pdf Revision)
Supersedes 11-00

Rexnord Industries, LLC, Coupling Group
5555 S. Moorland Rd., New Berlin, WI 53151-7953 USA Telephone : 262-796-4060
Fax: 262-796-4064 e-mail: info@rexnord.com web: www.rexnord.com

REXNORD

Falk™ Steelflex® Couplings • Installation and Maintenance

Type T20 • Sizes 1020–1170 & 20–170 (Page 3 of 6)

WARNING: If an oil bath is used, the oil must have a flash point of 350°F (177°C) or higher. Do not rest hubs on the bottom of the container. Do not use an open flame in a combustible atmosphere or near combustible materials.

Heat hubs as instructed above. Mount hubs as quickly as possible with hub face flush with shaft end. Allow hubs to cool before proceeding. Insert setscrews (if required) and tighten.

Maximize Performance And Life

The performance and life of couplings depend largely upon how you install and maintain them. Before installing couplings, make certain that foundations of equipment to be connected meet manufacturers' requirements. Check for soft foot. The use of stainless steel shims is recommended. Measuring misalignment and positioning equipment within alignment tolerances is simplified with an alignment computer. These calculations can also be done graphically or mathematically.

Alignment is shown using spacer bar and straight edge. This practice has proven to be adequate for many industrial applications. However, for superior final alignment, the use of dial indicators (see Manual 458-834 for instructions), lasers, alignment computers, or graphical analysis is recommended.

1— Mount Covers, Seals & Hubs

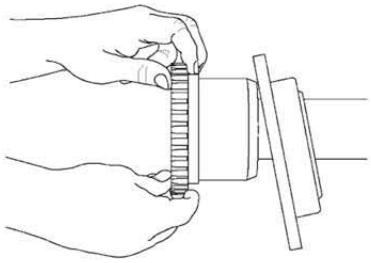

Lock out starting switch of prime mover. Clean all metal parts using a non-flammable solvent. Place seals into each cover half and lightly coat seals with grease. Place covers on shafts BEFORE mounting hubs. Heat interference fit hubs as previously instructed. Seal keyways to prevent leakage. Mount hubs on their respective shafts so the hub face is flush with the end of its shaft unless otherwise indicated. Tighten setscrews when furnished.

2 — Gap & Angular Alignment

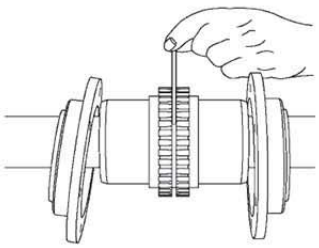

Use a spacer bar equal in thickness to the gap specified in Table 2, Page 5. Insert bar as shown below left, to same depth at 90° intervals and measure clearance between bar and hub face with feelers. The difference in minimum and maximum measurements must not exceed the ANGULAR installation limits specified in Table 2.

3 — Offset Alignment

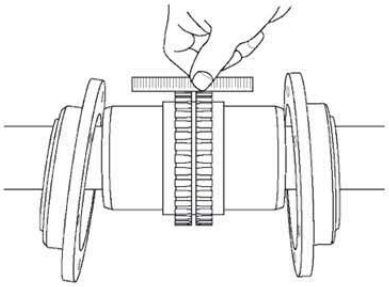

Align so that a straight edge rests squarely (or within the limits specified in Table 2) on both hubs as shown above and also at 90° intervals. Check with feelers. The clearance must not exceed the PARALLEL OFFSET installation limits specified in Table 2. Tighten all foundation bolts and repeat Steps 2 and 3. Realign coupling if necessary.

4 — Insert Grid

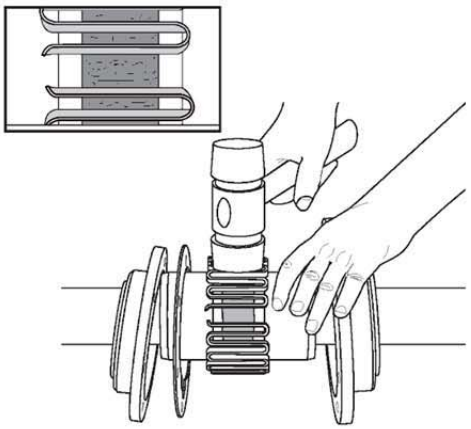

Insert gasket thru the gap and hang it on either hub. Pack gap and grooves with specified lubricant before inserting grid. When grids are furnished in two or more segments, install them so that all cut ends extend in the same direction (as detailed in the exploded view picture above); this will assure correct grid contact with non-rotating pin in cover halves. Spread the grid slightly to pass over the coupling teeth and seat with a soft mallet.

Rexnord Industries, LLC, Coupling Group
5555 S. Moorland Rd., New Berlin, WI 53151-7953 USA Telephone : 262-796-4060
Fax: 262-796-4064 e-mail: info@rexnord.com web: www.rexnord.com

428-210
March 2003 (9-05 Pdf Revision)
Supersedes 11-00

Installation and Maintenance • Falk™ Steelflex® Couplings

(Page 4 of 6) Type T20 • Sizes 1020–1170 & 20–170

REXNORD

5 — Pack With Grease & Assemble Covers

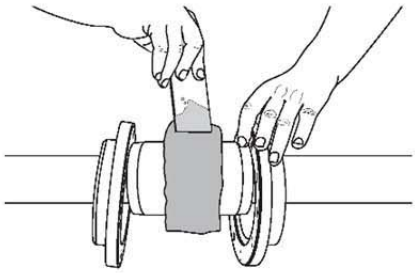

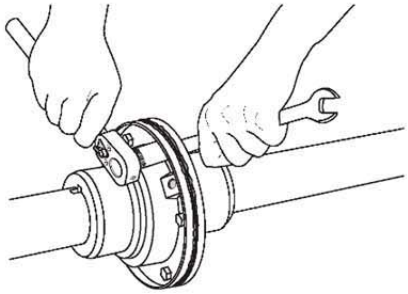

Pack the spaces between and around the grid with as much lubricant as possible and wipe off excess flush with top of grid. Make certain lube plugs are removed to ease in cover assembly. Slide cover halves with seals onto hubs and position with lube holes 180° apart (90° apart for Sizes 1150 thru 1170). Line up cover and gasket bolt holes and secure with fasteners; tighten to torque specified in Table 2. ***CAUTION:*** *Make certain lube plugs are installed before operating.*

NOTE: Reference the maintenance plate (Section 11.4.3) for maintenance information

Annual Maintenance

For extreme or unusual operating conditions, check coupling more frequently.

1. Check alignment per steps on Page 3. If the maximum operating misalignment limits are exceeded, realign the coupling to the recommended installation limits. See Table 2 for installation and operating alignment limits.
2. Check tightening torques of all fasteners.
3. Inspect seal ring and gasket to determine if replacement is required. If leaking grease, replace.
4. When connected equipment is serviced, disassemble the coupling and inspect for wear. Replace worn parts. Clean grease from coupling and repack with new grease. Install coupling using new gasket as instructed in this manual.

Periodic Lubrication

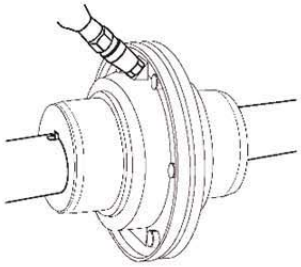

The required frequency of lubrication is directly related to the type of lubricant chosen, and the operating conditions. Steelflex couplings lubricated with common industrial lubricants, such as those shown in Table 1, should be relubed annually. The use of Falk Long Term Grease (LTG) will allow relube intervals to be extended to beyond five years. When relubing, remove both lube plugs and insert lube fitting. Fill with recommended lubricant until an excess appears at the opposite hole. ***CAUTION:*** Make certain all plugs have been inserted after lubricating.

Coupling Disassembly & Grid Removal

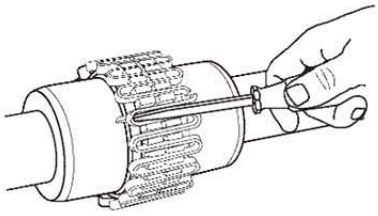

Whenever it is necessary to disconnect the coupling, remove the cover halves and grid. A round rod or screwdriver that will conveniently fit into the open loop ends of the grid is required. Begin at the open end of the grid section and insert the rod or screwdriver into the loop ends. Use the teeth adjacent to each loop as a fulcrum and pry the grid out radially in even, gradual stages, proceeding alternately from side to side.

428-210
March 2003 (9-05 Pdf Revision)
Supersedes 11-00

Rexnord Industries, LLC, Coupling Group
5555 S. Moorland Rd., New Berlin, WI 53151-7953 USA Telephone : 262-796-4060
Fax: 262-796-4064 e-mail: info@rexnord.com web: www.rexnord.com

REXNORD

Falk™ Steelflex® Couplings • Installation and Maintenance

Type T20 • Sizes 1020–1170 & 20–170 (Page 5 of 6)

Type T Coupling Installation & Alignment Data

Maximum life and minimum maintenance for the coupling and connected machinery will result if couplings are accurately aligned. Coupling life expectancy between initial alignment and maximum operating limits is a function of load, speed and lubrication. Maximum operating values listed in Table 2 are based on cataloged allowable rpm.

Values listed are based upon the use of the gaps listed, standard coupling components, standard assemblies, and cataloged allowable speeds.

Values may be combined for an installation or operating condition.

Example: 1060T max. operating misalignment is .016" parallel plus .018" angular.

NOTE: For applications requiring greater misalignment, refer application details to the Factory.

Angular misalignment is dimension X minus Y as illustrated below.

Parallel misalignment is distance P between the hub center lines as illustrated below.

End float (with zero angular and parallel misalignment) is the axial movement of the hubs(s) within the cover(s) measured from "O" gap.

ANGULAR MISALIGNMENT

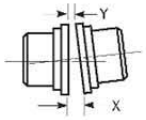

PARALLEL OFFSET MISALIGNMENT

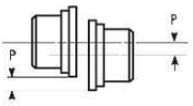

END FLOAT

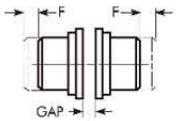

TABLE 2 — Misalignment & End Float

SIZE	Installation Limits						Operating Limits						Cover Fastener Tightening Torque Values		Allow Speed (rpm)	Lube Wt	
	Parallel Offset-P		Angular (x-y)		Hub Gap ± 10%		Parallel Offset-P		Angular (x-y)		End Float Physical Limit (Min) 2 x F						
	Max Inch	Max mm	Max Inch	Max mm	Inch	mm	Max Inch	Max mm	Max Inch	Max mm	Inch	mm	(lb-in)	(Nm)		lb	kg
1110T	.010	0,25	.009	0,23	.188	5	.020	0,51	.036	0,91	.408	10,36	260	29,4	3000	1.1	0,51

Rexnord Industries, LLC, Coupling Group
5555 S. Moorland Rd., New Berlin, WI 53151-7953 USA Telephone : 262-796-4060
Fax: 262-796-4064 e-mail: info@rexnord.com web: www.rexnord.com

428-210
March 2003 (9-05 Pdf Revision)
Supersedes 11-00

Installation and Maintenance • Falk™ Steelflex® Couplings

(Page 6 of 6) Type T20 • Sizes 1020–1170 & 20–170

REXNORD

Parts Identification

All coupling parts have identifying part numbers as shown below. Parts 3 and 4 (Hubs and Grids), are the same for both Type T10 and T20 couplings. All other coupling parts are unique to Type T20. When ordering parts, always SPECIFY SIZE and TYPE shown on the COVER.

Parts Interchangeability

Parts are interchangeable between Sizes 20T and 1020T, 30T and 1030T, etc. except as noted.

GRIDS — Size 1020T thru 1140T Steelflex couplings use blue grids or non-painted grids. Older models, 20T thru 140T, use orange grids.

CAUTION: *Blue grids may be used in all applications, but DO NOT substitute orange grids for blue.*

PART NUMBER LOCATION

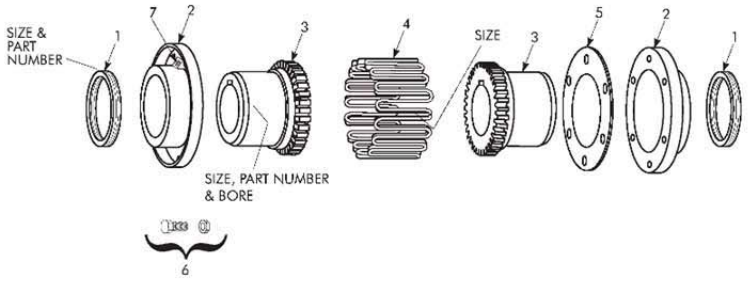

PART DESCRIPTION

1. Seal (T20)
2. Cover (T20)
3. Hub (Specify bore and keyway)
4. Grid
5. Gasket (T20)
6. Fasteners (T20) — Coupling may be supplied with one set each of inch series fasteners and metric fasteners.
7. Lube Plug

ORDER INFORMATION

1. Identify part(s) required by name above.
2. Furnish the following information.

   EXAMPLE:
   Coupling Size: 1030
   Coupling Type: T20
   Model: B
   Bore: 1.375
   Keyway: .375 x .187
3. Price parts from appropriate price list and discount sheet.

428-210
March 2003 (9-05 Pdf Revision)
Supersedes 11-00

Rexnord Industries, LLC, Coupling Group
5555 S. Moorland Rd., New Berlin, WI 53151-7953 USA Telephone : 262-796-4060
Fax: 262-796-4064 e-mail: info@rexnord.com web: www.rexnord.com

11.7.9 MOTOR BRAKE – MONDEL WST/E

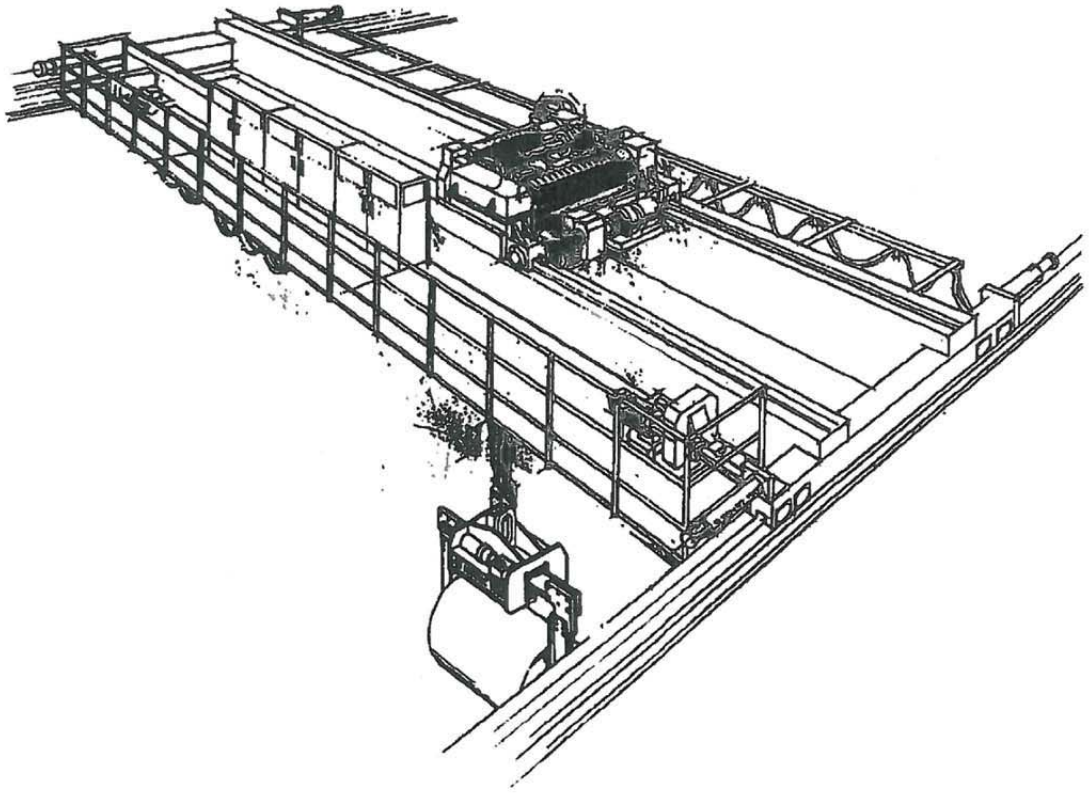

MST/E Electric Shoe Brakes

Mondel MST/E Electric Shoe Brakes Instruction Manual

MAGNETEK
MATERIAL HANDLING

Mondel

Part Number: 560022-R6
July 2006
© Copyright 2006 Magnetek Material Handling

MAGNETEK
MATERIAL HANDLING

Mondel

Installation and Maintenance Instructions

MST/E Electric Shoe Brakes

SUPPLEMENTS FORMING PART OF THIS MANUAL:

DATE OF MANUFACTURE:	
APPLICABLE DIMENSION PRINT:	
EXPLODED VIEW:	
PARTS LIST:	

Table of Contents

Chapter 1.0: MST/E Electric Shoe Brakes Warnings and Cautions 4
Chapter 2.0: General Description 7
Chapter 3.0: Application 10
Chapter 4.0: Description of Operation 11
Chapter 5.0: Installation 14
Chapter 6.0: Adjustment 16
Chapter 7.0: Electrical Detail 23
Chapter 8.0: Operational Test 24
Chapter 9.0: Maintenance and Repair 26
Chapter 10.0: Replacement Parts 32
Chapter 11.0: Long Term Storage 33

Chapter 1.0: MST/E Electric Shoe Brakes Warnings and Cautions

Read and Understand All Warnings And Cautions Printed In This Manual Before Commencing Installation, Adjustment Or Repair

Chapter 5: INSTALLATION – Warnings and Cautions

Anyone involved in the installation or service of this brake must have:

- **Received specific training.**
- **Had experience on similar equipment.**
- **Knowledge of the equipment on which the brake is installed.**
- **The ability to understand the terminology.**
- **The ability to understand the diagrams.**

Do not proceed unless technically qualified for the work involved.

The integrity of the brake may be compromised or a replacement part may not fit if alterations are made to the brake to achieve required alignment.

If the alterations to the brake supporting structure are required, they must be done under the direction of a competent authority.

All electrical power to this equipment must be disconnected by competent personnel. Consult specific wiring diagrams to identify and isolate all live power inputs to the equipment.

Unexpected movement or hazardous voltage can cause injury or death. Disconnect, lock out, and tag out the power source that feeds this device to prevent power from being applied while inspection and repairs are being performed. Before beginning repairs, try the operational controls to verify that the intended power source is disconnected.

On a hoist, chock the drum to prevent any rotation, due to the effect of gravity on the hook block etc.

On the travel motion subject to the effect of wind or camber gradient, apply the wind anchors or otherwise secure the equipment against inadvertent movement when the brake is being worked on or is removed entirely.

Never lift the brake assembly by the brake rod. The weight of the brake can irreversibly damage the rod leading to fracture and total loss of braking effect.

Failure to install the brake wheel correctly may result in total loss of braking. Do not operate the brake unless the wheel is secured to the shaft.

Failure to properly center the brake and obtain uniform lining contact results in localized heating and, ultimately, reduced torque, which can cause injury or death.

Chapter 6: ADJUSTMENT – Warnings and Cautions

Protect against the possibility of movement due to the effects of gravity, wind or other source of energy, which has the potential to create a hazard when the brake is being worked on or is removed entirely.

If the brake is arranged to operate in manual mode, the actuator "reserve stroke" must be monitored and adjusted to be within the range of 30 to 35% of full stroke with the brake applied.

An actuator reserve stroke of zero will result in total loss of brake torque.

Under no circumstances should the brake be allowed to function with zero reserve stroke. Such operation results in loss of load control, which can result in injury or death.

Always replace the caps on the actuator once adjustments are complete. This will prevent entry of contaminants.

The optional automatic adjustment mechanism uses a one-way clutch to adjust brake shoe clearance. It is located inside the clutch ring (R) shown in Fig.2A. Never disassemble this clutch. Incorrect reassembly will render the auto-adjust feature inoperative. This can lead to loss of load control and result in damage, injury or death.

If it is necessary to use a wrench to adjust the reserve stroke of a brake with auto-adjust, first withdraw the drive pin (E) shown in Fig.2A and rotate the mechanism in the required direction. Do not disturb the factory set pre-load, which is secured by set screws in nut (F). Releasing the brake will take the load off of the brake rod thread and make it easier to turn.

The two setscrews used to lock nut (F), see Fig. 2A, to the clutch drive shaft, are factory set. Do not loosen these setscrews or change the position of nut (F) with respect to the assembly. Failure to observe this warning can cause the automatic adjustment feature to become inoperative. This can lead to loss of load control and result in damage, injury or death.

Chapter 7: ELECTRICAL DETAIL – Warnings and Cautions

The actuator motor must be connected to its supply through a flexible cable or sealed flexible conduit. This is required to ensure that contaminants will not enter the motor through the wiring and junction box.

Avoid contact with "live" terminals and prevent contaminant entry. Replace the terminal box cover as soon as connections are complete.

Chapter 8: OPERATIONAL TEST – Warnings and Cautions

Always perform an operational test of the brake after any replacement, adjustment, or repair. Read and understand the intent of the warnings published in this document – if in doubt, ask.

In a hoist application, post observers to monitor the position of the hook if it travels out of sight of the operator.

Before conducting an operational test, remove all tools, chocks and other equipment, which may create a hazard when the machine is operated.

Following any repair or adjustment, and before conducting an operational test, verify that all brake adjustments are complete in accordance with Chapter 6.

Before attempting to operate any motion in any application, advise and account for the location and security of all personnel involved.

Chapter 9: MAINTENANCE AND REPAIR – Warnings and Cautions

When replacing a brake wheel or associated drive line components on an existing installation, verify that the brake is centered with uniform lining contact as described under the topic "Brake Installation". Incorrect repair or replacement can result in death or injury to personnel.

During operation, the actuator's internal temperature and pressure will increase. This is normal but presents a risk of burns and scalds if the filler plug is removed while the actuator is hot. Switch off power to the actuator and allow it to cool to ambient temperature before checking, topping off, or draining hydraulic fluid.

Improper brake operation and loss of load control due to incorrect brake adjustment can result in death or injury to personnel. Under no circumstances is it permissible to allow the brake release lever to bottom out against the hydraulic actuator.

Chapter 2.0: General Description

2.1: Mondel type MST/E spring applied, Hy-Thrust actuated general purpose brakes are designed for use on cranes and other severe braking applications in heavy industry. They can be used with any drive type applied to hoisting or horizontal travel motions.

2.2: There are two basic models of this versatile, high-speed, AC operated brake: Type MST with fixed value internal torque spring, and Type MST/E with an adjustable external torque spring.

2.3: The type MST brake spring is contained within the actuator. The brake can be arranged to deliver a percentage of the maximum torque by rearranging the brake pivot pins to provide a different lever ratio.

2.4: The type MST/E has an external torque spring, which is infinitely adjustable down to less than 50% of maximum torque.

2.5: Construction and operation of both models is similar; they are available for wheel sizes 6" to 16". A limited range of shunt-wound DC motor actuators is available.

2.6: A wide range of options is available; consult factory.

2.7: When the load cycle requires a larger than normal size, as is frequently the cause on crane bridge drives, type MST and MST/E brakes can be provided with torques lower than traditional for a given wheel size.

Except when specifically engineered and used in conjunction with Mondel Braketronic Controllers, type MST/E are more suited to crane bridge brakes.

2.8: The type MST and MST/E brakes can be supplied as "drop-ins", with footprints and shaft heights, to replace a wide range of competitor's brakes, including some metric sizes.

2.9: The standard actuator is weatherproof and dust proof. The electric motor is TENV construction, and the hydraulic section is fully sealed and self-contained. Electric motors for certain hazardous areas are available as options.

2.10: An optional breather unit can be installed to replace the standard filler plug for environments, which experience large temperature swings. The breather prevents pressure build-up within the actuator.

2.11: For more demanding environments, special hardware, enclosures, paint and surface treatments are available.

IF YOU HAVE AN UNUSUAL APPLICATION, OR REQUIRE A RECOMMENDATION FOR A BRAKE SIZE AND TYPE CONTACT MAGNETEK.

Figure 1

General Arrangement
MST/E Electric Shoe Brake

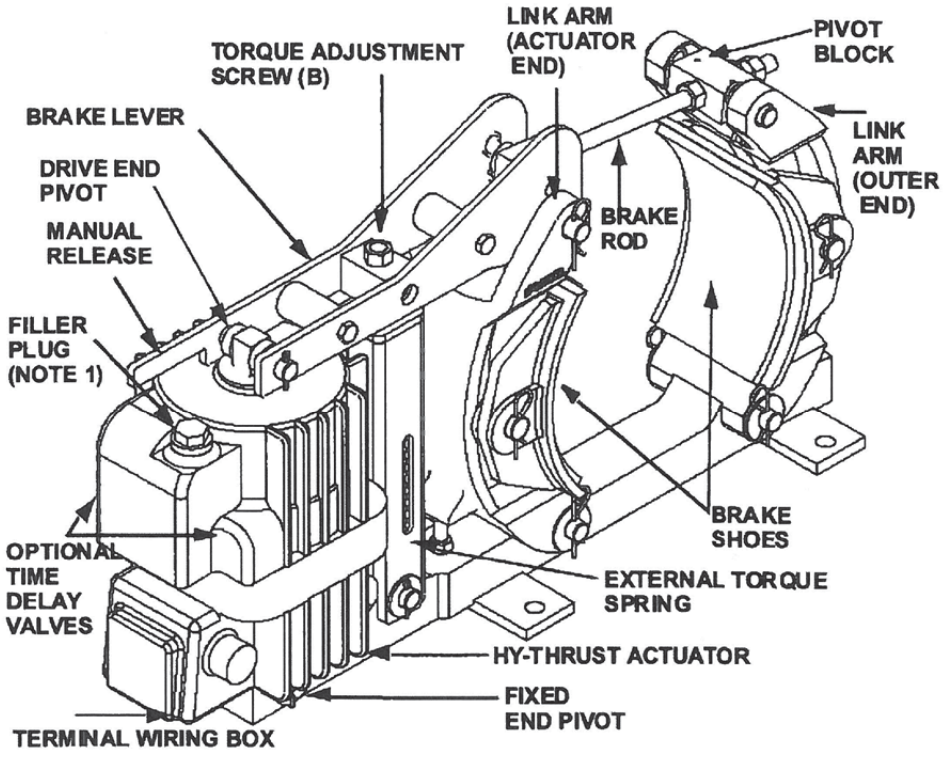

NOTE 1: FILL TO LOWER RIM OF FILLER HOLE. USE ONLY FLUID IDENTIFIED ON THE ACTUATOR NAMEPLATE. DO NOT OVER-FILL

Figure 1a

General Arrangement
MST/E Electric Shoe Brake
With Automatic-Adjustment and Automatic-Equalization

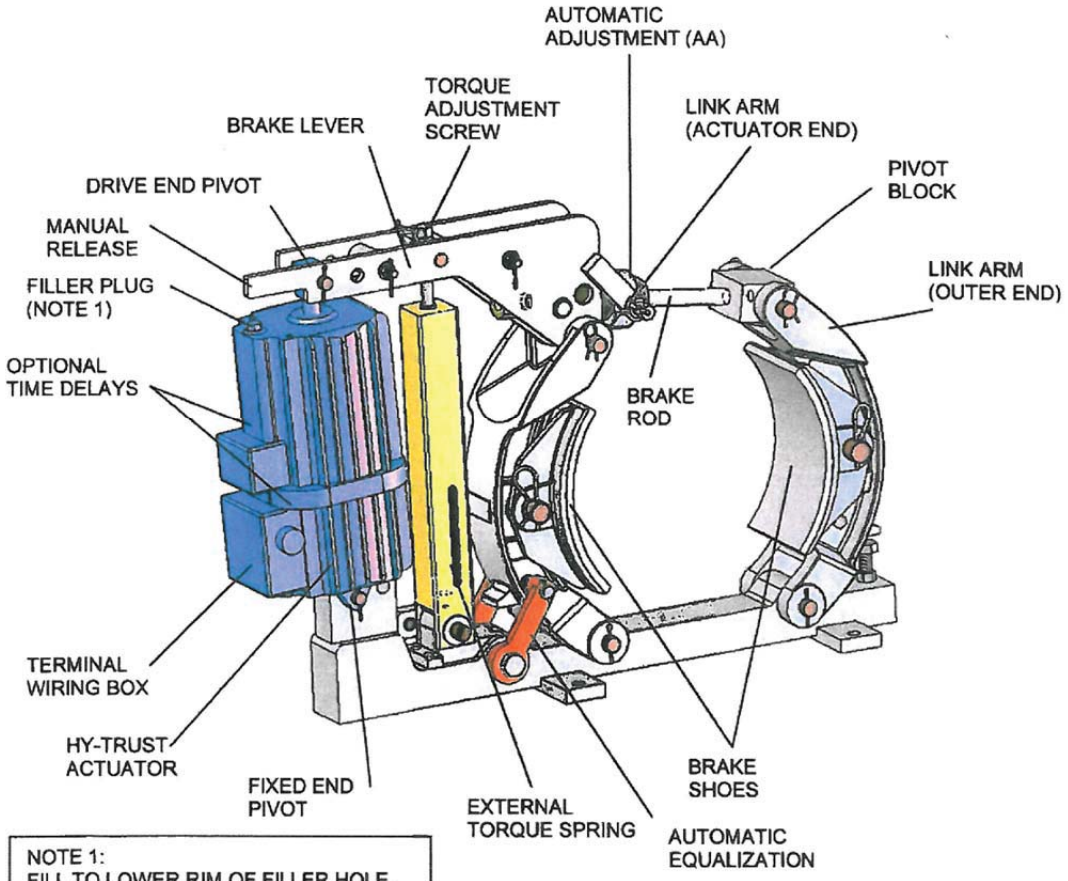

NOTE 1:
FILL TO LOWER RIM OF FILLER HOLE. USE ONLY FLUID IDENTIFIED ON THE ACTUATOR NAMEPLATE. DO NOT OVERFILL.

8/17/2006 Page 9 of 33 MST/E Electric Shoe Brakes Manual 560022-R6

Chapter 3.0: Application

3.1: The brake covered by this manual is type MST/E. This brake has an adjustable external torque spring and is generally applied on installations where the required torque cannot be pre-determined within well defined limits.

3.2: For a given wheel diameter the Association of Iron and Steel Engineers (AISE) determines the prescribed torque, when applied to 30 and 60 minute rated motors in steel mill applications.

3.3: When applied to four quadrant drives or other applications where wheel heating can be accurately predicted, type MST/E brakes can be provided with torque values in excess of the AISE recommendations.

3.4: When the load cycle requires a larger than normal wheel size, as is frequently the case on crane bridge drive, MST/E brakes can be provided with torques lower than AISE for a given wheel size.

3.5: For applications where larger than normal running clearance is required, a larger actuator can be applied to a given brake. Typical would be severe applications where wheel expansion can be considerable or where excessive wheel run-out can be expected.

Chapter 4.0: Description of Operation

4.1: The brake is spring applied and actuator released. A heavy-duty compression spring within the actuator pulls down on the brake lever and forces the shoes against the wheel.

4.2: The actuator piston rod extends when power is applied, the brake-shoe pressure removed and running shoe clearance established.

4.3: Subject to the effect of brake geometry, braking torque depends upon three major factors:

4.3.(a): The diameter of the wheel.

4.3.(b): The coefficient of friction of the lining material.

4.3.(c): The force with which the linings are applied to the wheel.

4.4: Power applied to the actuator cancels the brakes ability to apply torque.

4.5: The force with which the linings are applied to the wheel depends on the spring length and characteristics. Spring length increases as linings wear.

4.6: When the brake is released, Automatic Equalization of shoe clearance ensures equal clearance between each shoe and the wheel.

4.7: Because the applied brake shoe force is proportional to the compressed length of the torque spring, a slight decrease in brake torque occurs as linings wear (unless automatic adjustment is used).

4.8: Adjusting the reserve stroke to its specified setting, restores the required spring force.

NEMA states: "The torque ratings apply at a worn lining condition defined as the point where re-adjustment is required as recommended by the manufacturer".

4.9: Automatic Equalization (AE) is available on all brakes of this class.

4.10: To understand how the automatic equalization works, it is important to recognize that the total available shoe clearance is directly related to the length of active stroke and that the actuators "Fully Released" position is the only consistent value for actuator stroke. The "Brake Applied" position varies as the linings wear, resulting in a reduced "Reserve Stroke". The "Brake Applied" position also varies due to wheel expansion caused by temperature increase; this results in an increased "Reserve Stroke".

4.11: On brakes without Automatic Adjustment, after some significant lining wear and the brake wheel close to ambient temperature, a reduction in the "Reserve Stroke" and a corresponding increase in the "Active Stroke", will be noticed. Corrective action will be necessary to ensure the minimum reserve stroke. (See Chapter 6: "Actuator Stroke Adjustment / Brakes without Automatic Adjustment).

4.12: On brakes equipped with the Automatic Adjustment (AA) option, the reserve stroke is maintained by a one-way clutch mechanism arranged to shorten the effective brake rod length – but only when adjustment is required – as follows:

4.12.(a): A retractable pin mounted on the brake lever, oscillates within a slot in the (AA) clutch ring. (See Fig. 2A).

4.12.(b): When the angle, through which the pin moves within the slot, does not allow contact with the sides of the slot, nothing happens!

4.12.(c): When the brake applies, after some minimal amount of lining wear, the pin will contact the side of the slot in the collar, which will advance the ratcheting mechanism and prepare for adjustment the next time the brake is released.

4.12.(d): When the brake is next released and the load on the thread is minimal, the free wheel set-up referred to in the previous paragraph will result in an advance on the thread when the pin engages the other side of the slot in the collar.

4.12.(e): The ratcheting advancement will continue, a little at a time, until the pre-determined reserve stroke is reached.

4.13: When the brake is released, the shoes are moved apart to provide running clearance from the wheel. The actuator's active stroke establishes the total clearance available for both shoes.

4.13.(a): As the brake releases, the shoe nearest to the actuator has been biased to open first. This is done during manufacture, by inclining the actuator away from the nearest shoe (See Fig. 2).

4.13.(b): Clearance provided to the nearest shoe is restricted by the (AE) mechanism – located on the base – which transfers the remaining clearance to the other shoe.

4.13.(c): As shoe wear occurs the friction bolt in the (AE) mechanism relocates to provide a new reference point for the brake shoe on the actuator side of the brake.

4.13.(c).(i): The total available shoe clearance is determined by the active stroke.

4.13.(c).(ii): The clearance between the friction bolt and holes in the actuator links through which it passes, determines the "actuator side" shoe clearance.

4.14: Various optional features are available, including latching hand release mechanisms, limit switches, hydraulic and pneumatic overrides, etc. If the brake covered by this manual has any of the optional features, they will be listed on the front page of this manual and covered by supplementary instructions.

4.15: The actuator for this series of Mondel Brakes can be supplied with optional, factory installed time delays.

Figure 2

MST/E Brake Shown With Typical Brake Release Lever
Without Automatic Adjustment and Automatic Equalization

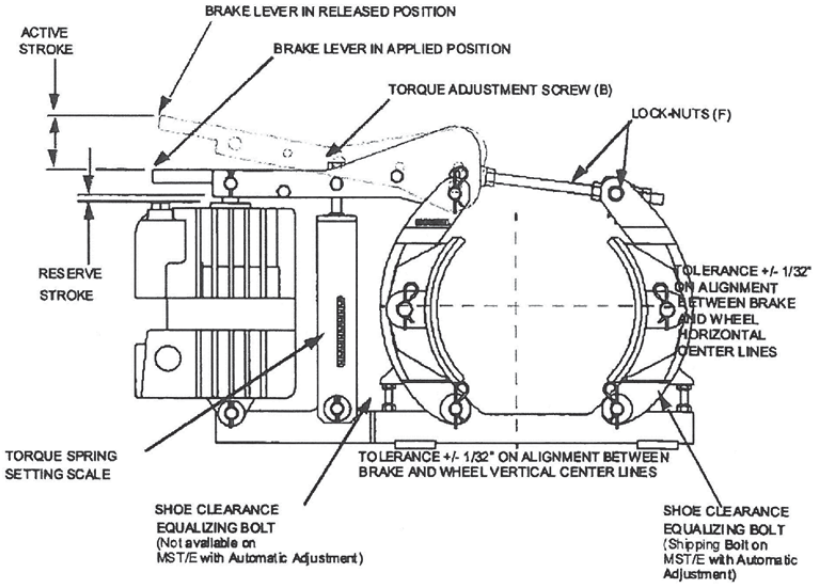

Figure 2A

MST/E Brake Shown With Typical Brake Release Lever
With Automatic Adjustment and Automatic Equalization

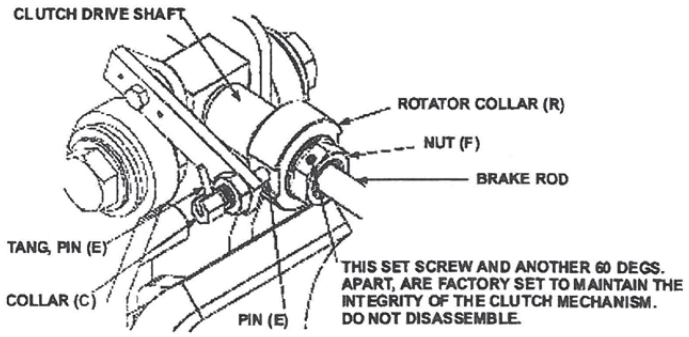

NOTE: TABLE 5 LISTS THE NEMA MINIMUM RECOMMENDED LINING THICKNESS.

Chapter 5.0: Installation

5.1: After unpacking, visually inspect the brake assembly to ensure that damage has not occurred during shipment and that there are no loose or missing parts.

5.2: Prepare the brake support structure and install the brake assembly subject to the following:

5.2.(a): Allow adequate clearance between the brake and adjacent obstructions to allow access for adjustment and maintenance.

Brake shoe replacement requires space for complete withdrawal of the link arm pivot pins.

5.2.(b): Whether mounting a brake in a new or existing installation, the base mounting bolts need a reasonable clearance in the base mounting holes to allow the brake to be aligned for full contact between the brake linings and the wheel.

5.2.(c): Circumstances may determine the best order of installation for the brake and the wheel. This may be due to the available space or handling facilities on site; generally the wheel is installed first.

5.2.(d): Center the brake shoes across the width of the brake wheel. This avoids ridge formation and the possible creation of a dangerous situation as the linings wear.

5.3: Alternatively, it may be necessary to introduce the brake to the brake wheel from one side of the wheel. In this case partial dismantling of the brake may be required depending on the circumstances. Refer to the general arrangement and exploded view drawings in this manual to evaluate the options.

5.3.(a): After installing the brake and wheel, make preliminary adjustments to apply sufficient shoe pressure to raise the actuator piston rod ½" above its fully retracted position.

5.3.(b): This will apply the brake at approximately rated torque, causing the brake to square itself to the wheel and maximize the shoe contact area, providing the bolt hole clearance will permit.

5.3.(c): When the brake assembly is correctly aligned and clamped to the wheel, loosen each of the securing bolts in turn and verify clearance in the base mounting holes. This will ensure tolerance to allow minor adjustment to the brake alignment to accommodate future relined shoes.

5.3.(d): For the reason identified in the previous paragraph Magnetek does not recommend "Dowelling" or "Keeper Plates" to maintain alignment.

5.4: Type MST/E brakes are generally installed with the base horizontal and the brake wheel shaft horizontal.

5.5: In most applications the brake can be installed from one side of the brake wheel. Alternatively it may be necessary to partially dismantle the brake.

5.6: Type MST/E brakes can also be wall mounted, with the brake wheel shaft horizontal. This is only possible if the actuator pump suction is flooded, which will be the case if the actuator hydraulic section filler plug is at the highest point possible with the actuator horizontal. For this mounting arrangement the actuator is best located above the wheel. The equalizing bolt opposite the actuator will be most effective in ensuring equal shoe clearance.

5.7: Type MST/E brakes can also be wall mounted with the brake wheel shaft vertical. Again this requires the actuator hydraulic section filler plug to be at the highest point possible with the actuator horizontal. For this mounting arrangement both equalizing bolts may be required to ensure equal shoe clearance.

5.8: For any other mounting arrangements consult factory.

5.9: The brake assembly must always be square and aligned to the brake wheel within a maximum of ± 1/32 inch, in three axes (horizontal, vertical, and longitudinal).

5.9.(a): Adjust the brake support bracket to achieve the specified horizontal and longitudinal alignment. For best performance, the brake base should be flat and parallel to the wheel rim or motor shaft. It may be necessary to release and re-apply the brake pressure several times to achieve optimum alignment. Shim under the brake base for the vertical alignment.

5.9.(b): When the brake assembly is correctly aligned and clamped to the wheel, check the securing bolt clearance in each of the brake base holes. There must be clearance in the base and through the brake support bracket to allow minor adjustments. Be sure that the brake shoes are still aligned parallel to the face of the brake and that each brake shoe is fully secured to its link arm.

5.9.(c): With the brake fully applied, verify that the shoes are centered on the wheel face and that lining contact is within adequate bedding range.

5.9.(d): When the brake is correctly aligned in all three axes, tighten the brake mounting bolts and re-check the alignment.

5.10: Connect the actuator to the electrical supply using a flexible, sealed conductor, suitable for the rated temperature. Use type "S0", or higher temperature, cable. The actuator must be allowed few degrees of movement without the risk of dirt or moisture entering the terminal box. Chapter 7 provides all necessary electrical details.

Chapter 6.0: Adjustment

6.1: Following any adjustment or repair of the brake, test operation of the brake as described under "Operational test", Chapter 8.

6.2: Complete adjustment is required following any rework where any settings were disturbed.

Table 1

BRAKE WHEEL SIZES (Inches)	TYPICAL RUNNING CLEARANCE BETWEEN LINING AND BRAKE WHEEL (Inches)	MAXIMUM FULL SPEED BRAKE WHEEL run-out (Inches)
6	0.014	0.006
~~8~~	~~0.016~~	~~0.008~~
~~10~~	~~0.020~~	~~0.010~~
~~13~~	~~0.026~~	~~0.013~~
~~16~~	~~0.032~~	~~0.016~~
~~19~~	~~0.038~~	~~0.019~~

Notes:
1. Refer to "Brake Installation" and "Replacing the Brake Shoes" for adjustment instructions.
2. Evaluate brake wheel run-out at full speed. It must not exceed value shown in this table.

6.3: Manual Operation

6.3.(a): Brake installation, shoe replacement, and actuator replacement, described elsewhere, require the brake to be released and reapplied without energizing the actuator. When type "S" Latching Hand Release is fitted, it can be used; or it can be manually over-ridden as follows:

6.3.(b): Brakes without Automatic Adjustment:

6.3.(b).(i): To manually release the brake: Adjust the brake rod hex-nuts – to increase the brake rod length – reducing the "reserve stroke" until the piston rod is no longer visible. Continue adjustment until there is sufficient lining to brake wheel clearance.

6.3.(c): To manually apply the brake: Adjust the brake rod hex-nuts – to decrease the brake rod length – increasing the "reserve stroke" until the linings contact the brake wheel. Continue until the brake release lever begins to rise. Proceed to "Actuator Stroke Adjustment".

6.3.(d): Brakes with Automatic Adjustment:

6.3.(e): To manually release the brake: Refer to Fig. 2A, withdraw drive pin (E), then carefully rotate the mechanism by hand to increase the brake rod length and, at the same time, reduce the reserve stroke until the piston rod is no longer visible. Continue adjustment until there is sufficient shoe/wheel clearance.

6.3.(f): To manually apply the brake: Refer to Fig. 2A and withdraw drive pin (E), then rotate the mechanism by hand to decrease the effective brake rod length until the linings contact the wheel and the brake lever begins to rise. Proceed to "Actuator Stroke Adjustment".

6.4: Actuator Stroke Adjustment

6.4.(a): When power is applied to the actuator the piston will be caused to extend. This will compress the external spring and raise the brake lever to provide operating clearance between the shoes and the wheel.

6.4.(b): When power is removed from the actuator, the spring will retract the lever until the shoe pressure on the wheel prevents any further lever movement as the reserve stroke setting is attained and the intended brake torque achieved.

6.4.(c): Brakes without Automatic Adjustment:

6.4.(d): Adjust the brake rod nuts until the brake release lever raises the piston rod to the specified reserve stroke, (Table 2). Re-secure the brake rod nuts against the pivot block.

6.4.(e): Brakes with Automatic Adjustment:

6.4.(f): To make initial adjustment before engaging the auto adjust (AA), refer to Fig. 2A and withdraw pin (E). Rotate the mechanism by hand to decrease the brake rod length until the linings contact the wheel and the brake lever begins to rise. Continue adjustment until the required reserve stroke is about 1/8" less than specified. Re-engage pin (E) allowing the (AA) mechanism to complete the final stage of the adjustment process. This will verify that the mechanism is operating correctly.

6.4.(g): Energize the actuator several times until the rotating collar (R) is no longer turned by the (AA) drive pin (E). Verify that the reserve stroke is still at the desired value per Table 2.

Table 2

ACTUATOR	MAX STROKE (inches)	ACTIVE STROKE (inches)	DESIRED RESERVE STROKE (inches)
Ed23/5	1.97	1.27	0.7
~~Ed30/5~~	~~1.97~~	~~1.27~~	~~0.7~~
~~Ed50/6~~	~~2.36~~	~~1.56~~	~~0.8~~
~~Ed80/6~~	~~2.36~~	~~1.56~~	~~0.8~~
~~Ed121/6~~	~~2.36~~	~~1.56~~	~~0.8~~

6.5: Torque Adjustment

6.5.(a): The rated torque, as shown on the nameplate, will be developed when the following conditions are met:

6.5.(a).(i): The brake is applied and aligned properly.

6.5.(a).(ii): The actuator stroke is correct.

6.5.(a).(iii): The correct linings are fitted.

6.5.(a).(iv): The linings are in good condition and bedding is completed.

6.5.(a).(v): The brake wheel is aligned and in good condition.

6.5.(b): Torque adjustment for Mondel MST/E brakes is adjustable on site. Tighten or loosen screw (B), see Fig. 2, to set the torque within the prescribed range shown on the scale. The torque setting is obtained by matching the top of the spring-block to a line on the spring scale.

6.6: Automatic Equalization Assembly

6.6.(a): The total available shoe clearance is determined by the active stroke of the actuator. Distribution of the resulting clearance is determined by two factors.

6.6.(a).(i): As the brake releases under power, the shoe nearest to the actuator has been biased to open first. This is done during manufacture by inclining the actuator away from the nearest shoe. (Fig. 2).

6.6.(a).(ii): Clearance provided to the nearest shoe is restricted by the (AE) mechanism located on the base. The clearance between the friction bolt and holes in the base, through which it passes, determines the "actuator side" shoe clearance.

6.6.(b): When the predetermined "actuator side" shoe clearance has been established, the remaining clearance is transferred to the "non-actuator side" shoe.

6.6.(c): As lining wear occurs, the friction bolt in the (AE) mechanism is dragged to a new location, to provide the reference point for the shoe clearance on the "actuator side" of the brake.

6.6.(d): The (AE) friction bolt mechanism is self-compensating after initial adjustments are completed as follows:

6.6.(d).(i): Release the brake and, using a soft-faced mallet if necessary, force the actuator side link away from the wheel. This will set the actuator side (inner) shoe to the maximum available clearance.

6.6.(e): The actual clearance which will be allowed to the "actuator side" shoe is determined by the difference in diameter between the friction bolt shank and the holes in the links, through which it passes.

6.6.(f): The friction bolt assembly is pre-tensioned at the factory. **DO NOT FIELD ADJUST.** If the friction bolt assembly is disturbed for any reason it can be retensioned as follows:

6.6.(g): Refer to Fig. 3a: Install friction bolt through Automatic Equalization arms and base. Add, onto the end of the friction bolt, a stack of three Belleville washers in series, (as indicated below), followed by a plain flat washer.

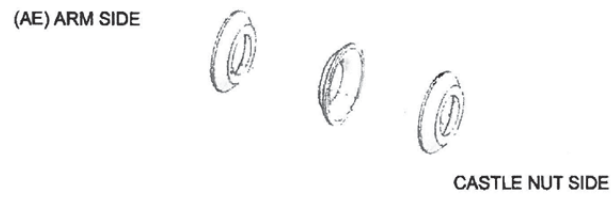

6.6.(g).(i): Install a castle nut, tighten nut until the flat washer is FLUSH with the side of the Automatic Equalization arm. Loosen or tighten the nut no more than 1/8 of a turn, only enough to align the nearest cotter pin slot and hole. Install the cotter pin. This completes the assembly.

6.7: Shoe Clearance Adjustment

6.7.(a): The total available shoe clearance is determined by the active stroke of the actuator and the brake lever ratio. Distribution of the resulting clearance is determined by the setting of the active shoe clearance equalizing bolt (Fig. 2).

6.7.(b): Generally only one of the two equalizing bolts will be effective depending on the lever ratio arrangement and subject to the brake being installed horizontally or vertically.

6.7.(c): The "active" equalizing bolt will be evident after energizing the actuator.

6.7.(d): To equalize the brake shoe running clearance:

6.7.(d).(i): Back-off both equalizing bolts and energize the actuator allowing the shoes to move away from the wheel.

6.7.(d).(ii): Adjust the active side equalizing bolt to limit the travel of that shoe; this moves the other shoe away from the wheel. Continue adjustment until wheel clearance is equal for both shoes.

6.7.(d).(iii): Set the non-active side equalizing bolt so that shoe travel is not restricted; lock both equalizing bolts with jam-nuts.

6.8: Parallel Shoe Gap Adjustment

6.8.(a): For optimum lining wear distribution, brake shoes have controlled freedom to align with the wheel contour as the linings wear.

6.8.(b): Each brake shoe holder pivots on its link arm. Its freedom to rotate under gravity is controlled by a shoe holder friction mechanism.

6.8.(c): Spring loaded pins in each link arm bear against the inside of the shoe (Fig. 3). This provides tension to maintain shoe alignment when the brake is released. The tension is not adjustable. When a shoe is replaced make sure that both shoe alignment tension mechanisms are re-installed.

6.8.(d): To align shoes with the wheel, apply the brake at the rated torque and make the following initial adjustments:

6.8.(d).(i): Release the brake manually or under power.

6.8.(d).(ii): With the brake released, use a soft-faced mallet to tap the upper edge of each brake shoe, in towards the wheel, in the direction it would rotate under gravity.

6.8.(d).(iii): Re-apply the brake, and the shoes will be forced to align with the wheel to optimize parallel clearance with the wheel.

6.9: Time Delay Adjustment

6.9.(a): The actuator nameplate will indicate when optional time delay valves are installed.

6.9.(a).(i): Letter **"S"** indicates an adjustable piston retract, (brake application), time delay.

6.9.(a).(ii): Letter **"H"** indicates an adjustable piston extend, (brake release), time delay.

6.9.(a).(iii): If both letters **"S"** and **"H"** are present, then the actuator is equipped with adjustable time delay valves independently controlling both the piston extend and retract times.

6.9.(a).(iv): When time delay valves are not fitted, the actuator response time to extend or retract, is between 0.4 and 0.8 seconds depending on actuator size

6.10: With time delay valve(s) installed, the extend and/or retract times are adjustable between approximately 0.5 and 10 seconds depending on actuator size.

6.10.(a): Remove the delay valve protective cap to expose the adjustment screw. For minimum delay set the screw head flush with the housing. Fig. 1 shows valve location.

6.10.(a).(i): Turn the screw clockwise to increase, and counter clockwise to decrease the delay.

Note: The standard actuator has the shortest response time. An actuator fitted with delay(s) provides longer response times, even when the delay(s) are adjusted for minimum effect.

Figure 3

Section Through Shoe And Link Arm
Drawn To Reveal Tension Device

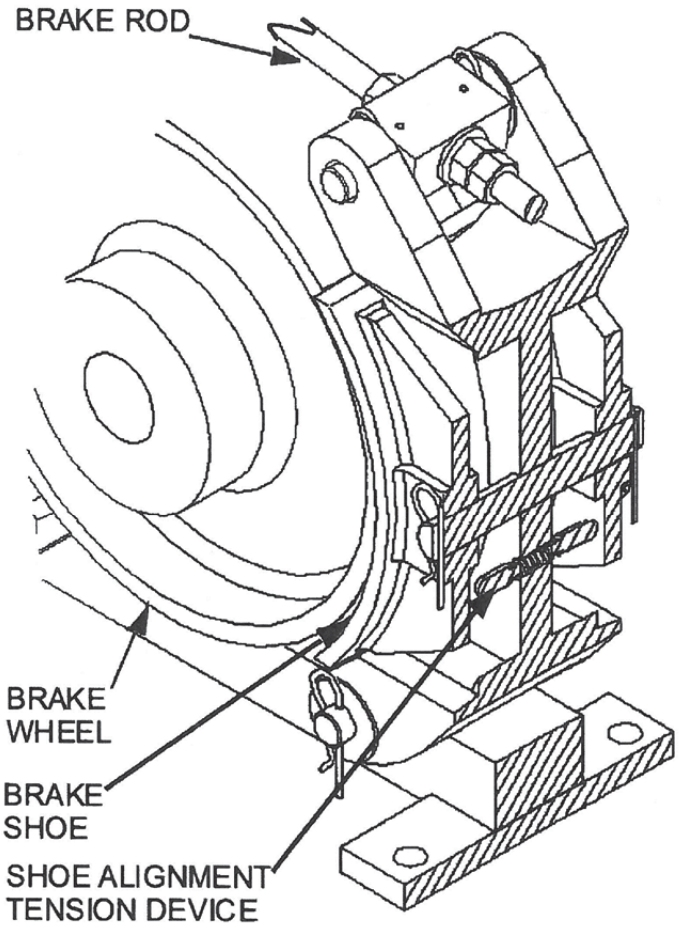

Figure 3A

Type AE Automatic Equalization Mechanism Assembly

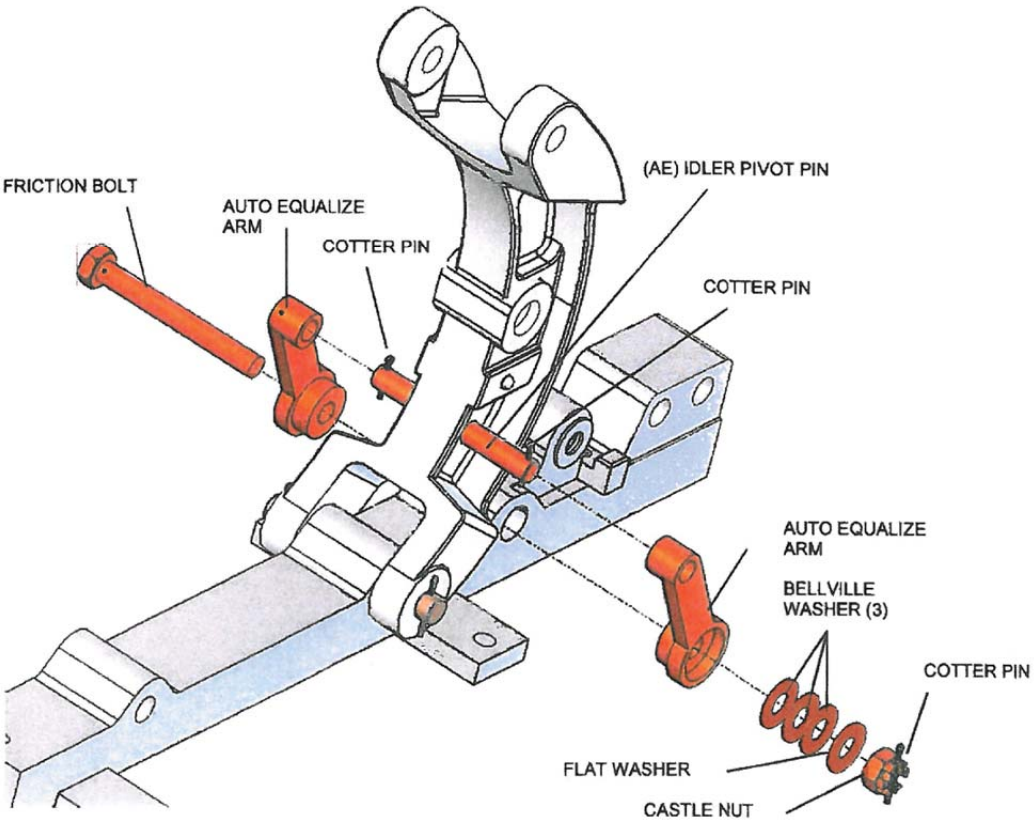

8/17/2006 Page 22 of 33 MST/E Electric Shoe Brakes Manual 560022-R6

Chapter 7.0: Electrical Detail

7.1: Operation of the actuator is not dependant of the direction of motor rotation. The cable leads can be connected to the U1, V1 and W1, (T1, T2, T3), terminals in any phase sequence.

Figure 4

Electrical Connections

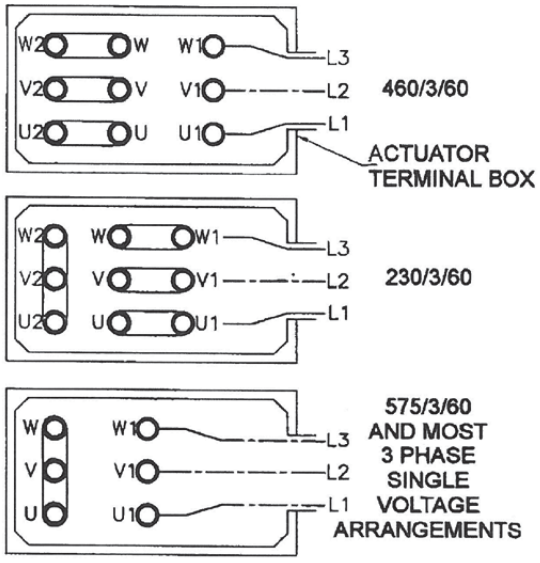

7.2: The motor leaves the factory already arranged for the specified voltage, which is also shown on the nameplate.

7.3: If the motor was specified for a nominal 460 volts supply, it will be connected with nine terminals and the links arranged as shown in Fig. 4. If at some future date the motor is required to operate from a 230 volts supply, re-arrangement of the links is required as shown.

7.4: When specified for operation on 575 Volts or other single voltage, it will be connected with six terminals, the links arranged as shown in Fig. 4. The winding will not be capable of re-connection for any other voltage.

7.5: Explosion Proof actuators are only arranged for the terminal voltage shown on the nameplate. Three terminal posts will be visible when the cover plate is removed under the required conditions. No provision is made for external re-connection to any other voltage.

7.6: A wiring diagram showing the possible terminal link arrangements is fastened inside the actuator terminal box cover.

Chapter 8.0: Operational Test

8.1: Heed all warnings and cautions in addition to the owners' safety procedures.

8.2: Follow all standards and local statutes.

8.3: Remove any drum chocks on a hoist application.

8.4: As a preliminary test of the brake without load, energize the actuator for one short jog. If the brake fails to stop and hold the motion stationary, repair or re-adjust the brake as necessary. Visually inspect the brake during operation to ensure all adjustments are correct. If successful, continue with longer duration jogs until confident that the brake is operating satisfactorily.

8.5: A minimum of 60% contact between lining and wheel on each shoe is required before subjecting the brake to its rated capacity.

8.6: If re-lined shoes have been fitted, or the brake alignment has been altered or is otherwise suspect, you may have to realign the brake. This will minimize the bedding needed to obtain the necessary 60% of brake lining to wheel contact.

8.7: The required lining contact is seldom achieved without "bedding", but time spent to achieve satisfactory bedding will be rewarded with a considerably longer life for the lining.

8.8: Modern linings, although hard wearing, are difficult to "bed" when the area in contact with the wheel cannot support the heat energy transferred to the brake. As a result the linings will become "glazed" where in contact with the wheel. "Glazing" is the name applied to a condition where the lining has been heated beyond its working temperature range and is no longer capable of its designed coefficient of friction. "Glazing" will seldom be removed by further braking operations as any increase in area of lining contact will immediately be glazed.

8.9: "Glazing" can be prevented by ensuring a minimum of 60% contact area before placing the brake in service.

8.10: On hoists, well spaced, short bursts of energy, such as an E.Stop at high speed with no load are best to achieve initial "bedding". This will limit the energy input while the wheel is monitored for temperature.

8.11: A distinct advantage of the type MST/E brakes is that the actuator can be easily overridden while the drive is operating. This can be accomplished with a short length of pipe fitted over the "manual release lever extension", Fig. 1. When circumstances permit, pressure can be applied to force the shoes against the wheel while the drive is operating. Care must be taken to achieve the minimum 60% contact between lining and wheel on each shoe, without exceeding the maximum of 150°C.

8.12: Bedding is just as important when the brake is applied with a four quadrant drive, and not subjected to dynamic loading, except under emergency conditions.

8.13: The following are the key steps to satisfactory "bedding" to extend lining life.

8.13.(a): Use only genuine Mondel lined brake shoes. This will maintain specified brake performance and ensure that the braking torque is neither more nor less than the specified rating.

8.13.(a).(i): Linings thicker than the original equipment may result in contact with the wheel only at the tips.

8.13.(a).(ii): Linings thinner than the original equipment may result in contact with the wheel only across the middle and cause vibration during stops.

8.13.(b): Do no use re-lined shoes where the castings are damaged, worn or distorted.

8.13.(c): Square the brake to the wheel for optimum contact between the linings and the wheel.

8.13.(d): Type **MST/E** brakes utilize shoe clearance equalizing bolts to equalize brake shoe clearance; ensure that they are correctly adjusted in accordance with Chapter 6.

8.13.(e): Type **MST/E** brakes incorporate a mechanism to keep brake shoe clearance parallel to the wheel; ensure that it is correctly adjusted in accordance with Chapter 6.

8.14: Wheel run-out must be within the allowable tolerance; see Table 1. Any unnecessary lining drag will result in excessive heat in the wheel and lining deterioration.

8.15: Every operational test should include verification of brake wheel run-out as follows:

8.15.(a): At all speeds, verify that the linings are clear of the wheel. Take steps to correct wheel run-out, imbalance or the effects of critical speed.

8.15.(b): If necessary, check low speed brake wheel run-out as follows:

8.15.(c): Using a run-out gauge, verify that radial run-out does not exceed 0.001" per inch of brake wheel diameter. Refer to Table 1 for brake wheel run-out allowance. Bearing play can also be checked by lifting the brake wheel with a suitable lever while observing the dial gauge.

Chapter 9.0: Maintenance and Repair

NEMA Standard ICS 9-1993, Part 1 recommends that brakes be fitted with new or re-lined shoes before the lining material is worn excessively. Refer to Table 4 for minimum thickness.

9.1: Replacing the Brake Shoes

9.1.(a): Remove and reinstall the brake shoes as follows. Use a lifting devise as necessary.

9.1.(a).(i): On a hoist lower the load to the floor and disconnect the load from the bottom block.

9.1.(a).(ii): Reset the bottom block on the floor, or on a suitable support. Chock drum to prevent rotation of the drum.

9.1.(a).(iii): Refer to Fig. 5.

9.1.(a).(iv): (1) Manually release the brake as instructed in Chapter 6.

9.1.(a).(v): (2) Remove cotter pin and withdraw the actuator drive end pivot pin.

9.1.(a).(vi): (3) Remove hitch pin at the active upper end of each link arm; withdraw the pivot pins.

9.1.(a).(vii): (4) Lift the brake rod and lever assembly clear of the brake body.

9.1.(a).(viii): (5) Remove hitch pin at the fixed lower end of each link arm; withdraw the pivot pins.

9.1.(a).(ix): (6) Lift out the link arm/brake shoe assemblies.

9.1.(a).(x): (7) Remove hitch pins and withdraw the shoe pivot pins.

9.1.(a).(xi): (8) Brake shoes can now be removed for service. To avoid loss, restrain the spring loaded shoe alignment tension device when removing a shoe.

Figure 5

Brake Shoe Removal

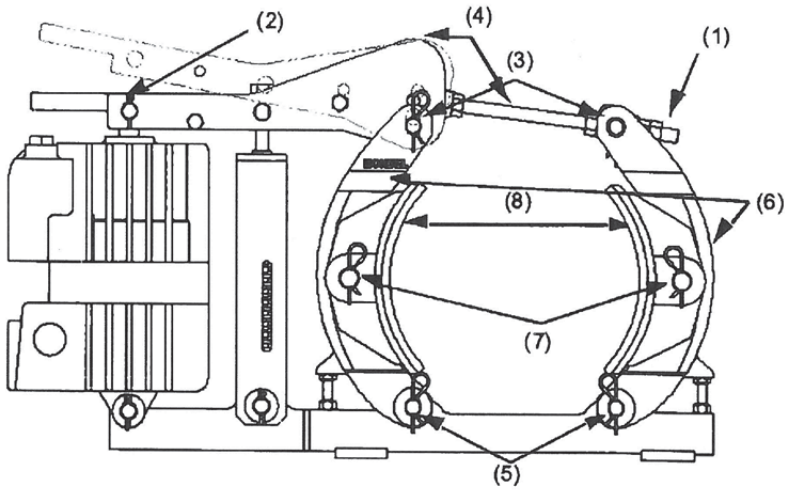

9.1.(a).(xii): Before starting shoe installation, check that the brake surface of the wheel is clean and free from oil and grease.

9.1.(a).(xiii): Next, verify that the lining surface will be true to the wheel when the shoe is installed. Carefully check lining contact with the wheel. Remove any high spots with emery paper to ensure 60% contact between the lining and the wheel.

9.1.(b): Ensure adequate clearance will be available and install the replacement shoe assemblies in the reverse order.

9.1.(c): Replace all pivot, cotter and hitch pins.

9.1.(d): Re-apply the brake and make all adjustments covered in Chapter 6.

NOTE: The brake can be damaged if the brake shoes are not accurately aligned. Do not operate the brake unless the brake shoes are in their normal position and all pivot, cotter and hitch pins are fully installed.

9.1.(e): Newly lined shoes seldom fit perfectly with the contour of an existing brake wheel, particularly if the wheel is worn or undersized. If the brake has been moved, realignment of the brake with the wheel may be necessary. Refer to the topic "Brake Installation" for the correct alignment and bedding procedure.

9.1.(f): Refer to Chapter 6 and adjust the reserve stroke as required.

9.1.(g): Refer to Chapter 6 and adjust the torque as required.

9.1.(h): Refer to Chapter 6 and adjust the brake shoe clearance as required.

9.1.(i): Refer to Chapter 8; bed and test the brake as described.

9.2: Removing The Actuator

9.2.(a): Secure against any possibility of an unexpected movement when the actuator is removed.

9.2.(b): Lower the load to the floor and disconnect the load from the bottom block.

9.2.(c): Reset the bottom block on the floor, or on a suitable support. Chock the drum to prevent rotation.

9.2.(d): Disconnect and remove electrical wiring and conduit to the actuator.

9.2.(e): Before attempting to remove the actuator, release the brake. See Chapter 6: "Manually Releasing the Brake".

Figure 6

Actuator Removal and/or Replacement

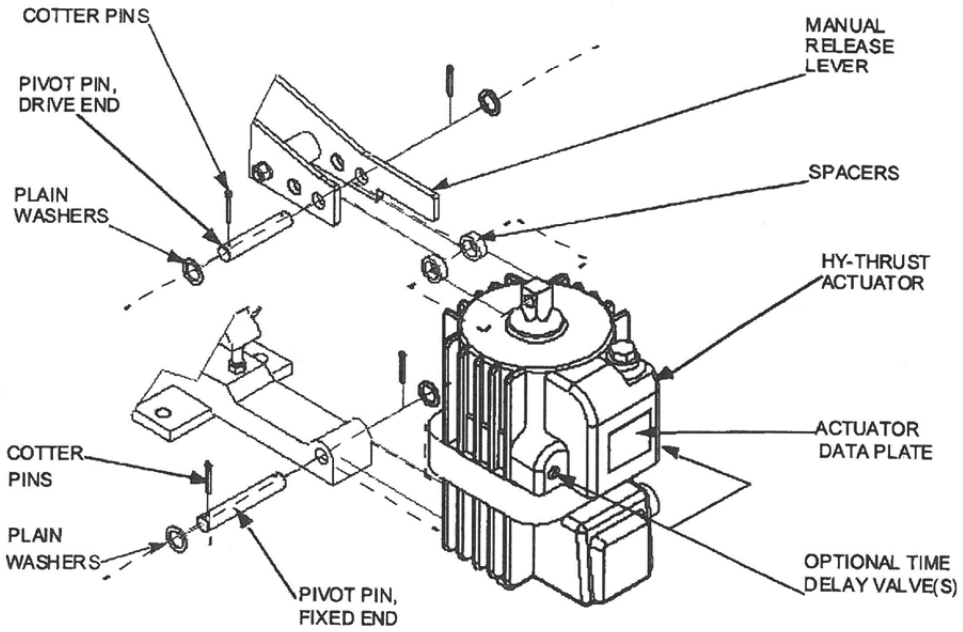

9.2.(f): Secure or support the actuator before attempting to remove the pivot pins.

9.2.(g): Refer to Fig. 6: remove the cotter pins and withdraw the pivot pins attaching the actuator to the brake body.

9.2.(h): Remove the complete actuator using appropriate lifting devices.

9.2.(i): Should service be required, return the actuator to Magnetek for repairs.

9.3: Re-Installing The Actuator

9.3.(a): Verify adequate means are still in place to protect unexpected movement when the actuator is replaced.

9.3.(b): Position the actuator within the lever and attach to the base. Use a lifting device as necessary.

9.3.(c): Attach and secure the actuator using the correct pivot pins, etc. Check for wear prior to re-fitting, Fig. 6.

9.3.(d): Refer to Chapter 6 and adjust the reserve stroke as required.

9.3.(e): Refer to Chapter 6 and adjust the torque as required.

9.3.(f): Refer to Chapter 6 and adjust the brake shoe clearance as required.

9.3.(g): Re-connect the actuator wiring, as required, and replace the terminal box cover.

9.3.(h): Refer to Chapter 8; bed and test the brake as described.

9.4: Re-lining The Brake Shoes

We do not recommend that shoes be re-lined in the field. New bonded shoe assemblies can be ordered as repair parts. Factory rebuilt shoes are also available from Magnetek. Under this program, credit will be allowed for old shoes in usable condition.

9.5: Removal and Installation of Motor and Brake Wheel as an Assembly

9.5.(a): Quick replacement of the drive motor and brake wheel, as an assembly, can be accomplished with minimum disturbance to the brake.

9.5.(b): Disconnect, lock out, and tag out the disconnect switch that feeds this equipment to prevent power from being applied while service is being performed.

9.5.(c): Remove both shoe assemblies as described under the topic, "Replacing the Brake Shoes". If the shoes will not be replaced as part of this work order, identify the shoes in order that they can be re-fitted without having to be re-bedded.

9.5.(d): Swing the entire brake rod assembly clear to permit unobstructed vertical withdrawal of the brake wheel without damage.

9.5.(e): Remove the motor and brake wheel by lifting straight up until the wheel clears the brake.

9.5.(f): Install the motor and brake wheel by lowering it into place.

9.5.(g): Re-install the shoe assemblies as described under the topic "Replacing the Brake Shoes".

9.5.(h): Re-attach the brake rod to the brake lever.

9.5.(i): Ensure that all shoe holder pivot and hitch pins are correctly installed.

9.5.(j): Test the operation of the brake as described under the topic "Operational Test".

9.5.(k): Install the brake wheel as described elsewhere.

9.5.(l): Verify the brake is still properly centered over the wheel. Make any adjustments as required. See Chapter 5, "Brake Installation".

9.5.(m): Maintenance and inspection periods depend on operating conditions. High duty cycle applications obviously require more frequent inspections than brakes operating on low duty cycle applications. In either case, we recommend a general inspection every 100 operating hours or every month minimum.

9.6: Inspection

9.6.(a): Electrical connections and mechanical fasteners should be checked for tightness. Inspect the brake wheel to ensure that it is neither damaged nor loose. Inspect the brake mounting bolts for tightness, and that brake shoe clearance settings are within specifications.

9.6.(b): Inspect the brake wheel for unusual scoring, signs of over-heating, cracking or wear. Replace any damaged, cracked or excessively worn brake wheels.

9.6.(c): Inspect the condition of the bearings and bushings as well as the electrical and mechanical integrity of the complete braking system. Make any repairs or adjustments that may be required to ensure proper brake system operation.

9.6.(d): Check the brake wheel run-out at all speeds. See Chapter 8, "Operational Test".

9.6.(e): Correct operation of the motor can be determined by measuring its operating current. Refer to motor nameplate for rated value.

9.7: Lubrication

9.7.(a): Periodic lubrication is not required on these brakes. Oil or any other lubricant applied to any part of the brake may trap airborne contaminants.

9.8: Actuator Working Fluid

9.8.(a): The actuator leaves the factory correctly filled with the fluid and seals for the specified operating temperature range.

9.8.(b): The fluid will not deteriorate in service, and if there are no tell-tale signs of leakage, no additional fluid will be required.

9.8.(c): The actuator working fluid should be checked periodically, but must not be overfilled to ensure an adequate air space is retained to allow for fluid expansion. See Fig. 1 for plug location and proper fluid level.

9.8.(d): If additional fluid is necessary for any reason, use only the fluid identified on the nameplate to ensure compatibility with the installed seals and the specified operating temperature range. **DO NOT OVER-FILL.**

9.8.(e): Table 3 specifies Recommended Hydraulic Fluid types for a range of ambient temperatures.

Table 3: Recommended Hydraulic Fluids

Ambient Temperature				Hydraulic Fluid
Lower Limit ^0F	Upper Limit ^0F	Lower Limit ^0C	Upper Limit ^0C	
-13	+122	-25	+50	C-10 (1)
+32	+176	0	+80	C-46 (1)
-31	+104	-35	+40	Aero 41 (2)
-76	+140	-60	+60	M-20 (3)

(1) C-10 and C-46 are Shell Tellus® products.
(2) Aero 41 is a Shell® product.
(3) M-20 is a Bayer® Baysilone product.
All hydraulic fluids are obtainable from Magnetek.

NOTE: Reference the maintenance plate (Section 11.4.2) for required fluid

9.9: Brake Adjustments

9.9.(a): Wear will be more rapid when the linings are new, while the high spots are wearing down as the bedding process takes place. Adjustment will be required soon after the brake has been put into service.

9.9.(b): Brake release lever travel increases with lining wear. This decreases the reserve stroke. Carry out periodic maintenance to reset the reserve stroke as described in Chapter 6 "Actuator Stroke Adjustment".

9.9.(c): Brake torque decreases as the brake lever drops. On critical applications, such as hoists, brake adjustment should be performed frequently enough so that the torque loss does not result in loss of load control. In no event should the lever be allowed to "bottom out". This results in total loss of braking torque and could result in death or injury to personnel.

Following any adjustment, maintenance or repair on the brake, fully test its operation as described under topic "Operational Test".

Chapter 10.0: Replacement Parts

10.1: Brake Lining Replacement

10.1.(a): As a general guide, Magnetek recommends that brake linings be replaced when the linings wear down to 1/16" minimum thickness. Table 4, taken from standard ICS 9-1993, Part 1: Electromagnetic Brakes, shows NEMA's recommended range of minimum lining thickness for bonded and riveted linings on brake wheels from 8" to 19" diameter...

Table 4

Wheel Diameter (Inches)	Maximum RPM Ductile Iron	Minimum Wheel Dia. (Inches) (1)	Lining Thickness (Inches) (2)	
			Riveted (3)	Bonded
8	5000	7.94	0.010	0.016
10	4000	9.92	0.010	0.020
13	3300	12.90	0.010	0.026
16	2600	15.87	0.015	0.032
19	2300	18.87	0.015	0.038

(1) Minimum after re-machining.
(2) Minimum permissible prior to replacement.
(3) Above rivet head at maximum wear point.

10.2: Detailed procedures for brake shoe replacement and actuator removal and installation are covered earlier in this manual.

10.3: For other parts replacement or complete disassembly and rebuild, refer to the exploded view attached to this manual.

10.4: Before returning a brake to service after major repairs or overhaul, carry out all adjustments outlined in this manual followed by a complete operational test.

10.5: Ordering Parts

10.5.(a): For part number and identification refer to the Exploded View and Bill of Material forming part of this manual.

10.5.(b): Always quote the Magnetek Serial Number when ordering parts.

10.5.(c): For optimum brake life and performance use only genuine Mondel parts.

Chapter 11.0: Long Term Storage

11.1: If a brake assembly will not be installed immediately, it can be stored indoors in a dry location indefinitely or outdoors for a reasonable time if adequately protected from moisture and corrosive atmosphere. The brake assembly must always be protected from direct exposure to the elements unless specifically treated at the factory for use in that environment. Covering with plastic sheeting is not acceptable unless provision is made to prevent condensation under the plastic.

11.2: During storage, rust may form on the surface of the brake wheel. This is not usually a problem with ductile iron wheels nor is it necessary to clean the wheel before placing the wheel in service. The first few brake applications will polish the wheel.

11.3: Steel wheels may form scale when corroded, and the braking surface may have to be re-machined to remove the scale. See Table 4 for machining limits. Dynamic balance may be affected.

11.4: Before painting a brake, protect all pivot points, pull-rod, actuator piston, brake wheel and linings, etc.

11.4.(a): Data plates and labels must not be removed or painted over.

11.7.10 PIVOT BEARING – TORRINGTON THRUST SPHERICAL ROLLER BEARING

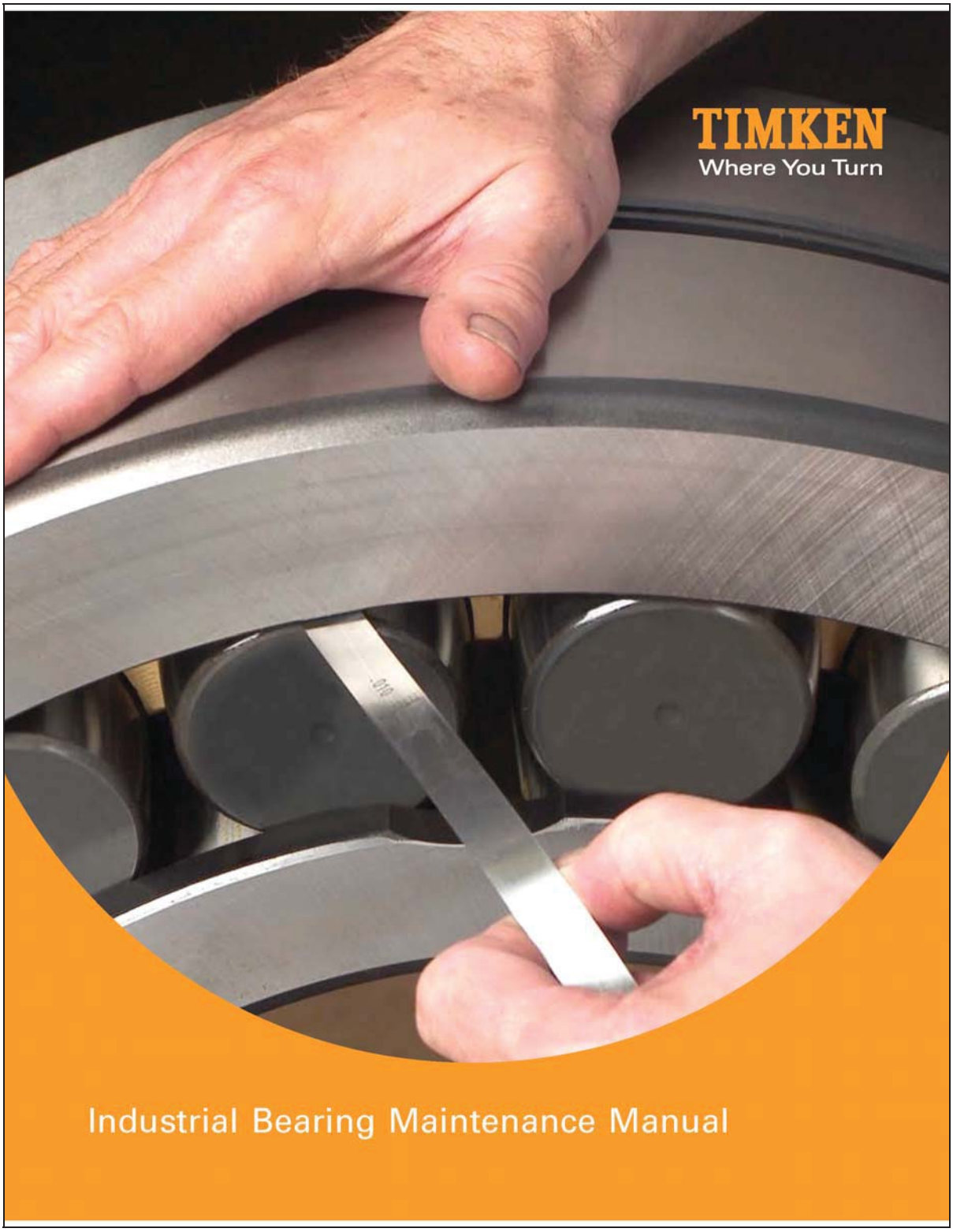

LUBRICATION

Using our knowledge of tribology, anti-friction bearings and total system performance needs, Timken has developed a complete line of application- and environment-specific lubricants.

Timken offers a range of lubricants to help bearings and related components operate effectively in demanding industrial operations. High-temperature, anti-wear and water-resistant additives offer greater protection in challenging environments. Timken also offers a line of single- and multi-point lubricators to simplify the delivery of grease.

Most bearings used in general industrial and precision applications do not reach their fatigue life goal for a variety of reasons. Proper lubrication is essential to achieve optimum equipment performance, minimum equipment downtime and the longest possible bearing life.

When a properly lubricated bearing rotates, the mating surfaces of the bearing components create a lubricant film that keeps the components separated. The lubricant:

- Provides a suitable film that prevents metal-to-metal contact and separates the moving parts in a bearing
- Carries away heat
- Protects the bearing surfaces from corrosion

In some cases, the lubricant can also trap debris, carrying it away from the contact surfaces.

The correct lubricant for each application depends on the bearing design and the operating conditions. The wide range of bearing types and operating conditions precludes any simple, all-inclusive guidelines regarding lubricant selection and use. However, an understanding of the characteristics and advantages of the various lubricants available can be helpful in implementing appropriate lubrication-related maintenance.

The lubrication requirements of all Timken bearings used in general industrial applications can be met with high quality petroleum lubricants. However, synthetic lubricants are gaining considerable popularity, especially where high operating temperatures and long service life is required.

New Timken bearings are protected with a preservative coating. The preservative coating is compatible with most lubricants, so it is not necessary to wash it off prior to installation. Bearings that are not pre-lubricated, however, will require proper lubrication as part of the installation process.

Lubricant types can be broadly divided into two groups; oil or grease. Each has its advantages (Table 5).

Oil	Grease
Carries heat away from the bearings	Simplifies seal design and acts as a sealant
Carries away moisture and particular matter	Permits prelubrication of sealed or shielded bearings
Easily controlled lubrication	Generally requires less frequent lubrication

Table 5 Advantages of oil and grease

OILS

Oil Types

Oils are classified as either petroleum or synthetic. Petroleum oils are refined from crude oil and synthetic oils are produced by chemical synthesis.

The primary characteristic when selecting an oil is its viscosity, a measure of its flow characteristics. Viscosity is normally expressed in terms of the time required for a specific amount of oil to flow through a standard size hole at a specific temperature. Viscosity varies with temperature and is always described with the temperature at which it was measured.

The International System (S.I. units) for classifying viscosity uses centistokes at standard temperatures of 40°C (104°F) and 100°C (212°F). The Saybolt Universal Second (SUS) is also commonly used in many parts of the world. The standard measuring temperature for SUS is 40°C (100°F) and 100°C (210°F).

There are many classifications for oil viscosity grades. The most familiar is the Society of Automotive Engineers (SAE) system, which includes automotive engine and gear oils for conventional crankcases (Fig. 56) and manual transmission oils (Fig. 57).

The American Society of Testing and Materials (ASTM) has adopted a standard of viscosity grades for industrial fluids, known as the ISO viscosity grade. This system shows the viscosity grade as the numerical viscosity of the fluid in centistokes at 40°C (104°F) (Fig. 58). These two viscosity classification systems can be directly compared (Fig. 59).

When selecting the correct oil for an application, the bearing size, speed, temperature, load and general operating condition must all be considered. Consult with your lubricant supplier or equipment manufacturer for specific questions about lubrication requirements for a piece of equipment. You can also contact your Timken representative for general lubrication guidelines for any application.

LUBRICATION AND SEALS

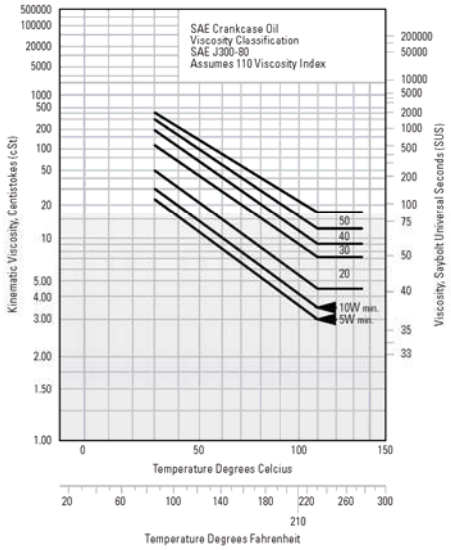

Fig. 56 Automotive engine and gear oils

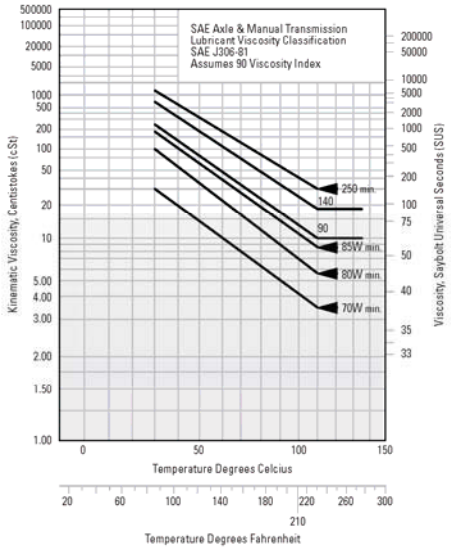

Fig. 57 Manual transmission oils

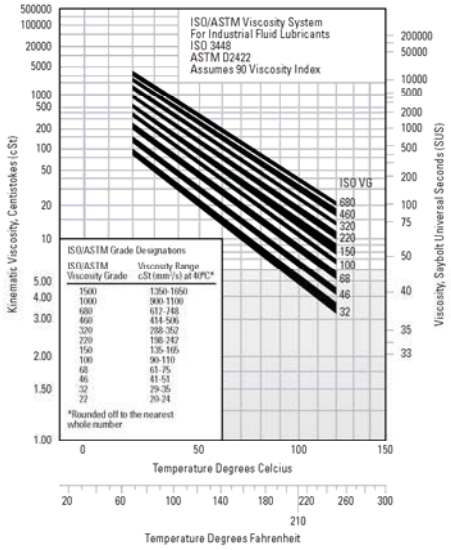

Fig. 58 ISO Viscosity system

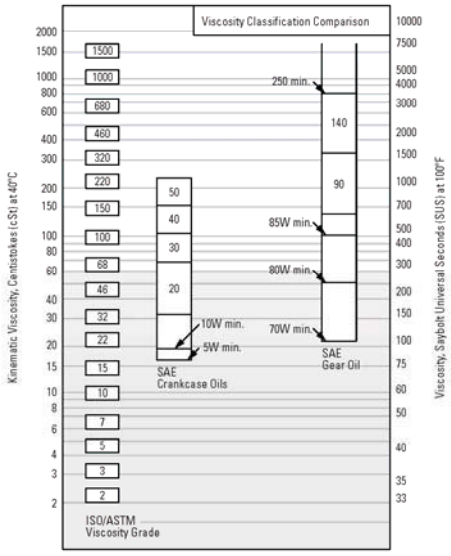

Fig. 59 Comparison of viscosity systems

Oil advantages

Where heat must be carried away from the bearing, oil must be used, and it is nearly always preferred for very high-speed applications. Other relevant features and advantages of oil lubrication include:

- Oil is a better lubricant for high speeds or high temperatures, and can be cooled to help reduce bearing temperature.
- Oil is easier to handle and to control the amount of lubricant reaching the bearing, but it is harder to retain in the bearing. Lubricant losses may be higher than with grease.
- As a liquid, oil can be introduced to the bearing in many ways such as drip-feed, wick feed, pressurized circulating systems, oil bath or air-oil mist. Each is suited to certain types of applications.
- Oil is easier to keep clean for recirculating systems.

Oil delivery systems

Oil may be introduced to the bearing in many ways. The most common systems are:

Oil bath: The housing is designed to provide a sump or reservoir that the bearing rolling elements rotate through. Generally, the oil level is no higher than the center point of the lowest rolling element, as measured when the bearing is stationary. In high-speed applications, lower oil levels are used to reduce churning. Gages or controlled elevation drains are used to achieve and maintain the proper oil level.

Circulating system: A typical oil system consists of an oil reservoir, pump, piping and filter. A cooler may also be required. These systems ensure an adequate supply of oil for both cooling and lubrication. Contaminants and moisture are removed from the bearing by the flushing action of the oil, and filters trap contaminants.

It is relatively easy to direct lubricant to multiple bearings in the application. The relatively large oil reservoir reduces lubricant deterioration, increasing lubricant life and system efficiency.

Oil-mist: These systems are used in high speed and continuous operation applications such as steel mill bearings and high-speed machines. They permit close control of the amount of lubricant reaching the bearings and use relatively little oil. The oil may be metered, atomized by compressed air and mixed with air, or it is picked up from a reservoir using a Venturi Effect.

The air is filtered and supplied under sufficient pressure to adequate bearing lubrication. The system is typically controlled by monitoring the bearing operating temperature.

The continuous flow of pressurized air and oil through the labyrinth seals in the system prevents the entrance of contaminants. Successful oil mist systems require:

- Proper location of the lubricant entry ports in relation to the bearings being lubricated.
- Avoiding excessive pressure drops across void spaces within the system.
- Proper air pressure and oil quantity ratio for the application.
- Adequate exhaust of the air-oil mist after lubrication has been accomplished.

To ensure wetting of the bearings and to prevent possible damage to the rolling elements and races, it is imperative that the oil-mist system be turned on for several minutes before the equipment is started. The importance of wetting the bearing before starting cannot be overstated, especially for equipment that has been idled for extended periods of time.

GREASE LUBRICATION

Lubricating grease is a solid-to-semi fluid product that includes a thickening agent dispersed in a liquid lubricant. The thickener acts as a sponge and releases oil under load to lubricate the bearing. Additional additives are typically included to change the performance or characteristics of the grease.

There is no universal bearing grease. Each individual grease has certain limiting properties and characteristics. Table 7 shows some of the primary characteristics for each of the most common grease types. The dropping point is the temperature at which the grease liquifies. Some greases are reversible and will reconstitute after the temperature cools to below the dropping point. Other greases will not.

In addition to these traditional greases, synthetic lubricating fluids such as esters, organic esters and silicones are capable of performing at temperatures as low as -70°C (-100°F) to as high as 290°C (550°F).

Regarding the thickeners, polyurea is a significant lubrication development. Polyurea grease performance is outstanding in a wide range of bearing applications, and in a relatively short time has gained acceptance as a factory packed lubricant for ball bearings.

Consistency

Greases may vary in consistency from semi-fluids hardly thicker than viscous oil to solid grades almost as hard as a soft wood. The

consistency of the grease and its ability to remain stable, both mechanically and chemically during operation, are important traits.

Consistency is measured by a penetrometer in which a standard weighted cone is dropped into the grease. The distance the cone penetrates (measured in tenths of a millimeter over a specific time) is the penetration number (Table 6). The National Lubricating Grease Institute (NLGI) has classified greases according to consistency as measured by a penetrometer. These numbers indicate the consistency of the grease. Timken bearings generally use a No. 1 or No. 2 consistency grease. Greases heavier than No. 2 are seldom used because they tend to channel and result in possible lubricant starvation.

NLGI Number	Penetration Range
000	445 - 475
00	400 - 430
0	355 - 385
1	310 - 340
2	265 - 295
3	220 - 250
4	175 - 205
5	130 - 160
6	85 - 115

Table 6 Grease penetration ranges by NLGI number

Grease consistency is not fixed; it normally becomes softer when sheared or worked. It also becomes thicker at lower temperatures and more fluid at higher temperatures. Starting torque at low temperatures can present a problem. In smaller machines, starting may be impossible when very cold. Under these operating conditions, use greases with good low-temperature characteristics.

If the operating temperature range is wide, synthetic fluid greases offer definite advantages. Greases are available to provide very low starting and running torque at temperatures as low as -70°C (-100°F). In certain instances these greases perform better in this respect than oil.

Thickener	Typical Dropping PT °C °F	Usable Temperature [1] °C °F	Typical Water Resistance
Sodium Soap	260 + 500 +	121 250	Poor
Lithium Soap	193 380	104 220	Good
Polyurea	238 460	149 300	Excellent
Lithium Complex Soap	260 + 500 +	163 325	Good

NOTE: The properties of a grease may vary considerably depending on the particular oil, thickener and additives used in the formulation.

[1] Continuous operation with no relubrication. Depending upon the formulation the service limits may vary. The usable limit can be extended significantly with relubrication.

Table 7 Usable temperature by thickener type

Temperature and grease life

Greases are rated to perform up to certain upper temperature limits. The Usable Temperature (Table 7) is the temperature at which a bearing can continuously operate with no relubrication. Brief intervals of higher temperature operation will probably not result in any lubrication problems. Extended operation above the usable temperature can degrade the grease and result in premature bearing damage.

At the dropping point, the grease liquefies and no longer provides adequate lubrication. Some greases are reversible and will reconstitute after the temperature cools to below the dropping point. Other greases will not. The dropping point of the grease used should be at least 40°C (100°F) greater than the highest expected temperature in the application.

The high temperature limit for grease is generally a function of the thermal and oxidation stability of the lubricant and the effectiveness of oxidation inhibitors included in grease.

Synthetic greases are available where extremely high temperatures are experienced (Fig. 60).

As the temperature increases, viscous or hard residues are created that interfere with the operation of the bearing. In general, the higher the temperature the more rapidly the grease oxidizes. As a rule of thumb, grease life is halved for every 10°C (18°F) increase in temperature. For example, if a particular grease provides 2000 hours of life at 90°C (194°F), raising the temperature to 100°C (212°F) would reduce life to approximately 1000 hours. On the other hand, 4000 hours could be expected by lowering the temperature to 80°C (176°F).

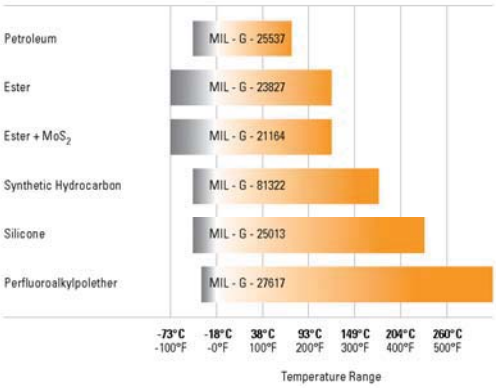

Fig. 60 Lubrication grease temperature ranges

Wet conditions

Water and moisture can greatly accelerate bearing damage, but greases may provide a measure of protection from this contamination. Certain greases – calcium, lithium and non-soap type for example – are highly water resistant. However, these greases exhibit poor rust preventative characteristics unless properly inhibited.

Sodium soap greases emulsify (combine) with small amounts of moisture that may be present and prevent moisture from coming in contact with the bearing surfaces. In certain applications this characteristic may be advantageous. However emulsions are generally considered undesirable.

GREASE SELECTION

The successful use of bearing grease depends on the physical and chemical properties of the lubricant, its application, application conditions and environmental factors. Because the choice of grease for a particular bearing under certain service conditions is often difficult to make, you should consult with your lubricant supplier or equipment maker for specific questions about lubrication requirements for a piece of equipment. You can also contact your Timken representative for general lubrication guidelines for any application.

Timken offers a line of industrial greases formulated specifically for particular applications (see Lubrication Selection Guide, page 163) that can be interchanged with many commonly used industrial greases (see Timken Grease Interchange Guide, pages 164-165).

Fig. 61 Grease can easily be packed by hand

Fig. 62 Mechanical grease packer

Grease application methods

Grease, in general, is easier to use than oil in industrial bearing lubrication applications. Bearings that are initially packed with grease require only periodic relubrication to operate efficiently.

Grease should be packed into the bearing so that it gets between the rolling elements – the rollers or balls. For tapered roller bearings, forcing grease through the bearing from the large end to the small end will ensure proper distribution.

Grease can be easily packed into small- and medium-size bearings by hand (Fig. 61). In shops where bearings are frequently regreased, a mechanical grease packer that forces grease through the bearing under pressure may be appropriate (Fig. 62). Regardless of the method used, after packing the internal areas of the bearing, a small amount of grease should also be smeared on the outside of the rollers or balls.

Regreasing timing and amount

The two primary considerations that determine the relubrication cycle are operating temperature and sealing efficiency. The less efficient the seals, the greater the grease loss and the more frequently grease must be added.

Grease should be added any time the amount in the bearing falls below the desired amount. The grease should be replaced when its lubrication properties have been reduced through contamination, high temperature, water, oxidation or any other factors. For additional information on appropriate regreasing cycles, consult with the equipment manufacturer or your Timken representative.

It is important to use the proper amount of grease in the application. In typical industrial applications, the voids in a roller bearing should be filled from one-third to two-thirds with grease. Less grease will result in the bearing being starved for lubrication. More grease may create churning which generates additional heat.

LUBRICATION AND SEALS

As the grease temperature rises, its viscosity decreases and becomes thinner. This can reduce the lubricating effect while increasing leakage of the grease from the bearing. It may also cause the grease components to separate, causing the grease to break down. Also, as the bearing heats up, the grease will expand somewhat and be purged from the bearing.

However, in low speed applications where temperature is not an issue, the housing can be entirely filled with grease. This safeguards against the entry of contaminants.

For best results, there should be ample space in the housing to allow room for excess grease to be thrown from the bearing. However, it is equally important that the grease be retained all around the bearing. If a large void exists between the bearings, grease closures should be used to prevent the grease from leaving the bearing area.

During periods of non-operation, it is often wise to completely fill the housings with grease to protect the bearing surfaces. Prior to subsequent operation, the excess grease should be removed and the proper level restored.

Applications using grease lubrication should have a grease fitting and a vent at opposite ends of the housing near the top. A drain plug should be located near the bottom of the housing to allow purging the old grease from the bearing.

Prelubricated bearings

Prelubricated and sealed bearings are extensively used with much success in applications where:

- Grease might be injurious to other parts of the mechanism.
- Cost and space limitations preclude the use of a grease filled housing.
- Housings cannot be kept free of dirt and grit, water or other contaminants. Relubrication is impossible or would be a hazard to satisfactory use.
- Accessing the bearing to re-lubricate it would be difficult or impossible.

Prelubricated bearings are typically packed with greases having chemical and mechanical stability, and demonstrated long life characteristics.

SPECIAL APPLICATIONS

Many bearing applications require lubricants with special properties or lubricants formulated specifically for certain environments, such as:

- Friction oxidation (fretting corrosion)
- Chemical and solvent resistance
- Food handling
- Quiet running
- Space and/or vacuum
- Electrical conductivity

For assistance with these or other areas requiring special lubricants, contact your Timken representative.

LUBRICATION AND SEALS

Lubrication Selection Guide

ENVIRONMENT		APPLICATION
High Wear > Moderate Loads Moderate Speeds Moderate Temperatures	Timken Premium All-Purpose Industrial Grease	Agriculture > Bushings/Ball Joints Truck and Auto Wheel Bearings Heavy Duty Industrial
High Speeds > Light Loads Moderate Temperatures Moderate Water	Timken Ball Bearing Electric Motor Grease	Alternators > Generators Electric Motors > Fans/Pumps
Extreme Heat > Heavy Loads High Sliding Wear Dirty Environments Slow Speeds > Shock Loading	Timken Construction and Off-Highway Grease	Agriculture/Mining > Cement Plants Construction/Off Road > Rock Quarry Earth Moving Equipment Fleet Equipment > Heavy Industry Pivot Pins/Splined Shafts
Wet and Corrosive Conditions Quiet Environments > Light Loads Moderate to High Speeds Moderate Temperatures	Timken Ball Bearing Pillow Block Grease	Lightly Loaded Pillow Blocks Idler Pulleys > Oven Conveyors Chemical Manufacture Noise-Sensitive Applications
Corrosive Media > Extreme Heat Heavy Loads > Wet Conditions Slow to Moderate Speeds	Timken Mill Grease	Aluminum Mills > Paper Mills Steel Mills > Offshore Rigs Power Generation
Incidental Food Contact Hot and Cold Temperatures Moderate to High Speeds Medium Loads	Timken Food Safe Grease	Food and Beverage Industries Pharmaceuticals
Extreme Low and High Temperatures Severe Loads Corrosive Media Slow to Moderate Speeds	Timken Synthetic Industrial Grease	Wind Energy Main Bearing Pulp and Paper Machines General Heavy Industry Marine Applications Centralized Grease Systems
Ultra-High Speeds Extreme Low Temperatures	Timken Ultra-High Speed Spindle Grease	Machine Tools Associated with: Grinding > Drilling > Turning Milling > Lathes
Moderate Speeds Light to Moderate Loads Moderate Temperatures Moderate Water	Timken Multi-Use Lithium Grease	General Industrial Applications Pins and Bushings > Track Rollers Water Pumps Plain and Antifriction Bearings

This selection guide is not intended to replace specific recommendations by the equipment builder.

INDUSTRIAL BEARING MAINTENANCE MANUAL 163 M

LUBRICATION AND SEALS

Timken Grease Interchange Guide

Timken Premium All Purpose Industrial Grease	Timken Construction and Off-Highway Grease	Timken Ball Bearing Pillow Block Grease
Castrol 4020/220-2™	Castrol Moly 860-2ES™	Citgo Polyurea MP2™
Castrol 8060/220-2™	Castrol Contractor Grease 2™	Conoco Polyurea 2™
Chevron Delo® EP 2	Conoco Superlube M EP™	Exxon Polyrex® EM
Chevron RPM Automotive	D.A. Stuart Molyplex EP 2™	Exxon Unirex N™
LC Grease EP-2™	Exxon Centaur Moly™	Mobilgrease® AW2
Citgo Lithoplex MP2™	Exxon Ronex Extra Duty Moly™	Shell Alvania RL3™
Citgo Premium	Fuchs Moreplex 2™	SKF LGHP2™
Lithium EP 2™	Lubriplate® 3000	Unocal 76 Unolife
Conoco Super-STA® 2	Mobilgrease® Moly 52	Grease™
Exxon Ronex MP™	Mystik® Tetrimoly® Extreme	
Exxon Unirex EP 2™	Pennzoil® Multipurpose EP 302	
FAG LOAD220™	Pennzoil® Premium	
Fuchs (Century) Uniwrl 2™	Lithium Complex 2 with Moly	
Lubrication Engineers	Petro-Canada	
Almagard® 3752	Precision Moly EP 2™	
Lubriplate® 1552	Schaeffer Moly Ultra	
Mobilgrease® XHP 222	Supreme 238™	
Pennzoil® Pennlith® EP 712	Shell Retinax CMX 2™	
Pennzoil® Premium	Texaco Starplex® Moly MPGM2	
Lithium Complex 2	Unical 76 Megaplex™	
Petro-Canada		
Multipurpose EP 2™		
Royal Purple® Ultra-Performance® 2		
Shell Albida® LC 2		
Shell Retinax® LC 2		
SKF LGWA2™		
SKF LGEP2™		
Texaco Starplex® 2		
Unical 76 Multiplex Red™		

Timken Ball Bearing Electric Motor Grease
Conoco Polyurea 2™
Chevron SRI™
Citgo Polyurea 2™
Lubriplate® EM
Petro-Canada EMB™
Shell Dolium® BRB

M 164 INDUSTRIAL BEARING MAINTENANCE MANUAL

LUBRICATION AND SEALS

Timken Food Safe Grease

- SKF LGFP2™
- FAG Arcanol FOOD2™
- Keystone Nevastane HT/AW2™
- LE 4025 H1 Quinplex™
- LPS ThermaPlex Foodlube ™
- Lubriplate® FGL-2
- Mobilgrease® FM 102
- Petro-Canada Purity FG™
- Royal Purple® Ultro-Performance® Clear FDA Grease

Timken Ultra-High Speed Spindle Grease

- Kluberspeed BF 72-22™
- FAG Arcanol L-75™
- FAG Arcanol Speed 2,6™
- LubCon Highspeed L252™
- SKF LGCT2™

Timken Mill Grease

- Castrol Moluballoy 777-2ES™
- Chem and Lube Black Magic™
- Chevron Ultiplex EP 2™
- Conoco HD Calcium™
- Conoco Milube™
- Exxon Ronex Extra Duty 2™
- FAG Arcanol Load 400™
- Kyodo Yushi Palmax RBG™
- Loctite ViperLube™
- Lubriplate® 1444
- Shell Retinax® Grease HD
- SKF LGHB2™

Timken Synthetic Industrial Grease

- Mobilith SHC™ 460
- Chevron Ultiplex Synthetic Grease EP™
- Conoco SynCon Extra Long Life™
- Mobil SHC® PM
- Shell Albida® 460
- Texaco Starfak® PM

Timken Multi-Use Lithium Grease

- Castrol Longtime PD™
- FAG Arcanol MULTI2™
- Lubriplate® 1200-2
- Lubriplate® 1241, 1242
- Lubriplate® 630-AA
- Mystik® Power Red Lithium C
- SKF LGMT2™

INDUSTRIAL BEARING MAINTENANCE MANUAL 165 M

11.8 TRAFFIC CONTROL EQUIPMENT MANUALS AND SPECIFICATIONS

11.8.1 TRAFFIC GATE – B&B ROADWAY VT-40

VT-40 WARNING GATE START-UP INSTRUCTIONS

NOTE: **These instructions assume installation has been completed. If necessary, refer to the enclosed installation instructions.**

1. Open the operator door.
2. Connect power by flipping the disconnect switch to the "ON" position.
3. Test operate the gate to be sure it is functioning properly.

VT-40 WARNING GATE SHUT-DOWN INSTRUCTIONS

1. Open the operator door.
2. Disconnect power by flipping the disconnect switch to the "OFF" position.

VT-40 WARNING GATE EMERGENCY OPERATION INSTRUCTIONS

1. Open the operator door.
2. Disconnect power by flipping the disconnect switch to the "OFF" position.
3. Locate the hand-crank mounted inside the housing.
4. Slip the hand-crank onto the shaft extending through the brake. The brake will automatically release.
5. Turn the hand-crank to raise or lower the gate, as needed. A tag on the brake indicates crank direction for opening or closing the gate.
6. Remove the hand-crank.
7. Flip the disconnect switch back to the "ON" position to resume powered operation.

VT-40 FIELD ADJUSTMENT INSTRUCTIONS

**WARNING: Operating mechanism can be damaged if gate is operated when:

1) Arm is installed and counterweights are not installed, or
2) Arm is not installed and counterweights are installed.

Please see installation instructions in handbook.

"Down" or "Closed Position Adjustment:

1. Break jam nuts loose at rod ends (items 8 and 9).
2. Shorten or lengthen connecting rod (item 6) by twisting it. Observe movement of arm.
3. Tighten jam nuts.

"Up" or "Open" Position Adjustment:

Note: "Open" position is 90 degrees from the "down" position and cannot be adjusted independently unless a special adjustable crank arm has been specified by the customer to accommodate nonstandard installation conditions.

If the gate is equipped with an adjustable crank (item 28), the "open" arm position can be adjusted between 60 and 90 degrees from the "down" position to clear overhead obstacles. The crank arm has been preset at the factory and verified by full test operation. The crank will not normally require field adjustment.

Limit Switch Adjustment:

The limit switch assembly (item 7) will not normally require field adjustment. Limit switch cams have been preset at the factory and verified by full test operation for each gate. It is recommended that the factory be consulted before adjusting the limit switch assembly. If it is determined that an adjustment is required, the cams can be adjusted using an allen wrench.

VT-40 LUBRICATION INSTRUCTIONS

Lubricate mechanism every ~~12 months as follows:~~ 6 MONTHS AS FOLLOWS:

Transmission (Item 4 on Assembly drawing):

First gear drive box:

1. Open the back door of the housing (opposite roadway).
2. Check oil by removing the oil level plug located on the left hand vertical surface of the transmission (item 4) a few inches below the motor (item 5).
   a. If oil is visible, oil level is adequate - replace plug and go to next section.
   b. If oil is not visible, go to step 3.
3. Remove fill plug on top of first gear box.
4. Fill the case to the level plug (removed in step two) with oil chosen per lubrication chart on the following page. MOBIL SHC 629
5. Replace plugs.

Final drive gear box:

1. Check the oil level by removing the oil level plug located near the bottom of the transmission (item 4). The plug will be facing you when standing at the back door.
   a. If oil is visible, oil level is adequate - replace the plug and go to next section.
   b. If oil is not visible, go to step 2.
2. Remove oil fill plug on top of final gear box.
3. Fill the case to the level plug (removed in step one) with oil chosen per lubrication chart on following page. MOBIL SHC 629
4. Replace plugs.

Arm Shaft (Item 38):

1. Grease with Texaco Marfak 2 or ~~equal.~~ MOBIL MOBILUX EP-2
2. Wipe off excess.

Connecting Rod Ends (Items 6, 8, and 9):

1. Grease threads with Texaco Marfak 2 or ~~equal.~~ MOBIL MOBILUX EP-2
2. Wipe off excess.

RECOMMENDED LUBRICANTS

VT-40, VT-77, AND VT6801

WORM GEAR REDUCERS

AMBIENT TEMPERATURE	-30 TO 15°F	16 TO 50° F	51 TO 110° F	111 TO 165° F
MAX. OPERATING TEMP.	150° F	185° F	200° F	200° F
VISCOSITY @ 100° F, SUS		1919 TO 2346	2837 TO 3467	4171 TO 5098
COMPOUNDED WITH	3% TO 10% FATTY OR SYNTHETIC FATTY OILS OR MILD EP ADDITIVES			
AGMA LUBRICANT NO.		#7 COMPOUND	#8 COMPOUND	#8A COMPOUND
CITIES SERVICE CO.	CITGO EP COMP. 68	CITGO CYL. OIL 400-S	CITGO CYL. OIL 680-7	CITGO CYL. OIL 680-7
FISKE BROS. REFINING	APG-80	LUBRIPLATE CP GEAR OIL #7	LUBRIPLATE CP GEAR OIL #8	LUBRIPLATE CP GEAR OIL #8A
GULF OIL CORP.	SL-460 E.P.	TRANSGEAR EP 460	TRANSGEAR EP 680	TRANSGEAR EP 800
KEYSTONE DIV.	KSL-365	KSL-366	K-600	K-620
MOBIL OIL CORP.	SHC 634	MOBIL 600W	MOBIL 600W SUPER	MOBIL EXTRA HECIA
SHELL OIL CORP.	OMALA 68	OMALA 460	OMALA 680	OMALA 80
SUN OIL CORP.	SUNEP 1050	SUNEP 1110	SUNEP 1150	SUNOCO GEAR OIL 8 AC
TEXACO, INC.	MEROPA 68	VANGUARD CYL. OIL 460	HONOR CYL. OIL 680	650T CYL. OIL 1000
AMERICAN LUB., INC.		IND. GEAR OIL 140	AGMA #8 GEAR OIL	AGMA #8 GEAR OIL
CHEVRON	NL GEAR COMP. 100	NL GEAR COMP. 460	NL GEAR COMP. 680	NL GEAR COMPOUND 1500

FOR SPECIAL APPLICATIONS THAT INVOLVE SEVERE AMBIENT TEMPERATURE EXTREMES OR A SEASONAL OIL REQUIREMENT, USE MOBIL SCH. 626.

11.9 ELECTRICAL EQUIPMENT MANUALS AND SPECIFICATIONS

11.9.1 DISCONNECT SWITCH – HUBBELL

AC Switches

Switched Enclosures

Circuit-Lock® 30, 60, and 100 Ampere Unfused Disconnect Switch
"Suitable as Motor Disconnect"

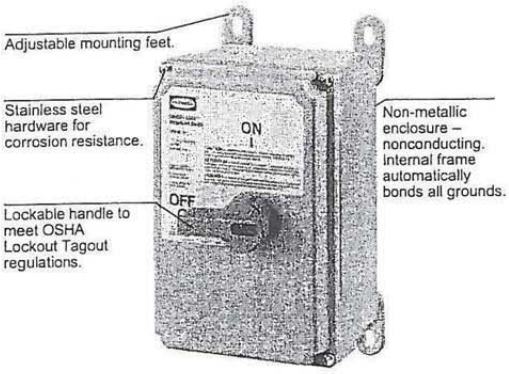

UL Listed, CSA Certified TYPE 4, 4X and 12K Enclosure Rating

IP67 SUITABILITY

The Circuit-Lock Disconnect Switch meets NEC Article 430 requirements for a separate disconnect means within sight of all motor loads. In addition, the enclosure offers the ability to lock directly wired motor loads in the "OFF" position to comply with OSHA Lockout/Tagout regulations. This safety enclosure is Type 4X (Washdown, Corrosion resistant) and is also suitable for use with metallic conduit. The switch is mounted on an internal frame that is integral with the enclosure and bonds all grounds, and it accepts auxiliary contacts that can be used to signal PLC controllers.

Circuit-Lock Unfused Disconnect Switch

Dimensions

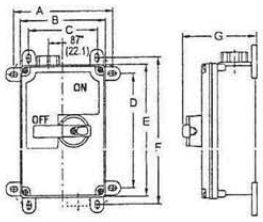

Key	30A inch	30A mm	60A/100A inch	60A/100A mm
A	6.00	152	7.75	197
B	5.12	130	6.87	175
C	4.12	105	4.75	121
D	6.62	168	8.00	203
E	7.62	194	9.95	253
F	8.50	216	11.00	279
G	4.12	105	5.94	151

Ordering Information 30A, 60A and 100A

Description	Catalog Numbers
30A Circuit-Lock disconnect switch.	HBLDS3
30A Circuit-Lock disconnect switch with aux. contact.*	HBLDS3AC
60A Circuit-Lock disconnect switch.	HBLDS6
60A Circuit-Lock disconnect switch with aux. contact.*	HBLDS6AC
100A Circuit-Lock disconnect switch.	HBLDS10
100A Circuit-Lock disconnect switch with aux. contact.*	HBLDS10AC

Auxiliary Contacts for 30A, 60A & 100A switch, A600 pilot duty

Description	Catalog Numbers
Break before break.	HBLAC1
Break after break.	HBLAC2

Ground Block

Description	Catalog Numbers
For 30A switch.	HBL30RGB
For 60 & 100A switch.	HBL60100RGB

Neutral Block

Description	Catalog Numbers
For 30A switch.	HBL30RNB
For 60A switch.	HBL60RNB
For 100A switch.	HBL100RNB

Replacement Switch

Description	Catalog Numbers
For 30A switch.	HBLDS3RS
For 60 & 100A switch.	HBL60100RS

Notes: * *Supplied with one HBLAC1*
30A Units come with 3/4" NPT Hub
60A & 100A Units come with 1 1/4" NPT Hub

Horsepower Ratings

Voltage	30A	60A	100A
120V AC 1Ø	1	7.5	7.5
208V AC 1Ø	-	-	-
208-240V AC 1Ø	3	15	15
240-277V AC 1Ø	-	-	-
480V AC 1Ø	5	30	30
208V AC 3Ø	-	-	-
208-240V AC 3Ø	7.5	30	30
240V AC 3Ø	-	-	-
480V AC 3Ø	15	50	50
600V AC 3Ø	15	50	50

Note: See page C-30 for technical data.

C-20 HUBBELL Wiring Device-Kellems www.hubbell-wiring.com

Dimensions in Inches (mm)

11.9.2 LIMIT SWITCH – NAMCO

Double Pole Harsh Environment/ Navy Marine

Limit Switches

Butt/ Sliding Contacts

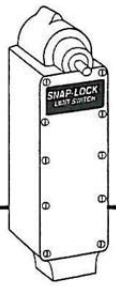

Limit Switches

NAVY meets MIL-C-2212F Current

Construction - Completely fabricated from non-corrosive materials, its bronze housing and high quality stainless steel shaft insure against external damage to the switch from salt spray corrosive elements. Sealing against leakage is achieved through the use of high quality gaskets on machined surfaces and "O" ring protection, plus close tolerance between the shaft and bushing.

Durability - All internal components are of high grade stainless steel or copper alloy, chrome plated when required, to protect against bearing surface wear and to provide millions of operations.

Both the EA780 and EA790 series switches have heavy duty electrical contacts. The EA780 switches have sliding, double-break type contacts built to meet the high shock requirements outlined in MIL-S-901.

EA790 switches have heavy duty, double-break, butt type contacts.

Contacts - EA780 switches contain sliding contact arrangements which wipe clean with each operation.

EA790 switches contain butt-style contacts.

Both series available with operation direction CW, CCW or CW/CCW.

Levers - A variety of corrosion resistant levers are available to meet specific actuating requirements.

NOTE: Levers must be ordered as separate items. See Operating Levers Section.

EA780 Double Pole 2 N.O. - 2 N.C. / Sliding Contacts / Cam Action

Standard Mounting Model No.	Wide Mounting Model No.	Long Mounting Model No.	Dir. Of Operation	Angle A Trip Travel	Angle B Reset Travel	Angle C Recom. Travel	Angle D Total Travel	Angle E Min. Travel to Maintain	Angle F Overall Travel	Torque (inch lbs)	Contact Config.	Data Drawing
STANDARD TRAVEL												
[illegible]	[illegible]	[illegible]	CW	[illegible]	[illegible]	[illegible]	[illegible]			[illegible]	[illegible]	[illegible]
EA780-20001	EA780-50001	EA780-80001	CCW	18°	14°	30°	90°	-	-	27	B	1
EA780-20100	EA780-50100	EA780-80100	CW/CCW	18°	14°	30°	90°	-	-	27	C	1
MAINTAINED CONTACT & LEVER POSITION												
[illegible]	[illegible]	[illegible]	CW	55°	22°	60°	116°	55	64	6	[illegible]	[illegible]
			CCW	25°	25°	60°	124°	54	56	9		
MAINTAINED CONTACT-LEVER RETURNED												
EA780-26700	EA780-56700	EA780-86700	CW	30°	26°	45°	90°	30°	-	15	D	3
			CCW	10	30	45	90	26	-	10.5		

See Operating Levers Section

REVIEWED FOR GENERAL CONFORMITY WITH THE PLANS AND SPECIFICATIONS

LVB 8-31-06

Modjeski and Masters, Inc. Date

AS NOTED

Namco Controls Corporation • Mayfield Village, OH 44143 • (440) 460-1360 • Fax: (440) 460-3800

EA780/EA790

EA790 Double Pole 2 N.O. - 2 N.C. / Butt Contacts / Cam Action

Standard Mounting Model No.	Wide Mouning Model No.	Long Mounting Model No.	Dir. Of Operation	Angle A Trip Travel	Angle B Reset Travel	Angle C Recom. Travel	Angle D Total Travel	Angle E Min. Travel to Maintain	Angle F Overall Travel	Torque (inch lbs)	Contact Config.	Data Drawing
STANDARD TRAVEL												
EA790-20000	EA790-50000	EA790-80000	CW	18°	14°	30°	90°	-	-	27	A	1
EA790-20001	EA790-50001	EA790-80001	CCW	18°	14°	30°	90°	-	-	27	B	1
EA790-20100	EA790-50100	EA790-80100	CW/CCW	18°	14°	30°	90°	-	-	27	C	1
MAINTAINED CONTACT & LEVER POSITION												
EA790-26000	EA790-56000	EA790-86000	CW	55°	22°	60°	116°	35°	64°	6	D	2
			CCW	23°	23°	60°	124°	34°	38°	9		
MAINTAINED CONTACT-LEVER RETURNED												
EA790-26700	EA790-56700	EA790-86700	CW	30°	26°	45°	90°	30°	-	13	D	3
			CCW	18°	30°	45°	90°	28°	-	16.5		
SHORT TRAVEL												
EA790-20900	EA790-50900	EA790-80900	CW/CCW	13°	10°	30°	90°	-	-	27	C	1
NEUTRAL POSITION ALL CONTACTS OPEN												
EA790-25102	EA790-55102	EA790-85102	CW	31°	12°	45°	90°	-	-	16.5	E	1
			CCW	31°	22°	45°	98°			16.5		
NEUTRAL POSITION ALL CONTACTS CLOSED												
EA790-25104	EA790-55104	EA790-85104	CW	31°	12°	45°	90°	-	-	16.5	F	1
			CCW	31°	22°	45°	98°	-	-	16.5		

Limit Switches

Common Switch Characteristics

DOUBLE POLE, HARSH ENVIRONMENT/NAVY MARINE, BUTT/SLIDING CONTACTS		
	EA780	EA790
NEMA Enclosure Type	1, 4, 4X, 6, 6P, 13	
Housing Material	Bronze	
Ambient Temperature Range*	-20°C to +90°C	
Shipping Weight	4 lbs. approx.	
Lever Adjustment	7°30' Increments thru 360°	
Contacts	Sliding, Silver Alloy Form Z	Butt, Silver Alloy Form Z
Special Switch Features	MIL-C-2212F Watertight (3 ft. for 60 min.) and Submersible (15ft. for 30 min.) per MIL STD-108E Vibration requirements per MIL-STD-167B, Type 1 High Shock per MIL-S-901, grade A, Class 1, type A	

*Some high temperature (0°C to 150°C) and low temperature (-40°C to +90°C) versions available. Contact factory.

EA780
Continuous Current Rating - Amperes

VOLTAGE	AC	DC
125	10.0	2.5
250	7.5	.75
480	5.0	-
600	2.5	-

75-100% Power Factor

EA790
Continuous Current Rating - Amperes

VOLTAGE	AC	DC
125	20.0	5.0
250	15.0	1.5
480	10.0	-
600	5.0	-

75-100% Power Factor

NAMCO

Namco Controls Corporation
Mayfield Village, OH 44143
(440) 460-1360 • FAX (440) 460-3800 • namcocontrols.com

For technical assistance, call 1-800-NAMTECH

Double Pole Harsh Environment/ Navy Marine

Limit Switches

Butt/ Sliding Contacts

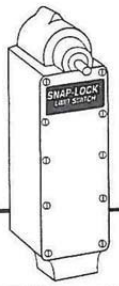

Limit Switches

Contact Configurations

CIRCUIT A

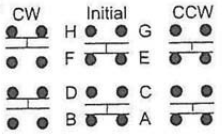

CIRCUIT B

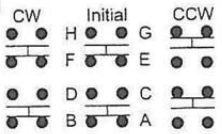

CIRCUIT C

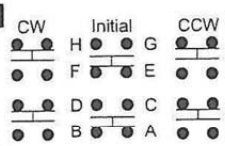

CIRCUIT D

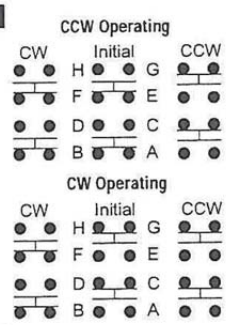

CIRCUIT E

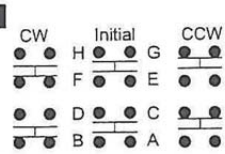

CIRCUIT F

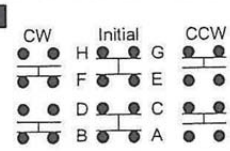

Operational Data Drawings

DRAWING #1

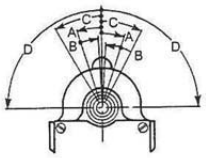

DRAWING #2

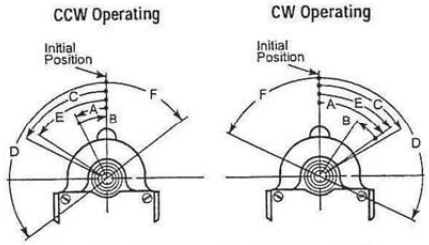

To change switch operation from CW operating to CCW operating, operate switch through angle E. Remove lever and reset at initial position.

DRAWING #3

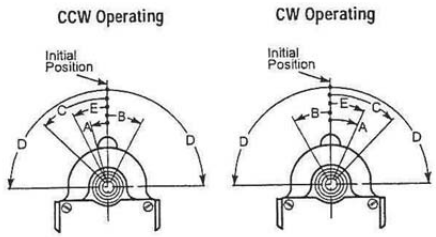

To change switch operation from CW operating to CCW operating, operate switch through angle E.

Namco Controls Corporation • Mayfield Village, OH 44143 • (440) 460-1360 • Fax: (440) 460-3800

EA780/EA790

EA780/790 Series Drawings

STANDARD MOUNTING PLATE

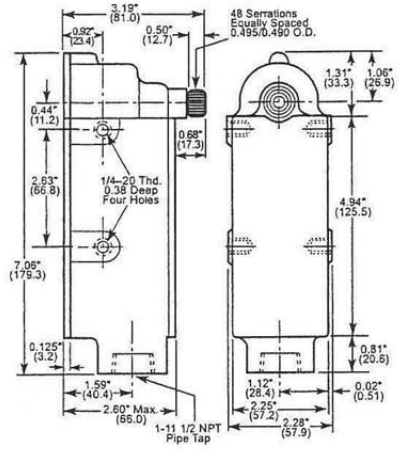

WIDE MOUNTING PLATE

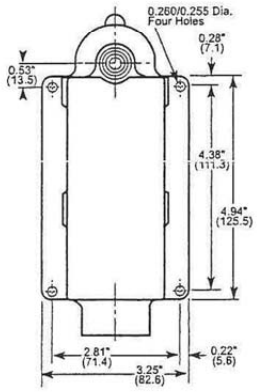

LONG MOUNTING PLATE

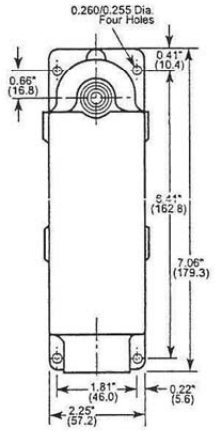

Dimensions: inches/(mm)

Limit Switches

NAMCO

Namco Controls Corporation
Mayfield Village, OH 44143
(440) 460-1360 • FAX (440) 460-3800 • namcocontrols.com

For technical assistance, call 1-800-NAMTECH

11.10 LOCKOUT/TAGOUT PROCEDURE FOR SR 36 (CEDAR CREEK)

11.10.1 PURPOSE

This procedure establishes the minimum requirements for lockout of electrical energy sources at the SR36 Bridge. This procedure is in general compliance with the recommendations of NFPA 70E, Article 120. It is to be used to ensure that conductors and circuit parts are disconnected from sources of electrical energy, locked, and tested before work begins where employees could be exposed to dangerous conditions. This procedure does not apply for work on energized sources. Sources of stored energy, such as capacitors or springs, shall be relieved of their energy, and a mechanism shall be engaged to prevent the re-accumulation of energy.

This procedure is intended for DelDOT personnel only. Subcontractors shall submit their own procedures for approval.

11.10.2 RESPONSIBILITY

All employees shall be instructed in the safety significance of the lockout procedure. All new or transferred employees and all other persons whose work operations are or might be in the area shall be instructed in the purpose and use of this procedure. Delaware Department of Transportation (DelDOT) shall ensure that appropriate personnel receive instructions on their roles and responsibilities.

All persons installing a lockout device shall sign their names and the date on the tag (or state how the name of the individual or person-in-charge will be available).

A qualified person as noted herein is defined per NFPA 70E as follows: "A qualified person shall be trained and knowledgeable of the construction and operation of equipment or a specific work method and be trained to recognize and avoid the electrical hazards that might be present with respect to that equipment or work method."

11.10.3 PREPARATION FOR LOCKOUT OF DE-ENERGIZED EQUIPMENT

11.10.3.1 GENERAL

All electrical circuit conductors and circuit parts shall be considered energized until the source of the energy has been removed, at which time they shall be considered de-energized. All electrical conductors and circuit parts shall not be considered to be in an electrically safe work condition until all of the applicable requirements of NFPA 70E, Article 120 have been met.

11.10.3.2 LOCATE SAFETY DISCONNECT SWITCHES

Review current diagrammatic drawings (or other equally effective means), tags, labels, and signs to identify and locate all disconnecting means to determine where power is interrupted by a physical break and not de-energized by a circuit interlock. Make a list of disconnecting means to be locked for the specified work scheduled (see Section 11.10.10).

11.10.3.3 REVIEW SAFETY DISCONNECT SWITCHES

Review disconnecting means to determine adequacy of their interrupting ability. Determine if it will be possible to verify a visible open point or if other precautions will be necessary (see Section 11.10.10).

11.10.3.4 INVESTIGATE OTHER ISSUES

Create a safe working boundary by reviewing other work activity to identify where and how other personnel might be exposed to sources of electrical energy hazards. Review other energy sources in the physical area to determine employee exposure to sources of other types of energy. Establish energy control methods for control of other hazardous energy sources in the area.

11.10.3.5 REVIEW EQUIPMENT

Provide an adequately rated voltage detector to test each phase conductor or circuit part to verify that they are de-energized (see Section 11.10.10). This test is to be performed with the disconnecting means in the off position. Provide a method to determine that the voltage detector is operating satisfactorily.

11.10.3.6 DETERMINE GROUNDING

Where the possibility of induced voltages or stored electrical energy exists, ground the appropriate de-energized conductors or circuit parts before touching them. Where it could be reasonably anticipated that contact with other exposed energized conductors or circuit parts is possible, apply ground connecting devices.

11.10.3.7 DETERMINE TYPE OF PROCEDURE

Determine whether the work is an individual employee control procedure (see Section 11.10.4), a simple lockout (see Section 11.10.5), or a complex lockout (see Section 11.10.6).

11.10.4 INDIVIDUAL EMPLOYEE CONTROL PROCEDURE

The individual employee control procedure can be used when equipment with exposed conductors and circuit parts are de-energized for minor maintenance, servicing, adjusting, cleaning, inspection, and operating corrections; work that cannot be performed with a lock installed. The work shall be permitted to be performed without the placement of lockout devices if ALL of the following conditions are met:

(1) The disconnecting means is adjacent to the conductor, circuit parts, and equipment on which the work is performed

(2) The disconnecting means is clearly visible to all employees involved in the work

(3) The work does not extend beyond the work shift

(4) Electricity must be de-energized upstream

(5) All appropriate work plans, forms and log sheets completed

If the work requires the employee to be out of sight or out of arms reach of the disconnecting means, the work requires a simple lockout (see Section 11.10.5).

11.10.5 SIMPLE LOCKOUT

The simple lockout procedure is used when only one set of conductors or circuit part is de-energized for the sole purpose of performing work on or near electrical equipment.

11.10.5.1 PROCEDURE INVOLVING MORE THAN ONE PERSON

For a simple lockout and where more than one person is involved in the work, each person shall install his/her own personal lockout device.

Simple lockout plans shall not be required to be written for each application.

11.10.5.2 PROCEDURE INVOLVING MORE THAN ONE SHIFT

When the lockout extends for more than one day, the lockout shall be verified to be still in place and not compromised at the beginning of each new day. Where the lockout is continued on successive shifts (new workers are involved), the lockout is considered to be a complex lockout (see Section 11.10.6).

11.10.6 COMPLEX LOCKOUT

A complex lockout plan is required where one or more of the following exist:

(1) Multiple energy sources

(2) Multiple crews

(3) Multiple crafts

(4) Multiple locations
(5) Multiple employers
(6) Different disconnecting means
(7) Complex or particular switching sequences
(8) Continues for more than one shift, that is, new workers

11.10.6.1 WRITTEN PLAN OF EXECUTION

All complex lockout procedures shall require a written plan of execution detailing the work being performed and the lockout and safety methods used. The written plan of execution shall be completed by the person in charge (see below), reviewed by all parties involved and filed accordingly.

11.10.6.2 PERSON-IN-CHARGE

A person-in-charge shall be involved with a complex lockout procedure. They must be on site during the work. The person-in-charge shall develop a written plan of execution and communicate that plan to all persons engaged in the work. The person-in-charge shall be held accountable for safe execution of the complex lockout plan. The complex lockout plan must address all the concerns of employees who might be exposed, and they must understand how electrical energy is controlled. The person-in-charge shall ensure that each person understands the hazards to which they are exposed and the safety-related work practices they are to use.

11.10.6.3 ACCOUNTING FOR EMPLOYEES

All complex lockout plans identify the method to account for all persons who might be exposed to electrical hazards in the course of the lockout. Select which of the following methods is to be used:

(1) Each individual will install his/her own personal lockout device
(2) The person-in-charge shall lock his/her key in a "lock box."
(3) The person-in-charge shall maintain a sign in/out log for all personnel entering the area.
(4) Another equally effective methodology.

11.10.6.4 INSTALLATION AND REMOVAL OF LOCKS

The person-in-charge can install locks, or direct their installation on behalf of other employees. The person-in-charge can remove locks or direct their removal on behalf of other employees, only after all personnel are accounted for and ensured to be clear of potential electrical hazards.

11.10.6.5 PROCEDURE INVOLVING MORE THAN ONE SHIFT

When the lockout extends for more than one day, the lockout shall be verified to be still in place and not compromised at the beginning of each new day. Where the lockout is continued on successive shifts, the person-in-charge shall identify the method for transfer of the lockout and of communication with all employees.

11.10.7 SEQUENCE OF LOCKOUT SYSTEM PROCEDURES

11.10.7.1 EMPLOYEE NOTIFICATION

All employees shall be notified that a lockout system is going to be implemented and the reason therefore. The qualified employee implementing the lockout shall know the disconnecting means location for all sources of electrical energy and the location of all sources of stored energy (see Section 11.10.10). The qualified person shall be knowledgeable of hazards associated with electrical energy. Before the lockout procedure begins, the qualified employee implementing the lockout shall fill out the "Lockout/Tagout Log Sheet" (attached at the end of this procedure) with the date, time, location of lockout, and the qualified employee's name. The Lockout Log Book shall be kept in an area and location easily accessible to all workers on-site. The location shall be made known to all personnel scheduled to be on-site whether part of the same shift or not.

Before any lockout procedures are started or implemented the responsible person in charge shall fill out and implement the instructions listed on the "Lockout/Tagout Instructions Form" (attached at the end of this

procedure). This employee is a person who will apply the lockout, and the only one who can remove it. Any lockout procedures performed without the completion of these two forms will be subject to the discipline specified under Section 11.10.12.

All employees involved with the work shall wear the proper PPE.

11.10.7.2 DE-ENERGIZE SOURCE

If the electrical supply is energized, the qualified person shall de-energize and disconnect the electric supply and relieve all stored energy. Visually inspect that the circuit has been broken. If a visual inspection cannot be made or confirmed, measure with an approved voltage-detecting instrument (see Section 11.10.13). Before using the instrument, inspect it for visible damage. Do not proceed if there is an indication of damage to the instrument until an undamaged device is available. Measure both phase-to-phase and phase-to-ground on both sides of the disconnecting means. Test each conductor.

Note: The majority of electrical equipment installed on the SR36 Bridge is only energized during bridge openings and steps must be taken to obtain the bridge opening schedule and lock the bridge control keys accordingly.

11.10.7.3 APPLY LOCKOUT

Lockout all disconnecting means with lockout devices. Label the lockout with the date, time, and the qualified employee's name. Only this employee may remove the lockout.

In addition, the keys for the bridge control power selector switch shall be locked in a locked box for safety in the event the bridge opening schedule is not known or is modified without notice. If no locked box is provided on-site the person in charge shall be notified immediately an alternate effective means shall be established and agreed upon by all parties involved.

11.10.7.4 VERIFY THE SOURCE HAS BEEN DISCONNECTED

(1) Attempt to operate the disconnecting means to determine that operation is prohibited
(2) A voltage-detecting instrument shall be used (see Section 11.10.13) to test for the absence of both source and stored voltage. Before using the instrument, inspect it for visible damage. Do not proceed if there is an indication of damage to the instrument until an undamaged device is available. Measure between the source and load to ensure there are no live parts. Test each conductor.
(3) Verify proper instrument operation after testing for absence of voltage
(4) Verify the disconnected device does not operate (by attempting to operate it).

11.10.7.5 GROUNDING

Where required, install grounding equipment/conductor device on the phase conductors or circuit parts, to eliminate induced voltage or stored energy, before touching them. Where it has been determined that contact with other exposed energized conductors or circuit parts is possible, apply ground connecting devices rated for the available fault duty.

11.10.8 RESTORING THE EQUIPMENT TO NORMAL CONDITION

11.10.8.1 WORK COMPLETION

(1) Visually verify the work is complete.
(2) Remove all tools, equipment, and unused materials and perform appropriate housekeeping.

11.10.8.2 PREPARE TO REMOVE LOCKOUT

(1) Notify all personnel involved with the work that the lockout is complete, that the electrical supply is being restored, and to remain clear of the equipment and electrical supply.
(2) Remove all grounding equipment/conductor/devices.
(3) Perform any quality control tests/checks on the repaired equipment and/or electrical supply.

11.10.8.3 REMOVE LOCKOUT

(1) Remove lockout devices and keys from locked boxes by the person who installed them.
(2) Notify the equipment and/or electrical supply owner that the equipment and/or electrical supply is ready to be returned to normal operation.
(3) Return the disconnecting means to their normal condition.

11.10.9 UNATTENDED LOCKOUTS

If a lockout is discovered to be unattended or unlabeled, do not remove the lockout. Refer to the log book to see who has applied the lockout and contact the responsible party. ***Do not remove a lockout device you did not install.***

11.10.10 TYPES OF DISCONNECTS

The qualified employee implementing a lockout procedure must review the electrical drawings to ensure all workers involved with the work are protected from sources of electrical energy. There are five types of disconnects at SR36 Bridge and they are as follows.

11.10.10.1 TYPE 1: MAIN CIRCUIT BREAKER

Type 1 device is located in the crawl space located below the control room (see Photo 9.6Q). The main circuit breaker feeds power to the entire bridge. Because power is fed from the utility and generator all sources must be locked out simultaneously. Failure to do so will create an unsafe work zone.

Proper lockout of main circuit breaker will remove all power located downstream of these breakers including lighting equipment (i.e. fixtures, circuit breakers, panel boards, etc.).

11.10.10.2 TYPE 2: MOTOR CIRCUIT BREAKER

Type 2 devices are located in the main distribution panel and starter panels, and feed the traffic gates, span brake, span motor, span locks, and the west end screw jacks. These devices are in line with and should be coordinated with the local disconnect switches (see Section 11.10.4).

Work on individual devices such as span locks requires lockout of at least two locations (one motor circuit breaker and one disconnect switch). Installation of lockout devices on Type 2 disconnecting means does not lockout control power to each individual device.

Separate provisions shall be made to lockout the appropriate Type 3 device if determined necessary by the person in charge.

Lockout of control power can be achieved through the lockout and tagout of the individual bridge control circuit breaker located in the panelboard in the utility room and under the control desk.

11.10.10.3 TYPE 3: CIRCUIT BREAKER

Type 3 devices are located in the utility room and under the control desk. They feed the heating panels, water heater, lighting panelboard and other miscellaneous loads.

Lockout of control power can be achieved through the lockout and tagout of the individual bridge control circuit breaker located in the panelboard in the utility room and under the control desk.

11.10.10.4 TYPE 4: DISCONNECT SWITCH

Type 4 devices are field devices and are located external to the main distribution panel and starter panels and include the generator, traffic gates, span locks, screw jacks, brakes, span motor, water heater, and sump pumps. These devices are in line with motor circuit breakers (see Section 11.10.10.2) and other circuit breakers (see Section 11.10.10.3). Lockout of these devices shall be performed in conjunction with Type 2 and 3 devices.

Lockout of control power can be achieved through the lockout and tagout of the individual bridge control circuit breaker located in the panelboard in the utility room and under the control desk.

Lockout of control power can be achieved through the lockout and tagout of the corresponding motor starter power protection circuit breaker. Note: devices such as the main span motor may have internal heaters and other control power circuitry that cannot be locked out from Type 4 disconnect switches alone.

11.10.10.5 TYPE 5: MOTOR DRIVE CIRCUIT BREAKERS

Type 5 devices are located in the span drive cabinet and provide power to the drive and span motor. These devices are in line with disconnect switches (see Section 11.10.10.4) and other circuit breakers (see Section 11.10.10.3). Lockout of these devices shall be performed in conjunction with Type 3 and 4 devices.

Main span motors and brakes shall be locked out simultaneously and shall consist of the lockout of multiple disconnecting means. Failure to do so will create an unsafe work zone.

Lockout of control power can be achieved through the lockout and tagout of the individual bridge control circuit breaker located in the panelboard in the utility room and under the control desk.

11.10.11 SIGNAGE

Posted by each and every disconnect shall be an easily visible warning sign. Signs shall be red with white lettering and state the following:

– WARNING –
ALL EMPLOYEES SERVICING ELECTRICAL PARTS MUST BE FAMILIAR
WITH THE SR36 (CEDAR CREEK) LOCKOUT PROCEDURE. DO NOT TAMPER
OR REMOVE ANY LOCKOUTS APPLIED TO THIS EQUIPMENT. DOING
SO MAY RESULT IN LOSS OF LIFE.

11.10.12 DISCIPLINE

Violating these procedures will result in disciplinary action in accordance with DELDOT policy.

11.10.13 EQUIPMENT

Lockout devices where required shall be in accordance with NFPA 70E, Article 120.2(E)(3).

(1) A lockout device shall include a lock (either keyed or combination).
(2) The lockout device shall include a method of identifying the individual who installed the lockout device.
(3) A lockout device shall be permitted to be only a lock, provided the lock is readily identifiable as a lockout device, in addition to having a means of identifying the person who installed the lock.
(4) Lockout devices shall be attached to prevent operation of the disconnecting means without resorting to undue force or the use of tools.
(5) Where a tag is used in conjunction with a lockout device, the tag shall contain a statement prohibiting unauthorized operation of the disconnecting means or unauthorized removal of the device.
(6) Lockout devices shall be suitable for the environment and for the duration of the lockout.
(7) Whether keyed or combination locks are used, the key or combination shall remain in the possession of the individual installing the lock or the person in charge, when provided by the established procedure.

Tags, where required, shall be in accordance NFPA 70E, Article 120.2(E)(4).

(8) A tagout device shall include a tag together with an attachment means.
(9) The tagout device shall be readily identifiable as a tagout device and suitable for the environment and duration of the tagout.

(10) A tagout device attachment means shall be capable of withstanding at least 224.4 N (50 lb) of force exerted at a right angle to the disconnecting means surface. The tag attachment means shall be non-reusable, attachable by hand, self-locking, and non-releasable, equal to an all-environmental tolerant nylon cable tie.

(11) Tags shall contain a statement prohibiting unauthorized operation of the disconnecting means or removal of the tag.

Voltage detecting devices to be used shall be approved prior to use by DelDOT and the person in charge. Voltage detecting devices shall be tested and calibrated per manufacturer recommendations but no less frequent than once a year.

11.10.14 REVIEW

This procedure was last reviewed on _____, and is schedule to be reviewed again on _____ (not more than one year from the last review).

11.10.15 ASSOCIATED DOCUMENTS

The following documents are included in the Appendix of this procedure:

(1) Lockout/Tagout Log Sheet (see Section 11.10.17)
(2) Lockout/Tagout Instructions Form (see Section 11.10.18)

11.10.16 LOCKOUT PROCEDURE TRAINING

Training shall be yearly for all employees and shall include the following:

(1) Recognizing lockout devices

(2) Installing lockout devices

(3) Duty of employer in writing procedures

(4) Duty of employer in executing procedures

(5) Duty of person-in-charge

(6) Authorized and unauthorized removal of locks

(7) Enforcing execution of lockout procedures

(8) Individual employee control of energy

(9) Simple lockout

(10) Complex lockout

(11) Using single line and diagrammatic drawings to identify sources of energy

(12) Use of tags and warning signs

(13) Release of stored energy

(14) Personnel accounting methods

(15) Grounding needs/requirements

(16) Safe use of voltage detecting instruments

11.10.17 LOCKOUT/TAGOUT LOG SHEET

Lockout/Tagout Log Sheet						
Tag No.	Location	Reason Installed	Date Installed	Installed By	Authorized By	Date Removed

11.10.18 LOCKOUT/TAGOUT INSTRUCTION FORM

LOCKOUT/TAGOUT INSTRUCTION FORM		
Date:	Location:	Equipment ID:
Name:	In Charge:	Est. Duration:
Purpose of Lock Out:		
Devices:	Locked Out	Tested and Confirmed
	☐ YES ☐ NO	☐ YES ☐ NO
	☐ YES ☐ NO	☐ YES ☐ NO
	☐ YES ☐ NO	☐ YES ☐ NO
	☐ YES ☐ NO	☐ YES ☐ NO
	☐ YES ☐ NO	☐ YES ☐ NO
	☐ YES ☐ NO	☐ YES ☐ NO
	☐ YES ☐ NO	☐ YES ☐ NO
	☐ YES ☐ NO	☐ YES ☐ NO
	☐ YES ☐ NO	☐ YES ☐ NO
Voltage Detector last Calibrated On:		
Determined Safe Working Boundary:		
Grounding Equipment Required:		
Type of Procedure and Used and Why:		
Plan of Execution Has Been Distributed and Discussed (Attached Plan to this form): ☐ YES ☐ NO		
Accounting Method Used ☐ Each Individual will Install his/her own personal lockout device ☐ The Person In Charge shall Lock his/her key in a locked box ☐ The Person In Charge Shall Maintain a Sign In/Out Log for all Personnel Entering The Area ☐ Another Equally Effective Pre-Approved Method		
Lockout/Tagout Approved On and By:		
All Associated Lock-Out/Tag Out Equipment Removed On and By:		

THIS PAGE INTENTIONALLY LEFT BLANK

CHAPTER 12 - CONTACTS, TELEPHONE NUMBERS AND EMERGENCY CALL OUTS

12.1 CONTACTS AND TELEPHONE NUMBERS

Delaware Department of Transportation (General)..... 302.760.2080

Delaware Department of Transportation (Maintenance).....302.326.4460

Delaware Department of Transportation (TMC)..... 302.659.4600

Delaware State Police.....302.739.5901

Fire Department 302.422.8888

Gravel Hill Maintenance Yard 302.856.5203

NOAA (National Oceanic and Atmospheric Administration).....206.526.6317

SR36 (Cedar Creek) Bridge.....302.422.9268

United States Coast Guard District Commander 302.277.2121

12.2 EMERGENCY CALL OUT PROCEDURES

During emergency situations, the following procedures and protocols should be followed.

12.2.1 MALFUNCTION (FAILURE TO OPEN OR CLOSE)

During maintenance inspection or marine vessel openings, if the bridge cannot be opened or closed, contact order should be as follows:

1) Area Supervisor
2) Area Foreman
3) Delaware State Police (only if traffic needs to be detoured)

12.2.2 DAMAGE TO BRIDGE FROM VESSEL OR VEHICLE

When damage to the bridge is observed or detected, contact order should be as follows:

12.2.2.1 MINOR DAMAGE

When damage will not hamper normal bridge operation, perform the following:

1) Log in log book
2) Notify Area Supervisor or Foreman at earliest convenience.

12.2.2.2 MAJOR DAMAGE

When damage may hamper normal bridge operation, perform the following:

1) Notify Area Supervisor or Foreman immediately.
2) Notify Delaware State Police
3) Log in log book

12.2.3 VEHICLE ACCIDENT OR DISABLED VEHICLE ON BRIDGE

When an accident occurs on the bridge or a disabled vehicle is observed, perform the following:

1) If accident, check about possible injuries, notify Delaware State Police.
2) DO NOT operate the bridge if an accident or disabled vehicle is within the operational area of the bridge.
3) If it is an injury accident before or after the operational area of the bridge, contact emergency services (911) at the scene before proceeding with an opening.
4) If unable to open the bridge due to an accident or disabled vehicle, notify any waiting vessels and the Coast Guard.

12.2.4 MARINE RELATED EMERGENCIES

For a marine related accident or emergencies, contact the following:

1) US Coast Guard
2) Area Supervisor or Foreman

12.2.5 WEATHER RELATED EMERGENCIES

For weather related accident or emergencies, contact the following:

1) Delaware State Police and NOAA
2) Area Supervisor or Foreman