DO NOT CONSIDER ANY OF THE DATA ON THE EXISTING STRUCTURE SUPPLIED IN THESE DRAWINGS AS POSITIVE REPRESENTATIONS OF ANY OF THE CONDITIONS THAT MAY BE ENCOUNTERED IN THE FIELD FOR T201107402.

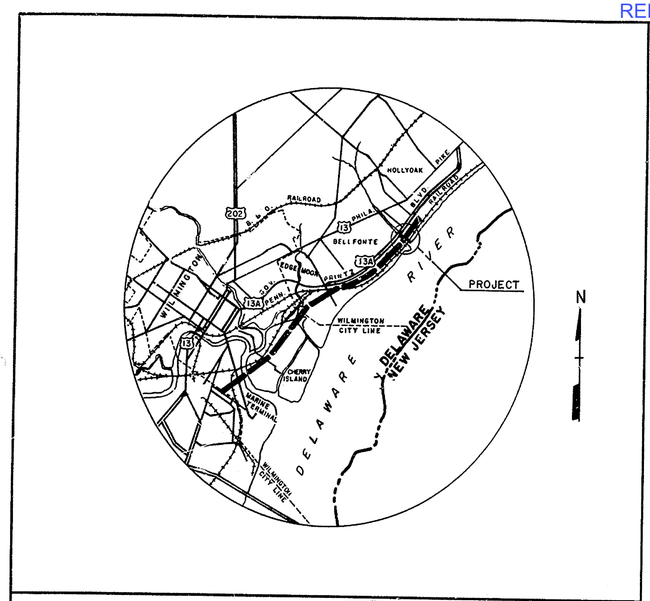

SCALE: 1" = 7500'

THE STATE OF DELAWARE

STATE HIGHWAY DEPARTMENT

PLAN
FOR
CONSTRUCTION OF CONTRACT № 68-07-005

STA. 597+60 TO STA. ~~611+00~~ 613+00

~~1340.0~~ 1540.0 FEET: ~~0.254~~ 0.292 MILES

SCALE: PLAN: 1 IN. = 50 FT.
PROFILE: HOR. 1 IN. = 50 FT.
VERT. 1 IN. = 5 FT.

FEDERAL AID PROJECT № I-495-3(17)19

DESIGN CRITERIA

FEDERAL CLASS: INTERSTATE
A.D.T. (1968): 26,900
D.H.V. (1990): 5,096
PERCENTAGE OF TRUCKS: 7
DESIGN SPEED: 70 MPH
MIN. STOPPING SIGHT DISTANCE: 600 Ft.
MAX. S.E.: 0.021 %
MAX. DEGREE CURVE: 0°-45'-00"
MAX. GRADE: ±0.3425 %

COUNTY	CONTRACT	F.H.A. DIV. NO	STATE	FED. AID PROJ. NO	FISCAL YEAR	SHEET NO	TOTAL SHEETS
NEW CASTLE	68-07-005	2	DEL.	I-495-3(17)19		1	41

INTERSTATE HIGHWAY ROUTE I-495
GRADING, STABILIZATION & STRUCTURE PLANS
STONEY CREEK

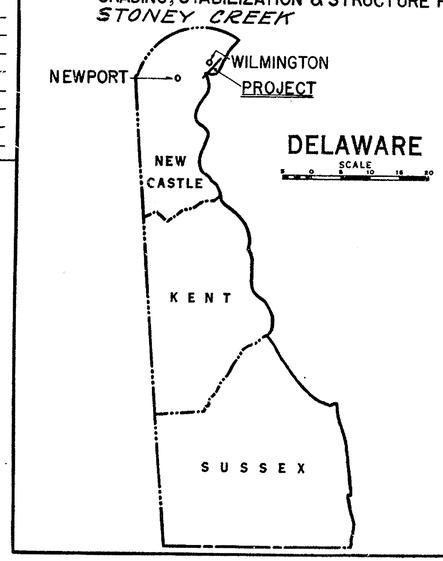

"AS BUILTS" IN RED 9-26-72
DRM

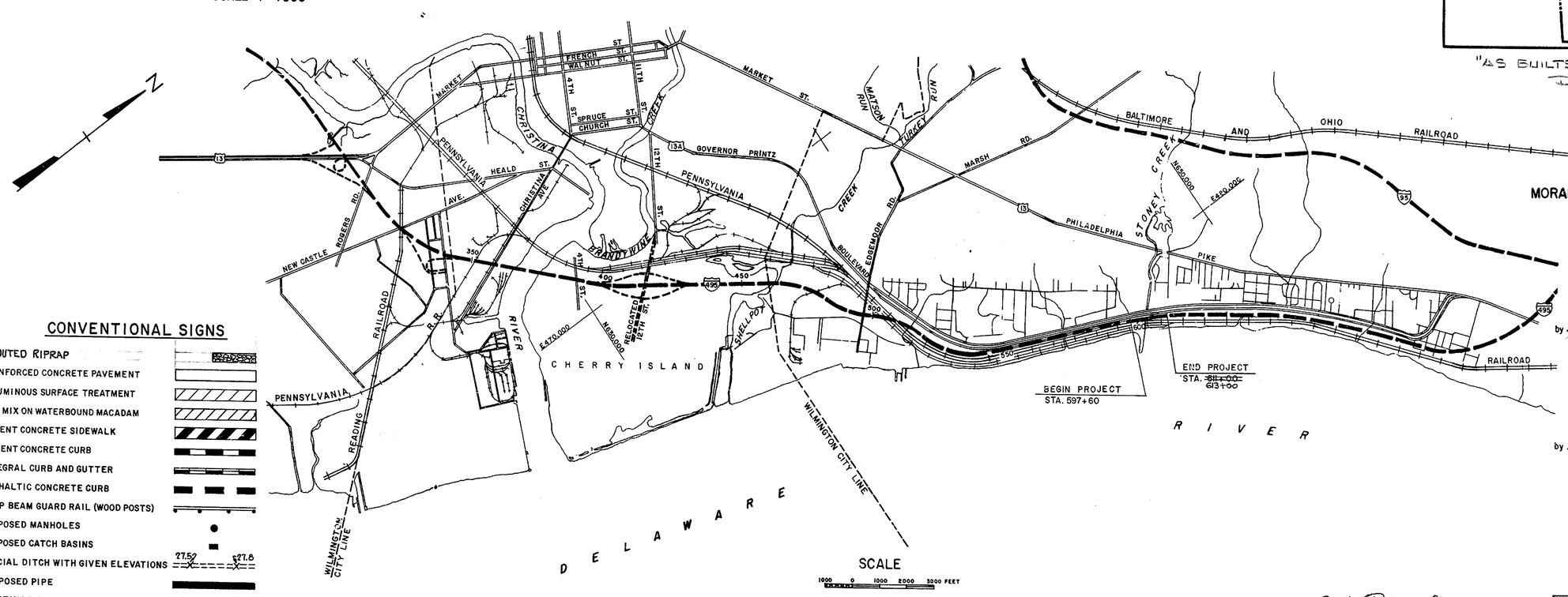

J. E. GREINER CO.
MORAN, PROCTOR, MUESER & RUTLEDGE
CONSULTING ENGINEERS

by [signature]

by [signature]

CONVENTIONAL SIGNS

- GROUTED RIPRAP
- REINFORCED CONCRETE PAVEMENT
- BITUMINOUS SURFACE TREATMENT
- HOT MIX ON WATERBOUND MACADAM
- CEMENT CONCRETE SIDEWALK
- CEMENT CONCRETE CURB
- INTEGRAL CURB AND GUTTER
- ASPHALTIC CONCRETE CURB
- DEEP BEAM GUARD RAIL (WOOD POSTS)
- PROPOSED MANHOLES
- PROPOSED CATCH BASINS
- SPECIAL DITCH WITH GIVEN ELEVATIONS (27.52, 27.8)
- PROPOSED PIPE
- EXISTING PIPE
- SODDING
- CONCRETE GUTTER
- UTILITY POLE
- FENCE
- CITY OR TOWN LINE
- RIGHT OF WAY LINE
- RAILROADS

PROFILE (GRADE, GROUND, DATUM, 25.0 GR. 23.2, 28.8 GR. 26.0)

INDEX OF SHEETS

SHEET NO. 1 TITLE SHEET
2-7 STABILIZATION PLANS AND TYPICAL SECTIONS
8&10 PLAN AND PROFILE SHEETS
11-22 STRUCTURE I-495 OVER STONEY CREEK
23-26 STRUCTURE RRMR OVER STONEY CREEK
27-31 MODIFICATIONS TO ELECTRIFICATION FACILITIES
32-35 BORINGS
36 QUANTITIES
37-41 STANDARDS D-1, D-11, L-4a, L-4b, W

RECOMMENDED 11/18 1968 — CHIEF PLANS & DESIGN DIVISION
RECOMMENDED 11/19 1968 — ASST. CHIEF ENGINEER
APPROVED 11/19 1968 — CHIEF ENGINEER
APPROVED 11-19 1968 — DIRECTOR OF OPERATIONS

DEPARTMENT OF TRANSPORTATION
FEDERAL HIGHWAY ADMINISTRATION
BUREAU OF PUBLIC ROADS

APPROVED:

DIVISION ENGINEER DATE

DO NOT CONSIDER ANY OF THE DATA ON THE EXISTING STRUCTURE SUPPLIED IN THESE DRAWINGS AS POSITIVE REPRESENTATIONS OF ANY OF THE CONDITIONS THAT MAY BE ENCOUNTERED IN THE FIELD FOR T201107402.

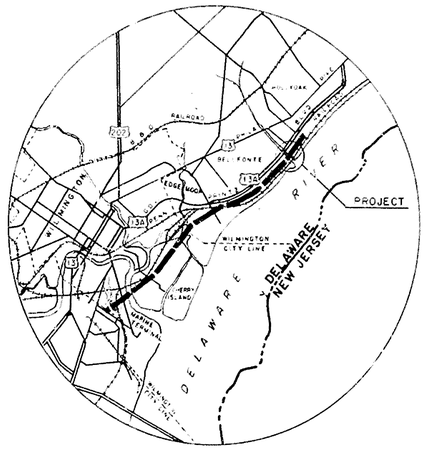

SCALE: 1" = 7500'

THE STATE OF DELAWARE

State of Delaware

STATE HIGHWAY DEPARTMENT

PLAN
FOR
CONSTRUCTION OF CONTRACT № 68-07-005

STA. 597+60 TO STA. ~~611+00~~ 613+00
~~1340.0~~ 1540.0 FEET: ~~0.254~~ 0.292 MILES

SCALE: PLAN: 1 IN.= 50 FT.
PROFILE: HOR. 1 IN.= 50 FT.
VERT. 1 IN.= 5 FT.

FEDERAL AID PROJECT № I-495-3(17)19

DESIGN CRITERIA

FEDERAL CLASS: INTERSTATE
A.D.T. (1968): 26,900
D.H.V. (1990): 5,096
PERCENTAGE OF TRUCKS: 7
DESIGN SPEED: 70 MPH
MIN. STOPPING SIGHT DISTANCE: 600 Ft.
MAX. S.E.: 0.021 %
MAX. DEGREE CURVE: 0°-45'-00"
MAX. GRADE: +0.3425%

COUNTY	CONTRACT	F.H.A. DIV. NO	STATE	FED. AID PROJ. NO	FISCAL YEAR	SHEET NO	TOTAL SHEETS
NEW CASTLE	68-07-005	2	DEL.	I-495-3(17)19		1	41

INTERSTATE HIGHWAY ROUTE I-495
GRADING, STABILIZATION & STRUCTURE PLANS
STONEY CREEK

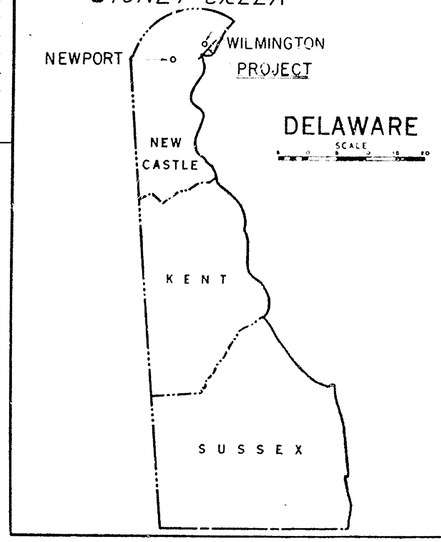

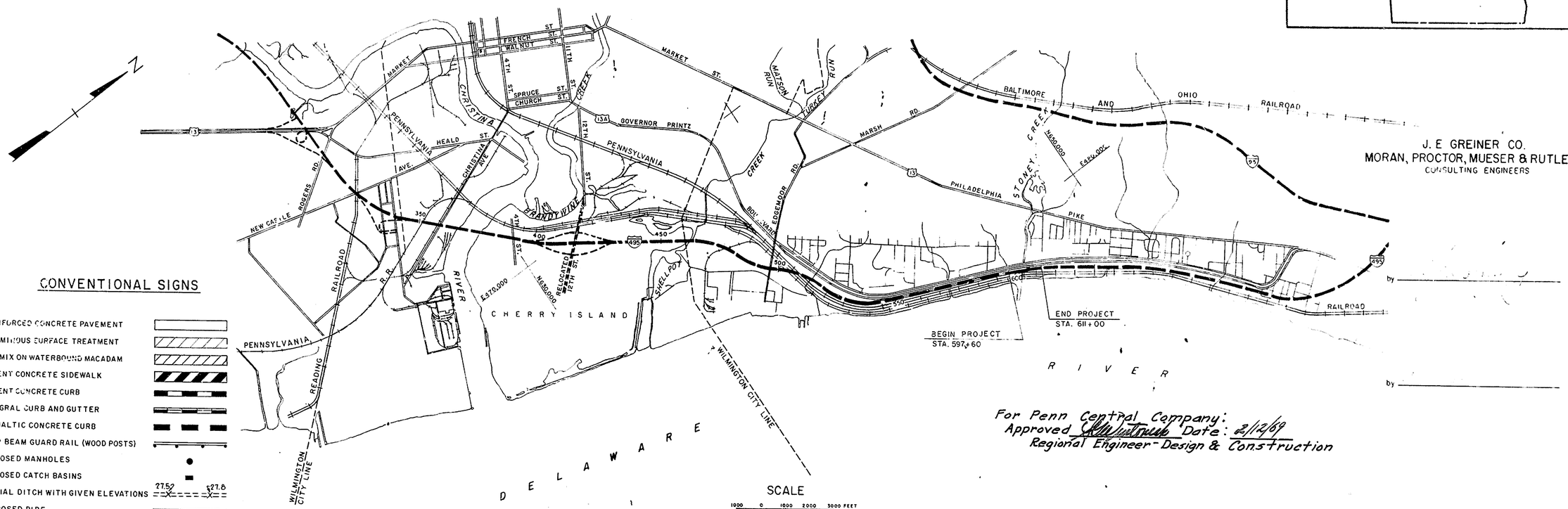

J. E. GREINER CO.
MORAN, PROCTOR, MUESER & RUTLEDGE
CONSULTING ENGINEERS

by _____

by _____

For Penn Central Company:
Approved _____ Date: 2/12/69
Regional Engineer-Design & Construction

CONVENTIONAL SIGNS

- REINFORCED CONCRETE PAVEMENT
- BITUMINOUS SURFACE TREATMENT
- HOT MIX ON WATERBOUND MACADAM
- CEMENT CONCRETE SIDEWALK
- CEMENT CONCRETE CURB
- INTEGRAL CURB AND GUTTER
- ASPHALTIC CONCRETE CURB
- DEEP BEAM GUARD RAIL (WOOD POSTS)
- PROPOSED MANHOLES
- PROPOSED CATCH BASINS
- SPECIAL DITCH WITH GIVEN ELEVATIONS (27.52, 27.8)
- PROPOSED PIPE
- EXISTING PIPE
- SODDING
- CONCRETE GUTTER
- UTILITY POLE
- FENCE
- CITY OR TOWN LINE
- RIGHT OF WAY LINE
- RAILROADS

PROFILE: GRADE, GROUND, DATUM, 250 GR. 252, 250 GR. 250

SCALE: 1000 0 1000 2000 3000 FEET

INDEX OF SHEETS

SHEET NO 1 TITLE SHEET
2-7 STABILIZATION PLANS AND TYPICAL SECTIONS
8-10 PLAN AND PROFILE SHEETS
11-22 STRUCTURE I-495 OVER STONEY CREEK
23-26 STRUCTURE RRMR OVER STONEY CREEK
27-31 MODIFICATIONS TO ELECTRIFICATION FACILITIES
32-35 BORINGS
36 QUANTITIES
37-41 STANDARDS D-1, D-11, L-4a, L-4b, W

RECOMMENDED 11/18 1968 — CHIEF PLANS & DESIGN DIVISION
RECOMMENDED 11/19 1968 — ASST. CHIEF ENGINEER
APPROVED 11/19 1968 — Joe S. Robinson, CHIEF ENGINEER
APPROVED 11-19 1968 — DIRECTOR OF OPERATIONS

DEPARTMENT OF TRANSPORTATION
FEDERAL HIGHWAY ADMINISTRATION
BUREAU OF PUBLIC ROADS

APPROVED

DIVISION ENGINEER DATE

DO NOT CONSIDER ANY OF THE DATA ON THE EXISTING STRUCTURE SUPPLIED IN THESE DRAWINGS AS POSITIVE REPRESENTATIONS OF ANY OF THE CONDITIONS THAT MAY BE ENCOUNTERED IN THE FIELD FOR T201107402.

COUNTY	CONTRACT	F. R. A. REG. NO.	STATE	FED. AID PROJECT NO.	FISCAL YEAR	SHEET NO.	TOTAL SHEETS
NEW CASTLE	68-07-005	2	DEL.	I-495-3(17)19		2	41

LEGEND

- Swamp excavation - Special Fill to El.+6.0 embankment fill to subgrade.
- Sand drains - embankment fill - surcharge fill
- Embankment fill - surcharge fill
- Embankment fill to subgrade, or berm as required
- Excavation to subgrade
- Proposed R.O.W. Line & Denial of Access Line.
- Proposed R.O.W. Taking Line
- Existing R.O.W. Line.
- Temporary Construction Easement.
- S — S — Sewer; W — W — Water; G — G — GAS — Existing utility lines
- Edge of water of existing creeks or ponds and shore lines (Approx.)
- +14.5 — Spot elevations of existing ground (September 1962)

NOTES

1. For Typical Earthwork Sections see Sheets 3 & 4.
2. For alignment & curve data see Sheets 8 & 9.
3. For Sand Drain Area Foundation Stabilization Plan see Sheet 7.
4. Stations noted represent the limits of the types of treatment in the various categories taken at center line of roadway. Where the limit of excavation or fill is shown by a dashed line and the station with ± symbol, the limit is approximate only. Swamp excavation at such locations shall be carried out to remove all soft compressible soil.
5. The limits of earthwork shown on either side of the roadway are the intersections of the embankment side slopes or excavation cut slopes with existing ground, unless shown otherwise on the typical sections.

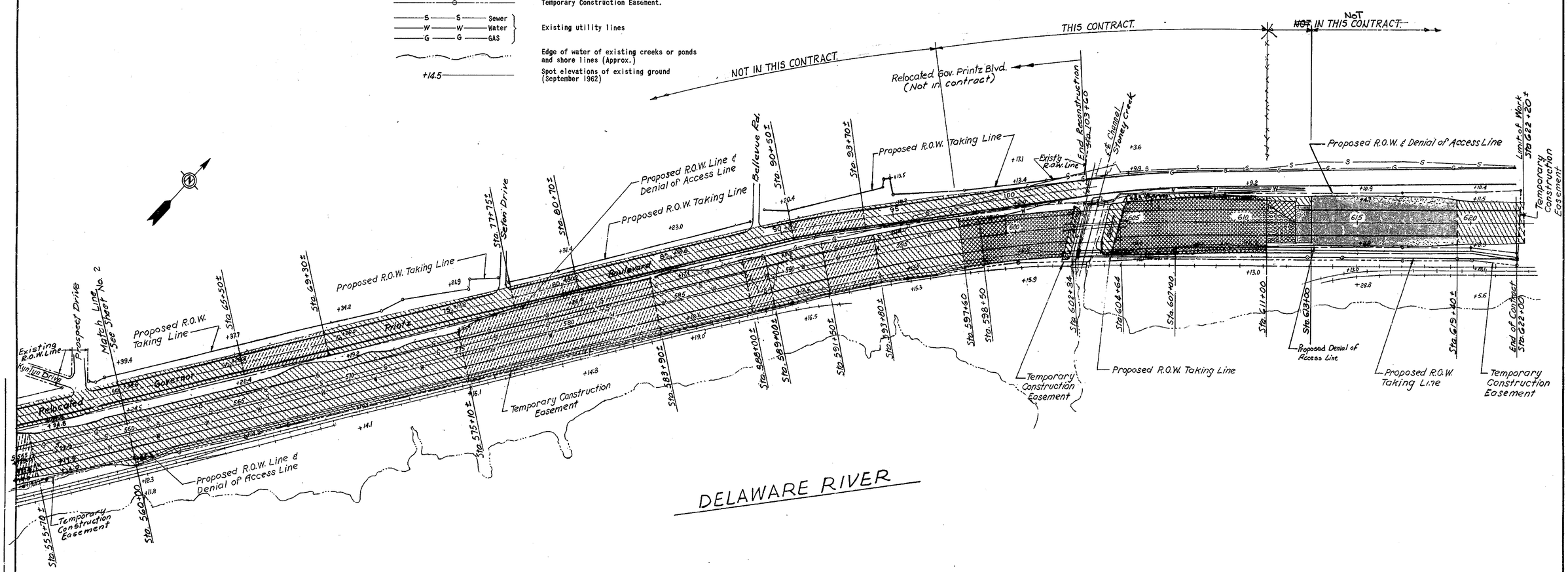

Revised Limits of Contract and Tie of Construction at Dark End 10-25-68

J. E. GREINER CO. MORAN, PROCTOR, MUESER & RUTLEDGE CONSULTING ENGINEERS	D. T.J.S. T. P.O.&L.S. C. S.L.T.	SCALE 1" = 200' DATE	

DELAWARE
STATE HIGHWAY DEPARTMENT

INTERSTATE ROUTE I-495

EARTHWORK PLAN AND SECTIONS

DO NOT CONSIDER ANY OF THE DATA ON THE EXISTING STRUCTURE SUPPLIED IN THESE DRAWINGS AS POSITIVE REPRESENTATIONS OF ANY OF THE CONDITIONS THAT MAY BE ENCOUNTERED IN THE FIELD FOR T201107402.

COUNTY	CONTRACT	P. B. A. REG. NO.	STATE	FED. AID PROJECT NO.	FISCAL YEAR	SHEET NO.	TOTAL SHEETS
NEW CASTLE	68-07-005	2	DEL.	I-495-3(17);19		3	41

⊥ Revised Intersection of Excavation & Sand Drain Area 9/23/68 to Extend Limits of Sand Blanket & Working Mat WSS
& Deleted one section and Modified another 1/12/70 WSS

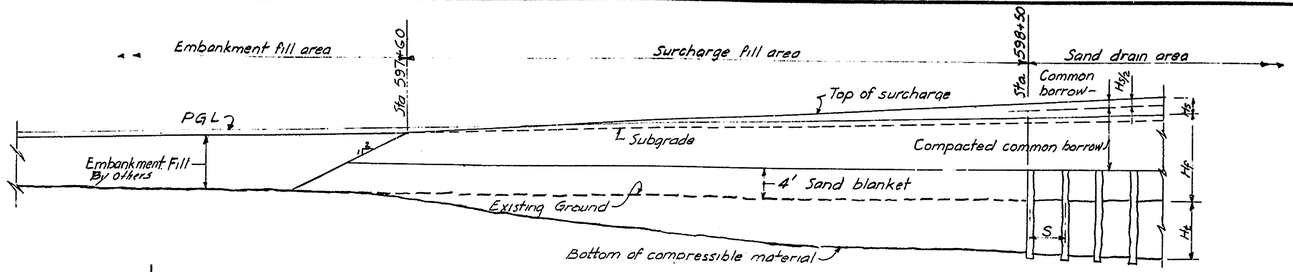

INTERSECTION OF EMBANKMENT & SAND DRAIN AREA

Scale: 1" = 10'-0"

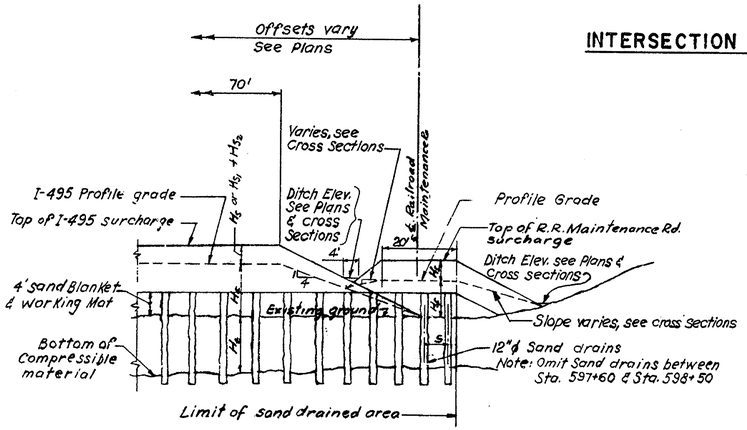

STATION 597+60 TO STATION 602+00

STATION 604+30 TO STATION 607+00

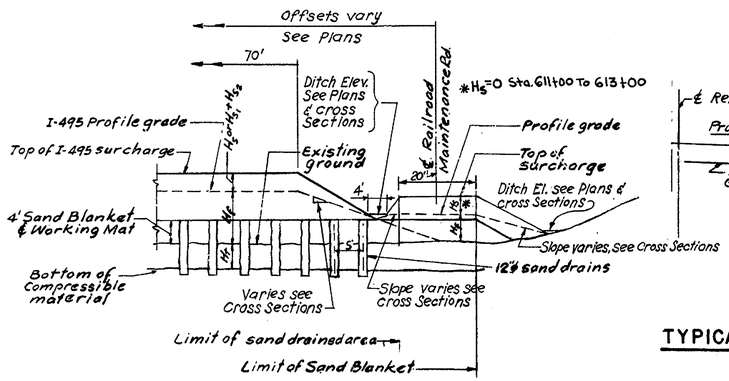

STATION 607+00 TO STATION ~~611+00~~ 613+00

Note – See Sheet 7A for Additional Information Sta. 611 to Sta. 613+00

TYPICAL SAND DRAIN STABILIZATION SECTIONS - R.R. MAINTENANCE ROAD

N.T.S.

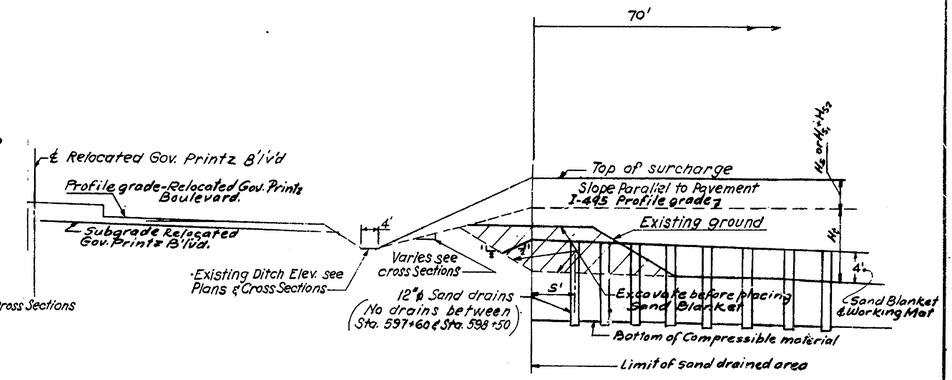

TYPICAL SAND DRAIN STABILIZATION ADJACENT TO GOVERNOR PRINTZ BOULEVARD BETWEEN STATION 597+60 AND STATION 602+34

N.T.S.

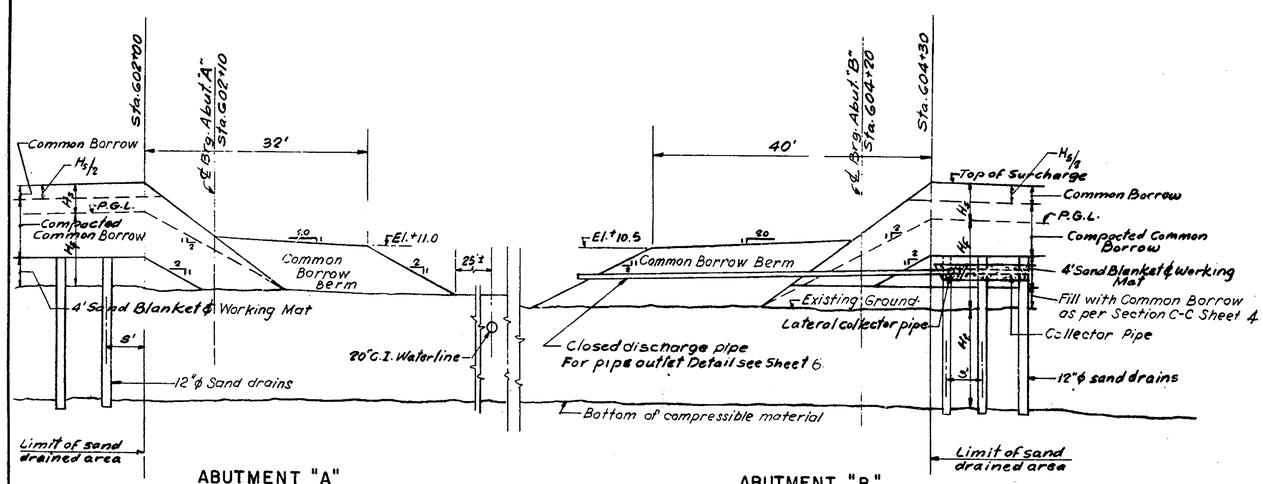

NOTE: Sections are normal to embankment end slope @ Maintenance Rd. Sta. 602+00 & Sta. 604+30.

TYPICAL SECTIONS - R.R. MAINTENANCE ROAD BRIDGE

Scale: 1" = 10'-0"

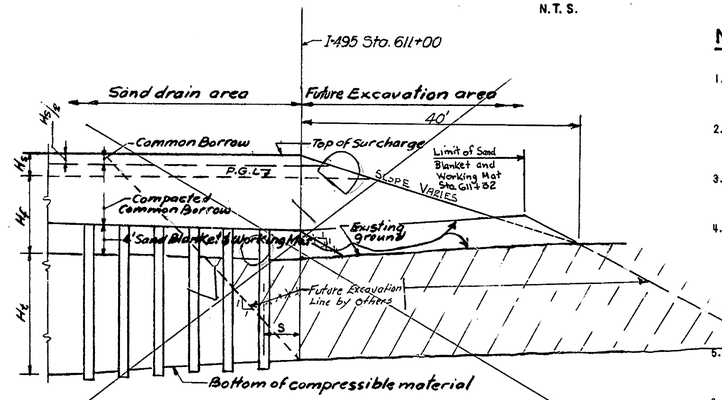

INTERSECTION OF EXCAVATION & SAND DRAIN AREA

Scale: 1" = 10'-0"

NOTES

1. The bottom of the compressible or unsuitable material as shown is approximate
2. Typical sand drain stabilization sections are shown as if the full embankment and surcharge are in place.
3. The embankments for the northbound and southbound roadways are to be considered as one with one continuous surcharge.
4. The surcharge shall be constructed so as to be its full thickness between the outside edges of the roadway berms as located on Sheet No. 4 (Typical Sections). The elevation of the surface of the surcharge fill at its completion shall be equal to the final profile grade elevation plus the required surcharge thickness MINUS the settlement which occurs during construction, as determined by the Engineer.
5. For sand drain stabilization plan, sand drain layout, surcharge thickness and location of control devices & collector pipes, see Sheet 7.
6. For details of control devices & collector pipe system see Sheets 5 & 6.
7. All elevations refer to U.S.C.& G. Survey Datum Mean Sea Level at Sandy Hook = 0.00 ft.

LEGEND

H_t = Thickness of compressible material.

H_f = Fill height to final profile grade.

H_s = Surcharge thickness - single stage areas.

H_{S1} = 1st Stage
H_{S2} = 2nd Stage
Surcharge thickness - double stage areas

S = Sand drain spacing

S' = Outside sand drain spacing (S , S' , S/2).

Denotes excavation areas.

DELAWARE
STATE HIGHWAY DEPARTMENT

INTERSTATE ROUTE I-495

TYPICAL EARTHWORK SECTIONS

J. E. GREINER CO.
MORAN, PROCTOR, MUESER & RUTLEDGE
CONSULTING ENGINEERS

D. T. J. S.
T. F. L.
C. S. L. T.

SCALE AS NOTED
DATE

DO NOT CONSIDER ANY OF THE DATA ON THE EXISTING STRUCTURE SUPPLIED IN THESE DRAWINGS AS POSITIVE REPRESENTATIONS OF ANY OF THE CONDITIONS THAT MAY BE ENCOUNTERED IN THE FIELD FOR T201107402.

COUNTY	CONTRACT	P. B. A. REG. NO.	STATE	FED. AID PROJECT NO.	FISCAL YEAR	SHEET NO.	TOTAL SHEETS
NEW CASTLE	68-07-005	2	DEL.	I-495-3(17)19		4	41

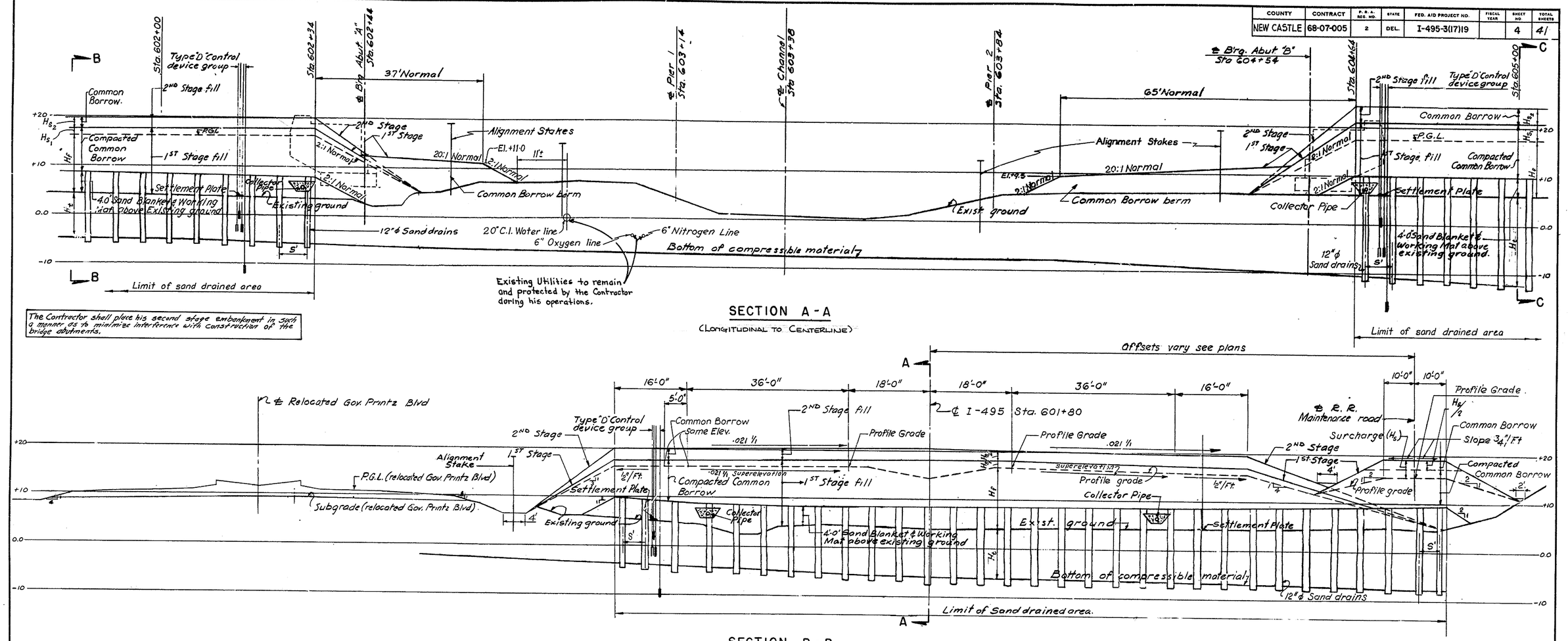

The Contractor shall place his second stage embankment in such a manner as to minimize interference with construction of the bridge abutments.

SECTION A-A

(LONGITUDINAL TO CENTERLINE)

SECTION B-B

(TRANSVERSE AT STA. 601+80)

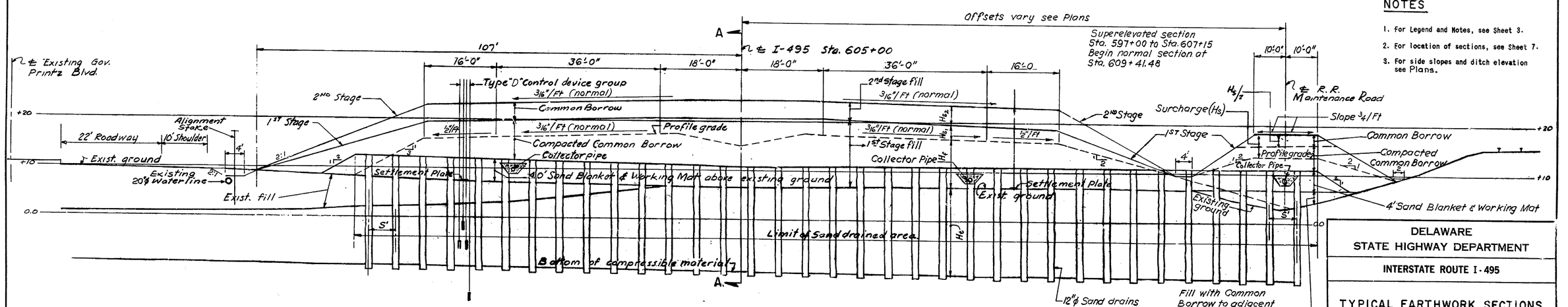

SECTION C-C

(TRANSVERSE AT STA. 605+00)

NOTES

1. For Legend and Notes, see Sheet 3.
2. For location of sections, see Sheet 7.
3. For side slopes and ditch elevation see Plans.

DELAWARE
STATE HIGHWAY DEPARTMENT

INTERSTATE ROUTE I-495

TYPICAL EARTHWORK SECTIONS

J. E. GREINER CO.
MORAN, PROCTOR, MUESER & RUTLEDGE
CONSULTING ENGINEERS

D. T. J. S.
T. L. S.
C. S. L. T.

SCALE 1" = 10'

DATE

REVISIONS

DO NOT CONSIDER ANY OF THE DATA ON THE EXISTING STRUCTURE SUPPLIED IN THESE DRAWINGS AS POSITIVE REPRESENTATIONS OF ANY OF THE CONDITIONS THAT MAY BE ENCOUNTERED IN THE FIELD FOR T201107402.

COUNTY	CONTRACT	F.A. or Res. Acc. No.	STATE	FED. AID PROJECT NO.	FISCAL YEAR	SHEET NO.	TOTAL SHEETS
NEW CASTLE	68-07-005	2	DEL.	I-495-3(17)19		5	41

GROUP TYPE / TYPICAL LAYOUT

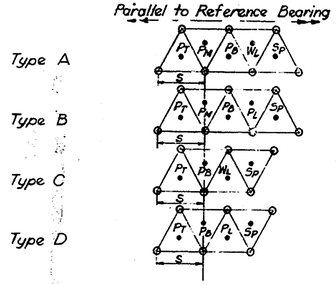

LEGEND

- ⊙ - Sand drain
- S - Sand drain spacing
- P_T - Type P_T piezometer installation
- P_M - " P_M "
- P_B - " P_B "
- P_L - " P_L "
- W_L - " W_L water observation hole
- S_P - " S_P settlement point
- • Location of control device.

Note:

Piezometers and settlement points shall be located equidistant between sand drains.

TYPICAL LAYOUT FOR CONTROL DEVICE GROUPS

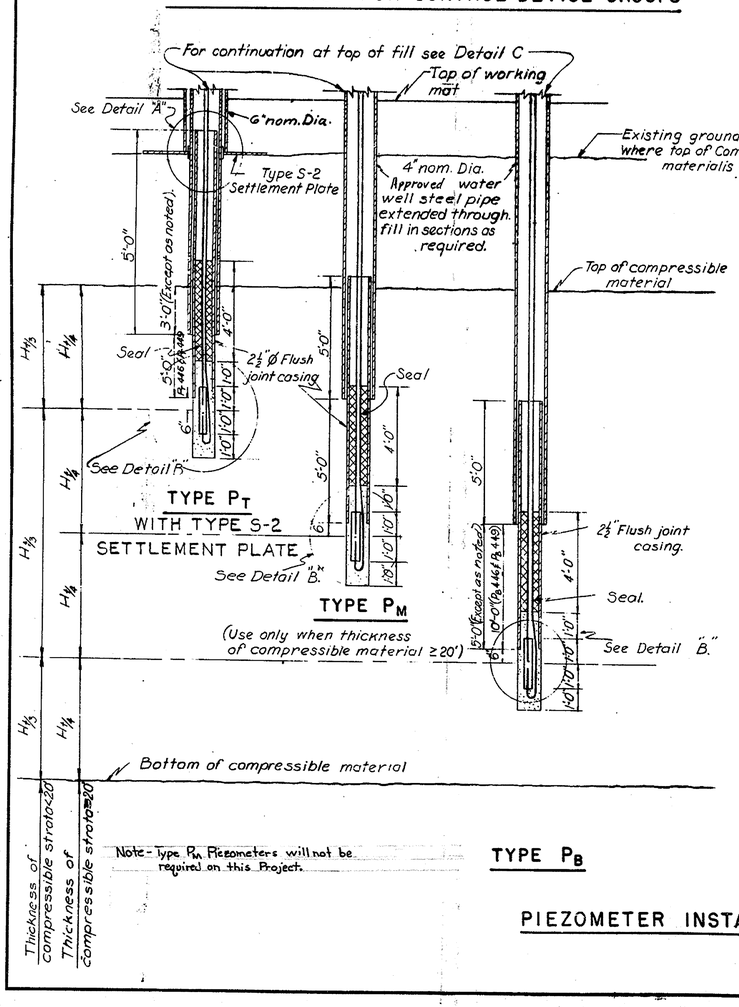

Note - Type P_M Piezometers will not be required on this Project.

TYPE P_B

TYPE P_L

PIEZOMETER INSTALLATION

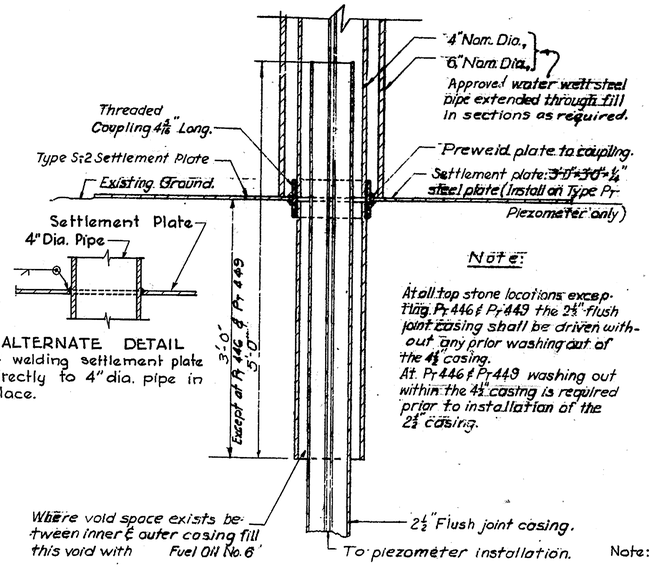

Note:

At all top stone locations except Pr 446 & Pr 449 the 2½" flush joint casing shall be driven without any prior washing out of the 4½" casing.
At Pr 446 & Pr 449 washing out within the 4½" casing is required prior to installation of the 2½" casing.

DETAIL "A"

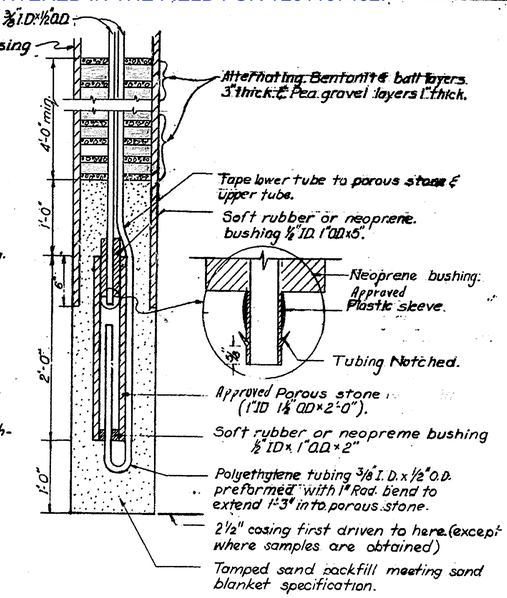

DETAIL "B"

Note: Piezometer detail shown is diagrammatic. Piezometer supplied to be equivalent to that shown, such that 2 lines of tubing are carried to the surface and so that the piezometer may be flushed by circulating water through the tubing.

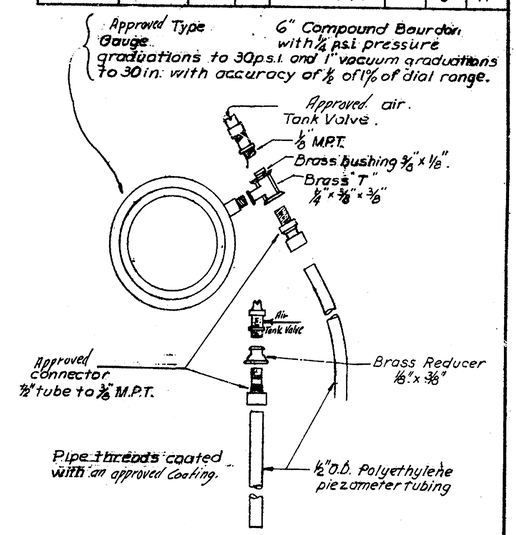

BOURDON GAUGE DETAILS

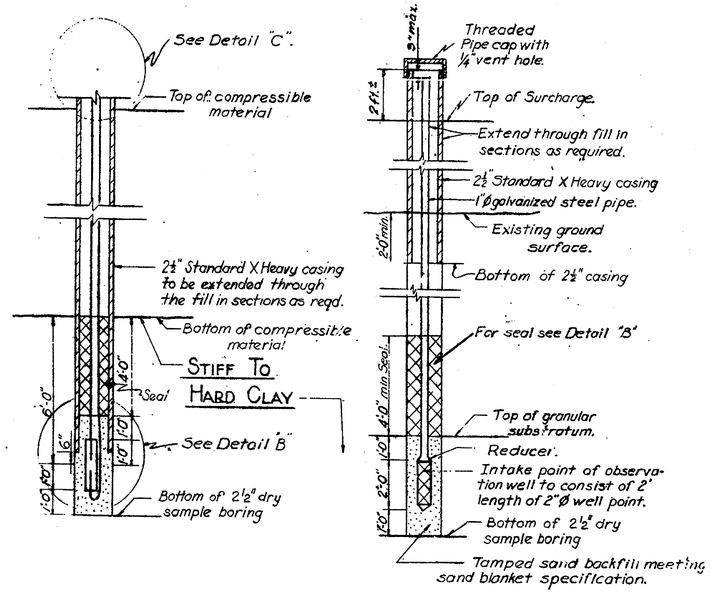

TYPE P_L

TYPE W_L

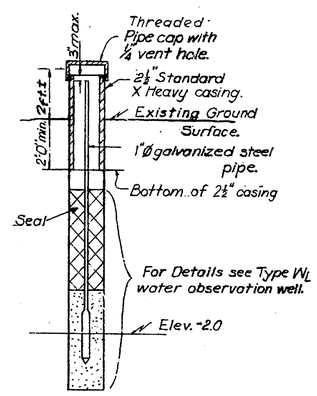

TYPE W_T

Note: Exact locations to be determined in field.

WATER OBSERVATION WELLS

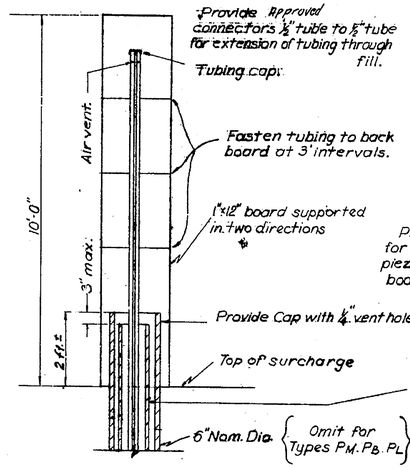

Note: Provide 1 Bourdon Gauge for each group of piezometers and fasten to board as required.

DETAIL "C"

DELAWARE
STATE HIGHWAY DEPARTMENT

INTERSTATE ROUTE I-495

CONTROL DEVICES
SAND DRAIN AREA

J. E. GREINER CO.
MORAN, PROCTOR, MUESER & RUTLEDGE
CONSULTING ENGINEERS

D. T. J. S.
T. L. G.
C. S. L. T.

SCALE N.T.S.

DATE

DO NOT CONSIDER ANY OF THE DATA ON THE EXISTING STRUCTURE SUPPLIED IN THESE DRAWINGS AS POSITIVE REPRESENTATIONS OF ANY OF THE CONDITIONS THAT MAY BE ENCOUNTERED IN THE FIELD FOR T201107402

COUNTY	CONTRACT	P.R.A. REG. NO.	STATE	FED. AID PROJECT NO.	FISCAL YEAR	SHEET NO.	TOTAL SHTS
NEW CASTLE	68-07-005	2	DEL.	I-495-3(17)19		6	41

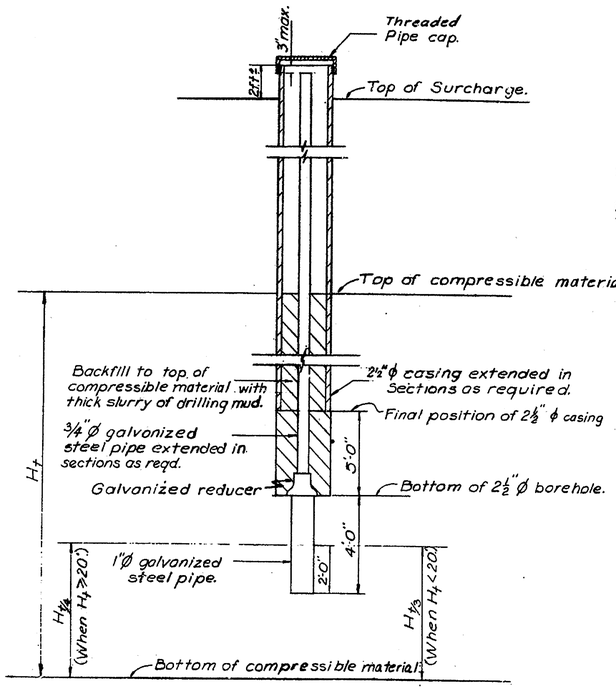

TYPE S_P SETTLEMENT POINT INSTALLATION

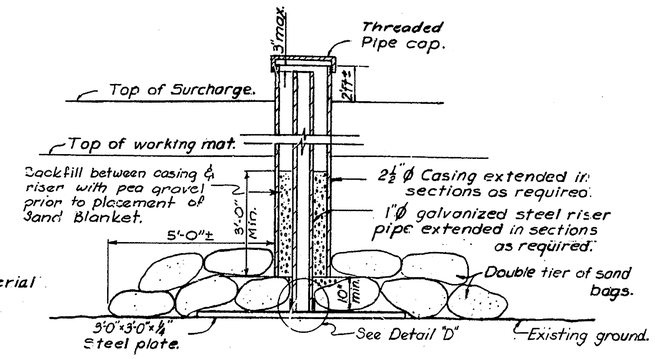

SETTLEMEMENT PLATE TYPE S

(PLACED ON EXISTING GROUND)

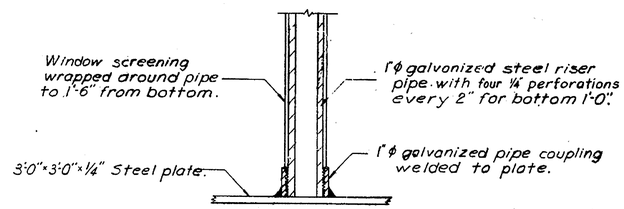

DETAIL D

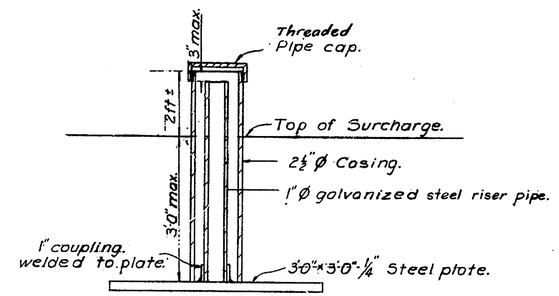

SETTLEMENT PLATE TYPE S-1

Note: Exact locations to be determined in field.

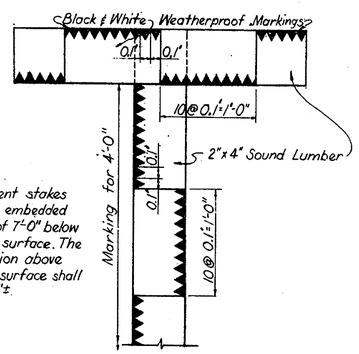

Note:
Alignment stakes shall be embedded a min. of 1'-0" below ground surface. The projection above ground surface shall be 8'-0"±.

ALIGNMENT STAKE

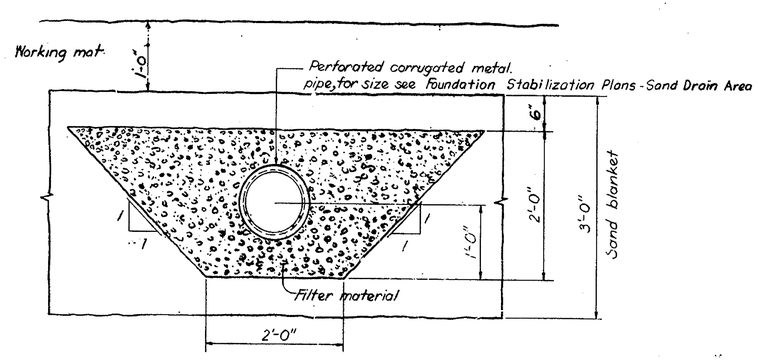

TYPICAL SAND BLANKET PERFORATED COLLECTOR PIPE DETAIL

Note: Exact locations & Invert elevations to be determined in field

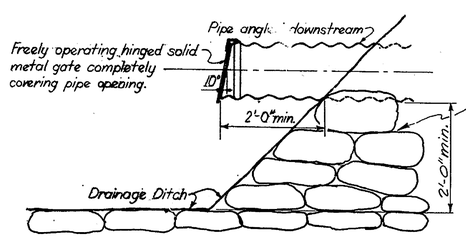

Protect with gravel or sand-cement bags to prevent erosion. Total 50 bags per pipe outlet is required. Cost shall be included in the lump sum for Sand Blanket Collector Pipes.

PIPE OUTLET DETAIL

NOTES

1. Control devices are located as shown on Sheet 7. Type S-1 settlement plates are to be located in the field as directed by the Engineer.
2. All control devices shall be conspicuously painted with their respective code as described in Note 6.
3. At each piezometer location the top foot of the polyethylene riser tube extending from the top of the porous stone shall be marked in such a way as to distinguish it from the tube extending from the bottom of the porous stone.
4. All control device groups and Type W_T water observation wells shall be installed on the existing ground surface prior to placing any fill except as noted below.
5. Alignment stakes located outside the berm areas shall be installed prior to placing common borrow fill. Alignment stakes located on the berms shall be installed immediately after the berms have reached their full height and before the embankment fill is more than 4 ft. above the top of the berm.
6. Numbering System for Control Devices:

S - C 8.5 L

Indicates device location

Position in Relation to Base Line
R = Right of Base Line
L = Left of Base Line
No Letter = on Base Line

Roadway
A indicates Interchange Ramp A
B " " " B
C " " " C
D " " " D
V " Relocated 12th St.
No letter indicates I-495

Station Number
Ex: 8.5 = Sta.8+50
8 = Sta.8+00
428 = Sta.428+00
409.5 = Sta.409+50

Type Device
S - Designates Type S settlement plates
S_P - " Type S_P " points
P_T - " Type P_T piezometers
P_M - " Type P_M "
P_B - " Type P_B "
P_L - " Type P_L "
W_L - " Type W_L water observation wells
W_T - " Type W_T " " "
A - " Alignment stakes

DELAWARE
STATE HIGHWAY DEPARTMENT

INTERSTATE ROUTE I-495

CONTROL DEVICES AND COLLECTOR SYSTEM DETAILS - SAND DRAIN AREA

J. E. GREINER CO.
MORAN, PROCTOR, MUESER & RUTLEDGE
CONSULTING ENGINEERS

D.T.J.S.
T.L.G.&L.G.J.R.
C.S.L.T.

SCALE N.T.S.
DATE

DO NOT CONSIDER ANY OF THE DATA ON THE EXISTING STRUCTURE SUPPLIED IN THESE DRAWINGS AS POSITIVE REPRESENTATIONS OF ANY OF THE CONDITIONS THAT MAY BE ENCOUNTERED IN THE FIELD FOR T201107402.

COUNTY	CONTRACT	P. B. A. REF. NO.	STATE	FED. AID PROJECT NO.	FISCAL YEAR	SHEET NO.	TOTAL SHEETS
NEW CASTLE	68-07-005	2	DEL.	I-495-3(17)19		7	41

(1) Extended Collector Pipes thru revised working mat and sand blanket area 9/26/72 DS
(2) Added note concerning Construction Limits and type for north end of project. WSS 1/12/70

"AS BUILTS" IN RED 9-25-72 D.R.M.

LEGEND

- + Alignment stake. (Place at even stations, unless shown otherwise).
- □ Settlement plate (Type S).
- (F) Control Device Group Letter designates Group Type.
- ==== Sand Blanket Perforated Collector Pipe
- Edge of water of existing creeks or ponds and shore lines (approx)
- Original Borings (See Information Drawings)

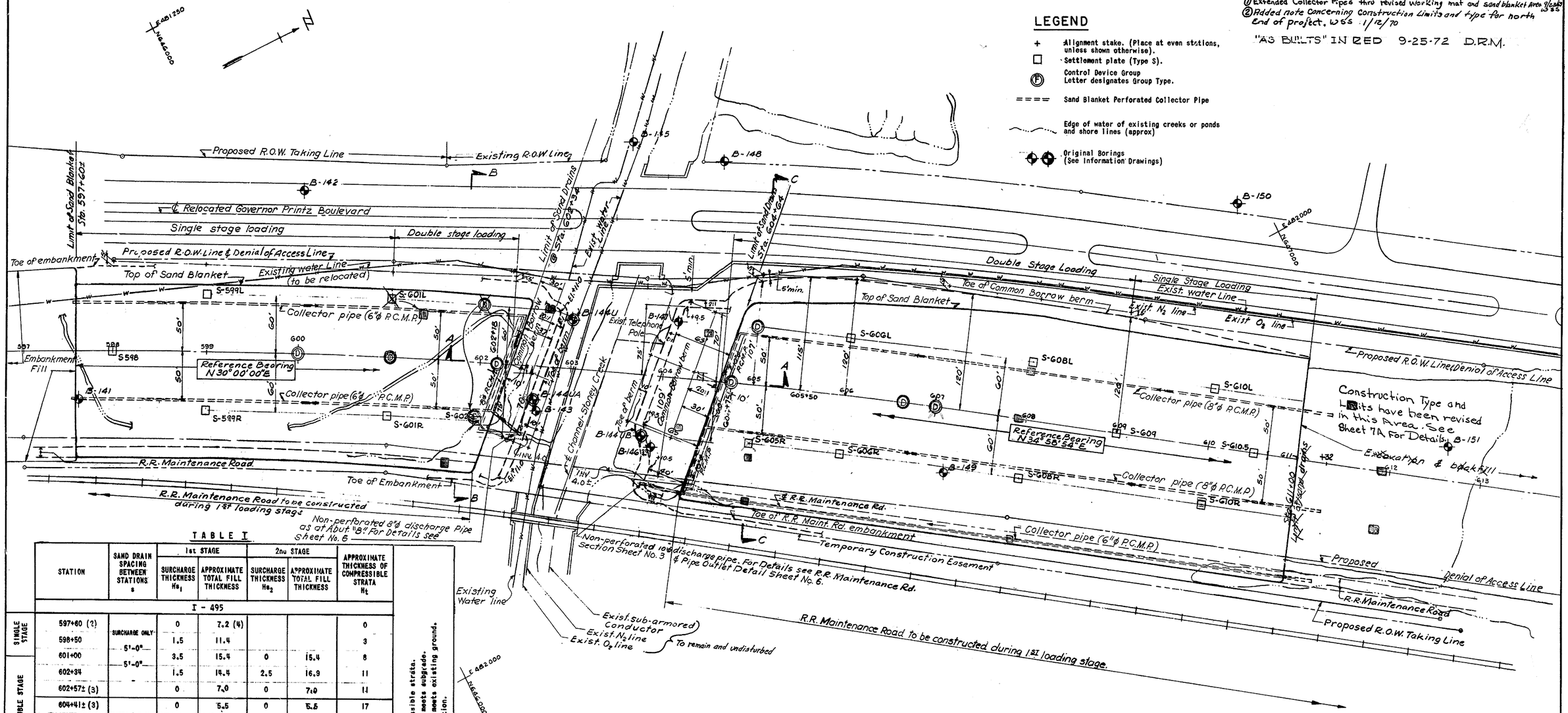

TABLE I

	STATION	SAND DRAIN SPACING BETWEEN STATIONS s	1st STAGE SURCHARGE THICKNESS He_1	1st STAGE APPROXIMATE TOTAL FILL THICKNESS	2nd STAGE SURCHARGE THICKNESS He_2	2nd STAGE APPROXIMATE TOTAL FILL THICKNESS	APPROXIMATE THICKNESS OF COMPRESSIBLE STRATA H_t
	I - 495						
SINGLE STAGE	597+60 (2)	SURCHARGE ONLY	0	7.2 (4)			0
	598+50	5'-0"	1.5	11.4			3
	601+00	5'-0"	3.5	15.4	0	15.4	8
DOUBLE STAGE	602+34	-	1.5	14.4	2.5	16.9	11
	602+57± (3)		0	7.0	0	7.0	14
	604+41± (3)		0	5.5	0	5.5	17
	604+64	5'-0"	3.5	14.8	3.5	18.3	17
	608+00	5'-0"	3.5	14.1	3.5	17.6	16
SINGLE STAGE	609+00	5'-0"	4.0	13.6	-0- 3.0	-14.5- 16.0	13
	611+00		4.0	15.4	0		5 (1)
	611+11± (2)	-	-0- 4.0	9.0	0		-
	612+30±	RAILROAD MAINTENANCE ROAD					
SINGLE STAGE	597+60 (2)	SURCHARGE ONLY	0	5.0 (4)			0
	598+50	5'-0"	1.5	9.0			3
	601+00	5'-0"	4.0	11.5			8
	602+00	-	4.0	14.3			10
	602+20± (3)		0	6.8			11
	604+11± (3)	-	0	5.8			16
	604+30	5'-0"	5.0	15.0			17
	607+00	SURCHARGE ONLY	3.0	6.2			17
	611+00	-	3.0	7.5			5 (1)
	611+08± (2)		0				-

NOTES
(1) Limit of complete excavation of compressible strata.
(2) Station at which toe of surcharge fill meets subgrade.
(3) Station at which toe of surcharge fill meets existing ground.
(4) Fill thickness given to subgrade elevation.

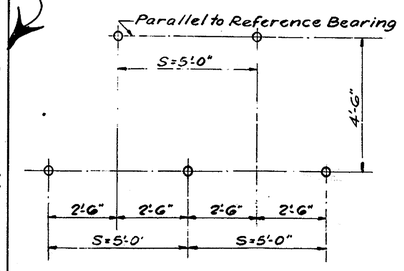

TYPICAL SAND DRAIN SPACING

NOTES

1. The spacing between the last two sand drains shall be greater than one-half & equal or less than the normal spacing.
2. The sand drain spacing as given in Table I is parallel to the Reference Bearing. For spacing perpendicular to the Reference Bearing see Typical Sand Drain Spacing this sheet.
3. The approximate thickness of compressible material as given in Table I is given for information only
4. For additional notes, see Sheet 2 & 3.
5. For sections see sheet 4.
6. See sheet 7A for details 611+00 to 613+00

DELAWARE
STATE HIGHWAY DEPARTMENT

INTERSTATE ROUTE I-495

FOUNDATION STABILIZATION PLAN
SAND DRAIN AREA

J. E. GREINER CO.
MORAN, PROCTOR, MUESER & RUTLEDGE
CONSULTING ENGINEERS

D. T. J. S.
T. L. S.
C. S. L. T.

SCALE 1" = 50'

DATE

OGILVIE PRESS, INC. — D-127 4348

DO NOT CONSIDER ANY OF THE DATA ON THE EXISTING STRUCTURE SUPPLIED IN THESE DRAWINGS AS POSITIVE REPRESENTATIONS OF ANY OF THE CONDITIONS THAT MAY BE ENCOUNTERED IN THE FIELD FOR T201107402.

COUNTY	CONTRACT	P.R.L. DW. NO.	STATE	FED. AID PROJ. NO.	FISCAL YEAR	SHEET NO.	TOTAL SHEETS
NEW CASTLE	68-07-005	2	DEL.	I-495-3(17)9		7A	41

QUANTITIES

Item	Quantity
12"φ Sand Drains	9,538 LF
Muck Excavation	8,260 CY
Special Fill	8,260 CY
Sand Blanket & W.M.	2,189 CY
Prep. O.G. for Sand Blanket	1,643 SY
8" P.C.M.P. Collector Pipes	166 LF
Type "S" Settlement Plates	4
Common Borrow	13,000 CY

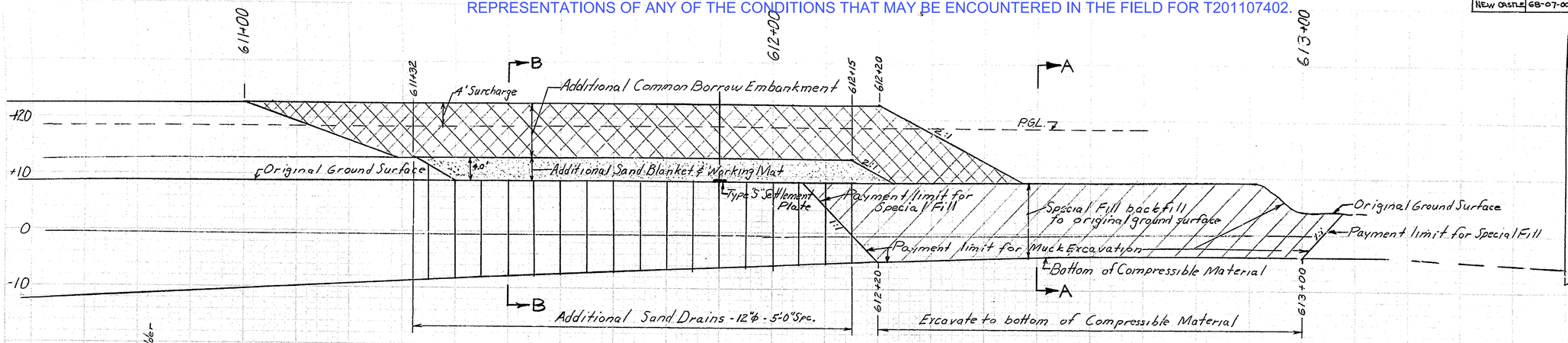

PROFILE ALONG BASE LINE

Scale: 1" = 10'-0"

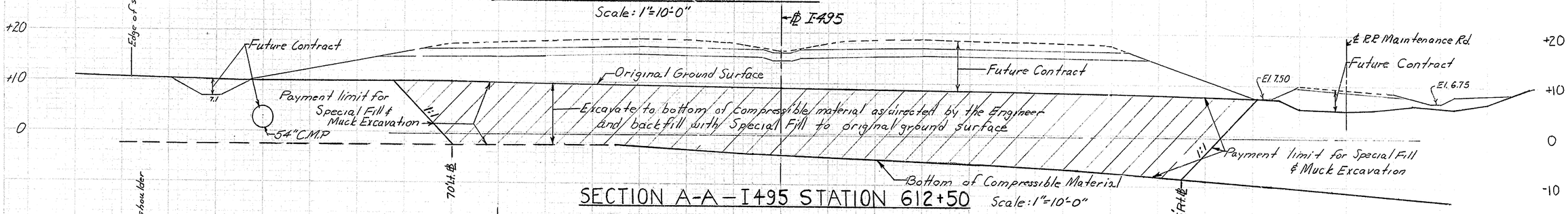

SECTION A-A – I495 STATION 612+50

Scale: 1" = 10'-0"

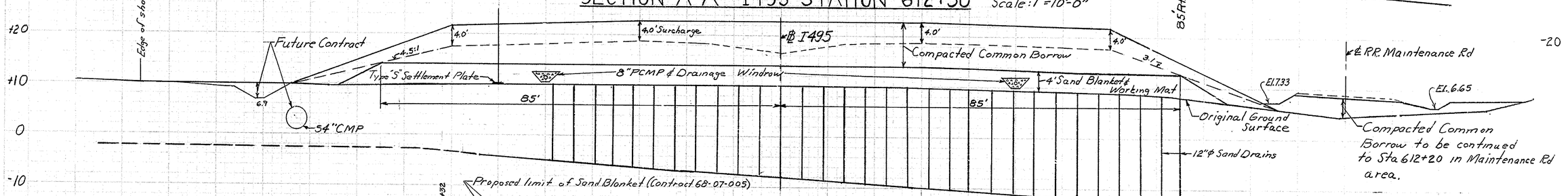

SECTION B-B-I495 STATION 611+50

Scale: 1" = 10'-0"

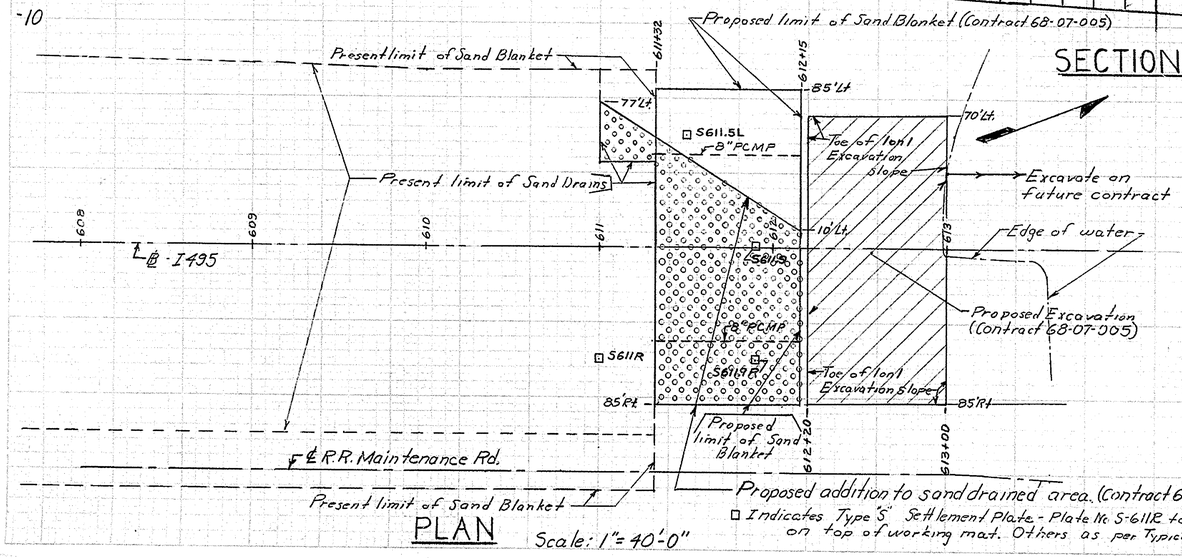

PLAN

Scale: 1" = 40'-0"

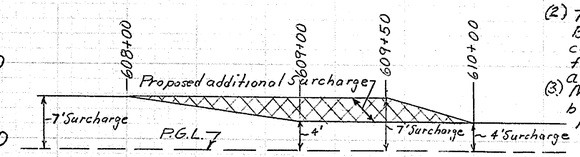

PROPOSED ADDITIONAL SURCHARGE
I495 STATION 608+00 TO 610+00

NOTES:

(1) A minimum distance of 45 ft is to be maintained between the sand blanket and the toe of the excavation until such time that the special fill has been placed south of Sta. 612+40.

(2) The item Preparation of Original Ground for Sand Blanket is to include the removal of possible contamination due to muck excavation operations from the surface of the previously driven sand drains and the removal of any underground tanks within the area.

(3) Muck excavation and special fill operations are to be completed prior to placing common borrow north of Sta. 611+30.

ADDITION TO CONTRACT 68-07-005

Designed & Drawn By T.J. Schmidt
Date Jan. 7, 1970

DWG. NO. A-1

DO NOT CONSIDER ANY OF THE DATA ON THE EXISTING STRUCTURE SUPPLIED IN THESE DRAWINGS AS POSITIVE REPRESENTATIONS OF ANY OF THE CONDITIONS THAT MAY BE ENCOUNTERED IN THE FIELD FOR T201107402.

COUNTY	CONTRACT	F.A.P. A. REG. NO.	STATE	FED. AID PROJECT NO.	FISCAL YEAR	SHEET NO.	TOTAL SHEETS
NEW CASTLE	68-07-005	2	DEL.	I-495-3(17)19		8	41

"AS BUILT" IN RED 9-25-72 D.R.M.

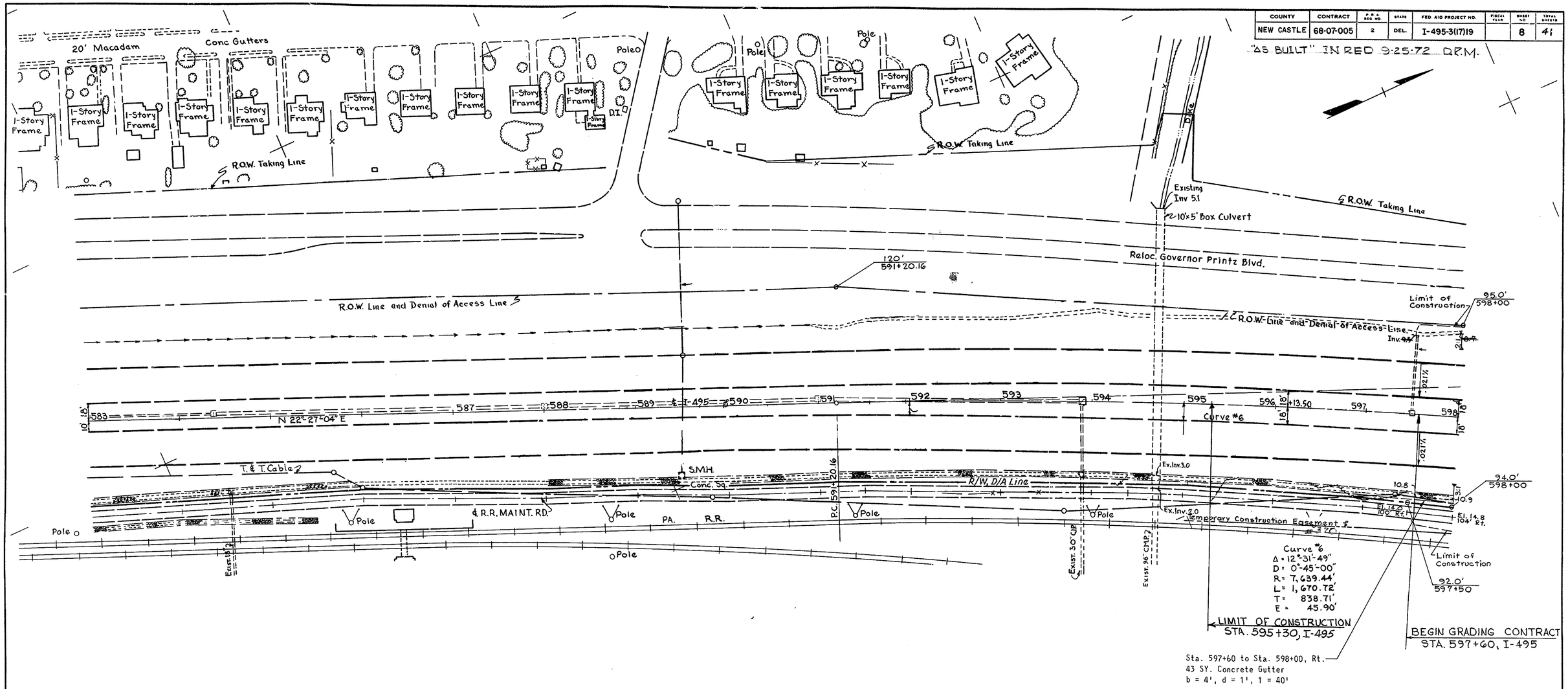

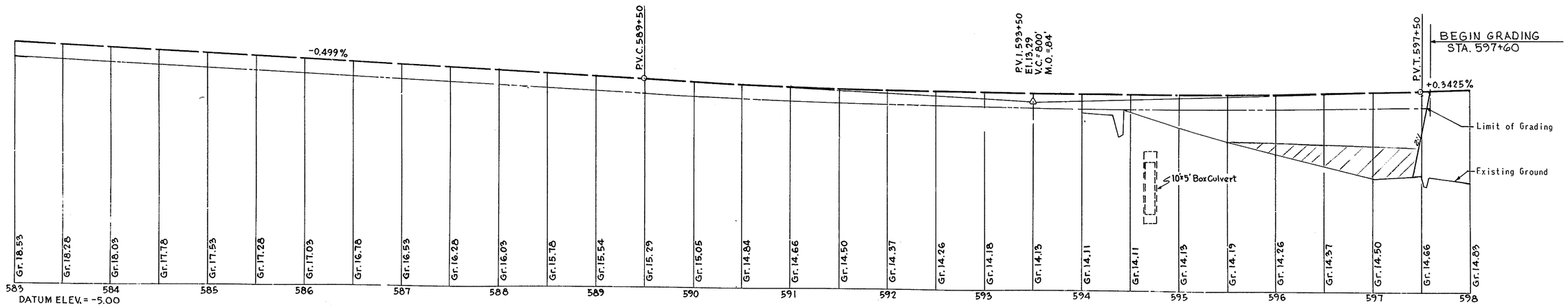

DO NOT CONSIDER ANY OF THE DATA ON THE EXISTING STRUCTURE SUPPLIED IN THESE DRAWINGS AS POSITIVE REPRESENTATIONS OF ANY OF THE CONDITIONS THAT MAY BE ENCOUNTERED IN THE FIELD FOR T201107402.

COUNTY	CONTRACT	F.A.P. REG. NO.	STATE	FED. AID PROJECT NO.	FISCAL YEAR	SHEET NO	TOTAL SHEETS
NEW CASTLE	E8-07-005	2	DEL.	I-495-3(17)19		9	41

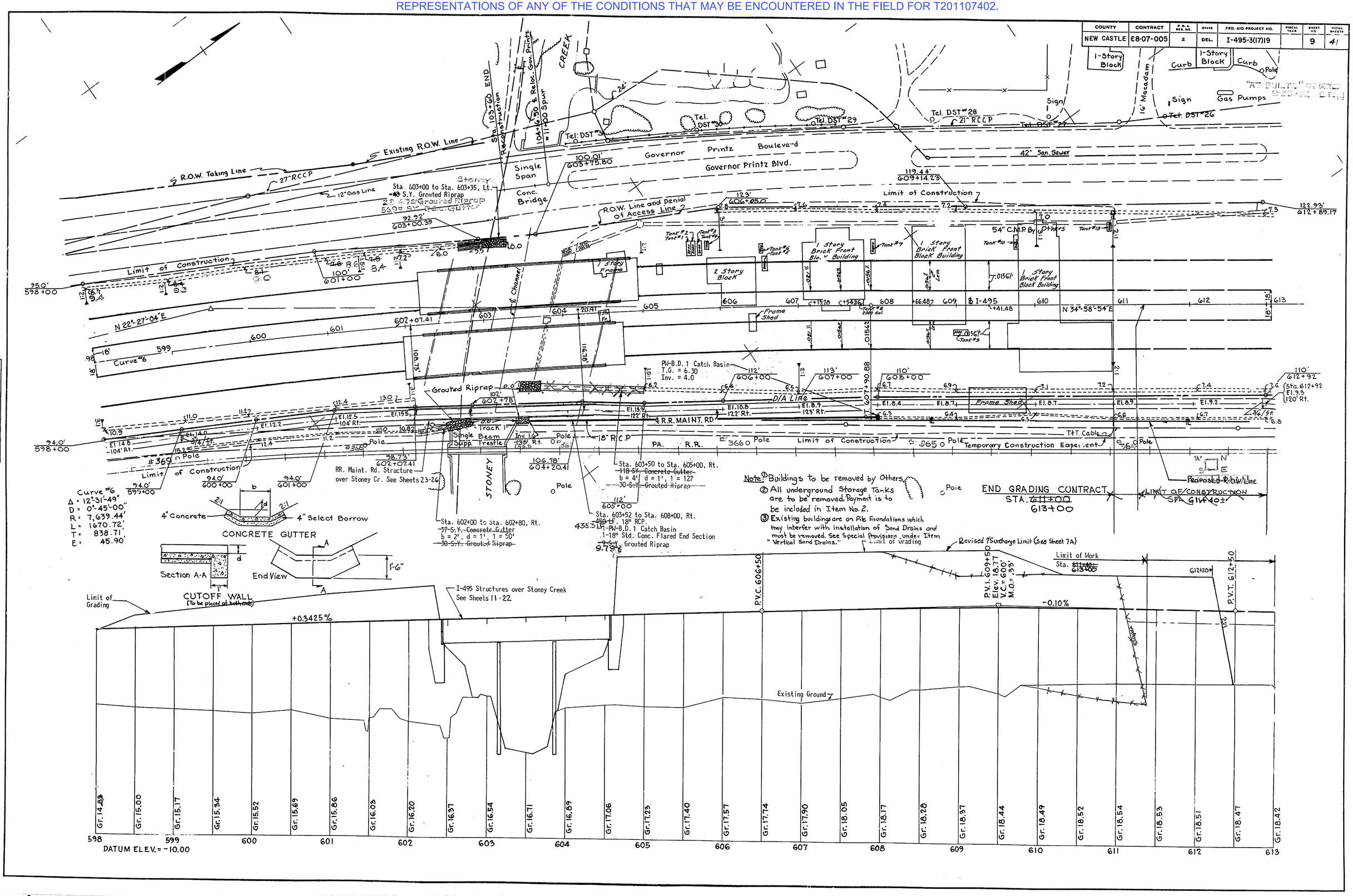

DO NOT CONSIDER ANY OF THE DATA ON THE EXISTING STRUCTURE SUPPLIED IN THESE DRAWINGS AS POSITIVE REPRESENTATIONS OF ANY OF THE CONDITIONS THAT MAY BE ENCOUNTERED IN THE FIELD FOR T201107402

COUNTY	CONTRACT	P. R. A. REG. NO.	STATE	FED. AID PROJECT NO.	SHEET NO.	TOTAL SHEETS
NEW CASTLE	68-07-005	2	DEL.	I-495-3(17)19	10	41

BORROW AREA

PREL. TRACING_____ DESIGN_____ CHKD._____

REVISIONS

① Revised Cut limits WSS 1/12/70
② Revised Cut Limits W.S.S. 1-16-70 & 1-29-70

B.M.#12 Elev. 88.24
Spike in Base of 27" Walnut
209' Lt. of I-495 Sta. 524+85.

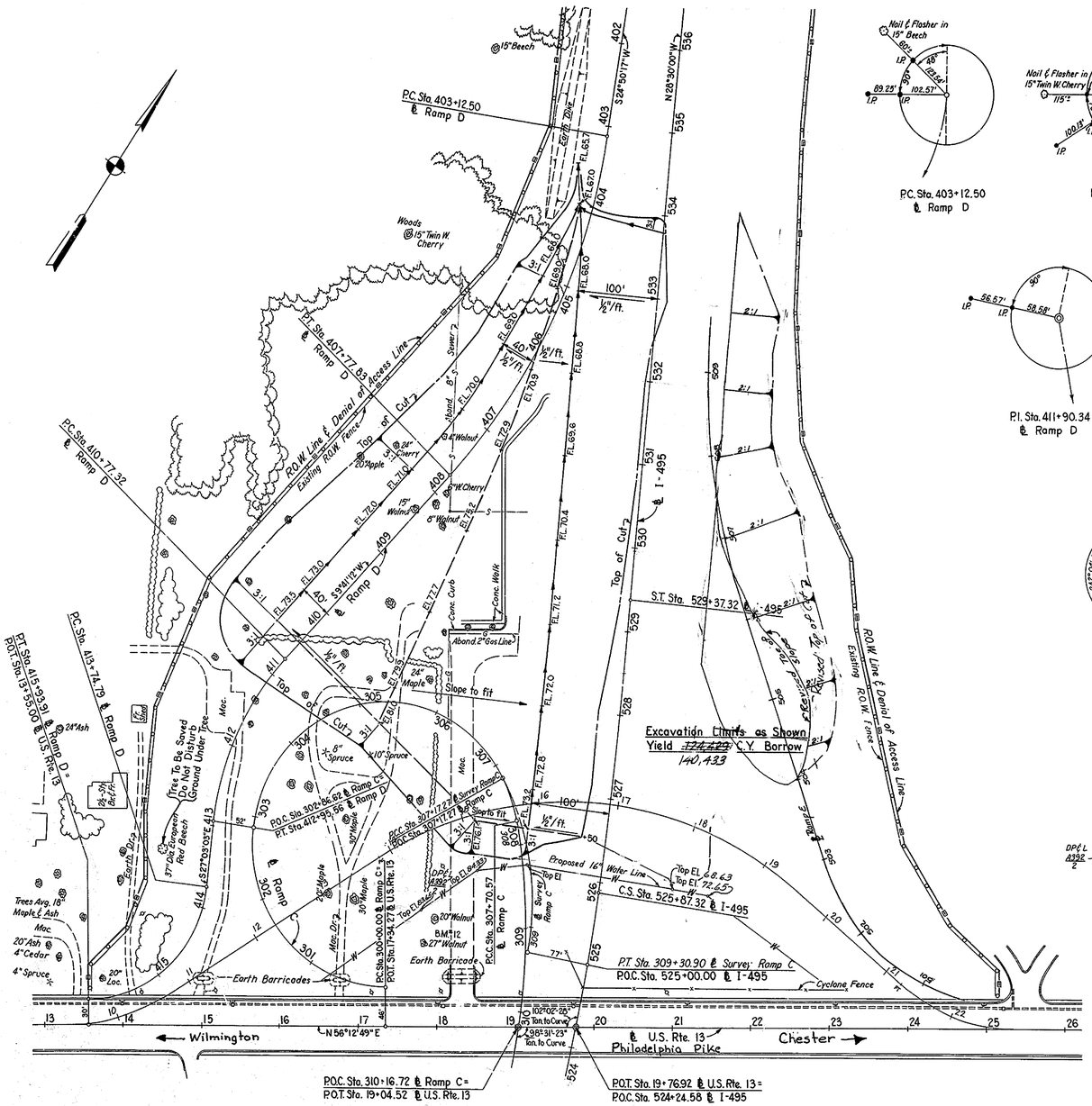

SCALE 1" = 80'

I-495

P.I. Sta. 514+39.79

Δr = 58°43'55", Lt.	Δc = 55°13'55", Lt.
Ti = 1,614.07' (P.C.C. to P.I.)	Dc = 2°00'00"
Tz = 1,785.88' (P.I. to S.T.)	Rc = 2,864.79'
θs = 3°30'00"	Tc = 1,498.69'
Ls = 350.00'	Lc = 2,761.60'
L.T. = 233.38'	Ec = 368.34'
S.T. = 116.71'	

Ramp C

℄ Survey	℄ Const.
P.I. Sta. 308+28.29	P.I. Sta. 309+21.62
Δ = 38°27'15", Rt.	Δ = 22°22'11", Rt.
D = 18°00'00"	D = 7°30'00"
R = 318.31'	R = 763.94'
T = 111.02'	T = 151.05'
L = 213.63'	L = 298.26'
E = 18.80'	E = 14.79'

Ramp D

P.I. Sta. 405+49.89	P.I. Sta. 411+90.34	P.I. Sta. 415+08.81
Δ = 34° 31' 29", Rt.	Δ = 36°44'15", Lt.	Δ = 83°15'52", Rt.
D = 7° 30'00"	D = 16° 50'00"	D = 38°00'00"
R = 763.94'	R = 340.37'	R = 150.75'
T = 237.39'	T = 113.02'	T = 134.02'
L = 460.33'	L = 218.24'	L = 219.12'
E = 36.03'	E = 18.27'	E = 50.95'

Note:
Existing topographic features may be incomplete and are shown only in the area of the proposed excavation and immediately adjacent thereto.

DIETZGEN Philadelphia 135 Imperial Tracing Cloth

DO NOT CONSIDER ANY OF THE DATA ON THE EXISTING STRUCTURE SUPPLIED IN THESE DRAWINGS AS POSITIVE REPRESENTATIONS OF ANY OF THE CONDITIONS THAT MAY BE ENCOUNTERED IN THE FIELD FOR T201107402.

COUNTY	CONTRACT	P. R. A. REG. NO.	STATE	FED. AID PROJECT NO.	FISCAL YEAR	SHEET NO.	TOTAL SHEETS
NEW CASTLE	68-07-005	2	DEL.	I-495-3(17)19		11	41

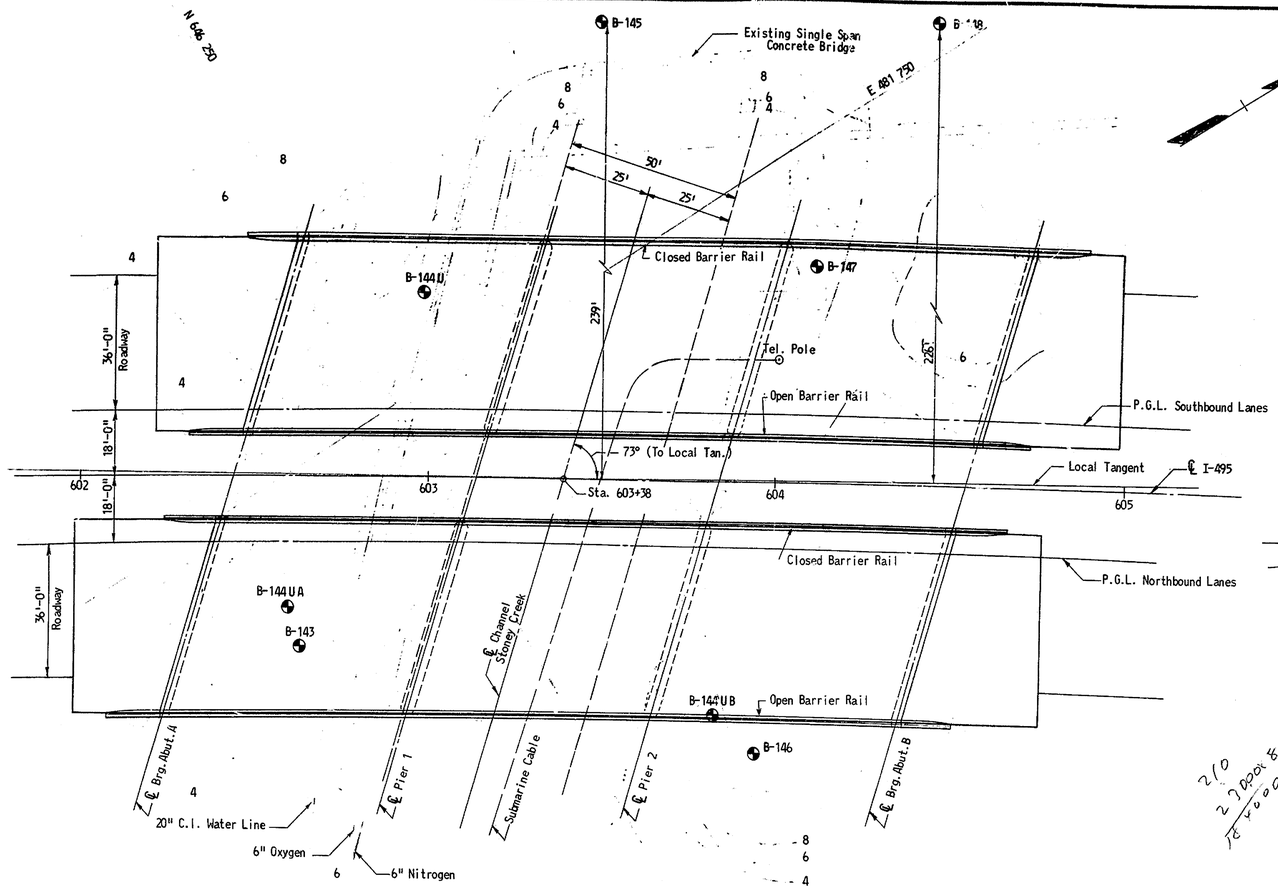

PLAN
1" = 20'

CURVE DATA
Δ = 12°-31'-49"
D = 0°-45'-00"
R = 7,639.44'
L = 1,670.72'
T = 838.71'
E = 45.90'
S.E. = 0.021'/ft.

NOTES:

Specifications:
Construction - State of Delaware State Highway Department Standard Specification, June 1, 1965.
Design - A.A.S.H.O. Standard Specifications for Highway Bridges, 1961, with interim Specifications, 1961, 1962, 1964.

Dead Load: Concrete - 150 lbs. per cu. ft., Future Wearing Surface 25lbs.per Sq.ft.
Live Load: H20-S16-44 Modified for Interstate
Unit Stresses: Reinforcing Steel A-615 Grade 40 f_s = 20,000 p.s.i.
Concrete f'c = 3,000 p.s.i., fc = 1,200 p.s.i.
Structural Steel (A36) f_s = 20,000 p.s.i.
Superstructure: Concrete Deck - Continuous Steel Beam Construction. Composite Action under Live Load
Borings: Locations shown thus: B-145.
General Notes: See Maintenance Road Bridge, Sheet No. 23

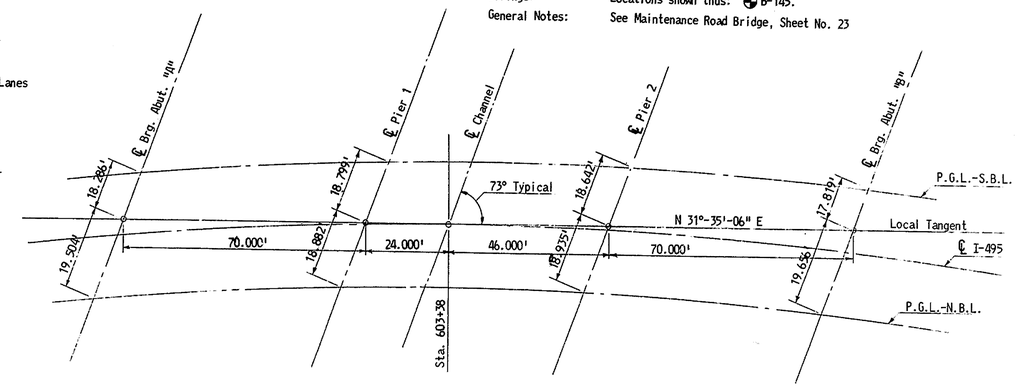

STAKE-OUT DIAGRAM
Not to Scale

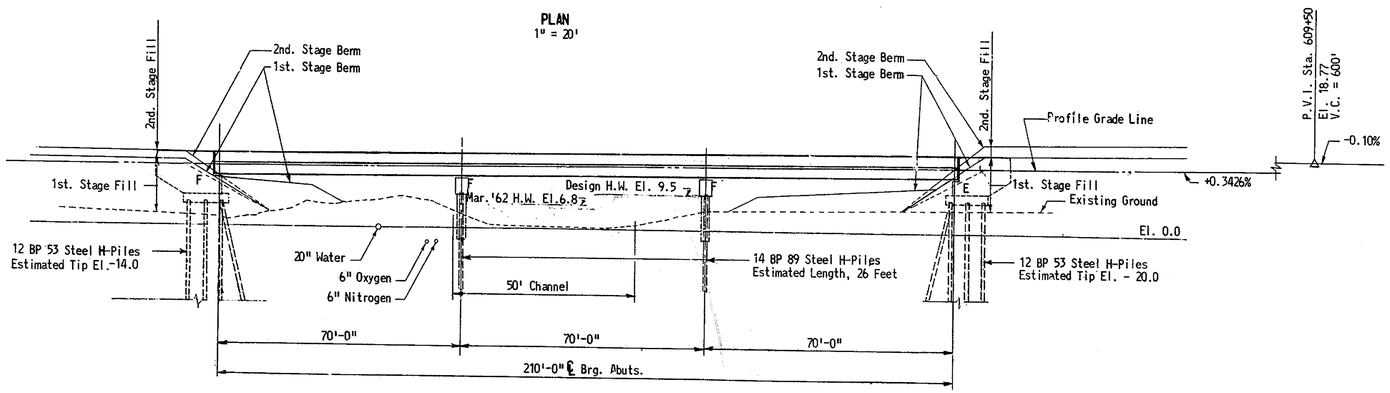

ELEVATION
1" = 20'

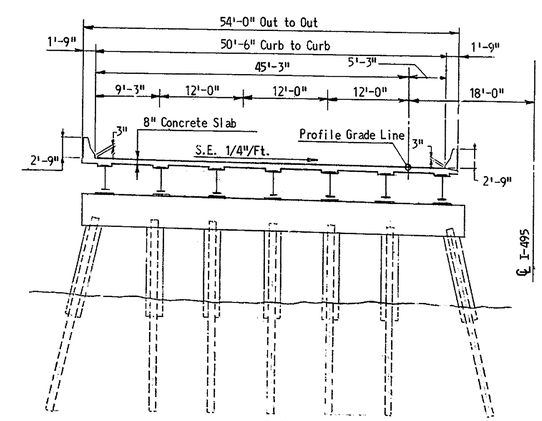

SECTION
1" = 10'

DELAWARE
STATE HIGHWAY DEPARTMENT

INTERSTATE ROUTE I-495

I-495 OVER STONEY CREEK
SITE PLAN

J. E. GREINER CO.
MORAN, PROCTOR, MUESER & RUTLEDGE
CONSULTING ENGINEERS

D. C. P. G.
T. T. G.
C. K. K. S.

SCALE: As Shown
DATE

APPROVED BY: John H. Duhles 1/27/09
BRIDGE ENGINEER

DO NOT CONSIDER ANY OF THE DATA ON THE EXISTING STRUCTURE SUPPLIED IN THESE DRAWINGS AS POSITIVE REPRESENTATIONS OF ANY OF THE CONDITIONS THAT MAY BE ENCOUNTERED IN THE FIELD FOR T201107402.

COUNTY	CONTRACT	F. A. A. REG. NO.	STATE	FED. AID PROJECT NO.	FISCAL YEAR	SHEET NO.	TOTAL SHEETS
NEW CASTLE	68-07-005	2	DEL.	I-495-3(17)19		12	41

"AS BUILTS" IN RED 9-26-72 DRM

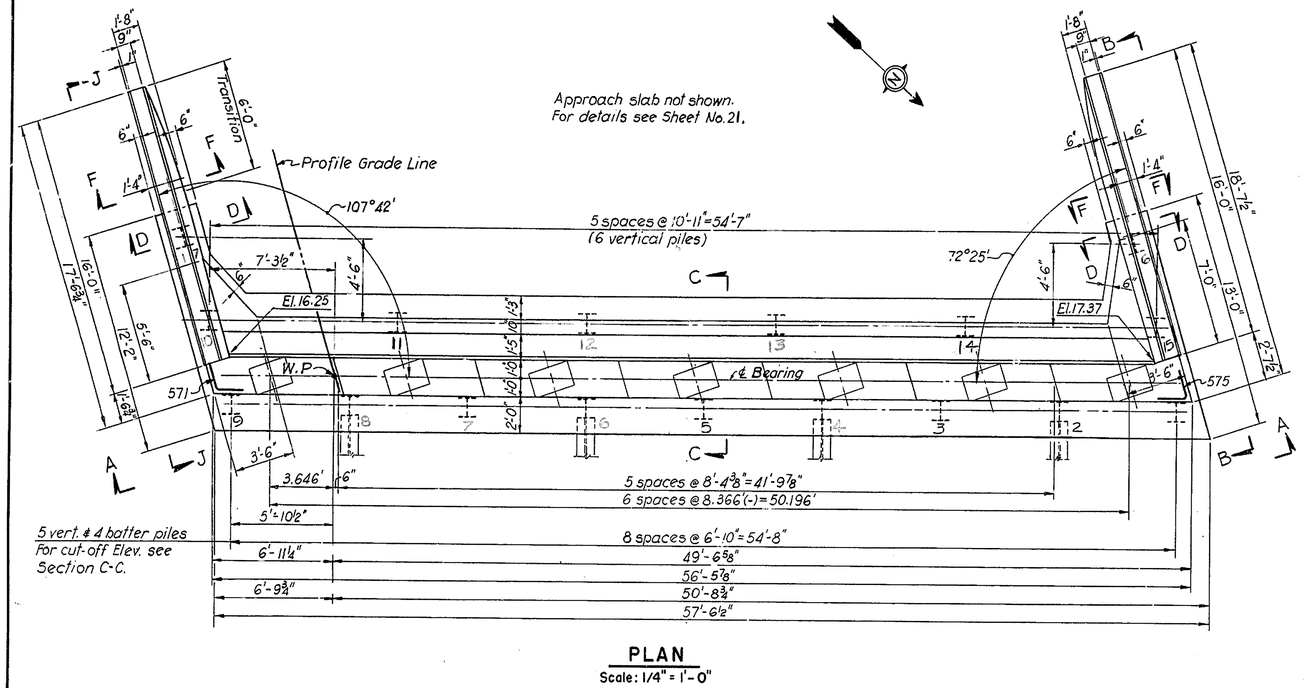

PLAN
Scale: 1/4" = 1'-0"

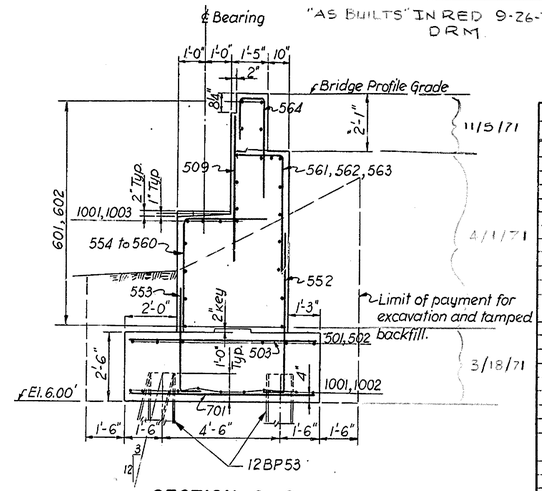

SECTION C-C
Scale: 3/8" = 1'-0"

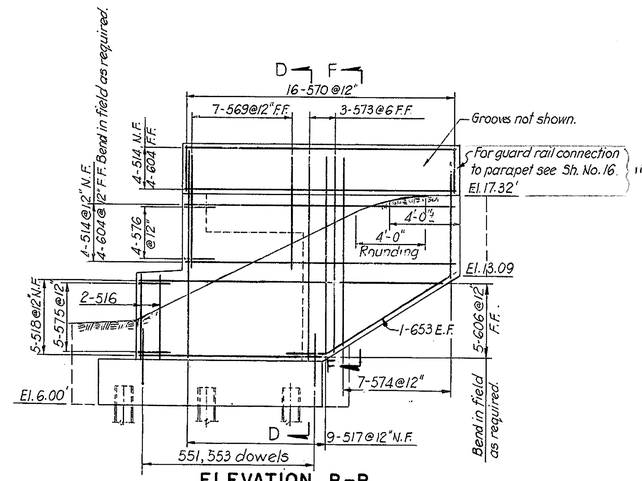

ELEVATION B-B
Scale: 1/4" = 1'-0"

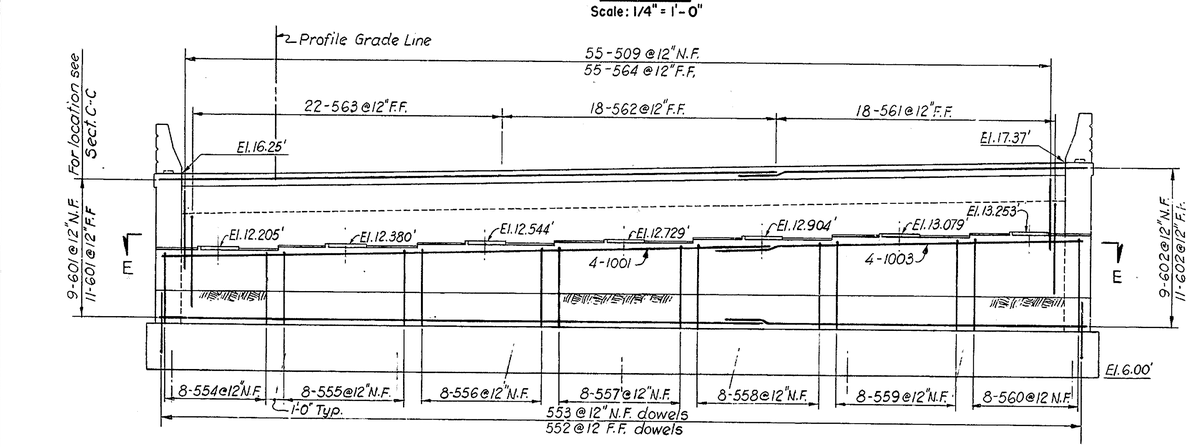

ELEVATION A-A
Scale: 1/4" = 1'-0"

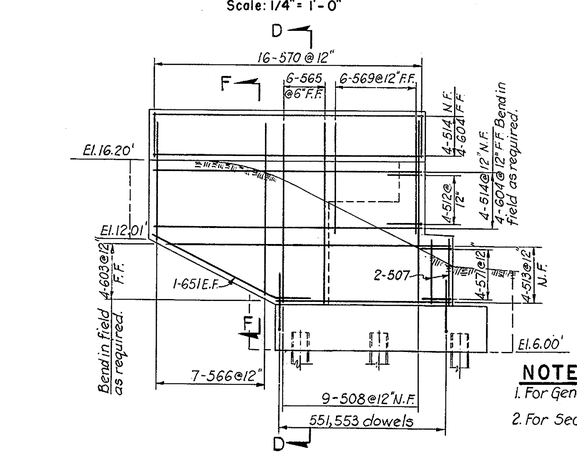

ELEVATION J-J
Scale: 1/4" = 1'-0"

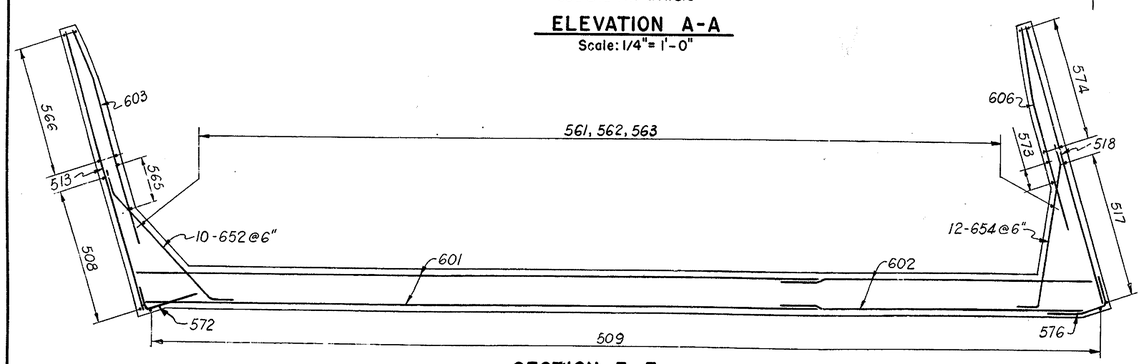

SECTION E-E
Scale: 1/4" = 1'-0"

REINFORCING SCHEDULE

BENT BARS (All dimensions are out to out)

MARK	NO.	SIZE	LENGTH	TYPE	A	B	C	D	E	F	G	REMARKS
551	18	#5	5-3	I	1-6	3-9						
552	58		5-11	I	0-9	5-2						
553	69		4-6	I	0-9	3-9						
554	8		6-10	I	3-6	3-4						
555	8		7-0	I	3-6	3-6						
556	8		7-2	I	3-6	3-8						
557	8		7-5	I	3-6	3-11						
558	8		7-7	I	3-6	4-1						
559	8		7-9	I	3-6	4-3						
560	8		7-11	I	3-6	4-5						
561	18		6-11	I	1-9	5-2						
562	18		6-7	I	1-9	4-10						
563	22		6-3	I	1-9	4-6						
564	55		6-10	I	2-3	0-11	3-8					
565	6		10-0	II	8-0	2-0				1-2	1-8	
566	7		13-0 to 19-9	V	1-0 to 2-3	5-3 to 7-6	0-9 to 1-3	6-0 to 9-0		0-10 to 1-8	0-7 to 1-2	Equal increment on sides shown.
569	13		6-0	II	4-0	2-0				1-2	1-8	
570	32		5-1	VI	See	diagram						
571	4		3-2	II	1-7	1-7				1-6	0-5	
572	4		5-7	I	1-7	4-0						
573	3		11-0	II	9-0	2-0				1-2	1-8	
574	7		13-3 to 21-0	V	1-0 to 2-0	5-6 to 8-3	0-9 to 1-3	6-0 to 9-6		0-10 to 1-8	0-7 to 1-2	Equal increment on sides shown
575	5		3-2	III	1-7	1-7				1-6	0-5	
576	4	#5	4-8	IV	1-6	1-7	1-7	1-7		0-6	1-6	
651	2	#6	9-9	II	7-10	1-11				0-9	1-9	
652	10	#6	10-0	IV	8-0	1-0	1-0	0-8	0-8	0-8	0-8	
653	2	#6	10-7	II	8-8	1-11				0-10	1-8	
654	12	#6	9-9	IV	7-9	1-0	1-0	0-5	0-10	1-0	0-2	

11/11/71

STRAIGHT BARS

MARK	NO.	SIZE	LENGTH	REMARKS
501	6	#5	40-0	
502	6		18-9	
503	37		7-0	
504	2		6-6	
505	2		11-8	
506	1		12-6	
507	2		3-6	
508	9		9-4	
509	55		5-0	
513	4		10-0 to 16-0	Increment 2'-0"
514	16		15-8	
516	2		4-7	
517	9		10-5	
518	5		10-9 to 17-5	Increment 1'-8"
519	1	#5	8-6	

MARK	NO.	SIZE	LENGTH	REMARKS
601	20	#6	40-0	
602	20		18-9	
603	4		5-0 to 11-0	Increment 2'-0"
604	16		15-8	
606	5	#6	3-2 to 9-10	Increment 1'-8"
701	74	#7	7-0	
702	6	#7	6-6	
703	2	#7	11-8	
704	1	#7	12-6	
705	1	#7	8-6	
1001	13	#10	40-0	
1002	9	#10	20-4	
1003	4	#10	19-5	

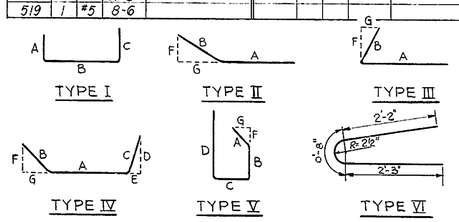

NOTES:
1. For General Notes see Sheet No. 23.
2. For Sections D-D & F-F see Sh. No. 16.

J. E. GREINER CO.
MORAN, PROCTOR, MUESER & RUTLEDGE
CONSULTING ENGINEERS

DELAWARE
STATE HIGHWAY DEPARTMENT

INTERSTATE ROUTE I-495

I-495 OVER STONEY CREEK
ABUTMENT "A" SOUTHBOUND

D. W. W.
T. P. F.
C. N. W. K.

SCALE AS NOTED

DATE

APPROVED BY: John H. Dillon 1/27/62
BRIDGE ENGINEER

REVISIONS

DO NOT CONSIDER ANY OF THE DATA ON THE EXISTING STRUCTURE SUPPLIED IN THESE DRAWINGS AS POSITIVE REPRESENTATIONS OF ANY OF THE CONDITIONS THAT MAY BE ENCOUNTERED IN THE FIELD FOR T201107402

"AS BUILTS" IN RED 9-26-72 D.R.M.

COUNTY	CONTRACT	P.R.A. ENG. NO.	STATE	FED. AID PROJECT NO.	FISCAL YEAR	SHEET NO.	TOTAL SHEETS
NEW CASTLE	68-07-005	2	DEL.	I-495-3(17)19		13	41

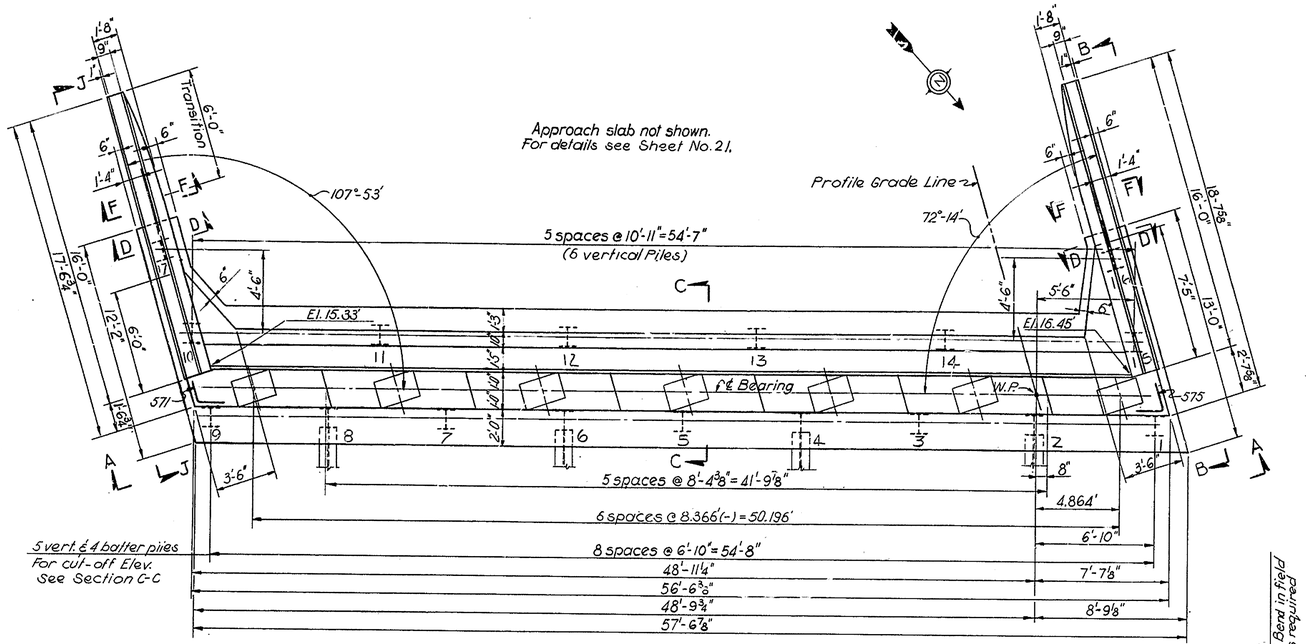

PLAN
Scale: 1/4" = 1'-0"

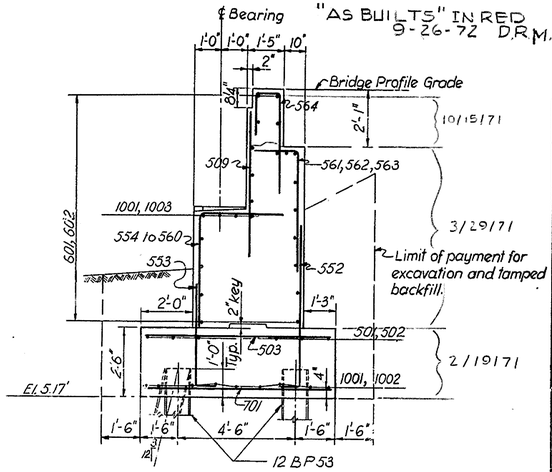

SECTION C-C
Scale: 3/8" = 1'-0"

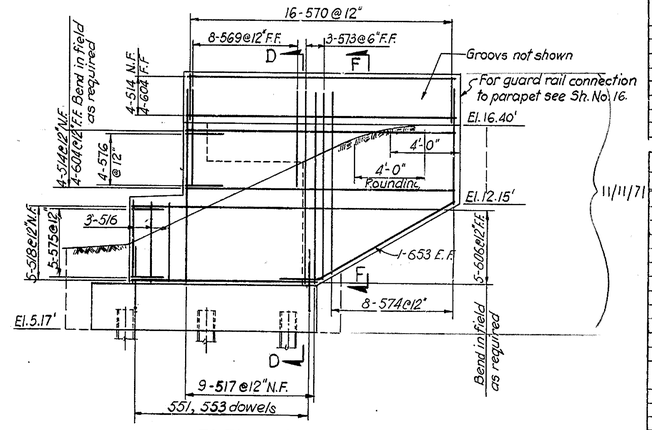

ELEVATION B-B
Scale: 1/4" = 1'-0"

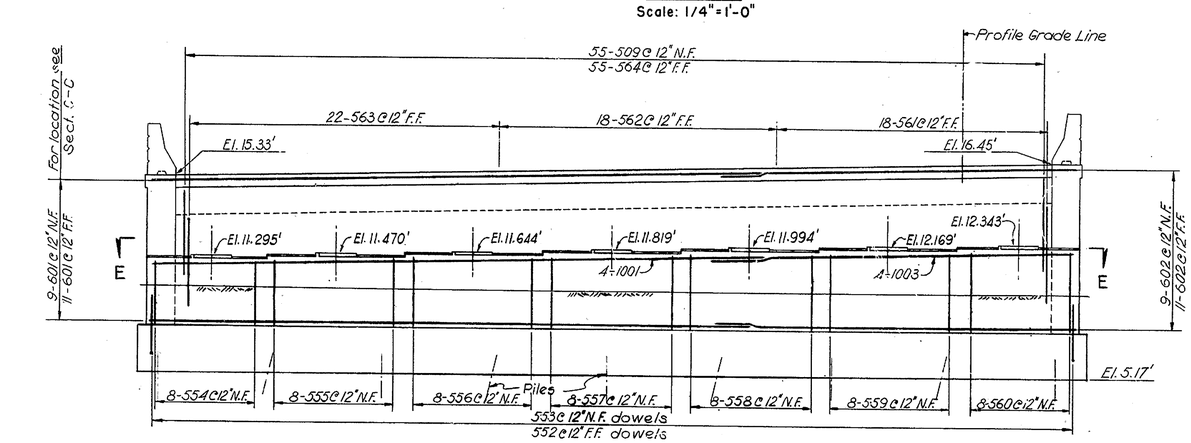

ELEVATION A-A
Scale: 1/4" = 1'-0"

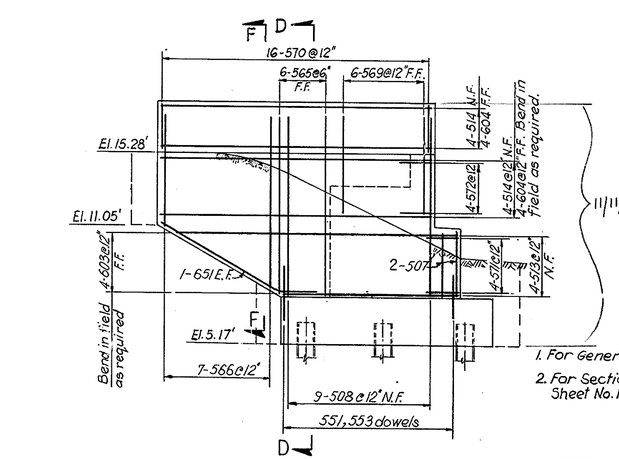

ELEVATION J-J
Scale: 1/4" = 1'-0"

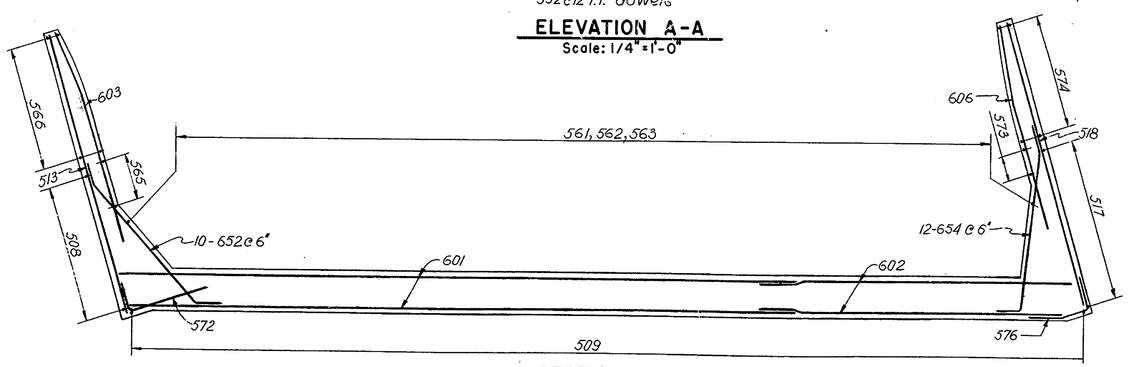

SECTION E-E
Scale: 1/4" = 1'-0"

REINFORCING SCHEDULE

BENT BARS (All dimensions are out to out)

MARK	NO.	SIZE	LENGTH	TYPE	A	B	C	D	E	F	G	REMARKS
551	18	#5	5-3	I	1-6	3-9						
552	58	#5	5-11	I	0-9	5-2						
553	69	#5	4-6	I	0-9	3-9						
554	8	#5	6-9	I	3-6	3-3						
555	8	#5	6-11	I	3-6	3-5						
556	8	#5	7-1	I	3-6	3-7						
557	8	#5	7-4	I	3-6	3-10						
558	8	#5	7-6	I	3-6	4-0						
559	8	#5	7-8	I	3-6	4-2						
560	8	#5	7-10	I	3-6	4-4						
561	18	#5	6-11	I	1-9	5-2						
562	18	#5	6-7	I	1-9	4-10						
563	22	#5	6-3	I	1-9	4-6						
564	55	#5	6-10	I	2-3	0-11	3-8					
565	6	#5	9-10	II	7-10	2-0				1-2	1-8	
566	7	#5	12-8 To 19-2	V	1-0 To 2-0	5-3 To 7-3	0-9 To 1-3	5-8 To 8-8		0-10 To 1-8	0-7 To 1-2	Equal increment on sides shown.
569	14	#5	6-0	II	4-0	2-0				1-2	1-8	
570	32	#5	5-1	VI								See diagram
571	4	#5	3-2	II	1-7	1-7				1-6	0-5	
572	4	#5	5-7	I	1-7	4-0						
573	3	#5	11-0	II	9-0	2-0				1-2	1-8	
574	8	#5	12-5 To 21-2	V	1-0 To 2-2	5-2 To 8-7	0-9 To 1-4	5-6 To 9-7		0-10 To 1-8	0-7 To 1-2	Equal increment on sides shown.
575	5	#5	3-2	III	1-7	1-7				1-6	0-5	
576	4	#5	4-8	IV	1-6	1-7	1-7			0-8	1-6	
651	2	#6	9-11	II	8-0	1-11				0-9	1-9	
652	10	#6	10-9	IV	8-9	1-0	1-0	0-8	0-8	0-8	0-8	
653	2	#6	10-11	II	9-0	1-11				0-11	1-8	
654	12	#6	10-6	IV	8-6	1-0	1-0	0-5	0-10	1-0	0-2	

STRAIGHT BARS

MARK	NO	SIZE	LENGTH	REMARKS	MARK	NO	SIZE	LENGTH	REMARKS
501	6	#5	40-0						
502	6	#5	18-10		601	20	#6	40-0	
503	37	#5	7-0		602	20	#6	18-2	
504	2	#5	6-6		603	4	#6	4 To 6 / 11 To 0	Increment 2'-2"
505	2	#5	11-8		604	16	#6	15-8	
506	1	#5	12-6						
507	2	#5	3-5						
508	9	#5	9-2		606	5	#6	2 To 7 / 9-11	Increment 1'-10"
509	55	#5	5-0						
					701	74	#7	7-0	
					702	6	#7	6-6	
513	4	#5	10-0 To 16-6	Increment 2'-2"	703	2	#7	11-8	
					704	1	#7	12-6	
514	16	#5	15-8		705	1	#7	8-6	
515	4	#5	15-4		1001	13	#10	40-0	
516	3	#5	4-6		1002	9	#10	20-5	
517	9	#5	10-3		1003	4	#10	19-4	
518	5	#5	10-5 To 17-9	Increment 1'-10"					
519	1	#5	8-6						

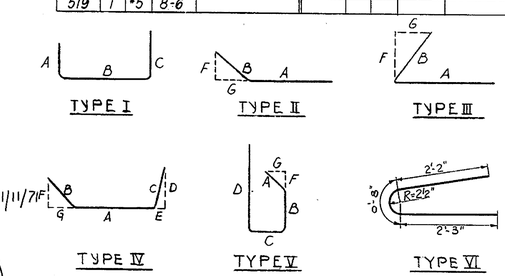

1. For General Notes see Sheet No 23
2. For Sections D-D & F-F see Sheet No. 16.

DELAWARE
STATE HIGHWAY DEPARTMENT

INTERSTATE ROUTE I-495

I-495 OVER STONEY CREEK ABUTMENT "A" NORTHBOUND

J. E. GREINER CO.
MORAN, PROCTOR, MUESER & RUTLEDGE
CONSULTING ENGINEERS

D. W.W.
T. J. L.
C. P. F.

SCALE AS NOTED
DATE

APPROVED BY: John M. Nichols 1/27/69
BRIDGE ENGINEER

DO NOT CONSIDER ANY OF THE DATA ON THE EXISTING STRUCTURE SUPPLIED IN THESE DRAWINGS AS POSITIVE REPRESENTATIONS OF ANY OF THE CONDITIONS THAT MAY BE ENCOUNTERED IN THE FIELD FOR T201107402.

COUNTY	CONTRACT	P. B. A. REG. NO.	STATE	FED. AID PROJECT NO.	FISCAL YEAR	SHEET NO.	TOTAL SHEETS
NEW CASTLE	68-07-005	2	DEL.	I-495-3(17)19		14	41

"AS BUILTS" IN RED 9-26-72 D.R.M.

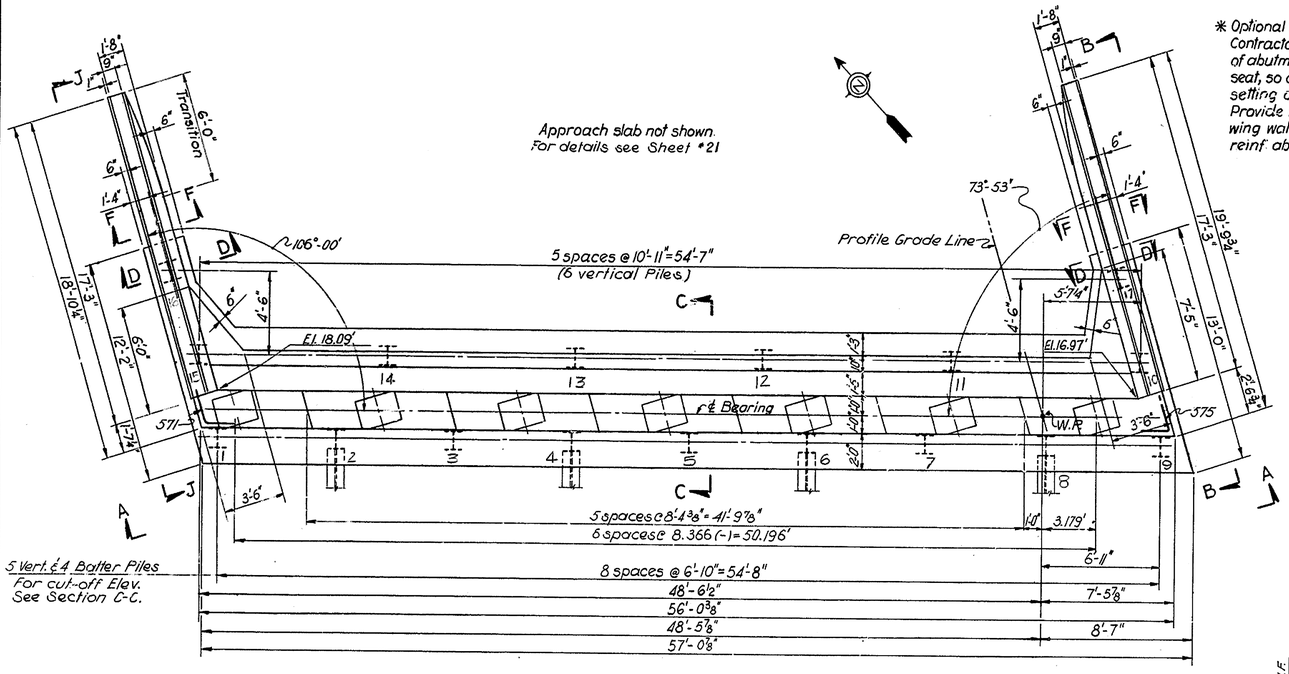

PLAN
Scale: 1/4" = 1'-0"

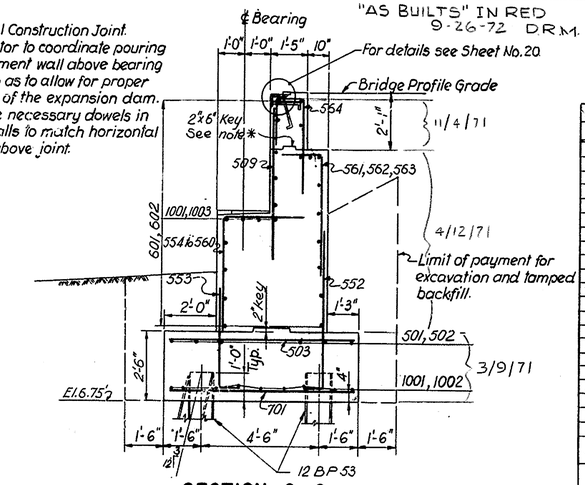

SECTION C-C
Scale: 3/8" = 1'-0"

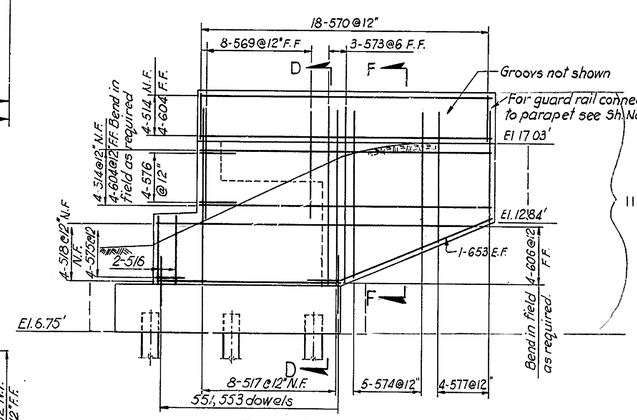

ELEVATION B-B
Scale: 1/4" = 1'-0"

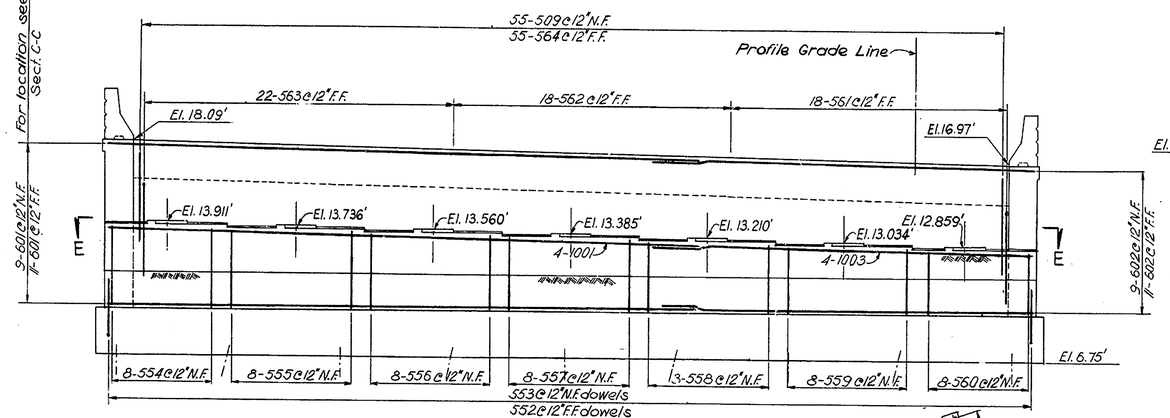

ELEVATION A-A
Scale: 1/4" = 1'-0"

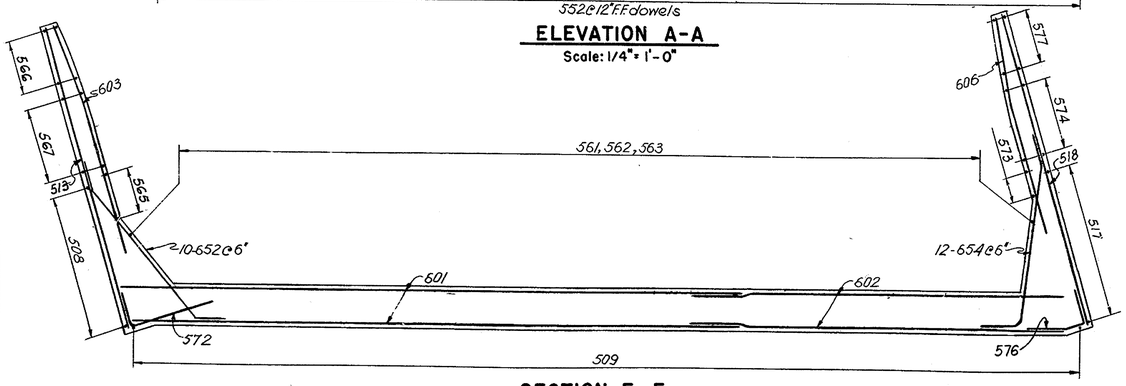

SECTION E-E
Scale: 1/4" = 1'-0"

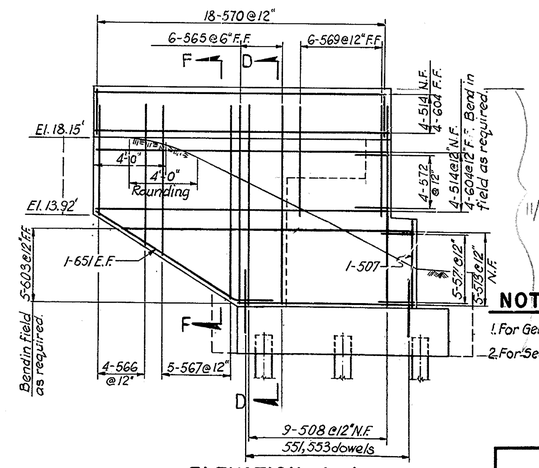

ELEVATION J-J
Scale: 1/4" = 1'-0"

REINFORCING SCHEDULE

BENT BARS (All dimensions are out to out)

MARK	NO.	SIZE	LENGTH	TYPE	A	B	C	D	E	F	G	REMARKS
551	18	#5	5-3	I	1-6	3-9						
552	58	#5	5-11	I	0-9	5-2						
553	69	#5	4-6	I	0-9	3-9						
554	8	#5	7-10	I	3-6	4-4						
555	8	#5	7-8	I	3-6	4-2						
556	8	#5	7-6	I	3-6	4-0						
557	8	#5	7-3	I	3-6	3-9						
558	8	#5	7-1	I	3-6	3-7						
559	8	#5	6-11	I	3-6	3-5						
560	8	#5	6-9	I	3-6	3-3						
561	18	#5	6-3	I	1-9	4-6						
562	18	#5	6-7	I	1-9	4-10						
563	22	#5	6-11	I	1-9	5-2						
564	55	#5	6-3	I	1-8	0-11	3-8					
565	6	#5	11-0	II	9-0	2-0				1-2	1-8	
566	4	#5	11-6 to 15-3	V	1-3 to 2-0	5-3 to 6-0	0-9 to 1-3	4-3 to 6-0		0-10 to 1-8	0-7 to 1-2	Equal increment on sides shown.
567	5	#5	17-9 to 22-5	V	2-0	6-5 to 8-9	1-4	8-0 to 10-4		1-8	1-2	Increment 0'-7"
569	14	#5	6-0	II	4-0	2-0				1-2	1-8	
570	36	#5	5-1	VI								See diagram
571	3	#5	3-2	II	1-7	1-7				1-6	0-5	
572	4	#5	5-7	I	1-7	4-0						
573	3	#5	10-0	II	8-0	2-0				1-2	1-8	
574	5	#5	16-8 to 19-8	V	2-0	6-9 to 7-6	1-4	7-4 to 8-10		1-8	1-2	Increment 0'-4 1/2"
575	4	#5	3-2	III	1-7	1-7				1-6	0-5	
576	4	#5	4-8	IV	1-6	1-7	1-7			0-6	1-6	
577	4	#5	13-1 to 15-10	V	1-3 to 2-0	5-4 to 5-7	0-9 to 1-3	5-9 to 7-0				Equal increment on sides shown.
651	2	#6	11-5	I	9-6	1-11				0-9	1-9	
652	10	#6	10-9	II	8-9	1-0	1-0	0-8	0-8	0-8	0-8	
653	2	#6	11-7	I	9-8	1-11						
654	12	#6	10-6	II	8-6	1-0	1-0	0-5	0-10	1-0	0-2	

11/4/71
4/12/71
3/9/71
11/17/71

STRAIGHT BARS

MARK	NO	SIZE	LENGTH	REMARKS	MARK	NO	SIZE	LENGTH	REMARKS
501	6	#5	40-0						
502	6	#5	18-4		601	20	#6	40-0	
503	37	#5	7-0		602	20	#6	17-10	
504	2	#5	6-6		603	5	#6	4-6 to 11-10	Increment 1'-10"
505	2	#5	11-8						
506	1	#5	12-6		604	16	#6	16-11	
507	2	#5	4-6						
508	9	#5	10-6		606	4	#6	2-8 to 10-5	Increment 2'-7"
509	55	#5	5-0						
					701	14	#7	7-0	
					702	6	#7	6-6	
					703	2	#7	11-8	
513	5	#5	10-0 to 17-4	Increment 1'-10"	704	1	#7	12-6	
514	16	#5	16-11		705	1	#7	8-6	
					1001	13	#10	40-0	
516	2	#5	3-5		1002	9	#10	20-0	
517	9	#5	9-6		1003	4	#10	19-0	
518	4	#5	10-9 to 18-6	Increment 2'-7"					
519	1	#5	8'-6						

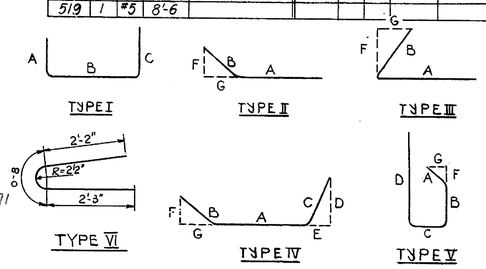

NOTES:
1. For General Notes see Sheet No. 23
2. For Sections D-D & F-F see Sheet No. 16.

DELAWARE
STATE HIGHWAY DEPARTMENT

INTERSTATE ROUTE I-495

I-495 OVER STONEY CREEK ABUTMENT "B" SOUTHBOUND

J. E. GREINER CO.
MORAN, PROCTOR, MUESER & RUTLEDGE
CONSULTING ENGINEERS

D. W. W.
T. J. L.
C. P. F.

SCALE AS NOTED
DATE

APPROVED BY: John Rakes 1/27/69
BRIDGE ENGINEER

REVISIONS

DO NOT CONSIDER ANY OF THE DATA ON THE EXISTING STRUCTURE SUPPLIED IN THESE DRAWINGS AS POSITIVE REPRESENTATIONS OF ANY OF THE CONDITIONS THAT MAY BE ENCOUNTERED IN THE FIELD FOR T201107402.

COUNTY	CONTRACT	F. R. A. REG. NO.	STATE	FED. AID PROJECT NO.	FISCAL YEAR	SHEET NO.	TOTAL SHEETS
NEW CASTLE	68-07-005	2	DEL.	I-495-3(17)19		15	41

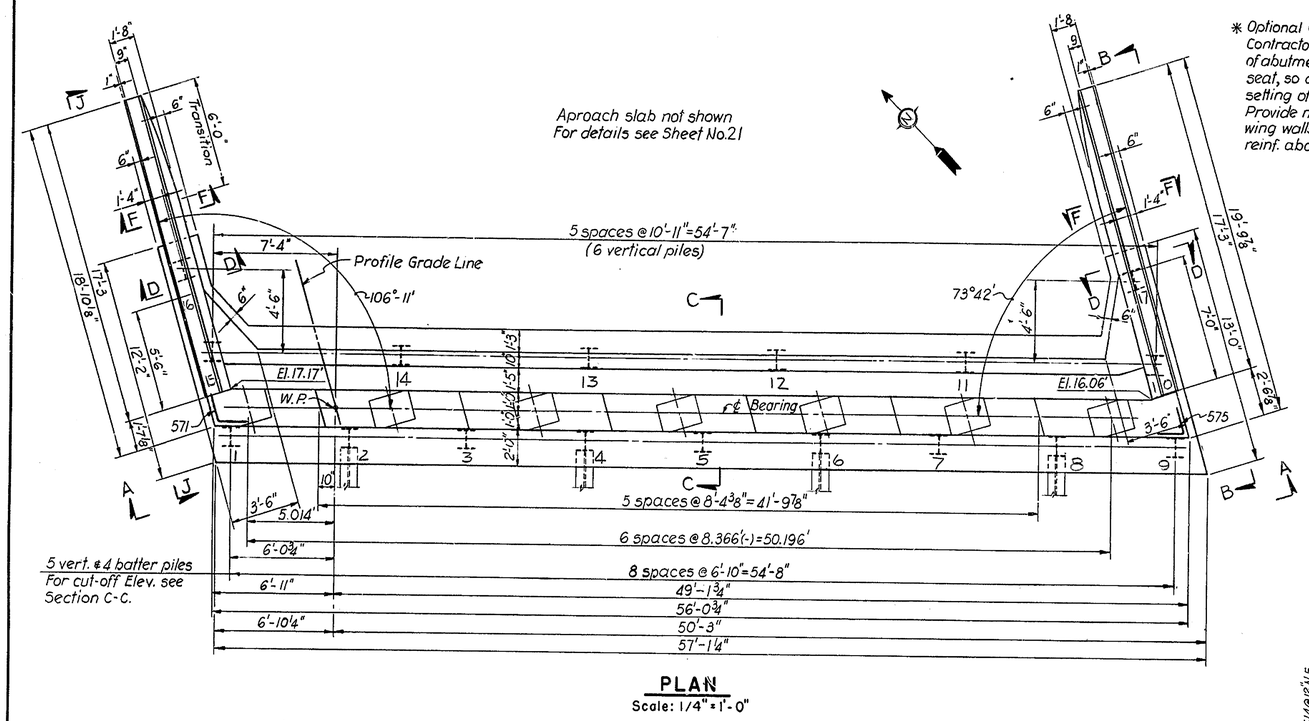

PLAN
Scale: 1/4" = 1'-0"

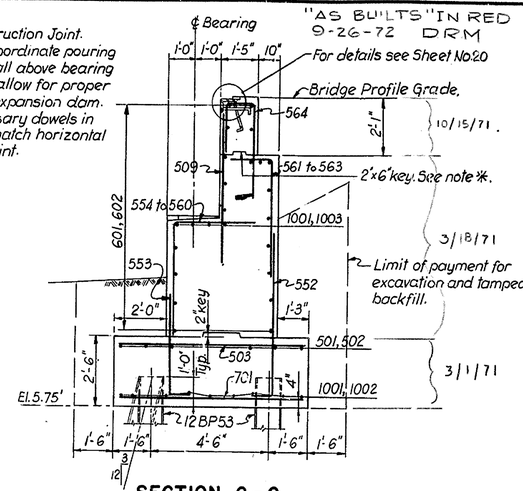

✱ Optional Construction Joint. Contractor to coordinate pouring of abutment wall above bearing seat, so as to allow for proper setting of the expansion dam. Provide necessary dowels in wing walls to match horizontal reinf. above joint.

SECTION C-C
Scale: 3/8" = 1'-0"

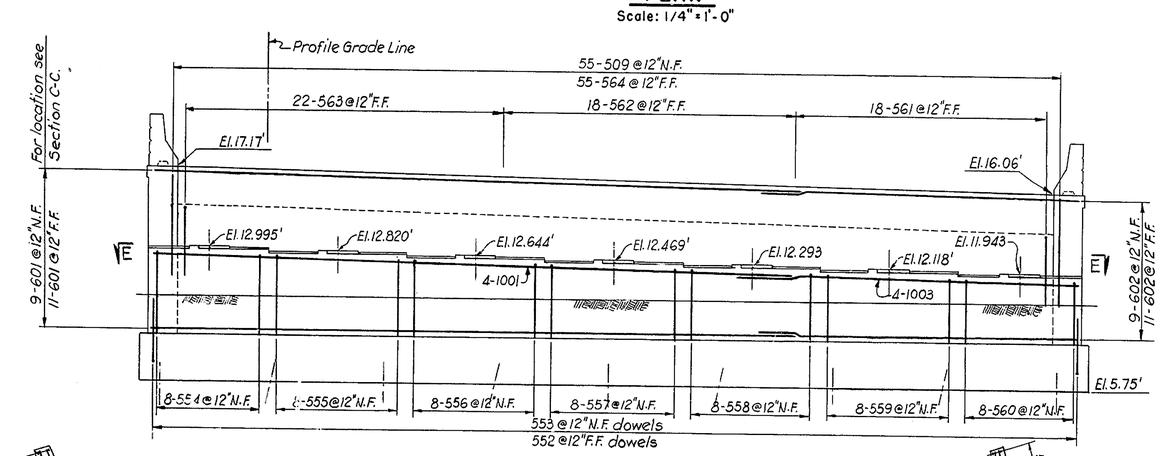

ELEVATION A-A
Scale: 1/4" = 1'-0"

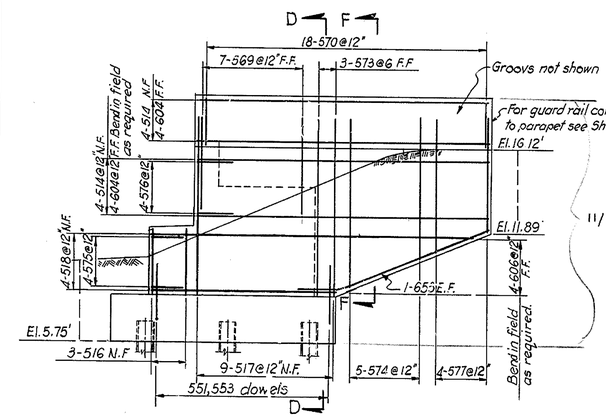

ELEVATION B-B
Scale: 1/4" = 1'-0"

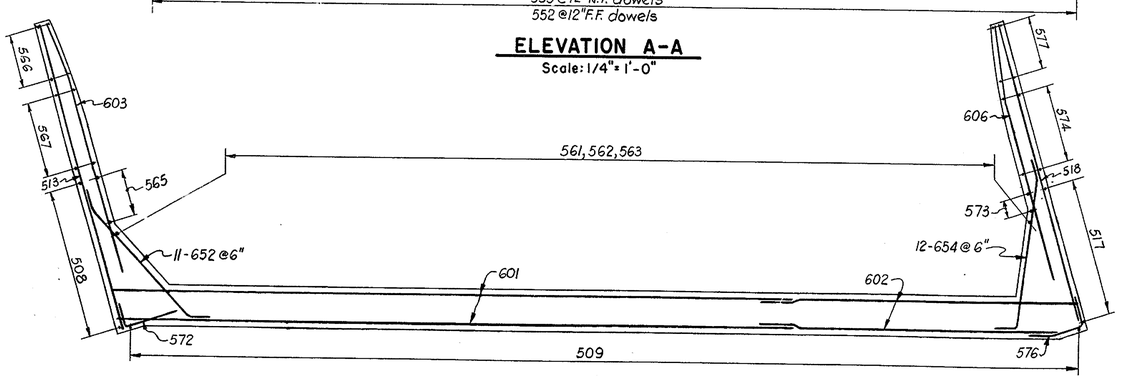

SECTION E-E
Scale: 1/4" = 1'-0"

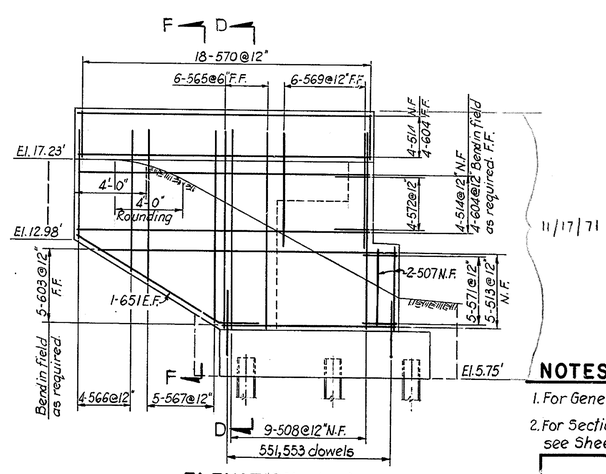

ELEVATION J-J
Scale: 1/4" = 1'-0"

REINFORCING SCHEDULE

BENT BARS (All dimensions are out to out).

MARK	NO.	SIZE	LENGTH	TYPE	A	B	C	D	E	F	G	REMARKS
551	18	#5	5-3	I	1-6	3-9						
552	58	↓	5-11	I	0-9	5-2						
553	69		4-6	I	0-9	3-9						
554	8		7-11	I	3-6	4-5						
555	8		7-9	I	3-6	4-3						
556	8		7-7	I	3-6	4-1						
557	8		7-5	I	3-6	3-11						
558	8		7-2	I	3-6	3-8						
559	8		7-0	I	3-6	3-6						
560	8		6-10	I	3-6	3-4						
561	18		6-4	I	1-9	4-7						
562	18		6-8	I	1-9	4-11						
563	22		7-0	I	1-9	5-3						
564	55		6-3	I	1-8	0-11	3-8					
565	6		11-1	II	9-1	2-0				1-2	1-8	
566	4		12-9 / 16-3	V	1-3 / 2-0	5-2 / 5-11	0-9 / 1-3	5-1 / 7-1		0-10 / 1-8	0-7 / 1-2	Equal increment on sides shown
567	5		17-6 / 21-10	V	2-0	6-5 / 8-7	1-4	7-9 / 9-11		1-2	1-8	Increment 0'-6 1/2"
569	13		6-0	II	4-0	2-0				1-2	1-6	
570	36		5-1	VI								See diagram
571	5		3-2	II	1-7	1-7				1-6	0-5	
572	4		5-7	I	1-7	4-0						
573	3		10-3	II	8-3	2-0				1-2	1-8	
574	5		16-9 / 20-1	V	2-0	6-0 / 7-8	1-4	7-5 / 9-1		1-2	1-8	Increment 0'-5"
575	4		3-2	III	1-7	1-7				1-6	0-5	
576	4	#5	4-8	IV	1-6	1-7	1-7			0-5	1-6	
577	4	↓5	13-0 / 16-5	V	1-3 / 2-0	5-2 / 5-8	0-9 / 1-3	5-10 / 7-6		0-10 / 1-8	0-7 / 1-2	Equal increment on sides shown
652	11	↑	10-6	IV	8-6	1-0	1-0	0-8	0-8	0-8	0-8	
653	2	↓	11-7	II	9-8	1-11				0-9	1-9	
654	12	#6	10-0	II	8-0	1-0	1-0	0-6	0-10	1-0	0-2	
651	2	#6	11-6	II	9-7	1-11				1-0	1-8	

STRAIGHT BARS

MARK	NO.	SIZE	LENGTH	REMARKS	MARK	NO.	SIZE	LENGTH	REMARKS
501	6	#5	40-0		601	20	#6	40-0	
502	6	↓	18-5		602	20	↓	17-9	
503	37		7-0		603	5		5-0 / 12-0	Increment 1'-9"
504	2		6-6						
505	2		11-8		604	16		16-11	
506	1		12-6		605	4	↓	16-7	
507	2		4-7		606	4	#6	3-6 / 11-0	Increment 2'-6"
508	9		10-6						
509	55		5-0						
					701	74	#7	7-0	
					702	6	↓	6-6	
					703	2		11-8	
513	5		10-0 / 17-0	Increment 1'-9"	704	1		12-6	
					705	1	#7	8-6	
514	16		16-11		1001	13	#10	40-0	
515	4		16-7		1002	9	#10	20-0	
516	3		3-7		1003	4	#10	19-0	
517	9		9-7						
518	4		10-6 / 18-0	Increment 2'-6"					
519	1	#5	8-6						

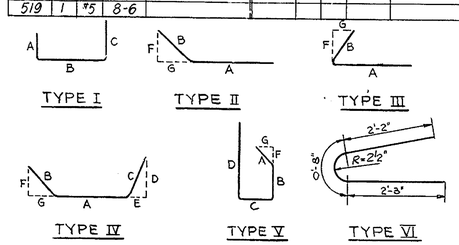

NOTES:

1. For General Notes see Sheet No.23.
2. For Sections D-D and F-F see Sheet No.16.

J. E. GREINER CO.
MORAN, PROCTOR, MUESER & RUTLEDGE
CONSULTING ENGINEERS

DELAWARE
STATE HIGHWAY DEPARTMENT

INTERSTATE ROUTE I-495

I-495 OVER STONEY CREEK
ABUTMENT "B" NORTHBOUND

D. W. W.	SCALE AS NOTED	APPROVED BY John E. Cullen 1/27/69
T. P. F.		
C. N. W. K.	DATE	BRIDGE ENGINEER

DO NOT CONSIDER ANY OF THE DATA ON THE EXISTING STRUCTURE SUPPLIED IN THESE DRAWINGS AS POSITIVE REPRESENTATIONS OF ANY OF THE CONDITIONS THAT MAY BE ENCOUNTERED IN THE FIELD FOR T201107402.

40

COUNTY	CONTRACT	P. R. A. REG. NO.	STATE	FED. AID PROJECT NO.	FISCAL YEAR	SHEET NO.	TOTAL SHEETS
NEW CASTLE	68-07-005	2	DEL.	I-495-3(17)19		16	41

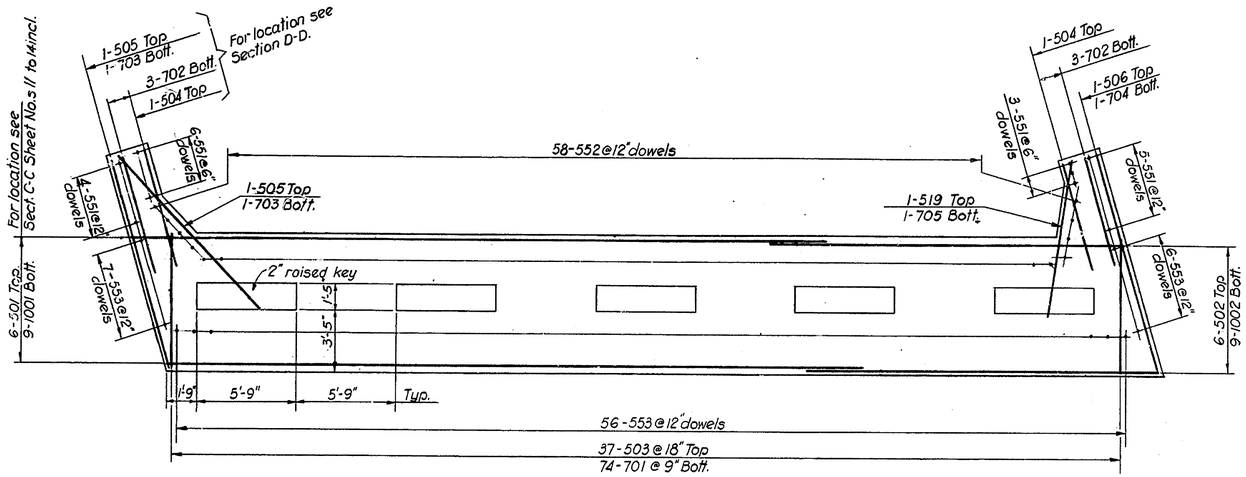

FOOTING REINFORCING PLAN

Scale: 1/4" = 1'-0"

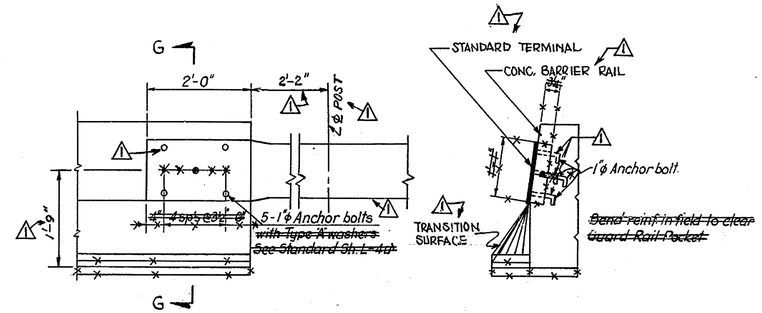

ELEVATION **SECTION G-G**

CONNECTION GUARD RAIL TO BARRIER RAIL

Scale: 3/4" = 1'-0"

△1 NOTE: FOR ADDITIONAL DETAILS OF CONNECTING GUARD RAIL TO BRIDGE. (SEE STANDARD SHEET G-7.)

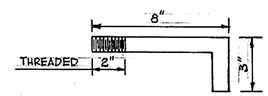

1"φ ANCHOR BOLT

SCALE: 1/4" = 1"

△1

NOTES:

1. For General Notes see Sheet No. 23.
2. Work this drawing with Sheets #12 to #16 including.
3. 12BP53 steel H-piles for abutments shall be driven to rock and shall develop a minimum of 70 ton capacity. See Specifications.
4. Approximate pile tip elevations for estimating purposes only:
   Abutment 'A' – El. -14.00'
   Abutment "B" – El. -20.00'

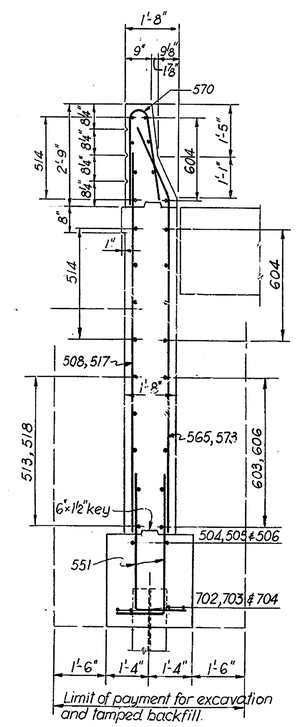

SECTION D-D

Scale: 1/2" = 1'-0"

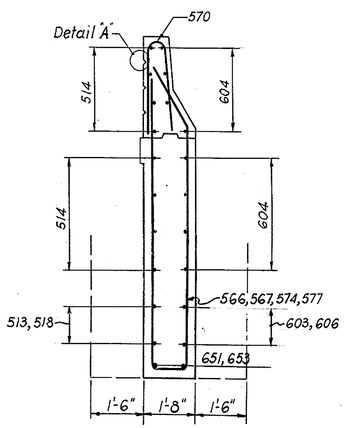

SECTION F-F

Scale: 1/2" = 1'-0"

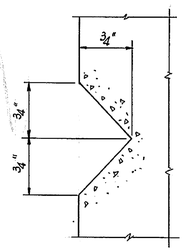

DETAIL 'A'

Scale: 3/4" = 1'-0"

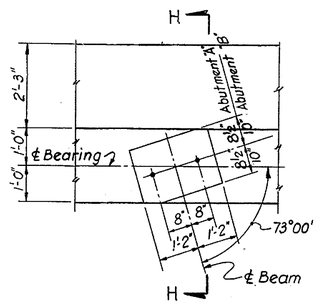

PLAN

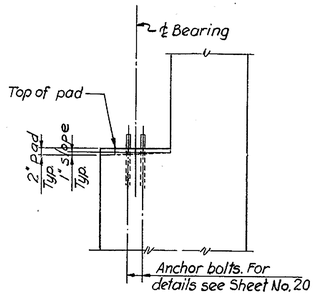

SECTION H-H

TYPICAL PAD UNDER BEARING PLATES

N.T.S.

REVISIONS

△1 CONNECTION OF GUARD RAIL TO BARRIER RAIL—(SEE STANDARD SHEET G-7)
TYPICAL ANCHOR BOLT ADDED — R.E.F. 2-10-71

DELAWARE
STATE HIGHWAY DEPARTMENT

INTERSTATE ROUTE I-495

I-495 OVER STONEY CREEK ABUTMENT DETAILS

J. E. GREINER CO.
MORAN, PROCTOR, MUESER & RUTLEDGE
CONSULTING ENGINEERS

D. W. W.
T. P. F.
C. N. W. K.

SCALE AS NOTED

DATE

APPROVED BY John Rutledge 1/27/69
BRIDGE ENGINEER

OGILVIE PRESS, INC. — D-127 2402

DO NOT CONSIDER ANY OF THE DATA ON THE EXISTING STRUCTURE SUPPLIED IN THESE DRAWINGS AS POSITIVE REPRESENTATIONS OF ANY OF THE CONDITIONS THAT MAY BE ENCOUNTERED IN THE FIELD FOR T201107402.

COUNTY	CONTRACT	F.R.A. REG. NO.	STATE	FED. AID PROJECT NO.	FISCAL YEAR	SHEET NO.	TOTAL SHEETS
NEW CASTLE	68-07-005	2	DEL.	I-495-3(17)19		17	41

"AS BUILTS" IN RED
9-26-72 DRM

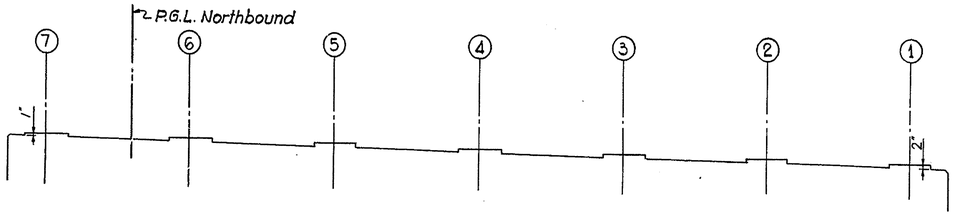

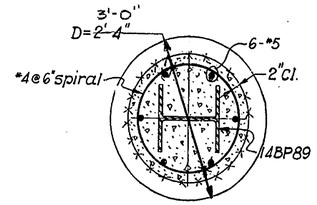

SECTION B-B
Scale: 3/4" = 1'-0"

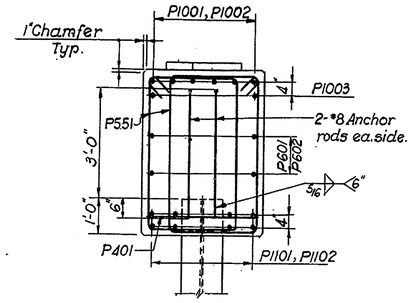

SECTION D-D
Scale: 1/2" = 1'-0"

REINFORCING SCHEDULE FOR PIER								
LOCATION	STRIGHT BARS				BENT BARS				BENDING DIAGRAMS (All dimens. are out to out.)
	MARK	NO.	SIZE	LENGTH	MARK	NO.	SIZE	LENGTH	
CAP BEAM	P401	27	#4	3-2					
	P601	4	#6	40-0	P551	72	#5	14-2	
	P602	4	#6	13-0	P552	8	#5	7-4	
					P553	8	#5	8-2	
	P1001	6	#10	40-0					
	P1002	12	#10	10-0					
	P1003	4	#10	27-6					
	P1101	8	#11	40-0					
	P1102	8	#11	17-6					

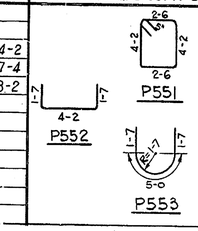

NOTE: Reinforcing shown in this Schedule is for one pier only. For total number of bars multiply each item by four.

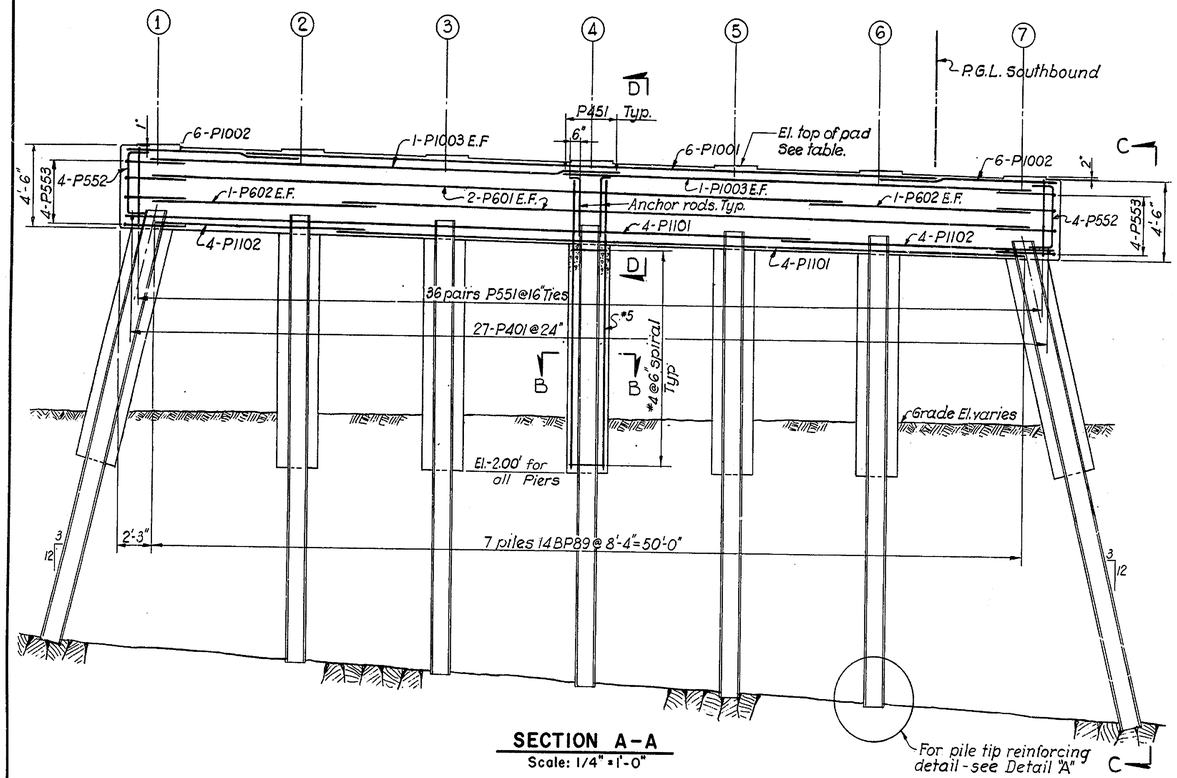

SECTION A-A
Scale: 1/4" = 1'-0"

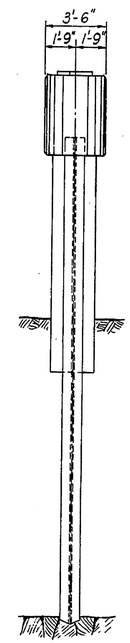

ELEVATION C-C
Scale: 1/4" = 1'-0"

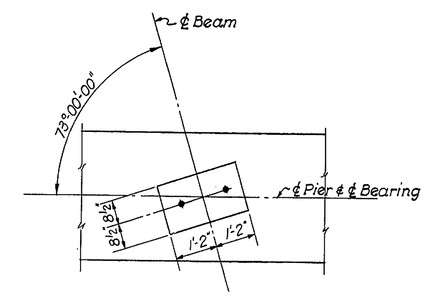

TYPICAL CONC. PAD UNDER BEARING PLATE
N.T.S.

TOP OF PADS ELEVATIONS				
	SOUTHBOUND		NORTHBOUND	
	PIER 1	PIER 2	PIER 1	PIER 2
El. 1	13.453	13.696	11.490	11.731
El. 2	13.278	13.521	11.665	11.906
El. 3	13.103	13.346	11.840	12.081
El. 4	12.928	13.171	12.015	12.256
El. 5	12.753	12.995	12.190	12.431
El. 6	12.578	12.820	12.365	12.607
El. 7	12.403	12.645	12.540	12.782

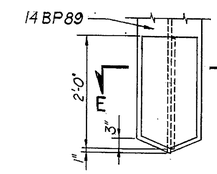

DETAIL A
Scale: 3/4" = 1'-0"

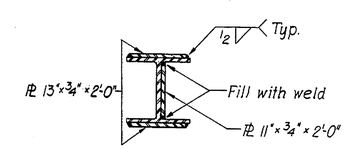

SECTION E E
Scale: 3/4" = 1'-0"

NOTES:

1. For General Notes see Sheet No. 23.
2. For bearing plates and anchor bolt details see Sheet No. 20
3. Assumed length of Piles is 26'-0" for estimating purposes only.
4. Steel 14BP89 H-piles for piers shall be driven to rock to develop a minimum of 118-ton capacity.

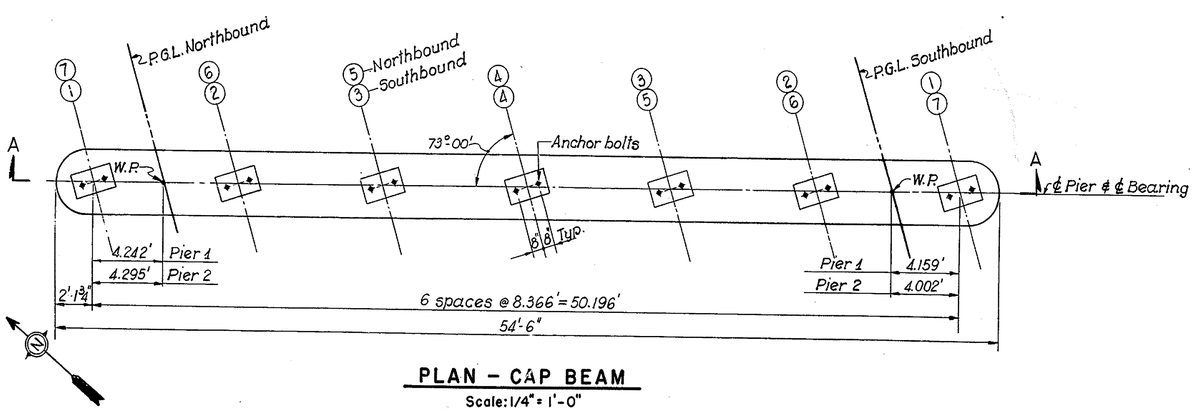

PLAN - CAP BEAM
Scale: 1/4" = 1'-0"

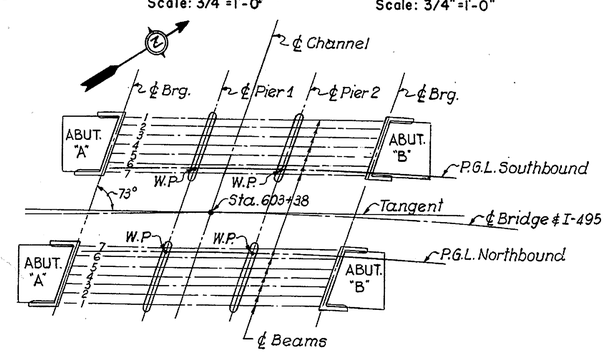

KEY PLAN
N.T.S.

REVISIONS

J. E. GREINER CO.
MORAN, PROCTOR, MUESER & RUTLEDGE
CONSULTING ENGINEERS

DELAWARE
STATE HIGHWAY DEPARTMENT

INTERSTATE ROUTE I-495

I-495 OVER STONEY CREEK
PIERS 1 & 2

D. W.W.
T. P.F.
C. N.W.K.

SCALE AS NOTED
DATE

APPROVED BY: John H. Fuller 1/2/69
BRIDGE ENGINEER

DO NOT CONSIDER ANY OF THE DATA ON THE EXISTING STRUCTURE SUPPLIED IN THESE DRAWINGS AS POSITIVE REPRESENTATIONS OF ANY OF THE CONDITIONS THAT MAY BE ENCOUNTERED IN THE FIELD FOR T201107402.

COUNTY	CONTRACT	F. H. A. REG. NO.	STATE	FED. AID PROJECT NO.	FISCAL YEAR	SHEET NO.	TOTAL SHEETS
NEW CASTLE	68-07-005	2	DEL.	I-495-3(17)19		18	41

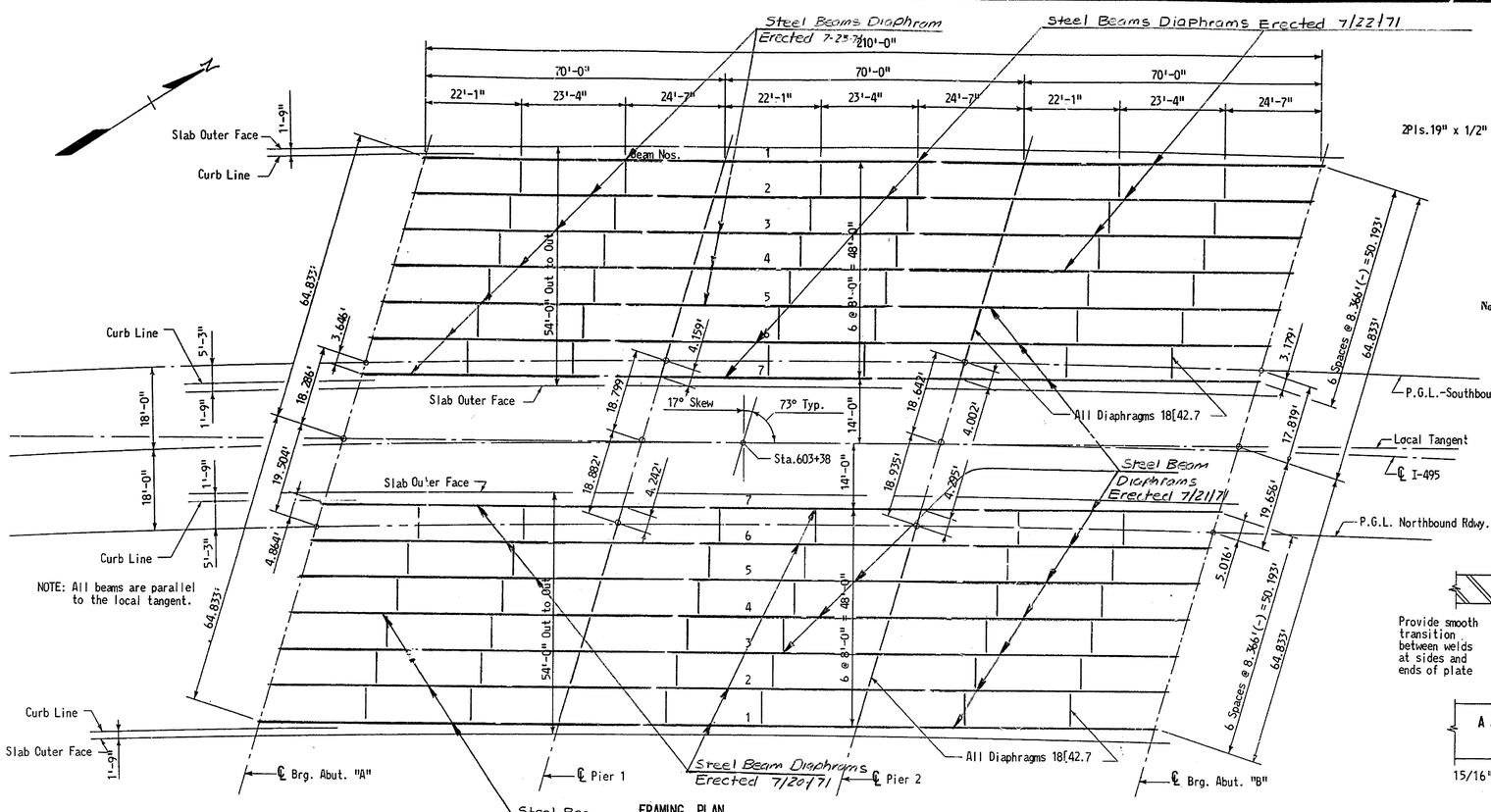

FRAMING PLAN
1/16" = 1'-0"

"ALL BUILTS" IN RED
5-26-72 D.R.M.

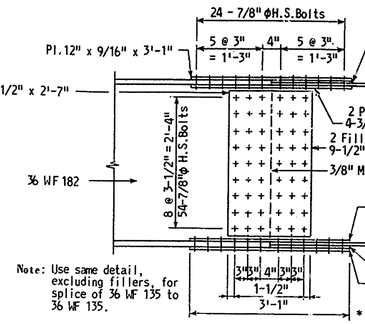

Note: Use same detail, excluding fillers, for splice of 36 WF 135 to 36 WF 135.

SPLICE DETAIL
3/4" = 1'-0"

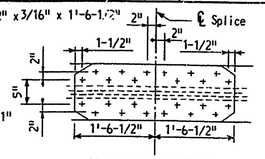

FLANGE SPLICE DETAIL

* Shear connector length shall be varied if necessary to insure that it extends a minimum of 2-1/2" and a maximum of 5" into deck slab.

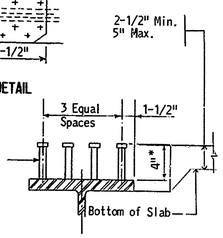

SHEAR CONNECTOR DETAIL
1-1/2" = 1'-0"

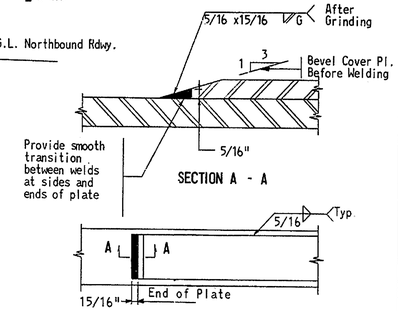

COVER PLATE DETAILS
No Scale

TABLE OF GRADE ELEVATIONS AND DEAD LOAD DEFLECTIONS IN FEET

SOUTHBOUND LANE

Stringer	1	2	3	4	5	6	7	
Point	Grade El.	Grade El.	Grade El.	Grade El.	Grade El.	Grade El.	Grade El.	Defl.
1	17.343	17.168	16.993	16.818	16.644	16.469	16.294	0.000
2	17.399	17.224	17.049	16.875	16.700	16.525	16.350	0.048
3	17.456	17.281	17.106	16.932	16.757	16.582	16.407	0.061
4	17.514	17.339	17.164	16.989	16.814	16.639	16.465	0.034
5	17.573	17.398	17.223	17.048	16.873	16.698	16.523	0.000
6	17.633	17.458	17.283	17.107	16.932	16.757	16.582	-.002
7	17.693	17.518	17.343	17.168	16.993	16.818	16.643	0.005
8	17.754	17.579	17.404	17.229	17.054	16.879	16.704	-.002
9	17.817	17.641	17.466	17.291	17.116	16.941	16.765	0.000
10	17.879	17.704	17.529	17.354	17.178	17.003	16.828	0.034
11	17.943	17.768	17.593	17.417	17.242	17.067	16.891	0.061
12	18.008	17.833	17.657	17.482	17.306	17.131	16.956	0.048
13	18.073	17.898	17.722	17.547	17.372	17.196	17.021	0.000

NORTHBOUND LANE

Stringer	1	2	3	4	5	6	7	
Point	Grade El.	Grade El.	Grade El.	Grade El.	Grade El.	Grade El.	Grade El.	Defl.
1	15.384	15.559	15.733	15.908	16.083	16.258	16.433	0.000
2	15.439	15.614	15.789	15.964	16.139	16.313	16.488	0.048
3	15.496	15.671	15.845	16.020	16.195	16.370	16.545	0.061
4	15.553	15.728	15.903	16.078	16.253	16.427	16.602	0.034
5	15.611	15.786	15.961	16.136	16.311	16.486	16.661	0.000
6	15.670	15.845	16.020	16.195	16.370	16.545	16.720	-.002
7	15.729	15.904	16.079	16.254	16.430	16.605	16.780	0.005
8	15.790	15.965	16.140	16.315	16.490	16.665	16.841	-.002
9	15.851	16.026	16.201	16.377	16.552	16.727	16.902	0.000
10	15.913	16.088	16.264	16.439	16.614	16.789	16.965	0.034
11	15.976	16.151	16.327	16.502	16.677	16.853	17.028	0.061
12	16.040	16.215	16.391	16.566	16.741	16.917	17.092	0.048
13	16.105	16.280	16.455	16.631	16.806	16.982	17.157	0.000

CAMBER: Beams shall be cambered for Dead Load deflection as indicated in the Camber Blocking Diagram. No camber for vertical curvature is required. Beams shall not be cambered more than shown even though the camber is less than that likely to remain permanent.

Beams shall be assembled in the shop to the correct blocking elevations of splices before reaming or drilling splices, and likewise shall be assembled in the field before bolting.

If beam sections over the piers do not have the indicated camber then the blocking elevations for the remaining beam sections shall be adjusted accordingly.

In the Table of "Grade Elevations ------," the deflections given are for dead load due to concrete only. After all beams have been assembled, elevations shall be taken along the tops of beams at points where the grade elevations are shown. The difference between these two elevations plus the amount of deflection listed at each point will be the thickness of the slab and haunch over the top of beam at the centerline of beam. The minimum slab and haunched depth over the centerline of beam shall not be less than 8".

Mill bearing stiffeners to bear on tension flange and weld stiffeners to compression flange with 5/16" fillet welds.

NOTES:
For General Notes, see Maintenance Road Bridge, Sheet No.23

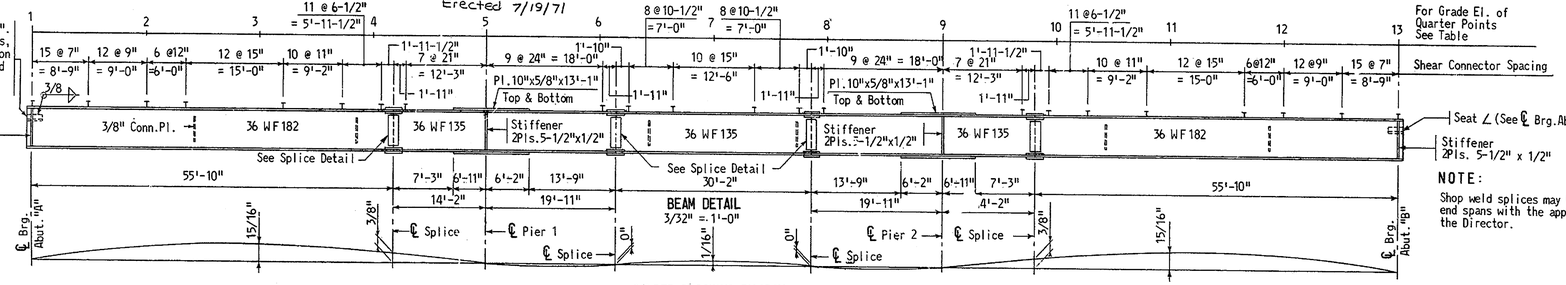

BEAM DETAIL
3/32" = 1'-0"

NOTE:
Shop weld splices may be used in end spans with the approval of the Director.

CAMBER BLOCKING DIAGRAM

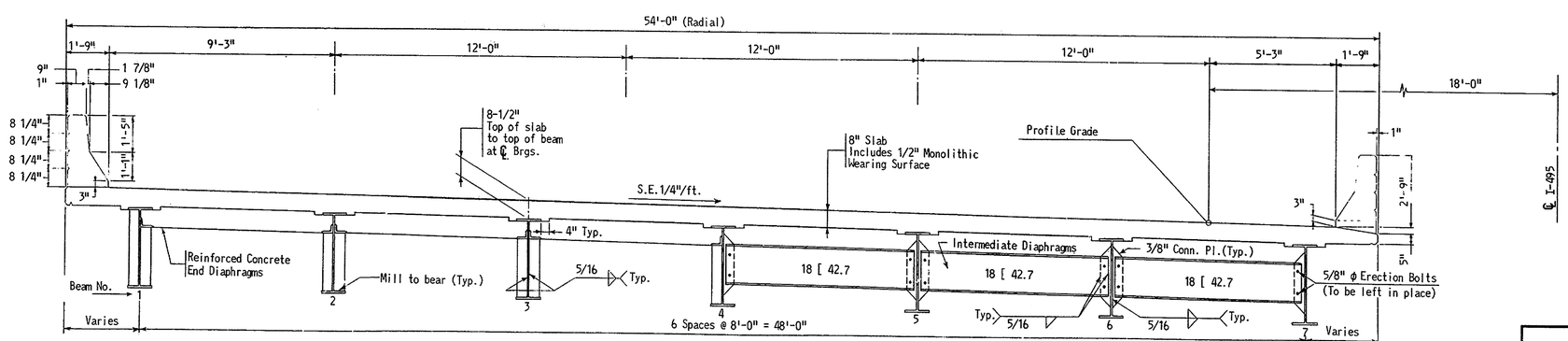

CROSS SECTION
3/8" = 1'-0"

J. E. GREINER CO.
MORAN, PROCTOR, MUESER & RUTLEDGE
CONSULTING ENGINEERS

DELAWARE
STATE HIGHWAY DEPARTMENT

INTERSTATE ROUTE I-495

I-495 OVER STONEY CREEK
FRAMING PLAN

D. C. E. G.	SCALE As Shown	APPROVED BY: John Walter 1/27/68
T. C. E. G.	DATE	BRIDGE ENGINEER
C. K. K. S.		

DO NOT CONSIDER ANY OF THE DATA ON THE EXISTING STRUCTURE SUPPLIED IN THESE DRAWINGS AS POSITIVE REPRESENTATIONS OF ANY OF THE CONDITIONS THAT MAY BE ENCOUNTERED IN THE FIELD FOR T201107402.

COUNTY	CONTRACT	P. R. A. RED. NO.	STATE	FED. AID PROJECT NO.	FISCAL YEAR	SHEET NO.	TOTAL SHEETS
NEW CASTLE	68-07-005	2	DEL.	I-495-3(17)19		19	41

"AS BUILTS" IN RED 9/26/72 D.R.M.

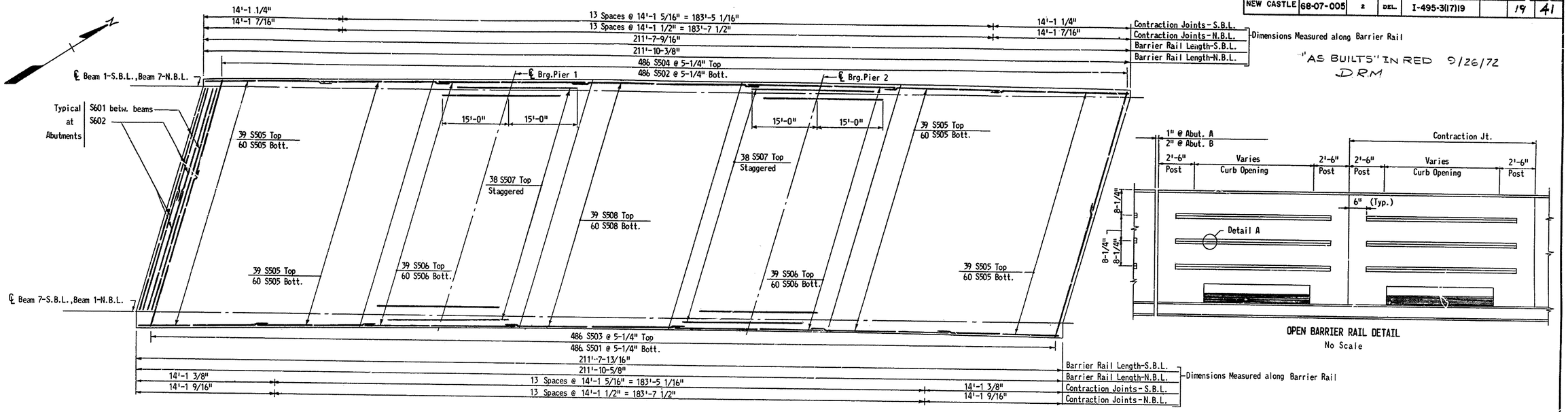

DECK PLAN
3/32" = 1'-0"

OPEN BARRIER RAIL DETAIL
No Scale

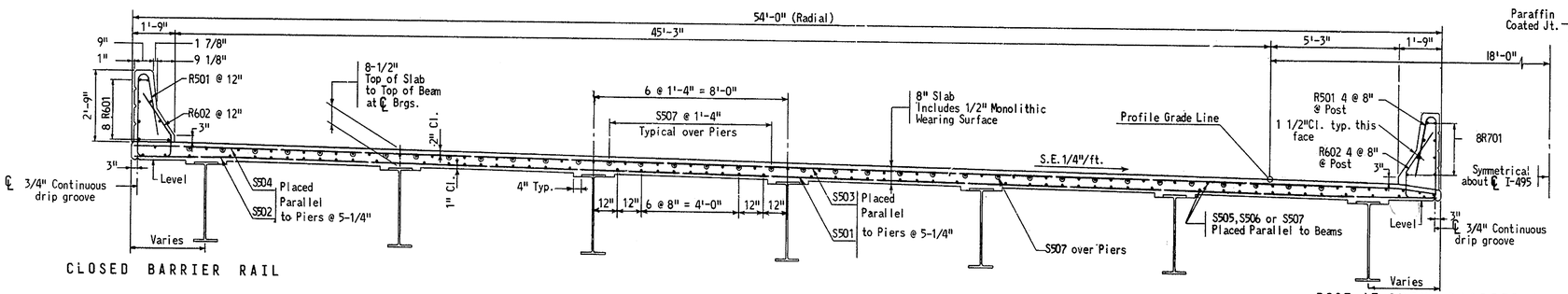

CLOSED BARRIER RAIL

TYPICAL SECTIONS
3/8" = 1'-0"

POST AT OPEN BARRIER RAIL

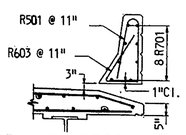

OPEN BARRIER RAIL

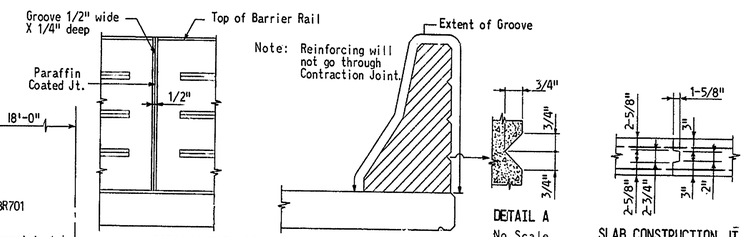

BARRIER RAIL CONTRACTION JOINTS
Closed Barrier Shown, Open Barrier Similar
3/4" = 1'-0"

DETAIL A
No Scale

SLAB CONSTRUCTION JT.
3/4" = 1'-0"

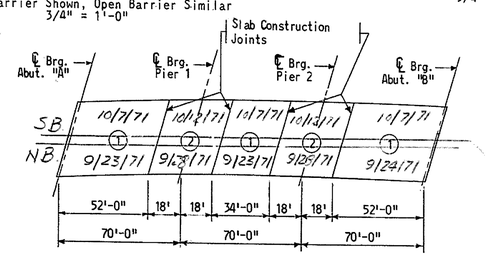

POURING SEQUENCE

NOTE: Deck Slab Concrete in Pouring Sequence (2) must not be placed until the Concrete in adjacent Pouring Sequences (1) is complete.

NOTES:

For General Notes. see Maintenance Road. Bridge, Sheet No. 23.

REINFORCING SCHEDULE

STRAIGHT BARS				BENT BARS			
MARK	NUMBER REQUIRED Southbound Roadway	NUMBER REQUIRED Northbound Roadway	LENGTH	MARK	NUMBER REQUIRED Southbound Roadway	NUMBER REQUIRED Northbound Roadway	LENGTH
S501	486	486	29'-8"	S503	486	486	34'-2"
S502	486	486	27'-11"	S509	84	84	4'-6"
S504	486	486	23'-5"				
S505	396	396	27'-9"				
S506	198	198	36'-0"	S602	8	8	28'-0"
S507	76	76	27'-0"				
S508	99	99	36'-6"				
R601	120	120	13'-9"	R501	480	480	4'-10"
R701	120	120	13'-9"				
				R602	345	345	6'-9"
S601	24	24	8'-0"	R603	135	135	3'-5"

BENDING DIAGRAMS

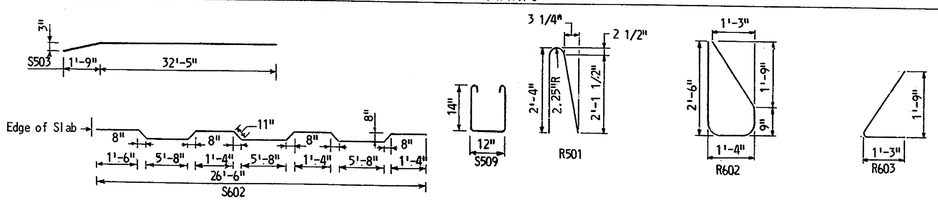

J. E. GREINER CO.
MORAN, PROCTOR, MUESER & RUTLEDGE
CONSULTING ENGINEERS

DELAWARE
STATE HIGHWAY DEPARTMENT

INTERSTATE ROUTE I-495

I-495 OVER STONEY CREEK
SUPERSTRUCTURE - DECK

D. C.P.G.	SCALE As Shown	APPROVED BY: John H. Duffy 1/27/69
T. A.B.M.	DATE	BRIDGE ENGINEER
C. K.K.S.		

DO NOT CONSIDER ANY OF THE DATA ON THE EXISTING STRUCTURE SUPPLIED IN THESE DRAWINGS AS POSITIVE REPRESENTATIONS OF ANY OF THE CONDITIONS THAT MAY BE ENCOUNTERED IN THE FIELD FOR T201107402.

COUNTY	CONTRACT	F. B. A. REG. NO.	STATE	FED. AID PROJECT NO.	FISCAL YEAR	SHEET NO.	TOTAL SHEETS
NEW CASTLE	68-07-005	2	DEL.	I-495-3(17)19		20	41

NOTE:
The surface finish of metal in contact indicated by the symbol ✓ shall meet the requirements as defined in American Standard Association Specification A.S.A. B-46.1. All sliding surfaces to be finished in the direction of expansion or rotation.

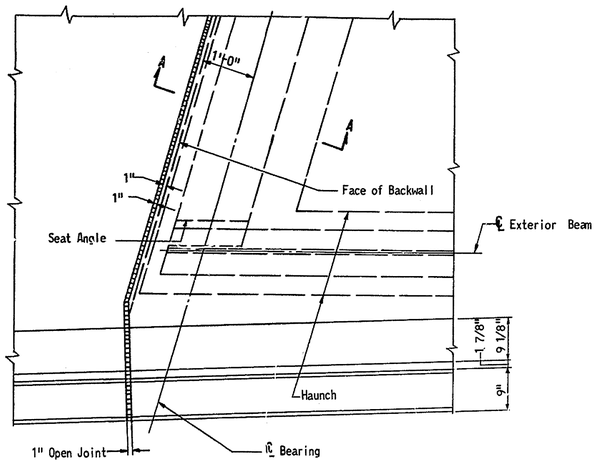

NOTE: Place 1" Performed Expansion Joint Filler 1'-4" above top of slab in Barrier Rail.

PLAN AT ABUTMENT "A"

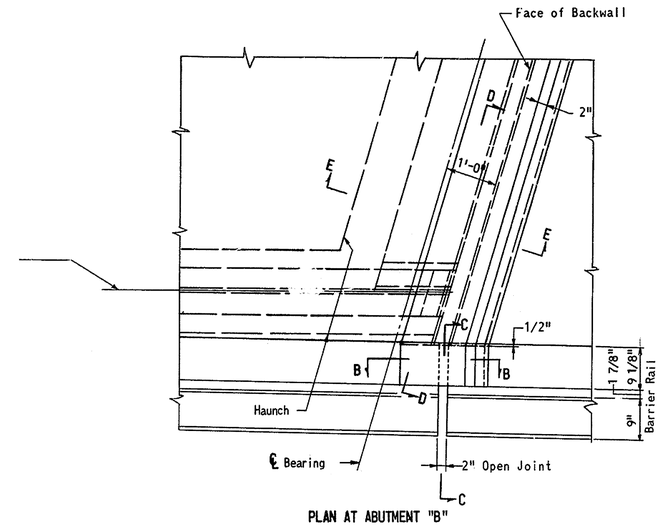

PLAN AT ABUTMENT "B"

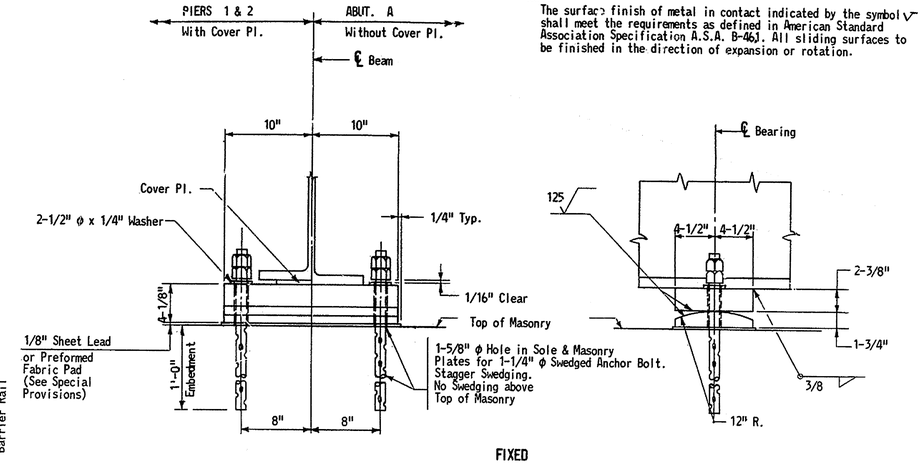

FIXED

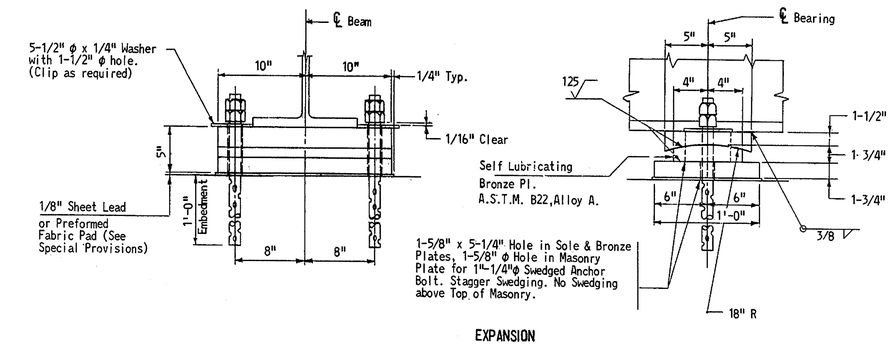

EXPANSION

BEARING DETAILS
1-1/2" = 1'-0"

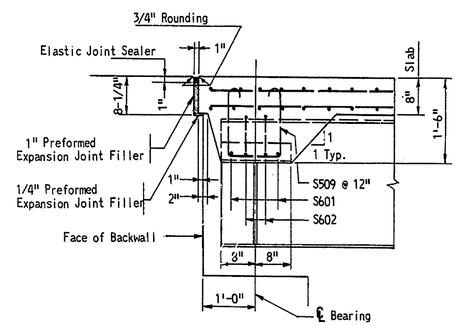

SECTION A - A

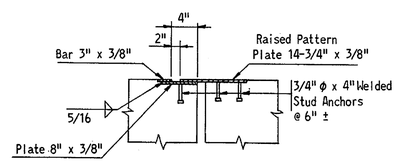

SECTION B - B

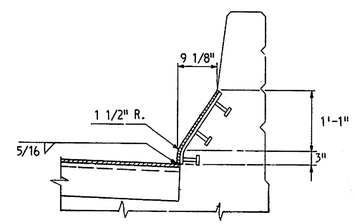

SECTION C - C

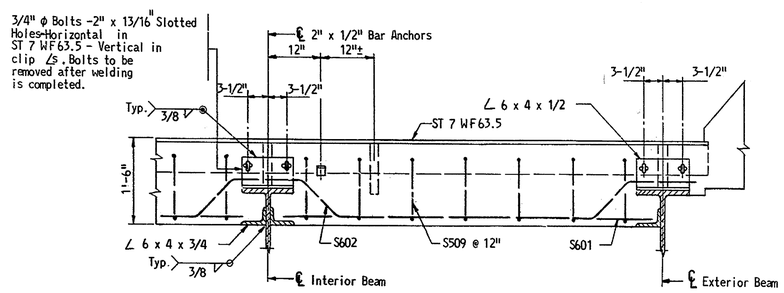

SECTION D - D

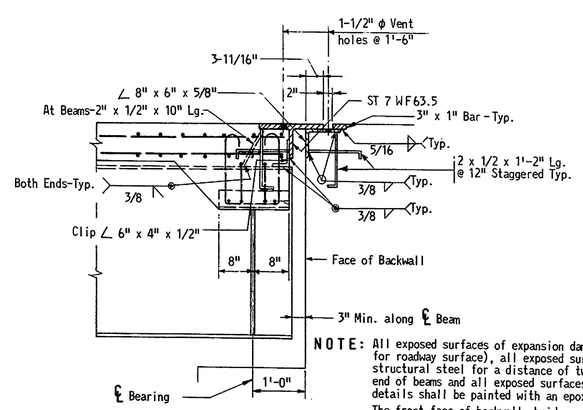

SECTION E - E

NOTE: All exposed surfaces of expansion dam (except for roadway surface), all exposed surfaces of structural steel for a distance of two feet from end of beams and all exposed surfaces of bearing details shall be painted with an epoxy coating.

The front face of backwall, bridge seat exclusive of bearing areas to be covered by shoes, and exposed surfaces of the front and sides (in front of backwall) of abutment shall be painted with a clear epoxy protective coating.

See Special Provisions.

ROADWAY, CURB & SAFETY WALK DAMS
3/4" = 1'-0"

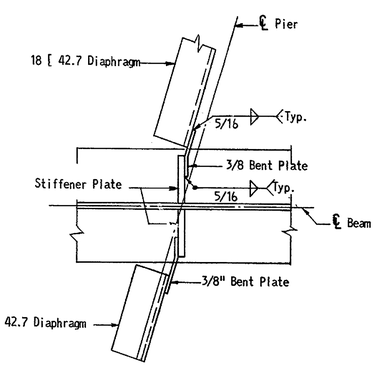

DIAPHRAGM CONNECTION - PIERS 1 & 2
1/1/2" = 1'-0"

NOTES:
For General Notes, see Maintenance Road Bridge, Sheet No. 23

DELAWARE
STATE HIGHWAY DEPARTMENT

INTERSTATE ROUTE I-495

I-495 OVER STONEY CREEK
SUPERSTRUCTURE DETAILS

J. E. GREINER CO.
MORAN, PROCTOR, MUESER & RUTLEDGE
CONSULTING ENGINEERS

D. C. P. G.
T. T. G.
C. K. K. S.

SCALE: As Shown
DATE

APPROVED BY: John E. Rullo 1/27/69
BRIDGE ENGINEER

DO NOT CONSIDER ANY OF THE DATA ON THE EXISTING STRUCTURE SUPPLIED IN THESE DRAWINGS AS POSITIVE REPRESENTATIONS OF ANY OF THE CONDITIONS THAT MAY BE ENCOUNTERED IN THE FIELD FOR T201107402.

COUNTY	CONTRACT	F. B. A. REG. NO.	STATE	FED. AID PROJECT NO.	FISCAL YEAR	SHEET NO.	TOTAL SHEETS
NEW CASTLE	68-07-005	2	DEL.	I-495-3(17)19		21	41

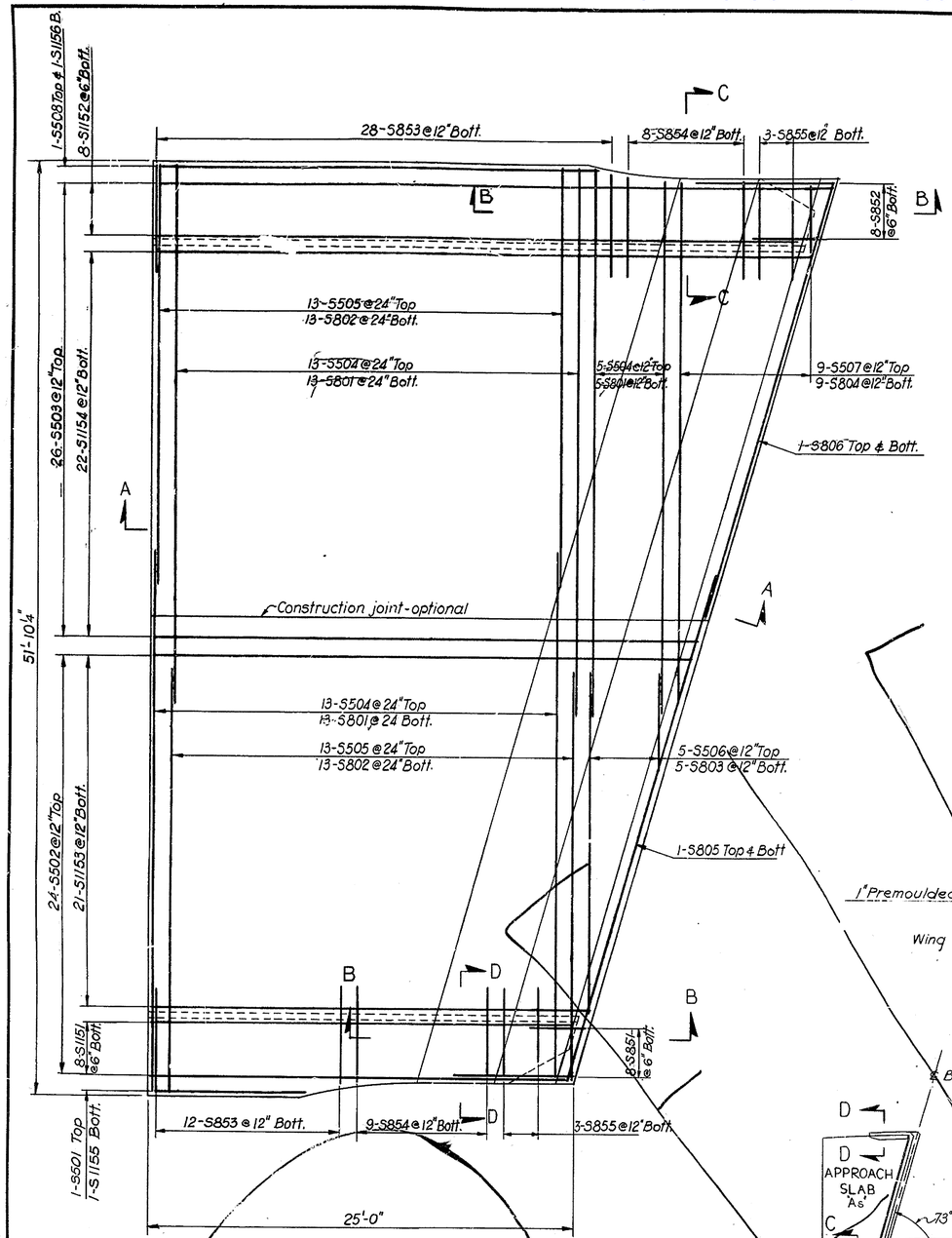

PLAN
4 REQUIRED
Scale: 1/4" = 1'-0"

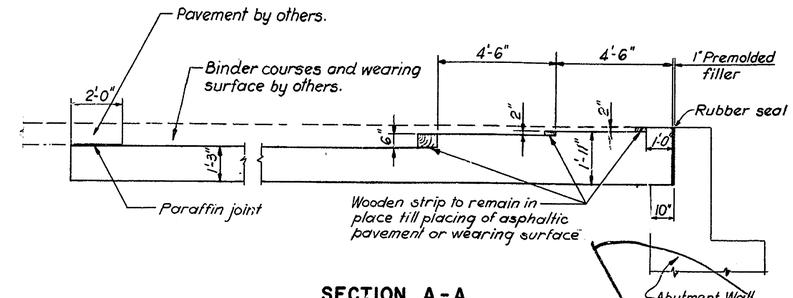

SECTION A-A
Scale: 3/8" = 1'-0"

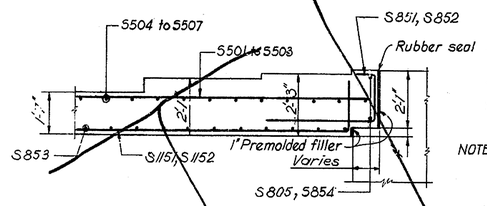

SECTION B-B
Scale: 3/8" = 1'-0"

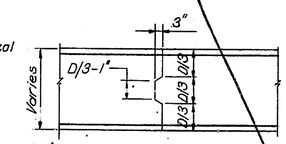

NOTES: 1. D - depth of slab at any point.
2. Reinforcing steel shall be continuous trough const. joint.

LONGITUDINAL CONSTRUCTION JOINT DETAIL
N.T.S.

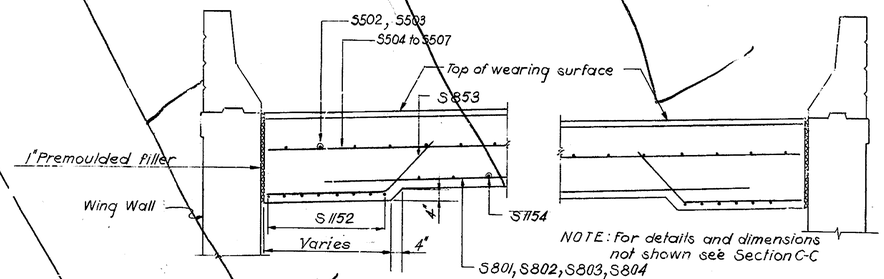

SECTION C-C
Scale: 1/2" = 1'-0"

NOTE: For details and dimensions not shown see Section C-C

SECTION D-D
Scale: 1/2" = 1'-0"

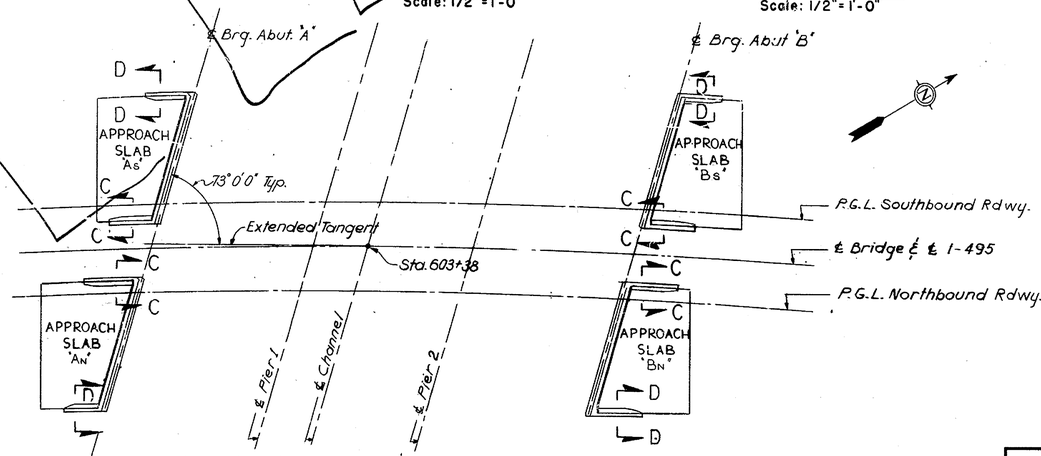

KEY PLAN FOR APPROACH SLABS
N.T.S.

REINFORCING SCHEDULE FOR FOUR SLABS

BENT BARS (Dimensions are out to out)

MARK	ABUT.	NO.	SIZE	LENGTH	TYPE	A	B	C	D	E	F	REMARKS
S851	ALL	32	#8	6-4 to 9-0	I	4-0 to 6-4	1-8	0-8				Increment 0'-4" 4 bars of each
S852	ALL	32	#8	6-4 to 9-10	I	4-0 to 7-1	1-8	0-8				Increment 0'-5" 4 bars of each
S853	ALL	160	#8	5-9	II	4-0	1-9	1-3	1-3			
S854	ALL	68	#8	5-0	I	3-3	1-9	1-3	1-3			
S855	ALL	24	#8	4-0 to 5-0	II	2-3 to 3-3	1-9	1-3	1-3			Increment 0'-6" 8 bars of each.
S1151	ALL	32	#11	22-6 to 26-9	I	20-9 to 24-9	1-9					Increment 0'-6" 4 bars of each
S1152	ALL	32	#11	36-11 to 40-3	I	35-2 to 38-6	1-9					Increment 0'-5" 4 bars of each
S1153	ALL	84	#11	27-8 to 33-6	I	25-6 to 31-4	1-6	0-8				Increment 0'-3½" 4 bars of each
S1154	ALL	88	#11	34-2 to 40-4	I	32-0 to 38-2	1-6	0-8				Increment 0'-3½" 4 bars of each
S1155	ALL	4	#11	10-9	I	9-0	1-9					
S1156	ALL	4	#11	28-3	I	26-6	1-9					

STRAIGHT BARS

MARK	ABUT.	NO.	SIZE	LENGTH	REMARKS
S501	ALL	4	#5	9-9	
S502	ALL	96	#5	24-9 to 31-9	Increment 0'-3½" 4 bars of each
S503	ALL	104	#5	32-6 to 39-6	Increment 0'-3½" 4 bars of each
S504	ALL	124	#5	30-0	
S505	ALL	104	#5	23-0	
S506	ALL	20	#5	5-6 to 18-6	Increment 3'-3" 4 bars of each
S507	ALL	36	#5	3-3 to 29-3	Increment 3'-3" 4 bars of each
S508	ALL	4	#5	25-6	
S801	ALL	124	#8	30-0	
S802	ALL	104	#8	20-0	
S803	ALL	20	#8	6-6 to 19-6	Increment 3'-3" 4 bars of each
S804	ALL	36	#8	3-3 to 29-3	Increment 3'-3" 4 bars of each
S805	ALL	8	#8	30-0	
S806	ALL	8	#8	26-0	

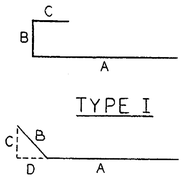

NOTES:
1. For General Notes see Sheet No. 23

REVISIONS
Dabtd. From Contract 1/26/71 W.S.S.

J. E. GREINER CO.
MORAN, PROCTOR, MUESER & RUTLEDGE
CONSULTING ENGINEERS

DELAWARE
STATE HIGHWAY DEPARTMENT

INTERSTATE ROUTE I-495

I-495 OVER STONEY CREEK APPROACH SLABS

D. W. W.
T. J. L.
C. N. W. K.

SCALE AS NOTED

DATE

APPROVED BY: John H. Rutledge 1/27/69
BRIDGE ENGINEER

DO NOT CONSIDER ANY OF THE DATA ON THE EXISTING STRUCTURE SUPPLIED IN THESE DRAWINGS AS POSITIVE REPRESENTATIONS OF ANY OF THE CONDITIONS THAT MAY BE ENCOUNTERED IN THE FIELD FOR T201107402.

COUNTY	CONTRACT	P. B. A. REG. NO.	STATE	FED. AID PROJECT NO.	FISC'L. YEAR	SHEET NO.	TOTAL SHEETS
NEW CASTLE	68-07-005	2	DEL.	I-495-3(17)19		22	41

"AS BUILTS" IN RED 9-26-72 D.R.M.

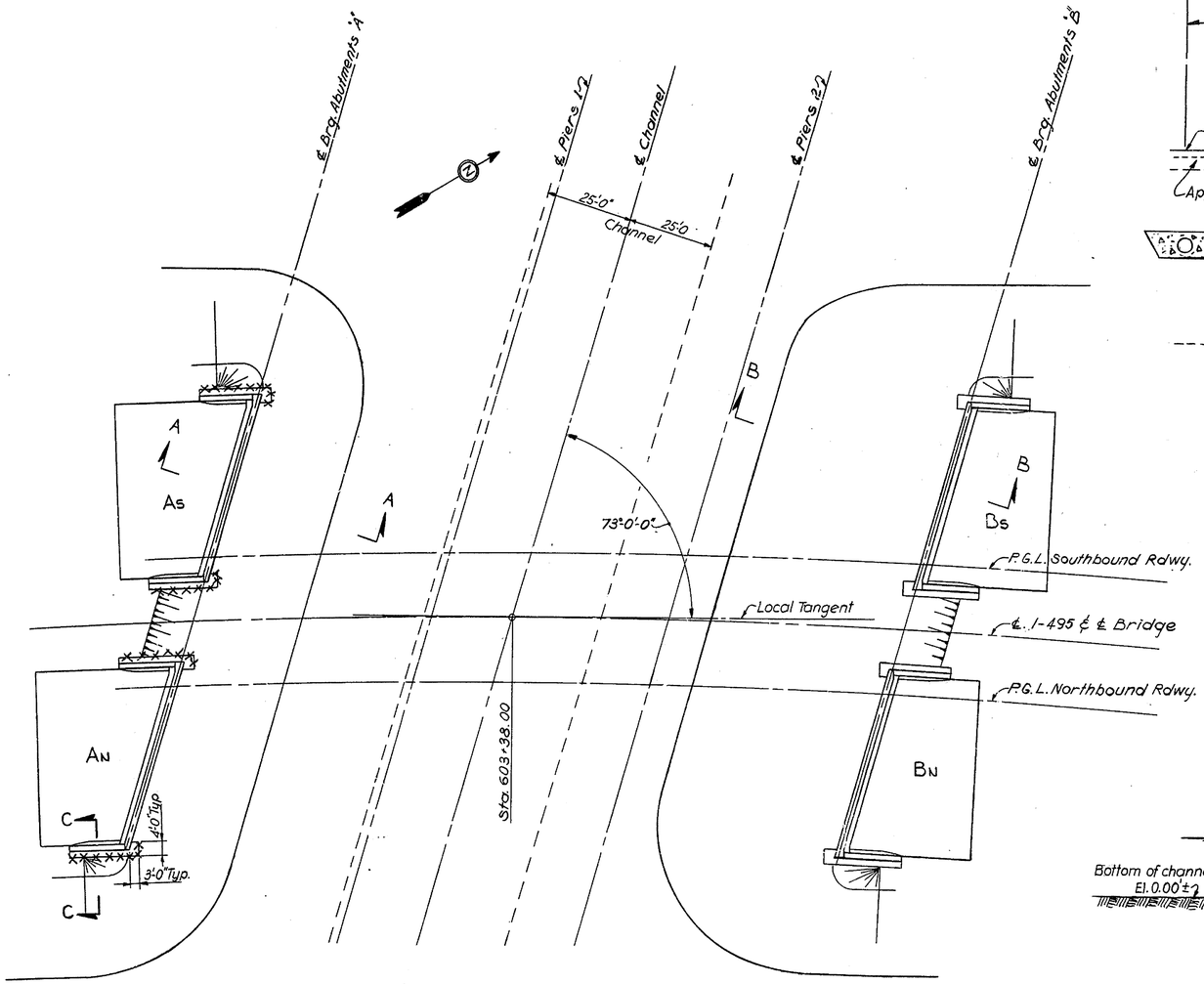

PLAN
Scale: 1" = 20'-0"

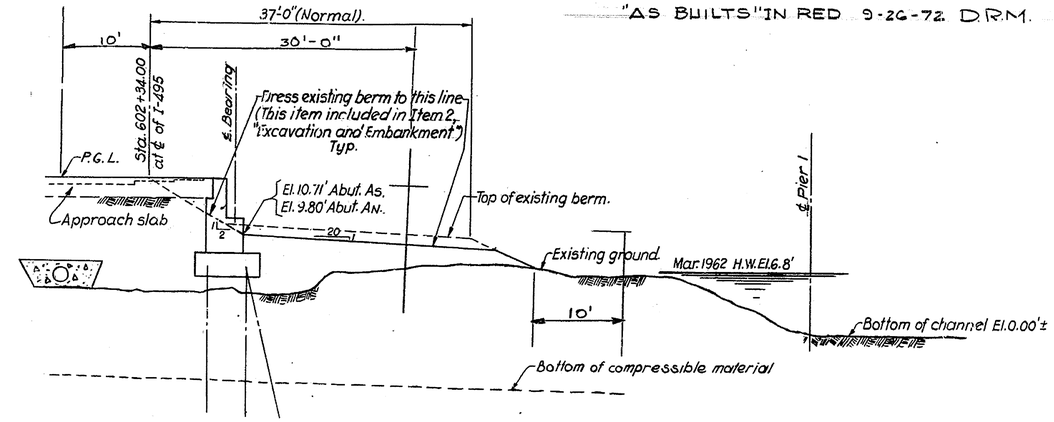

SECTION A-A
Scale: 1/8" = 1'-0"

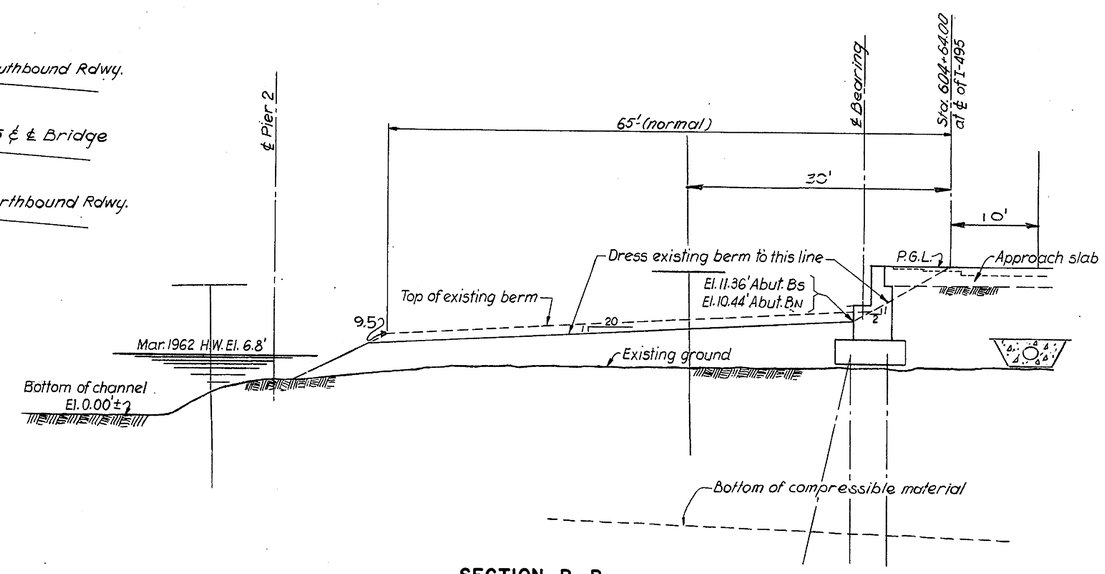

SECTION B-B
Scale: 1/8" = 1'-0"

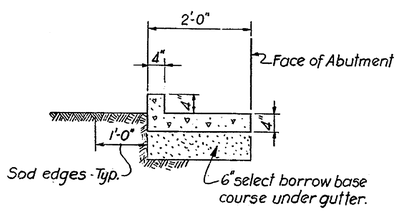

SECTION C-C
TYP. FOR ALL ABUTMENT WING WALLS
Scale: 3/4" = 1'-0"

NOTES:
1. For General Notes see Sheet No. 23

REVISIONS

DELAWARE
STATE HIGHWAY DEPARTMENT

INTERSTATE ROUTE I-495

I-495 OVER STONEY CREEK
SLOPE PROTECTION DETAILS

J. E. GREINER CO.
MORAN, PROCTOR, MUESER & RUTLEDGE
CONSULTING ENGINEERS

D. W.W.
T. J. L.
C. N.W.K.

SCALE AS NOTED
DATE

APPROVED BY: John E. Rutledge 1/27/69
BRIDGE ENGINEER

DO NOT CONSIDER ANY OF THE DATA ON THE EXISTING STRUCTURE SUPPLIED IN THESE DRAWINGS AS POSITIVE REPRESENTATIONS OF ANY OF THE CONDITIONS THAT MAY BE ENCOUNTERED IN THE FIELD FOR T201107402.

Folder 40

COUNTY	CONTRACT	P. R. A. REG. NO.	STATE	FED. AID PROJECT NO.	FISCAL YEAR	SHEET NO.	TOTAL SHEETS
NEW CASTLE	68-07-005	2	DEL.	I-495-3(17)19		23	41

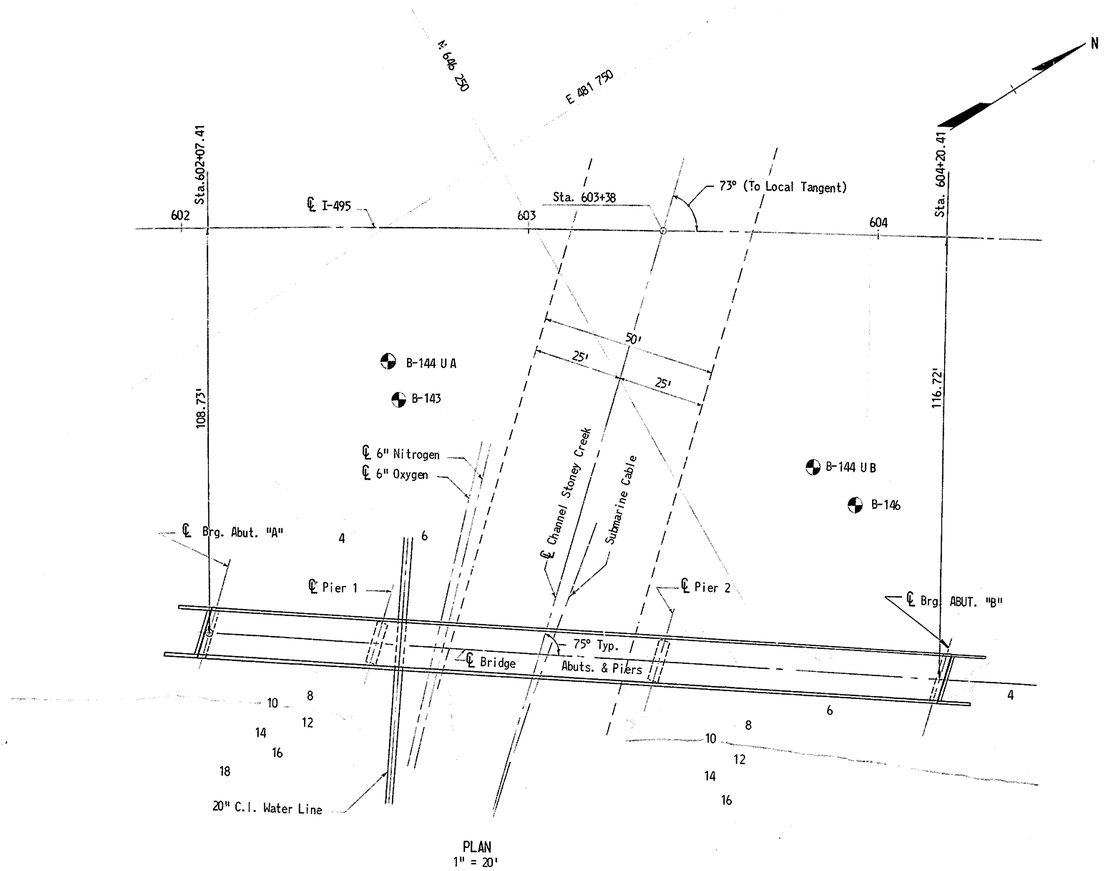

PLAN
1" = 20'

CURVE DATA

Δ = 12°-31'-49"
D = 0°-45'-00"
R = 7,639.44'
L = 1,670.72'
T = 838.71'
E = 45.90'

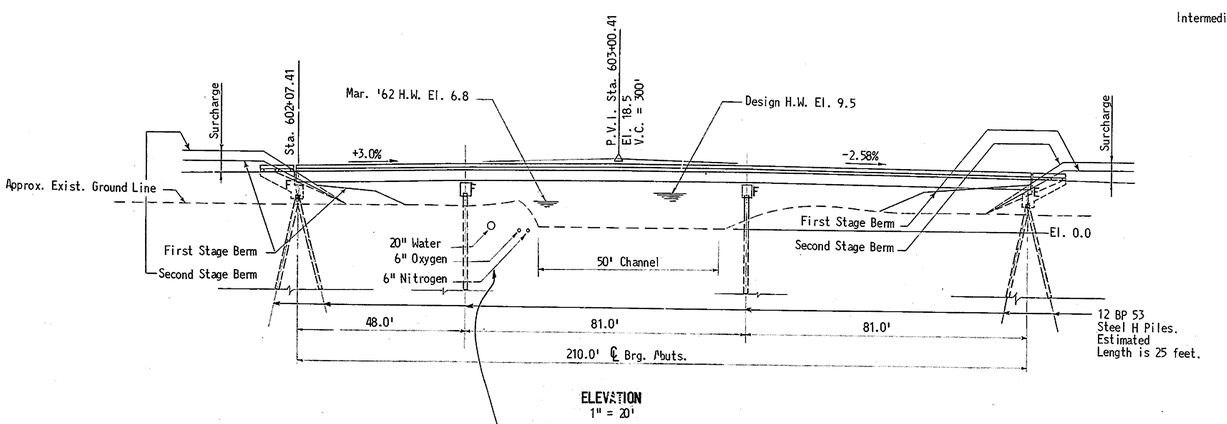

ELEVATION
1" = 20'

NOTE: UTILITIES TO BE LOCATED BEFORE DRIVING PILES - SEE SPECIAL PROVISIONS.

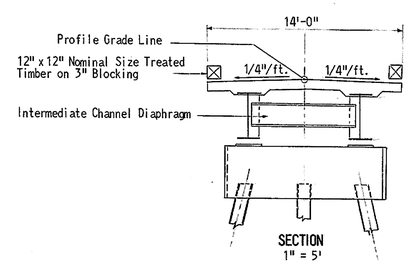

SECTION
1" = 5'

NOTES:

Specifications:

Construction - State of Delaware State Highway Department Standard Specification, June 1, 1965.

Design - A.A.S.H.O. Standard Specifications for Highway Bridges, 1961, with interim Specifications, 1961, 1962, 1964.

Dead Load: Concrete - 150 lbs. per cu. ft.

Live Load: H-15-44

Unit Stresses: Reinforcing Steel A-615 GRADE 40 f_s = 20,000 p.s.i. Concrete f'c = 3,000 p.s.i., fc = 1,200 p.s.i. Structural Steel (A36) f_s = 20,000 p.s.i.

Superstructure: Concrete Deck - Continuous Steel Beam Construction. Composite Action under Live Load.

Borings: Locations shown thus: B-146

GENERAL NOTES

Specifications: Design Criteria are based on 1961 Standard Specifications for Highway Bridges, American Association of State Highway Officials, with interim Specifications, 1961, 1962, and 1964.

Material and workmanship are to conform with State of Delaware, State Highway Department Standard Specifications dated June 1, 1965, unless otherwise noted and/or specified by Special Provisions.

Borings: The subsoil data and interpretations do not form a part of the contract, and will be available to the bidders for their information only. Available soil samples taken at the site may be examined by arrangement with State Highway Department of Delaware. The Contractor shall make his own interpretation and judgments of the boring results and assume full responsibility for same.

Elevations: Elevations are based on U.S.C. & C.S. datum, 1929.

Foundations: I-495 Over Stoney Creek Bridge
Abutment piles are 12 BP 53 H-piles and shall be driven to develop a minimum bearing capacity of 70 tons. Piles shall not be driven until 200 days after completion of first stage surcharge fill. Pier Piles are 14 BP 89 H-piles and shall be driven a minimum bearing capacity of 118 tons.

Maintenance Road Bridge
Abutment and pier piles are 12 BP 53 H-piles and shall be driven to develop a minimum bearing capacity of 70 tons. Piles shall not be driven until 200 days after completion of first stage surchage fill. A minimum of 1 test pioe shall be driven at a permanent pile location in all abutment and pier footings for I-495 over Stoney Creek and Maintenance Road Bridges as directed by the Director.

Excavation for Structures: The depth of excavation measured for payment shall be the vertical distance from the bottom of concrete to the ground line existing at the time of excavation but not above finished grade. The horizontal limits of excavation for payment shall be 1'-6" beyond the face of concrete.

Portland Cement Concrete Masonry: All concrete shall be controlled concrete with a minimum compressive strength of 3000 p.s.i. in 28 days. Cover over reinforcing bars shall be 2" except as otherwise noted on the drawings or as follows: Pile Caps-3", Approach Slabs-3" bottom, 1-1/2" top. All exposed edges of concrete shall be chamfered 3/4" x 3/4" unless otherwise shown. Concrete in areas under bearing plates shall be constructed to a smooth finish, to the elevations shown on the plans. See Special Provisions.

Bar Reinforcement: Bar reinforcement SHALL MEET THE REQUIREMENTS OF THE STANDARD FOR DEFORMED BILLET STEEL BARS ASTM A-615 GRADE 40. Lapped splices, unless otherwise noted, are to be a minimum of 24 bar diameters.

Slope Protection: Slope protection to the extent indicated on the drawings shall be as specified in the Special Profisions.

Deck Slab: Stay in place forms for the deck will not be permitted.

Shear Connectors: Three general types of shear connectors are eligible for use at the Contractor's option:

1. Welded Studs, (a) Solid-flux-filled welding end, (b) Granular-flux-filled welding end. (Detailed on Contract Plans).
2. Structural Shapes
3. Spirals
   Should the Contractor elect to use a different type of shear connector than shown on the Plans, he shall submit for approval complete detailed shop drawings and all other pertinent data concerning the shear connector he proposes to use. The proposed shear connector shall develop the equivalent resistance to shear of the shear connector shown on the Plans, and shall be approved by the Director. See Special Provisions.
   All shear connectors must be field installed.

Structural Steel and steelwork: All structural carbon steel shall conform with the requirements of ASTM Designation A-36. Unit stress f_s-20,000 p.s.i.
All welding shall conform to the Standard Specifications for Welded Highway and Railway Bridges of the American Welding Society, with current corrections and addenda. See Special Provisions.
All dimensions shown on the drawings are for the structures at a normal temperature of +68°F.
To avoid oversight the shop drawings shall show clearly the nature, dimensions and locations of all welds, bolt sizes, open holes, painting, etc.
Rolled beams shall be cambered as shown on the drawings, allowing for loss of camber due to welding.
Do not paint steel surfaces in contact with concrete. The bearing shoes, when in final position, are to be painted in order to prevent rust stains on the concrete.
Anchor bolts shall be drilled in place and set in non-shrink grout. Immediately after the grout has attained its initial set the anchor bolts shall be thoroughly coated with an approved heavy grease and securely wrapped in burlap. Payment for these rust preventative measures shall be included in the price bid for Item 22.
All stiffener plates are to be in a truly vertical plane when beams are in final erected position with the slab in place.
No welded field splices will be permitted.

DELAWARE
STATE HIGHWAY DEPARTMENT

INTERSTATE ROUTE I-495

MAINTENANCE ROAD BRIDGE
OVER STONEY CREEK
SITE PLAN

J. E. GREINER CO.
MORAN, PROCTOR, MUESER & RUTLEDGE
CONSULTING ENGINEERS

D. G.D.S.	SCALE As Shown	APPROVED BY John Stokley 1/27/69
T. J.S.W.	DATE	BRIDGE ENGINEER
C. K.K.S.		

DO NOT CONSIDER ANY OF THE DATA ON THE EXISTING STRUCTURE SUPPLIED IN THESE DRAWINGS AS POSITIVE REPRESENTATIONS OF ANY OF THE CONDITIONS THAT MAY BE ENCOUNTERED IN THE FIELD FOR T201107402.

COUNTY	CONTRACT	P. B. A. REG. NO.	STATE	FED. AID PROJECT NO.	FISCAL YEAR	SHEET NO.	TOTAL SHEETS
NEW CASTLE	68-07-005	2	DEL.	I-495-3(17)19		24	41

"AS BUILTS" IN RED 9-26-72 D.R.M.

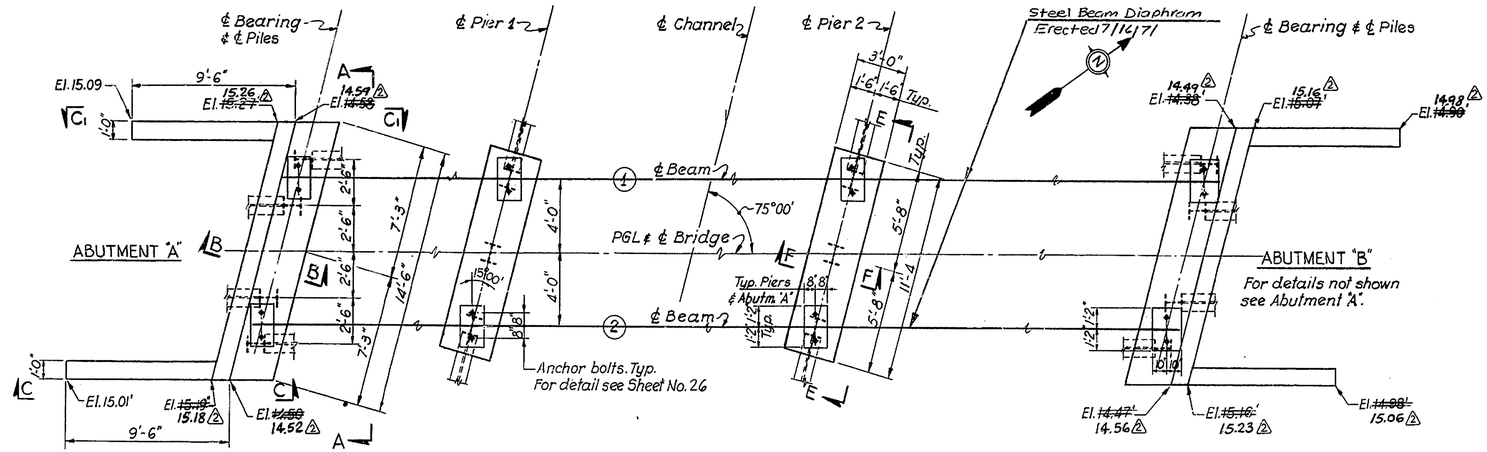

PLAN
Scale: 1/4" = 1'-0"

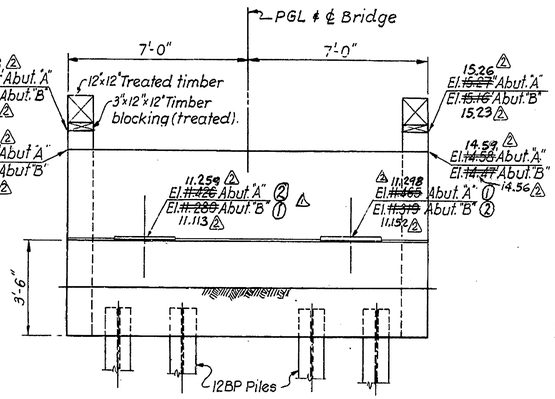

SECTION A-A
Scale: 3/8" = 1'-0"

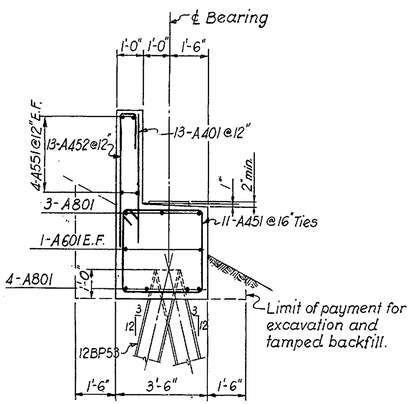

SECTION B-B
Scale: 3/8" = 1'-0"

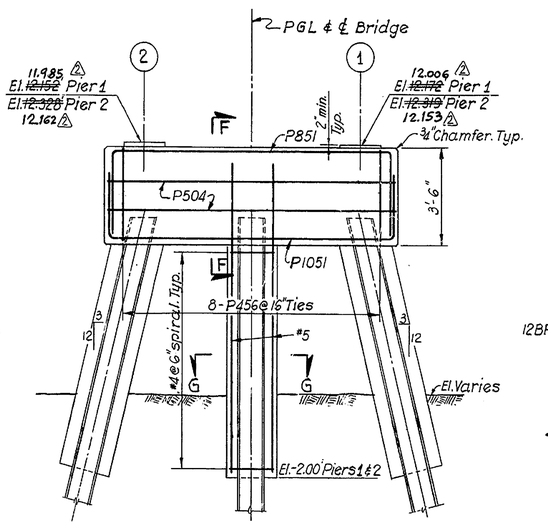

SECTION E-E
Scale: 3/8" = 1'-0"

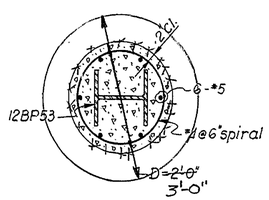

SECTION G-G
Scale: 3/4" = 1'-0"

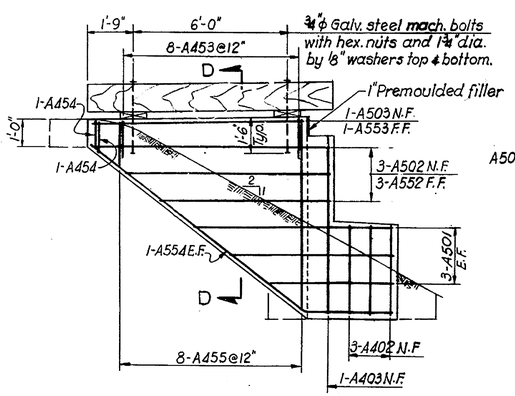

SECTION C-C
SECTION C_1-C_1 (SIMILAR)
Scale: 3/8" = 1'-0"

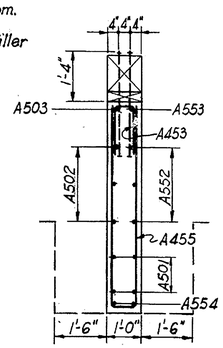

SECTION D-D
Scale: 1/2" = 1'-0"

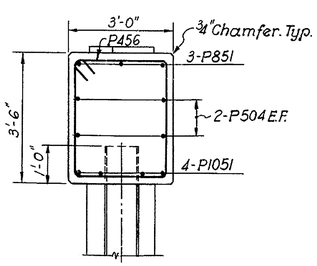

SECTION F-F
Scale: 1/2" = 1'-0"

REINFORCING SCHEDULE

LOCATION	STRAIGHT BARS MARK	NO.	SIZE	LENGTH	BENT BARS MARK	NO.	SIZE	LENGTH
ABUTMENTS	A401	26	#4	4-6	A451	22	#4	13-1
	A402	12	#4	3-2	A452	26	#4	7-0
	A403	4	#4	6-3	A453	32	#4	3-6
					A454	8	#4	2-4
					A455	32	#4	3-8 To 13-8
	A501	24	#5	5-0 To 7-6	A551	16	#5	17-4
	Increment 1'-3" 8 bars of ea.				A552	12	#5	7-4 To 9-10
	A502	12	#5	6-6 To 9-0	A553	4	#5	8-10
	Increment 1'-3" 4 bars of ea.				A554	8	#5	13-3
	A503	4	#5	8-0				
	A601	4	#6	14-0				
	A801	14	#8	14-0				
PIERS	P504	8	#5	11-0	P456	16	#4	12-5
					P851	6	#8	17-0
					P1051	8	#10	16-0

BENDING DIAGRAMS (All dimensions are out to out)

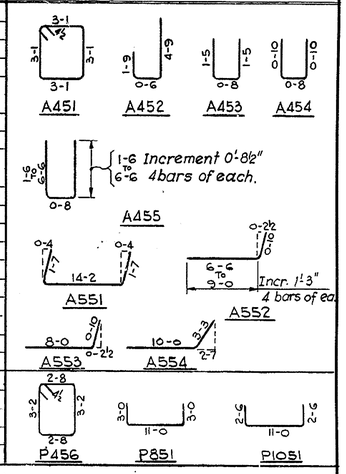

Note: Reinforcement shown is for two Piers and two Abutments.

NOTES:

1. For General Notes see Sheet No. 23
2. Abutment and pier piles are 12BP53 and shall be driven to rock and shall develop a minimum 70 ton bearing capacity. Assumed pile length for estimating purposes only is 25'-0".

REVISIONS
△ Beam #'s Added 7/28/69
△ Elevations Revised 8-27-69 A.W.R.

DELAWARE
STATE HIGHWAY DEPARTMENT

INTERSTATE ROUTE I-495

MAINTENANCE ROAD BRIDGE OVER STONEY CREEK
SUBSTRUCTURE DETAILS

J. E. GREINER CO.
MORAN, PROCTOR, MUESER & RUTLEDGE
CONSULTING ENGINEERS

D. W. W.
T. P. F.
C. N. W. K.

SCALE AS NOTED
DATE

APPROVED BY: John E. Cullen 11/27/69
BRIDGE ENGINEER

DO NOT CONSIDER ANY OF THE DATA ON THE EXISTING STRUCTURE SUPPLIED IN THESE DRAWINGS AS POSITIVE REPRESENTATIONS OF ANY OF THE CONDITIONS THAT MAY BE ENCOUNTERED IN THE FIELD FOR T201107402.

2-1 40

COUNTY	CONTRACT	P. R. A. REG. NO.	STATE	FED. AID PROJECT NO.	FISCAL YEAR	SHEET NO.	TOTAL SHEETS
NEW CASTLE	68-07-005	2	DEL.	I-495-3(17)19		25	41

NOTE: Use same detail (excluding fillers) for splice of 36 WF 150 to 36 WF 150 and 36 WF 135 to 36 WF 135.

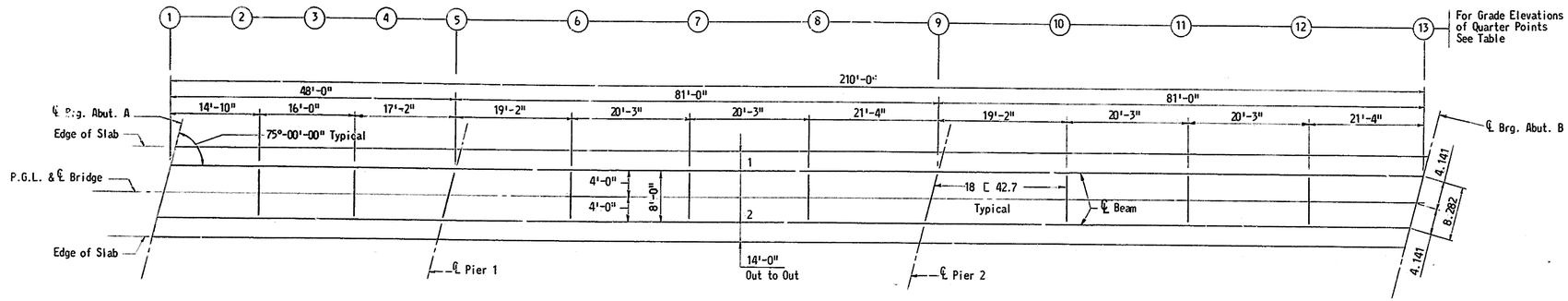

FRAMING PLAN
3/32" = 1'-0"

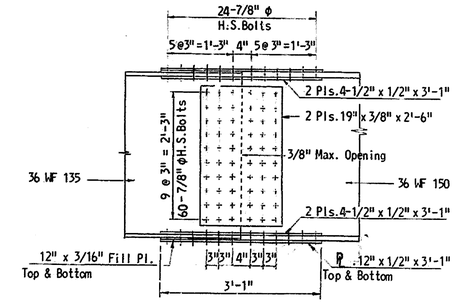

SPLICE DETAIL
3/4" = 1'-0"

Designed for 75% of Capacity as per A.A.S.H.O.

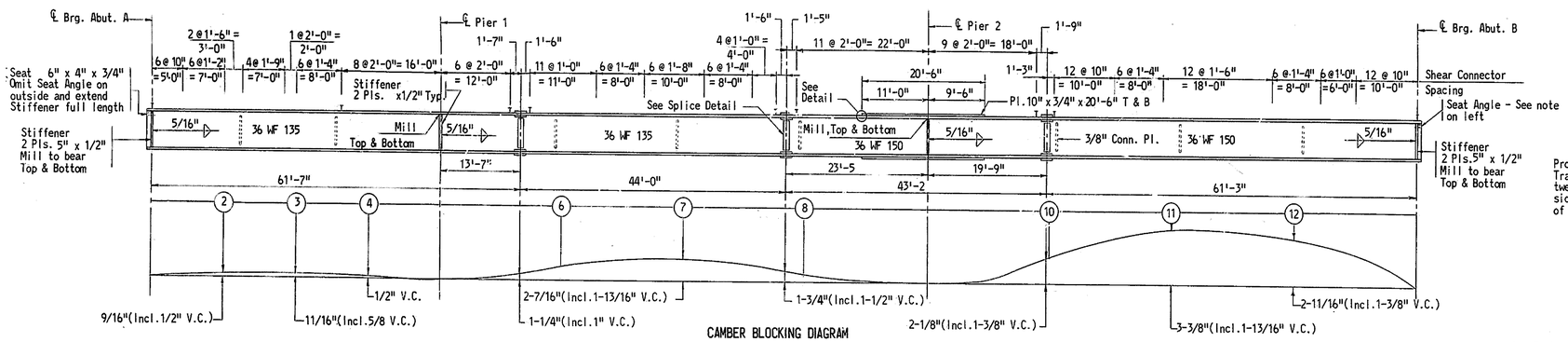

CAMBER BLOCKING DIAGRAM

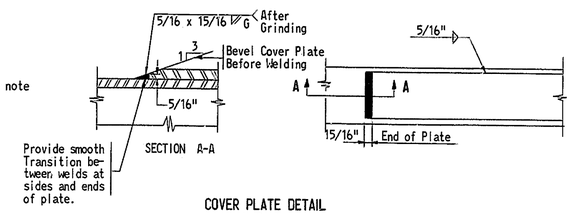

COVER PLATE DETAIL
No Scale

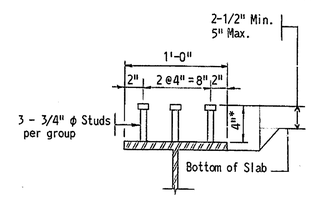

SHEAR CONNECTOR DETAIL
1-1/2" = 1'-0"

* Shear Connector length shall be varied if necessary to insure that it extends a minimum of 2-1/2" and a maximum of 5" into deck slab.

TABLE OF GRADE ELEVATIONS AND DEAD LOAD DEFLECTIONS IN FEET

Stringer Point	1 Grade El.	2 Grade El.	Defl.	
1	15.344	15.305	0.000	
2	15.561	15.527	~~0.078~~	.007
3	15.751	15.721	~~0.074~~	.006
4	15.915	15.889	~~0.004~~	.000
5	16.052	16.031	0.000	
6	16.222	16.208	~~0.316~~	.028
7	16.316	16.310	~~0.439~~	.039
8	16.333	16.335	~~0.126~~	.011
9	16.275	16.284	0.000	
10	16.140	16.156	~~0.550~~	.048
11	15.928	15.953	~~1.115~~	.097
12	15.641	15.673	~~0.911~~	.079
13	15.277	15.316	0.000	

Rev. △

For Camber and Deflection Notes, see Sheet No.26
For General Notes, see Sheet No.23

NOTE: REVISION #2 - COLUMNS 1 & 2 GRADE EL. REMOVED, NEW EL.'S ADDED

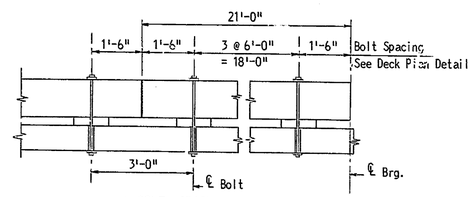

BOLT SPACING DETAIL
1/2" = 1'-0"

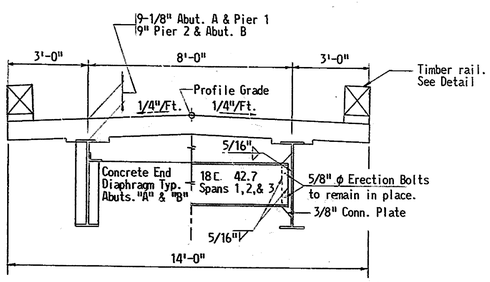

CROSS SECTION
3/8" = 1'-0"

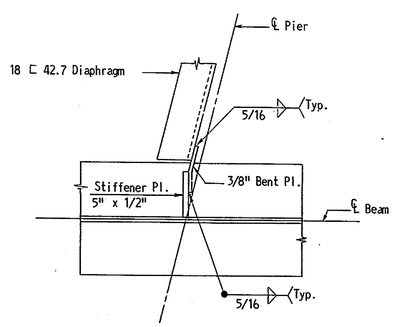

DIAPHRAGM CONNECTION PIER 1 & 2

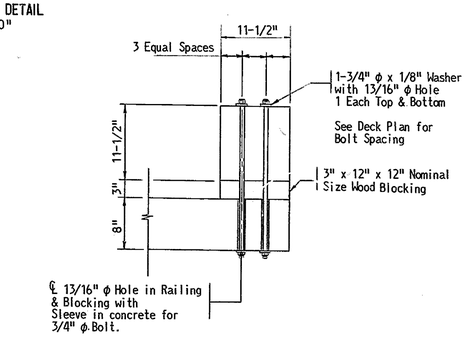

TIMBER RAIL DETAILS
1" = 1'-0"

REVISIONS
△1 Deflections Revised AWR 7-3-69
△2 Grade Elevations Revised G.R.D. 7-28-69

DELAWARE
STATE HIGHWAY DEPARTMENT

INTERSTATE ROUTE I-495

MAINTENANCE ROAD BRIDGE
OVER STONEY CREEK
FRAMING PLAN

J. E. GREINER CO.
MORAN, PROCTOR, MUESER & RUTLEDGE
CONSULTING ENGINEERS

D. G.D.S.
T. G.D.S.
C. K.K.S

SCALE As Shown
DATE

APPROVED BY John E. Cubby 1/27/69
BRIDGE ENGINEER

DO NOT CONSIDER ANY OF THE DATA ON THE EXISTING STRUCTURE SUPPLIED IN THESE DRAWINGS AS POSITIVE REPRESENTATIONS OF ANY OF THE CONDITIONS THAT MAY BE ENCOUNTERED IN THE FIELD FOR T201107402.

COUNTY	CONTRACT	P. R. A. REG. NO.	STATE	FED. AID PROJECT NO.	FISCAL YEAR	SHEET NO.	TOTAL SHEETS
NEW CASTLE	68-07-005	2	DEL.	I-495-3(17)19		26	41

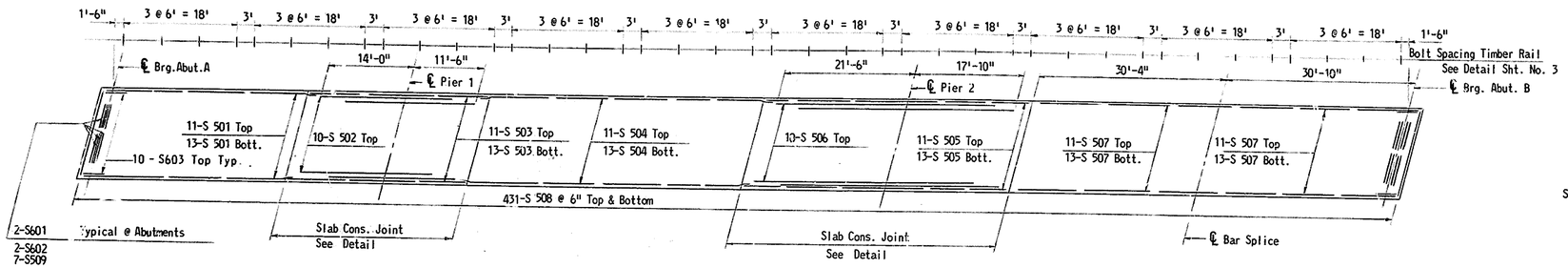

DECK PLAN
3/32" = 1'-0"

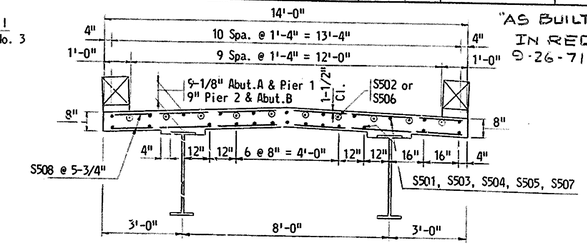

"AS BUILTS" IN RED 9-26-71 DRM.

TYPICAL SECTION
3/8" = 1'-0"

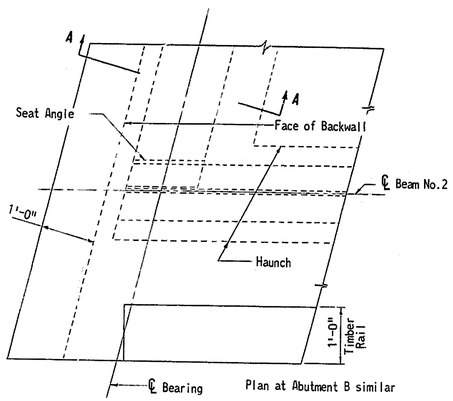

PLAN AT ABUTMENT A

NOTE:
Bronze plates for Expansion Type Shoes shall conform to A.S.T.M. B-22, Alloy A.

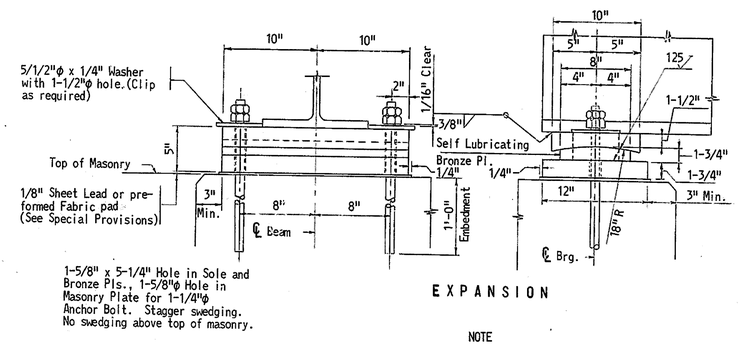

EXPANSION

NOTE

The surface finish of metal in contact indicated by the symbol ✓ shall meet the requirements as defined in American Standard Association Specification A.S.A. B-46.1. All sliding surfaces to be finished in the direction of expansion or rotation.

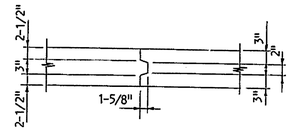

SLAB CONSTRUCTION JOINT
NO SCALE:

NOTE: Deck Slab Concrete in Pouring Sequence ② must not be placed until the Concrete in adjacent Pouring Sequence ① is complete.

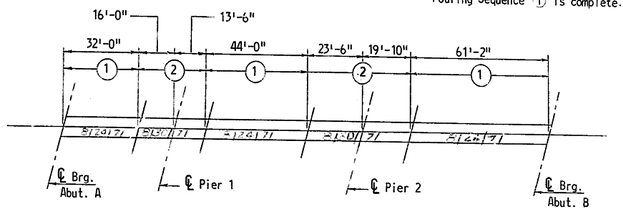

POURING SEQUENCE
1" = 30'-0"

CAMBER: Beams shall be cambered for Dead Load deflections and vertical curvature as indicated in the Camber Blocking Diagram. Beams shall not be cambered more than shown even though the camber is less than that likely to remain permanent.

Beams shall be assembled in the shop to the correct blocking elevations of splices before reaming or drilling splices, and likewise shall be assembled in the field before bolting.

If beam sections over the piers do not have the indicated camber then the blocking elevations for the remaining beam sections shall be adjusted accordingly.

In the Table of "Grade Elevations -----," the deflections given are for dead load due to concrete only. After all beams have been assembled, elevations shall be taken along the tops of beams at points where the grade elevations are shown. The difference between these two elevations plus the amount of deflection listed at each point will be the thickness of the slab and haunch over the top of beam at the centerline of beam. The minimum slab plus haunched depth over the centerline of beam shall not be less than 8".

Mill bearing stiffeners to bear on tension flange and weld stiffeners to compression flange with 5/16" fillet welds.

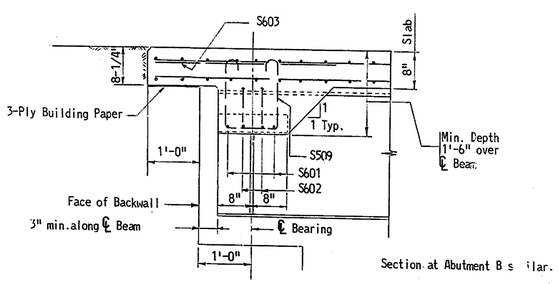

SECTION A-A

ROADWAY DAMS
3/4" = 1'-0"

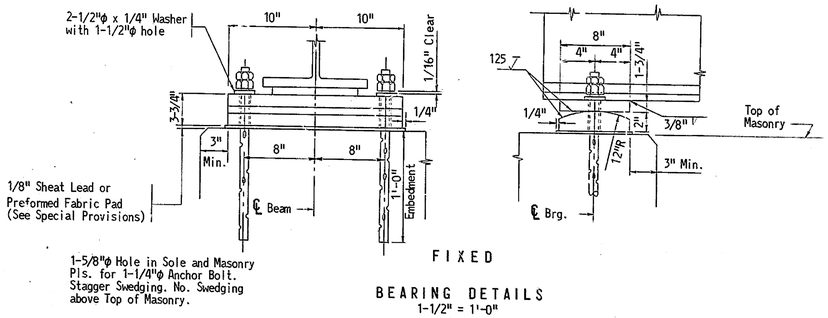

FIXED

BEARING DETAILS
1-1/2" = 1'-0"

REINFORCING SCHEDULE

STRAIGHT BARS			BENT BARS		
MARK	NO. REQ.	LENGTH	MARK	NO. REQ.	LENGTH
S501	24	35'-6"	S509	14	4'-6"
S502	10	21'-6"			
S503	24	29'-6"			
S504	24	46'-6"	S602	4	10'-1"
S505	24	43'-4"			
S506	10	35'-4"			
S507	48	33'-1"			
S508	862	14'-2"			
S603	20	3'-6"			
S601	4	7'-11"			

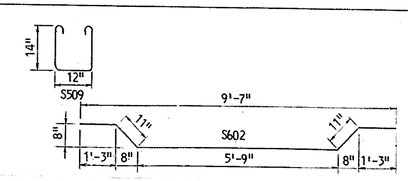

For General Notes See Sheet No. 23

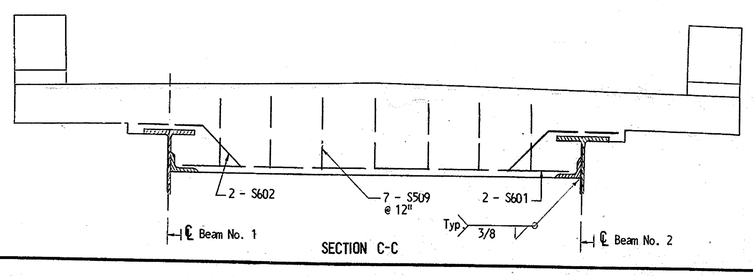

SECTION C-C

J. E. GREINER CO.
MORAN, PROCTOR, MUESER & RUTLEDGE
CONSULTING ENGINEERS

DELAWARE
STATE HIGHWAY DEPARTMENT

INTERSTATE ROUTE I-495

MAINTENANCE ROAD BRIDGE
OVER STONEY CREEK
SUPERSTRUCTURE - DECK & DETAILS

D. G.D.S.
T. G.D.S.
C. K.K.S.

SCALE: As Shown
DATE

APPROVED BY: John G. Rutledge 1/27/69
BRIDGE ENGINEER

DO NOT CONSIDER ANY OF THE DATA ON THE EXISTING STRUCTURE SUPPLIED IN THESE DRAWINGS AS POSITIVE REPRESENTATIONS OF ANY OF THE CONDITIONS THAT MAY BE ENCOUNTERED IN THE FIELD FOR T2011107402.

COUNTY	CONTRACT	A.B.S. REQ. NO.	STATE	FED. AID PROJECT NO.	FISCAL YEAR	SHEET NO.	TOTAL SHEETS
NEW CASTLE	68-07005	2	DEL.	I-495(17)19		27	41

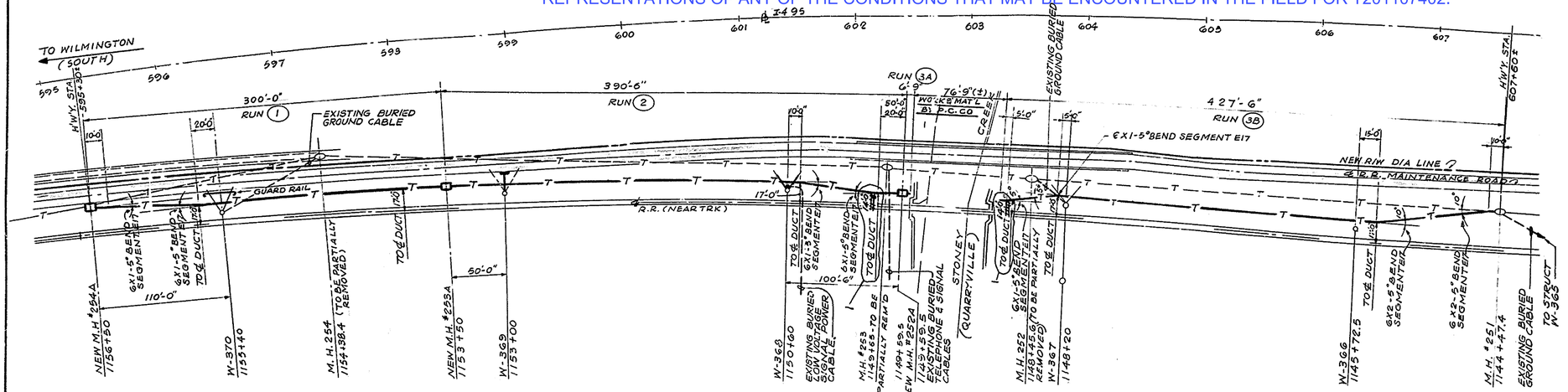

LEGEND

- NEW C&S DUCT LINE
- EXIST. C&S DUCT LINE TO REMAIN
- EXIST. C&S DUCT LINE TO BE ABANDONED

PLAN

SCALE: 1"=50'

GENERAL NOTES

STEEL

1. STRUCTURAL STEEL SHALL CONFORM TO A.S.T.M. SPECIFICATION - DESIGNATION A36, EXCEPT FOR DESIGN.
2. ALL CONNECTION BOLTS SHALL BE FRICTION TYPE, HEX. HEAD, NUT AND WASHER AND CONFORM TO A.S.T.M. SPECIFICATION - DESIGNATION A325, LATEST ISSUE.
3. GALVANIZING SHALL CONFORM TO THE LATEST REQUIREMENTS OF A.S.T.M. SPECIFICATION - DESIGNATION A120 & A153.
4. WELDING TO BE IN ACCORDANCE WITH AMERICAN WELDING SOCIETY SPECIFICATION FOR WELDED HIGHWAY AND RAILWAY BRIDGES D2.0-66. ALL WELDS TO BE CONTINUOUS UNLESS OTHERWISE SHOWN.

CONCRETE

1. CONCRETE SHALL CONFORM TO THE STANDARD SPECIFICATIONS ISSUED 1965 AND AS CALLED FOR IN THE SPECIAL PROVISIONS.
2. REINFORCING BARS SHALL BE BILLET STEEL, INTERMEDIATE GRADE AND CONFORM TO THE STANDARD SPECIFICATIONS ISSUED 1965.
3. STRUCTURAL STEEL EMBEDDED IN CONCRETE SHALL CONFORM TO A.S.T.M. SPECIFICATION - DESIGNATION A36.
4. ALL STEEL EMBEDDED IN CONCRETE SHALL BE UNPAINTED.

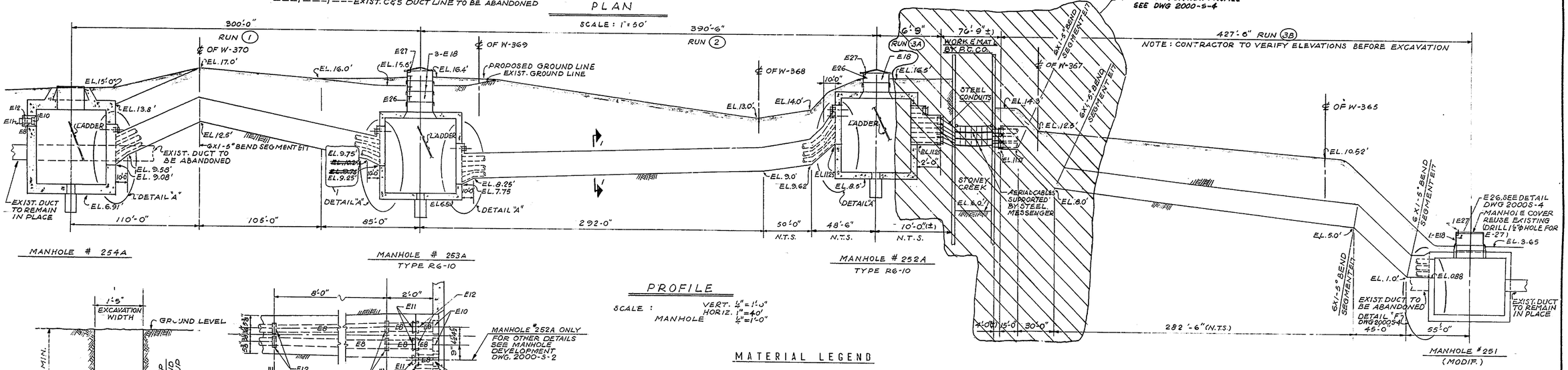

PROFILE

SCALE: VERT. 1/4"=1'-0" HORIZ. 1"=40'
MANHOLE 1/4"=1'-0"

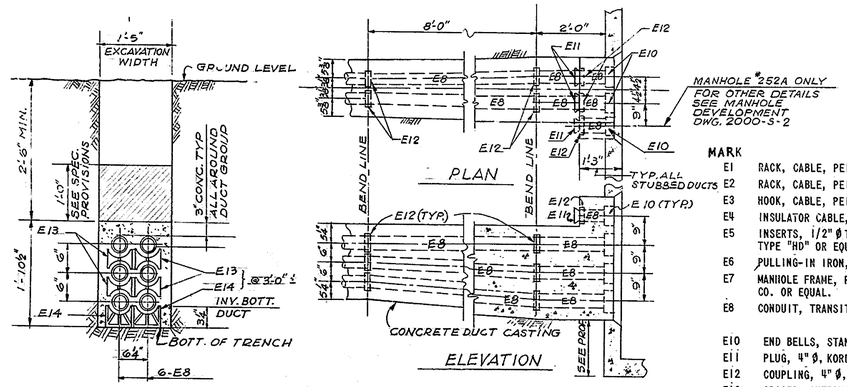

SECTION I-I (TYPICAL)

DETAIL "A" (TYPICAL ARRANGEMENT)

MATERIAL LEGEND

MARK	DESCRIPTION
E1	RACK, CABLE, PEIRCE, UNDERGROUND HUBBARD #2124 OR EQUAL.
E2	RACK, CABLE, PEIRCE, UNDERGROUND HUBBARD #2126 OR EQUAL.
E3	HOOK, CABLE, PEIRCE, UNDERGROUND HUBBARD #2133 OR EQUAL.
E4	INSULATOR CABLE, PEIRCE, UNDERGROUND HUBBARD #2120 OR EQUAL.
E5	INSERTS, 1/2" ϕ THREADED, GRAY IRON, HOHMANN & BARNARD TYPE "HD" OR EQUAL.
E6	PULLING-IN IRON, HUBBARD #9120 OR EQUAL.
E7	MANHOLE FRAME, PATTERN NO. M-39736 C.I., S.B. FOUNDRY CO. OR EQUAL.
E8	CONDUIT, TRANSITE KORDUCT, 4" ϕ OR EQUAL.-10' STD. SECTION
E10	END BELLS, STANDARD, 4" ϕ, TRANSITE KORDUCT OR EQUAL.
E11	PLUG, 4" ϕ, KORDUCT OR EQUAL.
E12	COUPLING, 4" ϕ, TRANSITE KORDUCT OR EQUAL.
E13	SPACER, INTERMEDIATE, PLASTIC, 1-1/2" SEPARATION FOR TRANSITE KORDUCT OR EQUAL.
E14	SPACER, BASE, PLASTIC, 1-1/2" SEPARATION FOR TRANSITE KORDUCT OR EQUAL.
E15	BOLT, 1/2" ϕ x 2-1/2" LG., HEX. HEAD & WASHER.
E16	BOLT, 1/2" ϕ x 2" LG., HEX. HEAD, NUT & WASHER.
E17	BEND SEGMENT, 5°, TRANSITE KORDUCT, 4" ϕ OR EQUAL.
E18	12" MANHOLE FRAME EXTENSIONS, PATTERN NO. M-32048 C.I., S.B FOUNDRY CO., BLOOMSBURG PA., OR EQUAL.
E19	MANHOLE COVER, PATTERN NO. M-39737 C.I., S.B. FOUNDRY CO., BLOOMSBURG, PA., OR EQUAL.
E22	STANDARD HIGHWAY BEAM GUARDRAIL.
E23	GUARDRAIL POST.
E24	STANDARD TERMINAL SECTION.
E25	RAIL BACKUP PLATE.
E26	STEP FOR MANHOLE EXTENSION.
E27	MANHOLE LOCKING HOOK.
E28	MANHOLE FRAME, PATTERN NO. M-31829 C.I., S.B. FOUNDRY CO. OR EQUAL.
E29	MANHOLE COVER, PATTERN NO. M-31830 C.I., S.B. FOUNDRY CO. OR EQUAL.

LIST OF DRAWINGS:

	DWG. NO.
1. PLAN AND PROFILE	2000-S-1
2. DETAIL OF MANHOLE TYPE R6-10	2000-S-2
3. DETAIL OF MANHOLE NO. 254A	2000-S-3
4. DETAIL OF MANHOLE NO. 254A AND MODIFICATIONS TO EXIST. MANHOLE NO. 251	2000-S-4
5. MODIFICATIONS TO CATENARY BRIDGES W-368, W-369 AND W-370	2000-S-5

LIST OF REFERENCE DRAWINGS

1. THE STATE OF DELAWARE - STATE HIGHWAY DEPARTMENT - FEDERAL AID PROJECT NO. I-495-3(17)19, CONTRACT No. 68-07-005 PLANS & CROSS SECTIONS

CONDUIT SCHEDULE

RUN NO.	FROM	TO	DWG NO.	DIA.	ITEM NO. E8	E10	E11	E12	E13	E14	E17
1	M.H. #254A	M.H. #253A	THIS DWG	4"	180	18	6	12	384	192	18
2	M.H. #253A	M.H. #252A	" "	4"	234	18	6	30	520	260	12
3A	M.H. #252A	ST. CR. ABUT.	" "	4"	3	8	8	8	—	—	—
3B	ST. CR. ABUT.	M.H. #251	" "	4"	264	6	6	42	580	290	60

MANHOLE SCHEDULE

NO.	TYPE	LOCATION	DWG. NO.	LADDERS	E18	E26	E27
254A	—	1156+50	2000S-3 2000S-4	HUBBARD NO. 5112 3'-0"LG OR EQUAL	—	—	—
253A	R6-10	1153+50	2000S-2	" " "	3	3	1
252A	"	1149+59.5	"	" " "	1	1	1
251	MODIF.	1144+47.4	2000S-4	—	1	1	1

ISSUE NO.	DATE	DWN.	CHKD.	ARCH.	C.&T.	STRUCT.	MECH.	ELEC.	P.E.	ISSUED FOR	P.C.CO. APPROVAL
2	10/11/68	GLC	WG	—	—	GG	—	WGR	WG	FOR CONSTRUCTION	
1	9-26-68	GLC	WG	—	—	GG	—	GG	WG	STRUCTURAL APPROVAL	

APPROVALS

Gibbs & Hill, Inc. ENGINEERS, DESIGNERS, CONSTRUCTORS NEW YORK

JOB NO. 2000 A

SCALE: AS NOTED

2000-S-1-2

DELAWARE STATE HIGHWAY DEPARTMENT

INTERSTATE ROUTE I-495

MODIFICATIONS TO P.C.CO. ELECTRIFICATION FACILITIES
R.R. STA. 1144+474 TO R.R. STA. 1156+50
PLAN & PROFILE

SCALE

DATE

APPROVED BY: John H. Cubbly 10/15/68 BRIDGE ENGINEER

NO. 1 - PLAN REVISED, PROFILE AT ST. CREEK VOIDED - OCT. 3, 1968

D C B A 1 5 10 A B C D

DO NOT CONSIDER ANY OF THE DATA ON THE EXISTING STRUCTURE SUPPLIED IN THESE DRAWINGS AS POSITIVE REPRESENTATIONS OF ANY OF THE CONDITIONS THAT MAY BE ENCOUNTERED IN THE FIELD FOR T201107402.

COUNTY	CONTRACT	F.A.P.-I.-R.R. NO.	STATE	FED. AID PROJECT NO.	FISCAL YEAR	SHEET NO.	TOTAL SHEETS
NEW CASTLE	68-07-005	2	DEL.	I-495-3(7)19		28	41

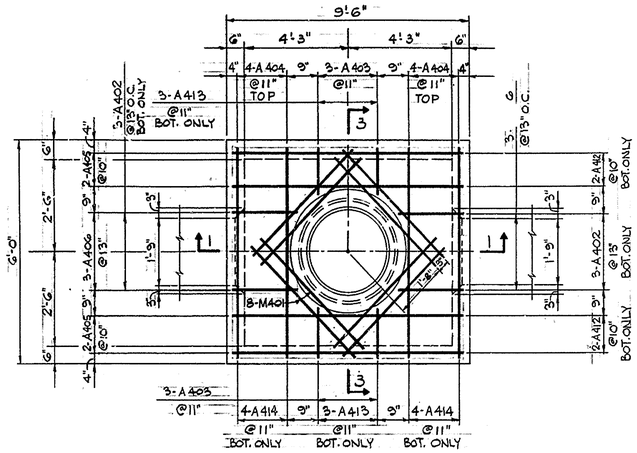

PLAN-ROOF

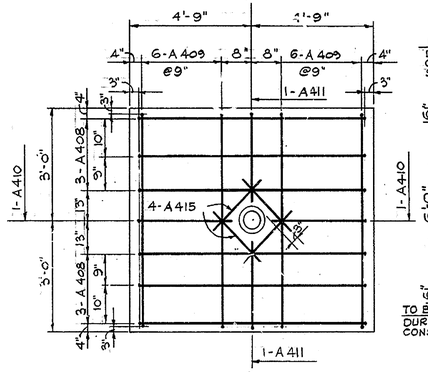

FLOOR SLAB

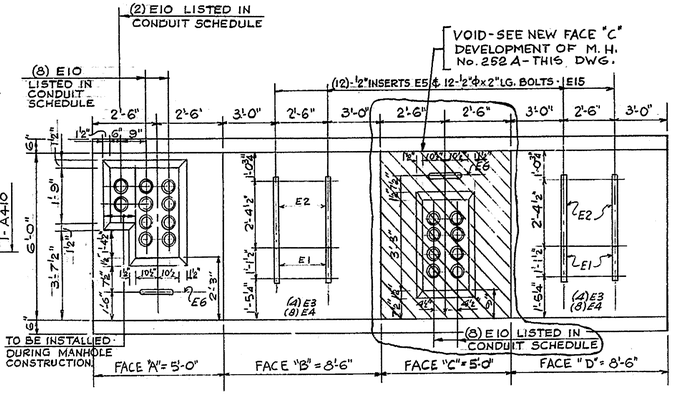

DEVELOPMENT OF MANHOLE No. 252A

REINFORCING SCHEDULE

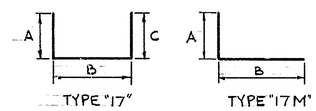

MARK	QUAN.	SIZE	TYPE	LENGTH	A	B	C					REMARKS
MANHOLE TYPE R6-10 (1-LISTED, 2-REQUIRED)												
A401	8	#4	STR.	4'-3"								
A402	6		STR.	3'-0"								
A403	6		17M	7'-4"	1'-2"	6'-2"						
A404	8		17	17'-10"	6'-2"	5'-6"	6'-2"					
A405	4		17	21'-2"	6'-1"	9'-0"	6'-1"					
A406	6		17M	9'-0"	2'-11"	6'-1"						CUT BAR TO CLEAR DUCT OPENING
A407	14		17	16'-0"	3'-6"	9'-0"	3'-6"					"
A408	6		17	11'-10"	1'-5"	9'-0"	1'-5"					
A409	12		17	8'-6"	1'-6"	5'-6"	1'-6"					
A410	2		17M	5'-4"	1'-5"	3'-11"						
A411	2		17M	3'-8"	1'-6"	2'-2"						
A412	4		STR.	9'-2"								
A413	8		STR.	1'-3"								
A414	6		STR.	5'-8"								
A415	4		STR.	1'-9"								

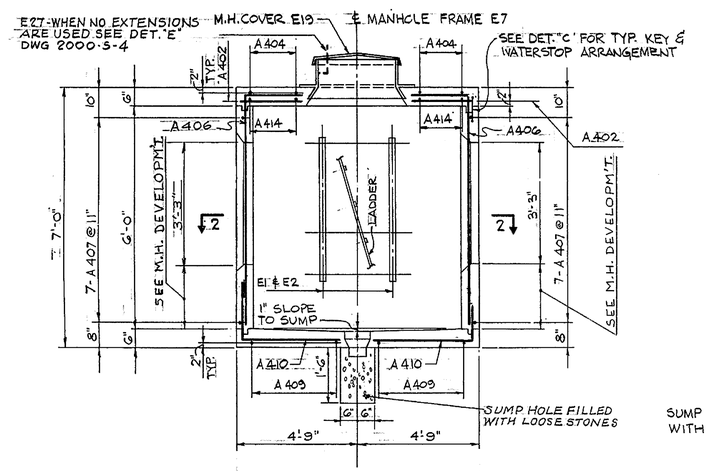

SECTION 1-1

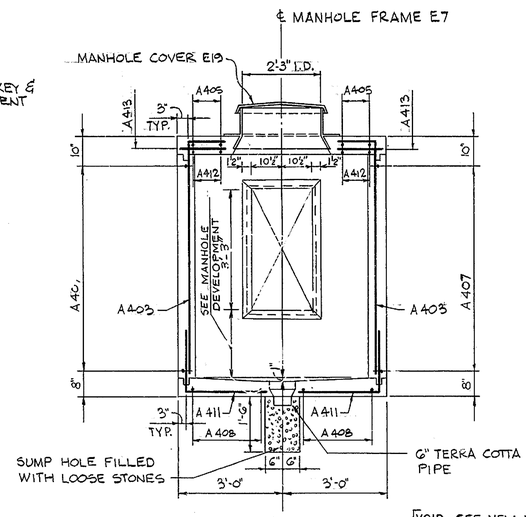

SECTION 3-3

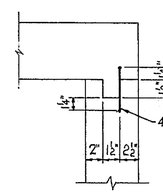

DET. "C"

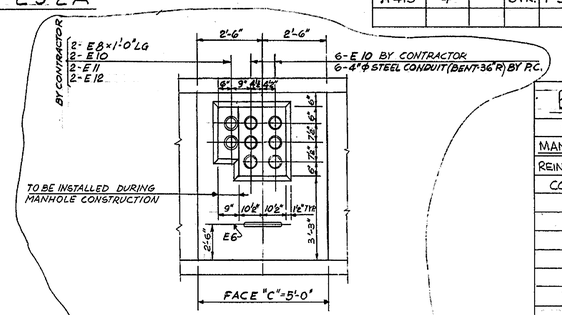

DEVELOPMENT OF MANHOLE No. 252A FACE "C"

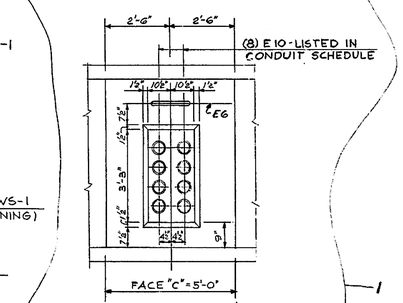

DEVELOPMENT OF MANHOLE No. 253A FACE "C"

BILL OF MATERIAL

ITEM	UNIT	QUANITY
MANHOLE TYPE R6-10 (1-LISTED, 2-REQUIRED)		
REINF. (SEE SCHEDULE)	LBS.	660
CONCRETE	CU. YDS.	5
E1	EA.	4
E2	"	4
E3	"	8
E4	"	16
E5	"	12
E6	"	2
E7	"	1
E15	"	12
E19	"	1
E27	"	1
WS-1	LIN. FT.	80

ALL WORK BY CONTRACTOR

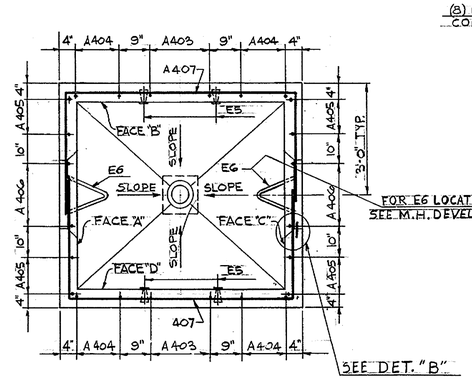

SECTION 2-2

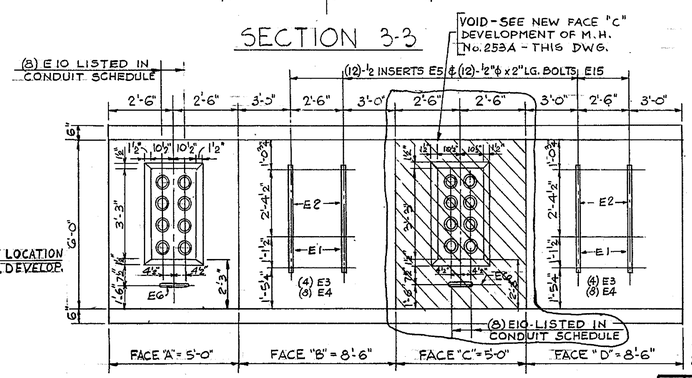

DEVELOPMENT OF MANHOLE NO. 253A

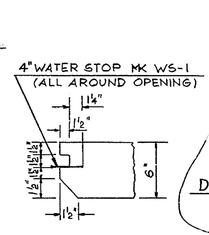

DET. "B"

TYPICAL KEY AT ALL DUCT OPENINGS

NOTES:
1- FOR LIST OF DRAWINGS, GENERAL NOTES & MATERIAL LEGEND SEE DWG. 2000-S-1.
2- WATER STOPS TO BE COPPER TYPE ETP AND CONFORM TO AASHO M138, LATEST ISSUE.

ISSUE NO.	DATE	DWN.	CHKD.	ARCH.	CAT.	STRUCT.	MECH.	ELEC.	P.E.	ISSUED FOR	P.C.CO. APPROVAL
2	10/11/68	M.K.		—	—	RCG	—	RSK		FOR CONSTRUCTION	
1	4-30-68	M.K.		—	—	RCG	—	RSK		STRUCTURAL APPROVAL	

APPROVALS

Gibbs & Hill, Inc.
ENGINEERS, DESIGNERS, CONSTRUCTORS
New York
JOB NO. 2000 A

SCALE: NONE

2000-S-2-2

DELAWARE
STATE HIGHWAY DEPARTMENT

INTERSTATE ROUTE I-495

MODIFICATIONS TO P.C.CO. ELECTRIFICATION FACILITIES
R.R. STA. 1144+47.4 TO R.R. STA. 1156+50
DETAIL OF MANHOLE
TYPE R6-10

SCALE

DATE

APPROVED BY: John E. Kirkby 10/15/68
BRIDGE ENGINEER

REVISIONS
No. 1 - FACE "C" DEVELOPMENT OF M.H.'s No. 252A & 253A REVISED - OCT. 3, 68

DO NOT CONSIDER ANY OF THE DATA ON THE EXISTING STRUCTURE SUPPLIED IN THESE DRAWINGS AS POSITIVE REPRESENTATIONS OF ANY OF THE CONDITIONS THAT MAY BE ENCOUNTERED IN THE FIELD FOR T201107402.

COUNTY	CONTRACT	F.A.P. NUMBER NO.	STATE	FED. AID PROJECT NO.	FISCAL YEAR	SHEET NO.	TOTAL SHEETS
NEW CASTLE	68-07-005	2	DEL.	I-495-3 (12) 19		29	41

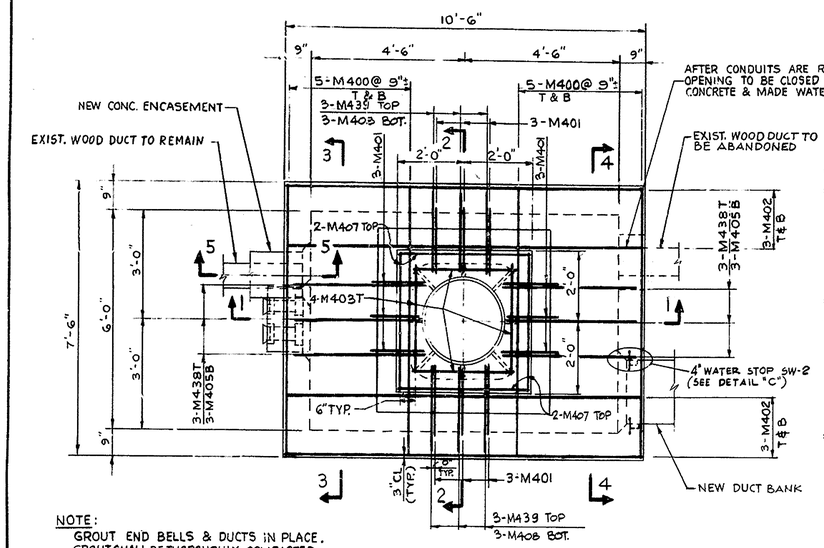

NOTE:
GROUT END BELLS & DUCTS IN PLACE. GROUT SHALL BE THOROUGHLY COMPACTED TO ELIMINATE ALL VOIDS. PROVIDE WATERTIGHT JOINTS

PLAN - MANHOLE ROOF

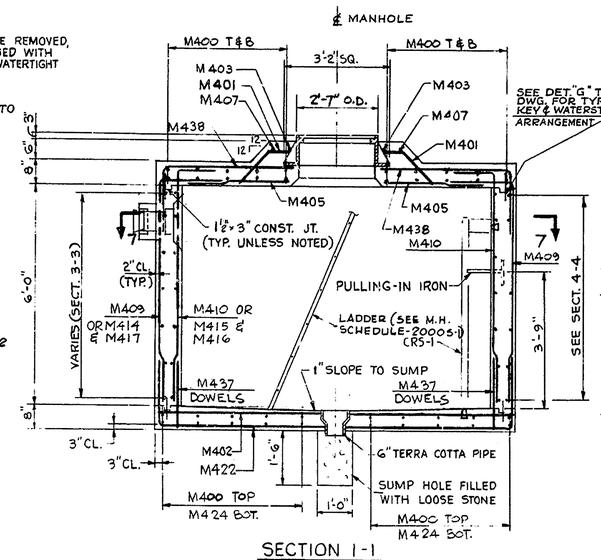

SECTION 1-1

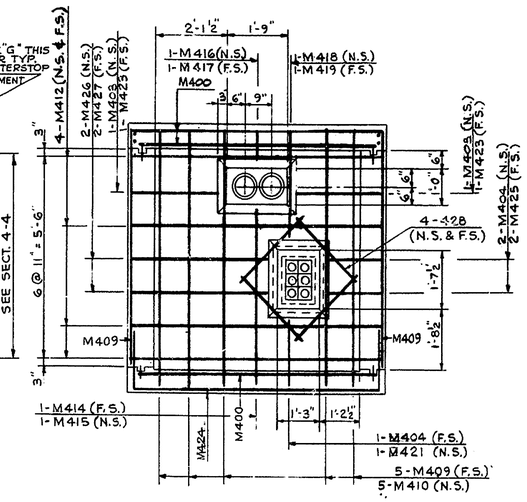

SECTION 3-3

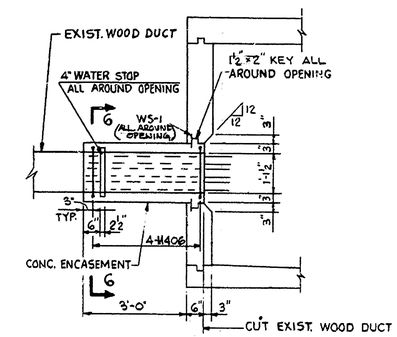

NOTE:
REINF. OF MANHOLE NOT SHOWN.

SECTION 5-5

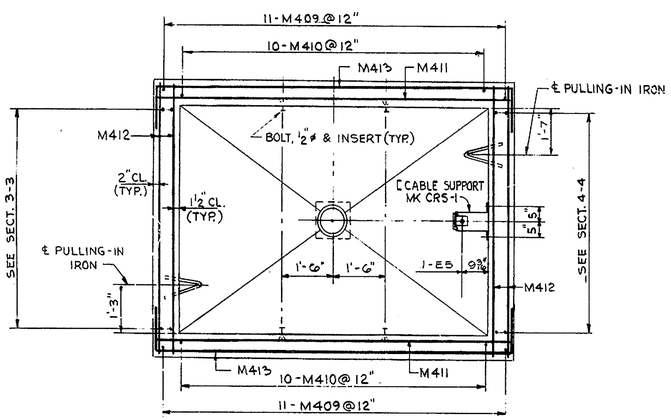

SECTION 7-7

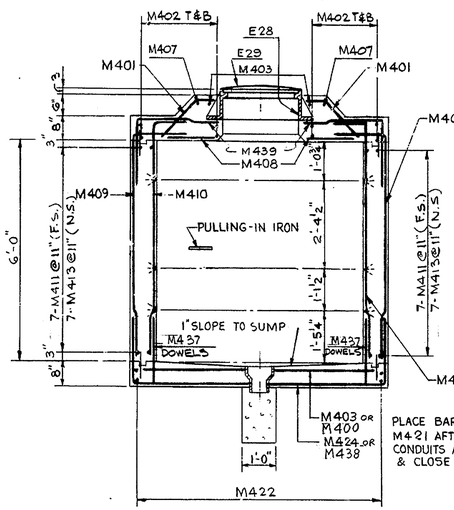

SECTION 2-2

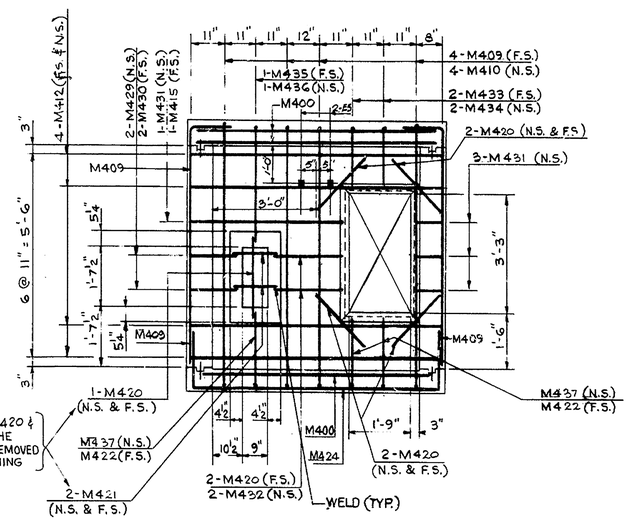

SECTION 4-4

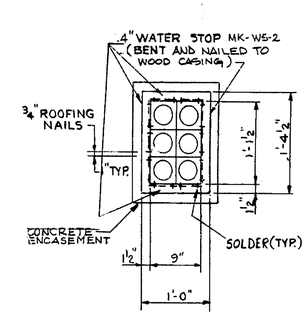

SECTION 6-6

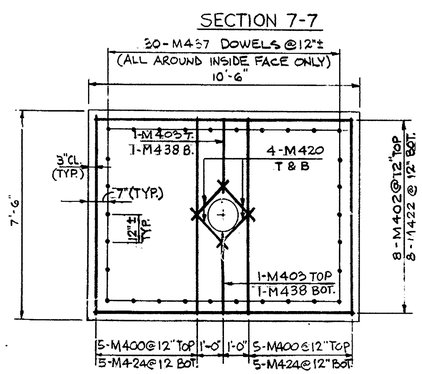

REINFORCEMENT OF FLOOR SLAB

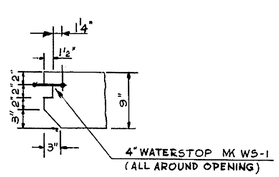

DETAIL "D"
TYPICAL KEY AT ALL DUCT OPENINGS
SCALE: 1" = 1'-0"

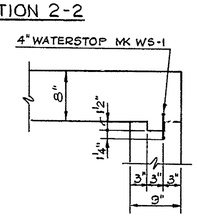

DETAIL "G"

NOTES:
1- FOR GENERAL NOTES, LIST OF DRAWINGS & MATERIAL LEGEND SEE DWG 2000S-1.
2- WORK THIS DRAWING WITH DWG. 2000S-4
3- WATER STOPS TO BE COPPER TYPE ETP AND CONFORM TO AASHO M138, LATEST ISSUE.

E.P. Foley 10/11/68

ISSUE NO.	DATE	DWN.	CHKD.	ARCH.	CAT.	STRUC.	MECH.	ELEC.	T.E.	ISSUED FOR	P.C.CO. APPROVAL
2	10/11/68	F.P.		–	–		–			FOR CONSTRUCTION	
1	9-30-68	F.P.		–	–		–			STRUCTURAL APPROVAL	

APPROVALS

Gibbe & Hill, Inc.
ENGINEERS, DESIGNERS, CONSTRUCTORS
NEW YORK
JOB NO. 2000 A

SCALE NONE

2000-S-3-2

DELAWARE
STATE HIGHWAY DEPARTMENT

INTERSTATE ROUTE I-495

MODIFICATIONS TO P.C.CO. ELECTRIFICATION FACILITIES
R.R. STA. 1144 + 47.4 TO R.R. STA. 1156 + 50
DETAIL OF MANHOLE NO. 254A

SCALE

DATE

APPROVED BY: John Hubbell 10/15/68
BRIDGE ENGINEER

REVISIONS

DO NOT CONSIDER ANY OF THE DATA ON THE EXISTING STRUCTURE SUPPLIED IN THESE DRAWINGS AS POSITIVE REPRESENTATIONS OF ANY OF THE CONDITIONS THAT MAY BE ENCOUNTERED IN THE FIELD FOR T201107402.

COUNTY	CONTRACT	ROUTE NO.	STATE	FED. AID PROJECT NO.	FISCAL YEAR	SHEET NO.	TOTAL SHEETS
NEW CASTLE	68-07-005	2	DEL.	I-495-3(7)19		30	41

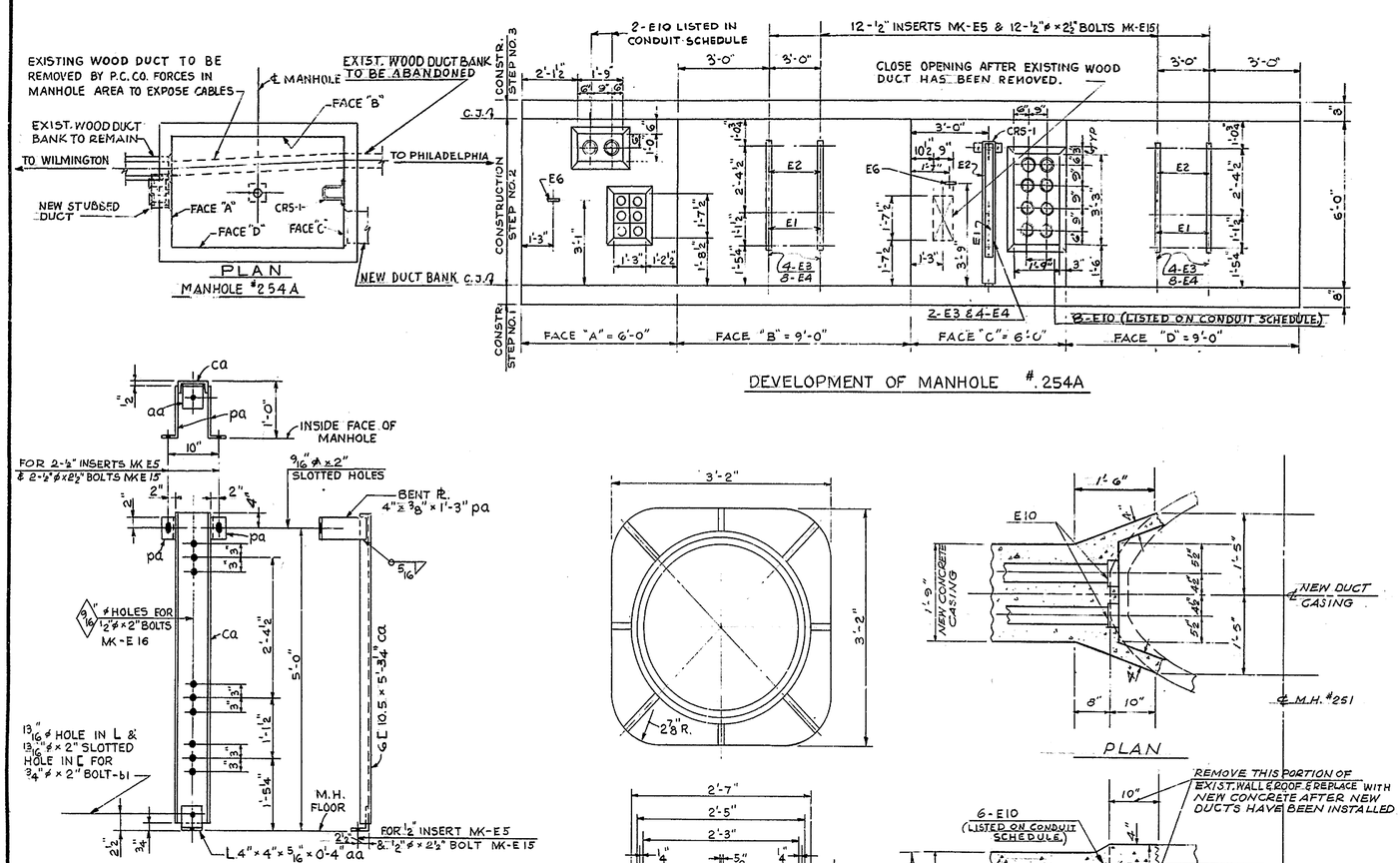

DEVELOPMENT OF MANHOLE #254A

CABLE RACK SUPPORT MK-CRS-1 (GALV.)

MATERIALS
1 - aa - L 4" × 4" × 5/16" × 0'-4"
1 - ca - 6 [10.5 × 5'-3¼"
2 - pa - PL. 4" × 3/8" × 1'-3"
1 - b1 - ¾" φ × 2" BOLT, H.H., NUT & WASHER

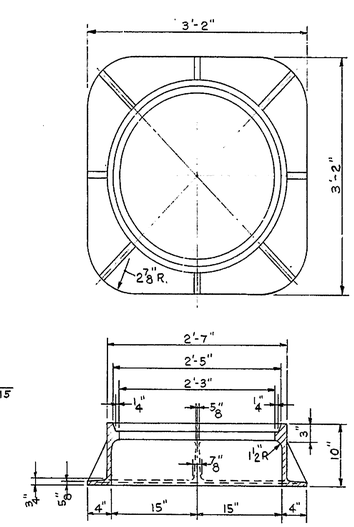

MANHOLE FRAME
REFERENCE NO. M-31829 C.I.
WEIGHT ABOUT 380 LBS.
E28
(MATERIAL - A48 CLASS #30)

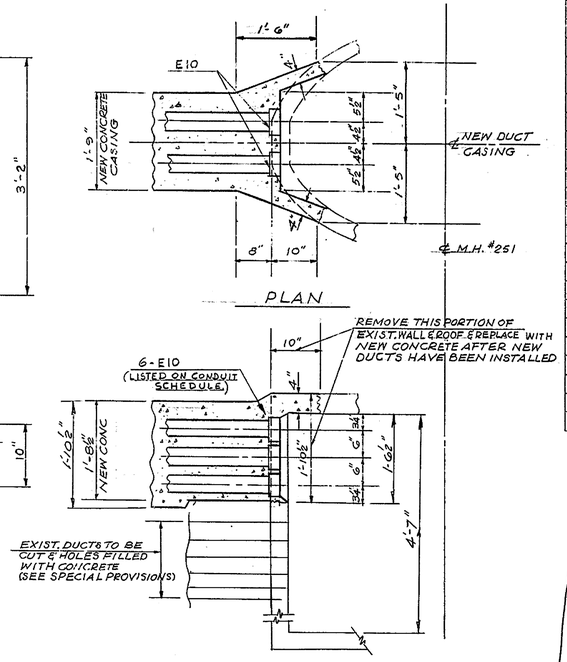

DETAIL "F"

MODIFICATION TO MANHOLE #25

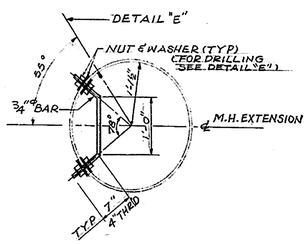

STEPS DETAIL OF MANHOLE EXTENSION
E26 (GALV.)

MARK	DESCRIPTION	UNIT	QUAN
E26	¾"φ BAR 2'-2" LG WITH 4-H.N. & W.	EA	2

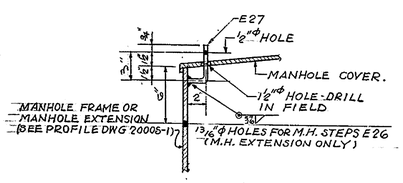

DETAIL "E"

MARK	DESCRIPTION	UNIT	QUAN.
E-27	BAR 1¼"φ X 0'-5¾" LG (GALV.)	EA	1

REINFORCING SCHEDULE

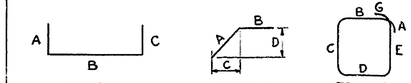

MARK	NO. REQ'D	SIZE	LENGTH	TYPE	A	B	C	D	E	G	REMARKS
M400	30	#4	7'-0"	STR.							
M401	12	"	1'-9"	19	1'-2"	7"	10"	10"			
M402	20	"	10'-0"	STR.							
M403	8	"	3'-0"	"							
M404	3	"	1'-6"	"							
M405	6	"	3'-0"	"							
M406	4	"	5'-4"	T2	6"	11"	1'-3"	11"	1'-3"	6"	
M407	4	"	3'-10"	STR.							
M408	6	"	1'-4"	STR.							
M409	31	"	7'-8"	17	1'-6"	6'-2"	—				
M410	29	"	7'-5"	17	1'-0"	6'-5"	—				
M411	14	"	10'-2"	STR.							
M412	16	"	7'-2"	"							
M413	14	"	13'-4"	17	1'-7"	10'-2"	1'-7"				
M414	1	"	4'-6"	STR.							
M415	2	"	4'-3	"							
M416	1	"	1'-1"	17	6"	7"	—				
M417	1	"	1'-4"	17	6"	10"	—				
M418	1	"	3'-8"	17	0'-11"	2'-9"	—				
M419	1	"	4'-3"	17	1'-3"	3'-0"	—				
M420	20	"	2'-0"	STR.							
M421	5	"	1'-3	"							
M422	8	"	14'-0"	17	2'-0"	10'-0"	2'-0"				
M423	2	"	3'-3"	STR.							
M424	10	"	11'-0"	17	2'-0"	7'-0"	2'-0"				
M425	2	"	1'-9"	STR.							
M426	2	"	3'-9"	"							
M427	2	"	4'-0"	"							
M428	6	"	2'-6"	STR.							
M429	2	"	2'-2"	17	1'-2"	1'-0"	—				
M430	2	"	3'-0"	17	1'-7"	1'-5"	—				
M431	3	"	1'-8"	17	1'-2"	6"	—				
M432	2	"	1'-7"	STR.							
M433	2	"	3'-1"	17	1'-7"	1'-6"	—				
M434	2	"	2'-5"	17	1'-2"	1'-3"	—				
M435	1	"	4'-7"	17	1'-7"	3'-0"	—				
M436	1	"	3'-9"	17	1'-2"	2'-7"	—				
M437	30	"	2'-6"	17	6"	2'-0"	—				DOWELS
M438	8	"	5'-6"	17	2'-0"	3'-6"	—				
M439	6	"	4'-0"	17	2'-0"	2'-0"	—				

BILL OF MATERIAL

ITEM NO.	UNIT	QUAN.
MAN HOLE #254 A		
E1	EA.	5
E2	"	5
E3	"	10
E4	"	20
E5	"	15
E6	"	2
E29	"	1
E15	"	15
E16	"	3
E28	"	1
CRS-1	"	1
WS-1	LIN. FT.	85
WS-2	"	5
#4 REINF. BARS	1820 FT.	1220#
CONCRETE	CU. YD.	9.5
MODIFICATION TO MAN HOLE #251		
CONCRETE	CU. YD.	1

ALL WORK BY CONTRACTOR

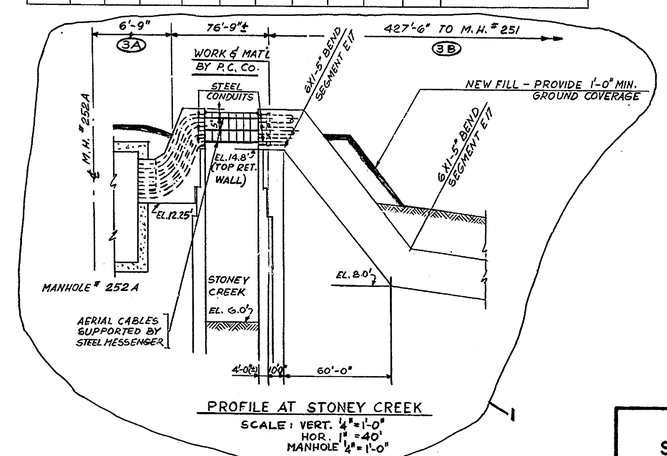

PROFILE AT STONEY CREEK
SCALE: VERT. ¼" = 1'-0"
HOR. 1" = 40'
MANHOLE ¼" = 1'-0"

NOTES:
FOR LISTS OF DRAWINGS, GENERAL NOTES & MATERIAL LEGEND SEE DWG. 2000S-1.

REVISIONS
NO. 1 - PROFILE AT STONEY CREEK ADDED - OCT. 3, 1969

ISSUE NO.	DATE	DWN.	CHKD.	ARCH.	CAT.	STRUCT.	MECH.	ELEC.	H.E.	ISSUED FOR	P.C.CO. APPROVAL
2	10/11/68	F.R.	M.G.	—	—	GCG	—	WSK	WK	FOR CONSTRUCTION	
1	3-24-68	F.R.	M.G.	—	—	GCG	—	WSK	WK	STRUCTURAL APPROVAL	

APPROVALS

Gibbs & Hill, Inc.
ENGINEERS, DESIGNERS, CONSTRUCTORS
NEW YORK
JOB NO. 2000 A

SCALE: NONE

2000-S-4-2

DELAWARE
STATE HIGHWAY DEPARTMENT

INTERSTATE ROUTE I-495

MODIFICATIONS TO P.C.CO. ELECTRIFICATION FACILITIES
R.R. STA. 1144+47.4 TO R.R. STA. 1156+50
DETAIL OF MANHOLE NO. 254A AND
MODIFICATIONS TO EXISTING MANHOLE NO. 251

SCALE

DATE

APPROVED BY: John H. Liddle 10/15/68
BRIDGE ENGINEER

DO NOT CONSIDER ANY OF THE DATA ON THE EXISTING STRUCTURE SUPPLIED IN THESE DRAWINGS AS POSITIVE REPRESENTATIONS OF ANY OF THE CONDITIONS THAT MAY BE ENCOUNTERED IN THE FIELD FOR T201107402.

COUNTY	CONTRACT	F.A.S. REG. NO.	STATE	FED. AID PROJECT NO.	FISCAL YEAR	SHEET NO.	TOTAL SHEETS
NEW CASTLE	68-07-005	2	DEL.	I-495-3(17) 19		31	41

"AS BUILTS" IN RED 9/26/72 D.R.M.

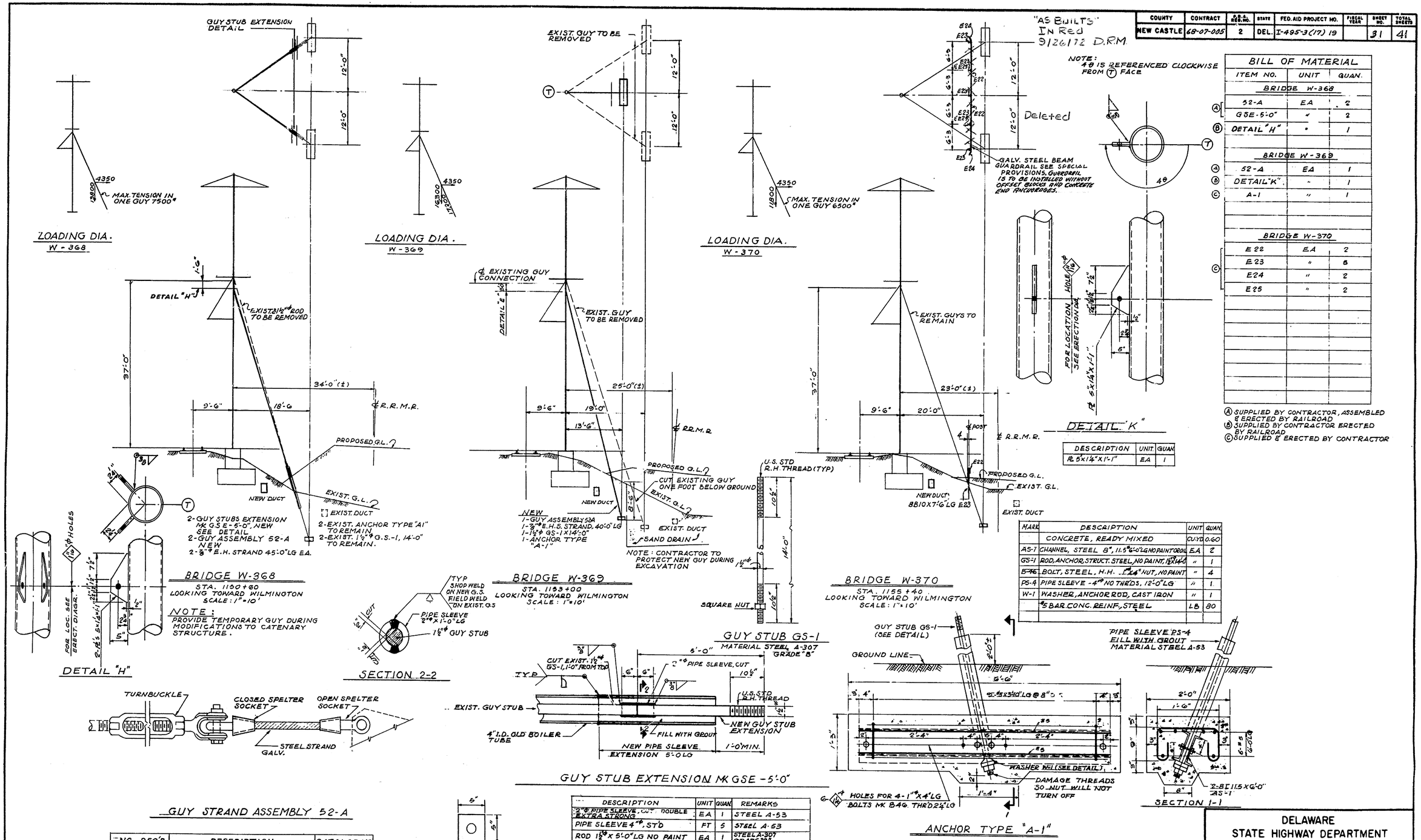

BILL OF MATERIAL

	ITEM NO.	UNIT	QUAN.
	BRIDGE W-368		
(A)	52-A	EA	2
	G5E-5'-0"	"	2
(B)	DETAIL "H"	"	1
	BRIDGE W-369		
(A)	52-A	EA	1
(B)	DETAIL "K"	"	1
(C)	A-1	"	1
	BRIDGE W-370		
(C)	E22	EA	2
	E23	"	6
	E24	"	2
	E25	"	2

(A) SUPPLIED BY CONTRACTOR, ASSEMBLED & ERECTED BY RAILROAD
(B) SUPPLIED BY CONTRACTOR ERECTED BY RAILROAD
(C) SUPPLIED & ERECTED BY CONTRACTOR

DESCRIPTION	UNIT	QUAN.
PL 5"X1¼"X1'-1"	EA	1

MARK	DESCRIPTION	UNIT	QUAN.
	CONCRETE, READY MIXED	CU.YD.	0.60
AS-1	CHANNEL, STEEL 8", 11.5#-6'-0" LG NO PAINT OR OIL	EA	2
GS-1	ROD, ANCHOR, STRUCT. STEEL, NO PAINT, 1½" ϕ X 14'-0"	"	1
B-46	BOLT, STEEL, H.H. 1" ϕ X 4" NUT, NO PAINT	"	4
PS-4	PIPE SLEEVE - 4" ϕ NO THREDS, 12'-0" LG	"	1
W-1	WASHER, ANCHOR ROD, CAST IRON	"	1
	#5 BAR CONC. REINF., STEEL	LB	80

NO. REQ'D	DESCRIPTION	CATALOG NO.
1	1½" X 18" TURNBUCKLE G228 (OMIT E.H. JAW)	CROSBY LAUGHLIN #930-SOR EQUAL
1	CLOSED SPELTER SOCKET FOR ⅞" ϕ STRAND	DO-FIG. G-417
1	OPEN SPELTER SOCKET FOR ⅞" ϕ STRAND	DO-FIG. G-416
FOR LENGTH SEE ERECTION DIA.	⅞" ϕ STEEL STRAND E.H., 19 WIRES GALV. OR GALV. STRUCTURAL (BRIDGE) STRAND-CLASS A COATING THROUGHOUT	AMER. STEEL AND WIRE OR EQUAL U.S. STEEL OR EQU.

DESCRIPTION	UNIT	QUAN.	REMARKS
2" ϕ PIPE SLEEVE, CUT DOUBLE EXTRA STRONG	EA	1	STEEL A-53
PIPE SLEEVE 4" ϕ, ST'D	FT	5	STEEL A-53
ROD 1½" ϕ X 5'-0" LG NO PAINT	EA	1	STEEL A-307 GRADE "B"

NOTE: FOR GENERAL NOTES, LIST OF DRAWINGS & MATERIAL LEGEND SEE DWG. 20005-1

ISSUE NO.	DATE	DWN.	CHKD.	MODIFICATIONS							ISSUED FOR	P.C.CO. APPROVAL
2	10/11/68	C.C.C.	M.G.	—	—	FGS	—	WWL	W.H.		FOR CONSTRUCTION	
1	9-26-68	C.C.C.	M.G.	—	—	FGS	—	WWL	W.H.		STRUCTURAL APPROVAL	

APPROVALS

Gibbs & Hill, Inc.
ENGINEERS, DESIGNERS, CONSTRUCTORS
NEW YORK
JOB NO. 2000 A

SCALE: NONE & AS NOTED

2000-S-5-2

DELAWARE
STATE HIGHWAY DEPARTMENT

INTERSTATE ROUTE I-495

MODIFICATIONS TO P.C.CO. ELECTRIFICATION FACILITIES
R.R. STA. 1144+47.4 TO R.R. STA. 1156+50
MODIFICATIONS TO CATENARY BRIDGES
W-368, W-369 & W-370

SCALE

DATE

APPROVED BY: John H. Liddle 10/15/68
BRIDGE ENGINEER

REVISIONS

D C B A 1 5 10 A B C D

DO NOT CONSIDER ANY OF THE DATA ON THE EXISTING STRUCTURE SUPPLIED IN THESE DRAWINGS AS POSITIVE REPRESENTATIONS OF ANY OF THE CONDITIONS THAT MAY BE ENCOUNTERED IN THE FIELD FOR T201107402.

COUNTY	CONTRACT	P. R. A. REG. NO.	STATE	FED. AID PROJECT NO.	FISCAL YEAR	SHEET NO.	TOTAL SHEETS
NEW CASTLE	68-07-005	2	DEL.	I-495-3(17)19		32	41

INDEX

SHEET	TITLE	CONTENTS
	TITLE SHEET	PROJECT TITLE & SITE PLAN
32	GENERAL NOTES, LEGENDS & INDEX	AS SHOWN
	BORING LOCATION PLAN - STA. 341+00 TO STA. 459+27	LOCATION PLAN FOR SECTIONS 1-1 TO 17-17
	" " " - STA. 459+27 TO STA. 561+50	" " " " 17-17 TO 36-36
33	" " " - STA. 561+50 TO STA. 625+00	" " " " 37-37 TO 43-43
	BORINGS & GEOLOGIC SECTIONS - STA. 341+00 TO STA. 353+20	SECTIONS 1-1 AND 2-2; DATA FOR PIEZOMETER PB-2
	" " " " - STA. 353+20 TO STA. 362+20	" 3-3 AND 4-4
	" " " " - STA. 362+20 TO STA. 374+20	" 5-5
	" " " " - STA. 374+20 TO STA. 386+30	" 6-6 AND DATA FOR PIEZOMETER PB-17
	" " " " - STA. 386+30 TO STA. 399+10	" 7-7 " " " " PB-28
	" " " " - STA. 385+10, 393+10, 397+60	" 8-8, 9-9 AND 10-10
	" " " " - STA. 399+10 TO STA. 411+10	" 11-11
	" " " " - STA. 411+10 TO STA. 423+60	" 12-12 AND DATA FOR PIEZOMETER PB-39U
	" " " " - STA. 423+60 TO STA. 436+10	" 13-13
	" " " " - STA. 436+10 TO STA. 448+80	" 14-14 AND DATA FOR PIEZOMETER PB-47
	" " " " - STA. 448+80 TO STA. 466+90	" 15-15, 16-16 AND 17-17
	" " " " - STA. 466+90 TO STA. 479+60 & STA. 462+60	" 18-18, 19-19 AND 20-20; DATA FOR PIEZOMETER PB-63
	" " " " - STA. 479+60 TO STA. 490+70 & STA. 476+11, STA. 477+75	" 21-21, 22-22, 23-23 AND 24-24; DATA FOR PIEZOMETER PB-73 & PB-78
	" " " " - STA. 490+70 TO STA. 500+70	" 25-25, 26-26, 27-27 AND 28-28 DATA FOR PIEZOMETER PB-100
	" " " " - STA. 500+70 TO STA. 511+80	" 29-29, 30-30, 31-31 AND 32-32 DATA FOR PIEZOMETER PB-109
	" " " " - STA. 511+80 TO STA. 534+10	" 33-33 AND 34-34; DATA FOR PIEZOMETER PB-113
	" " " " - STA. 534+10 TO STA. 561+20	" 35-35 AND 36-36 " " " PB-125
	" " " " - STA. 561+20 TO STA. 591+60	" 37-37 AND 38-38 " " " PB-137
34	" " " " - STA. 591+60 TO STA. 610+60	" 39-39 AND 40-40
35	" " " " - STA. 610+60 TO STA. 622+60 & STA. 602+77, STA. 604+03	" 41-41, 42-42 AND 43-43; DATA FOR PIEZOMETER PB-153
	DELAWARE RIVER BORING LOCATION PLAN AND BORING LOGS W-12 TO W-19	AS SHOWN
	DELAWARE RIVER BORING LOGS W-20 TO W-34	AS SHOWN
	TYPICAL PIEZOMETER INSTALLATION & TIDE READINGS.	AS SHOWN

NOTES AND LEGEND FOR BORING LOCATION PLAN

1. TOPOGRAPHY SHOWN ON PLANS WAS COMPILED BY PHOTOGRAMMETRIC METHODS FROM DATA OBTAINED BY AIR SURVEY CORPORATION IN THE SPRING OF 1962 AND SUPPLEMENTED BY INSTRUMENT SURVEYS MADE BY THE J.E. GREINER COMPANY AND MORAN, PROCTOR, MUESER & RUTLEDGE.
2. 1 2 - INDICATES LIMITS AND NUMBER OF GEOLOGIC SECTION.
3. B-7 - SYMBOL AND NUMBER DESIGNATION OF DRY SAMPLE BORING.
   - B - BORINGS LOCATED ON LAND
   - W - BORINGS MADE ON WATER
   - BW - BORINGS SCHEDULED TO BE MADE ON LAND THAT WERE ACTUALLY MADE ON WATER.
4. B-8U - SYMBOL AND NUMBER DESIGNATION OF UNDISTURBED SAMPLE BORING.
5. B-2 - SYMBOL DESIGNATION WHERE PIEZOMETER WAS INSTALLED WITHIN OR ADJACENT TO THE BORING INDICATED. (FOR TYPICAL DETAILS OF PIEZOMETER INSTALLATION, SEE SHEET Z).
6. 2 - SYMBOL AND NUMBER DESIGNATION FOR 8 BORINGS MADE IN 1957 BY SPRAGUE AND HENWOOD, INC. FOR MICHAEL BAKER JR., INC. LOGS OF THESE BORINGS ARE AVAILABLE AT THE DELAWARE STATE HIGHWAY DEPARTMENT.
7. LOCATION PLAN OF BORINGS MADE FOR BORROW INVESTIGATION IN THE DELAWARE RIVER IS SHOWN ON SHEET X. BORING LOGS ARE ON SHEETS X AND Y.
8. BORING LOCATIONS AND ELEVATIONS WERE ESTABLISHED IN THE FIELD BY J.E. GREINER COMPANY AND MORAN, PROCTOR, MUESER & RUTLEDGE.

LEGEND FOR BORING LOGS

1. A B C D E F G

A = BORING LOCATION AND NUMBER; SUFFIXED BY A LETTER "U" INDICATES UNDISTURBED SAMPLE BORINGS USING 3-1/2" DIAMETER CASING. ALL OTHER BORINGS ARE DRY SAMPLE BORINGS USING 2-1/2" DIAMETER CASING EXCEPT BORINGS B-152A AND B-152B WHICH WERE MADE WITH AN 1" DIAMETER RETRACTABLE PLUG SAMPLER.

B = ELEVATION OF GROUND SURFACE AT LAND BORING LOCATIONS OR ELEVATION OF MUD LINE AT WATER BORING LOCATIONS.

C = DISTANCE AND DIRECTION OF OFFSET OF BORINGS FROM CENTERLINE OF ROUTE I-495, LOOKING AT INCREASING STATIONS.

D = TYPE AND NUMBER OF SAMPLE:
- D - DRY SAMPLES TAKEN WITH A 2" O.D. SPLIT SPOON
- U - UNDISTURBED SAMPLES RECOVERED WITH A 3" DIAMETER FIXED-PISTON SAMPLER
- S - 3" DIAMETER OPEN END "SHELBY" TUBE SAMPLES
- W - SAMPLES RECOVERED FROM WASH WATER
- UD,SD - JAR SAMPLES FROM AN UNACCEPTABLE UNDISTURBED OR "SHELBY" SAMPLES
- V - VANE SHEAR TESTS, MADE WITH A TAPPERED 2-1/2"x6-3/4" VANE.
- NR - NO RECOVERY
- CORE - 1-3/16" ROCK CORE

E = PENETRATION RESISTANCE DURING ADVANCING OF SAMPLER RECORDED IN NUMBER OF BLOWS OF 140 LB. HAMMER, FALLING 30" PER FOOT OF PENETRATION OR AS OTHERWISE NOTED. BLOWS INDICATED ARE FOR LAST 12" OF AN 18" DRIVE. ALSO INDICATES PER CENT RECOVERY OF ROCK CORE.
- P - INDICATES SAMPLER PUSHED DOWN BY HAND FOR DRY SAMPLES AND BY USE OF MACHINE FOR UNDISTURBED SAMPLES.
- T - INDICATES SAMPLER DRIVEN DOWN BY 340 LB. HAMMER WITH A VARIABLE HEIGHT OF FALL. BLOWS NOT SHOWN.
- WH - ADVANCED UNDER WEIGHT OF SAMPLE HAMMER.
- WR - ADVANCED UNDER WEIGHT OF "A" DRILL RODS.
- HD - SAMPLE WAS HAND-DUG.

F = WATER CONTENT OF SOIL SAMPLE EXPRESSED IN PER CENT OF DRY WEIGHT.

G = PENETRATION RESISTANCE ENCOUNTERED IN ADVANCING CASING, RECORDED IN NUMBER OF BLOWS OF 300 LB. HAMMER FOR DRY SAMPLE HOLES AND 340 LB. HAMMER FOR UNDISTURBED SAMPLE HOLES WITH 24" FALL PER FOOT OF PENETRATION.

[G PENETRATION RESISTANCE OF CASING DRIVEN AFTER HOLE HAD BEEN WASHED AHEAD.

▽ MOST RELIABLE GROUND WATER LEVEL AS OBSERVED IN BORED HOLE.

▽ RANGE OF GROUND WATER LEVELS OBSERVED IN PIEZOMETER.

2. DESCRIPTIONS OF MATERIAL PERTAIN TO INDIVIDUAL SAMPLES AND ARE BASED ON LABORATORY TESTS AND MAY OR MAY NOT AGREE WITH THOSE ON THE FIELD BORING LOGS OR THE DRILLERS' LOGS.
3. ALL TIMES INDICATED ON THE WATER LEVEL OBSERVATIONS FROM PIEZOMETERS ARE EASTERN DAYLIGHT SAVING TIME.

NOTES FOR GEOLOGIC SECTIONS

1. STRATIFICATIONS FOR GEOLOGIC SECTIONS ARE INTERPOLATIONS FROM INDIVIDUAL BORINGS AND MAY NOT REPRESENT THE EXISTING CONDITIONS. THE CONTRACTOR SHALL MAKE HIS OWN INTERPRETATION WHICH MAY AFFECT HIS METHODS AND COST OF CONSTRUCTION.
2. SUBSOIL STRATIFICATIONS ARE BASED ON LABORATORY TESTS AND GEOLOGICAL CONSIDERATIONS WITH EACH GROUP REPRESENTED BY THE ENCIRCLED NUMERAL. THE APPROPRIATE DESCRIPTIONS FOR NUMERAL DESIGNATIONS ARE INCLUDED IN THE "LEGEND FOR STRATIFICATION".
3. DESCRIPTIONS AND DIVISIONS OF SUBSOIL STRATA WERE DETERMINED BY J.E. GREINER COMPANY AND MORAN, PROCTOR, MUESER & RUTLEDGE FROM EXAMINATION OF SAMPLES AND LABORATORY TESTS AND MAY OR MAY NOT AGREE WITH THOSE ON THE FIELD BORING LOGS OR THE DRILLERS' LOGS.
4. STRATIFICATIONS SHOWN ON THE LONGITUDINAL GEOLOGIC SECTIONS ARE PROJECTIONS FROM INDIVIDUAL BORINGS ON THE PLANE PASSING THROUGH THE CENTERLINE OF ROUTE I-495 EXCEPT SECTIONS 35 TO 40 INCLUSIVE. SECTIONS 35 TO 40 ARE PROFILES OF PLANES PASSING THROUGH BORINGS SHOWN. ALL BORINGS ON THE LONGITUDINAL SECTIONS ARE SHOWN AT THE PROPER LOCATIONS WITH RESPECT TO THE STATIONS ALONG THE CENTERLINE. THESE LOCATIONS MAY OR MAY NOT REPRESENT THE ACTUAL DISTANCE BETWEEN INDIVIDUAL BORINGS.
5. NO EXISTING STRUCTURES OR UTILITY LINES INTERSECTED BY THE GEOLOGIC SECTIONS ARE SHOWN.
6. ALL ELEVATIONS REFER TO U.S.C.& G. SURVEY DATUM; MEAN SEA LEVEL AT SANDY HOOK = 0.00 FT.
7. TIDE READINGS OBTAINED BY J.E. GREINER COMPANY AND MORAN, PROCTOR, MUESER & RUTLEDGE ARE FROM TWO TIDE GAUGES IN THE CHRISTINA RIVER ADJACENT TO THE PROPOSED RIVER CROSSING, LOCATED APPROXIMATELY 1/2 MILE UPSTREAM FROM THE WILMINGTON MARINE TERMINAL. (SEE SHEET Z).

LEGEND FOR STRATIFICATION

J.E.G. CO. & M.P.M.& R. DESIGNATION	DELAWARE DESIGNATION	SOIL DESCRIPTION
I	A-7 & A-8	SOFT DARK GRAY ORGANIC SILTY CLAY, TRACE TO SOME VEGETATION AND TRACE PEAT LAYERS.
II	A-4	LOOSE TO MEDIUM COMPACT BROWN AND GRAY FINE TO MEDIUM SANDY SILT TO SILTY FINE SAND.
III	A-1	COMPACT TO VERY COMPACT BROWN COARSE TO FINE SAND, SOME GRAVEL, TRACE SILT AND MICA.
IV	A-6	MEDIUM TO STIFF GRAY AND BROWN SILTY CLAY AND CLAYEY SILT WITH GRAY FINE SAND LAYERS.
V	A-6	STIFF MOTTLED RED WITH GRAY SILTY CLAY, TRACE TO SOME SAND AND GRAVEL, LENSES OF GRAY FINE SANDY SILT.
VI	A-4	COMPACT TO VERY COMPACT RED, BROWN AND GRAY FINE SANDY SILT TO SILTY FINE SAND, SOME CLAY.
VII	A-6	STIFF TO HARD VARICOLORED SILTY CLAY TO CLAYEY FINE SAND AND FINE SAND.
VIII	—	BEDROCK - RELATIVELY SOUND FRACTURED DARK GRAY QUARTZ DIORITE.

ABBREVIATIONS

b	BOTTOM	lt	LIGHT
bk	BLACK	m, med	MEDIUM
brn	BROWN	m-c	MEDIUM TO COARSE
c	COARSE	mic	MICACEOUS
cl	CLAY OR CLAYEY	mid	MIDDLE
comp	COMPACT	mtld	MOTTLED
dec	DECOMPOSED, DECAYED	org	ORGANIC
dk	DARK	si	SILT, SILTY
f	FINE	sm	SOME
fgmt	FRAGMENTS	t	TOP
grn	GREEN	tr	TRACE
gry	GRAY	veg	VEGETATION, VEGETABLE MATTER
gvl	GRAVEL	yel	YELLOW

FOR INFORMATION ONLY

DELAWARE
STATE HIGHWAY DEPARTMENT

INTERSTATE ROUTE I-495

GENERAL NOTES
LEGENDS AND INDEX

J. E. GREINER CO.
MORAN, PROCTOR, MUESER & RUTLEDGE
CONSULTING ENGINEERS

D. RCH
T. VRW
C. RCH

SCALE NONE

DATE 3-1-1963

John Wheatley 1/27/69

BB

DO NOT CONSIDER ANY OF THE DATA ON THE EXISTING STRUCTURE SUPPLIED IN THESE DRAWINGS AS POSITIVE REPRESENTATIONS OF ANY OF THE CONDITIONS THAT MAY BE ENCOUNTERED IN THE FIELD FOR T201107402.

COUNTY	CONTRACT	P. R. A. REG. NO.	STATE	FED. AID PROJECT NO.	FISCAL YEAR	SHEET NO.	TOTAL SHEETS
NEW CASTLE	68-07-005	2	DEL.	I-495-3(17)19		33	41

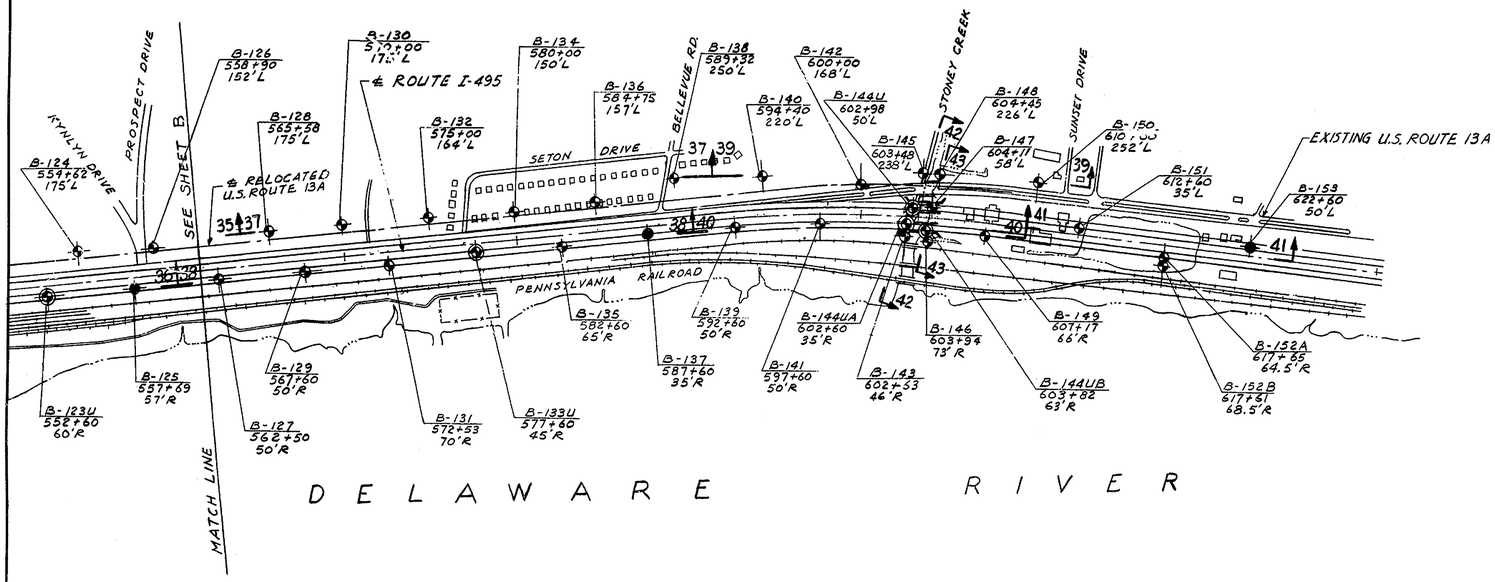

NOTE

1. For General Notes & Legends see Sheet 32

GRAPHIC SCALE

400' 200' 0 400' 800' 1200'

FOR INFORMATION ONLY

J. E. GREINER CO.
MORAN, PROCTOR, MUESER & RUTLEDGE
CONSULTING ENGINEERS

DELAWARE
STATE HIGHWAY DEPARTMENT

INTERSTATE ROUTE I-495

BORING LOCATION PLAN
STATION 561+50 TO STATION 625+00

D. S.L.T.
T. L.S.
C. R.C.H.

SCALE 1" = 400'
DATE 3-1-1963

John Rutledge 1/27/09

DO NOT CONSIDER ANY OF THE DATA ON THE EXISTING STRUCTURE SUPPLIED IN THESE DRAWINGS AS POSITIVE REPRESENTATIONS OF ANY OF THE CONDITIONS THAT MAY BE ENCOUNTERED IN THE FIELD FOR T201107402.

COUNTY	CONTRACT	P. R. A. REG. NO.	STATE	FED. AID PROJECT NO.	FISCAL YEAR	SHEET NO.	TOTAL SHEETS
NEW CASTLE	68-07-005	2	DEL.	I-495-3(17)19		34	41

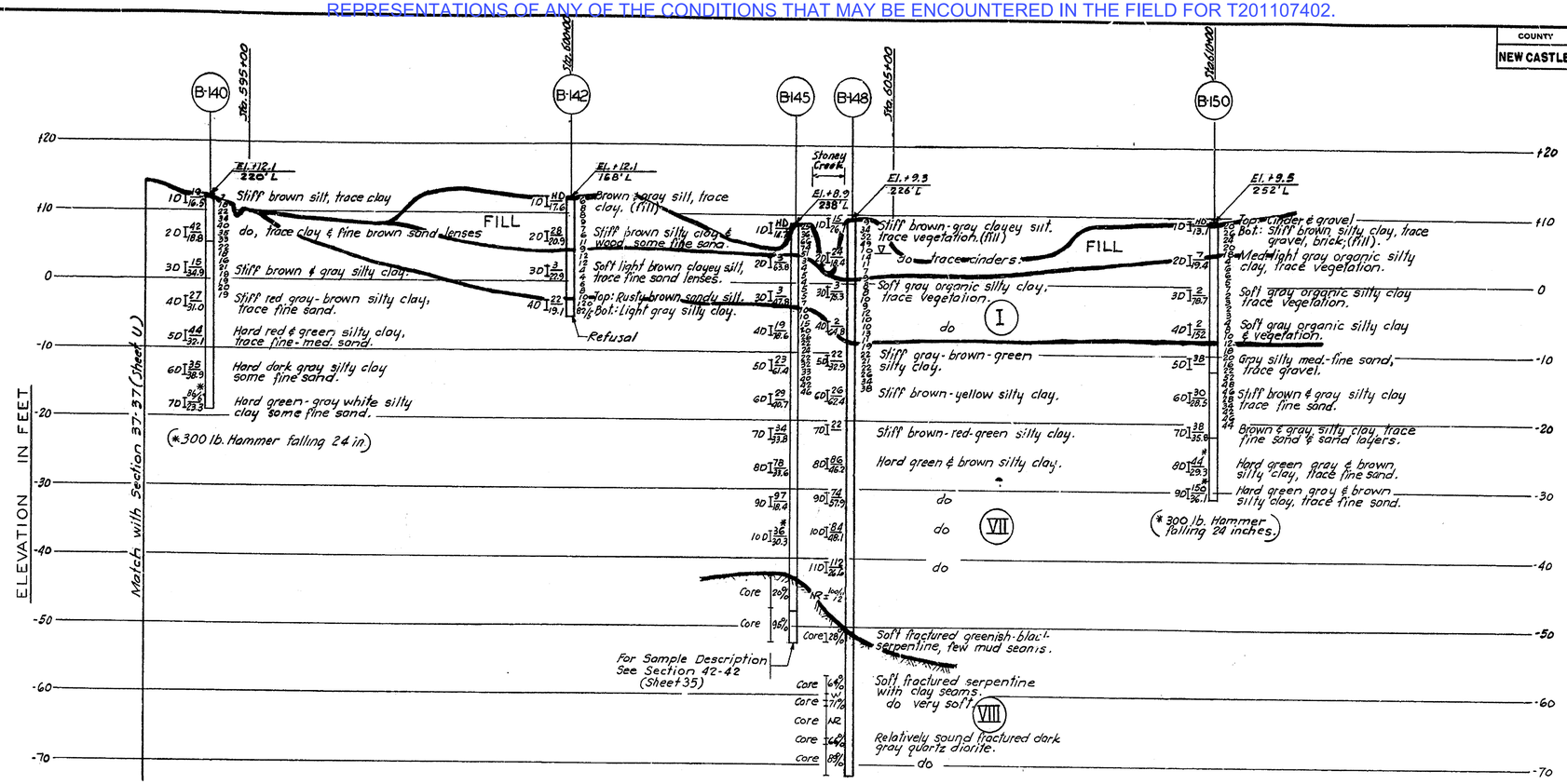

SECTION 39-39

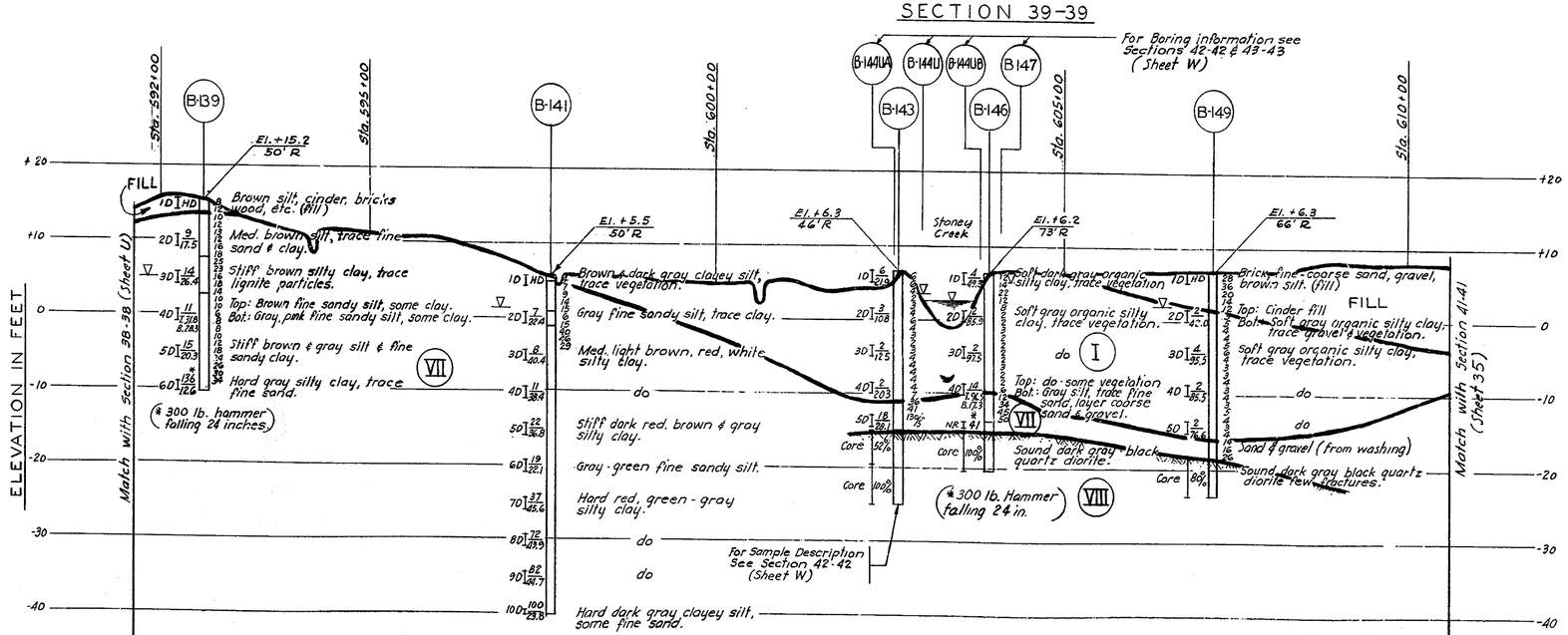

SECTION 40-40

NOTES:
1. For General Notes & Legends see Sheet 32
2. For Plan see Sheet 33.

GRAPHIC SCALES
Horizontal 100' 50' 0 100' 200' 300'
Vertical 10' 5' 0 10' 20' 30'

FOR INFORMATION ONLY

J. E. GREINER CO.
MORAN, PROCTOR, MUESER & RUTLEDGE
CONSULTING ENGINEERS

DELAWARE
STATE HIGHWAY DEPARTMENT

INTERSTATE ROUTE I-495

BORINGS AND GEOLOGIC SECTIONS
STA. 591+60 TO STA. 610+60

D. S.L.T.
T. M.C.P.
C. R.C.H.

SCALE AS SHOWN
DATE 3-1-1963

1/27/69

REVISIONS

DO NOT CONSIDER ANY OF THE DATA ON THE EXISTING STRUCTURE SUPPLIED IN THESE DRAWINGS AS POSITIVE REPRESENTATIONS OF ANY OF THE CONDITIONS THAT MAY BE ENCOUNTERED IN THE FIELD FOR T201107402.

COUNTY	CONTRACT	F. P. A. REG. NO.	STATE	FED. AID PROJECT NO.	FISCAL YEAR	SHEET NO.	TOTAL SHEETS
NEW CASTLE	68-07-005	2	DEL.	I-495-3(17)19		35	41

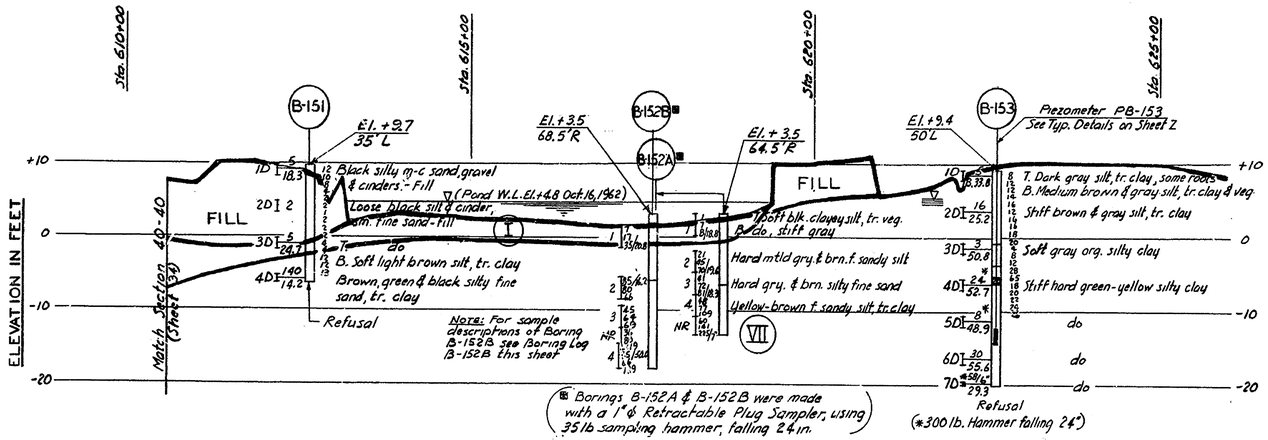

SECTION 41-41

GRAPHIC SCALES

Horizontal 100' 50' 0 100' 200' 300'

Vertical 10' 5' 0 10' 20' 30'

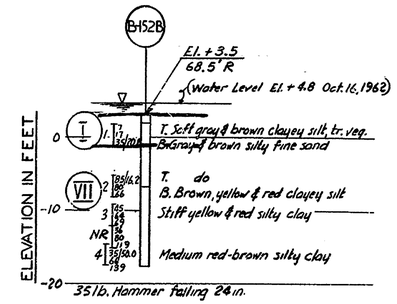

BORING LOG B-152B

PIEZOMETER PB-153 W.L. OBSERVATIONS		
DATE	TIME	W.L. ELEV.
10-12-62	1420	+5.0
10-19	1455	+4.7
10-26	0918	+4.5
10-31	1300	+4.7
11-2	1030	+4.6
11-6	1600	+5.2
11-7	1245	+5.4
11-28	1530	+5.5

NOTES:
1. For General Notes & Legends see Sheet 32.
2. For Plan see Sheet 33.

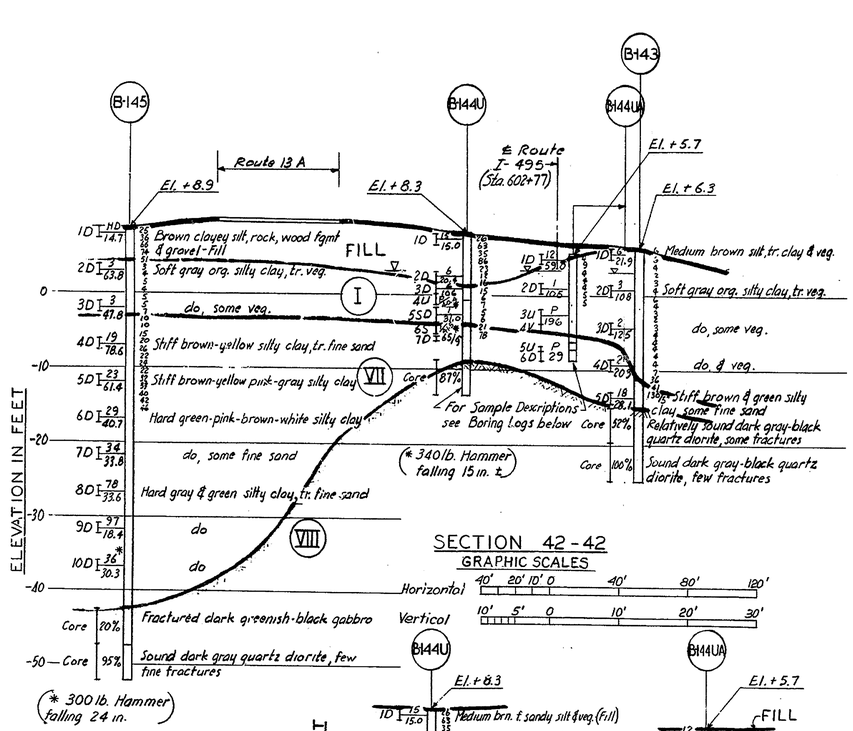

SECTION 42-42

GRAPHIC SCALES

Horizontal 40' 20' 10' 0 40' 80' 120'

Vertical 10' 5' 0 10' 20' 30'

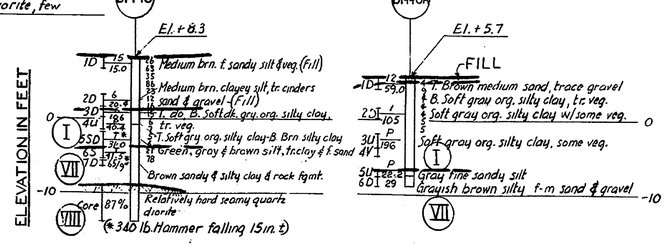

BORING LOG B-144U

BORING LOG B-144UA

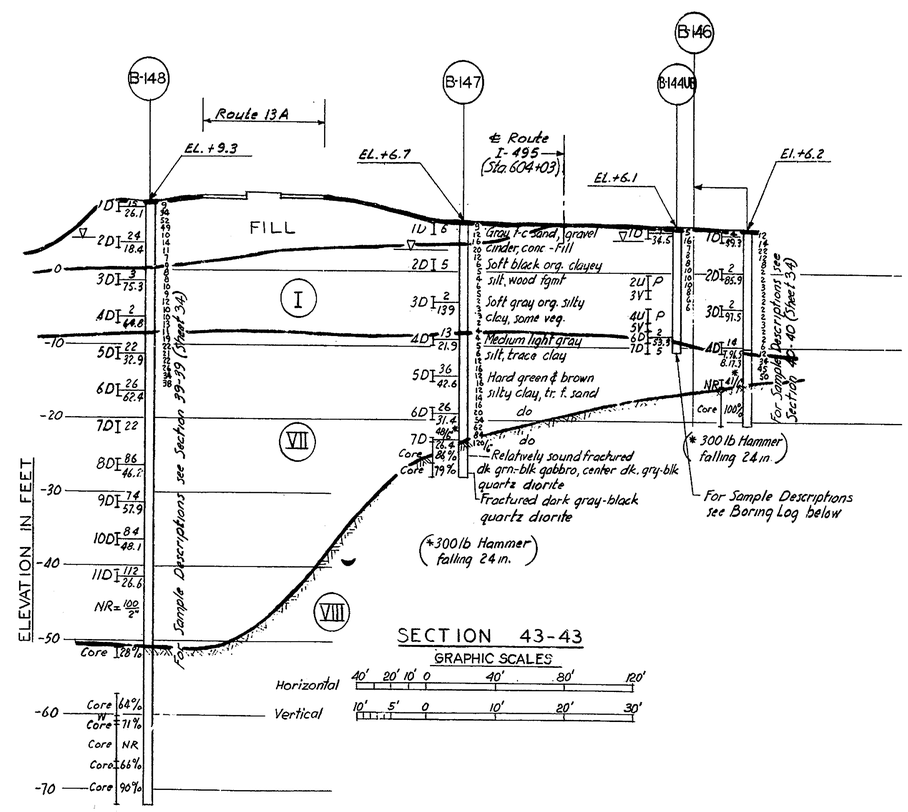

SECTION 43-43

GRAPHIC SCALES

Horizontal 40' 20' 10' 0 40' 80' 120'

Vertical 10' 5' 0 10' 20' 30'

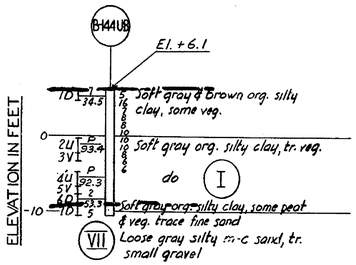

BORING LOG B-144UB

FOR INFORMATION ONLY

DELAWARE
STATE HIGHWAY DEPARTMENT

INTERSTATE ROUTE I-495

BORINGS AND GEOLOGIC SECTIONS
STA. 610+60 TO STA. 622+60
& STA. 602+77, STA. 604+03

J. E. GREINER CO.
MORA, PROCTOR, MUESER & RUTLEDGE
CONSULTING ENGINEERS

D. S.L.T.
T. L.S.
C. R.C.H.

SCALE AS SHOWN

DATE 3-1-1963

John R. Rutledge 1/27/65

DO NOT CONSIDER ANY OF THE DATA ON THE EXISTING STRUCTURE SUPPLIED IN THESE DRAWINGS AS POSITIVE REPRESENTATIONS OF ANY OF THE CONDITIONS THAT MAY BE ENCOUNTERED IN THE FIELD FOR T201107402.

QUANTITY SUMMARY

COUNTY	CONTRACT	F.R.A. REG. NO.	STATE	FED. AID PROJECT NO.	FISCAL YEAR	SHEET NO.	TOTAL SHEETS
NEW CASTLE	68-07-005	2	DEL	I-495-3(17)19		36	41

EARTHWORK AND STABILIZATION

ITEM	1	2		5	S.P.	S.P.	S.P.	S.P.	S.P.								7
									CONTROL DEVICES								
STATION	CLEARING AND GRUBBING	EXCAVATION	EMBANKMENT (Includes Shrinkage)	COMMON BORROW (Includes Shrinkage)	PREPARATION OF ORIGINAL GROUND FOR SAND BLANKET	SAND BLANKET & WORKING MAT	SAND BLANKET COLLECTOR PIPES	VERTICAL SAND DRAINS	SETTLEMENT PLATES		SETTLEMENT POINTS	PIEZOMETERS			BENCH MARKS	ALIGNMENT STAKES	SELECT BORROW (Includes Shrinkage)
									S	S_1	S_P	P_T	P_B	P_L			
		C.Y.	C.Y.	C.Y.	L.S.	L.S.	L.S.	LIN. FT.	Ea.	Ea.	Ea.	Ea.	Ea.	Ea.	Ea.	L.S.	C.Y.
597+60 To 602+80	L.S.	1,100	35,950					37,000	15	7	6	6	6	6	4	L.S.	
603+92 To 611+00	L.S.		74,280					146,700									
R.R. MAINTENANCE ROAD																	
597+60 To 602+16	L.S.		3620					9,000									
604+04 To 611+00	L.S.		4650					10,400									
CONCRETE GUTTER																	50
GROUTED RIPRAP																	20
SUB-TOTAL			118,500														
TOTAL	L.S.	1,100		117,400	L.S.	L.S.	L.S.	203,100	15	7	6	6	6	6	4	L.S.	70

TEMPORARY ROADWAY MATERIALS

S.P.	S.P.
Hot Mix Asphaltic Concrete or Cold-Laid Bituminous Concrete (TRM)	Select Borrow (TRM)
100 Tons.	200 C.Y.

ITEM 61	
Calcium Chloride For Dust Control.	10 Tons.
S. P.	
Field Office.	Lump Sum
S. P.	
Flagmen	2,000 Hrs.
S. P.	
Maintenance & Protection of Traffic, Railroad	Lump Sum

DRAINAGE

ITEM		37	44	SP	26	4A	64
STATION	SIDE	PORTLAND CEMENT CONCRETE GUTTER	CATCH BASIN PW-B.D. 1	STD.CONC. FLARED END SECTION 18"	REINF. CONC. PIPE 18"	EXCAV. FOR PIPE TRENCHES	GROUTED RIPRAP
		S.Y.	EACH	EACH	L.F.	C.Y.	S.Y.
597+60 To 598+00	RT.	43					
602+00 To 602+80	RT.	37					30
603+00 To 603+35	LT						40
603+50 To 605+00	RT.	118					30
603+52 To 608+00	RT.		1	1	450	239	9
FROM STRUCTURE SUMMARY		44					
TOTAL		242	1	1	450	239	109

EARTHWORK ANALYSIS

Embankment - 118,500 C.Y.
Excavation - 1,100 C.Y.
Common Borrow - 117,400 C.Y.

Underground Electrification Facilities

Description	Item No	Unit	Total
Excavation Underground Electrification Facilities	S.P.	L.S.	L.S.
Cement Concrete Structures Underground Electrification Facilities	S.P.	L.S.	L.S.
Cement Concrete Manholes And Ducts Underground Electrification Facilities	S.P.	L.S.	L.S.
Guy Assemblies	S.P.	L.S.	L.S.
Removal And Disposal Of Existing Underground Electrification Facilities	S.P.	L.S.	L.S.
Guard Rail Underground Electrification Facilities	S.P.	L.S.	L.S.

STRUCTURE QUANTIES

ITEM		4	18				20	22	SP.		SP.		55	37		SP	17	SP.	SP.
			PORTLAND CEMENT CONCRETE MASONRY						PILES		TEST PILES								
LOCATION	DESCRIPTION	EXCAVATION FOR STRUCT.	ABUTMENTS	PIERS ABOVE FOOTINGS	SUPER-STRUCTURE	APPROACH SLABS	BAR REINFORCEMENT	STRUCTURAL STEEL	12BP53	14BP89	12BP53	14BP89	SODDING	PORTLAND CEMENT CONCRETE GUTTER		PROTECTIVE COATING FOR PORTLAND CEMENT CONCRETE BRIDGE-SUPER-STRUCTURE	TIMBER STRUCTURES-TIMBER RAIL	EPOXY COATING OF STRUCTURAL STEEL	CLEAR EPOXY PROTECTIVE COATING BR. SUB-STRUCTURE
		C.Y.	C.Y.	C.Y.	C.Y.	C.Y.	LBS.	LBS.	L.F.	L.F.	L.F.	L.F.	S.Y.	S.Y.		GALLONS	L.F.	LUMP SUM	LUMP SUM
603+38	I-495 OVER STONEY CREEK	647	461	126	679	372	351,508	585,100	1,640	624		104	20	44		130		LUMP SUM	LUMP SUM
603+38±	MAINTENANCE ROAD BRIDGE OVER STONEY CREEK	29	22	9	79		22,250	71,500	300		50						462		
	SUB-TOTAL													44**					
	TOTAL	676	483 *	135 *	758 *	372 *	373,758 *	LUMP SUM	1,940	624	50	104	20			130	462 *	LUMP SUM	LUMP SUM

* ESTIMATED FIXED QUANTITY ITEMS

** Carry to Drainage Summary.

DO NOT CONSIDER ANY OF THE DATA ON THE EXISTING STRUCTURE SUPPLIED IN THESE DRAWINGS AS POSITIVE REPRESENTATIONS OF ANY OF THE CONDITIONS THAT MAY BE ENCOUNTERED IN THE FIELD FOR T201107402.

COUNTY	CONTRACT NO
NEW CASTLE	68-07-005

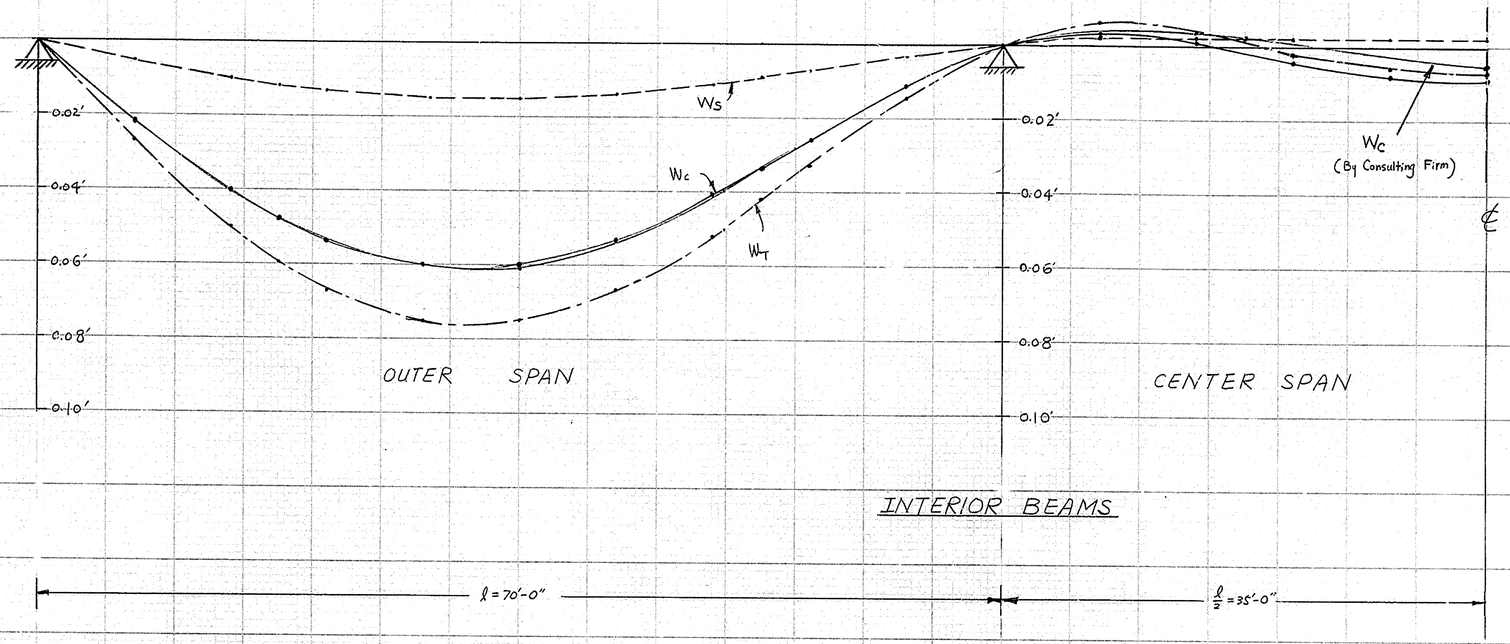

Ws : Dead Load Deflection Due to Steel Beam And Diaphragm

Wc : Dead Load Deflection Due to Concrete. (Slab Concrete For Interior Beam , Slab Concrete and Barrier Rail For Exterior Beam)

WT : Total Dead Load Deflection

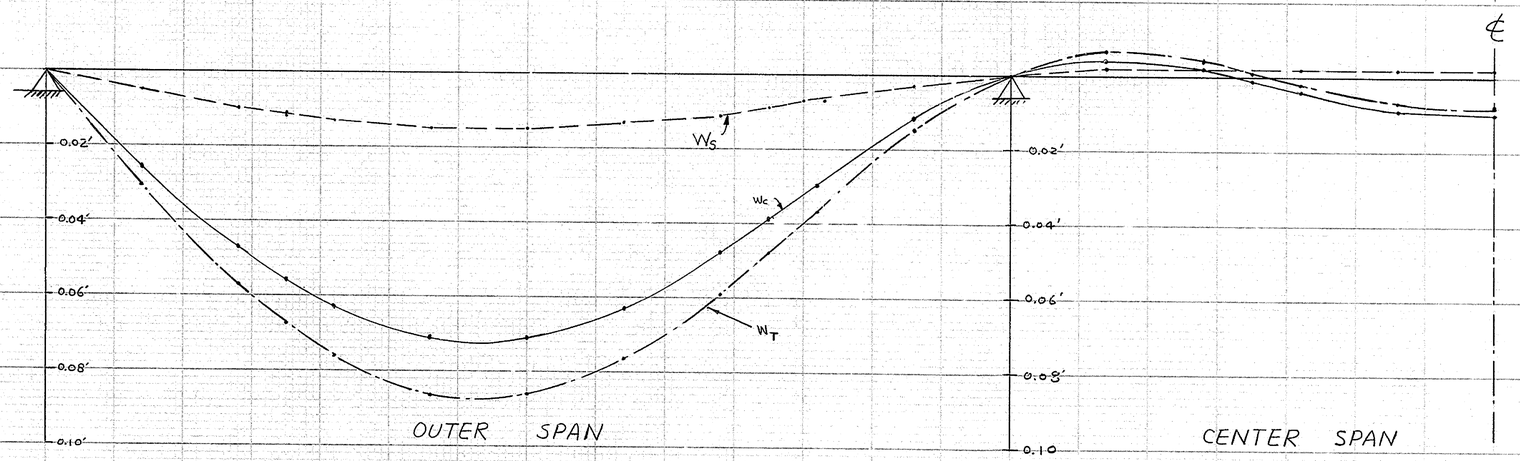

DEAD LOAD DEFLECTION OF BRIDGE AT I-495 STONEY CREEK

DO NOT CONSIDER ANY OF THE DATA ON THE EXISTING STRUCTURE SUPPLIED IN THESE DRAWINGS AS POSITIVE REPRESENTATIONS OF ANY OF THE CONDITIONS THAT MAY BE ENCOUNTERED IN THE FIELD FOR T201107402.

COUNTY N.C.	CONTRACT 68-07-005	STATE DEL.	FEDERAL AID + PROJ.NO. I-495-3(17)19	SHEET	TOTAL

I-495 OVER STONEY CREEK

NO	REVISIONS	BY	DATE

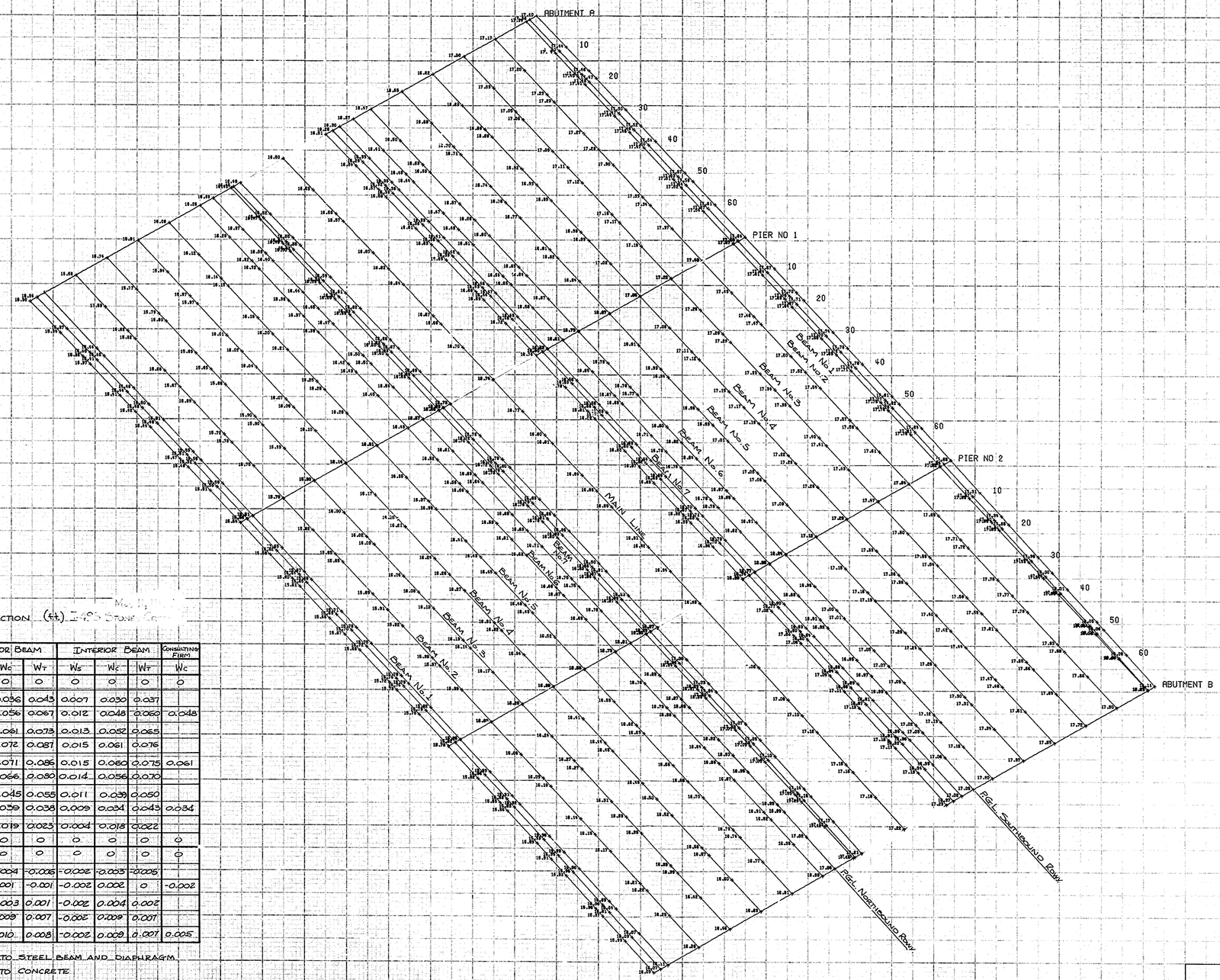

DEAD LOAD DEFLECTION (ft.) I-495 STONEY CR

	DISTANCE FROM SUPPORTS (ft.)	EXTERIOR BEAM Ws	EXTERIOR BEAM Wc	EXTERIOR BEAM WT	INTERIOR BEAM Ws	INTERIOR BEAM Wc	INTERIOR BEAM WT	CONSULTING FIRM Wc
OUTER SPAN	0	0	0	0	0	0	0	0
	10	0.007	0.036	0.043	0.007	0.030	0.037	
	17.5 (3/4)	0.011	0.056	0.067	0.012	0.048	0.060	0.048
	20	0.012	0.061	0.073	0.013	0.052	0.065	
	30	0.015	0.072	0.087	0.015	0.061	0.076	
	35 (7/2)	0.015	0.071	0.086	0.015	0.060	0.075	0.061
	40	0.014	0.066	0.080	0.014	0.056	0.070	
	50	0.010	0.045	0.055	0.011	0.039	0.050	
	52.5 (21/4)	0.009	0.039	0.038	0.009	0.034	0.043	0.034
	60	0.004	0.019	0.023	0.004	0.018	0.022	
	70 (2)	0	0	0	0	0	0	0
CENTER SPAN	0	0	0	0	0	0	0	0
	10	-0.002	-0.004	-0.006	-0.002	-0.003	-0.005	
	17.5 (3/4)	-0.002	0.001	-0.001	-0.002	0.002	0	-0.002
	20	-0.002	0.003	0.001	-0.002	0.004	0.002	
	30	-0.002	0.009	0.007	-0.002	0.009	0.007	
	35 (7/2)	-0.002	0.010	0.008	-0.002	0.009	0.007	0.005

Ws: DEFLECTION DUE TO STEEL BEAM AND DIAPHRAGM
Wc: DEFLECTION DUE TO CONCRETE
WT = Ws + Wc, TOTAL DEFLECTION

* GEORGIA STATE HIGHWAY DEPARTMENT PROGRAMS

DELAWARE
STATE HIGHWAY DEPARTMENT
INTERSTATE I 495

DO NOT CONSIDER ANY OF THE DATA ON THE EXISTING STRUCTURE SUPPLIED IN THESE DRAWINGS AS POSITIVE REPRESENTATIONS OF ANY OF THE CONDITIONS THAT MAY BE ENCOUNTERED IN THE FIELD FOR T201107402.

F.R.A. Reg. No.	State	Fed. Aid Proj. No.
2	Del.	I-495-3(17)19

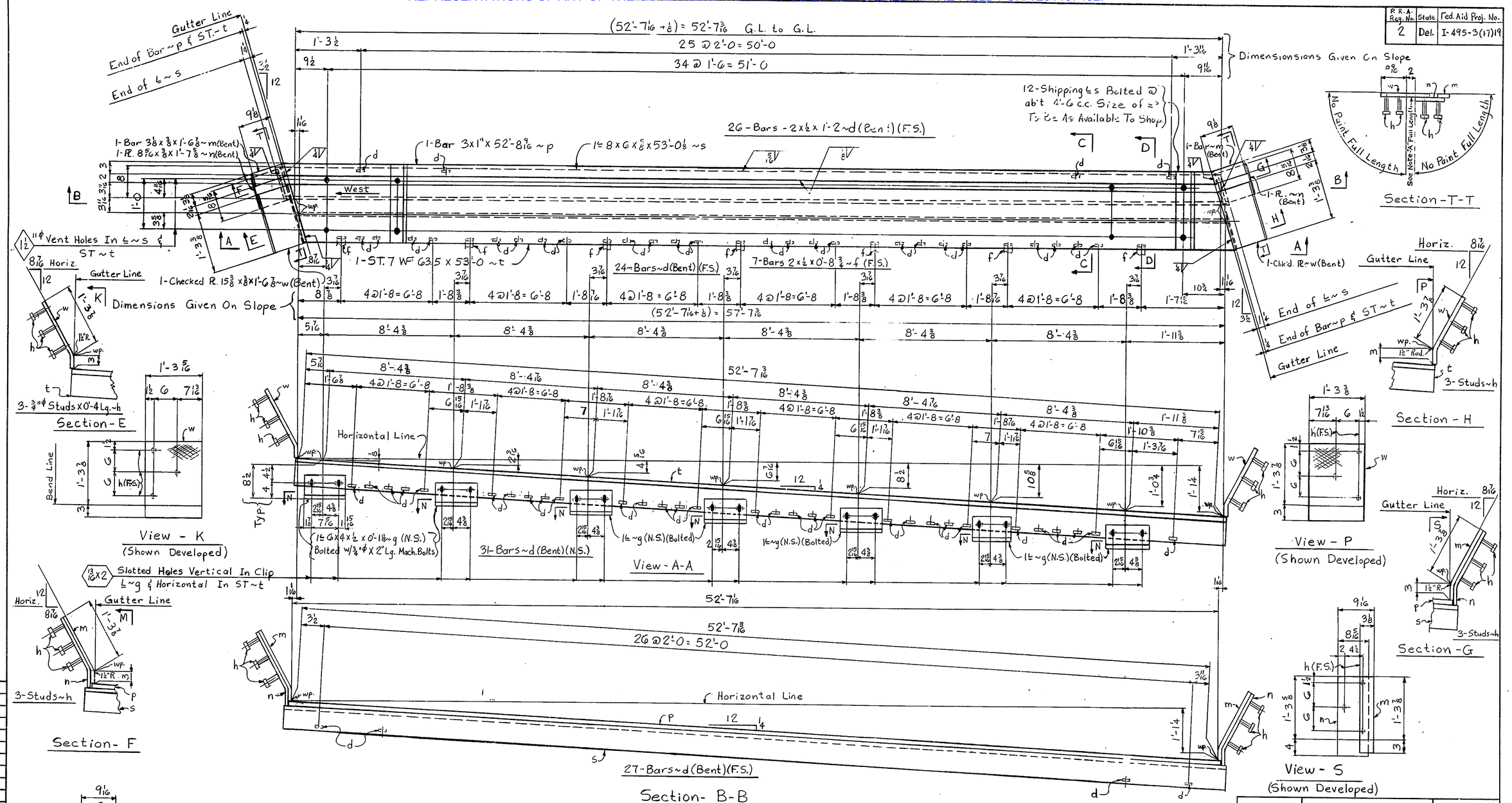

One-Expansion Dam-MK. ED3
One-Expansion Dam-MK. ED4
} Assemble & Ship As A Unit Wt. - 4,930 Lbs.

APPROVED
DELAWARE STATE HIGHWAY DEPT.
DATE July 1, 1970

SHOP NOTE

HOLES: As Noted
BOLTS: As Noted
PAINT: One Shop Coat of Primer: Del Spec. No. A. (Unless Noted).

Note -"A"

Surfaces Indicated Are Inaccessible After Erection. Surfaces Indicated Are to Be Sandblasted And Shall Recieve One Coat of Epoxy Coating Covered By One Coat of Primer; Del. Spec. No A And 3 Coats of Field Paint - All Coats Applied In the Shop.

NO.	REVISION	DATE

HIGH WELDING COMPANY
1911 OLD PHILADELPHIA PIKE
LANCASTER, PA.

Expansion Dams
I-495 Over Stoney Creek
I-495 Sta. 603+38
State of Delaware
State Highway Department
New Castle County, Delaware

STATE CONT. OR REF. NO. 68-07-005 CONTRACTOR Eastern States Const. Co.
MADE BY BCM CHECKED BY E.P.M. DATE 6-8-70
CONTRACT NO. 6996 DRAWING NO. 7 of 7

Lancaster Print-O-Stat 327

DO NOT CONSIDER ANY OF THE DATA ON THE EXISTING STRUCTURE SUPPLIED IN THESE DRAWINGS AS POSITIVE REPRESENTATIONS OF ANY OF THE CONDITIONS THAT MAY BE ENCOUNTERED IN THE FIELD FOR T201107402.

P.R.A. Reg. No.	State	Fed. Aid Proj. No.
2	Del.	I-495-3(17)19

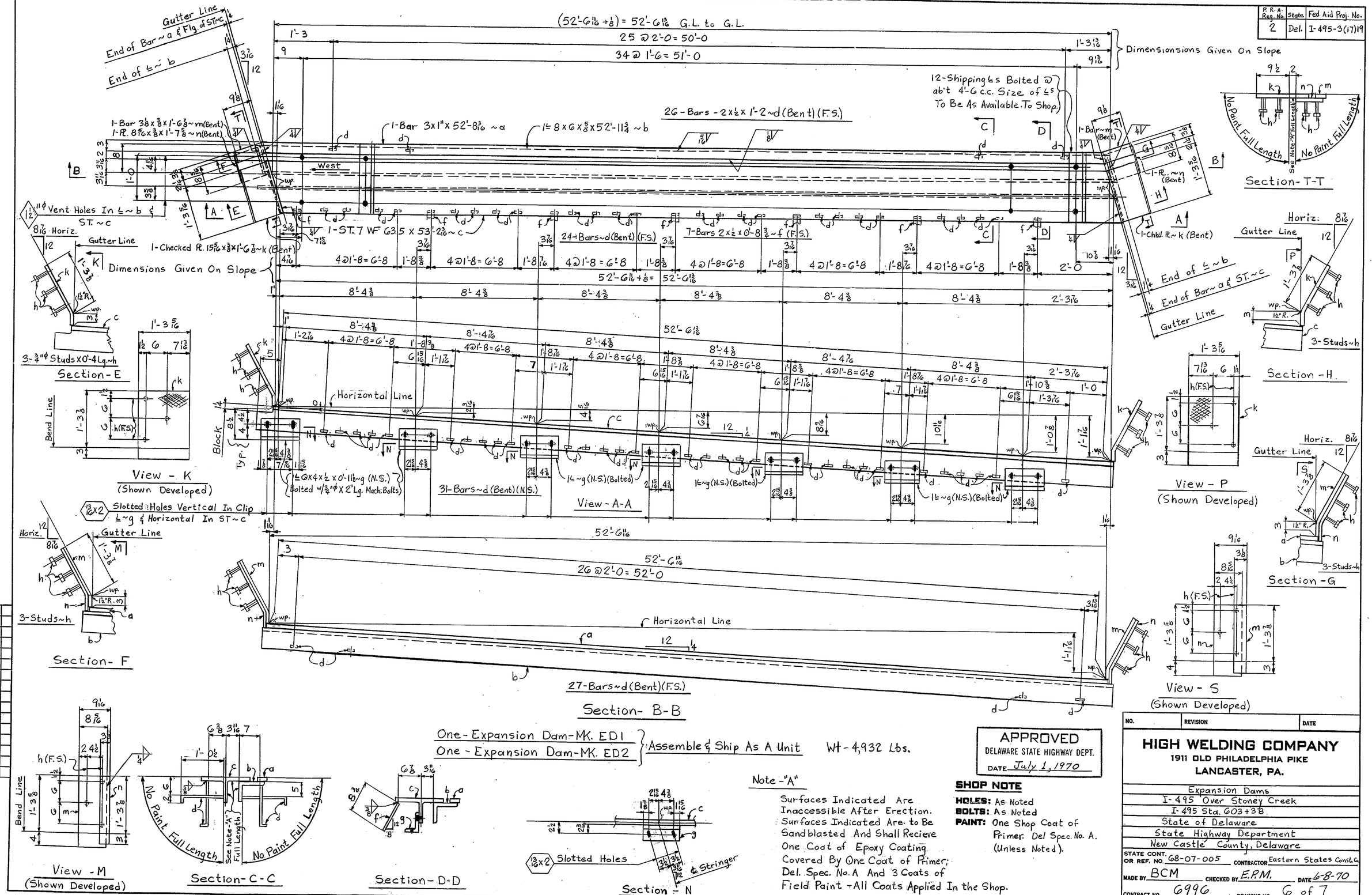

One-Expansion Dam-MK. ED1
One-Expansion Dam-MK. ED2
} Assemble & Ship As A Unit Wt-4,932 Lbs.

APPROVED
DELAWARE STATE HIGHWAY DEPT.
DATE July 1, 1970

Note-"A"

Surfaces Indicated Are Inaccessible After Erection. Surfaces Indicated Are to Be Sandblasted And Shall Recieve One Coat of Epoxy Coating Covered By One Coat of Primer; Del. Spec. No. A And 3 Coats of Field Paint - All Coats Applied In the Shop.

SHOP NOTE

HOLES: As Noted
BOLTS: As Noted
PAINT: One Shop Coat of Primer: Del Spec. No. A. (Unless Noted).

NO.	REVISION	DATE

HIGH WELDING COMPANY
1911 OLD PHILADELPHIA PIKE
LANCASTER, PA.

Expansion Dams
I-495 Over Stoney Creek
I-495 Sta. 603+38
State of Delaware
State Highway Department
New Castle County, Delaware

STATE CONT. OR REF. NO. 68-07-005 CONTRACTOR Eastern States Const. Co.
MADE BY BCM CHECKED BY E.P.M. DATE 6-8-70
CONTRACT NO. 6996 DRAWING NO. 6 of 7

Lancaster Print-O-Stat 127

DO NOT CONSIDER ANY OF THE DATA ON THE EXISTING STRUCTURE SUPPLIED IN THESE DRAWINGS AS POSITIVE REPRESENTATIONS OF ANY OF THE CONDITIONS THAT MAY BE ENCOUNTERED IN THE FIELD FOR T201107402.

P.R.A. Req. No.	State	Fed. Aid. Proj. No.
2	Del	I-495-3(17)19

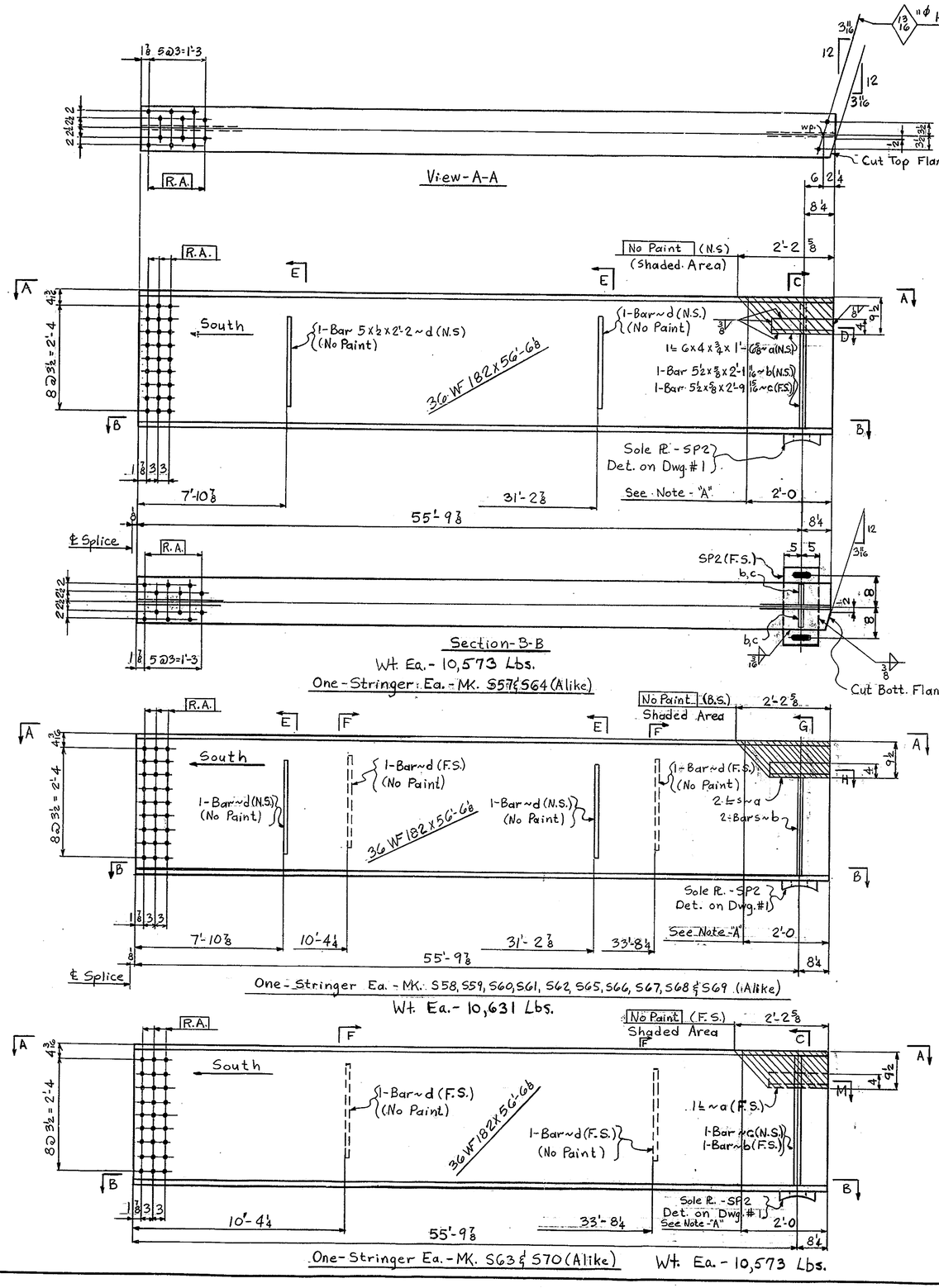

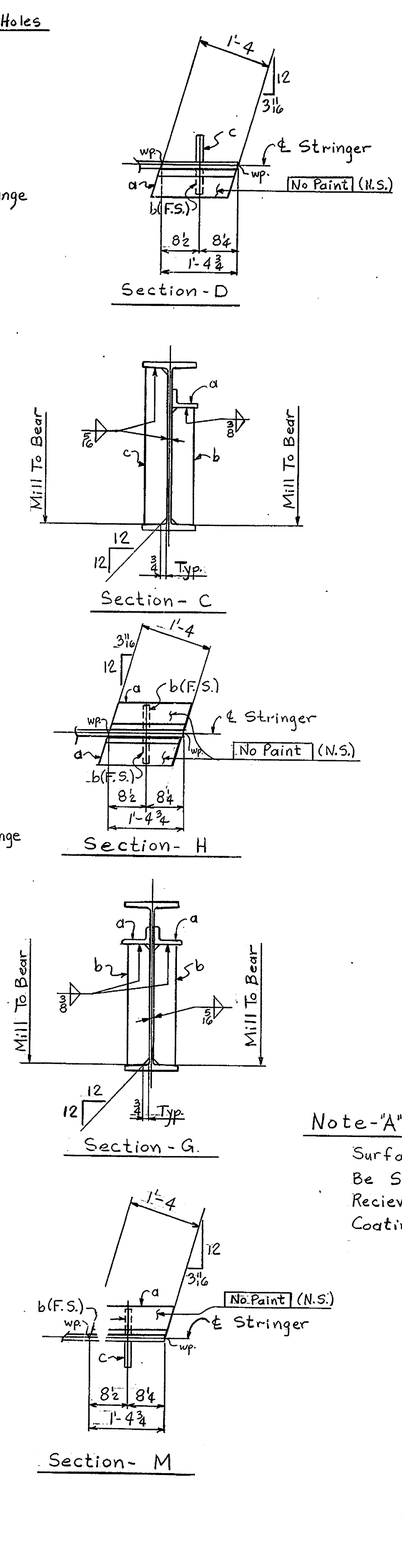

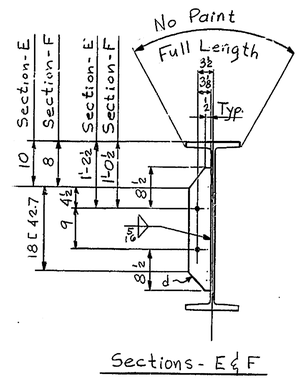

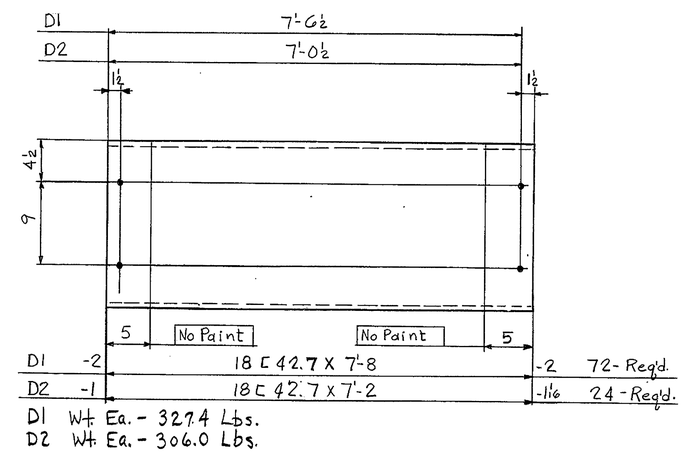

Note-"A"

Surfaces Indicated Are to Be Sandblasted And Shall Recieve One Coat of Epoxy Coating Prior to Shop Painting.

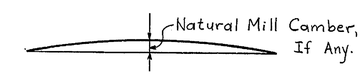

Camber Diagram

APPROVED
DELAWARE STATE HIGHWAY DEPT.
DATE July 1, 1970

SHOP NOTE

HOLES: 13/16"ϕ (Unless Noted)
BOLTS: None
PAINT: One Shop Coat of Primer. Del. Spec. No. A (Unless Noted). No Paint Within 3" of Holes Mk. R.A.

R.A. NOTE.
HOLES MARKED R.A. TO BE SUB-PUNCHED 11/16"ϕ AND REAMED TO 15/16"ϕ WITH CONNECTING PARTS ASSEMBLED AND MATCH MARKED. See Dwg. E2.

NO.	REVISION	DATE

HIGH WELDING COMPANY
1911 OLD PHILADELPHIA PIKE
LANCASTER, PA.

Stringers & Diaphragms
I-495 Over Stoney Creek
I-495 Sta. 603+38
State of Delaware
State Highway Department
New Castle County, Delaware

STATE CONT. OR REF. NO. 68-07-005 CONTRACTOR Eastern States Const Co.
MADE BY BCM CHECKED BY E.P.M. DATE 6-5-70
CONTRACT NO. 6996 DRAWING NO. 5 of 7

Lancaster Print-O-Stat 127

DO NOT CONSIDER ANY OF THE DATA ON THE EXISTING STRUCTURE SUPPLIED IN THESE DRAWINGS AS POSITIVE REPRESENTATIONS OF ANY OF THE CONDITIONS THAT MAY BE ENCOUNTERED IN THE FIELD FOR T201107402.

R.R.A. Reg. No.	State	Fed. Aid Proj. No.
2	Del.	I-495-3(17)(19)

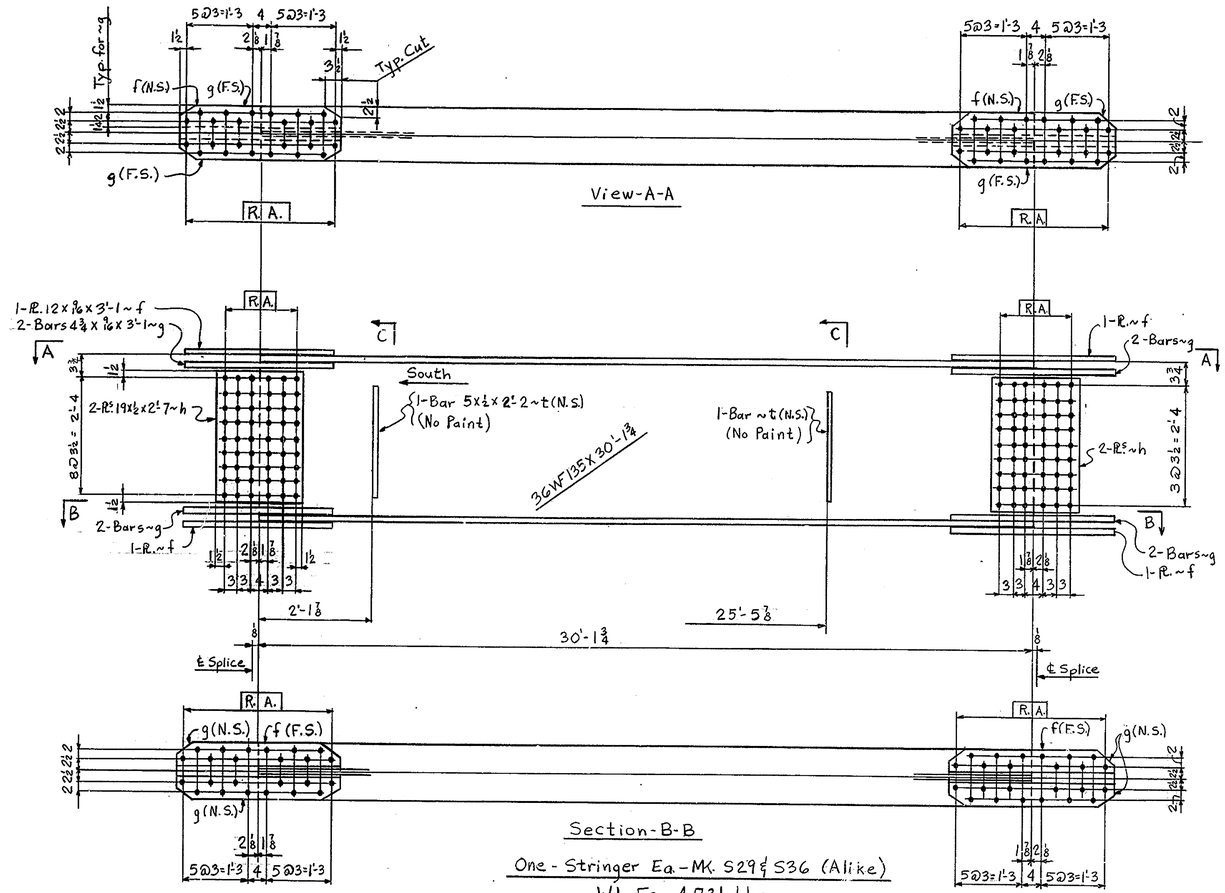

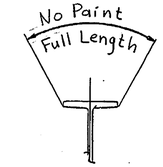

Typ. Paint Section

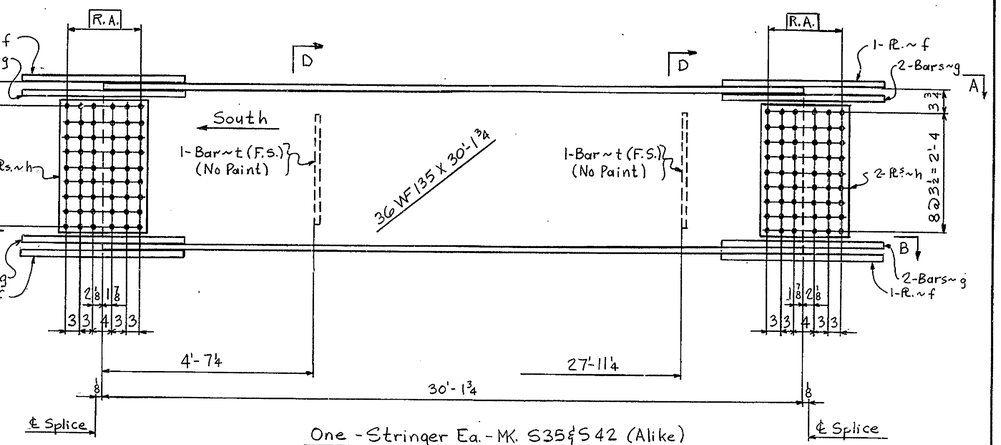

One - Stringer Ea. - MK. S35 & S42 (Alike)
Wt. Ea. - 4,731 Lbs.

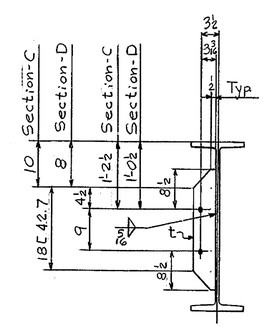

Sections - C & D

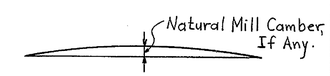

Camber Diagram

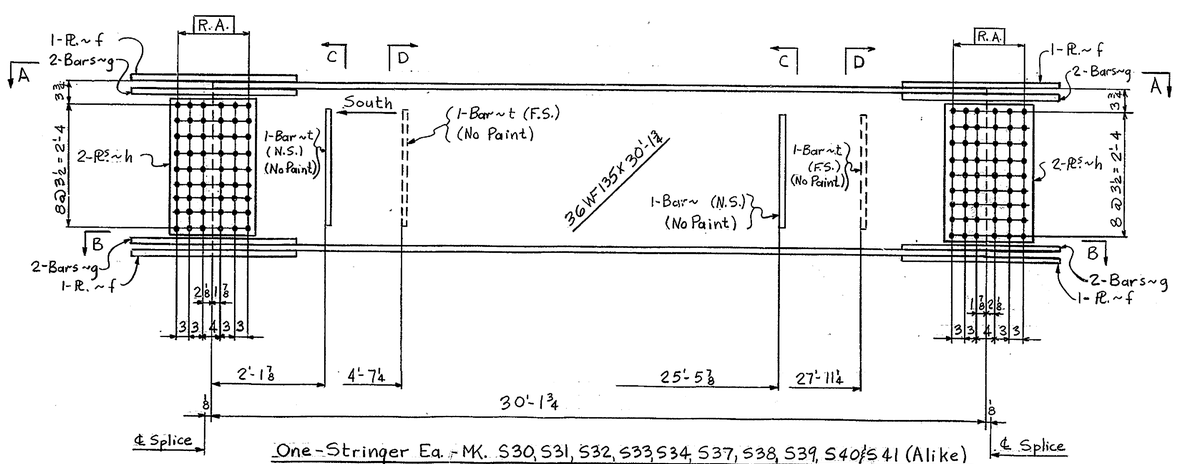

One - Stringer Ea. - MK. S30, S31, S32, S33, S34, S37, S38, S39, S40 & S41 (Alike)
Wt. Ea. - 4,768 Lbs.

SHOP NOTE

HOLES: 1 1/16" ϕ (Unless Noted)
BOLTS: None
PAINT: One Shop Coat of Primer. Del. Spec. No. A. (U.N.) No Paint Within 3" of Holes MK. R.A.

RA NOTE: HOLES MARKED RA TO BE SUB-PUNCHED 11/16" AND REAMED TO 15/16" WITH CONNECTING PARTS ASSEMBLED AND MATCH MARKED. See Dwg. E2.

APPROVED
DELAWARE STATE HIGHWAY DEPT.
DATE July 1, 1970

NO.	REVISION	DATE

HIGH WELDING COMPANY
1911 OLD PHILADELPHIA PIKE
LANCASTER, PA.

Stringers
I-495 Over Stoney Creek
I-495 Sta. 603 + 38
State of Delaware
State Highway Department
New Castle County, Delaware

STATE CONT. OR REF. NO. 68-07-005 CONTRACTOR Eastern States Const. Co.
MADE BY BCM CHECKED BY E.P.M. DATE 6-5-70
CONTRACT NO. 6996 DRAWING NO. 4 of 7

Lancaster Print-O-Stat 127

DO NOT CONSIDER ANY OF THE DATA ON THE EXISTING STRUCTURE SUPPLIED IN THESE DRAWINGS AS POSITIVE REPRESENTATIONS OF ANY OF THE CONDITIONS THAT MAY BE ENCOUNTERED IN THE FIELD FOR T201107402.

F.R.A. Reg. No.	State	Fed. Aid Proj. No
2	Del	I-495-3(17)19

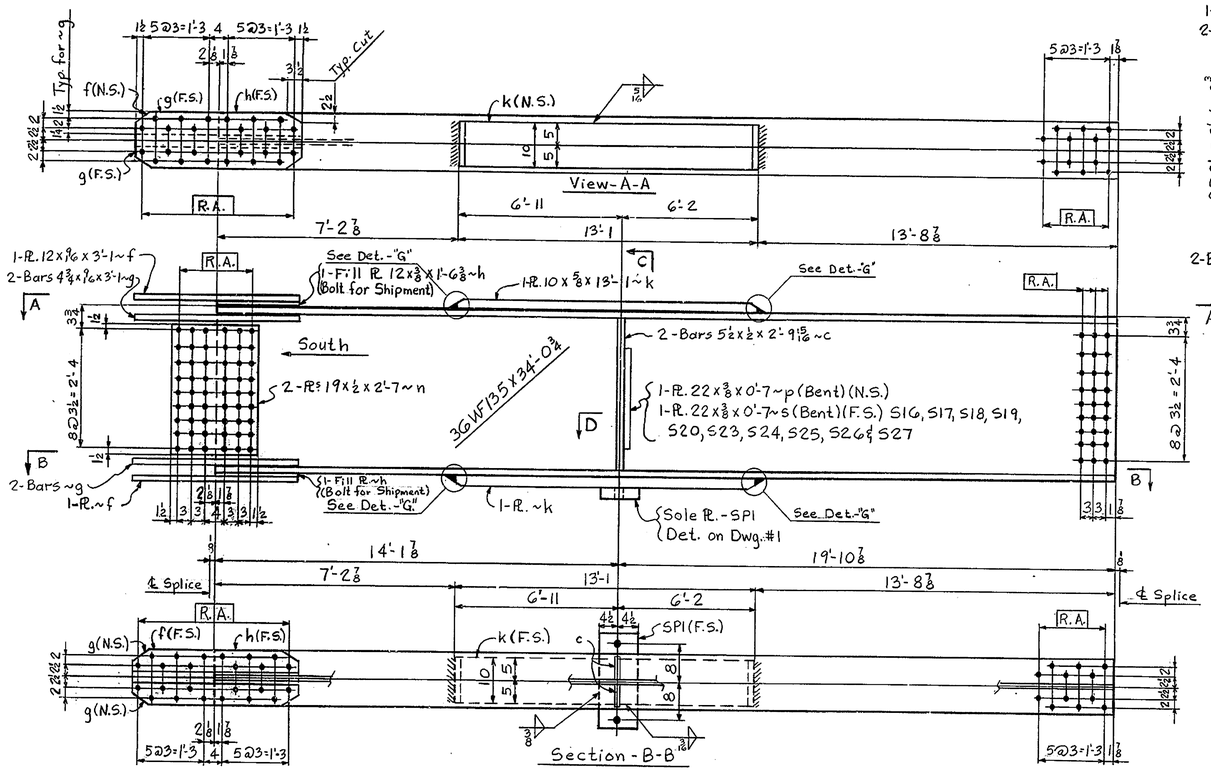

One-Stringer Ea.-MK. S15, S16, S17, S18, S19, S20, S22, S23, S24, S25, S26 & S27
Wt. Ea. - 5,860 Lbs.

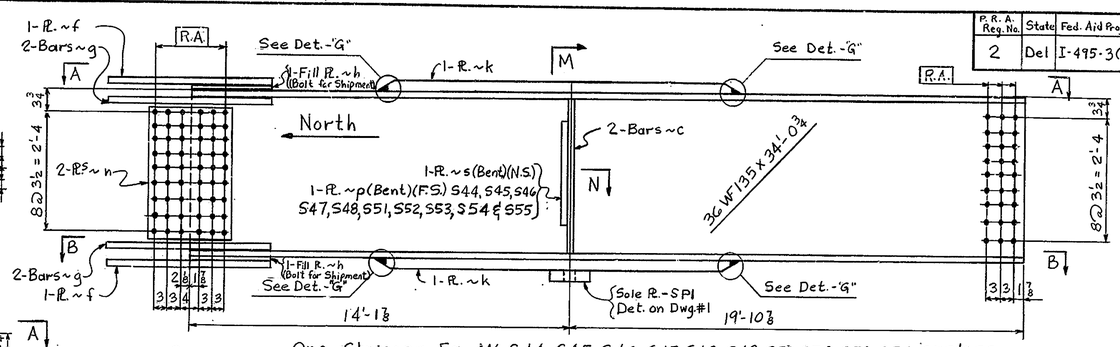

One-Stringer Ea.-MK. S44, S45, S46, S47, S48, S49, S51, S52, S53, S54, S55 & S56
Wt. Ea. - 5,860 Lbs.

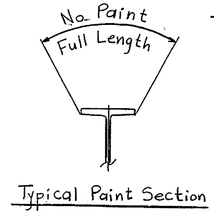

Typical Paint Section

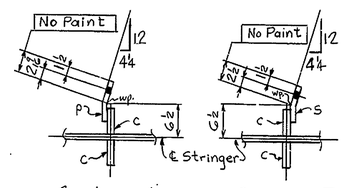

Section-K Section-F

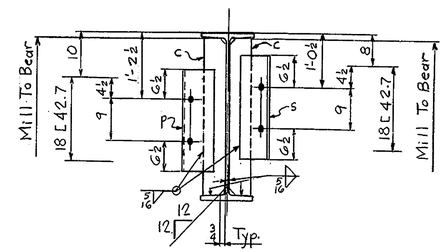

Section-C for S16, S17, S18, S19
S20, S23, S24, S25, S26 & S27
Section-M for S44, S45, S46, S47
S48, S51, S52, S53, S54 & S55

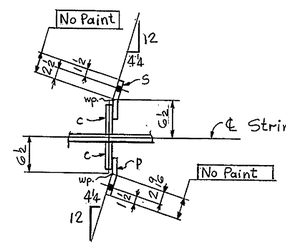

Section-D for S16, S17, S18, S19
S20, S23, S24, S25, S26 & S27

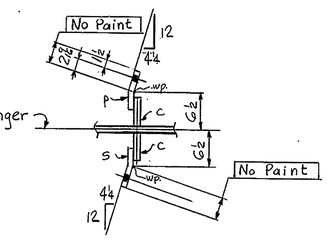

Section-N for S44, S45, S46, S47
S48, S51, S52, S53, S54 & S55

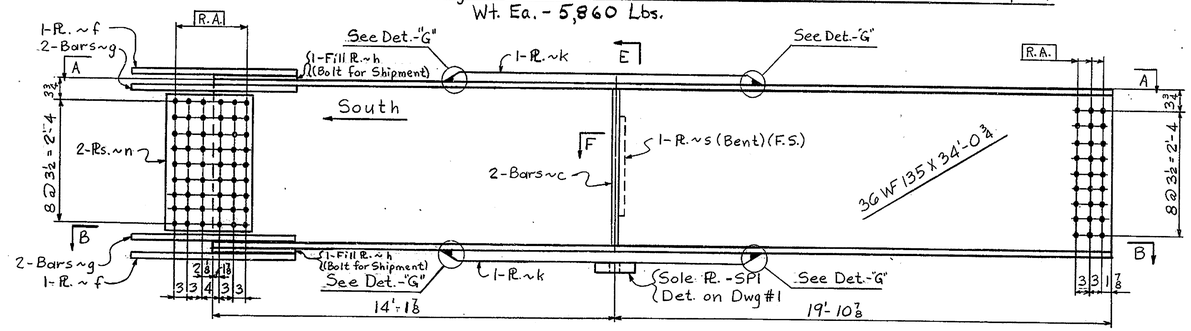

One-Stringer Ea.-MK.-S21 & S28 (Alike)
Wt. Ea. - 5,843 Lbs.

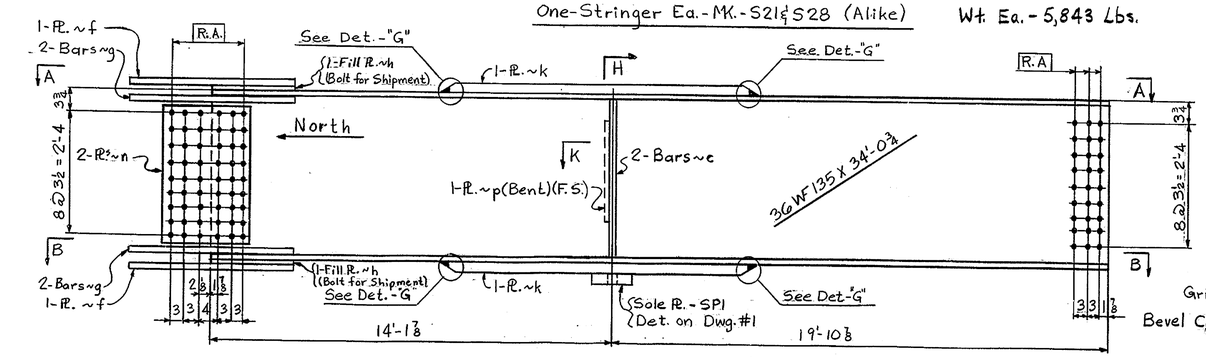

One-Stringer Ea.-MK.-S43 & S50 (Alike)
Wt. Ea. - 5,843 Lbs.

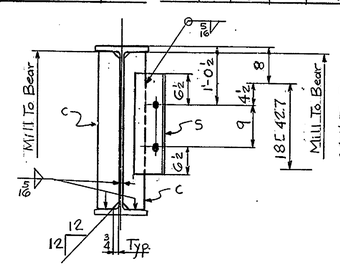

Section-E
Section-M for S49 & S56

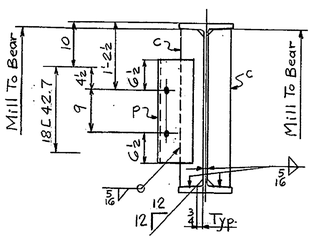

Section-H
Section-C for S15 & S22

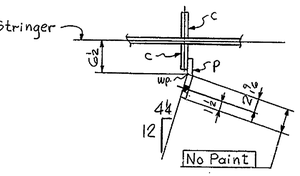

Section-D for S15 & S22

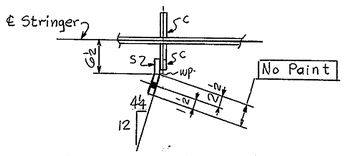

Section-N for S49 & S56

APPROVED
DELAWARE STATE HIGHWAY DEPT.
DATE July 1, 1970

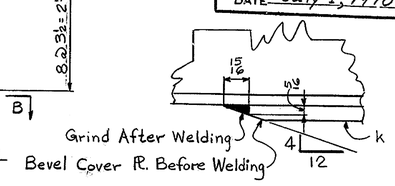

Detail-"G"

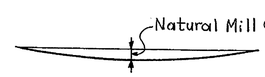

Camber Diagram

SHOP NOTE

HOLES: 1/16"Φ (Unless Noted)
BOLTS: None
PAINT: One Shop Coat of Primer. Del. Spec. No. A. (U.N.) No Paint Within 3" of Holes Mk. R.A.

R.A. NOTE:
HOLES MARKED R.A. TO BE SUB-PUNCHED 11/16"ϕ AND REAMED TO 15/16"ϕ WITH CONNECTING PARTS ASSEMBLED AND MATCH MARKED. See Dwg. E2.

NO.	REVISION	DATE

HIGH WELDING COMPANY
1911 OLD PHILADELPHIA PIKE
LANCASTER, PA.

Stringers
I-495 Over Stoney Creek
I-495 Sta. 603+38
State of Delaware
State Highway Department
New Castle County, Delaware

STATE CONT. OR REF. NO. 68-07-005 CONTRACTOR Eastern States Const. Co.
MADE BY BCM CHECKED BY E.P.M. DATE 6-5-70
CONTRACT NO. 6996 DRAWING NO. 3 of 7

Lancaster Print-O-Stat 127

DO NOT CONSIDER ANY OF THE DATA ON THE EXISTING STRUCTURE SUPPLIED IN THESE DRAWINGS AS POSITIVE REPRESENTATIONS OF ANY OF THE CONDITIONS THAT MAY BE ENCOUNTERED IN THE FIELD FOR T201107402.

P.R.A. Reg. No.		Fed. Aid Proj. No.
2	Del	I-495-3(17)19

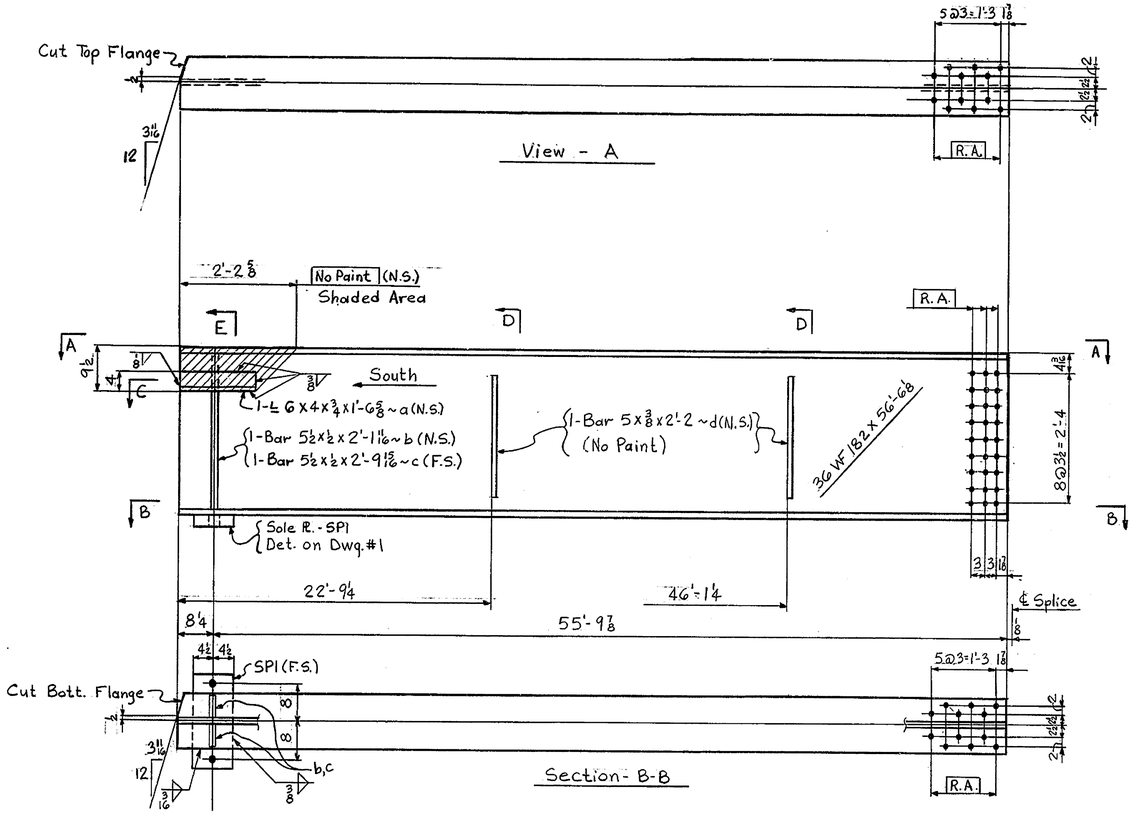

One-Stringer Ea. - Mk. S1 & S8 (Alike) Wt. Ea. - 10,570 Lbs.

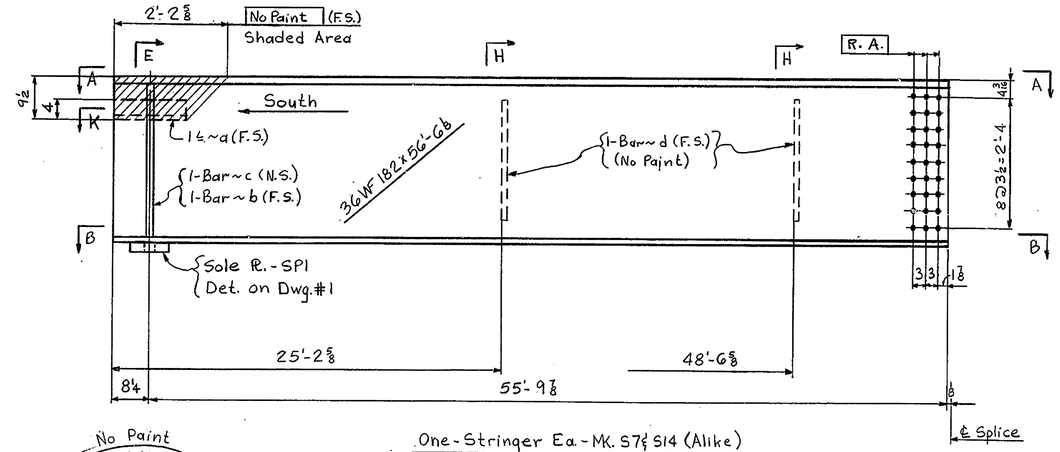

One-Stringer Ea. - Mk. S7 & S14 (Alike)
Wt. Ea. - 10,570 Lbs.

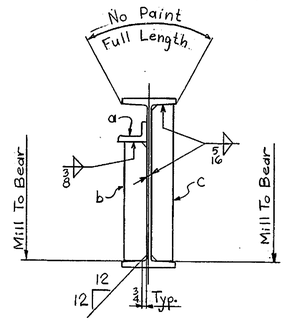

Section - E

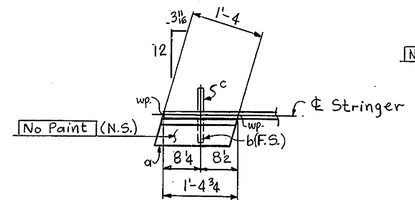

Section - C

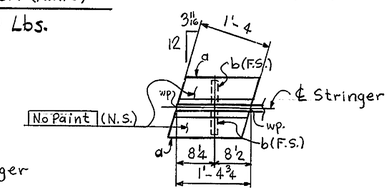

Section - F

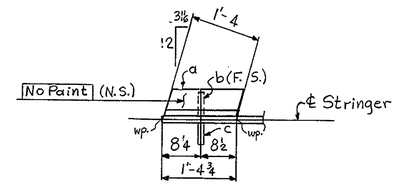

Section - K

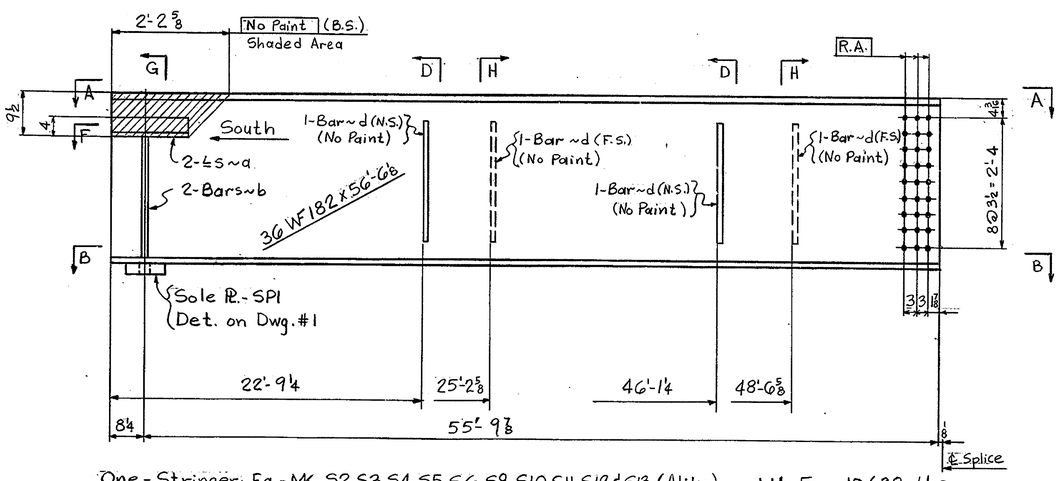

One-Stringer Ea. - Mk. S2, S3, S4, S5, S6, S9, S10, S11, S12 & S13 (Alike) Wt. Ea. - 10,628 Lbs.

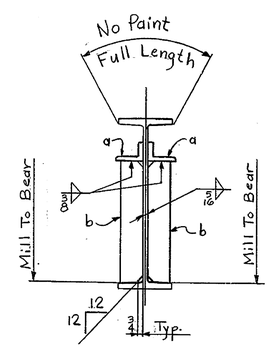

Section - G

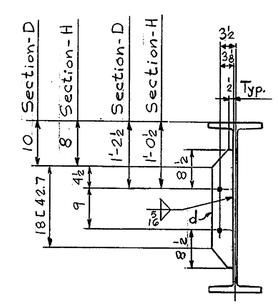

Sections D & H

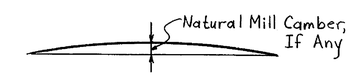

Camber Diagram

SHOP NOTE

Holes: 11/16" ϕ (Unless Noted)
Bolts: None
Paint: One Shop Coat of Primer Del. Spec. No. A. (U.N.)
No Paint Within 3" of Holes

Mk. R.A.

R.A. NOTE: HOLES MARKED R.A. TO BE SUB-PUNCHED 11/16" AND REAMED TO 15/16" WITH CONNECTING PARTS ASSEMBLED AND MATCH MARKED. See Dwg. E2.

APPROVED
DELAWARE STATE HIGHWAY DEPT.
DATE July 1, 1970

NO.	REVISION	DATE

HIGH WELDING COMPANY
1911 OLD PHILADELPHIA PIKE
LANCASTER, PA.

Stringers
I-495 Over Stoney Creek
I-495 Sta. 603+38
State of Delaware
State Highway Department
New Castle County, Delaware

STATE CONT. OR REF. NO. 68-07-005 CONTRACTOR Eastern States Const. Co.
MADE BY BCM CHECKED BY E.P.M. DATE 6-5-70
CONTRACT NO. 6996 DRAWING NO. 2 of 7

Lancaster Print-O-Stat 127

DO NOT CONSIDER ANY OF THE DATA ON THE EXISTING STRUCTURE SUPPLIED IN THESE DRAWINGS AS POSITIVE REPRESENTATIONS OF ANY OF THE CONDITIONS THAT MAY BE ENCOUNTERED IN THE FIELD FOR T201107402.

F.R.A. No.	State	Fed. Aid Proj. No.
2	Del.	I-495-3(17)19

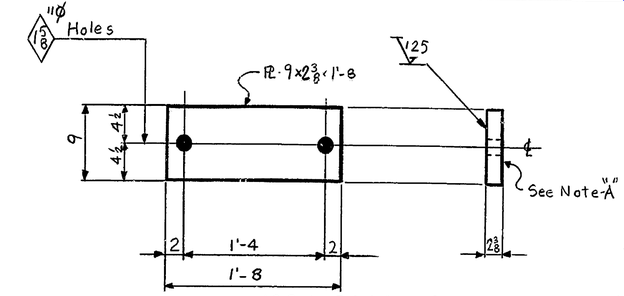

42-Sole PLs Mk. SP1 Wt. Ea.-121.2 Lbs.

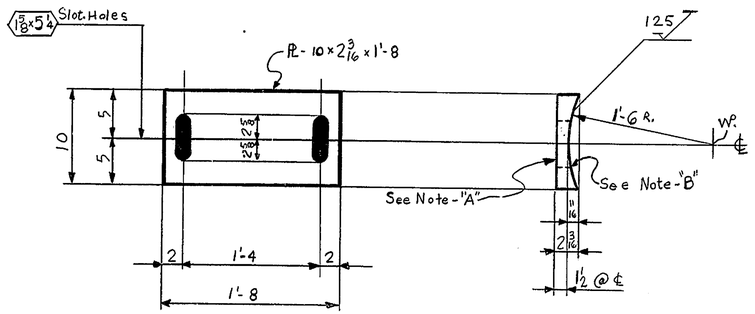

14-Sole PLs Mk. SP2 Wt. Ea.-124.0 Lbs.

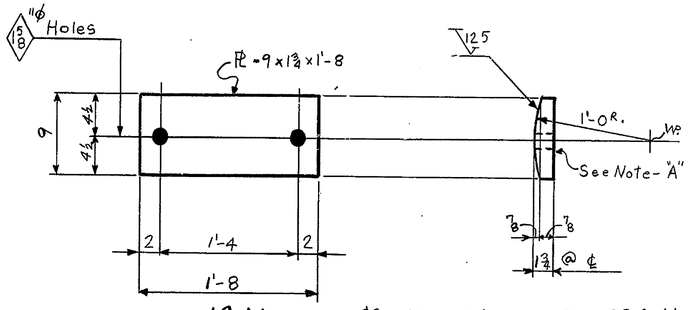

42-Masonry PLs Mk. MP1 Wt. Ea.-89.3 Lbs.

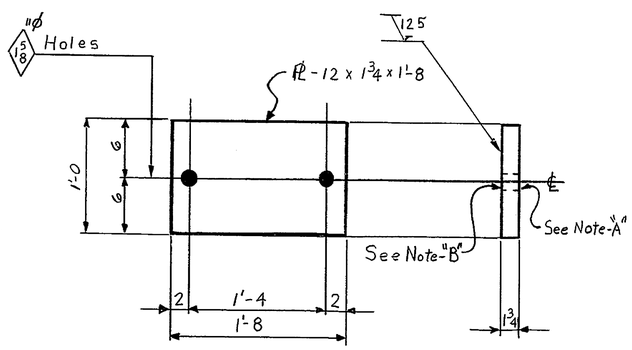

14-Masonry PLs Mk. MP2 Wt. Ea.-119.0 Lbs.

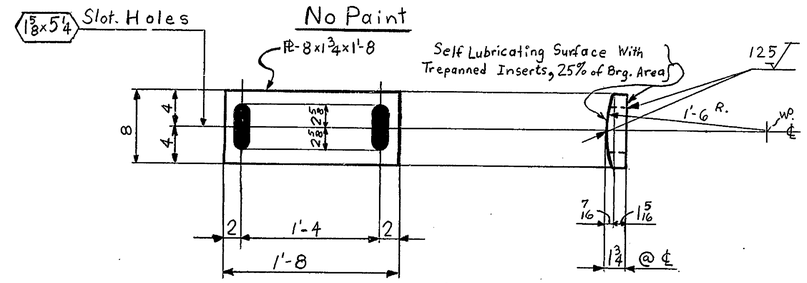

14-Bronze PLs Mk. BP1 Wt. Ea.-90.7 Lbs.

Material Spec. A.S.T.M. - B22, Alloy "A"

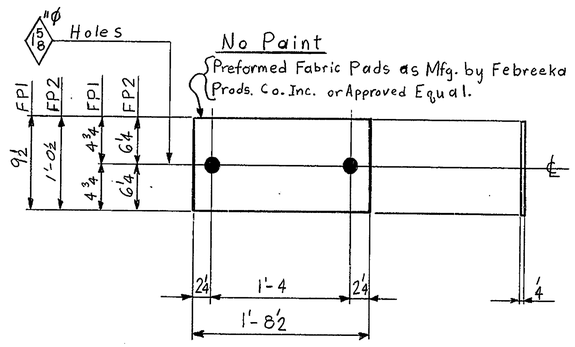

42-Fabric Pads Mk. FP1

14-Fabric Pads Mk. FP2

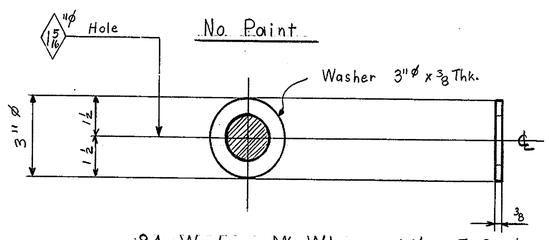

84-Washers Mk. W1 Wt.-50.9 Lbs.

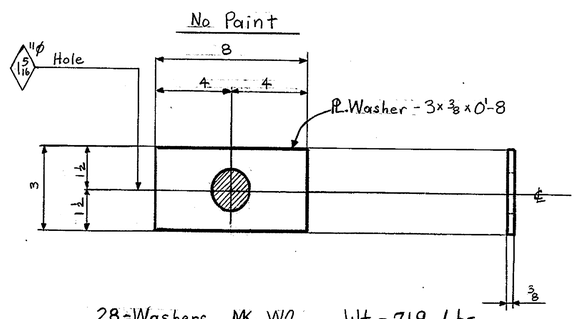

28-Washers Mk. W2 Wt.-71.9 Lbs.

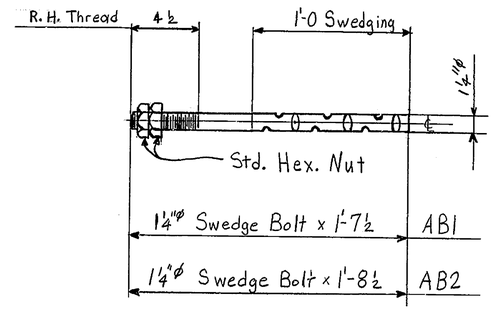

84-Anchor Bolts Mk. AB1 Wt.-658.7 Lbs.

28-Anchor Bolts Mk. AB2 Wt.-229.3 Lbs.

Notes:

All Materials A.S.T.M. A-36 (U.N.). Sole PLs Mk SP1 & SP2 Are to Be Painted (U.N.) After Being Welded To the Stringer In the Shop. Threads of Anchor Bolts Are to Be Coated With Oil Before Shipment.

Note "A"

Surfaces Indicated Are To Be Straight And True; Finish If Necessary.

Note "B"

Surfaces Indicated Are Not To Be Painted; Apply One Coat of Hot White Lead & Tallow.

SHOP NOTE

HOLES: As Noted
BOLTS: None
PAINT: One Shop Coat of Primer. Del. Spec. Paint No. A (U.N.)

APPROVED
DELAWARE STATE HIGHWAY DEPT.
DATE November 26, 1969

NO.	REVISION	DATE

HIGH WELDING COMPANY
1911 OLD PHILADELPHIA PIKE
LANCASTER, PA.

Bearing Details
I-495 Over Stoney Creek
I-495 Sta. 603+38
State of Delaware
State Highway Department
New Castle County, Delaware

STATE CONT. OR REF. NO. 68-07-005 CONTRACTOR Eastern States Const. Co., Inc.
MADE BY BCM CHECKED BY E.P.M. DATE 7-3-69
CONTRACT NO. 6996 DRAWING NO. 1 of 7

Lancaster Print-O-Stat 127

DO NOT CONSIDER ANY OF THE DATA ON THE EXISTING STRUCTURE SUPPLIED IN THESE DRAWINGS AS POSITIVE REPRESENTATIONS OF ANY OF THE CONDITIONS THAT MAY BE ENCOUNTERED IN THE FIELD FOR T201107402.

P.R.A. Req. No.	State	Fed. Aid Proj. No.
2	Del.	I-495-3(17)19

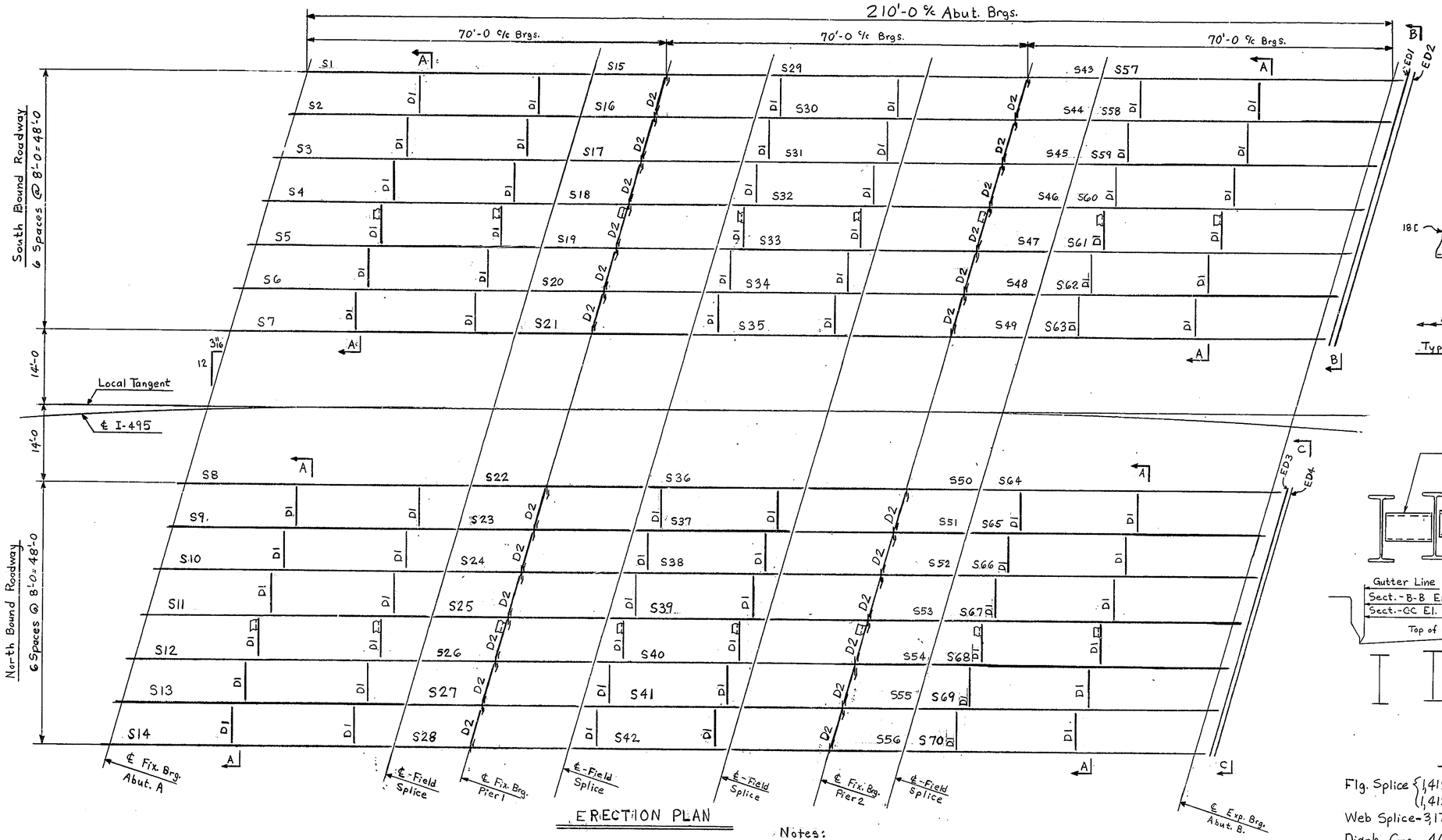

ERECTION PLAN

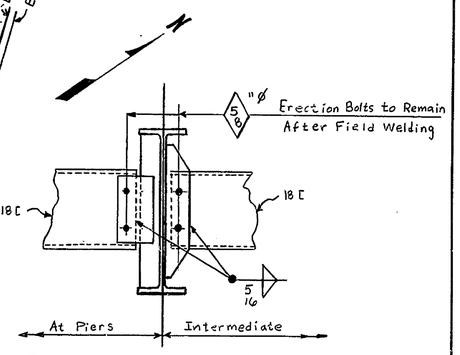

Typical Field Connection of Diaphragms

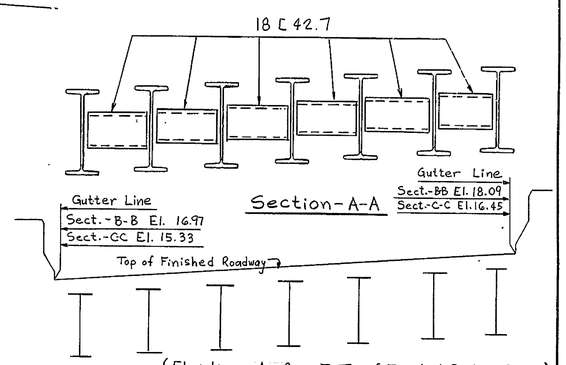

Section-A-A

(Elevations Are Given To Top of Finished Roadway @ Face of Backwall-See Det.-"A")

Sections- B-B & C-C

Summary of Field Bolts

Flg. Splice { 1,415 - 7/8" ϕ High Strength Bolts X 3¼ Lg.; 1,415 - " " " " X 3¾ Lg. } w/ Hvy. Hex. Hd. & Nut

Web Splice - 3,175 - " " " " X 3 Lg.

Diaph. Conn - 405 - 5/8" ϕ Machine Bolts X 1¾ Lg.

Exp. Dam Conn. - 30 - ¾" ϕ " " X 2¾ Lg.

6,005 - Hard. Flat Washers for 7/8" ϕ H.S. Bolts.

Notes:

All Dimensions Are Given Horizontally
All Field Connection are to Be Made With 7/8 ϕ High Strength Bolts (U.N.)
All Steel to Be A.S.T.M. A-36.

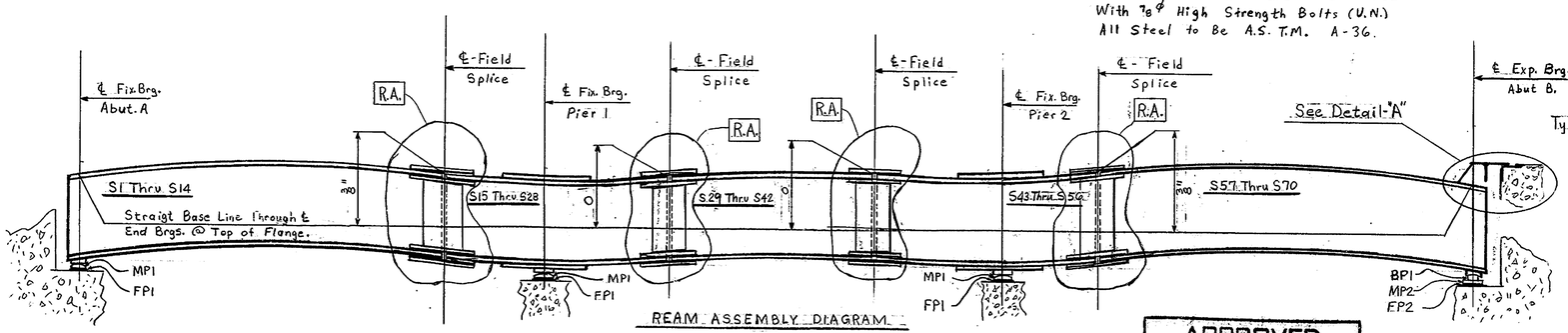

REAM ASSEMBLY DIAGRAM

Assemble Stringers In a Straight Line. Ream Holes MK. R.A To 15/16 ϕ. See Plan Above For Reaming One Line of Stringers. Dimensions Given Are to Top of Stringers.

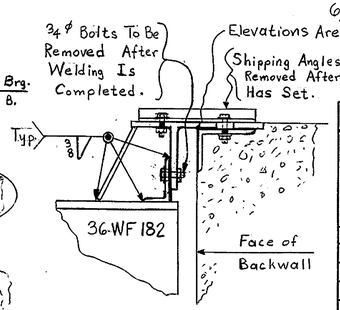

Detail A

APPROVED
DELAWARE STATE HIGHWAY DEPT.
DATE July 1, 1970

NO.	REVISION	DATE

HIGH WELDING COMPANY
1911 OLD PHILADELPHIA PIKE
LANCASTER, PA.

Erection Plan
I-495 Over Stoney Creek
I-495 Sta. 603+38
State of Delaware
State Highway Department
New Castle County, Delaware

STATE CONT. OR REF. NO. 68-07-005 CONTRACTOR Eastern States Const. Co. Inc.
MADE BY BCM CHECKED BY E.P.M. DATE 6-9-70
CONTRACT NO. 6996 DRAWING NO. E2

Lancaster Print-O-Stat 127

DO NOT CONSIDER ANY OF THE DATA ON THE EXISTING STRUCTURE SUPPLIED IN THESE DRAWINGS AS POSITIVE REPRESENTATIONS OF ANY OF THE CONDITIONS THAT MAY BE ENCOUNTERED IN THE FIELD FOR T201107402.

P.R.A. Reg. No.	State	Fed. Aid Proj. No.
2	Del.	I-495-3(17)19

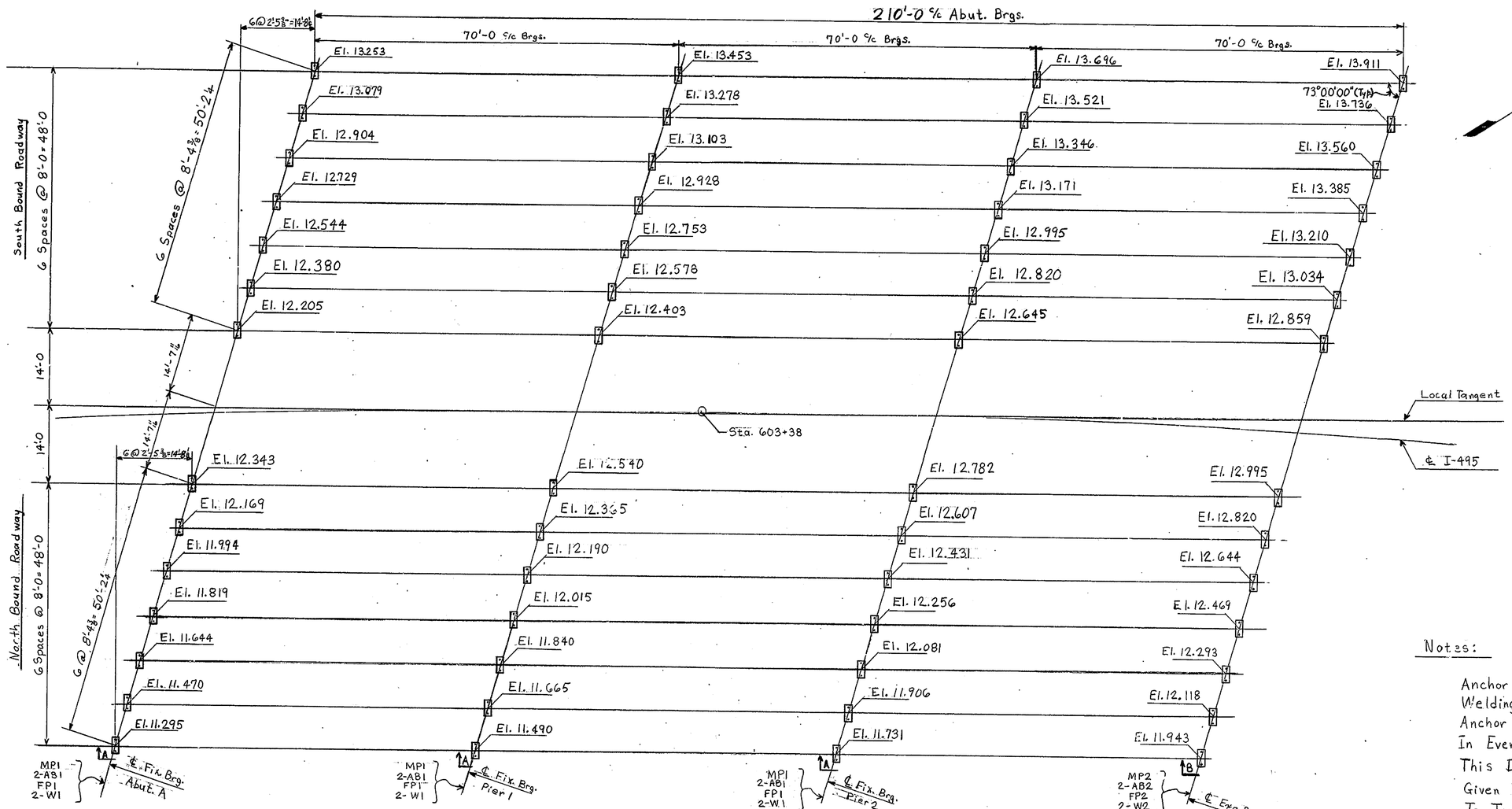

ANCHOR BOLT PLAN

Notes:

Anchor Bolts Furnished by High Welding Company and Set by Others. Anchor Bolt Setting Must Be Exact In Every Detail In Accordance With This Drawing. All Dimensions Are Given Horizontally. Elevations Are Given To Top of Concrete Pad.

All Steel to Be A.S.T.M. A-36

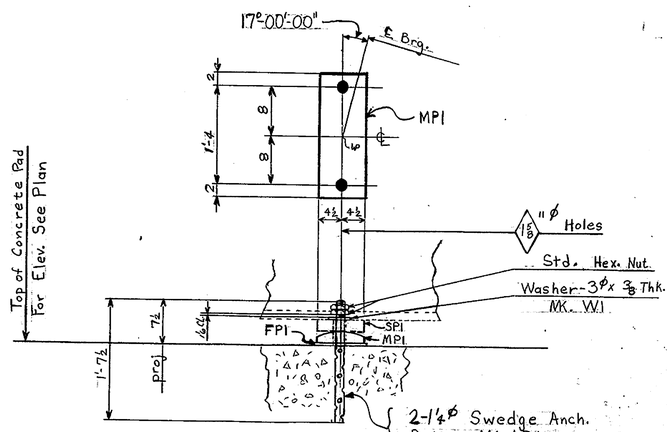

Section A

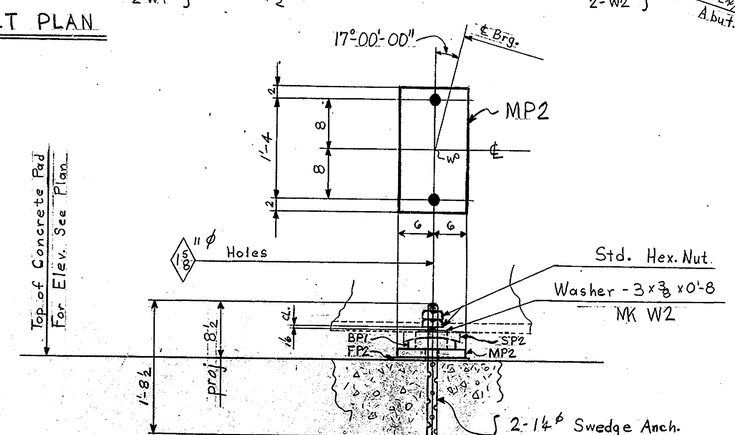

Section B

APPROVED
DELAWARE STATE HIGHWAY DEPT.
DATE November 26, 1969

826

NO.	REVISION	DATE

HIGH WELDING COMPANY
1911 OLD PHILADELPHIA PIKE
LANCASTER, PA.

Anchor Bolt Plan
I-495 Over Stoney Creek
I-495 Sta. 603+38
State of Delaware
State Highway Department
New Castle County, Delaware

STATE CONT. OR REF. NO. 68-07-005 CONTRACTOR Eastern States Const. Co., Inc.
MADE BY BCM CHECKED BY E.P.M. DATE 7-3-69
CONTRACT NO. 6996 DRAWING NO. E1

Lancaster Print-O-Stat 127

DO NOT CONSIDER ANY OF THE DATA ON THE EXISTING STRUCTURE SUPPLIED IN THESE DRAWINGS AS POSITIVE REPRESENTATIONS OF ANY OF THE CONDITIONS THAT MAY BE ENCOUNTERED IN THE FIELD FOR T201107402.

B.R.A. Req. No.	State	Fed. Aid Proj. No.
2	Del.	I-495-3(17)19

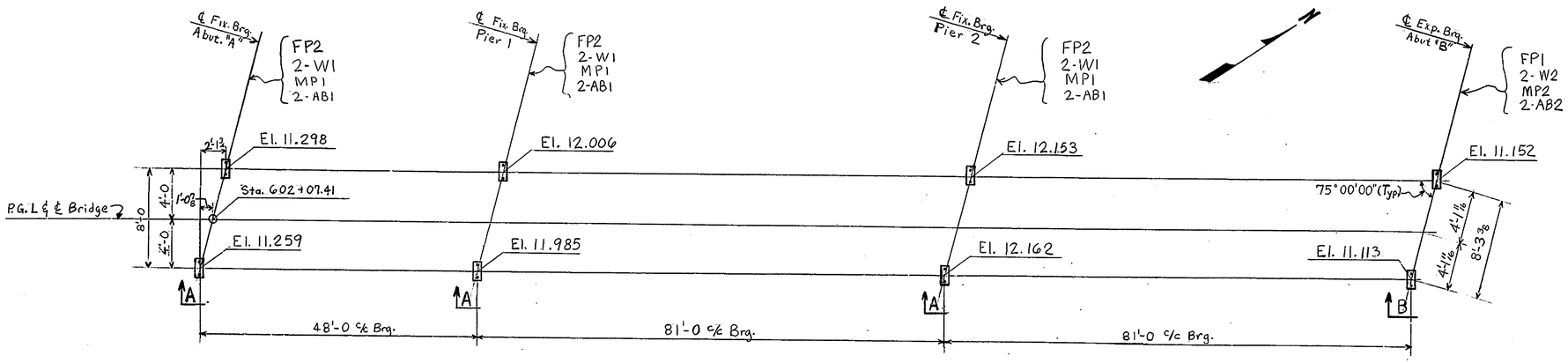

ANCHOR BOLT PLAN

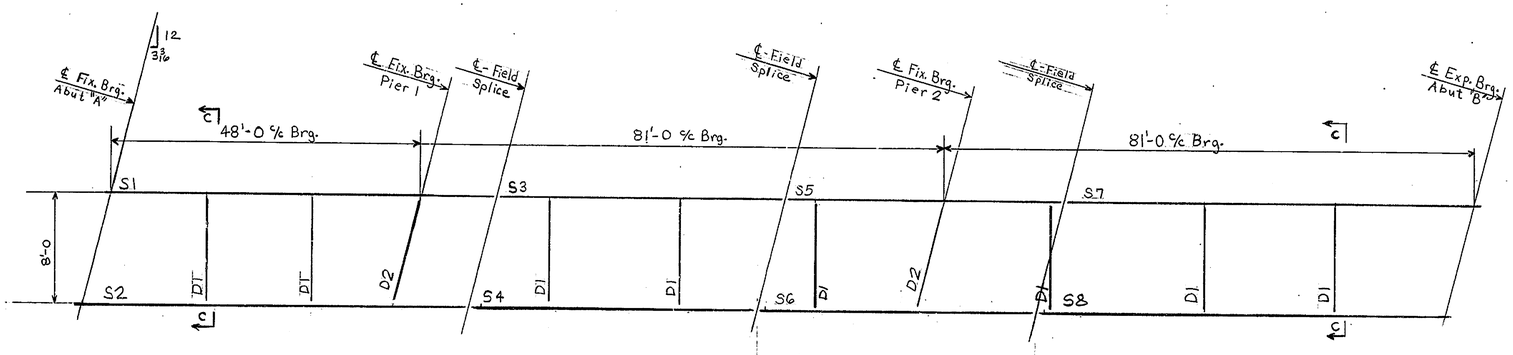

ERECTION PLAN

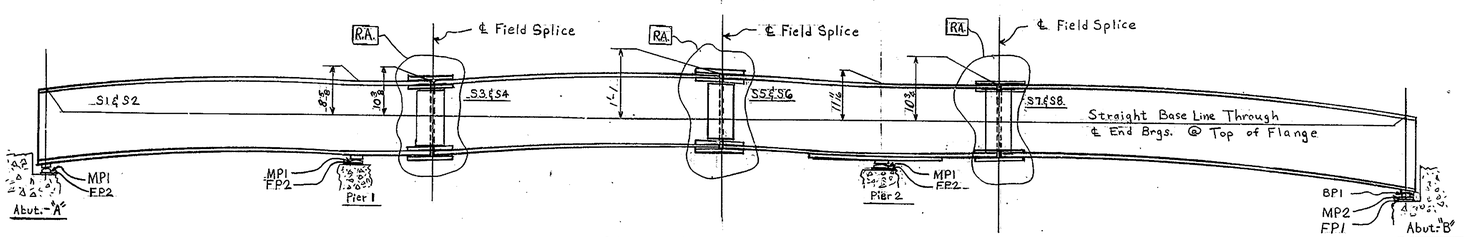

REAM ASSEMBLY DIAGRAM

Assemble Stringers - Ream Holes Mk. RA to 15/16 ϕ. See Plan Above For Reaming One Line of Stringers. Dimensions Given are to Top of Stringers.

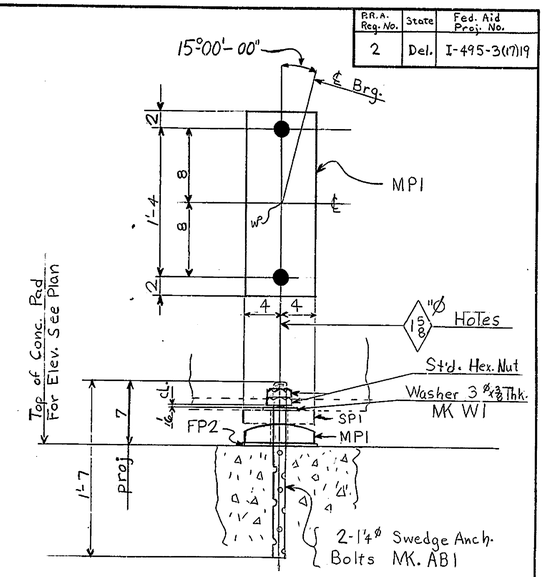

Section A

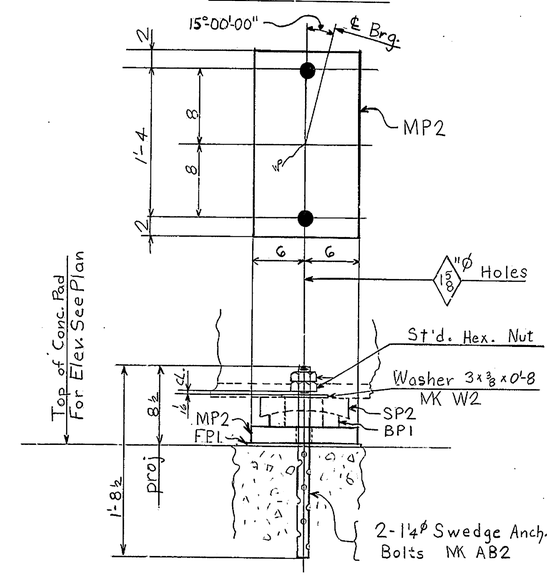

Section B

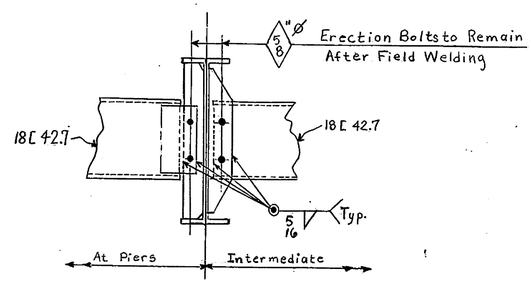

Typical Field Connection of Diaphragms

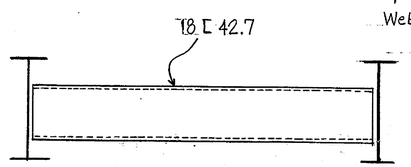

Section C-C

Summary of Field Bolts

Diaphragm Conn. - 45 - 5/8 ϕ Mach. Bolts x 1¾ Lg.
Web Splice - 380 - 7/8 ϕ High Strength Bolts x 2¾ Lg. (Hvy. Hex. Head & Nut)
Flg. Splice - 305 - 7/8 ϕ High Strength Bolts x 3½ Lg. (Hvy. Hex. Head & Nut)
685 - Hardened Flat Washers for 7/8 ϕ H.S. Bolts.

Notes:

Anchor Bolts furnished by High Welding Company and Set by Others. Anchor Bolt Setting Must Be Exact in Every Detail in Accordance With This Drawing. All Dimensions are Given Horizontally. Elevations Are Given to Top of Concrete Pad. All Field Connections to be Made With 7/8 ϕ High Strength Bolts. (U.N.)
All Steel to be A.S.T.M. A-36

APPROVED
DELAWARE STATE HIGHWAY DEPT.
DATE Feb. 17, 1970

NO.	REVISION	DATE

HIGH WELDING COMPANY
1911 OLD PHILADELPHIA PIKE
LANCASTER, PA.

Anchor Bolt And Erection Plan
I-495 Maintenance Road Over Stoney Creek
I-495 Maintenance Road Sta. 602+07.41
State of Delaware
State Highway Department
New Castle County, Delaware

STATE CONT. OR REF. NO. 68-07-005 CONTRACTOR Eastern States Const. Co., Inc.
MADE BY BCM CHECKED BY E.P.M. DATE 7-2-69
CONTRACT NO. 6995 DRAWING NO. E1

Lancaster Print-O-Stat 127

DO NOT CONSIDER ANY OF THE DATA ON THE EXISTING STRUCTURE SUPPLIED IN THESE DRAWINGS AS POSITIVE REPRESENTATIONS OF ANY OF THE CONDITIONS THAT MAY BE ENCOUNTERED IN THE FIELD FOR T201107402.

P.R.A. Req. No.	State	Fed. Aid Proj. No.
2	Del.	I-495 3017)19

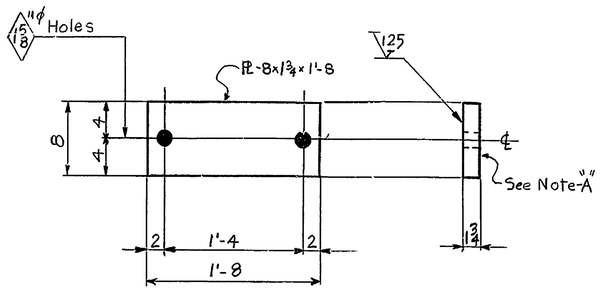

6-Sole PLs MK. SP1 Wt. Ea.-79.3 Lbs.

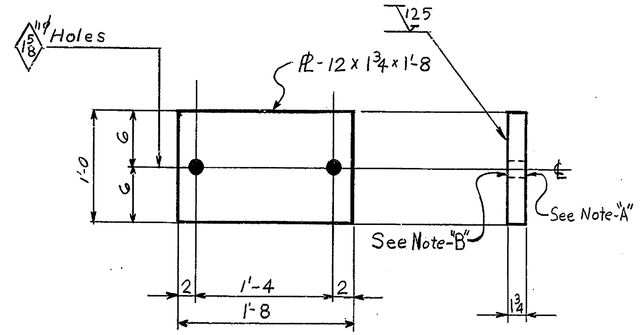

2-Masonry PLs MK. MP2 Wt. Ea.- 119.0 Lbs.

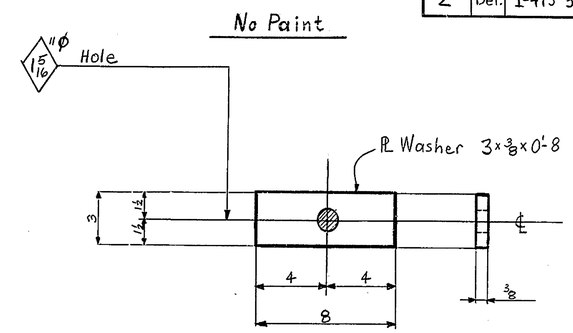

4-Washers MK. W2 Wt.- 10.3 Lbs.

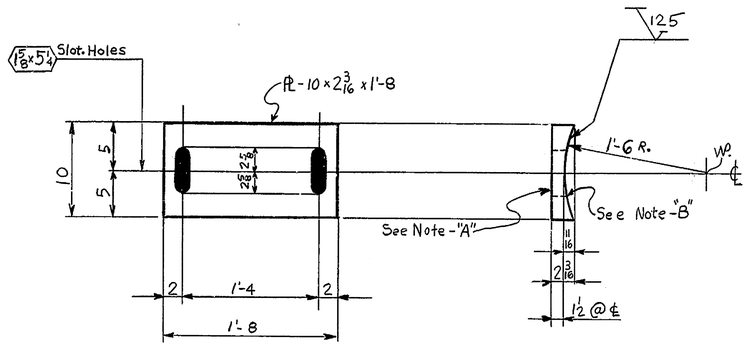

2-Sole PLs MK. SP2 Wt.Ea.-102.7 Lbs.

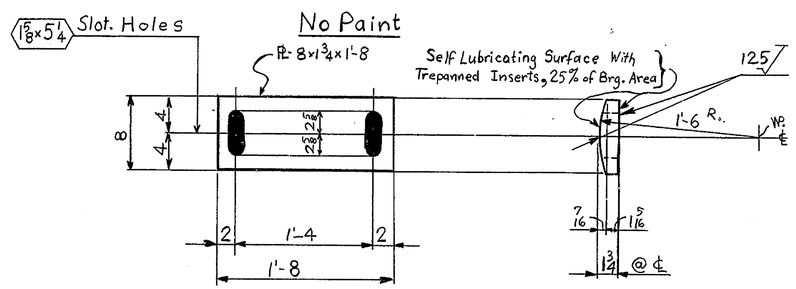

2-Bronze PLs MK. BP1 Wt.Ea.-73.7 Lbs.
Material Spec. A.S.T.M. - B22, Alloy "A"

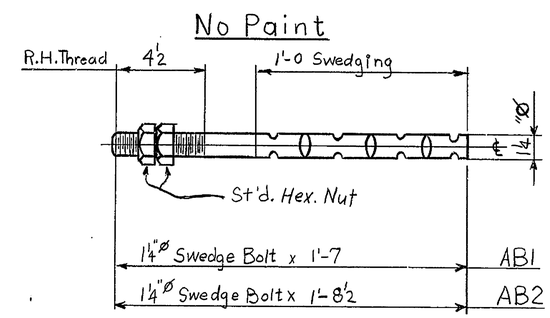

12-Anchor Bolts MK. AB1 Wt.-77.5 Lbs.
4-Anchor Bolts MK. AB2 Wt.-28.6 Lbs.

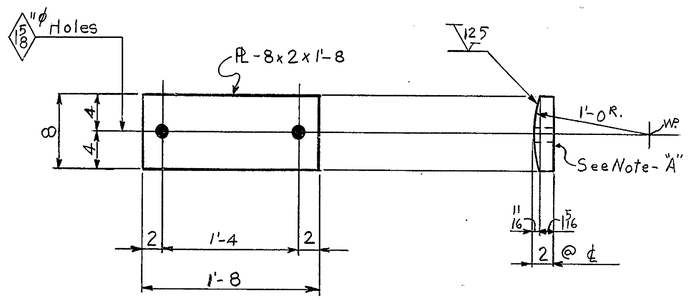

6-Masonry PLs MK. MP1 Wt.Ea.-90.7 Lbs.

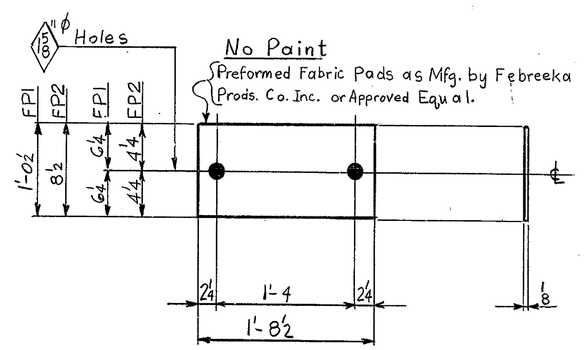

2-Fabric Pads MK. FP1
6-Fabric Pads MK. FP2

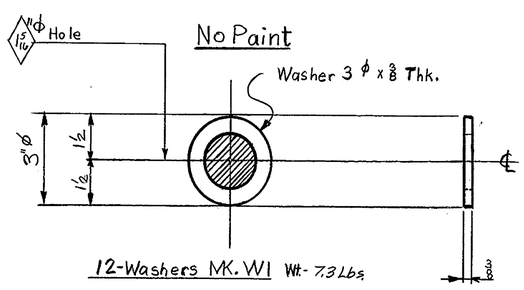

12-Washers MK. W1 Wt.- 7.3 Lbs.

Notes :

All Materials A.S.T.M. A-36 (U.N.)
Sole PLs MK SP1 & SP2 are to be Painted (U.N.) After Being Welded to the Stringer in the Shop.
Threads of Anchor Bolts are to be Coated With Oil Before Shipment.

Note-"A"

Surfaces Indicated Are to Be Straight & True; Finish if Necessary.

Note-"B"

Surfaces Indicated Are not to Be Painted; Apply One Coat of Hot White Lead & Tallow.

SHOP NOTE

HOLES: As Noted
BOLTS: None
PAINT: One Shop Coat of Primer. Del. Spec. Paint No. A (U.N.)

APPROVED
DELAWARE STATE HIGHWAY DEPT.
DATE Nov. 26, 1969

NO.	REVISION	DATE

HIGH WELDING COMPANY
1911 OLD PHILADELPHIA PIKE
LANCASTER, PA.

Bearing Details
I-495 Maintenance Road Over Stoney Creek
I-495 Maintenance Road Sta. 602 + 07.41
State of Delaware
State Highway Department
New Castle County, Delaware

STATE CONT. OR REF. NO. 68-07-005 CONTRACTOR Eastern States Const. Co. Inc.
MADE BY BCM CHECKED BY E.P.M. DATE 7-2-69.
CONTRACT NO. 6995 DRAWING NO. 1 of 4

Lancaster Print-O-Stat 127

DO NOT CONSIDER ANY OF THE DATA ON THE EXISTING STRUCTURE SUPPLIED IN THESE DRAWINGS AS POSITIVE REPRESENTATIONS OF ANY OF THE CONDITIONS THAT MAY BE ENCOUNTERED IN THE FIELD FOR T201107402.

P.R.A. Reg. No.	State	Fed. Aid Proj. No.
2	Del.	I-495 3(17)19

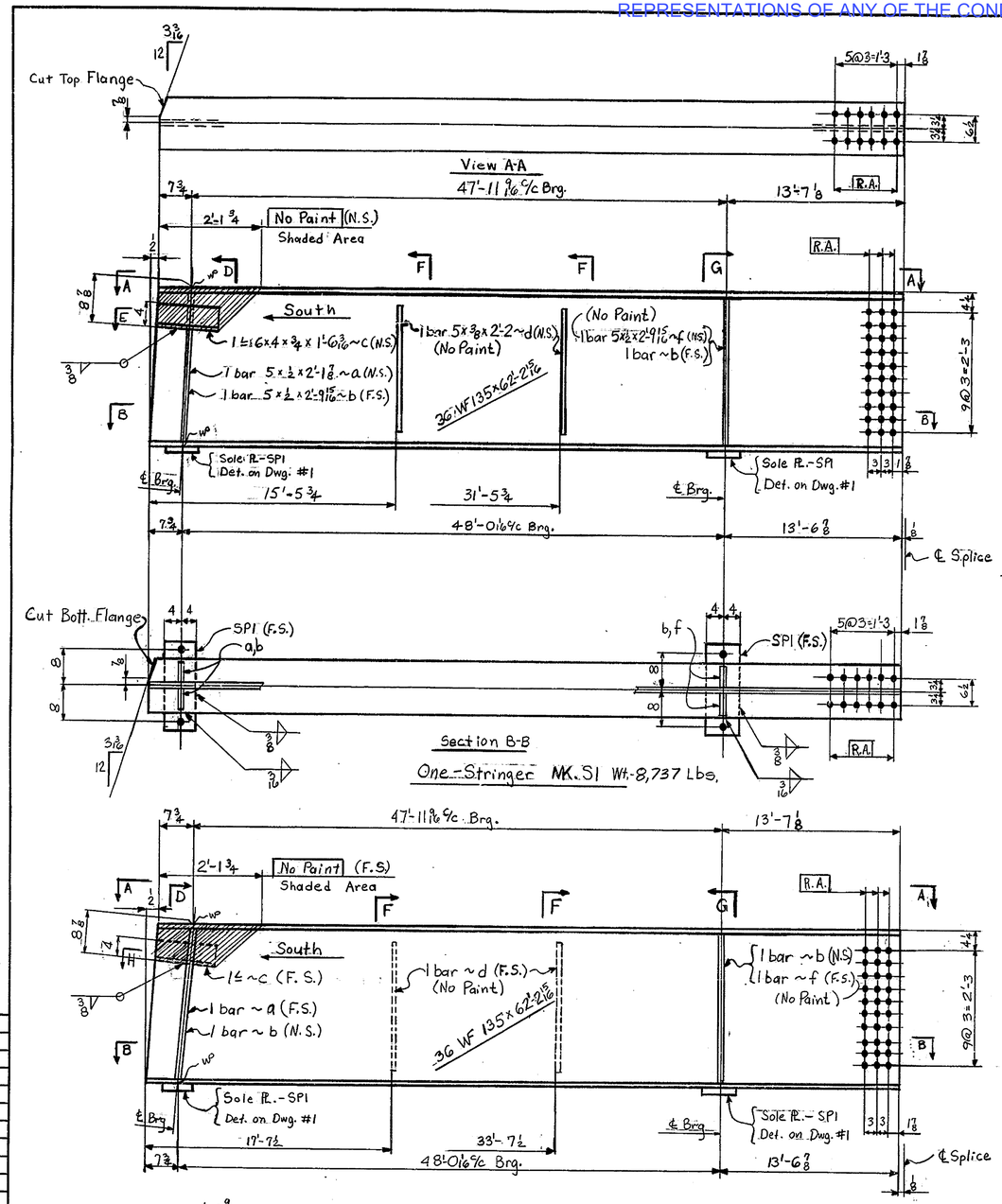

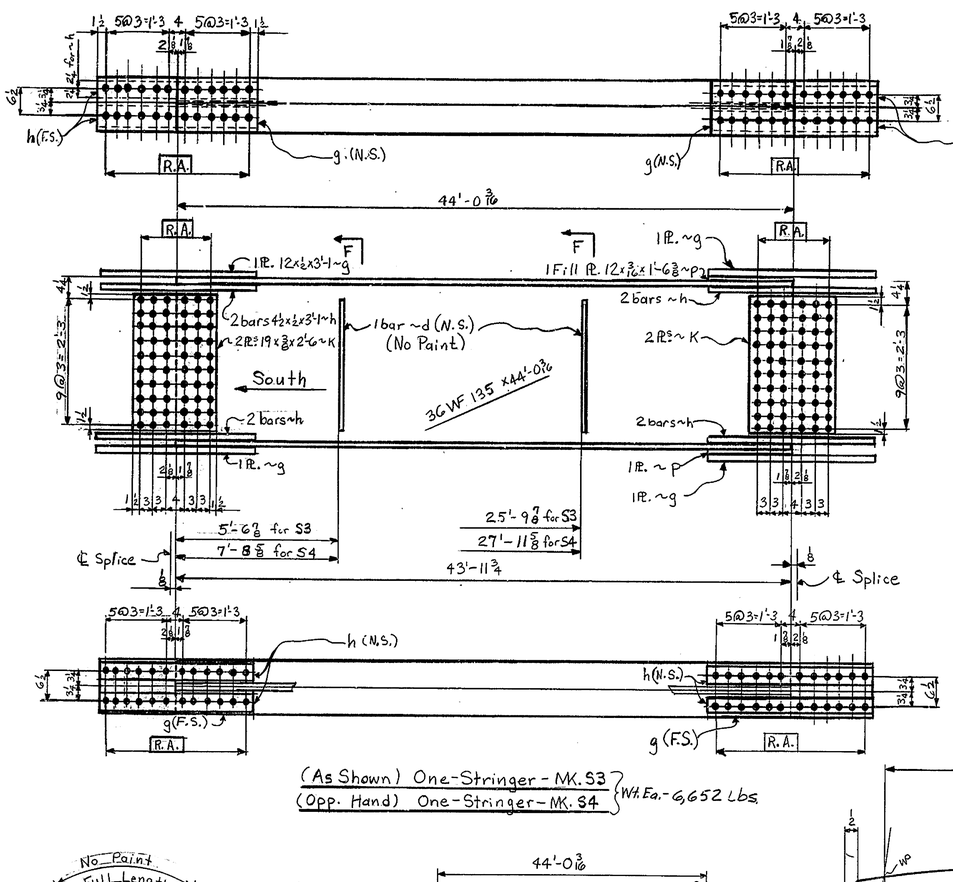

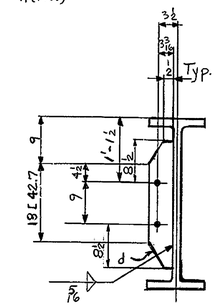

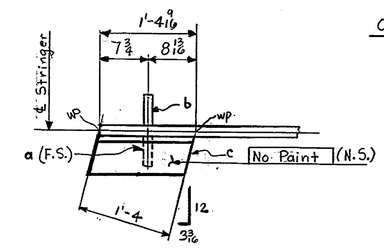

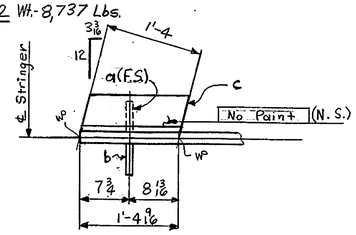

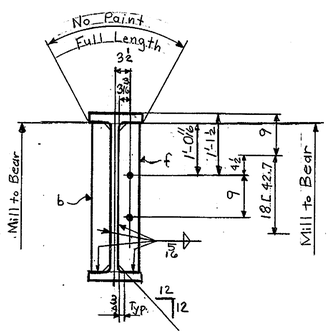

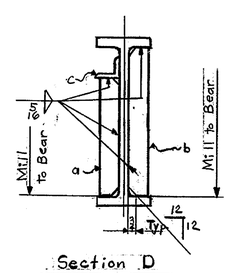

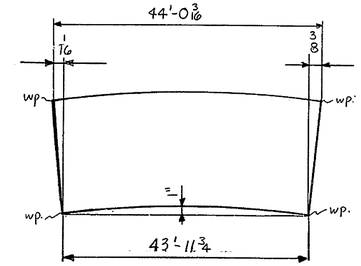

Camber Diagram for S3 & S4

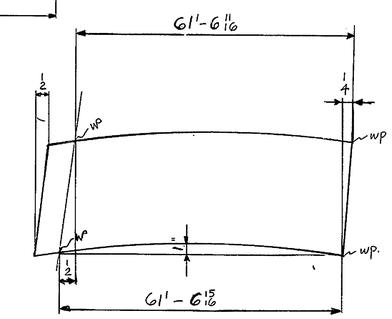

Camber Diagram for S1 & S2

R.A. NOTE:
HOLES MARKED R.A. TO BE SUB-PUNCHED 11/16" AND REAMED TO 15/16" WITH CONNECTING PARTS ASSEMBLED AND MATCH MARKED. SEE DWG. E1

SHOP NOTE

HOLES: 11/16" ø (U.N.)
BOLTS: None
PAINT: One Shop Coat of Primer. Del. Spec. Paint No. A (U.N.) No Paint Within 3" of Holes MK. R.A

APPROVED
DELAWARE STATE HIGHWAY DEPT.
DATE Feb. 25, 1970

NO.	REVISION	DATE

HIGH WELDING COMPANY
1911 OLD PHILADELPHIA PIKE
LANCASTER, PA.

Stringers
I-495 Maintenance Road Over Stoney Creek
I-495 Maintenance Road Sta. 602+07.41
State of Delaware
State Highway Department
New Castle County, Delaware

STATE CONT. OR REF. NO. 68-07-005 CONTRACTOR Eastern States Const. Co. Inc.
MADE BY BCM CHECKED BY W.R.C. DATE 1-19-70
CONTRACT NO. 6995 DRAWING NO. 2 of 4

Lancaster Print-O-Stat 127

DO NOT CONSIDER ANY OF THE DATA ON THE EXISTING STRUCTURE SUPPLIED IN THESE DRAWINGS AS POSITIVE REPRESENTATIONS OF ANY OF THE CONDITIONS THAT MAY BE ENCOUNTERED IN THE FIELD FOR T201107402.

P. R. A. Req. No.	State	Fed. Aid Proj. No.
2	Del.	I-495 3(17)19

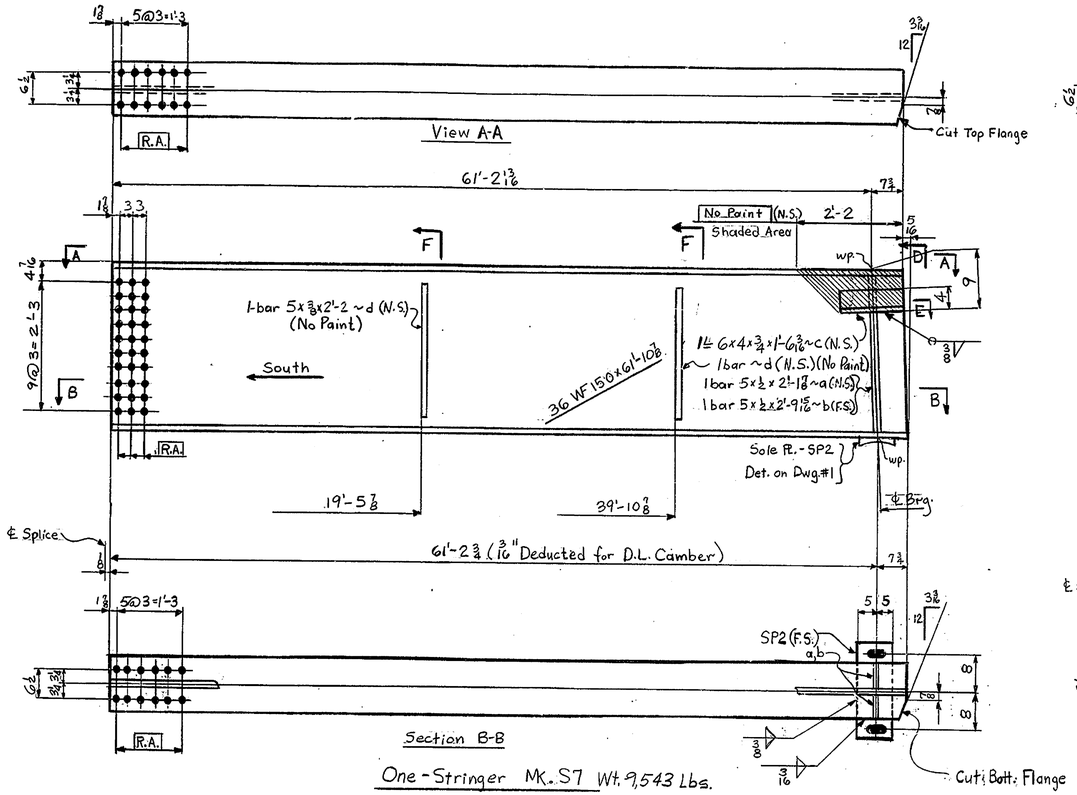

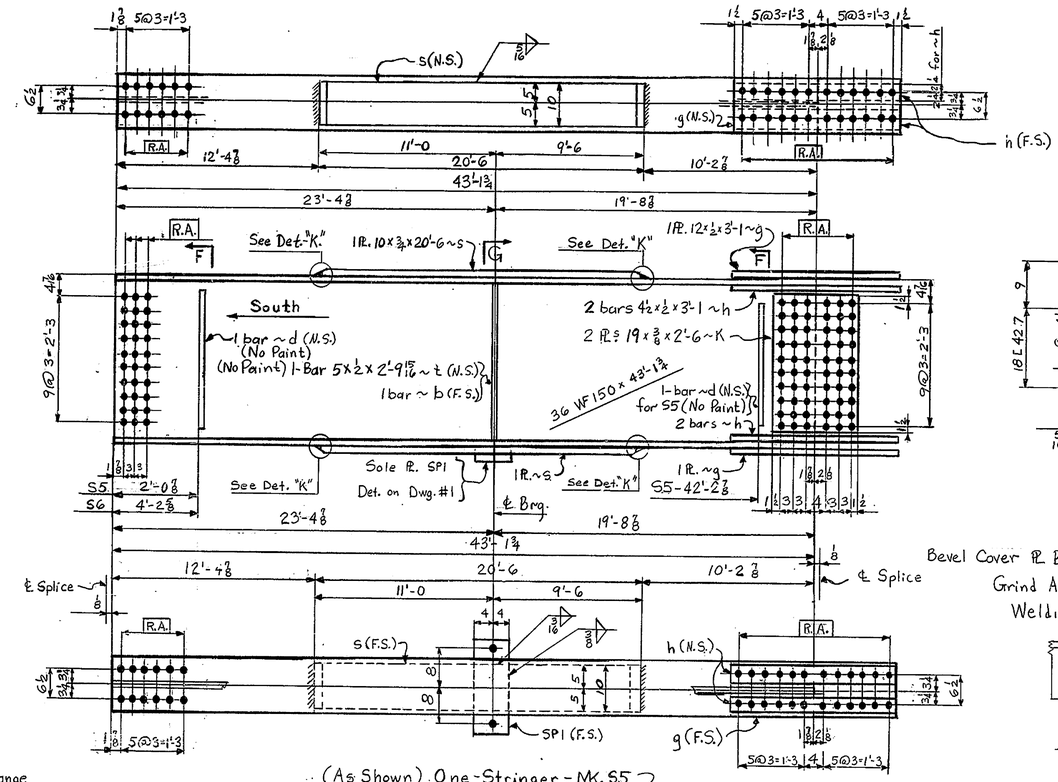

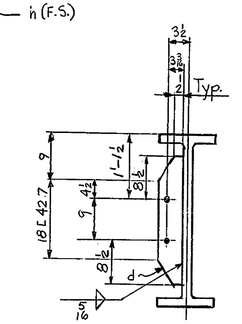

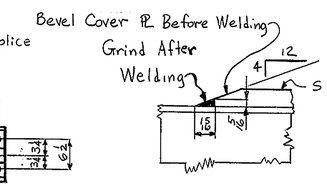

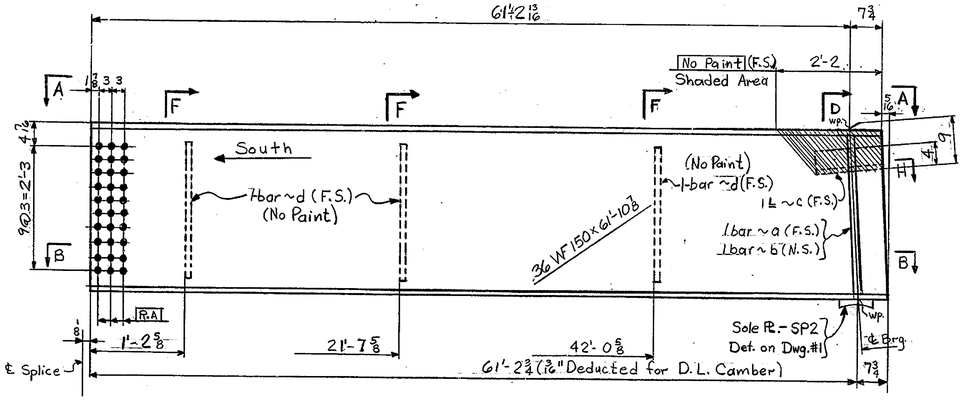

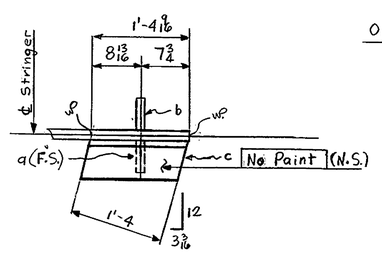

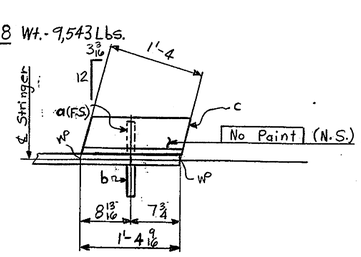

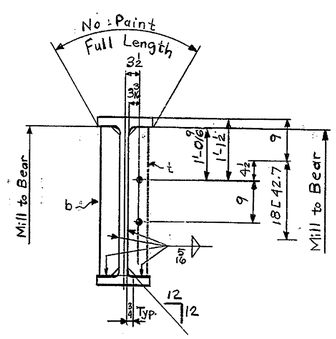

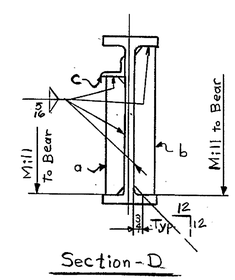

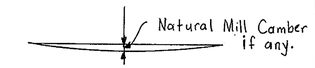

Camber Diagram for S5 & S6

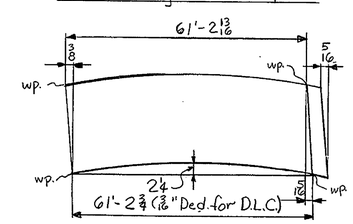

Camber Diagram for S7 & S8

RA NOTE:
HOLES MARKED RA TO BE SUB-PUNCHED 11/16" AND REAMED TO 13/16" WITH CONNECTING PARTS ASSEMBLED AND MATCH MARKED. SEE DWG. E1

SHOP NOTE

HOLES: 11/16" Φ (U.N.)
BOLTS: None
PAINT: One Shop Coat of Primer.-Del. Spec. Paint No. A (U.N.) No Paint Within 3" of Holes Mk. RA.

APPROVED
DELAWARE STATE HIGHWAY DEPT.
DATE Feb. 17, 1970

NO.	REVISION	DATE

HIGH WELDING COMPANY
1911 OLD PHILADELPHIA PIKE
LANCASTER, PA.

Stringers
I-495 Maintenance Road Over Stoney Creek
I-495 Maintenance Road Sta. 602+07.41
State of Delaware
State Highway Department
New Castle County, Delaware

STATE CONT. OR REF. NO. 68-07-005 CONTRACTOR Eastern States Const. Co., Inc.
MADE BY BCM CHECKED BY W.R.C. DATE 1-19-70
CONTRACT NO. 6995 DRAWING NO. 3 of 4

Lancaster Print-O-Stat 127

DO NOT CONSIDER ANY OF THE DATA ON THE EXISTING STRUCTURE SUPPLIED IN THESE DRAWINGS AS POSITIVE REPRESENTATIONS OF ANY OF THE CONDITIONS THAT MAY BE ENCOUNTERED IN THE FIELD FOR T201107402.

P.R.A. Req. No.	State	Fed. Aid Proj. No.
2	Del.	I-495 3(17)17

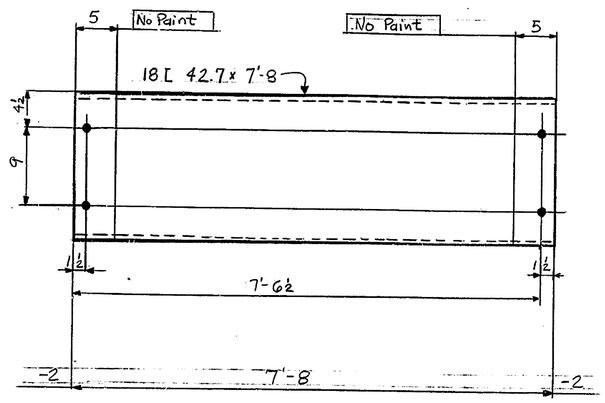

8-Diaphragms-MK. D1 Wt. Ea.-327.4 Lbs.

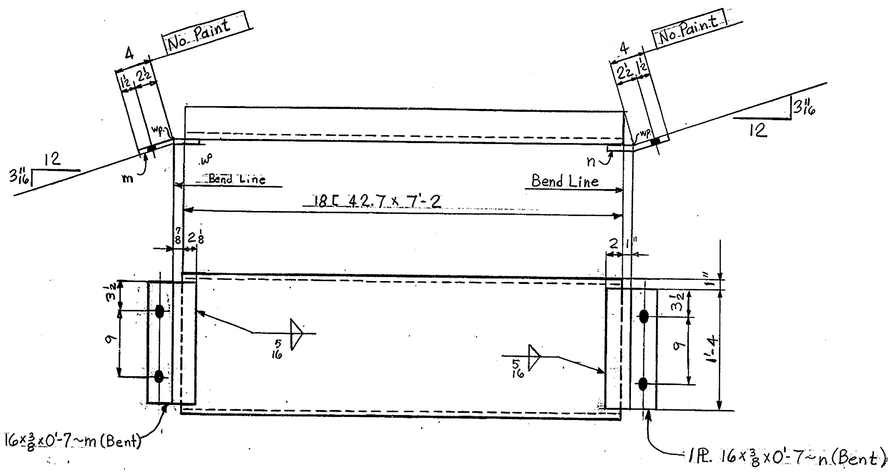

2- Diaphragms-MK D2 Wt. Ea.-329.8 Lbs.

SHOP NOTE

HOLES: 11/16" Ø

BOLTS: None

PAINT: One Shop Coat of Primer - Del. Spec. Paint No. A.(U.N.)

APPROVED
DELAWARE STATE HIGHWAY DEPT.
DATE Feb. 11, 1970

NO.	REVISION	DATE

HIGH WELDING COMPANY
1911 OLD PHILADELPHIA PIKE
LANCASTER, PA.

Diaghragms
I-495 Maintenance Road Over Stoney Creek
I-495 Maintenance Road Sta. 602+07.41
State of Delaware
State Highway Department
New Castle County, Delaware

STATE CONT. OR REF. NO. 68-07-005 CONTRACTOR Eastern States Const. Co., Inc.
MADE BY BCM CHECKED BY W.R.C. DATE 1-19-70
CONTRACT NO. 6995 DRAWING NO. 4 of 4

Lancaster Print-O-Stat 127