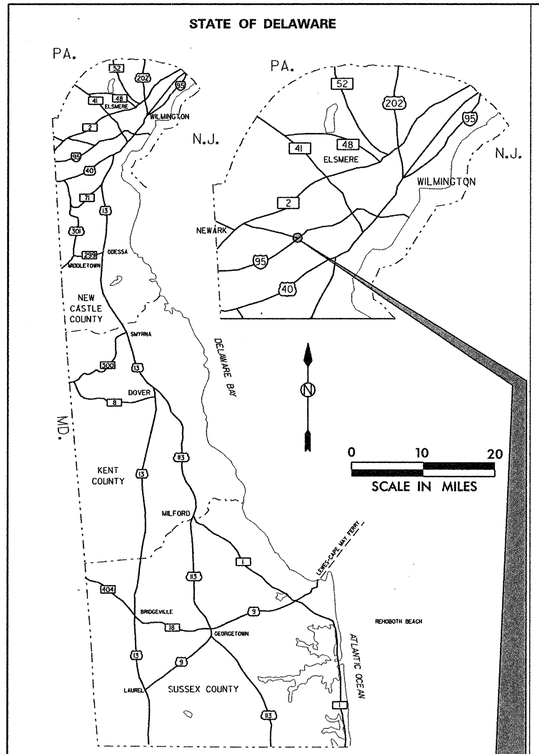

GENERAL LOCATION OF CONTRACT

THE STATE OF DELAWARE
DEPARTMENT OF TRANSPORTATION

U.S. CUSTOMARY UNITS

SPECIFICATION AND CONSTRUCTION PLANS FOR:

REHABILITATION OF BRIDGE NOS. 1 715, 1 715A & 1 715D ON SR 273 OVER I-95

CONTRACT NUMBER 22-074-09

FEDERAL AID PROJECT NUMBER IM-N056(21)

FROM MILE POST 0.60 **TO MILE POST** 1.70

ROADWAY LENGTH 7,261 FEET=1.38 MILES
STRUCTURE LENGTH 662 FEET=0.13 MILES
TOTAL LENGTH 7,923 FEET=1.51 MILES

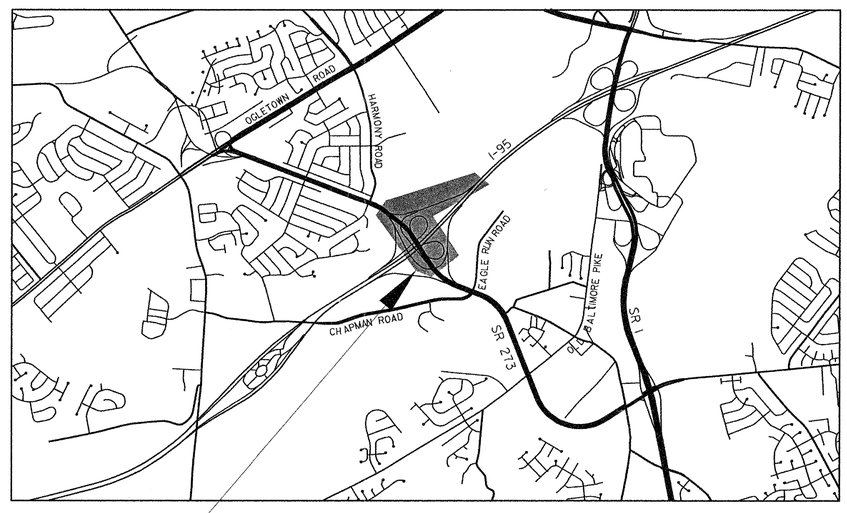

LOCATION MAP
SCALE: 1"=600'

CONTRACT 22-074-09 PROJECT LIMITS

COUNTY	M.R. NO.	F.A.P. NO.	SHEET NUMBER	TOTAL SHEETS
NEW CASTLE	N237	IM-N056(21)	1	152

DESIGN DESIGNATION

FUNCTIONAL CLASS: INTERSTATE/MINOR ARTERIAL
TYPE OF CONSTRUCTION: REHABILITATION
A.A.D.T. CURRENT: 1368 YEAR: ____
A.A.D.T. PROJECTED: ____ YEAR: ____
D.H.V. PROJECTED: ____ YEAR: ____
DESIGN SPEED: ____ M.P.H.
TRUCKS: 10 %
DIRECTION OF DISTRIBUTION: 100 %

INDEX OF SHEETS

SHEET №	TABLE OF CONTENTS
1	TITLE SHEET
2	PLAN SHEET INDEX
3	NOTES AND LEGEND
4	PROJECT NOTES
5-7	TYPICAL SECTIONS
8-9	HORIZONTAL AND VERTICAL CONTROL
10	SUPERELEVATION DIAGRAMS
11-14	CONSTRUCTION PLANS
15-19	PROFILES
20-23	GRADES AND GEOMETRICS
24	CONSTRUCTION DETAILS
25-44	CONSTRUCTION PHASING, MOT AND EROSION CONTROL
45-48	SIGNING, STRIPING AND CONDUIT PLANS
49	STRUCTURE LOCATION PLAN
50	PROJECT NOTES
51-86	BRIDGE 1 715 018
87-121	BRIDGE 1 715A 6048
122-148	BRIDGE 1 715D 6048
149-152	QUANTITY SUMMARY

APPROVED DESIGN EXCEPTIONS DATE: ____

DESIGN PARAMETER	REQUIRED	PROVIDED

PROJECT ADDENDA & REVISIONS

DESCRIPTION	NAME & DATE

PREPARED BY
THE CONSULTING FIRM OF
WHITMAN, REQUARDT & ASSOCIATES, LLP
ENGINEERS

JOSEPH S. MAKAR, PARTNER
RECOMMENDED — DATE 8/25/03

SEAL: JOSEPH STEPHEN MAKAR, REGISTERED No. 7974, DELAWARE PROFESSIONAL ENGINEER

RECOMMENDED

SQUAD MANAGER, CONSTRUCTION — DATE 9/4/03
GROUP ENGINEER, CONSTRUCTION — DATE 9-4-03
ASSISTANT DIRECTOR, TRANSPORTATION SOLUTIONS (CONSTRUCTION) — DATE 9-4-03

DEPARTMENT OF TRANSPORTATION

RECOMMENDED
STORMWATER ENGINEER
DATE Sept. 4, 2003
SEAL: SALVADOR F. PALALAY, REGISTERED No. 11101, DELAWARE PROFESSIONAL ENGINEER

RECOMMENDED
SQUAD MANAGER, TRANSPORTATION SOLUTIONS (PROJECT DEVELOPMENT OR BRIDGE DESIGN)
DATE SEPT 4, 2003
SEAL: GERARD MULDERRIG, REGISTERED NO. 9246, DELAWARE PROFESSIONAL ENGINEER

RECOMMENDED
BRIDGE DESIGN ENGINEER
DATE SEPT 4, 2003
SEAL: JITEN K. SONEJI, REGISTERED NO. 9207, DELAWARE PROFESSIONAL ENGINEER

RECOMMENDED
GROUP ENGINEER, PROJECT DEVELOPMENT
DATE ____
SEAL

RECOMMENDED
ASSISTANT DIRECTOR, TRANSPORTATION SOLUTIONS
DATE 9/5/03
SEAL: DENNIS M. O'ROURKE, REGISTERED NO. 8419, DELAWARE PROFESSIONAL ENGINEER

APPROVED
CHIEF ENGINEER
DATE 9/10/03
SEAL: CAROLANN G. WICKS, REGISTERED NO. 7233, DELAWARE PROFESSIONAL ENGINEER

APRIL 2003

M:\3\30314\TIOIS273.PLF

LEGEND

- CONSTRUCTION PLAN SHEET NUMBER
- ROADWAY PROFILE SHEET NUMBER
- GRADES AND GEOMETRICS PLAN SHEET NUMBER
- CONSTRUCTION PHASING, MOT AND EROSION CONTROL
- SIGNING, STRIPING, AND CONDUIT PLAN SHEET NUMBER

PLAN SHEET INDEX

SCALE

0 200 400 600

FEET

N

CONTRACT	COUNTY	F.A.P. NO.	SHEET NO.	TOTAL SHTS.
22-074-09	NEW CASTLE	SEE TITLE SHEET	2	152

REHABILITATION OF BRIDGE NOS. A 1 715, 1 715A, 1 715D ON SR 273 OVER I-95

REVISIONS

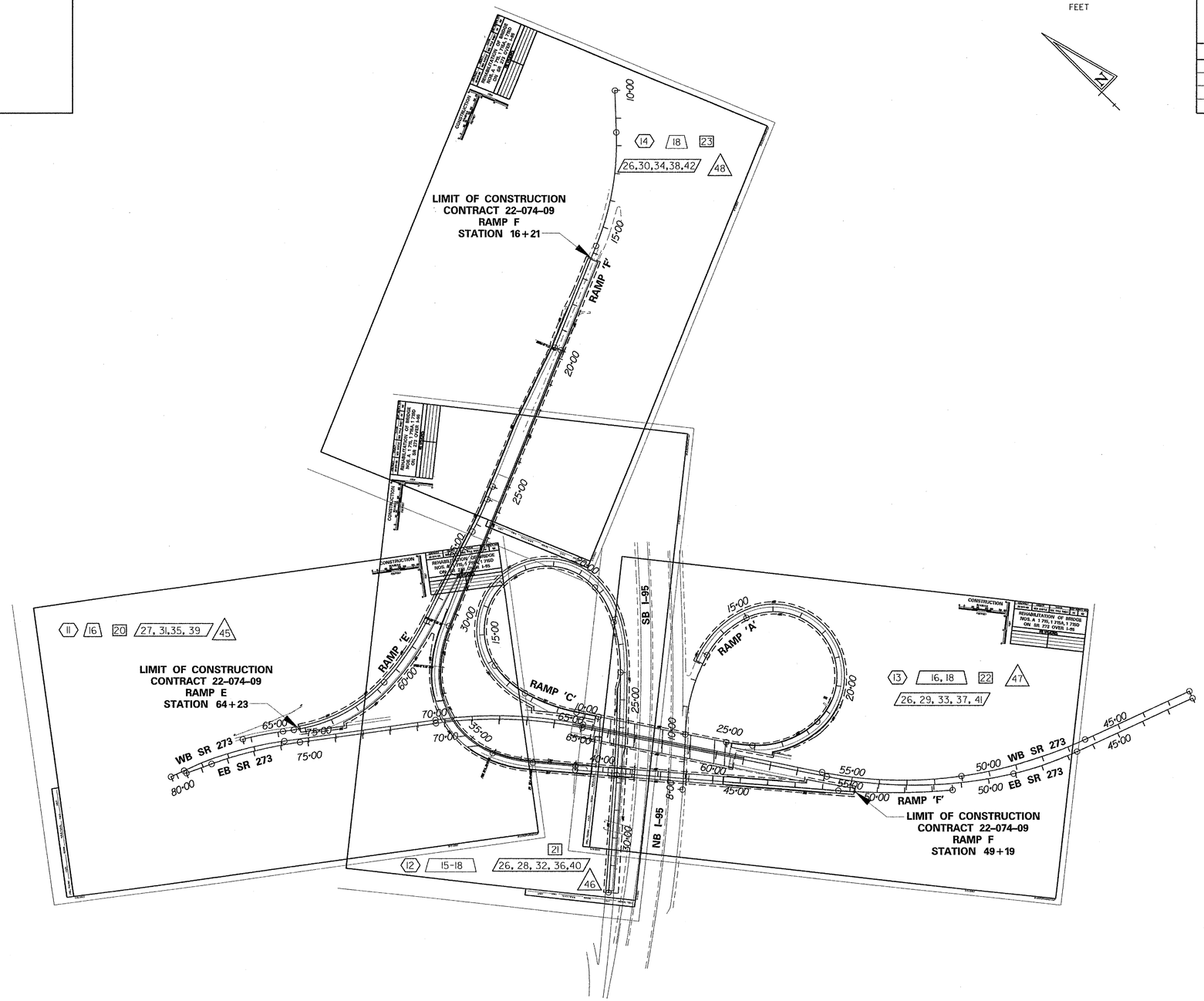

PREL. TRACING _____ J.A.D. _____ DESIGN _____ R.R.W./J.A.C. _____ CHKD. _____ J.M.P. _____

9/5/2003

9/5/2003

M:\31303\1\s10ls273.pif

CONTRACT	COUNTY	F.A.P. NO.	SHEET NO.	TOTAL SHTS.
22-074-09	NEW CASTLE	SEE TITLE SHEET	3	152

REHABILITATION OF BRIDGE NOS. A 1 715, 1 715A, 1 715D ON SR 273 OVER I-95

REVISIONS

2 ADDED PATCHING SHADE	
11/25/03 JMP/GM	

GENERAL NOTES

1. THIS PROJECT IS TO BE CONSTRUCTED IN ACCORDANCE WITH DELAWARE DEPARTMENT OF TRANSPORTATION STANDARD SPECIFICATIONS FOR ROAD AND BRIDGE CONSTRUCTION, DATED AUGUST 2001 AND THE DELAWARE DEPARTMENT OF TRANSPORTATION "STANDARD CONSTRUCTION DETAILS", DATED 2001, INCLUDING ALL REVISIONS UP TO THE DATE OF ADVERTISEMENT.
2. THE CONTRACTOR SHALL GIVE TWO (2) WEEKS NOTICE TO THE PROPERTY OWNER WHEN ANY FIXTURE, SHRUB OR OTHER OBJECT MUST BE REMOVED FROM THE RIGHT OF WAY OR EASEMENT AREA. IF THE OWNER HAS NOT ATTEMPTED TO SALVAGE THIS PROPERTY, THE CONTRACTOR SHALL REMOVE IT WITHOUT OBLIGATION. COMPENSATION SHALL BE INCIDENTAL TO THE CONTRACT.
3. THE ENDS OF ALL CURBS SHALL BE DEPRESSED AT A RATIO OF TWELVE TO ONE (12:1) UNLESS OTHERWISE DIRECTED BY THE ENGINEER.
4. THE CONTRACTOR SHALL PROVIDE AND INSTALL PVC SLEEVES (4 INCH INSIDE DIAMETER MINIMUM, 6 INCH INSIDE DIAMETER MAXIMUM) IN PROPOSED CONCRETE SIDEWALKS, ISLANDS, AND MEDIANS FOR FUTURE TRAFFIC SIGN POSTS AS DIRECTED BY THE ENGINEER. THE LOWER END OF THE SLEEVE SHALL SIT ON THE TOP OF THE SUBBASE. THE COST SHALL BE INCIDENTAL TO THE CONTRACT.
5. SITE REVIEWER. AN EROSION CONTROL SITE REVIEWER SHALL BE A PERSON FROM THE CONTRACTOR'S STAFF ASSIGNED TO EROSION AND SEDIMENT CONTROL IMPLEMENTATION AND MAINTENANCE AND SHALL BE REQUIRED ON SPECIFIC PROJECTS. THE NAME AND DNREC CERTIFICATION NUMBER OF EACH SITE REVIEWER SO REQUIRED SHALL BE SUBMITTED TO THE DEPARTMENT AT THE TIME OF BID. THE SITE REVIEWER REQUIREMENTS IN EFFECT ON THIS PROJECT SHALL BE AS MARKED WITH AN (X) BELOW:

EROSION POTENTIAL FOR THIS PROJECT	SITE REVIEWER REQUIREMENT
( ) INSIGNIFICANT	NONE
(X) MINOR	CONTRACTOR CERTIFICATION COURSE TRAINING ONLY. SEE 1. BELOW
( ) MEDIUM	AT THE TIME OF AWARD OF THE CONTRACT, EITHER THE SUPERINTENDENT OR A SEPARATE INDIVIDUAL FROM THE CONTRACTOR'S STAFF SHALL BE A CERTIFIED CONSTRUCTION REVIEWER (CCR), SEE 2 BELOW.
( ) MAJOR	SUPERINTENDENT AND INDIVIDUAL FROM CONTRACTOR'S STAFF SHALL BE CCR. SEE 3 BELOW.

1. AS DEFINED IN SECTION 13 OF THE DELAWARE SEDIMENT AND STORMWATER REGULATIONS.
2. AS DEFINED IN SECTION 12 OF THE DELAWARE SEDIMENT AND STORMWATER REGULATIONS.
3. ONE INDIVIDUAL FROM THE CONTRACTOR'S STAFF MUST BE A CCR AT THE TIME OF AWARD OF THE CONTRACT. THE SUPERINTENDENT MUST BECOME A CCR WITHIN ONE YEAR AFTER THE AWARD OF CONTRACT.

6. STAGING AREAS:
PROPER EROSION AND SEDIMENT CONTROL MEASURES AS DETERMINED BY THE ENGINEER SHALL BE INSTALLED IN ALL STAGING AREAS.
ALL AREAS USED BY THE CONTRACTOR FOR STAGING OPERATIONS SHALL BE FULLY RESTORED BY THE CONTRACTOR UPON COMPLETION OF THE PROJECT.
IF THE STAGING AREA IS PAVED, IT SHALL BE RESTORED TO ITS ORIGINAL CONDITION.
IF THE STAGING AREA IS UNPAVED, IT SHALL BE RE-GRADED, TOPSOILED, SEEDED AND MULCHED IN ACCORDANCE WITH DELAWARE STANDARD SPECIFICATIONS 732, 734 AND 735, FOR TOPSOIL, SEED AND MULCH RESPECTIVELY, TO THE SATISFACTION OF THE ENGINEER.
THE SEED SHALL ADHERE TO THE SPECIFICATIONS OF SECTION 734 FOR PERMANENT GRASS SEEDING - DRY GROUND.
ALL COSTS ASSOCIATED WITH RESTORATION OF THE STAGING AREA SHALL BE AT THE CONTRACTOR'S EXPENSE.
IF THE ENGINEER DETERMINES THAT A SATISFACTORY STAND OF GRASS DOES NOT EXIST AT THE TIME OF FINAL INSPECTION, ALL COSTS ASSOCIATED WITH RE-ESTABLISHING A SATISFACTORY STAND OF GRASS SHALL BE AT THE CONTRACTORS'S EXPENSE.

CONSTRUCTION PHASING

- STONE CHECK DAM (SCD)
- INLET SEDIMENT CONTROL
- PERIMETER DIKE SWALE
- TEMPORARY SWALE
- EARTH DIKE (ED)
- SAND BAG DIVERSION (S-B)
- EROSION CONTROL FABRIC
- SEDIMENT TRAP (ST)
- TRAFFIC CONTROL PLASTIC DRUMS
- CONSTRUCTION WARNING SIGNS (ROAD WORK 1500 FT)
- EXISTING CONTOURS
- PROPOSED CONTOURS
- CRASH CUSHION (SAND BARRELS)
- PORTABLE SEDIMENT TANK (PST)
- SILT FENCE (SF)
- REINFORCED SILT FENCE (RSF)
- SILT FENCE IDENTIFIER (SF)
- STILLING WELL (SW)
- SUMP PIT (SP)
- DEWATERING BASIN (DWB)
- SEDIMENT TRAP PIPE OUTLET (ST)
- TEMPORARY SLOPE DRAIN (TSD)
- SAND BAG DIKE (SBD)
- TYPE 3 BARRICADE
- TRAFFIC FLOW ARROW (PHASE)
- PORTABLE CONCRETE SAFETY BARRIER
- STABILIZED CONSTRUCTION ENTRANCE

CONSTRUCTION

- 2" SUPERPAVE, TYPE C; 3" SUPERPAVE, TYPE B; 9" SUPERPAVE, BCBC; 12" GABC, TYPE B
- 2" SUPERPAVE, TYPE C; 2.25" SUPERPAVE, TYPE B; 6" SUPERPAVE, BCBC; 10" GABC, TYPE B
- 2" SUPERPAVE, TYPE C; 10" SUPERPAVE, BCBC; 6" GABC, TYPE B
- 2" SUPERPAVE, TYPE C; 4" GABC, TYPE B
- BUTT JOINT
- PAVEMENT PATCH
- RIPRAP
- DRAINAGE INLET
- DRAINAGE INLET IDENTIFIER (DI)
- MANHOLE
- MANHOLE IDENTIFIER (MH)
- DRAINAGE PIPE & FLOW ARROW
- PIPE IDENTIFIER (P)
- FLARED END SECTION
- FLARED END SECTION IDENTIFIER (FE)
- JUNCTION BOX
- JUNCTION BOX IDENTIFIER (JB)
- CONVERT TO JB IDENTIFIER (CJB)
- UNDERDRAIN
- UNDERDRAIN IDENTIFIER (UD)
- UNDERDRAIN OUTLET STRUCTURE
- DITCH
- BFS — BIOFILTRATION SWALE
- INTEGRAL P.C.C. CURB AND GUTTER TYPE 1
- P.C.C. CURB TYPE 1 &/OR 3
- P.C.C. CURB TYPE 2
- INTEGRAL P.C.C. CURB AND GUTTER TYPE 2
- INTEGRAL P.C.C. CURB AND GUTTER TYPE 3
- CURB (BY OTHERS)
- CURB IDENTIFIER (C)
- CURB OPENING (C/O)
- CURB ACCESS RAMP IDENTIFIER WITH TYPE NUMBER (CR)
- CONCRETE SAFETY BARRIER
- BARRIER IDENTIFIER (B)
- STEEL BEAM GUARDRAIL
- GUARDRAIL END SECTION
- GUARDRAIL IDENTIFIER (GR)
- METAL FENCE
- WOOD FENCE
- R/W MONUMENT
- R/W MONUMENT IDENTIFIER (M)
- RELOCATE BY CONTRACTOR (RL/C)
- ADJUST BY CONTRACTOR (A/C)
- REMOVE BY CONTRACTOR (RM/C)
- RELOCATE BY OTHERS (RL/O)
- ADJUST BY OTHERS (A/O)
- REMOVE BY OTHERS (RM/O)

UTILITIES

EXISTING

- NCSS — NEW CASTLE SANITARY SEWER
- VER — VERIZON DELAWARE TELEPHONE (UNDERGROUND)
- CPD (GAS) — CONECTIV POWER DELIVERY (GAS)
- CPD (E) — CONECTIV POWER DELIVERY (ELECTRIC)
- FO-ADESTA — DELDOT FIBER OPTIC CABLE (MAINTAINED BY ADESTA)
- ELEC — DELDOT ELECTRIC (LIGHTING)

SIGNING, STRIPING AND CONDUITS

- PAVE — CONDUITS UNDER PAVEMENT
- SOD — CONDUITS IN TRENCH
- CONDUIT JUNCTION WELL
- PAVEMENT MARKINGS
- LANE STRIPING
- TRAFFIC SIGN AND POST (BY STATE FORCES)

RIGHT OF WAY

- RW — PROPOSED RIGHT-OF-WAY
- RW&DA — PROPOSED RIGHT OF WAY AND DENIAL OF ACCESS
- DA — PROPOSED DENIAL OF ACCESS
- PE — PROPOSED PERMANENT EASEMENT
- UE — PROPOSED UTILITY EASEMENT
- TCE — PROPOSED TEMPORARY CONSTRUCTION EASEMENT
- 100 — HISTORIC R/W CENTERLINE OR BASELINE
- 100 — PROPOSED RIGHT OF WAY BASELINE
- EXISTING RIGHT-OF-WAY LINE
- PL — EXISTING PROPERTY LINE

PROPOSED LANDSCAPING

- CONIFEROUS TREE
- SHRUB
- DECIDUOUS TREE

MISCELLANEOUS SYMBOLS

- LOC — LIMIT OF CONSTRUCTION
- NORTH ARROW
- CZ — CLEAR ZONE
- 100 — CONSTRUCTION BASELINE
- PROPOSED LUMINAIRE

NOTES & LEGEND

SYMBOLS SHOWN ON THIS SHEET DO NOT NECESSARILY APPEAR IN THIS CONTRACT.

EXISTING DETAIL

- SURVEY TRAVERSE POINT
- POINT OF INTERSECTION - TANGENTS
- POINT OF TANGENCY & CURVATURE
- T.P. — SURVEY TIE POINT LOCATION
- B.M. — BENCH MARK LOCATION
- A-6(4) A-2(4) — SOIL BORING LOG - PROFILE VIEW
- SOIL BORING LOCATION - PLAN VIEW
- GnB2 GnB3 — SOIL TYPE AND BOUNDARY LINE
- MARSH OR WET AREAS; LAWN
- SMALL BUSH OR ORNAMENTAL SHRUB
- CONIFEROUS TREE - 6" AND LARGER
- DECIDUOUS TREE - 6" AND LARGER
- HEDGEROW OR THICKET
- WOODS LINE
- TREE STUMP
- UTILITY TEST HOLE LOCATION
- GAS MANHOLE
- SANITARY SEWER MANHOLE
- TELEPHONE MANHOLE
- ELECTRIC MANHOLE
- F.H. — FIRE HYDRANT
- TELEPHONE BOOTH
- UTILITY POLE GUY WIRE ANCHOR
- G.V. — GAS VALVE
- W.V. — WATER VALVE
- WOOD POLE
- W.M. — WATER METER
- VENT — SANITARY SEWER VENT
- S.V. — SANITARY SEWER SURFACE FIXTURE
- TELEPHONE TEST POINT
- G.M. — GAS METER
- POLE MOUNTED LUMINAIRE
- LAMP — RESIDENTIAL STREET LAMP AND POST
- F.P. — FLAG POLE
- (TYPE LABEL) — CURB
- (TYPE LABEL) — INTEGRAL CURB & GUTTER
- FLEXIBLE PAVEMENT EDGE
- RIGID PAVEMENT EDGE
- STEEL BEAM GUARD RAIL
- WOOD POST AND CABLE GUARD RAIL
- C.B. — STORM DRAINAGE SURFACE INLET
- STORM DRAINAGE MANHOLE
- J.B. — STORM DRAINAGE JUNCTION BOX
- (SIZE/TYPE LABEL) — EXISTING DRAINAGE PIPE AND FLOW ARROW
- DRAINAGE PIPE HEADWALL
- EROSION CONTROL STONE
- STREAM, DITCH OR POND BOUNDARY
- STREAM FLOW DIRECTION ARROW
- TRAFFIC CONTROL SIGN POST
- TRAFFIC SIGNAL SUPPORT BASE
- TRAFFIC SIGNAL CONTROL BOX AND/OR BASE
- J.W. — TRAFFIC SIGNAL CONDUIT JUNCTION WELL
- ELECTRIC TRANSFORMER
- CABLE TELEVISION DISTRIBUTION BOX
- C.M. — CONCRETE MONUMENT OR PROPERTY MARKER
- P.L. — PROPERTY LINE MARKER
- STONE PILLAR - CONC. BLOCK OR POURED
- STRAND OR WOVEN WIRE FENCE
- WOODEN FENCE
- LUMINAIRE SUPPORT POLE AND/OR BASE
- G.P. — SERVICE STATION FUEL PUMP
- WELL — WELL HEAD
- S.D.F. — SEPTIC DRAIN FIELD
- STONE WALL
- BLOCK WALL
- RAILROAD TRACKS
- WL — WETLANDS

J.M.P. CHKD. R.R.W./J.A.G. DESIGN J.A.D. PREL. TRACING

CONTRACT	COUNTY	F.A.P. NO.	SHEET NO.	TOTAL SHTS.
22-074-09	NEW CASTLE	SEE TITLE SHEET	4	152

REHABILITATION OF BRIDGE NOS. A 1 715, 1 715A, 1 715D ON SR 273 OVER I-95

REVISIONS

2 ADDED FENCE/NOTE 7;	
UPDATED EARTHWORK SUMMARY	
11/25/03 JMP/GM	

PROJECT NOTES

1. IN AREAS WHERE PROPOSED CURB MEETS EXISTING CURB, PARAPET OR ADJUSTED DRAINAGE INLET HOOD, THE PROPOSED CURB SHALL BE TRANSITIONED HORIZONTALLY AND/ OR VERTICALLY IN 10 (TEN) LINEAR FEET UNLESS OTHERWISE DIRECTED BY THE ENGINEER. COST FOR TRANSITION SHALL BE INCIDENTAL TO THE CURB ITEM.

2. THE CONTRACTOR WILL BE REQUIRED TO COORDINATE HIS WORK WITH ANY CONSTRUCTION ACTIVITY BY UTILITY COMPANIES, OR ADJACENT CONSTRUCTION CONTRACTS. PROPOSED UTILITY RELOCATIONS ARE SHOWN ON THE PLANS - REFER TO UTILITY STATEMENT FOR DETAILED SCOPE AND TIMING OF UTILITY WORK.

3. IT IS ANTICIPATED THAT ALL PROPOSED WORK ASSOCIATED WITH THIS CONTRACT WILL OCCUR ON DELDOT PROPERTY AND WITHIN THE LIMIT OF CONSTRUCTION AS SHOWN ON THE PLANS. THEREFORE, RIGHT-OF-WAY LINES FOR THROUGH HIGHWAYS ARE NOT SHOWN ON PLANS. IT IS THE CONTRACTOR'S RESPONSIBILITY TO VERIFY THE LIMITS OF EXISTING STATE RIGHT-OF-WAY, IF NEEDED, IF ENCROACHMENT ON PRIVATE PROPERTY IS ANTICIPATED DUE TO CONSTRUCTION STAGING OR SPECIAL ACCESS NEEDS, IT SHALL BE THE CONTRACTOR'S RESPONSIBILITY TO OBTAIN ALL REQUIRED EASEMENTS.

4. THE FOLLOWING ITEMS SHALL BE REMOVED UNDER ITEM 211000- REMOVAL OF STRUCTURES AND OBSTRUCTIONS:
   1. CONCRETE SUPPORT FOUNDATIONS FOR TRAFFIC POLES, FENCES, AND MISCELLANEOUS SMALL STRUCTURES.
   2. DRAINAGE STRUCTURES.

   CAVITIES FORMED BY REMOVED CONCRETE FOUNDATIONS AND OTHER STRUCTURES UNDER ITEM 211000 SHALL BE BACKFILLED AS FOLLOWS:
   - MATERIAL MEETING THE REQUIREMENTS OF BORROW TYPE F OUTSIDE THE ROADWAY.
   - MATERIAL MEETING THE REQUIREMENTS OF BORROW TYPE C WITHIN THE ROADWAY.

5. THE STORAGE OF CONSTRUCTION EQUIPMENT AND MATERIAL WILL NOT BE ALLOWED IMMEDIATELY ADJACENT TO RESIDENTIAL AND COMMERCIAL PROPERTIES. LOCATION OF STORAGE AND LAY DOWN AREAS IS THE CONTRACTOR'S RESPONSIBILITY, SUBJECT THE APPROVAL OF THE ENGINEER.

6. ANY DAMAGE TO ITEMS NOTED TO BE RELOCATED OR RESET BY THE CONTRACTOR SHALL BE REPAIRED AND/OR REPLACED IN KIND AT THE CONTRACTOR'S EXPENSE.

7. EXISTING TOPSOIL, HOT-MIX, CONCRETE, AND OTHER UNSUITABLE MATERIALS FROM ROADWAY EXCAVATION SHALL NOT BE USED AS FILL AND SHALL BE DISPOSED OF OUTSIDE THE PROJECT LIMITS. EXISTING SUITABLE TOPSOIL SHALL BE USED ON PROPOSED SLOPES AS DIRECTED ELSEWHERE ON THE PLANS OR IN THE SPECIFICATIONS.

8. MOWING WITHIN THE LOC SHALL BE DONE AT THE DISCRETION OF THE ENGINEER BUT NO MORE THAN THREE TIMES A YEAR AND CUT NO SHORTER THAN SIX INCHES. COST OF MOWING SHALL BE INCIDENTAL TO THE VARIOUS SEEDING ITEMS.

9. UNLESS OTHERWISE SHOWN ON THE PLANS OR DIRECTED BY THE ENGINEER, ALL PAVED AREAS TO BE RECONSTRUCTED SHALL BE SAWCUT FULL DEPTH AT THE POINT WHERE THE NEW PAVEMENT IS TO TIE INTO EXISTING PAVEMENT.

10. ALL WATERING OF SEEDED, PLANTED OR SODDED AREA WILL NOT BE PAID FOR SEPARATELY. BUT WILL BE CONSIDERED INCIDENTAL TO THE SEEDING, PLANTING, OR SODDING ITEM.

11. THE ENGINEER MAY REQUIRE THE CONTRACTOR TO EXCAVATE TEST PIT'S AT POINTS OF POSSIBLE UTILITY CONFLICTS WITH PROPOSED CONSTRUCTION TO DETERMINE IF A CONFLICT EXISTS. ANY CONFLICTS SHALL BE COORDINATED BY THE CONTRACTOR WITH THE ENGINEER AND THE UTILITY COMPANY INVOLVED. THE ENGINEER SHALL ULTIMATELY DETERMINE THE SOLUTION TO THE UTILITY CONFLICT. TEST HOLES SHALL BE MEASURED AND PAID FOR IN ACCORDANCE WITH ITEM 208000. BUT ONLY THE ACTUAL DEPTH EXCAVATED.

12. ALL DRAINAGE INLETS INDICATED ON THE PLANS TO BE ADJUSTED AND REPAIRED SHALL BE DONE SO TO CONFORM TO THE PROPOSED HORIZONTAL AND VERTICAL ROADWAY CURBLINE GEOMETRY. THE TOP UNIT OF THE ADJUSTED DRAINAGE INLET SHALL BE CAST-IN-PLACE AND SHALL CONFORM TO THE STANDARD CONSTRUCTION DETAILS FOR THE TYPE OF CURB BEING CONSTRUCTED. NO COVER SLAB IS NECESSARY UNLESS DIRECTED BY THE ENGINEER. INLET BOX LOCATION SHALL BE DONE BY CORBELING THE FRONT AND REAR WALL OF THE BOX IN A MANNER ACCEPTABLE TO THE ENGINEER. PAYMENT FOR ALL WORK ASSOCIATED WITH ADJUSTING DRAINAGE INLETS SHALL BE UNDER ITEM 710001 - ADJUSTING AND REPAIRING EXISTING DRAINAGE INLET.

13. THERE ARE NO PERMITS OR CONSTRUCTION RESTRICTIONS ASSOCIATED WITH THIS PROJECT. AS SUCH, NO ENVIRONMENTAL COMPLIANCE SHEET WAS PREPARED.

14. ALL HOT-MIX SAW CUTTING SHALL BE FULL DEPTH, UNLESS OTHERWISE NOTED ON THE PLANS. OR AS DIRECTED BY THE ENGINEER.

15. CROSS SECTIONS USED IN THE PREPARATION OF THIS CONTRACT ARE AVAILABLE FROM DELDOT.

16. THE DEPARTMENT AND THE CONTRACTOR SHALL INSPECT ALL EXISTING PIPES AND DRAINAGE INLETS TO BE USED IN THE FINAL DRAINAGE SYSTEM AND AGREE ON THE CONDITION PRIOR TO CONSTRUCTION. DAMAGES TO EXISTING MATERIALS DUE TO CONTRACTOR OPERATIONS SHALL BE REPAIRED IN KIND AT THE CONTRACTOR'S EXPENSE. THE CONTRACTOR SHALL BE REQUIRED TO VIDEO INSPECT EXISTING PIPE RUNS UNDER OR ADJACENT TO THE ROADWAY TO CONFIRM CONDITION. PAYMENT FOR THIS WORK WILL BE UNDER ITEM 612529 - VIDEO INSPECTION.

17. TYPE A BORROW SHALL BE USED TO BACKFILL ALL UNDERCUT AREAS AS DIRECTED BY THE ENGINEER. TYPE B BORROW SHALL BE USED IN UNDERCUT AREAS WITH WET CONDITIONS.

18. INSERT THE FOLLOWING CLAUSE JUST PRIOR TO THE LAST SENTENCE OF SECTION 104.05 E. OF THE STANDARD SPECIFICATIONS - IF, HOWEVER, THE CHARACTER OF THE WORK, OR THE UNIT COSTS, OR THE TIME REQUIRED FOR PERFORMANCE OF THE WORK ARE MATERIALLY CHANGED, AN EQUITABLE ADJUSTMENT MAY BE MADE TO ANY PAY ITEM (WHETHER OR NOT IT IS A MAJOR ITEM) ON SUCH BASIS AS MAY HAVE BEEN AGREED UPON IN ADVANCE OF THE PERFORMANCE OF SUCH WORK, OR IN THE CASE NO SUCH AGREEMENT WAS MADE, THEN AN ALLOWANCE SHALL BE MADE, EITHER FOR OR AGAINST THE CONTRACTOR, IN SUCH AMOUNT AS THE DEPARTMENT MAY DETERMINE TO BE FAIR AND EQUITABLE.

PROJECT NOTES FOR EROSION AND SEDIMENT CONTROL AND STORMWATER MANAGEMENT:

DUST CONTROL. DUST IS TO BE CONTROLLED EXCLUSIVELY THROUGH THE USE OF WATER. COSTS ASSOCIATED WITH THE FURNISHING AND APPLICATION OF WATER FOR DUST CONTROL SHALL BE INCIDENTAL TO ALL THE CONTRACT BID ITEMS.

CONSTRUCTION ENTRANCES. IT IS INTENDED THAT MUD TRACKING BE ELIMINATED ON ALL STATE MAINTAINED ROADWAYS ADJOINING THE PROJECT. EACH POINT OF INGRESS AND EGRESS FROM THE PROJECT SHALL HAVE INSTALLED A STABILIZED CONSTRUCTION ENTRANCE (SCE), ITEM 268000. ALL PAVED SURFACES ADJOINING THE PROJECT LIMITS SHALL BE LEFT IN A BROOM CLEAN CONDITION AT THE END OF EACH WORKDAY. STABILIZED CONSTRUCTION ENTRANCES SHALL BE TOP DRESSED WITH TWO (2) INCHES OF CLEAN DE NO. 3 STONES WHEN THE VOIDS BECOME CLOGGED OR AS DIRECTED BY THE ENGINEER. ADDITIONAL STONES REQUIRED TO MAINTAIN THE ENTRANCES SHALL BE PAID UNDER THE SAME ITEM 268000 - STABILIZED CONSTRUCTION ENTRANCE.

SOIL STOCKPILES. STOCKPILES OF SOIL SHALL BE STABILIZED WITH ITEM 734017 - TEMPORARY GRASS SEEDING, DRY GROUND AND MULCHED WITH ITEM 735006 - MULCHING STRAW.

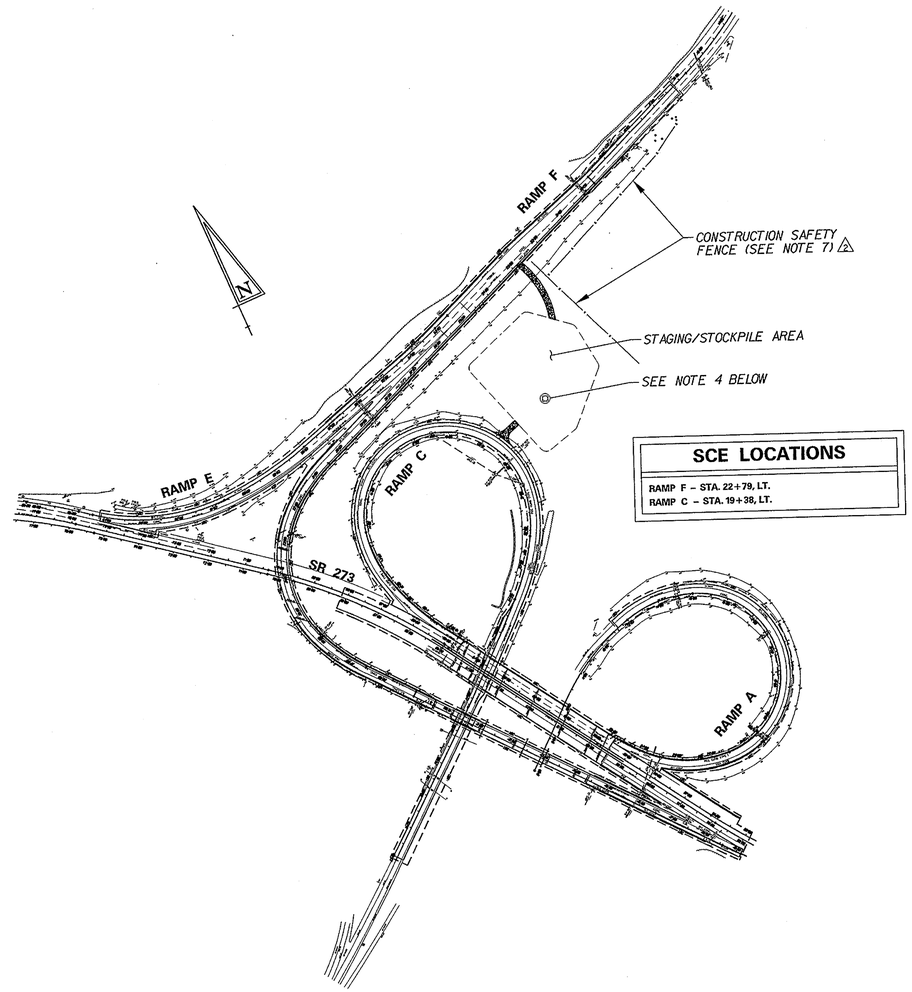

SCE LOCATIONS

RAMP F – STA. 22+79, LT.
RAMP C – STA. 19+38, LT.

STAGING / STOCKPILE PLAN

SCALE: 1" = 200'

NOTES:

1. THE ABOVE PLAN DEPICTS THE GENERAL LOCATION OF THE STAGING/STOCKPILE AREA TO BE USED BY THE CONTRACTOR FOR PROJECT CONSTRUCTION OPERATIONS. IT IS NOT INTENDED TO REPRESENT THE ACTUAL PHYSICAL AREA NEEDED FOR STORAGE AND STAGING, BUT RATHER TO DEPICT THE GENERAL AREA IN RELATION TO THE PROJECT SITE. THE ACTUAL LIMITS OF STAGING/STOCKPILE AREA PROPOSED SHALL BE STAKED BY THE CONTRACTOR AND APPROVED BY THE ENGINEER PRIOR TO THE START OF CONSTRUCTION.

2. CONSTRUCTION ACCESS POINTS SHALL BE OFF RAMP C AND RAMP F AS SHOWN. TEMPORARY SIGNS WARNING MOTORISTS OF THE ACCESS POINTS SHALL BE USED AS INDICATED ON MOT PLANS.

3. STABILIZED CONSTRUCTION ENTRANCE (ITEM 268000) SHALL BE CONSTRUCTED AT THE LOCATIONS INDICATED TO ACCESS THE STAGING/STOCKPILE AREA. A SECTION OF THE EXISTING GUARDRAIL SHALL BE REMOVED ALONG RAMP F FOR ACCESS WITH A CRASH CUSHION PLACED AT LEAD TERMINAL END OF GUARDRAIL. SCE AT RAMP F WILL NEED TO BE BUILT UP WITH NO.3 STONE AS NEEDED TO TRAVERSE THE ADJACENT SLOPE AREA.

4. LOCATION OF STAGING/STOCKPILE AREA SHALL BE ESTABLISHED NO CLOSER THAN 50 FEET FROM HIGH MAST LIGHT STANDARD. THE CONTRACTOR SHALL COORDINATE MATERIAL STORAGE WITHIN THE ENVELOPE OF THE LIGHT STANDARD HINGE MECHANISM SHOULD MAINTENANCE BE REQUIRED BY THE STATE DURING CONSTRUCTION.

5. SILT FENCE (ITEM 251000) SHALL BE PLACED AROUND ENTIRE PERIMETER OF STAGING/STOCKPILE AREA AND SCE ACCESS POINTS.

6. FOLLOWING CONSTRUCTION COMPLETION, ALL AREAS DISTURBED BY STAGING/STOCKPILE AND ACCESS AREAS SHALL BE RESTORED TO ORIGINAL LINE AND GRADE AND VEGETATIVELY RESTABILIZED IN ACCORDANCE WITH THE EROSION AND SEDIMENT CONTROL NOTES ELSEWHERE ON THE PLANS.

2 7. CONSTRUCTION SAFETY FENCE (ITEM 727520) SHALL BE PLACED AS SHOWN ALONG THE TOE OF EXISTING SLOPE ALONG RAMP F FROM STA.15+50 TO STA.22+50, AND FROM STA.22+50, 20' +/- LT. TO A POINT OFFSET FROM STA.22+50 NEAR SB I-95 (TO BE DESIGNATED BY ENGINEER). THE PURPOSE OF THE FENCE IS TO DELINEATE THE CONSTRUCTION WORK AND ACCESS AREAS FROM WETLAND AREAS LOCATED WITHIN THE RAMP INFIELD - THE CONTRACTOR SHALL NOT ACCESS THE AREA WITHIN THE SAFETY FENCE AT ANY TIME DURING CONSTRUCTION.

EARTHWORK SUMMARY

2

EXCAVATION		
FROM CROSS SECTIONS	13,742 C.Y.	~~13,639~~ C.Y.
FROM OTHER SOURCES (SEE NOTE 1)	850 C.Y.	
TOTAL EXCAVATION	14,592 C.Y.	~~14,489~~ C.Y.
EXCAVATION AVAILABLE FOR EMBANKMENT		
TOTAL EXCAVATION	14,592 C.Y.	~~14,489~~ C.Y.
LESS UNSUITABLE MATERIAL (SEE NOTE 2)	4,056 C.Y.	~~3,953~~ C.Y.
SUBTOTAL EXCAVATION AVAILABLE FOR EMBANKMENT	10,536 C.Y.	
LESS DENSIFICATION (20%)	2,107 C.Y.	
TOTAL EXCAVATION AVAILABLE FOR EMBANKMENT	8,429 C.Y.	
EXCAVATION MEETING BORROW TYPE 'A'	0 C.Y.	
EXCAVATION MEETING BORROW TYPE 'F'	8,429 C.Y.	
EMBANKMENT REQUIREMENTS		
BORROW TYPE 'A'	600 C.Y.	
BORROW TYPE 'F'	60 C.Y.	
CUT / FILL BALANCE (+ = EXCESS, - = NEED)		
BORROW TYPE 'A'	-600 C.Y.	
BORROW TYPE 'F'	+8,369 C.Y.	
TOPSOIL BALANCE (+ = EXCESS, - = NEED)		
TOPSOIL REMOVED FROM SITE (IN CUT & FILL)	285 C.Y.	
LESS UNSUITABLE TOPSOIL (20%)	57 C.Y.	
AVAILABLE TOPSOIL FOR REUSE	228 C.Y. =	1,368 S.Y.
TOPSOIL REQUIRED	10,188 S.Y.	
NET TOPSOIL REQUIRED	+8,820 S.Y.	

EARTHWORK NOTES:

1. OTHER SOURCES OF EXCAVATION MAY INCLUDE UNDERCUT EXCAVATION, TOPSOIL STRIPPING, STRUCTURE EXCAVATION, PIPE TRENCH EXCAVATION, ETC.

2. UNSUITABLE MATERIALS INCLUDE TOPSOIL, UNDERCUT SOILS, BITUMINOUS PAVEMENT, ETC.

3. THE VALUES LISTED IN THE EARTHWORK SUMMARY ARE PROVIDED FOR BIDDING PURPOSES ONLY, AND ARE NOT TO BE USED AS A BASIS OF PAYMENT.

ASSOCIATED CONTRACTS

CONTRACT No.	CONTRACT NAME
7060	ROUTE 273 INTERCHANGE IMPROVEMENTS
98-074-04	REHAB. OF BRIDGES NO. I-715B & I-715C ON SR 273 EB RAMP TO I-95 NB

PREL. TRACING ____ J.A.D. ____ DESIGN ____ R.R.W./J.A.G. ____ CHKD. ____ J.M.P. ____

11/24/2003

11/24/2003

M:\313031\ADPN01S273.dgn

CONTRACT	COUNTY	F.A.P. NO.	SHEET NO.	TOTAL SHTS.
22-074-09	NEW CASTLE	SEE TITLE SHEET	5	152

REHABILITATION OF BRIDGE NOS. A 1 715, 1 715A, 1 715D ON SR 273 OVER I-95

REVISIONS

TYPICAL SECTIONS

NOT TO SCALE

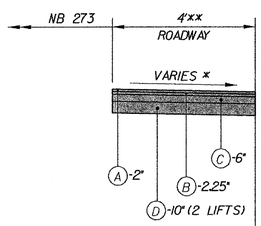

* SLOPE TO MATCH EXISTING NB SR 273 PROFILE

** VARIES FROM 24.18' AT STA. 23+38 TO 4' AT STA. 24+32.95

STA. 23+38 TO STA. 24+83

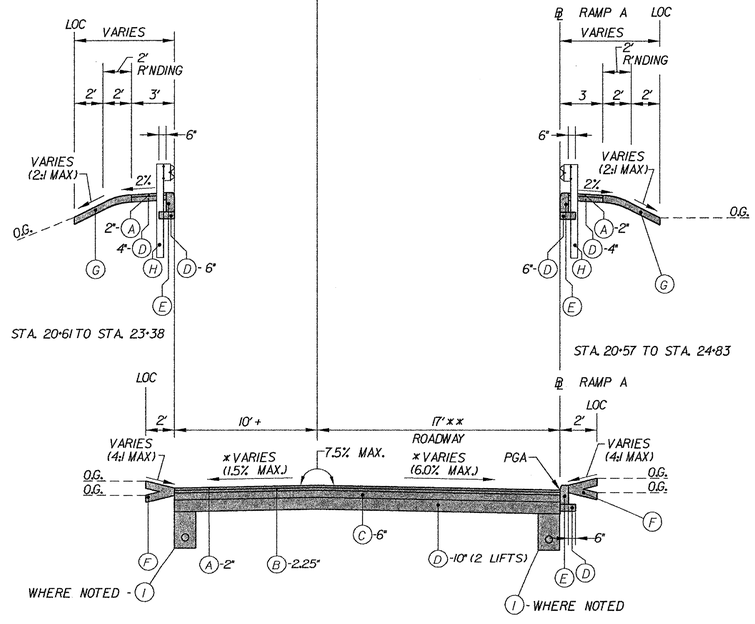

LOOP RAMP A

STA. 12+66 TO STA. 24+83

* SEE SUPERELEVATION TABLES FOR CROSS SLOPES

** VARIES FROM: 16.88' AT STA. 12+66 TO 17' AT STA. 12+86
17' AT STA. 22+84 TO 16.4' AT STA. 23+83
16.4' AT STA. 23+83 TO 14.5' AT STA. 24+08
14.5' AT STA. 24+08 TO 14' AT STA. 24+33
14' AT STA. 24+33 TO 10.1' AT STA. 24+83

+ VARIES FROM: 10.03' AT STA. 12+66 TO 10' AT STA. 12+86
10' AT STA. 22+84 TO 10.5' AT STA. 23+38

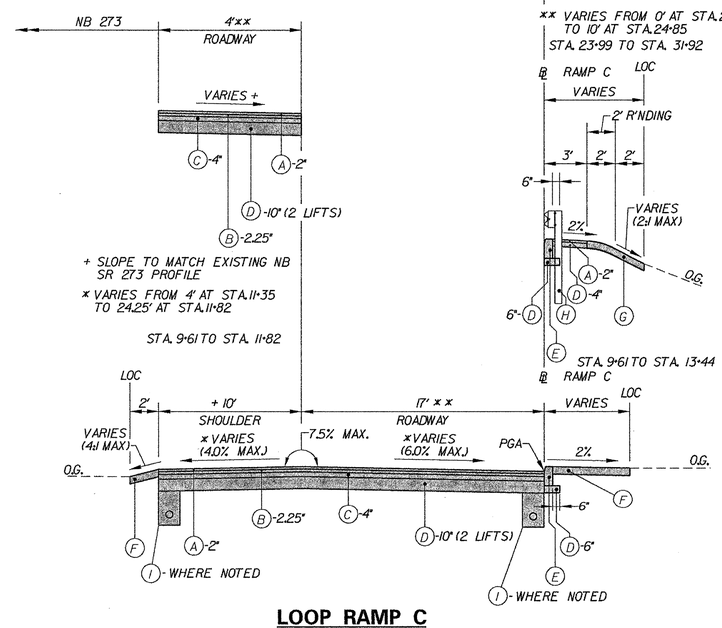

LOOP RAMP C

STA. 9+61 TO STA. 31+92

* SEE SUPERELEVATION TABLES FOR CROSS SLOPES

** VARIES FROM: 19' AT STA. 11+82 TO 17' AT STA. 12+31
- 17' AT STA. 22+16 TO 15.73' AT STA. 22+94
- 15.73' AT STA. 22+94 TO 14' AT STA. 23+99

+ VARIES FROM 10' AT STA. 26+75 TO 4' AT STA. 27+00

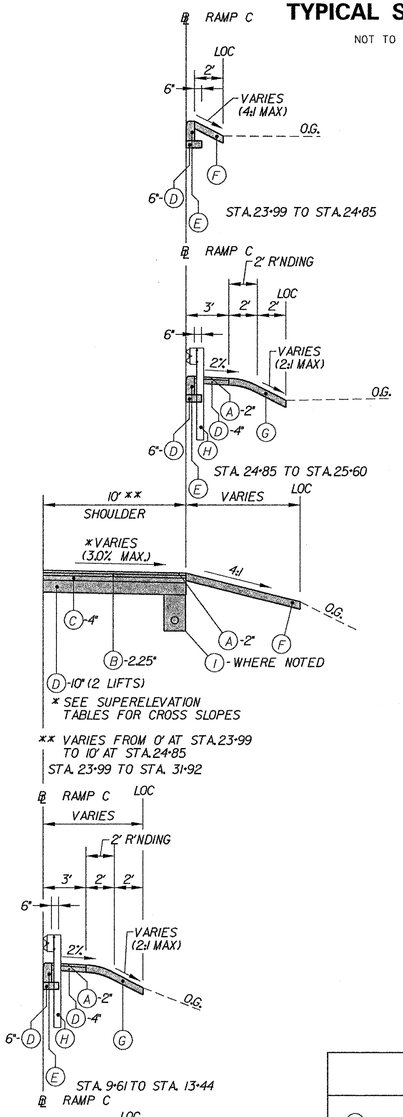

NOTES:

1. FACE OF GUARDRAIL TO BE SET AT FACE OF PROPOSED CURB EXCEPT IN TRANSITION AREAS AND TIE-INS TO BRIDGE PARAPET.
2. MAXIMUM SINGLE LIFT OF MATERIAL:
   TYPE C HOT-MIX: 2"
   TYPE B HOT-MIX: 3"
   BITUMINOUS CONCRETE BASE COURSE: 6"
   GABC: AS NOTED

LEGEND

(A) ITEM 401657 - SUPERPAVE, TYPE C HOT-MIX, 160 GYRATIONS, PG 76-22

(B) ITEM 401660 - SUPERPAVE, TYPE B HOT-MIX, 160 GYRATIONS, PG 76-22

(C) ITEM 401663 - SUPERPAVE BITUMINOUS CONCRETE BASE COURSE, 160 GYRATIONS, PG 64-22

(D) ITEM 302007 - GRADED AGGREGATE BASE COURSE, TYPE B

(E) ITEM 701012 - PORTLAND CEMENT CONCRETE CURB, TYPE 3

(F) ITEM 732002 - TOPSOIL, 6" DEPTH OR
ITEM 733002 - TOPSOILING, 6" DEPTH
ITEM 734013 - PERMANENT GRASS SEEDING, DRY GROUND
ITEM 735534 - SOIL RETENTION BLANKET MULCH, TYPE 4

(G) ITEM 732002 - TOPSOIL, 6" DEPTH OR
ITEM 733002 - TOPSOILING, 6" DEPTH
ITEM 734013 - PERMANENT GRASS SEEDING, DRY GROUND
ITEM 735533 - SOIL RETENTION BLANKET MULCH, TYPE 3

(H) ITEM 720050 - GALVANIZED STEEL BEAM GUARDRAIL, TYPE I

(I) ITEM 715001 - PERFORATED PIPE UNDERDRAINS, 6" OR
ITEM 715002 - PERFORATED PIPE UNDERDRAINS, 8"

PREL. TRACING ____ J.A.D. ____ DESIGN ____ R.R.W./J.A.C. ____ CHKD. ____ J.M.P. ____

TYPICAL SECTIONS

NOT TO SCALE

CONTRACT	COUNTY	F.A.P. NO.	SHEET NO.	TOTAL SHTS.
22-074-09	NEW CASTLE	SEE TITLE SHEET	6	152

REHABILITATION OF BRIDGE NOS. A 1 715, 1 715A, 1 715D ON SR 273 OVER I-95

REVISIONS

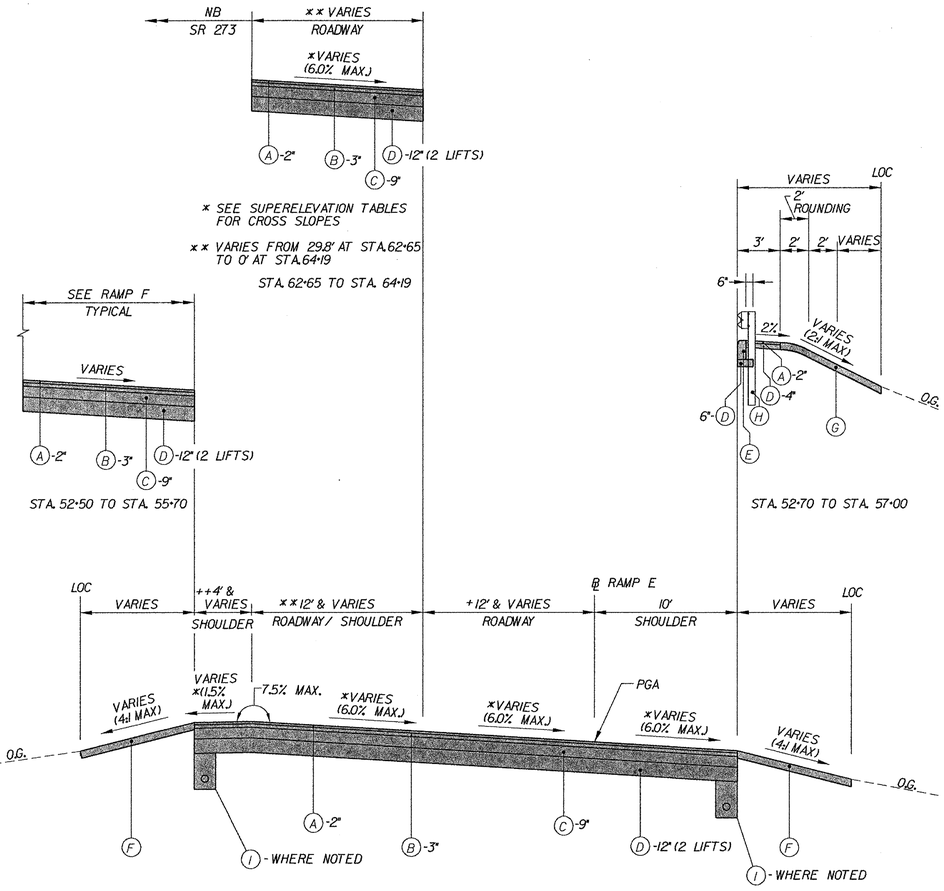

RAMP E

STA. 52+50 TO STA. 64+19

* SEE SUPERELEVATION TABLES FOR CROSS SLOPES

** VARIES FROM: 14' AT STA.52+50 TO 12' AT STA.54+30

\+ VARIES FROM: 14' AT STA.52+50 TO 12' AT STA.54+30
12' AT STA.58+33 TO 0' AT STA.62+25

++ VARIES FROM 4' AT STA.58+33 TO 12' AT STA.62+25

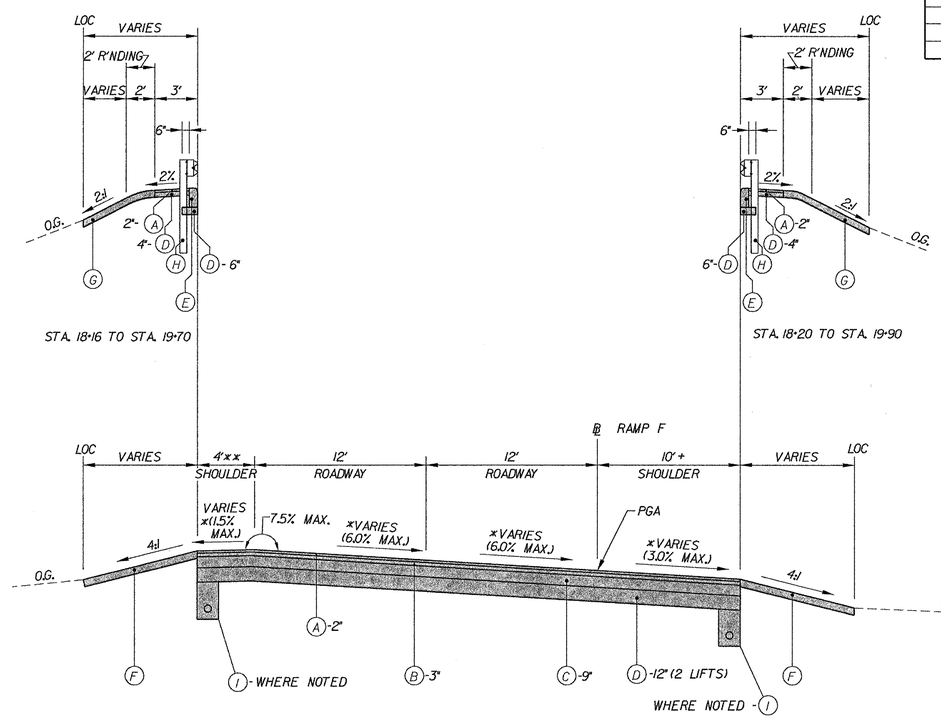

RAMP F

STA. 16+25 TO STA. 19+70

* SEE SUPERELEVATION TABLES FOR CROSS SLOPES

** VARIES FROM 4.66' AT STA.16+25 TO 4' AT STA.16+45

\+ VARIES FROM 9.98' AT STA.16+25 TO 10' AT STA.16+45

NOTES:

1. FACE OF GUARDRAIL TO BE SET AT FACE OF PROPOSED CURB EXCEPT IN TRANSITION AREAS AND TIE-INS TO BRIDGE PARAPET.
2. MAXIMUM SINGLE LIFT OF MATERIAL:
   TYPE C HOT-MIX: 2"
   TYPE B HOT-MIX: 3"
   BITUMINOUS CONCRETE BASE COURSE: 6"
   GABC: AS NOTED

LEGEND

(A) ITEM 401657 - SUPERPAVE, TYPE C HOT-MIX, 160 GYRATIONS, PG 76-22

(B) ITEM 401660 - SUPERPAVE, TYPE B HOT-MIX, 160 GYRATIONS, PG 76-22

(C) ITEM 401663 - SUPERPAVE BITUMINOUS CONCRETE BASE COURSE, 160 GYRATIONS, PG 64-22

(D) ITEM 302007 - GRADED AGGREGATE BASE COURSE, TYPE B

(E) ITEM 701012 - PORTLAND CEMENT CONCRETE CURB, TYPE 3

(F) ITEM 732002 - TOPSOIL, 6" DEPTH OR
ITEM 733002 - TOPSOILING, 6" DEPTH
ITEM 734013 - PERMANENT GRASS SEEDING, DRY GROUND
ITEM 735534 - SOIL RETENTION BLANKET MULCH, TYPE 4

(G) ITEM 732002 - TOPSOIL, 6" DEPTH OR
ITEM 733002 - TOPSOILING, 6" DEPTH
ITEM 734013 - PERMANENT GRASS SEEDING, DRY GROUND
ITEM 735533 - SOIL RETENTION BLANKET MULCH, TYPE 3

(H) ITEM 720050 - GALVANIZED STEEL BEAM GUARDRAIL, TYPE I

(I) ITEM 715001 - PERFORATED PIPE UNDERDRAINS, 6" OR
ITEM 715002 - PERFORATED PIPE UNDERDRAINS, 8"

PREL. TRACING J.A.D. DESIGN R.R.W./J.A.G. CHKD. J.M.P.

TYPICAL SECTIONS

NOT TO SCALE

CONTRACT	COUNTY	F.A.P. NO.	SHEET NO.	TOTAL SHTS.
22-074-09	NEW CASTLE	SEE TITLE SHEET	7	152

REHABILITATION OF BRIDGE NOS. A 1 715, 1 715A, 1 715D ON SR 273 OVER I-95

REVISIONS

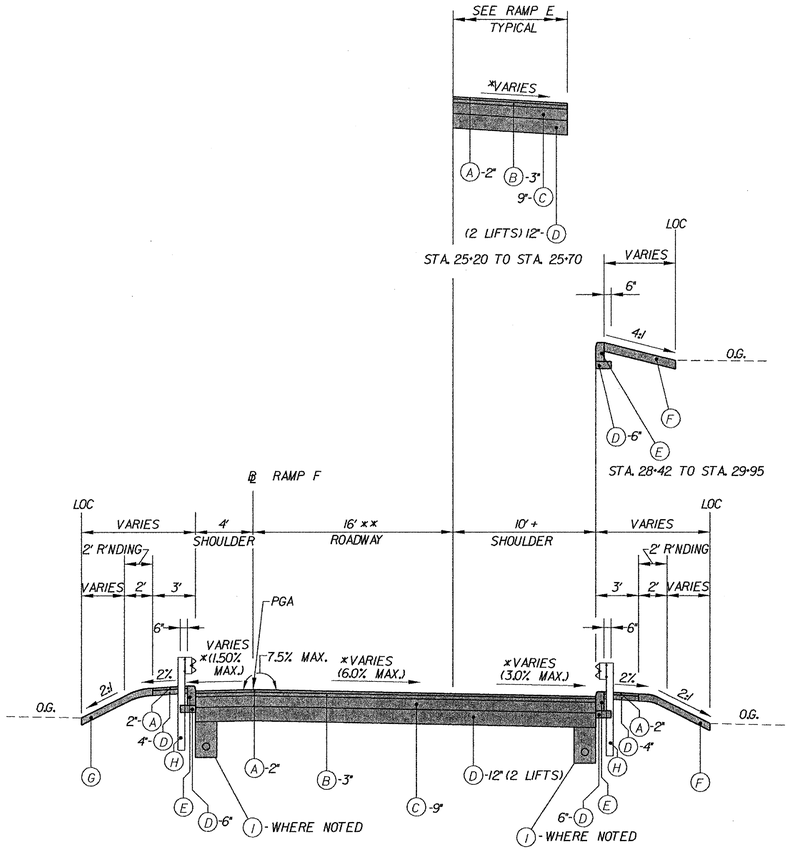

RAMP F

STA. 25+20 TO STA. 33+24
STA. 35+07 TO STA. 39+00

* SEE SUPERELEVATION TABLES FOR CROSS SLOPES

** VARIES FROM: 16' AT STA. 35+95 TO 14' AT STA. 37+45

+ VARIES FROM: 0' AT STA. 25+70 TO 12' AT STA. 28+42
12' AT STA. 28+42 TO 10' AT STA. 28+75

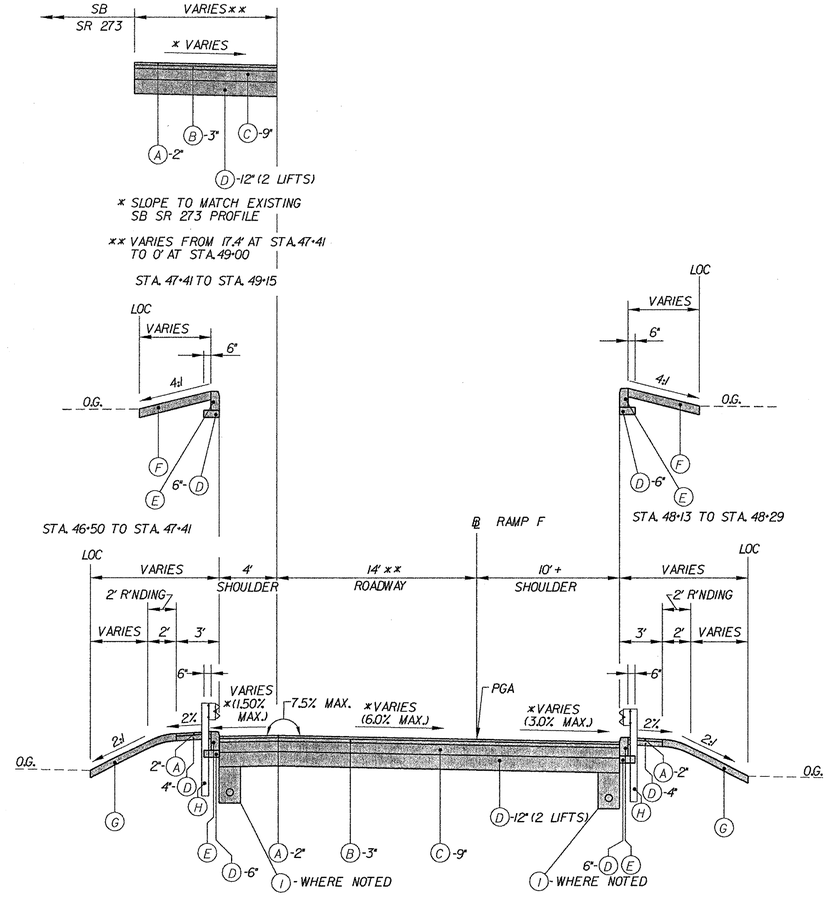

RAMP F

STA. 39+00 TO STA. 39+60
STA. 44+39 TO STA. 49+15

* SEE SUPERELEVATION TABLES FOR CROSS SLOPES

** VARIES FROM: 14' AT STA. 47+41 TO 40.8' AT STA. 49+15

+ VARIES FROM: 0' AT STA. 25+70 TO 10' AT STA. 28+42
10' AT STA. 48+95 TO 10.8' AT STA. 49+15

NOTES:

1. FACE OF GUARDRAIL TO BE SET AT FACE OF PROPOSED CURB EXCEPT IN TRANSITION AREAS AND TIE-INS TO BRIDGE PARAPET.
2. MAXIMUM SINGLE LIFT OF MATERIAL:
   TYPE C HOT-MIX: 2"
   TYPE B HOT-MIX: 3"
   BITUMINOUS CONCRETE BASE COURSE: 6"
   GABC: AS NOTED

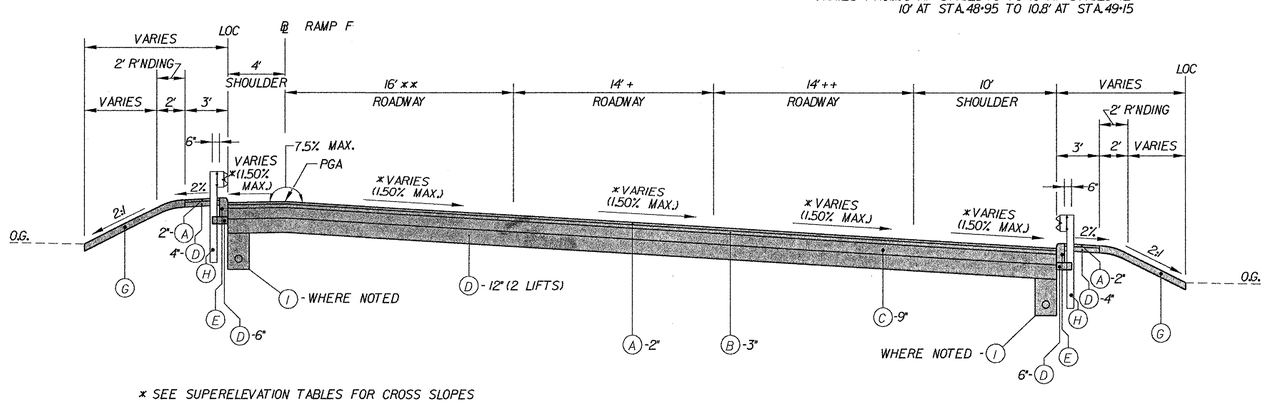

* SEE SUPERELEVATION TABLES FOR CROSS SLOPES

** VARIES FROM 12' AT STA. 19+70 TO 16' AT STA. 22+70
+ VARIES FROM 12' AT STA. 19+70 TO 14' AT STA. 22+70
++ VARIES FROM 0' AT STA. 19+70 TO 14' AT STA. 22+70

RAMP F

STA. 19+70 TO STA. 25+20

LEGEND

(A) ITEM 401657 - SUPERPAVE, TYPE C HOT-MIX, 160 GYRATIONS, PG 76-22

(B) ITEM 401660 - SUPERPAVE, TYPE B HOT-MIX, 160 GYRATIONS, PG 76-22

(C) ITEM 401663 - SUPERPAVE BITUMINOUS CONCRETE BASE COURSE, 160 GYRATIONS, PG 64-22

(D) ITEM 302007 - GRADED AGGREGATE BASE COURSE, TYPE B

(E) ITEM 701012 - PORTLAND CEMENT CONCRETE CURB, TYPE 3

(F) ITEM 732002 - TOPSOIL, 6" DEPTH OR
ITEM 733002 - TOPSOILING, 6" DEPTH
ITEM 734013 - PERMANENT GRASS SEEDING, DRY GROUND
ITEM 735534 - SOIL RETENTION BLANKET MULCH, TYPE 4

(G) ITEM 732002 - TOPSOIL, 6" DEPTH OR
ITEM 733002 - TOPSOILING, 6" DEPTH
ITEM 734013 - PERMANENT GRASS SEEDING, DRY GROUND
ITEM 735533 - SOIL RETENTION BLANKET MULCH, TYPE 3

(H) ITEM 720050 - GALVANIZED STEEL BEAM GUARDRAIL, TYPE I

(I) ITEM 715001 - PERFORATED PIPE UNDERDRAINS, 6" OR
ITEM 715002 - PERFORATED PIPE UNDERDRAINS, 8"

PREL. TRACING J.A.D. DESIGN R.R.W./J.A.G. CHKD. J.M.P.

DATUM REFERENCE:
HORIZONTAL - THIS PROJECT IS REFERENCED TO THE DELAWARE STATE PLANE COORDINATE SYSTEM (NAD 83/91).
VERTICAL - THIS PROJECT IS REFERENCED TO NAVD 88, BASED ON STATE OF DELAWARE BENCHMARKS:

JU4138 - ELEV. 93.53 FEET
JU4141 - ELEV. 197.46 FEET
JV1688 - ELEV. 76.74 FEET
JU1672 - ELEV. 69.36 FEET

HORIZONTAL AND VERTICAL CONTROL

SCALE
0 100 200 300
FEET

N

CONTRACT	COUNTY	F.A.P. NO.	SHEET NO.	TOTAL SHTS.
22-074-09	NEW CASTLE	SEE TITLE SHEET	8	152

REHABILITATION OF BRIDGE NOS. A 1 715, 1 715A, 1 715D ON SR 273 OVER I-95

REVISIONS

RAMP 'A' CONSTRUCTION ALIGNMENT CONTROL

POINT	STATION	OFFSET	NORTH	EAST	ELEV.
PC	8+00.00	0.00'	608928.3200	583293.6435	
PI	9+00.00	0.83' RT.	608993.0917	583369.8440	
PRC	10+00.00	0.00'	609060.3521	583443.8568	
PI	11+52.81	17.99' LT.	609163.1221	583556.9439	
PCC	13+00.00	0.00'	609203.7171	583704.2613	
PI	14+03.39	16.29' LT.	609231.1831	583803.9338	
PCC	15+00.00	0.00'	609195.1388	583900.8348	
PI	29+50.38	1238.50' LT.	608689.4904	585260.2140	
PCC	21+50.22	0.00'	608749.7678	583811.0906	
PI	22+86.41	27.77' LT.	608755.4277	583675.0207	
PCC	24+07.74	0.00'	608857.4101	583584.7619	
PI	24+55.84	1.81' LT.	608893.4323	583552.8806	
PT	25+03.77	0.00'	608933.8154	583526.7422	

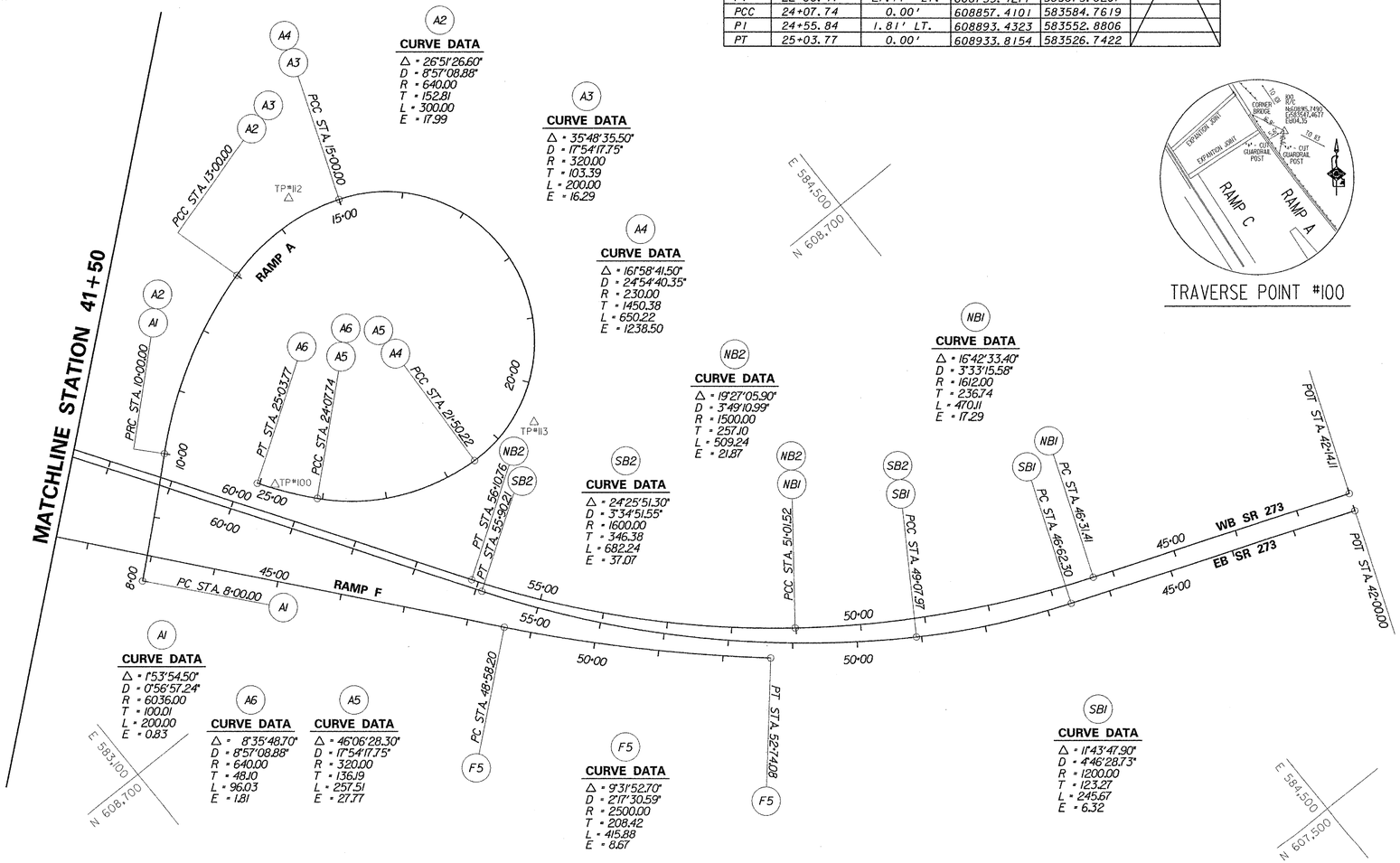

TRAVERSE POINT #100

WESTBOUND SR 273 CONSTRUCTION ALIGNMENT CONTROL

POINT	STATION	OFFSET	NORTH	EAST	ELEV.
POT	42+14.11	0.00'	607858.1073	584833.3362	
PC	46+31.41	0.00'	608007.1489	584443.5594	
PI	48+98.15	17.29' LT.	608091.7007	584222.4379	
PCC	51+01.52	0.00'	608236.2582	584034.9630	
PI	53+58.62	21.87' LT.	608393.2480	583831.3647	
PT	56+10.76	0.00'	608609.0778	583691.6666	
PC	64+95.73	0.00'	609352.0039	583210.7999	
PI	67+67.43	22.91' RT.	609580.0936	583063.1664	
PT	70+34.00	0.00'	609746.6630	582848.5150	
PC	75+88.25	0.00'	610086.4542	582410.6395	
PI	77+80.24	14.23' RT.	610204.1569	582258.9606	
PT	79+69.42	0.00'	610272.5277	582079.5564	
POT	80+21.95	0.00'	610291.2344	582030.4702	

EASTBOUND SR 273 CONSTRUCTION ALIGNMENT CONTROL

POINT	STATION	OFFSET	NORTH	EAST	ELEV.
POT	42+00.00	0.00'	607831.9544	584823.3377	
PC	46+62.30	0.00'	607997.0681	584391.5290	
PI	47+85.57	6.32' LT.	608041.0937	584276.3923	
PCC	49+07.97	0.00'	608107.6071	584172.6105	
PI	52+54.36	37.07' LT.	608294.5122	583880.9798	
PT	55+90.21	0.00'	608585.2991	583692.7647	
PC	64+95.74	0.00'	609345.4849	583200.7259	
PI	67+65.40	22.73' RT.	609571.8635	583054.1998	
PT	70+29.97	0.00'	609737.1834	582841.1586	
PC	75+28.55	0.00'	610042.8452	582447.2641	
PI	76+94.76	8.61' RT.	610144.7434	582315.9520	
PT	78+59.78	0.00'	610217.4751	582166.4990	
POT	79+56.99	0.00'	610260.0129	582079.0900	

RAMP 'F' CONSTRUCTION ALIGNMENT CONTROL

POINT	STATION	OFFSET	NORTH	EAST	ELEV.
POB	10+00.00	0.00'	610868.3998	584935.1930	
PC	11+51.11	0.00'	610759.3229	584830.6154	
PI	13+65.11	22.64' LT.	610604.8481	584682.5126	
PT	15+72.75	0.00'	610524.5154	584484.1605	
POT	19+70.00	0.00'	610375.3946	584115.9614	
POT	19+70.00	0.00'	610353.1497	584124.9706	
PC	30+48.19	0.00'	609948.4157	583125.6288	
PI	31+23.76	5.68' RT.	609920.0490	583055.5875	
PCC	31+98.19	0.00'	609872.2506	582997.0574	
PI	34+28.89	76.43' RT.	609726.3243	582818.3678	
PCC	35+94.86	0.00'	609513.2592	582906.8423	
PI	36+70.42	5.68' RT.	609443.4694	582935.8222	
PT	37+44.86	0.00'	609385.3608	582984.1321	
POT	39+00.00	0.00'	609266.0639	583083.3122	
POT	39+00.00	0.00'	609257.1138	583072.5467	
PC	48+58.20	0.00'	608520.2940	583685.1182	
PI	50+66.62	8.67' RT.	608360.0256	583818.3609	
PT	52+74.08	0.00'	608224.0328	583976.3026	

HORIZONTAL / VERTICAL CONTROL DATA

POINT	STATION	OFFSET	NORTH	EAST	ELEV.
TP100	24+76.27 A	7.22' RT.	608915.7490	583547.4677	104.35
TP112	14+48.32 A	35.25' LT.	609246.4718	538841.9244	77.56
TP113	20+56.16 A	30.27' LT.	608739.1666	583920.7929	89.61

PREL. TRACING ____ J.A.D. ____ DESIGN ____ R.R.W./J.A.G. ____ CHKD. ____ J.M.P. ____

CONTRACT	COUNTY	F.A.P. NO.	SHEET NO.	TOTAL SHTS.
22-074-09	NEW CASTLE	SEE TITLE SHEET	9	152

REHABILITATION OF BRIDGE NOS. A 1 715, 1 715A, 1 715D ON SR 273 OVER I-95

REVISIONS

HORIZONTAL AND VERTICAL CONTROL

SCALE 0 100 200 300 FEET

DATUM REFERENCE:
HORIZONTAL - THIS PROJECT IS REFERENCED TO THE DELAWARE STATE PLANE COORDINATE SYSTEM (NAD 83/91).
VERTICAL - THIS PROJECT IS REFERENCED TO NAVD 88, BASED ON STATE OF DELAWARE BENCHMARKS:

JU4138 - ELEV. 93.53 FEET
JU4141 - ELEV. 197.46 FEET
JN1688 - ELEV. 76.74 FEET
JU1672 - ELEV. 69.36 FEET

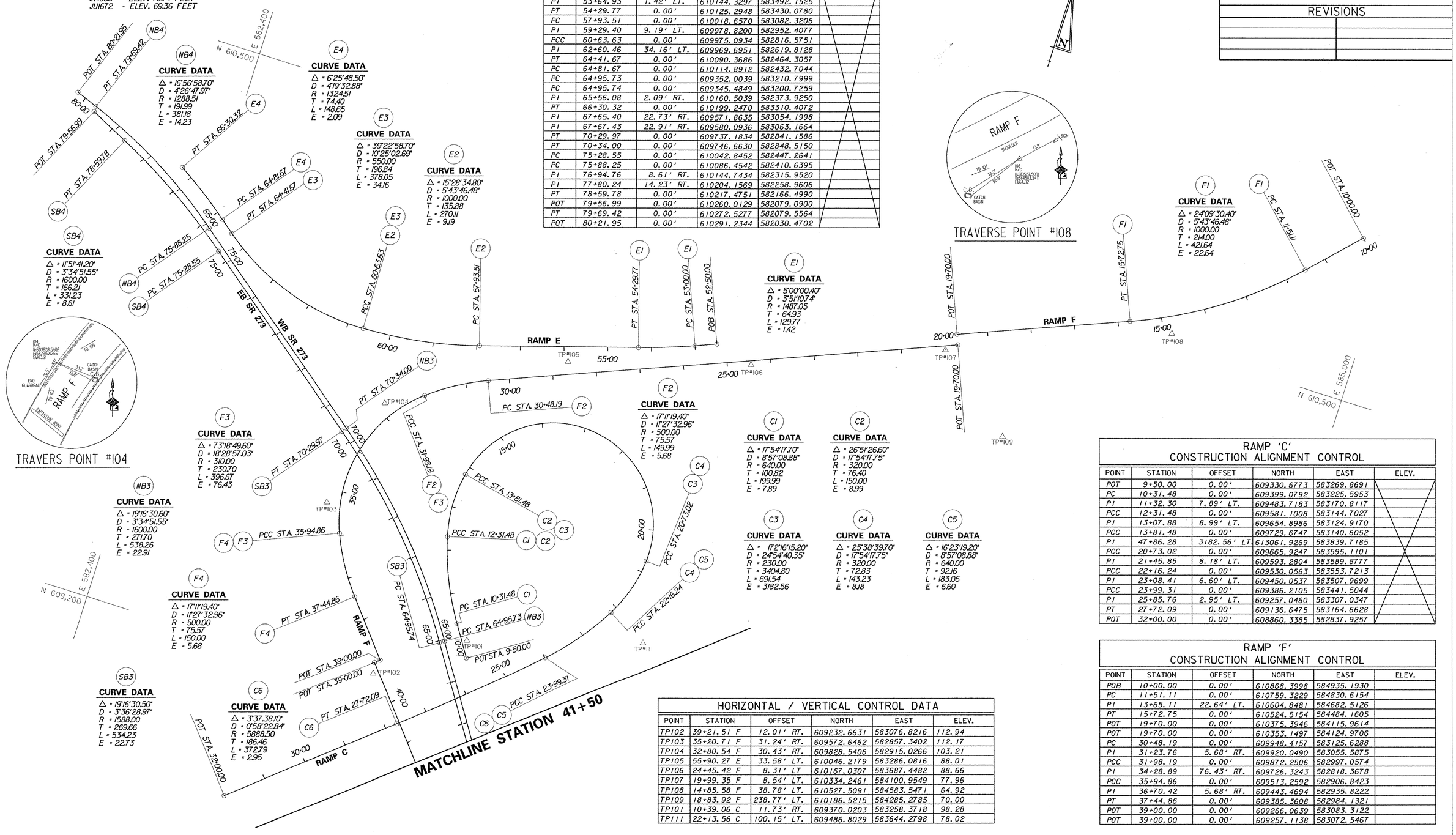

RAMP 'E' CONSTRUCTION ALIGNMENT CONTROL

POINT	STATION	OFFSET	NORTH	EAST	ELEV.
POT	52+50.00	0.00'	610187.4714	583598.6753	
PC	53+00.00	0.00'	610168.7023	583552.3318	
PI	53+64.93	1.42' LT.	610144.3297	583492.1525	
PT	54+29.77	0.00'	610125.2948	583430.0780	
PC	57+93.51	0.00'	610018.6570	583082.3206	
PI	59+29.40	9.19' LT.	609978.8200	582952.4077	
PCC	60+63.63	0.00'	609975.0934	582816.5751	
PI	62+60.46	34.16' LT.	609969.6951	582619.8128	
PT	64+41.67	0.00'	610090.3686	582464.3057	
PC	64+81.67	0.00'	610114.8912	582432.7044	
PC	64+95.73	0.00'	609352.0039	583210.7999	
PC	64+95.74	0.00'	609345.4849	583200.7259	
PI	65+56.08	2.09' RT.	610160.5039	582373.9250	
PT	66+30.32	0.00'	610199.2470	583310.4072	
PI	67+65.40	22.73' RT.	609571.8635	583054.1998	
PI	67+67.43	22.91' RT.	609580.0936	583063.1664	
PT	70+29.97	0.00'	609737.1834	582841.1586	
PT	70+34.00	0.00'	609746.6630	582848.5150	
PC	75+28.55	0.00'	610042.8452	582447.2641	
PC	75+88.25	0.00'	610086.4542	582410.6395	
PI	76+94.76	8.61' RT.	610144.7434	582315.9520	
PI	77+80.24	14.23' RT.	610204.1569	582258.9606	
PT	78+59.78	0.00'	610217.4751	582166.4990	
POT	79+56.99	0.00'	610260.0129	582079.0900	
PT	79+69.42	0.00'	610272.5277	582079.5564	
POT	80+21.95	0.00'	610291.2344	582030.4702	

RAMP 'C' CONSTRUCTION ALIGNMENT CONTROL

POINT	STATION	OFFSET	NORTH	EAST	ELEV.
POT	9+50.00	0.00'	609330.6773	583269.8691	
PC	10+31.48	0.00'	609399.0792	583225.5953	
PI	11+32.30	7.89' LT.	609483.7183	583170.8117	
PCC	12+31.48	0.00'	609581.1008	583144.7027	
PI	13+07.88	8.99' LT.	609654.8986	583124.9170	
PCC	13+81.48	0.00'	609729.6747	583140.6052	
PI	47+86.28	3182.56' LT.	613061.9269	583839.7185	
PCC	20+73.02	0.00'	609665.9247	583595.1101	
PI	21+45.85	8.18' LT.	609593.2804	583589.8777	
PCC	22+16.24	0.00'	609530.0563	583553.7213	
PI	23+08.41	6.60' LT.	609450.0537	583507.9699	
PCC	23+99.31	0.00'	609386.2105	583441.5044	
PI	25+85.76	2.95' LT.	609257.0460	583307.0347	
PT	27+72.09	0.00'	609136.6475	583164.6628	
POT	32+00.00	0.00'	608860.3385	582837.9257	

RAMP 'F' CONSTRUCTION ALIGNMENT CONTROL

POINT	STATION	OFFSET	NORTH	EAST	ELEV.
POB	10+00.00	0.00'	610868.3998	584935.1930	
PC	11+51.11	0.00'	610759.3229	584830.6154	
PI	13+65.11	22.64' LT.	610604.8481	584682.5126	
PT	15+72.75	0.00'	610524.5154	584484.1605	
POT	19+70.00	0.00'	610375.3946	584115.9614	
POT	19+70.00	0.00'	610353.1497	584124.9706	
PC	30+48.19	0.00'	609948.4157	583125.6288	
PI	31+23.76	5.68' RT.	609920.0490	583055.5875	
PCC	31+98.19	0.00'	609872.2506	582997.0574	
PI	34+28.89	76.43' RT.	609726.3243	582818.3678	
PCC	35+94.86	0.00'	609513.2592	582906.8423	
PI	36+70.42	5.68' RT.	609443.4694	582935.8222	
PT	37+44.86	0.00'	609385.3608	582984.1321	
POT	39+00.00	0.00'	609266.0639	583083.3122	
POT	39+00.00	0.00'	609257.1138	583072.5467	

HORIZONTAL / VERTICAL CONTROL DATA

POINT	STATION	OFFSET	NORTH	EAST	ELEV.
TP102	39+21.51 F	12.01' RT.	609232.6631	583076.8216	112.94
TP103	35+20.71 F	31.24' RT.	609572.6462	582857.3402	112.17
TP104	32+80.54 F	30.43' RT.	609828.5406	582915.0266	103.21
TP105	55+90.27 E	33.58' LT.	610046.2179	583286.0816	88.01
TP106	24+45.42 F	8.31' LT	610167.0307	583687.4482	88.66
TP107	19+99.35 F	8.54' LT.	610334.2461	584100.9549	77.96
TP108	14+85.58 F	38.78' LT.	610527.5091	584583.5471	64.92
TP109	18+83.92 F	238.77' LT.	610186.5215	584285.2785	70.00
TP101	10+39.06 C	11.73' RT.	609370.0203	583258.3718	98.28
TP111	22+13.56 C	100.15' LT.	609486.8029	583644.2798	78.02

PREL. TRACING ____ J.A.D. ____ DESIGN ____ R.R.W./J.A.G. ____ CHKD. ____ J.M.P. ____

9/5/2003 9/5/2003 MA\3130314GS02S273.plt

SUPERELEVATON DIAGRAMS

CONTRACT	COUNTY	F.A.P. NO.	SHEET NO.	TOTAL SHTS.
22-074-09	NEW CASTLE	SEE TITLE SHEET	10	152

REHABILITATION OF BRIDGE NOS. A 1 715, 1 715A, 1 715D ON SR 273 OVER I-95

REVISIONS

2 REVISED RAMP C,E & F SUPERELEVATION	
11/25/03 JMP/CM	

RAMP A

STATION	PAVEMENT SECTION A %	PAVEMENT SECTION B %
12+66	EXIST. (+1.90)	EXIST. (+4.94)
13+00	+0.54	+5.55
13+25	-0.48	+6.00
13+50	-1.50	+6.00
↕	↕	↕
23+25	-1.50	+6.00

NOTE: SEE GRADES & GEOMETRICS FOR ELEVATION LAYOUT FROM STA. 23+25 TO STA. 24+83.

RAMP C 2

STATION	PAVEMENT SECTION A %	PAVEMENT SECTION B %	PAVEMENT SECTION C %
11+82	-4.00	+2.97	-
12+00	-3.62	+3.43	-
20+50	-2.56	+4.72	-
13+00	-1.50	+6.00	-
↕	↕	↕	↕
20+95	-1.50	+6.00	-
21+00	-1.54	+5.95	-
21+50	-1.95	+5.46	-
22+00	-2.36	+4.96	-
22+50	-2.77	+4.47	-
23+00	-3.18	+3.98	-
23+50	-3.59	+3.49	-
23+99.31	-4.00	+3.00	-3.00
↕	↕	↕	↕
27+25	-4.00	+3.00	-3.00
27+50	-4.00	+2.10	-2.10
28+00	-4.00	+1.80	-1.80
28+50	-4.00	+1.50	-1.50
↕	↕	↕	↕
31+92	-4.00	+1.50	-1.50

NOTE: SEE GRADES & GEOMETRICS FOR ELEVATION LAYOUT FROM STA. 9+61 TO STA. 11+82.

RAMP E 2

STATION	PAVEMENT SECTION A %	PAVEMENT SECTION B %	PAVEMENT SECTION C %	PAVEMENT SECTION D %
52+50	*	0.00	0.00	0.00
53+00	*	+1.50	+1.50	-1.50
↕	↕	↕	↕	↕
57+00	-1.50	+1.50	+1.50	-1.50
57+50	-1.50	+0.67	+0.67	-0.67
58+00	-1.50	+2.83	+2.83	-2.83
58+50	-1.50	+5.00	+5.00	-5.00
↕	↕	↕	↕	↕
60+25	-1.50	+5.00	+5.00	-5.00
60+50	-1.50	+5.33	+5.33	-5.33
61+00	-1.50	+6.00	+6.00	-6.00
61+50	-0.70	↑	↑	↑
62+00	+2.91			
62+50	+5.12	↓	↓	↓
62+75	+5.82	+6.00	+6.00	-6.00

* SEE GRADES & GEOMETRICS FOR ELEVATION LAYOUT FROM STA. 52+50 TO STA. 55+70 & STA. 62+75 TO STA. 64+19.

RAMP F

STATION	PAVEMENT SECTION A %	PAVEMENT SECTION B %	PAVEMENT SECTION C %	PAVEMENT SECTION D %
16+25	EXIST. (-0.65)	EXIST. (+3.92)	EXIST. (+3.00)	EXIST. (-3.30)
16+45	-0.82	+3.44	+2.70	-2.94
16+50	-0.86	+3.32	+2.62	-2.85
17+00	-1.29	+2.10	+1.88	-1.95
17+25	-1.50	+1.50	+1.50	-1.50
↕	↕	↕	↕	↕
19+70	-1.50	+1.50	+1.50	-1.50

RAMP F 2

STATION	PAVEMENT SECTION A %	PAVEMENT SECTION B %	PAVEMENT SECTION C %	PAVEMENT SECTION D %
19+70	-1.50	-1.50	-1.50	-1.50
20+00	-1.50	-1.18	-1.50	-1.50
20+50	-1.50	-0.64	-1.50	-1.50
21+00	-1.50	-0.11	-1.50	-1.50
21+50	-1.50	+0.43	-1.50	-1.50
22+00	-1.50	+0.96	-1.50	-1.50
22+50	-1.50	+1.50	-1.50	-1.50
↕	↕	↕	↕	↕
24+00	-1.50	+1.50	-1.50	-1.50
24+50	-0.43	+0.43	-0.43	-0.43
24+70	0.00	0.00	0.00	0.00
↕	↕	↕	↕	↕
25+20	0.00	0.00	0.00	-
25+70	-1.50	+1.50	*	-
↕	↕	↕	↕	↕
27+50	-1.50	+1.50	*	-
28+40	-1.50	+1.50	-1.50	-
↕	↕	↕	↕	-
30+60	-1.50	+1.50	-1.50	-
31+00	-2.70	+2.70	0.00	-
31+50	-4.20	+4.20	+1.50	-
32+00	-5.70	+5.70	+3.00	-
32+10	-6.00	+6.00	+3.30	-
32+50	-6.00	+6.00	+4.20	-
32+90	-6.00	+6.00	+4.50	-
** 33+00.20	-5.70	+5.70	+5.70	-
BRIDGE	↕	↕	↕	
** 35+32.50	-5.40	+5.40	+5.40	-
35+50	-5.40	+5.40	+5.40	-
36+00	-5.40	+5.40	+5.40	-
36+50	-4.44	+4.44	+4.10	-
37+00	-3.49	+3.49	+2.80	-
37+50	-2.54	+2.54	+1.50	-
38+00	-1.58	+1.58	+0.20	-
38+50	-0.63	+0.63	-1.10	-
39+00	+0.32	-0.32	-2.40	-

* SEE GRADES & GEOMETRICS FOR ELEVATION LAYOUT IN GORE AREA FROM STA. 25+70 TO STA. 28+40.

** CROSS SLOPES TO MATCH PROPOSED BRIDGE ELEVATIONS

RAMP F

STATION	PAVEMENT SECTION A %	PAVEMENT SECTION B %	PAVEMENT SECTION C %	PAVEMENT SECTION D %
39+00	+0.32	+0.32	-2.40	-
39+50	+1.28	+1.28	-3.70	-
* 39+61.70	+1.50	+1.50	-4.00	-
BRIDGE	↕	↕	↕	↕
* 44+36.80	+1.50	+1.50	-4.00	-
44+50	+1.10	+1.50	-3.60	-
45+00	+0.40	+1.50	-2.10	-
45+20	-1.00	+1.50	-1.50	-
45+36.80	-1.50	+1.50	-1.50	-
47+20	-1.50	+1.50	-1.50	-

NOTE: SEE GRADES & GEOMETRICS FOR ELEVATION LAYOUT FROM STA. 47+20 TO STA. 49+15.

* CROSS SLOPES TO MATCH PROPOSED BRIDGE ELEVATIONS

NOTE: (+) AND (-) SLOPES ARE DEFINED AS SHOWN BELOW

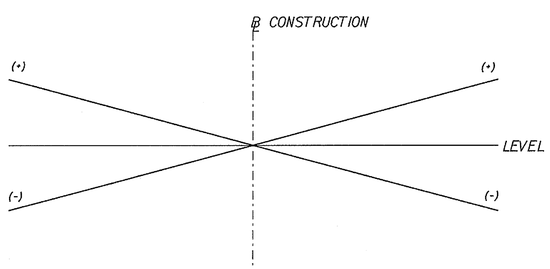

SUPERELEVATION SCHEMATIC

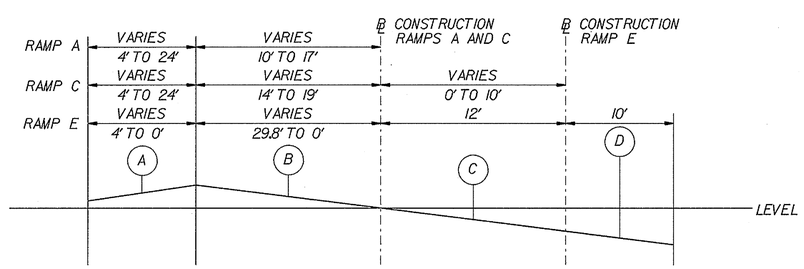

TYPICAL CURVE TO THE RIGHT

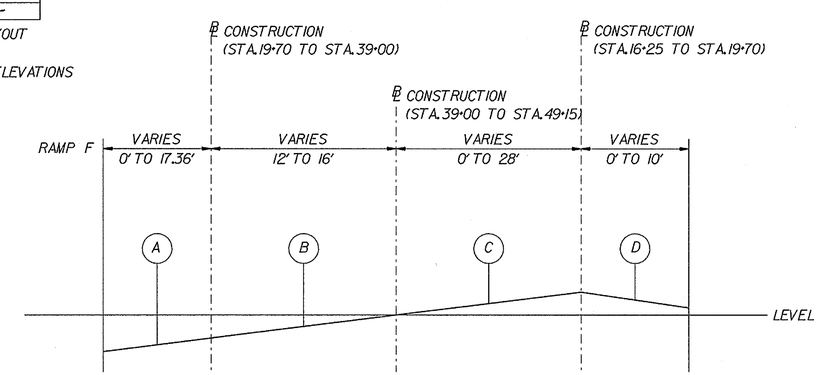

TYPICAL CURVE TO THE LEFT

J.M.P. CHKD. R.R.W./J.A.G. DESIGN J.A.D. PREL. TRACING

CONTRACT	COUNTY	F.A.P. NO.	SHEET NO.	TOTAL SHTS.
22-074-09	NEW CASTLE	SEE TITLE SHEET	11	152

REHABILITATION OF BRIDGE NOS. A 1 715, 1 715A, 1 715D ON SR 273 OVER I-95

REVISIONS

CONSTRUCTION

SCALE 0 50 100 150 FEET

UNDERDRAIN SCHEDULE					
NO.	STA. TO STA.	LENGTH	SIZE/TYPE	DISCHARGE TYPE	DISCHARGE INV.
32	E STA.60+93 TO STA.64+00,RT.	307'	6" PEP	UD OUTLET	*
33	E STA.60+93 TO STA.63+50,LT.	257'	6" PEP	UD OUTLET	*
34	E STA.60+00 TO STA.60+93,RT.	93'	6" PEP	UD OUTLET	*
35	E STA.60+00 TO STA.60+93,LT.	93'	6" PEP	UD OUTLET	*

* TO BE SET IN FIELD. REFER TO UNDERDRAIN DETAIL. MINIMUM SLOPE OF UD OUTLET SHALL BE 0.2%.

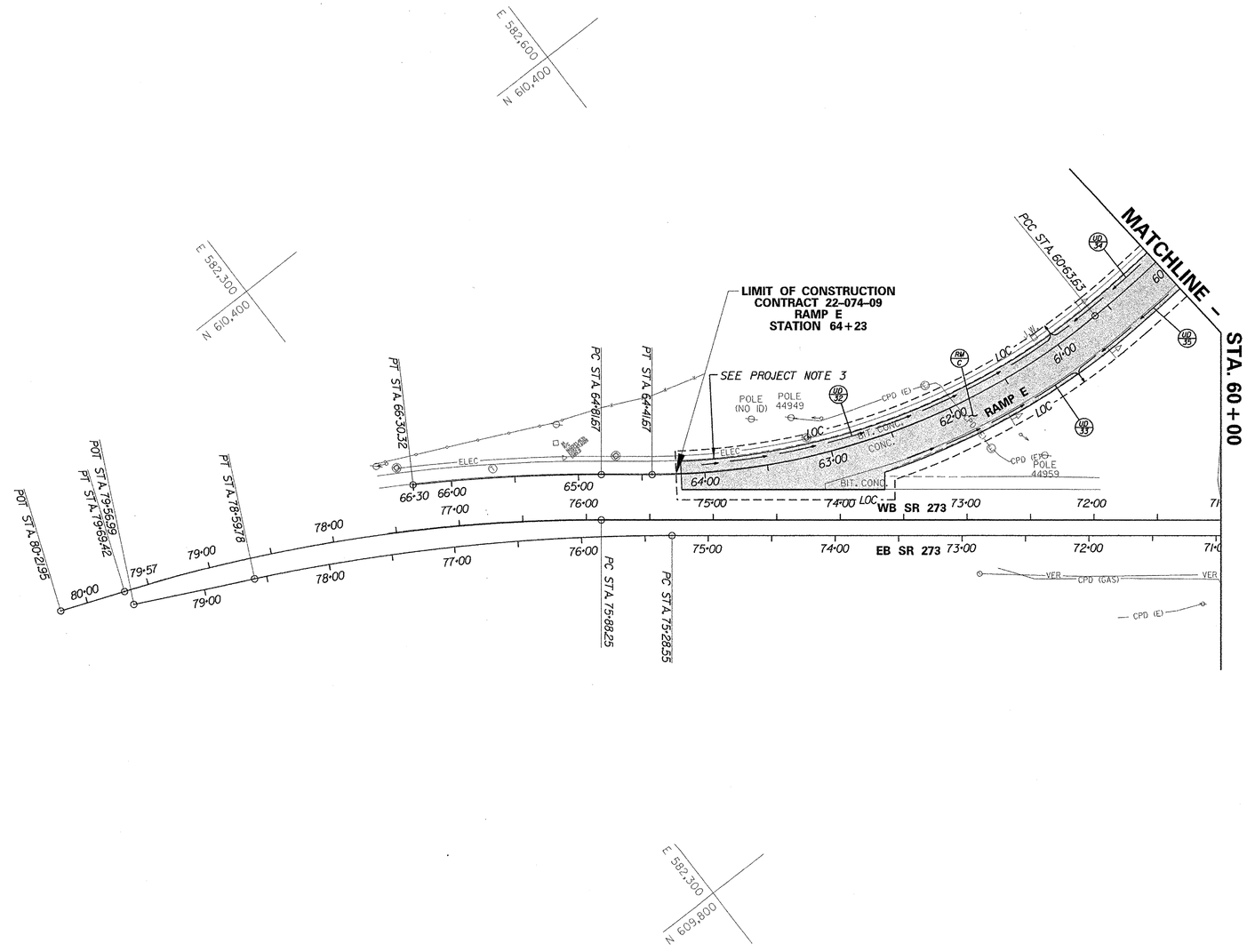

PREL. TRACING J.A.D. DESIGN R.R.W./J.A.G. CHKD. J.M.P.

9/5/2003 9/5/2003 M:\313031A\PS01S273.plf

CONTRACT	COUNTY	F.A.P. NO.	SHEET NO.	TOTAL SHTS.
22-074-09	NEW CASTLE	SEE TITLE SHEET	12	152

REHABILITATION OF BRIDGE NOS. A 1 715, 1 715A, 1 715D ON SR 273 OVER I-95

CONSTRUCTION

SCALE 0 50 100 150 FEET

REVISIONS

2 REVISED/ADDED GUARDRAIL	
11/25/03 - JMP/GM	

2 NOTE:
SEE SHEET 14A FOR ADDITIONAL PAVEMENT REHAB WORK ALONG SR 273.

GUARDRAIL SCHEDULE

NO.	TYPE	BEG. STA.	OFFSET	LENGTH
1	GALVANIZED STEEL BEAM GUARDRAIL, TYPE 1	C 9+75 RT.	*	356 LF
2 3	GALVANIZED STEEL BEAM GUARDRAIL, TYPE 1	F 35+72 LT.	*	348 LF
2 4	GALVANIZED STEEL BEAM GUARDRAIL, TYPE 1	F 35+36 RT.	*	384 LF
5	GALVANIZED STEEL BEAM GUARDRAIL, TYPE 1	F 24+50 RT.	*	508 LF
6	GALVANIZED STEEL BEAM GUARDRAIL, TYPE 1	F 24+50 LT.	*	838 LF
7	GALVANIZED STEEL BEAM GUARDRAIL, TYPE 1	F 30+45 RT.	*	236 LF
12	GUARDRAIL TO BARRIER CONNECTION (EXIT TYPE)	F 35+22 RT.	*	14 LF
13	GUARDRAIL TO BARRIER CONNECTION (EXIT TYPE)	F 35+58 LT.	*	14 LF
14	GUARDRAIL TO BARRIER CONNECTION, APPROACH TYPE 1	F 32+88 LT.	*	27 LF
15	GUARDRAIL TO BARRIER CONNECTION, APPROACH TYPE 1	F 32+81 RT.	*	27 LF
2 16	GUARDRAIL TO BARRIER CONNECTION, APPROACH TYPE 1	F 39+20 LT.	*	27 LF
2 17	GUARDRAIL TO BARRIER CONNECTION, APPROACH TYPE 1	F 39+20 RT.	*	27 LF
18	GUARDRAIL TO BARRIER CONNECTION (EXIT TYPE)	C 9+61 RT.	*	14 LF
19	GUARDRAIL END TREATMENT ATTENUATOR, TYPE 1	F 29+95 RT.	*	50 LF
20	END ANCHORAGE	E 56+88 RT.	*	12.5 LF
30	END ANCHORAGE	C 13+31 RT.	*	12.5 LF
32	GUARDRAIL END TREATMENT ATTENUATOR, TYPE 1	C 24+58 RT.	*	50 LF
2 33	GALVANIZED STEEL BEAM GUARDRAIL, TYPE 1	SR 273 64+77 LT.	*	250 LF
2 34	GUARDRAIL TO BARRIER CONNECTION, APPROACH TYPE 1	SR 273 64+50 LT.	*	27 LF
** 2 41	GALVANIZED STEEL BEAM GUARDRAIL, TYPE 1	C 25+08 RT.	*	37 LF
2 42	GUARDRAIL END TREATMENT ATTENUATOR, TYPE 2	SR 273 67+27 LT.	*	37.5 LF

* FACE OF W-BEAM TO BE SET AT FACE OF PROPOSED CURB, EXCEPT AS NOTED.

** SPLICE NEW GUARDRAIL INTO EXISTING. FACE OF W-BEAM TO BE SET AT SAME OFFSET FROM PAVEMENT AS EXISTING. COST SHALL BE INCIDENTAL TO ITEM 720585 - GUARDRAIL END TREATMENT ATTENUATOR, TYPE 1.

CURB SCHEDULE

NO.	TYPE	LENGTH
1	PCC CURB TYPE 3	1604 LF
3	PCC CURB TYPE 3	385 LF
4	PCC CURB TYPE 3	442 LF
5	PCC CURB TYPE 3	519 LF
6	PCC CURB TYPE 3	865 LF
7	PCC CURB TYPE 3	443 LF
9	PCC CURB TYPE 2	65 LF
2 14	PCC CURB TYPE 3	365 LF

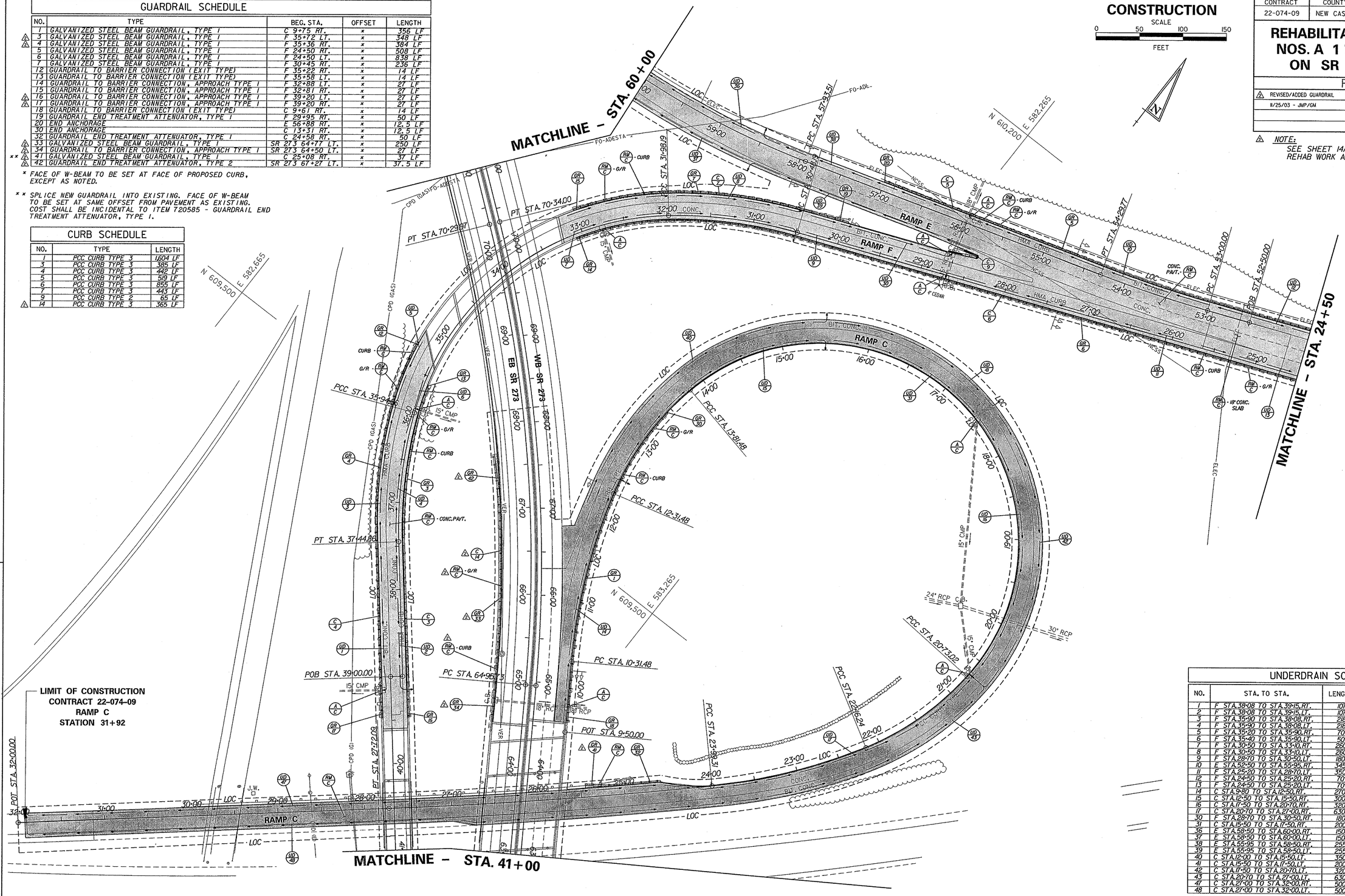

UNDERDRAIN SCHEDULE

NO.	STA. TO STA.	LENGTH	SIZE/TYPE	DISCHARGE TYPE	DISCHARGE INV.
1	F STA.38+08 TO STA.39+15,RT.	107'	6" PEP	EX.INLET	*
2	F STA.38+08 TO STA.39+15,LT.	107'	6" PEP	UD OUTLET	*
3	F STA.35+90 TO STA.38+08,RT.	218'	6" PEP	UD OUTLET	*
4	F STA.35+90 TO STA.38+08,LT.	218'	6" PEP	EX.INLET	*
5	F STA.35+20 TO STA.35+90,RT.	70'	6" PEP	UD OUTLET	*
6	F STA.35+40 TO STA.35+90,LT.	50'	6" PEP	EX.INLET	*
7	F STA.30+50 TO STA.33+10,RT.	260'	6" PEP	UD OUTLET	*
8	F STA.30+50 TO STA.33+10,LT.	260'	6" PEP	UD OUTLET	*
9	F STA.28+70 TO STA.30+50,LT.	180'	6" PEP	EX.INLET	*
10	E STA.52+50 TO STA.55+95,RT.	345'	6" PEP	EX.INLET	*
11	F STA.25+20 TO STA.28+70,LT.	350'	6" PEP	EX.INLET	*
12	F STA.24+50 TO STA.25+20,RT.	70'	6" PEP	UD OUTLET	*
13	F STA.24+50 TO STA.25+20,LT.	70'	6" PEP	UD OUTLET	*
14	C STA.9+80 TO STA.12+50,RT.	270'	6" PEP	UD OUTLET	*
15	C STA.12+50 TO STA.15+50,RT.	300'	6" PEP	UD OUTLET	*
16	C STA.17+50 TO STA.20+70,RT.	320'	6" PEP	EX.INLET	*
17	C STA.20+70 TO STA.27+00,RT.	630'	8" PEP	EX.INLET	*
30	F STA.28+70 TO STA.30+50,RT.	180'	6" PEP	EX.INLET	*
31	C STA.15+50 TO STA.17+50,RT.	200'	6" PEP	EX.INLET	*
36	E STA.58+50 TO STA.60+00,RT.	150'	6" PEP	UD OUTLET	*
37	E STA.58+50 TO STA.60+00,LT.	150'	6" PEP	UD OUTLET	*
38	E STA.55+95 TO STA.58+50,RT.	255'	6" PEP	UD OUTLET	*
39	E STA.55+95 TO STA.58+50,LT.	255'	6" PEP	UD OUTLET	*
40	C STA.12+00 TO STA.15+50,LT.	350'	6" PEP	UD OUTLET	*
41	C STA.15+50 TO STA.17+50,LT.	200'	6" PEP	UD OUTLET	*
42	C STA.17+50 TO STA.20+70,LT.	320'	6" PEP	EX. INLET	*
43	C STA.20+70 TO STA.27+00,LT.	630'	8" PEP	EX. INLET	*
47	C STA.27+00 TO STA.32+00,RT.	500'	6" PEP	UD OUTLET	*
48	C STA.27+00 TO STA.32+00,LT.	500'	6" PEP	UD OUTLET	*

* TO BE SET IN FIELD. REFER TO UNDERDRAIN DETAIL. MINIMUM SLOPE OF UD OUTLET SHALL BE 0.2%.

J.A.D. DESIGN R.R.W./J.A.G. CHKD. J.M.P.
PRELIM. TRACING

11/24/2003

11/24/2003 M:\31303\MDPS025273.dgn

CONTRACT	COUNTY	F.A.P. NO.	SHEET NO.	TOTAL SHTS.
22-074-09	NEW CASTLE	SEE TITLE SHEET	13	152

REHABILITATION OF BRIDGE NOS. A 1 715, 1 715A, 1 715D ON SR 273 OVER I-95

REVISIONS

2 REVISED/ADDED GUARDRAIL	
11/25/03 - JMP/GM	

2 NOTE:
SEE SHEET 14A FOR ADDITIONAL PAVEMENT REHAB WORK ALONG SR 273.

CONSTRUCTION
SCALE
0 50 100 150
FEET

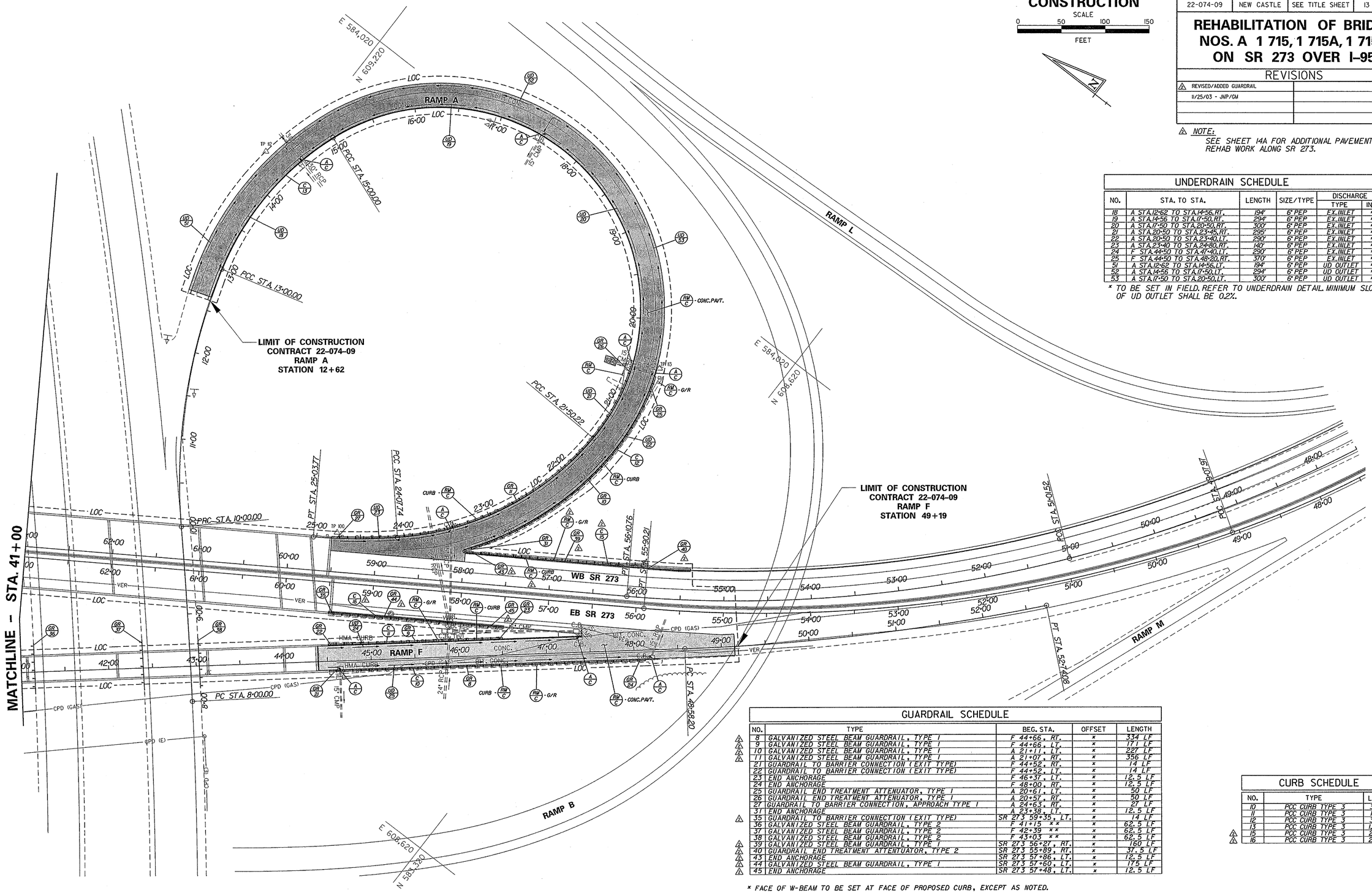

UNDERDRAIN SCHEDULE

NO.	STA. TO STA.	LENGTH	SIZE/TYPE	DISCHARGE TYPE	DISCHARGE INV.
18	A STA.12+62 TO STA.14+56,RT.	194'	6" PEP	EX.INLET	*
19	A STA.14+56 TO STA.17+50,RT.	294'	6" PEP	EX.INLET	*
20	A STA.17+50 TO STA.20+50,RT.	300'	6" PEP	EX.INLET	*
21	A STA.20+50 TO STA.23+45,RT.	295'	6" PEP	EX.INLET	*
22	A STA.20+50 TO STA.23+40,LT.	290'	6" PEP	EX.INLET	*
23	A STA.23+40 TO STA.24+80,RT.	140'	6" PEP	EX.INLET	*
24	F STA.44+50 TO STA.47+40,LT.	290'	6" PEP	EX.INLET	*
25	F STA.44+50 TO STA.48+20,RT.	370'	6" PEP	EX.INLET	*
51	A STA.12+62 TO STA.14+56,LT.	194'	6" PEP	UD OUTLET	*
52	A STA.14+56 TO STA.17+50,LT.	294'	6" PEP	UD OUTLET	*
53	A STA.17+50 TO STA.20+50,LT.	300'	6" PEP	UD OUTLET	*

* TO BE SET IN FIELD. REFER TO UNDERDRAIN DETAIL. MINIMUM SLOPE OF UD OUTLET SHALL BE 0.2%.

GUARDRAIL SCHEDULE

NO.	TYPE	BEG. STA.	OFFSET	LENGTH
2 8	GALVANIZED STEEL BEAM GUARDRAIL, TYPE 1	F 44+66, RT.	*	334 LF
2 9	GALVANIZED STEEL BEAM GUARDRAIL, TYPE 1	F 44+66, LT.	*	171 LF
2 10	GALVANIZED STEEL BEAM GUARDRAIL, TYPE 1	A 21+11, LT.	*	227 LF
2 11	GALVANIZED STEEL BEAM GUARDRAIL, TYPE 1	A 21+07, RT.	*	356 LF
21	GUARDRAIL TO BARRIER CONNECTION (EXIT TYPE)	F 44+52, RT.	*	14 LF
22	GUARDRAIL TO BARRIER CONNECTION (EXIT TYPE)	F 44+52, LT.	*	14 LF
23	END ANCHORAGE	F 46+37, LT.	*	12.5 LF
24	END ANCHORAGE	F 48+00, RT.	*	12.5 LF
25	GUARDRAIL END TREATMENT ATTENUATOR, TYPE 1	A 20+61, LT.	*	50 LF
26	GUARDRAIL END TREATMENT ATTENUATOR, TYPE 1	A 20+57, RT.	*	50 LF
27	GUARDRAIL TO BARRIER CONNECTION, APPROACH TYPE 1	A 24+63, RT.	*	27 LF
31	END ANCHORAGE	A 23+38, LT.	*	12.5 LF
2 35	GUARDRAIL TO BARRIER CONNECTION (EXIT TYPE)	SR 273 59+35, LT.	*	14 LF
36	GALVANIZED STEEL BEAM GUARDRAIL, TYPE 2	F 41+15 **	*	62.5 LF
37	GALVANIZED STEEL BEAM GUARDRAIL, TYPE 2	F 42+39 **	*	62.5 LF
38	GALVANIZED STEEL BEAM GUARDRAIL, TYPE 2	F 43+03 **	*	62.5 LF
2 39	GALVANIZED STEEL BEAM GUARDRAIL, TYPE 1	SR 273 56+27, RT.	*	160 LF
2 40	GUARDRAIL END TREATMENT ATTENUATOR, TYPE 2	SR 273 55+89, RT.	*	37.5 LF
2 43	END ANCHORAGE	SR 273 57+86, LT.	*	12.5 LF
2 44	GALVANIZED STEEL BEAM GUARDRAIL, TYPE 1	SR 273 57+60, LT.	*	175 LF
2 45	END ANCHORAGE	SR 273 57+48, LT.	*	12.5 LF

* FACE OF W-BEAM TO BE SET AT FACE OF PROPOSED CURB, EXCEPT AS NOTED.

** SPLICE NEW GUARDRAIL INTO EXISTING, COST SHALL BE INCIDENTAL TO ITEM T20051 - GALVANIZED STEEL BEAM GUARDRAIL, TYPE 2

CURB SCHEDULE

NO.	TYPE	LENGTH
10	PCC CURB TYPE 3	377 LF
11	PCC CURB TYPE 3	199 LF
12	PCC CURB TYPE 3	307 LF
13	PCC CURB TYPE 3	1217 LF
2 15	PCC CURB TYPE 3	260 LF
2 16	PCC CURB TYPE 3	202 LF

PREL. TRACING ____ J.A.D. ____ DESIGN ____ R.R.W./J.A.C. ____ CHK.D. ____ J.M.P. ____

CONTRACT	COUNTY	F.A.P. NO.	SHEET NO.	TOTAL SHTS.
22-074-09	NEW CASTLE	SEE TITLE SHEET	14	152

REHABILITATION OF BRIDGE NOS. A 1 715, 1 715A, 1 715D ON SR 273 OVER I-95

CONSTRUCTION

SCALE 0 50 100 150 FEET

REVISIONS

2 REVISED CURB/GUARDRAIL	
11/25/03 - JMP/GM	

NOTE:
LIMIT OF PAVEMENT RECONSTRUCTION SHALL BEGIN AT EXISTING ASPHALT/ CONCRETE PAVEMENT INTERFACE.

GUARDRAIL SCHEDULE

NO.	TYPE	BEG. STA.	OFFSET	LENGTH
5	GALVANIZED STEEL BEAM GUARDRAIL, TYPE I	F 18+70 RT.	*	580 LF
6	GALVANIZED STEEL BEAM GUARDRAIL, TYPE I	F 18+65 LT.	*	585 LF
28	GUARDRAIL END TREATMENT ATTENUATOR, TYPE I	F 18+20 RT.	*	50 LF
29	GUARDRAIL END TREATMENT ATTENUATOR, TYPE I	F 18+15 LT.	*	50 LF

*FACE OF W-BEAM TO BE SET AT FACE OF PROPOSED CURB, EXCEPT AS NOTED.

CURB SCHEDULE

NO.	TYPE	LENGTH
5	PCC CURB TYPE 3	680 LF
6	PCC CURB TYPE 3	685 LF

UNDERDRAIN SCHEDULE

NO.	STA. TO STA.	LENGTH	SIZE/TYPE	DISCHARGE TYPE	DISCHARGE INV.
26	F STA.22+50 TO STA.24+50,RT.	200'	6" PEP	UD OUTLET	*
27	F STA.22+50 TO STA.24+50,LT.	200'	6" PEP	UD OUTLET	*
28	F STA.20+05 TO STA.22+50,RT.	245'	6" PEP	EX.INLET	*
29	F STA.20+05 TO STA.22+50,LT.	245'	6" PEP	EX.INLET	*
54	F STA.18+00 TO STA.16+25,RT.	380'	6" PEP	UD OUTLET	*
55	F STA.18+00 TO STA.16+25,LT.	380'	6" PEP	UD OUTLET	*

* TO BE SET IN FIELD. REFER TO UNDERDRAIN DETAIL. MINIMUM SLOPE OF UD SCHEDULE OUTLET SHALL BE 0.2%.

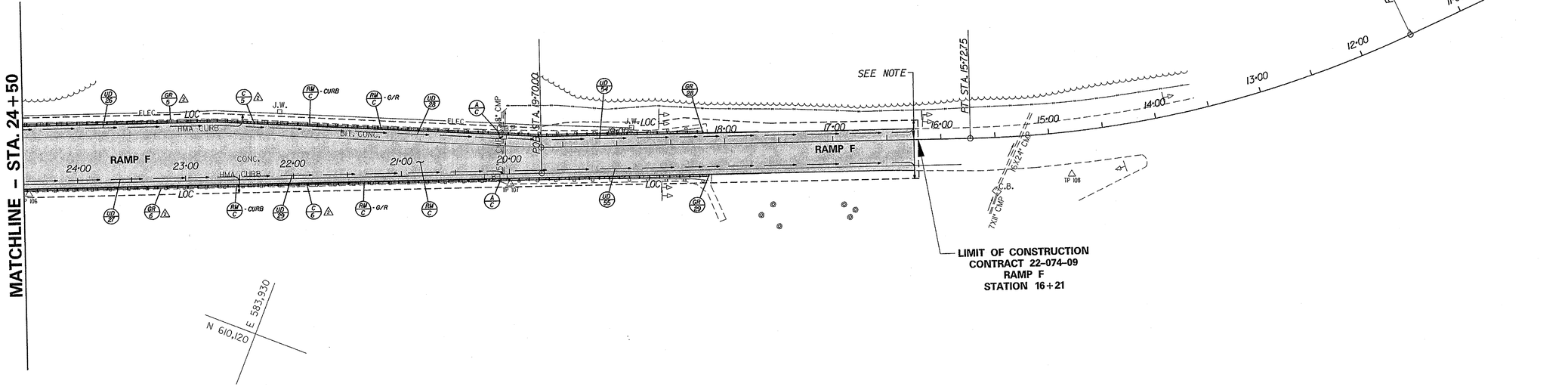

PRELIM. TRACING ____ J.A.D. ____ DESIGN ____ R.R.W./J.A.G. ____ CHKD. ____ J.M.P. ____

11/24/2003

M:\313031\ADP\S045273.dgn

11/24/2003

CONTRACT	COUNTY	F.A.P. NO.	SHEET NO.	TOTAL SHTS.
22-074-09	NEW CASTLE	SEE TITLE SHEET	14A	152

REHABILITATION OF BRIDGE NOS. 1-715, 1-715A, & 1-715D ON SR 273 OVER I-95

REVISIONS	
2 SR 273 MILL/OVERLAY & PATCHING WORK (ADDED SHEET)	
11/25/03 JMP/GM	

CONSTRUCTION

SCALE 0 150 300 FEET

GENERAL NOTES:

1. EXISTING INLETS WITHIN LIMITS OF MILL & OVERLAY ALONG SHOULDER OF SR 273 SHALL BE ADJUSTED AND REPAIRED AS DIRECTED BY THE ENGINEER. PAYMENT SHALL BE MADE UNDER ITEM 710001-ADJUSTING AND REPAIRING EXISTING DRAINAGE INLET.
2. THE CONTRACTOR SHALL NOTE THE EXISTANCE OF 4 VERIZON MANHOLES ALONG THE EB SR 273 OUTSIDE SHOULDER WITHIN THE MILL AND OVERLAY LIMITS. MILL AND OVERLAY OPERATION SHALL BE PERFORMED IN THE AREA OF THE MANHOLES TO MATCH EXISTING RIM ELEVATION SUCH THAT NO ADJUSTMENT IS NEEDED.
3. FOLLOWING OVERLAY APPLICATION 6 INCH SOLID WHITE EPOXY RESIN PAINT STRIPING SHALL BE PLACED ALONG SHOULDERS OF EB & WB SR 273 ADJACENT TO TRAVEL LANES.

LEGEND

2" UNIFORM HOT-MIX MILLING
2" TYPE C SUPERPAVE OVERLAY

PARTIAL-DEPTH CONCRETE PATCHING

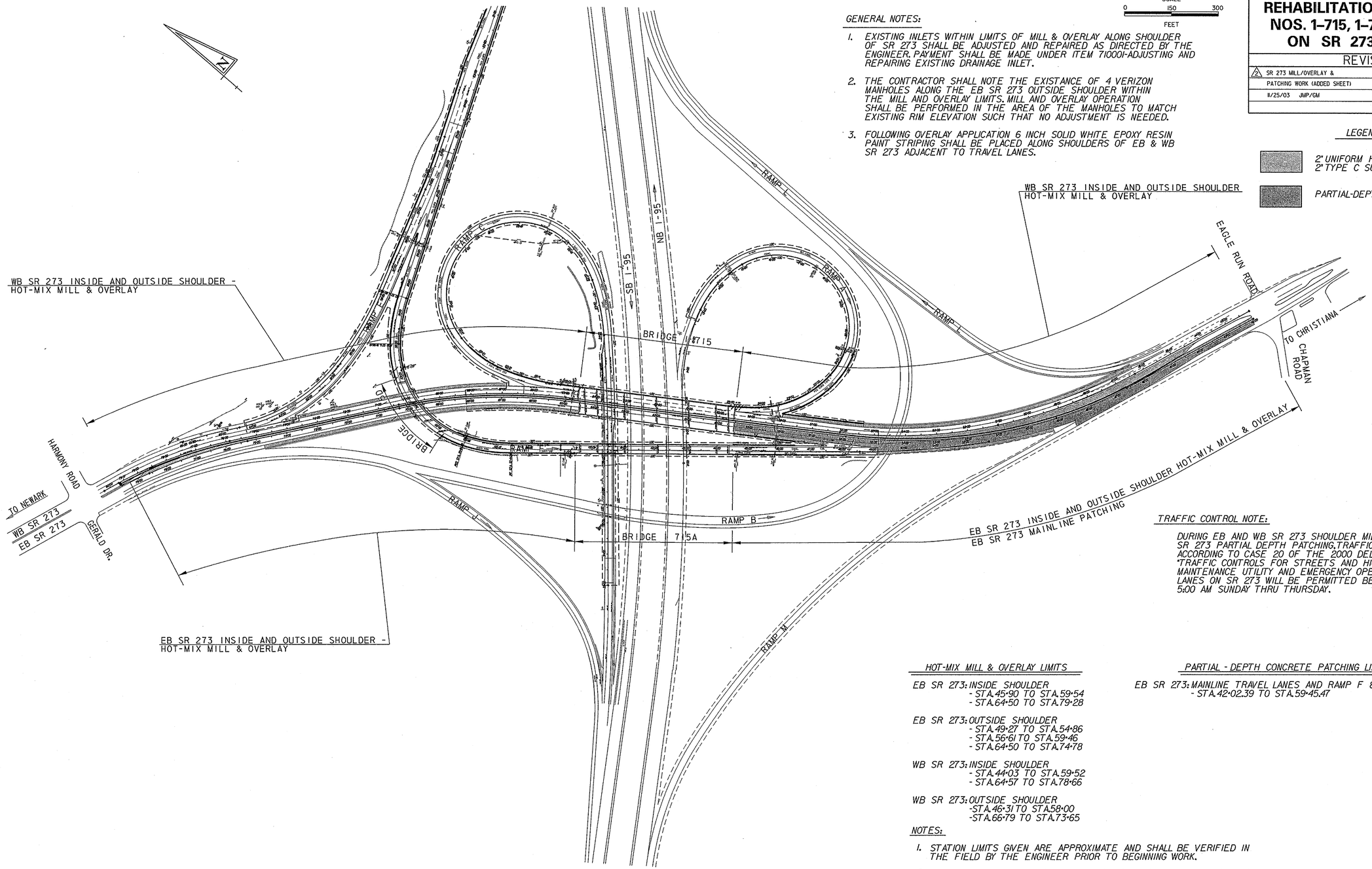

TRAFFIC CONTROL NOTE:

DURING EB AND WB SR 273 SHOULDER MILL AND OVERLAY AND EB SR 273 PARTIAL DEPTH PATCHING, TRAFFIC SHALL BE MAINTAINED ACCORDING TO CASE 20 OF THE 2000 DELAWARE MANUAL "TRAFFIC CONTROLS FOR STREETS AND HIGHWAY CONSTRUCTION, MAINTENANCE UTILITY AND EMERGENCY OPERATIONS." CLOSING LANES ON SR 273 WILL BE PERMITTED BETWEEN 8:00 PM AND 5:00 AM SUNDAY THRU THURSDAY.

HOT-MIX MILL & OVERLAY LIMITS

EB SR 273: INSIDE SHOULDER
- STA. 45+90 TO STA. 59+54
- STA. 64+50 TO STA. 79+28

EB SR 273: OUTSIDE SHOULDER
- STA. 49+27 TO STA. 54+86
- STA. 56+61 TO STA. 59+46
- STA. 64+50 TO STA. 74+78

WB SR 273: INSIDE SHOULDER
- STA. 44+03 TO STA. 59+52
- STA. 64+57 TO STA. 78+66

WB SR 273: OUTSIDE SHOULDER
- STA. 46+31 TO STA. 58+00
- STA. 66+79 TO STA. 73+65

PARTIAL - DEPTH CONCRETE PATCHING LIMITS

EB SR 273: MAINLINE TRAVEL LANES AND RAMP F & RAMP M MERGE AREA
- STA. 42+02.39 TO STA. 59+45.47

NOTES:

1. STATION LIMITS GIVEN ARE APPROXIMATE AND SHALL BE VERIFIED IN THE FIELD BY THE ENGINEER PRIOR TO BEGINNING WORK.
2. SHOULDER MILL & OVERLAY LIMITS SHALL ABUT PROPOSED CONSTRUCTION SHOWN ELSEWHERE IN CONTRACT PLANS, AS APPLICABLE.
3. LIMITS AND DEPTH OF CONCRETE PATCHING SHALL BE DELINEATED IN THE FIELD BY THE ENGINEER. THE QUANTITY OF PATCHING INCLUDED IN QUANTITY SHEETS REFLECTS A PATCHING SURVEY PERFORMED IN FALL 2003.

PREL. TRACING ____ W.R.A. ____ DESIGN ____ J.T.L./F.J.O. ____ CHKD. ____ W.A.G.

M:\313031\ADPS05S273.dgn

CONTRACT	COUNTY	F.A.P. NO.	SHEET NO.	TOTAL SHTS.
22-074-09	NEW CASTLE	SEE TITLE SHEET	15	152

REHABILITATION OF BRIDGE NOS. A 1 715, 1 715A, 1 715D ON SR 273 OVER I-95

REVISIONS

FOR REFERENCE ONLY

PROFILES

SCALE

0 50 100 150

FEET

15 10 5 0 FEET

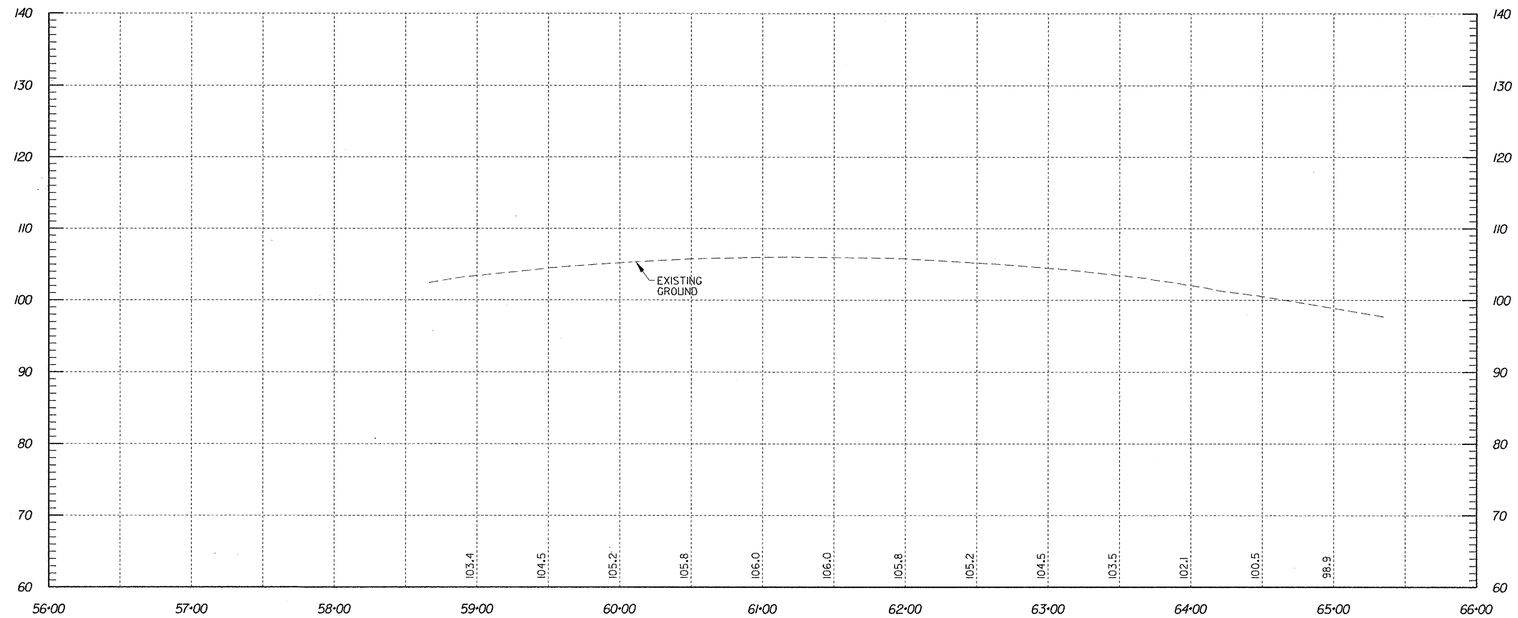

EB SR 273

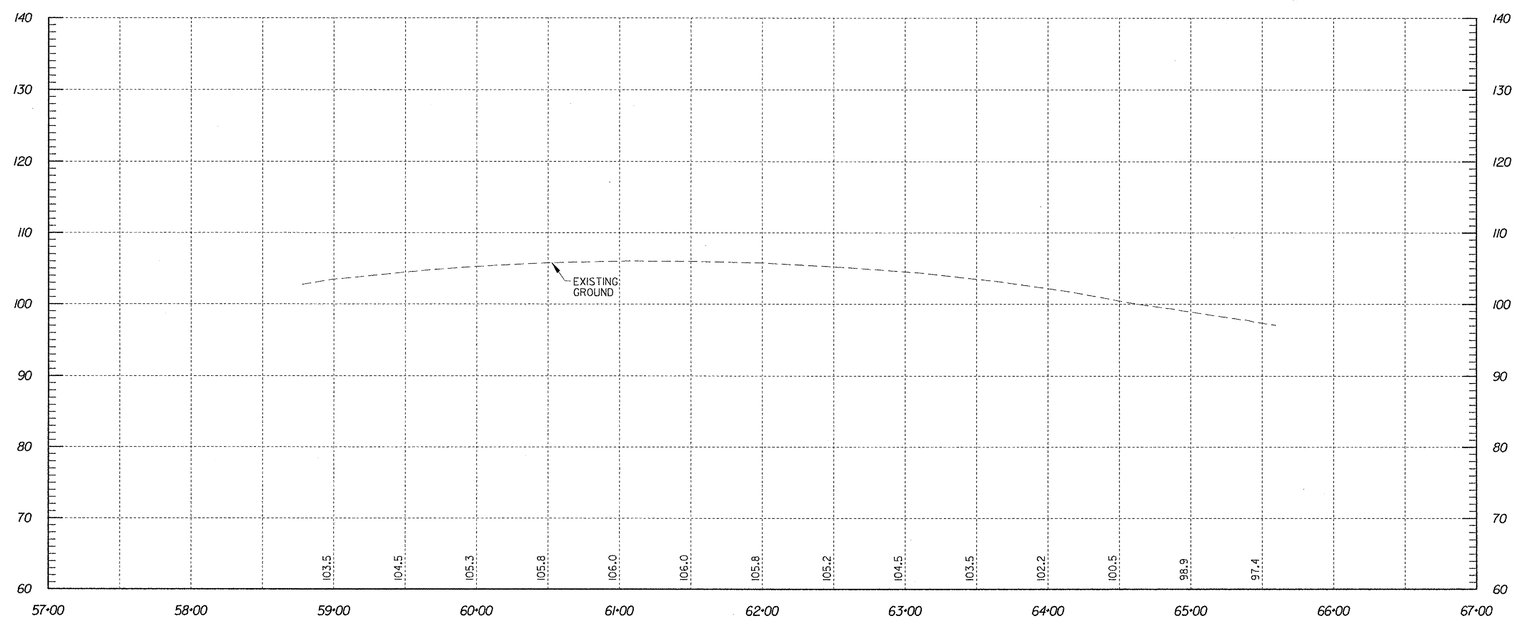

WB SR 273

PREL. TRACING _____ J.A.D. _____ DESIGN _____ R.R.W./J.A.C. _____ CHKD. _____ J.M.P. _____

PROFILES

SCALE

0 50 100 150

FEET

15 10 5 0 FEET

CONTRACT	COUNTY	F.A.P. NO.	SHEET NO.	TOTAL SHTS.
22-074-09	NEW CASTLE	SEE TITLE SHEET	16	152

REHABILITATION OF BRIDGE NOS. A 1 715, 1 715A, 1 715D ON SR 273 OVER I-95

REVISIONS

1 REVISED RAMP E PROFILE	
11/25/03 JMP/GM	

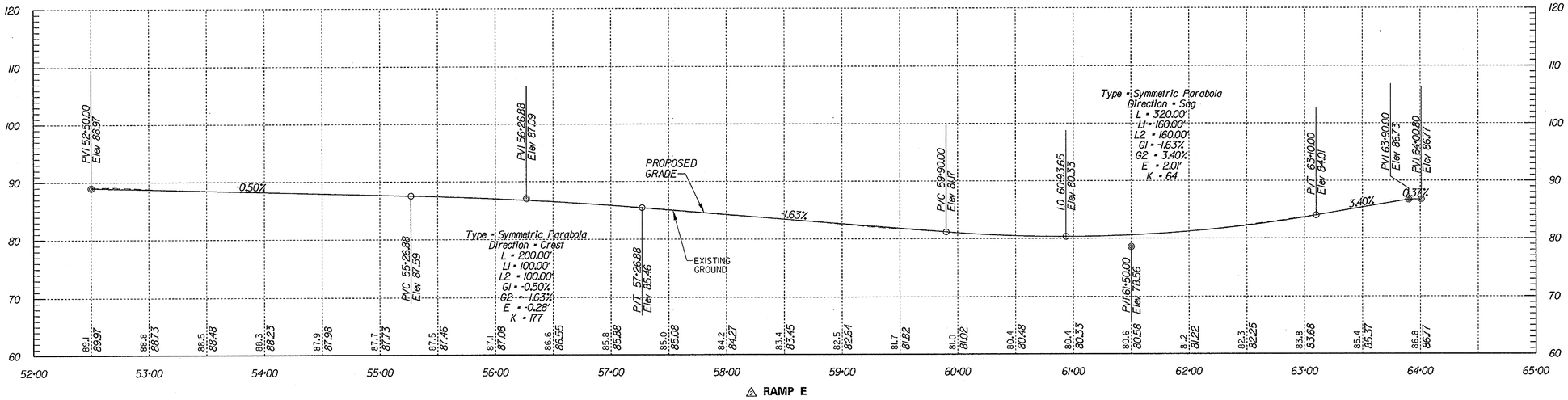

1 RAMP E

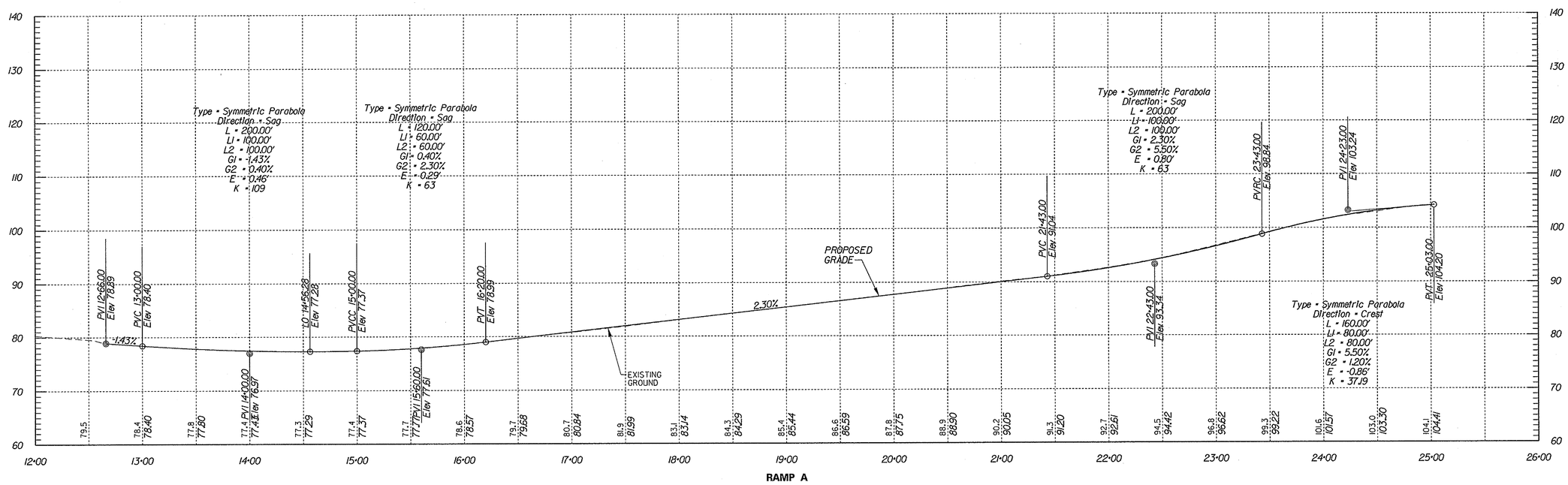

RAMP A

J.A.D. DESIGN R.R.M./J.A.G. CHKD. J.M.P.

PREL. TRACING

11/24/2003

11/24/2003

M:\3130314\ADPR02S273.dgn

CONTRACT	COUNTY	F.A.P. NO.	SHEET NO.	TOTAL SHTS.
22-074-09	NEW CASTLE	SEE TITLE SHEET	17	152

REHABILITATION OF BRIDGE NOS. A 1 715, 1 715A, 1 715D ON SR 273 OVER I-95

REVISIONS

PROFILES

SCALE 0 50 100 150 FEET

15 10 5 0 FEET

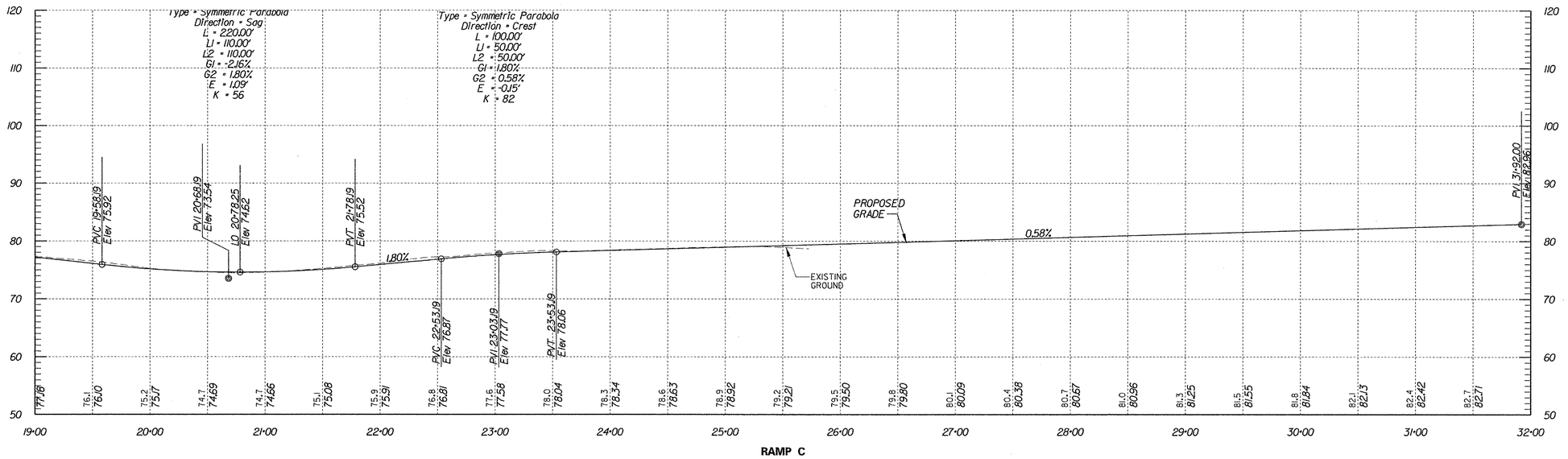

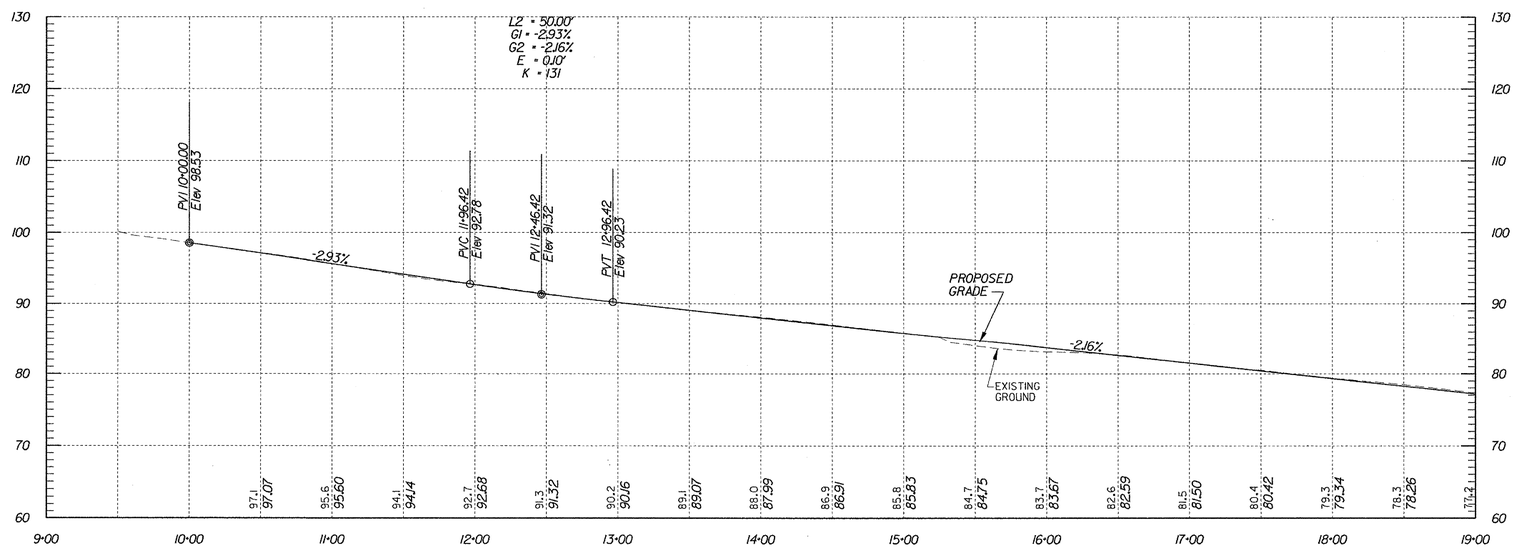

PREL. TRACING J.A.D. DESIGN R.R.W./J.A.G. CHKD. J.M.P.

9/5/2003 9/5/2003 M:\3130314\PR03S273.plf

PROFILES

SCALE
0 50 100 150
FEET

15 10 5 0 FEET

CONTRACT	COUNTY	F.A.P. NO.	SHEET NO.	TOTAL SHTS.
22-074-09	NEW CASTLE	SEE TITLE SHEET	18	152

REHABILITATION OF BRIDGE NOS. A 1 715, 1 715A, 1 715D ON SR 273 OVER I-95

REVISIONS

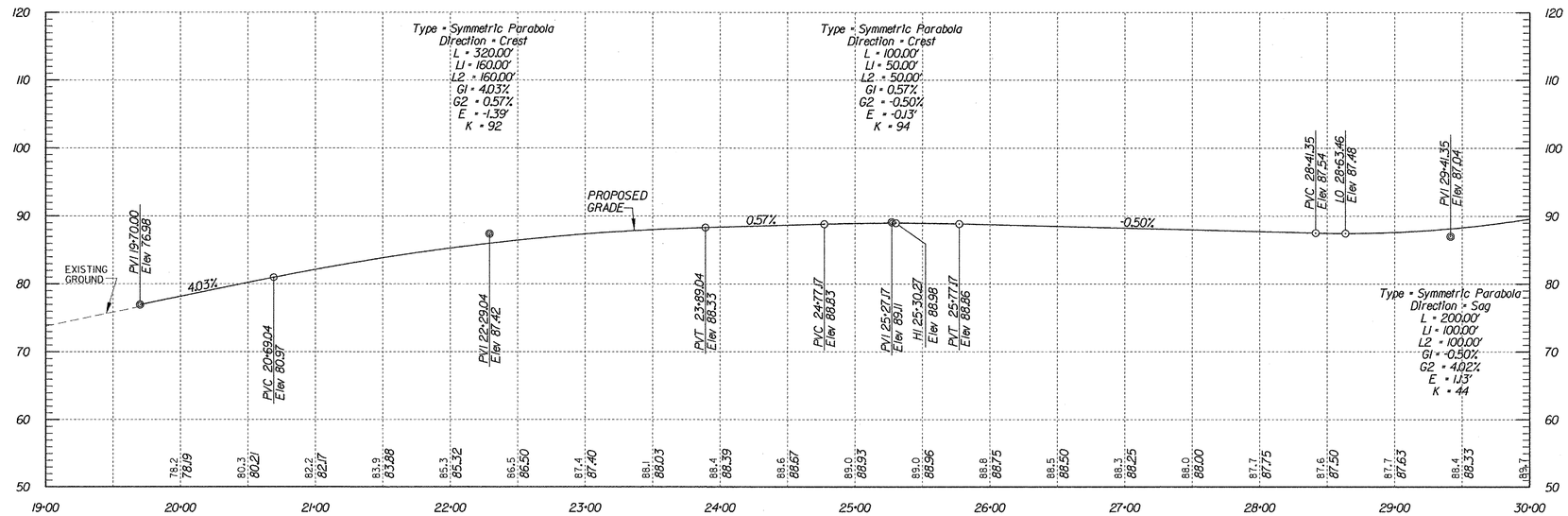

RAMP F

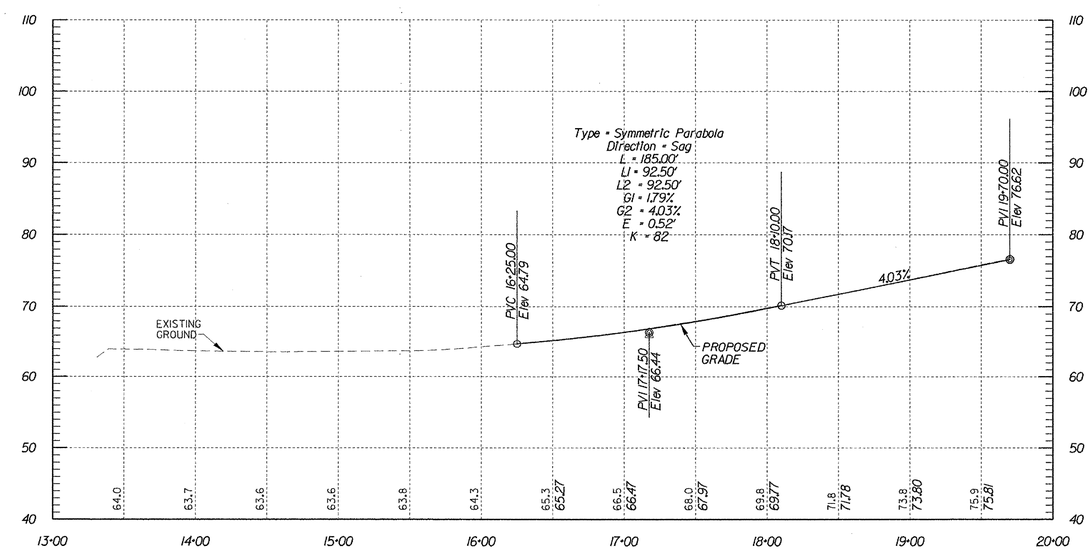

RAMP F

PREL. TRACING _____ J.A.D. _____ DESIGN _____ R.R.W./J.A.G. _____ CHKD. _____ J.M.P. _____

PROFILES

SCALE 0 50 100 150 FEET

15 10 5 0 FEET

CONTRACT	COUNTY	F.A.P. NO.	SHEET NO.	TOTAL SHTS.
22-074-09	NEW CASTLE	SEE TITLE SHEET	19	152

REHABILITATION OF BRIDGE NOS. A 1 715, 1 715A, 1 715D ON SR 273 OVER I-95

REVISIONS

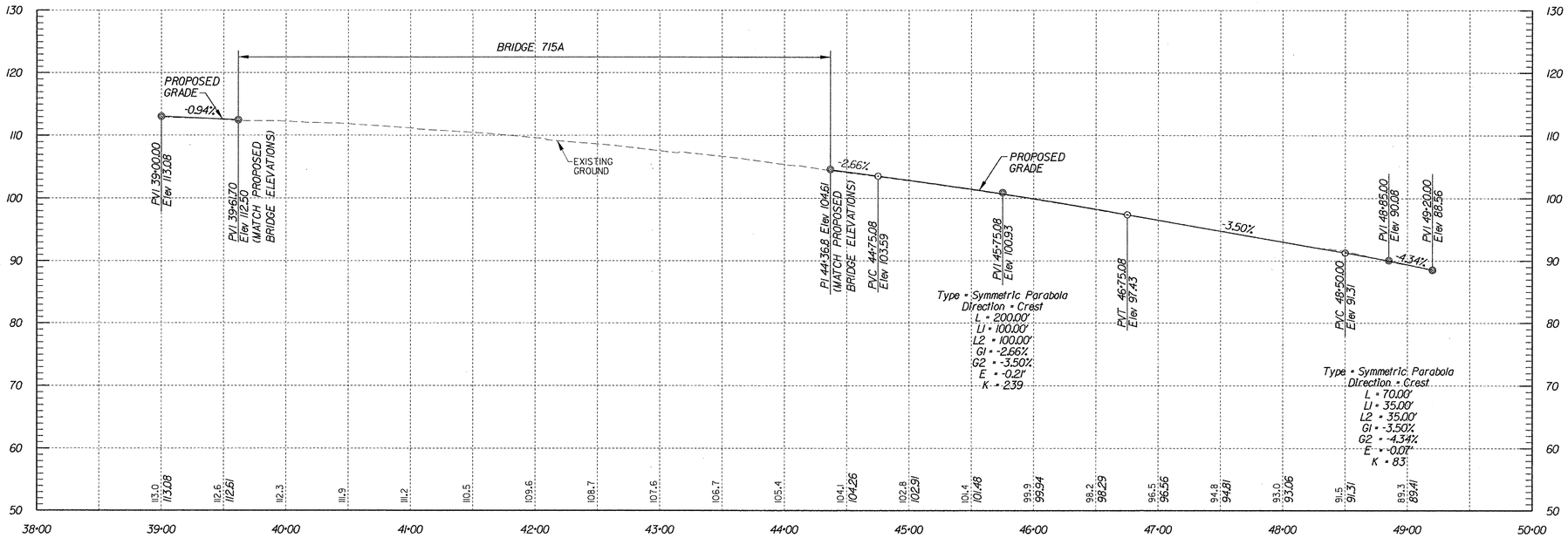

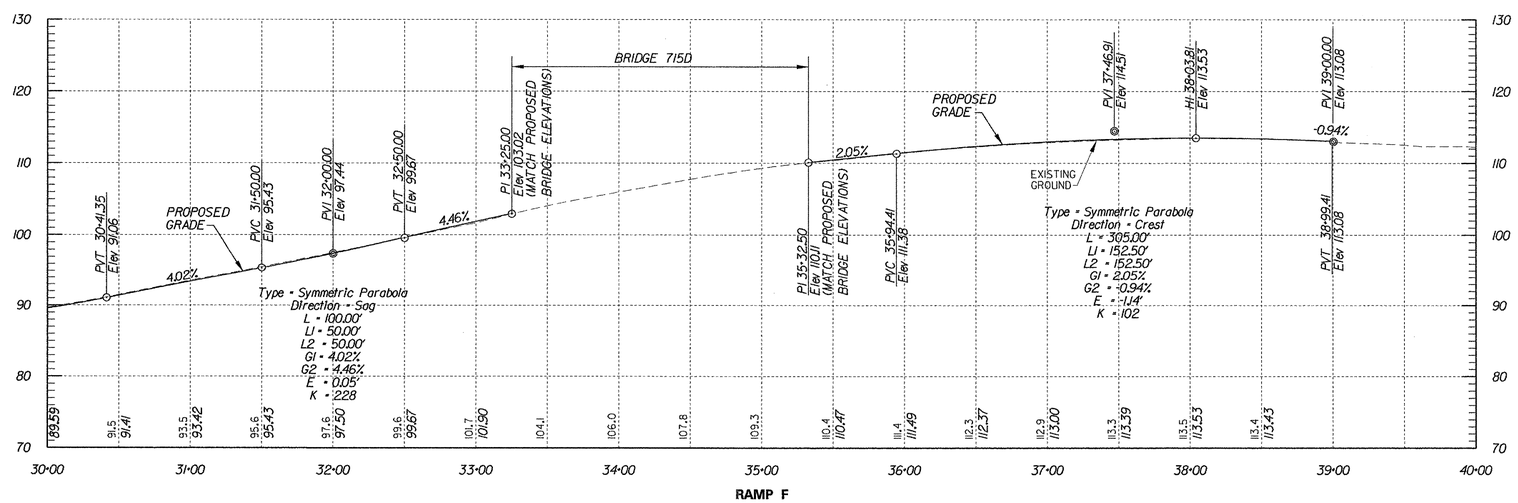

PREL. TRACING ____ J.A.D. ____ DESIGN ____ R.R.W./J.A.G. ____ CHK'D. ____ J.M.P. ____

GRADES AND GEOMETRICS

CONTRACT	COUNTY	F.A.P. NO.	SHEET NO.	TOTAL SHTS.
22-074-09	NEW CASTLE	SEE TITLE SHEET	20	152

REHABILITATION OF BRIDGE NOS. A 1 715, 1 715A, 1 715D ON SR 273 OVER I-95

REVISIONS

SCALE 0 50 100 150 FEET

N

GEOMETRY LAYOUT						
POINT TYPE	POINT NO.	BASELINE STATION	OFFSET	NORTH	EAST	ELEV.
PC	3000	E 64+18.7502	10.00	610084.8447	582488.5007	—
PCC	3001	E 60+63.6254	10.00	609985.0896	582816.3008	—
PI	3002	E 64+18.7502	-12.48	610066.5243	582475.4699	—
PI	3003	E 62+68.1485	-40.81	609968.7792	582601.9984	—
PC	3004	E 62+64.2000	-28.00	609979.4468	582610.2337	—
PCC	3005	E 60+63.6254	-28.00	609947.1039	582817.3430	—
CC	3006	E 64+41.6748	550.00	610524.8865	582801.4914	—
PCC	3008	E 60+63.6254	1000.00	610974.7172	582789.1502	—

NOTES:

1. *OFFSETS SHOWN IN THE GEOMETRY TABLES WITH A MINUS SIGN ARE TO THE LEFT OF THE RESPECTIVE CONSTRUCTION BASELINE.*
2. *UNLESS OTHERWISE NOTED, POINT GEOMETRY ADJACENT TO CURB IS GIVEN TO EDGE OF PAVEMENT.*
3. *RADII ARE GIVEN TO EDGE OF PAVEMENT.*
4. *ALL WORK REQUIRED FOR CALCULATING AND STAKING OF GRADES SHALL BE PAID FOR UNDER ITEM 763501 - CONSTRUCTION ENGINEERING.*
5. *PROPOSED CURBS OR PAVEMENT THAT TIE INTO EXISTING PAVEMENT OR EXISTING CURBS SHALL MATCH THE EXISTING PAVEMENT OR CURB ELEVATIONS.*

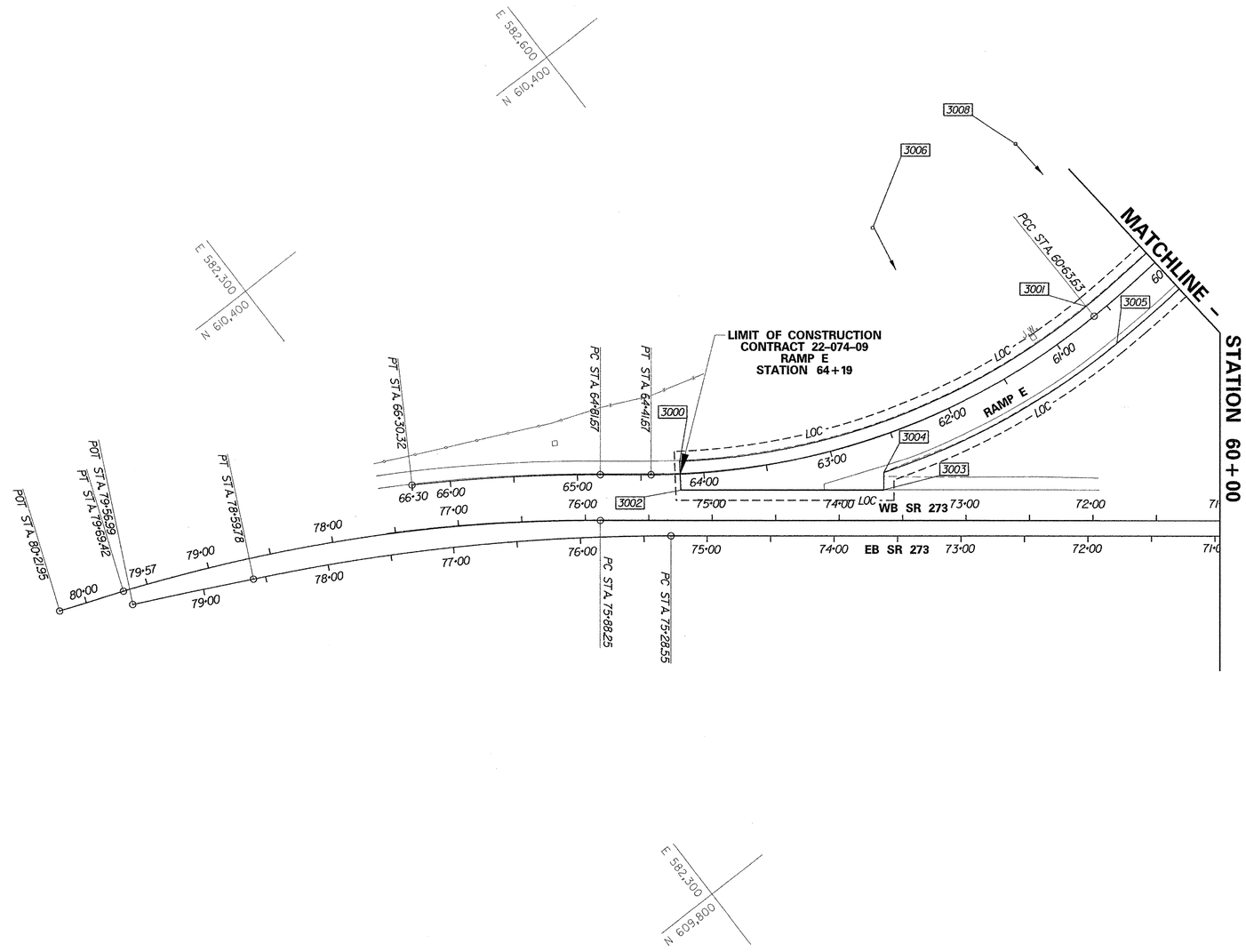

PREL. TRACING _____ J.A.D. _____ DESIGN _____ R.R.W./J.A.G. _____ CHKD. _____ J.M.P. _____

GRADES AND GEOMETRICS

SCALE 0 50 100 150 FEET

CONTRACT	COUNTY	F.A.P. NO.	SHEET NO.	TOTAL SHTS.
22-074-09	NEW CASTLE	SEE TITLE SHEET	21	152

REHABILITATION OF BRIDGE NOS. A 1 715, 1 715A, 1 715D ON SR 273 OVER I-95

REVISIONS

GEOMETRY LAYOUT						
POINT TYPE	POINT NO.	BASELINE STATION	OFFSET	NORTH	EAST	ELEV.
PT	3007	E 57+93.5125	10.00	610028.2176	583079.3889	—
PT	3009	E 57+93.5125	-28.00	609991.8873	583090.5294	—
PI	3010	E 56+99.9046	10.00	610055.6607	583168.8837	—
PI	3011	E 56+29.9703	-28.00	610039.8331	583246.8856	—
PC	3012	E 55+70.1031	-30.00	610055.4740	583304.7080	—
PC	3013	E 54+29.7729	10.00	610134.8550	583427.1460	—
PT	3014	E 53+00.0000	10.00	610177.9710	583548.5780	—
PI	3015	E 52+50.0005	10.00	610196.7400	583594.9210	—
PI	4007	F 24+87.1256	-4.00	610155.3220	583647.1640	—
PC	4008	F 30+48.1900	-4.00	609944.7083	583127.1303	—
PT	4009	F 31+98.1899	-4.00	609869.1524	582999.5875	—
PT	4032	F 28+42.0600	28.00	610051.7460	583306.1740	—
PI	4033	F 28+75.3038	26.00	610037.4130	583276.1120	—
PI	4034	F 29+94.9911	26.00	609992.4850	583165.1770	—
PI	4035	F 30+48.1900	26.00	609972.5140	583115.8690	—
PC	4036	F 31+98.1899	26.00	609892.3890	582980.6120	—
PT	4037	F 33+00.7859	26.00	609809.2050	582907.5790	—

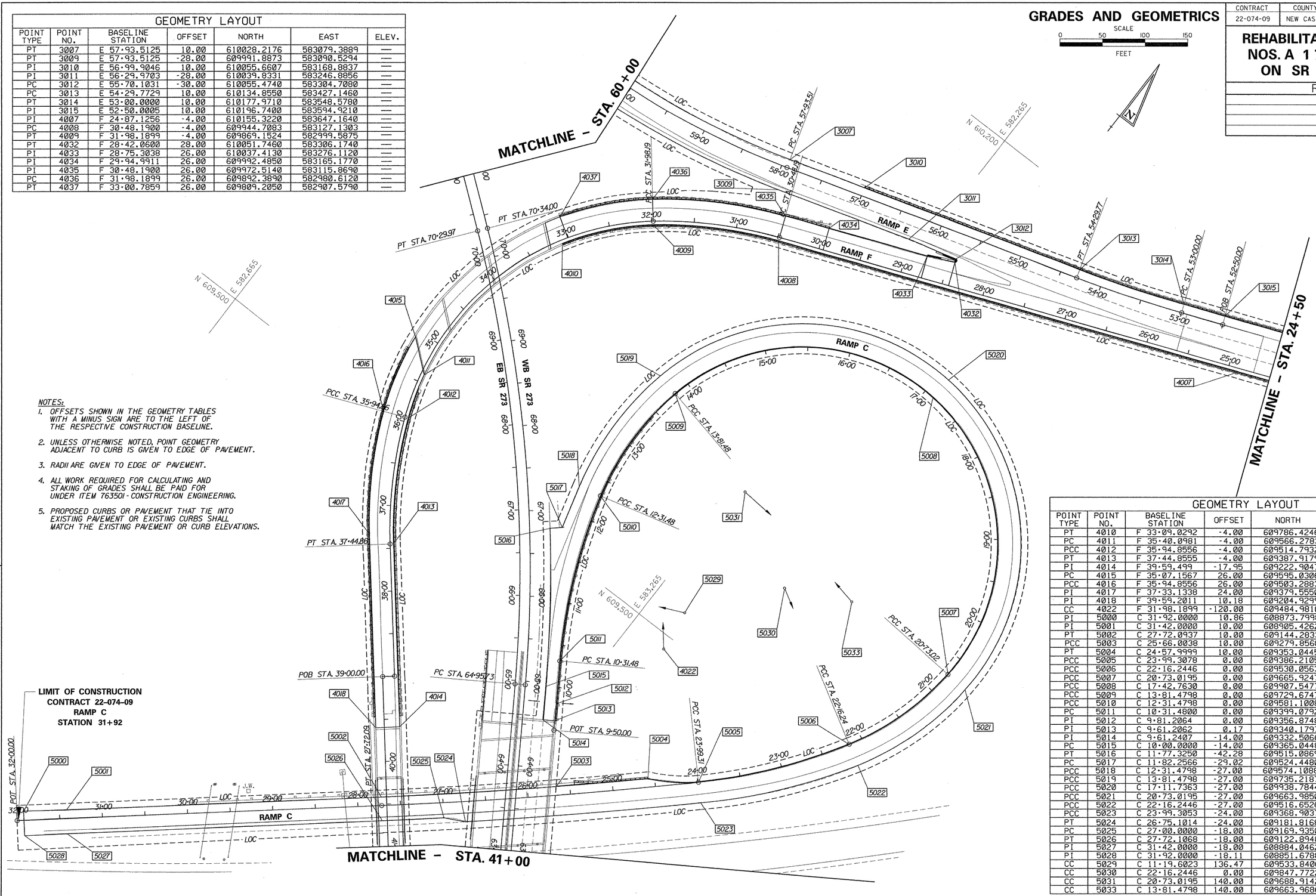

NOTES:

1. OFFSETS SHOWN IN THE GEOMETRY TABLES WITH A MINUS SIGN ARE TO THE LEFT OF THE RESPECTIVE CONSTRUCTION BASELINE.
2. UNLESS OTHERWISE NOTED, POINT GEOMETRY ADJACENT TO CURB IS GIVEN TO EDGE OF PAVEMENT.
3. RADII ARE GIVEN TO EDGE OF PAVEMENT.
4. ALL WORK REQUIRED FOR CALCULATING AND STAKING OF GRADES SHALL BE PAID FOR UNDER ITEM 763501-CONSTRUCTION ENGINEERING.
5. PROPOSED CURBS OR PAVEMENT THAT TIE INTO EXISTING PAVEMENT OR EXISTING CURBS SHALL MATCH THE EXISTING PAVEMENT OR CURB ELEVATIONS.

GEOMETRY LAYOUT						
POINT TYPE	POINT NO.	BASELINE STATION	OFFSET	NORTH	EAST	ELEV.
PT	4010	F 33+09.0292	-4.00	609786.4246	582928.8804	—
PC	4011	F 35+40.0981	-4.00	609566.2783	582894.3129	—
PCC	4012	F 35+94.8556	-4.00	609514.7932	582910.5364	—
PT	4013	F 37+44.8555	-4.00	609387.9179	582987.2079	—
PI	4014	F 39+59.499	-17.95	609222.9047	583124.3957	—
PC	4015	F 35+07.1567	26.00	609595.0306	582859.1962	—
PCC	4016	F 35+94.8556	26.00	609503.2883	582882.8302	—
PI	4017	F 37+33.1338	24.00	609379.5550	582957.9350	—
PI	4018	F 39+59.2011	10.18	609204.9299	583102.9250	—
CC	4022	F 31+98.1899	-120.00	609484.9810	583313.3200	—
PI	5000	C 31+92.0000	10.86	608873.7998	582837.0190	—
PI	5001	C 31+42.0000	10.00	608905.4262	582875.7556	—
PT	5002	C 27+72.0937	10.00	609144.2833	583158.2055	—
PCC	5003	C 25+66.0038	10.00	609279.8560	583312.9460	—
PT	5004	C 24+57.9999	10.00	609353.0445	583392.1191	—
PCC	5005	C 23+99.3078	0.00	609386.2105	583441.5044	—
PCC	5006	C 22+16.2446	0.00	609530.0563	583553.7213	—
PCC	5007	C 20+73.0195	0.00	609665.9247	583595.1101	—
PCC	5008	C 17+42.7630	0.00	609907.5477	583412.9307	—
PCC	5009	C 13+81.4798	0.00	609723.6747	583140.6052	—
PCC	5010	C 12+31.4798	0.00	609581.1008	583144.7027	—
PC	5011	C 10+31.4800	0.00	609399.0792	583225.5953	—
PI	5012	C 9+81.2064	0.00	609356.8748	583252.9125	—
PI	5013	C 9+61.2062	0.17	609340.1797	583263.9267	—
PI	5014	C 9+61.2407	-14.00	609332.5066	583252.0084	—
PC	5015	C 10+00.0000	-14.00	609365.0448	583230.9477	—
PT	5016	C 11+77.3250	-42.28	609515.0869	583121.1539	—
PC	5017	C 11+82.2566	-29.02	609524.4480	583131.8980	—
PCC	5018	C 12+31.4798	-27.00	609574.1088	583118.6238	—
PCC	5019	C 13+81.4798	-27.00	609735.2187	583114.1805	—
PCC	5020	C 17+11.7363	-27.00	609938.7844	583384.1679	—
PCC	5021	C 20+73.0195	-27.00	609663.9850	583622.0404	—
PCC	5022	C 22+16.2446	-27.00	609516.6526	583577.1594	—
PCC	5023	C 23+99.3053	-24.00	609368.9037	583458.1319	—
PT	5024	C 26+75.1014	-24.00	609181.8168	583254.0013	—
PC	5025	C 27+00.0000	-18.00	609169.9350	583231.2155	—
PT	5026	C 27+72.1068	-18.00	609122.8948	583176.2758	—
PI	5027	C 31+42.0000	-18.00	608884.0462	582893.8358	—
PI	5028	C 31+92.0000	-18.11	608851.6788	582855.7260	—
CC	5029	C 11+19.6023	136.47	609533.8406	583306.6045	—
CC	5030	C 22+16.2446	0.00	609847.7722	582998.1526	—
CC	5031	C 20+73.0195	140.00	609688.9142	583275.9370	—
CC	5033	C 13+81.4798	140.00	609663.9686	583453.7868	—

PREL. TRACING ____ J.A.D. ____ DESIGN ____ R.R.W./J.A.G. ____ CHK'D. ____ J.M.P. ____

9/5/2003 9/5/2003 M:\313031\GG002573.plf

GRADES AND GEOMETRICS

SCALE
0 50 100 150
FEET

CONTRACT	COUNTY	F.A.P. NO.	SHEET NO.	TOTAL SHTS.
22-074-09	NEW CASTLE	SEE TITLE SHEET	22	152

REHABILITATION OF BRIDGE NOS. A 1 715, 1 715A, 1 715D ON SR 273 OVER I-95

REVISIONS

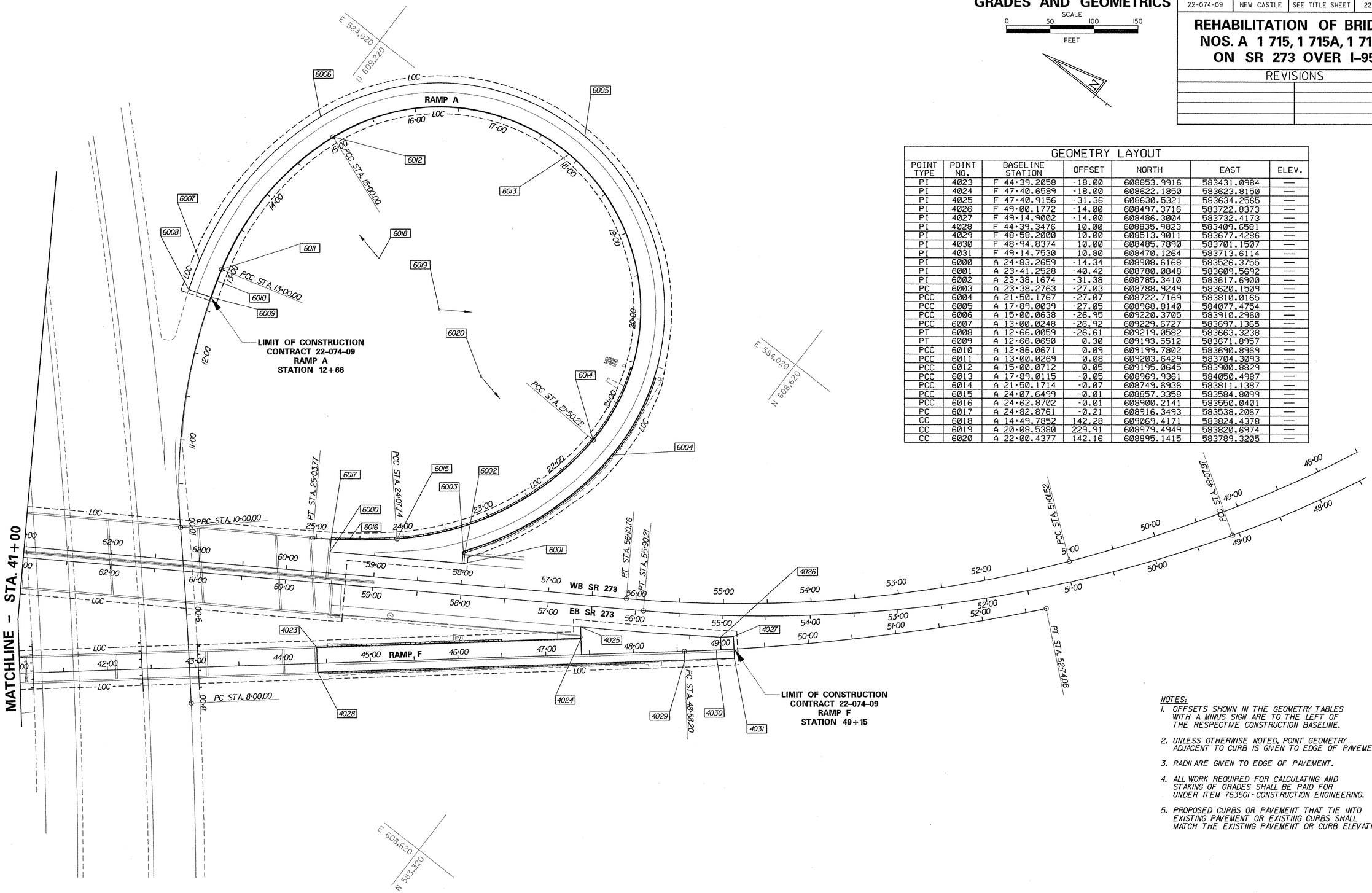

GEOMETRY LAYOUT						
POINT TYPE	POINT NO.	BASELINE STATION	OFFSET	NORTH	EAST	ELEV.
PI	4023	F 44+39.2058	-18.00	608853.9916	583431.0984	—
PI	4024	F 47+40.6589	-18.00	608622.1850	583623.8150	—
PI	4025	F 47+40.9156	-31.36	608630.5321	583634.2565	—
PI	4026	F 49+00.1772	-14.00	608497.3716	583722.8373	—
PI	4027	F 49+14.9002	-14.00	608486.3004	583732.4173	—
PI	4028	F 44+39.3476	10.00	608835.9823	583409.6581	—
PI	4029	F 48+58.2000	10.00	608513.9011	583677.4286	—
PI	4030	F 48+94.8374	10.00	608485.7890	583701.1507	—
PI	4031	F 49+14.7530	10.80	608470.1264	583713.6114	—
PI	6000	A 24+83.2659	-14.34	608908.6168	583526.3755	—
PI	6001	A 23+41.2528	-40.42	608780.0848	583609.5692	—
PI	6002	A 23+38.1674	-31.38	608785.3410	583617.6900	—
PC	6003	A 23+38.2763	-27.03	608788.9249	583620.1509	—
PCC	6004	A 21+50.1767	-27.07	608722.7169	583810.0165	—
PCC	6005	A 17+89.0039	-27.05	608968.8140	584077.4754	—
PCC	6006	A 15+00.0638	-26.95	609220.3705	583910.2960	—
PCC	6007	A 13+00.0248	-26.92	609229.6727	583697.1365	—
PT	6008	A 12+66.0059	-26.61	609219.0582	583663.3238	—
PT	6009	A 12+66.0650	0.30	609193.5512	583671.8957	—
PCC	6010	A 12+86.0671	0.09	609199.7802	583690.8969	—
PCC	6011	A 13+00.0269	0.08	609203.6429	583704.3093	—
PCC	6012	A 15+00.0712	0.05	609195.0645	583900.8829	—
PCC	6013	A 17+89.0115	-0.05	608969.9361	584050.4987	—
PCC	6014	A 21+50.1714	-0.07	608749.6936	583811.1387	—
PCC	6015	A 24+07.6499	-0.01	608857.3358	583584.8099	—
PCC	6016	A 24+62.8702	-0.01	608900.2141	583550.0401	—
PC	6017	A 24+82.8761	-0.21	608916.3493	583538.2067	—
CC	6018	A 14+49.7852	142.28	609069.4171	583824.4378	—
CC	6019	A 20+08.5380	229.91	608979.4949	583820.6974	—
CC	6020	A 22+00.4377	142.16	608895.1415	583789.3205	—

NOTES:

1. OFFSETS SHOWN IN THE GEOMETRY TABLES WITH A MINUS SIGN ARE TO THE LEFT OF THE RESPECTIVE CONSTRUCTION BASELINE.
2. UNLESS OTHERWISE NOTED, POINT GEOMETRY ADJACENT TO CURB IS GIVEN TO EDGE OF PAVEMENT.
3. RADII ARE GIVEN TO EDGE OF PAVEMENT.
4. ALL WORK REQUIRED FOR CALCULATING AND STAKING OF GRADES SHALL BE PAID FOR UNDER ITEM 763501-CONSTRUCTION ENGINEERING.
5. PROPOSED CURBS OR PAVEMENT THAT TIE INTO EXISTING PAVEMENT OR EXISTING CURBS SHALL MATCH THE EXISTING PAVEMENT OR CURB ELEVATIONS.

PREL. TRACING ____ J.A.D. ____ DESIGN ____ R.R.W./J.A.G. ____ CHKD. ____ J.M.P. ____

GEOMETRY LAYOUT						
POINT TYPE	POINT NO.	BASELINE STATION	OFFSET	NORTH	EAST	ELEV.
PI	4000	F 16+25.0000	9.98	610514.1536	584431.9892	—
PI	4001	F 16+25.0000	-28.66	610478.3391	584446.4941	—
PI	4002	F 16+45.0000	10.00	610506.6643	584413.4444	—
PI	4003	F 16+45.0000	-28.00	610471.4433	584427.7089	—
PI	4004	F 19+70.0000	10.00	610384.6633	584112.2076	—
PI	4006	F 22+69.6833	54.00	610290.7060	583826.9320	—

NOTES:

1. OFFSETS SHOWN IN THE GEOMETRY TABLES WITH A MINUS SIGN ARE TO THE LEFT OF THE RESPECTIVE CONSTRUCTION BASELINE.
2. UNLESS OTHERWISE NOTED, POINT GEOMETRY ADJACENT TO CURB IS GIVEN TO EDGE OF PAVEMENT.
3. RADII ARE GIVEN TO EDGE OF PAVEMENT.
4. ALL WORK REQUIRED FOR CALCULATING AND STAKING OF GRADES SHALL BE PAID FOR UNDER ITEM 763501-CONSTRUCTION ENGINEERING.
5. PROPOSED CURBS OR PAVEMENT THAT TIE INTO EXISTING PAVEMENT OR EXISTING CURBS SHALL MATCH THE EXISTING PAVEMENT OR CURB ELEVATIONS.

GRADES AND GEOMETRICS

SCALE 0 50 100 150 FEET

CONTRACT	COUNTY	F.A.P. NO.	SHEET NO.	TOTAL SHTS.
22-074-09	NEW CASTLE	SEE TITLE SHEET	23	152

REHABILITATION OF BRIDGE NOS. A 1 715, 1 715A, 1 715D ON SR 273 OVER I-95

REVISIONS

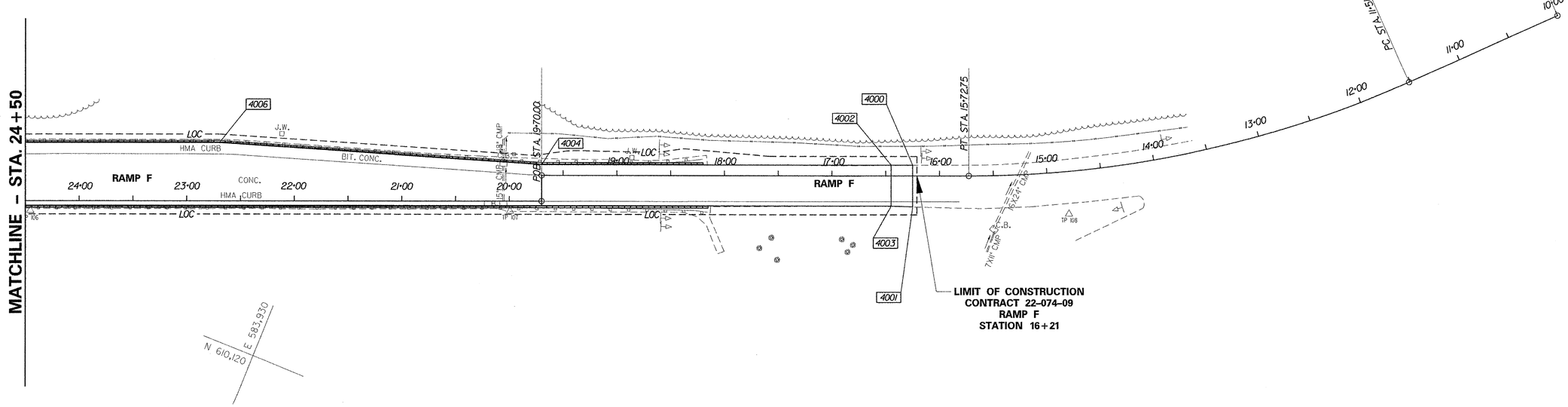

PREL. TRACING ____ J.A.D. ____ DESIGN ____ R.R.W./J.A.G. ____ CHKD. ____ J.M.P. ____

9/5/2003 9/5/2003 M:\313031\GG045273.PLF

CONSTRUCTION DETAILS

SCALE: SHOWN

CONTRACT	COUNTY	F.A.P. NO.	SHEET NO.	TOTAL SHTS.
22-074-09	NEW CASTLE	SEE TITLE SHEET	24	152

REHABILITATION OF BRIDGE NOS. A 1 715, 1 715A, 1 715D ON SR 273 OVER I-95

REVISIONS

2 ADDED PATCHING DETAIL;	
REVISED MOD. CURB QUANTITIES	
11/25/03 JMP/GM	

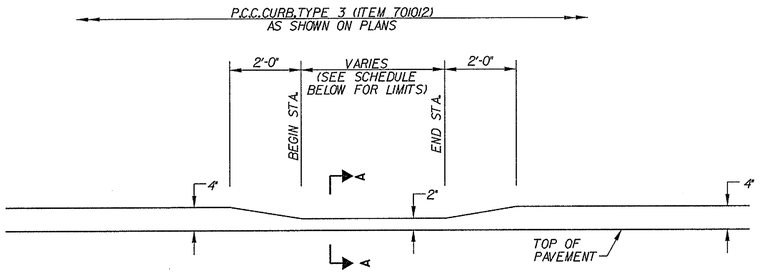

P.C.C. CURB TYPE 3, MODIFIED WITH 2" REVEAL

SCALE: NONE

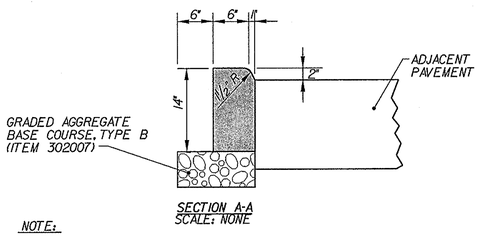

SECTION A-A
SCALE: NONE

NOTE:

PORTION OF P.C.C. CURB WITH 2" REVEAL, INCLUDING TAPER SECTION, SHALL BE MEASURED AND PAID FOR UNDER ITEM 701012 - P.C.C. CURB, TYPE 3.

P.C.C. CURB TYPE 3
MODIFIED WITH 2" REVEAL

REVEAL	BEGIN STATION	END STATION	LENGTH
2"	F 29+45, RT.	F 30+57, RT.	112'
2"	A 20+07, RT.	A 21+19, RT.	112'
2"	A 20+11, LT.	A 21+23, LT.	112'
2"	F 17+65, LT.	F 18+77, LT.	112'
2"	F 17+70, RT.	F 18+82, RT.	112'
2"	SR 273 55+39, RT.	SR 273 56+63, RT.	124'
2"	SR 273 66+91, LT.	SR 273 68+15, LT.	124'

2

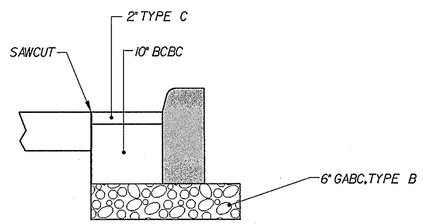

PATCHING ADJACENT TO CURB

SCALE: NONE

NOTE:
COST FOR ADDITIONAL HANDWORK NEEDED TO PLACE MATERIALS IN PATCH SECTION SHOWN ABOVE SHALL BE INCIDENTAL TO THE APPLICABLE PAVING ITEMS.

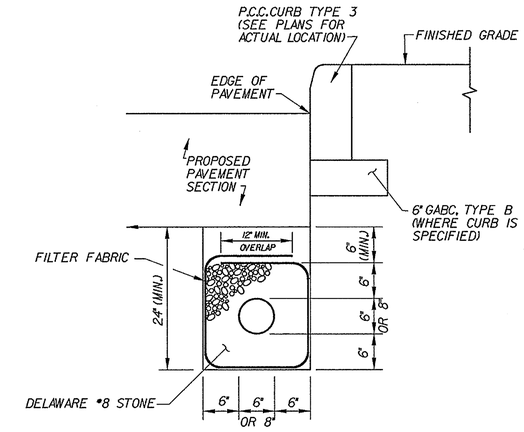

SECTION

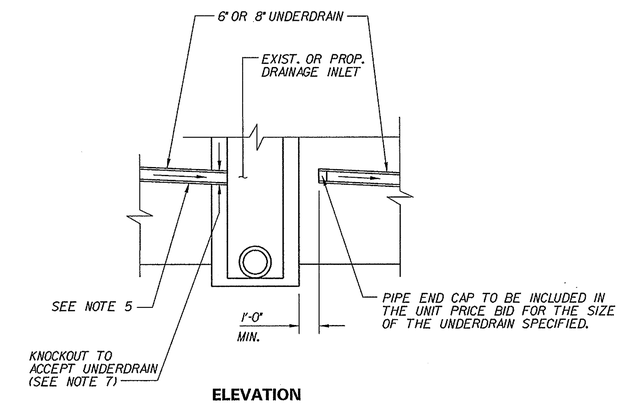

ELEVATION

NOTES:

1. FILTER FABRIC SHALL BE PLACED ENTIRELY OVER THE TOP OF UNDERDRAIN TRENCH.
2. SLOPE OF UNDERDRAINS SHALL MATCH ROADWAY GRADE, UNLESS OTHERWISE DIRECTED BY THE ENGINEER.
3. FILTER FABRIC SHALL BE MIRAFI 140N, EXXON GTF 130D OR APPROVED EQUAL.
4. PERFORATIONS SHALL BE DIRECTED DOWNWARD.
5. LAST 3' OF UNDERDRAIN SHALL BE NON-PERFORATED AND SHALL BE MEASURED AND PAID FOR UNDER THE SIZE OF THE UNDERDRAIN SPECIFIED.
6. OUTLET PIPE CONNECTIONS SHALL USE 45 OR 22½ DEGREE ELBOWS, WHERE NEEDED TO DIRECT UNDERDRAIN PIPE INTO SIDE OF DRAINAGE INLET OR TO UNDERDRAIN OUTLET.
7. COST FOR ELBOWS AND WORK TO INSTALL KNOCKOUT IN EXISTING DRAINAGE INLETS SHALL BE INCIDENTAL TO THE SIZE OF THE UNDERDRAIN SPECIFIED.
8. FOR UNDERDRAIN OUTLETS ON - GRADE, MEASUREMENT FOR OUTLET PIPE SHALL BEGIN AT END OF PIPE BEND CONNECTION - SEE DETAIL THIS SHEET FOR CONCRETE HEADWALL FOR UNDERDRAIN OUTLET.

PERFORATED PIPE UNDERDRAIN DETAIL

NOT TO SCALE

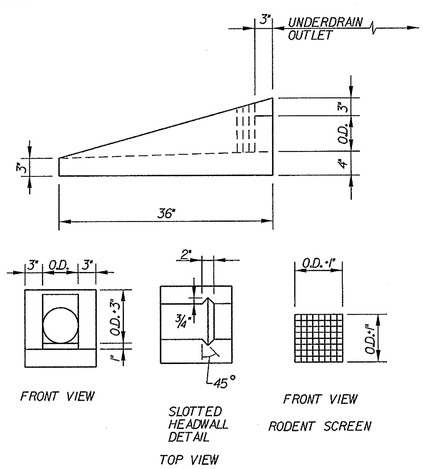

NOTES:

1. CONCRETE TO BE CLASS B, 3000 P.S.I. UNIT MAY BE PRECAST WITH APPROVAL OF THE ENGINEER.
2. FURNISH AND PLACE 1 C.Y. COARSE AGGREGATE BETWEEN THE CONCRETE AND THE GROUND.
3. RODENT SCREEN SHALL BE HEAVY HOT GALVANIZED STEEL WIRE MESH, 16 GAGE, WITH NOMINAL OPENINGS OF ONE-HALF INCH SQUARE AND SHALL SNUGLY FIT THE PROVIDED SLOT WITH THE SCREEN UP FITTING TIGHT TO THE BOTTOM FLOWLINE. THE RODENT SCREEN REPLACES THE "BOLTS TO BLOCK OPENING" SPECIFIED IN ITEM 715500.
4. A 4-FOOT FLEXIBLE DELINEATOR SHALL BE FURNISHED AND INSTALLED AT THE DIRECTION OF THE ENGINEER TO MARK THE LOCATION OF THE CONCRETE HEADWALL. COST INCIDENTAL TO ITEM 707005 - DOWNSPOUT SPLASH APRONS.
5. COST OF CONCRETE HEADWALL, RODENT SCREEN, DELINEATOR AND COARSE AGGREGATE, COMPLETE AND IN PLACE, TO BE INCLUDED IN THE UNIT PRICE BID FOR ITEM 707005 - DOWNSPOUT SPLASH APRONS.
6. WHEN TWO LINES OF PIPE UNDERDRAIN DRAIN TO A LOW POINT, ONLY ONE UNDERDRAIN OUTLET PIPE IS TO BE USED. CONNECTION SHALL BE MADE WITH A "Y" AT THE END OF THE CONNECTING PIPE. FURNISHING AND INSTALLING THE "Y" SHALL BE INCLUDED IN THE UNIT PRICE BID ITEM 715001 - PERFORATED PIPE UNDERDRAINS 6".

CONCRETE HEADWALL FOR UNDERDRAIN OUTLET

SCALE: NONE

J.M.P. CHKD. R.R.W./J.A.G. DESIGN J.A.D. PREL. TRACING

MAINTENANCE OF TRAFFIC
GENERAL TRAFFIC CONTROL NOTES

CONTRACT	COUNTY	F.A.P. NO.	SHEET NO.	TOTAL SHTS.
22-074-09	NEW CASTLE	SEE TITLE SHEET	25	152

REHABILITATION OF BRIDGE NOS. A 1 715, 1 715A, 1 715D ON SR 273 OVER I-95

REVISIONS

1 ADDED NOTE 11/25/03 - NML/GM	

GENERAL TRAFFIC CONTROL NOTES

1. ALL WORK SHALL BE PERFORMED IN A MANNER THAT WILL INSURE THE LEAST PRACTICABLE OBSTRUCTION TO TRAFFIC CONSISTENT WITH SAFETY STANDARDS AND SHALL COMPLY WITH THE LATEST EDITION OF THE MANUAL TITLED "DELAWARE TRAFFIC CONTROLS FOR STREETS AND HIGHWAY CONSTRUCTION, MAINTENANCE, UTILITY AND EMERGENCY OPERATIONS." HERE AFTER REFERRED TO AS THE TRAFFIC CONTROL MANUAL.

2. THE CONTRACTOR SHALL BE RESPONSIBLE FOR COORDINATING HIS WORK WITH OTHER CONTRACTORS IN THE AREA.

3. THE CONTRACTOR WILL BE RESPONSIBLE FOR NOTIFYING THE LOCAL 911 CENTER, LOCAL SCHOOLS, AND THE DELDOT PUBLIC INFORMATION CENTER OF ALL ROADS AND LANES TO BE CLOSED AT A MINIMUM OF SEVEN (7) CALENDAR DAYS BEFORE THE CLOSURE. IF TEMPORARILY BLOCKING ACCESS TO A FIRE HYDRANT IS REQUIRED, NOTIFICATION MUST BE GIVEN TO NEW CASTLE COUNTY, THE LOCAL FIRE FIGHTING AUTHORITIES, AND THE 911 CENTER.

4. ALL TRAFFIC CONTROL DEVICES SHALL BE IN NEW OR REFURBISHED CONDITION, SHALL COMPLY WITH THE TRAFFIC CONTROL MANUAL. TRAFFIC CONTROL DEVICES SHALL BE MAINTAINED IN GOOD CONDITION FOR DURATION OF USE.

5. ALL TEMPORARY OR PERMANENT WARNING SIGNS WILL BE COVERED WITH RETROREFLECTIVE FLUORESCENT SHEETING, ELIMINATING THE NEED FOR TYPE "B" WARNING LIGHTS ON THESE SIGNS. ALL OF THESE SIGNS SHALL BE MOUNTED ON BREAKAWAY POSTS SUCH THAT THE BOTTOM OF THE SIGN IS 7' ABOVE THE GROUND UNLESS OTHERWISE AUTHORIZED BY THE ENGINEER.

6. REMOVAL OF THE EXISTING PAVEMENT MARKINGS AS DIRECTED BY THE ENGINEER SHALL BE PAID UNDER ITEM 748530 - REMOVAL OF PAVEMENT STRIPING. ALL MARKINGS THAT ARE NO LONGER IN USE AND CONFLICT WITH THE PAVEMENT MARKINGS IN USE BY THE TRAVELING PUBLIC ARE TO BE REMOVED AND MUST BE COMPLETELY OBLITERATED BY A METHOD APPROVED BY THE ENGINEER. PAINTING OVER THE CONFLICTING STRIPING WILL NOT BE ACCEPTED. MAINTENANCE OF TRAFFIC DURING INSTALLATION OF THE TEMPORARY PAVEMENT MARKINGS SHALL CONFORM TO CASE 8B AND 8C OF THE TRAFFIC CONTROL MANUAL.

7. THE FIRST TWO DRUMS IN A LINE OF DRUMS USED TO CHANNELIZE OR DIVERT TRAFFIC SHALL EACH BE EQUIPPED WITH ONE (1) AMBER TYPE 'B' FLASHING LIGHT AND THE LAST DRUM SHALL HAVE ONE TYPE 'A' LIGHT. EACH SUBSEQUENT DRUM IN THAT LINE SHALL NOT BE EQUIPPED WITH LIGHTS. THE BATTERIES SHALL BE MOUNTED WITHIN THE DRUM AS PER THE TRAFFIC CONTROL MANUAL. DRUM SPACING SHALL EQUAL TWICE THE SPEED LIMIT EXCEPT ON TAPERS WHERE SPACING SHALL EQUAL 25 FEET, OR AS SHOWN ON THE TRAFFIC CONTROL PLAN.

8. ROADWAY EXCAVATION ADJACENT TO TRAVEL LANES SHALL NOT BE MORE THAN THE CONTRACTOR CAN BACKFILL WITH BASE COURSE TO WITHIN 2" OF THE ROADWAY WITHIN ONE (1) WORKING DAY. THE CONTRACTOR SHALL FOLLOW THE REQUIREMENTS OF THE TRAFFIC CONTROL MANUAL TO FORM 4:1 WEDGE/FILLET FOR AREA OF GRADE DIFFERENTIAL FROM BASE COURSE TO PAVEMENT EDGE. THE WEDGE/FILLET MATERIAL SHALL BE GRADED AGGREGATE BASE COURSE, TYPE 'B' AND WILL BE PAID FOR UNDER ITEM 763500 - MAINTENANCE OF TRAFFIC. THIS MATERIAL SHALL BE REMOVED AND REUSED, AS REQUIRED, FOR EXCAVATIONS ELSEWHERE ON THE PROJECT. SEE SECTION C-6 OF THE TRAFFIC CONTROL MANUAL FOR ADDITIONAL REQUIREMENTS RELATED TO VERTICAL DIFFERENCES.

9. THE CONTRACTOR SHALL SUPPLY MESSAGE BOARDS UNDER ITEM 743514 - FURNISH AND MAINTAIN MESSAGE BOARD. THE CONTRACTOR MUST DESIGNATE WHO SHALL BE RESPONSIBLE FOR THESE MESSAGE BOARDS. MOVING THE MESSAGE BOARDS TO DIFFERENT LOCATIONS DURING CONSTRUCTION WILL BE INCIDENTAL TO ITEM 743514. AT A MINIMUM, MESSAGE BOARDS SHALL BE POSTED 1 WEEK PRIOR TO CHANGES IN TRAFFIC PATTERNS.

10. A TRUCK MOUNTED ATTENUATOR, TYPE II (ITEM 743537) SHALL ALSO BE REQUIRED WHEN TRAFFIC IS PRESENT DURING THE FOLLOWING OPERATIONS:
    - -TEMPORARY/PERMANENT PAVEMENT MARKING;
    - -PATCHING;
    - -MILLING OPERATION,
    - -PAVING,
    - -PLACEMENT/REMOVAL OF TEMPORARY CONCRETE BARRIER,
    - -FOR OTHER OPERATIONS AS DIRECTED BY THE ENGINEER.

11. UNLESS OTHERWISE NOTED ON PLANS, THE COST OF ANY FLOODLIGHTING NECESSARY DUE TO WORK OCCURRING AFTER DARK WILL BE PAID FOR UNDER ITEM 746591- FURNISH AND MAINTAIN PORTABLE LIGHT ASSEMBLY. DURING BOTH DAY AND NIGHT WORK, ALL PERSONS WORKING WITHIN THE WORKSITE MUST WEAR REFLECTORIZED VESTS.

12. WHERE TYPICAL TRAFFIC CONTROL PLANS FROM DELDOT'S TRAFFIC CONTROL MANUAL ARE USED, THE CONTRACTOR SHALL REVIEW THE REQUIRED SIGNING AND TRAFFIC CONTROL DEVICES WITH THE ENGINEER TO INSURE THEIR APPLICABILITY PRIOR TO IMPLEMENTATION. LONGITUDINAL DIMENSIONS FOR PLACEMENT OF PERMANENT OR TEMPORARY WARNING SIGNS MAY BE ADJUSTED SLIGHTLY TO FIT FIELD CONDITION AS DIRECTED BY THE ENGINEER.

13. PLASTIC DRUMS SHALL BE PLACED AT A MINIMUM OF 12 INCHES FROM THE EDGELINE OF TRAVEL LANE UNLESS OTHERWISE NOTED ON PLANS.

14. STEEL PLATES SHALL BE PLACED AS REQUIRED TO COVER OPEN TRENCHES IN TRAFFIC AREAS AND FOR PROTECTION DURING NON-WORKING HOURS. CONTRACTOR IS REQUIRED TO PROVIDE A 3" WIDE WEDGE OF TYPE B ASPHALT AROUND STEEL PLATES. DURING THE WINTER MONTHS, A MINIMUM OF 3" OF TYPE B ASPHALT COVER SHALL BE PROVIDED OVER STEEL PLATE EDGES FOR PROTECTION. COST FOR STEEL PLATES AND ASSOCIATED TYPE B ASPHALT, IF REQUIRED, SHALL BE INCIDENTAL TO ITEM 763500 - MAINTENANCE OF TRAFFIC. (SEE STEEL PLATE DETAIL ON SHEET 81)

15. THE CONTRACTOR SHALL STAGE CONSTRUCTION ACTIVITIES TO MAINTAIN ACCESS TO PUBLIC STREETS AT ALL TIMES. ANY TEMPORARY CLOSURE OF A DRIVEWAY FOR TIE-IN PURPOSES SHALL BE COORDINATED WITH THE ENGINEER AND/OR PROPERTY OWNER IN ADVANCE OF CLOSURE.

16. ROADWAY AND SHOULDER WORK SHALL BE PERFORMED IN A MANNER SUCH THAT POSITIVE DRAINAGE OF THE ROADWAY SURFACE IS MAINTAINED THROUGHOUT CONSTRUCTION.

17. THE DEPARTMENT WILL NOT MAKE PAYMENT TO THE CONTRACTOR FOR ANY AND ALL TRAFFIC CONTROL DEVICES WHICH ARE IN PLACE AND/OR REQUIRED DURING THE FOLLOWING PERIODS:

    A) PERIODS WHEN THE CONTRACTOR CAN PURSUE WORK, BUT CHOOSES NOT TO. THIS INCLUDES WEEKENDS WITHIN AND CONTIGUOUS TO THE PERIOD FOR WHICH THE CONTRACTOR CHOOSES NOT TO PURSUE WORK.

    B) PERIODS WHICH THE CONTRACTOR PURSUES WORK, BUT WHICH ARE OUTSIDE OF THE APPROVED CONTRACT TIME (ALLOCATED WORKING/CALENDAR DAYS AND JUSTIFIABLE EXTENSIONS).

18. CONSTRUCTION OF ANY PROPOSED DRAINAGE, TEMPORARY DRAINAGE OR INSTALLATION OF EROSION CONTROL MEASURES SHALL START AT THE OUTFALL AND PROGRESS UPSTREAM FOR ALL CONSTRUCTION PHASES.

19. THE CONTRACTOR SHALL BE RESPONSIBLE FOR MAINTAINING PEDESTRIAN AND BICYCLE TRAFFIC ALONG SR 273.

20. ACCESS TO ALL BUSINESSES AND RESIDENCES WITHIN THE PROJECT LIMITS SHALL BE PROVIDED THROUGHOUT THE DURATION OF THIS CONTRACT. ALL WORK AND MATERIALS TO PROVIDE AND MAINTAIN THIS ACCESS SHALL BE INCIDENTAL TO ITEM 763500 - MAINTENANCE OF TRAFFIC.

21. WORK SHALL NOT BE PERFORMED ON BOTH SIDES OF THE ROADWAY AT THE SAME TIME, UNLESS OTHERWISE SHOWN ON THE TRAFFIC CONTROL PLAN OR DIRECTED BY THE ENGINEER.

22. IN AREAS WHERE SIDEWALK IS TO BE CONSTRUCTED, NO BARE SOIL SHALL BE ALLOWED TO SHOW AT THE END OF THE WORK DAY. ALL BARE SOIL SHALL BE COVERED WITH GABC OR STABILIZED BY A METHOD APPROVED BY THE ENGINEER.

23. GRADING AND MAINTAINING GRADED AGGREGATE BASE COURSE THAT IS BEING USED AS A TRAVELWAY, DRIVEWAY ACCESS, RAMP, ETC. SHALL BE INCIDENTAL TO ITEM 763500 - MAINTENANCE OF TRAFFIC. EXCESS GRADED AGGREGATE SHALL BE USED IN THE NEXT SEGMENT. NO SEPARATE PAYMENT SHALL BE MADE FOR TEMPORARY ROADWAY MATERIAL (TRM).

24. SEE WARNING SIGN LOCATION PLAN (THIS SHEET) FOR PERMANENT WARNING SIGNS TO BE IN PLACE THROUGH COMPLETION OF WORK. TEMPORARY WARNING SIGNS FOR INDIVIDUAL WORK AREAS ARE SHOWN ON RESPECTIVE TRAFFIC CONTROL PLANS, OR IN THE TRAFFIC CONTROL MANUAL FOR TYPICAL TRAFFIC CONTROL PLANS. WARNING SIGNS IN CONFLICT WITH TEMPORARY WARNING SIGNS SHALL BE COVERED AS DETAILED ON TRAFFIC CONTROL PLANS. REFER TO NOTE 5. THIS SHEET, OR AS DIRECTED BY THE ENGINEER.

WARNING SIGN LEGEND

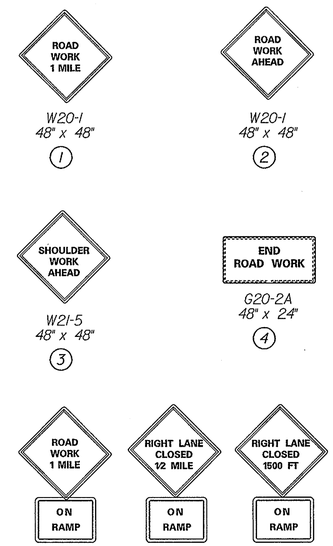

WARNING SIGN LOCATION PLAN

(NOT TO SCALE)

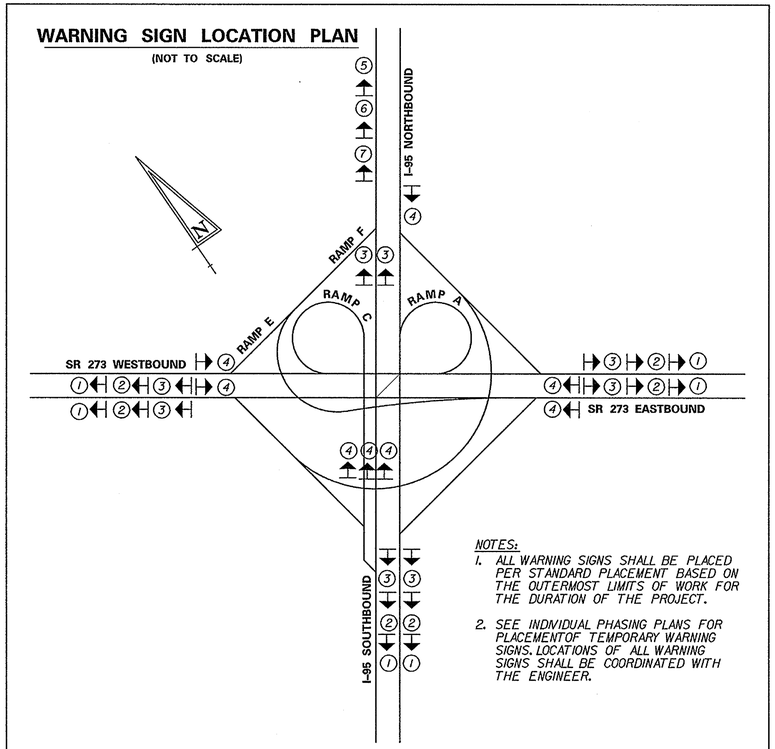

NOTES:

1. ALL WARNING SIGNS SHALL BE PLACED PER STANDARD PLACEMENT BASED ON THE OUTERMOST LIMITS OF WORK FOR THE DURATION OF THE PROJECT.
2. SEE INDIVIDUAL PHASING PLANS FOR PLACEMENT OF TEMPORARY WARNING SIGNS. LOCATIONS OF ALL WARNING SIGNS SHALL BE COORDINATED WITH THE ENGINEER.

25. FOR PAINTING SUPERSTRUCTURE OF BRIDGES 1715 AND 1715A OVER TRAFFIC LANES (I-95), USE CASE 27 AND 28 OF THE TRAFFIC CONTROL MANUAL AND A TRAFFIC OFFICER TO CLOSE LANES BETWEEN 8:00 PM AND 5:00 AM, SUNDAY THRU THURSDAY.

26. FOR APPLYING AN ANTI-GRAFFITI COATING ON BRIDGES 1715 AND 1715A OVER TRAFFIC LANES (I-95) USE CASE 27 AND 28 OF THE TRAFFIC CONTROL MANUAL AND A TRAFFIC OFFICER TO CLOSE LANES BETWEEN 8:00 PM. AND 5:00 AM. SUNDAY THRU THURSDAY.

27. FOR PAINTING SUPERSTRUCTURE OF BRIDGES 1715D OVER TRAFFIC LANES (SR-273), USE CASE 20 OF THE TRAFFIC CONTROL MANUAL AND A TRAFFIC OFFICER TO CLOSE LANES BETWEEN 8:00 PM AND 5:00 AM. SUNDAY THRU THURSDAY.

28. FOR APPLYING AN ANTI-GRAFFITI COATING ON BRIDGES 1715D OVER TRAFFIC LANES (SR-273) USE CASE 20 OF THE TRAFFIC CONTROL MANUAL AND A TRAFFIC OFFICER TO CLOSE LANES BETWEEN 8:00 PM. AND 5:00 AM. SUNDAY THRU THURSDAY.

29. AN ATSSA CERTIFIED TRAFFIC CONTROL SUPERVISOR SHALL BE ASSIGNED TO THIS PROJECT IN ACCORDANCE WITH ITEM 763500 - MAINTENANCE OF TRAFFIC.

30. TRAFFIC OFFICERS (ITEM 763505) SHALL BE USED FOR LANE CLOSURES ON I-95 AND SR 273, PLACEMENT OF CONCRETE BARRIER, AND OTHER WORK AS DIRECTED BY THE ENGINEER.

31. FOR JOINT REPAIR WORK ON SR 273, USE CASE 20 OF THE TRAFFIC CONTROL MANUAL AND A TRAFFIC OFFICER TO CLOSE LANES ON SR 273 BETWEEN 8:00 PM AND 5:00 AM SUNDAY THRU THURSDAY.

32. TO INSTALL, RESET AND REMOVE PORTABLE CONCRETE SAFETY BARRIER ALONG RAMPS E AND F, RAMP CLOSURE SHALL BE SCHEDULED BETWEEN 10:00 PM AND 5:00 AM ON TUESDAY, WEDNESDAY OR THURSDAY. THE CONTRACTOR SHALL COORDINATE WITH THE ENGINEER ON SCHEDULING THE RAMP CLOSURE. A MESSAGE BOARD SHALL BE PLACED ON SOUTHBOUND I-95 NORTH OR EXIT 3, ONE WEEK PRIOR TO CLOSING THE RAMP (SEE DETAIL 1). A TRUCK MOUNTED ATTENUATOR - TYPE II, TRAFFIC OFFICER AND A MESSAGE BOARD (SEE DETAIL 2) SHALL BE PLACED AT THE GORE OF SOUTHBOUND I-95 AND RAMP F TO CLOSE THE RAMP. THE CONTRACTOR SHALL COORDINATE WITH THE ENGINEER ON THE LOCATION OF THE MESSAGE BOARDS.

1 33. THE CONTRACTOR SHALL CONTACT MIKE ELLER AT (302) 577-3278 EXT. 3461 OF DELAWARE TRANSIT CORPORATION TWO WEEKS PRIOR TO CLOSING RAMPS A AND C.

DETAIL 1

FIRST SCREEN	SECOND SCREEN
273 RAMP CLOSED	10 PM TO 5 AM XX/XX/XX

DETAIL 2

FIRST SCREEN	SECOND SCREEN
273 RAMP CLOSED	USE EXIT 1

PREL. TRACING _____ J.A.D. _____ DESIGN _____ R.R.W./J.A.G. _____ CHKD. _____ J.M.P. _____

CONTRACT	COUNTY	F.A.P. NO.	SHEET NO.	TOTAL SHTS.
22-074-09	NEW CASTLE	SEE TITLE SHEET	26	152

REHABILITATION OF BRIDGE NOS. A 1 715, 1 715A, 1 715D ON SR 273 OVER I-95

REVISIONS

CONSTRUCTION PHASING, MOT AND EROSION CONTROL PRE-PHASE 1 TCP-00

MOT CONSTRUCTION SEQUENCE LEGEND

- (A) 4 INCH WHITE TEMPORARY PAVEMENT MARKINGS
- (B) 4 INCH YELLOW TEMPORARY PAVEMENT MARKINGS
- (C) 12 INCH WHITE TEMPORARY PAVEMENT MARKINGS
- (D) 16 INCH WHITE TEMPORARY PAVEMENT MARKINGS
- (E) 4 INCH WHITE TEMPORARY PAVEMENT MARKING TAPE
- (F) 4 INCH YELLOW TEMPORARY PAVEMENT MARKING TAPE
- SIGN
- FLOW ARROW
- SAND FILLED PLASTIC BARRELS
- TYPE B RED FLASHING LIGHT
- PROPOSED WORK AREA - THIS PHASE
- PORTABLE CONCRETE SAFETY BARRIER (F SHAPE)
- PLASTIC DRUM
- TYPE 3 BARRICADE
- ARROW PANEL

NOTE: 12 IN. AND 16 IN. TEMPORARY MARKINGS ARE PAID AS 4 IN. TEMPORARY MARKINGS WITH THE QUANTITY INCREASED DEPENDING ON THE WIDTH.

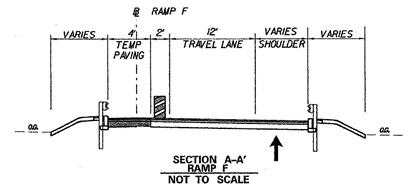

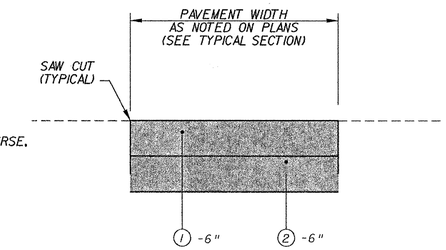

(1) SUPERPAVE, TYPE B HOT-MIX, 160 GYRATIONS, PG 76-22 - (2-3" LIFTS)

(2) SUPERPAVE, BITUMINOUS CONCRETE BASE COURSE, 160 GYRATIONS, PG 64-22 - (1-6" LIFTS)

TEMPORARY PAVEMENT SECTION

NOT TO SCALE

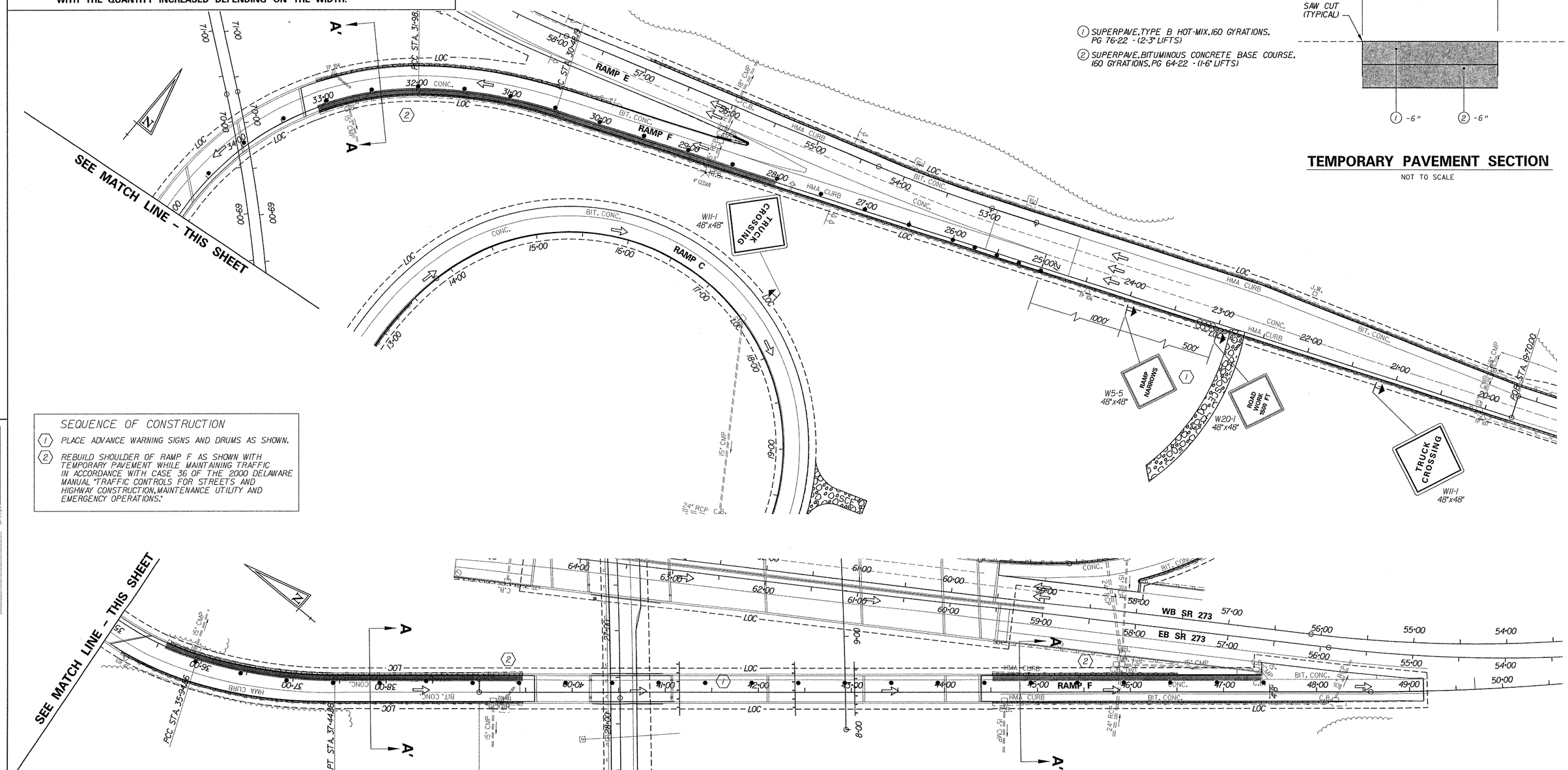

SEQUENCE OF CONSTRUCTION

(1) PLACE ADVANCE WARNING SIGNS AND DRUMS AS SHOWN.

(2) REBUILD SHOULDER OF RAMP F AS SHOWN WITH TEMPORARY PAVEMENT WHILE MAINTAINING TRAFFIC IN ACCORDANCE WITH CASE 36 OF THE 2000 DELAWARE MANUAL "TRAFFIC CONTROLS FOR STREETS AND HIGHWAY CONSTRUCTION, MAINTENANCE UTILITY AND EMERGENCY OPERATIONS."

PREL. TRACING _____ J.A.D. _____ DESIGN _____ R.R.W./J.A.G. _____ CHKD. _____ J.M.P. _____

9/5/2003 9/5/2003 M:\313031\Ntcp00sr273.plf

CONTRACT	COUNTY	F.A.P. NO.	SHEET NO.	TOTAL SHTS.
22-074-09	NEW CASTLE	SEE TITLE SHEET	27	152

REHABILITATION OF BRIDGE NOS. A 1 715, 1 715A, 1 715D ON SR 273 OVER I-95

REVISIONS

CONSTRUCTION PHASING, MOT AND EROSION CONTROL PHASE 1 TCP-01

SCALE 0 50 100 150 FEET

MOT CONSTRUCTION SEQUENCE LEGEND

- (A) 4 INCH WHITE TEMPORARY PAVEMENT MARKINGS
- (B) 4 INCH YELLOW TEMPORARY PAVEMENT MARKINGS
- (C) 12 INCH WHITE TEMPORARY PAVEMENT MARKINGS
- (D) 16 INCH WHITE TEMPORARY PAVEMENT MARKINGS
- (E) 4 INCH WHITE TEMPORARY PAVEMENT MARKING TAPE
- (F) 4 INCH YELLOW TEMPORARY PAVEMENT MARKING TAPE
- SIGN
- FLOW ARROW
- PROPOSED WORK AREA – THIS PHASE
- PORTABLE CONCRETE SAFETY BARRIER (F SHAPE)
- PLASTIC DRUM
- SAND FILLED PLASTIC BARRELS
- TYPE 3 BARRICADE
- TYPE B RED FLASHING LIGHT
- ARROW PANEL

NOTE: 12 IN. AND 16 IN. TEMPORARY MARKINGS ARE PAID AS 4 IN. TEMPORARY MARKINGS WITH THE QUANTITY INCREASED DEPENDING ON THE WIDTH.

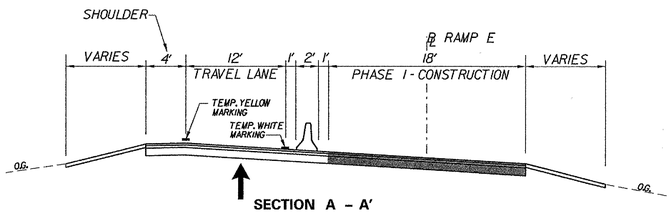

SECTION A – A'
RAMP E
NOT TO SCALE

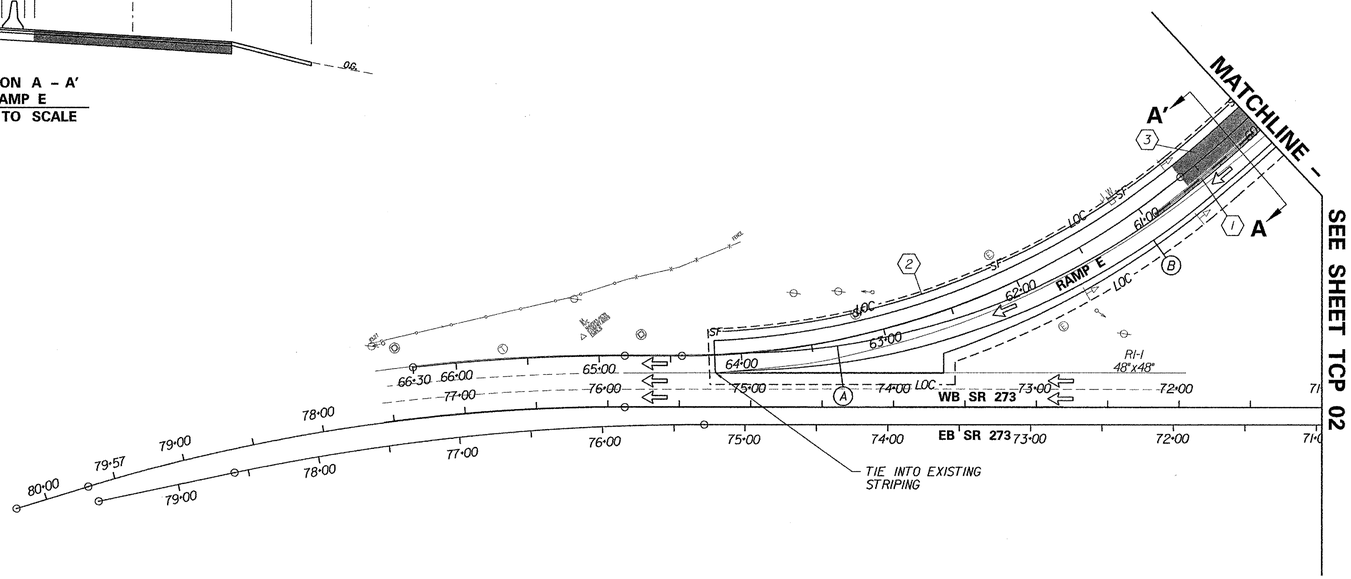

SEQUENCE OF CONSTRUCTION

1. INSTALL TRAFFIC CONTROL DEVICES AND SHIFT TRAFFIC ON RAMP E. SEE NOTE 32 OF THE MAINTENANCE OF TRAFFIC GENERAL TRAFFIC CONTROL NOTES FOR DETAILS ON INSTALLING PORTABLE CONCRETE SAFETY BARRIER.
2. INSTALL ALL EROSION AND SEDIMENT CONTROL MEASURES AS SHOWN.
3. RECONSTRUCT RIGHT SIDE OF RAMP E AS SHOWN.

PREL. TRACING _____ J.A.D. _____ DESIGN _____ R.R.W./J.A.G. _____ CHKD. _____ J.M.P. _____

CONTRACT	COUNTY	F.A.P. NO.	SHEET NO.	TOTAL SHTS.
22-074-09	NEW CASTLE	SEE TITLE SHEET	28	152

REHABILITATION OF BRIDGE NOS. A 1 715, 1 715A, 1 715D ON SR 273 OVER I-95

REVISIONS

CONSTRUCTION PHASING, MOT AND EROSION CONTROL PHASE 1 TCP-02

SCALE 0 50 100 150 FEET

MOT CONSTRUCTION SEQUENCE LEGEND

- (A) 4 INCH WHITE TEMPORARY PAVEMENT MARKINGS
- (B) 4 INCH YELLOW TEMPORARY PAVEMENT MARKINGS
- (C) 12 INCH WHITE TEMPORARY PAVEMENT MARKINGS
- (D) 16 INCH WHITE TEMPORARY PAVEMENT MARKINGS
- (E) 4 INCH WHITE TEMPORARY PAVEMENT MARKING TAPE
- (F) 4 INCH YELLOW TEMPORARY PAVEMENT MARKING TAPE
- SIGN
- FLOW ARROW
- PROPOSED WORK AREA - THIS PHASE
- PORTABLE CONCRETE SAFETY BARRIER (F SHAPE)
- PLASTIC DRUM
- SAND FILLED PLASTIC BARRELS
- TYPE 3 BARRICADE
- TYPE B RED FLASHING LIGHT
- ARROW PANEL

NOTE: 12 IN. AND 16 IN. TEMPORARY MARKINGS ARE PAID AS 4 IN. TEMPORARY MARKINGS WITH THE QUANTITY INCREASED DEPENDING ON THE WIDTH.

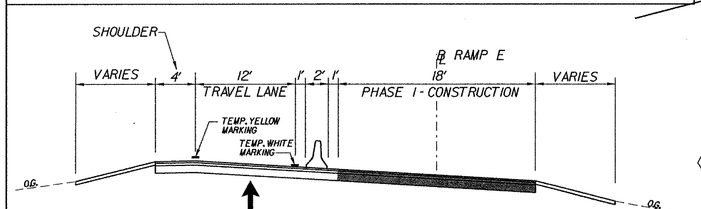

SECTION A - A'
RAMP E
NOT TO SCALE

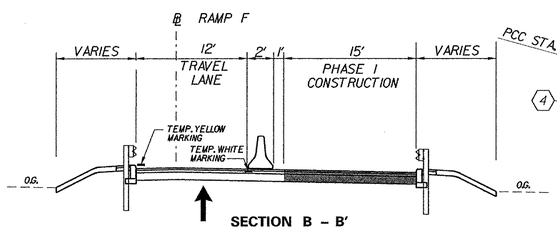

SECTION B - B'
RAMP F
NOT TO SCALE

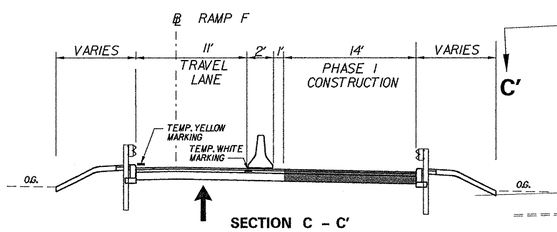

SECTION C - C'
RAMP F
NOT TO SCALE

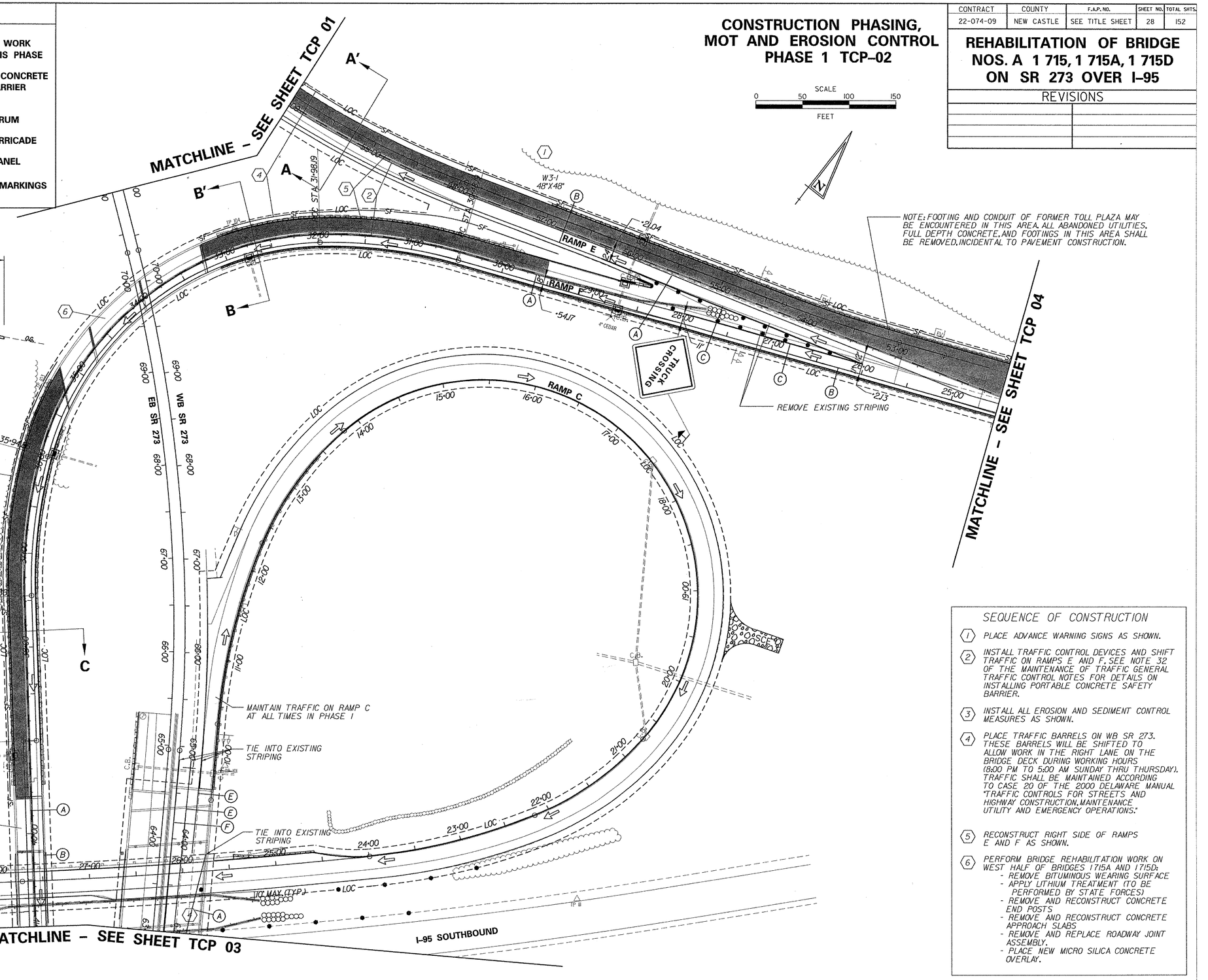

SEQUENCE OF CONSTRUCTION

1. PLACE ADVANCE WARNING SIGNS AS SHOWN.
2. INSTALL TRAFFIC CONTROL DEVICES AND SHIFT TRAFFIC ON RAMPS E AND F. SEE NOTE 32 OF THE MAINTENANCE OF TRAFFIC GENERAL TRAFFIC CONTROL NOTES FOR DETAILS ON INSTALLING PORTABLE CONCRETE SAFETY BARRIER.
3. INSTALL ALL EROSION AND SEDIMENT CONTROL MEASURES AS SHOWN.
4. PLACE TRAFFIC BARRELS ON WB SR 273. THESE BARRELS WILL BE SHIFTED TO ALLOW WORK IN THE RIGHT LANE ON THE BRIDGE DECK DURING WORKING HOURS (8:00 PM TO 5:00 AM SUNDAY THRU THURSDAY). TRAFFIC SHALL BE MAINTAINED ACCORDING TO CASE 20 OF THE 2000 DELAWARE MANUAL "TRAFFIC CONTROLS FOR STREETS AND HIGHWAY CONSTRUCTION, MAINTENANCE UTILITY AND EMERGENCY OPERATIONS."
5. RECONSTRUCT RIGHT SIDE OF RAMPS E AND F AS SHOWN.
6. PERFORM BRIDGE REHABILITATION WORK ON WEST HALF OF BRIDGES 1715A AND 1715D:
   - REMOVE BITUMINOUS WEARING SURFACE
   - APPLY LITHIUM TREATMENT (TO BE PERFORMED BY STATE FORCES)
   - REMOVE AND RECONSTRUCT CONCRETE END POSTS
   - REMOVE AND RECONSTRUCT CONCRETE APPROACH SLABS
   - REMOVE AND REPLACE ROADWAY JOINT ASSEMBLY.
   - PLACE NEW MICRO SILICA CONCRETE OVERLAY.

PREL. TRACING ____ J.A.D. ____ DESIGN ____ R.R.W./J.A.G. ____ CHKD. ____ J.M.P. ____

CONTRACT	COUNTY	F.A.P. NO.	SHEET NO.	TOTAL SHTS.
22-074-09	NEW CASTLE	SEE TITLE SHEET	29	152

REHABILITATION OF BRIDGE NOS. A 1 715, 1 715A, 1 715D ON SR 273 OVER I-95

REVISIONS

CONSTRUCTION PHASING, MOT AND EROSION CONTROL PHASE 1 TCP-03

SCALE 0 50 100 150 FEET

MOT CONSTRUCTION SEQUENCE LEGEND

- (A) 4 INCH WHITE TEMPORARY PAVEMENT MARKINGS
- (B) 4 INCH YELLOW TEMPORARY PAVEMENT MARKINGS
- (C) 12 INCH WHITE TEMPORARY PAVEMENT MARKINGS
- (D) 16 INCH WHITE TEMPORARY PAVEMENT MARKINGS
- (E) 4 INCH WHITE TEMPORARY PAVEMENT MARKING TAPE
- (F) 4 INCH YELLOW TEMPORARY PAVEMENT MARKING TAPE
- SIGN
- FLOW ARROW
- PROPOSED WORK AREA – THIS PHASE
- PORTABLE CONCRETE SAFETY BARRIER (F SHAPE)
- PLASTIC DRUM
- SAND FILLED PLASTIC BARRELS
- TYPE 3 BARRICADE
- TYPE B RED FLASHING LIGHT
- ARROW PANEL

NOTE: 12 IN. AND 16 IN. TEMPORARY MARKINGS ARE PAID AS 4 IN. TEMPORARY MARKINGS WITH THE QUANTITY INCREASED DEPENDING ON THE WIDTH.

SEQUENCE OF CONSTRUCTION

1. PLACE ADVANCE WARNING SIGNS AS SHOWN.
2. PLACE TRAFFIC BARRIER AND BARRELS ON WB SR 273 AS SHOWN WHILE MAINTAINING TRAFFIC IN ACCORDANCE WITH CASE 20 OF THE 2000 DELAWARE MANUAL "TRAFFIC CONTROLS FOR STREETS AND HIGHWAY CONSTRUCTION, MAINTENANCE UTILITY AND EMERGENCY OPERATIONS."
3. INSTALL ALL EROSION AND SEDIMENT CONTROL MEASURES AS SHOWN.
4. INSTALL TRAFFIC DEVICES AND SHIFTING TRAFFIC TO THE LEFT SIDE OF RAMP F. SEE NOTE 32 OF THE MAINTENANCE OF TRAFFIC GENERAL TRAFFIC CONTROL NOTES FOR DETAILS ON INSTALLING PORTABLE CONCRETE SAFETY BARRIER. RECONSTRUCT RIGHT SIDE OF RAMP F.
5. CLOSE RAMP A BY PLACING TRAFFIC DEVICES AS SHOWN. RECONSTRUCT RAMP A AS SHOWN. RAMP CLOSURE IS NOT TO EXCEED 45 CALENDAR DAYS IN DURATION. DECELERATION LANE FOR RAMP A IS TO BE CLOSED WITH BARRELS FOR ITS ENTIRE LENGTH FOR THE DURATION OF THE DETOUR. AND TYPE 3 TRAFFIC BARRICADE SHALL BE USED TO BLOCK ENTRANCE TO THE RAMP. SEE DRAWING TCP17 FOR DETOUR.
6. (PHASE 1B) AFTER RECONSTRUCTION OF RAMP A IS COMPLETE, REMOVE BARRIER TO ALLOW FOR BRIDGE DECK JOINT RECONSTRUCTION ON BRIDGE 1715. DRUMS ALONG WB SR 273 WILL BE SHIFTED TO ALLOW WORK IN THE RIGHT LANE ON THE BRIDGE DECK DURING WORKING HOURS (8:00 PM TO 5:00 AM. SUNDAY THRU THURSDAY). TRAFFIC SHALL BE MAINTAINED ACCORDING TO CASE 20 OF THE 2000 DELAWARE MANUAL "TRAFFIC CONTROLS FOR STREETS AND HIGHWAY CONSTRUCTION, MAINTENANCE UTILITY AND EMERGENCY OPERATIONS."
7. REMOVE AND RECONSTRUCT CONCRETE END POST AT SOUTHEAST WINGWALL ON BRIDGE 1715.
8. PERFORM BRIDGE REHABILITATION WORK ON WEST HALF OF BRIDGE 1715A:
   - REMOVE BITUMINOUS WEARING SURFACE
   - APPLY LITHIUM TREATMENT (TO BE PERFORMED BY STATE FORCES)
   - REMOVE AND RECONSTRUCT CONCRETE END POSTS
   - REMOVE AND RECONSTRUCT CONCRETE APPROACH SLABS
   - REMOVE AND REPLACE ROADWAY JOINT ASSEMBLY.
   - PLACE NEW MICRO SILICA CONCRETE OVERLAY.

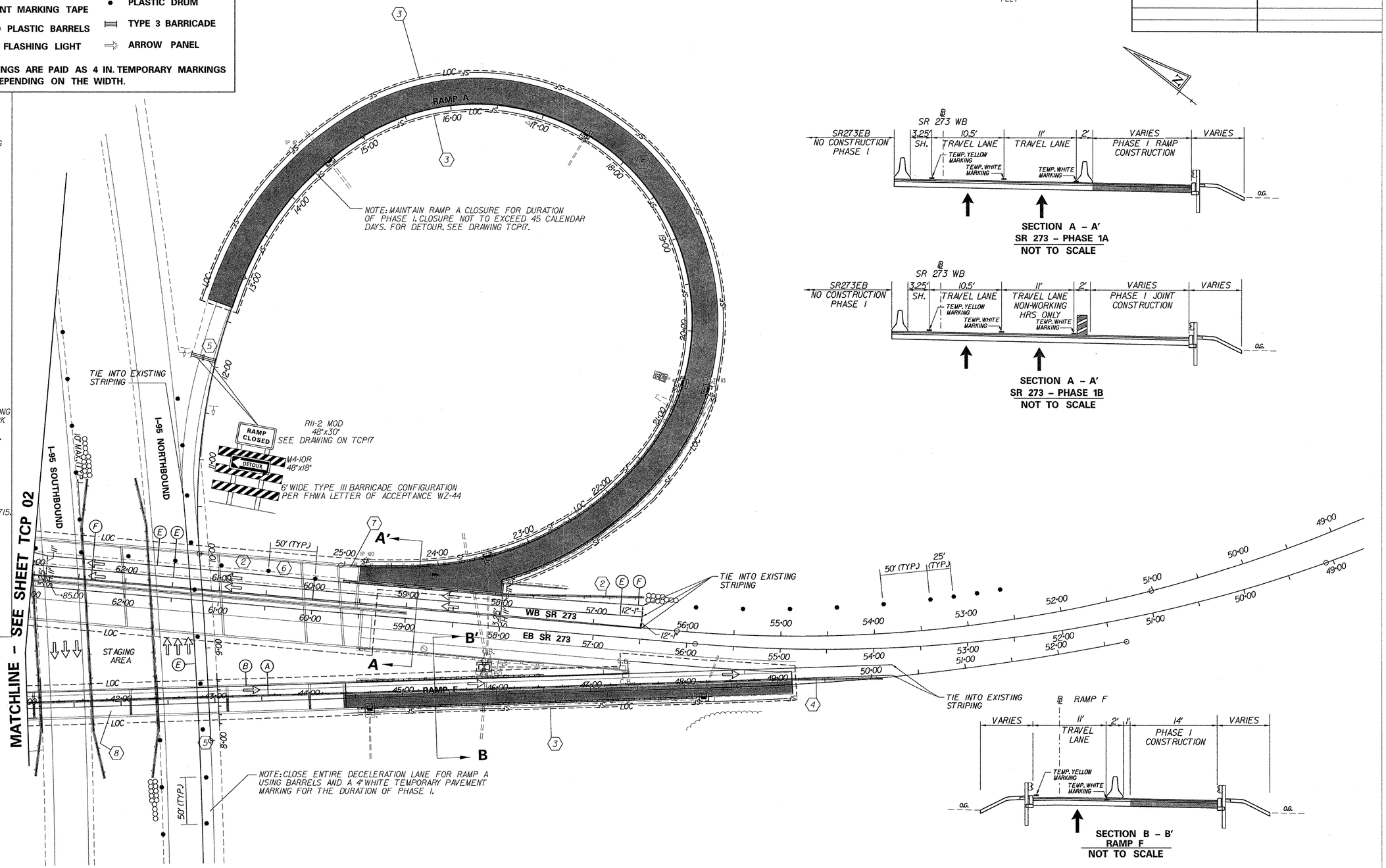

PREL. TRACING ____ J.A.D. ____ DESIGN ____ R.R.W./J.A.G. ____ CHKD. ____ J.M.P. ____

9/5/2003 9/5/2003 M:\313031\4\tcp03sr273.plf

CONTRACT	COUNTY	F.A.P. NO.	SHEET NO.	TOTAL SHTS.
22-074-09	NEW CASTLE	SEE TITLE SHEET	30	152

REHABILITATION OF BRIDGE NOS. A 1 715, 1 715A, 1 715D ON SR 273 OVER I-95

REVISIONS

CONSTRUCTION PHASING, MOT AND EROSION CONTROL PHASE 1 TCP-04

SCALE 0 50 100 150 FEET

MOT CONSTRUCTION SEQUENCE LEGEND

- (A) 4 INCH WHITE TEMPORARY PAVEMENT MARKINGS
- (B) 4 INCH YELLOW TEMPORARY PAVEMENT MARKINGS
- (C) 12 INCH WHITE TEMPORARY PAVEMENT MARKINGS
- (D) 16 INCH WHITE TEMPORARY PAVEMENT MARKINGS
- (E) 4 INCH WHITE TEMPORARY PAVEMENT MARKING TAPE
- (F) 4 INCH YELLOW TEMPORARY PAVEMENT MARKING TAPE
- SIGN
- FLOW ARROW
- SAND FILLED PLASTIC BARRELS
- TYPE B RED FLASHING LIGHT
- PROPOSED WORK AREA - THIS PHASE
- PORTABLE CONCRETE SAFETY BARRIER (F SHAPE)
- PLASTIC DRUM
- TYPE 3 BARRICADE
- ARROW PANEL

NOTE: 12 IN. AND 16 IN. TEMPORARY MARKINGS ARE PAID AS 4 IN. TEMPORARY MARKINGS WITH THE QUANTITY INCREASED DEPENDING ON THE WIDTH.

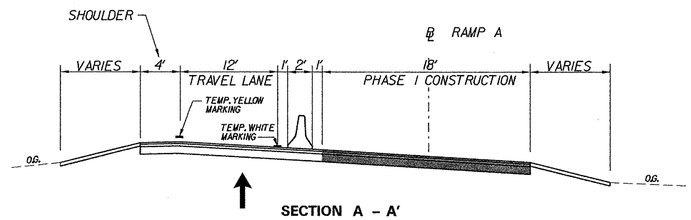

SECTION A - A'
RAMP F
NOT TO SCALE

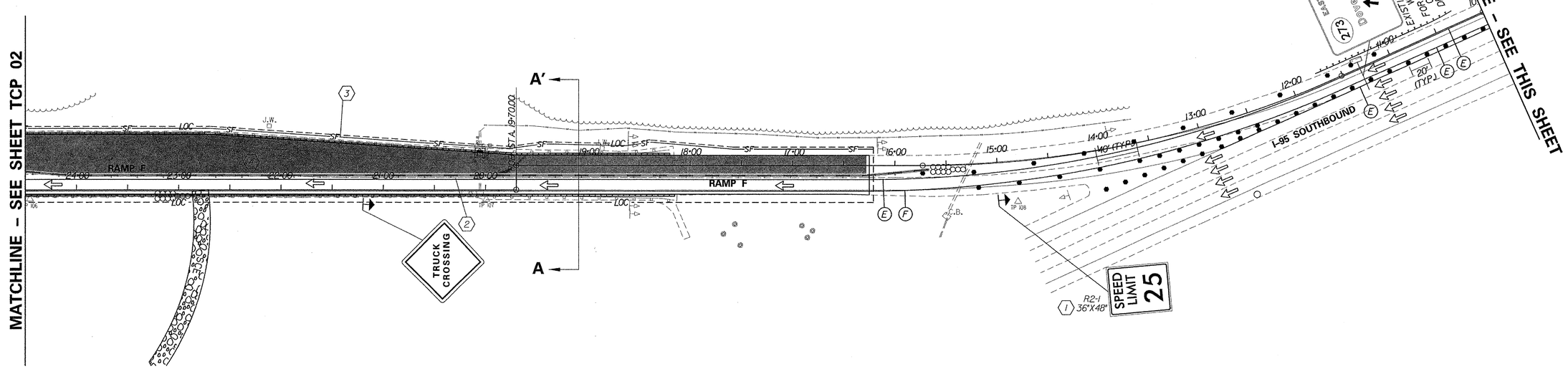

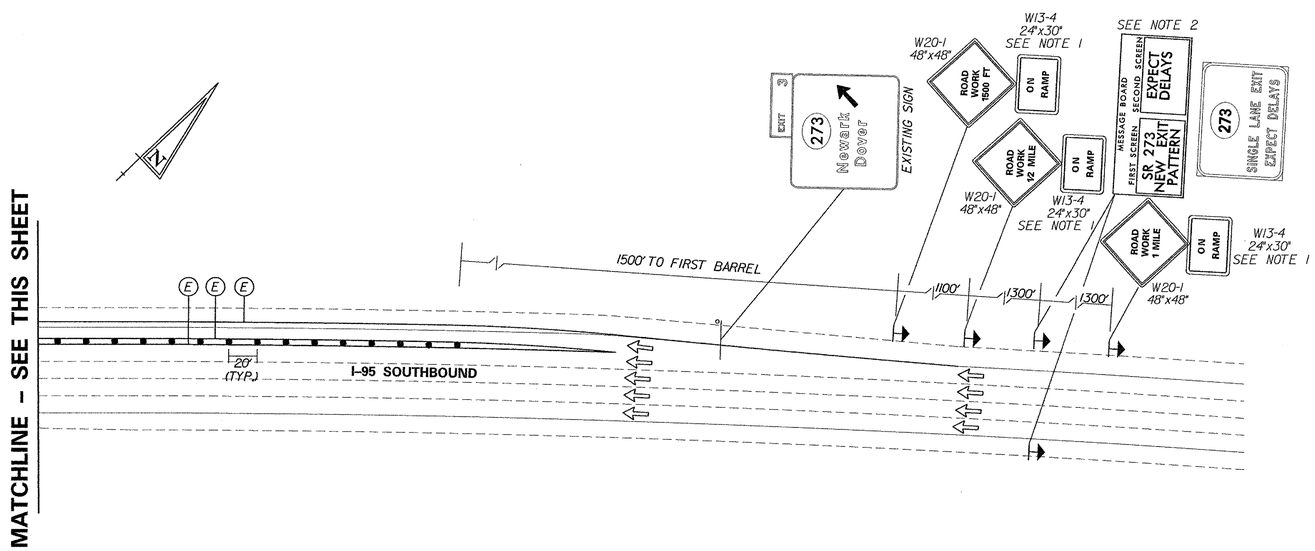

NOTE 1: SIGN ASSEMBLIES SHALL BE MOUNTED ON 4"x4"WOOD BREAKAWAY POSTS, EXCEPT AS NOTED AS REQUIRED BY FHWA NCHRP-350 STANDARDS.

NOTE 2: MESSAGE BOARDS SHALL BE USED FOR 2 WEEKS AFTER MODIFYING RAMP F EXIT PATTERN. AFTER 2 WEEK PERIOD TEMPORARY WARNING SIGN SHALL BE INSTALLED (SEE DETAIL). THE MESSAGE BOARD AND SIGN SHALL BE PLACED NORTH OF THE PHYSICAL GORE OF SR7 RAMP TO SOUTHBOUND I-95. THE CONTRACTOR SHALL COORDINATE WITH THE ENGINEER ON THE EXACT LOCATION.

SEQUENCE OF CONSTRUCTION

1. PLACE ADVANCE WARNING SIGNS AS SHOWN.
2. INSTALL TRAFFIC CONTROL DEVICES AND SHIFT TRAFFIC ON RAMPS E AND F. SEE NOTE 32 OF THE MAINTENANCE OF TRAFFIC GENERAL TRAFFIC CONTROL NOTES FOR DETAILS ON INSTALLING PORTABLE CONCRETE SAFETY BARRIER. TRAFFIC WILL BE SHIFTED TO THE LEFT SIDE OF THE RAMPS.
3. INSTALL ALL EROSION AND SEDIMENT CONTROL MEASURES AS SHOWN.
4. RECONSTRUCT RIGHT SIDE OF RAMPS E AND F AS SHOWN.

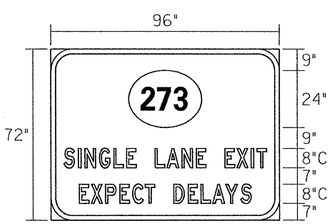

NOTE: SIGN SHAL BE INSTALLED ON TWO BREAKAWAY 6"x8" WOOD SIGN SUPPORTS

PREL. TRACING J.A.D. DESIGN R.R.W./J.A.G. CHKD. J.M.P.

9/5/2003 9/5/2003 M:\3\30314\tcp04sr273.plf

CONTRACT	COUNTY	F.A.P. NO.	SHEET NO.	TOTAL SHTS.
22-074-09	NEW CASTLE	SEE TITLE SHEET	31	152

REHABILITATION OF BRIDGE NOS. A 1 715, 1 715A, 1 715D ON SR 273 OVER I-95

REVISIONS

CONSTRUCTION PHASING, MOT AND EROSION CONTROL PHASE 2 TCP-05

SCALE 0 50 100 150 FEET

MOT CONSTRUCTION SEQUENCE LEGEND

- (A) 4 INCH WHITE TEMPORARY PAVEMENT MARKINGS
- (B) 4 INCH YELLOW TEMPORARY PAVEMENT MARKINGS
- (C) 12 INCH WHITE TEMPORARY PAVEMENT MARKINGS
- (D) 16 INCH WHITE TEMPORARY PAVEMENT MARKINGS
- (E) 4 INCH WHITE TEMPORARY PAVEMENT MARKING TAPE
- (F) 4 INCH YELLOW TEMPORARY PAVEMENT MARKING TAPE
- SIGN
- FLOW ARROW
- SAND FILLED PLASTIC BARRELS
- TYPE B RED FLASHING LIGHT
- PROPOSED WORK AREA - THIS PHASE
- PORTABLE CONCRETE SAFETY BARRIER (F SHAPE)
- PLASTIC DRUM
- TYPE 3 BARRICADE
- ARROW PANEL

NOTE: 12 IN. AND 16 IN. TEMPORARY MARKINGS ARE PAID AS 4 IN. TEMPORARY MARKINGS WITH THE QUANTITY INCREASED DEPENDING ON THE WIDTH.

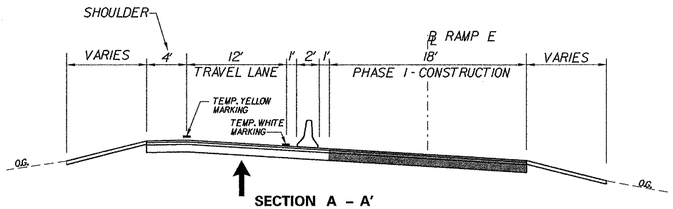

SECTION A - A'
RAMP E
NOT TO SCALE

THE PAVEMENT RECONSTRUCTION FROM STA.60+63 TO STA.64+19 SHALL BE COMPLETED AT THE END OF PHASE 2 TO MINIMIZE TIME THE RAMP OPERATES UNDER STOP CONTROL.THE CONTRACTOR SHALL COORDINATE WITH THE ENGINEER ON SCHEDULING THIS WORK

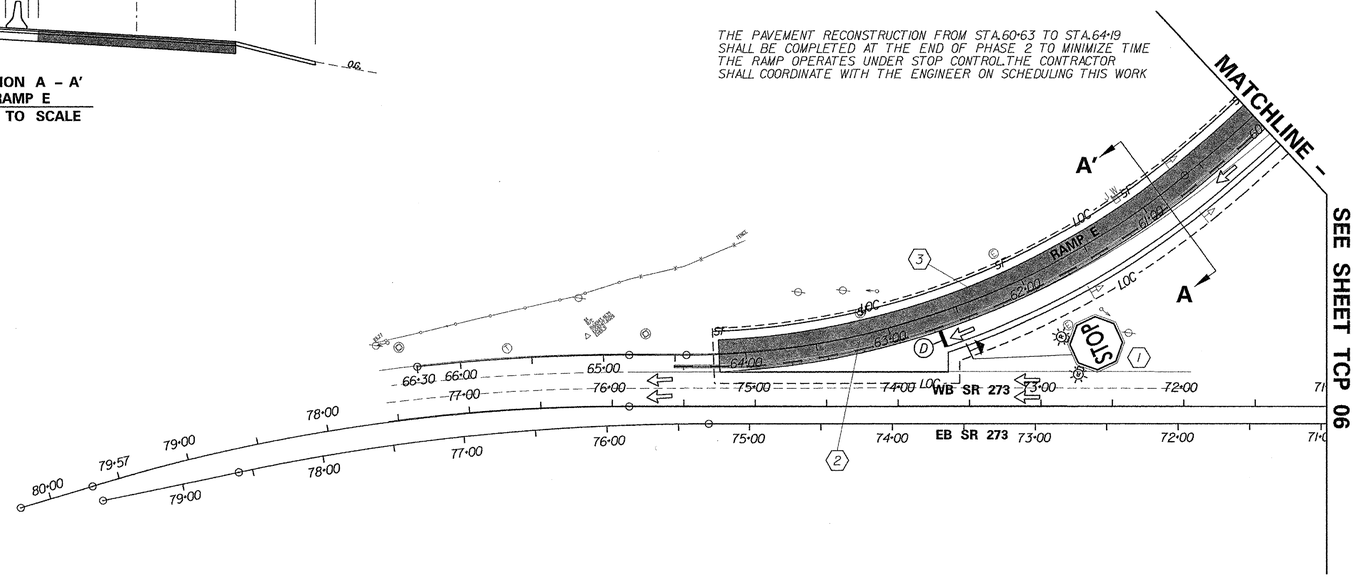

SEQUENCE OF CONSTRUCTION

1. PLACE ADVISORY SIGNS AS HOWN
2. INSTALL TRAFFIC CONTROL DEVICES AND SHIFT TRAFFIC ON RAMP E.
3. CONTINUE RECONSTRUCTION OF RAMP E FROM STA.60+63 TO STA.64+19

PREL. TRACING _____ J.A.D. _____ DESIGN _____ R.R.W./J.A.G. _____ CHKD. _____ J.M.P. _____

CONTRACT	COUNTY	F.A.P. NO.	SHEET NO.	TOTAL SHTS.
22-074-09	NEW CASTLE	SEE TITLE SHEET	32	152

REHABILITATION OF BRIDGE NOS. A 1 715, 1 715A, 1 715D ON SR 273 OVER I-95

REVISIONS

CONSTRUCTION PHASING, MOT AND EROSION CONTROL PHASE 2 TCP-06

SCALE 0 50 100 150 FEET

MOT CONSTRUCTION SEQUENCE LEGEND

- (A) 4 INCH WHITE TEMPORARY PAVEMENT MARKINGS
- (B) 4 INCH YELLOW TEMPORARY PAVEMENT MARKINGS
- (C) 12 INCH WHITE TEMPORARY PAVEMENT MARKINGS
- (D) 16 INCH WHITE TEMPORARY PAVEMENT MARKINGS
- (E) 4 INCH WHITE TEMPORARY PAVEMENT MARKING TAPE
- (F) 4 INCH YELLOW TEMPORARY PAVEMENT MARKING TAPE
- SIGN
- FLOW ARROW
- PROPOSED WORK AREA - THIS PHASE
- PORTABLE CONCRETE SAFETY BARRIER (F SHAPE)
- PLASTIC DRUM
- SAND FILLED PLASTIC BARRELS
- TYPE 3 BARRICADE
- TYPE B RED FLASHING LIGHT
- ARROW PANEL

NOTE: 12 IN. AND 16 IN. TEMPORARY MARKINGS ARE PAID AS 4 IN. TEMPORARY MARKINGS WITH THE QUANTITY INCREASED DEPENDING ON THE WIDTH.

SECTION D - D'
RAMP E
NOT TO SCALE

SEQUENCE OF CONSTRUCTION

1. MAINTAIN SIGNS AND STRIPING ON RAMPS E AND F AS SHOWN.
2. PLACE TRAFFIC BARRIER AND BARRELS ON WB SR 273 AS SHOWN ACCORDING TO CASE 20 OF THE 2000 DELAWARE MANUAL "TRAFFIC CONTROLS FOR STREETS AND HIGHWAY CONSTRUCTION, MAINTENANCE UTILITY AND EMERGENCY OPERATIONS".
3. INSTALL ALL EROSION AND SEDIMENT CONTROL MEASURES AS SHOWN.
4. CONTINUE RECONSTRUCTION OF RAMPS E AND F AS SHOWN.
5. CONTINUE BRIDGE REHABILITATION WORK ON WEST HALF OF BRIDGES 1715A AND 1715D:
   - REMOVE BITUMINOUS WEARING SURFACE
   - APPLY LITHIUM TREATMENT (TO BE PERFORMED BY STATE FORCES)
   - REMOVE AND RECONSTRUCT CONCRETE END POSTS
   - REMOVE AND RECONSTRUCT CONCRETE APPROACH SLABS
   - REMOVE AND REPLACE ROADWAY JOINT ASSEMBLY.
   - PLACE NEW MICRO SILICA CONCRETE OVERLAY.
6. (PHASE 2A) CLOSE RAMP C BY PLACING TRAFFIC DEVICES AS SHOWN. RECONSTRUCT RAMP C. RAMP CLOSURE IS NOT TO EXCEED TWO MONTHS IN DURATION. TYPE 3 TRAFFIC BARRICADE SHALL BE USED TO INDICATE RAMP CLOSURE. SEE DRAWING TCP18 FOR DETOUR.
7. (PHASE 2B) AFTER RECONSTRUCTION OF RAMP C IS COMPLETE, REMOVE BARRIER TO ALLOW FOR BRIDGE DECK JOINT RECONSTRUCTION ON BRIDGE 1715. DRUMS ALONG WB SR 273 WILL BE SHIFTED TO ALLOW WORK IN THE RIGHT LANE ON THE BRIDGE DECK DURING WORKING HOURS (8:00 PM TO 5:00 AM SUNDAY THRU THURSDAY). TRAFFIC SHALL BE MAINTAINED ACCORDING TO CASE 20 OF THE 2000 DELAWARE MANUAL "TRAFFIC CONTROLS FOR STREETS AND HIGHWAY CONSTRUCTION, MAINTENANCE UTILITY AND EMERGENCY OPERATIONS."
8. REMOVE AND RECONSTRUCT CONCRETE END POST AT NORTHEAST WINGWALL ON BRIDGE 1715.

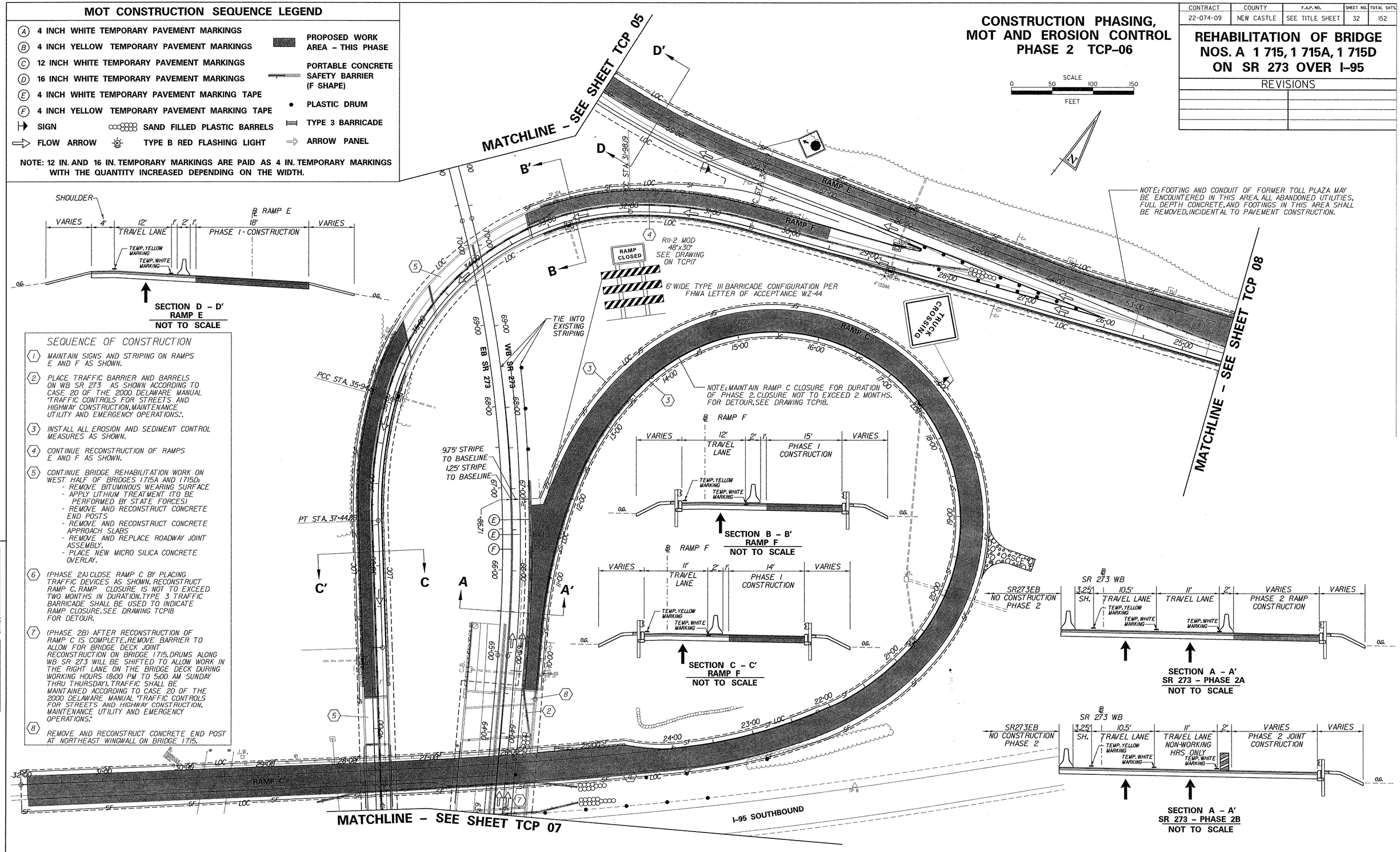

J.A.D. DESIGN R.R.W./J.A.G. CHK'D. J.M.P.
PREL. TRACING

9/5/2003 9/5/2003 M:\31303\Mcp06sr273.plf

MOT CONSTRUCTION SEQUENCE LEGEND

- (A) 4 INCH WHITE TEMPORARY PAVEMENT MARKINGS
- (B) 4 INCH YELLOW TEMPORARY PAVEMENT MARKINGS
- (C) 12 INCH WHITE TEMPORARY PAVEMENT MARKINGS
- (D) 16 INCH WHITE TEMPORARY PAVEMENT MARKINGS
- (E) 4 INCH WHITE TEMPORARY PAVEMENT MARKING TAPE
- (F) 4 INCH YELLOW TEMPORARY PAVEMENT MARKING TAPE
- SIGN
- FLOW ARROW
- PROPOSED WORK AREA – THIS PHASE
- PORTABLE CONCRETE SAFETY BARRIER (F SHAPE)
- PLASTIC DRUM
- SAND FILLED PLASTIC BARRELS
- TYPE 3 BARRICADE
- TYPE B RED FLASHING LIGHT
- ARROW PANEL

NOTE: 12 IN. AND 16 IN. TEMPORARY MARKINGS ARE PAID AS 4 IN. TEMPORARY MARKINGS WITH THE QUANTITY INCREASED DEPENDING ON THE WIDTH.

SEQUENCE OF CONSTRUCTION

1. MAINTAIN SIGNS AND STRIPING ON RAMP F AS SHOWN. CONTINUE RECONSTRUCTION OF RAMP F AS SHOWN.
2. REMOVE CLOSURE OF RAMP C. INCLUDING BARRICADE, BARRELS, STRIPING, EROSION AND SEDIMENT CONTROL DEVICES, AND DETOUR SIGNING. PLACE ADVANCE WARNING SIGNS AND STOP SIGN ON RAMP C AS SHOWN.
3. PLACE TRAFFIC BARRIER, BARRELS, BARRICADE AND STRIPING ON WB SR 273 AS SHOWN. FOR RAMP C DETOUR PLAN, SEE DRAWING TCP-18.
4. CONTINUE BRIDGE REHABILITATION WORK ON WEST HALF OF BRIDGE 1715A:
   - REMOVE BITUMINOUS WEARING SURFACE
   - APPLY LITHIUM TREATMENT (TO BE PERFORMED BY STATE FORCES)
   - REMOVE AND RECONSTRUCT CONCRETE END POSTS
   - REMOVE AND RECONSTRUCT CONCRETE APPROACH SLABS
   - REMOVE AND REPLACE ROADWAY JOINT ASSEMBLY.
   - PLACE NEW MICRO SILICA CONCRETE OVERLAY.

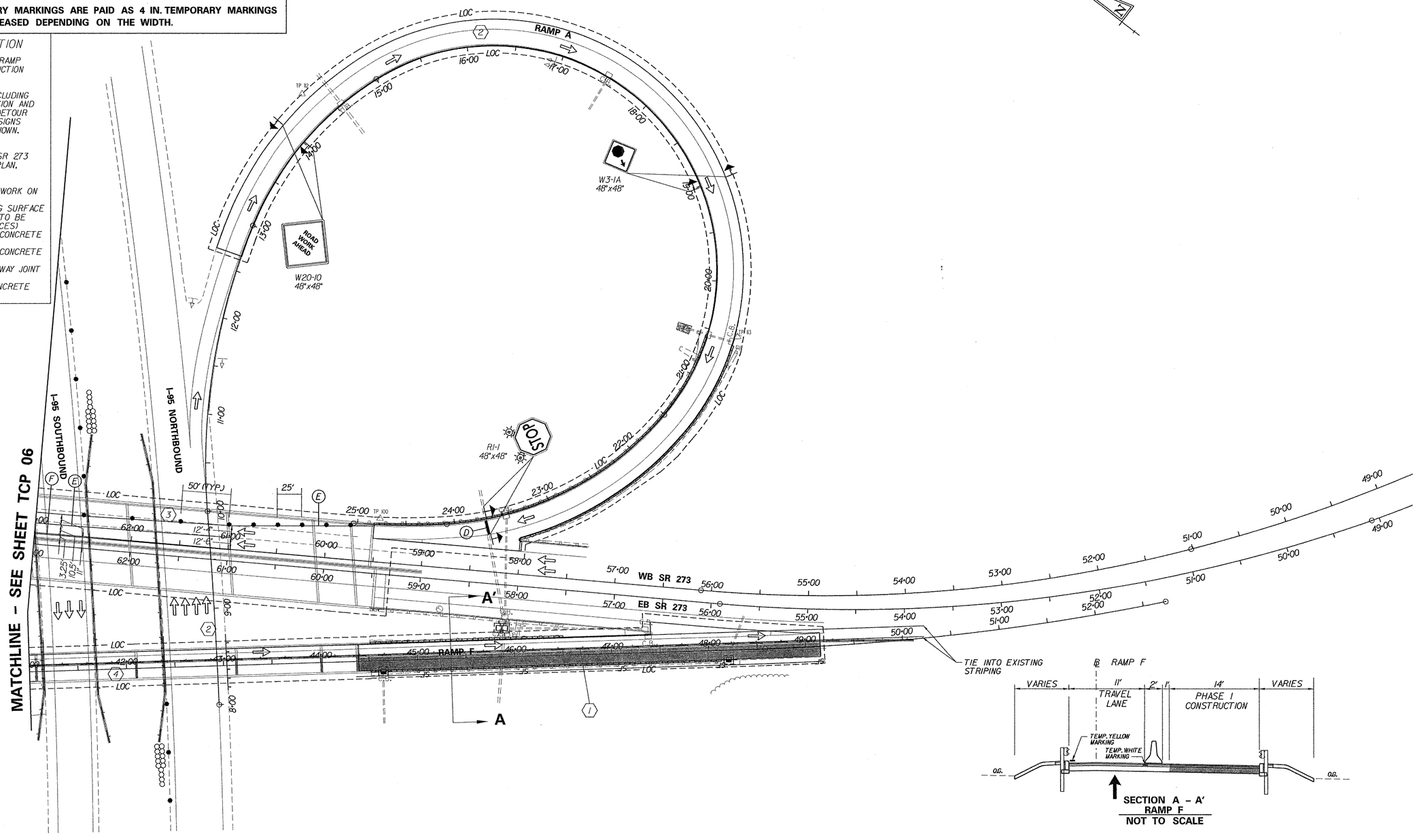

CONTRACT	COUNTY	F.A.P. NO.	SHEET NO.	TOTAL SHTS.
22-074-09	NEW CASTLE	SEE TITLE SHEET	33	152

CONSTRUCTION PHASING, MOT AND EROSION CONTROL PHASE 2 TCP-07

REHABILITATION OF BRIDGE NOS. A 1 715, 1 715A, 1 715D ON SR 273 OVER I-95

REVISIONS

PREL. TRACING ____ J.A.D. ____ DESIGN ____ R.R.W./J.A.G. ____ CHKD. ____ J.M.P. ____

9/5/2003 9/5/2003 M:\313031\tcp07sr273.plf

CONTRACT	COUNTY	F.A.P. NO.	SHEET NO.	TOTAL SHTS.
22-074-09	NEW CASTLE	SEE TITLE SHEET	34	152

REHABILITATION OF BRIDGE NOS. A 1 715, 1 715A, 1 715D ON SR 273 OVER I-95

REVISIONS

MOT CONSTRUCTION SEQUENCE LEGEND

- (A) 4 INCH WHITE TEMPORARY PAVEMENT MARKINGS
- (B) 4 INCH YELLOW TEMPORARY PAVEMENT MARKINGS
- (C) 12 INCH WHITE TEMPORARY PAVEMENT MARKINGS
- (D) 16 INCH WHITE TEMPORARY PAVEMENT MARKINGS
- (E) 4 INCH WHITE TEMPORARY PAVEMENT MARKING TAPE
- (F) 4 INCH YELLOW TEMPORARY PAVEMENT MARKING TAPE
- SIGN
- FLOW ARROW
- PROPOSED WORK AREA – THIS PHASE
- PORTABLE CONCRETE SAFETY BARRIER (F SHAPE)
- PLASTIC DRUM
- SAND FILLED PLASTIC BARRELS
- TYPE 3 BARRICADE
- TYPE B RED FLASHING LIGHT
- ARROW PANEL

NOTE: 12 IN. AND 16 IN. TEMPORARY MARKINGS ARE PAID AS 4 IN. TEMPORARY MARKINGS WITH THE QUANTITY INCREASED DEPENDING ON THE WIDTH.

CONSTRUCTION PHASING, MOT AND EROSION CONTROL PHASE 2 TCP-08

SCALE 0 50 100 150 FEET

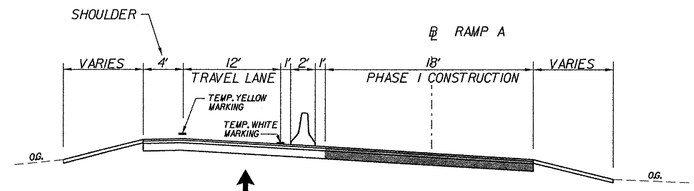

SECTION A – A'
RAMP F
NOT TO SCALE

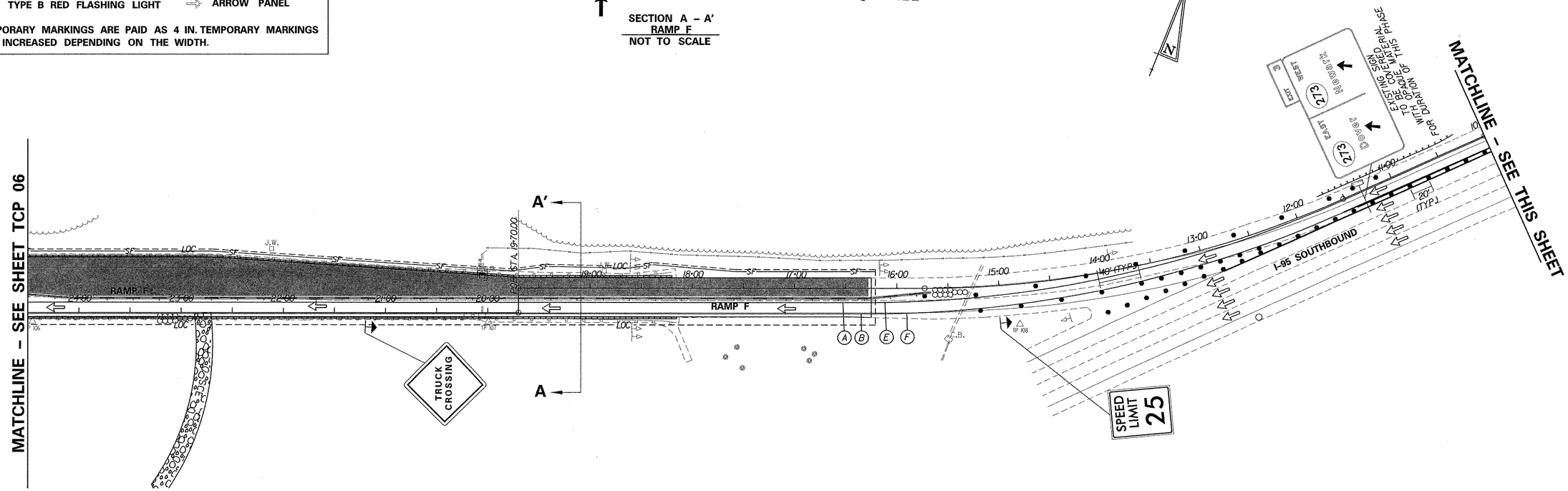

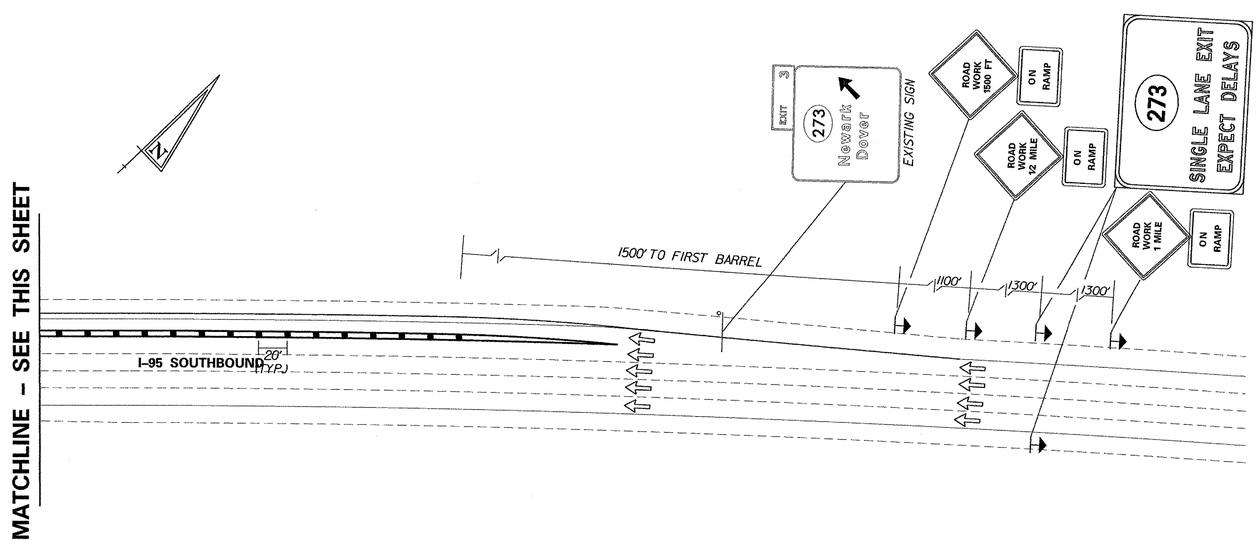

SEQUENCE OF CONSTRUCTION

1. MAINTAIN TRAFFIC AS IN PHASE I.
2. CONTINUE RECONSTRUCTION OF RAMP F AS SHOWN.

PREL. TRACING ____ J.A.D. ____ DESIGN ____ R.R.W./J.A.G. ____ CHKD. ____ J.M.P. ____

CONTRACT	COUNTY	F.A.P. NO.	SHEET NO.	TOTAL SHTS.
22-074-09	NEW CASTLE	SEE TITLE SHEET	35	152

REHABILITATION OF BRIDGE NOS. A 1 715, 1 715A, 1 715D ON SR 273 OVER I-95

REVISIONS

CONSTRUCTION PHASING, MOT AND EROSION CONTROL PHASE 3 TCP-09

SCALE 0 50 100 150 FEET

MOT CONSTRUCTION SEQUENCE LEGEND

- (A) 4 INCH WHITE TEMPORARY PAVEMENT MARKINGS
- (B) 4 INCH YELLOW TEMPORARY PAVEMENT MARKINGS
- (C) 12 INCH WHITE TEMPORARY PAVEMENT MARKINGS
- (D) 16 INCH WHITE TEMPORARY PAVEMENT MARKINGS
- (E) 4 INCH WHITE TEMPORARY PAVEMENT MARKING TAPE
- (F) 4 INCH YELLOW TEMPORARY PAVEMENT MARKING TAPE
- SIGN
- FLOW ARROW
- PROPOSED WORK AREA - THIS PHASE
- PORTABLE CONCRETE SAFETY BARRIER (F SHAPE)
- PLASTIC DRUM
- SAND FILLED PLASTIC BARRELS
- TYPE 3 BARRICADE
- TYPE B RED FLASHING LIGHT
- ARROW PANEL

NOTE: 12 IN. AND 16 IN. TEMPORARY MARKINGS ARE PAID AS 4 IN. TEMPORARY MARKINGS WITH THE QUANTITY INCREASED DEPENDING ON THE WIDTH.

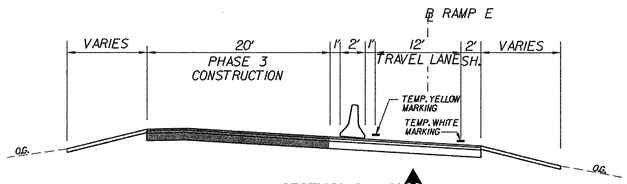

SECTION A - A'
RAMP E
NOT TO SCALE

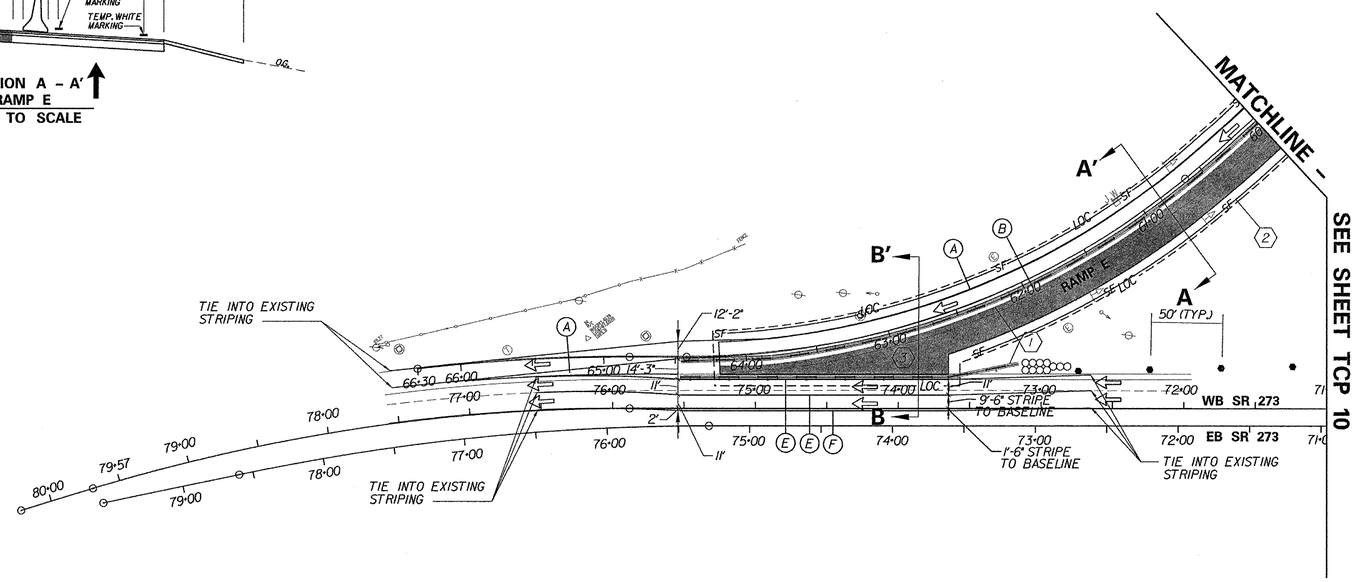

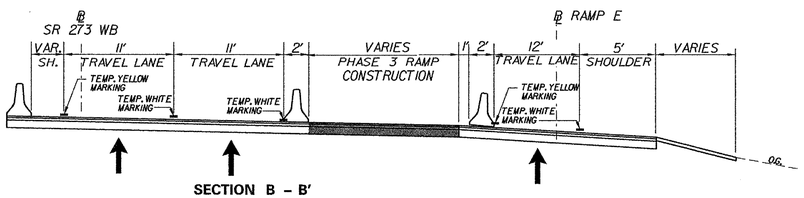

SECTION B - B'
SR 273
NOT TO SCALE

SEQUENCE OF CONSTRUCTION

(1) RESET TRAFFIC CONTROL DEVICES AND SHIFT TRAFFIC ON RAMP E TO THE RIGHT SIDE OF THE RAMP AS SHOWN. SEE NOTE 32 OF THE MAINTENANCE OF TRAFFIC GENERAL TRAFFIC CONTROL NOTES FOR DETAILS ON RESETTING PORTABLE CONCRETE SAFETY BARRIER.

(2) INSTALL ALL EROSION AND SEDIMENT CONTROL MEASURES AS SHOWN.

(3) RECONSTRUCT LEFT SIDE OF RAMP E AS SHOWN.

PREL. TRACING ____ J.A.D. ____ DESIGN ____ R.R.W./L.A.G. ____ CHKD. ____ J.M.P. ____

CONTRACT	COUNTY	F.A.P. NO.	SHEET NO.	TOTAL SHTS.
22-074-09	NEW CASTLE	SEE TITLE SHEET	36	152

REHABILITATION OF BRIDGE NOS. A 1 715, 1 715A, 1 715D ON SR 273 OVER I-95

REVISIONS

CONSTRUCTION PHASING, MOT AND EROSION CONTROL PHASE 3 TCP-10

SCALE 0 50 100 150 FEET

MOT CONSTRUCTION SEQUENCE LEGEND

- (A) 4 INCH WHITE TEMPORARY PAVEMENT MARKINGS
- (B) 4 INCH YELLOW TEMPORARY PAVEMENT MARKINGS
- (C) 12 INCH WHITE TEMPORARY PAVEMENT MARKINGS
- (D) 16 INCH WHITE TEMPORARY PAVEMENT MARKINGS
- (E) 4 INCH WHITE TEMPORARY PAVEMENT MARKING TAPE
- (F) 4 INCH YELLOW TEMPORARY PAVEMENT MARKING TAPE
- SIGN
- FLOW ARROW
- PROPOSED WORK AREA - THIS PHASE
- PORTABLE CONCRETE SAFETY BARRIER (F SHAPE)
- PLASTIC DRUM
- SAND FILLED PLASTIC BARRELS
- TYPE B RED FLASHING LIGHT
- TYPE 3 BARRICADE
- ARROW PANEL

NOTE: 12 IN. AND 16 IN. TEMPORARY MARKINGS ARE PAID AS 4 IN. TEMPORARY MARKINGS WITH THE QUANTITY INCREASED DEPENDING ON THE WIDTH.

SECTION A - A'
RAMP E
NOT TO SCALE

SECTION B - B'
RAMP F
NOT TO SCALE

SECTION C - C'
RAMP F
NOT TO SCALE

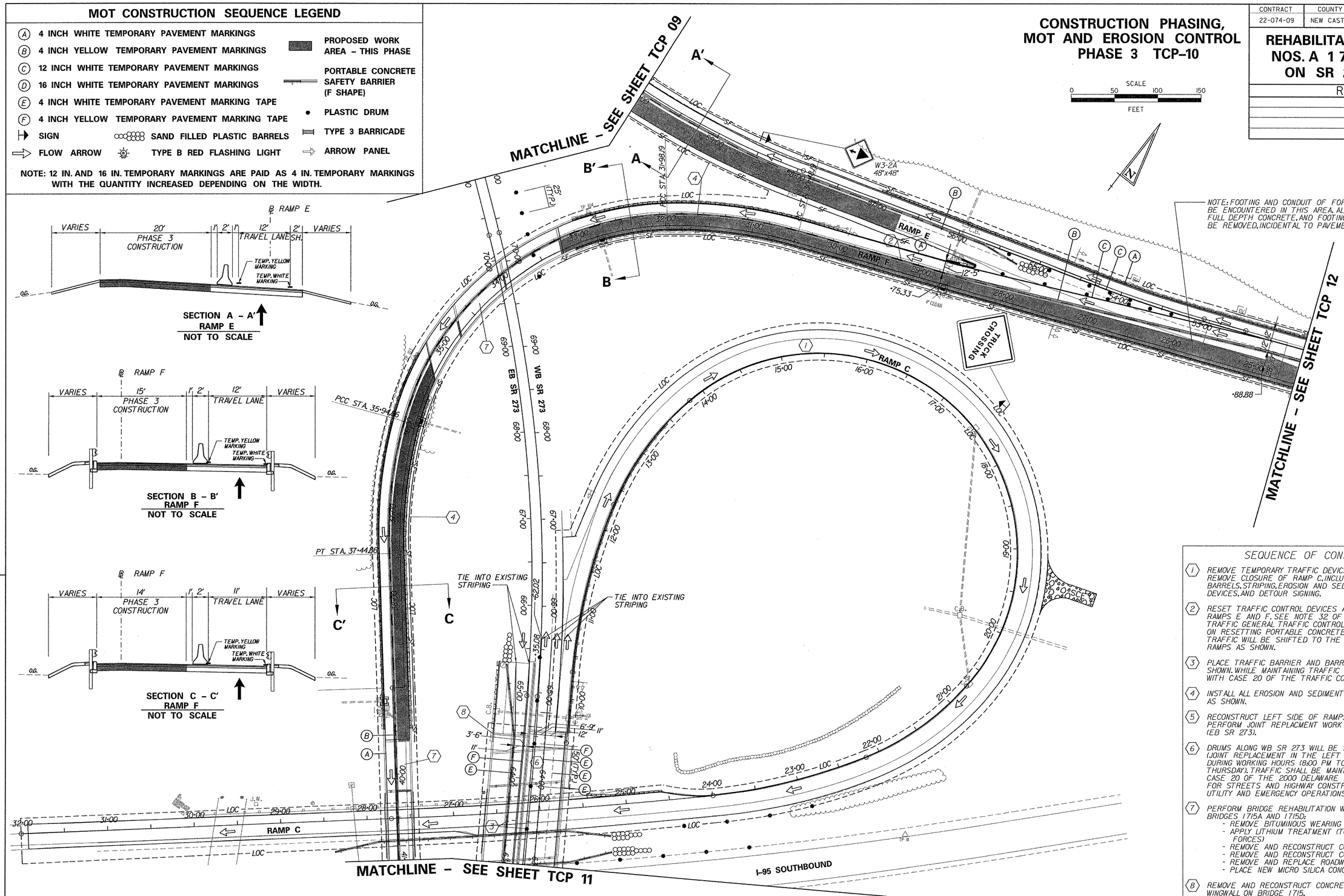

SEQUENCE OF CONSTRUCTION

1. REMOVE TEMPORARY TRAFFIC DEVICES ON WB SR 273 AND REMOVE CLOSURE OF RAMP C, INCLUDING BARRICADE, BARRELS, STRIPING, EROSION AND SEDIMENT CONTROL DEVICES, AND DETOUR SIGNING.
2. RESET TRAFFIC CONTROL DEVICES AND SHIFT TRAFFIC ON RAMPS E AND F. SEE NOTE 32 OF THE MAINTENANCE OF TRAFFIC GENERAL TRAFFIC CONTROL NOTES FOR DETAILS ON RESETTING PORTABLE CONCRETE SAFETY BARRIER. TRAFFIC WILL BE SHIFTED TO THE RIGHT SIDE OF THE RAMPS AS SHOWN.
3. PLACE TRAFFIC BARRIER AND BARRELS ON SR 273 AS SHOWN. WHILE MAINTAINING TRAFFIC IN ACCORDANCE WITH CASE 20 OF THE TRAFFIC CONTROL MANUAL.
4. INSTALL ALL EROSION AND SEDIMENT CONTROL MEASURES AS SHOWN.
5. RECONSTRUCT LEFT SIDE OF RAMPS E AND F AS SHOWN. PERFORM JOINT REPLACMENT WORK ON BRIDGE 1715 (EB SR 273).
6. DRUMS ALONG WB SR 273 WILL BE SHIFTED TO ALLOW WORK (JOINT REPLACEMENT IN THE LEFT LANE ON THE BRIDGE DECK DURING WORKING HOURS (8:00 PM TO 5:00 AM SUNDAY THRU THURSDAY). TRAFFIC SHALL BE MAINTAINED ACCORDING TO CASE 20 OF THE 2000 DELAWARE MANUAL "TRAFFIC CONTROLS FOR STREETS AND HIGHWAY CONSTRUCTION, MAINTENANCE UTILITY AND EMERGENCY OPERATIONS."
7. PERFORM BRIDGE REHABILITATION WORK ON EAST HALF OF BRIDGES 1715A AND 1715D:
   - REMOVE BITUMINOUS WEARING SURFACE
   - APPLY LITHIUM TREATMENT (TO BE PERFORMED BY STATE FORCES)
   - REMOVE AND RECONSTRUCT CONCRETE END POSTS
   - REMOVE AND RECONSTRUCT CONCRETE APPROACH SLABS
   - REMOVE AND REPLACE ROADWAY JOINT ASSEMBLY.
   - PLACE NEW MICRO SILICA CONCRETE OVERLAY.
8. REMOVE AND RECONSTRUCT CONCRETE ENDPOST AT NORTWEST WINGWALL ON BRIDGE 1715.

J.M.P. CHKD. R.R.W./J.A.G. DESIGN J.A.D. PREL. TRACING

CONTRACT	COUNTY	F.A.P. NO.	SHEET NO.	TOTAL SHTS.
22-074-09	NEW CASTLE	SEE TITLE SHEET	37	152

REHABILITATION OF BRIDGE NOS. A 1 715, 1 715A, 1 715D ON SR 273 OVER I-95

REVISIONS

MOT CONSTRUCTION SEQUENCE LEGEND

- (A) 4 INCH WHITE TEMPORARY PAVEMENT MARKINGS
- (B) 4 INCH YELLOW TEMPORARY PAVEMENT MARKINGS
- (C) 12 INCH WHITE TEMPORARY PAVEMENT MARKINGS
- (D) 16 INCH WHITE TEMPORARY PAVEMENT MARKINGS
- (E) 4 INCH WHITE TEMPORARY PAVEMENT MARKING TAPE
- (F) 4 INCH YELLOW TEMPORARY PAVEMENT MARKING TAPE
- SIGN
- FLOW ARROW
- PROPOSED WORK AREA - THIS PHASE
- PORTABLE CONCRETE SAFETY BARRIER (F SHAPE)
- PLASTIC DRUM
- TYPE 3 BARRICADE
- ARROW PANEL
- SAND FILLED PLASTIC BARRELS
- TYPE B RED FLASHING LIGHT

NOTE: 12 IN. AND 16 IN. TEMPORARY MARKINGS ARE PAID AS 4 IN. TEMPORARY MARKINGS WITH THE QUANTITY INCREASED DEPENDING ON THE WIDTH.

CONSTRUCTION PHASING, MOT AND EROSION CONTROL PHASE 3 TCP-11

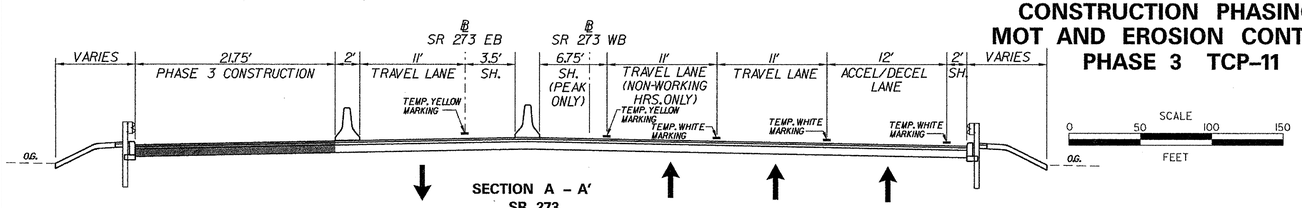

SECTION A - A'
SR 273
NOT TO SCALE

SECTION B - B'
RAMP F
NOT TO SCALE

SEQUENCE OF CONSTRUCTION

1. REMOVE TEMPORARY TRAFFIC DEVICES ON WB SR 273, REMOVE STOP AND STOP AHEAD SIGNS FROM RAMP C AND REOPEN ACCELERATION/DECELERATION LANE ON BRIDGE TO TRAFFIC.
2. RESET TRAFFIC CONTROL DEVICES AND SHIFT TRAFFIC ON RAMP F TO THE RIGHT SIDE OF THE RAMP AS SHOWN. SEE NOTE 32 OF THE MAINTENANCE OF TRAFFIC GENERAL TRAFFIC CONTROL NOTES FOR DETAILS ON RESETTING PORTABLE CONCRETE SAFTEY BARRIER.
3. PLACE TRAFFIC BARRIER AND BARRELS ON SR 273 AS SHOWN, WHILE MAINTAINING TRAFFIC IN ACCORDANCE WITH CASE 20 OF THE 2000 DELAWARE MANUAL "TRAFFIC CONTROLS FOR STREETS AND HIGHWAY CONSTRUCTION, MAINTENANCE UTILITY AND EMERGENCY OPERATIONS."
4. INSTALL ALL EROSION AND SEDIMENT CONTROL MEASURES AS SHOWN.
5. RECONSTRUCT LEFT SIDE OF RAMP F AS SHOWN. PERFORM JOINT REPLACMENT WORK ON BRIDGE 1715.
6. DRUMS ALONG WB SR 273 WILL BE SHIFTED TO ALLOW WORK IN THE LEFT LANE ON THE BRIDGE DECK DURING WORKING HOURS (8:00 PM TO 5:00 AM SUNDAY THRU THURSDAY). TRAFFIC SHALL BE MAINTAINED ACCORDING TO CASE 20 OF THE 2000 DELAWARE MANUAL "TRAFFIC CONTROLS FOR STREETS AND HIGHWAY CONSTRUCTION, MAINTENANCE UTILITY AND EMERGENCY OPERATIONS."
7. REMOVE AND RECONSTRUCT CONCRETE END POST AT SOUTHWEST WINGWALL ON BRIDGE 1715.
8. PERFORM BRIDGE REHABILITATION WORK ON EAST HALF OF BRIDGE 1715A:
   - REMOVE BITUMINOUS WEARING SURFACE
   - APPLY LITHIUM TREATMENT (TO BE PERFORMED BY STATE FORCES)
   - REMOVE AND RECONSTRUCT CONCRETE END POSTS
   - REMOVE AND RECONSTRUCT CONCRETE APPROACH SLABS
   - REMOVE AND REPLACE ROADWAY JOINT ASSEMBLY.
   - PLACE NEW MICRO SILICA CONCRETE OVERLAY.

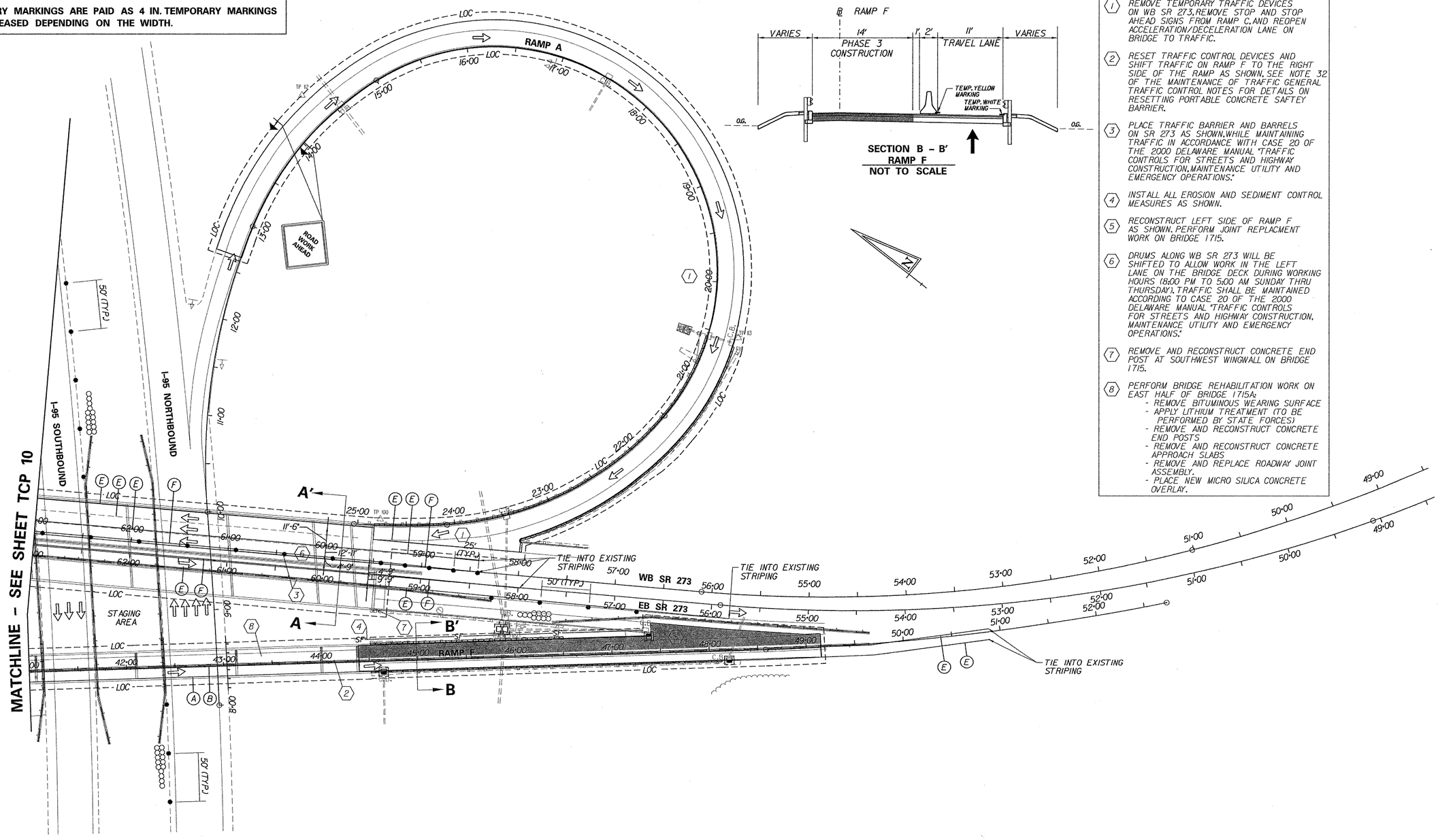

PREL. TRACING ____ J.A.D. ____ DESIGN ____ R.R.W./J.A.G. ____ CHKD. ____ J.M.P. ____

9/5/2003 9/5/2003 M:\31303\14\tcplsr273.plf

CONTRACT	COUNTY	F.A.P. NO.	SHEET NO.	TOTAL SHTS.
22-074-09	NEW CASTLE	SEE TITLE SHEET	38	152

REHABILITATION OF BRIDGE NOS. A 1 715, 1 715A, 1 715D ON SR 273 OVER I-95

REVISIONS

CONSTRUCTION PHASING, MOT AND EROSION CONTROL PHASE 3 TCP-12

SCALE 0 50 100 150 FEET

MOT CONSTRUCTION SEQUENCE LEGEND

- (A) 4 INCH WHITE TEMPORARY PAVEMENT MARKINGS
- (B) 4 INCH YELLOW TEMPORARY PAVEMENT MARKINGS
- (C) 12 INCH WHITE TEMPORARY PAVEMENT MARKINGS
- (D) 16 INCH WHITE TEMPORARY PAVEMENT MARKINGS
- (E) 4 INCH WHITE TEMPORARY PAVEMENT MARKING TAPE
- (F) 4 INCH YELLOW TEMPORARY PAVEMENT MARKING TAPE
- SIGN
- FLOW ARROW
- SAND FILLED PLASTIC BARRELS
- TYPE B RED FLASHING LIGHT
- PROPOSED WORK AREA - THIS PHASE
- PORTABLE CONCRETE SAFETY BARRIER (F SHAPE)
- PLASTIC DRUM
- TYPE 3 BARRICADE
- ARROW PANEL

NOTE: 12 IN. AND 16 IN. TEMPORARY MARKINGS ARE PAID AS 4 IN. TEMPORARY MARKINGS WITH THE QUANTITY INCREASED DEPENDING ON THE WIDTH.

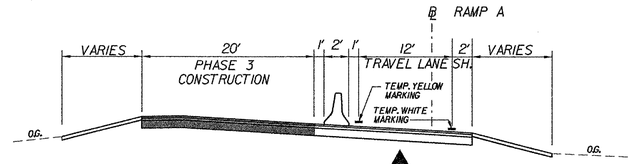

SECTION A - A'
RAMP F
NOT TO SCALE

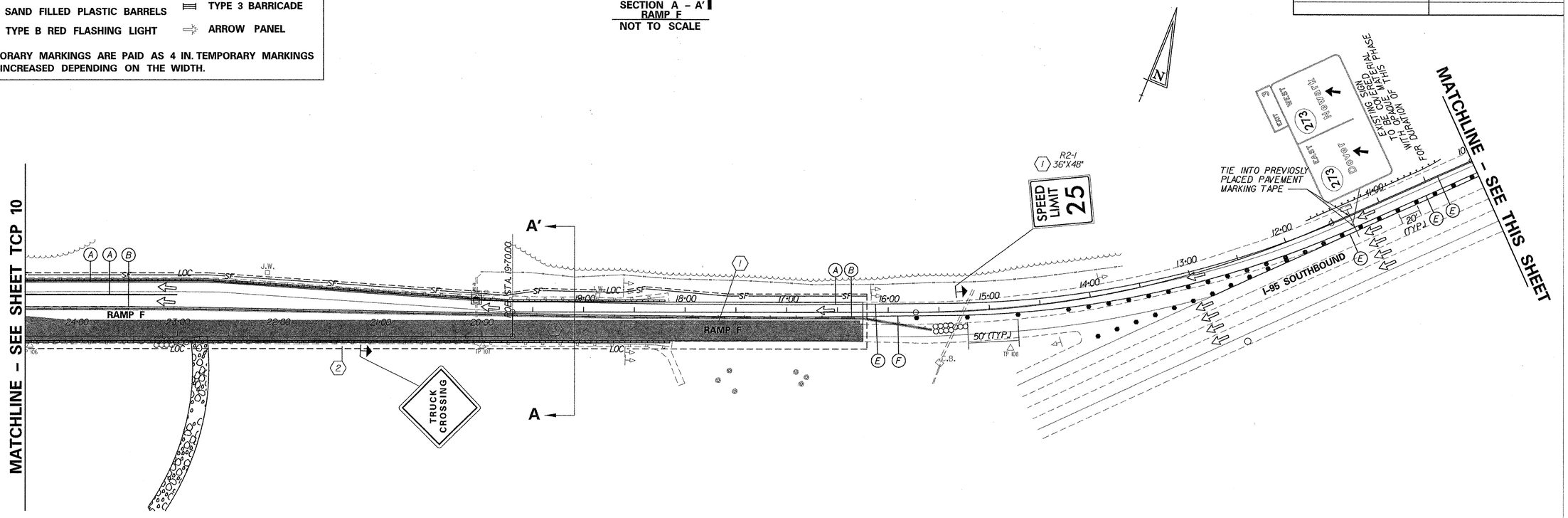

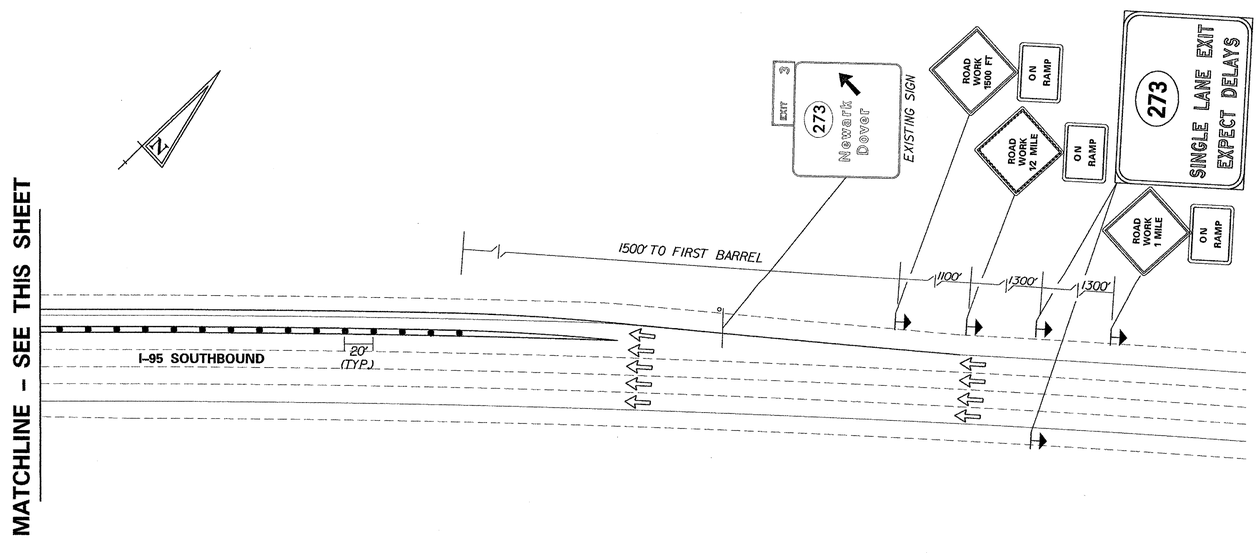

SEQUENCE OF CONSTRUCTION

1. RESET TRAFFIC CONTROL DEVICES AND SHIFT TRAFFIC ON RAMP F TO THE RIGHT SIDE OF THE RAMPS AS SHOWN. SEE NOTE 32 OF THE MAINTENANCE OF TRAFFIC GENERAL TRAFFIC CONTROL NOTES FOR DETAILS ON RESETTING PORTABLE CONCRETE SAFETY BARRIER.
2. INSTALL ALL EROSION AND SEDIMENT CONTROL MEASURES AS SHOWN.
3. RECONSTRUCT LEFT SIDE OF RAMP F AS SHOWN.

PREL. TRACING ____ J.A.D. ____ DESIGN ____ R.R.W./J.A.G. ____ CHKD. ____ J.M.P. ____

MOT CONSTRUCTION SEQUENCE LEGEND

- (A) 4 INCH WHITE TEMPORARY PAVEMENT MARKINGS
- (B) 4 INCH YELLOW TEMPORARY PAVEMENT MARKINGS
- (C) 12 INCH WHITE TEMPORARY PAVEMENT MARKINGS
- (D) 16 INCH WHITE TEMPORARY PAVEMENT MARKINGS
- (E) 4 INCH WHITE TEMPORARY PAVEMENT MARKING TAPE
- (F) 4 INCH YELLOW TEMPORARY PAVEMENT MARKING TAPE
- SIGN
- FLOW ARROW
- SAND FILLED PLASTIC BARRELS
- TYPE B RED FLASHING LIGHT
- PROPOSED WORK AREA – THIS PHASE
- PORTABLE CONCRETE SAFETY BARRIER (F SHAPE)
- PLASTIC DRUM
- TYPE 3 BARRICADE
- ARROW PANEL

NOTE: 12 IN. AND 16 IN. TEMPORARY MARKINGS ARE PAID AS 4 IN. TEMPORARY MARKINGS WITH THE QUANTITY INCREASED DEPENDING ON THE WIDTH.

CONTRACT	COUNTY	F.A.P. NO.	SHEET NO.	TOTAL SHTS.
22-074-09	NEW CASTLE	SEE TITLE SHEET	39	152

CONSTRUCTION PHASING, MOT AND EROSION CONTROL PHASE 4 TCP-13

REHABILITATION OF BRIDGE NOS. A 1 715, 1 715A, 1 715D ON SR 273 OVER I-95

REVISIONS

SCALE 0 50 100 150 FEET

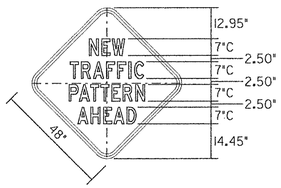

W9-2(1) MOD.
(48"x48")

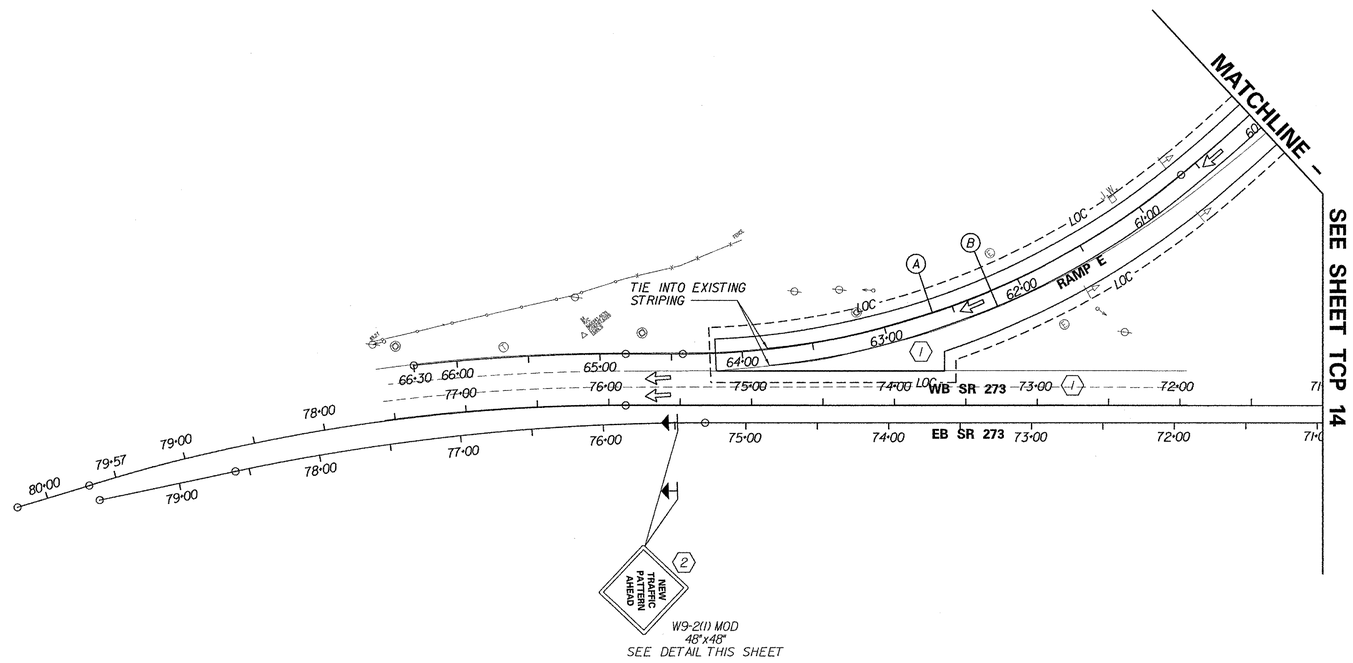

SEQUENCE OF CONSTRUCTION

1. REMOVE TRAFFIC CONTROL DEVICES AND EROSION AND SEDIMENT CONTROL DEVICES ON RAMP E AND WB SR 273 AND RESTORE TRAFFIC TO ALL LANES.
2. INSTALL "NEW TRAFFIC PATTERN AHEAD" SIGN ON EB SR 273.
3. WHEN ALL OTHER WORK HAS BEEN PERFORMED, PLACE FINAL SURFACE COURSE AND PAVEMENT MARKINGS, AND REMOVE TRAFFIC CONTROL SIGNS.

PREL. TRACING ____ J.A.D. ____ DESIGN ____ R.R.W./J.A.G. ____ CHKD. ____ J.M.P.

CONTRACT	COUNTY	F.A.P. NO.	SHEET NO.	TOTAL SHTS.
22-074-09	NEW CASTLE	SEE TITLE SHEET	40	152

REHABILITATION OF BRIDGE NOS. A 1 715, 1 715A, 1 715D ON SR 273 OVER I-95

REVISIONS

CONSTRUCTION PHASING, MOT AND EROSION CONTROL PHASE 4 TCP-14

SCALE 0 50 100 150 FEET

MOT CONSTRUCTION SEQUENCE LEGEND

- (A) 4 INCH WHITE TEMPORARY PAVEMENT MARKINGS
- (B) 4 INCH YELLOW TEMPORARY PAVEMENT MARKINGS
- (C) 12 INCH WHITE TEMPORARY PAVEMENT MARKINGS
- (D) 16 INCH WHITE TEMPORARY PAVEMENT MARKINGS
- (E) 4 INCH WHITE TEMPORARY PAVEMENT MARKING TAPE
- (F) 4 INCH YELLOW TEMPORARY PAVEMENT MARKING TAPE
- SIGN
- SAND FILLED PLASTIC BARRELS
- FLOW ARROW
- TYPE B RED FLASHING LIGHT
- PROPOSED WORK AREA - THIS PHASE
- PORTABLE CONCRETE SAFETY BARRIER (F SHAPE)
- PLASTIC DRUM
- TYPE 3 BARRICADE
- ARROW PANEL

NOTE: 12 IN. AND 16 IN. TEMPORARY MARKINGS ARE PAID AS 4 IN. TEMPORARY MARKINGS WITH THE QUANTITY INCREASED DEPENDING ON THE WIDTH.

SECTION A - A'
RAMP F AND E
NOT TO SCALE

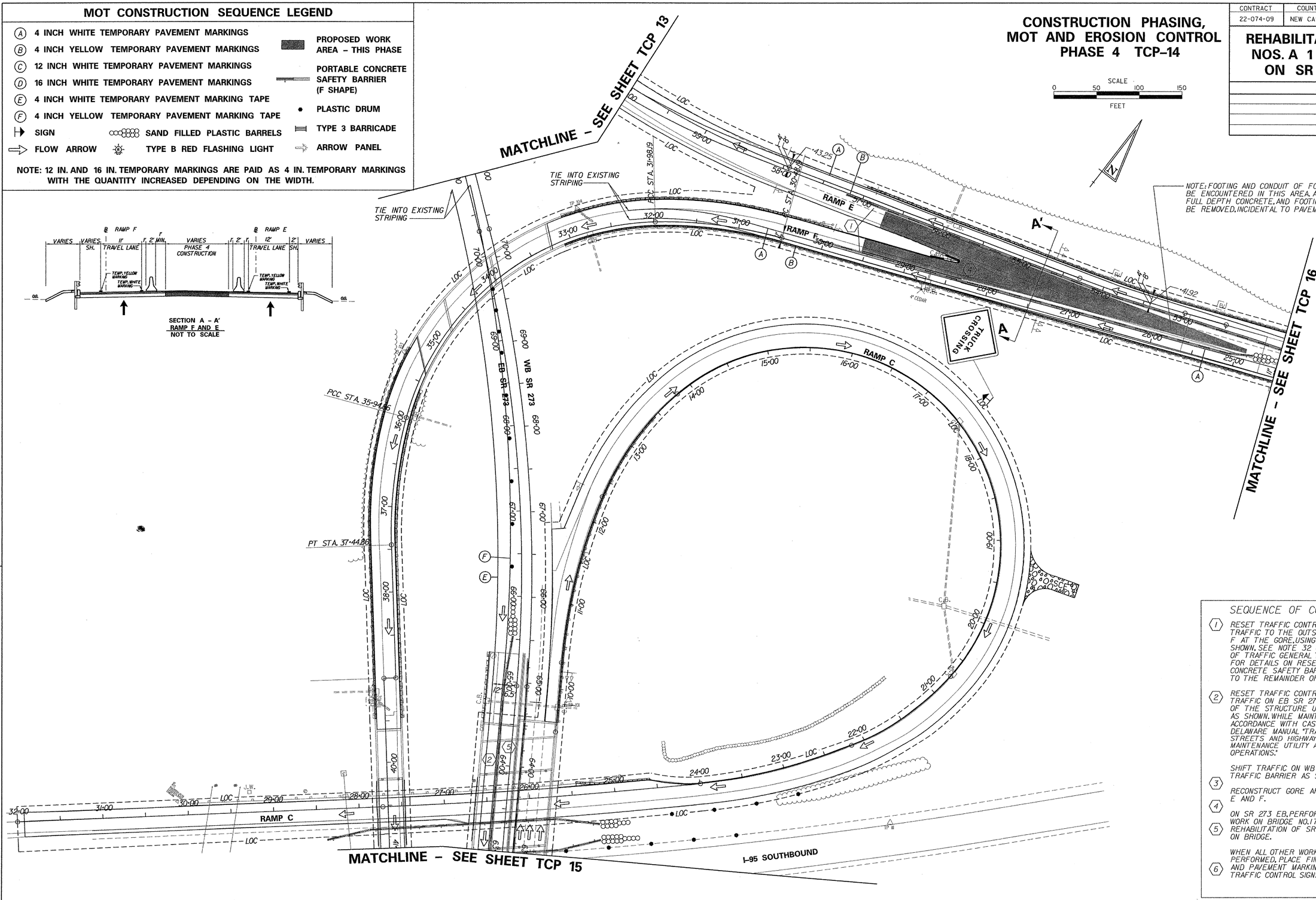

NOTE: FOOTING AND CONDUIT OF FORMER TOLL PLAZA MAY BE ENCOUNTERED IN THIS AREA. ALL ABANDONED UTILITIES, FULL DEPTH CONCRETE, AND FOOTINGS IN THIS AREA SHALL BE REMOVED, INCIDENTAL TO PAVEMENT CONSTRUCTION.

SEQUENCE OF CONSTRUCTION

1. RESET TRAFFIC CONTROL DEVICES AND SHIFT TRAFFIC TO THE OUTSIDE OF RAMPS E AND F AT THE GORE, USING TRAFFIC BARRIER AS SHOWN. SEE NOTE 32 OF THE MAINTENANCE OF TRAFFIC GENERAL TRAFFIC CONTROL NOTES FOR DETAILS ON RESETTING PORTABLE CONCRETE SAFETY BARRIER. RESTORE TRAFFIC TO THE REMAINDER OF RAMPS E AND F.
2. RESET TRAFFIC CONTROL DEVICES AND SHIFT TRAFFIC ON EB SR 273 TO THE RIGHT SIDE OF THE STRUCTURE USING TRAFFIC BARRIER AS SHOWN. WHILE MAINTAINING TRAFFIC IN ACCORDANCE WITH CASE 20 OF THE 2000 DELAWARE MANUAL "TRAFFIC CONTROLS FOR STREETS AND HIGHWAY CONSTRUCTION, MAINTENANCE UTILITY AND EMERGENCY OPERATIONS."
3. SHIFT TRAFFIC ON WB SR 273 USING TRAFFIC BARRIER AS SHOWN.
4. RECONSTRUCT GORE AREA OF RAMPS E AND F.
5. ON SR 273 EB, PERFORM JOINT REPLACEMENT WORK ON BRIDGE NO. 1715. PERFORM REHABILITATION OF SR 273 MEDIAN BARRIER ON BRIDGE.
6. WHEN ALL OTHER WORK HAS BEEN PERFORMED, PLACE FINAL SURFACE COURSE AND PAVEMENT MARKINGS, AND REMOVE TRAFFIC CONTROL SIGNS.

PREL. TRACING J.A.D. DESIGN R.R.W./J.A.G. CHKD. J.M.P.

9/5/2003 9/5/2003 M:\313031\4\tcp14sr273.plf

CONTRACT	COUNTY	F.A.P. NO.	SHEET NO.	TOTAL SHTS.
22-074-09	NEW CASTLE	SEE TITLE SHEET	41	152

REHABILITATION OF BRIDGE NOS. A 1 715, 1 715A, 1 715D ON SR 273 OVER I-95

REVISIONS

MOT CONSTRUCTION SEQUENCE LEGEND

- (A) 4 INCH WHITE TEMPORARY PAVEMENT MARKINGS
- (B) 4 INCH YELLOW TEMPORARY PAVEMENT MARKINGS
- (C) 12 INCH WHITE TEMPORARY PAVEMENT MARKINGS
- (D) 16 INCH WHITE TEMPORARY PAVEMENT MARKINGS
- (E) 4 INCH WHITE TEMPORARY PAVEMENT MARKING TAPE
- (F) 4 INCH YELLOW TEMPORARY PAVEMENT MARKING TAPE
- SIGN
- FLOW ARROW
- PROPOSED WORK AREA – THIS PHASE
- PORTABLE CONCRETE SAFETY BARRIER (F SHAPE)
- PLASTIC DRUM
- SAND FILLED PLASTIC BARRELS
- TYPE B RED FLASHING LIGHT
- TYPE 3 BARRICADE
- ARROW PANEL

NOTE: 12 IN. AND 16 IN. TEMPORARY MARKINGS ARE PAID AS 4 IN. TEMPORARY MARKINGS WITH THE QUANTITY INCREASED DEPENDING ON THE WIDTH.

CONSTRUCTION PHASING, MOT AND EROSION CONTROL PHASE 4 TCP-15

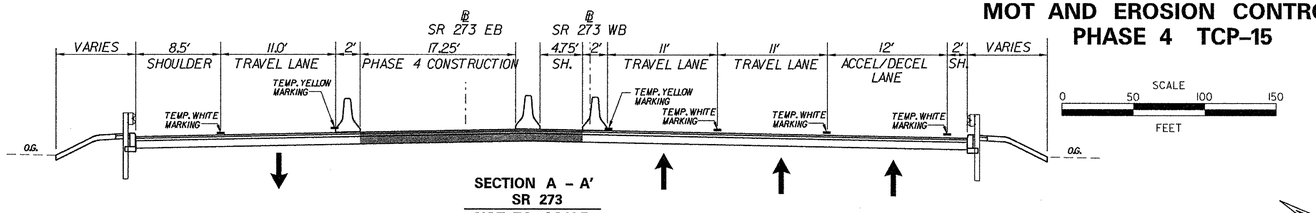

SECTION A – A'
SR 273
NOT TO SCALE

SCALE
0 50 100 150
FEET

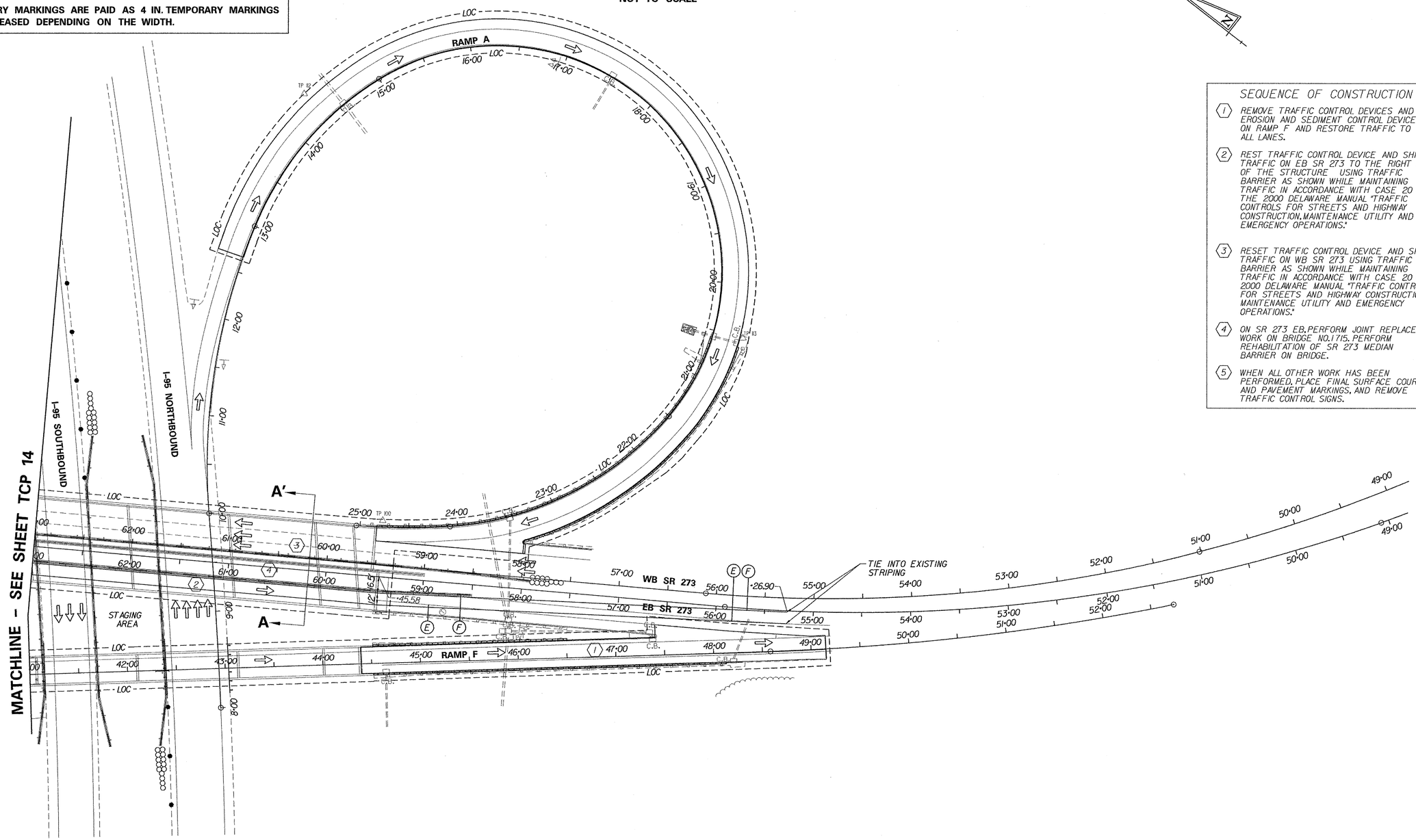

SEQUENCE OF CONSTRUCTION

1. REMOVE TRAFFIC CONTROL DEVICES AND EROSION AND SEDIMENT CONTROL DEVICES ON RAMP F AND RESTORE TRAFFIC TO ALL LANES.
2. REST TRAFFIC CONTROL DEVICE AND SHIFT TRAFFIC ON EB SR 273 TO THE RIGHT SIDE OF THE STRUCTURE USING TRAFFIC BARRIER AS SHOWN WHILE MAINTAINING TRAFFIC IN ACCORDANCE WITH CASE 20 OF THE 2000 DELAWARE MANUAL "TRAFFIC CONTROLS FOR STREETS AND HIGHWAY CONSTRUCTION, MAINTENANCE UTILITY AND EMERGENCY OPERATIONS."
3. RESET TRAFFIC CONTROL DEVICE AND SHIFT TRAFFIC ON WB SR 273 USING TRAFFIC BARRIER AS SHOWN WHILE MAINTAINING TRAFFIC IN ACCORDANCE WITH CASE 20 OF THE 2000 DELAWARE MANUAL "TRAFFIC CONTROLS FOR STREETS AND HIGHWAY CONSTRUCTION, MAINTENANCE UTILITY AND EMERGENCY OPERATIONS."
4. ON SR 273 EB. PERFORM JOINT REPLACEMENT WORK ON BRIDGE NO. 1715. PERFORM REHABILITATION OF SR 273 MEDIAN BARRIER ON BRIDGE.
5. WHEN ALL OTHER WORK HAS BEEN PERFORMED, PLACE FINAL SURFACE COURSE AND PAVEMENT MARKINGS, AND REMOVE TRAFFIC CONTROL SIGNS.

PREL. TRACING ____ J.A.D. ____ DESIGN ____ R.R.W./J.A.G. ____ CHKD. ____ J.M.P. ____

MOT CONSTRUCTION SEQUENCE LEGEND

- (A) 4 INCH WHITE TEMPORARY PAVEMENT MARKINGS
- (B) 4 INCH YELLOW TEMPORARY PAVEMENT MARKINGS
- (C) 12 INCH WHITE TEMPORARY PAVEMENT MARKINGS
- (D) 16 INCH WHITE TEMPORARY PAVEMENT MARKINGS
- (E) 4 INCH WHITE TEMPORARY PAVEMENT MARKING TAPE
- (F) 4 INCH YELLOW TEMPORARY PAVEMENT MARKING TAPE
- SIGN
- SAND FILLED PLASTIC BARRELS
- FLOW ARROW
- TYPE B RED FLASHING LIGHT
- PROPOSED WORK AREA – THIS PHASE
- PORTABLE CONCRETE SAFETY BARRIER (F SHAPE)
- PLASTIC DRUM
- TYPE 3 BARRICADE
- ARROW PANEL

NOTE: 12 IN. AND 16 IN. TEMPORARY MARKINGS ARE PAID AS 4 IN. TEMPORARY MARKINGS WITH THE QUANTITY INCREASED DEPENDING ON THE WIDTH.

CONSTRUCTION PHASING, MOT AND EROSION CONTROL PHASE 4 TCP-16

CONTRACT	COUNTY	F.A.P. NO.	SHEET NO.	TOTAL SHTS.
22-074-09	NEW CASTLE	SEE TITLE SHEET	42	152

REHABILITATION OF BRIDGE NOS. A 1 715, 1 715A, 1 715D ON SR 273 OVER I-95

REVISIONS

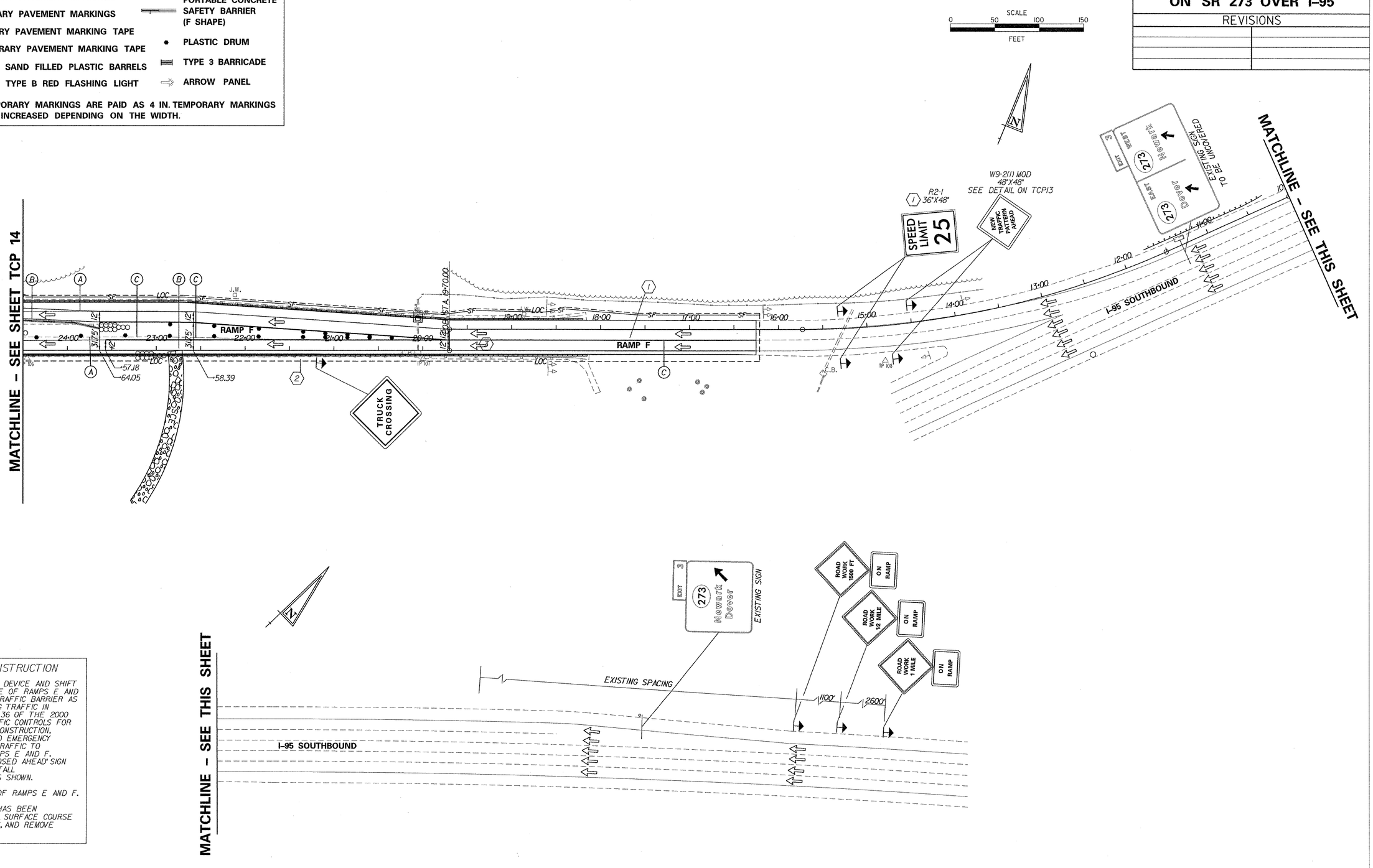

SEQUENCE OF CONSTRUCTION

(1) RESET TRAFFIC CONTROL DEVICE AND SHIFT TRAFFIC TO THE OUTSIDE OF RAMPS E AND F AT THE GORE, USING TRAFFIC BARRIER AS SHOWN, WHILE MAINTAINING TRAFFIC IN ACCORDANCE WITH CASE 36 OF THE 2000 DELAWARE MANUAL "TRAFFIC CONTROLS FOR STREETS AND HIGHWAY CONSTRUCTION, MAINTENANCE UTILITY AND EMERGENCY OPERATIONS." RESTORE TRAFFIC TO THE REMAINDER OF RAMPS E AND F. REMOVE "RIGHT LANE CLOSED AHEAD" SIGN ON I-95 SOUTHBOUND. INSTALL ROUTE MARKER SIGNS AS SHOWN.

(2) CONSTRUCT GORE AREA OF RAMPS E AND F.

(3) WHEN ALL OTHER WORK HAS BEEN PERFORMED, PLACE FINAL SURFACE COURSE AND PAVEMENT MARKINGS, AND REMOVE TRAFFIC CONTROL SIGNS.

PREL. TRACING J.A.D. DESIGN R.R.W./J.A.G. CHKD. J.M.P.

9/5/2003 9/5/2003 M:\3130314\tcp16sr273.plf

CONTRACT	COUNTY	F.A.P. NO.	SHEET	TOTAL
22-074-09	NEW CASTLE	N/A	43	152

RAMP A CLOSURE DETOUR PLAN

(NOT TO SCALE)

REHABILITATION OF BRIDGE NOS. 1 715, 1 715A & 1 715D ON SR 273 OVER I-95 RAMP A DETOUR (PHASE I)

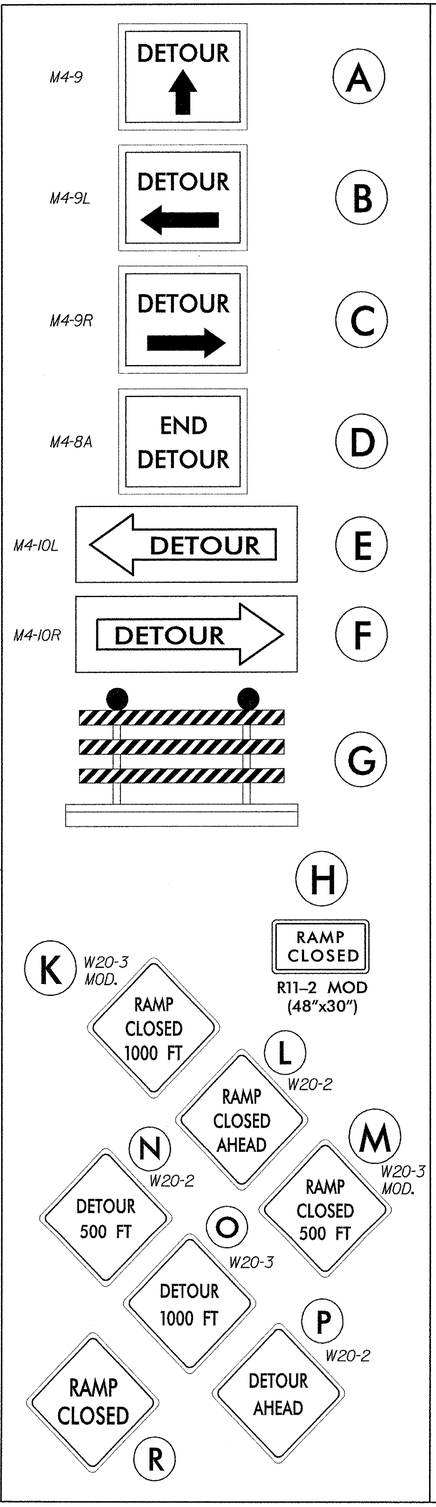

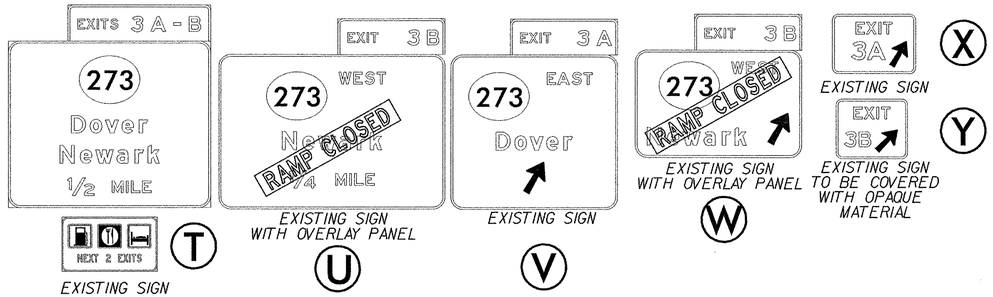

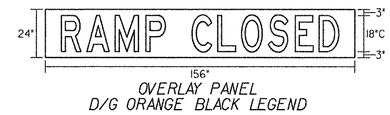

OVERLAY PANEL
D/G ORANGE BLACK LEGEND

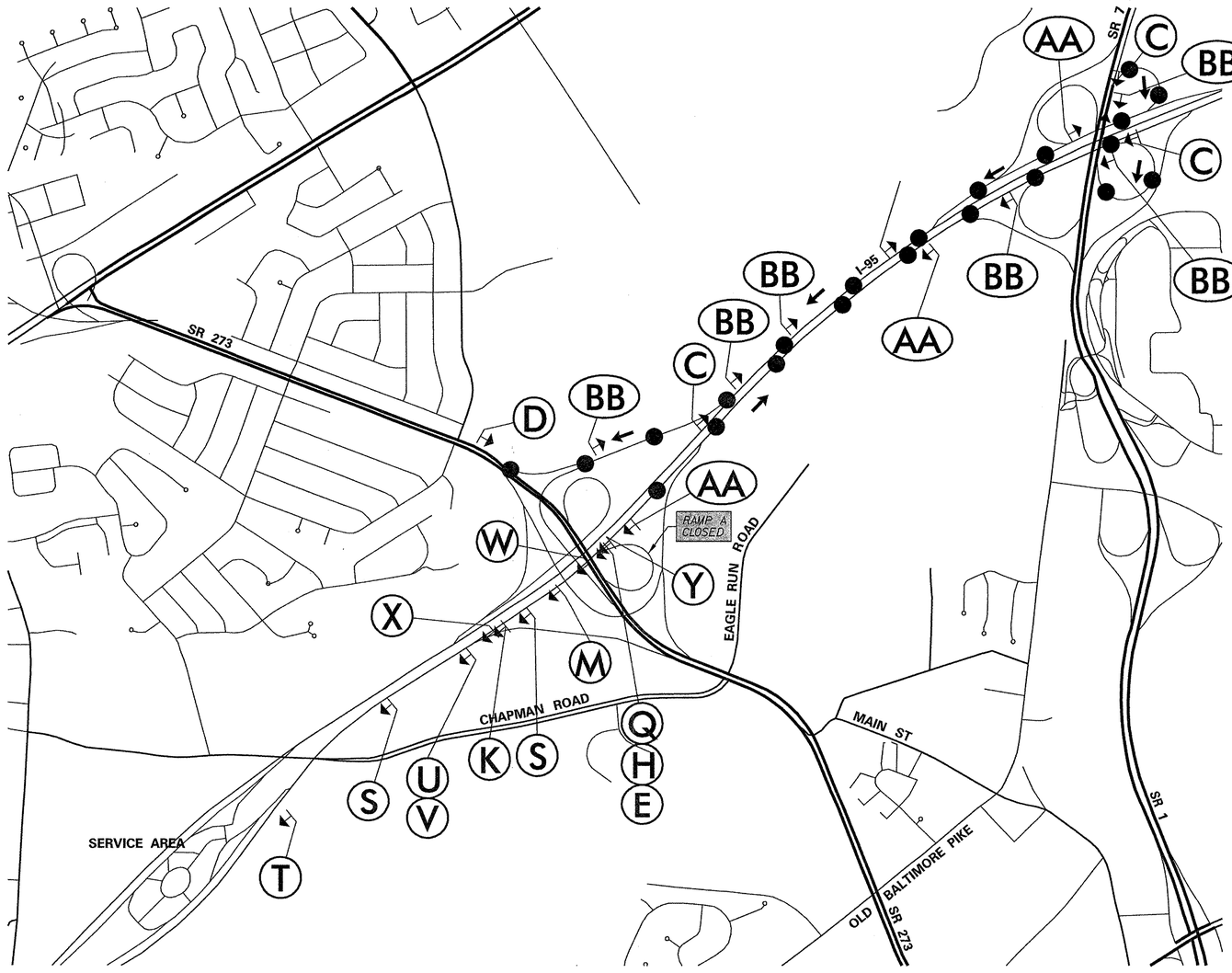

● ● ● - PROPOSED DETOUR ROUTE

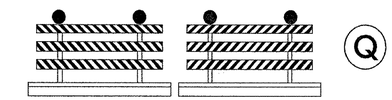

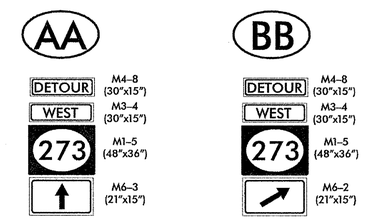

MESSAGE BOARD DURING RAMP CLOSURE

FIRST SCREEN	SECOND SCREEN
EXIT 3B 273 WEST CLOSED	FOLLOW DETOUR

S

MESSAGE BOARD FOR 2 WEEKS PRIOR TO DETOUR

FIRST SCREEN	SECOND SCREEN
EXIT 3B 273 WEST CLOSED	ON OR ABOUT XX/XX

NOTES

1. SIGNS A,B,C, & D SHALL BE INSTALLED AND MAINTAINED BY TRAFFIC FORCES.
2. THE CONTRACTOR SHALL COMPLY WITH GUIDELINES IN "TRAFFIC CONTROLS FOR STREETS AND HIGHWAY CONSTRUCTION, MAINTENANCE, UTILITY AND EMERGENCY OPERATIONS" MANUAL, FOR LIGHTS, BARRICADES AND SIGNS. (AS PER LATEST REVISION)
3. FIELD CONDITIONS MAY DICTATE CHANGES AT SOME TIME DURING THE LIFE OF THE CONTRACT. IN THE EVENT OF OMMISSIONS OR CORRECTIONS, THE SIGNING PROVISIONS OF THE DELAWARE TRAFFIC CONTROL MANUAL WILL PREVAIL.
4. SIGNS H THROUGH M, THE WORD (ROAD) SHOULD BE CHANGED TO R/R OR BRIDGE WHERE APPLICABLE.
5. WARNING SIGNS K THRU R WILL BE MOUNTED ON BREAKAWAY POSTS AND HAVE RETROREFLECTIVE FLUORESCENT SHEETING MOUNTED ON ALUMINUM PANELS. TYPE 'B' LIGHTS WILL NOT BE REQUIRED.
6. 'O' BARRICADES WILL COMPLETELY RUN THE FULL WIDTH OF ROADWAY.

RECOMMENDED _____ 19___ _____

RECOMMENDED _____ 19___ _____

RECOMMENDED _____ 19___ _____

APPROVED CHIEF SAFETY INSPECTOR _____ DATE _____

APPROVED TRAFFIC ENGINEER _____ DATE _____

DESIGN _____ C.L.G.

PREL. TRACING _____ J.D.

TCP17

9/5/2003

M:\31303\tcp17sr273.plf

RAMP C CLOSURE DETOUR PLAN

(NOT TO SCALE)

CONTRACT	COUNTY	F.A.P. NO.	SHEET	TOTAL
22-074-09	NEW CASTLE	N/A	44	152

REHABILITATION OF BRIDGE NOS. 1 715, 1 715A & 1 715D ON SR 273 OVER I-95 RAMP C DETOUR (PHASE 2)

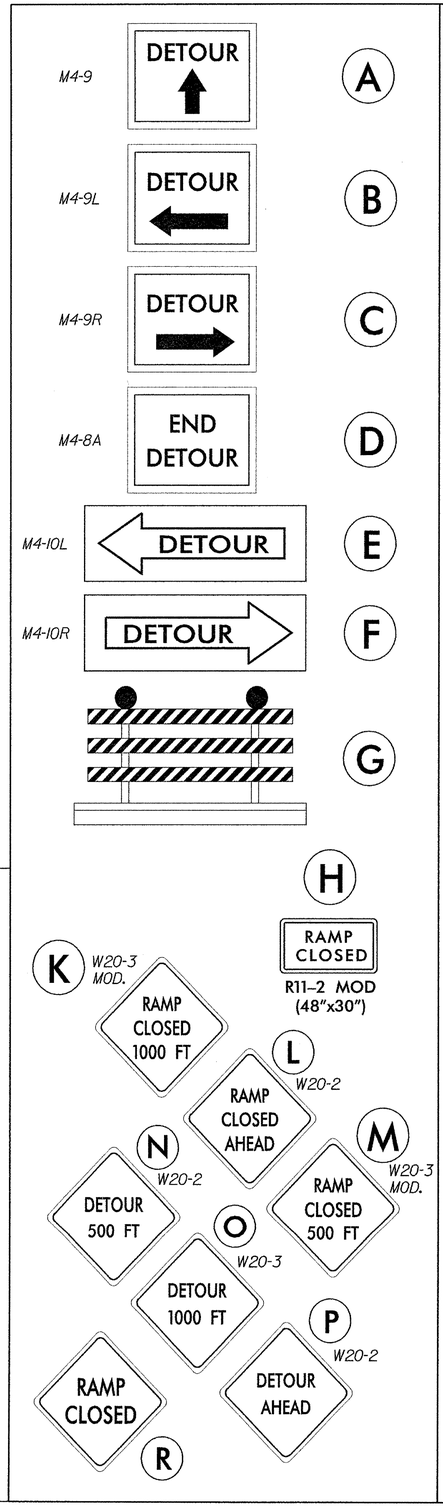

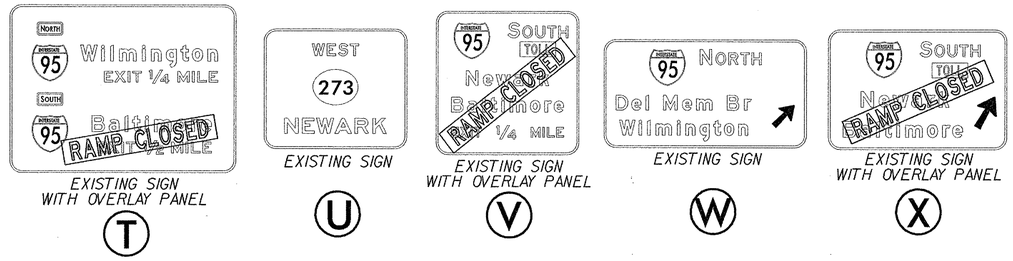

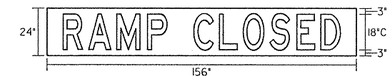

OVERLAY PANEL
D/G ORANGE BLACK LEGEND

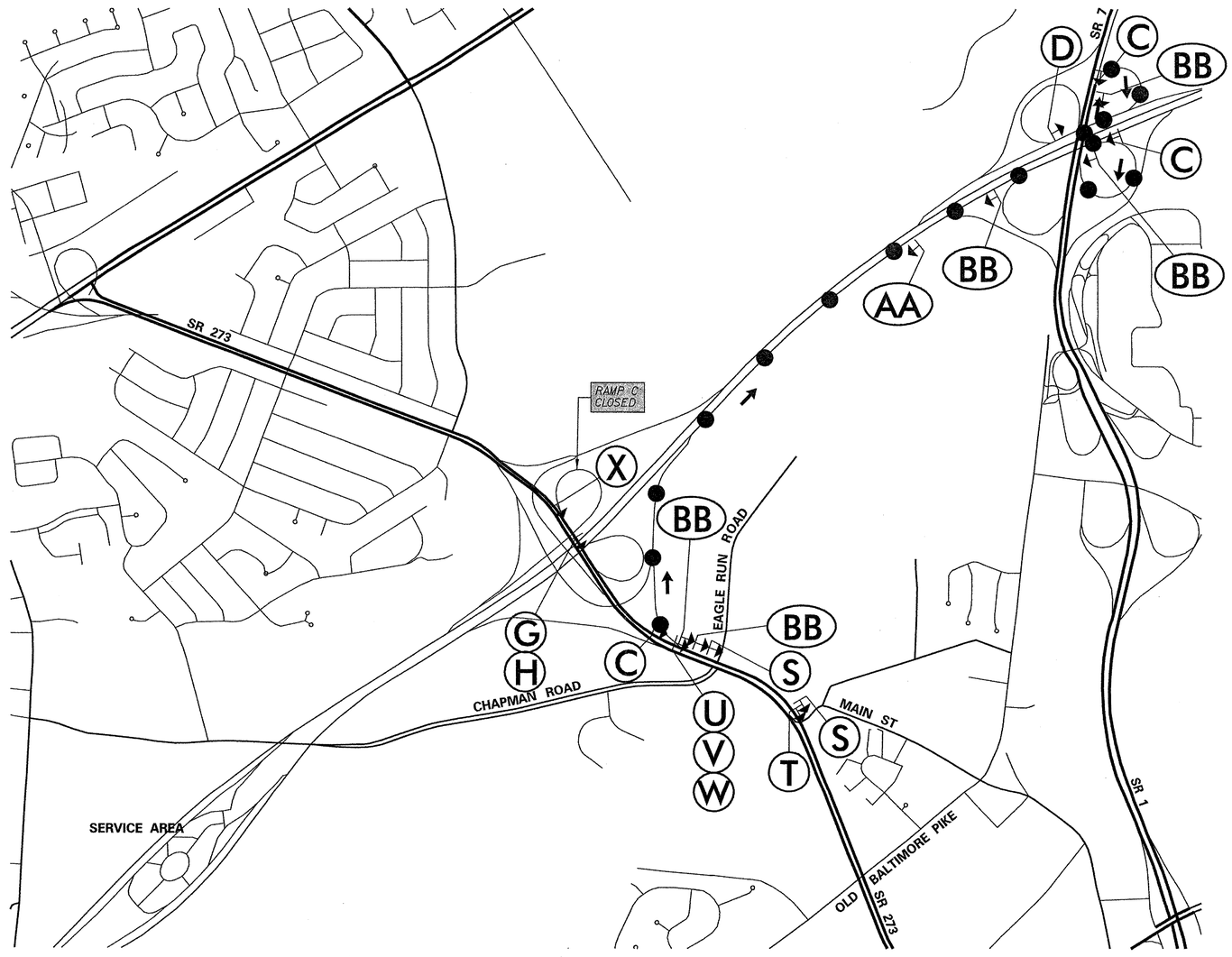

● ● ● - PROPOSED DETOUR ROUTE

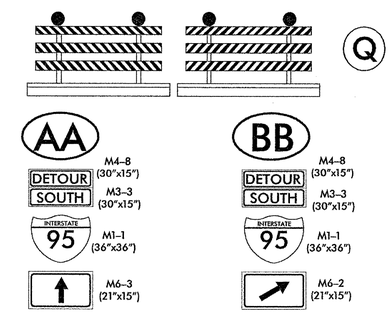

MESSAGE BOARD DURING RAMP CLOSURE

FIRST SCREEN	SECOND SCREEN
I-95 SB RAMP CLOSED	FOLLOW DETOUR

MESSAGE BOARD FOR 2 WEEKS PRIOR TO DETOUR

FIRST SCREEN	SECOND SCREEN
I-95 SB RAMP CLOSED	ON OR ABOUT XX/XX

S

NOTES

1. SIGNS A,B,C, & D SHALL BE INSTALLED AND MAINTAINED BY TRAFFIC FORCES.
2. THE CONTRACTOR SHALL COMPLY WITH GUIDELINES IN "TRAFFIC CONTROLS FOR STREETS AND HIGHWAY CONSTRUCTION, MAINTENANCE, UTILITY AND EMERGENCY OPERATIONS" MANUAL, FOR LIGHTS, BARRICADES AND SIGNS. (AS PER LATEST REVISION)
3. FIELD CONDITIONS MAY DICTATE CHANGES AT SOME TIME DURING THE LIFE OF THE CONTRACT. IN THE EVENT OF OMMISSIONS OR CORRECTIONS, THE SIGNING PROVISIONS OF THE DELAWARE TRAFFIC CONTROL MANUAL WILL PREVAIL.
4. SIGNS H THROUGH M, THE WORD (ROAD) SHOULD BE CHANGED TO R/R OR BRIDGE WHERE APPLICABLE.
5. WARNING SIGNS K THRU R WILL BE MOUNTED ON BREAKAWAY POSTS AND HAVE RETROREFLECTIVE FLUORESCENT SHEETING MOUNTED ON ALUMINUM PANELS. TYPE 'B' LIGHTS WILL NOT BE REQUIRED.
6. 'O' BARRICADES WILL COMPLETELY RUN THE FULL WIDTH OF ROADWAY.

RECOMMENDED _____ 19__ _____

RECOMMENDED _____ 19__ _____

RECOMMENDED _____ 19__ _____

APPROVED CHIEF SAFETY INSPECTOR _____ DATE _____

APPROVED TRAFFIC ENGINEER _____ DATE _____

PREL. TRACING J.D. _____ DESIGN _____ C.L.G. _____

TCP18

9/5/2003

M:\313031\tcp18sr273.plf

CONTRACT	COUNTY	F.A.P. NO.	SHEET NO.	TOTAL SHTS.
22-074-09	NEW CASTLE	SEE TITLE SHEET	45	152

SIGNING, STRIPING, & CONDUIT

SCALE
0 50 100 150
FEET

REHABILITATION OF BRIDGE NOS. A 1 715, 1 715A, 1 715D ON SR 273 OVER I-95

REVISIONS

PAVEMENT MARKINGS LEGEND

SYMBOL	ITEM	QUANTITY
(A)	6" SOLID WHITE EPOXY RESIN PAINT STRIPING (ITEM 748507)	618 LF
(B)	6" DASHED WHITE EPOXY RESIN PAINT STRIPING (10' LINE 30' GAP) (ITEM 748507)	0 LF
(C)	6" SOLID YELLOW EPOXY RESIN PAINT STRIPING (ITEM 748507)	229 LF
(D)	12" SOLID WHITE ALKYD-THERMOPLASTIC PAVEMENT STRIPING (ITEM 748027)	128 SF
(E)	4" SOLID BLACK EPOXY RESIN PAINT STRIPING (ITEM 748535)	0 LF

SIGNING LEGEND By State Forces

1. REMOVE EXISTING SIGN
2. EXISTING SIGN TO REMAIN
3. PLACE NEW SIGN
4. RENEW EXISTING SIGN
5. REPOSITION EXISTING SIGN

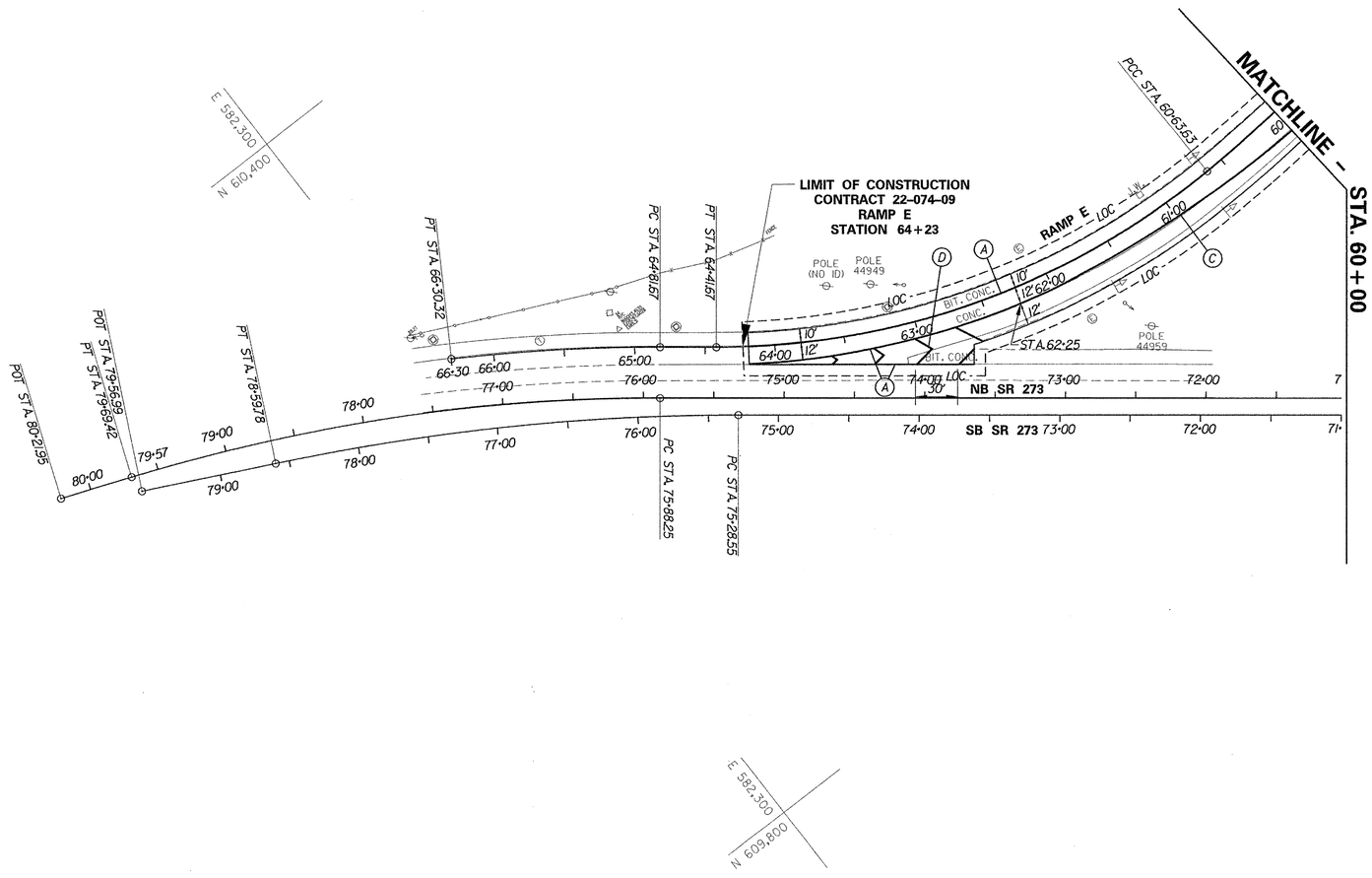

PREL. TRACING _____ J.A.D. _____ DESIGN _____ R.R.W./J.A.G. _____ CHKD. _____ J.M.P. _____

CONTRACT	COUNTY	F.A.P. NO.	SHEET NO.	TOTAL SHTS.
22-074-09	NEW CASTLE	SEE TITLE SHEET	46	152

REHABILITATION OF BRIDGE NOS. A 1 715, 1 715A, 1 715D ON SR 273 OVER I-95

REVISIONS

SIGNING, STRIPING, & CONDUIT

SCALE 0 50 100 150 FEET

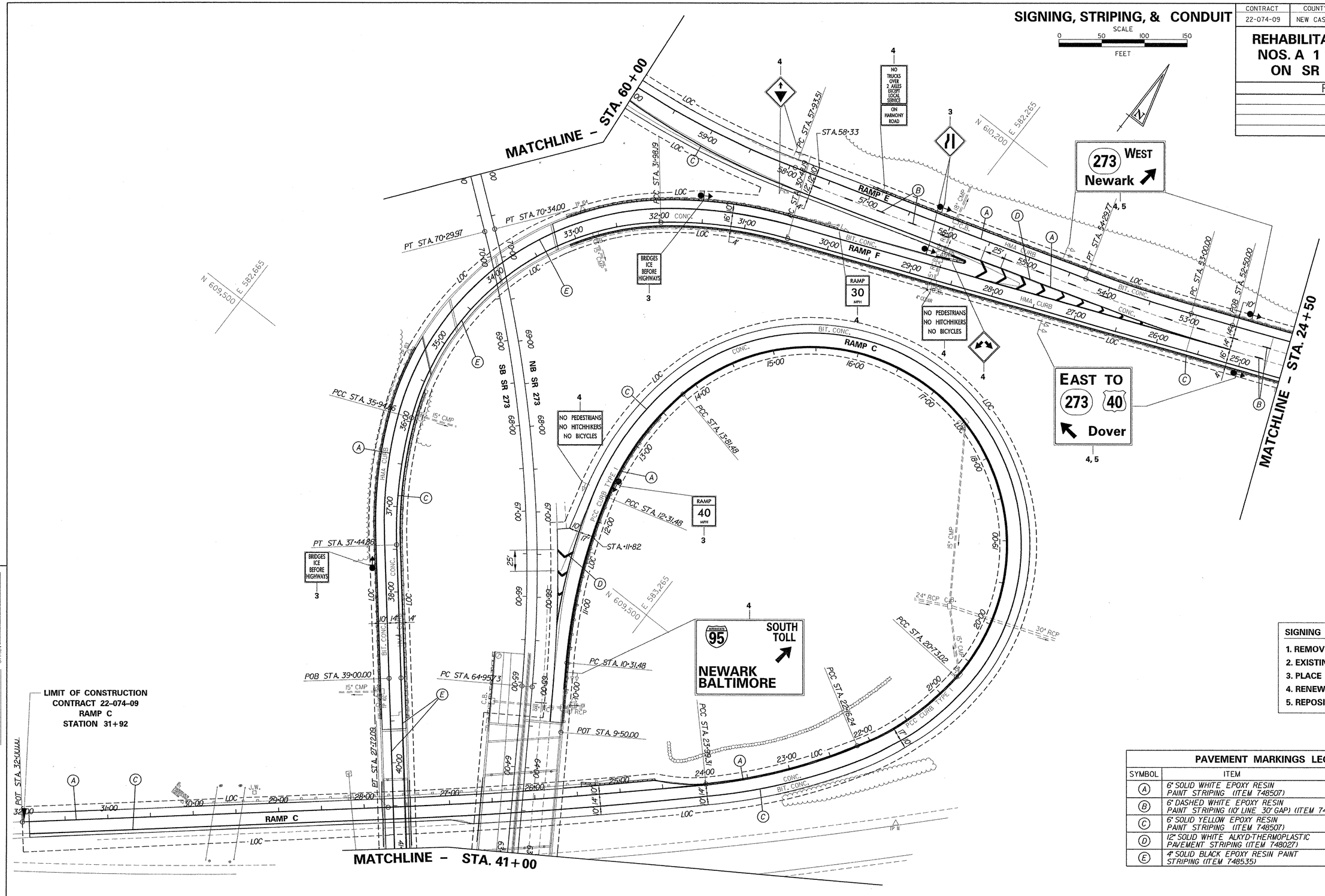

SIGNING LEGEND By State Forces

1. REMOVE EXISTING SIGN
2. EXISTING SIGN TO REMAIN
3. PLACE NEW SIGN
4. RENEW EXISTING SIGN
5. REPOSITION EXISTING SIGN

PAVEMENT MARKINGS LEGEND

SYMBOL	ITEM	QUANTITY
A	6" SOLID WHITE EPOXY RESIN PAINT STRIPING (ITEM 748507)	4,607 LF
B	6" DASHED WHITE EPOXY RESIN PAINT STRIPING (10' LINE 30' GAP) (ITEM 748507)	160 LF
C	6" SOLID YELLOW EPOXY RESIN PAINT STRIPING (ITEM 748507)	4,232 LF
D	12" SOLID WHITE ALKYD-THERMOPLASTIC PAVEMENT STRIPING (ITEM 748027)	168 SF
E	4" SOLID BLACK EPOXY RESIN PAINT STRIPING (ITEM 748535)	838 LF

PREL. TRACING ____ J.A.D. ____ DESIGN ____ R.R.W./J.A.C. ____ CHKD. ____ J.M.P. ____

SIGNING, STRIPING, & CONDUIT

CONTRACT	COUNTY	F.A.P. NO.	SHEET NO.	TOTAL SHTS.
22-074-09	NEW CASTLE	SEE TITLE SHEET	47	152

REHABILITATION OF BRIDGE NOS. A 1 715, 1 715A, 1 715D ON SR 273 OVER I-95

REVISIONS

SCALE 0 50 100 150 FEET

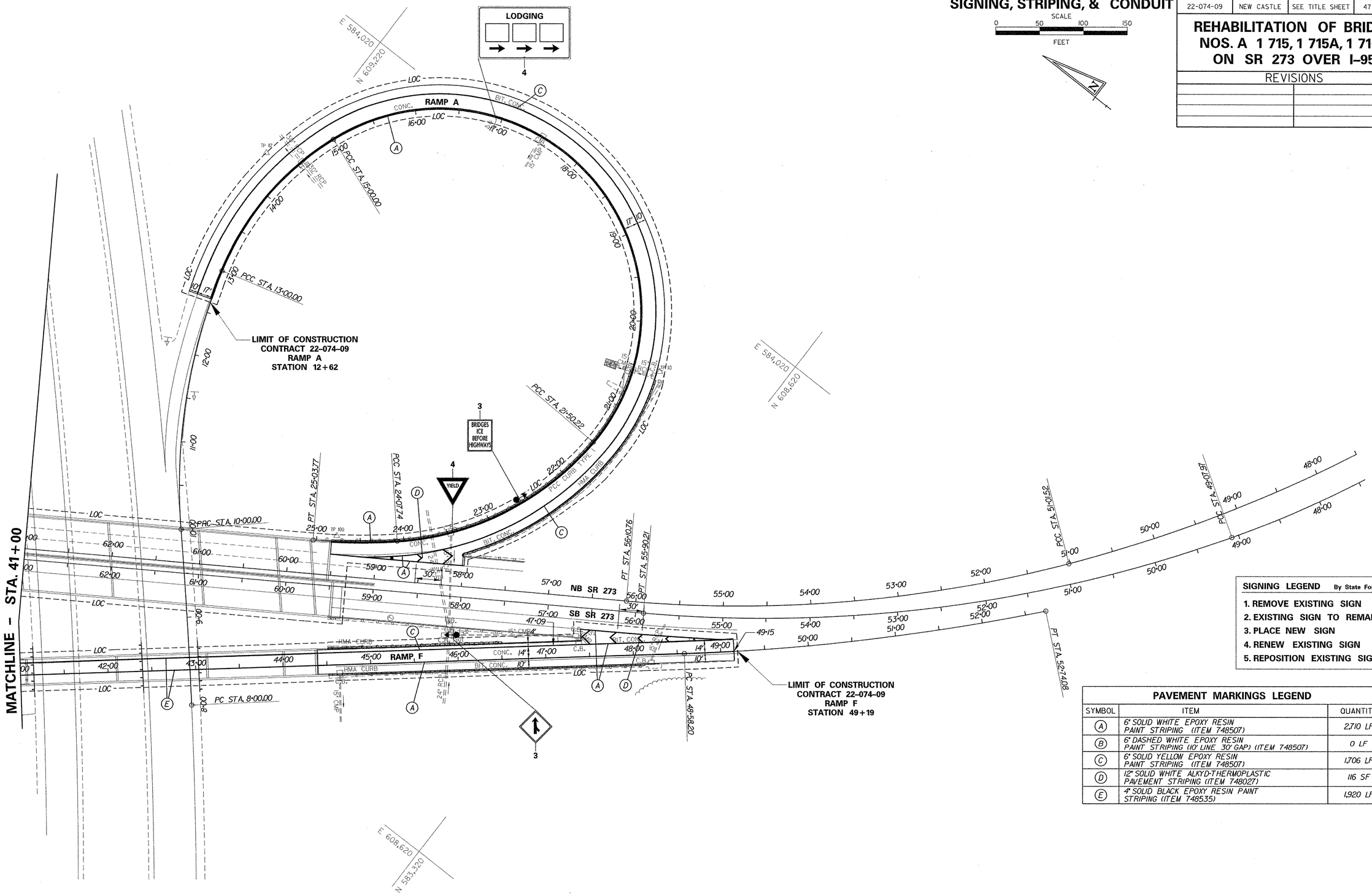

SIGNING LEGEND By State Forces

1. REMOVE EXISTING SIGN
2. EXISTING SIGN TO REMAIN
3. PLACE NEW SIGN
4. RENEW EXISTING SIGN
5. REPOSITION EXISTING SIGN

PAVEMENT MARKINGS LEGEND

SYMBOL	ITEM	QUANTITY
(A)	6" SOLID WHITE EPOXY RESIN PAINT STRIPING (ITEM 748507)	2,710 LF
(B)	6" DASHED WHITE EPOXY RESIN PAINT STRIPING (10' LINE 30' GAP) (ITEM 748507)	0 LF
(C)	6" SOLID YELLOW EPOXY RESIN PAINT STRIPING (ITEM 748507)	1,706 LF
(D)	12" SOLID WHITE ALKYD-THERMOPLASTIC PAVEMENT STRIPING (ITEM 748027)	116 SF
(E)	4" SOLID BLACK EPOXY RESIN PAINT STRIPING (ITEM 748535)	1,920 LF

PREL. TRACING ____ J.A.D. ____ DESIGN ____ R.R.W./J.A.G. ____ CHKD. ____ J.M.P. ____

SIGNING, STRIPING, & CONDUIT

CONTRACT	COUNTY	F.A.P. NO.	SHEET NO.	TOTAL SHTS.
22-074-09	NEW CASTLE	SEE TITLE SHEET	48	152

REHABILITATION OF BRIDGE NOS. A 1 715, 1 715A, 1 715D ON SR 273 OVER I-95

REVISIONS

SCALE 0 50 100 150 FEET

N

PAVEMENT MARKINGS LEGEND

SYMBOL	ITEM	QUANTITY
A	6" SOLID WHITE EPOXY RESIN PAINT STRIPING (ITEM 748507)	826 LF
B	6" DASHED WHITE EPOXY RESIN PAINT STRIPING (10' LINE 30' GAP) (ITEM 748507)	260 LF
C	6" SOLID YELLOW EPOXY RESIN PAINT STRIPING (ITEM 748507)	825 LF
D	12" SOLID WHITE ALKYD-THERMOPLASTIC PAVEMENT STRIPING (ITEM 748027)	0 SF
E	4" SOLID BLACK EPOXY RESIN PAINT STRIPING (ITEM 748535)	0 SF

SIGNING LEGEND By State Forces

1. REMOVE EXISTING SIGN
2. EXISTING SIGN TO REMAIN
3. PLACE NEW SIGN
4. RENEW EXISTING SIGN
5. REPOSITION EXISTING SIGN

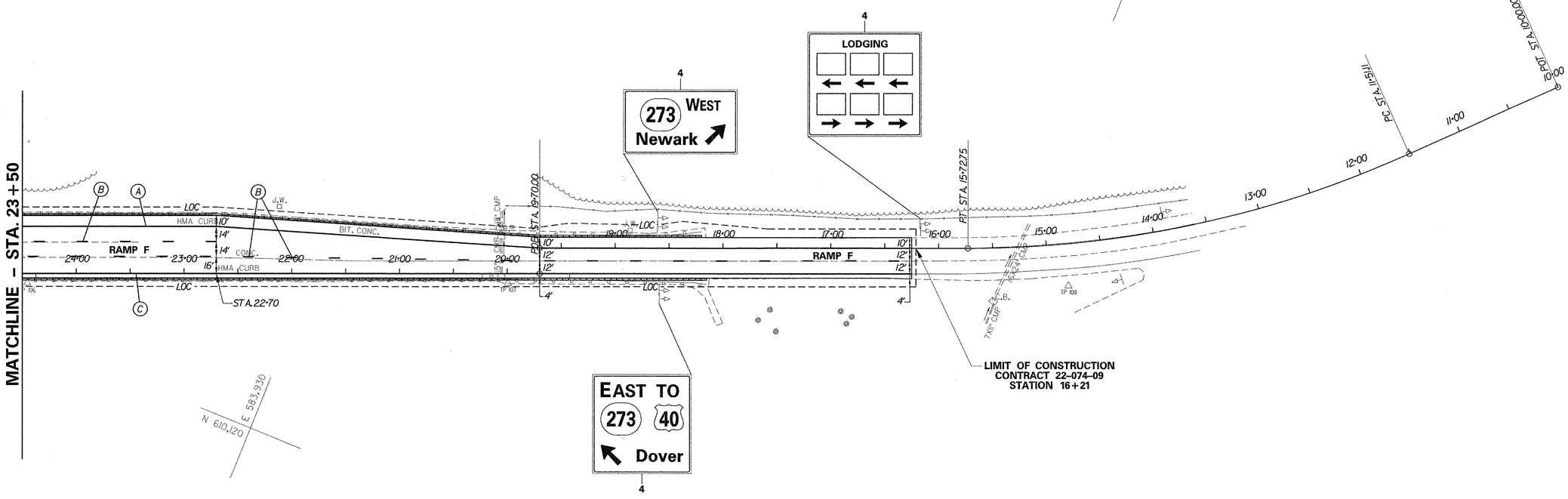

PREL. TRACING ____ J.A.D. ____ DESIGN ____ R.R.W./J.A.G. ____ CHKD. ____ J.M.P.

STRUCTURE LOCATION PLAN

BR.1–715 018	CONTRACT	COUNTY	F.A.P. NO.	SHEET NO.	TOTAL SHTS.
	22-074-09	NEW CASTLE	SEE TITLE SHEET	49	152
BR. 1 715A 6048	REHABILITATION OF BRIDGE NOS. 1–715, 1–715A, & 1–715D ON SR 273 OVER I–95				
BR. 1 715D 6048					

REVISIONS

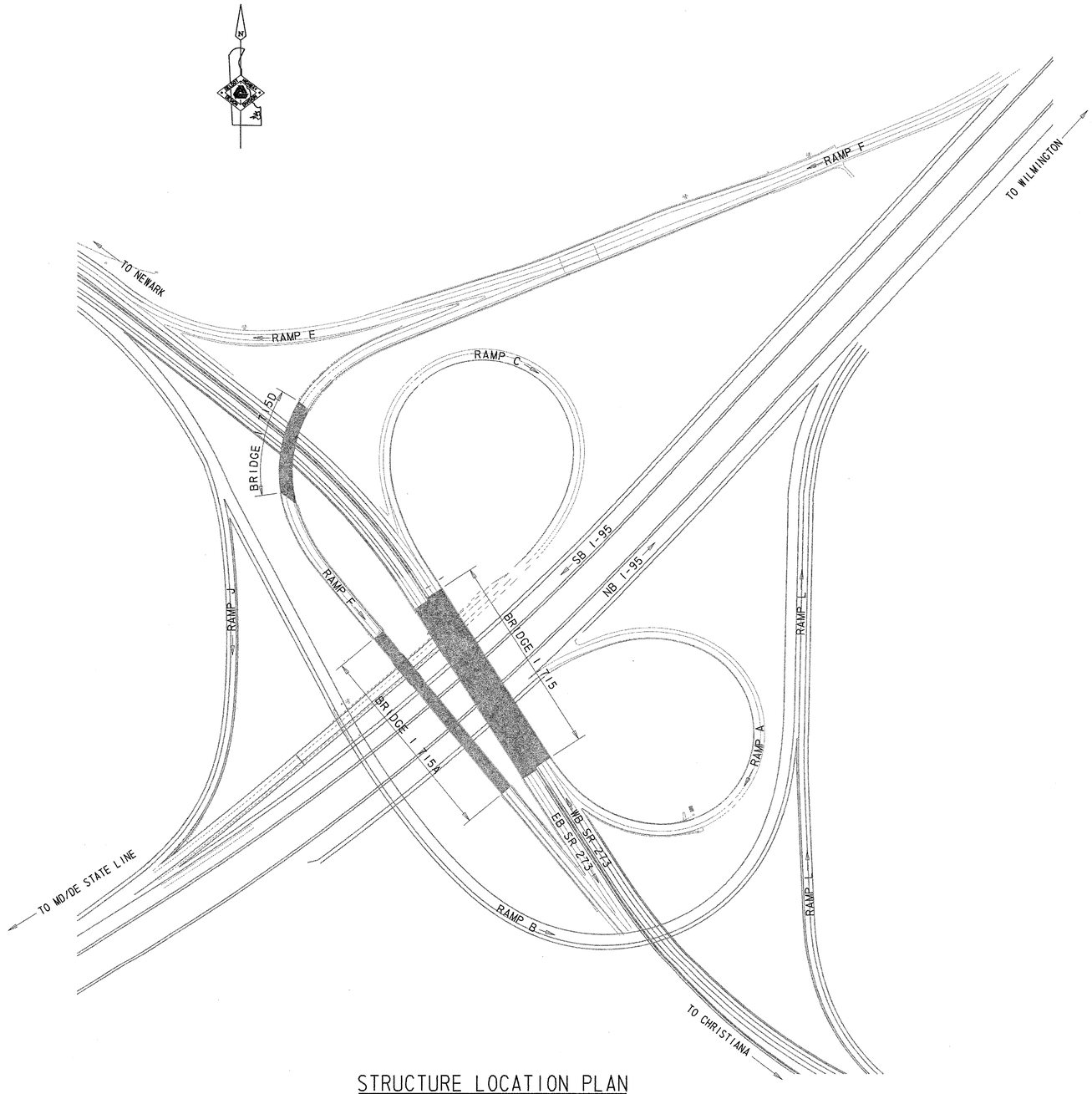

STRUCTURE LOCATION PLAN

SCALE: 1"=150'-0"

NOTE:

RAMP M NOT SHOWN.

PREL. TRACING _____ W.R.A. _____ DESIGN _____ J.T.L./F.J.O. _____ CHKD. _____ W.A.G. _____

M:\3130314\SL01BR715.DGN

BR.1-715 018	CONTRACT	COUNTY	F.A.P. NO.	SHEET NO.	TOTAL SHTS.
	22-074-09	NEW CASTLE	SEE TITLE SHEET	50	152
BR. 1-715A 6048	REHABILITATION OF BRIDGE NOS. 1-715, 1-715A, & 1-715D ON SR 273 OVER I-95				
BR. 1-715D 6048					

REVISIONS

PROJECT NOTES

1. LOCATION
REHABILITATION OF EXISTING BRIDGE NOS. 1 715, 1 715A AND 1 715D CARRYING SR 273 OVER I-95 IN NEW CASTLE COUNTY, DELAWARE.

THE WORK ON BRIDGE NO. 1 715 INVOLVES REPLACING ALL ASPHALTIC ROADWAY JOINTS WITH A NEW STRIP SEAL SYSTEM, CLEANING AND PAINTING THE STEEL SUPERSTRUCTURE, REPAIRING VARIOUS STRUCTURAL CONCRETE SPALLS AND CRACKS, INSTALLING HIGH STRENGTH FIBER COMPOSITE WRAP TO SELECT PIER COLUMNS, APPLYING AN ANTI-GRAFFITI COATING SYSTEM TO EXISTING CONCRETE SURFACES, REPLACING THE EXISTING CONCRETE BLOCK SLOPE PROTECTION WITH RIP RAP, MODIFYING ALL FOUR APPROACH ENDPOSTS, AND OTHER MISCELLANEOUS REPAIRS.

THE WORK ON BRIDGE NO. 1 715A INVOLVES REMOVAL OF THE EXISTING BITUMINOUS OVERLAY, REMOVING A PORTION OF THE EXISTING CONCRETE DECK AND APPLYING EITHER A MICRO-SILICA MODIFIED CONCRETE OVERLAY OR A LATEX CONCRETE OVERLAY, REPLACING ALL ROADWAY JOINTS WITH A NEW STRIP SEAL SYSTEM, REPLACING BOTH CONCRETE APPROACH SLABS, STRENGTHENING THE ENDS OF SELECT STEEL GIRDERS, CLEANING AND PAINTING THE ENTIRE STEEL SUPERSTRUCTURE WITH A THREE COAT SYSTEM, REPAIRING VARIOUS STRUCTURAL CONCRETE SPALLS AND CRACKS, APPLYING A LITHIUM TREATMENT TO SELECT CONCRETE SURFACES (BY DELDOT FORCES), APPLYING AN ANTI-GRAFFITI COATING SYSTEM TO EXISTING CONCRETE SURFACES, REPLACING THE EXISTING CONCRETE BLOCK SLOPE PROTECTION WITH RIP RAP, MODIFYING ALL FOUR APPROACH ENDPOSTS, AND OTHER MISCELLANEOUS REPAIRS.

THE WORK ON BRIDGE NO. 1 715D INVOLVES REMOVAL OF THE EXISTING BITUMINOUS OVERLAY, REMOVING A PORTION OF THE EXISTING CONCRETE DECK AND APPLYING EITHER A MICRO-SILICA MODIFIED CONCRETE OVERLAY OR A LATEX CONCRETE OVERLAY, REPLACING ALL ROADWAY JOINTS WITH A NEW STRIP SEAL SYSTEM, REPLACING BOTH CONCRETE APPROACH SLABS, REPAIRING BEAM IMPACT GOUGES AND DINGS, CLEANING AND PAINTING THE ENTIRE STEEL SUPERSTRUCTURE WITH A THREE COAT SYSTEM, REPAIRING VARIOUS STRUCTURAL CONCRETE SPALLS AND CRACKS, APPLYING A LITHIUM TREATMENT TO SELECT CONCRETE SURFACES (BY DELDOT FORCES), APPLYING AN ANTI-GRAFFITI COATING SYSTEM TO EXISTING CONCRETE SURFACES, REPLACING THE EXISTING CONCRETE BLOCK SLOPE PROTECTION WITH RIP RAP, MODIFYING ALL FOUR APPROACH ENDPOSTS, AND OTHER MISCELLANEOUS REPAIRS.

2. EXISTING STRUCTURE
PLANS OF THE EXISTING STRUCTURES ARE AVAILABLE AND MAY BE OBTAINED FROM THE CONTRACT ADMINISTRATION SECTION AND USED IN CONJUNCTION WITH THESE PLANS WHEN DETERMINING EXISTING FEATURES, DETAILS AND/OR DIMENSIONS. THE EXISTING PLANS ARE LISTED ON THE TITLE SHEET. ANY DAMAGE INCURRED TO EXISTING PORTIONS OF THE STRUCTURES TO REMAIN RESULTING FROM THE CONTRACTOR'S OPERATIONS SHALL BE REPAIRED ALL AT THE CONTRACTOR'S EXPENSE TO THE SATISFACTION OF THE ENGINEER.

ALL DIMENSIONS AND STATIONS SHOWN ARE APPROXIMATE. ALL DIMENSIONS AFFECTED BY THE GEOMETRICS, AND/OR LOCATION OF THE EXISTING STRUCTURE SHALL BE CHECKED IN THE FIELD BY THE CONTRACTOR, BEFORE ANY CONSTRUCTION IS DONE AND BEFORE ANY MATERIAL IS ORDERED OR FABRICATED. IF THE GEOMETRICS DIFFER FROM THAT SHOWN ON THE PLANS, THE ENGINEER SHALL BE CONTACTED FOR EVALUATION. IT SHALL BE THE RESPONSIBILITY OF THE CONTRACTOR TO SUPPLY THE ENGINEER WITH ALL FIELD DIMENSIONS REQUIRED TO CHECK DETAIL DRAWINGS. THE CONTRACTOR SHALL CONSIDER THE LENGTH OF TIME FOR REVIEW OF SHOP DRAWINGS AND FABRICATION IN HIS SCHEDULE OF WORK.

3. ELEVATIONS
THE ELEVATION FOR THIS PROJECT IS BASED ON THE NORTH AMERICAN VERTICAL DATUM OF 1988 AS REFERENCED BY THE FOLLOWING NGS BENCHMARKS:
JU4138 - ELEV. 93.53
JU4141 - ELEV. 197.46
JV1688 - ELEV. 76.74
JU1672 - ELEV. 69.36

4. DESIGN CRITERIA
2002 AASHTO STANDARD SPECIFICATIONS FOR HIGHWAY BRIDGES FOR APPROACH SLAB DESIGN, ENDPOST DESIGN, AND STRUCTURAL STEEL REPAIRS.

WELDS SHALL CONFORM TO AWS D1.5.

5. LOADING
VEHICULAR LIVE LOAD IS HS-25 AND DELAWARE LEGAL LOAD FOR APPROACH SLAB DESIGN.

VEHICULAR LIVE LOAD IS HS-20 FOR STRUCTURAL STEEL REPAIRS.

6. PORTLAND CEMENT CONCRETE
STRUCTURAL ELEMENTS OF PORTLAND CEMENT CONCRETE SHALL BE AS NOTED (F'C = 28 DAY STRENGTH)

CLASS A - ENDPOSTS, PARAPET WALLS, WING WALLS, AND CONCRETE REPAIRS (F'C = 4.5 KSI)
CLASS D - APPROACH SLABS AND DECK (F'C = 4.5 KSI)

MIX REQUIREMENTS SHALL CONFORM TO SECTION 812 OF THE STANDARD SPECIFICATIONS UNLESS NOTED OTHERWISE.

ALL EXPOSED EDGES SHALL BE CHAMFERED ¾" UNLESS NOTED OTHERWISE.

7. BAR REINFORCEMENT
ALL REINFORCEMENT STEEL SHALL CONFORM TO AASHTO M 31 (ASTM A615), GRADE 60. ALL REINFORCING STEEL SHALL HAVE A CLEAR COVER OF 2" UNLESS OTHERWISE SPECIFIED ON THE PLANS.

ALL EXPOSED EXISTING REINFORCING STEEL SHALL BE THOROUGHLY CLEANED AND INCORPORATED IN THE FINISHED STRUCTURE. ANY REINFORCING STEEL DAMAGED DURING REPAIR OPERATIONS SHALL BE REPAIRED AT THE CONTRACTOR'S SOLE EXPENSE TO THE SATISFACTION OF THE ENGINEER.

MECHANICAL SPLICES USED FOR STAGED CONSTRUCTION SHALL DEVELOP IN TENSION AT LEAST 125% OF THE SPECIFIED YIELD STRENGTH OF THE BAR. PAYMENT FOR FURNISHING AND INSTALLING THE MECHANICAL SPLICES WILL BE INCIDENTAL TO ITEM 604000 - BAR REINFORCEMENT, EPOXY COATED.

8. CONSTRUCTION JOINTS
KEYED CONSTRUCTION JOINTS SHALL BE 2" X 4" OR AS NOTED. ALL EXPOSED CONSTRUCTION JOINT EDGES SHALL HAVE A ¾" V-NOTCH UNLESS NOTED OTHERWISE.

9. LOAD RATING
THIS PROJECT DOES NOT CHANGE THE LOAD RATING OF THE BRIDGES.

10. STRUCTURAL REPAIRS
THE REPAIR OF ANY STRUCTURAL MEMBER OR COMPONENT SHALL BE PERFORMED ONE AT A TIME. NO CONCURRENT REPLACEMENT OF ANY STRUCTURAL MEMBER OR COMPONENT SHALL BE ALLOWED UNLESS SPECIFICALLY NOTED ON THE PLANS.

FLAME CUTTING OF EXISTING MATERIAL TO BE REMOVED WILL BE PERMITTED ONLY WHEN SUCH CUTTING WILL NOT IN ANY WAY DAMAGE THE EXISTING MATERIALS TO REMAIN. REMOVAL OF EXISTING FASTENERS BY FLAME CUTTING OR BURNING WILL NOT BE PERMITTED.

REFER TO SHEET 102 FOR GUIDELINES PERTAINING TO THE SECTION LOSS THAT CAN BE SUSTAINED TO THE GIRDERS OF BRIDGE 1 715A WITHOUT INITIATING STRUCTURAL STEEL REPAIRS.

PROJECT NOTES - BRIDGES

11. PAINTING
THE FOLLOWING PAY ITEMS ARE ASSOCIATED WITH CLEANING AND REPAINTING THE EXISTING STEEL SUPERSTRUCTURES OF BRIDGE NOS. 1 715A AND 1 715D:
605522 - URETHANE PAINT SYSTEM, EXISTING STEEL
605533 - CLEANING EXISTING STEEL STRUCTURES, HAZARDOUS BASE

THE FOLLOWING PAY ITEMS ARE ASSOCIATED WITH CLEANING AND REPAINTING THE EXISTING STEEL SUPERSTRUCTURE OF BRIDGE NO. 1 715:
605532 - CLEANING EXISTING STEEL STRUCTURES (NON-HAZARDOUS BASE)
605522 - URETHANE PAINT SYSTEM, EXISTING STEEL
605622 - CLEANING OF STRUCTURAL STEEL BY PRESSURE WASHING
605619 - MOISTURE CURED URETHANE PAINT SYSTEM (OVERCOATING)

ALL PAINT REMOVAL AND RE-PAINTING OPERATIONS THAT IMPACT THRU LANES OF TRAFFIC ON I-95 SHOULD BE PERFORMED AT NIGHT BETWEEN THE HOURS OF 8:00 PM TO 5:00 AM.

PAYMENT FOR LIGHTING REQUIRED TO PERFORM ANY WORK INCLUDED IN ITEMS 605522, 605532, 605533, 605619, AND 605622 SHALL BE MADE UNDER ITEM 746591 - FURNISH AND MAINTAIN PORTABLE LIGHT ASSEMBLY.

ALL COSTS ASSOCIATED WITH THE MAINTENANCE OF TRAFFIC SHALL BE PAID FOR UNDER APPLICABLE MAINTENANCE OF TRAFFIC ITEMS AND NOT DUPLICATED WITHIN THE COST FOR PAINTING OPERATIONS.

ALL EXISTING STRUCTURAL STEEL FOR BRIDGE NOS. 1 715A AND 1 715D DOES CONTAIN LEAD.

CONTAINMENT SYSTEMS SHALL BE REQUIRED DURING BLASTING AND SUBMITTED FOR APPROVAL. PAYMENT FOR THE CONTAINMENT SYSTEM WILL BE MADE UNDER ITEM 605533 - CLEANING EXISTING STEEL STRUCTURES, HAZARDOUS BASE AND 605532 - CLEANING EXISTING STEEL STRUCTURES (NON-HAZARDOUS BASE).

REMOVAL OF DIRT, DEBRIS, ETC. FROM THE EXISTING STRUCTURE SHALL BE INCIDENTAL TO ITEM 605532 - CLEANING EXISTING STEEL STRUCTURES (NON-HAZARDOUS BASE) AND ITEM 605533 - CLEANING EXISTING STEEL STRUCTURES, HAZARDOUS BASE.

CLEANING OF THE BEARING AREAS AT THE ABUTMENTS AND PIERS ON BRIDGE NOS. 1 715A AND 1 715D SHALL BE INCLUDED UNDER ITEM 605533 - CLEANING EXISTING STEEL STRUCTURES, HAZARDOUS BASE. CLEANING THE BEARING AREAS AT ABUTMENTS AND PIERS ON BRIDGE NO. 1 715 SHALL BE INCLUDED UNDER ITEM 605532 - CLEANING EXISTING STEEL STRUCTURES (NON-HAZARDOUS BASE).

THE PAINT SYSTEM USED ON BRIDGE NOS. 1 715, 1715A, AND 1 715D SHALL BE APPLIED IN A 3 COAT SYSTEM APPLICATION. THE COLOR OF THE FINISHED PAINT SHALL BE GREEN (NO. 24172) FROM FEDERAL STANDARD 595 B. COLOR SHALL BE SUBMITTED FOR APPROVAL. PAINT SYSTEM SHALL BE IN ACCORDANCE WITH ITEM 605522 - URETHANE PAINT SYSTEM, EXISTING STEEL.

THE PAINT SYSTEM USED ON BRIDGE 1 715 FOR OVERCOATING THE EXISTING PAINT SYSTEM SHALL HAVE A FINISHED PAINT COLOR OF GREEN (NO. 24172) FROM FEDERAL STANDARD 595 B. COLOR SHALL BE SUBMITTED FOR APPROVAL. PAINT SYSTEM SHALL BE IN ACCORDANCE WITH ITEM 605619 - MOISTURE CURED URETHANE PAINT SYSTEM (OVERCOATING).

ALL NEW STRUCTURAL STEEL SHALL BE PAINTED WITH A URETHANE PAINT SYSTEM IN ACCORDANCE WITH SECTION 605. THE COLOR OF THE FINISHED PAINT SHALL BE GREEN (NO. 24172) FROM FEDERAL STANDARD NO. 595 B. THE COLOR SHALL BE SUBMITTED FOR APPROVAL. AT ALL LOCATIONS WHERE THE CONTRACTOR'S WORK DAMAGES THE EXISTING PAINT SYSTEM, THE CONTRACTOR SHALL CLEAN THE DAMAGED LOCATION AND REPAINT THE AREA. ALL CLEANING AND PAINTING IS INCIDENTAL TO THE ITEM FOR WHICH THE STRUCTURAL STEEL IS BEING SUPPLIED OR TO THE WORK PERFORMED WHICH RESULTS IN THE NEED TO REPAINT AN AREA.

12. UTILITIES
BEFORE BEGINNING WORK, THE CONTRACTOR SHALL GIVE NOTIFICATION BY TELEPHONE BY CALLING "MISS UTILITY" AT 1-800-282-8555 A MINIMUM OF 48 HOURS PRIOR TO START OF WORK. VERIFY AND LOCATE ALL UTILITIES PRIOR TO STARTING WORK.

COORDINATE THE REQUIREMENTS FOR PROTECTION OF ANY UTILITY WITH THE UTILITY OWNER PRIOR TO STARTING WORK.

CONDUCT OPERATIONS IN A MANNER WHICH ENSURES THAT THE UTILITIES WILL NOT BE DISTURBED OR ENDANGERED. ANY DAMAGE INCURRED TO THESE UTILITIES OR ANY OTHER UTILITIES, SHOWN OR NOT SHOWN ON THE PLANS, DUE TO THE CONTRACTOR'S OPERATIONS SHALL BE REPAIRED AT THE CONTRACTOR'S EXPENSE TO THE SATISFACTION OF THE APPROPRIATE UTILITY COMPANY. THE DEPARTMENT DOES NOT ASSUME RESPONSIBILITY FOR REIMBURSEMENT, PARTICIPATION IN DESIGN AND/OR REVISIONS, OR LIABILITY FOR ACCURACY OF TYPE, SIZE AND LOCATION OF ANY UTILITY.

THE CONTRACTOR IS RESPONSIBLE FOR TEMPORARILY SUPPORTING, PROTECTING, OR RELOCATING ANY UTILITIES DURING CONSTRUCTION. WHERE NECESSARY, THE COST FOR THIS WORK WILL BE INCIDENTAL TO THE CONTRACT.

13. CONCRETE PROTECTIVE COATINGS
THE FOLLOWING ITEMS ARE ASSOCIATED WITH PROTECTING EXPOSED EXISTING CONCRETE SURFACES:
LITHIUM TREATMENT. DELDOT FORCES WILL SPRAY LITHUM APPLICATION ON EXPOSED CONCRETE SURFACES INDICATED ON THESE PLANS. THE CONTRACTOR SHALL NOTIFY DELDOT FORCES A MINIMUM OF 2 WEEKS IN ADVANCE OF THE NEED TO APPLY THE LITHIUM TREATMENT. ONCE THE LITHIUM TREATMENT IS APPLIED, THE CONCRACTOR WILL NOT BE ALLOWED ON ANY OF THE TREATED SURFACES UNTIL 7 DAYS AFTER THE LITHIUM APPLICATION OR AS DIRECTED BY THE ENGINEER IN THE FIELD.

602588-ANTI GRAFFITI COATING. APPLY TO ALL EXPOSED SURFACES OF SUBSTRUCTURE UNITS AND PARAPETS. APPLY ONLY AFTER LITHIUM TREATMENT HAS FULLY CURED. THE ANTI-GRAFFITI COATING SHALL HAVE A LOW LUSTER FINISH. SUBMIT COLOR FOR APPROVAL.

14. TEMPORARY PROTECTIVE SHIELD FOR ROADWAY JOINT
TEMPORARY PROTECTIVE SHEILDS SHALL BE INSTALLED WHILE PERFORMING WORK ON THE ROADWAY JOINTS AT THE FOLLOWING LOCATIONS:
BRIDGE 715 - PIERS 2, 3, 4 AND 5
BRIDGE 715A - PIERS 2, 3, 4 AND 5
BRIDGE 715D - PIERS 1 AND 2
SEE SPECIAL PROVISIONS.

15. STAGING AREAS
PROPER EROSION AND SEDIMENT CONTROL MEASURES AS DETERMINED BY THE ENGINEER SHALL BE INSTALLED IN ALL STAGING AREAS.

FOR GENERAL LOCATION OF STAGING AREA, SEE SHEET 4. ALL AREAS USED BY THE CONTRACTOR FOR STAGING OPERATIONS SHALL BE FULLY RESTORED BY THE CONTRACTOR UPON COMPLETION OF THE PROJECT. IF THE STAGING AREA IS PAVED, IT SHALL BE RESTORED TO ITS ORIGINAL CONDITION. IF THE STAGING AREA IS UNPAVED, IT SHALL BE RE-GRADED , TOP SOILED, SEEDED AND MULCHED IN ACCORDANCE WITH DELAWARE STANDARD SPECIFICATION SECTIONS 732, 734 AND 735, FOR TOP SOIL, SEED, AND MULCH, RESPECTIVELY, TO THE SATISFACTION OF THE ENGINEER. THE SEED SHALL ADHERE TO THE SPECIFICATIONS OF SECTION 734 FOR PERMANENT GRASS SEEDING-DRY GROUND. ALL COSTS ASSOCIATED WITH RESTORATION OF THE STAGING AREA SHALL BE AT THE CONTRACTOR'S EXPENSE. IF THE ENGINEER DETERMINES THAT A SATISFACTORY STAND OF GRASS DOES NOT EXIST AT THE TIME OF FINAL INSPECTION, ALL COSTS ASSOCIATED WITH RE-ESTABLISHING A SATISFACTORY STAND OF GRASS SHALL ALSO BE AT THE CONTRACTOR'S EXPENSE.

16. SUBMITTALS
WORKING DRAWING SUBMITTALS SHALL BE PREPARED AND SUBMITTED IN A TIMELY MANNER WITH DUE CONSIDERATION GIVEN TO THE CONSTRUCTION SCHEDULE, REVIEW TIME BY THE ENGINEER AND ANY LEAD TIME NECESSARY FOR FABRICATION. THE WORKING DRAWING SUBMITTALS INCLUDE, BUT ARE NOT LIMITED TO, THE FOLLOWING ITEMS:
ITEM 601502 - TEMPORARY PROTECTIVE SHIELD
ITEM 604000 - BAR REINFORCEMENT, EPOXY COATED
ITEM 605511 - PREFABRICATED JOINT SYSTEM, 3"
ITEM 605532 - CLEANING EXISTING STEEL STRUCTURES (NON - HAZARDOUS BASE) - CONTAINMENT SYSTEM
ITEM 605533 - CLEANING EXISTING STEEL STRUCTURES, HAZARDOUS BASE - CONTAINMENT SYSTEM
ITEM 605607 - JACKING BRIDGE

17. REFERENCES
FOR CONSTRUCTION PHASING, SEE SHEETS 26 THRU 42..

FOR MAINTENANCE OF TRAFFIC, SEE SHEETS 26 THRU 42.

FOR NOTES RELATING TO JACKING PROCEDURES FOR BRIDGE NO. 1 715A, SEE SHEET 116.

18. CONTINGENT QUANTITIES
THESE CONTRACT DRAWINGS HAVE BEEN PREPARED BASED ON ORIGINAL CONTRACT PLANS AND FIELD INSPECTION NOTES. ACTUAL CONDITIONS MAY REQUIRE MODIFICATION IN CONSTRUCTION DETAILS AND WORK QUANTITIES. ALL DIMENSIONS AND DETAILS SHOWN ON THE PLANS SHALL BE VERIFIED BY THE CONTRACTOR PRIOR TO ORDERING ANY MATERIALS. THE ESTIMATED QUANTITIES FOR THE FOLLOWING PAY ITEMS INCLUDE CONTINGENCY FACTORS TO ACCOUNT FOR THE ANTICIPATED VARIATIONS IN THE ACTUAL QUANTITY.

ITEM NO.	DESCRIPTION	CONTINGENCY FACTOR
602551	REHABILITATION OF EXISTING CONCRETE STRUCTURES	25%
602586	REHABILITATION OF CONCRETE STRUCTURE	25%
602524	TROWEL GRADE MORTAR REPAIRS	25%
602611	REPAIR OF CONCRETE STRUCTURES BY EPOXY INJECTION	25%
602574	DECK REPAIR, ¼" TO 1" DEPTH	200 SF
602575	DECK REPAIR, 1" TO 3" DEPTH	100 SF
602576	DECK REPAIR, 3" TO < FULL DEPTH	50 SF
602577	DECK REPAIR, FULL DEPTH	50 SF
602579	DRILLING HOLES AND INSTALLING DOWELS	25%
603500	REPAIRING BAR REINFORCEMENT	100 LB
605584	STEEL STRUCTURE REPAIR	100%

PREL. TRACING _____ W.R.A. _____ DESIGN _____ J.T.L./F.J.O. _____ CHKD. _____ W.A.G.

M:\313031A\PN01BR273.DGN

BR.1-715 018	CONTRACT	COUNTY	F.A.P. NO.	SHEET NO.	TOTAL SHTS.
	22-074-09	NEW CASTLE	SEE TITLE SHEET	51	152

REHABILITATION OF BRIDGE NOS. 1-715, 1-715A, & 1-715D ON SR 273 OVER I-95

REVISIONS

GENERAL PLAN AND ELEVATION

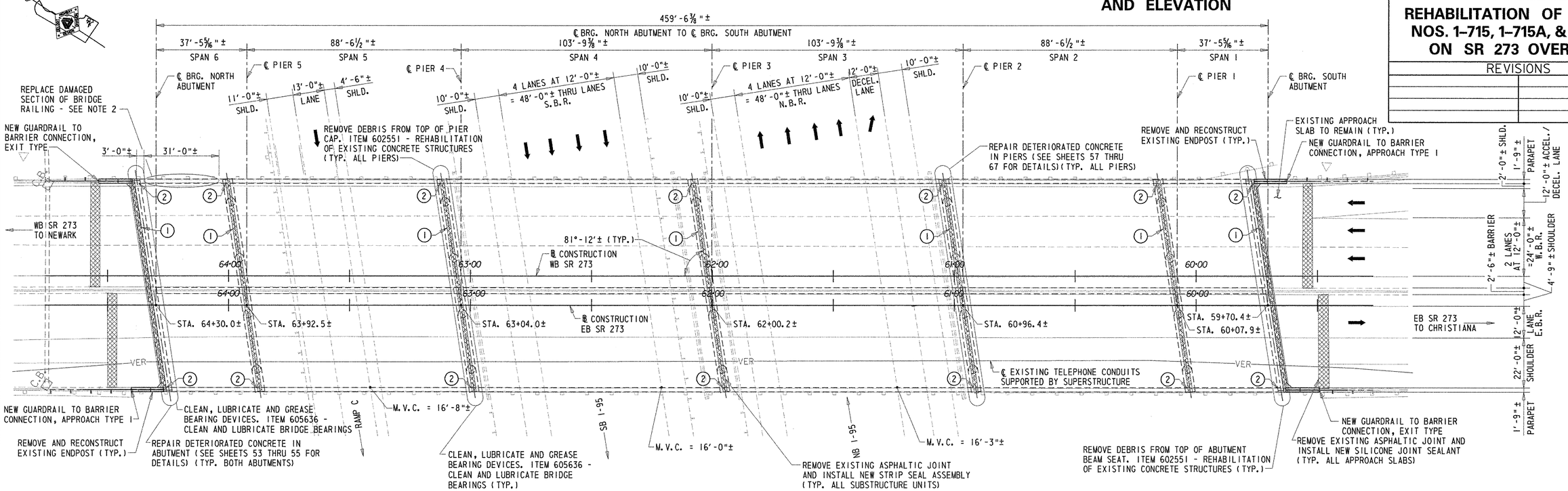

PLAN

SCALE: 1"=20'-0"

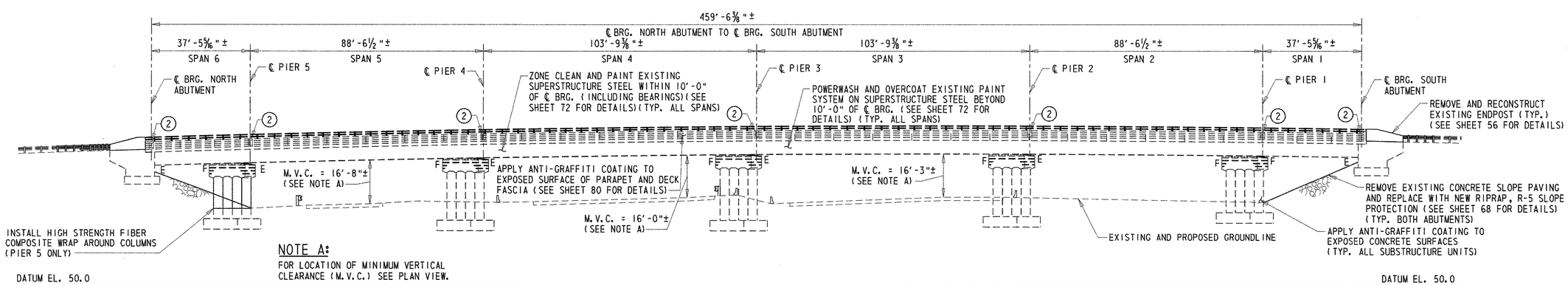

NOTE A:

FOR LOCATION OF MINIMUM VERTICAL CLEARANCE (M.V.C.) SEE PLAN VIEW.

ELEVATION

SCALE: 1"=20'-0"

LEGEND:

(1) REMOVAL OF EXISTING ASPHALTIC JOINT AND INSTALL NEW STRIP SEAL ASSEMBLY (SILICONE JOINT SEALANT AT APPROACH SLAB PAVEMENT JOINT ONLY).

(2) REMOVE A PORTION OF THE EXISTING PARAPET AND PLACE NEW PARAPET AND STRIP SEAL ASSEMBLY.

NOTES:

1. THE DECK MILLINGS GENERATED FROM THE WORK ON BRIDGE NOS. 1 715A AND 1 715D SHALL BE PLACED IN AREAS LACKING VEGETATION UNDER THE BRIDGE SUPERSTRUCTURE OF BRIDGE NO. 715. LOCATION TO BE DETERMINED BY THE ENGINEER. COST WILL BE INCIDENTAL TO THE CONTRACT.
2. THE DAMAGED TOP RAIL OF THE BRIDGE RAILING SHALL BE REPLACED IN-KIND. COST FOR REMOVING, FURNISHING AND INSTALLING THE NEW RAILING WILL BE INCIDENTIAL TO THE CONTRACT.

PREL. TRACING ____ W.R.A. ____ DESIGN ____ J.T.L./F.J.O. ____ CHKD. ____ W.A.G. ____

M:\313031\4\pe01br715.dgn

SEQUENCE OF CONSTRUCTION

BR.1-715 018	CONTRACT	COUNTY	F.A.P. NO.	SHEET NO.	TOTAL SHTS.
	22-074-09	NEW CASTLE	SEE TITLE SHEET	52	152

REHABILITATION OF BRIDGE NOS. 1-715, 1-715A, & 1-715D ON SR 273 OVER I-95

REVISIONS

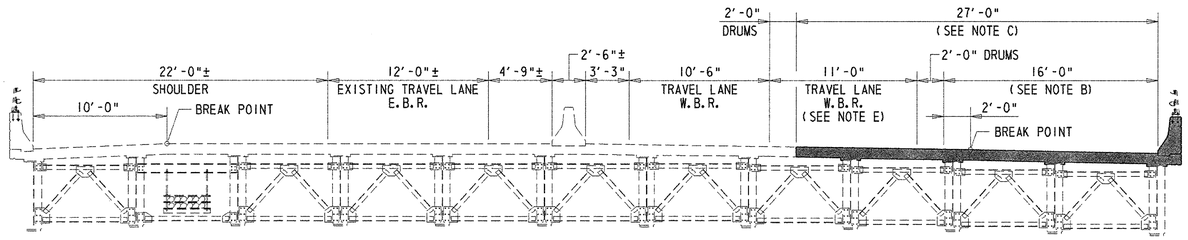

TYPICAL SECTION - PHASE 1

SCALE: 3/16" = 1'-0"

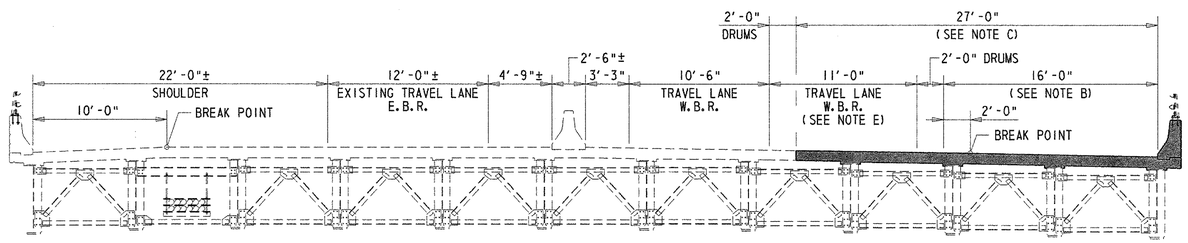

TYPICAL SECTION - PHASE 2

SCALE: 3/16" = 1'-0"

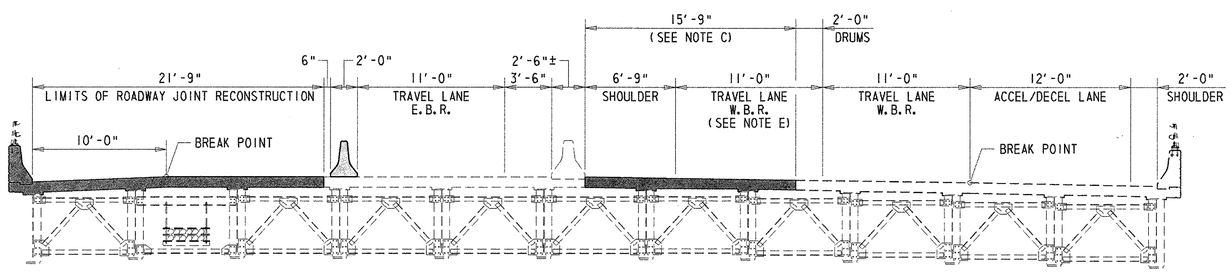

TYPICAL SECTION - PHASE 3

SCALE: 3/16" = 1'-0"

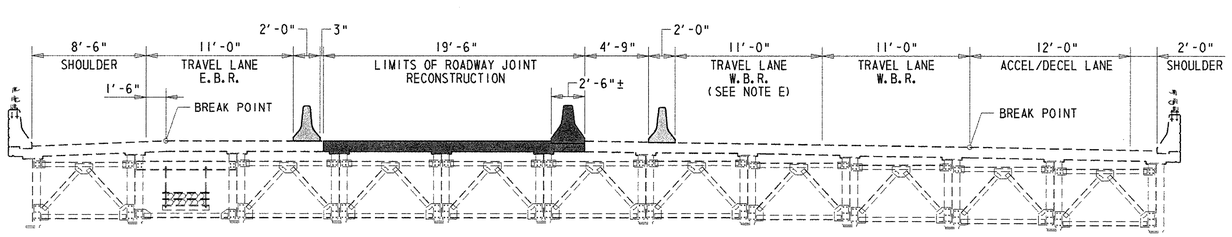

TYPICAL SECTION - PHASE 4

SCALE: 3/16" = 1'-0"

LEGEND:

TEMPORARY CONCRETE TRAFFIC BARRIER (SEE NOTE D)

INSTALLATION OF NEW STRIP SEAL ASSEMBLY

SUGGESTED SEQUENCE OF CONSTRUCTION

PHASE 1

1. REMOVE EXISTING ROADWAY JOINT SYSTEM AND INSTALL NEW STRIP SEAL ASSEMBLY (OR SILICONE SEALANT) AT THE SOUTH APPROACH PAVEMENT, SOUTH ABUTMENT AND PIERS 1, 2 AND 3.
2. REMOVE AND RECONSTRUCT THE CONCRETE ENDPOST ON THE EAST SIDE OF THE SOUTH ABUTMENT.
3. REPAIR THE DETERIORATED CONCRETE IN THE EAST PARAPET WITHIN SPANS 1, 2 AND 3.
4. INSTALL A NEW GUARDRAIL TO BARRIER CONNECTION AT THE EAST SIDE OF THE SOUTH ABUTMENT.

PHASE 2

1. REMOVE EXISTING ROADWAY JOINT SYSTEM AND INSTALL NEW STRIP SEAL ASSEMBLY (OR SILICONE SEALANT) AT THE NORTH APPROACH PAVEMENT, NORTH ABUTMENT AND PIERS 4 AND 5.
2. REMOVE AND RECONSTRUCT THE CONCRETE ENDPOST ON THE EAST SIDE OF THE NORTH ABUTMENT.
3. REPAIR THE DETERIORATED CONCRETE IN THE EAST PARAPET WITHIN SPANS 4, 5 AND 6.
4. INSTALL A NEW GUARDRAIL TO BARRIER CONNECTION AT THE EAST SIDE OF THE NORTH ABUTMENT.

PHASE 3

EB SR 273

1. REMOVE EXISTING ROADWAY JOINT SYSTEM AND INSTALL NEW STRIP SEAL ASSEMBLY (OR SILICONE SEALANT) AT THE NORTH AND SOUTH APPROACH PAVEMENT, NORTH AND SOUTH ABUTMENTS AND PIERS 1 THROUGH 5.
2. REMOVE AND RECONSTRUCT THE CONCRETE ENDPOSTS ON THE WEST SIDE OF THE NORTH AND SOUTH ABUTMENTS.
3. REPAIR THE DETERIORATED CONCRETE IN THE WEST PARAPET WITHIN SPANS 1 THROUGH 6.
4. INSTALL A NEW GUARDRAIL TO BARRIER CONNECTION AT THE WEST SIDE OF THE NORTH AND SOUTH ABUTMENTS.

WB SR 273

1. REMOVE EXISTING ROADWAY JOINT SYSTEM AND INSTALL NEW STRIP SEAL ASSEMBLY (OR SILICONE SEALANT) AT THE NORTH AND SOUTH APPROACH PAVEMENT, NORTH AND SOUTH ABUTMENTS AND PIERS 1 THROUGH 5.
2. INSTALL NEW CONTINUOUS STRIP SEAL IN JOINT OPENINGS UPON COMPLETION OF THE JOINT ASSEMBLY INSTALLATION USING DELDOT TYPICAL TRAFFIC CONTROL CASES.

PHASE 4

1. REMOVE EXISTING ROADWAY JOINT SYSTEM AND INSTALL NEW STRIP SEAL ASSEMBLY (OR SILICONE SEALANT) AT THE NORTH AND SOUTH APPROACH PAVEMENT, NORTH AND SOUTH ABUTMENTS AND PIERS 1 THROUGH 5.
2. REPAIR THE DETERIORATED CONCRETE IN THE MEDIAN BARRIER WITHIN SPANS 1 THROUGH 6.
3. INSTALL NEW CONTINUOUS STRIP SEAL IN JOINT OPENINGS UPON COMPLETION OF THE JOINT ASSEMBLY INSTALLATION USING DELDOT TYPICAL TRAFFIC CONTROL CASES.

NOTE:

ALL OTHER BRIDGE REPAIR ITEMS FOR BRIDGE NO. 1-715 NOT SPECIFICALLY INCLUDED IN THIS SUGGESTED SEQUENCE OF CONSTRUCTION CAN BE COMPLETED INDEPENDENT OF THE SPECIFIC MAINTENANCE OF TRAFFIC OPERATIONS USING DELDOT TYPICAL TRAFFIC CONTROL CASES

NOTES:

A. TYPICAL SECTIONS TAKEN LOOKING STATIONS AHEAD AT ROADWAY JOINTS.

B. LIMITS OF ROADWAY JOINT RECONSTRUCTION DURING RESPECTIVE RAMP CLOSURES (SEE NOTE E).

C. LIMITS OF ROADWAY JOINT RECONSTRUCTION FOR RESPECTIVE PHASE.

D. THE TEMPORARY CONCRETE TRAFFIC BARRIER SHALL NOT BE BOLTED TO THE EXISTING CONCRETE DECK.

E. TEMPORARY LANE CLOSURES ON SR 273 WILL BE RESTRICTED TO THE HOURS BETWEEN 8:00 P.M. AND 5:00 A.M. SUNDAY THROUGH THURSDAY, UNLESS OTHERWISE DIRECTED BY THE ENGINEER. ALL OTHER TIMES ARE CONSIDERED TO BE UNSUITABLE FOR LANE CLOSURES.

PREL. TRACING _____ W.R.A. _____ DESIGN _____ J.T.L./F.J.O. _____ CHKD. _____ W.A.G. _____

M:\3130314\socbr715.dgn

SUBSTRUCTURE REPAIRS - SOUTH ABUTMENT

BR.1-715 018

CONTRACT	COUNTY	F.A.P. NO.	SHEET NO.	TOTAL SHTS.
22-074-09	NEW CASTLE	SEE TITLE SHEET	53	152

REHABILITATION OF BRIDGE NOS. 1-715, 1-715A, & 1-715D ON SR 273 OVER I-95

REVISIONS

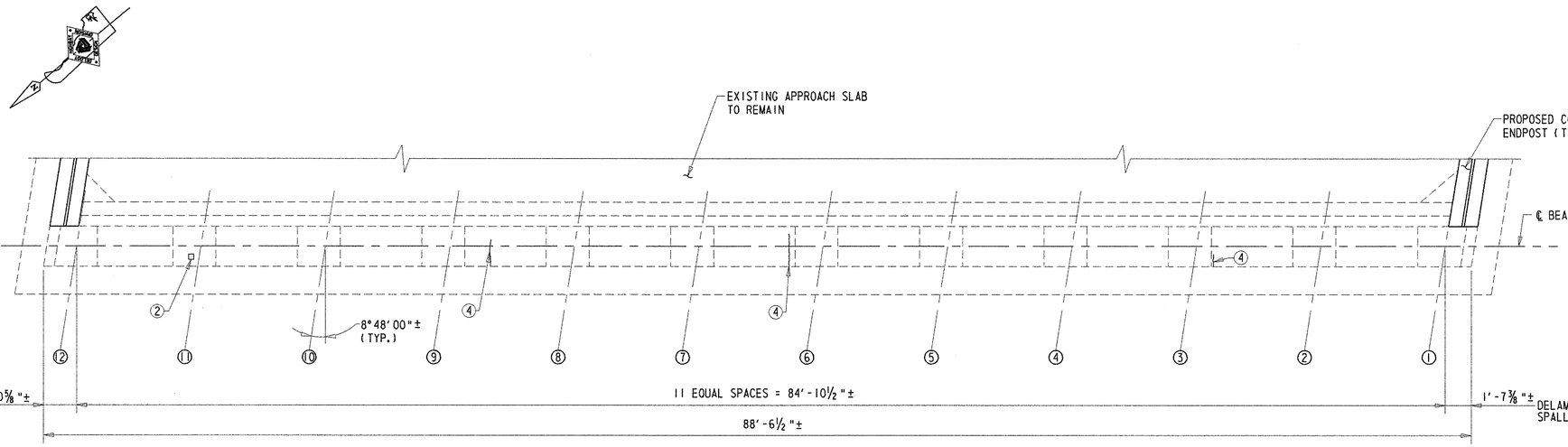

BEAM SEAT PLAN

SCALE: ¼"=1'-0"

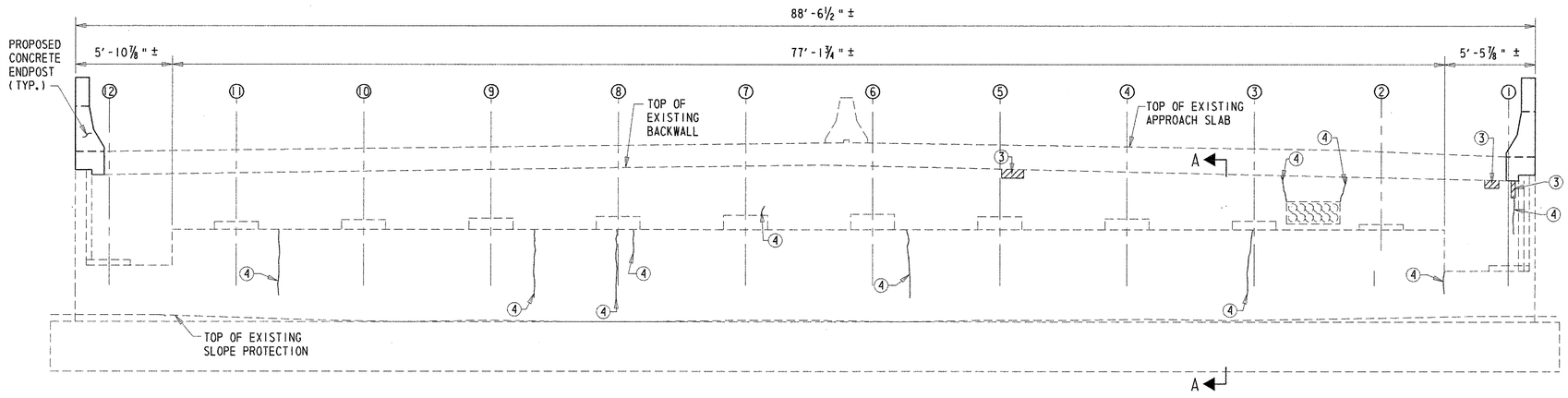

ELEVATION

SCALE: ¼"=1'-0"

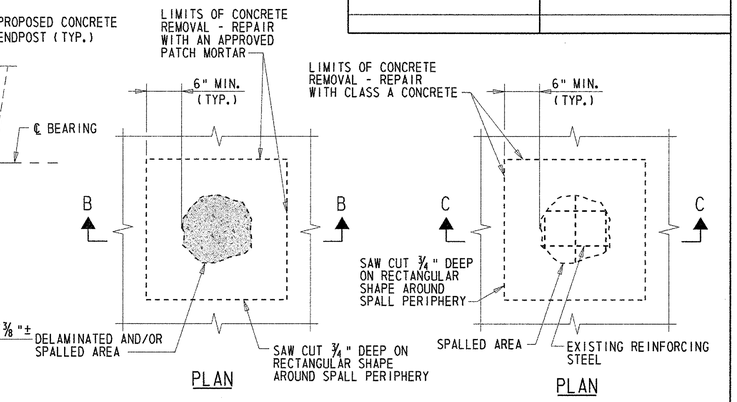

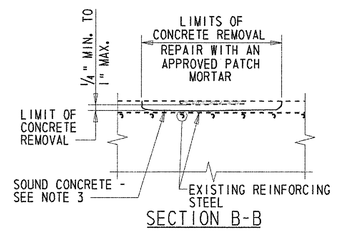

SECTION B-B

SHALLOW SPALL REPAIR

NOT TO SCALE

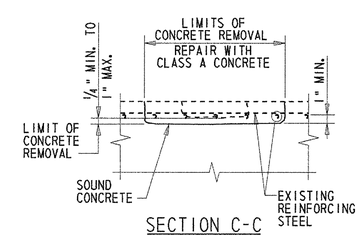

SECTION C-C

DEEP SPALL REPAIR

NOT TO SCALE

SPALL REPAIR NOTES:

1. PAYMENT FOR SHALLOW SPALL REPAIR WILL BE MADE UNDER ITEM 602551 - REHABILITATION OF EXISTING CONCRETE STRUCTURES.
2. PAYMENT FOR DEEP SPALL REPAIR WILL BE MADE UNDER ITEM 602586 - REHABILITATION OF CONCRETE STRUCTURE.
3. IF SOUND CONCRETE IS NOT ENCOUNTERED BEFORE EXPOSING EXISTING REINFORCING STEEL, USE 'DEEP SPALL REPAIR' DETAIL. IF SOUND CONCRETE IS NOT ENCOUNTERED AT A DEPTH OF 6", ALL REMOVAL OPERATIONS SHALL STOP AND THE ENGINEER SHALL BE NOTIFIED IMMEDIATELY.
4. WHEREVER POSSIBLE, ALL EXPOSED EXISTING REINFORCING STEEL SHALL BE INCORPORATED INTO THE FINISHED STRUCTURE IN ACCORDANCE WITH THE FOLLOWING:
   - (A) IN THE OPINION OF THE ENGINEER, IF THE REINFORCING STEEL HAS LOST 20 PERCENT OR MORE OF ITS ORIGINAL CROSS SECTION AREA, IT SHALL BE CUT OUT. A NEW BAR OF THE SAME DIAMETER SHALL BE PROVIDED AND PLACED SO AS TO HAVE THE MINIMUM REQUIRED LAP AT EACH END OF THE NEW BAR.
   - (B) WHERE THE REQUIRED BAR LAP LENGTH IS AVAILABLE, IT SHALL BE USED AS A DOWEL.
   - (C) WHERE THE REQUIRED BAR LAP IS NOT AVAILABLE OR LIMITS OF CONCRETE REMOVAL TO ACHIEVE BAR LAP ARE TOO GREAT, A STANDARD HOOK OR A WELDED OR APPROVED MECHANICAL SPLICE SHALL BE PROVIDED. THE ENGINEER SHALL BE THE SOLE JUDGE WHETHER REINFORCING STEEL IS TO BE REUSED OR REPLACED.
   - (D) IN THE EVENT THAT THE NEW BAR IS UNABLE TO BE WELDED OR MECHANICALLY SPLICED TO THE EXISTING REINFORCING STEEL, A NEW BAR SHALL BE DRILLED AND GROUTED ADJACENT TO THE EXISTING BAR LOCATION. PAYMENT FOR THE DRILLING AND GROUTING WILL BE MADE UNDER ITEM 602579 - DRILLING HOLES AND INSTALLING DOWELS. PAYMENT FOR THE NEW REINFORCING STEEL BAR WILL BE MADE UNDER ITEM 603500 - REPAIRING BAR REINFORCEMENT.
5. ALL EXISTING REINFORCING STEEL TO BE INCORPORATED INTO THE FINISHED CONSTRUCTION SHALL BE BLAST CLEANED TO REMOVE ALL CONCRETE, DEBRIS AND RUST. PAYMENT SHALL BE INCIDENTAL TO ITEM 602586 - REHABILITATION OF CONCRETE STRUCTURE.
6. ALL NEW REINFORCING STEEL REQUIRED TO COMPLETE CONCRETE REPAIRS SHALL BE NON-EPOXY COATED. PAYMENT WILL BE MADE UNDER ITEM 603500 - REPAIRING BAR REINFORCEMENT.
7. SIZE, TYPE, AND LOCATION OF EXISTING REINFORCING STEEL NOT VERIFIED.

REPAIR LEGEND

① REPAIR DELAMINATED CONCRETE AND/OR SHALLOW SPALL - ITEM 602551.

② REPAIR SHALLOW SPALL - ITEM 602551.

③ REPAIR DEEP SPALL - ITEM 602586.

④ SEAL VERTICAL CRACKS BY EPOXY INJECTION - ITEM 602611.

NOTES:

1. ABUTMENT SPALL REPAIR LOCATIONS SHOWN GRAPHICALLY. REPAIR AREAS ARE BASED ON FIELD INSPECTION OBSERVATIONS TAKEN 5/02. THE CONCRETE REPAIR QUANTITIES FOR ITEMS 602551 AND 602586, AS SHOWN ON THE QUANTITY SUMMARY SHEET, HAVE BEEN INCREASED BY 25% TO ACCOUNT FOR LATENT DEFECTS THAT MAY HAVE OCCURRED SINCE THE 5/02 INSPECTION. ALL PROPOSED REPAIR LOCATIONS SHALL BE VERIFIED BY THE CONTRACTOR IN THE PRESENCE OF THE ENGINEER PRIOR TO BEGINNING ANY WORK. REFERENCE APPLICABLE SPECIAL PROVISIONS. THE ACTUAL LIMITS OF THE REPAIRS SHALL BE DEFINED AND DOCUMENTED BY THE ENGINEER. THE CONTRACTOR SHALL PROVIDE ACCESS TO THE REPAIR AREAS AT ALL TIMES DURING CONSTRUCTION.
2. LENGTH OF CONCRETE CRACKS SHOWN GRAPHICALLY. REPAIR LENGTH BASED ON FIELD INSPECTION OBSERVATIONS TAKEN 5/02. THE REPAIR OF CONCRETE STRUCTURE BY EPOXY INJECTION FOR ITEM 602611, AS SHOWN ON SUMMARY QUANTITY SHEET, HAS BEEN INCREASED BY 25% TO ACCOUNT FOR LATENT DEFECTS THAT MAY HAVE OCCURRED SINCE THE 5/02 INSPECTION. ALL PROPOSED REPAIR LOCATIONS SHALL BE VERIFIED BY THE CONTRACTOR IN THE PRESENCE OF THE ENGINEER PRIOR TO BEGINNING ANY WORK. REFERENCE APPLICABLE SPECIAL PROVISIONS. THE ACTUAL LIMITS OF THE REPAIRS SHALL BE DEFINED AND DOCUMENTED BY THE ENGINEER. THE CONTRACTOR SHALL PROVIDE ACCESS TO THE REPAIR AREAS AT ALL TIMES DURING CONSTRUCTION.
3. APPLY ANTI-GRAFFITI COATING TO ALL EXPOSED SURFACES OF THE ABUTMENT. PAYMENT FOR THIS WORK WILL BE MADE UNDER ITEM 602588 - ANTI-GRAFFITI COATING.

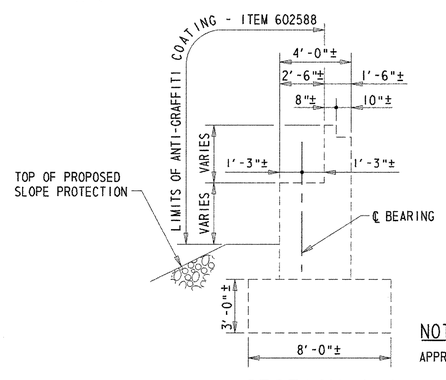

SECTION A-A

SCALE: ¼"=1'-0"

NOTE:

APPROACH SLAB NOT SHOWN FOR CLARITY.

LEGEND		
DEEP SPALL REPAIR	CRACK REPAIR	DELAMINATED CONCRETE AND/OR SHALLOW SPALL REPAIR

PREL. TRACING ____ W.R.A. ____ DESIGN ____ J.T.L./F.J.O. ____ CHKD. ____ W.A.G.

M:\3130314\ab01br715.dgn

SUBSTRUCTURE REPAIRS – NORTH ABUTMENT

BR.1-715 018

CONTRACT	COUNTY	F.A.P. NO.	SHEET NO.	TOTAL SHTS.
22-074-09	NEW CASTLE	SEE TITLE SHEET	54	152

REHABILITATION OF BRIDGE NOS. 1-715, 1-715A, & 1-715D ON SR 273 OVER I-95

REVISIONS

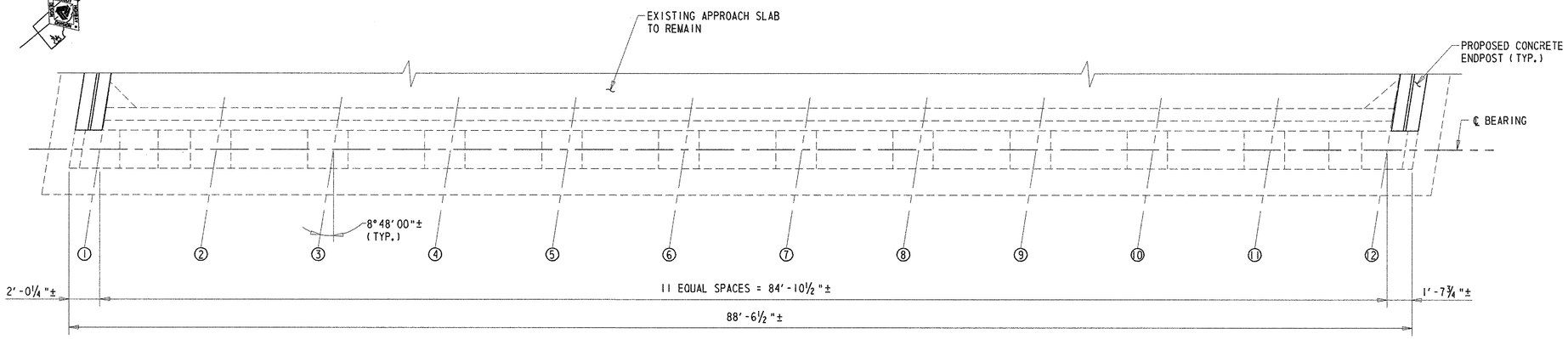

BEAM SEAT PLAN

SCALE: ¼"=1'-0"

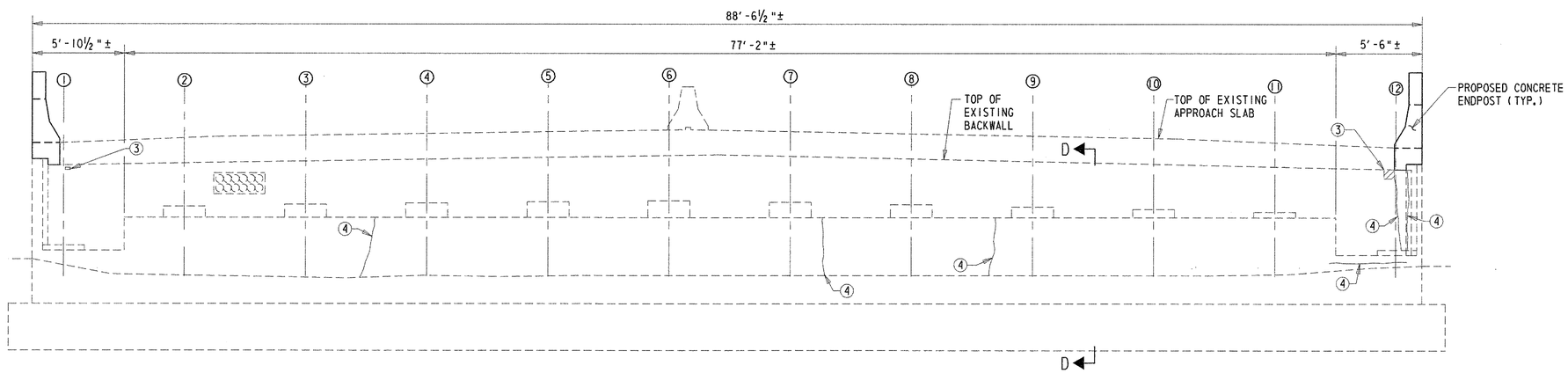

ELEVATION

SCALE: ¼"=1'-0"

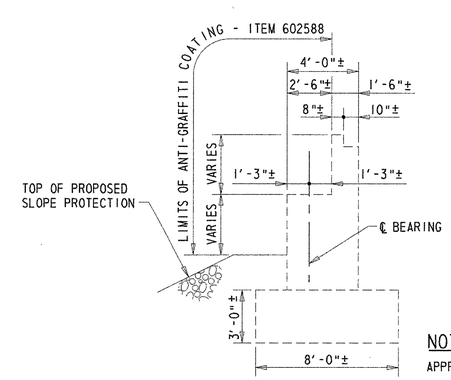

SECTION D-D

SCALE: ¼"=1'-0"

NOTES:

1. ABUTMENT SPALL REPAIR LOCATIONS SHOWN GRAPHICALLY. REPAIR AREAS ARE BASED ON FIELD INSPECTION OBSERVATIONS TAKEN 5/02. THE CONCRETE REPAIR QUANTITIES FOR ITEMS 602551 AND 602586, AS SHOWN ON THE QUANTITY SUMMARY SHEET, HAVE BEEN INCREASED BY 25% TO ACCOUNT FOR LATENT DEFECTS THAT MAY HAVE OCCURRED SINCE THE 5/02 INSPECTION. ALL PROPOSED REPAIR LOCATIONS SHALL BE VERIFIED BY THE CONTRACTOR IN THE PRESENCE OF THE ENGINEER PRIOR TO BEGINNING ANY WORK. REFERENCE APPLICABLE SPECIAL PROVISIONS. THE ACTUAL LIMITS OF THE REPAIRS SHALL BE DEFINED AND DOCUMENTED BY THE ENGINEER. THE CONTRACTOR SHALL PROVIDE ACCESS TO THE REPAIR AREAS AT ALL TIMES DURING CONSTRUCTION.

2. LENGTH OF CONCRETE CRACKS SHOWN GRAPHICALLY. REPAIR LENGTH BASED ON FIELD INSPECTION OBSERVATIONS TAKEN 5/02. THE REPAIR OF CONCRETE STRUCTURE BY EPOXY INJECTION FOR ITEM 602611, AS SHOWN ON SUMMARY QUANTITY SHEET, HAS BEEN INCREASED BY 25% TO ACCOUNT FOR LATENT DEFECTS THAT MAY HAVE OCCURRED SINCE THE 5/02 INSPECTION. ALL PROPOSED REPAIR LOCATIONS SHALL BE VERIFIED BY THE CONTRACTOR IN THE PRESENCE OF THE ENGINEER PRIOR TO BEGINNING ANY WORK. REFERENCE APPLICABLE SPECIAL PROVISIONS. THE ACTUAL LIMITS OF THE REPAIRS SHALL BE DEFINED AND DOCUMENTED BY THE ENGINEER. THE CONTRACTOR SHALL PROVIDE ACCESS TO THE REPAIR AREAS AT ALL TIMES DURING CONSTRUCTION.

3. APPLY ANTI-GRAFFITI COATING TO ALL EXPOSED SURFACES OF THE ABUTMENT. PAYMENT FOR THIS WORK WILL BE MADE UNDER ITEM 602588 - ANTI-GRAFFITI COATING.

REPAIR LEGEND

① REPAIR DELAMINATED CONCRETE AND/OR SHALLOW SPALL - ITEM 602551.

② REPAIR SHALLOW SPALL - ITEM 602551.

③ REPAIR DEEP SPALL - ITEM 602586.

④ SEAL VERTICAL AND HORIZONTAL CRACKS BY EPOXY INJECTION - ITEM 602611.

NOTE:

APPROACH SLAB NOT SHOWN FOR CLARITY.

LEGEND

DEEP SPALL REPAIR | CRACK REPAIR | DELAMINATED CONCRETE AND/OR SHALLOW SPALL REPAIR

PREL. TRACING ____ W.R.A. ____ DESIGN ____ J.T.L./F.J.O. ____ CHKD. ____ W.A.O.

M:\3130314\ab02br715.dgn

SUBSTRUCTURE REPAIRS - WINGWALLS

BR.1-715 018

CONTRACT	COUNTY	F.A.P. NO.	SHEET NO.	TOTAL SHTS.
22-074-09	NEW CASTLE	SEE TITLE SHEET	55	152

REHABILITATION OF BRIDGE NOS. 1-715, 1-715A, & 1-715D ON SR 273 OVER I-95

REVISIONS

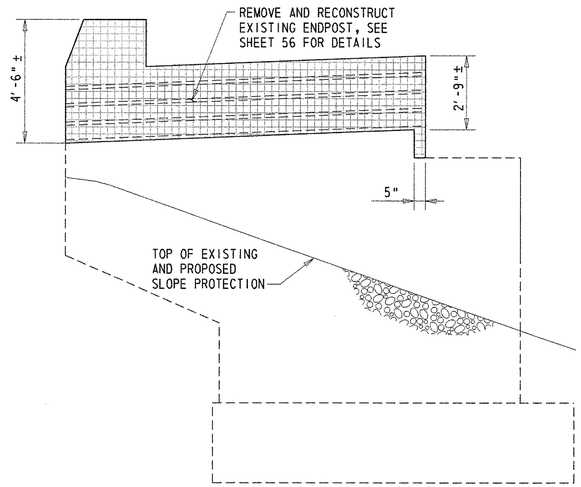

NORTHWEST WINGWALL - ELEVATION

SCALE: 3/8"=1'-0"

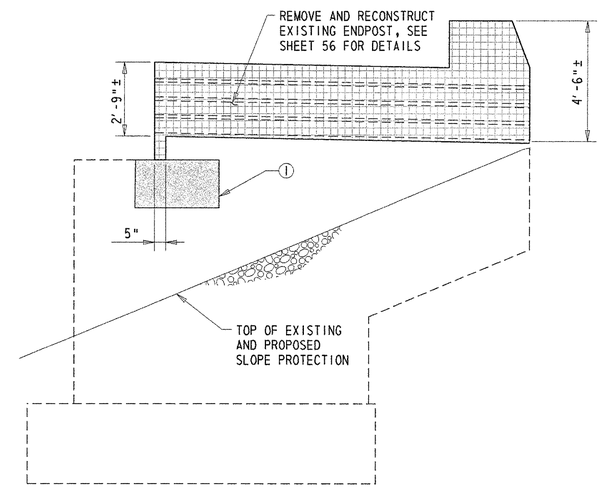

NORTHEAST WINGWALL - ELEVATION

SCALE: 3/8"=1'-0"

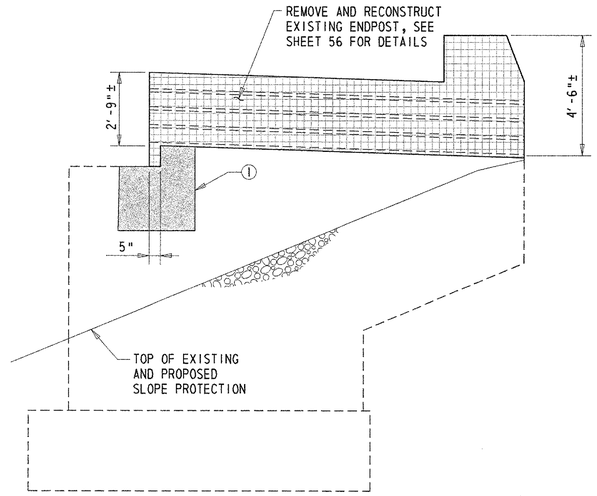

SOUTHWEST WINGWALL - ELEVATION

SCALE: 3/8"=1'-0"

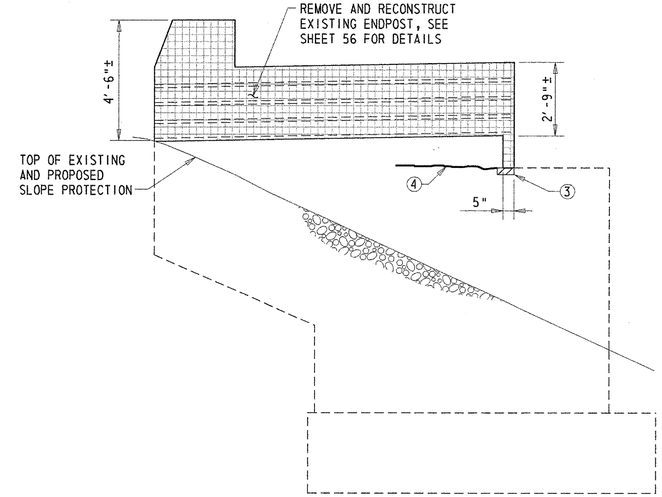

SOUTHEAST WINGWALL - ELEVATION

SCALE: 3/8"=1'-0"

REPAIR LEGEND

1. REPAIR DELAMINATED CONCRETE AND/OR SHALLOW SPALL - ITEM 602551.
2. REPAIR SHALLOW SPALL - ITEM 602551.
3. REPAIR DEEP SPALL - ITEM 602586.
4. SEAL VERTICAL AND/OR DIAGONAL CRACKS BY EPOXY INJECTION - ITEM 602611.

NOTES:

1. WINGWALL SPALL REPAIR LOCATIONS SHOWN GRAPHICALLY. REPAIR AREAS ARE BASED ON FIELD INSPECTION OBSERVATIONS TAKEN 5/02. THE CONCRETE REPAIR QUANTITIES FOR ITEMS 602551 AND 602586, AS SHOWN ON THE QUANTITY SUMMARY SHEET, HAVE BEEN INCREASED BY 25% TO ACCOUNT FOR LATENT DEFECTS THAT MAY HAVE OCCURRED SINCE THE 5/02 INSPECTION. ALL PROPOSED REPAIR LOCATIONS SHALL BE VERIFIED BY THE CONTRACTOR IN THE PRESENCE OF THE ENGINEER PRIOR TO BEGINNING ANY WORK. REFERENCE APPLICABLE SPECIAL PROVISIONS. THE ACTUAL LIMITS OF THE REPAIRS SHALL BE DEFINED AND DOCUMENTED BY THE ENGINEER. THE CONTRACTOR SHALL PROVIDE ACCESS TO THE REPAIR AREAS AT ALL TIMES DURING CONSTRUCTION.
2. LENGTH OF CONCRETE CRACKS SHOWN GRAPHICALLY. REPAIR LENGTH BASED ON FIELD INSPECTION OBSERVATIONS TAKEN 5/02. THE REPAIR OF CONCRETE STRUCTURE BY EPOXY INJECTION FOR ITEM 602611, AS SHOWN ON SUMMARY QUANTITY SHEET, HAS BEEN INCREASED BY 25% TO ACCOUNT FOR LATENT DEFECTS THAT MAY HAVE OCCURRED SINCE THE 5/02 INSPECTION. ALL PROPOSED REPAIR LOCATIONS SHALL BE VERIFIED BY THE CONTRACTOR IN THE PRESENCE OF THE ENGINEER PRIOR TO BEGINNING ANY WORK. REFERENCE APPLICABLE SPECIAL PROVISIONS. THE ACTUAL LIMITS OF THE REPAIRS SHALL BE DEFINED AND DOCUMENTED BY THE ENGINEER. THE CONTRACTOR SHALL PROVIDE ACCESS TO THE REPAIR AREAS AT ALL TIMES DURING CONSTRUCTION.
3. APPLY ANTI-GRAFFITI COATING TO ALL EXPOSED SURFACES OF THE WINGWALLS AND PROPOSED ENDPOSTS. PAYMENT FOR THIS WORK WILL BE MADE UNDER ITEM 602588 - ANTI-GRAFFITI COATING.
4. TWO-STRAND RAILING NOT SHOWN FOR CLARITY.

LEGEND

- ENDPOST RECONSTRUCTION
- DEEP SPALL REPAIR
- CRACK REPAIR
- DELAMINATED CONCRETE AND/OR SHALLOW SPALL REPAIR

PREL. TRACING ____ W.R.A. ____ DESIGN ____ J.T.L./F.J.O. ____ CHKD. ____ W.A.C. ____

M:\3130314\ww01br715.dgn

ENDPOST MODIFICATIONS

BR.1-715 018	CONTRACT	COUNTY	F.A.P. NO.	SHEET NO.	TOTAL SHTS.
	22-074-09	NEW CASTLE	SEE TITLE SHEET	56	152

REHABILITATION OF BRIDGE NOS. 1-715, 1-715A, & 1-715D ON SR 273 OVER I-95

REVISIONS

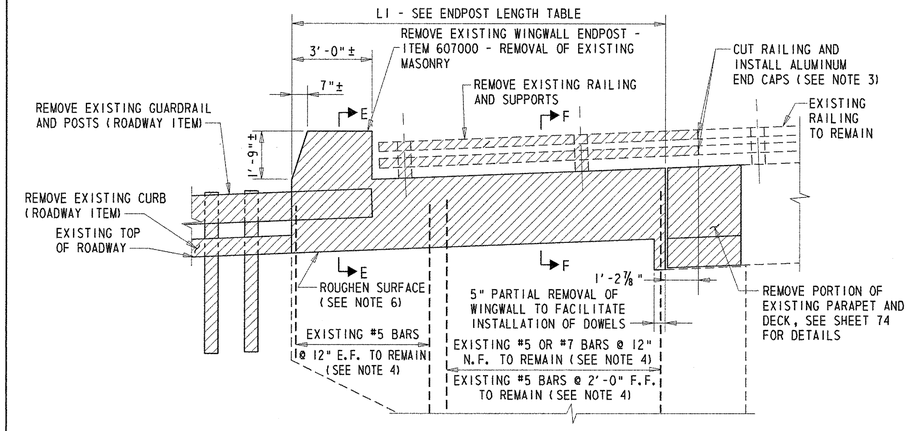

EXISTING ENDPOST ELEVATION (INTERIOR) - REMOVAL LIMITS

SCALE: ⅜"=1'-0"

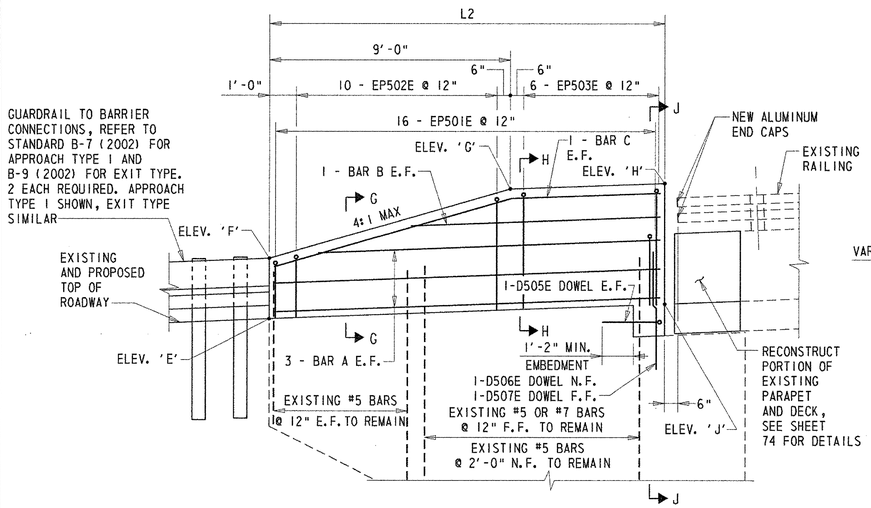

PROPOSED ENDPOST ELEVATION (INTERIOR)

SCALE: ⅜"=1'-0"

TABLE OF PROPOSED ELEVATIONS

	E		F		G		H		J	
LOCATION	STATION	ELEVATION	STATION	ELEVATION	STATION	ELEVATION	STATION	ELEVATION	STATION	ELEVATION
NORTHEAST	64+53.72	99.83	64+53.72	102.08	64+44.72	104.66	64+38.94	104.84	64+38.94	100.34
NORTHWEST	64+40.18	100.12	64+40.18	102.37	64+31.18	104.92	64+26.06	105.06	64+26.06	100.59
SOUTHEAST	59+62.74	103.95	59+62.74	106.20	59+71.74	108.60	59+76.86	108.67	59+76.86	104.17
SOUTHWEST	59+49.20	104.77	59+49.20	107.02	59+58.20	109.40	59+63.98	109.48	59+63.98	104.98

NOTES:

1. ALL STATIONS AND ELEVATIONS ARE FOR INFORMATIONAL PURPOSES ONLY AND SHALL BE FIELD SURVEYED PRIOR TO REMOVING AND RECONSTRUCTING THE ENDPOSTS. COST FOR FIELD SURVEY WILL BE INCLUDED IN ITEM 763501-CONSTRUCTION ENGINEERNG.

2. ELEVATIONS ARE MEASURED AT THE FLOWLINES.

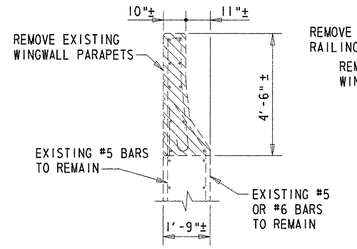

SECTION E-E

SCALE: ⅜"=1'-0"

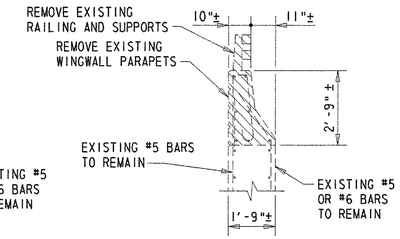

SECTION F-F

SCALE: ⅜"=1'-0"

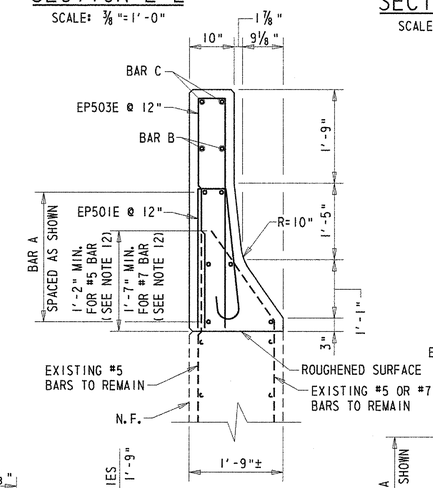

SECTION H-H

SCALE: ¾"=1'-0"

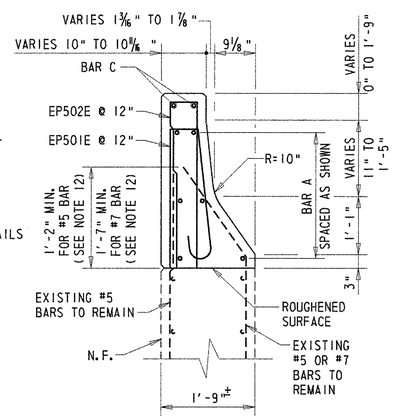

SECTION G-G

SCALE: ¾"=1'-0"

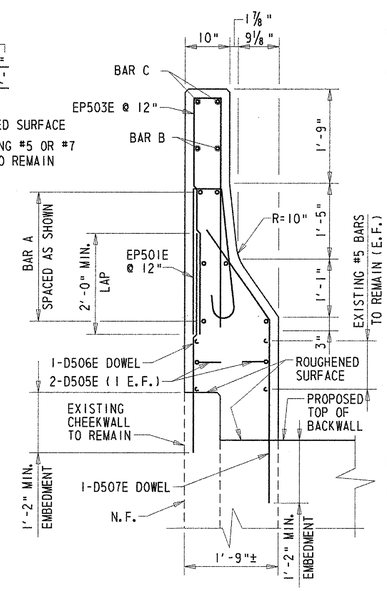

SECTION J-J

SCALE: ¾"=1'-0"

BAR SCHEDULE

LOCATION	A	B	C
NORTHEAST	EP504E	EP506E	EP508E
NORTHWEST	EP505E	EP507E	EP509E
SOUTHEAST	EP505E	EP507E	EP509E
SOUTHWEST	EP504E	EP506E	EP508E

ENDPOST LENGTH TABLE

LOCATION	L1	L2
NORTHEAST	13'-11¾"±	14'-9⅝"
NORTHWEST	13'-5¼"±	14'-1⅞"
SOUTHEAST	13'-5¼"±	14'-1⅞"
SOUTHWEST	13'-11¾"±	14'-9⅝"

NOTES:

1. NORTHEAST WINGWALL SHOWN. NORTHWEST, SOUTHEAST, AND SOUTHWEST WINGWALLS SIMILAR.
2. TRAFFIC FACE OF PROPOSED ENDPOST TO MATCH EXISTING BRIDGE PARAPET.
3. CUT EXISTING ALUMINUM RAILING SO THAT THE GAP BETWEEN THE RAILING AND THE PROPOSED ENDPOST DOES NOT EXCEED 6". COST FOR CUTTING AND REMOVING EXISTING ALUMINUM RAILING AND INSTALLATION OF NEW ALUMINUM END CAPS WILL BE INCLUDED IN ITEM 607000 - REMOVAL OF EXISTING MASONRY.
4. ALL EXISTING EXPOSED REINFORCEMENT SHALL BE BLAST CLEANED, AND EPOXY COATED. COST OF THIS ITEM TO BE INCLUDED IN ITEM 607000 - REMOVAL OF EXISTING MASONRY.
5. CONTRACTOR MAY BEND EXISTING REINFORCING STEEL TO PROVIDE MINIMUM COVER REQUIRED.
6. CLEAN AND APPLY EPOXY BONDING COMPOUND TO ALL REMOVAL AND ROUGHENED SURFACES. COST OF THIS ITEM SHALL BE INCLUDED IN ITEM 602017 - P.C.C. MASONRY, PARAPET, CLASS A.
7. APPLY ANTI-GRAFFITI COATING TO ALL SURFACES OF THE ENDPOST. PAYMENT FOR THIS WORK WILL BE MADE UNDER ITEM 602588 - ANTI-GRAFFITI COATING.
8. ANY EXISTING REINFORCING STEEL TO REMAIN THAT IS DAMAGED DURING THE REMOVAL OPERATIONS SHALL BE REPAIRED OR REPLACED AT THE SOLE EXPENSE OF THE CONTRACTOR.
9. IN THE OPINION OF THE ENGINEER, IF REINFORCING STEEL TO REMAIN EXHIBITS SECTION LOSS OF 20 PERCENT OR MORE OF ITS ORIGINAL CROSS SECTION AREA, IT SHALL BE CUT OUT AND A NEW BAR OF THE SAME DIAMETER SHALL BE INSTALLED. IF THE MINIMUM REQUIRED LAP IS NOT AVAILABLE THE NEW BAR SHALL BE WELDED OR AN APPROVED MECHANICAL SPLICE SHALL BE PROVIDED. THE ENGINEER SHALL BE THE SOLE JUDGE OF WHETHER REINFORCING STEEL IS TO BE REUSED OR REPLACED.
10. IN THE EVENT THAT THE NEW BAR IS UNABLE TO BE WELDED OR MECHANICALLY SPLICED TO THE EXISTING REINFORCING STEEL, A NEW BAR SHALL BE DRILLED AND GROUTED ADJACENT TO THE EXISTING BAR LOCATION. SEE DEVELOPMENT LENGTH TABLE ON SHEET 82 FOR EMBEDMENT OF NEW BAR INTO EXISTING STEM. PAYMENT FOR THE DRILLING AND GROUTING WILL BE MADE UNDER ITEM 602579 - DRILLING HOLES AND INSTALLING DOWELS. PAYMENT FOR THE NEW REINFORCING STEEL BAR WILL BE MADE UNDER ITEM 603500 - REPAIRING BAR REINFORCEMENT.
11. E.F. = EACH FACE
    F.F. = FAR FACE
    N.F. = NEAR FACE
12. EXISTING REINFORCING STEEL SHALL EXTEND THE MINIMUM DIMENSION SHOWN FROM THE ROUGHENED SURFACE. IN THE EVENT THAT THE REINFORCING STEEL DOES NOT HAVE ADEQUATE LENGTH, A NEW BAR SHALL BE DRILLED AND GROUTED ADJACENT TO THE EXISTING BAR LOCATION. PAYMENT FOR THE DRILLING AND GROUTING WILL BE MADE UNDER ITEM 602579 - DRILLING HOLES AND INSTALLING DOWELS. PAYMENT FOR THE NEW REINFORCING STEEL BAR WILL BE MADE UNDER ITEM 603500 - REPAIRING BAR REINFORCEMENT.
13. CONTRACTOR SHALL LOCATE EXISTING REINFORCEMENT BARS PRIOR TO INSTALLING DOWELS.
14. NO STRIATIONS SHALL BE CAST INTO THE REAR FACE OF THE CONCRETE ENDPOST.

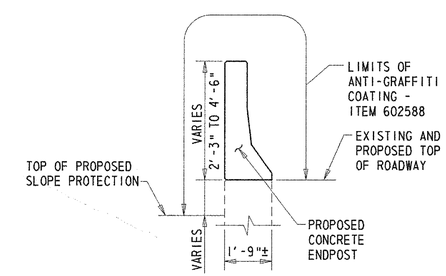

ANTI-GRAFFITI COATING - TYPICAL SECTION

SCALE: ⅜"=1'-0"

PRELIM. TRACING ____ W.R.A. ____ DESIGN ____ J.T.L./F.J.O. ____ CHKD. ____ W.A.G. ____

M:\313031\epOlbr715.dgn

PIER REPAIR – MISCELLANEOUS DETAILS

BR.1-715 018	CONTRACT	COUNTY	F.A.P. NO.	SHEET NO.	TOTAL SHTS.
	22-074-09	NEW CASTLE	SEE TITLE SHEET	57	152

REHABILITATION OF BRIDGE NOS. 1-715, 1-715A, & 1-715D ON SR 273 OVER I-95

REVISIONS

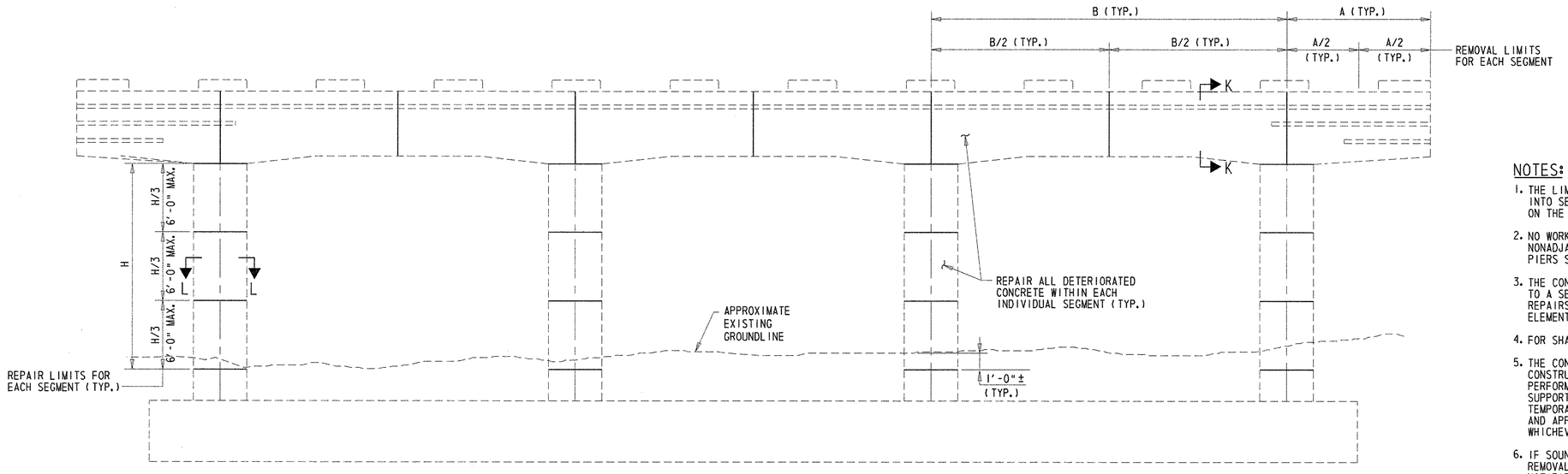

ELEVATION - PIER

SCALE: 1/4"=1'-0"

NOTES:

1. THE LIMITS OF PERFORMING CONCRETE REPAIRS SHALL BE DIVIDED INTO SECTIONS AS SHOWN ON THIS SHEET. WORKSHALL BE PERFORMED ON THE SECTIONS AS SHOWN AND AS OUTLINED IN SUBSEQUENT NOTES.
2. NO WORK SHALL BE PERFORMED ON ADJACENT OR ON MORE THAN TWO NONADJACENT SECTIONS ON EACH PIER CAP OR COLUMN AT ONE TIME. PIERS SHALL BE REPAIRED ONE AT A TIME.
3. THE CONTRACTOR SHALL WAIT 72 HOURS AFTER COMPLETING REPAIRS TO A SECTION PRIOR TO REPAIRING ADJACENT SECTIONS, HOWEVER, REPAIRS MAY BE PERFORMED CONCURRENTLY ON OTHER BRIDGE ELEMENTS.
4. FOR SHALLOW AND DEEP SPALL REPAIR DETAILS, SEE SHEET 53.
5. THE CONTRACTOR HAS THE OPTION OF ELIMINATING THE SEQUENCE OF CONSTRUCTION DEPICTED ON THIS SHEET PROVIDED ALL REPAIRS ARE PERFORMED WITH ADEQUATE TEMPORARY SHORING INSTALLED TO SUPPORT THE CONCRETE ELEMENTS BEING REPAIRED. DETAILS OF THE TEMPORARY SHORING SHALL BE SUBMITTED TO THE ENGINEER FOR REVIEW AND APPROVAL. NO ADDITIONAL COMPENSATION WILL BE ALLOWED FOR WHICHEVER ALTERNATIVE IS SELECTED.
6. IF SOUND CONCRETE IS NOT ENCOUNTERED AT A DEPTH OF 6", ALL REMOVAL OPERATIONS SHALL STOP AND THE ENGINEER SHALL BE NOTIFIED IMMEDIATELY.

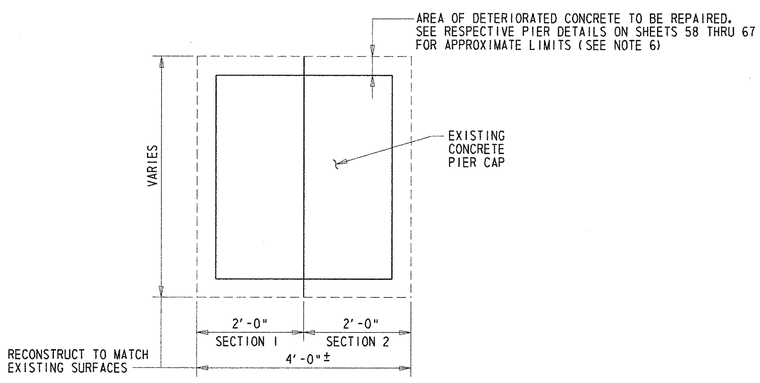

SECTION K-K

SCALE: 3/4" = 1'-0"

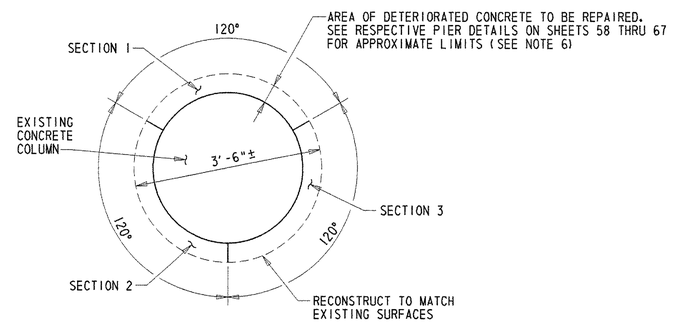

SECTION L-L

SCALE: 3/4"=1'-0"

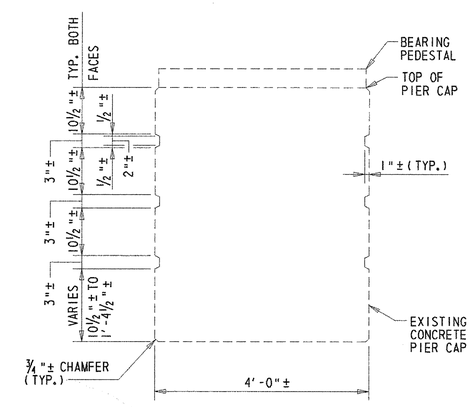

EXISTING PIER CAP STRIATIONS DETAIL

SCALE: 3/4"=1'-0"

PREL. TRACING W.R.A. DESIGN J.T.L./F.J.O. CHK'D. W.A.G.

M:\3130314\pr06br715.dgn

SUBSTRUCTURE REPAIRS – PIER 1 (SOUTH ELEVATION)

BR.1–715 018

CONTRACT	COUNTY	F.A.P. NO.	SHEET NO.	TOTAL SHTS.
22-074-09	NEW CASTLE	SEE TITLE SHEET	58	152

REHABILITATION OF BRIDGE NOS. 1–715, 1–715A, & 1–715D ON SR 273 OVER I–95

REVISIONS

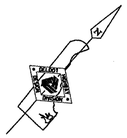

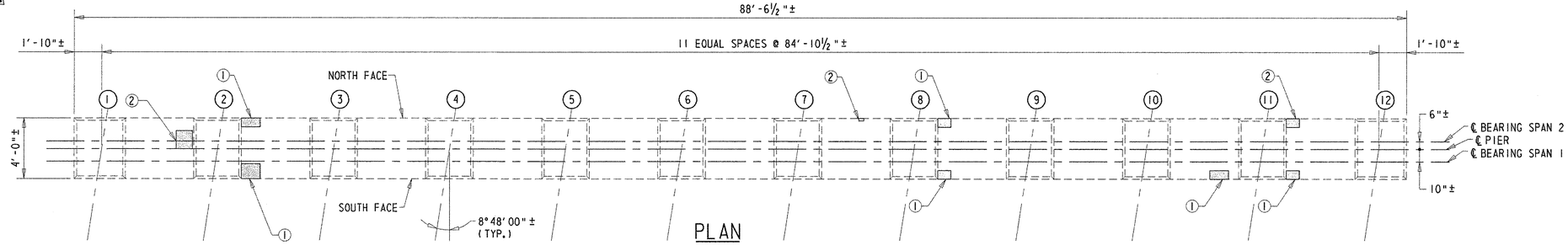

PLAN

SCALE: ¼"=1'-0"

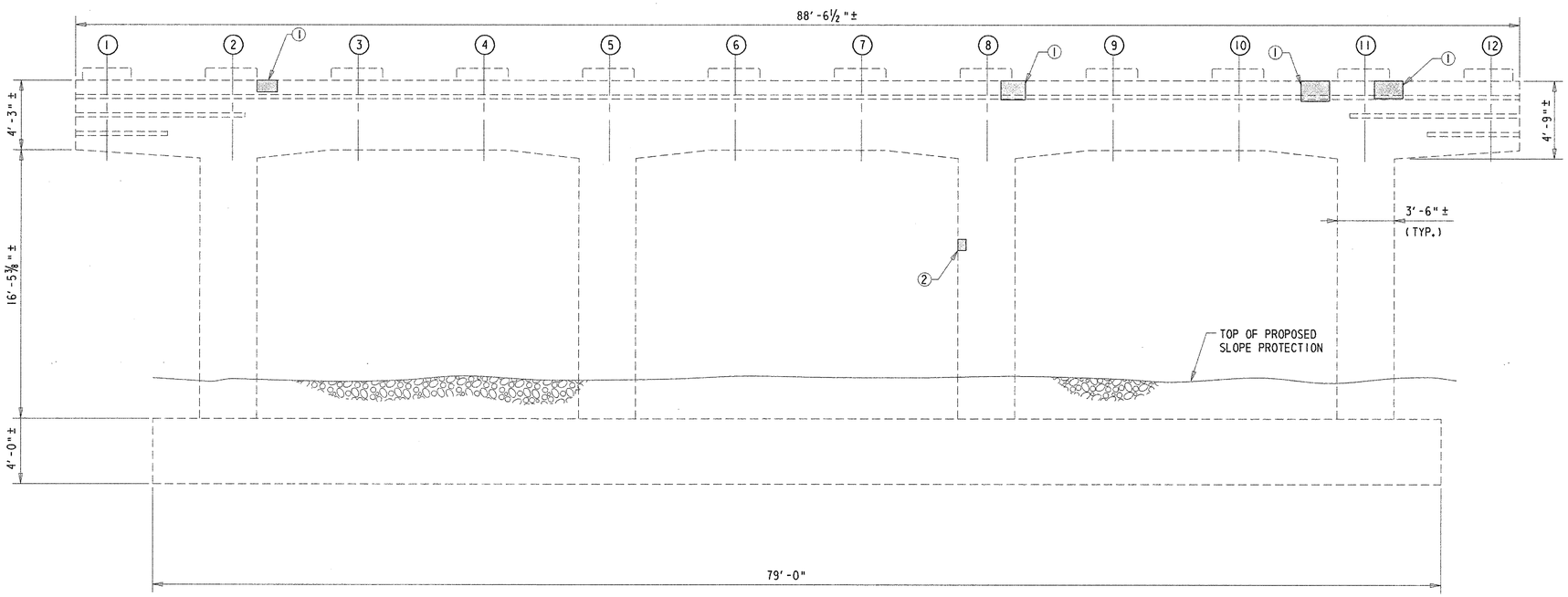

SOUTH ELEVATION

SCALE: ¼"=1'-0"

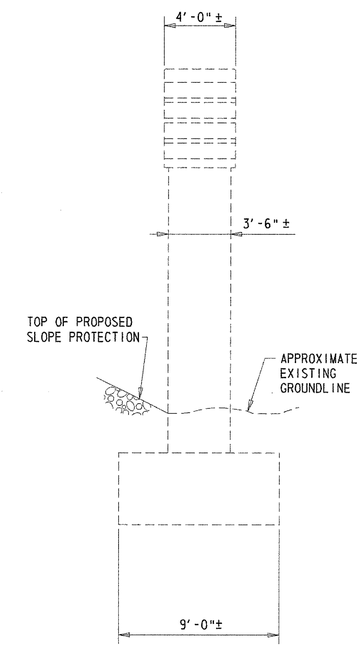

EAST ELEVATION

SCALE: ¼"=1'-0"

REPAIR LEGEND

① REPAIR DELAMINATED CONCRETE AND/OR SHALLOW SPALL - ITEM 602551.

② REPAIR SHALLOW SPALL - ITEM 602551.

③ REPAIR DEEP SPALL - ITEM 602586.

④ SEAL VERTICAL AND/OR DIAGONAL CRACKS BY EPOXY INJECTION - ITEM 602611.

NOTES:

1. PIER SPALL REPAIR LOCATIONS SHOWN GRAPHICALLY. REPAIR AREAS ARE BASED ON FIELD INSPECTION OBSERVATIONS TAKEN 5/02. THE CONCRETE REPAIR QUANTITIES FOR ITEMS 602551 AND 602586, AS SHOWN ON THE QUANTITY SUMMARY SHEET, HAVE BEEN INCREASED BY 25% TO ACCOUNT FOR LATENT DEFECTS THAT MAY HAVE OCCURRED SINCE THE 5/02 INSPECTION. ALL PROPOSED REPAIR LOCATIONS SHALL BE VERIFIED BY THE CONTRACTOR, IN THE PRESENCE OF THE ENGINEER, PRIOR TO BEGINNING ANY WORK. REFERENCE APPLICABLE SPECIAL PROVISIONS. THE ACTUAL LIMITS OF THE REPAIRS SHALL BE DEFINED AND DOCUMENTED BY THE ENGINEER. THE CONTRACTOR SHALL PROVIDE ACCESS TO THE REPAIR AREAS AT ALL TIMES DURING CONSTRUCTION.
2. LENGTH OF CONCRETE CRACKS SHOWN GRAPHICALLY. REPAIR LENGTH BASED ON FIELD INSPECTION OBSERVATIONS TAKEN 5/02. THE REPAIR OF CONCRETE STRUCTURE BY EPOXY INJECTION FOR ITEM 602611, AS SHOWN ON SUMMARY QUANTITY SHEET, HAS BEEN INCREASED BY 25% TO ACCOUNT FOR LATENT DEFECTS THAT MAY HAVE OCCURRED SINCE THE 5/02 INSPECTION. ALL PROPOSED REPAIR LOCATIONS SHALL BE VERIFIED BY THE CONTRACTOR IN THE PRESENCE OF THE ENGINEER PRIOR TO BEGINNING ANY WORK. REFERENCE APPLICABLE SPECIAL PROVISIONS. THE ACTUAL LIMITS OF THE REPAIRS SHALL BE DEFINED AND DOCUMENTED BY THE ENGINEER. THE CONTRACTOR SHALL PROVIDE ACCESS TO THE REPAIR AREAS AT ALL TIMES DURING CONSTRUCTION.
3. APPLY ANTI-GRAFFITI COATING TO ALL EXPOSED SURFACES OF THE PIER CAP AND COLUMNS. PAYMENT FOR THIS WORK WILL BE MADE UNDER ITEM 602588 - ANTI-GRAFFITI COATING.
4. FOR SPALL REPAIR DETAILS, SEE SHEET 53.
5. IF SOUND CONCRETE IS NOT ENCOUNTERED AT A DEPTH OF 6", ALL REMOVAL OPERATIONS SHALL STOP AND THE ENGINEER SHALL BE NOTIFIED IMMEDIATELY.

LEGEND

DEEP SPALL REPAIR | CRACK REPAIR | DELAMINATED CONCRETE AND/OR SHALLOW SPALL REPAIR

PREL. TRACING W.R.A. DESIGN J.T.L./F.J.O. CHKD. W.A.G.

M:\3130314\pr01sbr715.dgn

SUBSTRUCTURE REPAIRS – PIER 1 (NORTH ELEVATION)

BR.1-715 018	CONTRACT	COUNTY	F.A.P. NO.	SHEET NO.	TOTAL SHTS.
	22-074-09	NEW CASTLE	SEE TITLE SHEET	59	152

REHABILITATION OF BRIDGE NOS. 1-715, 1-715A, & 1-715D ON SR 273 OVER I-95

REVISIONS

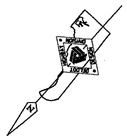

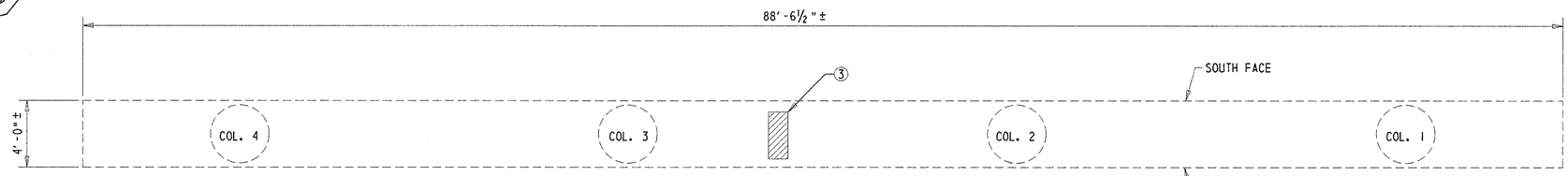

UNDERSIDE LOOKING UP

SCALE: ¼"=1'-0"

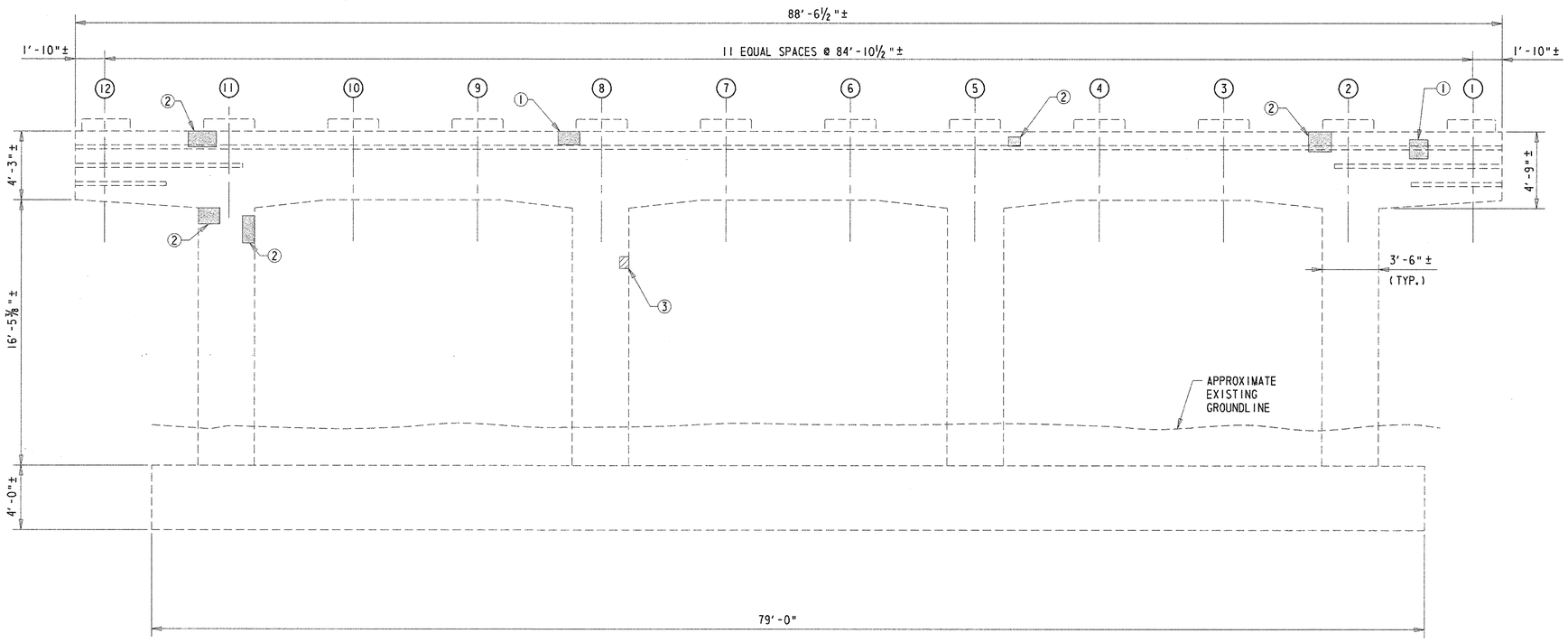

NORTH ELEVATION

SCALE: ¼"=1'-0"

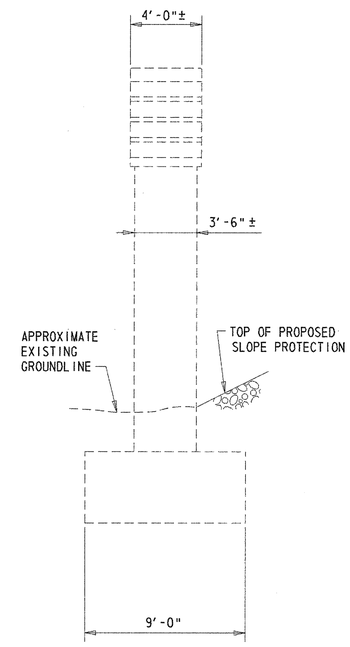

WEST ELEVATION

SCALE: ¼"=1'-0"

REPAIR LEGEND

① REPAIR DELAMINATED CONCRETE AND/OR SHALLOW SPALL - ITEM 602551.

② REPAIR SHALLOW SPALL - ITEM 602551.

③ REPAIR DEEP SPALL - ITEM 602586.

④ SEAL VERTICAL AND/OR DIAGONAL CRACKS BY EPOXY INJECTION - ITEM 602611.

NOTES:

1. PIER SPALL REPAIR LOCATIONS SHOWN GRAPHICALLY. REPAIR AREAS ARE BASED ON FIELD INSPECTION OBSERVATIONS TAKEN 5/02. THE CONCRETE REPAIR QUANTITIES FOR ITEMS 602551 AND 602586, AS SHOWN ON THE QUANTITY SUMMARY SHEET, HAVE BEEN INCREASED BY 25% TO ACCOUNT FOR LATENT DEFECTS THAT MAY HAVE OCCURRED SINCE THE 5/02 INSPECTION. ALL PROPOSED REPAIR LOCATIONS SHALL BE VERIFIED BY THE CONTRACTOR, IN THE PRESENCE OF THE ENGINEER, PRIOR TO BEGINNING ANY WORK. REFERENCE APPLICABLE SPECIAL PROVISIONS. THE ACTUAL LIMITS OF THE REPAIRS SHALL BE DEFINED AND DOCUMENTED BY THE ENGINEER. THE CONTRACTOR SHALL PROVIDE ACCESS TO THE REPAIR AREAS AT ALL TIMES DURING CONSTRUCTION.

2. LENGTH OF CONCRETE CRACKS SHOWN GRAPHICALLY. REPAIR LENGTH BASED ON FIELD INSPECTION OBSERVATIONS TAKEN 5/02. THE REPAIR OF CONCRETE STRUCTURE BY EPOXY INJECTION FOR ITEM 602611, AS SHOWN ON SUMMARY QUANTITY SHEET, HAS BEEN INCREASED BY 25% TO ACCOUNT FOR LATENT DEFECTS THAT MAY HAVE OCCURRED SINCE THE 5/02 INSPECTION. ALL PROPOSED REPAIR LOCATIONS SHALL BE VERIFIED BY THE CONTRACTOR IN THE PRESENCE OF THE ENGINEER PRIOR TO BEGINNING ANY WORK. REFERENCE APPLICABLE SPECIAL PROVISIONS. THE ACTUAL LIMITS OF THE REPAIRS SHALL BE DEFINED AND DOCUMENTED BY THE ENGINEER. THE CONTRACTOR SHALL PROVIDE ACCESS TO THE REPAIR AREAS AT ALL TIMES DURING CONSTRUCTION.

3. APPLY ANTI-GRAFFITI COATING TO ALL EXPOSED SURFACES OF THE PIER CAP AND COLUMNS. PAYMENT FOR THIS WORK WILL BE MADE UNDER ITEM 602588 - ANTI-GRAFFITI COATING.

4. FOR SPALL REPAIR DETAILS, SEE SHEET 53.

5. IF SOUND CONCRETE IS NOT ENCOUNTERED AT A DEPTH OF 6", ALL REMOVAL OPERATIONS SHALL STOP AND THE ENGINEER SHALL BE NOTIFIED IMMEDIATELY.

LEGEND

DEEP SPALL REPAIR | CRACK REPAIR | DELAMINATED CONCRETE AND/OR SHALLOW SPALL REPAIR

PREL. TRACING ____ W.R.A. ____ DESIGN ____ J.T.L./F.L.O. ____ CHKD. ____ W.A.G.

M:\313031\4\pr01nbr715.dgn

SUBSTRUCTURE REPAIRS – PIER 2 (SOUTH ELEVATION)

BR.1–715 018

CONTRACT	COUNTY	F.A.P. NO.	SHEET NO.	TOTAL SHTS.
22-074-09	NEW CASTLE	SEE TITLE SHEET	60	152

REHABILITATION OF BRIDGE NOS. 1–715, 1–715A, & 1–715D ON SR 273 OVER I–95

REVISIONS

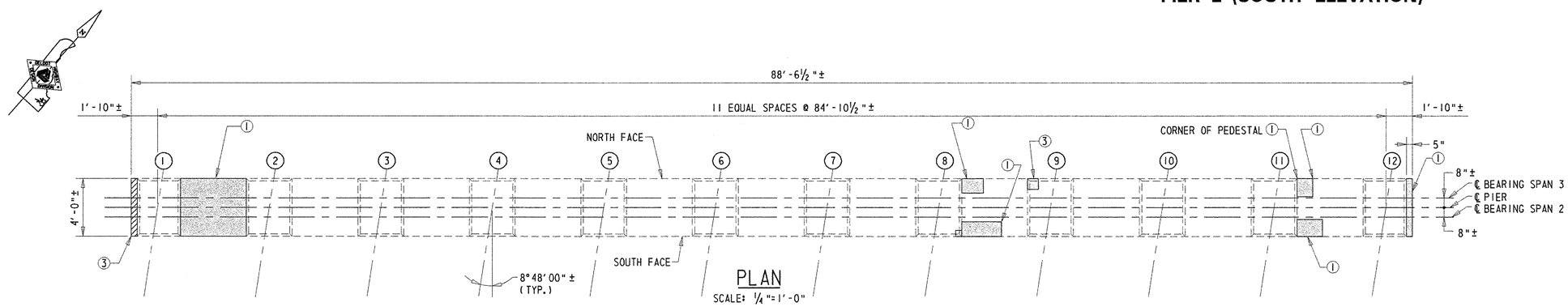

PLAN
SCALE: ¼"=1'-0"

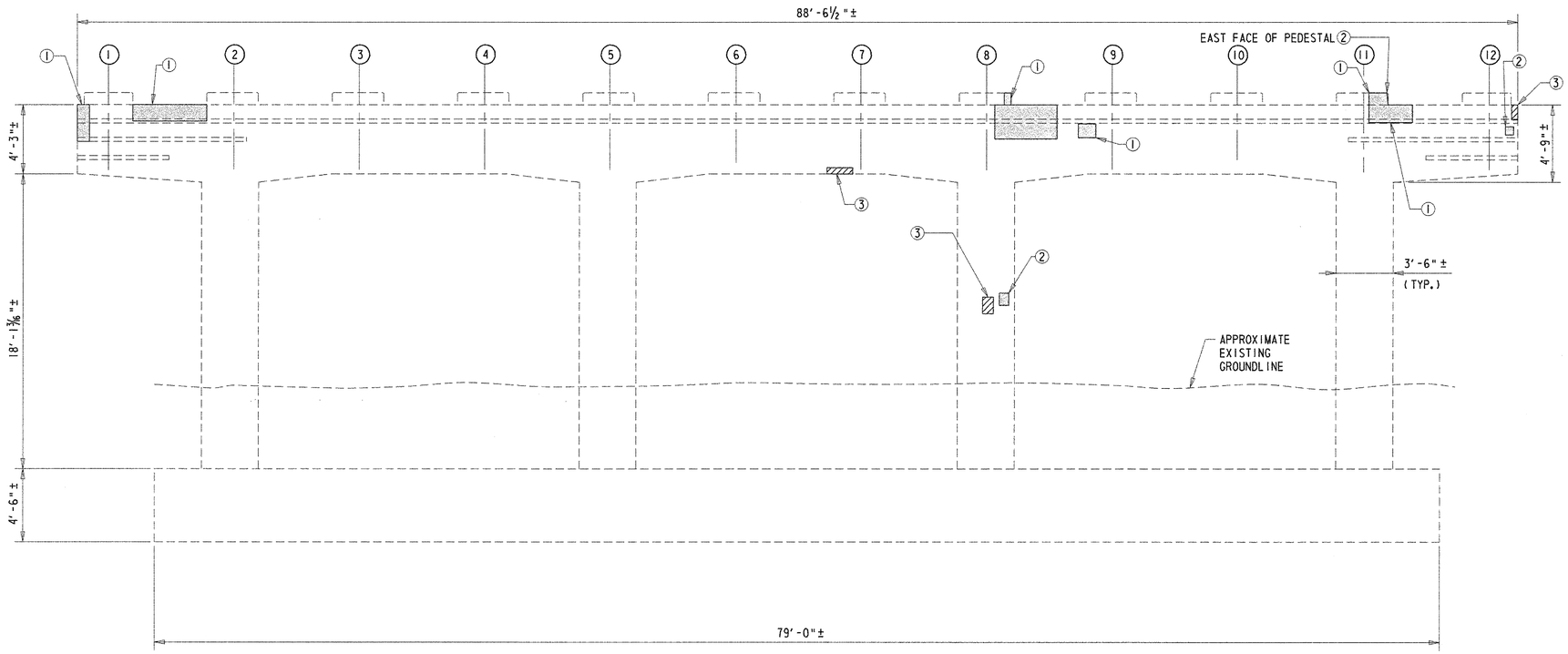

SOUTH ELEVATION
SCALE: ¼"=1'-0"

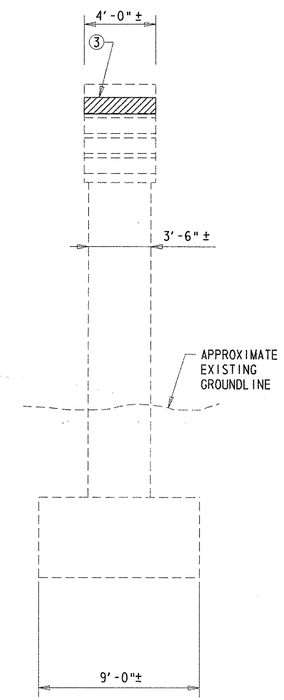

EAST ELEVATION
SCALE: ¼"=1'-0"

REPAIR LEGEND

① REPAIR DELAMINATED CONCRETE AND/OR SHALLOW SPALL - ITEM 602551.

② REPAIR SHALLOW SPALL - ITEM 602551.

③ REPAIR DEEP SPALL - ITEM 602586.

④ SEAL VERTICAL AND/OR DIAGONAL CRACKS BY EPOXY INJECTION - ITEM 602611.

NOTES:

1. PIER SPALL REPAIR LOCATIONS SHOWN GRAPHICALLY. REPAIR AREAS ARE BASED ON FIELD INSPECTION OBSERVATIONS TAKEN 5/02. THE CONCRETE REPAIR QUANTITIES FOR ITEMS 602551 AND 602586, AS SHOWN ON THE QUANTITY SUMMARY SHEET, HAVE BEEN INCREASED BY 25% TO ACCOUNT FOR LATENT DEFECTS THAT MAY HAVE OCCURRED SINCE THE 5/02 INSPECTION. ALL PROPOSED REPAIR LOCATIONS SHALL BE VERIFIED BY THE CONTRACTOR, IN THE PRESENCE OF THE ENGINEER, PRIOR TO BEGINNING ANY WORK. REFERENCE APPLICABLE SPECIAL PROVISIONS. THE ACTUAL LIMITS OF THE REPAIRS SHALL BE DEFINED AND DOCUMENTED BY THE ENGINEER. THE CONTRACTOR SHALL PROVIDE ACCESS TO THE REPAIR AREAS AT ALL TIMES DURING CONSTRUCTION.

2. LENGTH OF CONCRETE CRACKS SHOWN GRAPHICALLY. REPAIR LENGTH BASED ON FIELD INSPECTION OBSERVATIONS TAKEN 5/02. THE REPAIR OF CONCRETE STRUCTURE BY EPOXY INJECTION FOR ITEM 602611, AS SHOWN ON SUMMARY QUANTITY SHEET, HAS BEEN INCREASED BY 25% TO ACCOUNT FOR LATENT DEFECTS THAT MAY HAVE OCCURRED SINCE THE 5/02 INSPECTION. ALL PROPOSED REPAIR LOCATIONS SHALL BE VERIFIED BY THE CONTRACTOR IN THE PRESENCE OF THE ENGINEER PRIOR TO BEGINNING ANY WORK. REFERENCE APPLICABLE SPECIAL PROVISIONS. THE ACTUAL LIMITS OF THE REPAIRS SHALL BE DEFINED AND DOCUMENTED BY THE ENGINEER. THE CONTRACTOR SHALL PROVIDE ACCESS TO THE REPAIR AREAS AT ALL TIMES DURING CONSTRUCTION.

3. APPLY ANTI-GRAFFITI COATING TO ALL EXPOSED SURFACES OF THE PIER CAP AND COLUMNS. PAYMENT FOR THIS WORK WILL BE MADE UNDER ITEM 602588 - ANTI-GRAFFITI COATING.

4. FOR SPALL REPAIR DETAILS, SEE SHEET 53.

5. IF SOUND CONCRETE IS NOT ENCOUNTERED AT A DEPTH OF 6", ALL REMOVAL OPERATIONS SHALL STOP AND THE ENGINEER SHALL BE NOTIFIED IMMEDIATELY.

LEGEND

DEEP SPALL REPAIR | CRACK REPAIR | DELAMINATED CONCRETE AND/OR SHALLOW SPALL REPAIR

PREL. TRACING _____ W.R.A. _____ DESIGN _____ J.T.L./F.J.O. _____ CHKD. _____ W.A.G. _____

M:\3130314\pr02sbr715.dgn

SUBSTRUCTURE REPAIRS – PIER 2 (NORTH ELEVATION)

BR.1–715 018

CONTRACT	COUNTY	F.A.P. NO.	SHEET NO.	TOTAL SHTS.
22-074-09	NEW CASTLE	SEE TITLE SHEET	61	152

REHABILITATION OF BRIDGE NOS. 1–715, 1–715A, & 1–715D ON SR 273 OVER I–95

REVISIONS

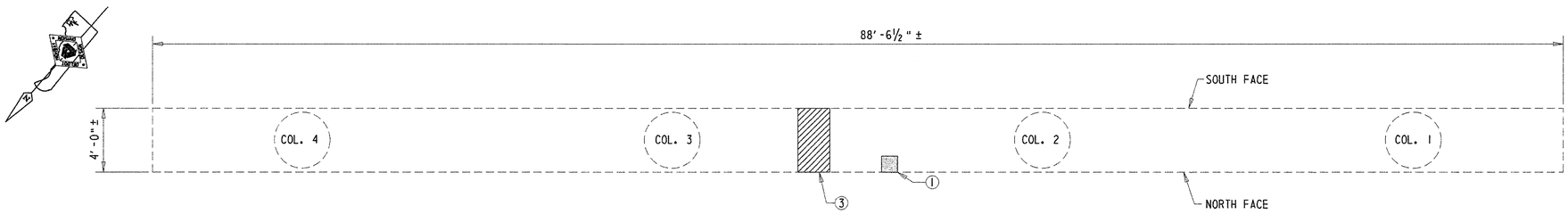

UNDERSIDE LOOKING UP

SCALE: ¼"=1'-0"

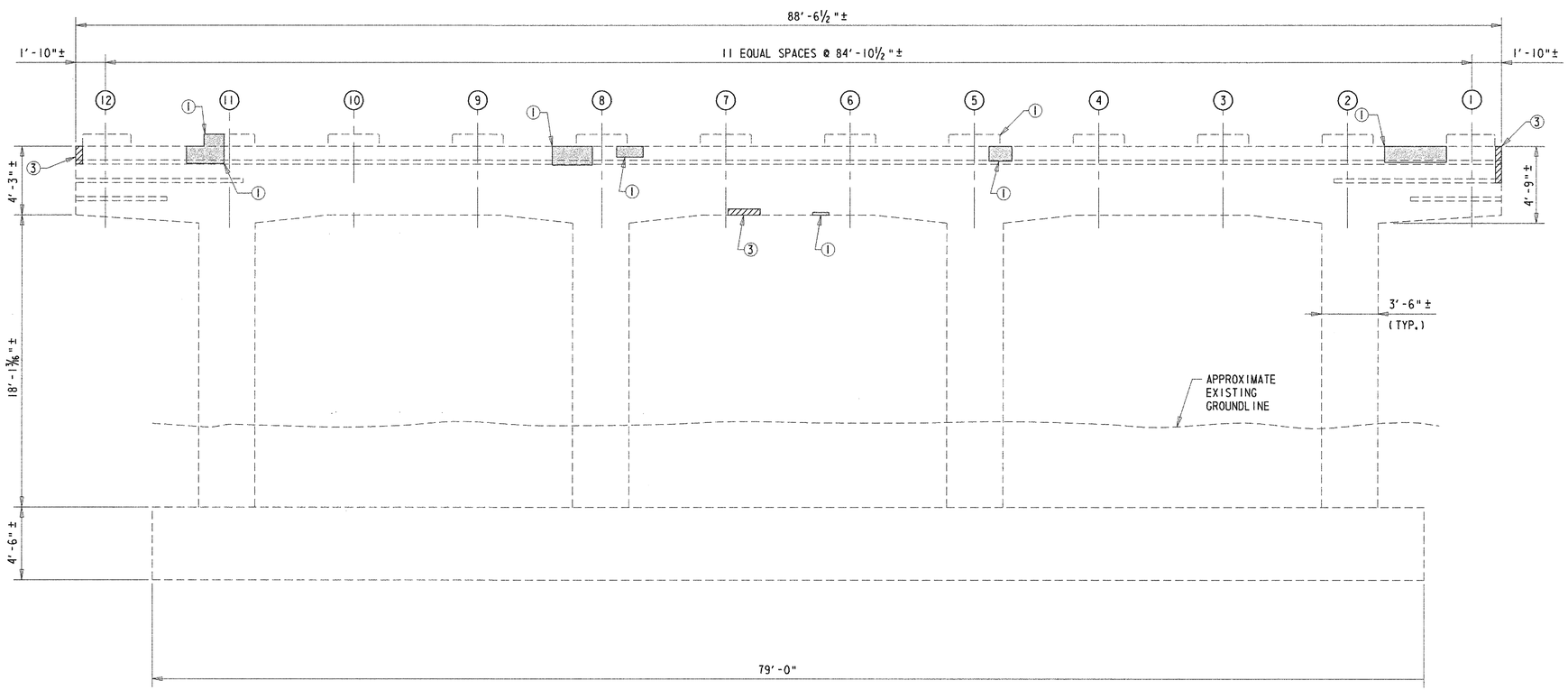

NORTH ELEVATION

SCALE: ¼"=1'-0"

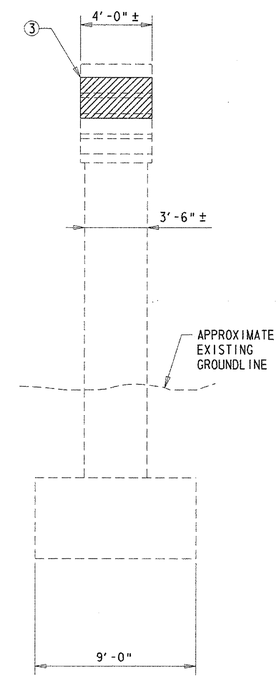

WEST ELEVATION

SCALE: ¼"=1'-0"

NOTES:

1. PIER SPALL REPAIR LOCATIONS SHOWN GRAPHICALLY. REPAIR AREAS ARE BASED ON FIELD INSPECTION OBSERVATIONS TAKEN 5/02. THE CONCRETE REPAIR QUANTITIES FOR ITEMS 602551 AND 602586, AS SHOWN ON THE QUANTITY SUMMARY SHEET, HAVE BEEN INCREASED BY 25% TO ACCOUNT FOR LATENT DEFECTS THAT MAY HAVE OCCURRED SINCE THE 5/02 INSPECTION. ALL PROPOSED REPAIR LOCATIONS SHALL BE VERIFIED BY THE CONTRACTOR, IN THE PRESENCE OF THE ENGINEER, PRIOR TO BEGINNING ANY WORK. REFERENCE APPLICABLE SPECIAL PROVISIONS. THE ACTUAL LIMITS OF THE REPAIRS SHALL BE DEFINED AND DOCUMENTED BY THE ENGINEER. THE CONTRACTOR SHALL PROVIDE ACCESS TO THE REPAIR AREAS AT ALL TIMES DURING CONSTRUCTION.
2. LENGTH OF CONCRETE CRACKS SHOWN GRAPHICALLY. REPAIR LENGTH BASED ON FIELD INSPECTION OBSERVATIONS TAKEN 5/02. THE REPAIR OF CONCRETE STRUCTURE BY EPOXY INJECTION FOR ITEM 602611, AS SHOWN ON SUMMARY QUANTITY SHEET, HAS BEEN INCREASED BY 25% TO ACCOUNT FOR LATENT DEFECTS THAT MAY HAVE OCCURRED SINCE THE 5/02 INSPECTION. ALL PROPOSED REPAIR LOCATIONS SHALL BE VERIFIED BY THE CONTRACTOR IN THE PRESENCE OF THE ENGINEER PRIOR TO BEGINNING ANY WORK. REFERENCE APPLICABLE SPECIAL PROVISIONS. THE ACTUAL LIMITS OF THE REPAIRS SHALL BE DEFINED AND DOCUMENTED BY THE ENGINEER. THE CONTRACTOR SHALL PROVIDE ACCESS TO THE REPAIR AREAS AT ALL TIMES DURING CONSTRUCTION.
3. APPLY ANTI-GRAFFITI COATING TO ALL EXPOSED SURFACES OF THE PIER CAP AND COLUMNS. PAYMENT FOR THIS WORK WILL BE MADE UNDER ITEM 602588 - ANTI-GRAFFITI COATING.
4. FOR SPALL REPAIR DETAILS, SEE SHEET 53.
5. IF SOUND CONCRETE IS NOT ENCOUNTERED AT A DEPTH OF 6", ALL REMOVAL OPERATIONS SHALL STOP AND THE ENGINEER SHALL BE NOTIFIED IMMEDIATELY.

REPAIR LEGEND

① REPAIR DELAMINATED CONCRETE AND/OR SHALLOW SPALL - ITEM 602551.

② REPAIR SHALLOW SPALL - ITEM 602551.

③ REPAIR DEEP SPALL - ITEM 602586.

④ SEAL VERTICAL AND/OR DIAGONAL CRACKS BY EPOXY INJECTION - ITEM 602611.

LEGEND

DEEP SPALL REPAIR | CRACK REPAIR | DELAMINATED CONCRETE AND/OR SHALLOW SPALL REPAIR

PREL. TRACING ____ W.R.A. ____ DESIGN ____ J.T.L./F.J.O. ____ CHKD. ____ W.A.G.

M:\313031\pr02nbr715.dgn

SUBSTRUCTURE REPAIRS – PIER 3 (SOUTH ELEVATION)

BR.1-715 018	CONTRACT	COUNTY	F.A.P. NO.	SHEET NO.	TOTAL SHTS.
	22-074-09	NEW CASTLE	SEE TITLE SHEET	62	152

REHABILITATION OF BRIDGE NOS. 1-715, 1-715A, & 1-715D ON SR 273 OVER I-95

REVISIONS

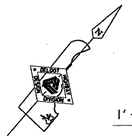

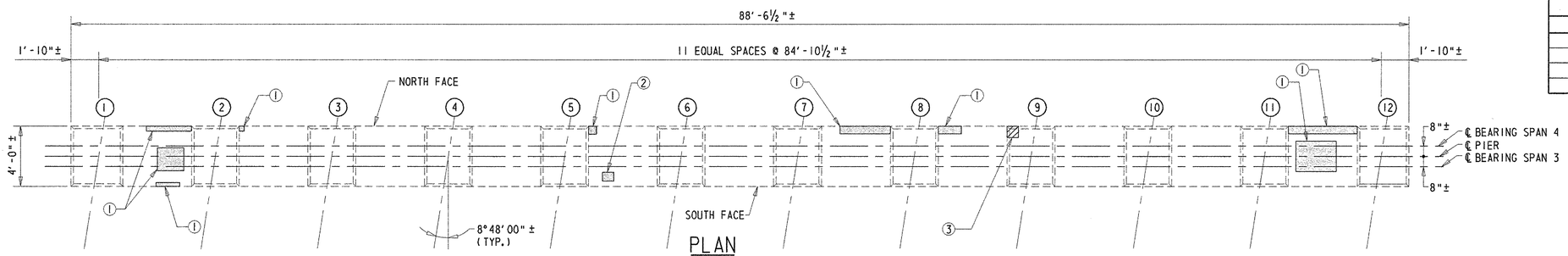

PLAN

SCALE: ¼"=1'-0"

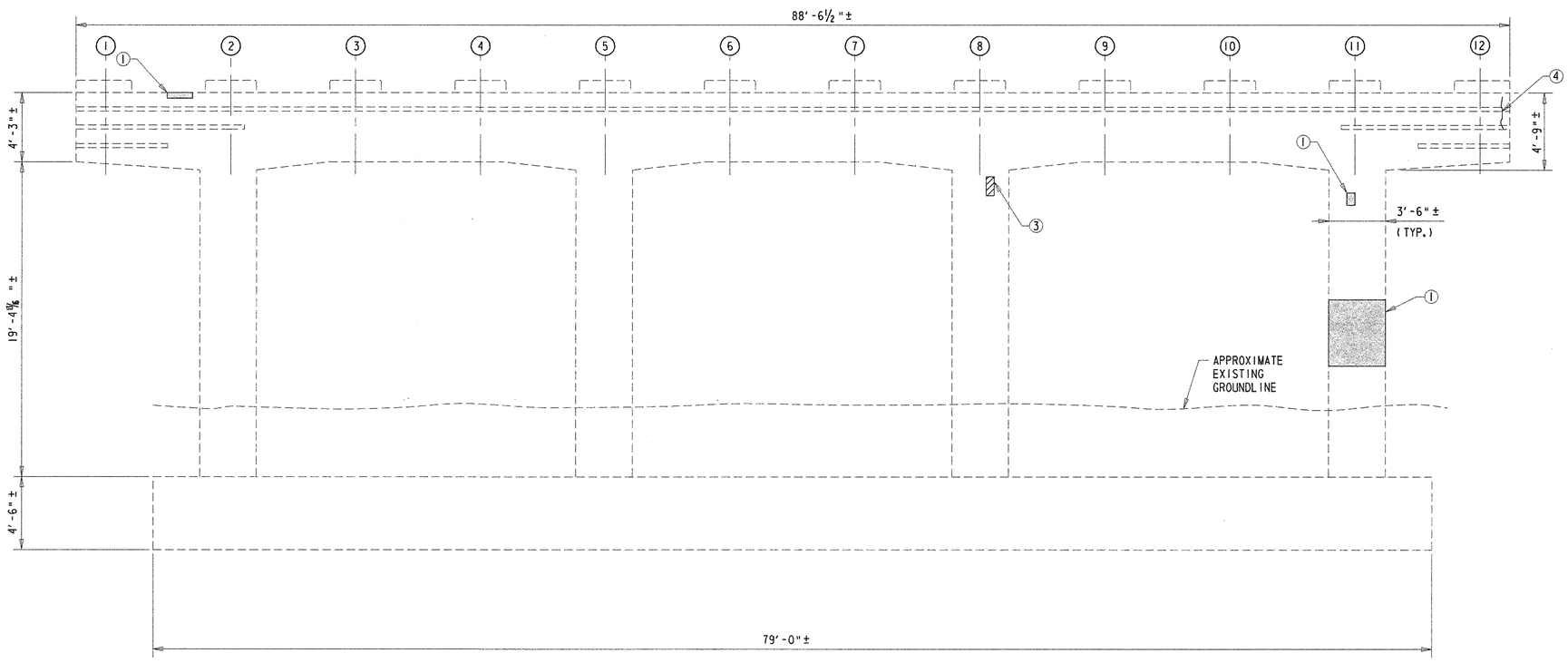

SOUTH ELEVATION

SCALE: ¼"=1'-0"

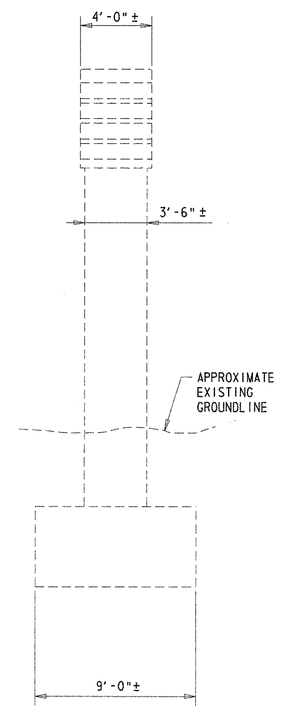

EAST ELEVATION

SCALE: ¼"=1'-0"

REPAIR LEGEND

① REPAIR DELAMINATED CONCRETE AND/OR SHALLOW SPALL - ITEM 602551.

② REPAIR SHALLOW SPALL - ITEM 602551.

③ REPAIR DEEP SPALL - ITEM 602586.

④ SEAL VERTICAL AND/OR DIAGONAL CRACKS BY EPOXY INJECTION - ITEM 602611.

NOTES:

1. PIER SPALL REPAIR LOCATIONS SHOWN GRAPHICALLY. REPAIR AREAS ARE BASED ON FIELD INSPECTION OBSERVATIONS TAKEN 5/02. THE CONCRETE REPAIR QUANTITIES FOR ITEMS 602551 AND 602586, AS SHOWN ON THE QUANTITY SUMMARY SHEET, HAVE BEEN INCREASED BY 25% TO ACCOUNT FOR LATENT DEFECTS THAT MAY HAVE OCCURRED SINCE THE 5/02 INSPECTION. ALL PROPOSED REPAIR LOCATIONS SHALL BE VERIFIED BY THE CONTRACTOR, IN THE PRESENCE OF THE ENGINEER, PRIOR TO BEGINNING ANY WORK. REFERENCE APPLICABLE SPECIAL PROVISIONS. THE ACTUAL LIMITS OF THE REPAIRS SHALL BE DEFINED AND DOCUMENTED BY THE ENGINEER. THE CONTRACTOR SHALL PROVIDE ACCESS TO THE REPAIR AREAS AT ALL TIMES DURING CONSTRUCTION.

2. LENGTH OF CONCRETE CRACKS SHOWN GRAPHICALLY. REPAIR LENGTH BASED ON FIELD INSPECTION OBSERVATIONS TAKEN 5/02. THE REPAIR OF CONCRETE STRUCTURE BY EPOXY INJECTION FOR ITEM 602611, AS SHOWN ON SUMMARY QUANTITY SHEET, HAS BEEN INCREASED BY 25% TO ACCOUNT FOR LATENT DEFECTS THAT MAY HAVE OCCURRED SINCE THE 5/02 INSPECTION. ALL PROPOSED REPAIR LOCATIONS SHALL BE VERIFIED BY THE CONTRACTOR IN THE PRESENCE OF THE ENGINEER PRIOR TO BEGINNING ANY WORK. REFERENCE APPLICABLE SPECIAL PROVISIONS. THE ACTUAL LIMITS OF THE REPAIRS SHALL BE DEFINED AND DOCUMENTED BY THE ENGINEER. THE CONTRACTOR SHALL PROVIDE ACCESS TO THE REPAIR AREAS AT ALL TIMES DURING CONSTRUCTION.

3. APPLY ANTI-GRAFFITI COATING TO ALL EXPOSED SURFACES OF THE PIER CAP AND COLUMNS. PAYMENT FOR THIS WORK WILL BE MADE UNDER ITEM 602588 - ANTI-GRAFFITI COATING.

4. FOR SPALL REPAIR DETAILS, SEE SHEET 53.

5. IF SOUND CONCRETE IS NOT ENCOUNTERED AT A DEPTH OF 6", ALL REMOVAL OPERATIONS SHALL STOP AND THE ENGINEER SHALL BE NOTIFIED IMMEDIATELY.

LEGEND

DEEP SPALL REPAIR | CRACK REPAIR | DELAMINATED CONCRETE AND/OR SHALLOW SPALL REPAIR

PREL. TRACING ____ W.R.A. ____ DESIGN ____ J.T.L./F.J.O. ____ CHKD. ____ W.A.G. ____

M:\313031\4\pr03sbr715.dgn

SUBSTRUCTURE REPAIRS – PIER 3 (NORTH ELEVATION)

BR.1–715 018

CONTRACT	COUNTY	F.A.P. NO.	SHEET NO.	TOTAL SHTS.
22-074-09	NEW CASTLE	SEE TITLE SHEET	63	152

REHABILITATION OF BRIDGE NOS. 1–715, 1–715A, & 1–715D ON SR 273 OVER I–95

REVISIONS

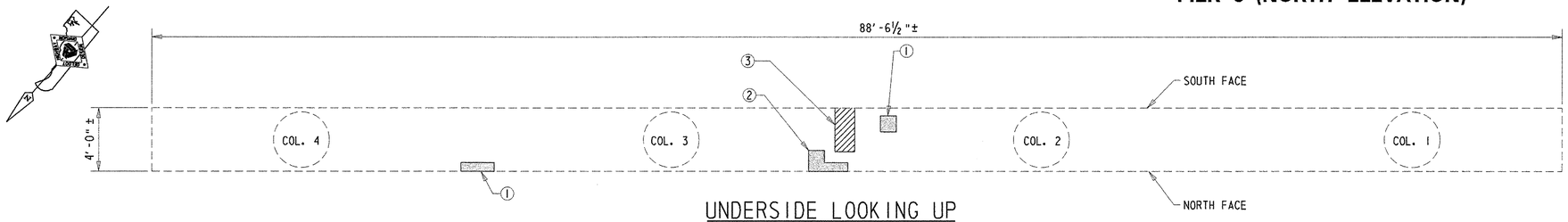

UNDERSIDE LOOKING UP

SCALE: ¼"=1'-0"

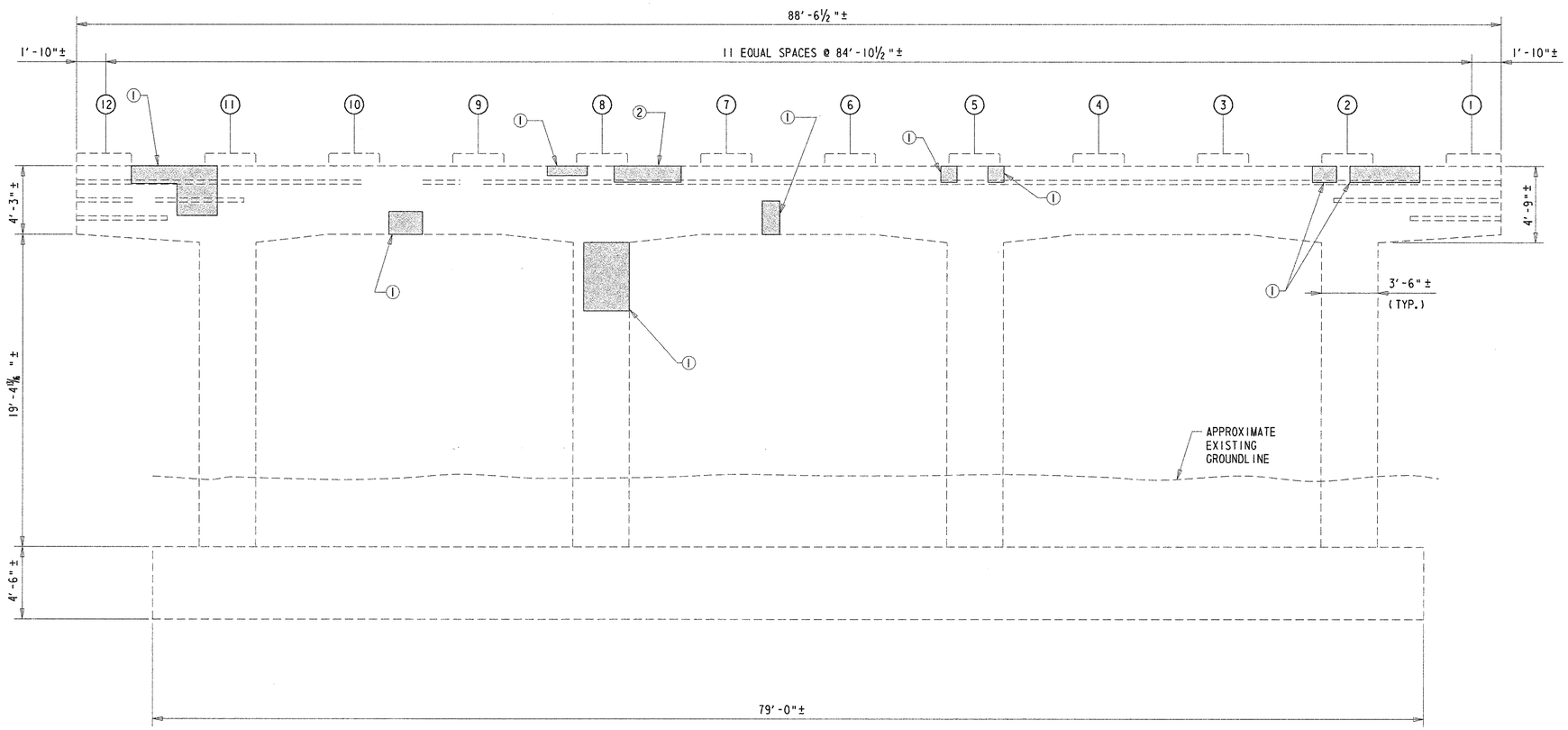

NORTH ELEVATION

SCALE: ¼"=1'-0"

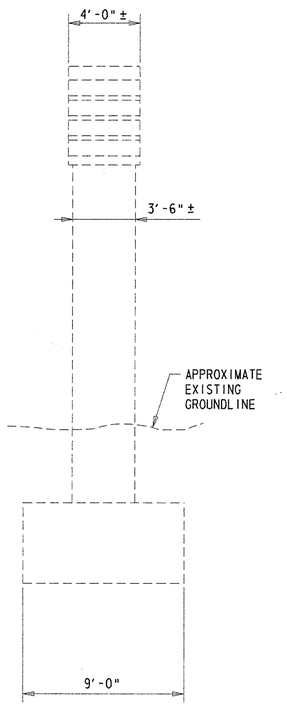

WEST ELEVATION

SCALE: ¼"=1'-0"

NOTES:

1. PIER SPALL REPAIR LOCATIONS SHOWN GRAPHICALLY. REPAIR AREAS ARE BASED ON FIELD INSPECTION OBSERVATIONS TAKEN 5/02. THE CONCRETE REPAIR QUANTITIES FOR ITEMS 602551 AND 602586, AS SHOWN ON THE QUANTITY SUMMARY SHEET, HAVE BEEN INCREASED BY 25% TO ACCOUNT FOR LATENT DEFECTS THAT MAY HAVE OCCURRED SINCE THE 5/02 INSPECTION. ALL PROPOSED REPAIR LOCATIONS SHALL BE VERIFIED BY THE CONTRACTOR, IN THE PRESENCE OF THE ENGINEER, PRIOR TO BEGINNING ANY WORK. REFERENCE APPLICABLE SPECIAL PROVISIONS. THE ACTUAL LIMITS OF THE REPAIRS SHALL BE DEFINED AND DOCUMENTED BY THE ENGINEER. THE CONTRACTOR SHALL PROVIDE ACCESS TO THE REPAIR AREAS AT ALL TIMES DURING CONSTRUCTION.

2. LENGTH OF CONCRETE CRACKS SHOWN GRAPHICALLY. REPAIR LENGTH BASED ON FIELD INSPECTION OBSERVATIONS TAKEN 5/02. THE REPAIR OF CONCRETE STRUCTURE BY EPOXY INJECTION FOR ITEM 602611, AS SHOWN ON SUMMARY QUANTITY SHEET, HAS BEEN INCREASED BY 25% TO ACCOUNT FOR LATENT DEFECTS THAT MAY HAVE OCCURRED SINCE THE 5/02 INSPECTION. ALL PROPOSED REPAIR LOCATIONS SHALL BE VERIFIED BY THE CONTRACTOR IN THE PRESENCE OF THE ENGINEER PRIOR TO BEGINNING ANY WORK. REFERENCE APPLICABLE SPECIAL PROVISIONS. THE ACTUAL LIMITS OF THE REPAIRS SHALL BE DEFINED AND DOCUMENTED BY THE ENGINEER. THE CONTRACTOR SHALL PROVIDE ACCESS TO THE REPAIR AREAS AT ALL TIMES DURING CONSTRUCTION.

3. APPLY ANTI-GRAFFITI COATING TO ALL EXPOSED SURFACES OF THE PIER CAP AND COLUMNS. PAYMENT FOR THIS WORK WILL BE MADE UNDER ITEM 602588 - ANTI-GRAFFITI COATING.

4. FOR SPALL REPAIR DETAILS, SEE SHEET 53.

5. IF SOUND CONCRETE IS NOT ENCOUNTERED AT A DEPTH OF 6", ALL REMOVAL OPERATIONS SHALL STOP AND THE ENGINEER SHALL BE NOTIFIED IMMEDIATELY.

REPAIR LEGEND

1. REPAIR DELAMINATED CONCRETE AND/OR SHALLOW SPALL - ITEM 602551.
2. REPAIR SHALLOW SPALL - ITEM 602551.
3. REPAIR DEEP SPALL - ITEM 602586.
4. SEAL VERTICAL AND/OR DIAGONAL CRACKS BY EPOXY INJECTION - ITEM 602611.

LEGEND

- DEEP SPALL REPAIR
- CRACK REPAIR
- DELAMINATED CONCRETE AND/OR SHALLOW SPALL REPAIR

PREL. TRACING W.R.A. DESIGN J.T.L./F.J.O. CHKD. W.A.G.

M:\3130314\pr03nbr715.dgn

SUBSTRUCTURE REPAIRS – PIER 4 (SOUTH ELEVATION)

BR.1–715 018

CONTRACT	COUNTY	F.A.P. NO.	SHEET NO.	TOTAL SHTS.
22-074-09	NEW CASTLE	SEE TITLE SHEET	64	152

REHABILITATION OF BRIDGE NOS. 1–715, 1–715A, & 1–715D ON SR 273 OVER I–95

REVISIONS

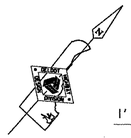

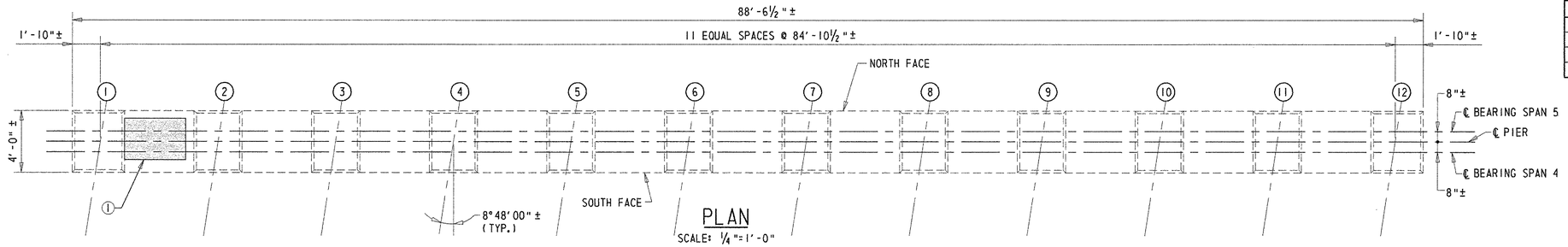

PLAN
SCALE: ¼"=1'-0"

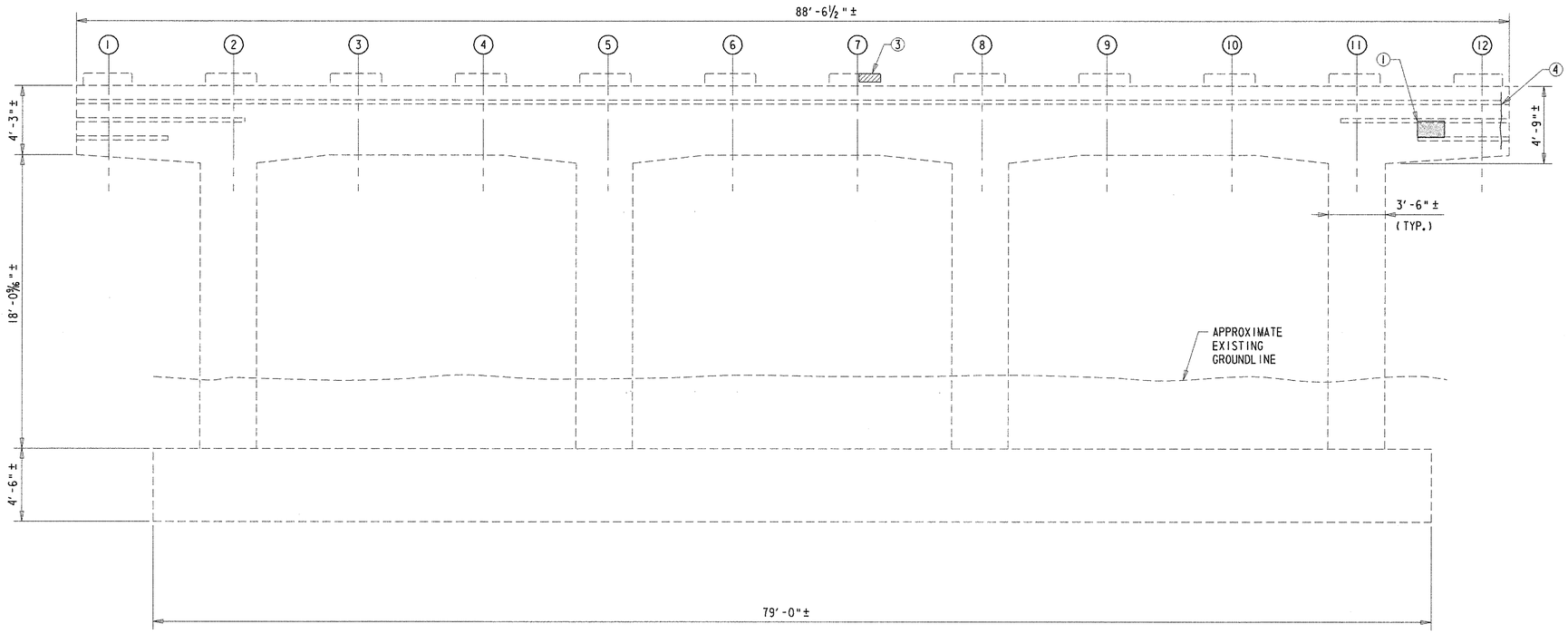

SOUTH ELEVATION
SCALE: ¼"=1'-0"

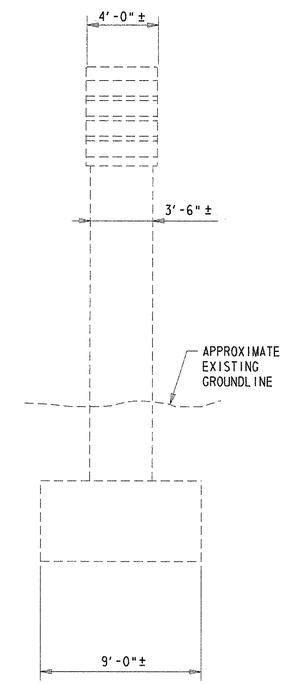

EAST ELEVATION
SCALE: ¼"=1'-0"

REPAIR LEGEND

① REPAIR DELAMINATED CONCRETE AND/OR SHALLOW SPALL - ITEM 602551.

② REPAIR SHALLOW SPALL - ITEM 602551.

③ REPAIR DEEP SPALL - ITEM 602586.

④ SEAL VERTICAL AND/OR DIAGONAL CRACKS BY EPOXY INJECTION - ITEM 602611.

NOTES:

1. PIER SPALL REPAIR LOCATIONS SHOWN GRAPHICALLY. REPAIR AREAS ARE BASED ON FIELD INSPECTION OBSERVATIONS TAKEN 5/02. THE CONCRETE REPAIR QUANTITIES FOR ITEMS 602551 AND 602586, AS SHOWN ON THE QUANTITY SUMMARY SHEET, HAVE BEEN INCREASED BY 25% TO ACCOUNT FOR LATENT DEFECTS THAT MAY HAVE OCCURRED SINCE THE 5/02 INSPECTION. ALL PROPOSED REPAIR LOCATIONS SHALL BE VERIFIED BY THE CONTRACTOR, IN THE PRESENCE OF THE ENGINEER, PRIOR TO BEGINNING ANY WORK. REFERENCE APPLICABLE SPECIAL PROVISIONS. THE ACTUAL LIMITS OF THE REPAIRS SHALL BE DEFINED AND DOCUMENTED BY THE ENGINEER. THE CONTRACTOR SHALL PROVIDE ACCESS TO THE REPAIR AREAS AT ALL TIMES DURING CONSTRUCTION.

2. LENGTH OF CONCRETE CRACKS SHOWN GRAPHICALLY. REPAIR LENGTH BASED ON FIELD INSPECTION OBSERVATIONS TAKEN 5/02. THE REPAIR OF CONCRETE STRUCTURE BY EPOXY INJECTION FOR ITEM 602611, AS SHOWN ON SUMMARY QUANTITY SHEET, HAS BEEN INCREASED BY 25% TO ACCOUNT FOR LATENT DEFECTS THAT MAY HAVE OCCURRED SINCE THE 5/02 INSPECTION. ALL PROPOSED REPAIR LOCATIONS SHALL BE VERIFIED BY THE CONTRACTOR IN THE PRESENCE OF THE ENGINEER PRIOR TO BEGINNING ANY WORK. REFERENCE APPLICABLE SPECIAL PROVISIONS. THE ACTUAL LIMITS OF THE REPAIRS SHALL BE DEFINED AND DOCUMENTED BY THE ENGINEER. THE CONTRACTOR SHALL PROVIDE ACCESS TO THE REPAIR AREAS AT ALL TIMES DURING CONSTRUCTION.

3. APPLY ANTI-GRAFFITI COATING TO ALL EXPOSED SURFACES OF THE PIER CAP AND COLUMNS. PAYMENT FOR THIS WORK WILL BE MADE UNDER ITEM 602588 - ANTI-GRAFFITI COATING.

4. FOR SPALL REPAIR DETAILS, SEE SHEET 53.

5. IF SOUND CONCRETE IS NOT ENCOUNTERED AT A DEPTH OF 6", ALL REMOVAL OPERATIONS SHALL STOP AND THE ENGINEER SHALL BE NOTIFIED IMMEDIATELY.

LEGEND

DEEP SPALL REPAIR | CRACK REPAIR | DELAMINATED CONCRETE AND/OR SHALLOW SPALL REPAIR

PREL. TRACING ____ W.R.A. ____ DESIGN ____ J.T.L./F.J.O. ____ CHKD. ____ W.A.G. ____

M:\3130314\pr04sbr715.dgn

SUBSTRUCTURE REPAIRS – PIER 4 (NORTH ELEVATION)

BR.1–715 018

CONTRACT	COUNTY	F.A.P. NO.	SHEET NO.	TOTAL SHTS.
22-074-09	NEW CASTLE	SEE TITLE SHEET	65	152

REHABILITATION OF BRIDGE NOS. 1–715, 1–715A, & 1–715D ON SR 273 OVER I–95

REVISIONS

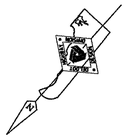

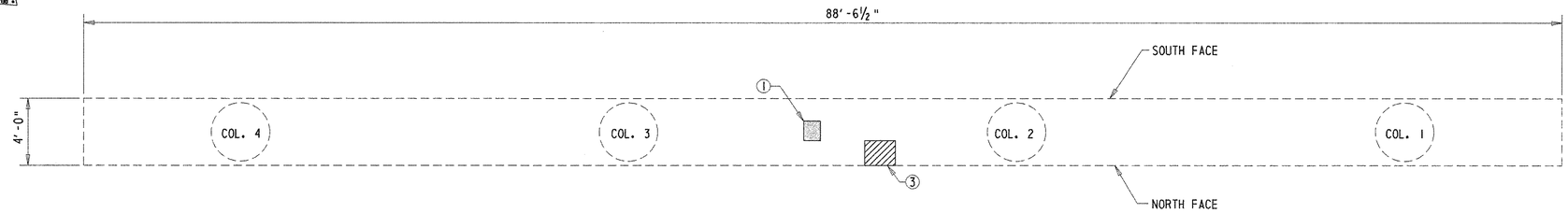

UNDERSIDE LOOKING UP

SCALE: ¼"=1'-0"

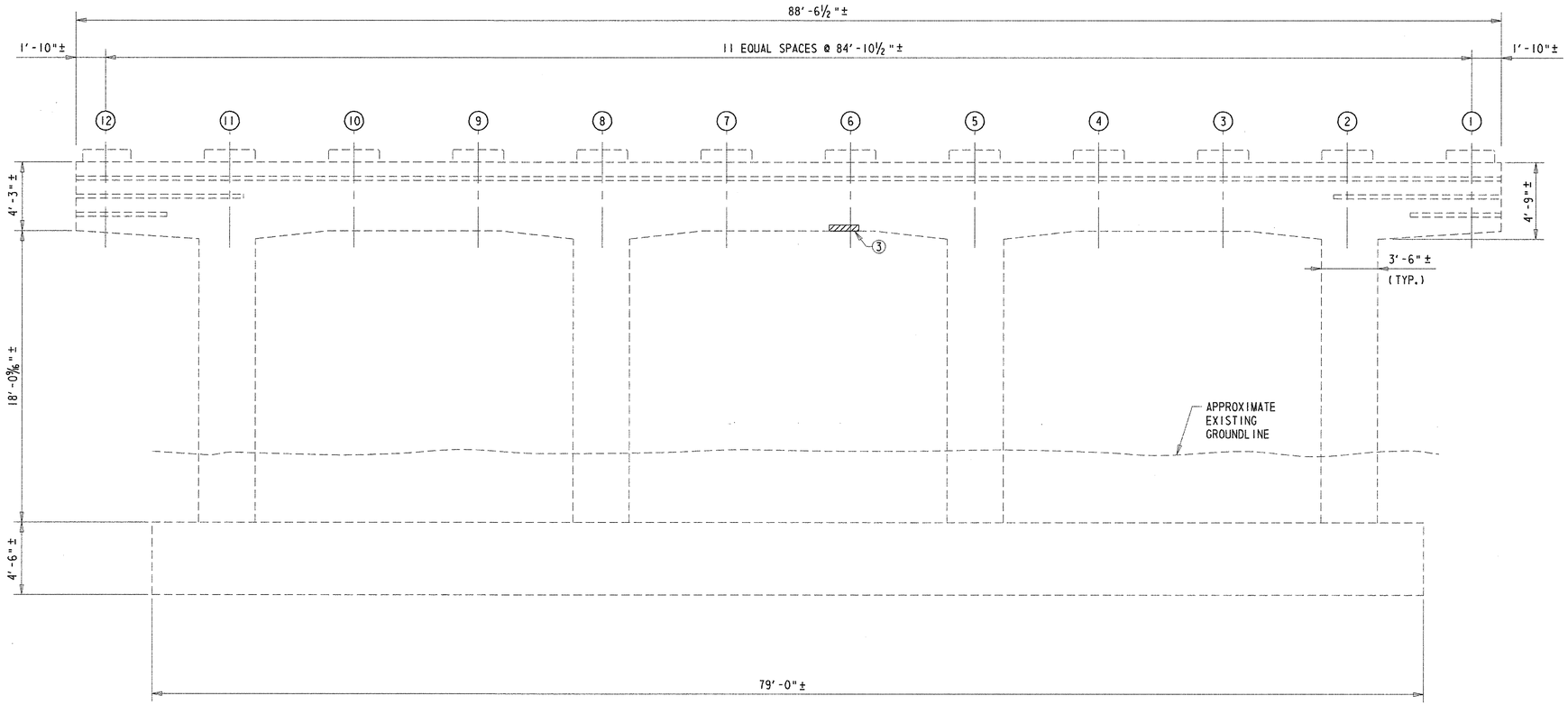

NORTH ELEVATION

SCALE: ¼"=1'-0"

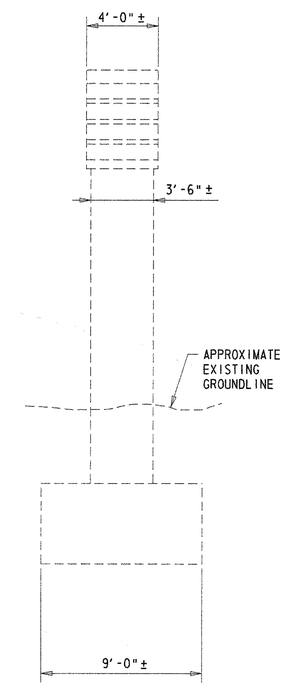

WEST ELEVATION

SCALE: ¼"=1'-0"

NOTES:

1. PIER SPALL REPAIR LOCATIONS SHOWN GRAPHICALLY. REPAIR AREAS ARE BASED ON FIELD INSPECTION OBSERVATIONS TAKEN 5/02. THE CONCRETE REPAIR QUANTITIES FOR ITEMS 602551 AND 602586, AS SHOWN ON THE QUANTITY SUMMARY SHEET, HAVE BEEN INCREASED BY 25% TO ACCOUNT FOR LATENT DEFECTS THAT MAY HAVE OCCURRED SINCE THE 5/02 INSPECTION. ALL PROPOSED REPAIR LOCATIONS SHALL BE VERIFIED BY THE CONTRACTOR, IN THE PRESENCE OF THE ENGINEER, PRIOR TO BEGINNING ANY WORK. REFERENCE APPLICABLE SPECIAL PROVISIONS. THE ACTUAL LIMITS OF THE REPAIRS SHALL BE DEFINED AND DOCUMENTED BY THE ENGINEER. THE CONTRACTOR SHALL PROVIDE ACCESS TO THE REPAIR AREAS AT ALL TIMES DURING CONSTRUCTION.
2. LENGTH OF CONCRETE CRACKS SHOWN GRAPHICALLY. REPAIR LENGTH BASED ON FIELD INSPECTION OBSERVATIONS TAKEN 5/02. THE REPAIR OF CONCRETE STRUCTURE BY EPOXY INJECTION FOR ITEM 602611, AS SHOWN ON SUMMARY QUANTITY SHEET, HAS BEEN INCREASED BY 25% TO ACCOUNT FOR LATENT DEFECTS THAT MAY HAVE OCCURRED SINCE THE 5/02 INSPECTION. ALL PROPOSED REPAIR LOCATIONS SHALL BE VERIFIED BY THE CONTRACTOR IN THE PRESENCE OF THE ENGINEER PRIOR TO BEGINNING ANY WORK. REFERENCE APPLICABLE SPECIAL PROVISIONS. THE ACTUAL LIMITS OF THE REPAIRS SHALL BE DEFINED AND DOCUMENTED BY THE ENGINEER. THE CONTRACTOR SHALL PROVIDE ACCESS TO THE REPAIR AREAS AT ALL TIMES DURING CONSTRUCTION.
3. APPLY ANTI-GRAFFITI COATING TO ALL EXPOSED SURFACES OF THE PIER CAP AND COLUMNS. PAYMENT FOR THIS WORK WILL BE MADE UNDER ITEM 602588 - ANTI-GRAFFITI COATING.
4. FOR SPALL REPAIR DETAILS, SEE SHEET 53.
5. IF SOUND CONCRETE IS NOT ENCOUNTERED AT A DEPTH OF 6", ALL REMOVAL OPERATIONS SHALL STOP AND THE ENGINEER SHALL BE NOTIFIED IMMEDIATELY.

REPAIR LEGEND

① REPAIR DELAMINATED CONCRETE AND/OR SHALLOW SPALL - ITEM 602551.

② REPAIR SHALLOW SPALL - ITEM 602551.

③ REPAIR DEEP SPALL - ITEM 602586.

④ SEAL VERTICAL AND/OR DIAGONAL CRACKS BY EPOXY INJECTION - ITEM 602611.

LEGEND

DEEP SPALL REPAIR	CRACK REPAIR	DELAMINATED CONCRETE AND/OR SHALLOW SPALL REPAIR

PREL. TRACING ____ W.R.A. ____ DESIGN ____ J.T.L./F.J.O. ____ CHKD. ____ W.A.G. ____

M:\3130314\pr04nbr715.dgn

SUBSTRUCTURE REPAIRS – PIER 5 (SOUTH ELEVATION)

BR.1–715 018

CONTRACT	COUNTY	F.A.P. NO.	SHEET NO.	TOTAL SHTS.
22-074-09	NEW CASTLE	SEE TITLE SHEET	66	152

REHABILITATION OF BRIDGE NOS. 1–715, 1–715A, & 1–715D ON SR 273 OVER I–95

REVISIONS

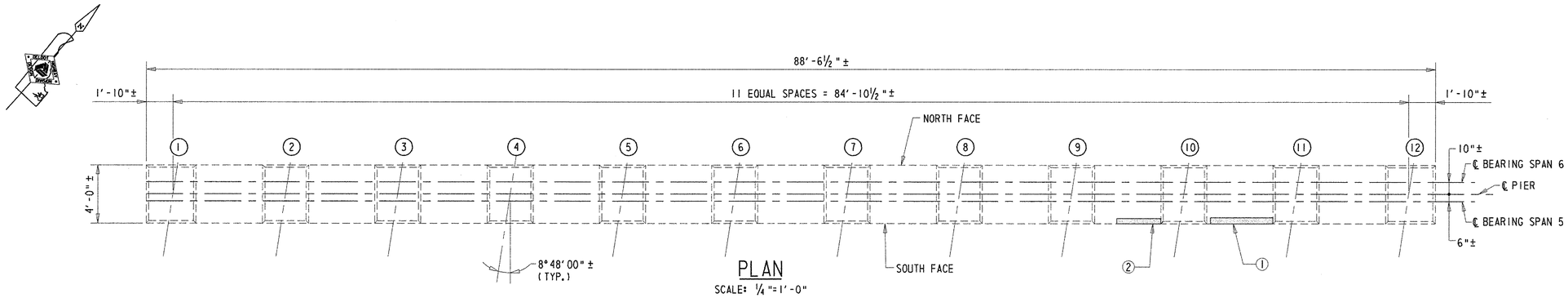

PLAN

SCALE: ¼"=1'-0"

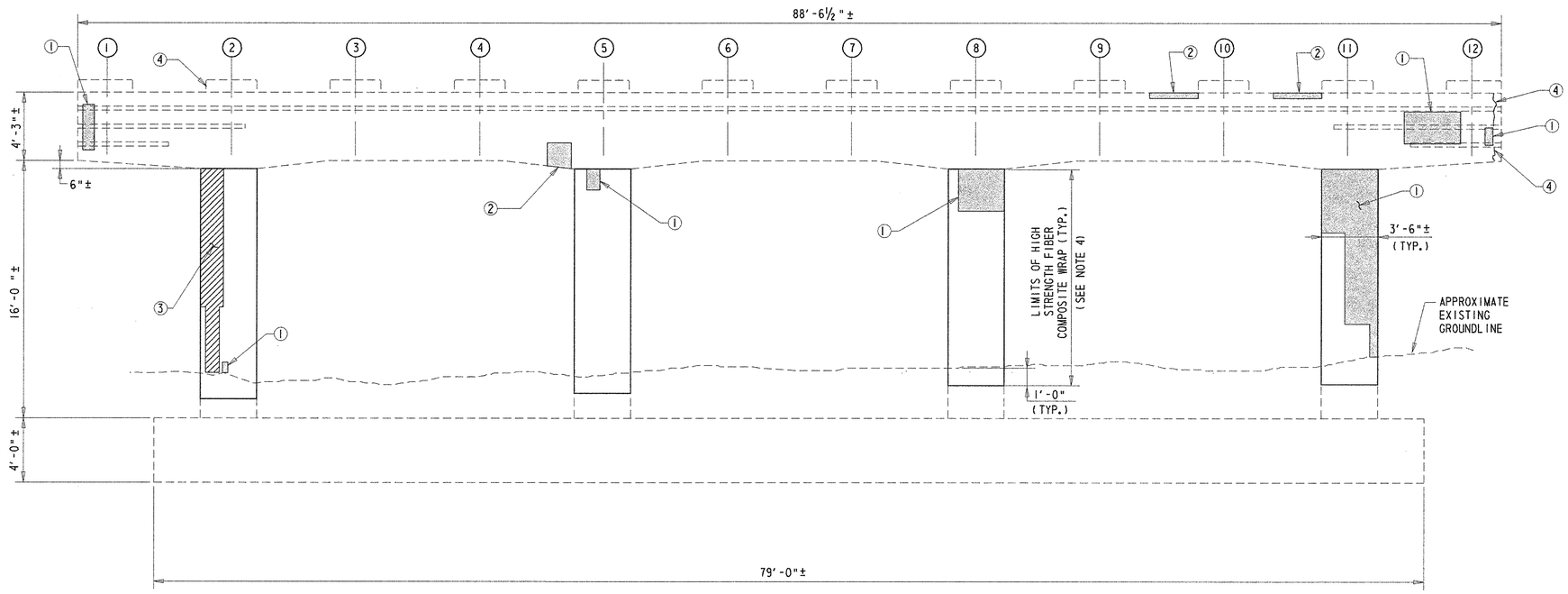

SOUTH ELEVATION

SCALE: ¼"=1'-0"

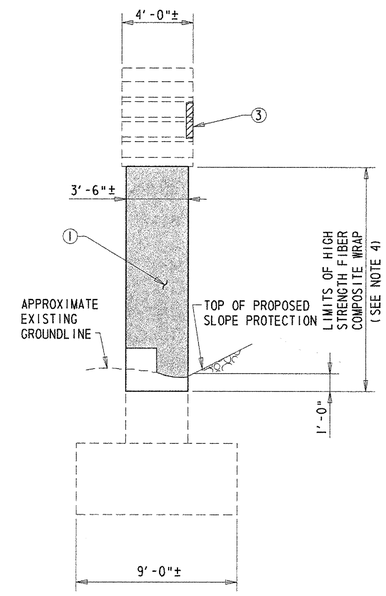

EAST ELEVATION

SCALE: ¼"=1'-0"

REPAIR LEGEND

① REPAIR DELAMINATED CONCRETE AND/OR SHALLOW SPALL - ITEM 602551.

② REPAIR SHALLOW SPALL - ITEM 602551.

③ REPAIR DEEP SPALL - ITEM 602586.

④ SEAL VERTICAL AND/OR DIAGONAL CRACKS BY EPOXY INJECTION - ITEM 602611.

NOTES:

1. PIER SPALL REPAIR LOCATIONS SHOWN GRAPHICALLY. REPAIR AREAS ARE BASED ON FIELD INSPECTION OBSERVATIONS TAKEN 5/02. THE CONCRETE REPAIR QUANTITIES FOR ITEMS 602551 AND 602586, AS SHOWN ON THE QUANTITY SUMMARY SHEET, HAVE BEEN INCREASED BY 25% TO ACCOUNT FOR LATENT DEFECTS THAT MAY HAVE OCCURRED SINCE THE 5/02 INSPECTION. ALL PROPOSED REPAIR LOCATIONS SHALL BE VERIFIED BY THE CONTRACTOR, IN THE PRESENCE OF THE ENGINEER, PRIOR TO BEGINNING ANY WORK. REFERENCE APPLICABLE SPECIAL PROVISIONS. THE ACTUAL LIMITS OF THE REPAIRS SHALL BE DEFINED AND DOCUMENTED BY THE ENGINEER. THE CONTRACTOR SHALL PROVIDE ACCESS TO THE REPAIR AREAS AT ALL TIMES DURING CONSTRUCTION.

2. LENGTH OF CONCRETE CRACKS SHOWN GRAPHICALLY. REPAIR LENGTH BASED ON FIELD INSPECTION OBSERVATIONS TAKEN 5/02. THE REPAIR OF CONCRETE STRUCTURE BY EPOXY INJECTION FOR ITEM 602611, AS SHOWN ON SUMMARY QUANTITY SHEET, HAS BEEN INCREASED BY 25% TO ACCOUNT FOR LATENT DEFECTS THAT MAY HAVE OCCURRED SINCE THE 5/02 INSPECTION. ALL PROPOSED REPAIR LOCATIONS SHALL BE VERIFIED BY THE CONTRACTOR IN THE PRESENCE OF THE ENGINEER PRIOR TO BEGINNING ANY WORK. REFERENCE APPLICABLE SPECIAL PROVISIONS. THE ACTUAL LIMITS OF THE REPAIRS SHALL BE DEFINED AND DOCUMENTED BY THE ENGINEER. THE CONTRACTOR SHALL PROVIDE ACCESS TO THE REPAIR AREAS AT ALL TIMES DURING CONSTRUCTION.

3. APPLY ANTI-GRAFFITI COATING TO ALL EXPOSED SURFACES OF THE PIER CAP AND COLUMNS UPON COMPLETION OF INSTALLING THE HIGH STRENGTH FIBER COMPOSITE WRAP. PAYMENT FOR THIS WORK WILL BE MADE UNDER ITEM 602588 - ANTI-GRAFFITI COATING.

4. FOR REQUIREMENTS OF THE HIGH STRENGTH FIBER COMPOSITE WRAP, SEE SPECIAL PROVISIONS. PAYMENT FOR THIS WORK WILL BE MADE UNDER ITEM 602657 - HIGH STRENGTH FIBER COMPOSITE WRAP. APPLY WRAP AFTER COMPLETION OF CONCRETE COLUMN REPAIRS.

5. FOR SPALL REPAIR DETAILS, SEE SHEET 53.

6. IF SOUND CONCRETE IS NOT ENCOUNTERED AT A DEPTH OF 6", ALL REMOVAL OPERATIONS SHALL STOP AND THE ENGINEER SHALL BE NOTIFIED IMMEDIATELY.

LEGEND

DEEP SPALL REPAIR | CRACK REPAIR | DELAMINATED CONCRETE AND/OR SHALLOW SPALL REPAIR

PREL. TRACING _____ W.R.A. _____ DESIGN _____ J.T.L./F.J.O. _____ CHKD. _____ W.A.G. _____

M:\313031\4\pr05sbr715.dgn

SUBSTRUCTURE REPAIRS – PIER 5 (NORTH ELEVATION)

BR.1-715 018	CONTRACT	COUNTY	F.A.P. NO.	SHEET NO.	TOTAL SHTS.
	22-074-09	NEW CASTLE	SEE TITLE SHEET	67	152

REHABILITATION OF BRIDGE NOS. 1-715, 1-715A, & 1-715D ON SR 273 OVER I-95

REVISIONS

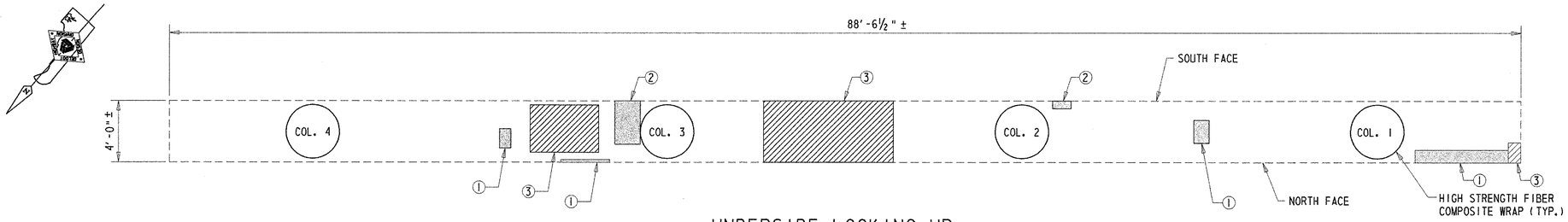

UNDERSIDE LOOKING UP

SCALE: ¼"=1'-0"

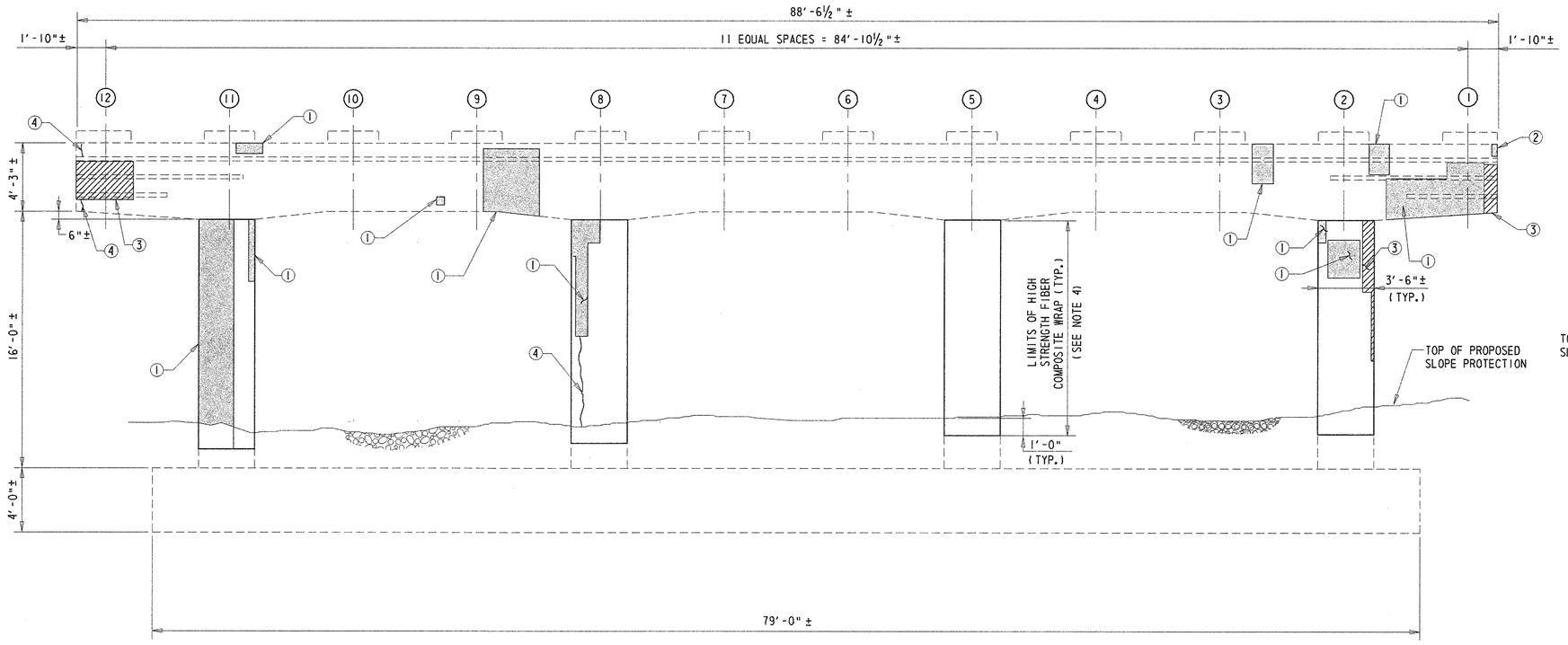

NORTH ELEVATION

SCALE: ¼"=1'-0"

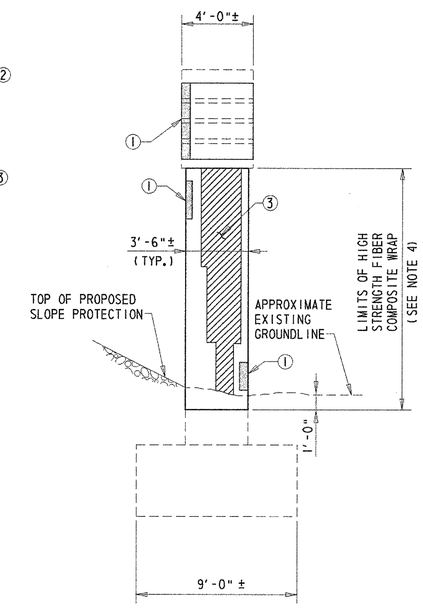

WEST ELEVATION

SCALE: ¼"=1'-0"

REPAIR LEGEND

① REPAIR DELAMINATED CONCRETE AND/OR SHALLOW SPALL - ITEM 602551.

② REPAIR SHALLOW SPALL - ITEM 602551.

③ REPAIR DEEP SPALL - ITEM 602586.

④ SEAL VERTICAL AND/OR DIAGONAL CRACKS BY EPOXY INJECTION - ITEM 602611.

NOTES:

1. PIER SPALL REPAIR LOCATIONS SHOWN GRAPHICALLY. REPAIR AREAS ARE BASED ON FIELD INSPECTION OBSERVATIONS TAKEN 5/02. THE CONCRETE REPAIR QUANTITIES FOR ITEMS 602551 AND 602586, AS SHOWN ON THE QUANTITY SUMMARY SHEET, HAVE BEEN INCREASED BY 25% TO ACCOUNT FOR LATENT DEFECTS THAT MAY HAVE OCCURRED SINCE THE 5/02 INSPECTION. ALL PROPOSED REPAIR LOCATIONS SHALL BE VERIFIED BY THE CONTRACTOR, IN THE PRESENCE OF THE ENGINEER, PRIOR TO BEGINNING ANY WORK. REFERENCE APPLICABLE SPECIAL PROVISIONS. THE ACTUAL LIMITS OF THE REPAIRS SHALL BE DEFINED AND DOCUMENTED BY THE ENGINEER. THE CONTRACTOR SHALL PROVIDE ACCESS TO THE REPAIR AREAS AT ALL TIMES DURING CONSTRUCTION.

2. LENGTH OF CONCRETE CRACKS SHOWN GRAPHICALLY. REPAIR LENGTH BASED ON FIELD INSPECTION OBSERVATIONS TAKEN 5/02. THE REPAIR OF CONCRETE STRUCTURE BY EPOXY INJECTION FOR ITEM 602611, AS SHOWN ON SUMMARY QUANTITY SHEET, HAS BEEN INCREASED BY 25% TO ACCOUNT FOR LATENT DEFECTS THAT MAY HAVE OCCURRED SINCE THE 5/02 INSPECTION. ALL PROPOSED REPAIR LOCATIONS SHALL BE VERIFIED BY THE CONTRACTOR IN THE PRESENCE OF THE ENGINEER PRIOR TO BEGINNING ANY WORK. REFERENCE APPLICABLE SPECIAL PROVISIONS. THE ACTUAL LIMITS OF THE REPAIRS SHALL BE DEFINED AND DOCUMENTED BY THE ENGINEER. THE CONTRACTOR SHALL PROVIDE ACCESS TO THE REPAIR AREAS AT ALL TIMES DURING CONSTRUCTION.

3. APPLY ANTI-GRAFFITI COATING TO ALL EXPOSED SURFACES OF THE PIER CAP AND COLUMNS UPON COMPLETION OF INSTALLING THE HIGH STRENGTH FIBER COMPOSITE WRAP. PAYMENT FOR THIS WORK WILL BE MADE UNDER ITEM 602588 - ANTI-GRAFFITI COATING.

4. FOR REQUIREMENTS OF THE HIGH STRENGTH FIBER COMPOSITE WRAP, SEE SPECIAL PROVISIONS. PAYMENT FOR THIS WORK WILL BE MADE UNDER ITEM 602657 - HIGH STRENGTH FIBER COMPOSITE WRAP. APPLY WRAP AFTER COMPLETION OF CONCRETE COLUMN REPAIRS.

5. FOR SPALL REPAIR DETAILS, SEE SHEET 53.

6. IF SOUND CONCRETE IS NOT ENCOUNTERED AT A DEPTH OF 6", ALL REMOVAL OPERATIONS SHALL STOP AND THE ENGINEER SHALL BE NOTIFIED IMMEDIATELY.

LEGEND

DEEP SPALL REPAIR | CRACK REPAIR | DELAMINATED CONCRETE AND/OR SHALLOW SPALL REPAIR

PREL. TRACING ____ W.R.A. ____ DESIGN ____ J.T.L./F.J.O. ____ CHKD. ____ W.A.C. ____

M:\3130314\pr05nbr715.dgn

BR.1-715 018	CONTRACT	COUNTY	F.A.P. NO.	SHEET NO.	TOTAL SHTS.
	22-074-09	NEW CASTLE	SEE TITLE SHEET	68	152

REHABILITATION OF BRIDGE NOS. 1-715, 1-715A, & 1-715D ON SR 273 OVER I-95

REVISIONS

SLOPE PROTECTION REPLACEMENT

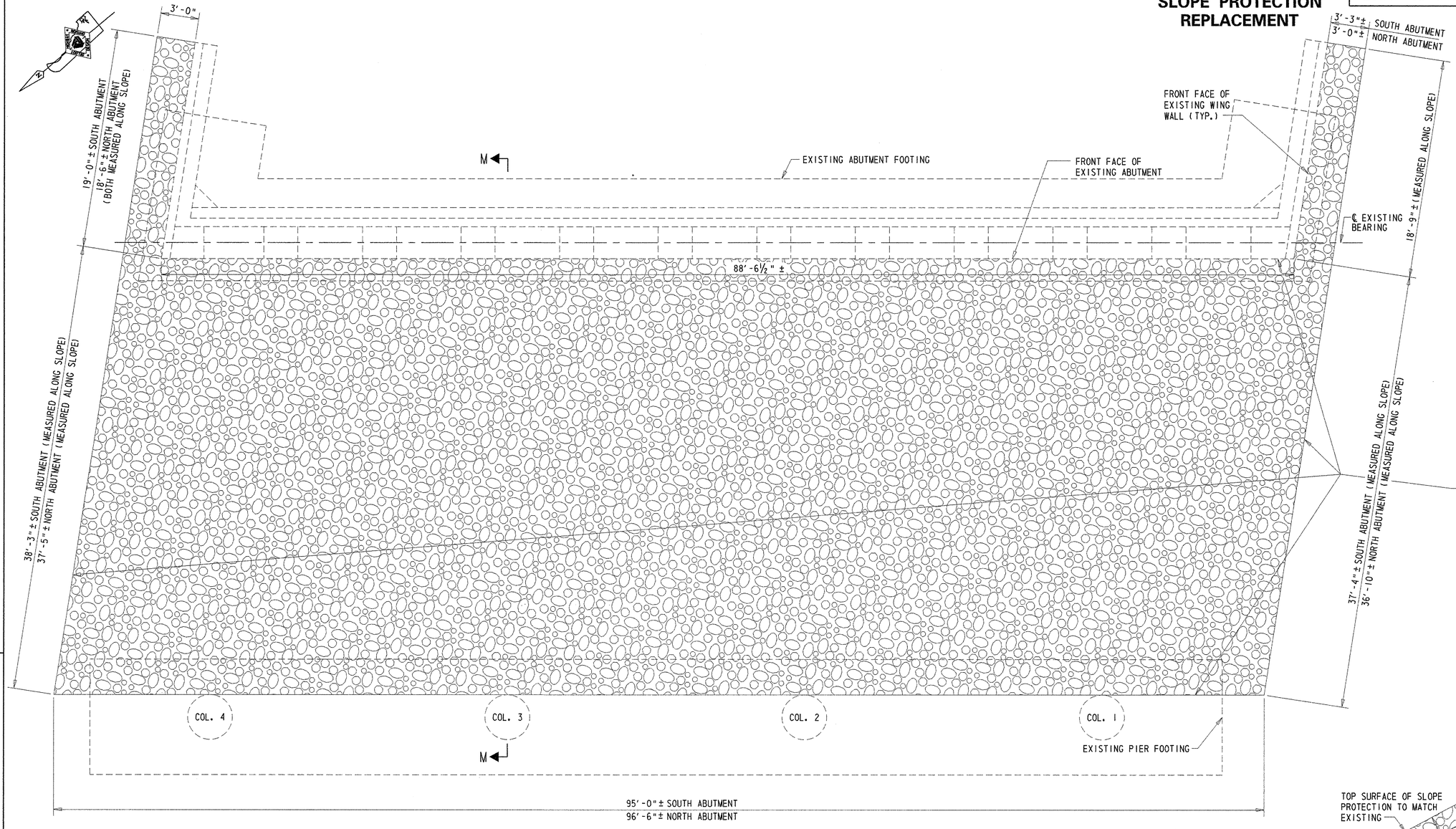

SLOPE PROTECTION - PLAN

SCALE: ¼"=1'-0"

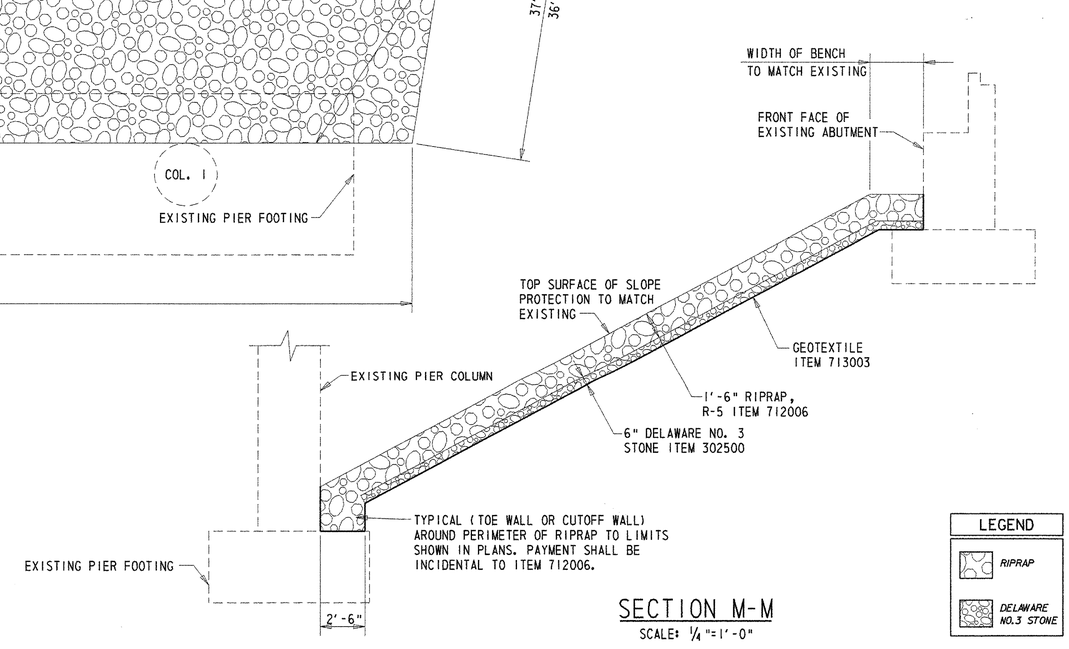

SECTION M-M

SCALE: ¼"=1'-0"

LEGEND

- RIPRAP
- DELAWARE NO.3 STONE

NOTES:

1. SLOPE PROTECTION AT SOUTH ABUTMENT SHOWN, SLOPE PROTECTION AT NORTH ABUTMENT SIMILAR.
2. PAYMENT FOR REMOVAL OF THE EXISTING CONCRETE SLOPE PAVING AND ANY ADDITIONAL EXCAVATION NECESSARY BEYOND THE REMOVAL OF THE EXISTING CONCRETE SLOPE PROTECTION TO FACILITATE THE PLACEMENT OF THE NEW RIPRAP SLOPE PROTECTION WILL BE INCLUDED IN ITEM 712006 - RIPRAP, R-5

PREL. TRACING ____ W.R.A. ____ DESIGN ____ J.T.L./F.J.O. ____ CHKD. ____ W.A.G.

M:\3130314\ab03br715.dgn

BR.1-715 018	CONTRACT	COUNTY	F.A.P. NO.	SHEET NO.	TOTAL SHTS.
	22-074-09	NEW CASTLE	SEE TITLE SHEET	69	152

REHABILITATION OF BRIDGE NOS. 1-715, 1-715A, & 1-715D ON SR 273 OVER I-95

REVISIONS

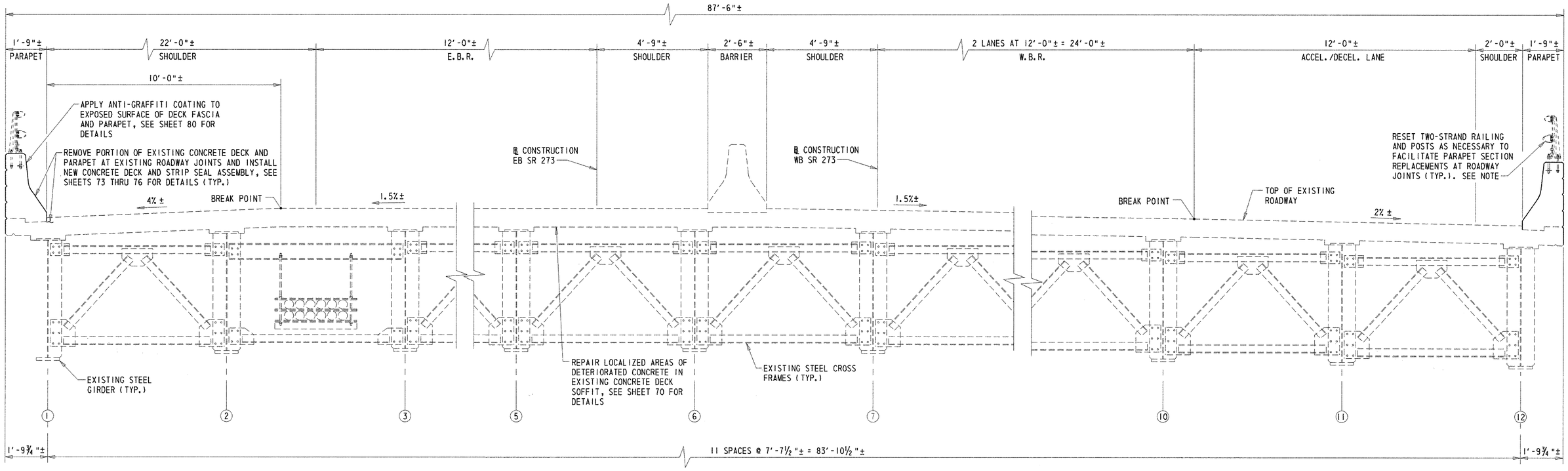

SUPERSTRUCTURE TYPICAL SECTION

LOOKING STATION AHEAD
SCALE: ½" = 1'-0"

NOTE:

COST OF RESETTING TWO-STRAND RAILING AND POSTS (AT JOINT REPLACEMENT LOCATIONS ONLY) WILL BE INCLUDED IN ITEM 602017 - P.C.C. MASONRY, PARAPET, CLASS A.

PREL. TRACING _____ W.R.A. _____ DESIGN _____ J.T.L./F.J.O. _____ CHKD. _____ W.A.G. _____

SUPERSTRUCTURE REPAIRS - DECK SOFFIT

BR.1-715 018

CONTRACT	COUNTY	F.A.P. NO.	SHEET NO.	TOTAL SHTS.
22-074-09	NEW CASTLE	SEE TITLE SHEET	70	152

REHABILITATION OF BRIDGE NOS. 1-715, 1-715A, & 1-715D ON SR 273 OVER I-95

REVISIONS

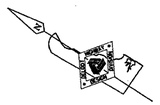

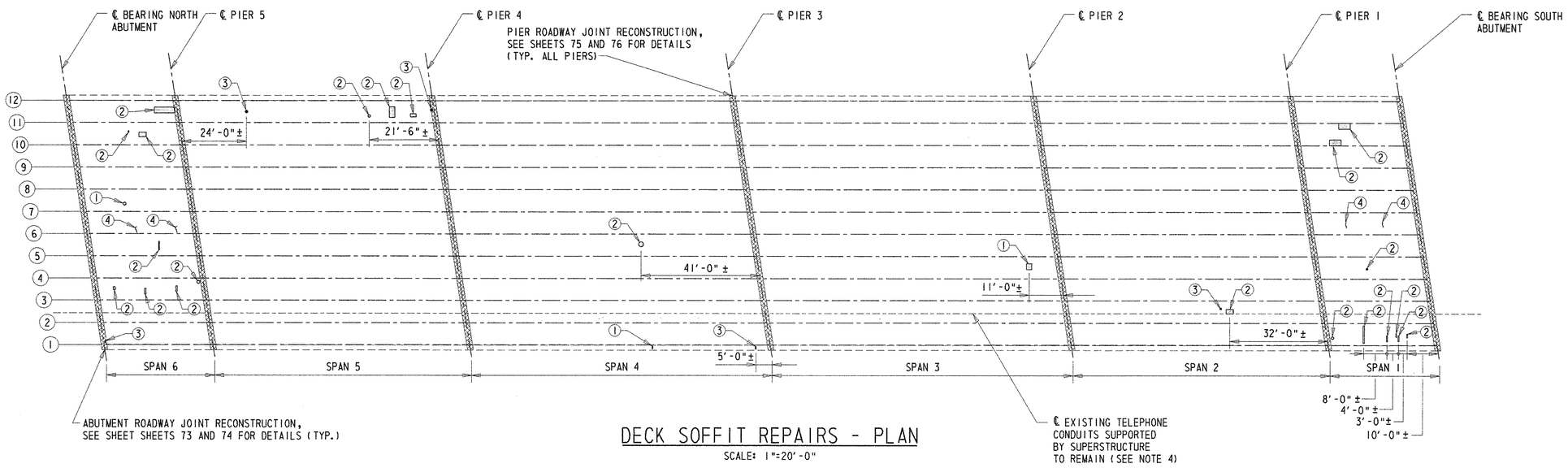

DECK SOFFIT REPAIRS - PLAN

SCALE: 1"=20'-0"

REPAIR LEGEND

① REPAIR DELAMINATED CONCRETE AND/OR SHALLOW SPALL IN UNDERSIDE OF DECK - ITEM 602524.

② REPAIR SHALLOW SPALL - ITEM 602524.

③ REPAIR DEEP SPALL - ITEM 602524.

④ SEAL TRANSVERSE CRACKS BY EPOXY INJECTION - ITEM 602611.

NOTES:

1. DECK SOFFIT REPAIR LOCATIONS SHOWN GRAPHICALLY LOOKING DOWN ON STUCTURE. REPAIR AREAS ARE BASED ON FIELD INSPECTION OBSERVATIONS TAKEN 5/02. THE CONCRETE REPAIR QUANTITY FOR ITEM 602524, AS SHOWN ON THE QUANTITY SUMMARY SHEET, HAS BEEN INCREASED BY 25% TO ACCOUNT FOR LATENT DEFECTS THAT MAY HAVE OCCURRED SINCE THE 5/02 INSPECTION. ALL PROPOSED REPAIR LOCATIONS SHALL BE VERIFIED BY THE CONTRACTOR IN THE PRESENCE OF THE ENGINEER PRIOR TO BEGINNING ANY WORK. REFERENCE APPLICABLE SPECIAL PROVISIONS. THE ACTUAL LIMITS OF THE REPAIRS SHALL BE DEFINED AND DOCUMENTED BY THE ENGINEER. THE CONTRACTOR SHALL PROVIDE ACCESS TO THE REPAIR AREAS AT ALL TIMES DURING CONSTRUCTION.

2. LENGTH OF CONCRETE CRACKS SHOWN GRAPHICALLY. REPAIR LENGTH BASED ON FIELD INSPECTION OBSERVATIONS TAKEN 5/02. THE REPAIR OF CONCRETE STRUCTURE BY EPOXY INJECTION FOR ITEM 602611, AS SHOWN ON SUMMARY QUANTITY SHEET, HAS BEEN INCREASED BY 25% TO ACCOUNT FOR LATENT DEFECTS THAT MAY HAVE OCCURRED SINCE THE 5/02 INSPECTION. ALL PROPOSED REPAIR LOCATIONS SHALL BE VERIFIED BY THE CONTRACTOR IN THE PRESENCE OF THE ENGINEER PRIOR TO BEGINNING ANY WORK. REFERENCE APPLICABLE SPECIAL PROVISIONS. THE ACTUAL LIMITS OF THE REPAIRS SHALL BE DEFINED AND DOCUMENTED BY THE ENGINEER. THE CONTRACTOR SHALL PROVIDE ACCESS TO THE REPAIR AREAS AT ALL TIMES DURING CONSTRUCTION.

3. ALL DIMENSIONS ARE APPROXIMATE.

4. THE CONTRACTOR SHALL USE CARE AND NECESSARY MEASURES TO AVOID DAMAGING THE EXISTING TELEPHONE CONDUITS DURING THE REPAIRS TO THE DEACK SOFFIT AND THE CLEANING, POWER WASHING AND PAINTING OF THE STRUCTURAL STEEL. ANY DAMAGE TO THE EXISTING TELEPHONE CONDUITS SHALL BE REPAIRED TO THE SATISFACTION OF THE ENGINEER AT THE SOLE EXPENSE OF THE CONTRACTOR. COST OF PROVIDING ANY PROTECTION FOR THE EXISTING TELEPHONE CONDUIT WILL BE INCIDENTAL TO THE CONTRACT.

5. LIMITS OF DECK SOFFIT REPAIRS SHALL BE PERFORMED IN ACCORDANCE WITH THE DEEP AND SHALLOW SPALL REPAIR DETAILS SHOWN ON SHEET 53. HOWEVER, PAYMENT FOR DECK SOFFIT REPAIRS WILL BE PAID FOR UNDER ITEM 602524.

LEGEND

JOINT RECONSTRUCTION | DEEP SPALL REPAIR | CRACK REPAIR | DELAMINATED CONCRETE AND/OR SHALLOW SPALL REPAIR

PREL. TRACING W.R.A. DESIGN J.T.L./F.J.O. CHKD. W.A.O.

M:\313031\as02br715.dgn

SUPERSTRUCTURE REPAIRS - PARAPET

BR.1-715 018

CONTRACT	COUNTY	F.A.P. NO.	SHEET NO.	TOTAL SHTS.
22-074-09	NEW CASTLE	SEE TITLE SHEET	71	152

REHABILITATION OF BRIDGE NOS. 1-715, 1-715A, & 1-715D ON SR 273 OVER I-95

REVISIONS

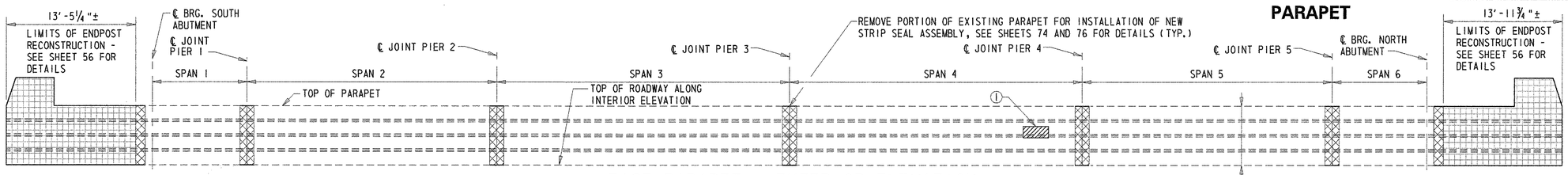

EAST PARAPET - EXTERIOR ELEVATION

NOT TO SCALE

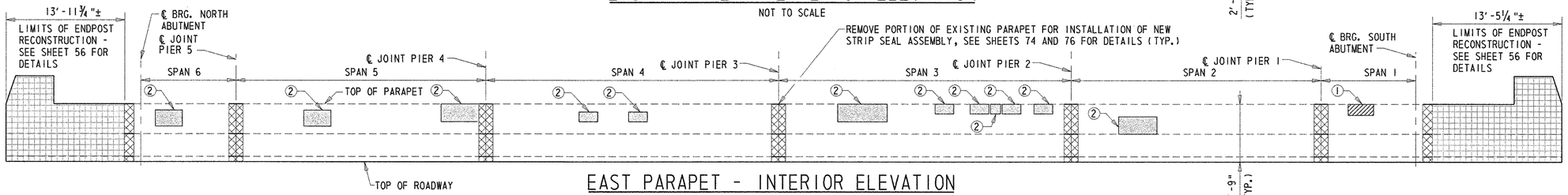

EAST PARAPET - INTERIOR ELEVATION

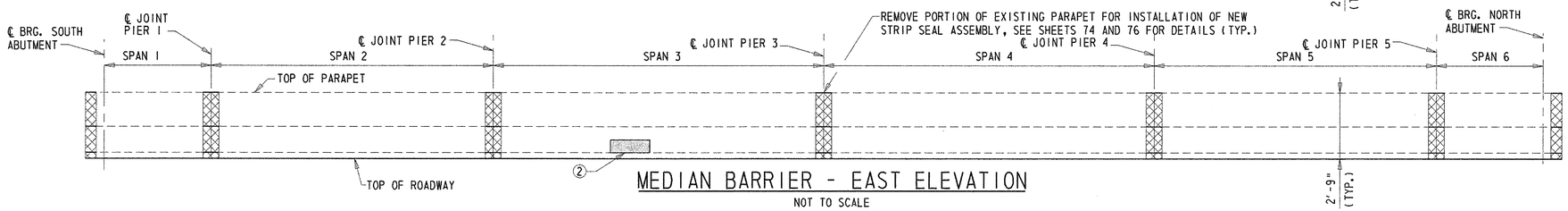

MEDIAN BARRIER - EAST ELEVATION

NOT TO SCALE

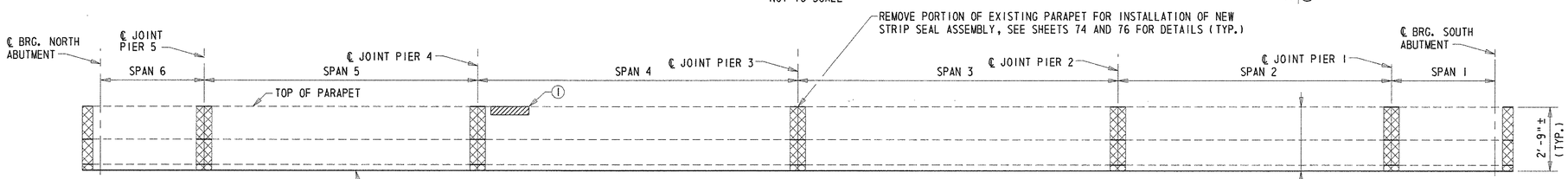

MEDIAN BARRIER - WEST ELEVATION

NOT TO SCALE

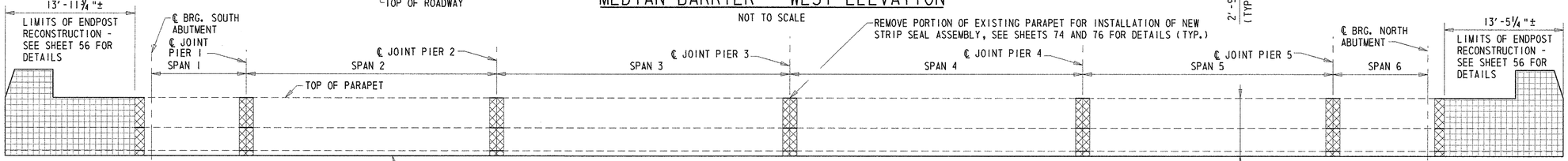

WEST PARAPET - INTERIOR ELEVATION

NOT TO SCALE

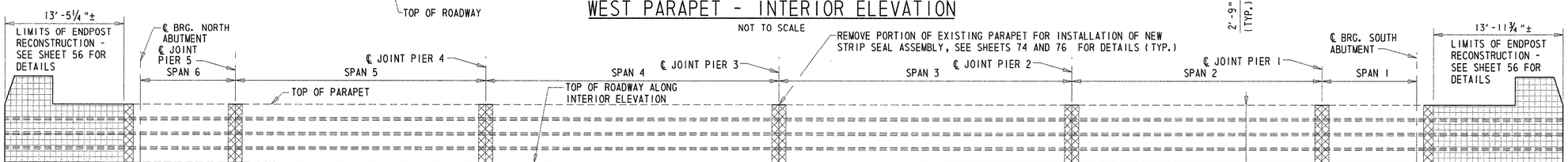

WEST PARAPET - EXTERIOR ELEVATION

NOT TO SCALE

NOTES:

1. PARAPET SPALL REPAIR LOCATIONS SHOWN GRAPHICALLY. REPAIR AREAS ARE BASED ON FIELD INSPECTION OBSERVATIONS TAKEN 5/02. THE CONCRETE REPAIR QUANTITY FOR ITEMS 602551 AND 602586, AS SHOWN ON THE QUANTITY SUMMARY SHEET, HAS BEEN INCREASED BY 25% TO ACCOUNT FOR LATENT DEFECTS THAT MAY HAVE OCCURRED SINCE THE 5/02 INSPECTION. ALL PROPOSED REPAIR LOCATIONS SHALL BE VERIFIED BY THE CONTRACTOR IN THE PRESENCE OF THE ENGINEER PRIOR TO BEGINNING ANY WORK. REFERENCE APPLICABLE SPECIAL PROVISIONS. THE ACTUAL LIMITS OF THE REPAIRS SHALL BE DEFINED AND DOCUMENTED BY THE ENGINEER. THE CONTRACTOR SHALL PROVIDE ACCESS TO THE REPAIR AREAS AT ALL TIMES DURING CONSTRUCTION.
2. CONTROL JOINTS IN PARAPET AND METAL BRIDGE RAILING NOT SHOWN FOR CLARITY.
3. FOR DETAILS OF SHALLOW AND DEEP SPALL REPAIRS, SEE SHEET 53.

REPAIR LEGEND

① REPAIR DEEP SPALL - ITEM 602586.

② REPAIR DELAMINATED CONCRETE AND/OR SHALLOW SPALL - ITEM 602551.

LEGEND

ENDPOST RECONSTRUCTION | PARAPET RECONSTRUCTION | DEEP SPALL REPAIR | CRACK REPAIR | DELAMINATED CONCRETE AND/OR SHALLOW SPALL REPAIR

PREL. TRACING ____ W.R.A. ____ DESIGN ____ J.T.L./F.J.O. ____ CHKD. ____ W.A.G. ____

M:\3130314\MD02BR715.dgn

BR.1-715 018	CONTRACT	COUNTY	F.A.P. NO.	SHEET NO.	TOTAL SHTS.
	22-074-09	NEW CASTLE	SEE TITLE SHEET	72	152

SUPERSTRUCTURE - PAINTING LIMITS

REHABILITATION OF BRIDGE NOS. 1-715, 1-715A, & 1-715D ON SR 273 OVER I-95

REVISIONS

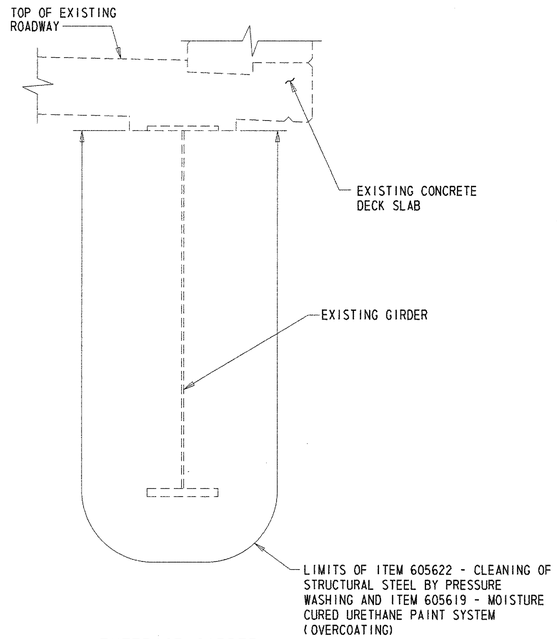

EXTERIOR GIRDER

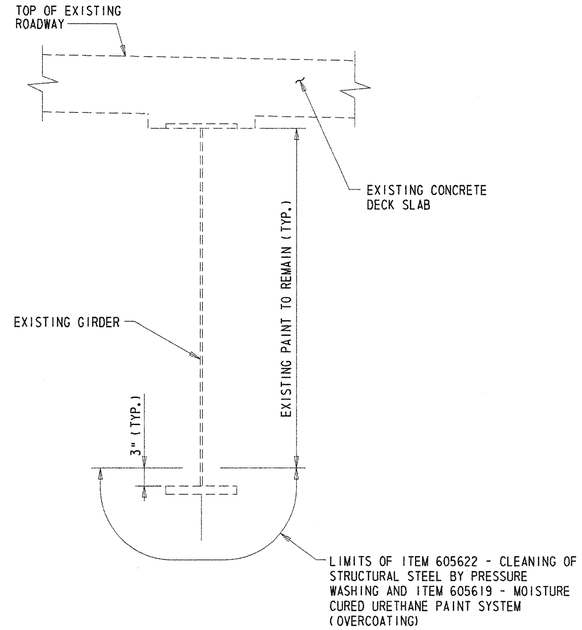

INTERIOR GIRDER

SECTION N-N

SCALE: 1"=1'-0"

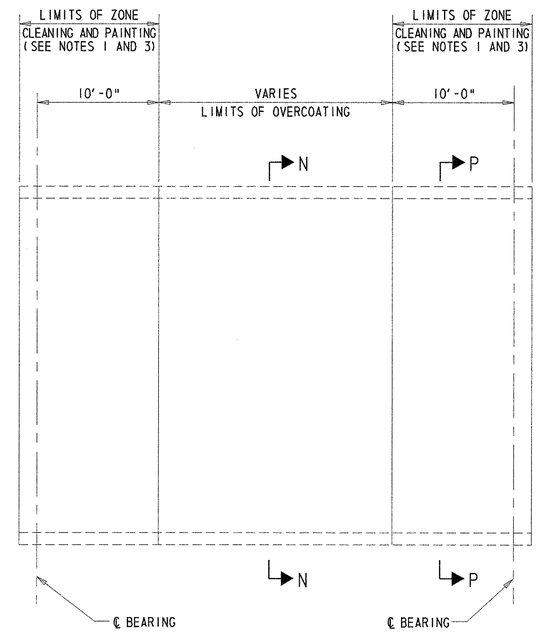

GIRDER ELEVATION

NOT TO SCALE

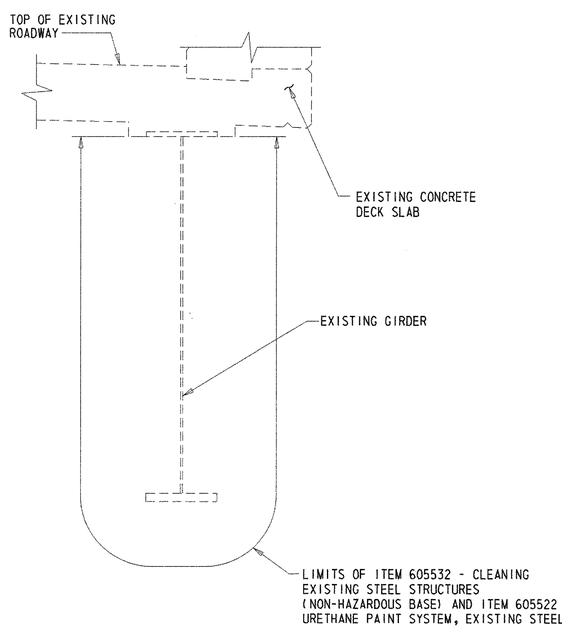

EXTERIOR GIRDER

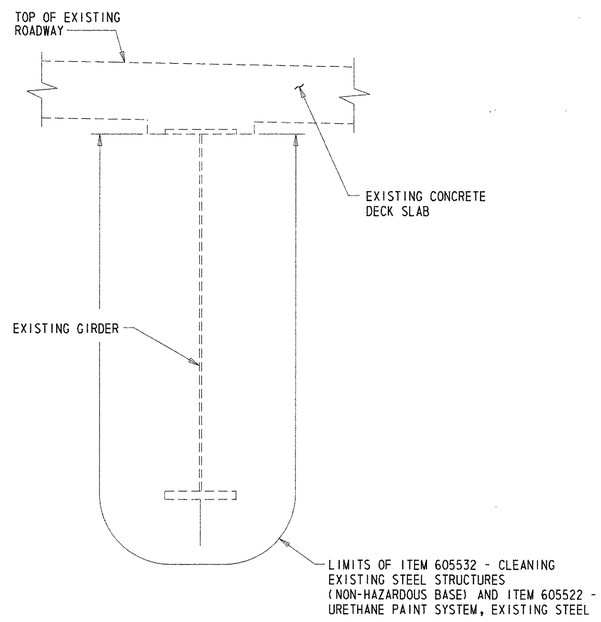

INTERIOR GIRDER

SECTION P-P

SCALE: 1"=1'-0"

NOTES:

1. ZONE CLEANING AND PAINTING SHALL INCLUDE BEARINGS, END DIAPHRAGMS AND CROSS FRAMES WITHIN 10'-0" OF THE ℄ BEARING.
2. NO INTERMEDIATE CROSS FRAMES SHALL BE OVERCOATED BEYOND 10'-0" OF THE ℄ OF BEARING OF EACH SPAN.
3. THE COATING WARRENTY WILL ONLY BE IN EFFECT FOR THOSE AREAS OF THE STRUCTURAL STEEL THAT ARE TO BE CLEANED AND PAINTED PER REQUIREMENTS OF ITEM 605532 - CLEANING EXISTING STEEL STRUCTURES (NON-HAZARDOUS BASE) AND ITEM 605522 - URETHANE PAINT SYSTEM, EXISTING STEEL.

PREL. TRACING _____ W.R.A. _____ DESIGN _____ J.T.L./F.J.O. _____ CHKD. _____ W.A.G.

M:\313031\md03br715.dgn

JOINT REPAIRS - ABUTMENTS

BR.1-715 018	CONTRACT	COUNTY	F.A.P. NO.	SHEET NO.	TOTAL SHTS.
	22-074-09	NEW CASTLE	SEE TITLE SHEET	73	152

REHABILITATION OF BRIDGE NOS. 1-715, 1-715A, & 1-715D ON SR 273 OVER I-95

REVISIONS

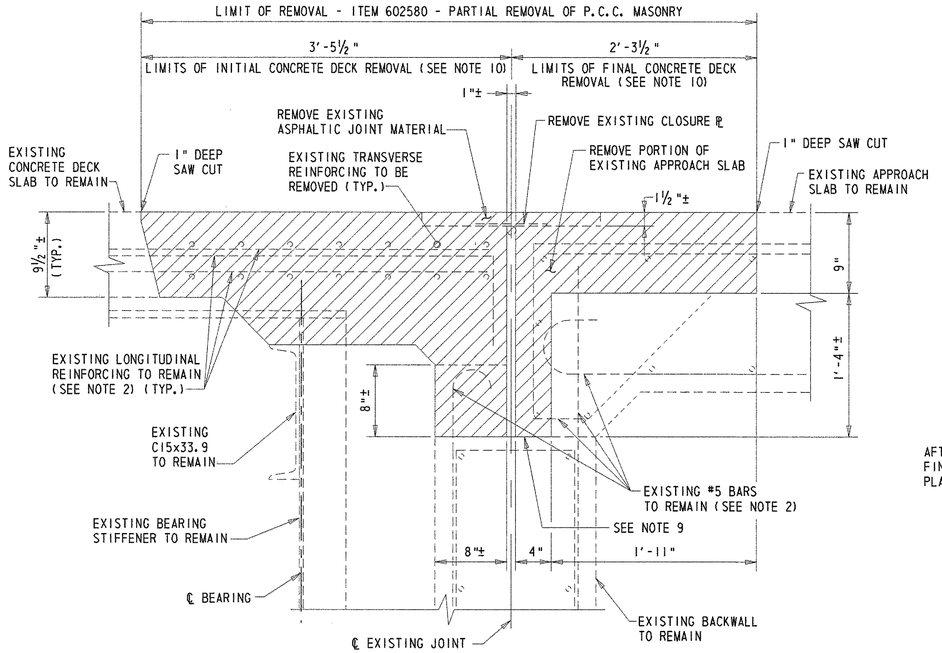

EXISTING TYPICAL SECTION @ ABUTMENTS

SCALE: 1½"=1'-0"

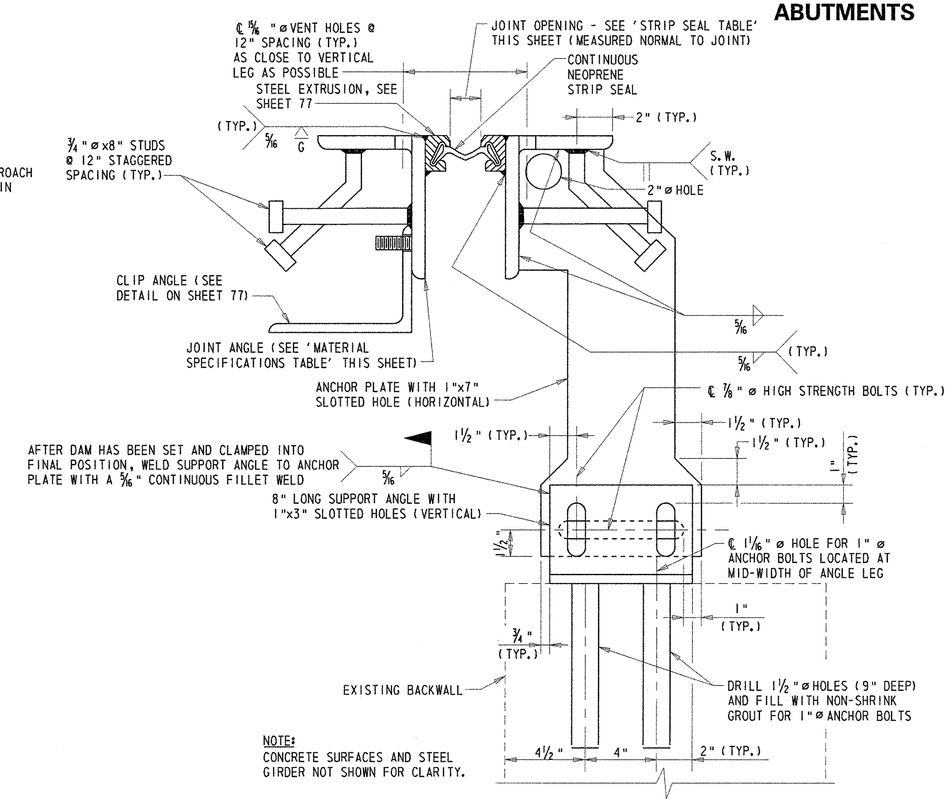

NOTE:
CONCRETE SURFACES AND STEEL GIRDER NOT SHOWN FOR CLARITY.

NEW ARMORED STRIP SEAL JOINT ASSEMBLY

SCALE: 3"=1'-0"

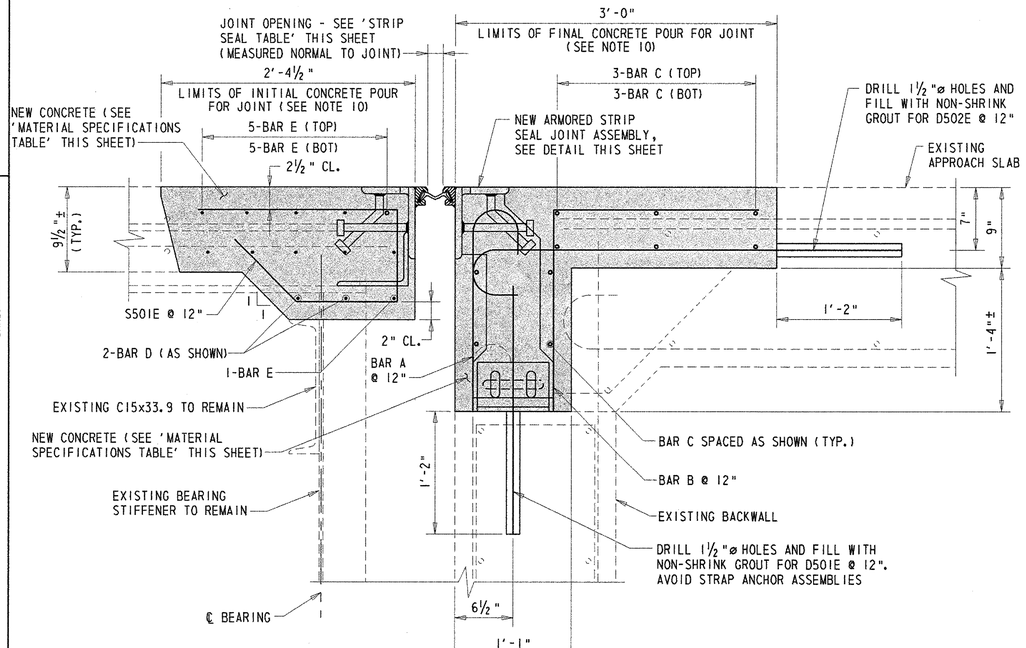

PROPOSED TYPICAL SECTION @ ABUTMENTS

SCALE: 1½"=1'-0"

MATERIAL SPECIFICATIONS TABLE

LOCATION	CONCRETE MIX	JOINT ANGLE	ANCHOR PLATE	SUPPORT ANGLE
EB SR 273	CLASS D CONCRETE -ITEM 602013	∠ 8" x 6" x ¾" GRADE 36	½" THICK GRADE 36	∠ 8" x 6" x ¾" GRADE 36
WB SR 273	HIGH EARLY STRENGTH CONCRETE-ITEM 602603	∠ 8" x 6" x 1" GRADE 50	1" THICK GRADE 36	∠ 8" x 6" x 1" GRADE 50

NOTE:
GRADE 50 STEEL MAY BE SUBSTITUTED FOR GRADE 36 STEEL AT NO ADDITIONAL COST TO THE DEPARTMENT.

STRIP SEAL TABLE

TEMP. (F)	S. ABUTMENT	N. ABUTMENT
40	2 1/16"	2 1/16"
50	2 1/16"	2 1/16"
60	2"	2"
70	1 5/16"	1 5/16"
80	1 5/16"	1 5/16"
90	1⅞"	1⅞"

BAR SCHEDULE

	LABEL	PHASE 1	PHASE 2	PHASE 3 (WB)	PHASE 3 (EB)	PHASE 4
SOUTH ABUTMENT	A	SAS501E	-	SAS501E	SAS501E	SAS501E
	B	SAS502E	-	SAS502E	SAS502E	SAS502E
	C	SAS503E	-	SAS511E	SAS521E	SAS531E
	D	S602E (BAYS 9-11)	-	S611E (BAY 8)	S602E (BAYS 1,2)	S602E (BAYS 4,5)
		S603E (BAY 8)	-	S602E (BAY 7)	S621E (BAY 3)	S632E (BAY 6)
		-	-	S612E (BAY 6)	-	-
	E	S604E	-	S613E	S622E	S631E
NORTH ABUTMENT	A	-	NAS501E	NAS501E	NAS501E	NAS501E
	B	-	NAS502E	NAS502E	NAS502E	NAS502E
	C	-	NAS503E	NAS511E	NAS521E	NAS531E
	D	-	S602E (BAYS 9-11)	S602E (BAY 7)	S602E (BAYS 1,2)	S602E (BAYS 4,5)
		-	S603E (BAY 8)	S612E (BAY 6)	S621E (BAY 3)	S632E (BAY 6)
		-	-	S611E (BAY 8)	-	-
	E	-	S604E	S613E	S622E	S631E

NOTES:

1. DETAILS SHOWN FOR SOUTH ABUTMENT. NORTH ABUTMENT SIMILAR.
2. ALL EXPOSED REINFORCEMENT STEEL SHALL BE BLAST CLEANED AND EPOXY COATED. COST OF THIS WORK WILL BE INCLUDED IN ITEM 602580 - PARTIAL REMOVAL OF P.C.C. MASONRY.
3. COST FOR THE 1" DEEP SAW CUT WILL BE INCLUDED IN ITEM 602580 - PARTIAL REMOVAL OF P.C.C. MASONRY.
4. SLAB THICKNESS IS AS SHOWN ON THE ORIGINAL CONTRACT DRAWINGS. FINISHED DECK SURFACE SHALL MATCH ELEVATION OF EXISTING SURFACE REGARDLESS OF THE RESULTING THICKNESS COMPARED TO THE VALUE SHOWN ON THE ORIGINAL CONTRACT DRAWINGS.
5. LIMITS OF JOINT REMOVAL AND RECONSTRUCTION ARE MEASURED NORMAL TO THE JOINT.
6. CLEAN AND APPLY EPOXY BONDING COMPOUND TO ALL REMOVAL AND ROUGHENED SURFACES PRIOR TO PLACING CONCRETE. COST OF THIS WORK WILL BE INCLUDED UNDER THE PERTINENT CONCRETE ITEM 602013 OR 602603.
7. THE PERMANENT NEOPRENE STRIP SEAL SHALL BE CONTINUOUS ACROSS THE SPLICE IN THE JOINT ASSEMBLY REQUIRED FOR STAGED CONSTRUCTION.
8. STEEL PLATES SHALL BE INSTALLED OVER THE WORK AREA LOCATED WITHIN THE TRAVEL LANES OPENED TO TRAFFIC DURING PEAK HOURS. SEE SHEET 81 FOR DETAILS.
9. UPON COMPLETION OF CONCRETE REMOVAL, EXISTING SURFACE UNDER THE PROPOSED ANGLE SHALL BE LEVELED AND SMOOTHED USING AN EPOXY GROUT. COST WILL BE INCLUDED IN ITEM 605511 - PREFABRICATED EXPANSION JOINT SYSTEM, 3".
10. CONTRACTOR SHALL COMPLETE ALL WORK ASSOCIATED WITH THE JOINT MODIFICATION ON THE SPAN PORTION OF JOINT FIRST PRIOR TO PROCEEDING WITH WORK ON THE APPROACH SLAB PORTION OF JOINT IN ORDER TO MINIMIZE THE SPAN OF THE TEMPORARY STEEL PLATE.
11. ALL STRUCTURAL STEEL SHALL CONFORM TO ASTM A 709. FOR GRADE OF STEEL, SEE 'MATERIAL SPECIFICATIONS TABLE' THIS SHEET. ANCHOR BOLTS SHALL CONFORM TO ASTM A 709, GRADE 36.
12. COST FOR DRILLING AND GROUTING 1" ø ANCHOR BOLTS WILL BE INCLUDED IN ITEM 605611 - PREFABRICATED EXPANSION JOINT SYSTEM, 3".
13. WHEREVER POSSIBLE, ALL EXPOSED EXISTING REINFORCING STEEL SHALL BE INCORPORATED INTO THE FINISHED STRUCTURE IN ACCORDANCE WITH THE FOLLOWING:
    (A) IN THE OPINION OF THE ENGINEER, IF THE REINFORCING STEEL HAS LOST 20 PERCENT OR MORE OF ITS ORIGINAL CROSS SECTION AREA, IT SHALL BE CUT OUT. A NEW BAR OF THE SAME DIAMETER SHALL BE PROVIDED AND PLACED SO AS TO HAVE THE MINIMUM REQUIRED LAP AT EACH END OF THE NEW BAR.
    (B) WHERE THE REQUIRED BAR LAP LENGTH IS AVAILABLE, IT SHALL BE USED AS A DOWEL.
    (C) WHERE THE REQUIRED BAR LAP IS NOT AVAILABLE OR LIMITS OF CONCRETE REMOVAL TO ACHIEVE BAR LAP ARE TOO GREAT, A STANDARD HOOK OR A WELDED OR APPROVED MECHANICAL SPLICE SHALL BE PROVIDED. THE ENGINEER SHALL BE THE SOLE JUDGE WHETHER REINFORCING STEEL IS TO BE REUSED OR REPLACED.
    (D) IN THE EVENT THAT THE NEW BAR IS UNABLE TO BE WELDED OR MECHANICALLY SPLICED TO THE EXISTING REINFORCING STEEL, A NEW BAR SHALL BE DRILLED AND GROUTED ADJACENT TO THE EXISTING BAR LOCATION. PAYMENT FOR THE DRILLING AND GROUTING WILL BE MADE UNDER ITEM 602579 - DRILLING HOLES AND INSTALLING DOWELS. PAYMENT FOR THE NEW REINFORCING STEEL BAR WILL BE MADE UNDER ITEM 603500 - REPAIRING BAR REINFORCEMENT.
14. PRIOR TO FABRICATION OF THE ROADWAY JOINT MATERIAL, THE CONTRACTOR SHALL FIELD VERIFY THE CROSS-SLOPE OF THE ROADWAY AT THE INDIVIDUAL JOINT LOCATIONS.

PRELIM. TRACING ____ W.R.A. ____ DESIGN ____ J.T.L./F.J.O. ____ CHKD. ____ W.A.O.

M:\313031\EX01br715.dgn

JOINT REPAIR LAYOUT - ABUTMENTS

BR.1-715 018

CONTRACT	COUNTY	F.A.P. NO.	SHEET NO.	TOTAL SHTS.
22-074-09	NEW CASTLE	SEE TITLE SHEET	74	152

REHABILITATION OF BRIDGE NOS. 1-715, 1-715A, & 1-715D ON SR 273 OVER I-95

REVISIONS

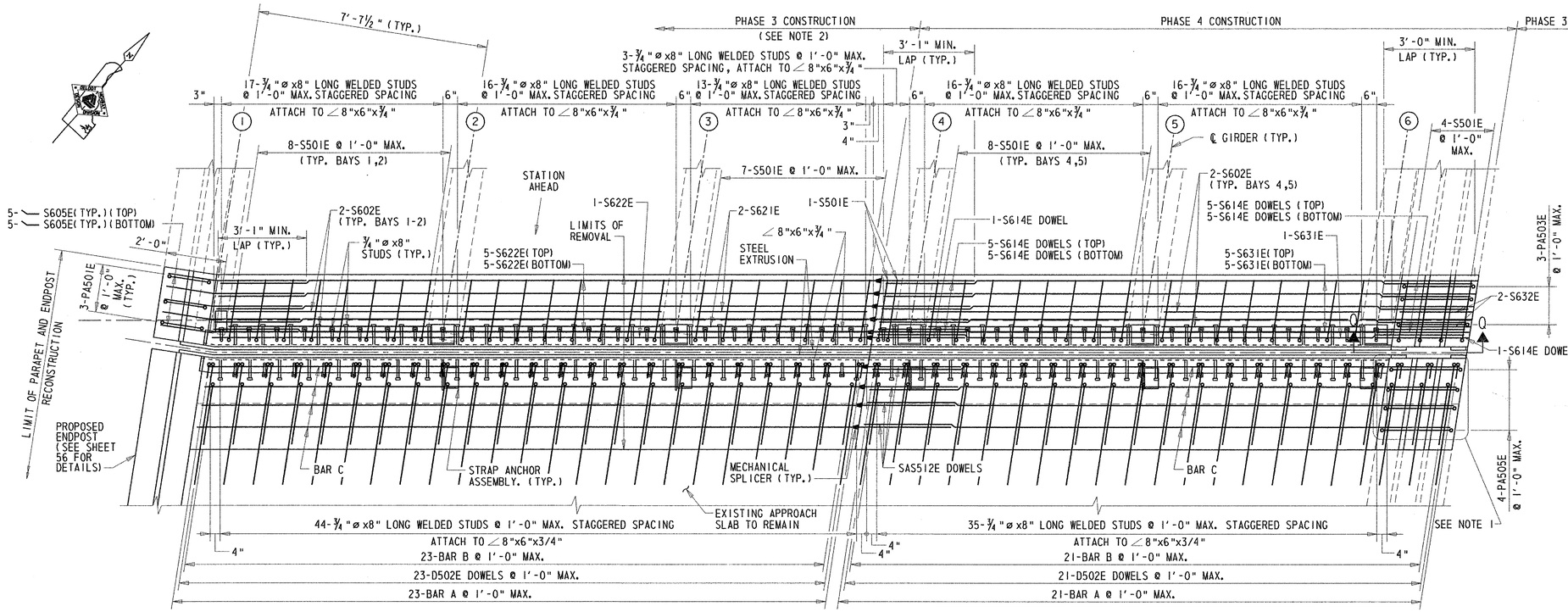

BAR SCHEDULE

	LABEL	PHASE 1	PHASE 2	PHASE 3 (WB)	PHASE 3 (EB)	PHASE 4
SOUTH ABUTMENT	A	SAS501E	-	SAS501E	SAS501E	SAS501E
	B	SAS502E	-	SAS502E	SAS502E	SAS502E
	C	SAS503E	-	SAS511E	SAS521E	SAS531E
NORTH ABUTMENT	A	-	NAS501E	NAS501E	NAS501E	NAS501E
	B	-	NAS502E	NAS502E	NAS502E	NAS502E
	C	-	NAS503E	NAS511E	NAS521E	NAS531E

NOTES:

1. BASED ON THE EXISTING PLANS, IT IS UNKNOWN WHETHER THE APPROACH SLAB EXTENDS BENEATH THE MEDIAN BARRIER OR THE MEDIAN BARRIER IS CAST ON A SEPARATE FOOTING. THE DETAILS IN THESE PLANS ASSUMES THE APPROACH SLAB EXTENDS BENEATH THE MEDIAN BARRIER. IN THE EVENT THAT THE MEDIAN BARRIER IS CAST ON A SEPARATE FOOTING, THE REINFORCMENT BARS TRANSVERSE TO TRAFFIC SHALL BE FIELD CUT AND TOUCHED UP WITH EPOXY PAINT IN ORDER TO REMAIN WITHIN THE APPROACH SLAB AND THE APPROACH SLAB CONCRETE AND MEDIAN BARRIER CONCRETE SHALL BE INDEPENDENT OF ONE ANOTHER. NO ADDITIONAL PAYMENT WILL BE MADE FOR WHICH EVER METHOD OF CONSTRUCTION IS REQUIRED.
2. UPON COMPLETION OF RECONSTRUCTING THE PHASE 1 AND 2 PORTION OF THE ROADWAY JOINT IN THE WESTBOUND ROADWAY AND PHASE 3 PORTION OF THE ROADWAY JOINT IN THE EASTBOUND ROADWAY, A TEMPORARY STRIP SEAL SHALL BE INSTALLED IN THE JOINT OPENING. NO ADHESIVE SHALL BE APPLIED TO THE INNER PORTIONS OF THE EXTRUSION PRIOR TO INSTALLING THE TEMPORARY STRIP SEAL. UPON COMPLETION OF RECONSTRUCTING THE PHASE 3 PORTION OF THE ROADWAY JOINT IN THE WESTBOUND ROADWAY AND PHASE 4 PORTION OF THE ROADWAY JOINT IN THE EASTBOUND ROADWAY, THE TEMPORARY STRIP SEAL SHALL BE REMOVED AND THE PERMANENT STRIP SEAL SHALL BE INSTALLED IN ACCORDANCE WITH THE MANUFACTURER'S RECOMMENDATIONS. COST OF FURNISHING, INSTALLING AND REMOVING THE TEMPORARY STRIP SEAL WILL BE INCIDENTAL TO ITEM 605511 - PREFABRICATED EXPANSION JOINT SYSTEM, 3".

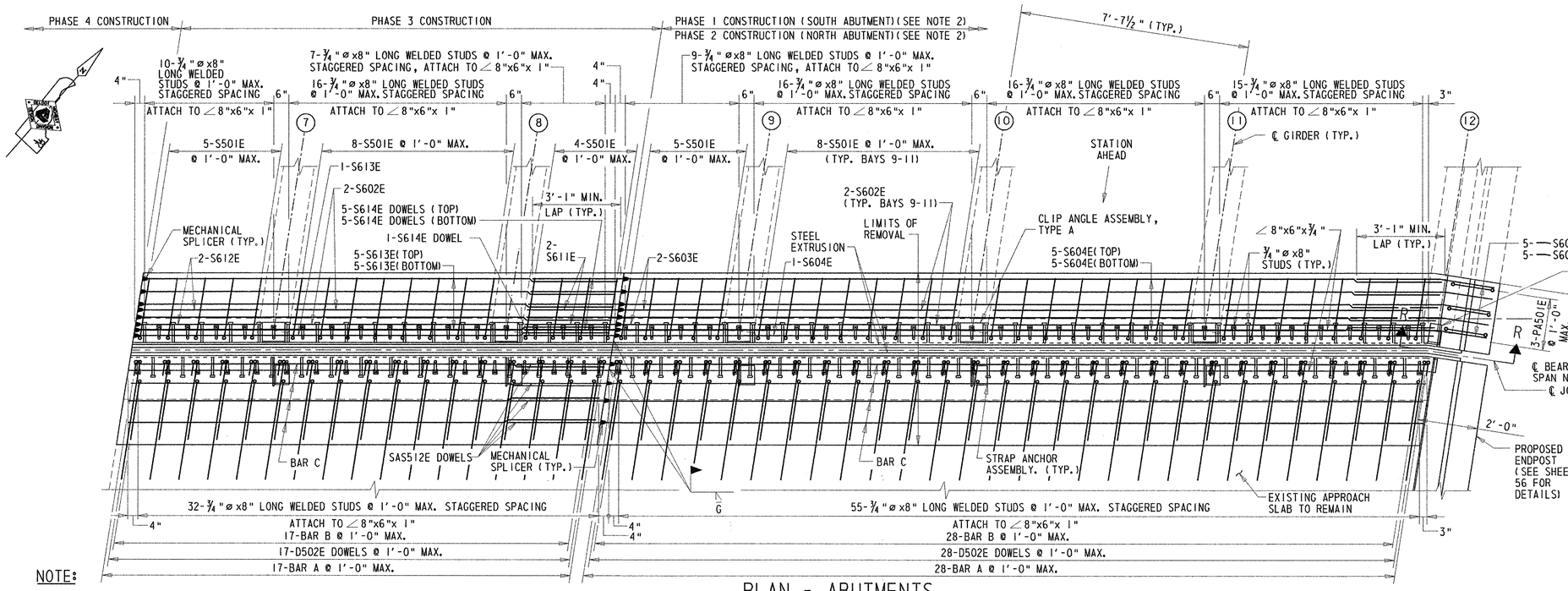

PLAN - ABUTMENTS

SCALE: ½"=1'-0"

NOTE:

SOUTH ABUTMENT SHOWN; NORTH ABUTMENT SIMILIAR, BUT OPPOSITE HAND.

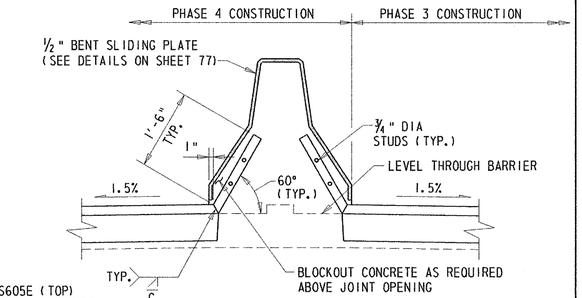

SECTION Q-Q

SCALE: ¾"=1'-0"

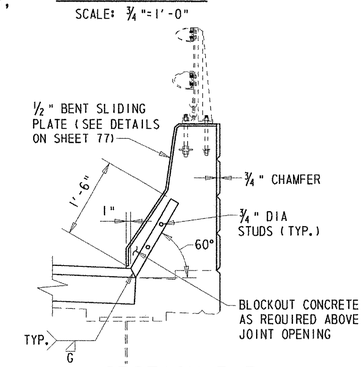

SECTION R-R

SCALE: ¾"=1'-0"

PREL. TRACING ____ W.R.A. ____ DESIGN ____ J.T.L./F.J.O. ____ CHKD. ____ W.A.G.

M:\31303\NEX06br715.dgn

JOINT REPAIRS - PIERS

BR.1-715 018	CONTRACT	COUNTY	F.A.P. NO.	SHEET NO.	TOTAL SHTS.
	22-074-09	NEW CASTLE	SEE TITLE SHEET	75	152

REHABILITATION OF BRIDGE NOS. 1-715, 1-715A, & 1-715D ON SR 273 OVER I-95

REVISIONS

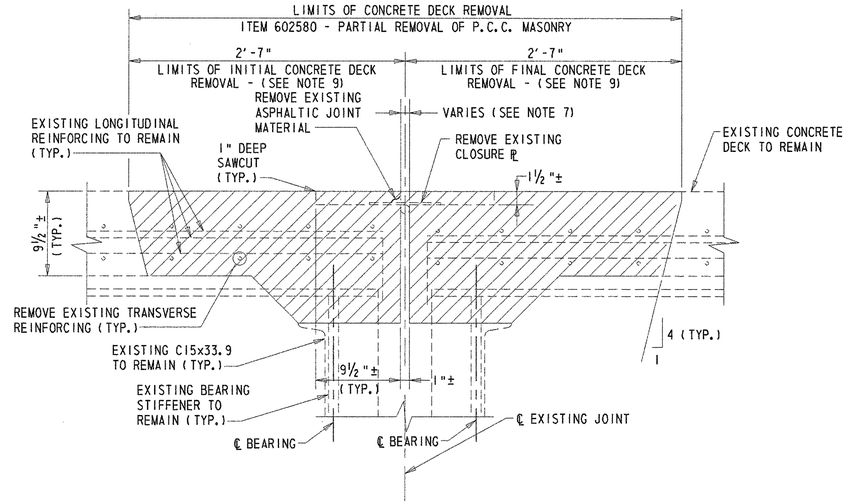

EXISTING TYPICAL SECTION @ PIERS

SCALE: 1½"=1'-0"

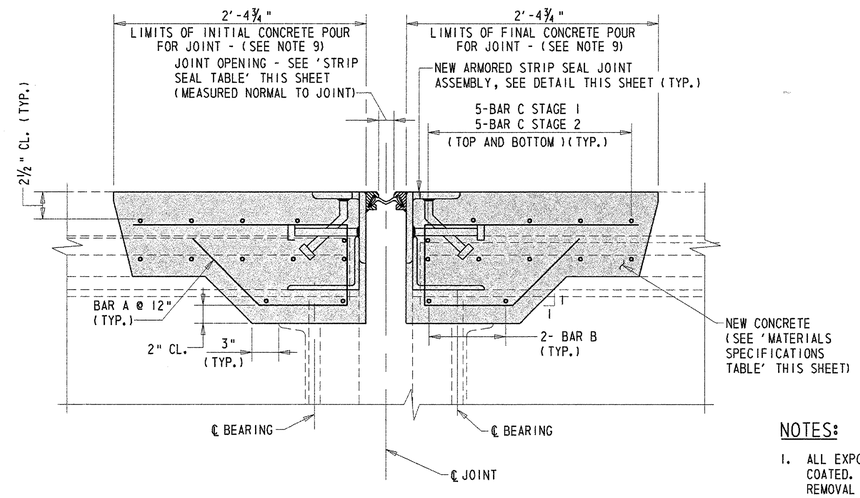

PROPOSED TYPICAL SECTION (ALL PIERS)

SCALE: 1½"=1'-0"

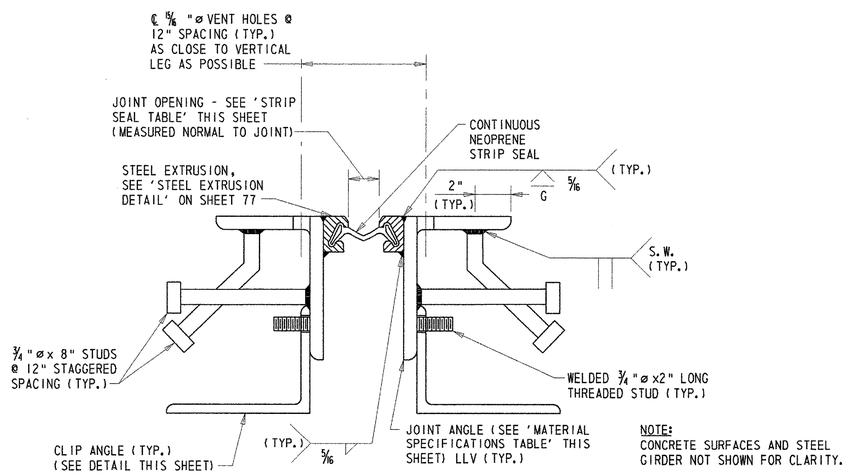

NOTE:
CONCRETE SURFACES AND STEEL GIRDER NOT SHOWN FOR CLARITY.

NEW ARMORED STRIP SEAL JOINT ASSEMBLY DETAIL

SCALE: 3"=1'-0"

MATERIAL SPECIFICATIONS TABLE

LOCATION	CONCRETE MIX	JOINT ANGLE
EB SR 273	CLASS D CONCRETE -ITEM 602013	∠8" x 6" x ¾" GRADE 36
WB SR 273	HIGH EARLY STRENGTH CONCRETE-ITEM 602603	∠8" x 6" x 1" GRADE 50

NOTE:
GRADE 50 STEEL MAY BE SUBSTITUTED FOR GRADE 36 STEEL AT NO ADDITIONAL COST TO THE DEPARTMENT.

STRIP SEAL TABLE

TEMP. (F)	PIER 1	PIER 2	PIER 3	PIER 4	PIER 5
40	2"	2⅛"	2 3/16"	2 3/16"	2⅛"
50	2"	2 1/16"	2 1/16"	2 1/16"	2 1/16"
60	2"	2"	2"	2"	2"
70	2"	1 15/16"	1 15/16"	1 15/16"	1 15/16"
80	2"	1⅞"	1⅞"	1⅞"	1⅞"
90	2"	1 11/16"	1¾"	1¾"	1 11/16"

BAR SCHEDULE

LABEL	PHASE 1	PHASE 2	PHASE 3 (WB)	PHASE 3 (EB)	PHASE 4
A	S551E	S551E	S551E	S551E	S551E
B	S653E (BAY 8)	S653E (BAY 8)	S662E (BAY 6)	S652E (BAYS 1,2)	S652E (BAYS 4,5)
	S652E (BAYS 9-11)	S652E (BAYS 9-11)	S652E (BAYS 7)	S671E (BAYS 3)	S681E (BAYS 6)
	-	-	S661E (BAY 8)	-	-
C	S604E	S604E	S613E	S622E	S631E

NOTES:

1. ALL EXPOSED REINFORCEMENT STEEL SHALL BE BLAST CLEANED AND EPOXY COATED. COST OF THIS WORK WILL BE INCLUDED IN ITEM 602580- PARTIAL REMOVAL OF P.C.C. MASONRY.
2. SLAB THICKNESS IS AS SHOWN ON THE ORIGINAL CONTRACT DRAWINGS. FINISHED DECK SURFACE SHALL MATCH ELEVATION OF EXISTING SURFACE REGARDLESS OF THE RESULTING THICKNESS COMPARED TO THE VALUE SHOWN ON THE ORIGINAL CONTRACT DRAWINGS.
3. COST FOR THE SAW CUT WILL BE INCLUDED IN ITEM 602580 - PARTIAL REMOVAL OF P.C.C. MASONRY.
4. LIMITS OF JOINT REMOVAL AND RECONSTRUCTION ARE MEASURED NORMAL TO THE JOINT.
5. CLEAN AND APPLY EPOXY BONDING COMPOUND TO ALL REMOVAL AND ROUGHENED SURFACES PRIOR TO PLACING CONCRETE. COST OF THIS WORK WILL BE INCLUDED UNDER THE PERTINENT CONCRETE ITEM 602013 OR 602603.
6. THE PERMANENT NEOPRENE STRIP SEAL SHALL BE CONTINUOUS ACROSS THE SPLICE IN THE JOINT ASSEMBLY REQUIRED FOR STAGED CONSTRUCTION.
7. APPROXIMATE JOINT OPENING IS ⅜" AT PIER 1, 1⅝" AT PIERS 2 AND 5, AND 2" AT PIERS 3 AND 4.
8. STEEL PLATES SHALL BE INSTALLED OVER THE WORK AREA LOCATED WITHIN THE TRAVEL LANES OPENED TO TRAFFIC DURING PEAK HOURS. SEE SHEET 81 FOR DETAILS.
9. CONTRACTOR SHALL COMPLETE ALL WORK ASSOCIATED WITH THE JOINT MODIFICATION ON ONE SIDE OF THE JOINT PRIOR TO PROCEEDING WITH WORK ON THE ADJACENT SIDE OF THE JOINT IN ORDER TO MINIMIZE THE SPAN OF THE TEMPORARY STEEL PLATE.
10. ALL STRUCTUAL STEEL SHALL CONFORM TO ASTM A 709. FOR GRADE OF STEEL, SEE 'MATERIAL SPECIFICATIONS TABLE' THIS SHEET.
11. WHEREVER POSSIBLE, ALL EXPOSED EXISTING REINFORCING STEEL SHALL BE INCORPORATED INTO THE FINISHED STRUCTURE IN ACCORDANCE WITH THE FOLLOWING:
    (A) IN THE OPINION OF THE ENGINEER, IF THE REINFORCING STEEL HAS LOST 20 PERCENT OR MORE OF ITS ORIGINAL CROSS SECTION AREA, IT SHALL BE CUT OUT. A NEW BAR OF THE SAME DIAMETER SHALL BE PROVIDED AND PLACEDSO AS TO HAVE THE MINIMUM REQUIRED LAP AT EACH END OF THE NEW BAR.
    (B) WHERE THE REQUIRED BAR LAP LENGTH IS AVAILABLE, IT SHALL BE USED AS A DOWEL.
    (C) WHERE THE REQUIRED BAR LAP IS NOT AVAILABLE OR LIMITS OF CONCRETE REMOVAL TO ACHIEVE BAR LAP ARE TOO GREAT, A STANDARD HOOK OR A WELDED OR APPROVED MECHANICAL SPLICE SHALL BE PROVIDED. THE ENGINEER SHALL BE THE SOLE JUDGE WHETHER REINFORCING STEEL IS TO BE REUSED OR REPLACED.
    (D) IN THE EVENT THAT THE NEW BAR IS UNABLE TO BE WELDED OR MECHANICALLY SPLICED TO THE EXISTING REINFORCING STEEL, A NEW BAR SHALL BE DRILLED AND GROUTED ADJACENT TO THE EXISTING BAR LOCATION. PAYMENT FOR THE DRILLING AND GROUTING WILL BE MADE UNDER ITEM 602579 - DRILLING HOLES AND INSTALLING DOWELS. PAYMENT FOR THE NEW REINFORCING STEEL BAR WILL BE MADE UNDER ITEM 603500 - REPAIRING BAR REINFORCEMENT.
12. PRIOR TO FABRICATION OF THE ROADWAY JOINT MATERIAL, THE CONTRACTOR SHALL FIELD VERIFY THE CROSS-SLOPE OF THE ROADWAY AT THE INDIVIDUAL JOINT LOCATIONS.

PREL. TRACING ____ W.R.A. ____ DESIGN ____ J.T.L./F.J.O. ____ CHKD. ____ W.A.G. ____

M:\313031\4\EX02br715.dgn

JOINT REPAIR LAYOUT - PIERS

BR.1-715 018

CONTRACT	COUNTY	F.A.P. NO.	SHEET NO.	TOTAL SHTS.
22-074-09	NEW CASTLE	SEE TITLE SHEET	76	152

REHABILITATION OF BRIDGE NOS. 1-715, 1-715A, & 1-715D ON SR 273 OVER I-95

REVISIONS

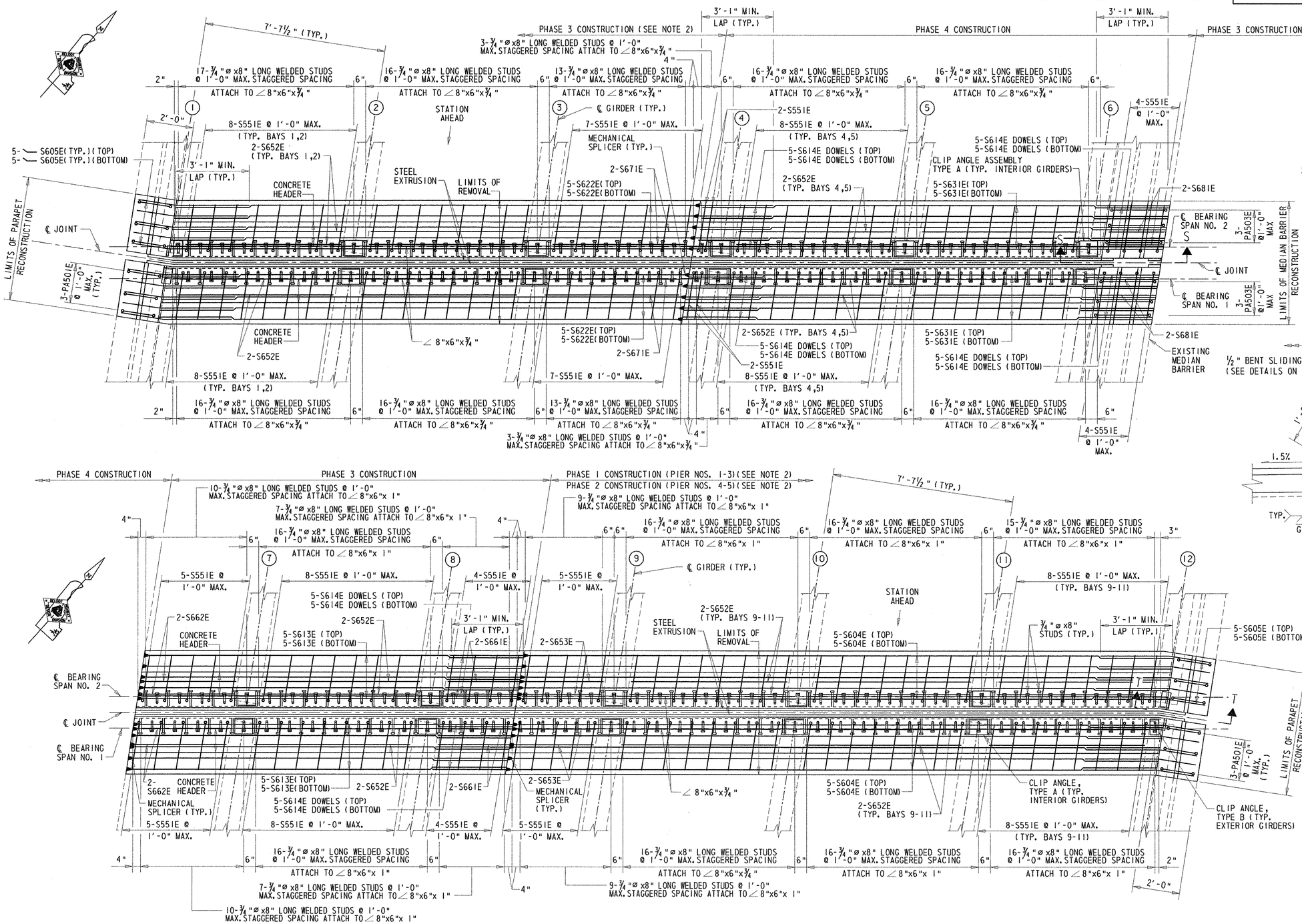

PLAN - PIER

SCALE: ½"=1'-0"

NOTES:

1. PIER 1 SHOWN ; PIERS 2-5 SIMILIAR.
2. UPON COMPLETION OF RECONSTRUCTING THE PHASE 1 AND 2 PORTION OF THE ROADWAY JOINT IN THE WESTBOUND ROADWAY AND PHASE 3 PORTION OF THE ROADWAY JOINT IN THE EASTBOUND ROADWAY, A TEMPORARY STRIP SEAL SHALL BE INSTALLED IN THE JOINT OPENING. NO ADHESIVE SHALL BE APPLIED TO THE INNER PORTIONS OF THE EXTRUSION PRIOR TO INSTALLING THE TEMPORARY STRIP SEAL. UPON COMPLETION OF RECONSTRUCTING THE PHASE 3 PORTION OF THE ROADWAY JOINT IN THE WESTBOUND ROADWAY AND PHASE 4 PORTION OF THE ROADWAY JOINT IN THE EASTBOUND ROADWAY, THE TEMPORARY STRIP SEAL SHALL BE REMOVED AND THE PERMANENT STRIP SEAL SHALL BE INSTALLED IN ACCORDANCE WITH THE MANUFACTURER'S RECOMMENDATIONS. COST OF FURNISHING, INSTALLING AND REMOVING THE TEMPORARY STRIP SEAL WILL BE INCIDENTAL TO ITEM 605511 - PREFABRICATED EXPANSION JOINT SYSTEM, 3".

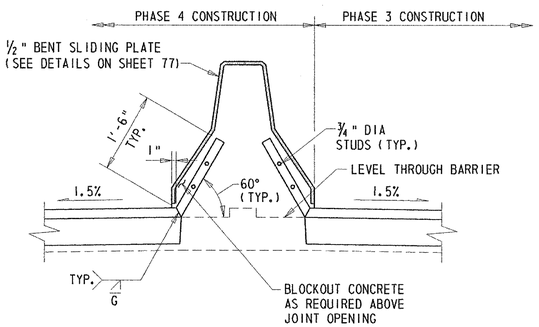

SECTION S-S

SCALE: ¾"=1'-0"

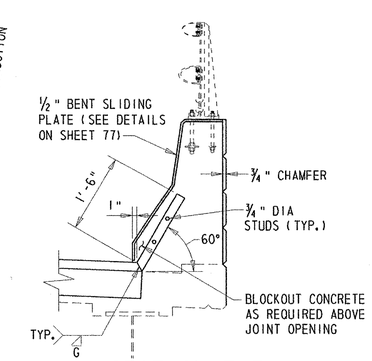

SECTION T-T

SCALE: ¾"=1'-0"

W.A.G. CHKD. J.T.L./F.J.O. DESIGN W.R.A. PRELI. TRACING

M:\313031\EX05br715.dgn

MISCELLANEOUS JOINT REPAIR DETAILS

BR.1-715 018	CONTRACT	COUNTY	F.A.P. NO.	SHEET NO.	TOTAL SHTS.
	22-074-09	NEW CASTLE	SEE TITLE SHEET	77	152

REHABILITATION OF BRIDGE NOS. 1-715, 1-715A, & 1-715D ON SR 273 OVER I-95

REVISIONS

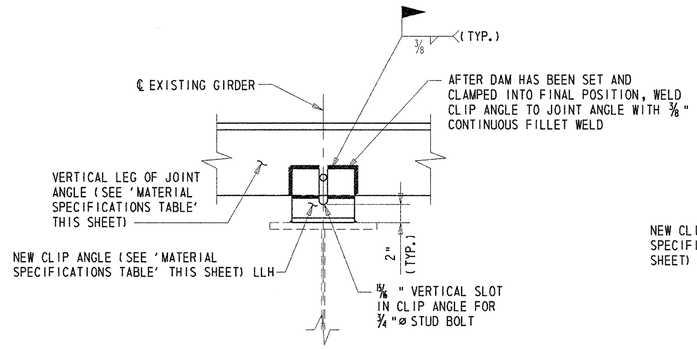

SECTION U-U

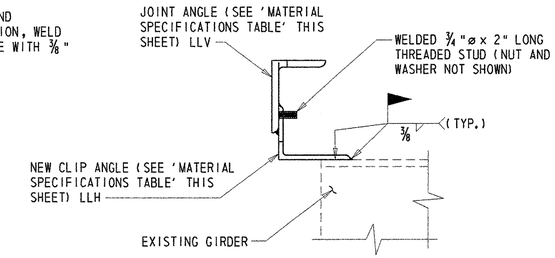

SECTION V-V

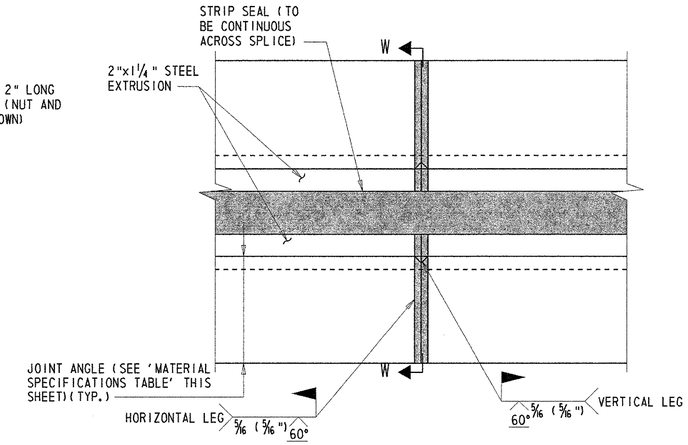

FIELD SPLICE DETAIL

SCALE: 3"=1'-0"

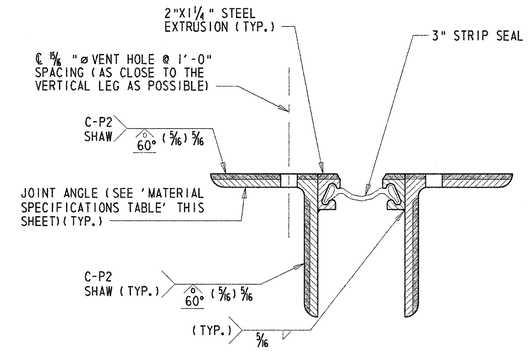

SECTION W-W

SCALE: 3"=1'-0"

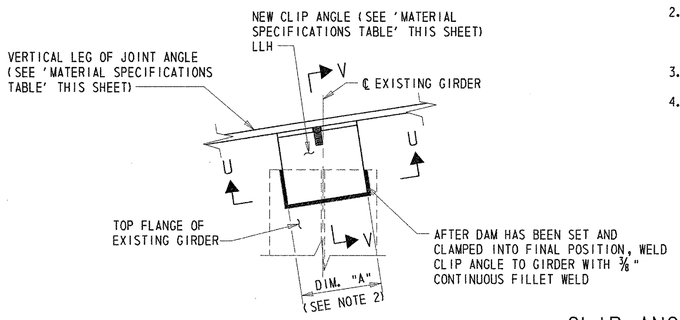

PLAN

NOTES:

1. 3/4"ø STUDS NOT SHOWN FOR CLARITY.
2. CLIP ANGLE, TYPE A - DIMENSION "A" = 9"
   CLIP ANGLE, TYPE B - DIMENSION "B" = 4 1/2"
   REFER TO SHEET 74 AND 76 FOR LOCATION OF TYPE A AND TYPE B CLIP ANGLES.
3. STRUCTUAL STEEL FOR CLIP ANGLES SHALL CONFORM TO ASTM A 709, GRADE 36.
4. LUBRICANT-ADHESIVE FOR USE IN INSTALLING AND BONDING NEOPRENE SEAL ELEMENTS TO STEEL EXPANSION DAM COMPONENTS SHALL BE A ONE-QUART MOISTURE-CURING POLYURETHANE AND HYDROCARBON SOLVENT MIXTURE HAVING THE FOLLOWING PHYSICAL PROPERTIES:

AVERAGE WEIGHT, POUNDS PER GALLON	8 ±10%
SOLIDS CONTENT	65%
ADHESIVE SHALL REMAIN LIQUID FROM	5° TO 120° F
FILM STRENGTH AS PER ASTM D-412	2000 PSI
ELONGATION	250%

CLIP ANGLE DETAILS

SCALE: 1 1/2"=1'-0"

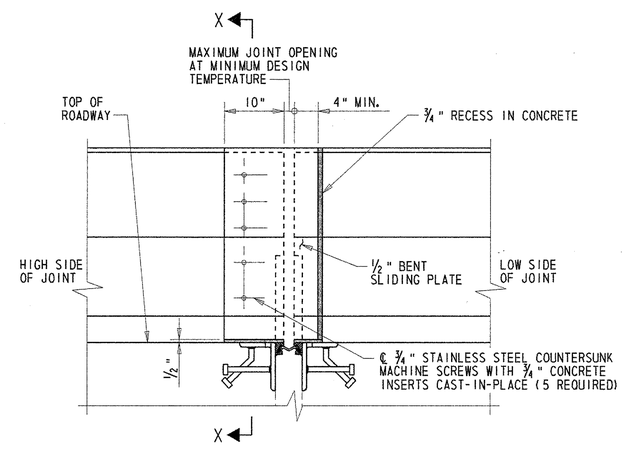

BENT SLIDING PLATE DETAIL - ELEVATION

SCALE: 1"=1'-0"

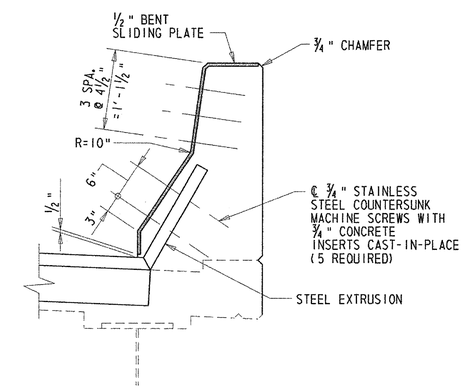

SECTION X-X

SCALE: 1"=1'-0"

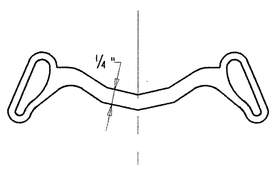

3" STRIP SEAL

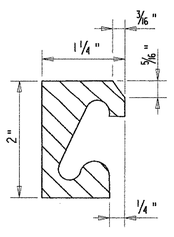

STEEL EXTRUSION DETAIL

EXPANSION JOINT SEAL

NOT TO SCALE

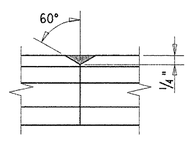

FRONT FACE

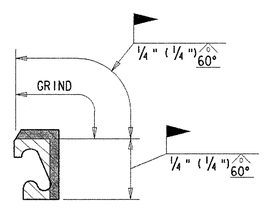

SECTION

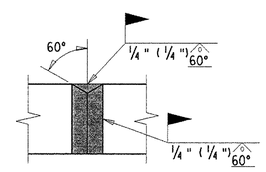

REAR FACE

STEEL EXTRUSION FIELD SPLICE DETAIL

NOT TO SCALE

MATERIAL SPECIFICATIONS TABLE

LOCATION	JOINT ANGLE	CLIP ANGLE
EB SR 273	∠ 8" x 6" x 3/4" GRADE 36	∠ 8" x 6" x 1/2" GRADE 36
WB SR 273	∠ 8" x 6" x 1" GRADE 50	∠ 8" x 6" x 1" GRADE 50

NOTE:
GRADE 50 STEEL MAY BE SUBSTITUTED FOR GRADE 36 STEEL AT NO ADDITIONAL COST TO THE DEPARTMENT.

BENT SLIDING PLATE NOTES:

1. EXISTING TWO-STRAND RAILING NOT SHOWN FOR CLARITY.
2. COST OF FURNISHING AND INSTALLING THE BENT SLIDING PLATE, COUNTERSUNK SCREWS AND INSERTS WILL BE PAID UNDER ITEM 605511 - PREFABRICATED EXPANSION JOINT SYSTEM, 3".
3. PAINT SYSTEM TO BE APPLIED TO THE ARMORING ANGLE, EXTRUSION AND BENT SLIDING PLATE SHALL MATCH COLOR APPLIED TO SUPERSTRUCTURE STEEL.
4. TOP PORTION OF BENT SLIDING PLATE SHALL BE CLIPPED AT ENDPOST LOCATIONS.

PREL. TRACING ____ W.R.A. ____ DESIGN ____ J.T.L./F.J.O. ____ CHKD. ____ W.A.G.

M:\313031\4\EX04br715.dgn

JOINT REPAIRS – APPROACH PAVEMENT

BR.1–715 018	CONTRACT	COUNTY	F.A.P. NO.	SHEET NO.	TOTAL SHTS.
	22-074-09	NEW CASTLE	SEE TITLE SHEET	78	152

REHABILITATION OF BRIDGE NOS. 1–715, 1–715A, & 1–715D ON SR 273 OVER I–95

REVISIONS

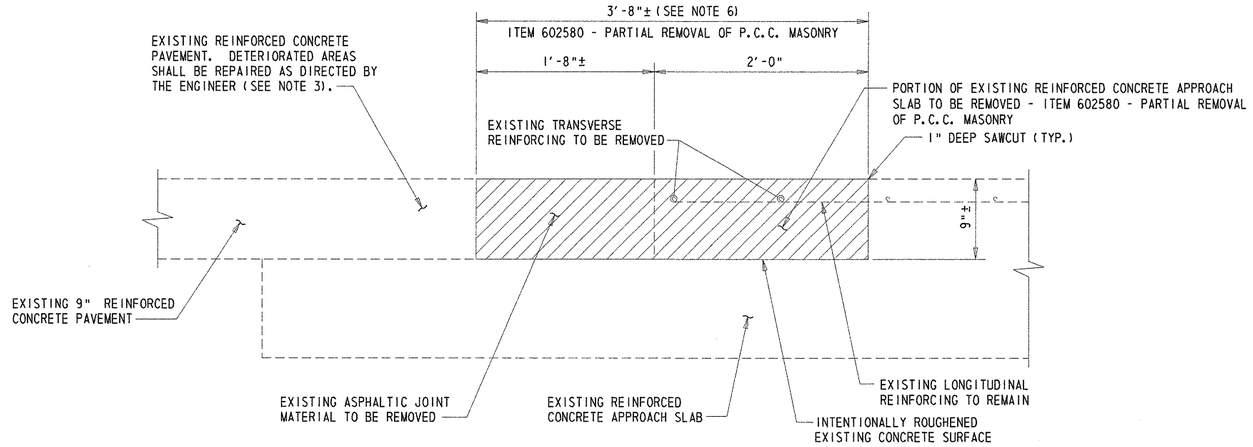

EXISTING TYPICAL SECTION @ APPROACH PAVEMENT

SCALE: 1½"=1'-0"

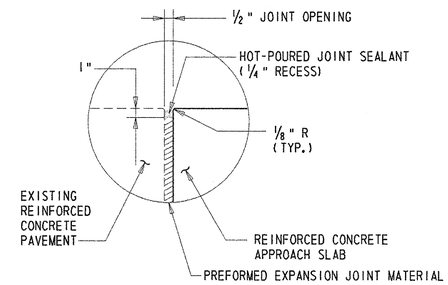

DETAIL 'A'

SCALE: 3"=1'-0"

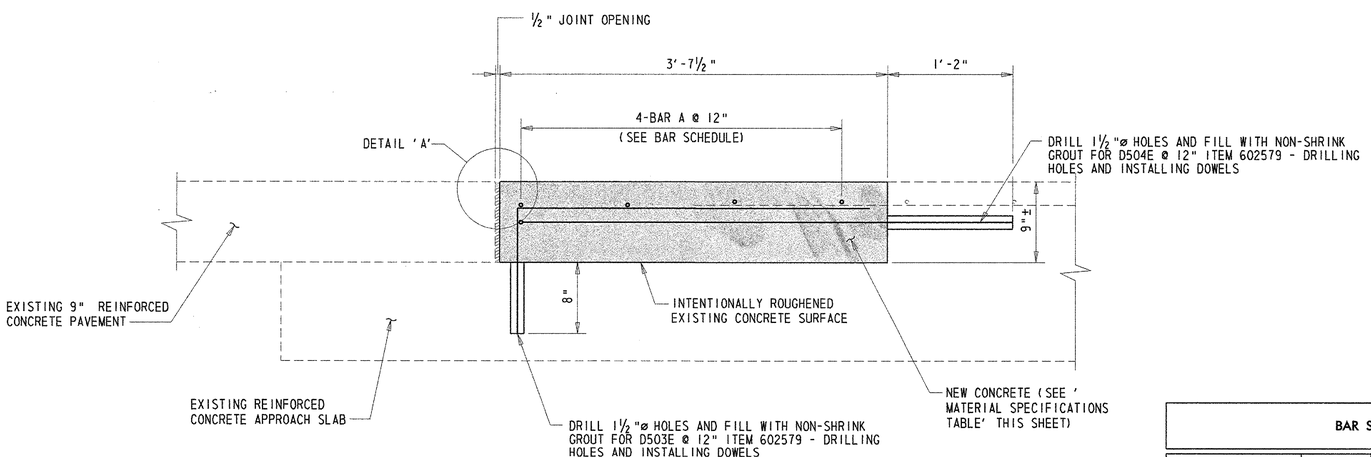

PROPOSED TYPICAL SECTION @ APPROACH PAVEMENT

SCALE: 1½"=1'-0"

MATERIAL SPECIFICATIONS TABLE

LOCATION	CONCRETE MIX
EB SR 273	CLASS D CONCRETE - ITEM 602013
WB SR 273	HIGH EARLY STRENGTH CONCRETE - ITEM 602603

BAR SCHEDULE

LOCATION	BAR MARK	PHASE	BAR MARK
SOUTH APPROACH	A	1	SAP501E
		3 (WESTBOUND)	SAP502E
		3 (EASTBOUND)	SAP503E
		4	SAP504E
NORTH APPROACH	A	2	NAP501E
		3 (WESTBOUND)	NAP502E
		3 (EASTBOUND)	NAP503E
		4	NAP504E

NOTES:

1. PAYMENT FOR REMOVAL OF EXISTING ASPHALTIC JOINT MATERIAL WILL BE INCLUDED IN ITEM 602580 - PARTIAL REMOVAL OF P.C.C. MASONRY.
2. COST FOR PREFORMED EXPANSION JOINT MATERIAL AND HOT-POURED JOINT SEALANT. WILL BE INCIDENTAL TO THE RESPECTIVE CONCRETE ITEM SHOWN IN THE TABLE ON THIS SHEET.
3. IN THE EVENT THAT THE REINFORCED CONCRETE PAVEMENT REQUIRES REPAIR, THIS WORK SHALL BE PERFORMED PRIOR TO REMOVAL OF THE ASHALTIC JOINT MATERIAL AND PORTION OF THE APPROACH SLAB. REPAIRS SHALL BE PERFORMED USING HIGH EARLY STRENGTH CONCRETE. COST FOR PERFORMING REPAIRS TO REINFORCED CONCRETE PAVEMENT WILL BE INCIDENTAL TO THE RESPECTIVE CONCRETE ITEM SHOWN IN THE TABLE ON THIS SHEET. THE COST OF ANY NECESSARY MAINTENANCE OF TRAFFIC WILL BE PAID FOR UNDER THE OTHER PERTINENT ITEMS IN THE CONTRACT.
4. HOT-POURED JOINT SEALANT SHALL CONFORM TO SECTION 808.02 (a). PREFORMED EXPANSION JOINT MATERIAL SHALL CONFORM TO SECTION 808.04(d).
5. LIMITS OF JOINT REPAIRS SHALL EXTEND FROM FLOWLINE TO FLOWLINE.
6. STIFFENED STEEL PLATES SHALL BE INSTALLED OVER THE WORK AREA WITHIN THE TRAVEL LANES TO BE OPENED TO TRAFFIC DURING PEAK HOURS. SEE SHEET 81 FOR DETAILS.

PREL. TRACING ____ W.R.A. ____ DESIGN ____ J.T.L./F.J.O. ____ CHKD. ____ W.A.G. ____

M:\313031\EX03br715.dgn

JOINT REPAIR LAYOUT - APPROACH PAVEMENT

BR.1-715 018

CONTRACT	COUNTY	F.A.P. NO.	SHEET NO.	TOTAL SHTS.
22-074-09	NEW CASTLE	SEE TITLE SHEET	79	152

REHABILITATION OF BRIDGE NOS. 1-715, 1-715A, & 1-715D ON SR 273 OVER I-95

REVISIONS

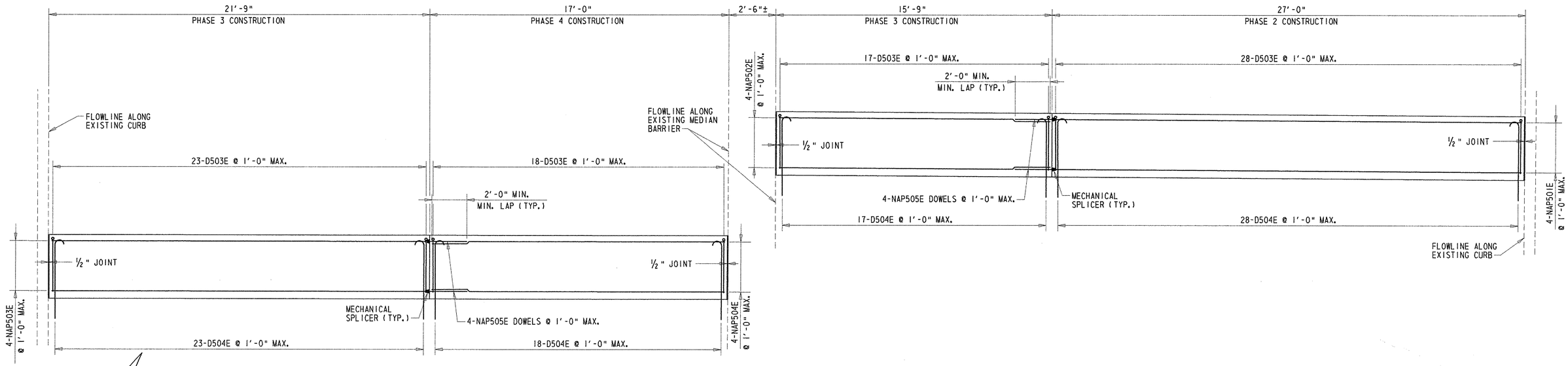

PLAN-NORTH APPROACH PAVEMENT

SCALE: 3/8"=1'-0"

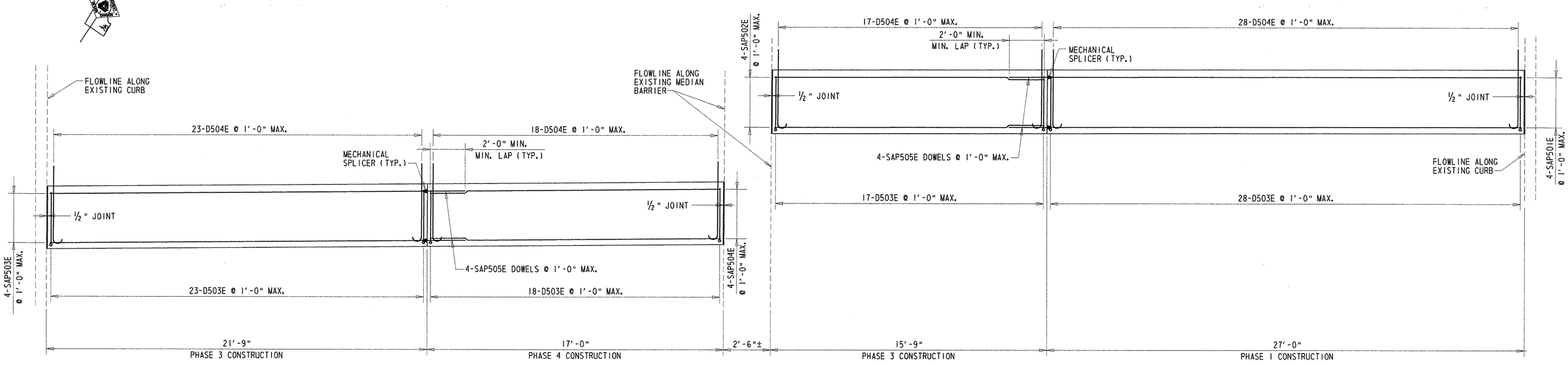

PLAN-SOUTH APPROACH PAVEMENT

SCALE: 3/8"=1'-0"

PREL. TRACING ____ W.R.A. ____ DESIGN ____ J.T.L./F.J.O. ____ CHKD. ____ W.A.G.

M:\313031\ex08br715.dgn

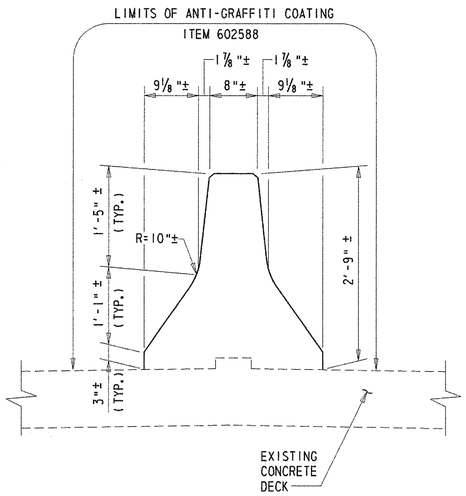

MEDIAN BARRIER

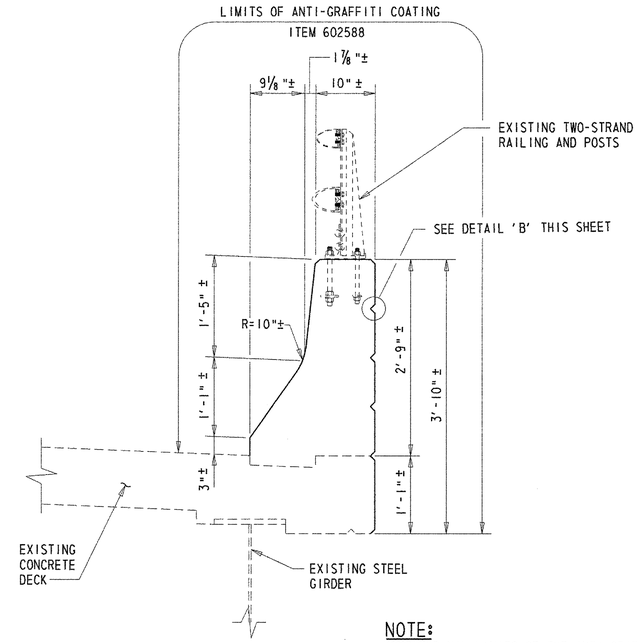

PARAPET

NOTE:
LONGITUDINAL LIMITS OF THE ANTI-GRAFFITI COATING SHALL EXTEND FROM END OF RECONSTRUCTED CONCRETE ENDPOST AT THE SOUTH ABUTMENT TO END OF RECONSTRUCTED CONCRETE ENDPOST AT THE NORTH ABUTMENT.

ANTI-GRAFFITI COATING LIMITS - TYPICAL SECTION

SCALE: 1"=1'-0"

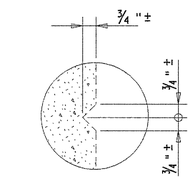

DETAIL 'B'

SCALE: 3"=1'-0"

NOTE:
LOCATION AND SIZE OF STRIATIONS IN PROPOSED PARAPET AT THE ROADWAY JOINTS SHALL MATCH STRIATIONS IN THE EXISTING PARAPET.

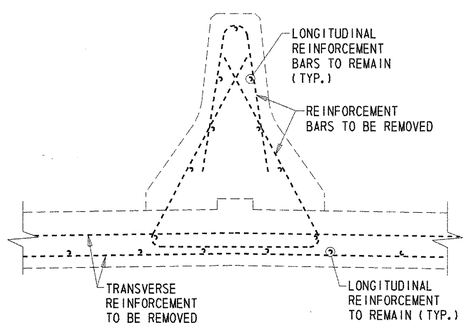

MEDIAN BARRIER

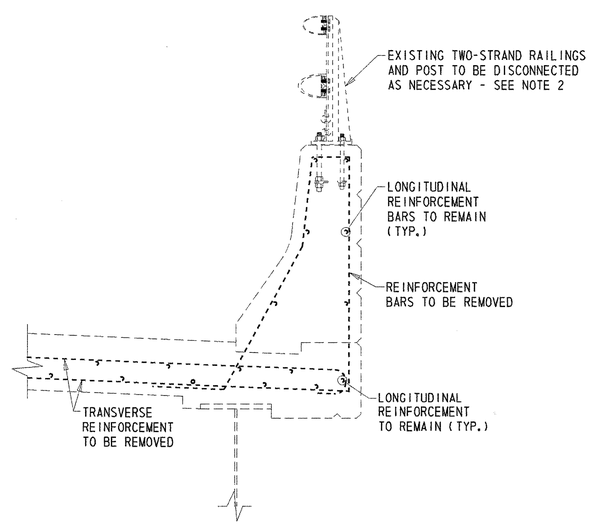

PARAPET

EXISTING BARRIER REINFORCEMENT DETAIL - TYPICAL SECTION

SCALE: 1"=1'-0"

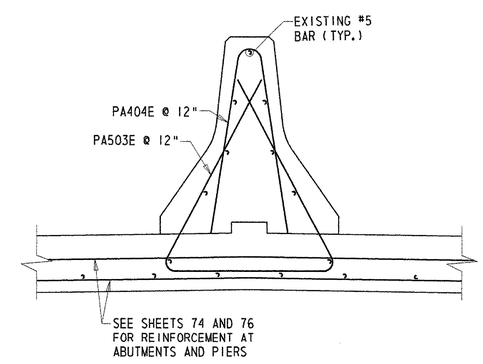

MEDIAN BARRIER

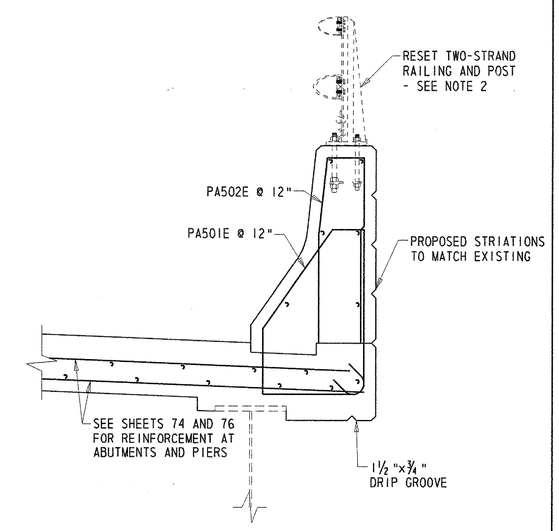

PARAPET

NOTES:

1. TYPICAL SECTION SHOWN FOR PARAPET/MEDIAN BARRIER RECONSTRUCTION AT THE EXISTING ROADWAY JOINTS ONLY.
2. PAYMENT FOR REMOVAL AND RESETTING OF TWO-STRAND RAILING AND POSTS WILL BE MADE UNDER ITEM 602017 - P.C.C. MASONRY, PARAPET, CLASS A.

PROPOSED BARRIER REINFORCEMENT DETAIL - TYPICAL SECTION

SCALE: 1"=1'-0"

PREL. TRACING W.R.A. DESIGN J.T.L./F.J.O. CHKD. W.A.G.

M:\313031\MD01br715.dgn

REHABILITATION OF BRIDGE NOS. 1-715, 1-715A, & 1-715D ON SR 273 OVER I-95

REVISIONS

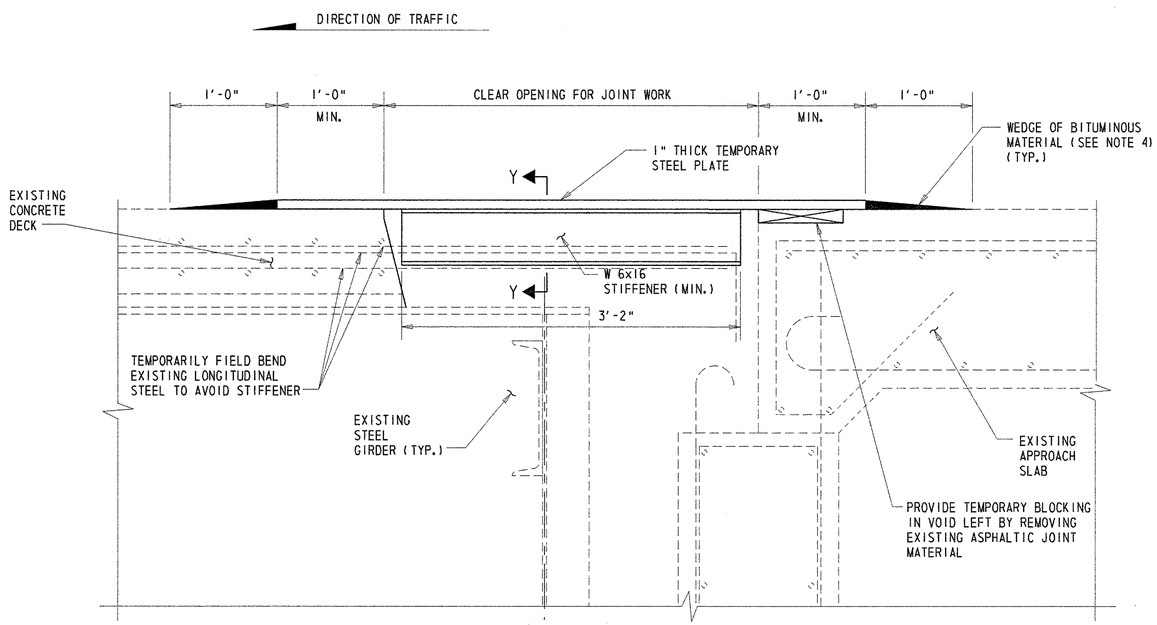

STIFFENED STEEL PLATE DETAIL

SCALE: 1½"=1'-0"

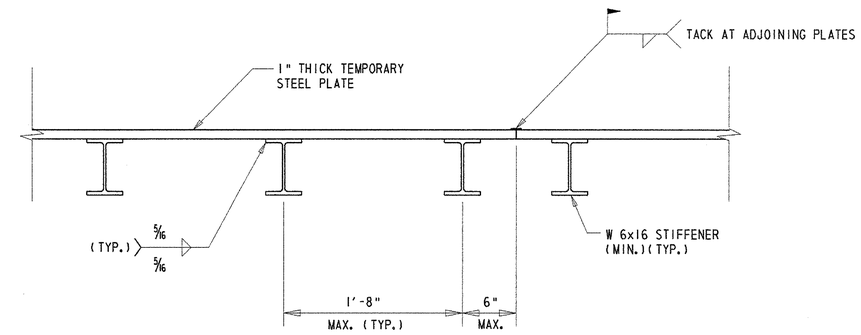

SECTION Y-Y

SCALE: 1½"=1'-0"

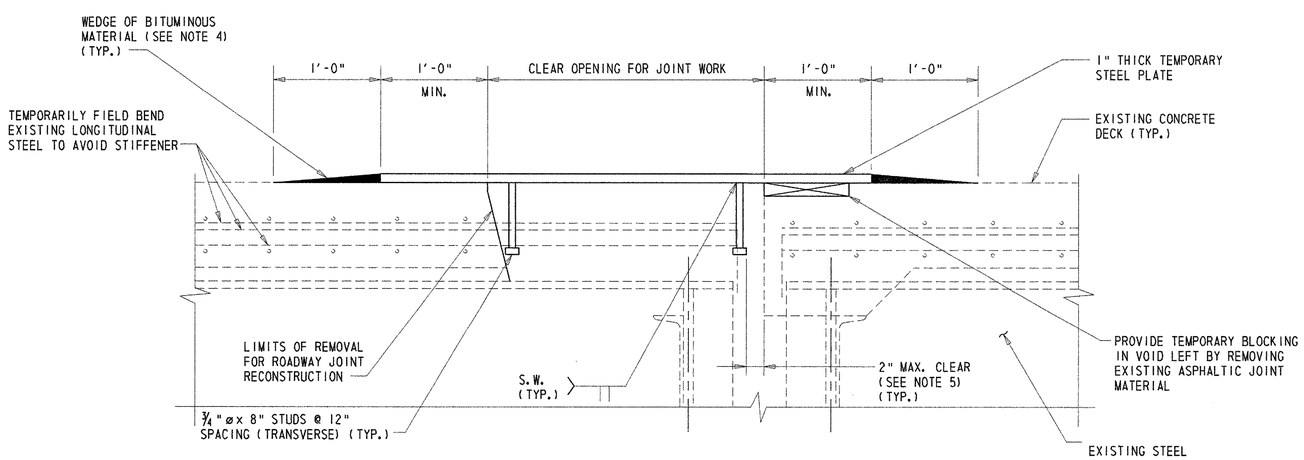

UNSTIFFENED STEEL PLATE DETAIL

SCALE: 1½"=1'-0"

NOTES:

1. THE DETAILS SHOWN ON THIS SHEET SHALL BE USED AT THE LOCATIONS OF ROADWAY JOINT RECONSTRUCTION WHERE MAINTENANCE OF TWO TRAVEL LANES DURING PEAK HOURS IS REQUIRED.
2. THE 'STIFFENED STEEL PLATE DETAIL' SHALL BE USED FOR WORK AREAS THAT RESULT IN A CLEAR OPENING OF GREATER THAN 3'-0". ONCE THE JOINT ANGLES ARE INSTALLED, THE STIFFENED STEEL PLATE CAN NO LONGER BE USED AND AN UNSTIFFENED STEEL PLATE WITH WELDED STUDS ON THE UNDERSIDE SHALL BE INSTALLED. CARE SHALL BE TAKEN TO INSTALL THE JOINT ANGLES IN SUCH A MANNER SO AS TO FULLY SUPPORT THE TEMPORARY STEEL PLATE WITHOUT RESULTING IN ROCKING OF THE STEEL PLATE ABOUT THE JOINT ANGLE OR EXCESSIVE DEFLECTION OF THE STEEL PLATE PRIOR TO ENGAGING THE JOINT ANGLE.
3. THE 'UNSTIFFENED STEEL PLATE DETAIL' SHALL BE USED FOR WORK AREAS THAT RESULT IN A CLEAR OPENING LESS THAN OR EQUAL TO 3'-0".
4. THE BITUMINOUS MATERIAL SHALL BE COMPACTED TO FORM RAMPS HAVING A MAXIMUM SLOPE OF 8.5% WITH A MINIMUM 1'-0" TAPER TO COVER ALL EDGES OF THE STEEL PLATE.
5. STUDS SHALL BE POSITIONED SUCH THAT THEY ARE LOCATED AT THE SPECIFIED CLEAR DISTANCE TO RESTRAIN THE PLATE FROM SLIDING IN THE DIRECTION PARALLEL TO TRAFFIC.
6. THE STEEL PLATES AND STIFFENERS SHALL CONFORM TO ASTM A 709, GRADE 36 (GRADE 50 STEEL MAY BE USED IN LIEU OF GRADE 36 STEEL AT NO ADDITIONAL COST TO THE DEPARTMENT).
7. THE TEMPORARY STEEL PLATES SHALL NOT REMAIN IN SERVICE FROM 5:00 A.M. FRIDAY THROUGH 8:00 P.M. SUNDAY, UNLESS OTHERWISE DIRECTED BY THE ENGINEER.
8. THE CONTRACTOR SHALL SUBMIT WORKING DRAWINGS TO THE ENGINEER FOR REVIEW AND APPROVAL. THE CONTRACTOR MAY SUBMIT AN ALTERNATE METHOD OF PLATING OVER THE WORK AREA FOR REVIEW AND APPROVAL. NO ADDITIONAL COMPENSATION WILL BE MADE FOR ANY ALTERNATE SYSTEM THAT MAY BE INSTALLED.
9. THE COST FOR WORKING DRAWING SUBMITTALS AND FURNISHING, INSTALLING AND MAINTAINING THE TEMPORARY STEEL PLATES, STIFFENERS AND STUDS WILL BE INCLUDED IN ITEM 605511 - PREFABRICATED EXPANSION JOINT SYSTEM, 3".

PREL. TRACING _____ W.R.A. _____ DESIGN _____ J.T.L./F.J.O. _____ CHKD. _____ W.A.O. _____

REINFORCING STEEL DEVELOPMENT LENGTH AND LAP TABLES

BR.1-715 018	CONTRACT	COUNTY	F.A.P. NO.	SHEET NO.	TOTAL SHTS.
	22-074-09	NEW CASTLE	SEE TITLE SHEET	82	152

REHABILITATION OF BRIDGE NOS. 1-715, 1-715A, & 1-715D ON SR 273 OVER I-95

REVISIONS

BAR SIZE	* LOCATION CATEGORY			3 TIMES BAR DIAMETER	6 TIMES BAR DIAMETER	= C/C SPACING
	A	B	C			
#4	1'-9"	1'-6"	1'-3"	1½"	3"	3½"
#5	2'-2"	1'-11"	1'-6"	1⅞"	3¾"	4⅜"
#6	2'-9"	2'-5"	2'-0"	2¼"	4½"	5¼"
#7	3'-9"	3'-4"	2'-8"	2⅝"	5¼"	6⅛"

CASE NO. 1

FOR BARS COATED WITH EPOXY WITH COVER LESS THAN 3 TIMES THE BAR DIAMETER OR CLEAR SPACING BETWEEN BARS LESS THAN 6 TIMES THE BAR DIAMETER.

BAR SIZE	* LOCATION CATEGORY		
	A	B	C
#4	1'-8"	1'-2"	1'-0"
#5	2'-1"	1'-6"	1'-2"
#6	2'-7"	1'-11"	1'-6"
#7	3'-7"	2'-7"	2'-1"

CASE NO. 2

FOR BARS COATED WITH EPOXY NOT IN CASE NO. 1

* LOCATION CATEGORY

A-BARS IN HORIZONTAL LAYERS IN TOP OF POUR WITH 12" OR MORE OF CONCRETE BELOW THEM SUCH AS IN: FOOTINGS, PIER CAPS, ETC.
B-ALL BARS NOT IN CATEGORY A SPACED LESS THAN 6" APART.
C-ALL BARS NOT IN CATEGORY A SPACED 6" OR MORE APART.

DEVELOPEMENT LENGTH DIMENSIONS FOR GRADE 60 REINFORCING STEEL IN 3000 P.S.I. CONCRETE EPOXY COATED REINFORCING

BAR SIZE	* LOCATION CATEGORY			3 TIMES BAR DIAMETER	6 TIMES BAR DIAMETER	= C/C SPACING
	A	B	C			
#4	2'-11"	2'-7"	2'-1"	1½"	3"	3½"
#5	3'-8"	3'-3"	2'-7"	1⅞"	3¾"	4⅜"
#6	4'-8"	4'-2"	3'-4"	2¼"	4½"	5¼"
#7	6'-4"	5'-7"	4'-6"	2⅝"	5¼"	6⅛"

CASE NO. 1

FOR BARS COATED WITH EPOXY WITH COVER LESS THAN 3 TIMES THE BAR DIAMETER OR CLEAR SPACING BETWEEN BARS LESS THAN 6 TIMES THE BAR DIAMETER.

BAR SIZE	* LOCATION CATEGORY		
	A	B	C
#4	2'-9"	2'-0"	1'-7"
#5	3'-6"	2'-6"	2'-0"
#6	4'-5"	3'-2"	2'-7"
#7	6'-0"	4'-4"	3'-6"

CASE NO. 2

FOR BARS COATED WITH EPOXY NOT IN CASE NO. 1

* LOCATION CATEGORY

A-BARS IN HORIZONTAL LAYERS IN TOP OF POUR WITH 12" OR MORE OF CONCRETE BELOW THEM SUCH AS IN: FOOTINGS, PIER CAPS, ETC.
B-ALL BARS NOT IN CATEGORY A SPACED LESS THAN 6" APART.
C-ALL BARS NOT IN CATEGORY A SPACED 6" OR MORE APART.

BAR LAP DIMENSIONS FOR GRADE 60 REINFORCING STEEL IN 3000 P.S.I. CONCRETE EPOXY COATED REINFORCING

NOTE:

BASED ON EXISTING PLANS, THE STRENGTH OF THE EXISTING CONCRETE IS 3000 P.S.I.

BAR SIZE	* LOCATION CATEGORY			3 TIMES BAR DIAMETER	6 TIMES BAR DIAMETER	= C/C SPACING
	A	B	C			
#4	1'-9"	1'-6"	1'-3"	1½"	3"	3½"
#5	2'-2"	1'-11"	1'-6"	1⅞"	3¾"	4⅜"
#6	2'-7"	2'-3"	1'-10"	2¼"	4½"	5¼"
#7	3'-1"	2'-9"	2'-2"	2⅝"	5¼"	6⅛"

CASE NO. 1

FOR BARS COATED WITH EPOXY WITH COVER LESS THAN 3 TIMES THE BAR DIAMETER OR CLEAR SPACING BETWEEN BARS LESS THAN 6 TIMES THE BAR DIAMETER.

BAR SIZE	* LOCATION CATEGORY		
	A	B	C
#4	1'-8"	1'-2"	1'-0"
#5	2'-1"	1'-6"	1'-2"
#6	2'-5"	1'-9"	1'-5"
#7	2'-11"	2'-1"	1'-8"

CASE NO. 2

FOR BARS COATED WITH EPOXY NOT IN CASE NO. 1

* LOCATION CATEGORY

A-BARS IN HORIZONTAL LAYERS IN TOP OF POUR WITH 12" OR MORE OF CONCRETE BELOW THEM SUCH AS IN: FOOTINGS, PIER CAPS, ETC.
B-ALL BARS NOT IN CATEGORY A SPACED LESS THAN 6" APART.
C-ALL BARS NOT IN CATEGORY A SPACED 6" OR MORE APART.

DEVELOPEMENT LENGTH DIMENSIONS FOR GRADE 60 REINFORCING STEEL IN 4500 P.S.I. CONCRETE EPOXY COATED REINFORCING

BAR SIZE	* LOCATION CATEGORY			3 TIMES BAR DIAMETER	6 TIMES BAR DIAMETER	= C/C SPACING
	A	B	C			
#4	2'-11"	2'-7"	2'-1"	1½"	3"	3½"
#5	3'-8"	3'-3"	2'-7"	1⅞"	3¾"	4⅜"
#6	4'-5"	3'-10"	3'-1"	2¼"	4½"	5¼"
#7	5'-3"	4'-7"	3'-8"	2⅝"	5¼"	6⅛"

CASE NO. 1

FOR BARS COATED WITH EPOXY WITH COVER LESS THAN 3 TIMES THE BAR DIAMETER OR CLEAR SPACING BETWEEN BARS LESS THAN 6 TIMES THE BAR DIAMETER.

BAR SIZE	* LOCATION CATEGORY		
	A	B	C
#4	2'-9"	2'-0"	1'-7"
#5	3'-6"	2'-6"	2'-0"
#6	4'-2"	3'-0"	2'-5"
#7	4'-11"	3'-6"	2'-10"

CASE NO. 2

FOR BARS COATED WITH EPOXY NOT IN CASE NO. 1

* LOCATION CATEGORY

A-BARS IN HORIZONTAL LAYERS IN TOP OF POUR WITH 12" OR MORE OF CONCRETE BELOW THEM SUCH AS IN: FOOTINGS, PIER CAPS, ETC.
B-ALL BARS NOT IN CATEGORY A SPACED LESS THAN 6" APART.
C-ALL BARS NOT IN CATEGORY A SPACED 6" OR MORE APART.

BAR LAP DIMENSIONS FOR GRADE 60 REINFORCING STEEL IN 4500 P.S.I. CONCRETE EPOXY COATED REINFORCING

PREL. TRACING W.R.A. DESIGN J.T.L./F.J.O. CHKD. W.A.G.

M:\3130314\MD04BR715.DGN

(1) MARK NUMBER WITH SUFFIX 'E' DENOTES EPOXY COATED REINFORCING STEEL.

(2) MARK 'LOCATION PREFIXES' ARE AS FOLLOWS: (X)NAS = NORTH APPROACH SLAB, (X)SAS = SOUTH APPROACH SLAB, (X)D = DOWEL, (X)PA = PARAPET, (X)S = SLAB, (X)NAP = NORTH APPROACH PAVEMENT, (X)SAP = SOUTH APPROACH PAVEMENT, (X)EP = ENDPOST - WHERE (X) DENOTES SPECIFIC LOCATION [IF APPLICABLE].

REINFORCING BAR LIST - I

BR.1-715 018

CONTRACT	COUNTY	F.A.P. NO.	SHEET NO.	TOTAL SHTS.
22-074-09	NEW CASTLE	SEE TITLE SHEET	83	152

REHABILITATION OF BRIDGE NOS. 1-715, 1-715A, & 1-715D ON SR 273 OVER I-95

REVISIONS

QTY.	SIZE	LENGTH	MARK	TYPE	A	B	C	D	E	F/R	G	H	J	K	O
ENDPOSTS															
(SOUTHEAST)															
16	5	5-00 6	EP501E	C78	0-07 0	1-11 0	0-05 6	2-01 0						0-02 6	
10	5	* 6-06 4	EP502E	S11		0-08 2						*3-01 6			0-05 2
						(H VARIES FROM 2-01 0 TO 4-02 4)									
6	5	8-11 0	EP503E	S11		0-08 2						4-04 0			0-05 2
6	5	13-09 2	EP505E	STR		13-09 2									
2	5	9-03 2	EP507E	STR		9-03 2									
2	5	14-00 4	EP509E	31		4-11 0	9-01 4					2-02 4		8-10 2	13-09 2
2	5	2-09 2	D505E	18	0-07 0	2-02 2							0-05 0		
1	5	5-04 0	D506E	STR		5-04 0									
1	5	4-11 2	D507E	31		3-06 0	1-05 2					0-10 0		1-02 0	4-08 0
(NORTHEAST)															
15	5	5-00 6	EP501E	C78	0-07 0	1-11 0	0-05 6	2-01 0						0-02 6	
10	5	* 6-06 4	EP502E	S11		0-08 2						*3-01 6			0-05 2
						(H VARIES FROM 2-01 0 TO 4-02 4)									
6	5	8-11 0	EP503E	S11		0-08 2						4-04 0			0-05 2
6	5	14-05 2	EP504E	STR		14-05 2									
2	5	9-11 2	EP506E	STR		9-11 2									
2	5	14-08 4	EP508E	31		5-07 0	9-01 4					2-02 4		8-10 2	14-05 2
2	5	2-09 2	D505E	18	0-07 0	2-02 2							0-05 0		
1	5	5-04 0	D506E	STR		5-04 0									
1	5	4-11 2	D507E	31		3-06 0	1-05 2					0-10 0		1-02 0	4-08 0
(NORTHWEST)															
16	5	5-00 6	EP501E	C78	0-07 0	1-11 0	0-05 6	2-01 0						0-02 6	
10	5	* 6-06 4	EP502E	S11		0-08 2						*3-01 6			0-05 2
						(H VARIES FROM 2-01 0 TO 4-02 4)									
6	5	8-11 0	EP503E	S11		0-08 2						4-04 0			0-05 2
6	5	13-09 2	EP505E	STR		13-09 2									
2	5	9-03 2	EP507E	STR		9-03 2									
2	5	14-00 4	EP509E	31		4-11 0	9-01 4					2-02 4		8-10 2	13-09 2
2	5	2-09 2	D505E	18	0-07 0	2-02 2							0-05 0		
1	5	5-04 0	D506E	STR		5-04 0									
1	5	4-11 2	D507E	31		3-06 0	1-05 2					0-10 0		1-02 0	4-08 0
(SOUTHWEST)															
15	5	5-00 6	EP501E	C78	0-07 0	1-11 0	0-05 6	2-01 0						0-02 6	
10	5	* 6-06 4	EP502E	S11		0-08 2						*3-01 6			0-05 2
						(H VARIES FROM 2-01 0 TO 4-02 4)									
6	5	8-11 0	EP503E	S11		0-08 2						4-04 0			0-05 2
6	5	14-05 2	EP504E	STR		14-05 2									
2	5	9-11 2	EP506E	STR		9-11 2									
2	5	14-08 4	EP508E	31		5-07 0	9-01 4					2-02 4		8-10 2	14-05 2
2	5	2-09 2	D505E	18	0-07 0	2-02 2							0-05 0		
1	5	5-04 0	D506E	STR		5-04 0									
1	5	4-11 2	D507E	31		3-06 0	1-05 2					0-10 0		1-02 0	4-08 0
JOINT, PARAPET, AND MEDIAN BARRIER RECONSTRUCTION															
(SOUTH ABUTMENT, PHASE 1B)															
28	5	2-04 0	D501E	STR		2-04 0									
28	5	4-07 0	D502E	18	0-07 0	4-00 0							0-05 0		
28	5	2-05 4	SAS501E	18	0-07 0	1-10 4							0-05 0		
28	5	3-09 4	SAS502E	17		1-11 0	1-10 4								
10	5	27-01 2	SAS503E	STR		27-01 2									
						(THREAD 1 END FOR MECHANICAL SPLICER)									
29	5	5-02 0	S501E	16	2-00 0	0-10 2	1-02 6	1-01 0				0-09 2		0-09 2	
6	6	6-04 2	S602E	STR		6-04 2									
2	6	3-03 2	S603E	STR		3-03 2									
						(THREAD 1 END FOR MECHANICAL SPLICER)									
11	6	27-01 0	S604E	STR		27-01 0									
						(THREAD 1 END FOR MECHANICAL SPLICER)									
10	6	4-09 0	S605E	31		1-07 0	3-02 0					0-04 4		3-01 2	4-08 2
3	5	7-02 4	PA501E	P1	0-05 4	1-04 2	0-10 2	1-10 0	0-05 2	2-03 2		1-05 0		0-11 0	
3	5	5-07 2	PA502E	P2		1-03 0	1-04 0	0-05 2	2-07 0			1-04 0		0-01 6	0-07 0
(SOUTH ABUTMENT, PHASE 3, WESTBOUND)															
17	5	2-04 0	D501E	STR		2-04 0									
17	5	4-07 0	D502E	18	0-07 0	4-00 0							0-05 0		
17	5	2-05 4	SAS501E	18	0-07 0	1-10 4							0-05 0		
17	5	3-09 4	SAS502E	17		1-11 0	1-10 4								
10	5	15-07 0	SAS511E	STR		15-07 0									
						(THREAD 1 END FOR MECHANICAL SPLICER)									
10	5	2-08 0	SAS512E	STR		2-08 0									
						(THREAD 1 END FOR MECHANICAL SPLICER)									
17	5	5-02 2	S501E	16	2-00 0	0-10 2	1-03 0	1-01 0				0-09 2		0-09 2	
2	6	6-04 2	S602E	STR		6-04 2									
2	6	2-11 0	S611E	STR		2-11 0									
						(THREAD 1 END FOR MECHANICAL SPLICER)									
2	6	3-11 2	S612E	STR		3-11 2									
						(THREAD 1 END FOR MECHANICAL SPLICER)									
11	6	15-09 2	S613E	STR		15-09 2									
						(THREAD 1 END FOR MECHANICAL SPLICER)									
11	6	3-09 0	S614E	STR		3-09 0									
						(THREAD 1 END FOR MECHANICAL SPLICER)									
(SOUTH ABUTMENT, PHASE 3, EASTBOUND)															
23	5	2-04 0	D501E	STR		2-04 0									
23	5	4-07 0	D502E	18	0-07 0	4-00 0							0-05 0		
23	5	2-05 4	SAS501E	18	0-07 0	1-10 4							0-05 0		
23	5	3-09 4	SAS502E	17		1-11 0	1-10 4								
10	5	21-09 2	SAS521E	31		11-10 4	9-10 6					0-02 6		9-10 6	21-09 2
						(THREAD END OF DIMENSION "B" FOR MECHANICAL SPLICER)									
23	5	5-02 2	S501E	16	2-00 0	0-10 2	1-03 0	1-01 0				0-09 2		0-09 2	
4	6	6-04 2	S602E	STR		6-04 2									
10	6	4-09 0	S605E	31		1-07 0	3-02 0					0-04 4		3-01 2	4-08 2
2	6	5-10 0	S621E	STR		5-10 0									
11	6	21-07 6	S622E	31		11-10 4	9-09 2					0-03 4		9-09 2	21-07 6
						(THREAD END OF DIMENSION "B" FOR MECHANICAL SPLICER)									
3	5	7-02 4	PA501E	P1	0-05 4	1-04 2	0-10 2	1-10 0	0-05 2	2-03 2		1-05 0		0-11 0	
3	5	5-07 2	PA502E	P2		1-03 0	1-04 0	0-05 2	2-07 0			1-04 0		0-01 6	0-07 0
(SOUTH ABUTMENT, PHASE 4)															
21	5	2-04 0	D501E	STR		2-04 0									
21	5	4-07 0	D502E	18	0-07 0	4-00 0							0-05 0		
21	5	2-05 4	SAS501E	18	0-07 0	1-10 4							0-05 0		
21	5	3-09 4	SAS502E	17		1-11 0	1-10 4								
10	5	2-08 0	SAS512E	STR		2-08 0									
						(THREAD 1 END FOR MECHANICAL SPLICER)									
10	5	19-04 6	SAS531E	STR		19-04 6									
22	5	5-02 2	S501E	16	2-00 0	0-10 2	1-03 0	1-01 0				0-09 2		0-09 2	
4	6	6-04 2	S602E	STR		6-04 2									
22	6	3-09 0	S614E	STR		3-09 0									
						(THREAD 1 END FOR MECHANICAL SPLICER)									
11	6	19-04 6	S631E	STR		19-04 6									
2	6	2-05 0	S632E	STR		2-05 0									
						(THREAD 1 END FOR MECHANICAL SPLICER)									
3	5	8-06 0	PA503E	P3		3-00 0	2-06 0	3-00 0				2-08 0		1-05 0	
7	4	5-08 0	PA404E	P4	0-06 0	2-07 0	2-07 0								1-01 0
4	5	8-00 4	PA505E	P3		2-11 2	2-02 0	2-11 2				2-08 0		1-03 0	
(NORTH ABUTMENT, PHASE 2)															
28	5	2-04 0	D501E	STR		2-04 0									
28	5	4-07 0	D502E	18	0-07 0	4-00 0							0-05 0		
28	5	2-05 4	NAS501E	18	0-07 0	1-10 4							0-05 0		
28	5	3-09 4	NAS502E	17		1-11 0	1-10 4								
10	5	27-01 2	NAS503E	STR		27-01 2									
						(THREAD 1 END FOR MECHANICAL SPLICER)									
29	5	5-02 2	S501E	16	2-00 0	0-10 2	1-03 0	1-01 0				0-09 2		0-09 2	
6	6	6-04 2	S602E	STR		6-04 2									
2	6	3-03 2	S603E	STR		3-03 2									
						(THREAD 1 END FOR MECHANICAL SPLICER)									
11	6	27-01 0	S604E	STR		27-01 0									
						(THREAD 1 END FOR MECHANICAL SPLICER)									
10	6	4-09 0	S605E	31		1-07 0	3-02 0					0-04 4		3-01 2	4-08 2
3	5	7-02 4	PA501E	P1	0-05 4	1-04 2	0-10 2	1-10 0	0-05 2	2-03 2		1-05 0		0-11 0	
3	5	5-07 2	PA502E	P2		1-03 0	1-04 0	0-05 2	2-07 0			1-04 0		0-01 6	0-07 0

* DENOTES AVERAGE LENGTH

NOTES:

1. STANDARD BAR BENDS INCLUDE ONLY TYPES 1-32, S1-S12, AND T1-T16.
2. ALL DIMENSIONS ARE OUT-TO-OUT OF BAR EXCEPT "A" AND "G" ON STANDARD 180° AND 135° HOOKS.
3. "J" DIMENSIONS ON 180° HOOKS TO BE SHOWN ONLY WHERE NECESSARY TO RESTRICT HOOK SIZE, OTHERWISE STANDARD HOOKS ARE TO BE USED.
4. WHERE "J" IS NOT SHOWN, "J" WILL BE KEPT EQUAL TO OR LESS THAN "H" ON TRUSS BARS. WHERE "J" CAN EXCEED "H", IT SHOULD BE SHOWN.
5. "H" DIMENSIONS STIRRUPS TO BE SHOWN WHERE NECESSARY TO FIT WITHIN CONCRETE.
6. UNLESS OTHERWISE NOTED, DIAMETER "D" IS THE SAME FOR ALL BENDS AND HOOKS ON A BAR.
7. WHERE SLOPE DIFFERS FROM 45° DIMENSIONS, "H" AND "K" MUST BE SHOWN.
8. WHERE BARS ARE TO BE BENT MORE ACCURATELY THAN STANDARD BENDING TOLERANCES, BENDING DIMENSIONS WHICH REQUIRE CLOSER FABRICATION SHOULD HAVE LIMITS INDICATED.
9. FIGURES IN CIRCLES SHOW TYPES.
10. FOR RECOMMENDED DIAMETER "D", OF BENDS, HOOKS, ETC., SEE 'CRSI' OR 'ACI' TABLES.
11. TYPE S1-S12, T1-T16 APPLY TO BAR SIZES #3 THROUGH #6.

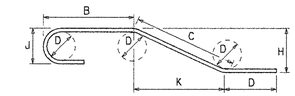

STANDARD BAR BENDS

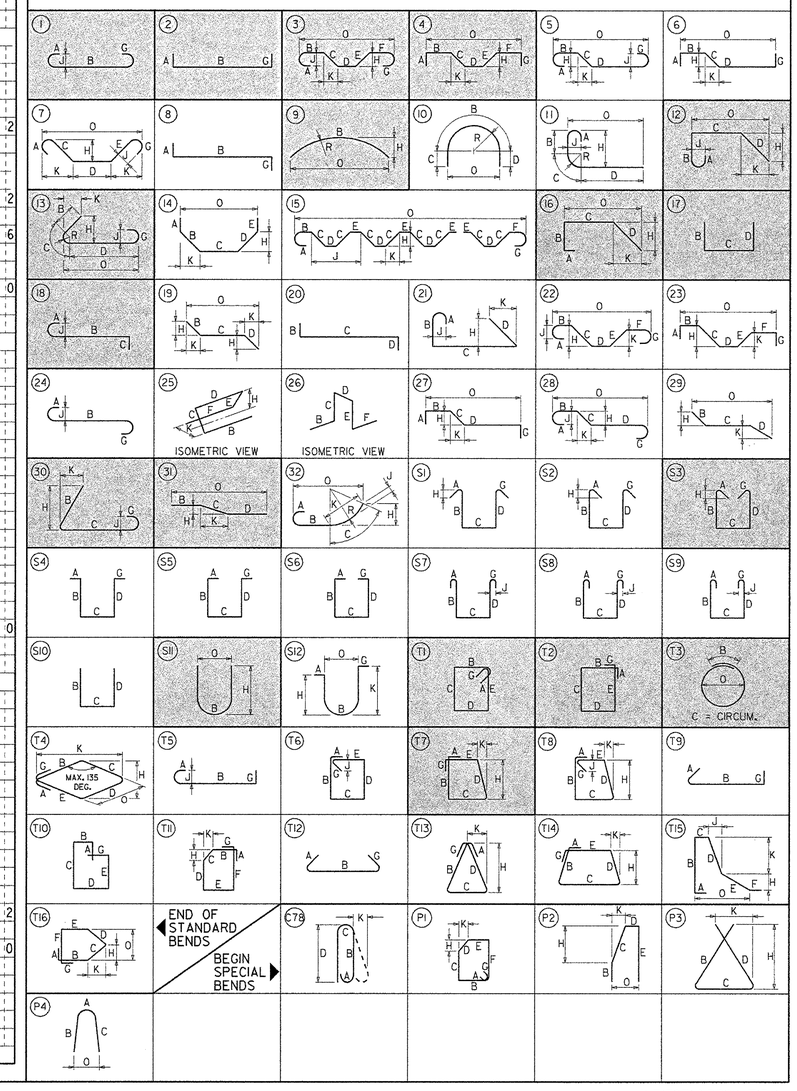

W.A.G. CHKD. J.T.L./F.J.O. DESIGN W.R.A. PREL. TRACING

M:\313031\4\BR01br715.dgn

(1) MARK NUMBER WITH SUFFIX 'E' DENOTES EPOXY COATED REINFORCING STEEL.

(2) MARK 'LOCATION PREFIXES' ARE AS FOLLOWS: (X)NAS = NORTH APPROACH SLAB, (X)SAS = SOUTH APPROACH SLAB, (X)D = DOWEL, (X)PA = PARAPET, (X)S = SLAB, (X)NAP = NORTH APPROACH PAVEMENT, (X)SAP = SOUTH APPROACH PAVEMENT, (X)EP = ENDPOST - WHERE (X) DENOTES SPECIFIC LOCATION (IF APPLICABLE).

SPECIFICATIONS					BENDING DIMENSIONS										
QTY.	SIZE	LENGTH	MARK	TYPE	A	B	C	D	E	F/R	G	H	J	K	O
(NORTH ABUTMENT, PHASE 3, WESTBOUND)															
17	5	2-04 0	D501E	STR		2-04 0									
17	5	4-07 0	D502E	18	0-07 0	4-00 0							0-05 0		
17	5	2-05 4	NAS501E	18	0-07 0	1-10 4							0-05 0		
17	5	3-09 4	NAS502E	17		1-11 0	1-10 4								
10	5	15-09 2	NAS511E	STR		15-09 2									
						(THREAD 1 END FOR MECHANICAL SPLICER)									
10	5	2-08 0	NAS512E	STR		2-08 0									
						(THREAD 1 END FOR MECHANICAL SPLICER)									
17	5	5-02 2	S501E	16	2-00 0	0-10 2	1-03 0	1-01 0				0-09 2		0-09 2	
2	6	6-04 2	S602E	STR		6-04 2									
2	6	2-11 0	S611E	STR		2-11 0									
						(THREAD 1 END FOR MECHANICAL SPLICER)									
2	6	3-11 2	S612E	STR		3-11 2									
						(THREAD 1 END FOR MECHANICAL SPLICER)									
11	6	15-09 2	S613E	STR		15-09 2									
						(THREAD 1 END FOR MECHANICAL SPLICER)									
11	6	3-09 0	S614E	STR		3-09 0									
						(THREAD 1 END FOR MECHANICAL SPLICER)									
(NORTH ABUTMENT, PHASE 3, EASTBOUND)															
23	5	2-04 0	D501E	STR		2-04 0									
23	5	6-05 4	D502E	18	0-07 0	4-00 0	1-10 4						0-05 0		
23	5	2-05 4	NAS501E	18	0-07 0	1-10 4							0-05 0		
23	5	3-09 4	NAS502E	17		1-11 0	1-10 4								
10	5	21-09 2	NAS521E	31		11-10 4	9-10 6					0-02 6		9-10 6	21-09 2
						(THREAD END OF DIMENSION "B" FOR MECHANICAL SPLICER)									
23	5	5-02 2	S501E	16	2-00 0	0-10 2	1-03 0	1-01 0				0-09 2		0-09 2	
4	6	6-04 2	S602E	STR		6-04 2									
10	6	4-09 0	S605E	31		1-07 0	3-02 0					0-04 4		3-01 2	4-08 2
2	6	5-10 0	S621E	STR		5-10 0									
11	6	21-07 6	S622E	31		11-10 4	9-09 2					0-03 4		9-09 2	21-07 6
						(THREAD END OF DIMENSION "B" FOR MECHANICAL SPLICER)									
3	5	7-02 4	PA501E	P1	0-05 4	1-04 2	0-10 2	1-10 0	0-05 2	2-03 2		1-05 0		0-11 0	
3	5	5-07 2	PA502E	P2		1-03 0	1-04 0	0-05 2	2-07 0			1-04 0		0-01 6	0-07 0
(NORTH ABUTMENT, PHASE 4)															
21	5	2-04 0	D501E	STR		2-04 0									
21	5	4-07 0	D502E	18	0-07 0	4-00 0							0-05 0		
21	5	2-05 4	NAS501E	18	0-07 0	1-10 4							0-05 0		
21	5	3-09 4	NAS502E	17		1-11 0	1-10 4								
10	5	2-08 0	NAS512E	STR		2-08 0									
						(THREAD 1 END FOR MECHANICAL SPLICER)									
10	5	19-04 6	NAS531E	STR		19-04 6									
22	5	5-02 2	S501E	16	2-00 0	0-10 2	1-03 0	1-01 0				0-09 2		0-09 2	
4	6	6-04 2	S602E	STR		6-04 2									
22	6	3-09 0	S614E	STR		3-09 0									
						(THREAD 1 END FOR MECHANICAL SPLICER)									
11	6	19-04 6	S631E	STR		19-04 6									
2	6	2-05 0	S632E	STR		2-05 0									
						(THREAD 1 END FOR MECHANICAL SPLICER)									
11	6	19-04 6	S631E	STR		19-04 6									
2	6	2-05 0	S632E	STR		2-05 0									
						(THREAD 1 END FOR MECHANICAL SPLICER)									
3	5	8-06 0	PA503E	P3		3-00 0	2-06 0	3-00 0				2-08 0		1-05 0	
7	4	5-08 0	PA404E	P4	0-06 0	2-07 0	2-07 0								1-01 0
4	5	8-00 4	PA505E	P3		2-11 2	2-02 0	2-11 2				2-08 0		1-03 0	
(PIER NO. 1, PHASE 1)															
20	6	27-01 0	S604E	STR		27-01 0									
						(THREAD 1 END FOR MECHANICAL SPLICER)									
20	6	4-09 0	S605E	31		1-07 0	3-02 0					0-04 4		3-01 2	4-08 2
58	5	4-06 0	S551E	16	2-00 0	0-08 4	0-08 4	1-01 0				0-09 2		0-09 2	
12	6	6-02 2	S652E	STR		6-02 2									
4	6	3-02 2	S653E	STR		3-02 2									
						(THREAD 1 END FOR MECHANICAL SPLICER)									
6	5	7-02 4	PA501E	P1	0-05 4	1-04 2	0-10 2	1-10 0	0-05 2	2-03 2		1-05 0		0-11 0	
6	5	5-07 2	PA502E	P2		1-03 0	1-04 0	0-05 2	2-07			1.333 0		0-01 6	0-07 0

SPECIFICATIONS					BENDING DIMENSIONS										
QTY.	SIZE	LENGTH	MARK	TYPE	A	B	C	D	E	F/R	G	H	J	K	O
(PIER NO. 1, PHASE 3, WESTBOUND)															
20	6	15-09 2	S613E	STR		15-09 2									
						(THREAD 1 END FOR MECHANICAL SPLICER)									
20	6	3-09 0	S614E	STR		3-09 0									
						(THREAD 1 END FOR MECHANICAL SPLICER)									
34	5	4-06 0	S551E	16	2-00 0	0-08 4	0-08 4	1-01 0				0-09 2		0-09 2	
4	6	6-02 2	S652E	STR		6-02 2									
4	6	2-10 0	S661E	STR		2-10 0									
						(THREAD 1 END FOR MECHANICAL SPLICER)									
4	6	3-10 2	S662E	STR		3-10 2									
						(THREAD 1 END FOR MECHANICAL SPLICER)									
(PIER NO. 1, PHASE 3, EASTBOUND)															
20	6	4-09 0	S605E	31		1-07 0	3-02 0					0-04 4		3-01 2	4-08 2
20	6	21-09 0	S622E	31		9-10 4	11-10 4					0-02 6		9-10 4	21-09 0
						(THREAD END OF DIMENSION "C" FOR MECHANICAL SPLICER)									
46	5	4-06 0	S551E	16	2-00 0	0-08 4	0-08 4	1-01 0				0-09 2		0-09 2	
8	6	6-02 2	S652E	STR		6-02 2									
4	6	5-07 0	S671E	STR		5-07 0									
6	5	4-11 0	PA501E	P1	0-05 4	1-04 2	0-10 2	1-10 0	0-05			1-05 0		0-11 0	
6	5	5-07 2	PA502E	P2		1-03 0	1-04 0	0-05 2	2-07			1-04 0		0-01 6	0-07 0
(PIER NO. 1, PHASE 4)															
40	6	3-09 0	S614E	STR		3-09 0									
						(THREAD 1 END FOR MECHANICAL SPLICER)									
20	6	19-04 6	S631E	STR		19-04 6									
44	5	4-06 0	S551E	16	2-00 0	0-08 4	0-08 4	1-01 0				0-09 2		0-09 2	
8	6	6-02 2	S652E	STR		6-02 2									
4	6	2-04 0	S681E	STR		2-04 0									
						(THREAD 1 END FOR MECHANICAL SPLICER)									
6	5	8-06 0	PA503E	P3		3-00 0	2-06 0	3-00 0				2-08 0		1-05 0	
6	4	5-08 0	PA404E	P4	0-06 0	2-07 0	2-07 0								1-01 0
(PIER NO. 2, PHASE 1)															
20	6	27-01 0	S604E	STR		27-01 0									
						(THREAD 1 END FOR MECHANICAL SPLICER)									
20	6	4-09 0	S605E	31		1-07 0	3-02 0					0-04 4		3-01 2	4-08 2
58	5	4-06 0	S551E	16	2-00 0	0-08 4	0-08 4	1-01 0				0-09 2		0-09 2	
12	6	6-02 2	S652E	STR		6-02 2									
4	6	3-02 2	S653E	STR		3-02 2									
						(THREAD 1 END FOR MECHANICAL SPLICER)									
6	5	7-02 4	PA501E	P1	0-05 4	1-04 2	0-10 2	1-10 0	0-05 2	2-03 2		1-05 0		0-11 0	
6	5	5-07 2	PA502E	P2		1-03 0	1-04 0	0-05 2	2-07 0			1-04 0		0-01 6	0-07 0
(PIER NO. 2, PHASE 3, WESTBOUND)															
20	6	15-09 2	S613E	STR		15-09 2									
						(THREAD 1 END FOR MECHANICAL SPLICER)									
20	6	3-09 0	S614E	STR		3-09 0									
						(THREAD 1 END FOR MECHANICAL SPLICER)									
34	5	4-06 0	S551E	16	2-00 0	0-08 4	0-08 4	1-01 0				0-09 2		0-09 2	
4	6	6-02 2	S652E	STR		6-02 2									
4	6	2-10 0	S661E	STR		2-10 0									
						(THREAD 1 END FOR MECHANICAL SPLICER)									
4	6	3-10 2	S662E	STR		3-10 2									
						(THREAD 1 END FOR MECHANICAL SPLICER)									
(PIER NO. 2, PHASE 3, EASTBOUND)															
20	6	4-09 0	S605E	31		1-07 0	3-02 0					0-04 4		3-01 2	4-08 2
20	6	21-09 0	S622E	31		9-10 4	11-10 4					0-03 4		11-10 4	21-09 0
						(THREAD END OF DIMENSION "C" FOR MECHANICAL SPLICER)									
46	5	4-06 0	S551E	16	2-00 0	0-08 4	0-08 4	1-01 0				0-09 2		0-09 2	
8	6	6-02 2	S652E	STR		6-02 2									
4	6	5-07 0	S671E	STR		5-07 0									
6	5	7-02 4	PA501E	P1	0-05 4	1-04 2	0-10 2	1-10 0	0-05 2	2-03 2		1-05 0		0-11 0	
6	5	5-07 2	PA502E	P2		1-03 0	1-04 0	0-05 2	2-07 0			1-04 0		0-01 6	0-07 0
(PIER NO. 2, PHASE 4)															
40	6	3-09 0	S614E	STR		3-09 0									
						(THREAD 1 END FOR MECHANICAL SPLICER)									
20	6	19-04 6	S631E	STR		19-04 6									
44	5	4-06 0	S551E	16	2-00 0	0-08 4	0-08 4	1-01 0				0-09 2		0-09 2	
8	6	6-02 2	S652E	STR		6-02 2									
4	6	2-04 0	S681E	STR		2-04 0									
						(THREAD 1 END FOR MECHANICAL SPLICER)									
6	5	8-06 0	PA503E	P3		3-00 0	2-06 0	3-00 0				2-08 0		1-05 0	
6	4	5-08 0	PA404E	P4	0-06 0	2-07 0	2-07 0								1-01 0

* DENOTES AVERAGE LENGTH

REINFORCING BAR LIST - II

BR.1-715 018

CONTRACT	COUNTY	F.A.P. NO.	SHEET NO.	TOTAL SHTS.
22-074-09	NEW CASTLE	SEE TITLE SHEET	84	152

REHABILITATION OF BRIDGE NOS. 1-715, 1-715A, & 1-715D ON SR 273 OVER I-95

REVISIONS

NOTES:

1. STANDARD BAR BENDS INCLUDE ONLY TYPES 1-32, S1-S12, AND T1-T16.
2. ALL DIMENSIONS ARE OUT-TO-OUT OF BAR EXCEPT "A" AND "G" ON STANDARD 180° AND 135° HOOKS.
3. "J" DIMENSIONS ON 180° HOOKS TO BE SHOWN ONLY WHERE NECESSARY TO RESTRICT HOOK SIZE, OTHERWISE STANDARD HOOKS ARE TO BE USED.
4. WHERE "J" IS NOT SHOWN, "J" WILL BE KEPT EQUAL TO OR LESS THAN "H" ON TRUSS BARS. WHERE "J" CAN EXCEED "H", IT SHOULD BE SHOWN.
5. "H" DIMENSIONS STIRRUPS TO BE SHOWN WHERE NECESSARY TO FIT WITHIN CONCRETE.
6. UNLESS OTHERWISE NOTED, DIAMETER "D" IS THE SAME FOR ALL BENDS AND HOOKS ON A BAR.
7. WHERE SLOPE DIFFERS FROM 45° DIMENSIONS, "H" AND "K" MUST BE SHOWN.
8. WHERE BARS ARE TO BE BENT MORE ACCURATELY THAN STANDARD BENDING TOLERANCES, BENDING DIMENSIONS WHICH REQUIRE CLOSER FABRICATION SHOULD HAVE LIMITS INDICATED.
9. FIGURES IN CIRCLES SHOW TYPES.
10. FOR RECOMMENDED DIAMETER "D", OF BENDS, HOOKS, ETC., SEE 'CRSI' OR 'ACI' TABLES.
11. TYPE S1-S12, T1-T16 APPLY TO BAR SIZES #3 THROUGH #6.

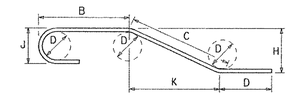

STANDARD BAR BENDS

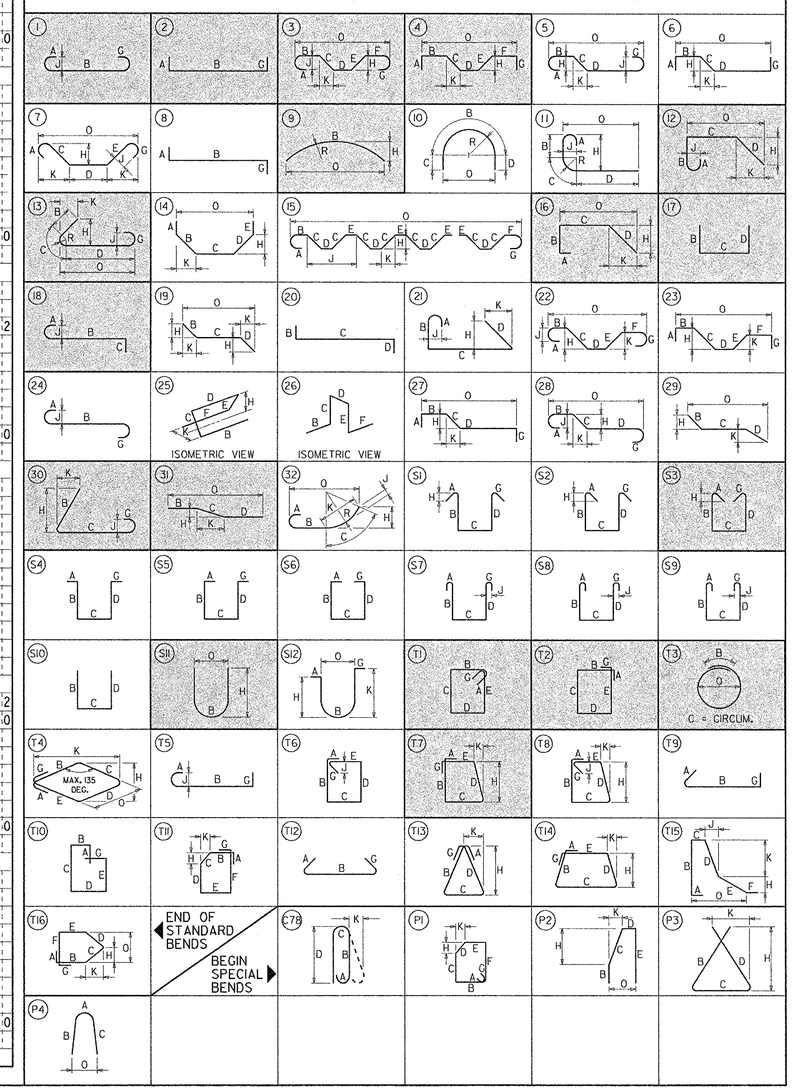

W.A.G. — CHKD. — J.T.L./F.J.O. — DESIGN — W.R.A. — PREL. TRACING

M:\313031\ABR02br715.dgn

(1) MARK NUMBER WITH SUFFIX 'E' DENOTES EPOXY COATED REINFORCING STEEL.

(2) MARK 'LOCATION PREFIXES' ARE AS FOLLOWS: (X)NAS = NORTH APPROACH SLAB, (X)SAS = SOUTH APPROACH SLAB, (X)D = DOWEL, (X)PA = PARAPET, (X)S = SLAB, (X)NAP = NORTH APPROACH PAVEMENT, (X) SAP = SOUTH APPROACH PAVEMENT, (X)EP = ENDPOST - WHERE (X) DENOTES SPECIFIC LOCATION [IF APPLICABLE].

REINFORCING BAR LIST - III

BR.1-715 018

CONTRACT	COUNTY	F.A.P. NO.	SHEET NO.	TOTAL SHTS.
22-074-09	NEW CASTLE	SEE TITLE SHEET	85	152

REHABILITATION OF BRIDGE NOS. 1-715, 1-715A, & 1-715D ON SR 273 OVER I-95

REVISIONS

SPECIFICATIONS					BENDING DIMENSIONS										
QTY.	SIZE	LENGTH	MARK	TYPE	A	B	C	D	E	F/R	G	H	J	K	O
(PIER NO. 3, PHASE 1)															
20	6	27-01 0	S604E	STR		27-01 0									
						(THREAD 1 END FOR MECHANICAL SPLICER)									
20	6	4-09 0	S605E	31		1-07 0	3-02 0					0-04 4		3-01 2	4-08 2
58	5	4-06 0	S551E	16	2-00 0	0-08 4	0-08 4	1-01 0				0-09 2		0-09 2	
12	6	6-02 2	S652E	STR		6-02 2									
4	6	3-02 2	S653E	STR		3-02 2									
						(THREAD 1 END FOR MECHANICAL SPLICER)									
6	5	7-02 4	PA501E	P1	0-05 4	1-04 2	0-10 2	1-10 0	0-05 2	2-03 2		1-05 0		0-11 0	
6	5	5-07 2	PA502E	P2		1-03 0	1-04 0	0-05 2	2-07 0			1-04 0		0-01 6	0-07 0
(PIER NO. 3, PHASE 3, WESTBOUND)															
20	6	15-09 2	S613E	STR		15-09 2									
						(THREAD 1 END FOR MECHANICAL SPLICER)									
20	6	3-09 0	S614E	STR		3-09 0									
						(THREAD 1 END FOR MECHANICAL SPLICER)									
34	5	4-06 0	S551E	16	2-00 0	0-08 4	0-08 4	1-01 0				0-09 2		0-09 2	
4	6	6-02 2	S652E	STR		6-02 2									
4	6	2-10 0	S661E	STR		2-10 0									
						(THREAD 1 END FOR MECHANICAL SPLICER)									
4	6	3-10 2	S662E	STR		3-10 2									
						(THREAD 1 END FOR MECHANICAL SPLICER)									
(PIER NO. 3, PHASE 3, EASTBOUND)															
20	6	4-09 0	S605E	31		1-07 0	3-02 0					0-04 4		3-01 2	4-08 2
20	6	21-09 0	S622E	31		9-10 4	11-10 4					0-03 4		11-10 4	21-09 0
						(THREAD END OF DIMENSION "C" FOR MECHANICAL SPLICER)									
46	5	4-06 0	S551E	16	2-00 0	0-08 4	0-08 4	1-01 0				0-09 2		0-09 2	
8	6	6-02 2	S652E	STR		6-02 2									
4	6	5-07 0	S671E	STR		5-07 0									
6	5	7-02 4	PA501E	P1	0-05 4	1-04 2	0-10 2	1-10 0	0-05 2	2-03 2		1-05 0		0-11 0	
6	5	5-07 2	PA502E	P2		1-03 0	1-04 0	0-05 2	2-07 0			1-04 0		0-01 6	0-07 0
(PIER NO. 3, PHASE 4)															
40	6	3-09 0	S614E	STR		3-09 0									
						(THREAD 1 END FOR MECHANICAL SPLICER)									
20	6	19-04 6	S631E	STR		19-04 6									
44	5	4-06 0	S551E	16	2-00 0	0-08 4	0-08 4	1-01 0				0-09 2		0-09 2	
8	6	6-02 2	S652E	STR		6-02 2									
4	6	2-04 0	S681E	STR		2-04 0									
						(THREAD 1 END FOR MECHANICAL SPLICER)									
6	5	8-06 0	PA503E	P3		3-00 0	2-06 0	3-00 0				2-08 0		1-05 0	
6	4	5-08 0	PA404E	P4	0-06 0	2-07 0	2-07 0								1-01 0
(PIER NO. 4, PHASE 2)															
20	6	27-01 0	S604E	STR		27-01 0									
						(THREAD 1 END FOR MECHANICAL SPLICER)									
20	6	4-09 0	S605E	31		1-07 0	3-02 0					0-04 4		3-01 2	4-08 2
58	5	4-06 0	S551E	16	2-00 0	0-08 4	0-08 4	1-01 0				0-09 2		0-09 2	
12	6	6-02 2	S652E	STR		6-02 2									
4	6	3-02 2	S653E	STR		3-02 2									
						(THREAD 1 END FOR MECHANICAL SPLICER)									
6	5	7-02 4	PA501E	P1	0-05 4	1-04 2	0-10 2	1-10 0	0-05 2	2-03 2		1-05 0		0-11 0	
6	5	5-07 2	PA502E	P2		1-03 0	1-04 0	0-05 2	2-07 0			1-04 0		0-01 6	0-07 0
(PIER NO. 4, PHASE 3, WESTBOUND)															
20	6	15-09 2	S613E	STR		15-09 2									
						(THREAD 1 END FOR MECHANICAL SPLICER)									
20	6	3-09 0	S614E	STR		3-09 0									
						(THREAD 1 END FOR MECHANICAL SPLICER)									
34	5	4-06 0	S551E	16	2-00 0	0-08 4	0-08 4	1-01 0				0-09 2		0-09 2	
4	6	6-02 2	S652E	STR		6-02 2									
4	6	2-10 0	S661E	STR		2-10 0									
						(THREAD 1 END FOR MECHANICAL SPLICER)									
4	6	3-10 2	S662E	STR		3-10 2									
						(THREAD 1 END FOR MECHANICAL SPLICER)									
(PIER NO. 4, PHASE 3, EASTBOUND)															
20	6	4-09 0	S605E	31		1-07 0	3-02 0					0-04 4		3-01 2	4-08 2
20	6	21-09 0	S622E	31		9-10 4	11-10 4					0-03 4		11-10 4	21-09 0
						(THREAD END OF DIMENSION "C" FOR MECHANICAL SPLICER)									
46	5	4-06 0	S551E	16	2-00 0	0-08 4	0-08 4	1-01 0				0-09 2		0-09 2	
8	6	6-02 2	S652E	STR		6-02 2									
4	6	5-07 0	S671E	STR		5-07 0									
6	5	7-02 4	PA501E	P1	0-05 4	1-04 2	0-10 2	1-10 0	0-05 2	2-03 2		1-05 0		0-11 0	
6	5	5-07 2	PA502E	P2		1-03 0	1-04 0	0-05 2	2-07 0			1-04 0		0-01 6	0-07 0
(PIER NO. 4, PHASE 4)															
40	6	3-09 0	S614E	STR		3-09 0									
						(THREAD 1 END FOR MECHANICAL SPLICER)									
20	6	19-04 6	S631E	STR		19-04 6									
44	5	4-06 0	S551E	16	2-00 0	0-08 4	0-08 4	1-01 0				0-09 2		0-09 2	
8	6	6-02 2	S652E	STR		6-02 2									
4	6	2-04 0	S681E	STR		2-04 0									
						(THREAD 1 END FOR MECHANICAL SPLICER)									
6	5	8-06 0	PA503E	P3		3-00 0	2-06 0	3-00 0				2-08 0		1-05 0	
6	4	5-08 0	PA404E	P4	0-06 0	2-07 0	2-07 0								1-01 0
(PIER NO. 5, PHASE 2)															
20	6	27-01 0	S604E	STR		27-01 0									
						(THREAD 1 END FOR MECHANICAL SPLICER)									
20	6	4-09 0	S605E	31		1-07 0	3-02 0					0-04 4		3-01 2	4-08 2
58	5	4-06 0	S551E	16	2-00 0	0-08 4	0-08 4	1-01 0				0-09 2		0-09 2	
12	6	6-02 2	S652E	STR		6-02 2									
4	6	3-02 2	S653E	STR		3-02 2									
						(THREAD 1 END FOR MECHANICAL SPLICER)									
6	5	7-02 4	PA501E	P1	0-05 4	1-04 2	0-10 2	1-10 0	0-05 2	2-03 2		1-05 0		0-11 0	
6	5	5-07 2	PA502E	P2		1-03 0	1-04 0	0-05 2	2-07 0			1-04 0		0-01 6	0-07 0
(PIER NO. 5, PHASE 3, WESTBOUND)															
20	6	15-09 2	S613E	STR		15-09 2									
						(THREAD 1 END FOR MECHANICAL SPLICER)									
20	6	3-09 0	S614E	STR		3-09 0									
						(THREAD 1 END FOR MECHANICAL SPLICER)									
34	5	4-06 0	S551E	16	2-00 0	0-08 4	0-08 4	1-01 0				0-09 2		0-09 2	
4	6	6-02 2	S652E	STR		6-02 2									
4	6	2-10 0	S661E	STR		2-10 0									
						(THREAD 1 END FOR MECHANICAL SPLICER)									
4	6	3-10 2	S662E	STR		3-10 2									
						(THREAD 1 END FOR MECHANICAL SPLICER)									
(PIER NO. 5, PHASE 3, EASTBOUND)															
20	6	4-09 0	S605E	31		1-07 0	3-02 0					0-04 4		3-01 2	4-08 2
20	6	21-09 0	S622E	31		9-10 4	11-10 4					0-03 4		11-10 4	21-09 0
						(THREAD END OF DIMENSION "C" FOR MECHANICAL SPLICER)									
46	5	4-06 0	S551E	16	2-00 0	0-08 4	0-08 4	1-01 0				0-09 2		0-09 2	
8	6	6-02 2	S652E	STR		6-02 2									
4	6	5-07 0	S671E	STR		5-07 0									
6	5	7-02 4	PA501E	P1	0-05 4	1-04 2	0-10 2	1-10 0	0-05 2	2-03 2		1-05 0		0-11 0	
6	5	5-07 2	PA502E	P2		1-03 0	1-04 0	0-05 2	2-07 0			1-04 0		0-01 6	0-07 0
(PIER NO. 5, PHASE 4)															
40	6	3-09 0	S614E	STR		3-09 0									
						(THREAD 1 END FOR MECHANICAL SPLICER)									
20	6	19-04 6	S631E	STR		19-04 6									
44	5	4-06 0	S551E	16	2-00 0	0-08 4	0-08 4	1-01 0				0-09 2		0-09 2	
8	6	6-02 2	S652E	STR		6-02 2									
4	6	2-04 0	S681E	STR		2-04 0									
						(THREAD 1 END FOR MECHANICAL SPLICER)									
6	5	8-06 0	PA503E	P3		3-00 0	2-06 0	3-00 0				2-08 0		1-05 0	
6	4	5-08 0	PA404E	P4	0-06 0	2-07 0	2-07 0								1-01 0
APPROACH PAVEMENT JOINT															
(SOUTH APPROACH PAVEMENT, PHASE 1)															
28	5	4-05 2	D503E	20		1-01 6	3-03 4								
28	5	5-01 6	D504E	18	0-07 0	4-06 6							0-05 0		
4	5	26-09 4	SAP501E	STR		26-09 4									
						(THREAD 1 END FOR MECHANICAL SPLICER)									
(SOUTH APPROACH PAVEMENT, PHASE 3, WESTBOUND)															
17	5	4-05 2	D503E	20		1-01 6	3-03 4								
17	5	5-01 6	D504E	18	0-07 0	4-06 6							0-05 0		
4	5	15-04 4	SAP502E	STR		15-04 4									
4	5	2-08 0	SAP505E	STR		2-08 0									
						(THREAD 1 END FOR MECHANICAL SPLICER)									
(SOUTH APPROACH PAVEMENT, PHASE 3, EASTBOUND)															
23	5	4-05 2	D503E	20		1-01 6	3-03 4								
23	5	5-01 6	D504E	18	0-07 0	4-06 6							0-05 0		
4	5	21-06 2	SAP503E	31		11-08 6	9-09 4					0-02 6		9-09 4	21-06 2
						(THREAD END OF DIMENSION "B" FOR MECHANICAL SPLICER)									

* DENOTES AVERAGE LENGTH

NOTES:

1. STANDARD BAR BENDS INCLUDE ONLY TYPES 1-32, SI-SI2, AND TI-TI6.
2. ALL DIMENSIONS ARE OUT-TO-OUT OF BAR EXCEPT "A" AND "G" ON STANDARD 180° AND 135° HOOKS.
3. "J" DIMENSIONS ON 180° HOOKS TO BE SHOWN ONLY WHERE NECESSARY TO RESTRICT HOOK SIZE, OTHERWISE STANDARD HOOKS ARE TO BE USED.
4. WHERE "J" IS NOT SHOWN, "J" WILL BE KEPT EQUAL TO OR LESS THAN "H" ON TRUSS BARS. WHERE "J" CAN EXCEED "H", IT SHOULD BE SHOWN.
5. "H" DIMENSIONS STIRRUPS TO BE SHOWN WHERE NECESSARY TO FIT WITHIN CONCRETE.
6. UNLESS OTHERWISE NOTED, DIAMETER "D" IS THE SAME FOR ALL BENDS AND HOOKS ON A BAR.
7. WHERE SLOPE DIFFERS FROM 45° DIMENSIONS, "H" AND "K" MUST BE SHOWN.
8. WHERE BARS ARE TO BE BENT MORE ACCURATELY THAN STANDARD BENDING TOLERANCES, BENDING DIMENSIONS WHICH REQUIRE CLOSER FABRICATION SHOULD HAVE LIMITS INDICATED.
9. FIGURES IN CIRCLES SHOW TYPES.
10. FOR RECOMMENDED DIAMETER "D", OF BENDS, HOOKS, ETC., SEE 'CRSI' OR 'ACI' TABLES.
11. TYPE SI-SI2, TI-TI6 APPLY TO BAR SIZES #3 THROUGH #6.

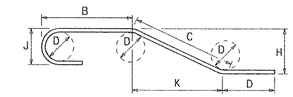

STANDARD BAR BENDS

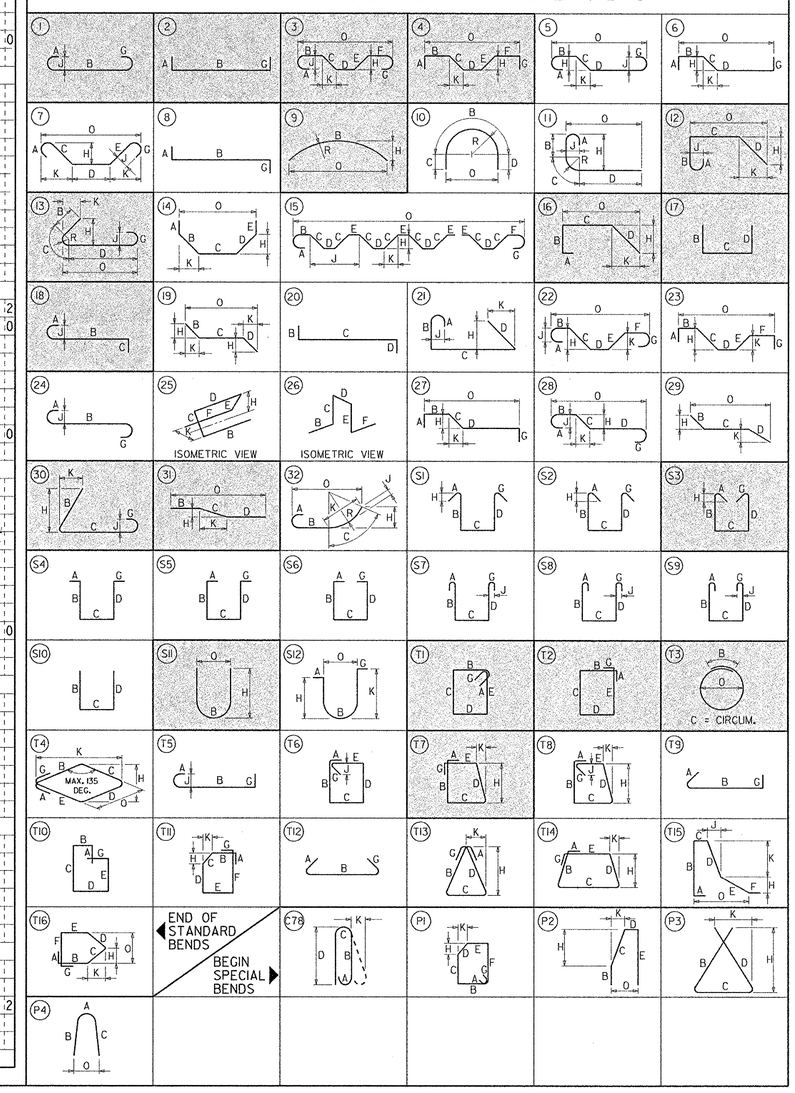

W.A.O. CHKD. J.T.L./F.J.O. DESIGN W.R.A. PREL. TRACING

M:\31303\4\BR03br715.dgn

(1) MARK NUMBER WITH SUFFIX 'E' DENOTES EPOXY COATED REINFORCING STEEL.

(2) MARK 'LOCATION PREFIXES' ARE AS FOLLOWS: (X)NAS = NORTH APPROACH SLAB, (X)SAS = SOUTH APPROACH SLAB, (X)D = DOWEL, (X)PA = PARAPET, (X)S = SLAB, (X)NAP = NORTH APPROACH PAVEMENT, (X)SAP = SOUTH APPROACH PAVEMENT, (X)EP = ENDPOST - WHERE (X) DENOTES SPECIFIC LOCATION [IF APPLICABLE].

REINFORCING BAR LIST – IV

BR.1–715 018

CONTRACT	COUNTY	F.A.P. NO.	SHEET NO.	TOTAL SHTS.
22-074-09	NEW CASTLE	SEE TITLE SHEET	86	152

REHABILITATION OF BRIDGE NOS. 1–715, 1–715A, & 1–715D ON SR 273 OVER I–95

REVISIONS

SPECIFICATIONS					BENDING DIMENSIONS										
QTY.	SIZE	LENGTH	MARK	TYPE	A	B	C	D	E	F/R	G	H	J	K	O
(SOUTH APPROACH PAVEMENT, PHASE 4)															
21	5	4-05 2	D503E	20		1-01 6	3-03 4								
21	5	5-01 6	D504E	18	0-07 0	4-06 6							0-05 0		
4	5	16-07 4	SAP504E	STR		16-07 4									
4	5	2-08 0	SAP505E	STR		2-08 0									
						(THREAD 1 END FOR MECHANICAL SPLICER)									
(NORTH APPROACH PAVEMENT, PHASE 2)															
28	5	4-05 2	D503E	20		1-01 6	3-03 4								
28	5	5-01 6	D504E	18	0-07 0	4-06 6							0-05 0		
4	5	26-09 4	NAP501E	STR		26-09 4									
						(THREAD 1 END FOR MECHANICAL SPLICER)									
(NORTH APPROACH PAVEMENT, PHASE 3, WESTBOUND)															
17	5	4-05 2	D503E	20		1-01 6	3-03 4								
17	5	5-01 6	D504E	18	0-07 0	4-06 6							0-05 0		
4	5	15-04 4	NAP502E	STR		15-04 4									
4	5	2-08 0	NAP505E	STR		2-08 0									
						(THREAD 1 END FOR MECHANICAL SPLICER)									
(NORTH APPROACH PAVEMENT, PHASE 3, EASTBOUND)															
23	5	4-05 2	D503E	20		1-01 6	3-03 4								
23	5	5-01 6	D504E	18	0-07 0	4-06 6							0-05 0		
4	5	21-06 2	NAP503E	31		11-08 6	9-09 4					0-02 6		9-09 4	21-06 2
						(THREAD END OF DIMENSION "B" FOR MECHANICAL SPLICER)									
(NORTH APPROACH PAVEMENT, PHASE 4)															
21	5	4-05 2	D503E	20		1-01 6	3-03 4								
21	5	5-01 6	D504E	18	0-07 0	4-06 6							0-05 0		
4	5	16-07 4	NAP504E	STR		16-07 4									
4	5	2-08 0	NAP505E	STR		2-08 0									
						(THREAD 1 END FOR MECHANICAL SPLICER)									

SPECIFICATIONS					BENDING DIMENSIONS										
QTY.	SIZE	LENGTH	MARK	TYPE	A	B	C	D	E	F/R	G	H	J	K	O

* DENOTES AVERAGE LENGTH

NOTES:

1. STANDARD BAR BENDS INCLUDE ONLY TYPES 1-32, S1-S12, AND T1-T16.
2. ALL DIMENSIONS ARE OUT-TO-OUT OF BAR EXCEPT "A" AND "G" ON STANDARD 180° AND 135° HOOKS.
3. "J" DIMENSIONS ON 180° HOOKS TO BE SHOWN ONLY WHERE NECESSARY TO RESTRICT HOOK SIZE, OTHERWISE STANDARD HOOKS ARE TO BE USED.
4. WHERE "J" IS NOT SHOWN, "J" WILL BE KEPT EQUAL TO OR LESS THAN "H" ON TRUSS BARS. WHERE "J" CAN EXCEED "H", IT SHOULD BE SHOWN.
5. "H" DIMENSIONS STIRRUPS TO BE SHOWN WHERE NECESSARY TO FIT WITHIN CONCRETE.
6. UNLESS OTHERWISE NOTED, DIAMETER "D" IS THE SAME FOR ALL BENDS AND HOOKS ON A BAR.
7. WHERE SLOPE DIFFERS FROM 45° DIMENSIONS, "H" AND "K" MUST BE SHOWN.
8. WHERE BARS ARE TO BE BENT MORE ACCURATELY THAN STANDARD BENDING TOLERANCES, BENDING DIMENSIONS WHICH REQUIRE CLOSER FABRICATION SHOULD HAVE LIMITS INDICATED.
9. FIGURES IN CIRCLES SHOW TYPES.
10. FOR RECOMMENDED DIAMETER "D", OF BENDS, HOOKS, ETC., SEE 'CRSI' OR 'ACI' TABLES.
11. TYPE S1-S12, T1-T16 APPLY TO BAR SIZES #3 THROUGH #6.

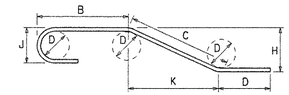

STANDARD BAR BENDS

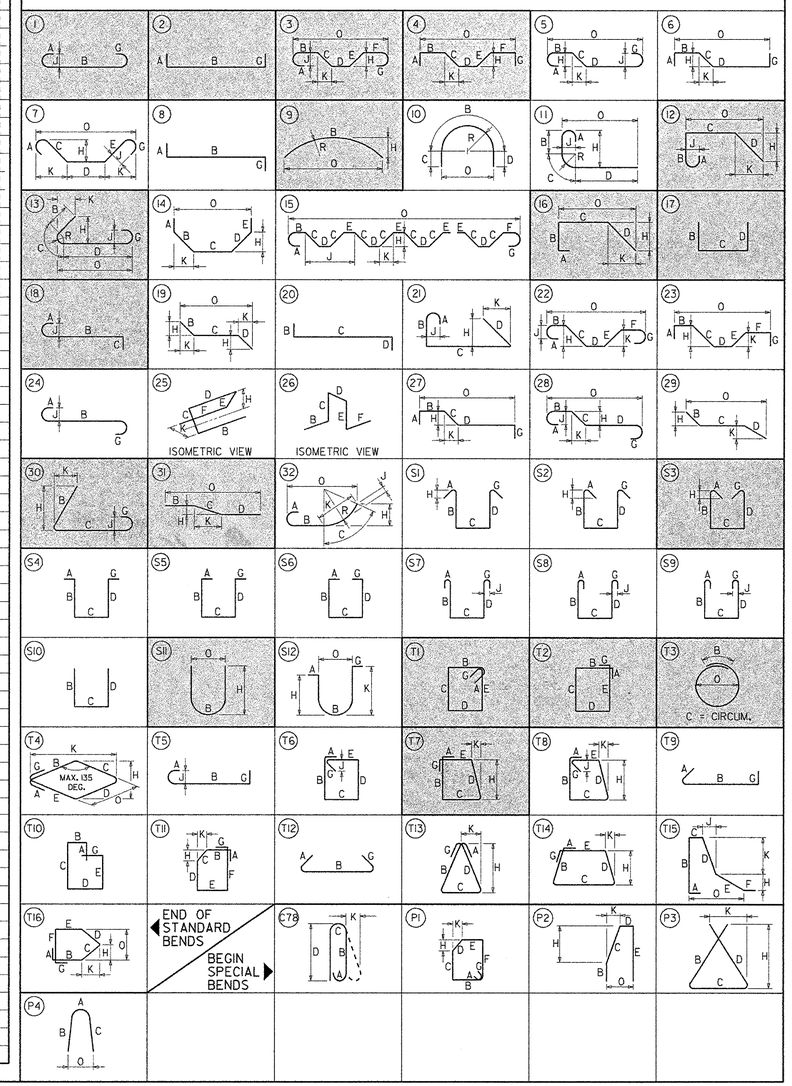

PREL. TRACING ____ W.R.A. ____ DESIGN ____ J.T.L./F.J.O. ____ CHKD. ____ W.A.C. ____

M:\313031A\BR04br715.dgn

GENERAL PLAN AND ELEVATION

BR. 1-715A 6048	CONTRACT	COUNTY	F.A.P. NO.	SHEET NO.	TOTAL SHTS.
	22-074-09	NEW CASTLE	SEE TITLE SHEET	87	152

REHABILITATION OF BRIDGE NOS. 1-715, 1-715A, & 1-715D ON SR 273 OVER I-95

REVISIONS

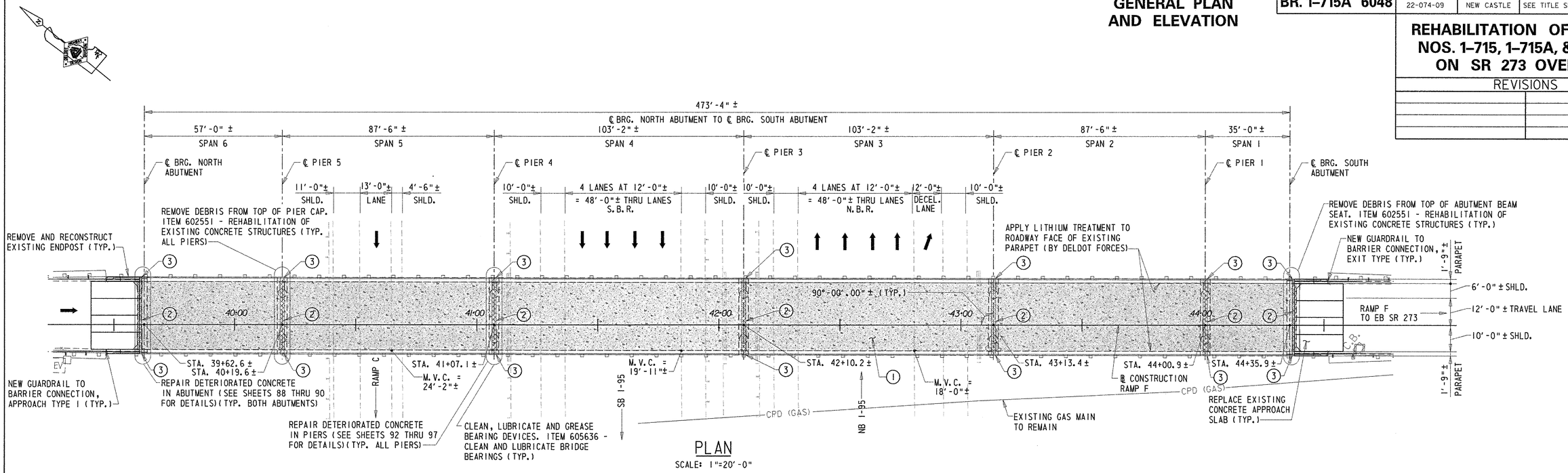

PLAN

SCALE: 1"=20'-0"

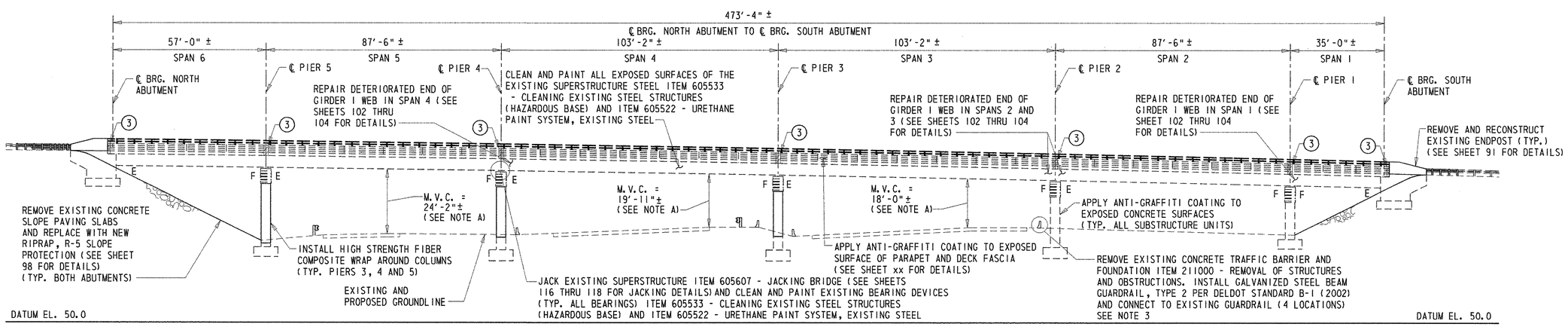

ELEVATION

SCALE: 1"=20'-0"

LEGEND:

1. REMOVE EXISTING 2"± BITUMINOUS OVERLAY AND ½" OF EXISTING CONCRETE DECK SLAB, APPLY LITHIUM TREATMENT TO EXPOSED MILLED DECK SURFACE (BY DELDOT FORCES). PLACE NEW 2½" MICRO-SILICA MODIFIED CONCRETE OVERLAY OR LATEX CONCRETE OVERLAY.
2. FULL DEPTH REMOVAL OF EXISTING CONCRETE DECK AND ROADWAY JOINT ASSEMBLY AND PLACE NEW CONCRETE DECK AND STRIP SEAL ASSEMBLY.
3. REMOVE A PORTION OF THE EXISTING PARAPET AND PLACE NEW PARAPET AND STRIP SEAL ASSEMBLY.

NOTE A:

FOR LOCATION OF MINIMUM VERTICAL CLEARANCE (M.V.C.) SEE PLAN VIEW

NOTES:

1. THE DECK MILLINGS SHALL BE PLACED IN AREAS LACKING VEGETATION UNDER THE BRIDGE SUPERSTRUCTURE AS DIRECTED BY THE ENGINEER. LOCATION TO BE DETERMINED BY THE ENGINEER. COST WILL BE INCIDENTAL TO THE CONTRACT.
2. SEE 'PROJECT NOTES' FOR INFORMATION REGARDING SCHEDULING OF LITHIUM TREATMENT APPLICATION.
3. COST FOR CONNECTING THE NEW STEEL BEAM GUARDRAIL TO THE EXISTING STEEL BEAM GUARDRAIL WILL BE INCIDENTAL TO ITEM 720051 - GALVANIZED STEEL BEAM GUARDRAIL, TYPE 2.

PREL. TRACING ____ W.R.A. ____ DESIGN ____ J.T.L./F.J.O. ____ CHKD. ____ W.A.G. ____

M:\3130314\pe01br715a.dgn

SUBSTRUCTURE REPAIRS – SOUTH ABUTMENT

BR. 1-715A 6048	CONTRACT	COUNTY	F.A.P. NO.	SHEET NO.	TOTAL SHTS.
	22-074-09	NEW CASTLE	SEE TITLE SHEET	88	152

REHABILITATION OF BRIDGE NOS. 1-715, 1-715A, & 1-715D ON SR 273 OVER I-95

REVISIONS

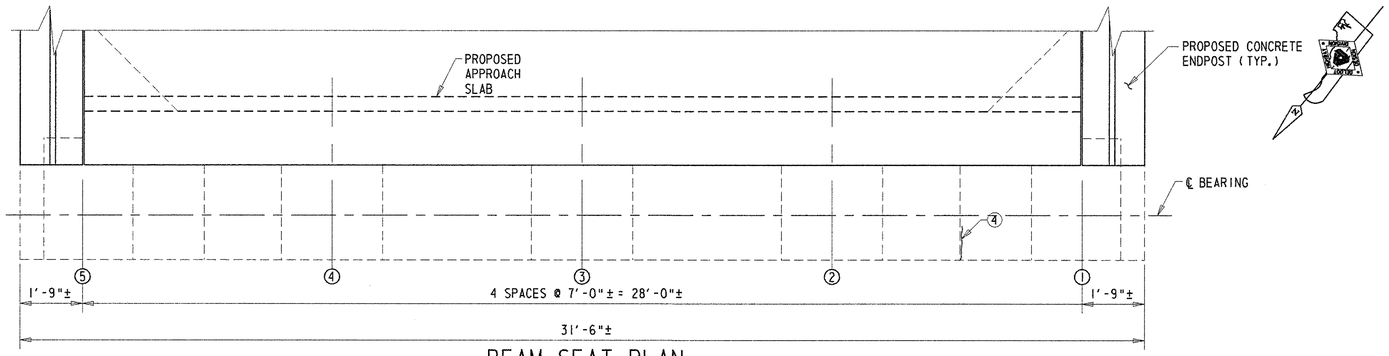

BEAM SEAT PLAN

SCALE: ½"=1'-0"

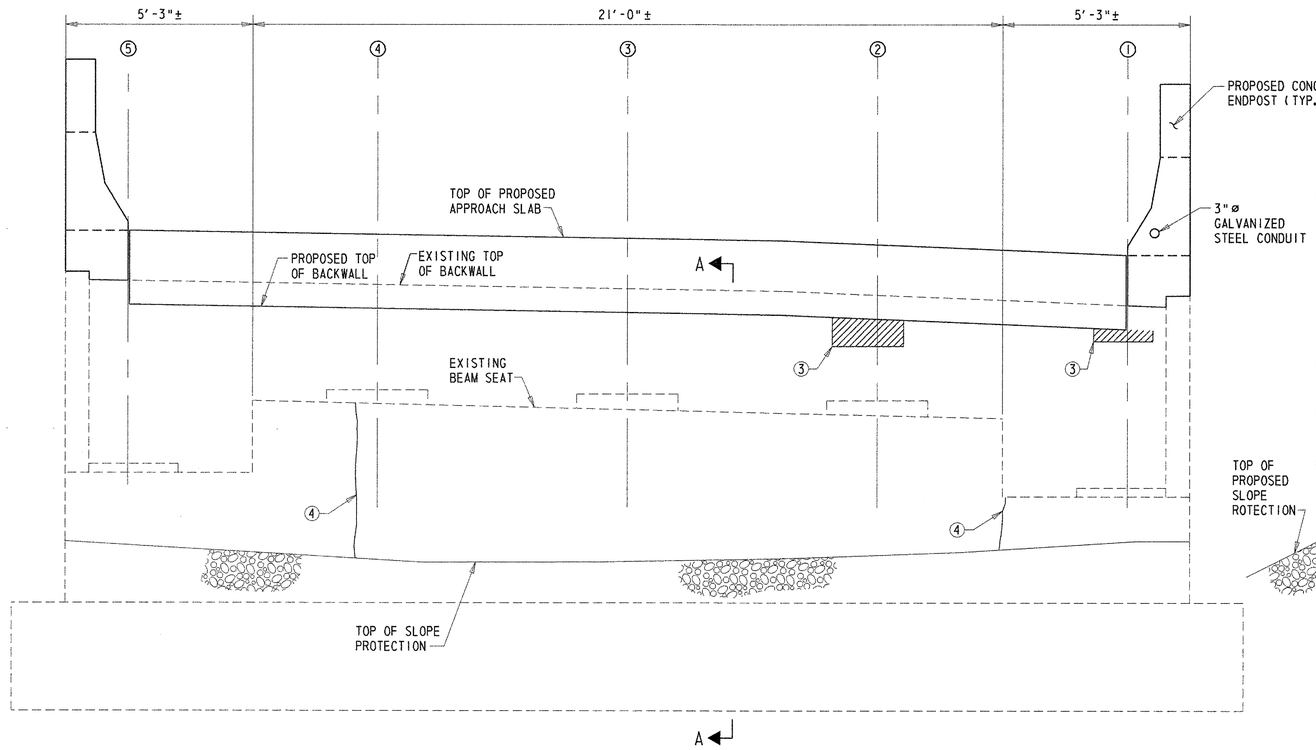

ELEVATION

SCALE: ½"=1'-0"

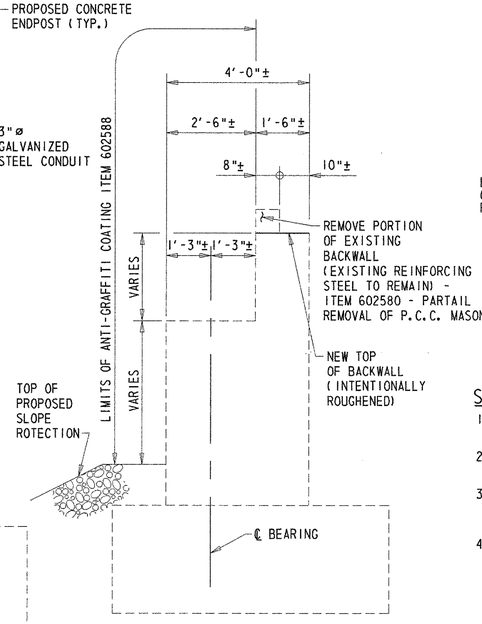

SECTION A-A

SCALE: ½"=1'-0"

NOTE:

TOP OF PROPOSED APPROACH SLAB NOT SHOWN FOR CLARITY IN SECTION A-A.

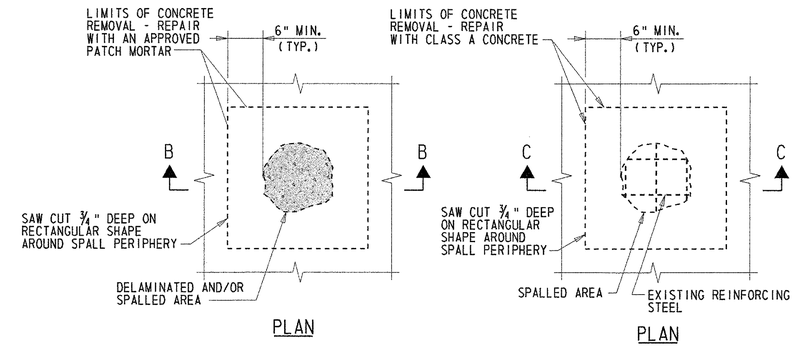

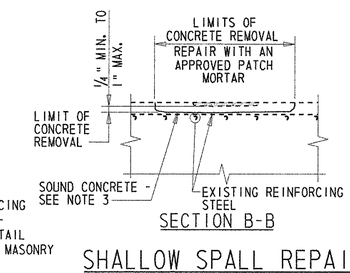

SHALLOW SPALL REPAIR

NOT TO SCALE

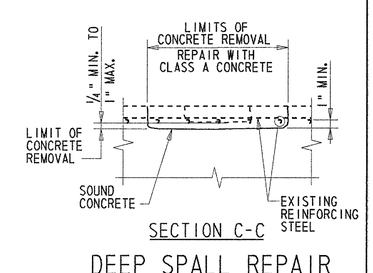

DEEP SPALL REPAIR

NOT TO SCALE

SPALL REPAIR NOTES:

1. PAYMENT FOR SHALLOW SPALL REPAIR WILL BE MADE UNDER ITEM 602551 - REHABILITATION OF EXISTING CONCRETE STRUCTURES.
2. PAYMENT FOR DEEP SPALL REPAIR WILL BE MADE UNDER ITEM 602586 - REHABILITATION OF CONCRETE STRUCTURE.
3. IF SOUND CONCRETE IS NOT ENCOUNTERED BEFORE EXPOSING EXISTING REINFORCING STEEL, USE 'DEEP SPALL REPAIR' DETAIL. IF SOUND CONCRETE IS NOT ENCOUNTERED AT A DEPTH OF 6", ALL REMOVAL OPERATIONS SHALL STOP AND THE ENGINEER SHALL BE NOTIFIED IMMEDIATELY.
4. WHEREVER POSSIBLE, ALL EXPOSED EXISTING REINFORCING STEEL SHALL BE INCORPORATED INTO THE FINISHED STRUCTURE IN ACCORDANCE WITH THE FOLLOWING:
   - (A) IN THE OPINION OF THE ENGINEER, IF THE REINFORCING STEEL HAS LOST 20 PERCENT OR MORE OF ITS ORIGINAL CROSS SECTION AREA, IT SHALL BE CUT OUT. A NEW BAR OF THE SAME DIAMETER SHALL BE PROVIDED AND PLACED SO AS TO HAVE THE MINIMUM REQUIRED LAP AT EACH END OF THE NEW BAR.
   - (B) WHERE THE REQUIRED BAR LAP LENGTH IS AVAILABLE, IT SHALL BE USED AS A DOWEL.
   - (C) WHERE THE REQUIRED BAR LAP IS NOT AVAILABLE OR LIMITS OF CONCRETE REMOVAL TO ACHIEVE BAR LAP ARE TOO GREAT, A STANDARD HOOK OR A WELDED OR APPROVED MECHANICAL SPLICE SHALL BE PROVIDED. THE ENGINEER SHALL BE THE SOLE JUDGE WHETHER REINFORCING STEEL IS TO BE REUSED OR REPLACED.
   - (D) IN THE EVENT THAT THE NEW BAR IS UNABLE TO BE WELDED OR MECHANICALLY SPLICED TO THE EXISTING REINFORCING STEEL, A NEW BAR SHALL BE DRILLED AND GROUTED ADJACENT TO THE EXISTING BAR LOCATION. PAYMENT FOR THE DRILLING AND GROUTING WILL BE MADE UNDER ITEM 602579 - DRILLING HOLES AND INSTALLING DOWELS. PAYMENT FOR THE NEW REINFORCING STEEL BAR WILL BE MADE UNDER ITEM 603500 - REPAIRING BAR REINFORCEMENT.
5. ALL EXISTING REINFORCING STEEL TO BE INCORPORATED INTO THE FINISHED CONSTRUCTION SHALL BE BLAST CLEANED TO REMOVE ALL CONCRETE, DEBRIS AND RUST. PAYMENT SHALL BE INCIDENTAL TO ITEM 602586 - REHABILITATION OF CONCRETE STRUCTURE.
6. ALL NEW REINFORCING STEEL REQUIRED TO COMPLETE CONCRETE REPAIRS SHALL BE NON-EPOXY COATED. PAYMENT WILL BE MADE UNDER ITEM 603500 - REPAIRING BAR REINFORCEMENT.
7. SIZE, TYPE, AND LOCATION OF EXISTING REINFORCING STEEL NOT VERIFIED.

REPAIR LEGEND

1. REPAIR DELAMINATED CONCRETE AND/OR SHALLOW SPALL - ITEM 602551.
2. REPAIR SHALLOW SPALL - 602551.
3. REPAIR DEEP SPALL - ITEM 602586.
4. SEAL VERTICAL AND/OR DIAGONAL CRACKS BY EPOXY INJECTION - ITEM 602611.

NOTES:

1. ABUTMENT SPALL REPAIR LOCATIONS SHOWN GRAPHICALLY. REPAIR AREAS ARE BASED ON FIELD INSPECTION OBSERVATIONS TAKEN 5/02. THE CONCRETE REPAIR QUANTITIES FOR ITEMS 602551 AND 602586, AS SHOWN ON THE QUANTITY SUMMARY SHEET, HAVE BEEN INCREASED BY 25% TO ACCOUNT FOR LATENT DEFECTS THAT MAY HAVE OCCURRED SINCE THE 5/02 INSPECTION. ALL PROPOSED REPAIR LOCATIONS SHALL BE VERIFIED BY THE CONTRACTOR IN THE PRESENCE OF THE ENGINEER PRIOR TO BEGINNING ANY WORK. REFERENCE APPLICABLE SPECIAL PROVISIONS. THE ACTUAL LIMITS OF THE REPAIRS SHALL BE DEFINED AND DOCUMENTED BY THE ENGINEER. THE CONTRACTOR SHALL PROVIDE ACCESS TO THE REPAIR AREAS AT ALL TIMES DURING CONSTRUCTION.
2. LENGTH OF CONCRETE CRACKS SHOWN GRAPHICALLY. REPAIR LENGTH BASED ON FIELD INSPECTION OBSERVATIONS TAKEN 5/02. THE REPAIR OF CONCRETE STRUCTURE BY EPOXY INJECTION FOR ITEM 602611, AS SHOWN ON SUMMARY QUANTITY SHEET, HAS BEEN INCREASED BY 25% TO ACCOUNT FOR LATENT DEFECTS THAT MAY HAVE OCCURRED SINCE THE 5/02 INSPECTION. ALL PROPOSED REPAIR LOCATIONS SHALL BE VERIFIED BY THE CONTRACTOR IN THE PRESENCE OF THE ENGINEER PRIOR TO BEGINNING ANY WORK. REFERENCE APPLICABLE SPECIAL PROVISIONS. THE ACTUAL LIMITS OF THE REPAIRS SHALL BE DEFINED AND DOCUMENTED BY THE ENGINEER. THE CONTRACTOR SHALL PROVIDE ACCESS TO THE REPAIR AREAS AT ALL TIMES DURING CONSTRUCTION.
3. APPLY ANTI-GRAFFITI COATING TO ALL EXPOSED SURFACES OF THE ABUTMENT. PAYMENT FOR THIS WORK WILL BE MADE UNDER ITEM 602588 - ANTI-GRAFFITI COATING.

LEGEND

- DEEP SPALL REPAIR
- CRACK REPAIR
- DELAMINATED CONCRETE AND/OR SHALLOW SPALL REPAIR

PREL. TRACING W.R.A. DESIGN J.T.L./F.J.O. CHKD. W.A.G.

M:\313031\ab01br715a.dgn

SUBSTRUCTURE REPAIRS – NORTH ABUTMENT

BR. 1-715A 6048	CONTRACT	COUNTY	F.A.P. NO.	SHEET NO.	TOTAL SHTS.
	22-074-09	NEW CASTLE	SEE TITLE SHEET	89	152

REHABILITATION OF BRIDGE NOS. 1-715, 1-715A, & 1-715D ON SR 273 OVER I-95

REVISIONS

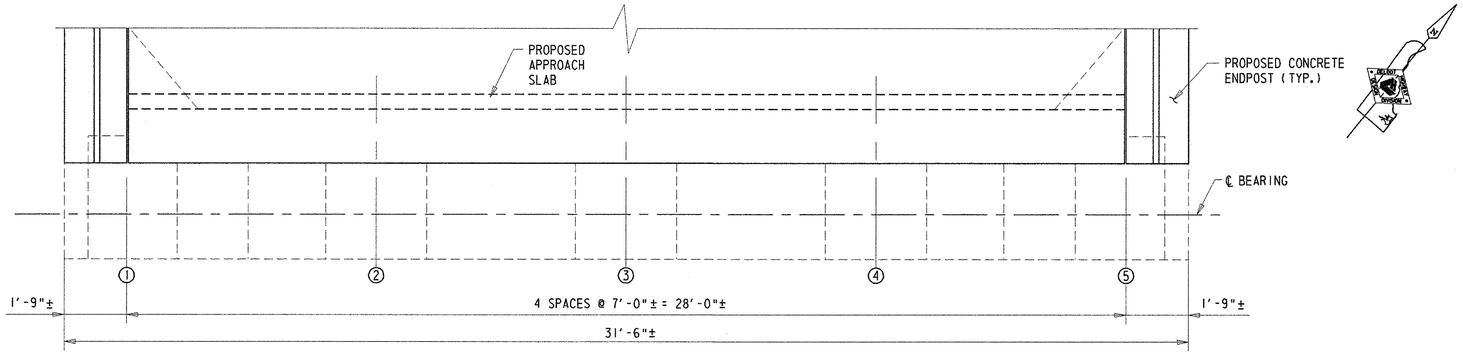

BEAM SEAT PLAN

SCALE: ½"=1'-0"

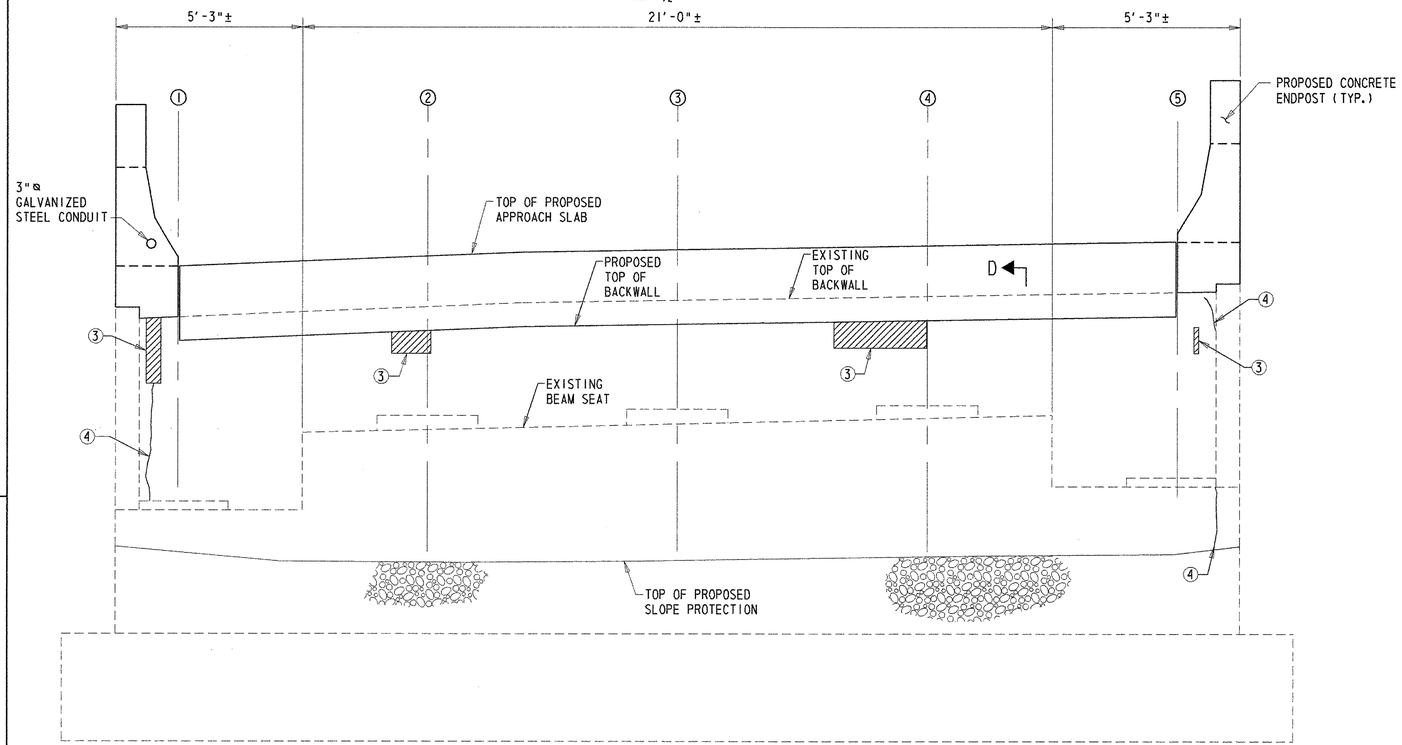

ELEVATION

SCALE: ½"=1'-0"

D

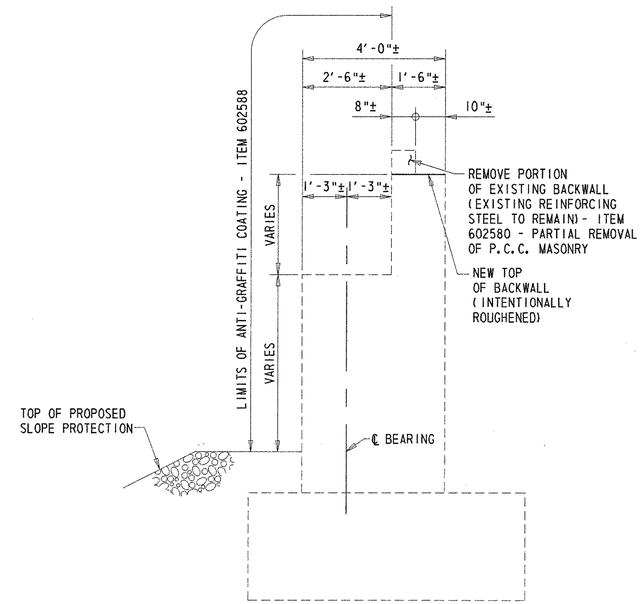

SECTION D-D

SCALE: ½"=1'-0"

NOTE:

TOP OF APPROACH SLAB NOT SHOWN FOR CLARITY IN SECTION D-D.

REPAIR LEGEND

1. REPAIR DELAMINATED CONCRETE AND/OR SHALLOW SPALL - ITEM 602551.
2. REPAIR SHALLOW SPALL - ITEM 602551.
3. REPAIR DEEP SPALL - ITEM 602586.
4. SEAL VERTICAL AND/OR DIAGONAL CRACKS BY EPOXY INJECTION - ITEM 602611.

NOTES:

1. ABUTMENT SPALL REPAIR LOCATIONS SHOWN GRAPHICALLY. REPAIR AREAS ARE BASED ON FIELD INSPECTION OBSERVATIONS TAKEN 5/02. THE CONCRETE REPAIR QUANTITIES FOR ITEMS 602551 AND 602586, AS SHOWN ON THE QUANTITY SUMMARY SHEET, HAVE BEEN INCREASED BY 25% TO ACCOUNT FOR LATENT DEFECTS THAT MAY HAVE OCCURRED SINCE THE 5/02 INSPECTION. ALL PROPOSED REPAIR LOCATIONS SHALL BE VERIFIED BY THE CONTRACTOR IN THE PRESENCE OF THE ENGINEER PRIOR TO BEGINNING ANY WORK. REFERENCE APPLICABLE SPECIAL PROVISIONS. THE ACTUAL LIMITS OF THE REPAIRS SHALL BE DEFINED AND DOCUMENTED BY THE ENGINEER. THE CONTRACTOR SHALL PROVIDE ACCESS TO THE REPAIR AREAS AT ALL TIMES DURING CONSTRUCTION.
2. LENGTH OF CONCRETE CRACKS SHOWN GRAPHICALLY. REPAIR LENGTH BASED ON FIELD INSPECTION OBSERVATIONS TAKEN 5/02. THE REPAIR OF CONCRETE STRUCTURE BY EPOXY INJECTION FOR ITEM 602611, AS SHOWN ON SUMMARY QUANTITY SHEET, HAS BEEN INCREASED BY 25% TO ACCOUNT FOR LATENT DEFECTS THAT MAY HAVE OCCURRED SINCE THE 5/02 INSPECTION. ALL PROPOSED REPAIR LOCATIONS SHALL BE VERIFIED BY THE CONTRACTOR IN THE PRESENCE OF THE ENGINEER PRIOR TO BEGINNING ANY WORK. REFERENCE APPLICABLE SPECIAL PROVISIONS. THE ACTUAL LIMITS OF THE REPAIRS SHALL BE DEFINED AND DOCUMENTED BY THE ENGINEER. THE CONTRACTOR SHALL PROVIDE ACCESS TO THE REPAIR AREAS AT ALL TIMES DURING CONSTRUCTION.
3. APPLY ANTI-GRAFFITI COATING TO ALL EXPOSED SURFACES OF THE ABUTMENT. PAYMENT FOR THIS WORK WILL BE MADE UNDER ITEM 602588 - ANTI-GRAFFITI COATING.

LEGEND

DEEP SPALL REPAIR | CRACK REPAIR | DELAMINATED CONCRETE AND/OR SHALLOW SPALL REPAIR

PREL. TRACING W.R.A. DESIGN J.T.L./F.J.O. CHKD. W.A.G.

M:\3130314\ab02br715a.dgn

SUBSTRUCTURE REPAIRS - WINGWALLS

BR. 1-715A 6048	CONTRACT	COUNTY	F.A.P. NO.	SHEET NO.	TOTAL SHTS.
	22-074-09	NEW CASTLE	SEE TITLE SHEET	90	152

REHABILITATION OF BRIDGE NOS. 1-715, 1-715A, & 1-715D ON SR 273 OVER I-95

REVISIONS

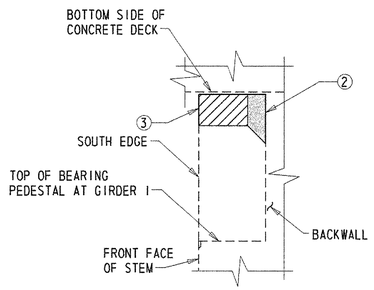

NORTHWEST CHEEKWALL - INTERIOR ELEVATION

SCALE: 3/8"=1'-0"

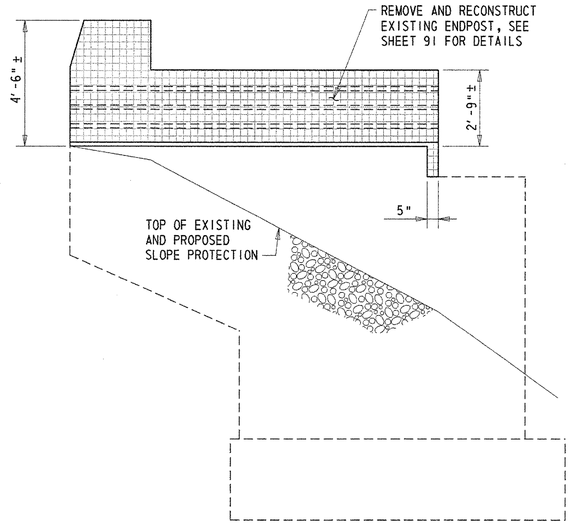

NORTHWEST WINGWALL - ELEVATION

SCALE: 3/8"=1'-0"

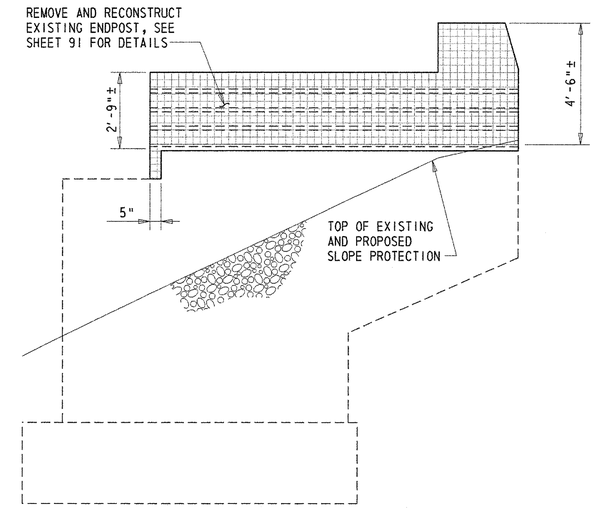

NORTHEAST WINGWALL - ELEVATION

SCALE: 3/8"=1'-0"

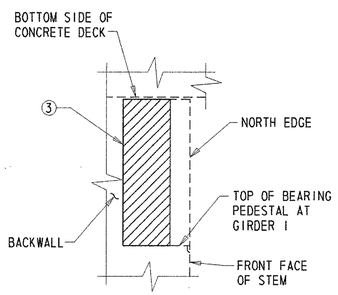

SOUTHWEST CHEEKWALL - INTERIOR ELEVATION

SCALE: 3/8"=1'-0"

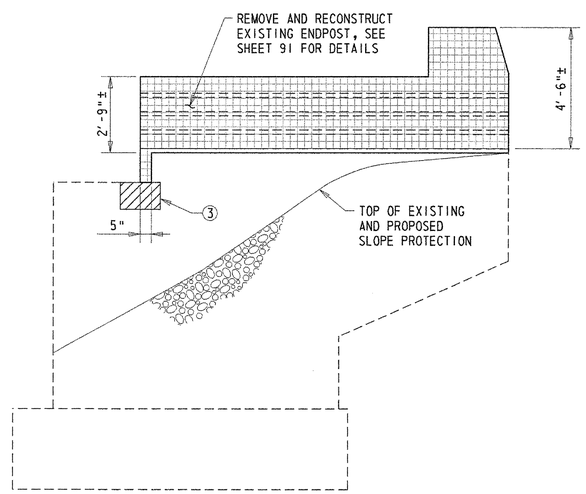

SOUTHWEST WINGWALL - ELEVATION

SCALE: 3/8"=1'-0"

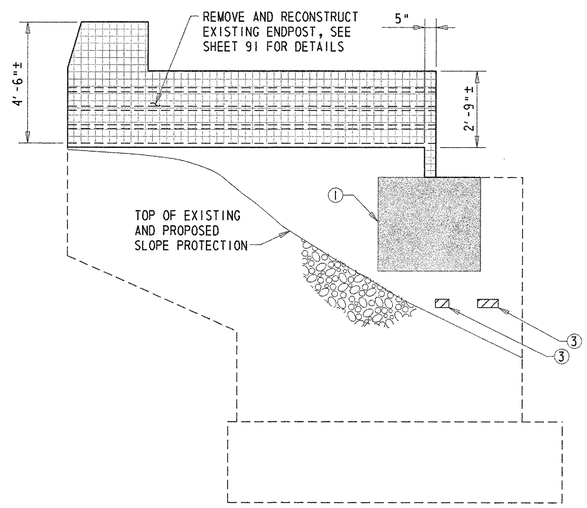

SOUTHEAST WINGWALL - ELEVATION

SCALE: 3/8"=1'-0"

REPAIR LEGEND

① REPAIR DELAMINATED CONCRETE AND/OR SHALLOW SPALL - ITEM 602551.

② REPAIR SHALLOW SPALL - ITEM 602551.

③ REPAIR DEEP SPALL - ITEM 602586.

④ SEAL VERTICAL AND/OR DIAGONAL CRACKS BY EPOXY INJECTION - ITEM 602611.

NOTES:

1. WINGWALL SPALL REPAIR LOCATIONS SHOWN GRAPHICALLY. REPAIR AREAS ARE BASED ON FIELD INSPECTION OBSERVATIONS TAKEN 5/02. THE CONCRETE REPAIR QUANTITIES FOR ITEMS 602551 AND 602586, AS SHOWN ON THE QUANTITY SUMMARY SHEET, HAVE BEEN INCREASED BY 25% TO ACCOUNT FOR LATENT DEFECTS THAT MAY HAVE OCCURRED SINCE THE 5/02 INSPECTION. ALL PROPOSED REPAIR LOCATIONS SHALL BE VERIFIED BY THE CONTRACTOR IN THE PRESENCE OF THE ENGINEER PRIOR TO BEGINNING ANY WORK. REFERENCE APPLICABLE SPECIAL PROVISIONS. THE ACTUAL LIMITS OF THE REPAIRS SHALL BE DEFINED AND DOCUMENTED BY THE ENGINEER. THE CONTRACTOR SHALL PROVIDE ACCESS TO THE REPAIR AREAS AT ALL TIMES DURING CONSTRUCTION.

2. LENGTH OF CONCRETE CRACKS SHOWN GRAPHICALLY. REPAIR LENGTH BASED ON FIELD INSPECTION OBSERVATIONS TAKEN 5/02. THE REPAIR OF CONCRETE STRUCTURE BY EPOXY INJECTION FOR ITEM 602611, AS SHOWN ON SUMMARY QUANTITY SHEET, HAS BEEN INCREASED BY 25% TO ACCOUNT FOR LATENT DEFECTS THAT MAY HAVE OCCURRED SINCE THE 5/02 INSPECTION. ALL PROPOSED REPAIR LOCATIONS SHALL BE VERIFIED BY THE CONTRACTOR IN THE PRESENCE OF THE ENGINEER PRIOR TO BEGINNING ANY WORK. REFERENCE APPLICABLE SPECIAL PROVISIONS. THE ACTUAL LIMITS OF THE REPAIRS SHALL BE DEFINED AND DOCUMENTED BY THE ENGINEER. THE CONTRACTOR SHALL PROVIDE ACCESS TO THE REPAIR AREAS AT ALL TIMES DURING CONSTRUCTION.

3. APPLY ANTI-GRAFFITI COATING TO ALL EXPOSED SURFACES OF THE WINGWALLS. PAYMENT FOR THIS WORK WILL BE MADE UNDER ITEM 602588 - ANTI-GRAFFITI COATING.

4. TWO-STRAND RAILING NOT SHOWN FOR CLARITY.

LEGEND

ENDPOST RECONSTRUCTION | DEEP SPALL REPAIR | CRACK REPAIR | DELAMINATED CONCRETE AND/OR SHALLOW SPALL REPAIR

PREL. TRACING ____ W.R.A. ____ DESIGN ____ J.T.L./F.J.O. ____ CHKD. ____ W.A.G.

M:\3\30314\ww01br715a.dgn

ENDPOST MODIFICATIONS

BR. 1-715A 6048	CONTRACT	COUNTY	F.A.P. NO.	SHEET NO.	TOTAL SHTS.
	22-074-09	NEW CASTLE	SEE TITLE SHEET	91	152

REHABILITATION OF BRIDGE NOS. 1-715, 1-715A, & 1-715D ON SR 273 OVER I-95

REVISIONS

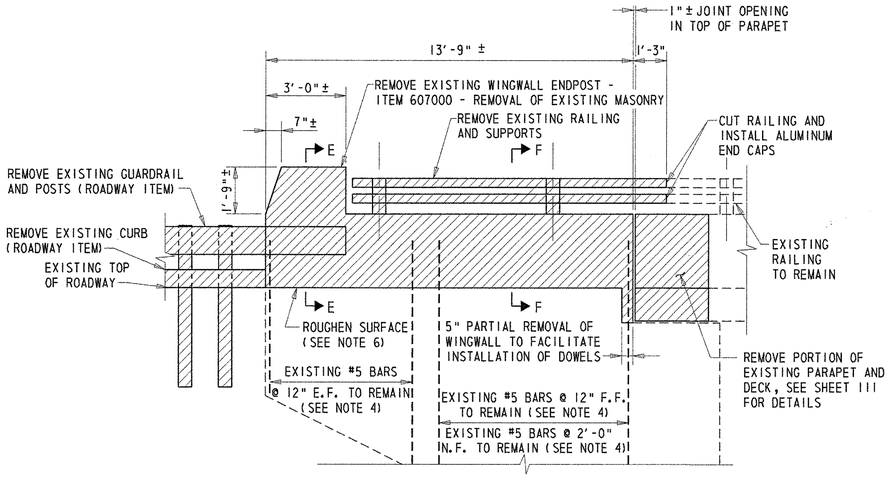

EXISTING ENDPOST ELEVATION (INTERIOR) - REMOVAL LIMITS

SCALE: 3/8"=1'-0"

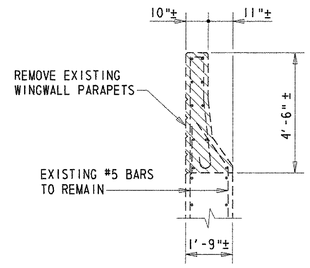

SECTION E-E

SCALE: 3/8"=1'-0"

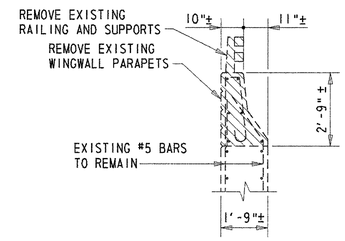

SECTION F-F

SCALE: 3/8"=1'-0"

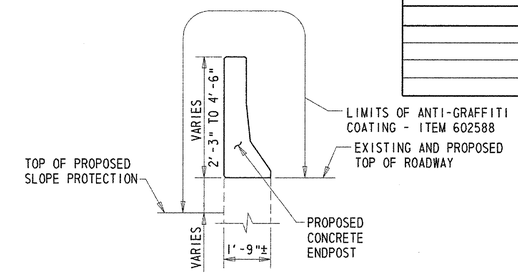

ANTI-GRAFFITI COATING - TYPICAL SECTION

SCALE: 3/8"=1'-0"

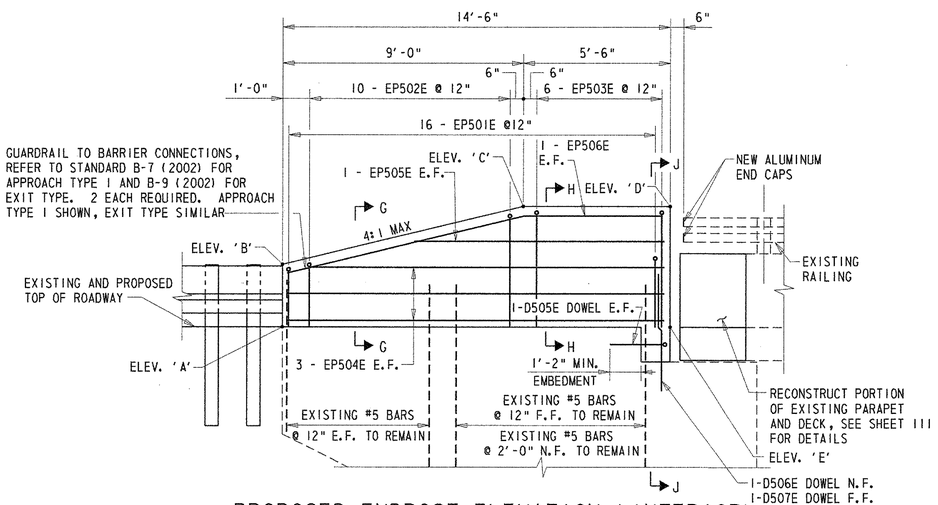

PROPOSED ENDPOST ELEVATION (INTERIOR)

SCALE: 3/8"=1'-0"

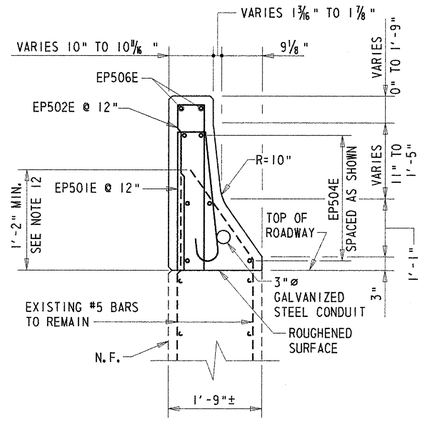

SECTION G-G

SCALE: 3/4"=1'-0"

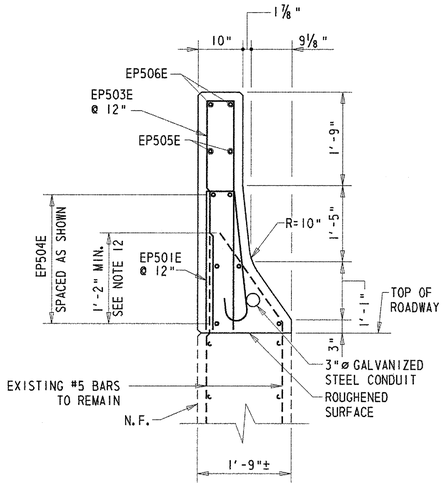

SECTION H-H

SCALE: 3/4"=1'-0"

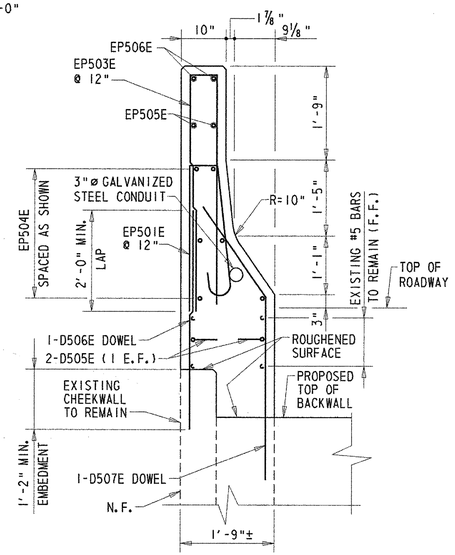

SECTION J-J

SCALE: 3/4"=1'-0"

ELEVATION SCHEDULE

	A		B		C		D		E	
LOCATION	STATION	ELEVATION	STATION	ELEVATION	STATION	ELEVATION	STATION	ELEVATION	STATION	ELEVATION
NORTHEAST	39+46.83	112.91	39+46.83	115.16	39+55.83	117.33	39+61.33	117.27	39+61.33	112.77
NORTHWEST	39+46.83	112.24	39+46.83	114.49	39+55.83	116.66	39+61.33	116.60	39+61.33	112.10
SOUTHEAST	44+51.66	104.48	44+51.66	106.73	44+42.66	109.22	44+37.16	109.37	44+37.16	104.87
SOUTHWEST	44+51.66	103.81	44+51.66	106.06	44+42.66	108.55	44+37.16	108.70	44+37.16	104.20

NOTE:
ALL STATIONS AND ELEVATIONS ARE SHOWN FOR INFORMATIONAL PURPOSES ONLY AND SHALL BE FIELD SURVEYED PRIOR TO REMOVING AND RECONSTRUCTING THE ENDPOSTS. COST FOR FIELD SURVEY WILL BE INCLUDED UNDER ITEM 763501 - CONSTRUCTION ENGINEERING.

NOTES:

1. NORTHEAST WINGWALL SHOWN. NORTHWEST, SOUTHEAST, AND SOUTHWEST WINGWALLS SIMILAR.
2. TRAFFIC FACE OF PROPOSED ENDPOST TO MATCH EXISTING BRIDGE PARAPET. NO STRIATIONS SHALL BE CAST INTO THE REAR FACE OF THE CONCRETE ENDPOST.
3. COST FOR CUTTING AND REMOVING ALUMINUM RAILING AND INSTALLATION OF NEW ALUMINUM END CAPS WILL BE INCLUDED IN ITEM 607000 - REMOVAL OF EXISTING MASONRY.
4. ALL EXISTING EXPOSED REINFORCEMENT SHALL BE CLEANED, BLASTED AND EPOXY COATED. COST OF THIS ITEM TO BE INCLUDED IN ITEM 607000 - REMOVAL OF EXISTING MASONRY.
5. CONTRACTOR MAY BEND EXISTING REINFORCING STEEL TO PROVIDE MINIMUM COVER REQUIRED.
6. CLEAN AND APPLY EPOXY BONDING COMPOUND TO ALL REMOVAL AND ROUGHENED SURFACES. COST OF THIS ITEM SHALL BE INCLUDED IN ITEM 602017 - P.C.C. MASONRY, PARAPET, CLASS A.
7. APPLY ANTI-GRAFFITI COATING TO ALL SURFACES OF THE ENDPOST. PAYMENT FOR THIS WORK WILL BE MADE UNDER ITEM 602588 - ANTI-GRAFFITI COATING.
8. ANY EXISTING REINFORCING STEEL TO REMAIN THAT IS DAMAGED DURING THE REMOVAL OPERATIONS SHALL BE REPAIRED OR REPLACED AT THE SOLE EXPENSE OF THE CONTRACTOR.
9. IN THE OPINION OF THE ENGINEER, IF REINFORCING STEEL TO REMAIN EXHIBITS SECTION LOSS OF 20 PERCENT OR MORE OF ITS ORIGINAL CROSS SECTION AREA, IT SHALL BE CUT OUT AND A NEW BAR OF THE SAME DIAMETER SHALL BE INSTALLED. IF THE MINIMUM REQUIRED LAP IS NOT AVAILABLE THE NEW BAR SHALL BE WELDED OR AN APPROVED MECHANICAL SPLICE SHALL BE PROVIDED. THE ENGINEER SHALL BE THE SOLE JUDGE OF WHETHER REINFORCING STEEL IS TO BE REUSED OR REPLACED.
10. IN THE EVENT THAT THE NEW BAR IS UNABLE TO BE WELDED OR MECHANICALLY SPLICED TO THE EXISTING REINFORCING STEEL, A NEW EPOXY COATED BAR SHALL BE DRILLED AND GROUTED ADJACENT TO THE EXISTING BAR LOCATION. SEE DEVELOPMENT LENGTH TABLE ON SHEET 119 FOR EMBEDMENT OF NEW BAR INTO EXISTING STEM. PAYMENT FOR THE DRILLING AND GROUTING WILL BE MADE UNDER ITEM 602579 - DRILLING HOLES AND INSTALLING DOWELS. PAYMENT FOR THE NEW REINFORCING STEEL BAR WILL BE MADE UNDER ITEM 603500 - REPAIRING BAR REINFORCEMENT.
11. E.F. = EACH FACE
    F.F. = FAR FACE
    N.F. = NEAR FACE
12. EXISTING REINFORCING STEEL SHALL EXTEND THE MINIMUM DIMENSION SHOWN FROM THE ROUGHENED SURFACE. IN THE EVENT THAT THE REINFORCING STEEL DOES NOT HAVE ADEQUATE LENGTH, A NEW BAR SHALL BE DRILLED AND GROUTED ADJACENT TO THE EXISTING BAR LOCATION. PAYMENT FOR DRILLING AND GROUTING WILL BE MADE UNDER ITEM 602579 - DRILLING HOLES AND INSTALLING DOWELS. PAYMENT FOR THE NEW REINFORCING STEEL BAR WILL BE MADE UNDER ITEM 603500 - REPAIRING BAR REINFORCEMENT.
13. CONTRACTOR SHALL CONFIRM EXISTING REINFORCEMENT BARS PRIOR TO INSTALLING DOWELS.
14. GALVANIZED STEEL CONDUIT TO BE INSTALLED IN THE NORTHWEST AND SOUTHWEST ENDPOST ONLY. A GALVANIZED STEEL HANDBOX SHALL BE INSTALLED AT A LOCATION SO IT DOES NOT CONFLICT WITH GUARDRAIL ATTACHMENT. A CONDUIT SHALL BE EXTENDED FROM THE JUCTION BOX TO 1'-0" OUT FROM THE NEAR FACE OF THE ENDPOST 2'-6" BELOW GRADE AT A LOCATION TO AVOID GUARDRAIL POSTS. A CAP SHALL BE INSTALLED AT THE END OF THE CONDUIT. PAYMENT FOR THE GALVANIZED STEEL CONDUIT AND JUNCTION BOX WILL BE INCIDENTAL TO ITEM 602017 - P.C.C. MASONRY, PARAPET, CLASS A.

PREL. TRACING ____ W.R.A. ____ DESIGN ____ J.T.L./F.J.O. ____ CHKD. ____ W.A.G.

M:\3130314\ep01br715a.dgn

CONTRACT	COUNTY	F.A.P. NO.	SHEET NO.	TOTAL SHTS.
22-074-09	NEW CASTLE	SEE TITLE SHEET	92	152

REHABILITATION OF BRIDGE NOS. 1-715, 1-715A, & 1-715D ON SR 273 OVER I-95

REVISIONS

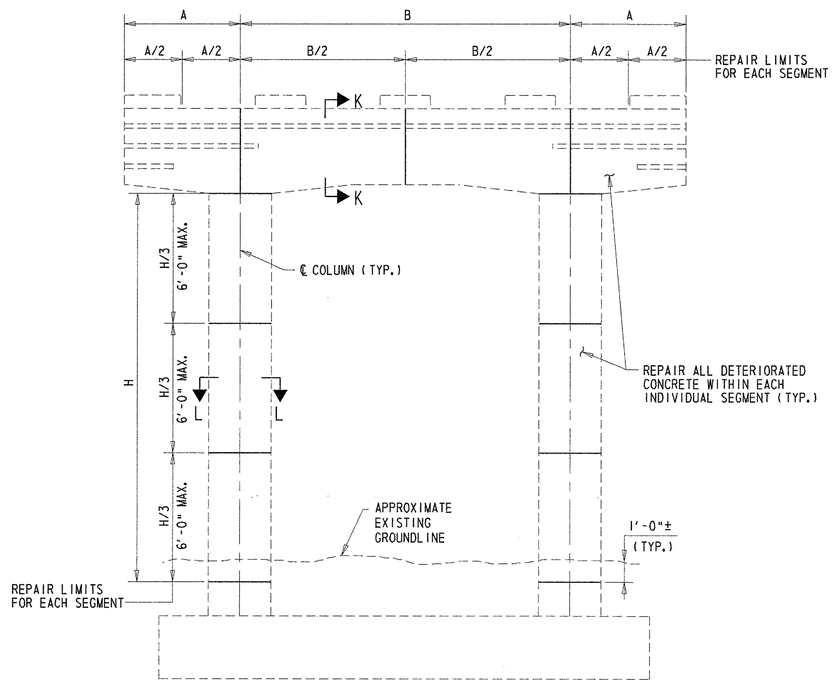

ELEVATION - PIER

SCALE: 1/4"=1'-0"

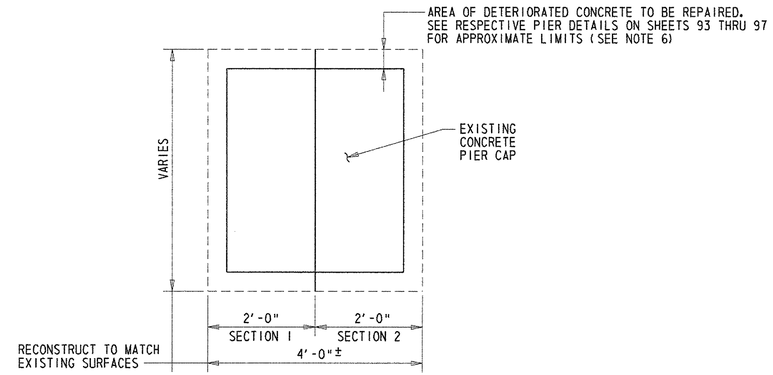

SECTION K-K

SCALE: 3/4" = 1'-0"

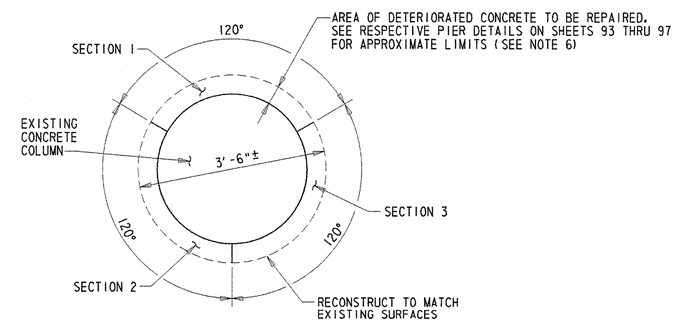

SECTION L-L

SCALE: 3/4" = 1'-0"

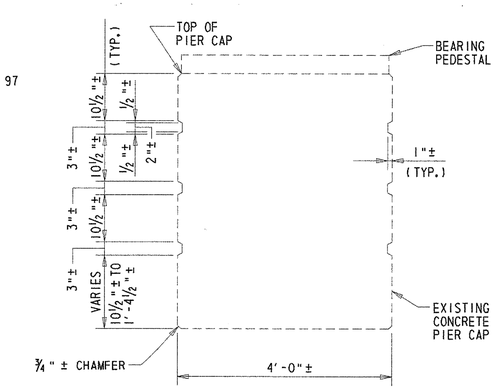

EXISTING PIER CAP STRIATIONS DETAIL

SCALE: 3/4"=1'-0"

NOTES:

1. THE LIMITS OF PERFORMING CONCRETE REPAIRS SHALL BE DIVIDED INTO SECTIONS AS SHOWN ON THIS SHEET. WORK SHALL BE PERFORMED ON THE SECTIONS AS SHOWN AND AS OUTLINED IN SUBSEQUENT NOTES.
2. NO WORK SHALL BE PERFORMED ON ADJACENT OR ON MORE THAN TWO NONADJACENT SECTIONS ON EACH PIER CAP OR COLUMN AT ONE TIME. PIERS SHALL BE REPAIRED ONE AT A TIME.
3. THE CONTRACTOR SHALL WAIT 72 HOURS AFTER COMPLETING REPAIRS TO A SECTION PRIOR TO REPAIRING ADJACENT SECTIONS, HOWEVER, REPAIRS MAY BE PERFORMED CONCURRENTLY ON OTHER BRIDGE ELEMENTS.
4. FOR SHALLOW AND DEEP SPALL REPAIR DETAILS, SEE SHEET 88.
5. THE CONTRACTOR HAS THE OPTION OF ELIMINATING THE SEQUENCE OF CONSTRUCTION DEPICTED ON THIS SHEET PROVIDED ALL REPAIRS ARE PERFORMED WITH ADEQUATE TEMPORARY SHORING INSTALLED TO SUPPORT THE CONCRETE ELEMENTS BEING REPAIRED. DETAILS OF THE TEMPORARY SHORING SHALL BE SUBMITTED TO THE ENGINEER FOR REVIEW AND APPROVAL. NO ADDITIONAL COMPENSATION WILL BE ALLOWED FOR WHICHEVER ALTERNATIVE IS SELECTED.
6. IF SOUND CONCRETE IS NOT ENCOUNTERED AT A DEPTH OF 6", ALL REMOVAL OPERATIONS SHALL STOP AND THE ENGINEER SHALL BE NOTIFIED IMMEDIATELY.

PREL. TRACING ____ W.R.A. ____ DESIGN ____ J.T.L./F.J.O. ____ CHKD. ____ W.A.G. ____

SUBSTRUCTURE REPAIRS – PIER 1

BR. 1-715A 6048	CONTRACT	COUNTY	F.A.P. NO.	SHEET NO.	TOTAL SHTS.
	22-074-09	NEW CASTLE	SEE TITLE SHEET	93	152

REHABILITATION OF BRIDGE NOS. 1-715, 1-715A, & 1-715D ON SR 273 OVER I-95

REVISIONS

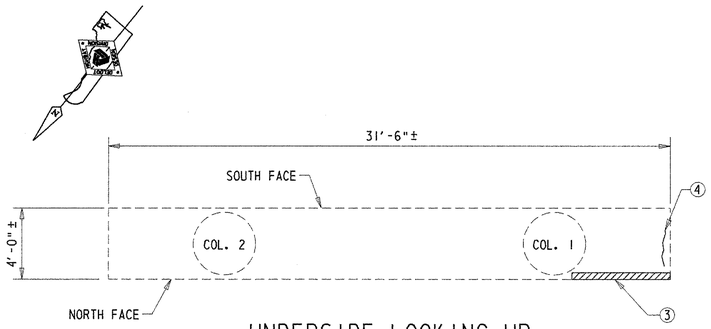

UNDERSIDE LOOKING UP

SCALE: 1/4"=1'-0"

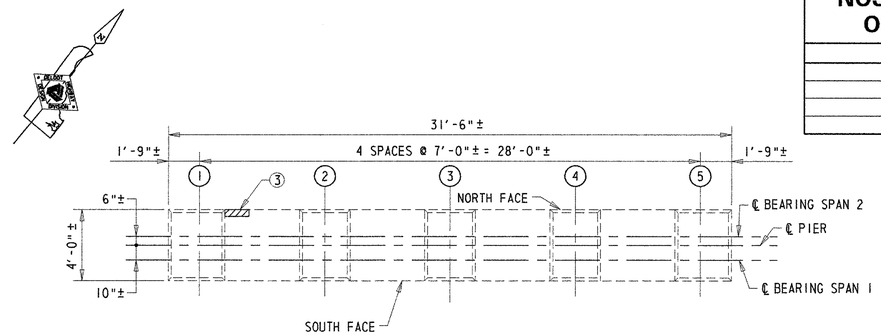

PLAN

SCALE: 1/4"=1'-0"

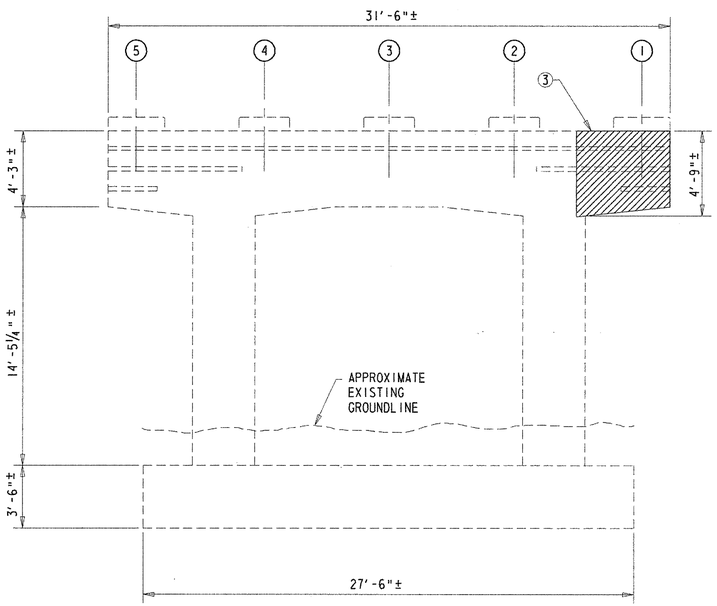

NORTH ELEVATION

SCALE: 1/4"=1'-0"

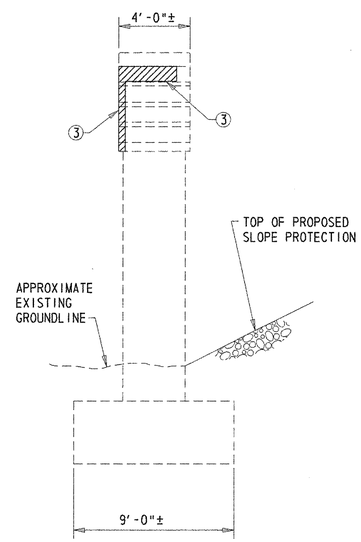

WEST ELEVATION

SCALE: 1/4"=1'-0"

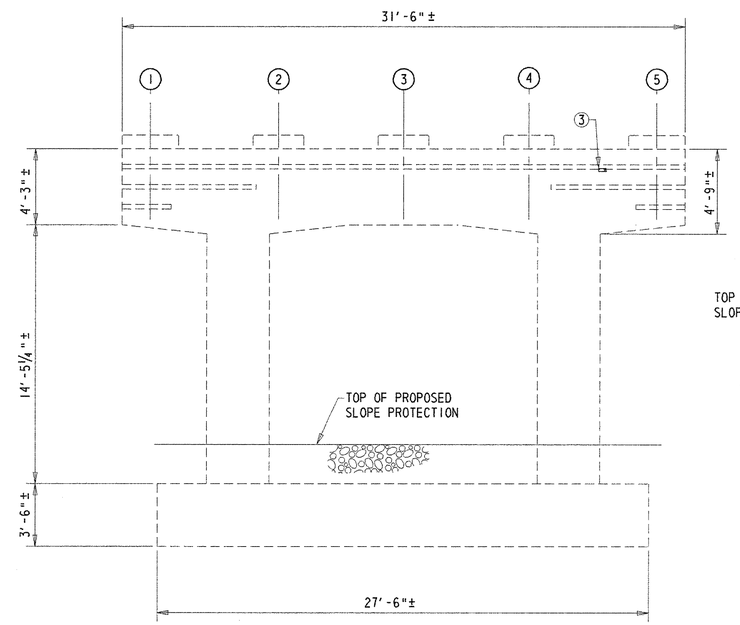

SOUTH ELEVATION

SCALE: 1/4"=1'-0"

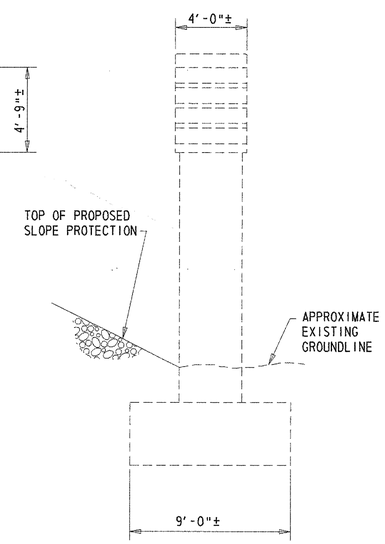

EAST ELEVATION

SCALE: 1/4"=1'-0"

REPAIR LEGEND

1. REPAIR DELAMINATED CONCRETE AND/OR SHALLOW SPALL - ITEM 602551.
2. REPAIR SHALLOW SPALL - ITEM 602551.
3. REPAIR DEEP SPALL - ITEM 602586.
4. SEAL VERTICAL AND/OR DIAGONAL CRACKS BY EPOXY INJECTION - ITEM 602611.

NOTES:

1. PIER SPALL REPAIR LOCATIONS SHOWN GRAPHICALLY. REPAIR AREAS ARE BASED ON FIELD INSPECTION OBSERVATIONS TAKEN 5/02. THE CONCRETE REPAIR QUANTITIES FOR ITEMS 602551 AND 602586, AS SHOWN ON THE QUANTITY SUMMARY SHEET, HAVE BEEN INCREASED BY 25% TO ACCOUNT FOR LATENT DEFECTS THAT MAY HAVE OCCURRED SINCE THE 5/02 INSPECTION. ALL PROPOSED REPAIR LOCATIONS SHALL BE VERIFIED BY THE CONTRACTOR, IN THE PRESENCE OF THE ENGINEER, PRIOR TO BEGINNING ANY WORK. REFERENCE APPLICABLE SPECIAL PROVISIONS. THE ACTUAL LIMITS OF THE REPAIRS SHALL BE DEFINED AND DOCUMENTED BY THE ENGINEER. THE CONTRACTOR SHALL PROVIDE ACCESS TO THE REPAIR AREAS AT ALL TIMES DURING CONSTRUCTION.
2. LENGTH OF CONCRETE CRACKS SHOWN GRAPHICALLY. REPAIR LENGTH BASED ON FIELD INSPECTION OBSERVATIONS TAKEN 5/02. THE REPAIR OF CONCRETE STRUCTURE BY EPOXY INJECTION FOR ITEM 602611, AS SHOWN ON SUMMARY QUANTITY SHEET, HAS BEEN INCREASED BY 25% TO ACCOUNT FOR LATENT DEFECTS THAT MAY HAVE OCCURRED SINCE THE 5/02 INSPECTION. ALL PROPOSED REPAIR LOCATIONS SHALL BE VERIFIED BY THE CONTRACTOR IN THE PRESENCE OF THE ENGINEER PRIOR TO BEGINNING ANY WORK. REFERENCE APPLICABLE SPECIAL PROVISIONS. THE ACTUAL LIMITS OF THE REPAIRS SHALL BE DEFINED AND DOCUMENTED BY THE ENGINEER. THE CONTRACTOR SHALL PROVIDE ACCESS TO THE REPAIR AREAS AT ALL TIMES DURING CONSTRUCTION.
3. APPLY ANTI-GRAFFITI COATING TO ALL EXPOSED SURFACES OF THE PIER CAP AND COLUMNS. PAYMENT FOR THIS WORK WILL BE MADE UNDER ITEM 602588 - ANTI-GRAFFITI COATING.
4. FOR SPALL REPAIR DETAILS, SEE SHEET 88.
5. IF SOUND CONCRETE IS NOT ENCOUNTERED AT A DEPTH OF 6", ALL REMOVAL OPERATIONS SHALL STOP AND THE ENGINEER SHALL BE NOTIFIED IMMEDIATELY.

LEGEND

- DEEP SPALL REPAIR
- CRACK REPAIR
- DELAMINATED CONCRETE AND/OR SHALLOW SPALL REPAIR

PREL. TRACING ____ W.R.A. ____ DESIGN ____ J.T.L./F.J.O. ____ CHKD. ____ W.A.C.

M:\3130314\pr01br715a.dgn

SUBSTRUCTURE REPAIRS – PIER 2

BR. 1-715A 6048	CONTRACT	COUNTY	F.A.P. NO.	SHEET NO.	TOTAL SHTS.
	22-074-09	NEW CASTLE	SEE TITLE SHEET	94	152

REHABILITATION OF BRIDGE NOS. 1-715, 1-715A, & 1-715D ON SR 273 OVER I-95

REVISIONS

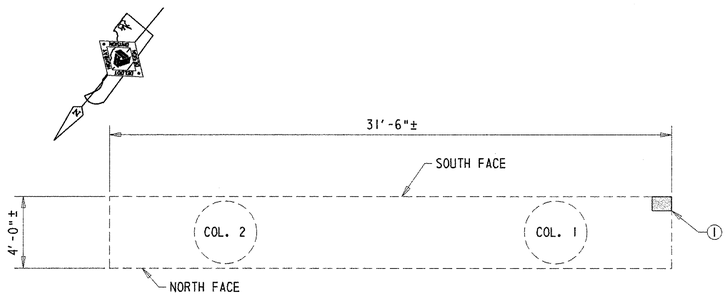

UNDERSIDE LOOKING UP
SCALE: 1/4"=1'-0"

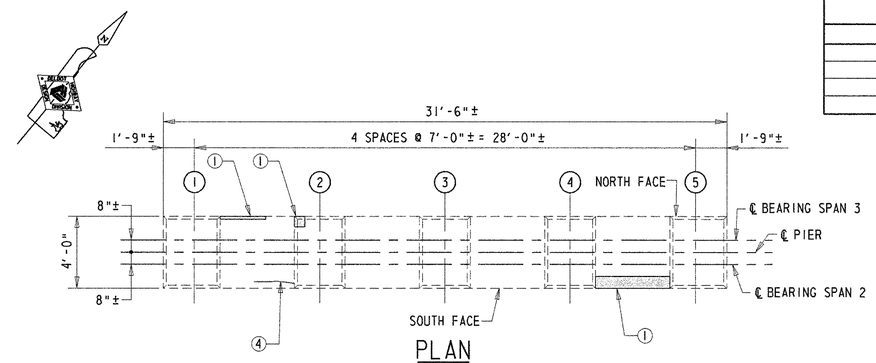

PLAN
SCALE: 1/4"=1'-0"

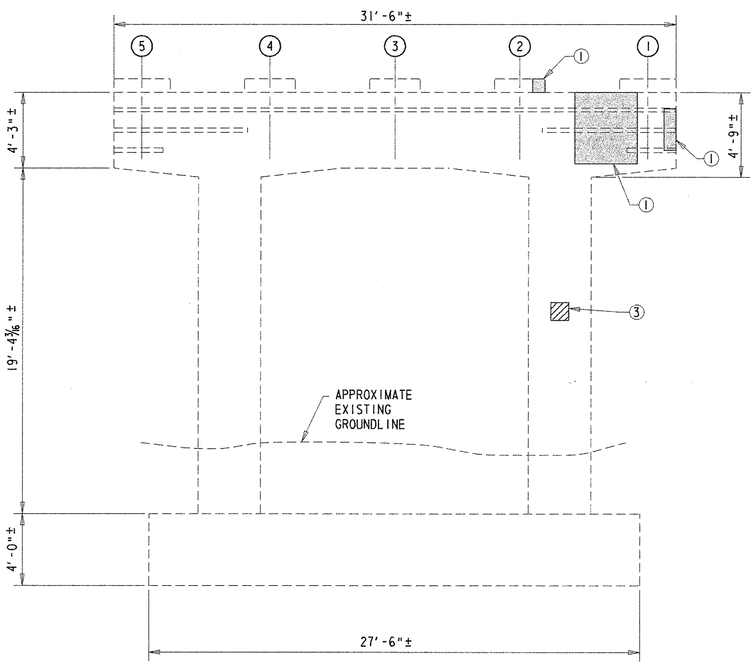

NORTH ELEVATION
SCALE: 1/4"=1'-0"

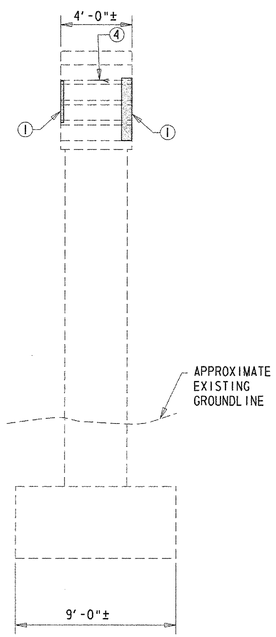

WEST ELEVATION
SCALE: 1/4"=1'-0"

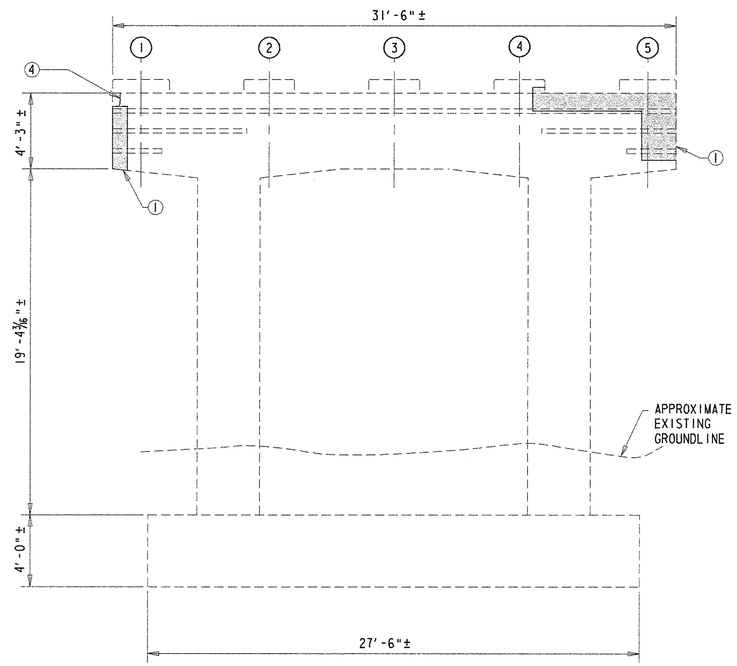

SOUTH ELEVATION
SCALE: 1/4"=1'-0"

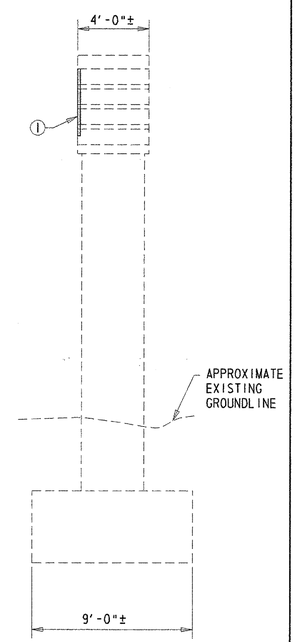

EAST ELEVATION
SCALE: 1/4"=1'-0"

NOTES:

1. PIER SPALL REPAIR LOCATIONS SHOWN GRAPHICALLY. REPAIR AREAS ARE BASED ON FIELD INSPECTION OBSERVATIONS TAKEN 5/02. THE CONCRETE REPAIR QUANTITIES FOR ITEMS 602551 AND 602586, AS SHOWN ON THE QUANTITY SUMMARY SHEET, HAVE BEEN INCREASED BY 25% TO ACCOUNT FOR LATENT DEFECTS THAT MAY HAVE OCCURRED SINCE THE 5/02 INSPECTION. ALL PROPOSED REPAIR LOCATIONS SHALL BE VERIFIED BY THE CONTRACTOR, IN THE PRESENCE OF THE ENGINEER, PRIOR TO BEGINNING ANY WORK. REFERENCE APPLICABLE SPECIAL PROVISIONS. THE ACTUAL LIMITS OF THE REPAIRS SHALL BE DEFINED AND DOCUMENTED BY THE ENGINEER. THE CONTRACTOR SHALL PROVIDE ACCESS TO THE REPAIR AREAS AT ALL TIMES DURING CONSTRUCTION.

2. LENGTH OF CONCRETE CRACKS SHOWN GRAPHICALLY. REPAIR LENGTH BASED ON FIELD INSPECTION OBSERVATIONS TAKEN 5/02. THE REPAIR OF CONCRETE STRUCTURE BY EPOXY INJECTION FOR ITEM 602611, AS SHOWN ON SUMMARY QUANTITY SHEET, HAS BEEN INCREASED BY 25% TO ACCOUNT FOR LATENT DEFECTS THAT MAY HAVE OCCURRED SINCE THE 5/02 INSPECTION. ALL PROPOSED REPAIR LOCATIONS SHALL BE VERIFIED BY THE CONTRACTOR IN THE PRESENCE OF THE ENGINEER PRIOR TO BEGINNING ANY WORK. REFERENCE APPLICABLE SPECIAL PROVISIONS. THE ACTUAL LIMITS OF THE REPAIRS SHALL BE DEFINED AND DOCUMENTED BY THE ENGINEER. THE CONTRACTOR SHALL PROVIDE ACCESS TO THE REPAIR AREAS AT ALL TIMES DURING CONSTRUCTION.

3. APPLY ANTI-GRAFFITI COATING TO ALL EXPOSED SURFACES OF THE PIER CAP AND COLUMNS. PAYMENT FOR THIS WORK WILL BE MADE UNDER ITEM 602588 - ANTI-GRAFFITI COATING.

4. FOR SPALL REPAIR DETAILS, SEE SHEET 88.

5. IF SOUND CONCRETE IS NOT ENCOUNTERED AT A DEPTH OF 6", ALL REMOVAL OPERATIONS SHALL STOP AND THE ENGINEER SHALL BE NOTIFIED IMMEDIATELY.

REPAIR LEGEND

1. REPAIR DELAMINATED CONCRETE AND/OR SHALLOW SPALL - ITEM 602551.
2. REPAIR SHALLOW SPALL - ITEM 602551.
3. REPAIR DEEP SPALL - ITEM 602586.
4. SEAL VERTICAL AND/OR DIAGONAL CRACKS BY EPOXY INJECTION - ITEM 602611.

LEGEND

- DEEP SPALL REPAIR
- CRACK REPAIR
- DELAMINATED CONCRETE AND/OR SHALLOW SPALL REPAIR

PREL. TRACING W.R.A. DESIGN J.T.L./F.J.O. CHKD. W.A.G.

M:\3130314\pr02br715a.dgn

SUBSTRUCTURE REPAIRS – PIER 3

BR. 1-715A 6048

CONTRACT	COUNTY	F.A.P. NO.	SHEET NO.	TOTAL SHTS.
22-074-09	NEW CASTLE	SEE TITLE SHEET	95	152

REHABILITATION OF BRIDGE NOS. 1-715, 1-715A, & 1-715D ON SR 273 OVER I-95

REVISIONS

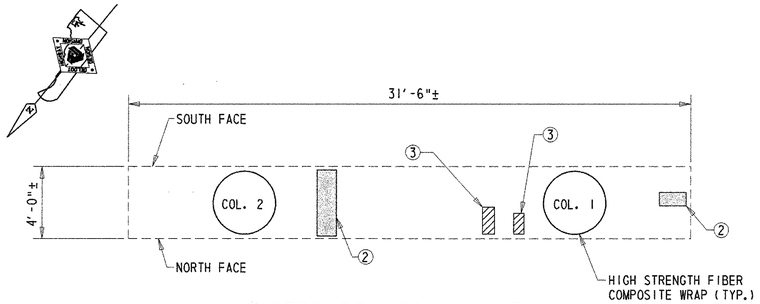

UNDERSIDE LOOKING UP
SCALE: 1/4"=1'-0"

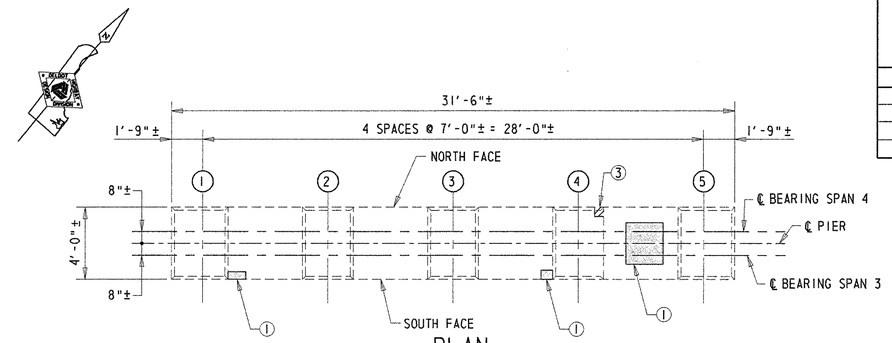

PLAN
SCALE: 1/4"=1'-0"

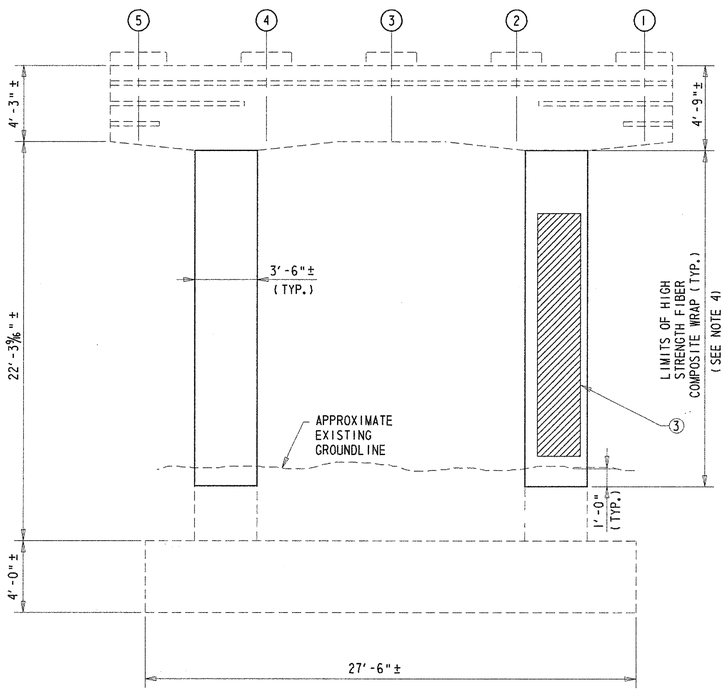

NORTH ELEVATION
SCALE: 1/4"=1'-0"

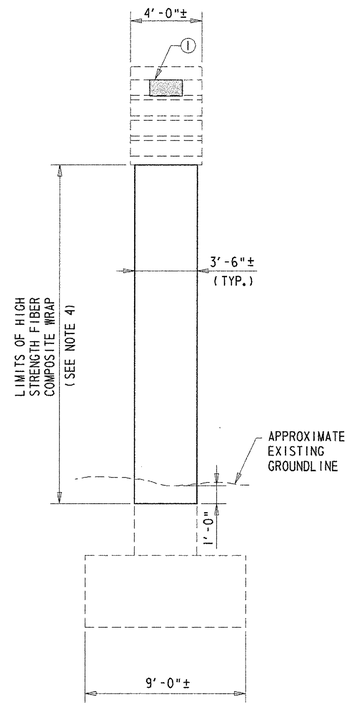

WEST ELEVATION
SCALE: 1/4"=1'-0"

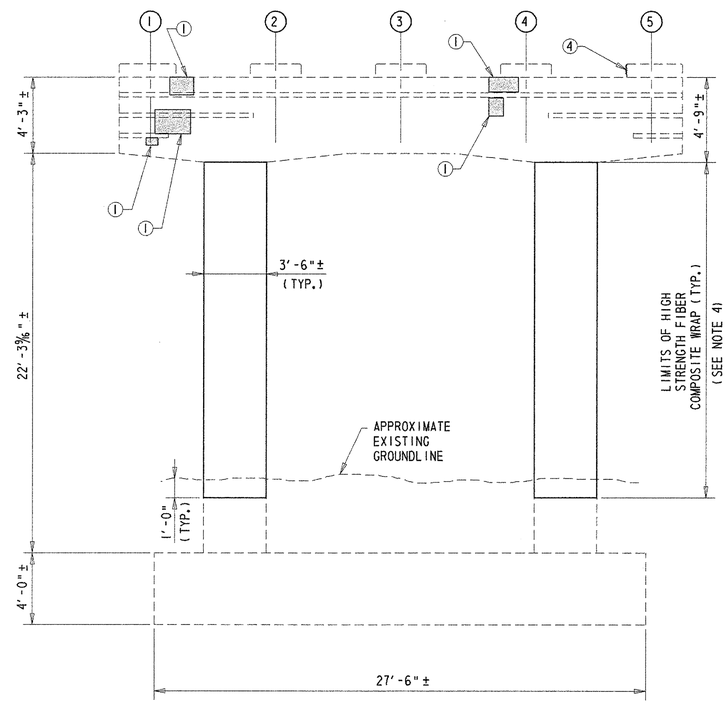

SOUTH ELEVATION
SCALE: 1/4"=1'-0"

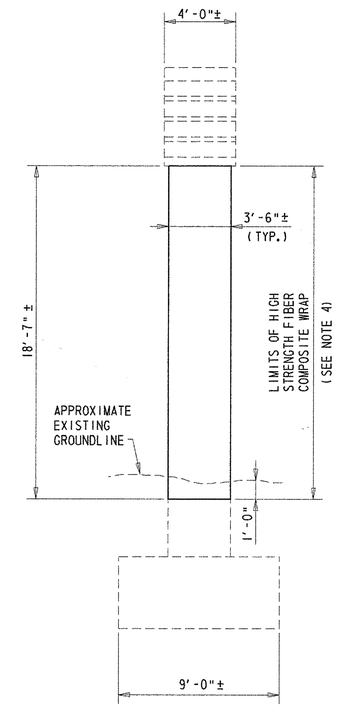

EAST ELEVATION
SCALE: 1/4"=1'-0"

REPAIR LEGEND

① REPAIR DELAMINATED CONCRETE AND/OR SHALLOW SPALL - ITEM 602551.

② REPAIR SHALLOW SPALL - ITEM 602551.

③ REPAIR DEEP SPALL - ITEM 602586.

④ SEAL VERTICAL AND/OR DIAGONAL CRACKS BY EPOXY INJECTION - ITEM 602611.

NOTES:

1. PIER SPALL REPAIR LOCATIONS SHOWN GRAPHICALLY. REPAIR AREAS ARE BASED ON FIELD INSPECTION OBSERVATIONS TAKEN 5/02. THE CONCRETE REPAIR QUANTITIES FOR ITEMS 602551 AND 602586, AS SHOWN ON THE QUANTITY SUMMARY SHEET, HAVE BEEN INCREASED BY 25% TO ACCOUNT FOR LATENT DEFECTS THAT MAY HAVE OCCURRED SINCE THE 5/02 INSPECTION. ALL PROPOSED REPAIR LOCATIONS SHALL BE VERIFIED BY THE CONTRACTOR, IN THE PRESENCE OF THE ENGINEER, PRIOR TO BEGINNING ANY WORK. REFERENCE APPLICABLE SPECIAL PROVISIONS. THE ACTUAL LIMITS OF THE REPAIRS SHALL BE DEFINED AND DOCUMENTED BY THE ENGINEER. THE CONTRACTOR SHALL PROVIDE ACCESS TO THE REPAIR AREAS AT ALL TIMES DURING CONSTRUCTION.

2. LENGTH OF CONCRETE CRACKS SHOWN GRAPHICALLY. REPAIR LENGTH BASED ON FIELD INSPECTION OBSERVATIONS TAKEN 5/02. THE REPAIR OF CONCRETE STRUCTURE BY EPOXY INJECTION FOR ITEM 602611, AS SHOWN ON SUMMARY QUANTITY SHEET, HAS BEEN INCREASED BY 25% TO ACCOUNT FOR LATENT DEFECTS THAT MAY HAVE OCCURRED SINCE THE 5/02 INSPECTION. ALL PROPOSED REPAIR LOCATIONS SHALL BE VERIFIED BY THE CONTRACTOR IN THE PRESENCE OF THE ENGINEER PRIOR TO BEGINNING ANY WORK. REFERENCE APPLICABLE SPECIAL PROVISIONS. THE ACTUAL LIMITS OF THE REPAIRS SHALL BE DEFINED AND DOCUMENTED BY THE ENGINEER. THE CONTRACTOR SHALL PROVIDE ACCESS TO THE REPAIR AREAS AT ALL TIMES DURING CONSTRUCTION.

3. APPLY ANTI-GRAFFITI COATING TO ALL EXPOSED SURFACES OF THE PIER CAP AND COLUMNS UPON COMPLETION OF INSTALLING THE HIGH STRENGTH FIBER COMPOSITE WRAP. PAYMENT FOR THIS WORK WILL BE MADE UNDER ITEM 602588 - ANTI-GRAFFITI COATING.

4. FOR REQUIREMENTS OF THE HIGH STRENGTH FIBER COMPOSITE WRAP, SEE SPECIAL PROVISIONS. PAYMENT FOR THIS WORK WILL BE MADE UNDER ITEM 602657 - HIGH STRENGTH FIBER COMPOSITE WRAP. APPLY WRAP AFTER COMPLETION OF CONCRETE COLUMN REPAIRS.

5. FOR SPALL REPAIR DETAILS, SEE SHEET 88.

6. IF SOUND CONCRETE IS NOT ENCOUNTERED AT A DEPTH OF 6", ALL REMOVAL OPERATIONS SHALL STOP AND THE ENGINEER SHALL BE NOTIFIED IMMEDIATELY.

LEGEND

DEEP SPALL REPAIR | CRACK REPAIR | DELAMINATED CONCRETE AND/OR SHALLOW SPALL REPAIR

PREL. TRACING ____ W.R.A. ____ DESIGN ____ J.T.L./F.J.O. ____ CHKD. ____ W.A.G. ____

M:\3130314\pr03br715a.dgn

BR. 1-715A 6048	CONTRACT	COUNTY	F.A.P. NO.	SHEET NO.	TOTAL SHTS.
	22-074-09	NEW CASTLE	SEE TITLE SHEET	96	152

SUBSTRUCTURE REPAIRS – PIER 4

REHABILITATION OF BRIDGE NOS. 1-715, 1-715A, & 1-715D ON SR 273 OVER I-95

REVISIONS

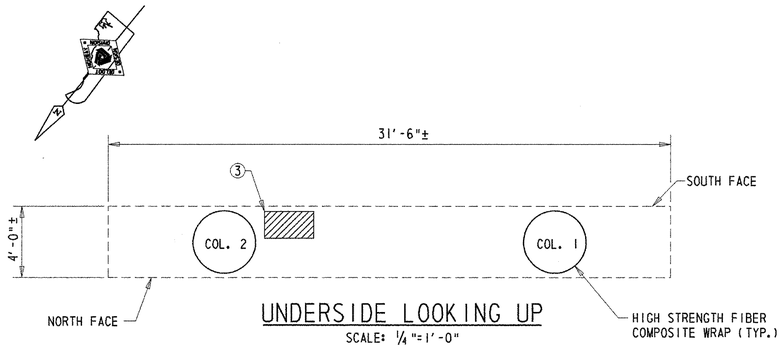

UNDERSIDE LOOKING UP
SCALE: 1/4"=1'-0"

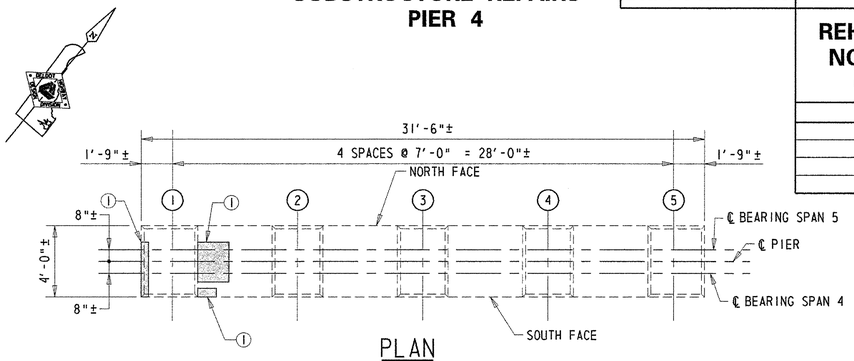

PLAN
SCALE: 1/4"=1'-0"

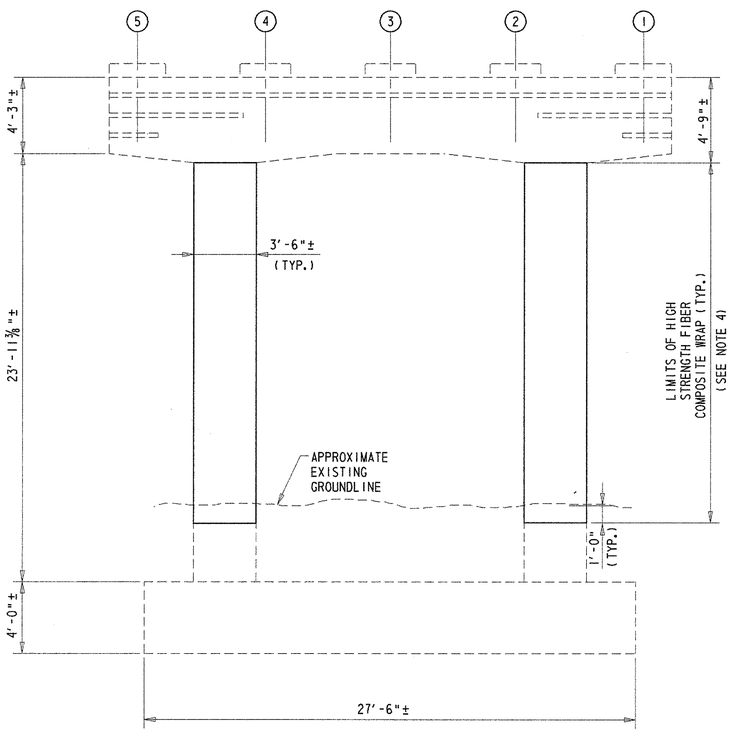

NORTH ELEVATION
SCALE: 1/4"=1'-0"

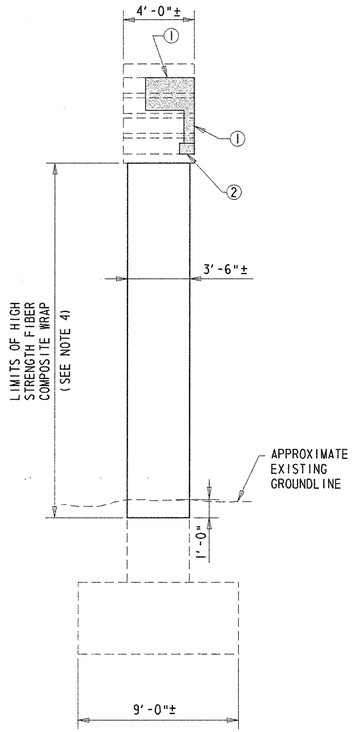

WEST ELEVATION
SCALE: 1/4"=1'-0"

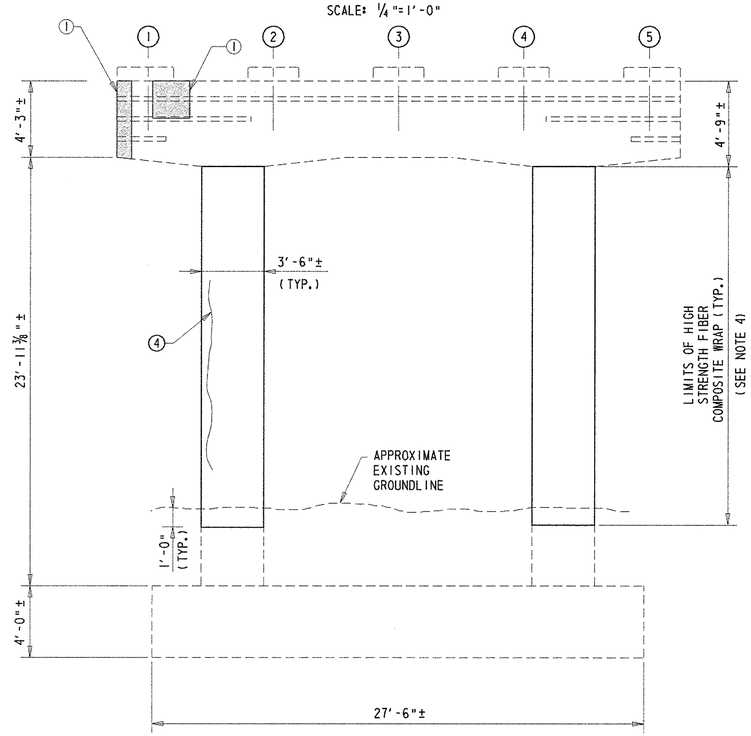

SOUTH ELEVATION
SCALE: 1/4"=1'-0"

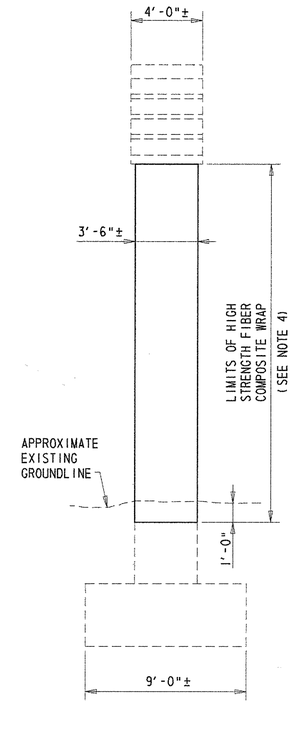

EAST ELEVATION
SCALE: 1/4"=1'-0"

REPAIR LEGEND

① REPAIR DELAMINATED CONCRETE AND/OR SHALLOW SPALL - ITEM 602551.

② REPAIR SHALLOW SPALL - ITEM 602551.

③ REPAIR DEEP SPALL - ITEM 602586.

④ SEAL VERTICAL AND/OR DIAGONAL CRACKS BY EPOXY INJECTION - ITEM 602611.

NOTES:

1. PIER SPALL REPAIR LOCATIONS SHOWN GRAPHICALLY. REPAIR AREAS ARE BASED ON FIELD INSPECTION OBSERVATIONS TAKEN 5/02. THE CONCRETE REPAIR QUANTITIES FOR ITEMS 602551 AND 602586, AS SHOWN ON THE QUANTITY SUMMARY SHEET, HAVE BEEN INCREASED BY 25% TO ACCOUNT FOR LATENT DEFECTS THAT MAY HAVE OCCURRED SINCE THE 5/02 INSPECTION. ALL PROPOSED REPAIR LOCATIONS SHALL BE VERIFIED BY THE CONTRACTOR, IN THE PRESENCE OF THE ENGINEER, PRIOR TO BEGINNING ANY WORK. REFERENCE APPLICABLE SPECIAL PROVISIONS. THE ACTUAL LIMITS OF THE REPAIRS SHALL BE DEFINED AND DOCUMENTED BY THE ENGINEER. THE CONTRACTOR SHALL PROVIDE ACCESS TO THE REPAIR AREAS AT ALL TIMES DURING CONSTRUCTION.

2. LENGTH OF CONCRETE CRACKS SHOWN GRAPHICALLY. REPAIR LENGTH BASED ON FIELD INSPECTION OBSERVATIONS TAKEN 5/02. THE REPAIR OF CONCRETE STRUCTURE BY EPOXY INJECTION FOR ITEM 602611, AS SHOWN ON SUMMARY QUANTITY SHEET, HAS BEEN INCREASED BY 25% TO ACCOUNT FOR LATENT DEFECTS THAT MAY HAVE OCCURRED SINCE THE 5/02 INSPECTION. ALL PROPOSED REPAIR LOCATIONS SHALL BE VERIFIED BY THE CONTRACTOR IN THE PRESENCE OF THE ENGINEER PRIOR TO BEGINNING ANY WORK. REFERENCE APPLICABLE SPECIAL PROVISIONS. THE ACTUAL LIMITS OF THE REPAIRS SHALL BE DEFINED AND DOCUMENTED BY THE ENGINEER. THE CONTRACTOR SHALL PROVIDE ACCESS TO THE REPAIR AREAS AT ALL TIMES DURING CONSTRUCTION.

3. APPLY ANTI-GRAFFITI COATING TO ALL EXPOSED SURFACES OF THE PIER CAP AND COLUMNS UPON COMPLETION OF INSTALLING THE HIGH STRENGTH FIBER COMPOSITE WRAP. PAYMENT FOR THIS WORK WILL BE MADE UNDER ITEM 602588 - ANTI-GRAFFITI COATING.

4. FOR REQUIREMENTS OF THE HIGH STRENGTH FIBER COMPOSITE WRAP, SEE SPECIAL PROVISIONS. PAYMENT FOR THIS WORK WILL BE MADE UNDER ITEM 602657 - HIGH STRENGTH FIBER COMPOSITE WRAP. APPLY WRAP AFTER COMPLETION OF CONCRETE COLUMN REPAIRS.

5. FOR SPALL REPAIR DETAILS, SEE SHEET 88.

6. IF SOUND CONCRETE IS NOT ENCOUNTERED AT A DEPTH OF 6", ALL REMOVAL OPERATIONS SHALL STOP AND THE ENGINEER SHALL BE NOTIFIED IMMEDIATELY.

LEGEND

DEEP SPALL REPAIR | CRACK REPAIR | DELAMINATED CONCRETE AND/OR SHALLOW SPALL REPAIR

PREL. TRACING ____ W.R.A. ____ DESIGN ____ J.T.L./F.J.O. ____ CHKD. ____ W.A.G. ____

M:\3130314\pr04br715a.dgn

SUBSTRUCTURE REPAIRS - PIER 5

BR. 1-715A 6048	CONTRACT	COUNTY	F.A.P. NO.	SHEET NO.	TOTAL SHTS.
	22-074-09	NEW CASTLE	SEE TITLE SHEET	97	152

REHABILITATION OF BRIDGE NOS. 1-715, 1-715A, & 1-715D ON SR 273 OVER I-95

REVISIONS

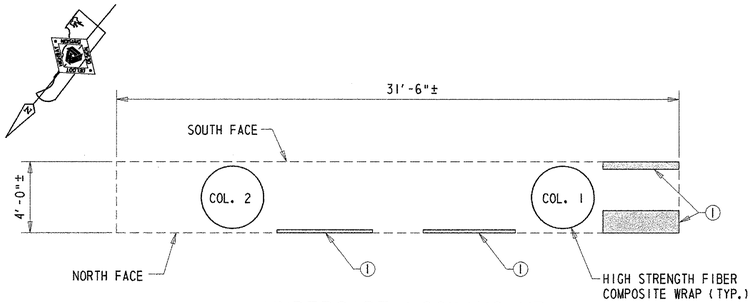

UNDERSIDE LOOKING UP
SCALE: 1/4"=1'-0"

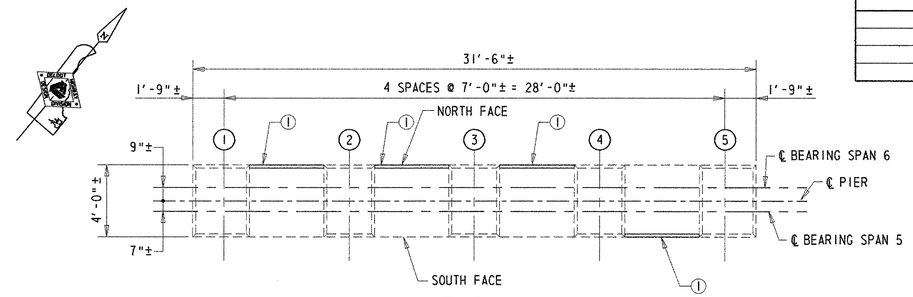

PLAN
SCALE: 1/4"=1'-0"

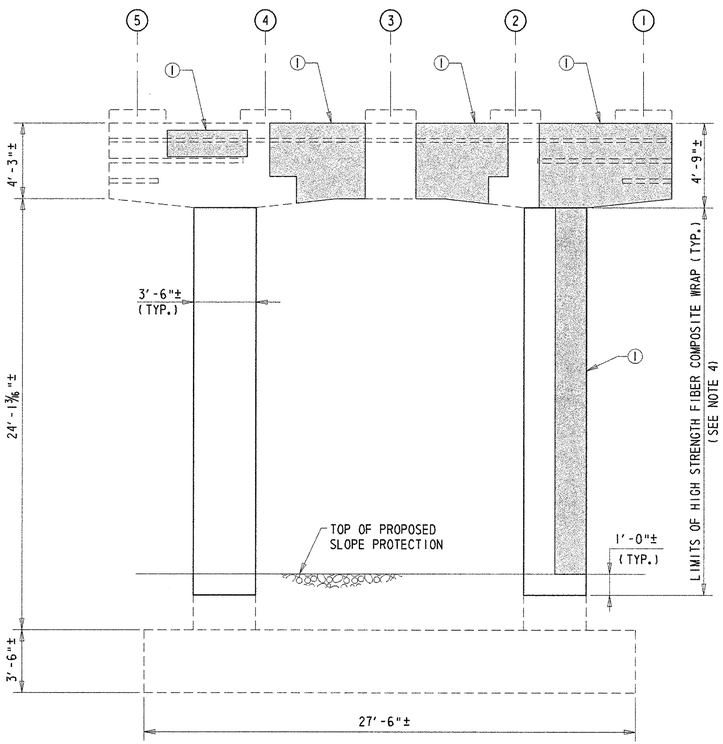

NORTH ELEVATION
SCALE: 1/4"=1'-0"

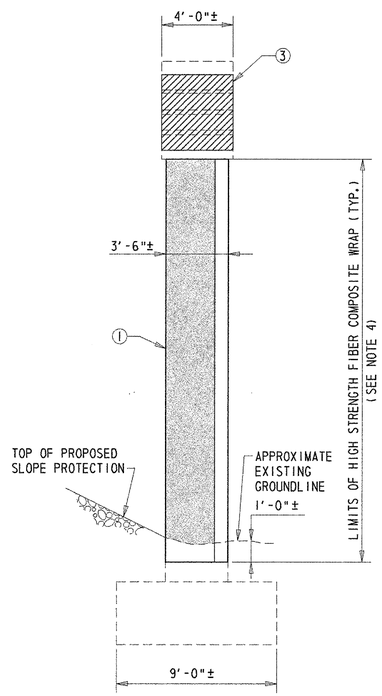

WEST ELEVATION
SCALE: 1/4"=1'-0"

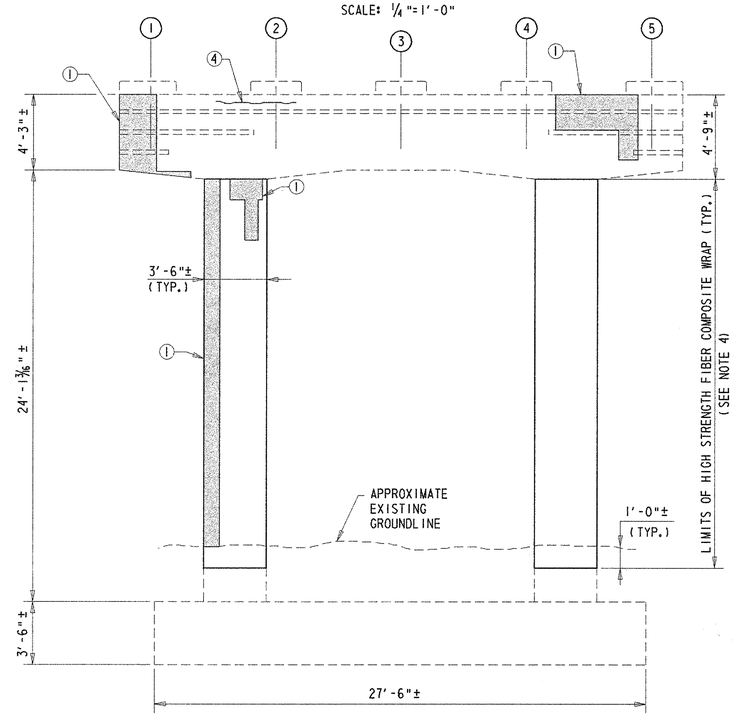

SOUTH ELEVATION
SCALE: 1/4"=1'-0"

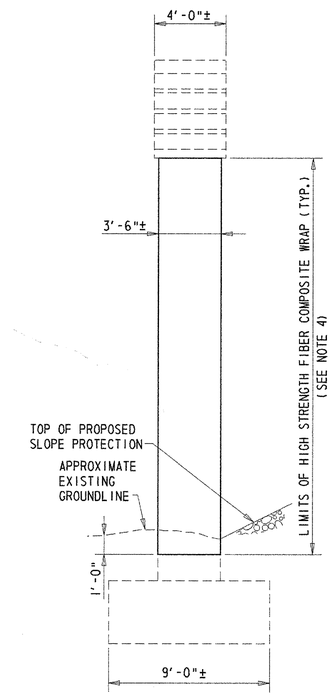

EAST ELEVATION
SCALE: 1/4"=1'-0"

REPAIR LEGEND

1. REPAIR DELAMINATED CONCRETE AND/OR SHALLOW SPALL - ITEM 602551.
2. REPAIR SHALLOW SPALL - ITEM 602551.
3. REPAIR DEEP SPALL - ITEM 602586.
4. SEAL VERTICAL AND/OR DIAGONAL CRACKS BY EPOXY INJECTION - ITEM 602611.

NOTES:

1. PIER SPALL REPAIR LOCATIONS SHOWN GRAPHICALLY. REPAIR AREAS ARE BASED ON FIELD INSPECTION OBSERVATIONS TAKEN 5/02. THE CONCRETE REPAIR QUANTITIES FOR ITEMS 602551 AND 602586, AS SHOWN ON THE QUANTITY SUMMARY SHEET, HAVE BEEN INCREASED BY 25% TO ACCOUNT FOR LATENT DEFECTS THAT MAY HAVE OCCURRED SINCE THE 5/02 INSPECTION. ALL PROPOSED REPAIR LOCATIONS SHALL BE VERIFIED BY THE CONTRACTOR, IN THE PRESENCE OF THE ENGINEER, PRIOR TO BEGINNING ANY WORK. REFERENCE APPLICABLE SPECIAL PROVISIONS. THE ACTUAL LIMITS OF THE REPAIRS SHALL BE DEFINED AND DOCUMENTED BY THE ENGINEER. THE CONTRACTOR SHALL PROVIDE ACCESS TO THE REPAIR AREAS AT ALL TIMES DURING CONSTRUCTION.
2. LENGTH OF CONCRETE CRACKS SHOWN GRAPHICALLY. REPAIR LENGTH BASED ON FIELD INSPECTION OBSERVATIONS TAKEN 5/02. THE REPAIR OF CONCRETE STRUCTURE BY EPOXY INJECTION FOR ITEM 602611, AS SHOWN ON SUMMARY QUANTITY SHEET, HAS BEEN INCREASED BY 25% TO ACCOUNT FOR LATENT DEFECTS THAT MAY HAVE OCCURRED SINCE THE 5/02 INSPECTION. ALL PROPOSED REPAIR LOCATIONS SHALL BE VERIFIED BY THE CONTRACTOR IN THE PRESENCE OF THE ENGINEER PRIOR TO BEGINNING ANY WORK. REFERENCE APPLICABLE SPECIAL PROVISIONS. THE ACTUAL LIMITS OF THE REPAIRS SHALL BE DEFINED AND DOCUMENTED BY THE ENGINEER. THE CONTRACTOR SHALL PROVIDE ACCESS TO THE REPAIR AREAS AT ALL TIMES DURING CONSTRUCTION.
3. APPLY ANTI-GRAFFITI COATING TO ALL EXPOSED SURFACES OF THE PIER CAP AND COLUMNS UPON COMPLETION OF INSTALLING THE HIGH STRENGTH FIBER COMPOSITE WRAP. PAYMENT FOR THIS WORK WILL BE MADE UNDER ITEM 602588 - ANTI-GRAFFITI COATING.
4. FOR REQUIREMENTS OF THE HIGH STRENGTH FIBER COMPOSITE WRAP, SEE SPECIAL PROVISIONS. PAYMENT FOR THIS WORK WILL BE MADE UNDER ITEM 602657 - HIGH STRENGTH FIBER COMPOSITE WRAP. APPLY WRAP AFTER COMPLETION OF CONCRETE COLUMN REPAIRS.
5. FOR SPALL REPAIR DETAILS, SEE SHEET 88.
6. IF SOUND CONCRETE IS NOT ENCOUNTERED AT A DEPTH OF 6", ALL REMOVAL OPERATIONS SHALL STOP AND THE ENGINEER SHALL BE NOTIFIED IMMEDIATELY.

LEGEND

DEEP SPALL REPAIR	CRACK REPAIR	DELAMINATED CONCRETE AND/OR SHALLOW SPALL REPAIR

PREL. TRACING ____ W.R.A. ____ DESIGN ____ J.T.L./F.J.O. ____ CHKD. ____ W.A.G. ____

M:\3130314\pr05br715a.dgn

BR. 1-715A 6048	CONTRACT	COUNTY	F.A.P. NO.	SHEET NO.	TOTAL SHTS.
	22-074-09	NEW CASTLE	SEE TITLE SHEET	98	152

REHABILITATION OF BRIDGE NOS. 1-715, 1-715A, & 1-715D ON SR 273 OVER I-95

REVISIONS

SLOPE PROTECTION REPLACEMENT

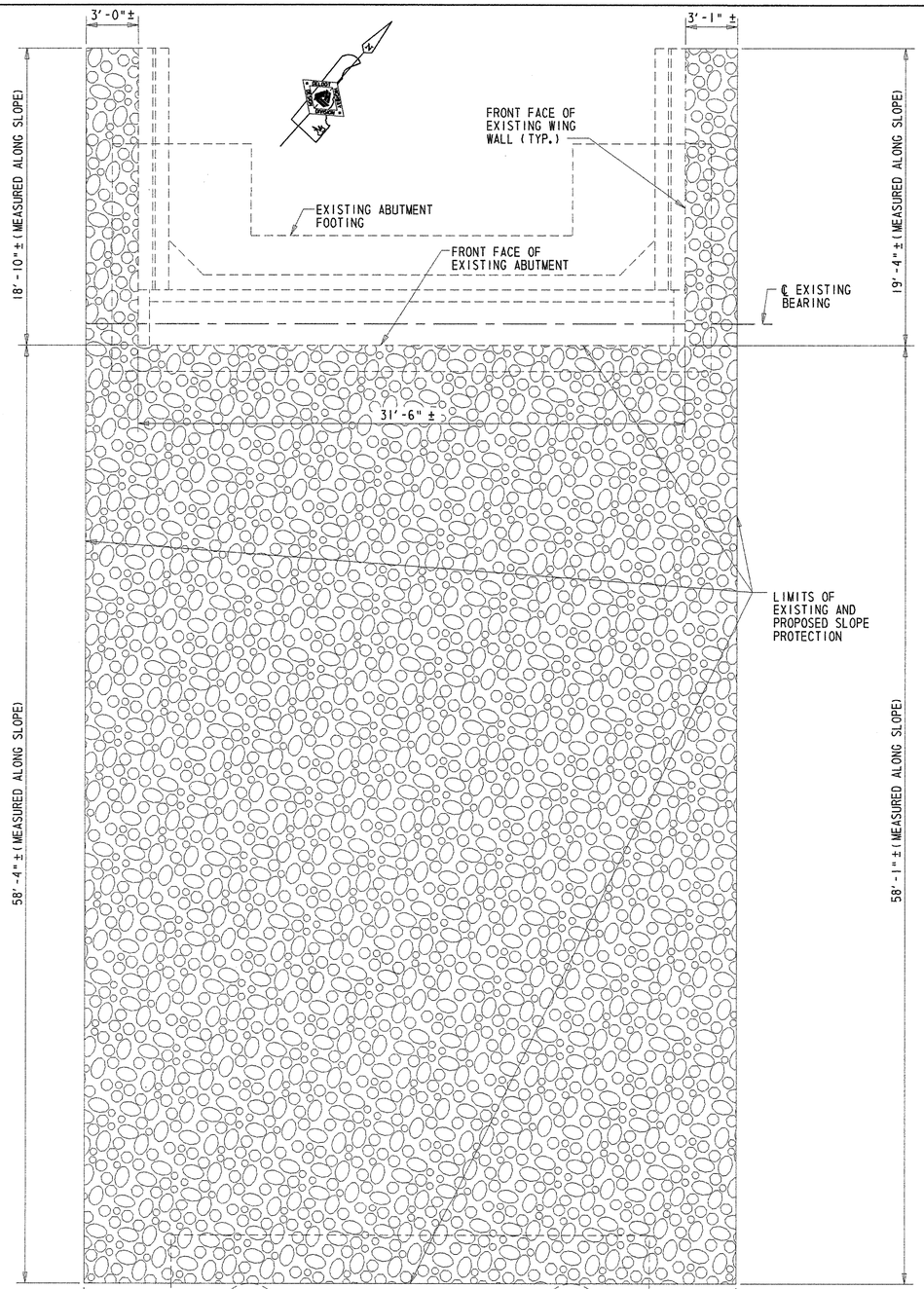

NORTH ABUTMENT SLOPE PROTECTION - PLAN

SCALE: 1/4"=1'-0"

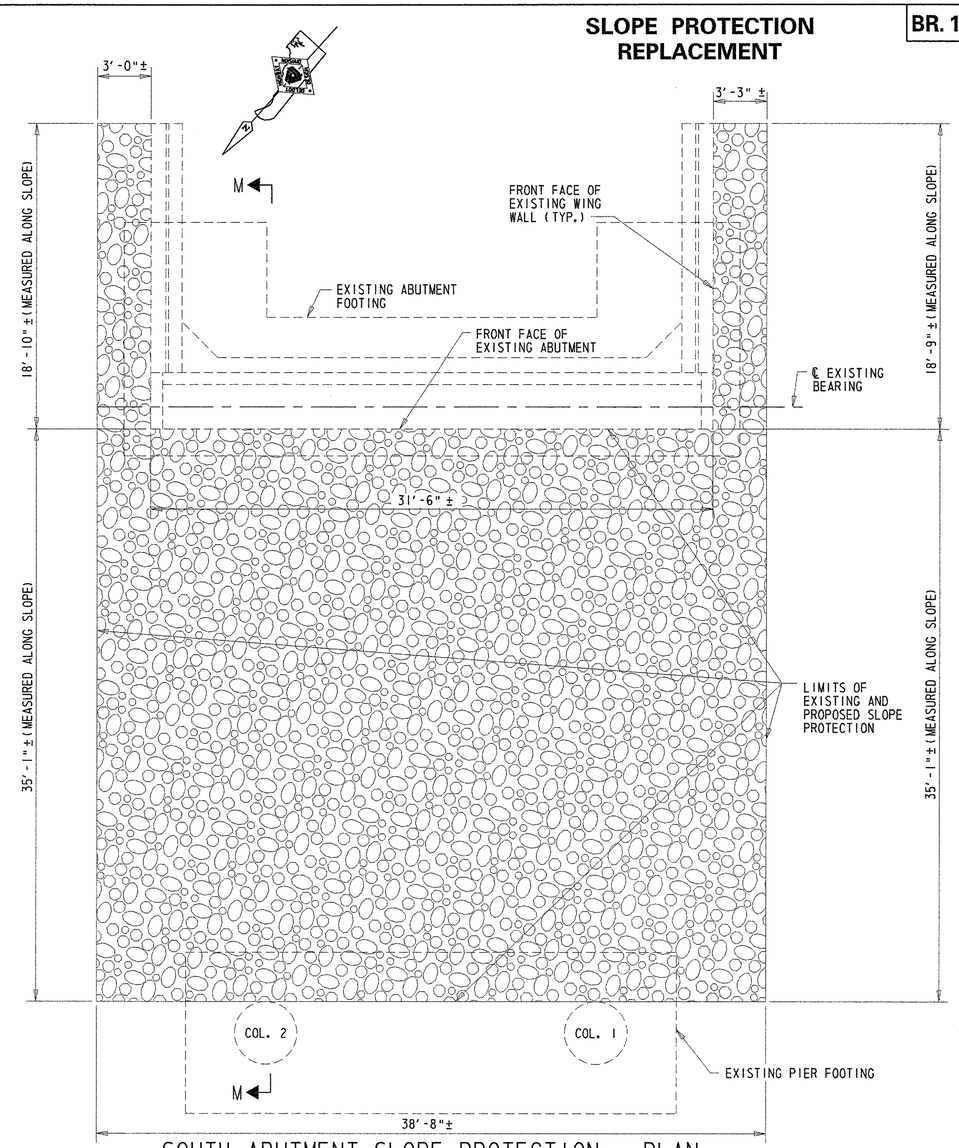

SOUTH ABUTMENT SLOPE PROTECTION - PLAN

SCALE: 1/4"=1'-0"

NOTE:

PAYMENT FOR REMOVAL OF THE EXISTING CONCRETE SLOPE PAVING AND ANY ADDITIONAL EXCAVATION NECESSARY BEYOND THE REMOVAL OF THE EXISTING CONCRETE SLOPE PROTECTION TO FACILITATE THE PLACEMENT OF THE NEW RIPRAP SLOPE PROTECTION WILL BE INCLUDED IN ITEM 712006 - RIPRAP, R-5.

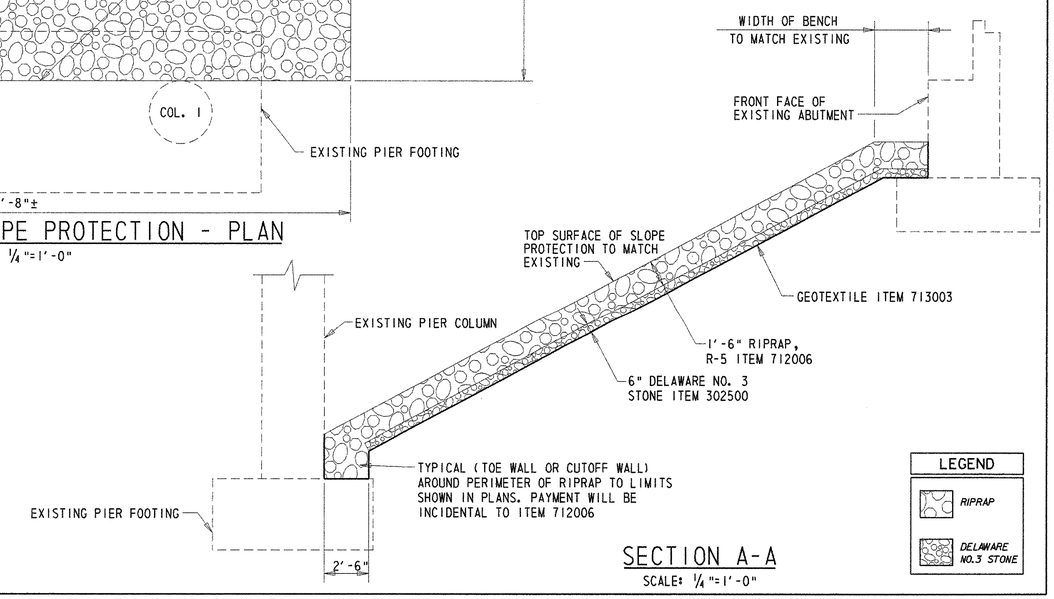

SECTION A-A

SCALE: 1/4"=1'-0"

PREL. TRACING W.R.A. DESIGN J.T.L./F.J.O. CHKD. W.A.G.

M:\313031\ab03br715Adgn

1 715A 6048	CONTRACT	COUNTY	F.A.P. NO.	SHEET NO.	TOTAL SHTS.
	22-074-09	NEW CASTLE	SEE TITLE SHEET	99	152

REHABILITATION OF BRIDGE NOS. 1-715, 1-715A, & 1-715D ON SR 273 OVER I-95

REVISIONS

3 MODIFIED NOTE 2	
12/17/03 WAG/GM	

SUPERSTRUCTURE - TYPICAL SECTIONS

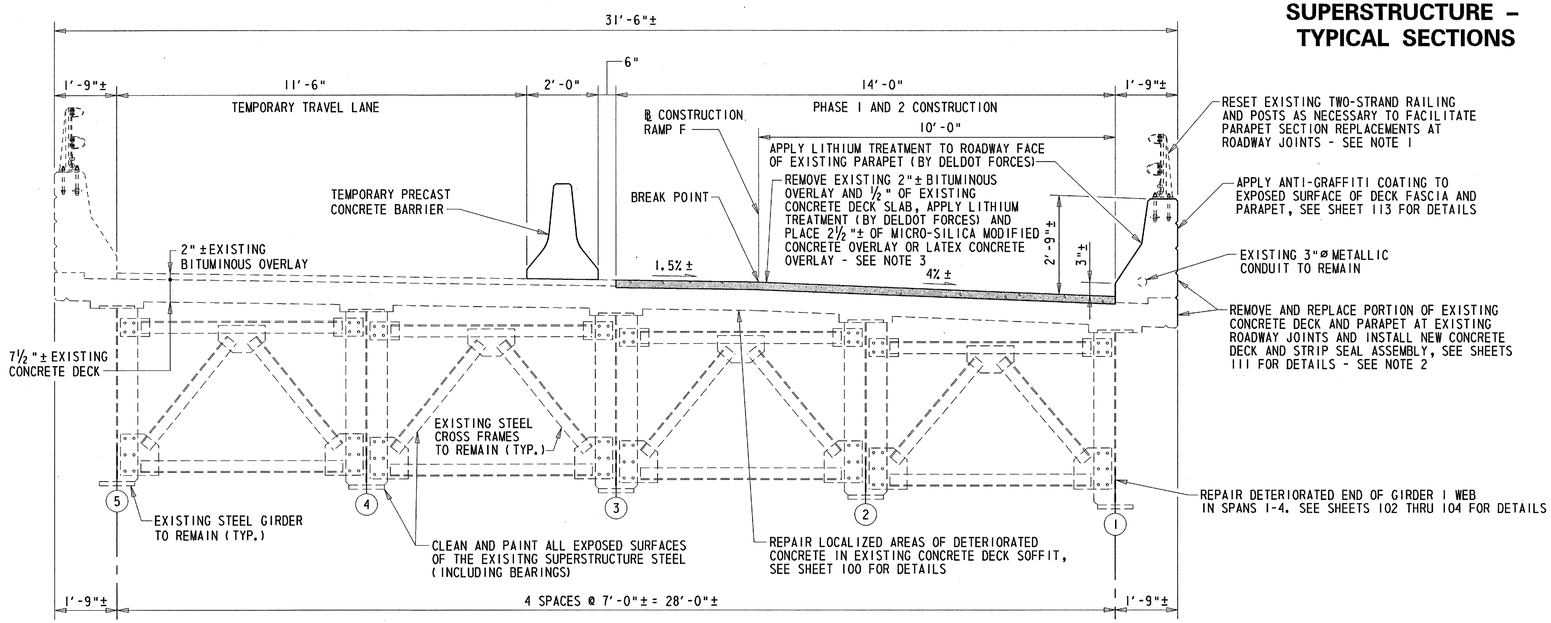

SUPERSTRUCTURE TYPICAL SECTION - PHASE 1 AND 2

LOOKING STATION AHEAD
SCALE: ½" = 1'-0"

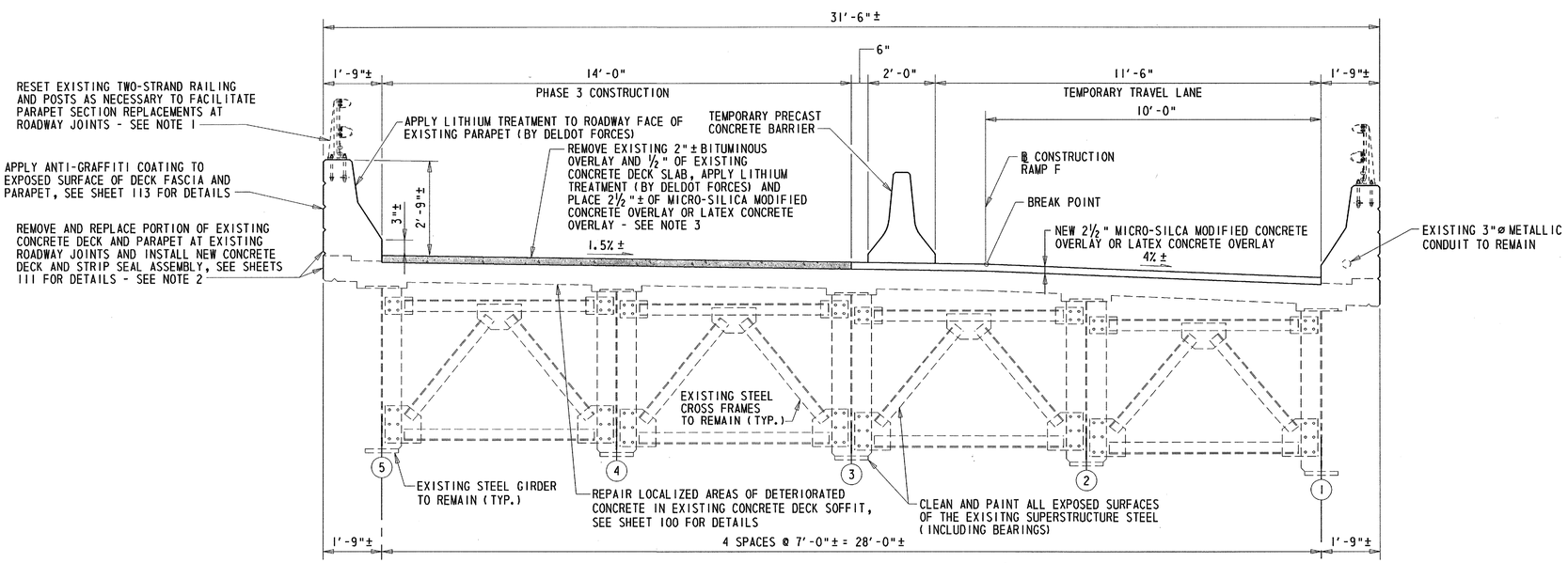

SUPERSTRUCTURE TYPICAL SECTION - PHASE 3

LOOKING STATION AHEAD
SCALE: ½" = 1'-0"

NOTES:

1. COST FOR RESETTING TWO-STRAND RAILING AND POSTS WILL BE INCLUDED IN ITEM 602017 - P.C.C. MASONRY, PARAPET, CLASS A.
2. (3) COST FOR REMOVING ~~AND REPLACING~~ A PORTION OF THE CONCRETE DECK AND PARAPET WILL BE INCLUDED IN ITEM ~~602013 - P.C.C. MASONRY, SUPERSTRUCTURE, CLASS D AND ITEM 602017 - P.C.C. MASONRY, PARAPET, CLASS A, RESPECTIVELY.~~ 602580 - PARTIAL REMOVAL OF P.C.C MASONRY.
3. FOLLOWING THE REMOVAL OF THE EXISTING BITUMINOUS OVERLAY AND INITIAL ½" REMOVAL OF THE CONCRETE DECK SLAB, AND BEFORE APPLYING THE LITHIUM TREATMENT, THE CONTRACTOR SHALL VISUALLY INSPECT THE CONDITION OF THE EXPOSED DECK SURFACE IN THE PRESENCE OF THE ENGINEER. THIS VISUAL INSPECTION SHALL DOCUMENT ALL AREAS OF THE DECK SURFACE IN NEED OF REPAIR. REFERENCE APPLICABLE SPECIAL PROVISIONS. THE ACTUAL LIMITS OF THE REPAIRS SHALL BE DEFINED AND DOCUMENTED BY THE ENGINEER.
4. MILLING OF EXISTING BITUMINOUS OVERLAY WILL BE PAID FOR UNDER ITEM 760006 - PAVEMENT MILLING, HOT MIX 2" DEPTH. IN THE EVENT THAT THE BITUMINOUS OVERLAY THICKNESS EXCEEDS 2", PAYMENT FOR THE REMOVAL OF ALL BITUMINOUS OVERLAY IN EXCESS OF 2" WILL BE INCIDENTAL TO ITEM 760006 - PAVEMENT MILLING, HOT MIX 2" DEPTH.
5. SEE 'PROJECT NOTES' FOR INFORMATION REGARDING SCHEDULING OF LITHIUM TREATMENT APPLICATION.
6. REMOVAL OF THE INITIAL ½" OF THE EXISTING CONCRETE DECK SLAB WILL BE PAID FOR UNDER ITEM 602544 OR ITEM 602584, WHICHEVER IS APPLICABLE.
7. REFER TO SHEETS 105 THRU 108 FOR PROPOSED OVERLAY ELEVATIONS AND INFORMATION REGARDING THE CROSS SLOPE.

PREL. TRACING _____ W.R.A. _____ DESIGN _____ J.T.L./F.J.O. _____ CHKD. _____ W.A.G.

M:\313031\Ns01br715a.dgn

SUPERSTRUCTURE REPAIRS – GIRDERS AND DECK SOFFIT

BR. 1-715A 6048	CONTRACT	COUNTY	F.A.P. NO.	SHEET NO.	TOTAL SHTS.
	22-074-09	NEW CASTLE	SEE TITLE SHEET	100	152

REHABILITATION OF BRIDGE NOS. 1-715, 1-715A, & 1-715D ON SR 273 OVER I-95

REVISIONS

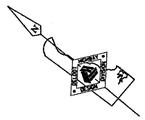

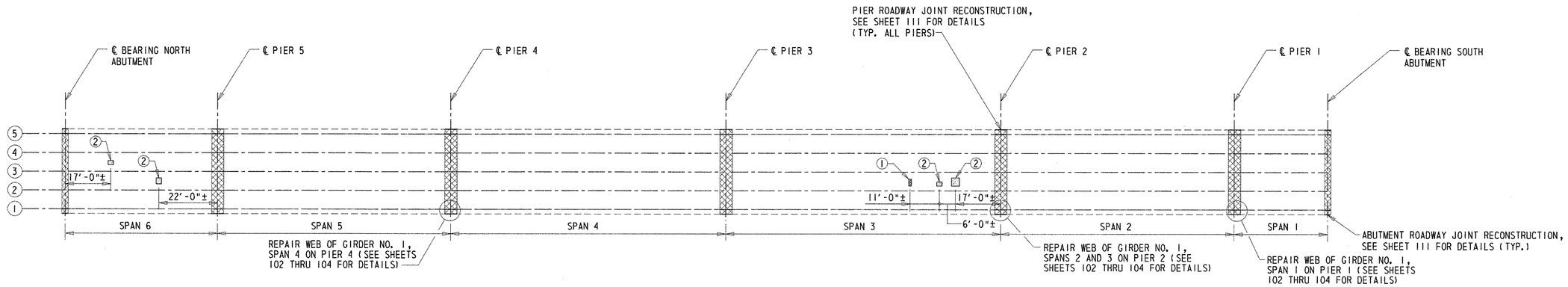

GIRDER AND DECK SOFFIT REPAIRS - PLAN

SCALE: 1"=20'-0"

NOTES:

1. DECK SOFFIT REPAIR LOCATIONS SHOWN GRAPHICALLY LOOKING DOWN ON STUCTURE. REPAIR AREAS ARE BASED ON FIELD INSPECTION OBSERVATIONS TAKEN 5/02. THE CONCRETE REPAIR QUANTITY FOR ITEM 602524, AS SHOWN ON THE QUANTITY SUMMARY SHEET, HAS BEEN INCREASED BY 25% TO ACCOUNT FOR LATENT DEFECTS THAT MAY HAVE OCCURRED SINCE THE 5/02 INSPECTION. ALL PROPOSED REPAIR LOCATIONS SHALL BE VERIFIED BY THE CONTRACTOR IN THE PRESENCE OF THE ENGINEER PRIOR TO BEGINNING ANY WORK. REFERENCE APPLICABLE SPECIAL PROVISIONS. THE ACTUAL LIMITS OF THE REPAIRS SHALL BE DEFINED AND DOCUMENTED BY THE ENGINEER. THE CONTRACTOR SHALL PROVIDE ACCESS TO THE REPAIR AREAS AT ALL TIMES DURING CONSTRUCTION.
2. ALL DIMENSIONS ARE APPROXIMATE.
3. LIMITS OF DECK SOFFIT REPAIRS SHALL BE PERFORMED IN ACCORDANCE WITH THE DEEP AND SHALLOW SPALL REPAIR DETAILS SHOWN ON SHEET 88. HOWEVER, PAYMENT FOR DECK SOFFIT REPAIRS WILL BE PAID FOR UNDER ITEM 602524.

REPAIR LEGEND

① REPAIR DEEP SPALL - ITEM 602524.

② REPAIR SHALLOW SPALL - ITEM 602524.

LEGEND

- JOINT RECONSTRUCTION
- DEEP SPALL REPAIR
- DELAMINATED CONCRETE AND/OR SHALLOW SPALL REPAIR

PREL. TRACING ____ W.R.A. ____ DESIGN ____ J.T.L./F.J.O. ____ CHKD. ____ W.A.G. ____

M:\3130314\dk01br715a.dgn

SUPERSTRUCTURE REPAIRS – PARAPET

BR. 1–715A 6048

CONTRACT	COUNTY	F.A.P. NO.	SHEET NO.	TOTAL SHTS.
22-074-09	NEW CASTLE	SEE TITLE SHEET	101	152

REHABILITATION OF BRIDGE NOS. 1–715, 1–715A, & 1–715D ON SR 273 OVER I–95

REVISIONS

NOTES:

1. LENGTH OF CONCRETE CRACKS SHOWN GRAPHICALLY. REPAIR LENGTH BASED ON FIELD INSPECTION OBSERVATIONS TAKEN 6/02. THE REPAIR OF CONCRETE STRUCTURE BY EPOXY INJECTION FOR ITEMS 602551 AND 602586, AS SHOWN ON SUMMARY QUANTITY SHEET, HAS BEEN INCREASED BY 25% TO ACCOUNT FOR LATENT DEFECTS THAT MAY HAVE OCCURRED SINCE THE 6/02 INSPECTION. ALL PROPOSED REPAIR LOCATIONS SHALL BE VERIFIED BY THE CONTRACTOR IN THE PRESENCE OF THE ENGINEER PRIOR TO BEGINNING ANY WORK. REFERENCE APPLICABLE SPECIAL PROVISIONS. THE ACTUAL LIMITS OF THE REPAIRS SHALL BE DEFINED AND DOCUMENTED BY THE ENGINEER. THE CONTRACTOR SHALL PROVIDE ACCESS TO THE REPAIR AREAS AT ALL TIMES DURING CONSTRUCTION.
2. CONTROL JOINTS IN PARAPET AND METAL BRIDGE RAILING NOT SHOWN FOR CLARITY.
3. FOR DETAILS OF SHALLOW AND DEEP SPALL REPAIRS, SEE SHEET 88.

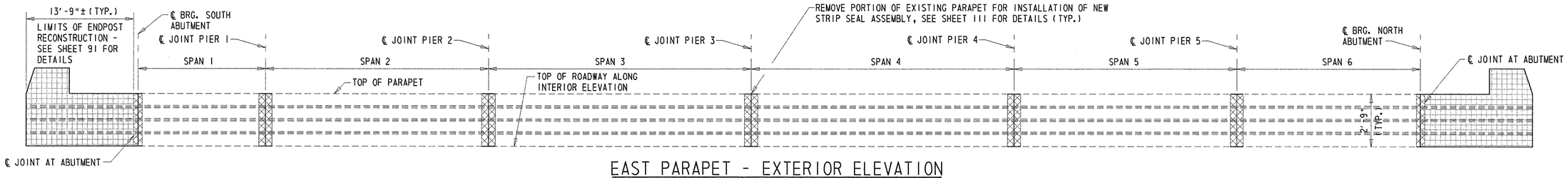

EAST PARAPET - EXTERIOR ELEVATION

NOT TO SCALE

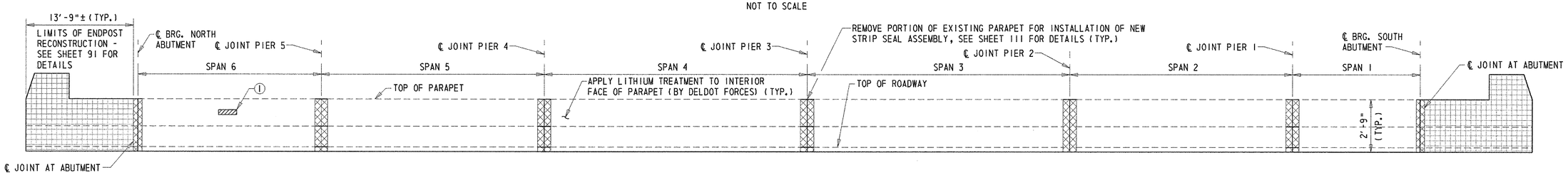

EAST PARAPET - INTERIOR ELEVATION

NOT TO SCALE

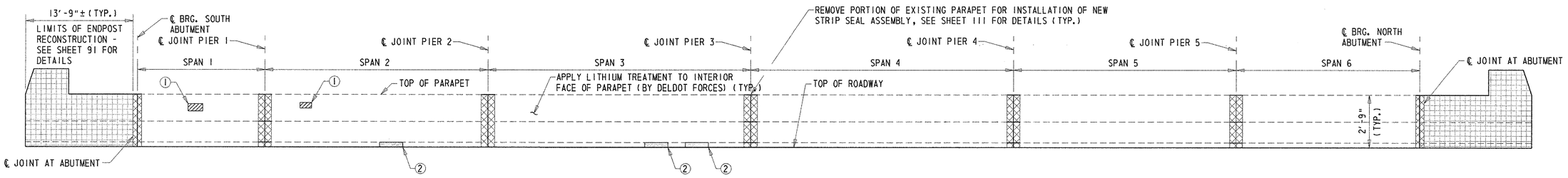

WEST PARAPET - INTERIOR ELEVATION

NOT TO SCALE

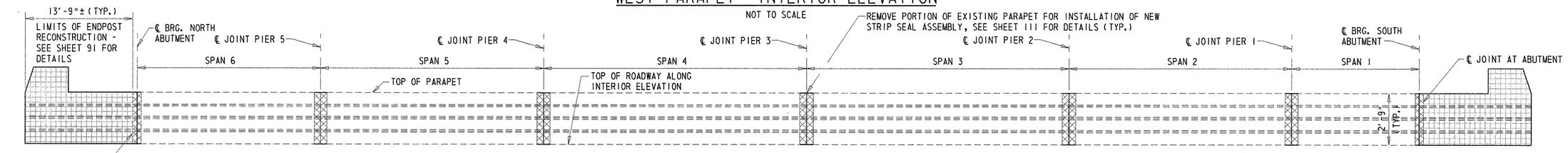

WEST PARAPET - EXTERIOR ELEVATION

NOT TO SCALE

REPAIR LEGEND

① REPAIR DEEP SPALL - ITEM 602586.

② REPAIR SHALLOW SPALL - ITEM 602551

LEGEND

ENDPOST RECONSTRUCTION	PARAPET RECONSTRUCTION	DEEP SPALL REPAIR	CRACK REPAIR	DELAMINATED CONCRETE AND/OR SHALLOW SPALL REPAIR

PREL. TRACING _____ W.R.A. _____ DESIGN _____ J.T.L./F.J.O. _____ CHKD. _____ W.A.D. _____

M:\3130314\MD02BR715A.DGN

GIRDER REPAIR DETAIL - I

BR. 1-715A 6048	CONTRACT	COUNTY	F.A.P. NO.	SHEET NO.	TOTAL SHTS.
	22-074-09	NEW CASTLE	SEE TITLE SHEET	102	152

REHABILITATION OF BRIDGE NOS. 1-715, 1-715A, & 1-715D ON SR 273 OVER I-95

REVISIONS

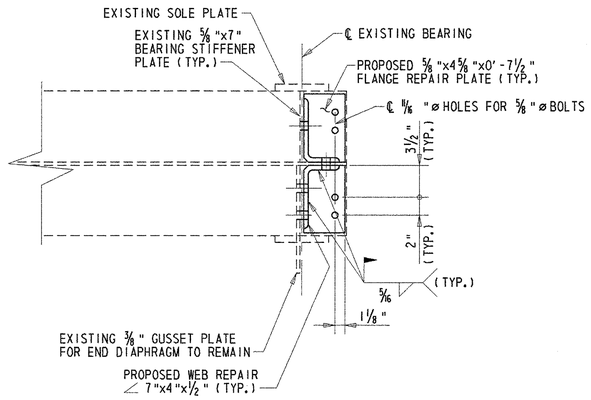

SECTION P-P

SCALE: 1 1/2"=1'-0"

MINIMUM SECTION LOSS IN GIRDER WEB FOR REQUIRED REPAIRS			
SPAN	GIRDER	ORIGINAL SECTION	SECTION LOSS
1	*1 & 5	3/8"	3/16"
	2-4	5/8"	5/16"
2	*1 & 5	3/8"	1/4"
	2-4	1/2"	1/4"
3	*1 & 5	3/8"	3/16"
	2-4	3/8"	3/16"
4	*1 & 5	3/8"	3/16"
	2-4	3/8"	3/16"
5	1 & 5	3/8"	1/4"
	2-4	1/2"	1/4"
6	1 & 5	3/8"	1/8"
	2-4	5/8"	1/4"

* REPAIR REQUIRED AT GIRDER 1, SEE DETAILS ON THIS SHEET AND SHEETS 103 AND 104. PAYMENT WILL BE MADE UNDER ITEM 605584 - STRUCTURAL STEEL REPAIR.

SECTION LOSS NOTES:

1. THE VALUES IN THE ADJACENT TABLE SPECIFY THE LIMITS OF SECTION LOSS AT THE GIRDER ENDS (WEB OR BEARING STIFFENERS), AT WHICH STRUCTURAL STEEL REPAIRS SHALL BE PERFORMED.
2. SECTION LOSS SHALL BE MEASURED IN THE PRESENCE OF THE ENGINEER AND UPON COMPLETION OF BLAST CLEANING OF THE STRUCTURAL STEEL.
3. IF MEASURED SECTION LOSS IS GREATER THAN OR EQUAL TO THE VALUES SHOWN IN THE TABLE, THE CONTRACTOR SHALL NOTIFY THE ENGINEER IMMEDIATELY BEFORE PROCEEDING WITH ADDITIONAL WORK. REPAIR OTHER THAN THOSE SHOWN ON THE CONTRACT DRAWINGS SHALL BE INCLUDED IN ITEM 605584 - STRUCTURAL STEEL REPAIR. THIS CONTRACT INCLUDES A 100% CONTINGENCY IN QUANITITY TO ACCOUNT FOR ADDITIONAL WORK.

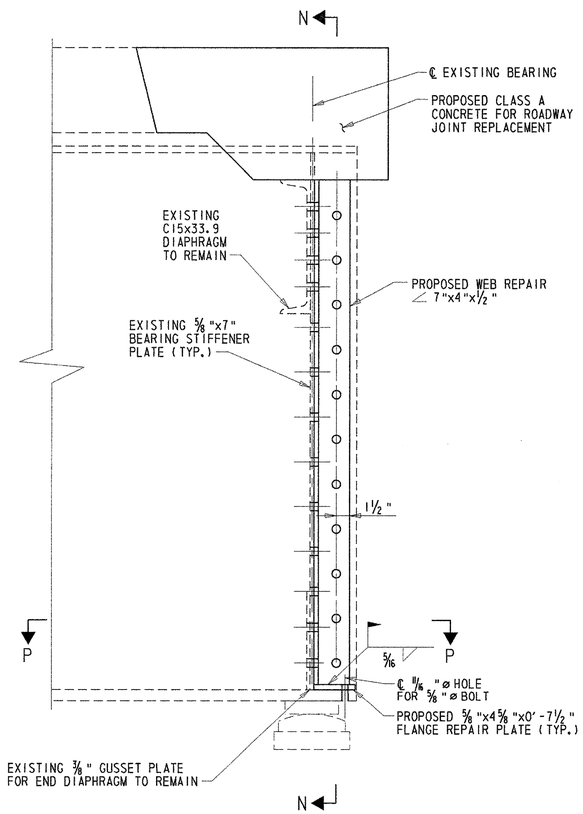

GIRDER NO. 1 WEB REPAIR AT PIER 1 ON SPAN 1 AND PIER 2 ON SPAN 3

SCALE: 1 1/2"=1'-0"

NOTE:

EAST INTERIOR ELEVATION OF GIRDER NO. 1 AT PIER 1 ON SPAN 1 SHOWN. GIRDER NO. 1 AT PIER 2 ON SPAN 3 SIMILIAR BUT OPPOSITE HAND.

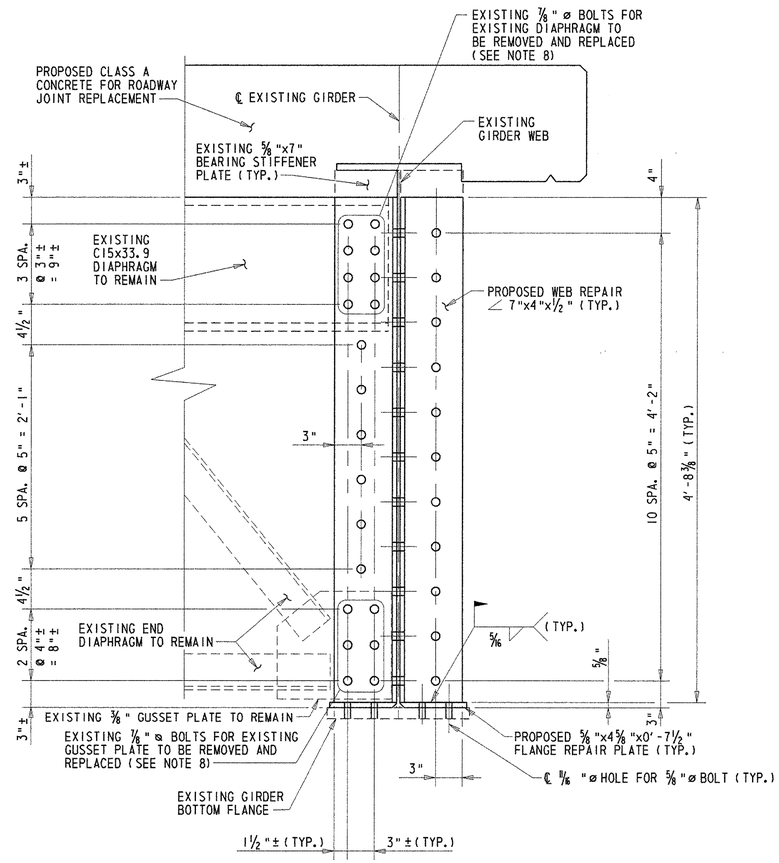

SECTION N-N

SCALE: 1 1/2"=1'-0"

GIRDER REPAIR NOTES:

1. ALL STRUCTURAL STEEL FOR GIRDER REPAIRS SHALL CONFORM TO ASTM A 709, GRADE 36. GRADE 50 STEEL MAY BE SUBSTITUTED FOR GRADE 36 AT NO ADDITIONAL COST TO THE DEPARTMENT.
2. ALL BOLTS TO BE 7/8" DIAMETER HIGH STRENGTH BOLTS CONFORMING TO ASTM A 325, TYPE 1, UNLESS NOTED OTHERWISE. ALL HOLES SHALL BE 15/16" DIAMETER, UNLESS NOTED OTHERWISE.
3. ALL WEB REPAIR ANGLES SHALL BE BEVELED TO CLEAR THE EXISTING BEARING STIFFENER TO GIRDER WEB WELD.
4. ALL FLANGE REPAIR PLATES SHALL BE BEVELED TO CLEAR THE EXISTING GIRDER FILLET WELD.
5. AREAS OF SECTION LOSS AND PITTING SHALL BE COATED WITH AN APPROVED METAL REINFORCED EPOXY FILLER PRIOR TO INSTALLING NEW STRUCTURALSTEEL. METAL REINFORCED EPOXY FILLER SHALL CONFORM TO THE FOLLOWING CRITERIA:

MIN. POT LIFE	20 MINS. @ 75 DEGREES
MIN. SPECIFIC GRAVITY	1.65
MIN. COMPRESSIVE STRENGTH ASTM D 695/7 DAYS	17,200 PSI
MIN. FLEXURAL STRENGTH ASTM D 790/7 DAYS	13,500 PSI
MIN. SHEAR STRENGTH (TENSILE: STEEL TO STEEL) ASTM D 1002	2,400 PSI

METAL REINFORCED EPOXY FILLER SHALL BE APPLIED IN ACCORDANCE WITH THE MANUFACTURER'S RECOMMENDATIONS.

6. WHEN CONDITIONS PREVENT TIGHTENING AT THE NUT, BOLTS MAY BE TIGHENED AT THE HEAD, PROVIDED THE NUT IS PREVENTED FROM TURNING. ALL BOLTS SHALL HAVE A WASHER UNDER THE ELEMENT (NUT OR HEAD) TURNED IN TIGHTENING.
7. FIELD DRILL AND REAM/GRIND OUT HOLES IN THE EXISTING STRUCTURAL STEEL ELEMENTS TO RECEIVE THE REPAIR PLATES AND ANGLES.
8. EXISTING BOLTS SHALL BE REMOVED FROM THE DIAPHRAGM AND GUSSET PLATE CONNECTION TO THE BEARING STIFFENER. NEW HIGH STRENGTH BOLTS OF SIMILAR SIZE SHALL BE INSTALLED WHEN INSTALLING THE REPAIR ANGLES. CONTRACTOR SHALL FIELD VERIFY THE LOCATION AND SPACING OF THE EXISTING BOLT HOLES IN THE DIAPHRAGM AND GUSSET PLATE PRIOR TO FABRICATION OF THE REPAIR ANGLES.
9. THE CONTRACTOR MAY ELECT TO FIELD WELD (5/16" WELD) THE PLATE AND ANGLE REPAIRS IN LIEU OF BOLTING AT NO ADDITIONAL COST TO THE DEPARTMENT. FIELD WELDING SHALL CONFORM TO SUBSECTION 826.12.
10. DETERIORATED PORTIONS OF THE EXISTING STEEL GIRDER SHALL BE PAINTED WITH PRIMER IN ACCORDANCE WITH ITEM 605522 PRIOR TO PERFORMING ANY REPAIRS.
11. UPON COMPLETION OF INSTALLING THE STRUCTURAL STEEL ASSOCIATED WITH THE GIRDER REPAIRS, THE AREA OF THE REPAIR SHALL BE PAINTED IN ACCORDANCE WITH ITEM 605522. COST FOR THIS WORK WILL BE INCIDENTAL TO ITEM 605522 - URETHANE PAINTING SYSTEM, EXISTING STEEL.

PREL. TRACING _____ W.R.A. _____ DESIGN _____ J.T.L./F.J.O. _____ CHKD. _____ W.A.G. _____

BR. 1-715A 6048	CONTRACT	COUNTY	F.A.P. NO.	SHEET NO.	TOTAL SHTS.
	22-074-09	NEW CASTLE	SEE TITLE SHEET	103	152

GIRDER REPAIR DETAIL - II

REHABILITATION OF BRIDGE NOS. 1-715, 1-715A, & 1-715D ON SR 273 OVER I-95

REVISIONS

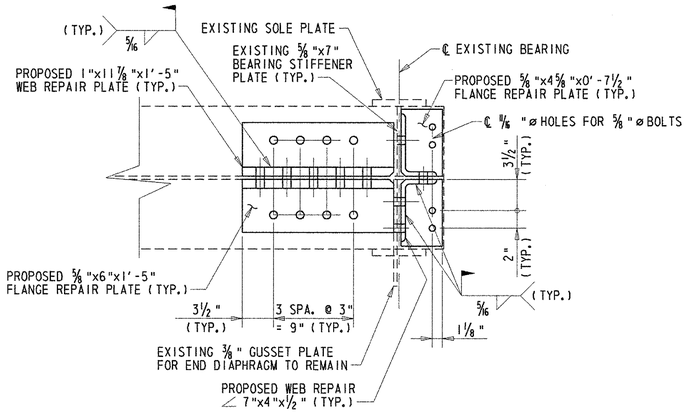

SECTION S-S

SCALE: 1 1/2"=1'-0"

GIRDER REPAIR NOTES:

1. ALL STRUCTURAL STEEL FOR GIRDER REPAIRS SHALL CONFORM TO ASTM A 709, GRADE 36. GRADE 50 STEEL MAY BE SUBSTITUTED FOR GRADE 36 AT NO ADDITIONAL COST TO THE DEPARTMENT.
2. ALL BOLTS TO BE 7/8" DIAMETER HIGH STRENGTH BOLTS CONFORMING TO ASTM A 325, TYPE 1, UNLESS NOTED OTHERWISE. ALL HOLES SHALL BE 15/16" DIAMETER, UNLESS NOTED OTHERWISE.
3. ALL WEB REPAIR PLATES AND WEB REPAIR ANGLES SHALL BE BEVELED TO CLEAR THE EXISTING BEARING STIFFENER TO GIRDER WEB WELD.
4. ALL FLANGE REPAIR PLATES SHALL BE BEVELED TO CLEAR THE EXISTING GIRDER FILLET WELD.
5. AREAS OF SECTION LOSS AND PITTING SHALL BE COATED WITH AN APPROVED METAL REINFORCED EPOXY FILLER PRIOR TO INSTALLING NEW STRUCTURAL STEEL. METAL REINFORCED EPOXY FILLER SHALL CONFORM TO THE FOLLOWING CRITERIA:

MIN. POT LIFE	20 MINS. @ 75 DEGREES
MIN. SPECIFIC GRAVITY	1.65
MIN. COMPRESSIVE STRENGTH ASTM D 695/7 DAYS	17,200 PSI
MIN. FLEXURAL STRENGTH ASTM D 790/7 DAYS	13,500 PSI
MIN. SHEAR STRENGTH (TENSILE: STEEL TO STEEL) ASTM D 1002	2,400 PSI

METAL REINFORCED EPOXY FILLER SHALL BE APPLIED IN ACCORDANCE WITH THE MANUFACTURER'S RECOMMENDATIONS.

6. WHEN CONDITIONS PREVENT TIGHTENING AT THE NUT, BOLTS MAY BE TIGHENED AT THE HEAD, PROVIDED THE NUT IS PREVENTED FROM TURNING. ALL BOLTS SHALL HAVE A WASHER UNDER THE ELEMENT (NUT OR HEAD) TURNED IN TIGHTENING.
7. FIELD DRILL AND REAM/GRIND OUT HOLES IN THE EXISTING STRUCTURAL STEEL ELEMENTS TO RECEIVE THE REPAIR PLATES AND ANGLES.
8. EXISTING BOLTS SHALL BE REMOVED FROM THE DIAPHRAGM AND GUSSET PLATE CONNECTION TO THE BEARING STIFFENER. NEW HIGH STRENGTH BOLTS OF SIMILAR SIZE SHALL BE INSTALLED WHEN INSTALLING THE REPAIR ANGLES. CONTRACTOR SHALL FIELD VERIFY THE LOCATION AND SPACING OF THE EXISTING BOLT HOLES IN THE DIAPHRAGM AND GUSSET PLATE PRIOR TO FABRICATION OF THE REPAIR ANGLES.
9. THE CONTRACTOR MAY ELECT TO FIELD WELD (5/16" WELD) THE PLATE AND ANGLE REPAIRS IN LIEU OF BOLTING AT NO ADDITIONAL COST TO THE DEPARTMENT. FIELD WELDING SHALL CONFORM TO SUBSECTION 826.12.
10. FOR THE MINIMUM SECTION LOSS IN THE GIRDER REQUIRED TO PERFORM GIRDER REPAIRS IN ADDITION TO THE DETAILS SHOWN, SEE SHEET 102.
11. DETERIORATED PORTIONS OF THE EXISTING STEEL GIRDER SHALL BE PAINTED WITH PRIMER IN ACCORDANCE WITH ITEM 605522 PRIOR TO PERFORMING ANY REPAIRS.
12. UPON COMPLETION OF INSTALLING THE STRUCTURAL STEEL ASSOCIATED WITH THE GIRDER REPAIRS, THE AREA OF THE REPAIR SHALL BE PAINTED IN ACCORDANCE WITH ITEM 605522. COST FOR THIS WORK WILL BE INCIDENTAL TO ITEM 605522 - URETHANE PAINTING SYSTEM, EXISTING STEEL.

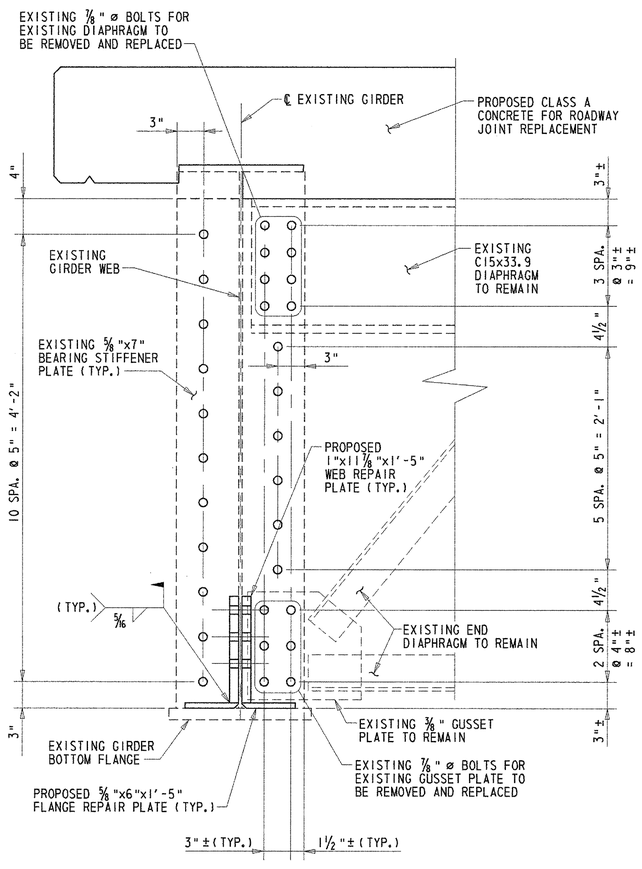

SECTION Q-Q

SCALE: 1 1/2"=1'-0"

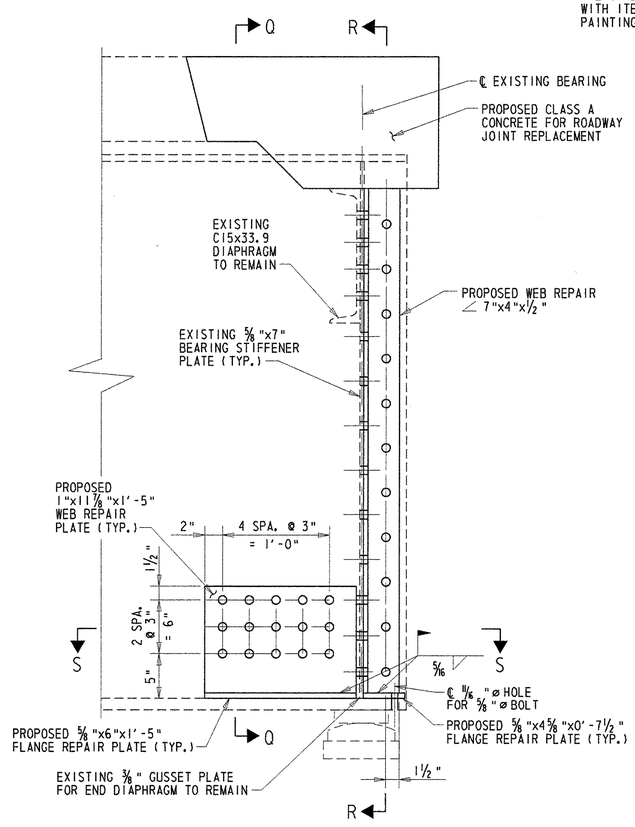

GIRDER NO. 1 WEB REPAIR AT PIER 2 ON SPAN 2 - EAST ELEVATION

SCALE: 1 1/2"=1'-0"

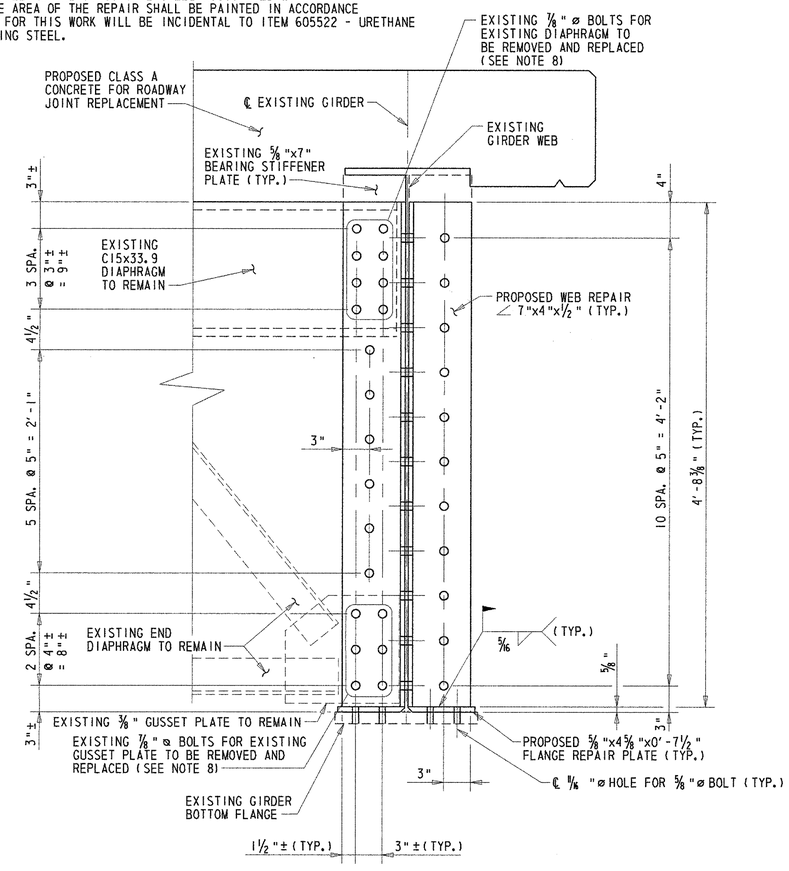

SECTION R-R

SCALE: 1 1/2"=1'-0"

PREL. TRACING ____ W.R.A. ____ DESIGN ____ J.T.L./F.J.O. ____ CHKD. ____ W.A.G. ____

M:\3130314\bm01br715a.dgn

GIRDER REPAIR DETAIL - III

BR. 1-715A 6048	CONTRACT	COUNTY	F.A.P. NO.	SHEET NO.	TOTAL SHTS.
	22-074-09	NEW CASTLE	SEE TITLE SHEET	104	152

REHABILITATION OF BRIDGE NOS. 1-715, 1-715A, & 1-715D ON SR 273 OVER I-95

REVISIONS

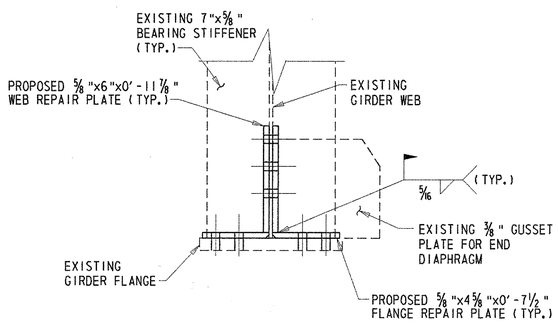

SECTION T-T

SCALE: 1 1/2"=1'-0"

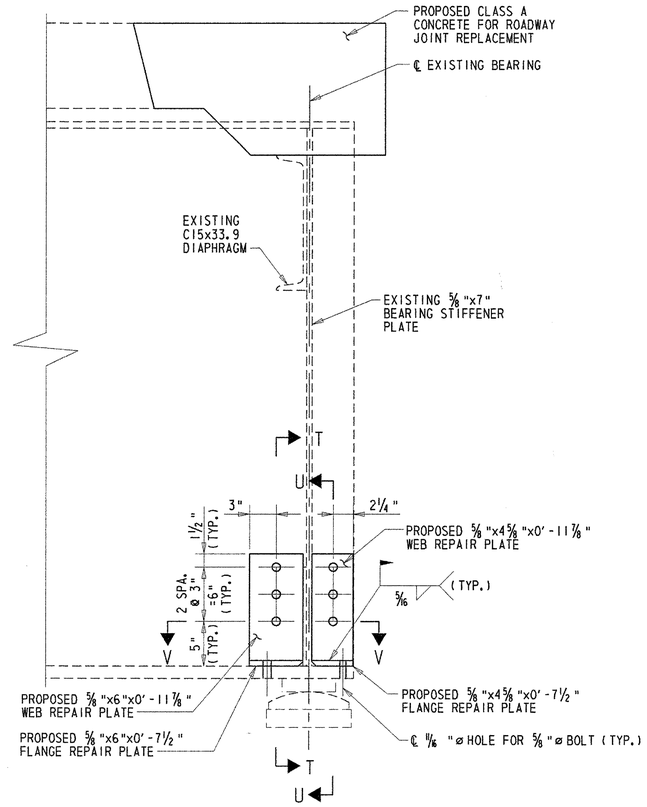

GIRDER NO. 1 WEB REPAIR AT PIER 4 ON SPAN 4 - EAST ELEVATION

SCALE: 1 1/2"=1'-0"

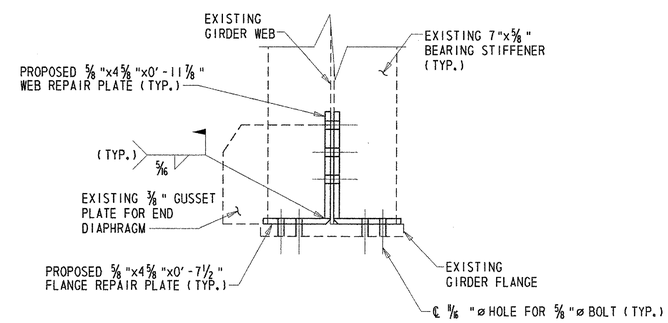

SECTION V-V

SCALE: 1 1/2"=1'-0"

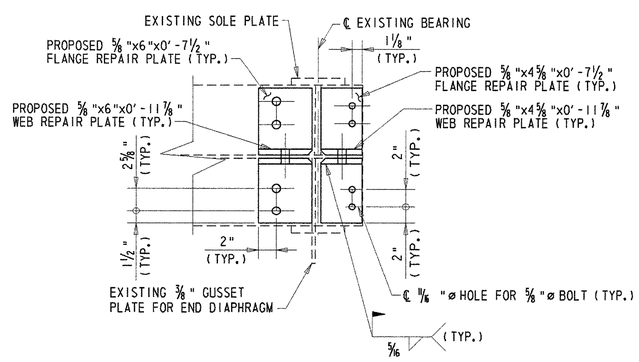

SECTION U-U

SCALE: 1 1/2"=1'-0"

GIRDER REPAIR NOTES:

1. ALL STRUCTURAL STEEL FOR GIRDER REPAIRS SHALL CONFORM TO ASTM A 709, GRADE 36. GRADE 50 STEEL MAY BE SUBSTITUTED FOR GRADE 36 AT NO ADDITIONAL COST TO THE DEPARTMENT.
2. ALL BOLTS TO BE 7/8" DIAMETER HIGH STRENGTH BOLTS CONFORMING TO ASTM A 325, TYPE 1, UNLESS NOTED OTHERWISE. ALL HOLES SHALL BE 5/8" DIAMETER, UNLESS NOTED OTHERWISE.
3. ALL WEB REPAIR PLATES AND WEB REPAIR ANGLES SHALL BE BEVELED TO CLEAR THE EXISTING BEARING STIFFENER TO GIRDER WEB WELD.
4. ALL FLANGE REPAIR PLATES SHALL BE BEVELED TO CLEAR THE EXISTING GIRDER FILLET WELD.
5. AREAS OF SECTION LOSS AND PITTING SHALL BE COATED WITH AN APPROVED METAL REINFORCED EPOXY FILLER PRIOR TO INSTALLING NEW STRUCTURAL STEEL. METAL REINFORCED EPOXY FILLER SHALL CONFORM TO THE FOLLOWING CRITERIA:

MIN. POT LIFE	20 MINS. @ 75 DEGREES
MIN. SPECIFIC GRAVITY	1.65
MIN. COMPRESSIVE STRENGTH ASTM D 695/7 DAYS	17,200 PSI
MIN. FLEXURAL STRENGTH ASTM D 790/7 DAYS	13,500 PSI
MIN. SHEAR STRENGTH (TENSILE: STEEL TO STEEL) ASTM D 1002	2,400 PSI

METAL REINFORCED EPOXY FILLER SHALL BE APPLIED IN ACCORDANCE WITH THE MANUFACTURER'S RECOMMENDATIONS.

6. WHEN CONDITIONS PREVENT TIGHTENING AT THE NUT, BOLTS MAY BE TIGHENED AT THE HEAD, PROVIDED THE NUT IS PREVENTED FROM TURNING. ALL BOLTS SHALL HAVE A WASHER UNDER THE ELEMENT (NUT OR HEAD) TURNED IN TIGHTENING.
7. FIELD DRILL AND REAM/GRIND OUT HOLES IN THE EXISTING STRUCTURAL STEEL ELEMENTS TO RECEIVE THE REPAIR PLATES AND ANGLES.
8. EXISTING BOLTS SHALL BE REMOVED FROM THE DIAPHRAGM AND GUSSET PLATE CONNECTION TO THE BEARING STIFFENER. NEW HIGH STRENGTH BOLTS OF SIMILAR SIZE SHALL BE INSTALLED WHEN INSTALLING THE REPAIR ANGLES. CONTRACTOR SHALL FIELD VERIFY THE LOCATION AND SPACING OF THE EXISTING BOLT HOLES IN THE DIAPHRAGM AND GUSSET PLATE PRIOR TO FABRICATION OF THE REPAIR ANGLES.
9. THE CONTRACTOR MAY ELECT TO FIELD WELD (5/16" WELD) THE PLATE AND ANGLE REPAIRS IN LIEU OF BOLTING AT NO ADDITIONAL COST TO THE DEPARTMENT. FIELD WELDING SHALL CONFORM TO SUBSECTION 826.12.
10. FOR THE MINIMUM SECTION LOSS IN THE GIRDER REQUIRED TO PERFORM GIRDER REPAIRS IN ADDIITON TO THE DETAILS SHOWN, SEE SHEET 102.
11. DETERIORATED PORTIONS OF THE EXISTING STEEL GIRDER SHALL BE PAINTED WITH PRIMER IN ACCORDANCE WITH ITEM 605522 PRIOR TO PERFORMING ANY REPAIRS.
12. UPON COMPLETION OF INSTALLING THE STRUCTURAL STEEL ASSOCIATED WITH THE GIRDER REPAIRS, THE AREA OF THE REPAIR SHALL BE PAINTED IN ACCORDANCE WITH ITEM 605522. COST FOR THIS WORK WILL BE INCIDENTAL TO ITEM 605522 - URETHANE PAINTING SYSTEM, EXISTING STEEL.

PREL. TRACING ____ W.R.A. ____ DESIGN ____ J.T.L./F.J.O. ____ CHKD. ____ W.A.G. ____

M:\3130314\bm02br715a.dgn

FINISHED ROADWAY ELEVATIONS – I

BR. 1-715A 6048	CONTRACT	COUNTY	F.A.P. NO.	SHEET NO.	TOTAL SHTS.
	22-074-09	NEW CASTLE	SEE TITLE SHEET	105	152

REHABILITATION OF BRIDGE NOS. 1-715, 1-715A, & 1-715D ON SR 273 OVER I-95

REVISIONS

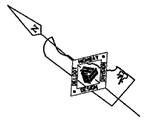

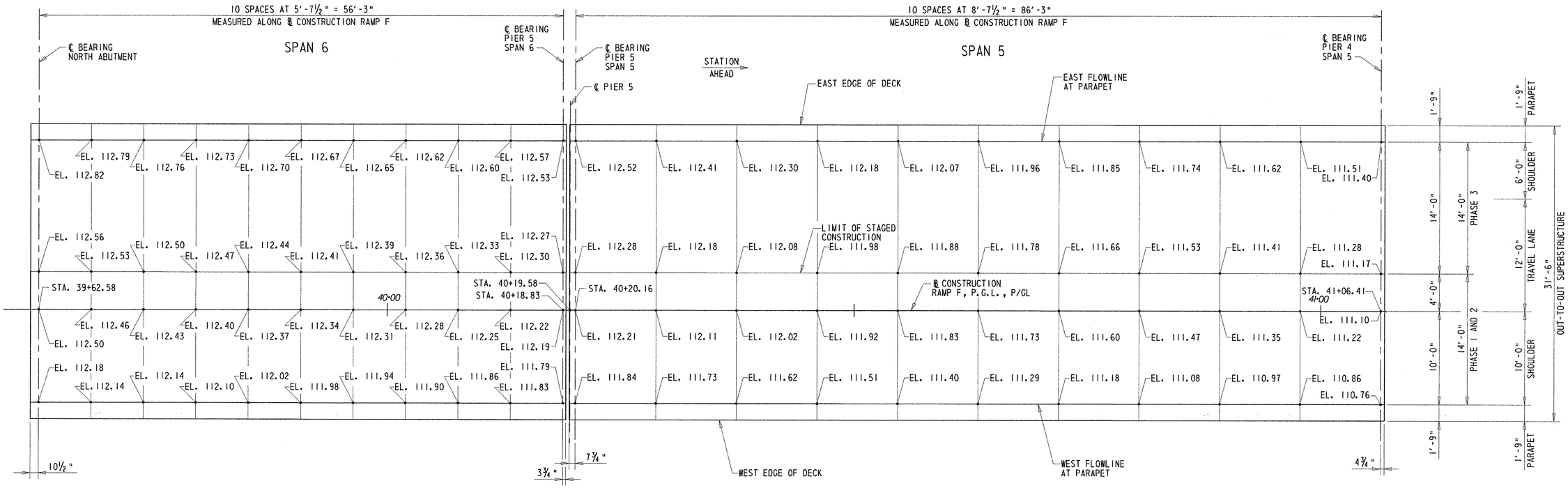

FINISHED ROADWAY ELEVATIONS - SPANS 5 AND 6

SCALE: 3/16" = 1'-0"

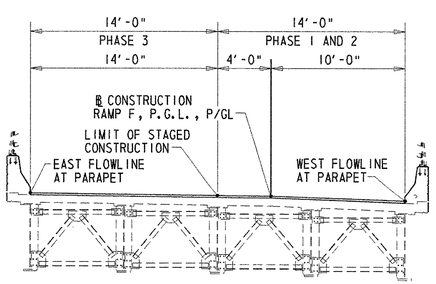

LOCATIONS OF FINISHED ROADWAY ELEVATIONS

LOOKING STATION AHEAD
SCALE: 3/16" = 1'-0"

NOTES:

1. THE ELEVATIONS SHOWN ARE FOR INFORMATIONAL PURPOSES ONLY. CONTRACTOR SHALL SURVEY THE EXISTING DECK AT LOCATIONS SHOWN ON THESE PLANS PRIOR TO REMOVING THE BITUMINOUS OVERLAY. THIS SURVEY SHALL BE USED TO VERIFY FINISHED ELEVATIONS FOR THE CONCRETE OVERLAY. COST OF THIS WORK WILL BE INCLUDED IN 763501 - CONSTRUCTION ENGINEERING.

2. DUE TO THE VARYING NATURE OF THE EXISTING BITUMINOUS OVERLAY THICKNESS, THE EXISTING CROSS SLOPE MAY NOT MATCH THE CROSS SLOPE SHOWN ON THE PLANS. THE CROSS SLOPE OF THE PROPOSED CONCRETE OVERLAY SHALL CLOSELY MATCH THE CROSS SLOPE SHOWN ON THE PLANS WHILE MAINTAINING 2'-9" PARAPET HEIGHT AND 2" MIN. THICKNESS FOR THE OVERLAY. THE CONTRACTOR SHALL CONTACT THE ENGINEER IN THE EVENT THAT THIS CRITERIA IS UNABLE TO BE MET.

PREL. TRACING _____ W.R.A. _____ DESIGN _____ J.T.L./F.J.O. _____ CHKD. _____ W.A.G.

M:\3130314\fd01br715a.dgn

FINISHED ROADWAY ELEVATIONS - II

BR. 1-715A 6048	CONTRACT	COUNTY	F.A.P. NO.	SHEET NO.	TOTAL SHTS.
	22-074-09	NEW CASTLE	SEE TITLE SHEET	106	152

REHABILITATION OF BRIDGE NOS. 1-715, 1-715A, & 1-715D ON SR 273 OVER I-95

REVISIONS

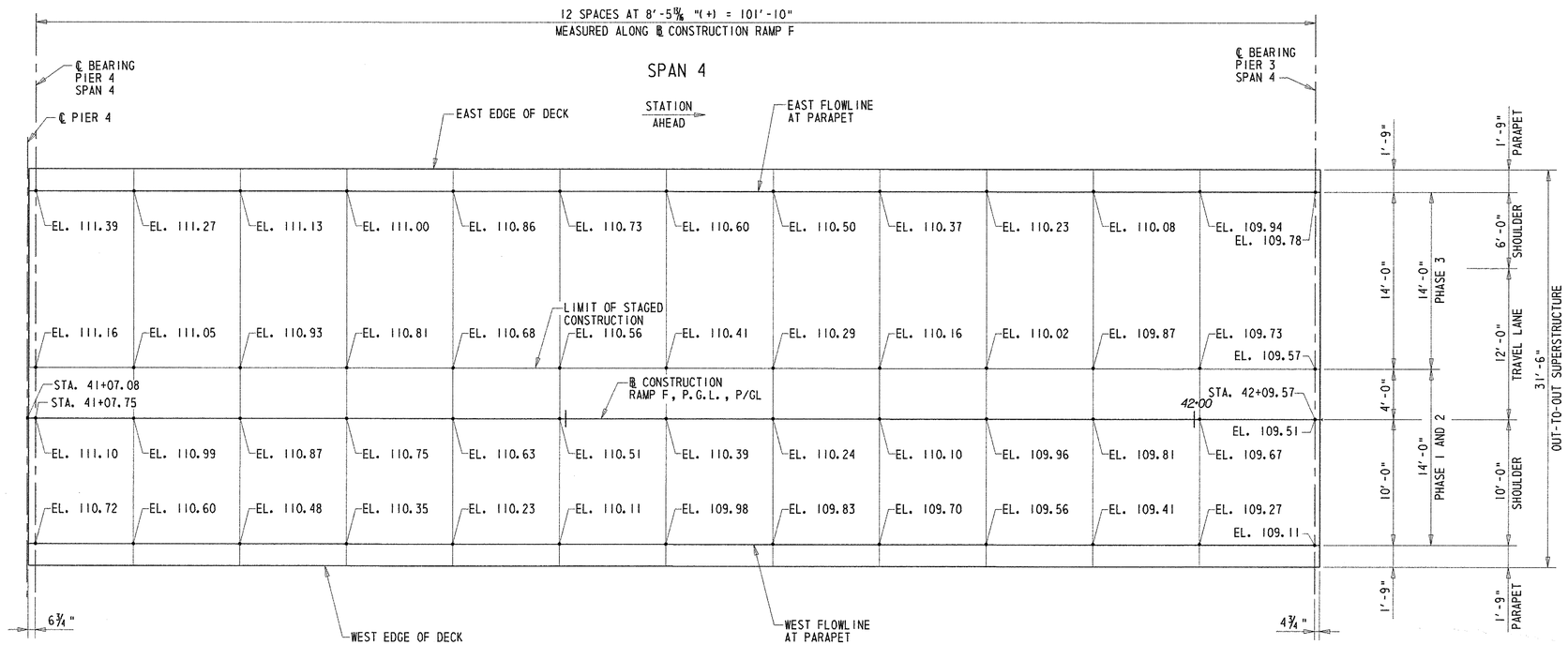

FINISHED ROADWAY ELEVATIONS - SPAN 4

SCALE: 3/16" = 1'-0"

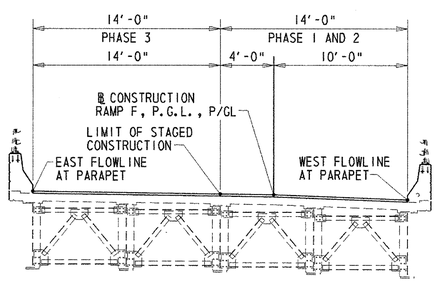

LOCATIONS OF FINISHED ROADWAY ELEVATIONS

LOOKING STATION AHEAD
SCALE: 3/16" = 1'-0"

NOTES:

1. THE ELEVATIONS SHOWN ARE FOR INFORMATIONAL PURPOSES ONLY. CONTRACTOR SHALL SURVEY THE EXISTING DECK AT LOCATIONS SHOWN ON THESE PLANS PRIOR TO REMOVING THE BITUMINOUS OVERLAY. THIS SURVEY SHALL BE USED TO VERIFY FINISHED ELEVATIONS FOR THE CONCRETE OVERLAY. COST OF THIS WORK WILL BE INCLUDED IN 763501 - CONSTRUCTION ENGINEERING.
2. DUE TO THE VARYING NATURE OF THE EXISTING BITUMINOUS OVERLAY THICKNESS, THE EXISTING CROSS SLOPE MAY NOT MATCH THE CROSS SLOPE SHOWN ON THE PLANS. THE CROSS SLOPE OF THE PROPOSED CONCRETE OVERLAY SHALL CLOSELY MATCH THE CROSS SLOPE SHOWN ON THE PLANS WHILE MAINTAINING 2'-9" PARAPET HEIGHT AND 2" MIN. THICKNESS FOR THE OVERLAY. THE CONTRACTOR SHALL CONTACT THE ENGINEER IN THE EVENT THAT THIS CRITERIA IS UNABLE TO BE MET.

PREL. TRACING _____ W.R.A. _____ DESIGN _____ J.T.L./F.J.O. _____ CHKD. _____ W.A.O. _____

M:\3130314\fd02br715a.dgn

FINISHED ROADWAY ELEVATIONS – III

BR. 1-715A 6048	CONTRACT	COUNTY	F.A.P. NO.	SHEET NO.	TOTAL SHTS.
	22-074-09	NEW CASTLE	SEE TITLE SHEET	107	152

REHABILITATION OF BRIDGE NOS. 1-715, 1-715A, & 1-715D ON SR 273 OVER I-95

REVISIONS

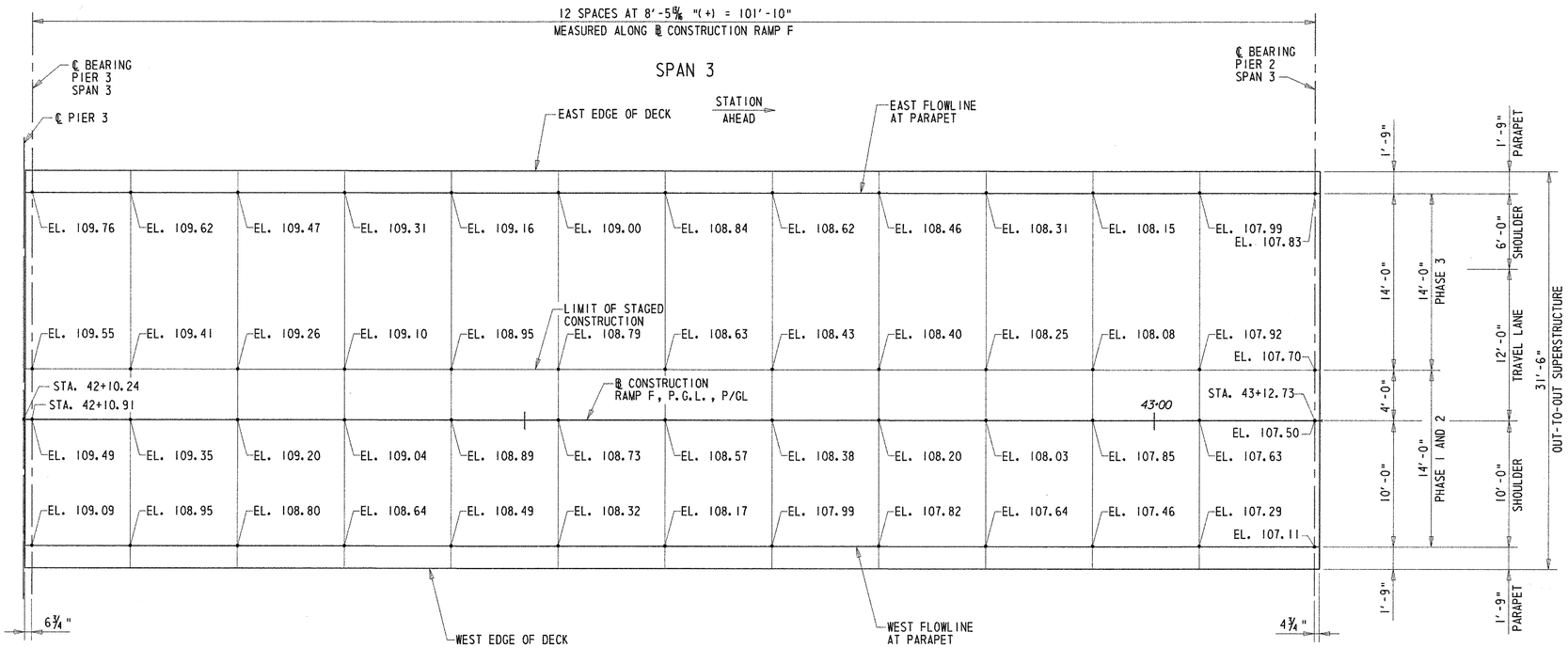

FINISHED ROADWAY ELEVATIONS - SPAN 3

SCALE: 3/16" = 1'-0"

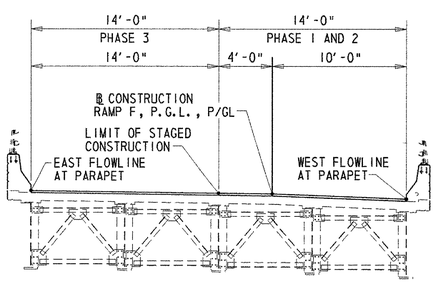

LOCATIONS OF FINISHED ROADWAY ELEVATIONS

LOOKING STATION AHEAD

SCALE: 3/16" = 1'-0"

NOTES:

1. THE ELEVATIONS SHOWN ARE FOR INFORMATIONAL PURPOSES ONLY. CONTRACTOR SHALL SURVEY THE EXISTING DECK AT LOCATIONS SHOWN ON THESE PLANS PRIOR TO REMOVING THE BITUMINOUS OVERLAY. THIS SURVEY SHALL BE USED TO VERIFY FINISHED ELEVATIONS FOR THE CONCRETE OVERLAY. COST OF THIS WORK WILL BE INCLUDED IN 763501 - CONSTRUCTION ENGINEERING.

2. DUE TO THE VARYING NATURE OF THE EXISTING BITUMINOUS OVERLAY THICKNESS, THE EXISTING CROSS SLOPE MAY NOT MATCH THE CROSS SLOPE SHOWN ON THE PLANS. THE CROSS SLOPE OF THE PROPOSED CONCRETE OVERLAY SHALL CLOSELY MATCH THE CROSS SLOPE SHOWN ON THE PLANS WHILE MAINTAINING 2'-9" PARAPET HEIGHT AND 2" MIN. THICKNESS FOR THE OVERLAY. THE CONTRACTOR SHALL CONTACT THE ENGINEER IN THE EVENT THAT THIS CRITERIA IS UNABLE TO BE MET.

PREL. TRACING W.R.A. DESIGN J.T.L./F.J.O. CHKD. W.A.C.

M:\3130314\fd03br715a.dgn

FINISHED ROADWAY ELEVATIONS – IV

BR. 1-715A 6048	CONTRACT	COUNTY	F.A.P. NO.	SHEET NO.	TOTAL SHTS.
	22-074-09	NEW CASTLE	SEE TITLE SHEET	108	152

REHABILITATION OF BRIDGE NOS. 1-715, 1-715A, & 1-715D ON SR 273 OVER I-95

REVISIONS

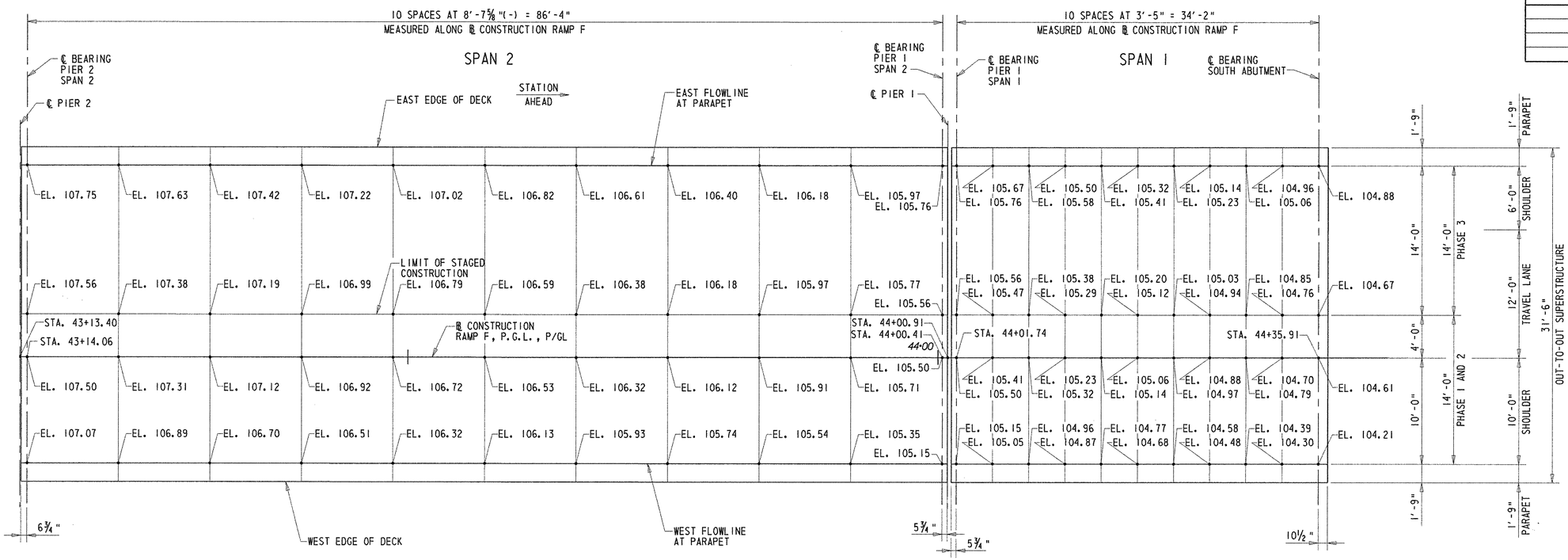

FINISHED ROADWAY ELEVATIONS - SPANS 1 AND 2

SCALE: 3/16" = 1'-0"

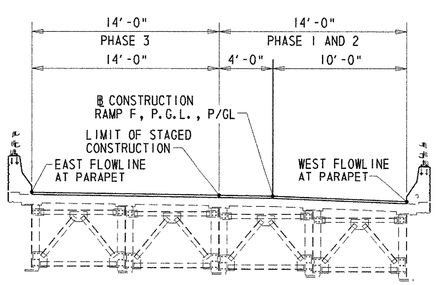

LOCATIONS OF FINISHED ROADWAY ELEVATIONS

LOOKING STATION AHEAD

SCALE: 3/16" = 1'-0"

NOTES:

1. THE ELEVATIONS SHOWN ARE FOR INFORMATIONAL PURPOSES ONLY. CONTRACTOR SHALL SURVEY THE EXISTING DECK AT LOCATIONS SHOWN ON THESE PLANS PRIOR TO REMOVING THE BITUMINOUS OVERLAY. THIS SURVEY SHALL BE USED TO VERIFY FINISHED ELEVATIONS FOR THE CONCRETE OVERLAY. COST OF THIS WORK WILL BE INCLUDED IN 763501 - CONSTRUCTION ENGINEERING.

2. DUE TO THE VARYING NATURE OF THE EXISTING BITUMINOUS OVERLAY THICKNESS, THE EXISTING CROSS SLOPE MAY NOT MATCH THE CROSS SLOPE SHOWN ON THE PLANS. THE CROSS SLOPE OF THE PROPOSED CONCRETE OVERLAY SHALL CLOSELY MATCH THE CROSS SLOPE SHOWN ON THE PLANS WHILE MAINTAINING 2'-9" PARAPET HEIGHT AND 2" MIN. THICKNESS FOR THE OVERLAY. THE CONTRACTOR SHALL CONTACT THE ENGINEER IN THE EVENT THAT THIS CRITERIA IS UNABLE TO BE MET.

PREL. TRACING _____ W.R.A. _____ DESIGN _____ J.T.L./F.J.O. _____ CHKD. _____ W.A.G. _____

M:\3130314\fd04br715a.dgn

JOINT REPAIRS - ABUTMENTS

BR. 1-715A 6048	CONTRACT	COUNTY	F.A.P. NO.	SHEET NO.	TOTAL SHTS.
	22-074-09	NEW CASTLE	SEE TITLE SHEET	109	152

REHABILITATION OF BRIDGE NOS. 1-715, 1-715A, & 1-715D ON SR 273 OVER I-95

REVISIONS	

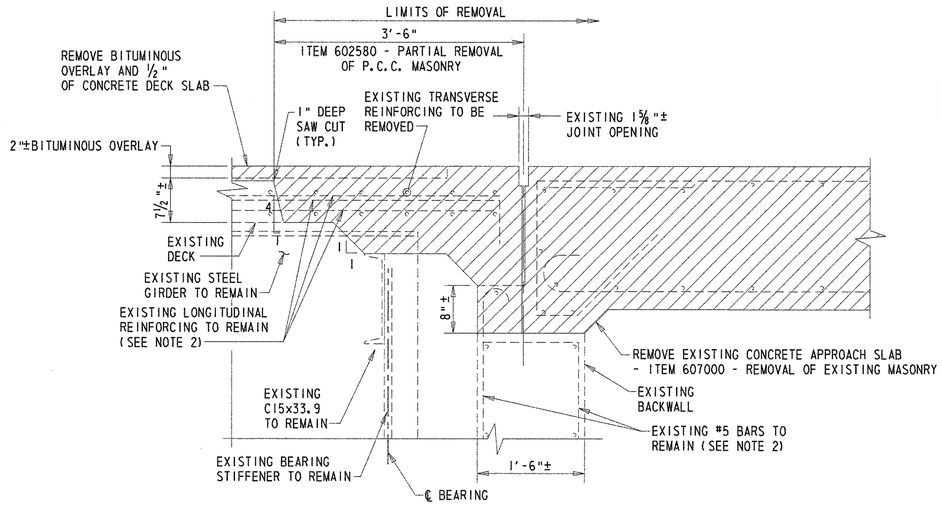

EXISTING TYPICAL SECTION @ ABUTMENTS

SCALE: 1"=1'-0"

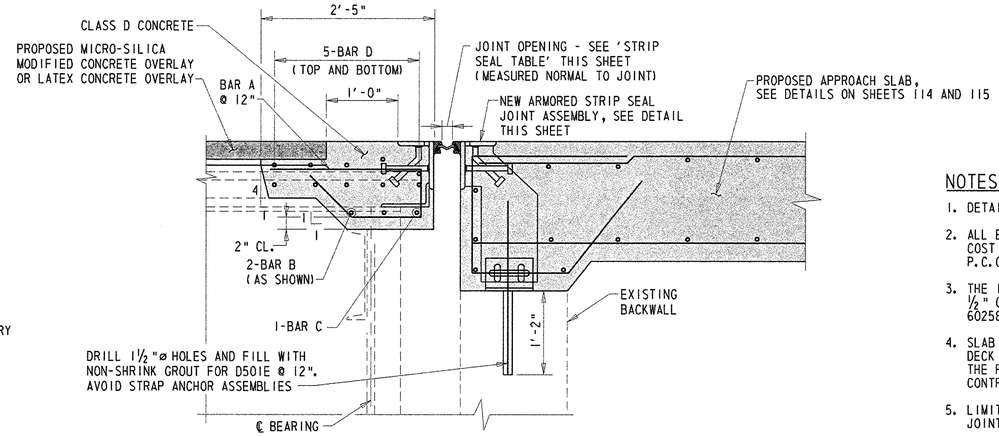

PROPOSED TYPICAL SECTION @ ABUTMENTS

SCALE: 1"=1'-0"

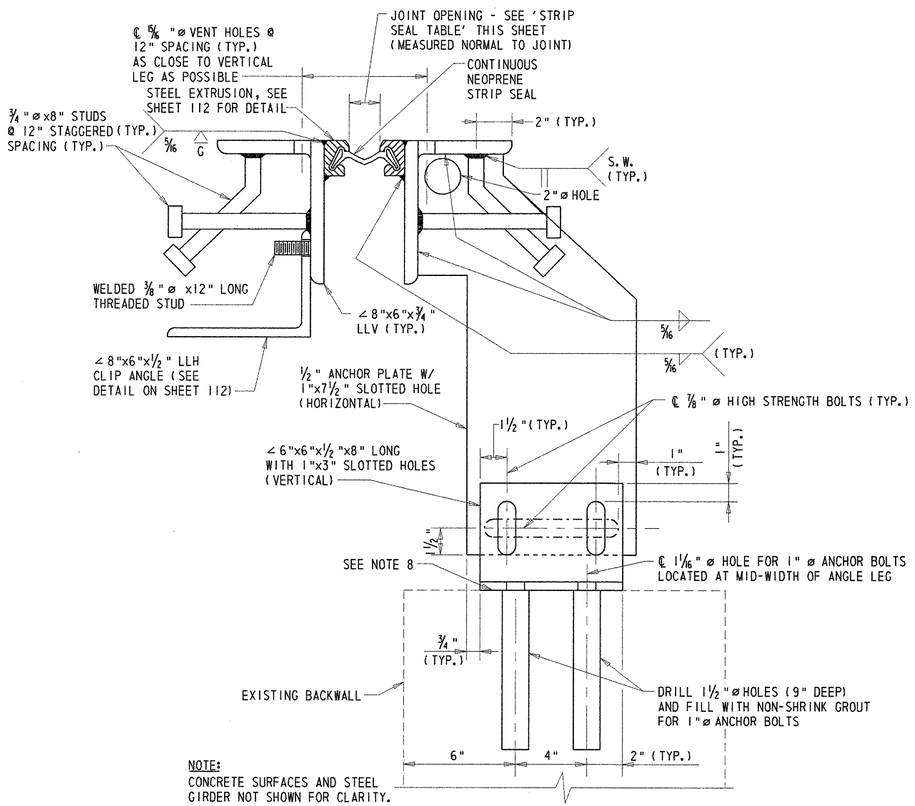

NOTE:
CONCRETE SURFACES AND STEEL GIRDER NOT SHOWN FOR CLARITY.

NEW ARMORED STRIP SEAL JOINT ASSEMBLY

SCALE: 3"=1'-0"

BAR SCHEDULE

BAR	PHASE 1 AND 2	PHASE 3
A	S501E	S511E
B	S602E	S612E
C	S603E	S613E
D	S605E	S614E

STRIP SEAL TABLE

TEMP. (F)	S. ABUTMENT	N. ABUTMENT
40	2 1/16"	2 1/16"
50	2 1/16"	2 1/16"
60	2"	2"
70	1 15/16"	1 15/16"
80	1 15/16"	1 15/16"
90	1 15/16"	1 7/8"

NOTES:

1. DETAILS SHOWN FOR SOUTH ABUTMENT. NORTH ABUTMENT SIMILAR.
2. ALL EXPOSED REINFORCEMENT STEEL SHALL BE BLAST CLEANED AND EPOXY COATED. COST OF THIS WORK WILL BE INCLUDED IN ITEM 602580 - PARTIAL REMOVAL OF P.C.C. MASONRY.
3. THE 1" DEEP SAW CUT SHALL BE PERFORMED UPON COMPLETION OF REMOVING THE 1/2" OF CONCRETE DECK. COST FOR THE SAW CUT WILL BE INCLUDED IN ITEM 602580 - PARTIAL REMOVAL OF P.C.C. MASONRY.
4. SLAB THICKNESS IS AS SHOWN ON THE ORIGINAL CONTRACT DRAWINGS. FINISHED DECK SURFACE SHALL MATCH ELEVATION OF EXISTING SURFACE REGARDLESS OF THE RESULTING THICKNESS COMPARED TO THE VALUE SHOWN ON THE ORIGINAL CONTRACT DRAWINGS.
5. LIMITS OF JOINT REMOVAL AND RECONSTRUCTION ARE MEASURED NORMAL TO THE JOINT.
6. CLEAN AND APPLY EPOXY BONDING COMPOUND TO ALL REMOVAL AND ROUGHENED SURFACES PRIOR TO PLACING CONCRETE. COST OF THIS WORK WILL BE INCLUDED IN ITEM 602013 - P.C.C. MASONRY, SUPERSTRUCTURE, CLASS D.
7. THE PERMANENT NEOPRENE STRIP SEAL SHALL BE CONTINUOUS ACROSS THE SPLICE IN THE JOINT ASSEMBLY REQUIRED FOR STAGED CONSTRUCTION.
8. UPON COMPLETION OF CONCRETE REMOVAL, EXISTING SURFACE SHALL BE LEVELED AND SMOOTHED USING AN EPOXY GROUT. COST WILL BE INCLUDED IN ITEM 605511 - PREFABRICATED EXPANSION JOINT SYSTEM, 3".
9. ALL STRUCTURAL STEEL FOR JOINT MODIFICATIONS SHALL CONFORM TO ASTM A 709, GRADE 36. GRADE 50 STEEL MAY BE SUBSTITUTED FOR GRADE 36 AT NO ADDITIONAL COST TO THE DEPARTMENT.
10. COST FOR DRILLING AND GROUTING 1" ø ANCHOR BOLTS WILL BE INCLUDED IN ITEM 605511 - PREFABRICATED EXPANSION JOINT SYSTEM - 3".
11. PRIOR TO FABRICATION OF THE ROADWAY JOINT MATERIAL, THE CONTRACTOR SHALL FIELD VERIFY THE CROSS-SLOPE OF THE ROADWAY AT THE INDIVIDUAL JOINT LOCATIONS.

PREL. TRACING _____ W.R.A. _____ DESIGN _____ J.T.L./F.J.O. _____ CHKD. _____ W.A.G. _____

BR. 1-715A 6048	CONTRACT	COUNTY	F.A.P. NO.	SHEET NO.	TOTAL SHTS.
	22-074-09	NEW CASTLE	SEE TITLE SHEET	110	152

REHABILITATION OF BRIDGE NOS. 1-715, 1-715A, & 1-715D ON SR 273 OVER I-95

REVISIONS

JOINT REPAIRS - PIERS

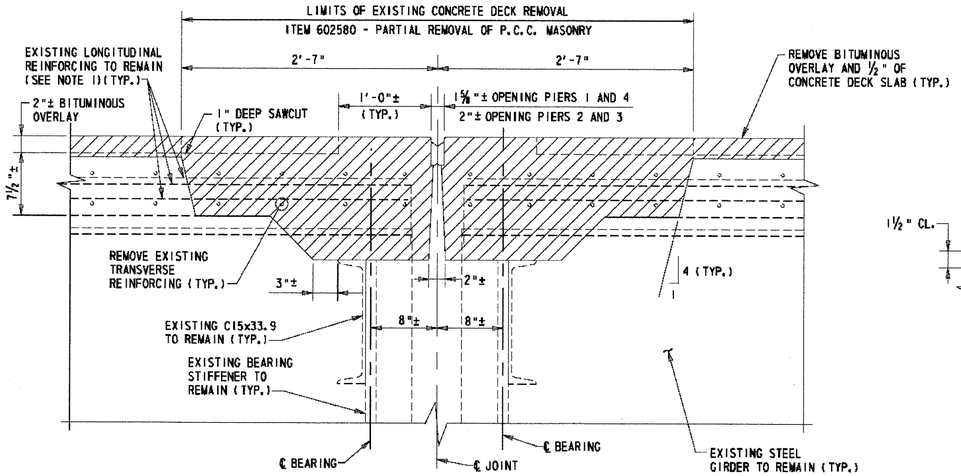

EXISTING TYPICAL SECTION @ PIERS 1-4

SCALE: 1 1/2"=1'-0"

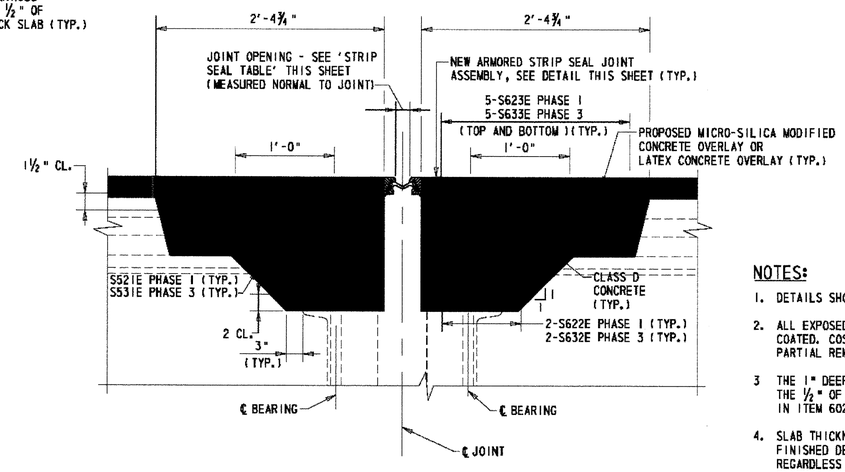

PROPOSED TYPICAL SECTION (ALL PIERS)

SCALE: 1 1/2"=1'-0"

NOTES:

1. DETAILS SHOWN FOR SOUTH ABUTMENT. NORTH ABUTMENT SIMILAR.
2. ALL EXPOSED REINFORCEMENT STEEL SHALL BE BLAST CLEANED AND EPOXY COATED. COST OF THIS WORK WILL BE INCLUDED IN ITEM 602580 - PARTIAL REMOVAL OF P.C.C. MASONRY.
3. THE 1" DEEP SAW CUT SHALL BE PERFORMED UPON COMPLETION OF REMOVING THE 1/2" OF CONCRETE DECK. COST FOR THE SAW CUT WILL BE INCLUDED IN ITEM 602580 - PARTIAL REMOVAL OF P.C.C. MASONRY.
4. SLAB THICKNESS IS AS SHOWN ON THE ORIGINAL CONTRACT DRAWINGS. FINISHED DECK SURFACE SHALL MATCH ELEVATION OF EXISTING SURFACE REGARDLESS OF THE RESULTING THICKNESS COMPARED TO THE VALUE SHOWN ON THE ORIGINAL CONTRACT DRAWINGS.
5. LIMITS OF JOINT REMOVAL AND RECONSTRUCTION ARE MEASURED NORMAL TO THE JOINT.
6. CLEAN AND APPLY EPOXY BONDING COMPOUND TO ALL REMOVAL AND ROUGHENED SURFACES PRIOR TO PLACING CONCRETE. COST OF THIS WORK WILL BE INCLUDED IN ITEM 602013 - P.C.C. MASONRY, SUPERSTRUCTURE, CLASS D.
7. THE PERMANENT NEOPRENE STRIP SEAL SHALL BE CONTINUOUS ACROSS THE SPLICE IN THE JOINT ASSEMBLY REQUIRED FOR STAGED CONSTRUCTION.
8. UPON COMPLETION OF CONCRETE REMOVAL, EXISTING SURFACE SHALL BE LEVELED AND SMOOTHED USING AN EPOXY GROUT. COST WILL BE INCLUDED IN ITEM 605511 - PREFABRICATED EXPANSION JOINT SYSTEM, 3".
9. ALL STRUCTURAL STEEL AND ANCHOR BOLTS FOR JOINT MODIFICATIONS SHALL CONFORM TO ASTM A709, GRADE 36. GRADE 50 STEEL MAY BE SUBSTITUTED FOR GRADE 36 AT NO ADDITIONAL COST TO THE DEPARTMENT.
10. COST OF DRILLING AND GROUTING 1" ANCHOR BOLTS WILL BE INCLUDED IN ITEM 605511 - PREFABRICATED EXPANSION JOINT SYSTEM, 3".
11. PRIOR TO FABRICATION OF THE ROADWAY JOINT MATERIAL, THE CONTRACTOR SHALL FIELD VERIFY THE CROSS-SLOPE OF THE ROADWAY AT THE INDIVIDUAL JOINT LOCATIONS

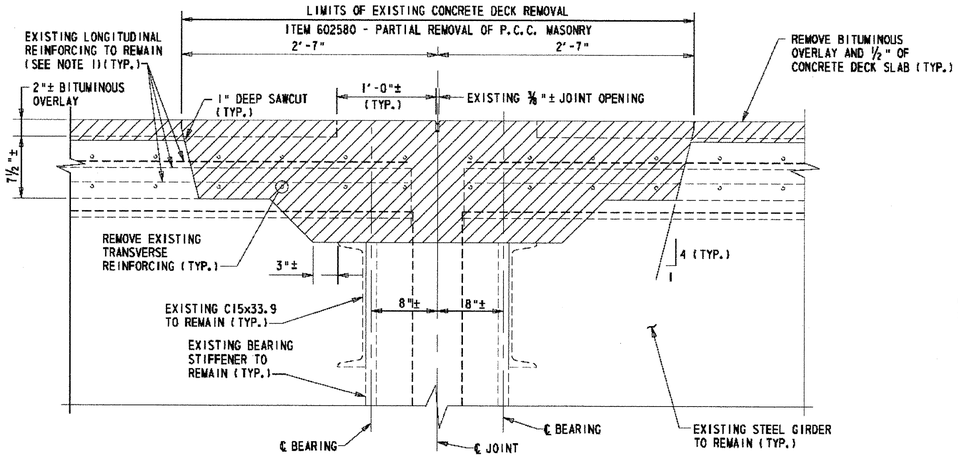

EXISTING SECTION @ PIER 5

SCALE: 1 1/2"=1'-0"

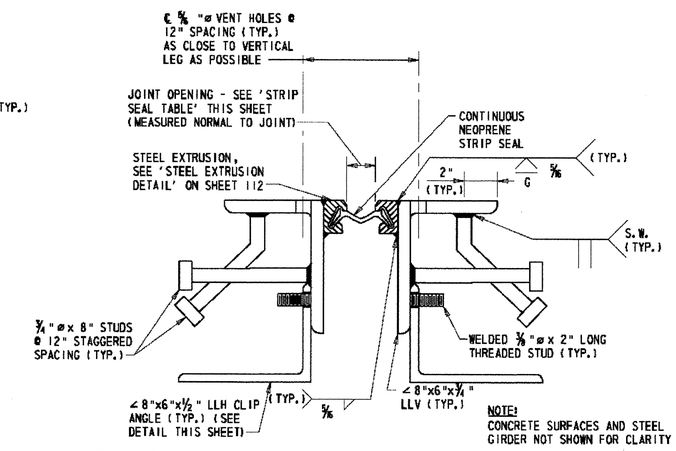

NOTE:
CONCRETE SURFACES AND STEEL GIRDER NOT SHOWN FOR CLARITY

NEW ARMORED STRIP SEAL JOINT ASSEMBLY DETAIL

SCALE: 3"=1'-0"

STRIP SEAL TABLE					
TEMP. (F)	PIER 1	PIER 2	PIER 3	PIER 4	PIER 5
40	2"	2 1/8"	2 3/16"	2 3/16"	2 1/8"
50	2"	2 1/16"	2 1/16"	2 1/16"	2 1/16"
60	2"	2"	2"	2"	2"
70	2"	1 15/16"	1 15/16"	1 15/16"	1 15/16"
80	2"	1 7/8"	1 7/8"	1 7/8"	1 7/8"
90	2"	1 5/16"	1 3/4"	1 3/4"	1 11/16"

NOTES:

1. ALL EXPOSED REINFORCEMENT STEEL SHALL BE BLAST CLEANED AND EPOXY COATED. COST OF THIS WORK WILL BE INCLUDED IN ITEM 602580 - PARTIAL REMOVAL OF P.C.C. MASONRY.
2. SLAB THICKNESS IS AS SHOWN ON THE ORIGINAL CONTRACT DRAWINGS. FINISHED DECK SURFACE SHALL MATCH ELEVATION OF EXISTING SURFACE REGARDLESS OF THE RESULTING THICKNESS COMPARED TO THE VALUE SHOWN ON THE ORIGINAL CONTRACT DRAWINGS.
3. THE 1" DEEP SAW CUT SHALL BE PERFORMED UPON COMPLETION OF REMOVING THE 1/2" OF CONCRETE DECK. COST FOR THE SAW CUT WILL BE INCLUDED IN ITEM 602580 - PARTIAL REMOVAL OF P.C.C. MASONRY.
4. LIMITS OF JOINT REMOVAL AND RECONSTRUCTION ARE MEASURED NORMAL TO THE JOINT.
5. CLEAN AND APPLY EPOXY BONDING COMPOUND TO ALL REMOVAL AND ROUGHENED SURFACES PRIOR TO PLACING CONCRETE. COST OF THIS WORK WILL BE INCLUDED IN ITEM 602013 - P.C.C. MASONRY, SUPERSTRUCTURE, CLASS D.
6. THE PERMANENT NEOPRENE STRIP SEAL SHALL BE CONTINUOUS ACROSS THE SPLICE IN THE JOINT ASSEMBLY REQUIRED FOR STAGED CONSTRUCTION.
7. ALL STRUCTURAL STEEL FOR JOINT MODIFICATIONS SHALL CONFORM TO ASTM A 709, GRADE 36. GRADE 50 STEEL MAY BE SUBSTITUTED FOR GRADE 36 AT NO ADDITIONAL COST TO THE DEPARTMENT.
8. PRIOR TO FABRICATION OF THE ROADWAY JOINT MATERIAL, THE CONTRACTOR SHALL FIELD VERIFY THE CROSS-SLOPE OF THE ROADWAY AT THE INDIVIUAL JOINT LOCATIONS.

PRELIM. TRACING ____ W.R.A. ____ DESIGN ____ J.T.L./F.J.O. ____ CHKD. ____ W.A.G.

M:\313031\4\EX02br715a.dgn

JOINT REPAIR LAYOUT

BR. 1-715A 6048	CONTRACT	COUNTY	F.A.P. NO.	SHEET NO.	TOTAL SHTS.
	22-074-09	NEW CASTLE	SEE TITLE SHEET	111	152

REHABILITATION OF BRIDGE NOS. 1-715, 1-715A, & 1-715D ON SR 273 OVER I-95

REVISIONS

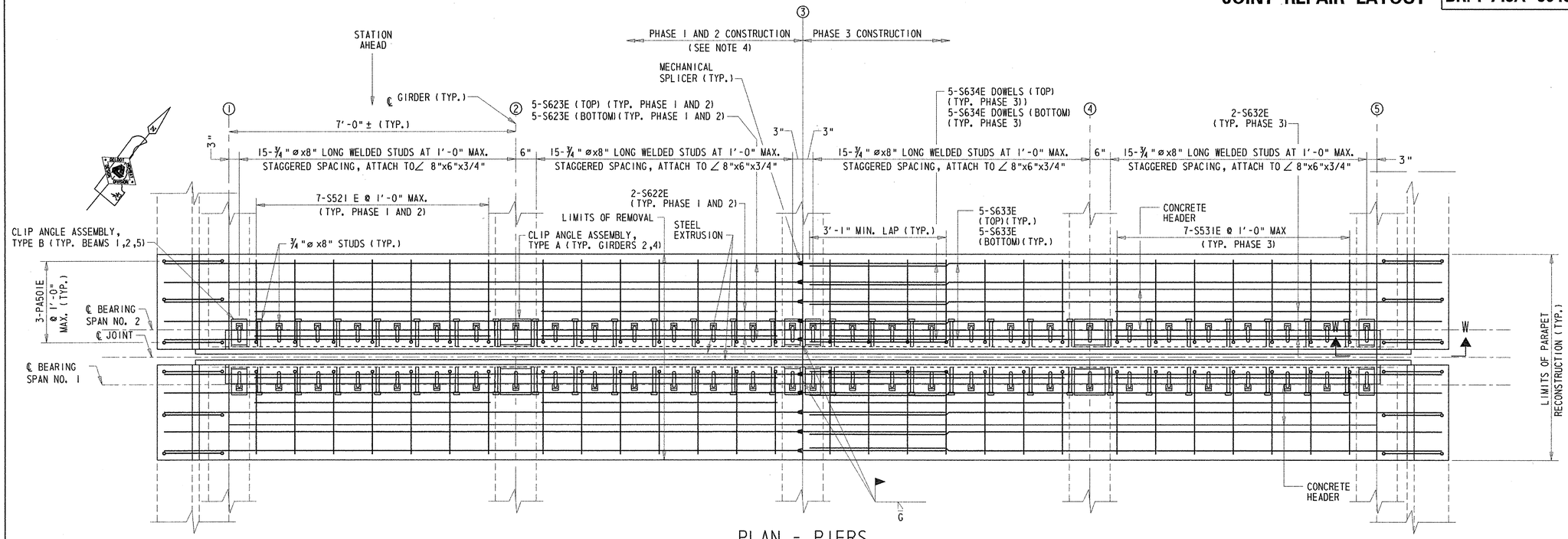

PLAN - PIERS

SCALE: ¾"=1'-0"

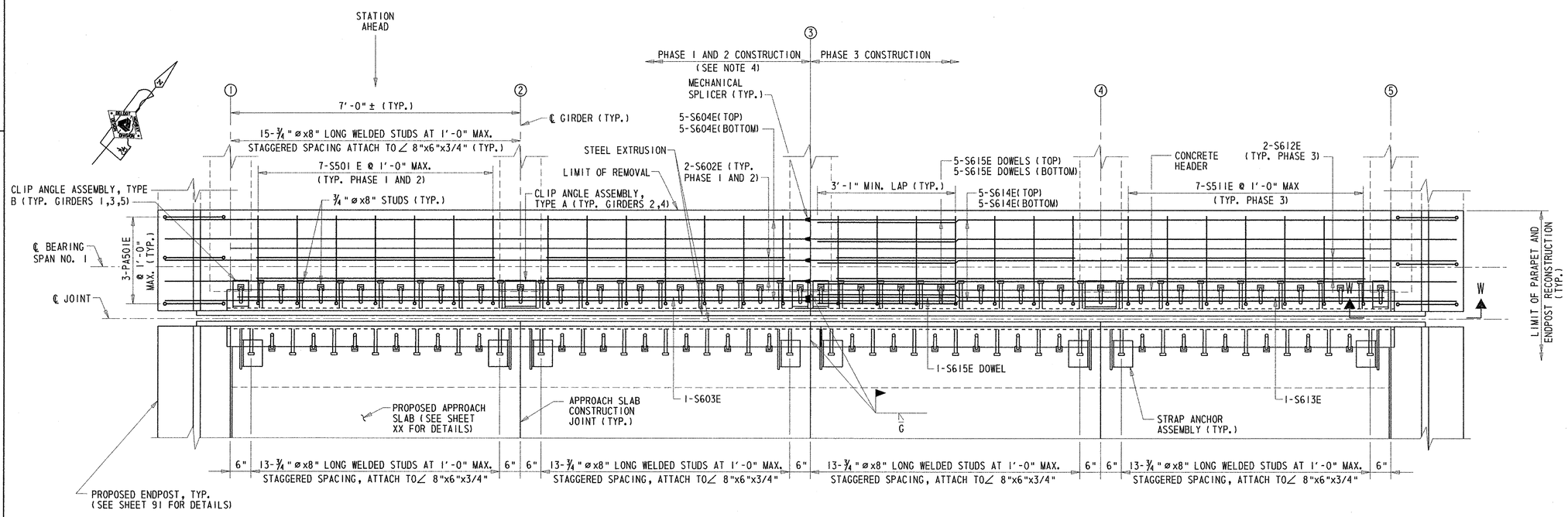

PLAN - ABUTMENTS

SCALE: ¾"=1'-0"

NOTES:

1. SOUTH ABUTMENT SHOWN. NORTH ABUTMENT SIMILAR.
2. PIER NO. 1 SHOWN. PIER NOS. 2 - 5 SIMILAR.
3. BENT SLIDING PLATE NOT SHOWN FOR CLARITY. SEE DETAILS ON SHEET 112.
4. UPON COMPLETION OF RECONSTRUCTING THE PHASE 1 AND 2 PORTION OF THE ROADWAY JOINT, A TEMPORARY STRIP SEAL SHALL BE INSTALLED IN THE JOINT OPENING. NO ADHESIVE SHALL BE APPLIED TO THE INNER PORTIONS OF THE EXTRUSION PRIOR TO INSTALLING THE TEMPORARY STRIP SEAL. UPON COMPLETION OF RECONSTRUCTING THE PHASE 3 PORTION OF THE ROADWAY JOINT, THE TEMPORARY STRIP SEAL SHALL BE REMOVED AND THE PERMANENT STRIP SEAL SHALL BE INSTALLED IN ACCORDANCE WITH THE MANUFACTURER'S RECOMMENDATIONS. COST OF FURNISHING, INSTALLING AND REMOVING THE TEMPORARY STRIP SEAL WILL BE INCIDENTAL TO ITEM 605511 - PREFABRICATED EXPANSION JOINT SYSTEM, 3".

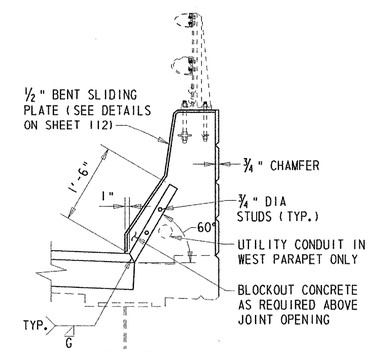

SECTION W-W

SCALE: ¾"=1'-0"

PREL. TRACING W.R.A. DESIGN J.T.L./F.J.O. CHKD. W.A.G.

M:\31303\MEX03br715a.dgn

MISCELLANEOUS JOINT REPAIR DETAILS

BR. 1-715A 6048	CONTRACT	COUNTY	F.A.P. NO.	SHEET NO.	TOTAL SHTS.
	22-074-09	NEW CASTLE	SEE TITLE SHEET	112	152

REHABILITATION OF BRIDGE NOS. 1-715, 1-715A, & 1-715D ON SR 273 OVER I-95

REVISIONS

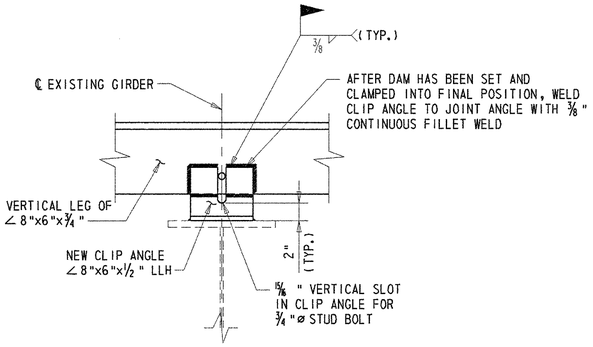

SECTION X-X

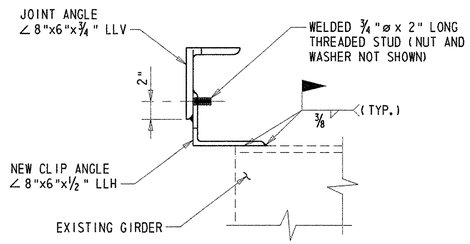

SECTION Y-Y

NOTES:

1. 3/4"⌀ STUDS NOT SHOWN FOR CLARITY.
2. CLIP ANGLE, TYPE A - DIMENSION "A" = 9"
   CLIP ANGLE, TYPE B - DIMENSION "B" = 4 1/2"
   REFER TO SHEET xx AND xx FOR LOCATION OF TYPE A AND TYPE B CLIP ANGLES.
3. STRUCTUAL STEEL FOR CLIP ANGLES SHALL CONFORM TO ASTM A 709, GRADE 36. GRADE 50 STEEL MAY BE SUBSTITUDED FOR GRADE 36 AT NO ADDITIONAL COST TO THE DEPARTMENT.
4. LUBRICANT-ADHESIVE FOR USE IN INSTALLING AND BONDING NEOPRENE SEAL ELEMENTS TO STEEL EXPANSION DAM COMPONENTS SHALL BE A ONE-QUART MOISTURE-CURING POLYURETHANE AND HYDROCARBON SOLVENT MIXTURE HAVING THE FOLLOWING PHYSICAL PROPERTIES:

AVERAGE WEIGHT, POUNDS PER GALLON	8 ±10%
SOLIDS CONTENT	65%
ADHESIVE SHALL REMAIN LIQUID FROM	5° TO 120° F
FILM STRENGTH AS PER ASTM D-412	2000 PSI
ELONGATION	250%

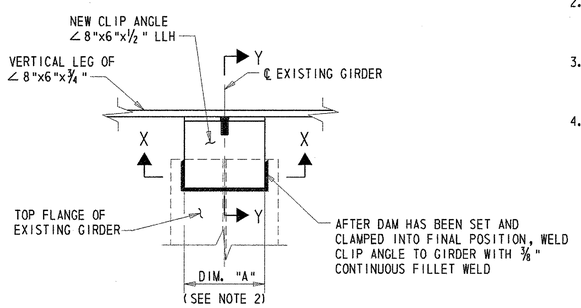

PLAN

CLIP ANGLE DETAILS

SCALE: 1 1/2"=1'-0"

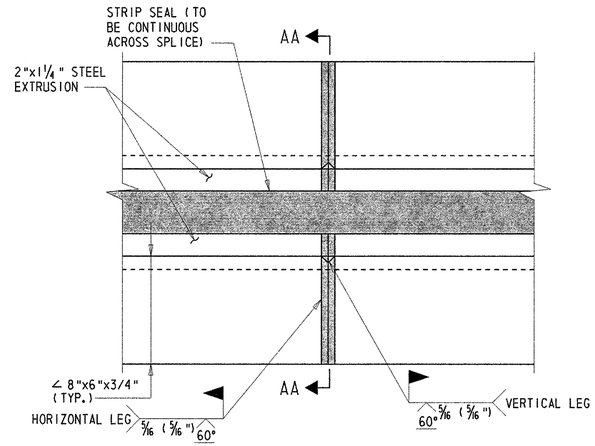

FIELD SPLICE DETAIL

SCALE: 3"=1'-0"

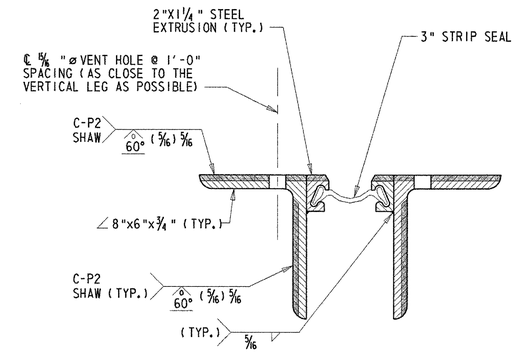

SECTION AA-AA

SCALE: 3"=1'-0"

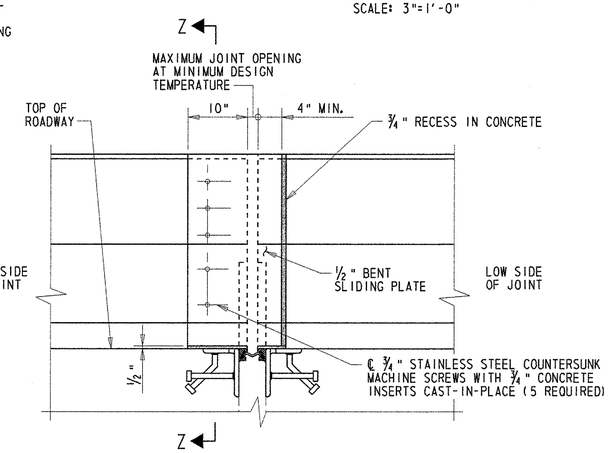

BENT SLIDING PLATE DETAIL - ELEVATION

SCALE: 1"=1'-0"

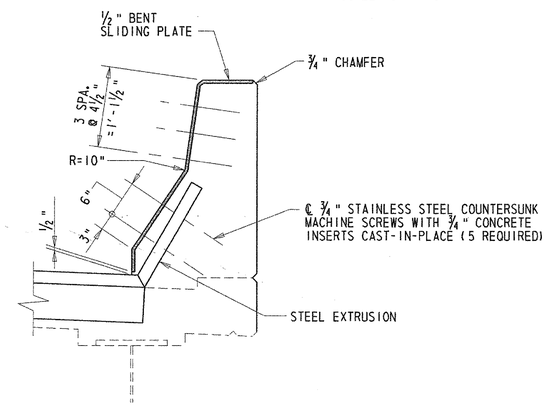

SECTION Z-Z

SCALE: 1"=1'-0"

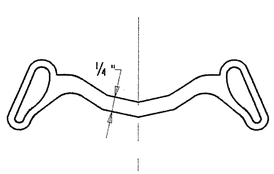

3" STRIP SEAL

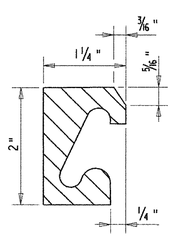

STEEL EXTRUSION DETAIL

EXPANSION JOINT SEAL

NOT TO SCALE

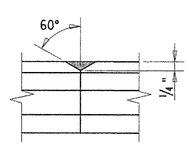

FRONT FACE

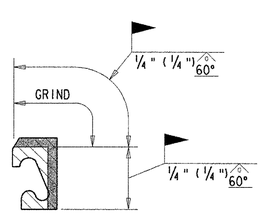

SECTION

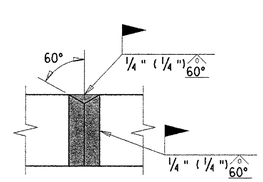

REAR FACE

STEEL EXTRUSION FIELD SPLICE DETAIL

NOT TO SCALE

BENT SLIDING PLATE NOTES:

1. EXISTING TWO-STRAND RAILING NOT SHOWN FOR CLARITY.
2. COST OF FURNISHING AND INSTALLING THE BENT SLIDING PLATE, COUNTERSUNK SCREWS AND INSERTS WILL BE PAID UNDER ITEM 605511 - PREFABRICATED EXPANSION JOINT SYSTEM, 3".
3. PAINT SYSTEM TO BE APPLIED TO THE ARMORING ANGLE, EXTRUSION AND BENT SLIDING PLATE SHALL MATCH COLOR APPLIED TO SUPERSTRUCTURE STEEL.
4. TOP PORTION OF BENT SLIDING PLATE SHALL BE CLIPPED AT ENDPOST LOCATIONS.

PREL. TRACING W.R.A. DESIGN J.T.L./F.J.O. CHKD. W.A.G.

M:\3130314\EX04br715a.dgn

BR. 1-715A 6048	CONTRACT	COUNTY	F.A.P. NO.	SHEET NO.	TOTAL SHTS.
	22-074-09	NEW CASTLE	SEE TITLE SHEET	113	152

SUPERSTRUCTURE MISCELLANEOUS DETAILS

REHABILITATION OF BRIDGE NOS. 1-715, 1-715A, & 1-715D ON SR 273 OVER I-95

REVISIONS

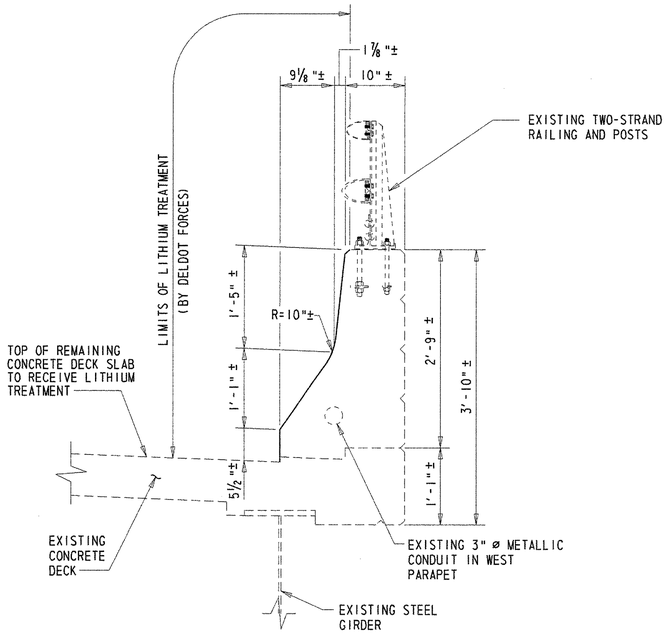

LITHIUM TREATMENT LIMITS (BY DELDOT FORCES) - TYPICAL SECTION

SCALE: 1"=1'-0"

LITHIUM TREATMENT NOTES:

1. EXISTING 2"± BITUMINOUS OVERLAY TO BE REMOVED NOT SHOWN.
2. LONGITUDINAL LIMITS OF THE LITHIUM TREATMENT SHALL EXTEND FROM ROADWAY JOINT AT THE SOUTH ABUTMENT TO ROADWAY JOINT AT THE NORTH ABUTMENT.
3. SEE 'PROJECT NOTES' FOR INFORMATION REGARDING SCHEDULING OF LITHIUM TREATMENT APPLICATION.

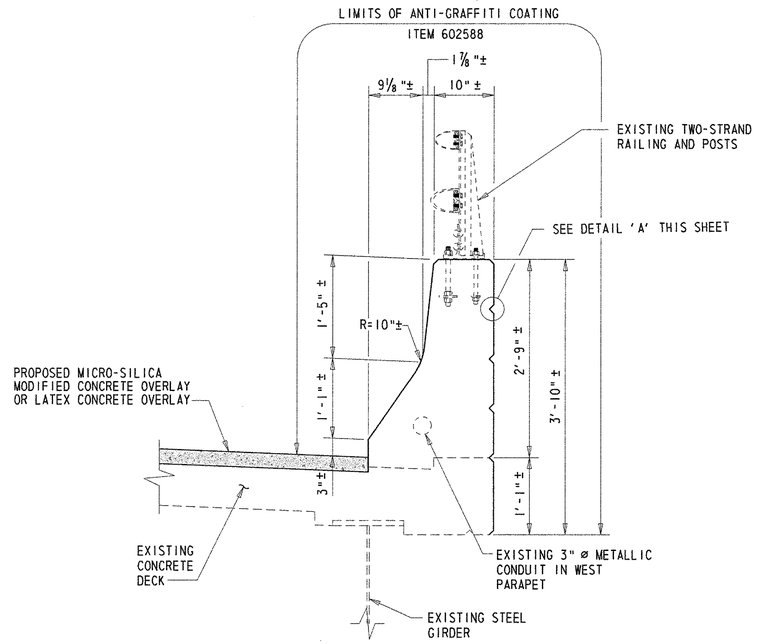

NOTE:

LONGITUDINAL LIMITS OF THE ANTI-GRAFFITI COATING SHALL EXTEND FROM END OF RECONSTRUCTED CONCRETE ENDPOST AT THE SOUTH ABUTMENT TO END OF RECONSTRUCTED CONCRETE ENDPOST AT THE NORTH ABUTMENT.

ANTI-GRAFFITI COATING LIMITS - TYPICAL SECTION

SCALE: 1"=1'-0"

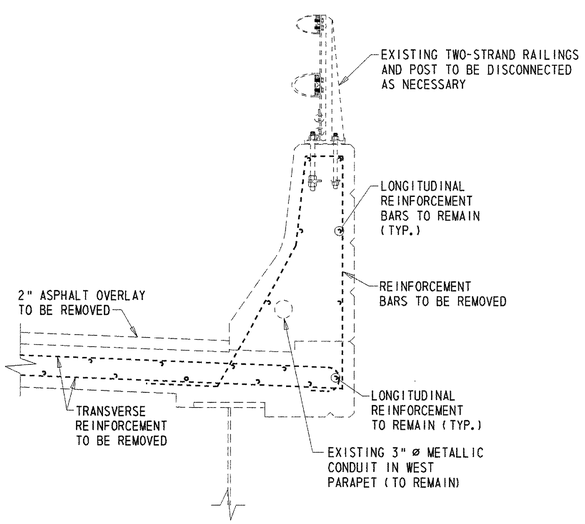

EXISTING BARRIER REINFORCEMENT DETAIL - TYPICAL SECTION

SCALE: 1"=1'-0"

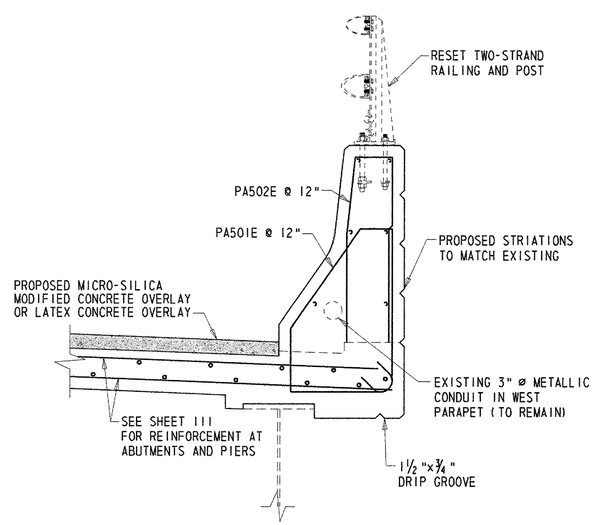

PROPOSED BARRIER REINFORCEMENT DETAIL - TYPICAL SECTION

SCALE: 1"=1'-0"

PROPOSED PARAPET NOTES:

1. TYPICAL SECTION SHOWN FOR PARAPET/MEDIAN BARRIER RECONSTRUCTION AT THE EXISTING ROADWAY JOINTS ONLY.
2. PAYMENT FOR REMOVAL AND RESETTING OF TWO-STRAND RAILING AND POSTS WILL BE MADE UNDER ITEM 602017 - P.C.C. MASONRY, PARAPET, CLASS A.

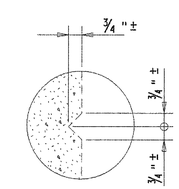

DETAIL 'A'

SCALE: 3"=1'-0"

NOTE:

LOCATION AND SIZE OF STRIATIONS IN PROPOSED PARAPET AT THE ROADWAY JOINTS SHALL MATCH STRIATIONS IN THE EXISTING PARAPET.

PREL. TRACING ____ W.R.A. ____ DESIGN ____ J.T.L./F.J.O. ____ CHKD. ____ W.A.G. ____

M:\3130314\MD03br715a.dgn

SOUTH APPROACH SLAB DETAILS

BR. 1-715A 6048

CONTRACT	COUNTY	F.A.P. NO.	SHEET NO.	TOTAL SHTS.
22-074-09	NEW CASTLE	SEE TITLE SHEET	114	152

REHABILITATION OF BRIDGE NOS. 1-715, 1-715A, & 1-715D ON SR 273 OVER I-95

REVISIONS

1 DELETED SHEET	
11/25/03 WAG/GM	

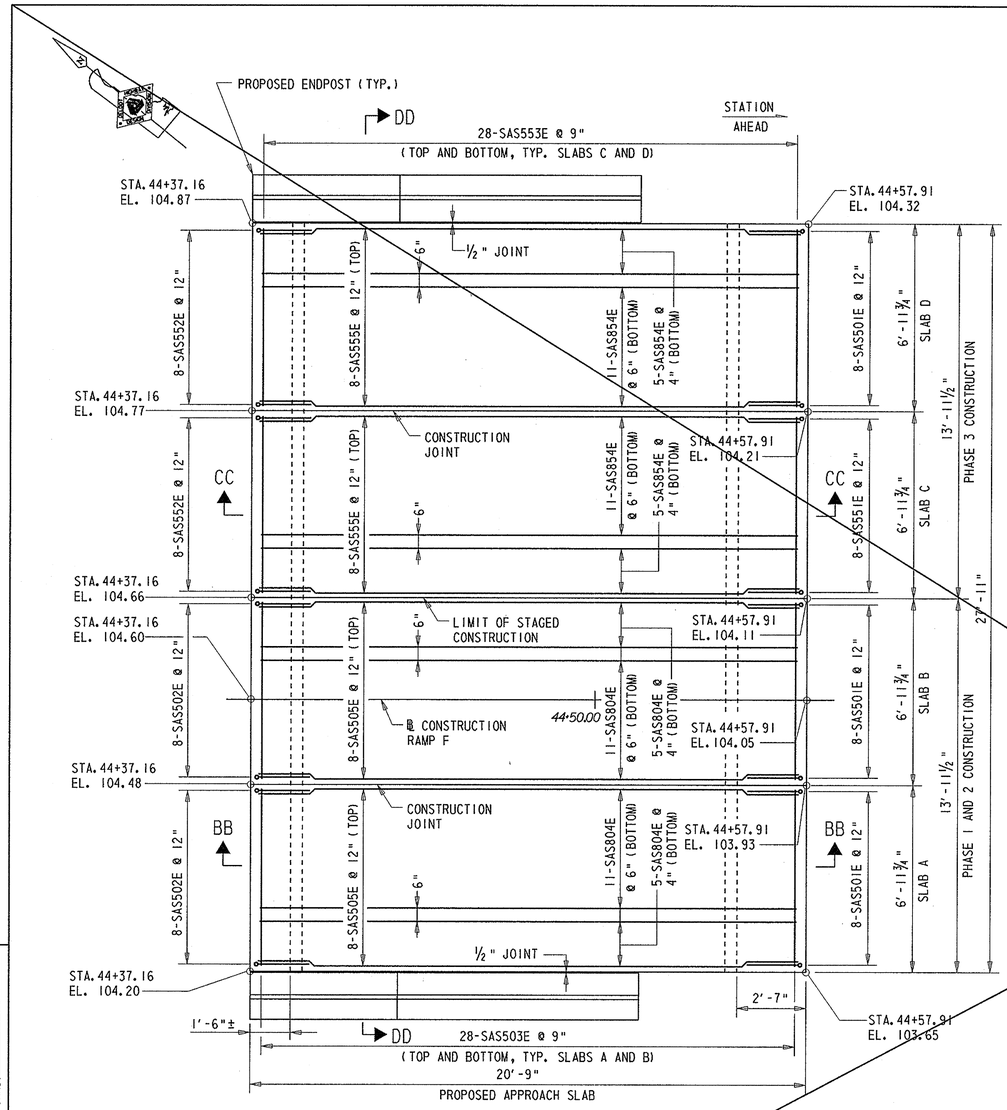

PLAN

SCALE: 3/8"=1'-0"

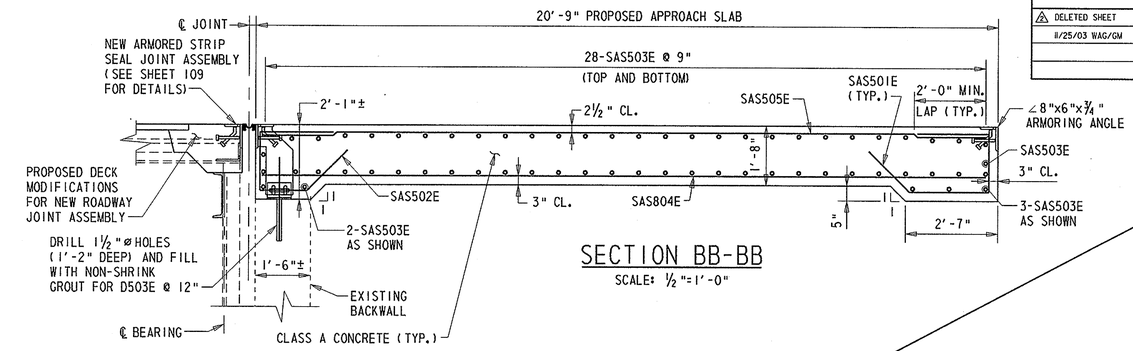

SECTION BB-BB

SCALE: 1/2"=1'-0"

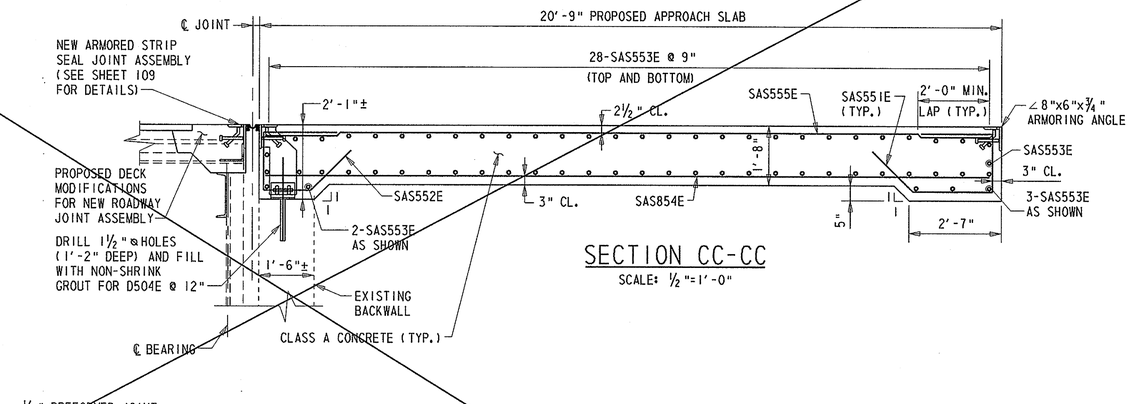

SECTION CC-CC

SCALE: 1/2"=1'-0"

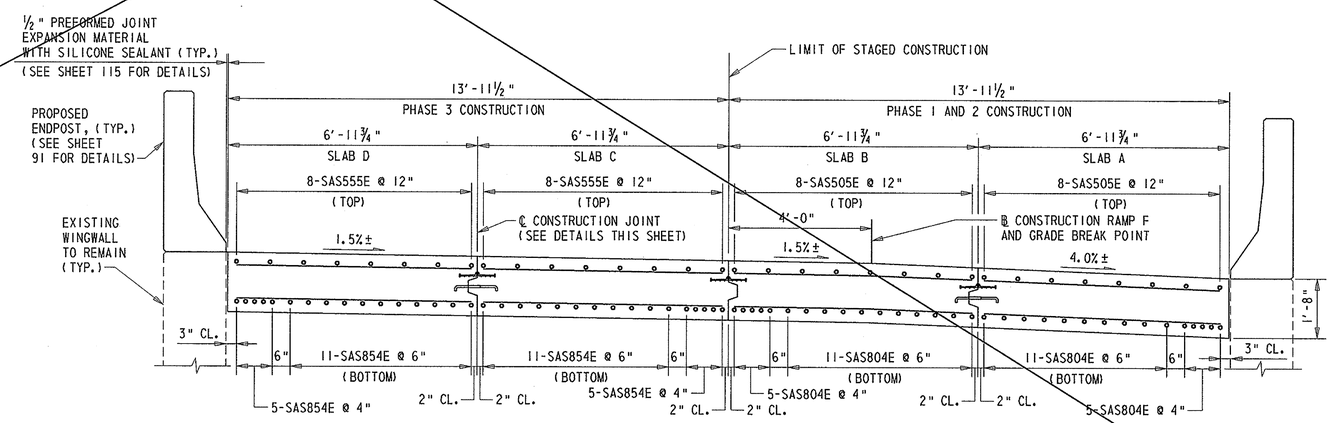

SECTION DD-DD

SCALE: 1/2"=1'-0"

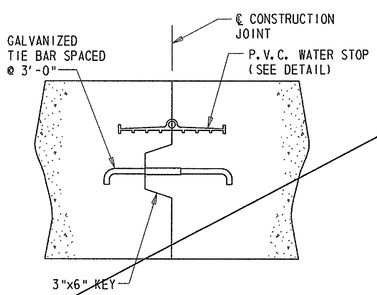

CONSTRUCTION JOINT DETAIL

SCALE: 1 1/2"=1'-0"

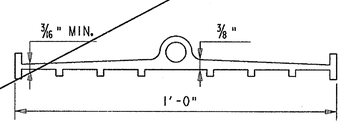

P.V.C. WATER STOP

SCALE: N.T.S.

NOTE:

1. SECTION DD-DD CUT LOOKING STATION AHEAD.
2. COSTS FOR GALVANIZED TIE BARS, P.V.C. WATERSTOPS AND 1/2" PREFORMED EXPANSION JOINT MATERIAL WITH SILICONE SEALANT SHALL BE INCIDENTAL TO ITEM 602009 - "PORTLAND CEMENT CONCRETE MASONRY, APPROACH SLAB, CLASS A".
3. FOR ARMORING ANGLE DETAILS, SEE SHEET 115.
4. PAYMENT FOR REMOVING THE EXISTING APPROACH SLAB CONCRETE AND ASPHALT OVERLAY AND ANY NECESSARY GRADING AND COMPACTION WILL BE PAID FOR UNDER ITEM 607000 - REMOVAL OF EXISTING MASONRY.
5. THE ELEVATIONS SHOWN ARE FOR INFORMATIONAL PURPOSES ONLY. PRIOR TO CONSTRUCTION THE CONCRETE APPROACH SLABS. THE CONTRACTOR SHALL FIELD VERIFY ALL ELEVATIONS SHOWN AND COORDINATE THE FINISHED ELEVATIONS WITH THE ADJACENT CONCRETE ENDPOSTS AND TOP OF OVERLAY ELEVATIONS.
6. ANY UNDERCUT EXCAVATION REQUIRED WITHIN THE LIMITS OF THE PROPOSED APPROACH SLAB AS DETERMINED BY THE ENGINEER SHALL BE PAID FOR UNDER ITEM 212000 - UNDERCUT EXCAVATION.

PREL. TRACING ____ W.R.A. ____ DESIGN ____ J.T.L./F.J.O. ____ CHKD. ____ W.A.G.

M:\313031\ns02br715adgn

SOUTH APPROACH SLAB DETAILS

BR. 1-715A 6048

CONTRACT	COUNTY	F.A.P. NO.	SHEET NO.	TOTAL SHTS.
22-074-09	NEW CASTLE	SEE TITLE SHEET	114A	152

REHABILITATION OF BRIDGE NOS. 1-715, 1-715A, & 1-715D ON SR 273 OVER I-95

REVISIONS

1 ADDED SHEET	
11/25/03 WAG/GM	

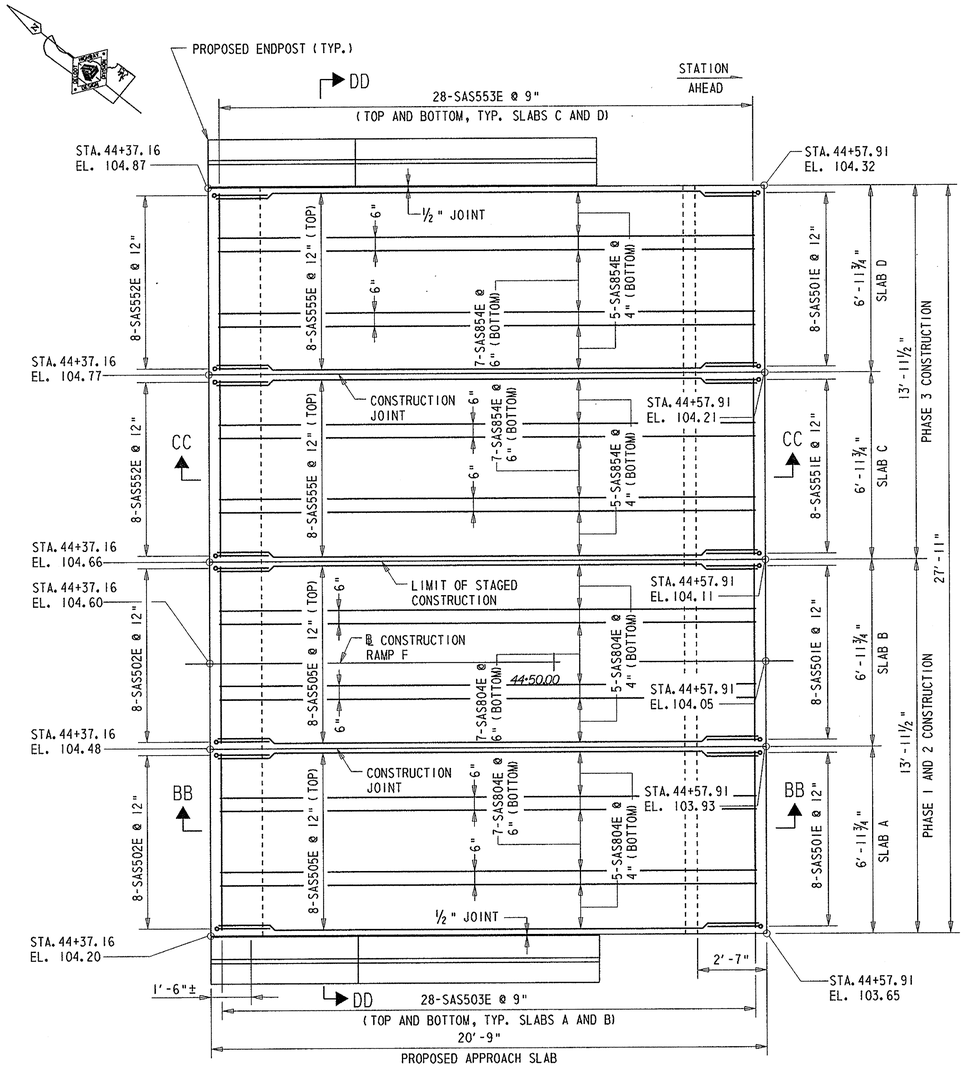

PLAN

SCALE: ⅜"=1'-0"

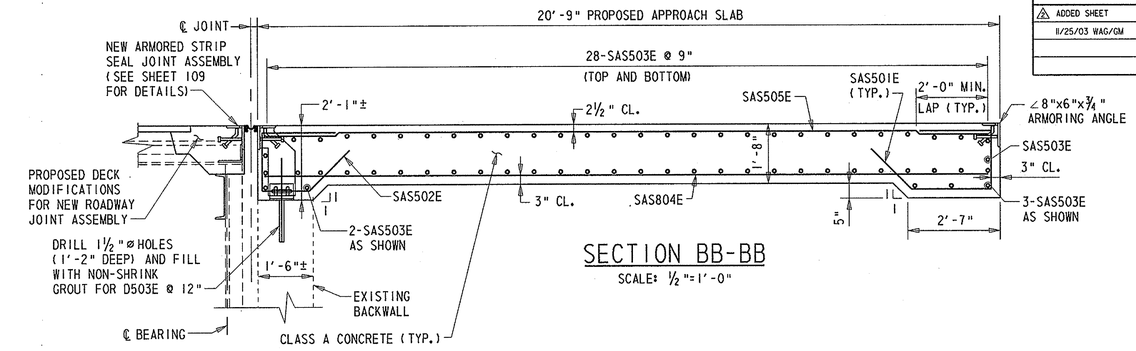

SECTION BB-BB

SCALE: ½"=1'-0"

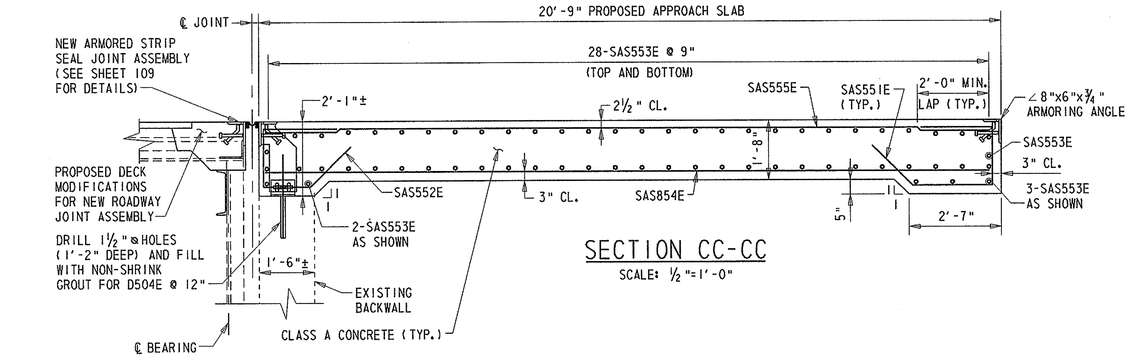

SECTION CC-CC

SCALE: ½"=1'-0"

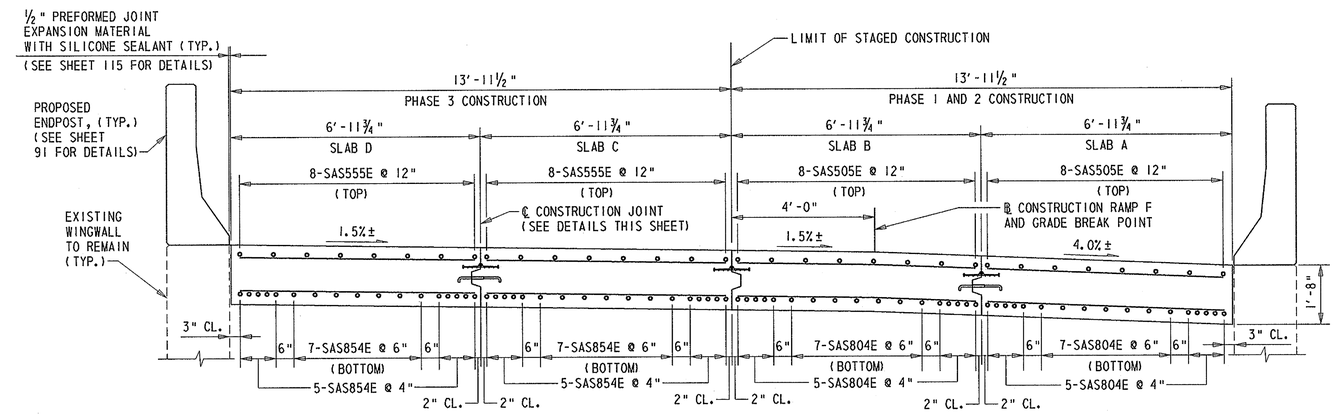

SECTION DD-DD

SCALE: ½"=1'-0"

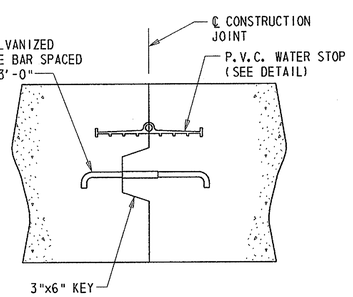

CONSTRUCTION JOINT DETAIL

SCALE: 1½"=1'-0"

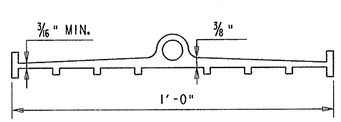

P.V.C. WATER STOP

SCALE: N.T.S.

NOTE:

1. SECTION DD-DD CUT LOOKING STATION AHEAD.
2. COSTS FOR GALVANIZED TIE BARS, P.V.C. WATERSTOPS AND ½" PREFORMED EXPANSION JOINT MATERIAL WITH SILICONE SEALANT SHALL BE INCIDENTAL TO ITEM 602009 - "PORTLAND CEMENT CONCRETE MASONRY, APPROACH SLAB, CLASS A".
3. FOR ARMORING ANGLE DETAILS, SEE SHEET 115.
4. PAYMENT FOR REMOVING THE EXISTING APPROACH SLAB CONCRETE AND ASPHALT OVERLAY AND ANY NECESSARY GRADING AND COMPACTION WILL BE PAID FOR UNDER ITEM 607000 - REMOVAL OF EXISTING MASONRY.
5. THE ELEVATIONS SHOWN ARE FOR INFORMATIONAL PURPOSES ONLY. PRIOR TO CONSTRUCTION THE CONCRETE APPROACH SLABS. THE CONTRACTOR SHALL FIELD VERIFY ALL ELEVATIONS SHOWN AND COORDINATE THE FINISHED ELEVATIONS WITH THE ADJACENT CONCRETE ENDPOSTS AND TOP OF OVERLAY ELEVATIONS.
6. ANY UNDERCUT EXCAVATION REQUIRED WITHIN THE LIMITS OF THE PROPOSED APPROACH SLAB AS DETERMINED BY THE ENGINEER SHALL BE PAID FOR UNDER ITEM 212000 - UNDERCUT EXCAVATION.

PREL. TRACING ____ W.R.A. ____ DESIGN ____ J.T.L./F.J.O. ____ CHKD. ____ W.A.G.

M:\313031A\as02br715aA.dgn

NORTH APPROACH SLAB DETAILS

BR. 1-715A 6048	CONTRACT	COUNTY	F.A.P. NO.	SHEET NO.	TOTAL SHTS.
	22-074-09	NEW CASTLE	SEE TITLE SHEET	115	152

REHABILITATION OF BRIDGE NOS. 1-715, 1-715A, & 1-715D ON SR 273 OVER I-95

REVISIONS

△ DELETED SHEET	
11/25/03 WAG/GM	

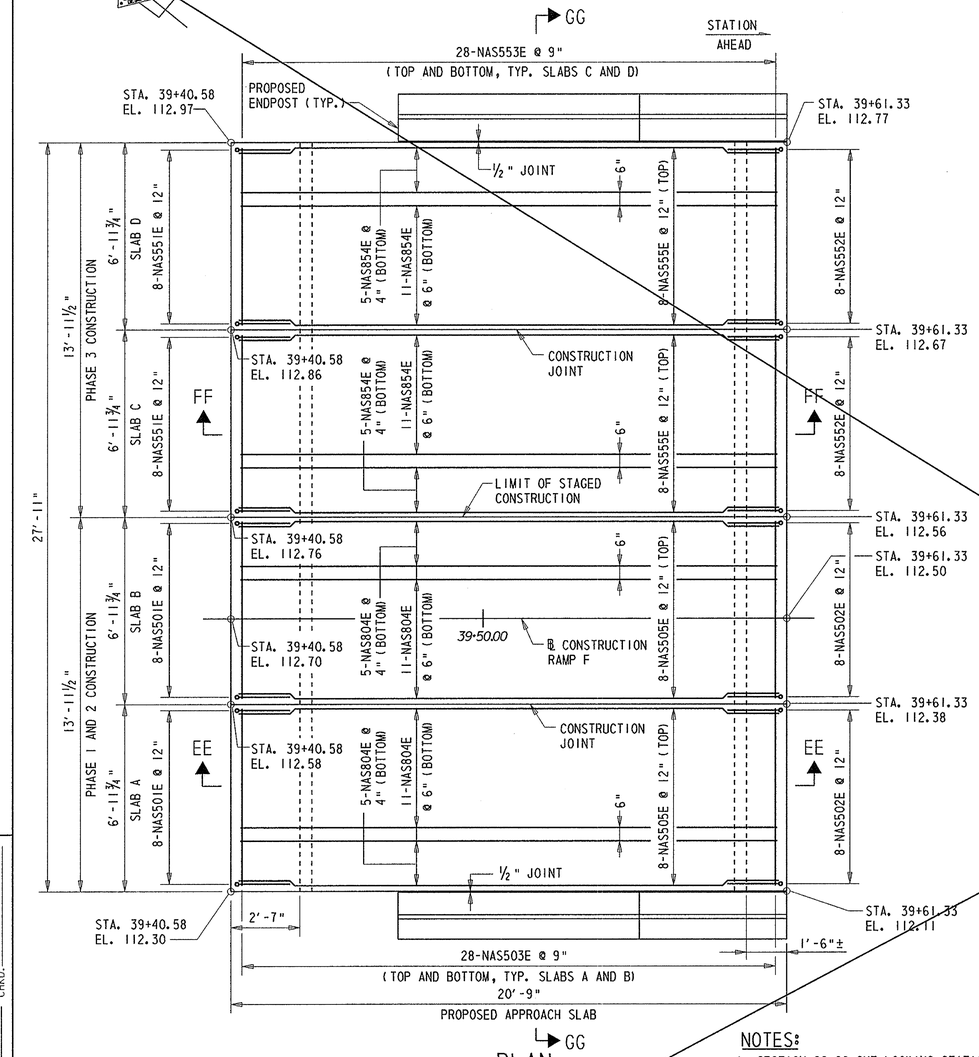

PLAN

SCALE: ⅜"=1'-0"

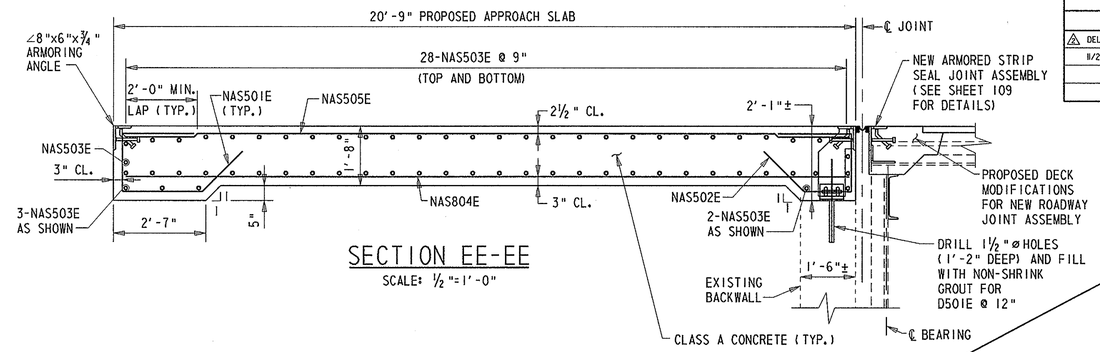

SECTION EE-EE

SCALE: ½"=1'-0"

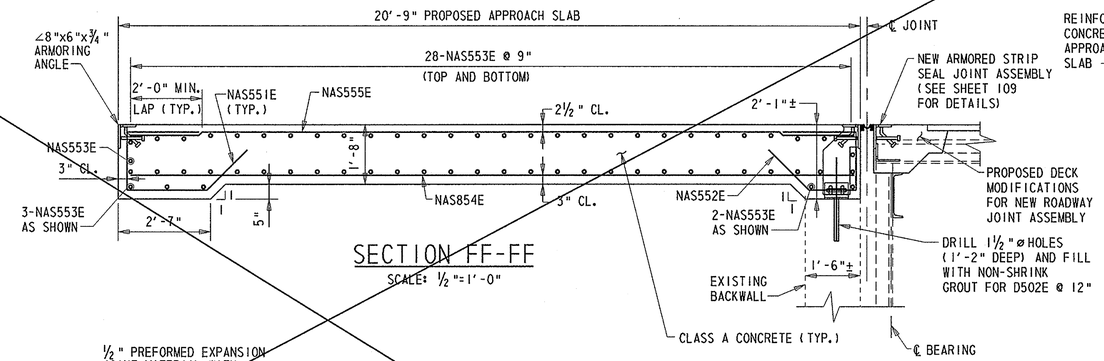

SECTION FF-FF

SCALE: ½"=1'-0"

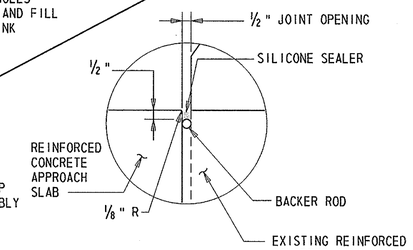

DETAIL 'B'

SCALE: 3"=1'-0"

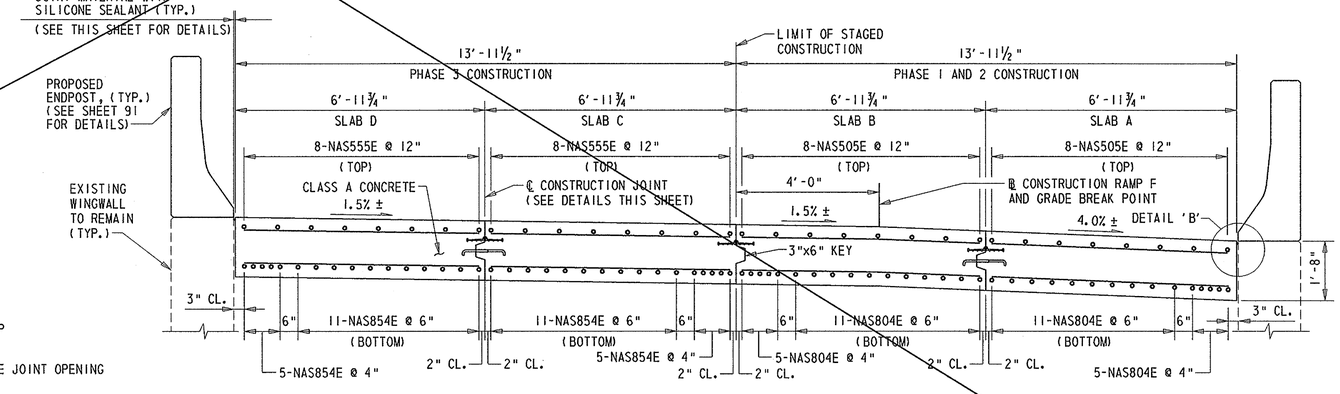

SECTION GG-GG

SCALE: ½"=1'-0"

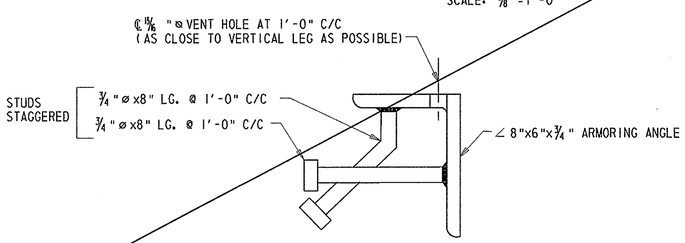

ARMORING ANGLE DETAIL

SCALE: 3"=1'-0"

NOTES:

1. SECTION GG-GG CUT LOOKING STATION AHEAD.
2. FOR CONSTRUCTION JOINT AND P.V.C. WATER STOP DETAILS, SEE SHEET 114.
3. THE SILICONE SEALANT SHALL BE APPLIED TO THE JOINT OPENING PER THE MANUFACTURER'S RECOMMENDATIONS.
4. SILICONE SEALANT MATERIAL SHALL BE A LOW MODULUS, ONE COMPONENT COMPOUND UTILIZING A BONDING PRIMER (IF RECOMMENDED BY THE MANUFACTURER) AND SHALL CONFORM TO THE FOLLOWING WHEN TESTED AT 73 ± 3°F AND 45-55 PERCENT HUMIDITY:

SHORE A HARDNESS, AT 7 DAYS (ASTM D 2240)	10-25
TENSILE STRENGTH AT 150% ELONGATION (ASTM D 412 DIE C)	45psi
MIN. ELONGATION (ASTM D 412 DIE C)	700%
MIN. ADHESION IN PEEL (FED. SPEC. TT-S-00230)	20 lb/in.
MAX. FLOW	0.3
TACK-FREE TIME	20-75 MINUTES

5. COSTS FOR GALVANIZED TIE BARS, P.V.C. WATERSTOPS AND ½" PREFORMED EXPANSION JOINT MATERIAL WITH SILICONE CAULK SHALL BE INCIDENTAL TO ITEM 602009 - "PORTLAND CEMENT CONCRETE MASONRY, APPROACH SLAB, CLASS A".
6. PAYMENT FOR REMOVING THE EXISTING APPROACH SLAB CONCRETE AND ANY NECESSARY GRADING AND COMPACTION WILL BE PAID FOR UNDER ITEM 607000 - REMOVAL OF EXISTING MASONRY.
7. THE ELEVATIONS SHOWN ARE FOR INFORMATIONAL PURPOSES ONLY. PRIOR TO CONSTRUCTION THE CONCRETE APPROACH SLABS. THE CONTRACTOR SHALL FIELD VERIFY ALL ELEVATIONS SHOWN AND COORDINATE THE FINISHED ELEVATIONS WITH THE ADJACENT CONCRETE ENDPOSTS AND TOP OF OVERLAY ELEVATIONS.
8. ANY UNDERCUT EXCAVATION REQUIRED WITHIN THE LIMITS OF THE PROPOSED APPROACH SLAB AS DETERMINED BY THE ENGINEER SHALL BE PAID FOR UNDER ITEM 212000 - UNDERCUT EXCAVATION.

PRELIM. TRACING ____ W.R.A. ____ DESIGN ____ J.T.L./F.J.O. ____ CHKD. ____ W.A.G. ____

M:\3130314\as01br715a.dgn

NORTH APPROACH SLAB DETAILS

BR. 1-715A 6048	CONTRACT	COUNTY	F.A.P. NO.	SHEET NO.	TOTAL SHTS.
	22-074-09	NEW CASTLE	SEE TITLE SHEET	115A	152

REHABILITATION OF BRIDGE NOS. 1-715, 1-715A, & 1-715D ON SR 273 OVER I-95

REVISIONS	
2 ADDED SHEET	
11/25/03 WAG/GM	

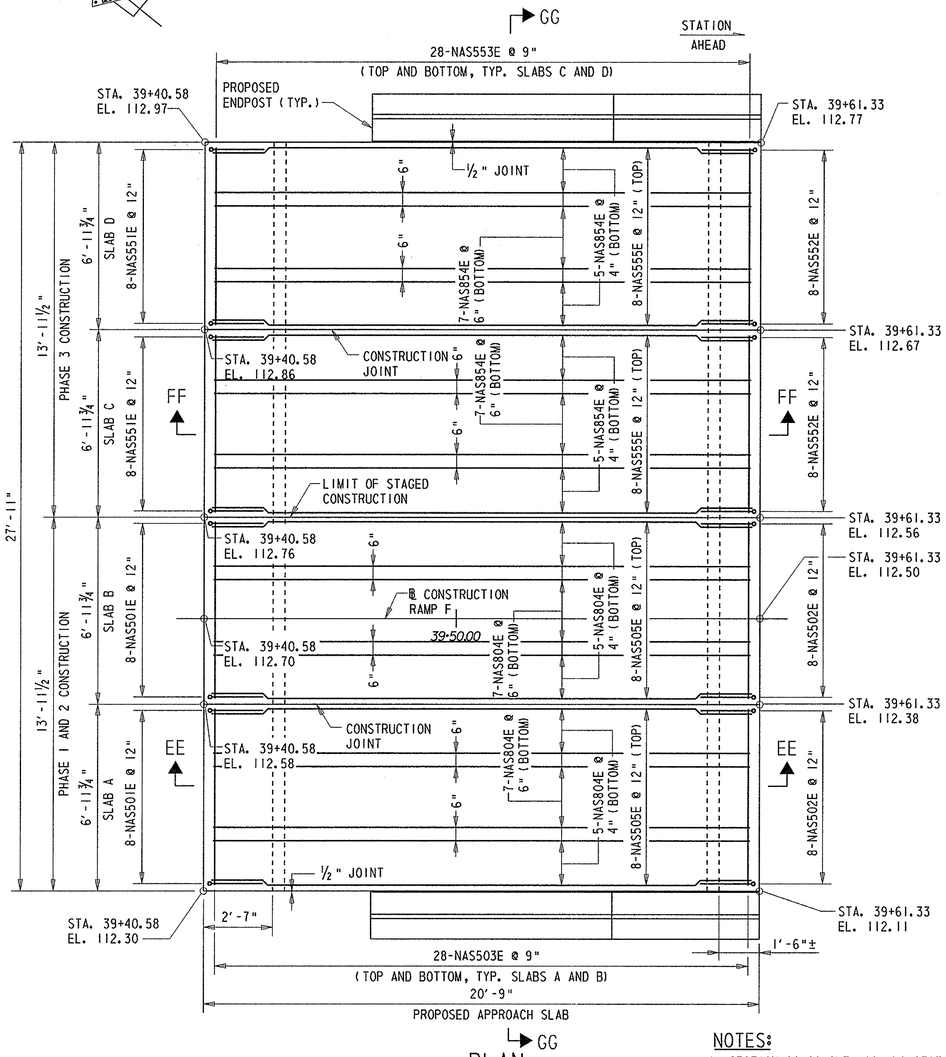

PLAN

SCALE: 3/8"=1'-0"

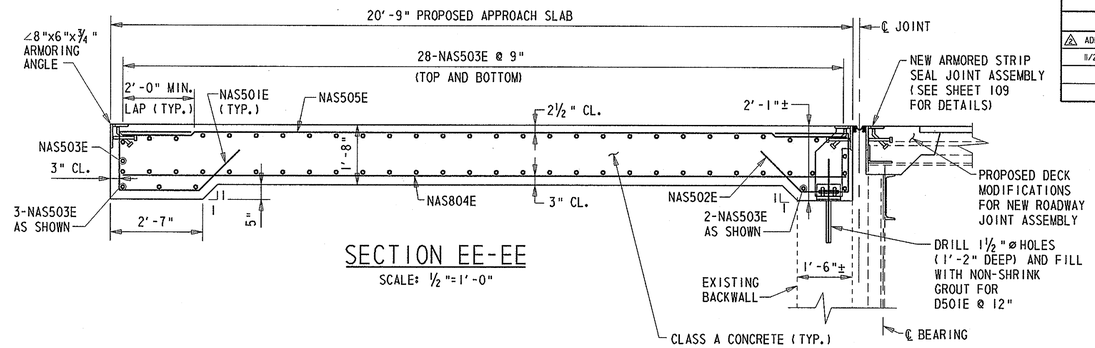

SECTION EE-EE

SCALE: 1/2"=1'-0"

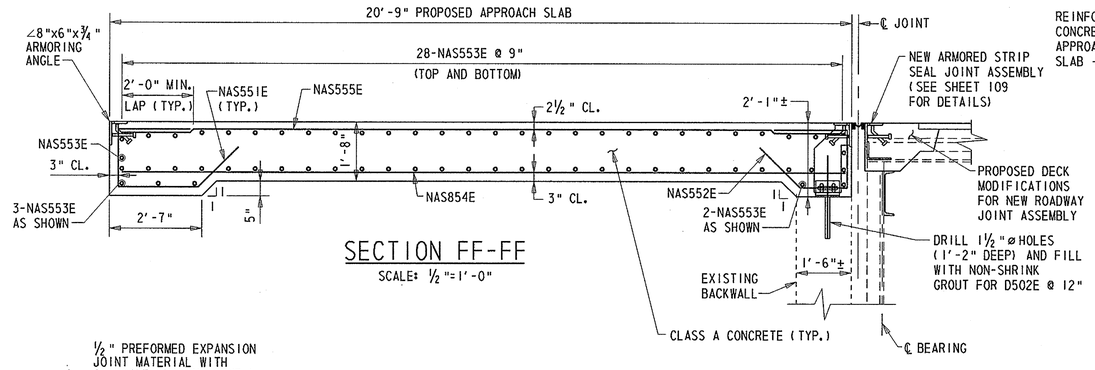

SECTION FF-FF

SCALE: 1/2"=1'-0"

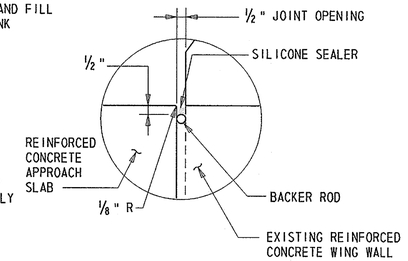

DETAIL 'B'

SCALE: 3"=1'-0"

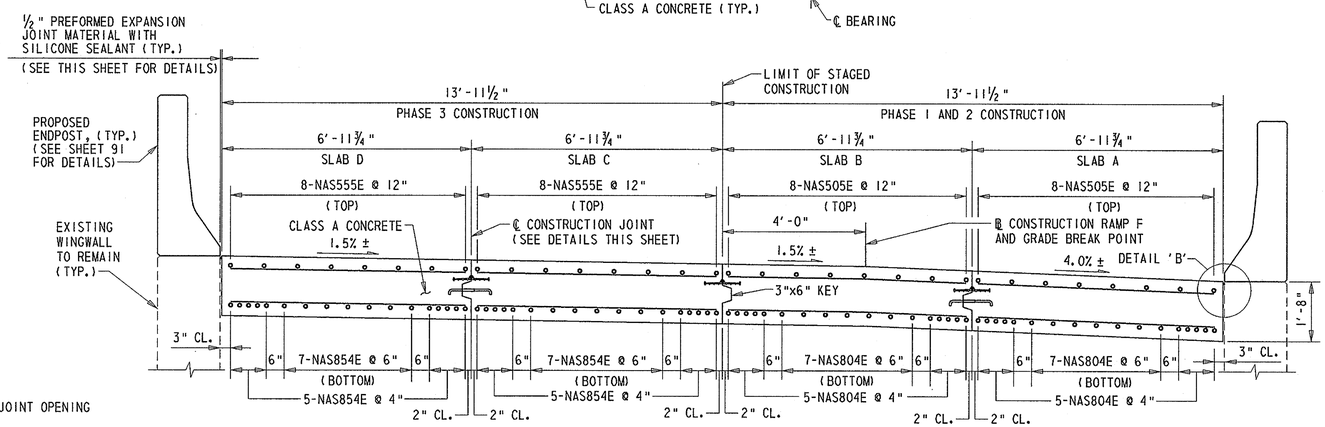

SECTION GG-GG

SCALE: 1/2"=1'-0"

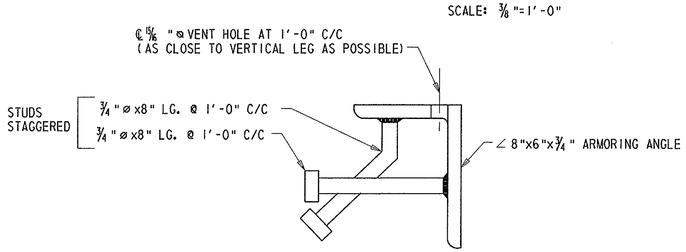

ARMORING ANGLE DETAIL

SCALE: 3"=1'-0"

NOTES:

1. SECTION GG-GG CUT LOOKING STATION AHEAD.
2. FOR CONSTRUCTION JOINT AND P.V.C. WATER STOP DETAILS, SEE SHEET 114.
3. THE SILICONE SEALANT SHALL BE APPLIED TO THE JOINT OPENING PER THE MANUFACTURER'S RECOMMENDATIONS.
4. SILICONE SEALANT MATERIAL SHALL BE A LOW MODULUS, ONE COMPONENT COMPOUND UTILIZING A BONDING PRIMER (IF RECOMMENDED BY THE MANUFACTURER) AND SHALL CONFORM TO THE FOLLOWING WHEN TESTED AT 73 ± 3°F AND 45-55 PERCENT HUMIDITY:

SHORE A HARDNESS, AT 7 DAYS (ASTM D 2240)	10-25
TENSILE STRENGTH AT 150% ELONGATION (ASTM D 412 DIE C)	45psi
MIN. ELONGATION (ASTM D 412 DIE C)	700%
MIN. ADHESION IN PEEL (FED. SPEC. TT-S-00230)	20 lb/in.
MAX. FLOW	0.3
TACK-FREE TIME	20-75 MINUTES

5. COSTS FOR GALVANIZED TIE BARS, P.V.C. WATERSTOPS AND 1/2" PREFORMED EXPANSION JOINT MATERIAL WITH SILICONE CAULK SHALL BE INCIDENTAL TO ITEM 602009 - "PORTLAND CEMENT CONCRETE MASONRY, APPROACH SLAB, CLASS A".
6. PAYMENT FOR REMOVING THE EXISTING APPROACH SLAB CONCRETE AND ANY NECESSARY GRADING AND COMPACTION WILL BE PAID FOR UNDER ITEM 607000 - REMOVAL OF EXISTING MASONRY.
7. THE ELEVATIONS SHOWN ARE FOR INFORMATIONAL PURPOSES ONLY. PRIOR TO CONSTRUCTION THE CONCRETE APPROACH SLABS. THE CONTRACTOR SHALL FIELD VERIFY ALL ELEVATIONS SHOWN AND COORDINATE THE FINISHED ELEVATIONS WITH THE ADJACENT CONCRETE ENDPOSTS AND TOP OF OVERLAY ELEVATIONS.
8. ANY UNDERCUT EXCAVATION REQUIRED WITHIN THE LIMITS OF THE PROPOSED APPROACH SLAB AS DETERMINED BY THE ENGINEER SHALL BE PAID FOR UNDER ITEM 212000 - UNDERCUT EXCAVATION.

PREL. TRACING ____ W.R.A. ____ DESIGN ____ J.T.L./F.J.O. ____ CHKD. ____ W.A.G. ____

M:\313031\as01br715aA.dgn

JACKING DETAILS - I

BR. 1-715A 6048	CONTRACT	COUNTY	F.A.P. NO.	SHEET NO.	TOTAL SHTS.
	22-074-09	NEW CASTLE	SEE TITLE SHEET	116	152

REHABILITATION OF BRIDGE NOS. 1-715, 1-715A, & 1-715D ON SR 273 OVER I-95

REVISIONS

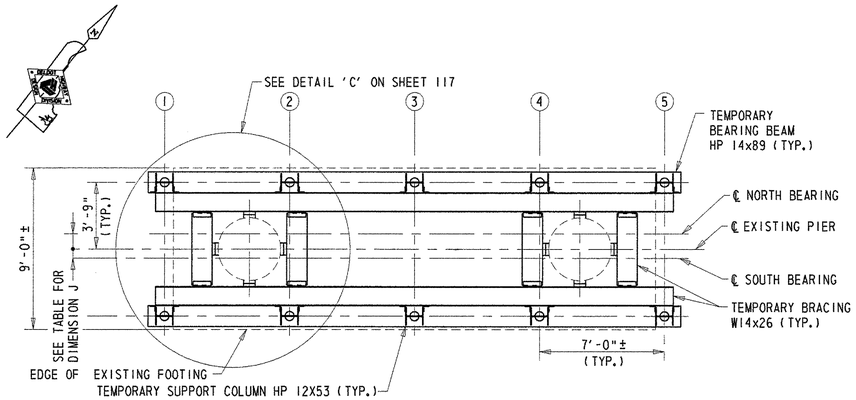

PIER JACKING FRAME - PLAN

SCALE: 1/4"=1'-0"

℄ BEARING TO ℄ PIER DIMENSION J					
	PIER 1	PIER 2	PIER 3	PIER 4	PIER 5
SOUTH BRG.	10"±	8"±	8"±	8"±	7"±
NORTH BRG.	6"±	8"±	8"±	8"±	9"±

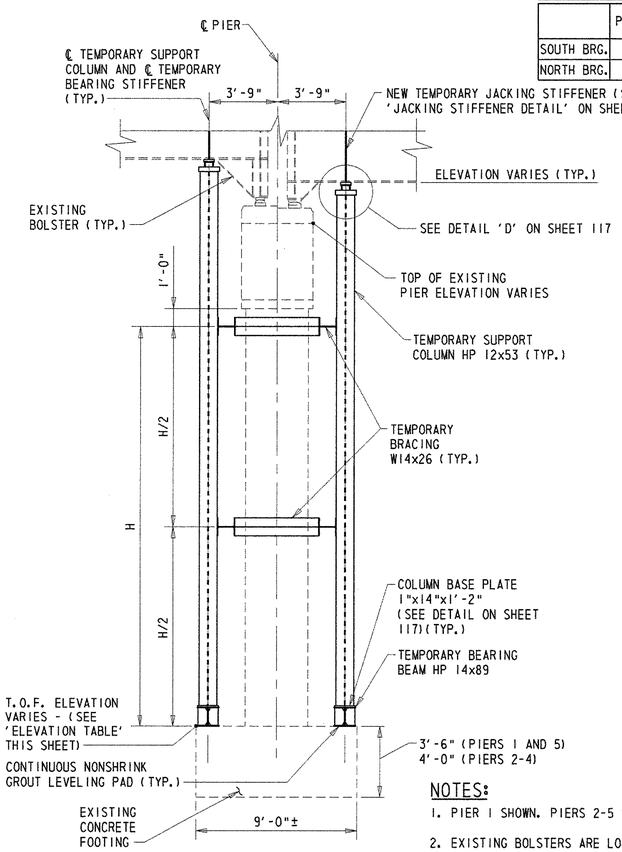

SECTION HH-HH

SCALE: 1/4"=1'-0"

NOTES:

1. PIER 1 SHOWN. PIERS 2-5 SIMILIAR.
2. EXISTING BOLSTERS ARE LOCATED ON INTERIOR GIRDERS AT PIERS 1, 2, 4 AND 5.
3. FOR JACKING STIFFENER DETAILS, SEE SHEET 118.
4. LOCATION OF EXISTING EDGE OF ROADWAY NOT SHOWN. REFER TO SHEET 87 FOR APPROXIMATE LOCATION.

GIRDER REACTION TABLE, IN KIPS - PIERS			
LOCATION	LOAD	GIRDER NOS. 1 & 5	GIRDER NOS. 2-4
PIER 1, SPAN 1	DEAD LOAD	24	29
	LIVE LOAD + IMPACT	47	47
	TOTAL	71	76
PIER 1, SPAN 2 PIER 4, SPAN 5	DEAD LOAD	59	73
	LIVE LOAD + IMPACT	49	49
	TOTAL	108	122
PIER 2, SPAN 2 PIER 5, SPAN 5	DEAD LOAD	59	73
	LIVE LOAD + IMPACT	54	54
	TOTAL	113	127
PIER 2, SPAN 3 PIER 3, SPAN 4	DEAD LOAD	71	87
	LIVE LOAD + IMPACT	49	49
	TOTAL	120	136
PIER 3, SPAN 3 PIER 4, SPAN 4	DEAD LOAD	71	87
	LIVE LOAD + IMPACT	54	54
	TOTAL	125	141
PIER 5, SPAN 6	DEAD LOAD	38	47
	LIVE LOAD + IMPACT	49	49
	TOTAL	87	96

NOTE:

THE VALUES SHOWN IN THE GIRDER REACTION TABLE INCLUDE A 25% INCREASE FOR DEAD LOAD AND LIVE LOAD + IMPACT.

ELEVATION TABLE	
LOCATION	TOP OF FOOTING ELEVATION
PIER 1	79.6 ±
PIER 2	76.7 ±
PIER 3	75.7 ±
PIER 4	75.7 ±
PIER 5	76.7 ±

DIMENSION H	
PIER	H
1	12'-11 1/4" ±
2	17'-10 3/16" ±
3	20'-9 5/8" ±
4	22'-5 3/8" ±
5	22'-7 3/16" ±

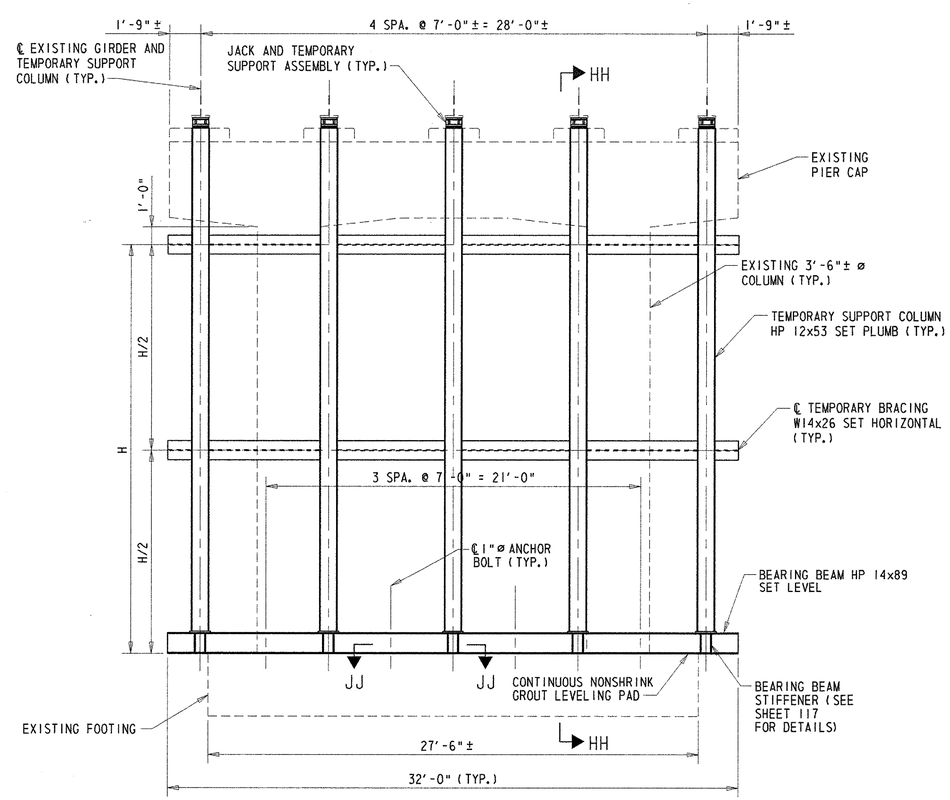

PIER JACKING FRAME - ELEVATION

SCALE: 1/4"=1'-0"

JACKING NOTES:

1. JACKING DETAILS SHOWN ARE FOR THE CLEANING, LUBRICATING AND GREASING OF THE EXISTING BEARINGS AT ALL SUBSTRUCTURE UNITS.
2. ALL STEEL SHAPES, SECTIONS, PLATES AND ANCHOR BOLTS SHALL CONFORM TO ASTM A709 GRADE 36. GRADE 50 STEEL MAY BE SUBSTITUTED FOR GRADE 36 AT NO ADDITIONAL COST TO THE DEPARTMENT.
3. ALL ERECTION BOLTS SHALL BE 7/8" DIAMETER AND SHALL CONFORM TO ASTM A325 .
4. NONSHRINK GROUT LEVELING PADS SHALL BE CONSTRUCTED ON TOP OF THE EXISTING FOOTING TO PROVIDE EVEN BEARING FOR THE BEARING BEAMS. NO JACKING OPERATIONS SHALL BE PERMITTED UNTIL THE GROUT LEVELING PADS HAVE ATTAINED A MINIMUM CONCRETE COMPRESSIVE STRENGTH OF 4000 PSI. COST OF CONSTRUCTING THE GROUT LEVELING PAD WILL BE INCIDENTAL TO ITEM 605607 - JACKING BRIDGE.
5. FABRICATION AND INSTALLATION OF JACKING ASSEMBLIES (INCLUDING EXCAVATION AND BACKFILLING) , TEMPORARY SUPPORT COLUMNS AND BRACING, FURNISHING AND PLACING NON-SHRINK GROUT, DRILLING HOLES, INSTALLING ANCHOR BOLTS AND JACKING THE SUPERSTRUCTURE WILL BE PAID FOR UNDER ITEM 605607 - JACKING BRIDGE.
6. ALL TEMPORARY LANE CLOSURES SHALL BE COORDINATED WITH THE STATE POLICE. COMPLETE CLOSURE OF RAMP F FOR JACKING OPERATIONS IS RESTRICTED TO THE HOURS OF 12:00 A.M. THROUGH 3:00 A.M. , SUNDAY THROUGH THURSDAY & SHALL BE A MAXIMUM OF 15 MIN. DURATION.
7. THE CONTRACTOR SHALL BE RESPONSIBLE FOR THE JACKING PROCEDURES AND DETAILS THAT HE WILL ULTIMATELY USE. THE SPECIFIC DETAILS AND PROCEDURES SHALL BE SUBMITTED TO THE ENGINEER FOR APPROVAL. WORKING DRAWINGS SHALL BE PREPARED AND SUBMITTED TO THE ENGINEER FOR REVIEW. THIS SUBMITTAL SHALL INCLUDE, AT A MINIMUM, THE FOLLOWING INFORMATION:

   A. DURING THE JACKING OPERATIONS, LIVE LOAD SHALL NOT BE ALLOWED ON THE BRIDGE UNTIL THE GIRDER REACTIONS ARE COMPLETELY TRANSFERRED TO THE TEMPORARY SUPPORTS.

   B. THE LOADS SHOWN ON THE GIRDER REACTION TABLE ARE THE GIRDER REACTIONS. (INCREASED BY 25%) AT THE BEARING. THE JACKING LOAD SHALL BE CALCULATED BY THE CONTRACTOR. BASED ON THE ACTUAL LOCATION OF THE JACK AND GIVEN LOAD REACTION. ANY ALTERNATIVE METHOD OF JACKING PROPOSED BY THE CONTRACTOR SHALL BE DESIGNED FOR THE LOADS SHOWN IN THE GIRDER REACTION TABLE.

   C. NO LIFTING OF THE STRINGER SHALL BE ALLOWED. THE TOTAL ALLOWABLE MAXIMUM VERTICAL MOVEMENT DUE TO ANY INCREMENTAL LOAD APPLICATION SHALL BE 1/8". THE GIRDER SHALL BE JACKED UP 1/8" TO ALLOW FOR PROPER CLEANING, LUBRICATING AND GREASING OF THE EXISTING BEARING DEVICES.

   D. JACKING SHALL PROGRESS AT A SLOW UNIFORM RATE APPROVED BY THE ENGINEER UNTIL THE DEAD LOAD HAS BEEN RELIEVED. THE LAST 20% OF THE JACKING LOAD SHALL BE APPLIED IN 5% INCREMENTS OF TOTAL LOAD. PRIOR TO ANY INCREMENTAL LOAD APPLICATION, THE GIRDER AND JACKING ASSEMBLIES SHALL BE CHECKED FOR ANY SETTLEMENT, MOVEMENT, ROTATION, OR DEFLECTION. SHOULD JACKING THE GIRDER TO 110% OF THE JACKING LOAD NOT RELEASE THE BEARING, JACKING SHALL BE HALTED AND THE ENGINEER SHALL BE CONSULTED.

   E. ALL JACKING OPERATIONS SHALL BE DONE IN THE PRESENCE OF THE ENGINEER OR REPRESENTATIVE. THE ENGINEER SHALL HAVE THE RIGHT TO SUSPEND THE JACKING OPERATION AT ANY TIME.

   F. ALL OPERATIONS SHALL BE CAREFULLY MONITORED DURING JACKING IN ACCORDANCE WITH THE SPECIAL PROVISIONS. AT THE INSTANT THAT ANY SIGN OF DISTRESS IN THE SUPERSTRUCTURE OR SUBSTRUCTURE IS NOTED, JACKING OPERATIONS SHALL BE HALTED AND THE ENGINEER SHALL BE NOTIFIED.

   G. EACH JACK SHALL HAVE A MINIMUM CAPACITY OF 150 KIPS AND BE FURNISHED WITH A SWIVEL-TOP BEARING PLATE. DURING JACKING OPERATIONS, PROVISIONS SHALL BE MADE TO PREVENT THE JACK AND JACK ASSEMBLIES FROM DISPLACING.

   H. NO JACKING SHALL BE ALLOWED WHEN THE WIND VELOCITIES OF THE SITE EXCEED 20 MPH OR IN OTHER ADVERSE WEATHER CONDITIONS AS DETERMINED BY THE ENGINEER.

   I. PRIOR TO ANY MATERIAL FABRICATION, CONTRACTOR SHALL SURVEY THE EXISTING BRIDGE AND DETERMINE THE BOTTOM OF GIRDER AND BEARING SEAT ELEVATIONS AT THE CENTERLINE OF EXISTING BEARINGS. THE CONTRACTOR SHALL VERIFY ALL EXISTING DIMENSIONS AND CLEARANCE AFFECTING THE WORK AS WELL AS ANY BEVELED BEARING PLATES TO ACCOMODATE ANY CAMBER IN THE GIRDERS. CAREFUL MEASUREMENTS SHALL BE TAKEN TO ENSURE THE PROPER FIT OF ALL JACKING ASSEMBLY COMPONENTS. THIS INFORMATION SHALL BE SUBMITTED WITH THE SHOP DRAWINGS. THIS WORK SHALL BE INCLUDED IN ITEM 605607 - JACKING BRIDGE.

   J. CONTRACTOR SHALL TAKE FULL RESPONSIBILITY FOR THE DESIGN, FABRICATION AND ERECTION OF ANY ALTERNATIVE JACKING SYSTEM PROPOSED. SUBMIT WORKING DRAWINGS AND CALCULATIONS OF ALTERNATE DESIGN TO THE ENGINEER FOR APPROVAL. ALL WORKING DRAWINGS AND CALCULATIONS ARE TO BE SEALED BY A PROFESSIONAL ENGINEER REGISTERED IN THE STATE OF DELAWARE. NO ADDITIONAL COST WILL BE PAID FOR AN APPROVED ALTERNATIVE JACKING SCHEME.

PREL. TRACING ____ W.R.A. ____ DESIGN ____ J.T.L./F.J.O. ____ CHKD. ____ W.A.G. ____

M:\3130314\MD01BR715A.DGN

JACKING DETAILS – II

BR. 1-715A 6048

CONTRACT	COUNTY	F.A.P. NO.	SHEET NO.	TOTAL SHTS.
22-074-09	NEW CASTLE	SEE TITLE SHEET	117	152

REHABILITATION OF BRIDGE NOS. 1-715, 1-715A, & 1-715D ON SR 273 OVER I-95

REVISIONS

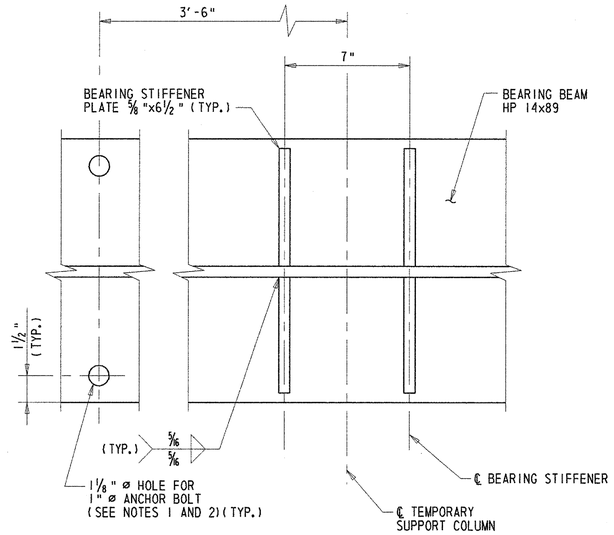

SECTION JJ-JJ

SCALE: 3"=1'-0"

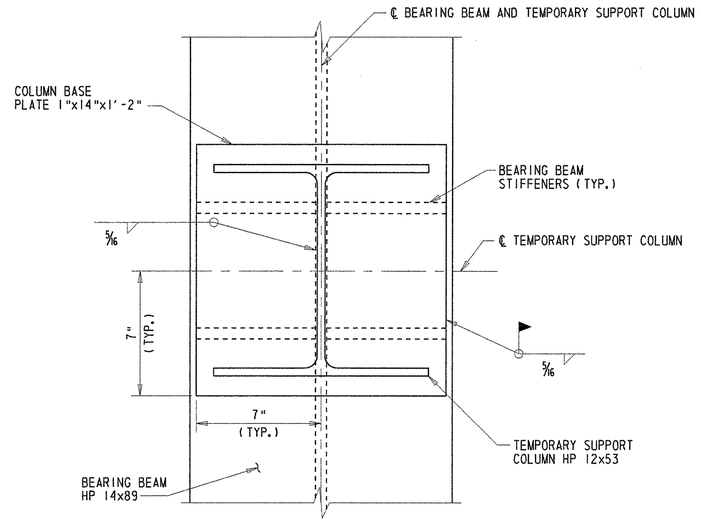

COLUMN BASE PLATE DETAIL

SCALE: 3"=1'-0"

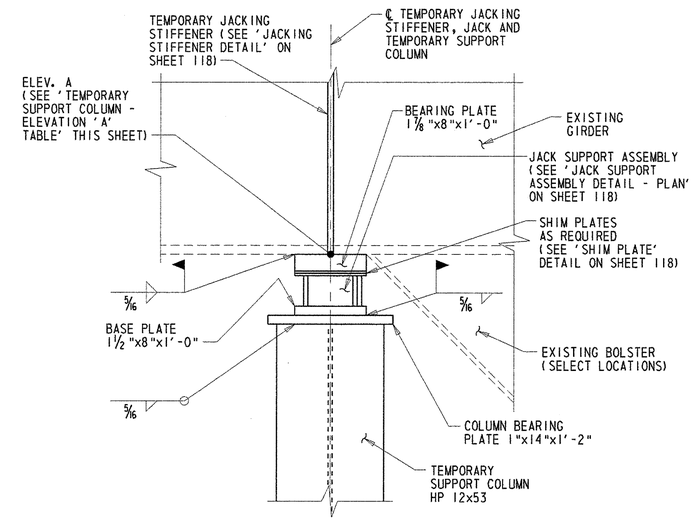

DETAIL 'D'

SCALE: 1 1/2"=1'-0"

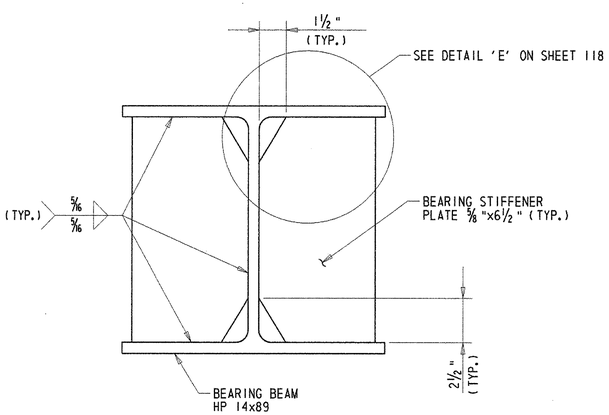

BEARING BEAM STIFFENER DETAIL

SCALE: 3"=1'-0"

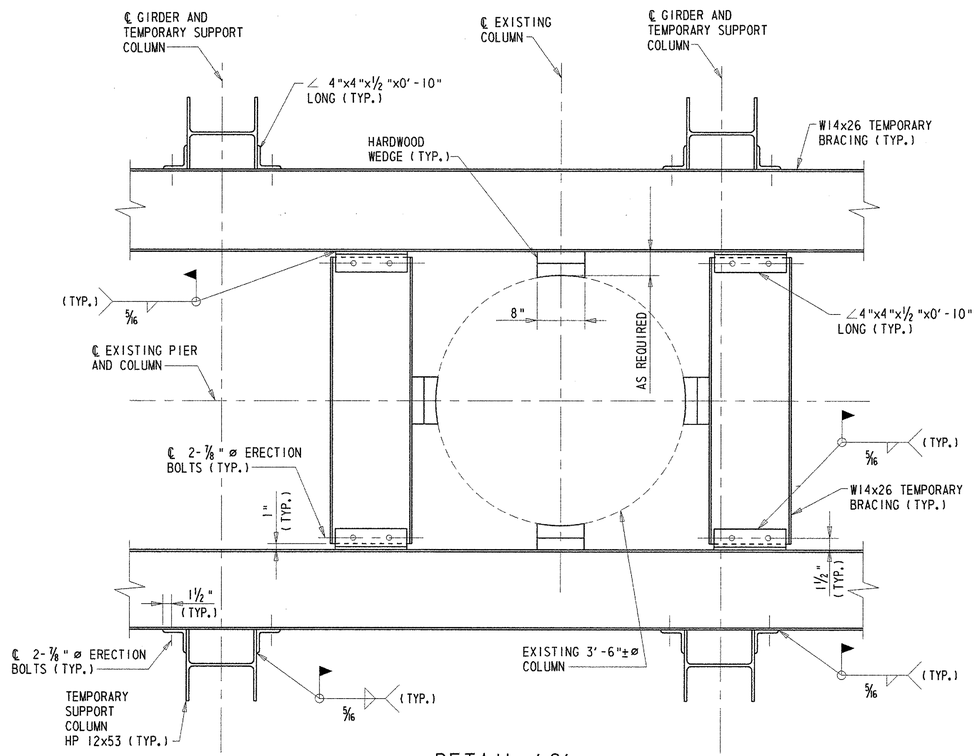

DETAIL 'C'

SCALE: 1"=1'-0"

TEMPORARY SUPPORT COLUMN – ELEVATION 'A'

PIER	SPAN	GIRDER 1	GIRDER 2	GIRDER 3	GIRDER 4	GIRDER 5
1	1	99.1 ±	101.6 ±	101.7 ±	101.8 ±	99.7±
	2	99.1 ±	100.3 ±	100.5 ±	100.5 ±	99.7±
2	2	101.0 ±	102.2 ±	102.5 ±	102.5 ±	101.7±
	3	101.0 ±	101.3 ±	101.6 ±	101.6 ±	101.7±
3	3	103.0 ±	103.3 ±	103.4 ±	103.5 ±	103.7±
	4	103.0 ±	103.2 ±	103.4 ±	103.5 ±	103.6±
4	4	104.6 ±	104.9 ±	105.0 ±	105.1 ±	105.3±
	5	104.7 ±	105.9 ±	106.0 ±	106.2 ±	105.3±
5	5	105.8 ±	107.0 ±	107.1 ±	107.3 ±	106.4±
	6	105.7 ±	108.1 ±	108.3 ±	108.5 ±	106.5±

NOTES:

1. FOR LOCATION OF ANCHOR BOLTS, SEE SHEET 116.
2. ANCHOR BOLTS SHALL EXTEND A MINIMUM OF 9" INTO THE EXISTING FOOTING CONCRETE AND SHALL BE GROUTED INTO PLACE WITH AN APPROVED EPOXY GROUT. COST FOR DRILLING AND INSTALLING THE ANCHOR BOLTS WILL BE PAID UNDER ITEM 605607 - JACKING BRIDGE.
3. ERECTION BOLTS SHALL REMAIN IN PLACE UPON COMPLETION OF FIELD WELDING.
4. HEIGHT OF JACK SUPPORT ASSEMBLY SHALL BE COMPATIBLE WITH THE HEIGHT AND STROKE OF THE JACK.
5. BEARING BEAM NOT SHOWN IN DETAIL 'C' FOR CLARITY.

PREL. TRACING ____ W.R.A. ____ DESIGN ____ J.T.L./F.J.O. ____ CHKD. ____ W.A.G. ____

JACKING DETAILS III

BR. 1-715A 6048	CONTRACT	COUNTY	F.A.P. NO.	SHEET NO.	TOTAL SHTS.
	22-074-09	NEW CASTLE	SEE TITLE SHEET	118	152

REHABILITATION OF BRIDGE NOS. 1-715, 1-715A, & 1-715D ON SR 273 OVER I-95

REVISIONS

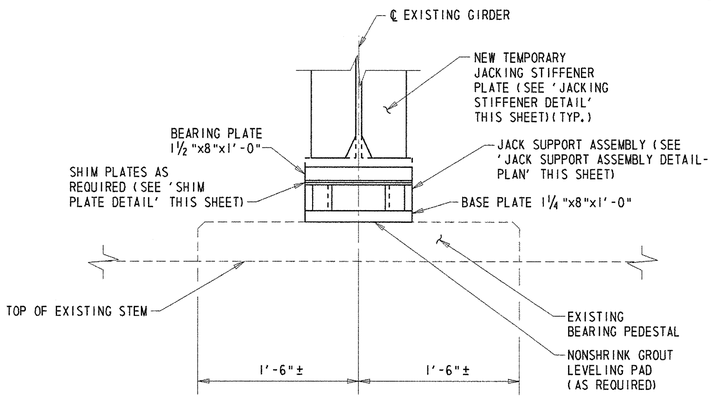

ABUTMENT - ELEVATION

SCALE: 1½"=1'-0"

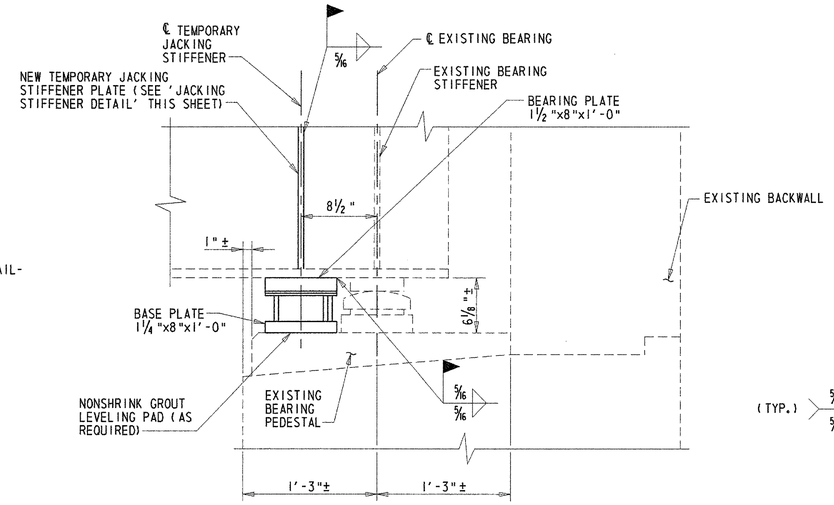

ABUTMENT - SECTION

SCALE: 1½"=1'-0"

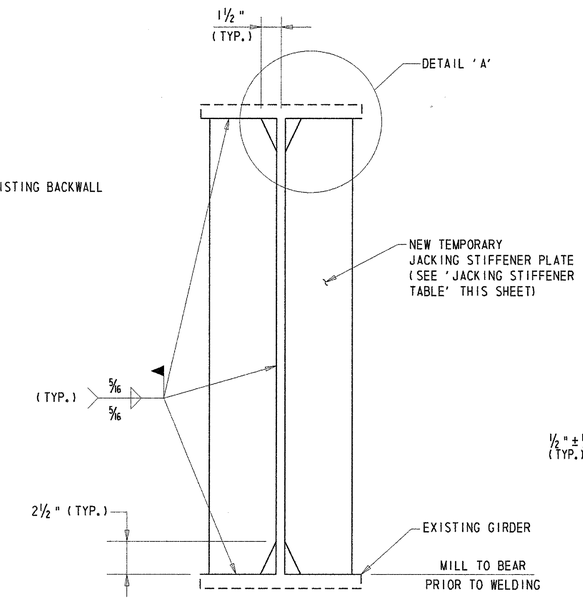

JACKING STIFFENER DETAIL

N.T.S.

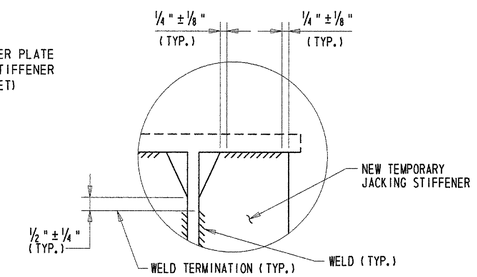

DETAIL 'E'

N.T.S.

JACKING STIFFENER DETAIL	
LOCATION	PLATE SIZE
SPANS 1 AND 6	½"x5"
SPANS 2 - 5	⅝"x7"

GIRDER REACTION TABLE - ABUTMENTS			
LOCATION	LOAD (KIPS)	GIRDER NOS. 1&5	GIRDER NOS. 2-4
SOUTH ABUTMENT	DEAD LOAD	24.1	30.1
	LIVE LOAD + IMPACT	45.0	45.0
	TOTAL	69.1	75.1
NORTH ABUTMENT	DEAD LOAD	38.3	48.3
	LIVE LOAD + IMPACT	51.5	51.5
	TOTAL	89.8	99.8

NOTE:

THE VALUES SHOWN IN THE TABLE ABOVE INCLUDE A 25% INCREASE FOR DEAD LOAD AND LIVE LOAD + IMPACT.

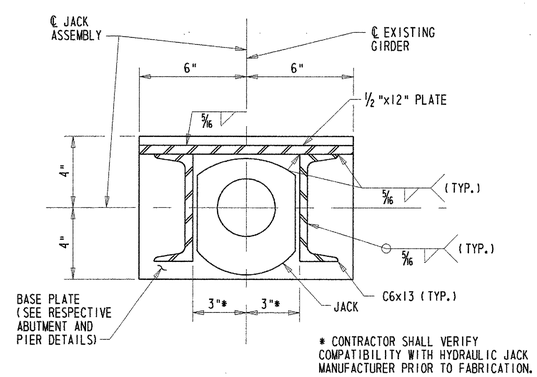

JACK SUPPORT ASSEMBLY DETAIL - PLAN

SCALE: 3"=1'-0"

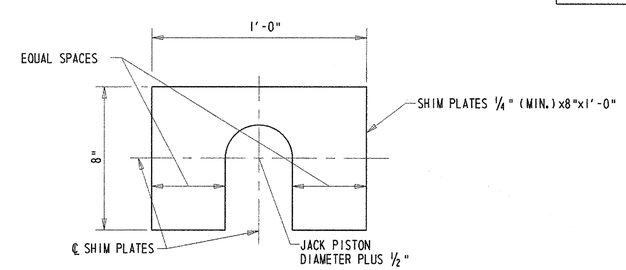

SHIM PLATE DETAIL

SCALE: 3"=1'-0"

NOTES:

1. THE SHIM PLATE IS NOT WELDED TO THE JACK SUPPORT ASSEMBLY.
2. THE LENGTH OF CHANNELS AND PLATE IN THE JACKING ASSEMBLY ARE TO BE CUSTOM FIT TO THE JACK BEING USED.

PRELIM. TRACING W.R.A. DESIGN J.T.L./F.J.O. CHKD. W.A.G.

M:\313031\MD06BR715A.DGN

REINFORCING STEEL DEVELOPMENT LENGTH AND LAP TABLES

BR. 1-715A 6048	CONTRACT	COUNTY	F.A.P. NO.	SHEET NO.	TOTAL SHTS.
	22-074-09	NEW CASTLE	SEE TITLE SHEET	119	152

REHABILITATION OF BRIDGE NOS. 1-715, 1-715A, & 1-715D ON SR 273 OVER I-95

REVISIONS

BAR SIZE	* LOCATION CATEGORY			3 TIMES BAR DIAMETER	6 TIMES BAR DIAMETER	= C/C SPACING
	A	B	C			
#4	1'-9"	1'-6"	1'-3"	1½"	3"	3½"
#5	2'-2"	1'-11"	1'-6"	1⅞"	3¾"	4⅜"
#6	2'-9"	2'-5"	2'-0"	2¼"	4½"	5¼"
#7	3'-9"	3'-4"	2'-8"	2⅝"	5¼"	6⅛"

CASE NO. 1

FOR BARS COATED WITH EPOXY WITH COVER LESS THAN 3 TIMES THE BAR DIAMETER OR CLEAR SPACING BETWEEN BARS LESS THAN 6 TIMES THE BAR DIAMETER.

BAR SIZE	* LOCATION CATEGORY		
	A	B	C
#4	1'-8"	1'-2"	1'-0"
#5	2'-1"	1'-6"	1'-2"
#6	2'-7"	1'-11"	1'-6"
#7	3'-7"	2'-7"	2'-1"

CASE NO. 2

FOR BARS COATED WITH EPOXY NOT IN CASE NO. 1

BAR SIZE	* LOCATION CATEGORY			3 TIMES BAR DIAMETER	6 TIMES BAR DIAMETER	= C/C SPACING
	A	B	C			
#4	2'-11"	2'-7"	2'-1"	1½"	3"	3½"
#5	3'-8"	3'-3"	2'-7"	1⅞"	3¾"	4⅜"
#6	4'-8"	4'-2"	3'-4"	2¼"	4½"	5¼"
#7	6'-4"	5'-7"	4'-6"	2⅝"	5¼"	6⅛"

CASE NO. 1

FOR BARS COATED WITH EPOXY WITH COVER LESS THAN 3 TIMES THE BAR DIAMETER OR CLEAR SPACING BETWEEN BARS LESS THAN 6 TIMES THE BAR DIAMETER.

BAR SIZE	* LOCATION CATEGORY		
	A	B	C
#4	2'-9"	2'-0"	1'-7"
#5	3'-6"	2'-6"	2'-0"
#6	4'-5"	3'-2"	2'-7"
#7	6'-0"	4'-4"	3'-6"

CASE NO. 2

FOR BARS COATED WITH EPOXY NOT IN CASE NO. 1

* LOCATION CATEGORY

A-BARS IN HORIZONTAL LAYERS IN TOP OF POUR WITH 12" OR MORE OF CONCRETE BELOW THEM SUCH AS IN: FOOTINGS, PIER CAPS, ETC.
B-ALL BARS NOT IN CATEGORY A SPACED LESS THAN 6" APART.
C-ALL BARS NOT IN CATEGORY A SPACED 6" OR MORE APART.

* LOCATION CATEGORY

A-BARS IN HORIZONTAL LAYERS IN TOP OF POUR WITH 12" OR MORE OF CONCRETE BELOW THEM SUCH AS IN: FOOTINGS, PIER CAPS, ETC.
B-ALL BARS NOT IN CATEGORY A SPACED LESS THAN 6" APART.
C-ALL BARS NOT IN CATEGORY A SPACED 6" OR MORE APART.

DEVELOPEMENT LENGTH DIMENSIONS FOR
GRADE 60 REINFORCING STEEL
IN 3000 P.S.I. CONCRETE
EPOXY COATED REINFORCING

BAR LAP DIMENSIONS FOR
GRADE 60 REINFORCING STEEL
IN 3000 P.S.I. CONCRETE
EPOXY COATED REINFORCING

NOTE:

BASED ON EXISTING PLANS, THE STRENGTH OF THE EXISTING CONCRETE IS 3000 P.S.I.

BAR SIZE	* LOCATION CATEGORY			3 TIMES BAR DIAMETER	6 TIMES BAR DIAMETER	= C/C SPACING
	A	B	C			
#4	1'-9"	1'-6"	1'-3"	1½"	3"	3½"
#5	2'-2"	1'-11"	1'-6"	1⅞"	3¾"	4⅜"
#6	2'-7"	2'-3"	1'-10"	2¼"	4½"	5¼"
#7	3'-1"	2'-9"	2'-2"	2⅝"	5¼"	6⅛"

CASE NO. 1

FOR BARS COATED WITH EPOXY WITH COVER LESS THAN 3 TIMES THE BAR DIAMETER OR CLEAR SPACING BETWEEN BARS LESS THAN 6 TIMES THE BAR DIAMETER.

BAR SIZE	* LOCATION CATEGORY		
	A	B	C
#4	1'-8"	1'-2"	1'-0"
#5	2'-1"	1'-6"	1'-2"
#6	2'-5"	1'-9"	1'-5"
#7	2'-11"	2'-1"	1'-8"

CASE NO. 2

FOR BARS COATED WITH EPOXY NOT IN CASE NO. 1

BAR SIZE	* LOCATION CATEGORY			3 TIMES BAR DIAMETER	6 TIMES BAR DIAMETER	= C/C SPACING
	A	B	C			
#4	2'-11"	2'-7"	2'-1"	1½"	3"	3½"
#5	3'-8"	3'-3"	2'-7"	1⅞"	3¾"	4⅜"
#6	4'-5"	3'-10"	3'-1"	2¼"	4½"	5¼"
#7	5'-3"	4'-7"	3'-8"	2⅝"	5¼"	6⅛"

CASE NO. 1

FOR BARS COATED WITH EPOXY WITH COVER LESS THAN 3 TIMES THE BAR DIAMETER OR CLEAR SPACING BETWEEN BARS LESS THAN 6 TIMES THE BAR DIAMETER.

BAR SIZE	* LOCATION CATEGORY		
	A	B	C
#4	2'-9"	2'-0"	1'-7"
#5	3'-6"	2'-6"	2'-0"
#6	4'-2"	3'-0"	2'-5"
#7	4'-11"	3'-6"	2'-10"

CASE NO. 2

FOR BARS COATED WITH EPOXY NOT IN CASE NO. 1

* LOCATION CATEGORY

A-BARS IN HORIZONTAL LAYERS IN TOP OF POUR WITH 12" OR MORE OF CONCRETE BELOW THEM SUCH AS IN: FOOTINGS, PIER CAPS, ETC.
B-ALL BARS NOT IN CATEGORY A SPACED LESS THAN 6" APART.
C-ALL BARS NOT IN CATEGORY A SPACED 6" OR MORE APART.

* LOCATION CATEGORY

A-BARS IN HORIZONTAL LAYERS IN TOP OF POUR WITH 12" OR MORE OF CONCRETE BELOW THEM SUCH AS IN: FOOTINGS, PIER CAPS, ETC.
B-ALL BARS NOT IN CATEGORY A SPACED LESS THAN 6" APART.
C-ALL BARS NOT IN CATEGORY A SPACED 6" OR MORE APART.

DEVELOPEMENT LENGTH DIMENSIONS FOR
GRADE 60 REINFORCING STEEL
IN 4500 P.S.I. CONCRETE
EPOXY COATED REINFORCING

BAR LAP DIMENSIONS FOR
GRADE 60 REINFORCING STEEL
IN 4500 P.S.I. CONCRETE
EPOXY COATED REINFORCING

PREL. TRACING W.R.A. DESIGN J.T.L./F.J.O. CHKD. W.A.G.

M:\313031A\MD04BR715A.DGN

(1) MARK NUMBER WITH SUFFIX 'E' DENOTES EPOXY COATED REINFORCING STEEL.

(2) MARK LOCATION PREFIXES' ARE AS FOLLOWS: (X)NAS = NORTH APPROACH SLAB, (X)SAS = SOUTH APPROACH SLAB, (X)D = DOWEL, (X)PA = PARAPET, (X)S = SLAB, (X)EP = ENDPOST - WHERE (X) DENOTES SPECIFIC LOCATION [IF APPLICABLE].

SPECIFICATIONS					BENDING DIMENSIONS										
QTY.	SIZE	LENGTH	MARK	TYPE	A	B	C	D	E	F/R	G	H	J	K	O
NORTH APPROACH SLAB															
(PHASES 1 AND 2)															
16	5	2-04.0	D501E	STR		2-04.0									
16	5	7-03.2	NAS501E	16	2-00.0	1-07.4	2-02.6	1-05.0				1-00.0		1-00.0	3-02.6
16	5	6-02.4	NAS502E	16	2-00.0	1-07.4	1-02.0	1-05.0				1-00.0		1-00.0	2-02.0
124	5	6-06.6	NAS503E	STR		6-06.6									
32	8	20-04.0	NAS804E	STR		20-04.0									
16	5	20-03.4	NAS505E	STR		20-03.4									
(PHASE 3)															
16	5	2-04.0	D502E	STR		2-04.0									
16	5	7-03.2	NAS551E	16	2-00.0	1-07.4	2-02.6	1-05.0				1-00.0		1-00.0	3-02.6
16	5	6-02.4	NAS552E	16	2-00.0	1-07.4	1-02.0	1-05.0				1-00.0		1-00.0	2-02.0
124	5	6-06.6	NAS553E	STR		6-06.6									
32	8	20-04.0	NAS854E	STR		20-04.0									
16	5	20-03.4	NAS555E	STR		20-03.4									
SOUTH APPROACH SLAB															
(PHASES 1 AND 2)															
16	5	2-04.0	D503E	STR		2-04.0									
16	5	7-03.2	SAS501E	16	2-00.0	1-07.4	2-02.6	1-05.0				1-00.0		1-00.0	3-02.6
16	5	6-02.4	SAS502E	16	2-00.0	1-07.4	1-02.0	1-05.0				1-00.0		1-00.0	2-02.0
124	5	6-06.6	SAS503E	STR		6-06.6									
32	8	20-04.0	SAS804E	STR		20-04.0									
16	5	20-03.4	SAS505E	STR		20-03.4									
(PHASE 3)															
16	5	2-04.0	D504E	STR		2-04.0									
16	5	7-03.2	SAS551E	16	2-00.0	1-07.4	2-02.6	1-05.0				1-00.0		1-00.0	3-02.6
16	5	6-02.4	SAS552E	16	2-00.0	1-07.4	1-02.0	1-05.0				1-00.0		1-00.0	2-02.0
124	5	6-06.6	SAS553E	STR		6-06.6									
32	8	20-04.0	SAS854E	STR		20-04.0									
16	5	20-03.4	SAS555E	STR		20-03.4									
JOINT AND PARAPET RECONSTRUCTION															
(SOUTH ABUTMENT, PHASES 1 AND 2)															
14	5	4-09.4	S501E	16	2-00.0	0-08.4	0-10.4	1-02.4				0-10.2		0-10.2	2-01.0
4	6	5-08.0	S602E	STR		5-08.0									
1	6	13-09.2	S603E	31		9-09.2	4-00.0					0-01.2		4-00.0	13-09.2
						(THREAD END OF DIMENSION "C" FOR MECHANICAL SPLICER)									
10	6	15-07.0	S604E	31		11-07.0	4-00.0					0-01.2		4-00.0	15-07.0
						(THREAD END OF DIMENSION "C" FOR MECHANICAL SPLICER)									
3	5	7-08.0	PA501E	P1	0-05.4	1-04.2	0-10.2	1-10.0	0-05.2	2-03.2	0-05.4	1-05.0		0-11.0	
3	5	6-02.2	PA502E	P2	0-07.0	1-03.0	1-04.0	0-05.2	2-07.0			1-04.0		0-01.6	0-07.0
(SOUTH ABUTMENT, PHASE 3)															
14	5	4-09.4	S511E	16	2-00.0	0-08.4	0-10.4	1-02.4				0-10.2		0-10.2	2-01.0
4	6	5-08.0	S612E	STR		5-08.0									
1	6	13-07.2	S613E	STR		13-07.2									
10	6	15-05.0	S614E	STR		15-05.0									
11	5	3-09.0	S615E	STR		3-09.0									
						(THREAD 1 END FOR MECHANICAL SPLICER)									
3	5	7-08.0	PA501E	P1	0-05.4	1-04.2	0-10.2	1-10.0	0-05.2	2-03.2	0-05.4	1-05.0		0-11.0	
3	5	6-02.2	PA502E	P2	0-07.0	1-03.0	1-04.0	0-05.2	2-07.0			1-04.0		0-01.6	0-07.0
(NORTH ABUTMENT, PHASES 1 AND 2)															
14	5	4-09.4	S501E	16	2-00.0	0-08.4	0-10.4	1-02.4				0-10.2		0-10.2	2-01.0
4	6	5-08.0	S602E	STR		5-08.0									
1	6	13-09.2	S603E	31		9-09.2	4-00.0					0-01.2		4-00.0	13-09.2
						(THREAD END OF DIMENSION "C" FOR MECHANICAL SPLICER)									
10	6	15-07.0	S604E	31		11-07.0	4-00.0					0-01.2		4-00.0	15-07.0
						(THREAD END OF DIMENSION "C" FOR MECHANICAL SPLICER)									
3	5	7-08.0	PA501E	P1	0-05.4	1-04.2	0-10.2	1-10.0	0-05.2	2-03.2	0-05.4	1-05.0		0-11.0	
3	5	6-02.2	PA502E	P2	0-07.0	1-03.0	1-04.0	0-05.2	2-07.0			1-04.0		0-01.6	0-07.0
(NORTH ABUTMENT, PHASE 3)															
14	5	4-09.4	S511E	16	2-00.0	0-08.4	0-10.4	1-02.4				0-10.2		0-10.2	2-01.0
4	6	5-08.0	S612E	STR		5-08.0									
1	6	13-07.2	S613E	STR		13-07.2									
10	6	15-05.0	S614E	STR		15-05.0									
11	5	3-09.0	S615E	STR		3-09.0									
						(THREAD 1 END FOR MECHANICAL SPLICER)									
3	5	7-08.0	PA501E	P1	0-05.4	1-04.2	0-10.2	1-10.0	0-05.2	2-03.2	0-05.4	1-05.0		0-11.0	2-01.0
3	5	6-02.2	PA502E	P2	0-07.0	1-03.0	1-04.0	0-05.2	2-07.0			1-04.0		0-01.6	0-07.0

SPECIFICATIONS					BENDING DIMENSIONS										
QTY.	SIZE	LENGTH	MARK	TYPE	A	B	C	D	E	F/R	G	H	J	K	O
(PIER 1, PHASES 1 AND 2)															
28	5	4-07.6	S521E	16	2-00.0	0-08.4	0-08.6	1-02.4				0-10.2		0-10.2	1-07.0
8	6	5-06.0	S622E	STR		5-06.0									
20	6	15-07.0	S623E	31		11-07.0	4-00.0					0-01.2		4-00.0	15-07.0
						(THREAD END OF DIMENSION "C" FOR MECHANICAL SPLICER)									
6	5	7-08.0	PA501E	P1	0-05.4	1-04.2	0-10.2	1-10.0	0-05.2	2-03.2	0-05.4	1-05.0		0-11.0	
6	5	6-02.2	PA502E	P2	0-07.0	1-03.0	1-04.0	0-05.2	2-07.0			1-04.0		0-01.6	0-07.0
(PIER 1, PHASE 3)															
28	5	4-07.6	S531E	16	2-00.0	0-08.4	0-08.6	1-02.4				0-10.2		0-10.2	1-07.0
8	6	5-06.0	S632E	STR		5-06.0									
20	6	15-05.0	S633E	STR		15-05.0									
22	6	3-09.0	S634E	STR		3-09.0									
						(THREAD 1 END FOR MECHANICAL SPLICER)									
6	5	7-08.0	PA501E	P1	0-05.4	1-04.2	0-10.2	1-10.0	0-05.2	2-03.2	0-05.4	1-05.0		0-11.0	
6	5	6-02.2	PA502E	P2	0-07.0	1-03.0	1-04.0	0-05.2	2-07.0			1-04.0		0-01.6	0-07.0
(PIER 2, PHASES 1 AND 2)															
28	5	4-07.6	S521E	16	2-00.0	0-08.4	0-08.6	1-02.4				0-10.2		0-10.2	1-07.0
8	6	5-06.0	S622E	STR		5-06.0									
20	6	15-07.0	S623E	31		11-07.0	4-00.0					0-01.2		4-00.0	15-07.0
						(THREAD END OF DIMENSION "C" FOR MECHANICAL SPLICER)									
6	5	7-08.0	PA501E	P1	0-05.4	1-04.2	0-10.2	1-10.0	0-05.2	2-03.2	0-05.4	1-05.0		0-11.0	
6	5	6-02.2	PA502E	P2	0-07.0	1-03.0	1-04.0	0-05.2	2-07.0			1-04.0		0-01.6	0-07.0
(PIER 2, PHASE 3)															
28	5	4-07.6	S531E	16	2-00.0	0-08.4	0-08.6	1-02.4				0-10.2		0-10.2	1-07.0
8	6	5-06.0	S632E	STR		5-06.0									
20	6	15-05.0	S633E	STR		15-05.0									
22	6	3-09.0	S634E	STR		3-09.0									
						(THREAD 1 END FOR MECHANICAL SPLICER)									
6	5	7-08.0	PA501E	P1	0-05.4	1-04.2	0-10.2	1-10.0	0-05.2	2-03.2	0-05.4	1-05.0		0-11.0	
6	5	6-02.2	PA502E	P2	0-07.0	1-03.0	1-04.0	0-05.2	2-07.0			1-04.0		0-01.6	0-07.0
(PIER 3, PHASES 1 AND 2)															
28	5	4-07.6	S521E	16	2-00.0	0-08.4	0-08.6	1-02.4				0-10.2		0-10.2	1-07.0
8	6	5-06.0	S622E	STR		5-06.0									
20	6	15-07.0	S623E	31		11-07.0	4-00.0					0-01.2		4-00.0	15-07.0
						(THREAD END OF DIMENSION "C" FOR MECHANICAL SPLICER)									
6	5	7-03.0	PA501E	P1	0-05.4	1-04.2	0-10.2	1-10.0	0-05.2	2-03.2	0-05.4	0-00.0		0-11.0	
6	5	6-02.2	PA502E	P2	0-07.0	1-03.0	1-04.0	0-05.2	2-07.0			0-00.0		0-01.6	0-07.0
(PIER 3, PHASE 3)															
28	5	4-07.6	S531E	16	2-00.0	0-08.4	0-08.6	1-02.4				0-00.2		0-10.2	1-07.0
8	6	5-06.0	S632E	STR		5-06.0									
20	6	15-05.0	S633E	STR		15-05.0									
22	6	3-09.0	S634E	STR		3-09.0									
						(THREAD 1 END FOR MECHANICAL SPLICER)									
6	5	7-03.0	PA501E	P1	0-05.4	1-04.2	0-10.2	1-10.0	0-05.2	2-03.2	0-05.4	0-00.0		0-11.0	
6	5	6-02.2	PA502E	P2	0-07.0	1-03.0	1-04.0	0-05.2	2-07.0			1-04.0		0-01.6	0-07.0
(PIER 4, PHASES 1 AND 2)															
28	5	4-07.6	S521E	16	2-00.0	0-08.4	0-08.6	1-02.4				0-10.2		0-10.2	1-07.0
8	6	5-06.0	S622E	STR		5-06.0									
20	6	15-07.0	S623E	31		11-07.0	4-00.0					0-01.2		4-00.0	15-07.0
						(THREAD END OF DIMENSION "C" FOR MECHANICAL SPLICER)									
6	5	7-08.0	PA501E	P1	0-05.4	1-04.2	0-10.2	1-10.0	0-05.2	2-03.2	0-05.4	1-05.0		0-11.0	1-07.0
6	5	6-02.2	PA502E	P2	0-07.0	1-03.0	1-04.0	0-05.2	2-07.0			1-04.0		0-01.6	0-07.0
(PIER 4, PHASE 3)															
28	5	4-07.6	S531E	16	2-00.0	0-08.4	0-08.6	1-02.4				0-10.2		0-10.2	1-07.0
8	6	5-06.0	S632E	STR		5-06.0									
20	6	15-05.0	S633E	STR		15-05.0									
22	6	3-09.0	S634E	STR		3-09.0									
						(THREAD 1 END FOR MECHANICAL SPLICER)									
6	5	7-08.0	PA501E	P1	0-05.4	1-04.2	0-10.2	1-10.0	0-05.2	2-03.2	0-05.4	1-05.0		0-11.0	
6	5	6-02.2	PA502E	P2	0-07.0	1-03.0	1-04.0	0-05.2	2-07.0			1-04.0		0-01.6	0-07.0

* DENOTES AVERAGE LENGTH

REINFORCING BAR LIST - I

BR. 1-715A 6048

CONTRACT	COUNTY	F.A.P. NO.	SHEET NO.	TOTAL SHTS.
22-074-09	NEW CASTLE	SEE TITLE SHEET	120	152

REHABILITATION OF BRIDGE NOS. 1-715, 1-715A, & 1-715D ON SR 273 OVER I-95

REVISIONS

1 DELETED SHEET	
11/25/03 WAG/GM	

NOTES:

1. STANDARD BAR BENDS INCLUDE ONLY TYPES 1-32, SI-SI2, AND TI-TI6.
2. ALL DIMENSIONS ARE OUT-TO-OUT OF BAR EXCEPT "A" AND "G" ON STANDARD 180° AND 135° HOOKS.
3. "J" DIMENSIONS ON 180° HOOKS TO BE SHOWN ONLY WHERE NECESSARY TO RESTRICT HOOK SIZE, OTHERWISE STANDARD HOOKS ARE TO BE USED.
4. WHERE "J" IS NOT SHOWN, "J" WILL BE KEPT EQUAL TO OR LESS THAN "H" ON TRUSS BARS. WHERE "J" CAN EXCEED "H", IT SHOULD BE SHOWN.
5. "H" DIMENSIONS STIRRUPS TO BE SHOWN WHERE NECESSARY TO FIT WITHIN CONCRETE.
6. UNLESS OTHERWISE NOTED, DIAMETER "D" IS THE SAME FOR ALL BENDS AND HOOKS ON A BAR.
7. WHERE SLOPE DIFFERS FROM 45° DIMENSIONS, "H" AND "K" MUST BE SHOWN.
8. WHERE BARS ARE TO BE BENT MORE ACCURATELY THAN STANDARD BENDING TOLERANCES, BENDING DIMENSIONS WHICH REQUIRE CLOSER FABRICATION SHOULD HAVE LIMITS INDICATED.
9. FIGURES IN CIRCLES SHOW TYPES.
10. FOR RECOMMENDED DIAMETER "D", OF BENDS, HOOKS, ETC., SEE 'CRSI' OR 'ACI' TABLES.
11. TYPE SI-SI2, TI-TI6 APPLY TO BAR SIZES #3 THROUGH #6.

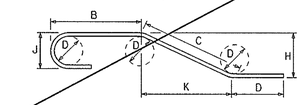

STANDARD BAR BENDS

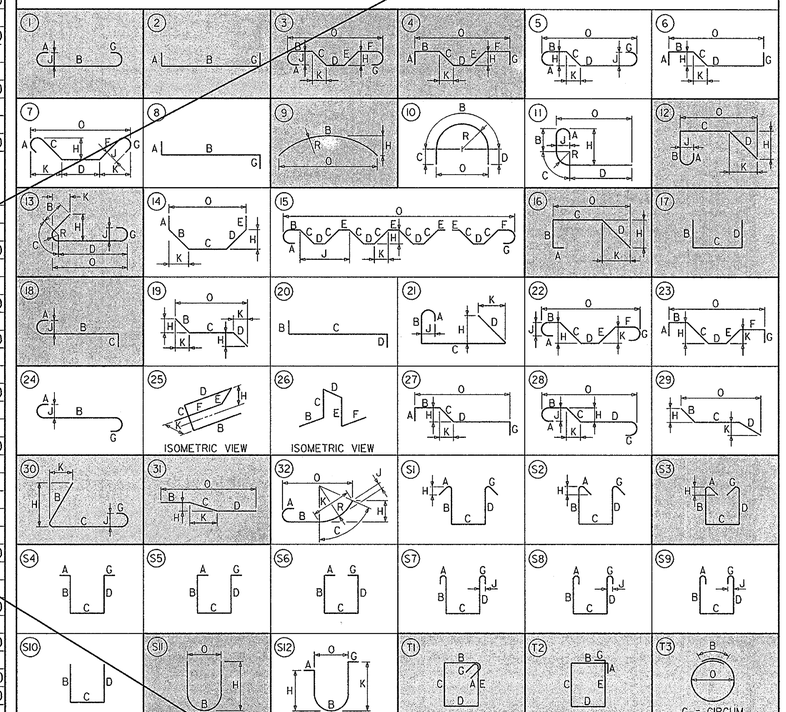

PREL. TRACING ____ W.R.A. ____ DESIGN ____ J.T.L./F.J.O. ____ CHKD. ____ W.A.G. ____

M:\3130314\BR01br715A.dgn

(1) MARK NUMBER WITH SUFFIX 'E' DENOTES EPOXY COATED REINFORCING STEEL.

(2) MARK 'LOCATION PREFIXES' ARE AS FOLLOWS: (X)NAS = NORTH APPROACH SLAB, (X)SAS = SOUTH APPROACH SLAB, (X)D = DOWEL, (X)PA = PARAPET, (X)S = SLAB, (X)EP = ENDPOST - WHERE (X) DENOTES SPECIFIC LOCATION [IF APPLICABLE].

REINFORCING BAR LIST - I

BR. 1-715A 6048

CONTRACT	COUNTY	F.A.P. NO.	SHEET NO.	TOTAL SHTS.
22-074-09	NEW CASTLE	SEE TITLE SHEET	120A	152

REHABILITATION OF BRIDGE NOS. 1-715, 1-715A, & 1-715D ON SR 273 OVER I-95

REVISIONS

1 ADDED SHEET	
11/25/03 WAG/GM	

SPECIFICATIONS					BENDING DIMENSIONS											
QTY.	SIZE	LENGTH	MARK	TYPE	A	B	C	D	E	F/R	G	H	J	K	O
NORTH APPROACH SLAB															
(PHASES 1 AND 2)															
16	5	2-04 0	D501E	STR		2-04 0									
16	5	7-03 2	NAS501E	16	2-00 0	1-07 4	2-02 6	1-05 0				1-00 0		1-00 0	3-02 6
16	5	6-02 4	NAS502E	16	2-00 0	1-07 4	1-02 0	1-05 0				1-00 0		1-00 0	2-02 0
124	5	6-06 6	NAS503E	STR		6-06 6									
34	8	20-04 0	NAS804E	STR		20-04 0									
16	5	20-03 4	NAS505E	STR		20-03 4									
(PHASE 3)															
16	5	2-04 0	D502E	STR		2-04 0									
16	5	7-03 2	NAS551E	16	2-00 0	1-07 4	2-02 6	1-05 0				1-00 0		1-00 0	3-02 6
16	5	6-02 4	NAS552E	16	2-00 0	1-07 4	1-02 0	1-05 0				1-00 0		1-00 0	2-02 0
124	5	6-06 6	NAS553E	STR		6-06 6									
34	8	20-04 0	NAS854E	STR		20-04 0									
16	5	20-03 4	NAS555E	STR		20-03 4									
SOUTH APPROACH SLAB															
(PHASES 1 AND 2)															
16	5	2-04 0	D503E	STR		2-04 0									
16	5	7-03 2	SAS501E	16	2-00 0	1-07 4	2-02 6	1-05 0				1-00 0		1-00 0	3-02 6
16	5	6-02 4	SAS502E	16	2-00 0	1-07 4	1-02 0	1-05 0				1-00 0		1-00 0	2-02 0
124	5	6-06 6	SAS503E	STR		6-06 6									
34	8	20-04 0	SAS804E	STR		20-04 0									
16	5	20-03 4	SAS505E	STR		20-03 4									
(PHASE 3)															
16	5	2-04 0	D504E	STR		2-04 0									
16	5	7-03 2	SAS551E	16	2-00 0	1-07 4	2-02 6	1-05 0				1-00 0		1-00 0	3-02 6
16	5	6-02 4	SAS552E	16	2-00 0	1-07 4	1-02 0	1-05 0				1-00 0		1-00 0	2-02 0
124	5	6-06 6	SAS553E	STR		6-06 6									
34	8	20-04 0	SAS854E	STR		20-04 0									
16	5	20-03 4	SAS555E	STR		20-03 4									
JOINT AND PARAPET RECONSTRUCTION															
(SOUTH ABUTMENT, PHASES 1 AND 2)															
14	5	4-09 4	S501E	16	2-00 0	0-08 4	0-10 4	1-02 4				0-10 2		0-10 2	2-01 0
4	6	5-08 0	S602E	STR		5-08 0									
1	6	13-09 2	S603E	31		9-09 2	4-00 0					0-01 2		4-00 0	13-09 2
						(THREAD END OF DIMENSION "C" FOR MECHANICAL SPLICER)									
10	6	15-07 0	S604E	31		11-07 0	4-00 0					0-01 2		4-00 0	15-07 0
						(THREAD END OF DIMENSION "C" FOR MECHANICAL SPLICER)									
3	5	7-08 0	PA501E	P1	0-05 4	1-04 2	0-10 2	1-10 0	0-05 2	2-03 2	0-05 4	1-05 0		0-11 0	
3	5	6-02 2	PA502E	P2	0-07 0	1-03 0	1-04 0	0-05 2	2-07 0			1-04 0		0-01 6	0-07 0
(SOUTH ABUTMENT, PHASE 3)															
14	5	4-09 4	S511E	16	2-00 0	0-08 4	0-10 4	1-02 4				0-10 2		0-10 2	2-01 0
4	6	5-08 0	S612E	STR		5-08 0									
1	6	13-07 2	S613E	STR		13-07 2									
10	6	15-05 0	S614E	STR		15-05 0									
11	5	3-09 0	S615E	STR		3-09 0									
						(THREAD 1 END FOR MECHANICAL SPLICER)									
3	5	7-08 0	PA501E	P1	0-05 4	1-04 2	0-10 2	1-10 0	0-05 2	2-03 2	0-05 4	1-05 0		0-11 0	
3	5	6-02 2	PA502E	P2	0-07 0	1-03 0	1-04 0	0-05 2	2-07 0			1-04 0		0-01 6	0-07 0
(NORTH ABUTMENT, PHASES 1 AND 2)															
14	5	4-09 4	S501E	16	2-00 0	0-08 4	0-10 4	1-02 4				0-10 2		0-10 2	2-01 0
4	6	5-08 0	S602E	STR		5-08 0									
1	6	13-09 2	S603E	31		9-09 2	4-00 0					0-01 2		4-00 0	13-09 2
						(THREAD END OF DIMENSION "C" FOR MECHANICAL SPLICER)									
10	6	15-07 0	S604E	31		11-07 0	4-00 0					0-01 2		4-00 0	15-07 0
						(THREAD END OF DIMENSION "C" FOR MECHANICAL SPLICER)									
3	5	7-08 0	PA501E	P1	0-05 4	1-04 2	0-10 2	1-10 0	0-05 2	2-03 2	0-05 4	1-05 0		0-11 0	
3	5	6-02 2	PA502E	P2	0-07 0	1-03 0	1-04 0	0-05 2	2-07 0			1-04 0		0-01 6	0-07 0
(NORTH ABUTMENT, PHASE 3)															
14	5	4-09 4	S511E	16	2-00 0	0-08 4	0-10 4	1-02 4				0-10 2		0-10 2	2-01 0
4	6	5-08 0	S612E	STR		5-08 0									
1	6	13-07 2	S613E	STR		13-07 2									
10	6	15-05 0	S614E	STR		15-05 0									
11	5	3-09 0	S615E	STR		3-09 0									
						(THREAD 1 END FOR MECHANICAL SPLICER)									
3	5	7-08 0	PA501E	P1	0-05 4	1-04 2	0-10 2	1-10 0	0-05 2	2-03 2	0-05 4	1-05 0		0-11 0	2-01 0
3	5	6-02 2	PA502E	P2	0-07 0	1-03 0	1-04 0	0-05 2	2-07 0			1-04 0		0-01 6	0-07 0

SPECIFICATIONS					BENDING DIMENSIONS											
QTY.	SIZE	LENGTH	MARK	TYPE	A	B	C	D	E	F/R	G	H	J	K	O
(PIER 1, PHASES 1 AND 2)															
28	5	4-07 6	S521E	16	2-00 0	0-08 4	0-08 6	1-02 4				0-10 2		0-10 2	1-07 0
8	6	5-06 0	S622E	STR		5-06 0									
20	6	15-07 0	S623E	31		11-07 0	4-00 0					0-01 2		4-00 0	15-07 0
						(THREAD END OF DIMENSION "C" FOR MECHANICAL SPLICER)									
6	5	7-08 0	PA501E	P1	0-05 4	1-04 2	0-10 2	1-10 0	0-05 2	2-03 2	0-05 4	1-05 0		0-11 0	
6	5	6-02 2	PA502E	P2	0-07 0	1-03 0	1-04 0	0-05 2	2-07 0			1-04 0		0-01 6	0-07 0
(PIER 1, PHASE 3)															
28	5	4-07 6	S531E	16	2-00 0	0-08 4	0-08 6	1-02 4				0-10 2		0-10 2	1-07 0
8	6	5-06 0	S632E	STR		5-06 0									
20	6	15-05 0	S633E	STR		15-05 0									
22	6	3-09 0	S634E	STR		3-09 0									
						(THREAD 1 END FOR MECHANICAL SPLICER)									
6	5	7-08 0	PA501E	P1	0-05 4	1-04 2	0-10 2	1-10 0	0-05 2	2-03 2	0-05 4	1-05 0		0-11 0	
6	5	6-02 2	PA502E	P2	0-07 0	1-03 0	1-04 0	0-05 2	2-07 0			1-04 0		0-01 6	0-07 0
(PIER 2, PHASES 1 AND 2)															
28	5	4-07 6	S521E	16	2-00 0	0-08 4	0-08 6	1-02 4				0-10 2		0-10 2	1-07 0
8	6	5-06 0	S622E	STR		5-06 0									
20	6	15-07 0	S623E	31		11-07 0	4-00 0					0-01 2		4-00 0	15-07 0
						(THREAD END OF DIMENSION "C" FOR MECHANICAL SPLICER)									
6	5	7-08 0	PA501E	P1	0-05 4	1-04 2	0-10 2	1-10 0	0-05 2	2-03 2	0-05 4	1-05 0		0-11 0	
6	5	6-02 2	PA502E	P2	0-07 0	1-03 0	1-04 0	0-05 2	2-07 0			1-04 0		0-01 6	0-07 0
(PIER 2, PHASE 3)															
28	5	4-07 6	S531E	16	2-00 0	0-08 4	0-08 6	1-02 4				0-10 2		0-10 2	1-07 0
8	6	5-06 0	S632E	STR		5-06 0									
20	6	15-05 0	S633E	STR		15-05 0									
22	6	3-09 0	S634E	STR		3-09 0									
						(THREAD 1 END FOR MECHANICAL SPLICER)									
6	5	7-08 0	PA501E	P1	0-05 4	1-04 2	0-10 2	1-10 0	0-05 2	2-03 2	0-05 4	1-05 0		0-11 0	
6	5	6-02 2	PA502E	P2	0-07 0	1-03 0	1-04 0	0-05 2	2-07 0			1-04 0		0-01 6	0-07 0
(PIER 3, PHASES 1 AND 2)															
28	5	4-07 6	S521E	16	2-00 0	0-08 4	0-08 6	1-02 4				0-10 2		0-10 2	1-07 0
8	6	5-06 0	S622E	STR		5-06 0									
20	6	15-07 0	S623E	31		11-07 0	4-00 0					0-01 2		4-00 0	15-07 0
						(THREAD END OF DIMENSION "C" FOR MECHANICAL SPLICER)									
6	5	7-03 0	PA501E	P1	0-05 4	1-04 2	0-10 2	1-10 0	0-05 2	2-03 2	0-05 4	0-00 0		0-11 0	
6	5	6-02 2	PA502E	P2	0-07 0	1-03 0	1-04 0	0-05 2	2-07 0			0-00 0		0-01 6	0-07 0
(PIER 3, PHASE 3)															
28	5	4-07 6	S531E	16	2-00 0	0-08 4	0-08 6	1-02 4				0-00 2		0-10 2	1-07 0
8	6	5-06 0	S632E	STR		5-06 0									
20	6	15-05 0	S633E	STR		15-05 0									
22	6	3-09 0	S634E	STR		3-09 0									
						(THREAD 1 END FOR MECHANICAL SPLICER)									
6	5	7-03 0	PA501E	P1	0-05 4	1-04 2	0-10 2	1-10 0	0-05 2	2-03 2	0-05 4	0-00 0		0-11 0	
6	5	6-02 2	PA502E	P2	0-07 0	1-03 0	1-04 0	0-05 2	2-07 0			1-04 0		0-01 6	0-07 0
(PIER 4, PHASES 1 AND 2)															
28	5	4-07 6	S521E	16	2-00 0	0-08 4	0-08 6	1-02 4				0-10 2		0-10 2	1-07 0
8	6	5-06 0	S622E	STR		5-06 0									
20	6	15-07 0	S623E	31		11-07 0	4-00 0					0-01 2		4-00 0	15-07 0
						(THREAD END OF DIMENSION "C" FOR MECHANICAL SPLICER)									
6	5	7-08 0	PA501E	P1	0-05 4	1-04 2	0-10 2	1-10 0	0-05 2	2-03 2	0-05 4	1-05 0		0-11 0	1-07 0
6	5	6-02 2	PA502E	P2	0-07 0	1-03 0	1-04 0	0-05 2	2-07 0			1-04 0		0-01 6	0-07 0
(PIER 4, PHASE 3)															
28	5	4-07 6	S531E	16	2-00 0	0-08 4	0-08 6	1-02 4				0-10 2		0-10 2	1-07 0
8	6	5-06 0	S632E	STR		5-06 0									
20	6	15-05 0	S633E	STR		15-05 0									
22	6	3-09 0	S634E	STR		3-09 0									
						(THREAD 1 END FOR MECHANICAL SPLICER)									
6	5	7-08 0	PA501E	P1	0-05 4	1-04 2	0-10 2	1-10 0	0-05 2	2-03 2	0-05 4	1-05 0		0-11 0	
6	5	6-02 2	PA502E	P2	0-07 0	1-03 0	1-04 0	0-05 2	2-07 0			1-04 0		0-01 6	0-07 0

* DENOTES AVERAGE LENGTH

NOTES:

1. STANDARD BAR BENDS INCLUDE ONLY TYPES 1-32, S1-S12, AND T1-T16.
2. ALL DIMENSIONS ARE OUT-TO-OUT OF BAR EXCEPT "A" AND "G" ON STANDARD 180° AND 135° HOOKS.
3. "J" DIMENSIONS ON 180° HOOKS TO BE SHOWN ONLY WHERE NECESSARY TO RESTRICT HOOK SIZE, OTHERWISE STANDARD HOOKS ARE TO BE USED.
4. WHERE "J" IS NOT SHOWN, "J" WILL BE KEPT EQUAL TO OR LESS THAN "H" ON TRUSS BARS. WHERE "J" CAN EXCEED "H", IT SHOULD BE SHOWN.
5. "H" DIMENSIONS STIRRUPS TO BE SHOWN WHERE NECESSARY TO FIT WITHIN CONCRETE.
6. UNLESS OTHERWISE NOTED, DIAMETER "D" IS THE SAME FOR ALL BENDS AND HOOKS ON A BAR.
7. WHERE SLOPE DIFFERS FROM 45° DIMENSIONS, "H" AND "K" MUST BE SHOWN.
8. WHERE BARS ARE TO BE BENT MORE ACCURATELY THAN STANDARD BENDING TOLERANCES, BENDING DIMENSIONS WHICH REQUIRE CLOSER FABRICATION SHOULD HAVE LIMITS INDICATED.
9. FIGURES IN CIRCLES SHOW TYPES.
10. FOR RECOMMENDED DIAMETER "D", OF BENDS, HOOKS, ETC., SEE 'CRSI' OR 'ACI' TABLES.
11. TYPE S1-S12, T1-T16 APPLY TO BAR SIZES #3 THROUGH #6.

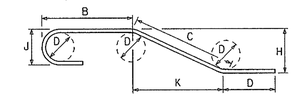

STANDARD BAR BENDS

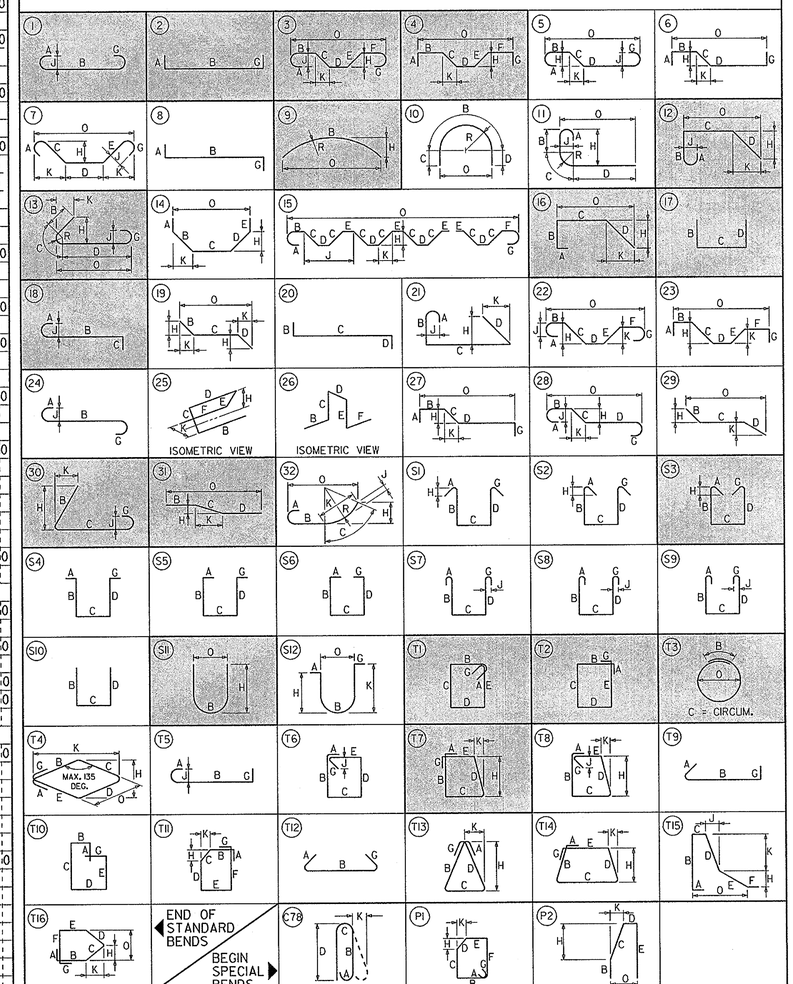

PREL. TRACING _____ W.R.A. _____ DESIGN _____ J.T.L./F.J.O. _____ CHKD. _____ W.A.G.

M:\3130314\BR01br715aA.dgn

(1) MARK NUMBER WITH SUFFIX 'E' DENOTES EPOXY COATED REINFORCING STEEL.

(2) MARK 'LOCATION PREFIXES' ARE AS FOLLOWS: (X)NAS = NORTH APPROACH SLAB, (X)SAS = SOUTH APPROACH SLAB, (X)D = DOWEL, (X)PA = PARAPET, (X)S = SLAB, (X)EP = ENDPOST - WHERE (X) DENOTES SPECIFIC LOCATION [IF APPLICABLE].

REINFORCING BAR LIST – II

BR. 1-715A 6048

CONTRACT	COUNTY	F.A.P. NO.	SHEET NO.	TOTAL SHTS.
22-074-09	NEW CASTLE	SEE TITLE SHEET	121	152

REHABILITATION OF BRIDGE NOS. 1-715, 1-715A, & 1-715D ON SR 273 OVER I-95

REVISIONS

SPECIFICATIONS					BENDING DIMENSIONS										
QTY.	SIZE	LENGTH	MARK	TYPE	A	B	C	D	E	F/R	G	H	J	K	O
(PIER 5, PHASES 1 AND 2)															
28	5	4-07 6	S521E	16	2-00 0	0-08 4	0-08 6	1-02 4				0-10 2		0-10 2	1-07 0
8	6	5-06 0	S622E	STR		5-06 0									
20	6	15-07 0	S623E	31		11-07 0	4-00 0					0-01 2		4-00 0	15-07 0
						(THREAD END OF DIMENSION "C" FOR MECHANICAL SPLICER)									
6	5	7-08 0	PA501E	P1	0-05 4	1-04 2	0-10 2	1-10 0	0-05 2	2-03 2	0-05 4	1-05 0		0-11 0	
6	5	6-02 2	PA502E	P2	0-07 0	1-03 0	1-04 0	0-05 2	2-07 0			1-04 0		0-01 6	0-07 0
(PIER 5, PHASE 3)															
28	5	4-07 6	S531E	16	2-00 0	0-08 4	0-08 6	1-02 4				0-10 2		0-10 2	1-07 0
8	6	5-06 0	S632E	STR		5-06 0									
20	6	15-05 0	S633E	STR		15-05 0									
22	6	3-09 0	S634E	STR		3-09 0									
						(THREAD 1 END FOR MECHANICAL SPLICER)									
6	5	7-08 0	PA501E	P1	0-05 4	1-04 2	0-10 2	1-10 0	0-05 2	2-03 2	0-05 4	1-05 0		0-11 0	
6	5	6-02 2	PA502E	P2	0-07 0	1-03 0	1-04 0	0-05 2	2-07 0			1-04 0		0-01 6	0-07 0
ENDPOSTS															
(SOUTHEAST)															
16	5	5-00 6	EP501E	C78	0-07 0	1-11 0	0-05 6	2-01 0						0-02 6	
10	5	* 6-06 4	EP502E	S11		0-08 2						*3-01 6			0-05 2
						(H VARIES FROM 2-01 0 TO 4-02 4)									
6	5	8-11 0	EP503E	S11		0-08 2						4-04 0			0-05 2
6	5	14-02 0	EP504E	STR		14-02 0									
2	5	9-08 0	EP505E	STR		9-08 0									
2	5	14-05 2	EP506E	31		5-03 6	9-01 4					2-02 4		8-10 2	14-02 0
2	5	2-08 4	D505E	18	0-07 0	2-01 4							0-05 0		
1	5	5-04 0	D506E	STR		5-04 0									
1	5	4-08 0	D507E	STR		4-08 0									
(NORTHEAST)															
16	5	5-00 6	EP501E	C78	0-07 0	1-11 0	0-05 6	2-01 0						0-02 6	
10	5	* 6-06 4	EP502E	S11		0-08 2						*3-01 6			0-05 2
						(H VARIES FROM 2-01 0 TO 4-02 4)									
6	5	8-11 0	EP503E	S11		0-08 2						4-04 0			0-05 2
6	5	14-02 0	EP504E	STR		14-02 0									
2	5	9-08 0	EP505E	STR		9-08 0									
2	5	14-05 2	EP506E	31		5-03 6	9-01 4					2-02 4		8-10 2	14-02 0
2	5	2-08 4	D505E	18	0-07 0	2-01 4							0-05 0		
1	5	5-04 0	D506E	STR		5-04 0									
1	5	4-08 0	D507E	STR		4-08 0									
(SOUTHWEST)															
16	5	5-00 6	EP501E	C78	0-07 0	1-11 0	0-05 6	2-01 0						0-02 6	
10	5	* 6-06 4	EP502E	S11		0-08 2						*3-01 6			0-05 2
						(H VARIES FROM 2-01 0 TO 4-02 4)									
6	5	8-11 0	EP503E	S11		0-08 2						4-04 0			0-05 2
6	5	14-02 0	EP504E	STR		14-02 0									
2	5	9-08 0	EP505E	STR		9-08 0									
2	5	14-05 2	EP506E	31		5-03 6	9-01 4					2-02 4		8-10 2	14-02 0
2	5	2-08 4	D505E	18	0-07 0	2-01 4							0-05 0		
1	5	5-04 0	D506E	STR		5-04 0									
1	5	4-08 0	D507E	STR		4-08 0									
(NORTHWEST)															
16	5	5-00 6	EP501E	C78	0-07 0	1-11 0	0-05 6	2-01 0						0-02 6	
10	5	* 6-06 4	EP502E	S11		0-08 2						*3-01 6			0-05 2
						(H VARIES FROM 2-01 0 TO 4-02 4)									
6	5	8-09 0	EP503E	S11		0-08 2						4-04 0			0-05 2
6	5	14-02 0	EP504E	STR		14-02 0									
2	5	9-08 0	EP505E	STR		9-08 0									
2	5	14-05 2	EP506E	31		5-03 6	9-01 4					2-02 4		8-10 2	14-02 0
2	5	2-08 4	D505E	18	0-07 0	2-01 4							0-05 0		
1	5	5-04 0	D506E	STR		5-04 0									
1	5	4-08 0	D507E	STR		4-08 0									

SPECIFICATIONS					BENDING DIMENSIONS										
QTY.	SIZE	LENGTH	MARK	TYPE	A	B	C	D	E	F/R	G	H	J	K	O

* DENOTES AVERAGE LENGTH

NOTES:

1. STANDARD BAR BENDS INCLUDE ONLY TYPES 1-32, S1-S12, AND T1-T16.
2. ALL DIMENSIONS ARE OUT-TO-OUT OF BAR EXCEPT "A" AND "G" ON STANDARD 180° AND 135° HOOKS.
3. "J" DIMENSIONS ON 180° HOOKS TO BE SHOWN ONLY WHERE NECESSARY TO RESTRICT HOOK SIZE, OTHERWISE STANDARD HOOKS ARE TO BE USED.
4. WHERE "J" IS NOT SHOWN, "J" WILL BE KEPT EQUAL TO OR LESS THAN "H" ON TRUSS BARS. WHERE "J" CAN EXCEED "H", IT SHOULD BE SHOWN.
5. "H" DIMENSIONS STIRRUPS TO BE SHOWN WHERE NECESSARY TO FIT WITHIN CONCRETE.
6. UNLESS OTHERWISE NOTED, DIAMETER "D" IS THE SAME FOR ALL BENDS AND HOOKS ON A BAR.
7. WHERE SLOPE DIFFERS FROM 45° DIMENSIONS, "H" AND "K" MUST BE SHOWN.
8. WHERE BARS ARE TO BE BENT MORE ACCURATELY THAN STANDARD BENDING TOLERANCES, BENDING DIMENSIONS WHICH REQUIRE CLOSER FABRICATION SHOULD HAVE LIMITS INDICATED.
9. FIGURES IN CIRCLES SHOW TYPES.
10. FOR RECOMMENDED DIAMETER "D", OF BENDS, HOOKS, ETC., SEE 'CRSI' OR 'ACI' TABLES.
11. TYPE S1-S12, T1-T16 APPLY TO BAR SIZES #3 THROUGH #6.

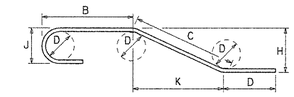

STANDARD BAR BENDS

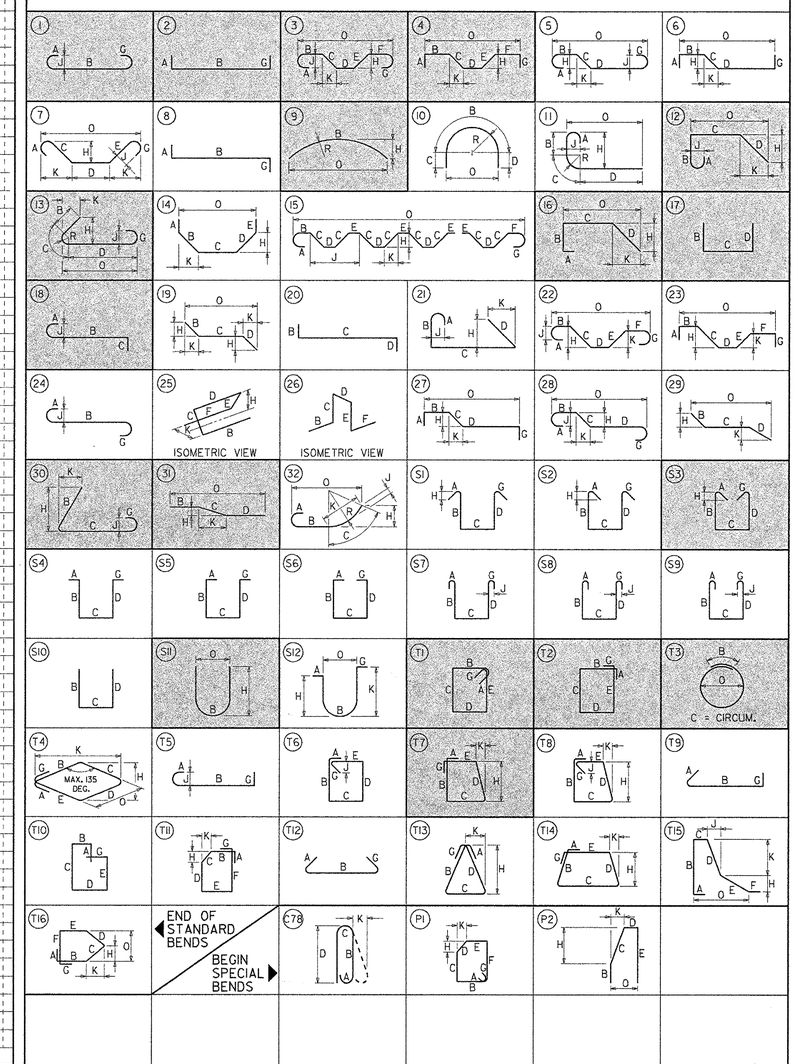

PREL. TRACING ____ W.R.A. ____ DESIGN ____ J.T.L./F.J.O. ____ CHKD. ____ W.A.G.

M:\3130314\BR02br715Adgn

GENERAL PLAN AND ELEVATION

BR. 1-715D 6048	CONTRACT	COUNTY	F.A.P. NO.	SHEET NO.	TOTAL SHTS.
	22-074-09	NEW CASTLE	SEE TITLE SHEET	122	152

REHABILITATION OF BRIDGE NOS. 1-715, 1-715A, & 1-715D ON SR 273 OVER I-95

REVISIONS

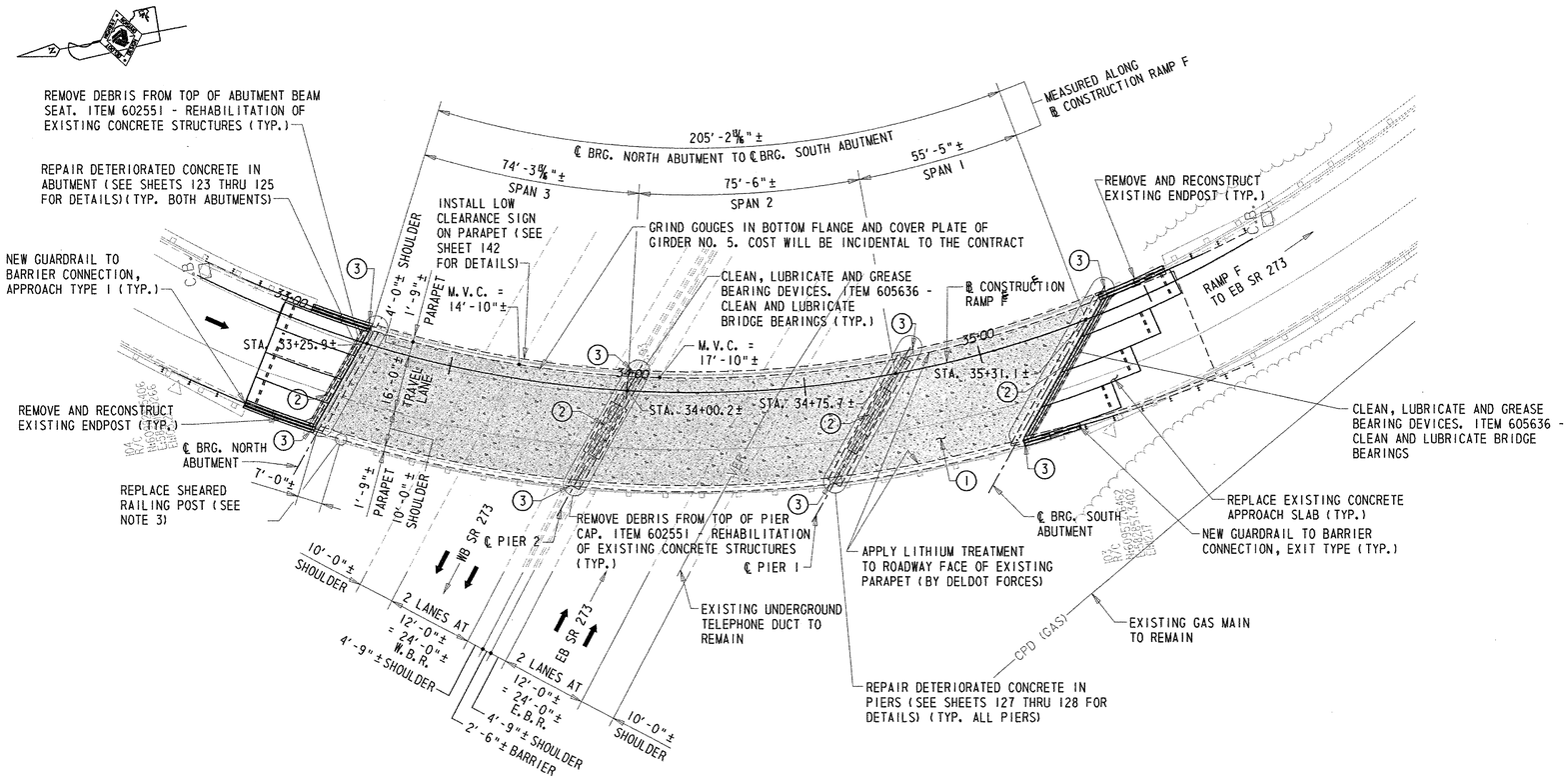

PLAN

SCALE: 1"=20'-0"

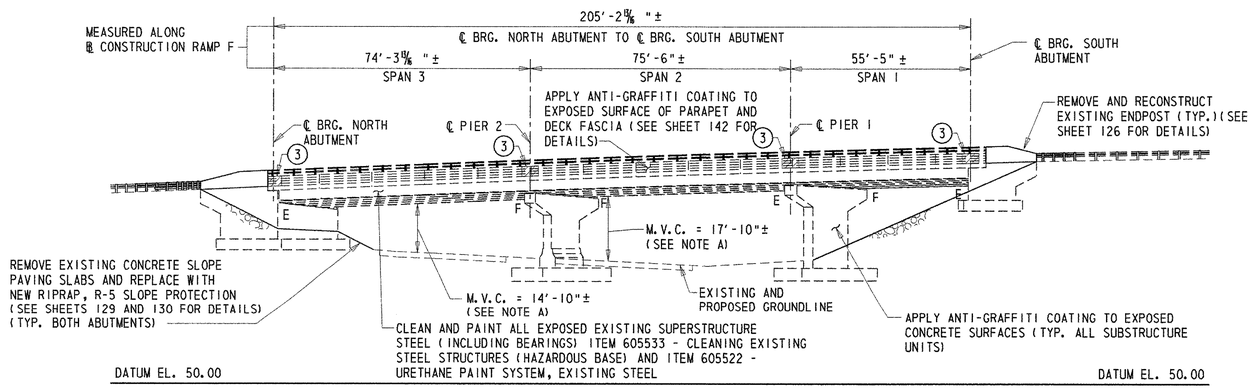

ELEVATION

SCALE: 1"=20'-0"

NOTE A:

FOR LOCATION OF MINIMUM VERTICAL CLEARANCE (M.V.C.) SEE PLAN VIEW.

LEGEND:

1. REMOVE EXISTING 2" ± BITUMINOUS OVERLAY AND ½" OF EXISTING CONCRETE DECK SLAB, APPLY LITHIUM TREATMENT TO EXPOSED MILLED DECK SURFACE (BY DELDOT FORCES). PLACE NEW 2½" MICRO-SILICA MODIFIED CONCRETE OVERLAY OR LATEX CONCRETE OVERLAY.
2. FULL DEPTH REMOVAL OF EXISTING CONCRETE DECK AND ROADWAY JOINT ASSEMBLY AND PLACE NEW CONCRETE DECK AND STRIP SEAL ASSEMBLY.
3. REMOVE A PORTION OF THE EXISTING PARAPET AND PLACE NEW PARAPET AND STRIP SEAL ASSEMBLY.

NOTES:

1. THE DECK MILLINGS SHALL BE PLACED IN AREAS LACKING VEGETATION UNDER THE BRIDGE SUPERSTRUCTURE. LOCATION TO BE DETERMINED BY THE ENGINEER. COST WILL BE INCIDENTAL TO THE CONTRACT.
2. SEE 'PROJECT NOTES' FOR INFORMATION REGARDING SCHEDULING OF LITHIUM TREATMENT APPLICATION.
3. SHEARDED RAILING POST SHALL BE REPLACED IN-KIND. COST FOR REMOVING, FURNISHING AND INSTALLING THE NEW RAILING POST WILL BE INCIDENTAL TO THE CONTRACT.

PRELIM. TRACING ____ W.R.A. ____ DESIGN ____ J.T.L./F.J.O. ____ CHKD. ____ W.A.G. ____

M:\3130314\pe01br715d.dgn

SUBSTRUCTURE REPAIRS – SOUTH ABUTMENT

BR. 1-715D 6048

CONTRACT	COUNTY	F.A.P. NO.	SHEET NO.	TOTAL SHTS.
22-074-09	NEW CASTLE	SEE TITLE SHEET	123	152

REHABILITATION OF BRIDGE NOS. 1-715, 1-715A, & 1-715D ON SR 273 OVER I-95

REVISIONS

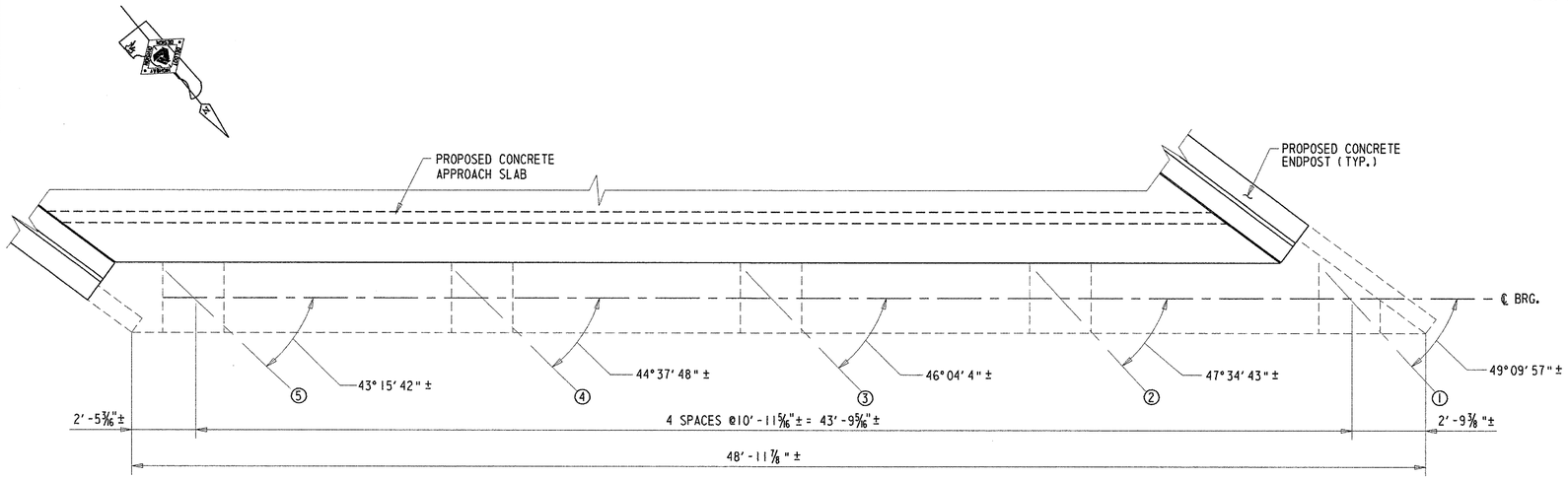

BEAM SEAT PLAN

SCALE: 3/8" = 1'-0"

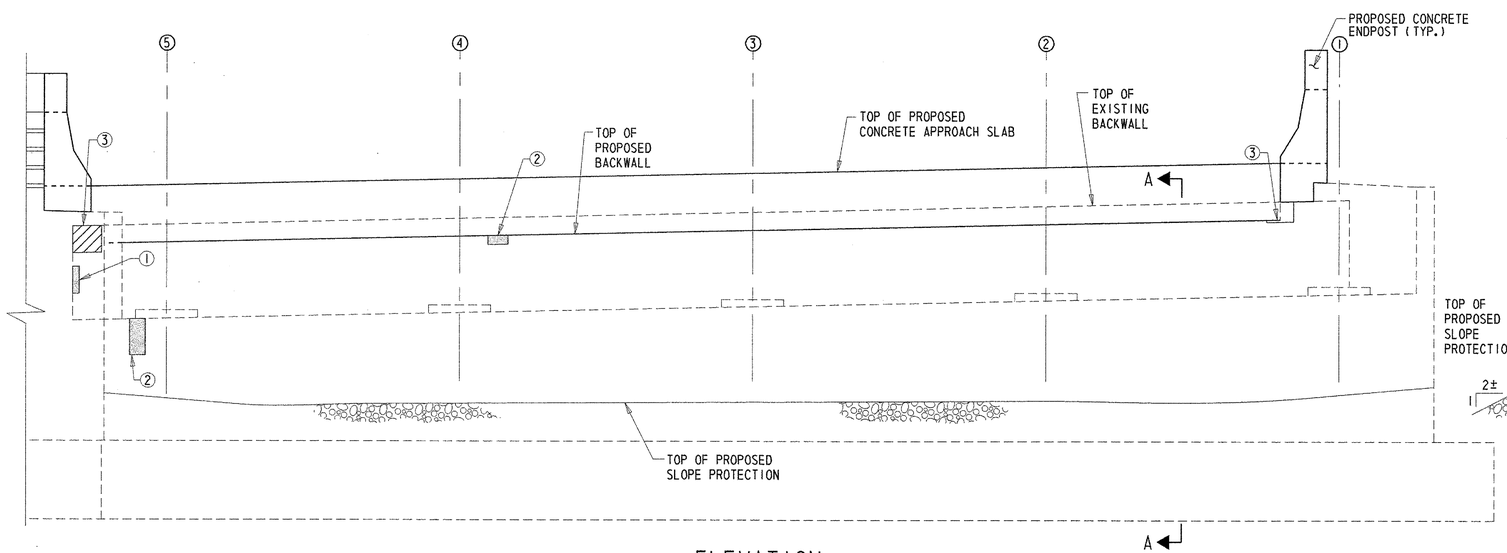

ELEVATION

SCALE: 3/8" = 1'-0"

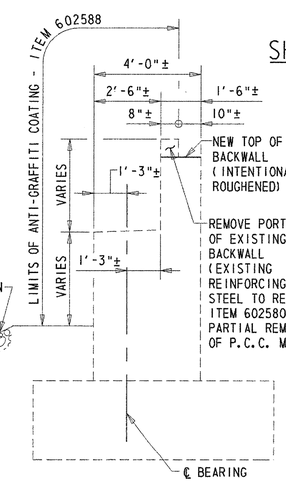

SECTION A-A

SCALE: 3/8" = 1'-0"

NOTE:

TOP OF PROPOSED APPROACH SLAB NOT SHOWN FOR CLARITY IN SECTION A-A.

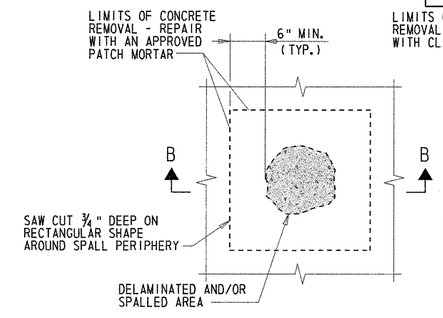

PLAN

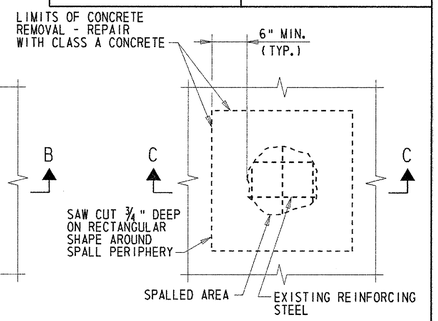

PLAN

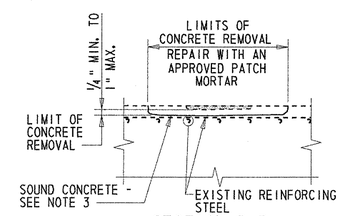

SECTION B-B

SHALLOW SPALL REPAIR

NOT TO SCALE

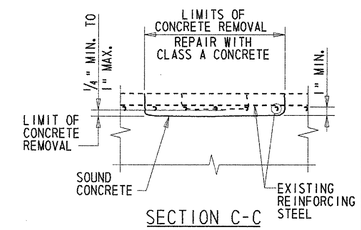

SECTION C-C

DEEP SPALL REPAIR

NOT TO SCALE

SPALL REPAIR NOTES:

SPALL REPAIR NOTES:

1. PAYMENT FOR SHALLOW SPALL REPAIR WILL BE MADE UNDER ITEM 602551 - REHABILITATION OF EXISTING CONCRETE STRUCTURES.
2. PAYMENT FOR DEEP SPALL REPAIR WILL BE MADE UNDER ITEM 602586 - REHABILITATION OF CONCRETE STRUCTURE.
3. IF SOUND CONCRETE IS NOT ENCOUNTERED BEFORE EXPOSING EXISTING REINFORCING STEEL, USE DEEP SPALL REPAIR' DETAIL. IF SOUND CONCRETE IS NOT ENCOUNTERED AT A DEPTH OF 6", ALL REMOVAL OPERATIONS SHALL STOP AND THE ENGINEER SHALL BE NOTIFIED IMMEDIATELY.
4. WHEREVER POSSIBLE, ALL EXPOSED EXISTING REINFORCING STEEL SHALL BE INCORPORATED INTO THE FINISHED STRUCTURE IN ACCORDANCE WITH THE FOLLOWING:
   - (A) IN THE OPINION OF THE ENGINEER, IF THE REINFORCING STEEL HAS LOST 20 PERCENT OR MORE OF ITS ORIGINAL CROSS SECTION AREA, IT SHALL BE CUT OUT. A NEW BAR OF THE SAME DIAMETER SHALL BE PROVIDED AND PLACED SO AS TO HAVE THE MINIMUM REQUIRED LAP AT EACH END OF THE NEW BAR.
   - (B) WHERE THE REQUIRED BAR LAP LENGTH IS AVAILABLE, IT SHALL BE USED AS A DOWEL.
   - (C) WHERE THE REQUIRED BAR LAP IS NOT AVAILABLE OR LIMITS OF CONCRETE REMOVAL TO ACHIEVE BAR LAP ARE TOO GREAT, A STANDARD HOOK OR A WELDED OR APPROVED MECHANICAL SPLICE SHALL BE PROVIDED. THE ENGINEER SHALL BE THE SOLE JUDGE WHETHER REINFORCING STEEL IS TO BE REUSED OR REPLACED.
   - (D) IN THE EVENT THAT THE NEW BAR IS UNABLE TO BE WELDED OR MECHANICALLY SPLICED TO THE EXISTING REINFORCING STEEL, A NEW BAR SHALL BE DRILLED AND GROUTED ADJACENT TO THE EXISTING BAR LOCATION. PAYMENT FOR THE DRILLING AND GROUTING WILL BE MADE UNDER ITEM - 602579 - DRILLING HOLES AND INSTALLING DOWELS. PAYMENT FOR THE NEW REINFORCING STEEL BAR WILL BE MADE UNDER ITEM 603500 - REPAIRING BAR REINFORCEMENT.
5. ALL EXISTING REINFORCING STEEL TO BE INCORPORATED INTO THE FINISHED CONSTRUCTION SHALL BE BLAST CLEANED TO REMOVE ALL CONCRETE, DEBRIS AND RUST. PAYMENT SHALL BE INCIDENTAL TO ITEM - 602586 - REHABILITATION OF CONCRETE STRUCTURE.
6. ALL NEW REINFORCING STEEL REQUIRED TO COMPLETE CONCRETE REPAIRS SHALL BE NON-EPOXY COATED. PAYMENT WILL BE MADE UNDER ITEM 603500 - REPAIRING BAR REINFORCEMENT.
7. SIZE, TYPE, AND LOCATION OF EXISTING REINFORCING STEEL NOT VERIFIED.

REPAIR LEGEND

1. REPAIR DELAMINATED CONCRETE AND/OR SHALLOW SPALL - ITEM 602551.
2. REPAIR SHALLOW SPALL - ITEM 602551.
3. REPAIR DEEP SPALL - ITEM 602586.
4. SEAL VERTICAL AND/OR DIAGONAL CRACKS BY EPOXY INJECTION - ITEM 602611.

NOTES:

1. ABUTMENT SPALL REPAIR LOCATIONS SHOWN GRAPHICALLY. REPAIR AREAS ARE BASED ON FIELD INSPECTION OBSERVATIONS TAKEN 6/02. THE CONCRETE REPAIR QUANTITIES FOR ITEMS 602551 AND 602586, AS SHOWN ON THE QUANTITY SUMMARY SHEET, HAVE BEEN INCREASED BY 25% TO ACCOUNT FOR LATENT DEFECTS THAT MAY HAVE OCCURRED SINCE THE 6/02 INSPECTION. ALL PROPOSED REPAIR LOCATIONS SHALL BE VERIFIED BY THE CONTRACTOR IN THE PRESENCE OF THE ENGINEER PRIOR TO BEGINNING ANY WORK. REFERENCE APPLICABLE SPECIAL PROVISIONS. THE ACTUAL LIMITS OF THE REPAIRS SHALL BE DEFINED AND DOCUMENTED BY THE ENGINEER. THE CONTRACTOR SHALL PROVIDE ACCESS TO THE REPAIR AREAS AT ALL TIMES DURING CONSTRUCTION.
2. LENGTH OF CONCRETE CRACKS SHOWN GRAPHICALLY. REPAIR LENGTH BASED ON FIELD INSPECTION OBSERVATIONS TAKEN 6/02. THE REPAIR OF CONCRETE STRUCTURE BY EPOXY INJECTION FOR ITEM 602611, AS SHOWN ON SUMMARY QUANTITY SHEET, HAS BEEN INCREASED BY 25% TO ACCOUNT FOR LATENT DEFECTS THAT MAY HAVE OCCURRED SINCE THE 6/02 INSPECTION. ALL PROPOSED REPAIR LOCATIONS SHALL BE VERIFIED BY THE CONTRACTOR IN THE PRESENCE OF THE ENGINEER PRIOR TO BEGINNING ANY WORK. REFERENCE APPLICABLE SPECIAL PROVISIONS. THE ACTUAL LIMITS OF THE REPAIRS SHALL BE DEFINED AND DOCUMENTED BY THE ENGINEER. THE CONTRACTOR SHALL PROVIDE ACCESS TO THE REPAIR AREAS AT ALL TIMES DURING CONSTRUCTION.
3. APPLY ANTI-GRAFFITI COATING TO ALL EXPOSED SURFACES OF THE ABUTMENT. PAYMENT FOR THIS WORK WILL BE MADE UNDER ITEM 602588 - ANTI-GRAFFITI COATING.

LEGEND

- DEEP SPALL REPAIR
- CRACK REPAIR
- DELAMINATED CONCRETE AND/OR SHALLOW SPALL REPAIR

PREL. TRACING ____ W.R.A. ____ DESIGN ____ J.T.L./F.J.O. ____ CHKD. ____ W.A.O. ____

M:\3130314\ab01br715d.dgn

BR. 1-715D 6048	CONTRACT	COUNTY	F.A.P. NO.	SHEET NO.	TOTAL SHTS.
	22-074-09	NEW CASTLE	SEE TITLE SHEET	124	152

SUBSTRUCTURE REPAIRS - NORTH ABUTMENT

REHABILITATION OF BRIDGE NOS. 1-715, 1-715A, & 1-715D ON SR 273 OVER I-95

REVISIONS

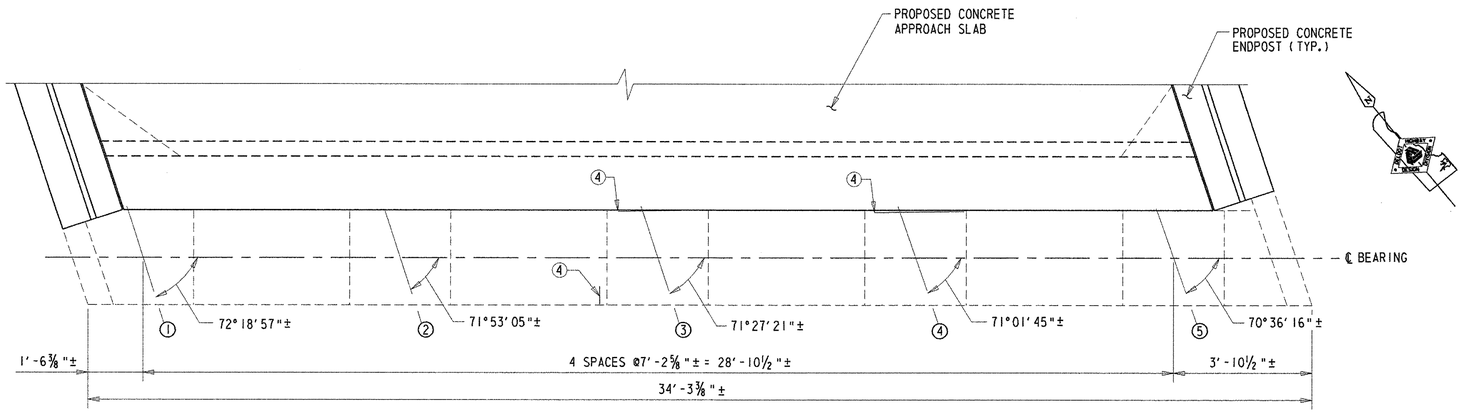

BEAM SEAT PLAN

SCALE: ½"=1'-0"

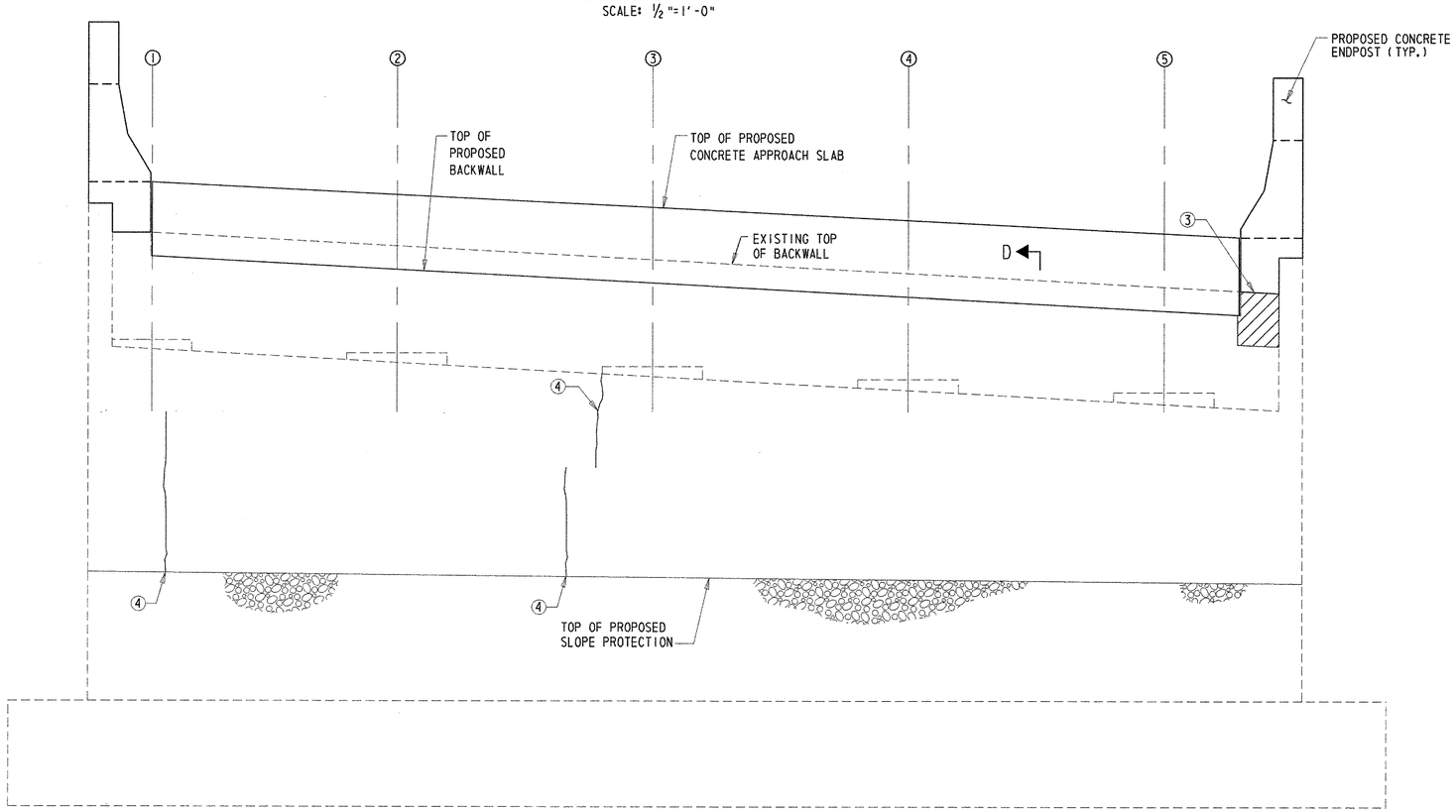

ELEVATION

SCALE: ½"=1'-0"

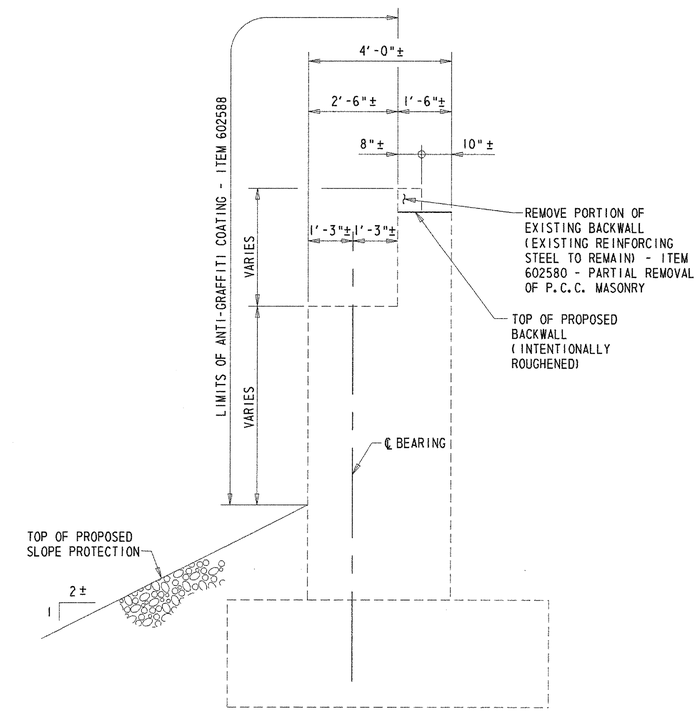

SECTION D-D

SCALE: ½"=1'-0"

NOTE:

TOP OF PROPOSED CONCRETE APPROACH SLAB NOT SHOWN FOR CLARITY.

REPAIR LEGEND

① REPAIR DELAMINATED CONCRETE AND/OR SHALLOW SPALL - ITEM 602551.

② REPAIR SHALLOW SPALL - ITEM 602551.

③ REPAIR DEEP SPALL - ITEM 602586.

④ SEAL VERTICAL AND/OR DIAGONAL CRACKS BY EPOXY INJECTION - ITEM 602611.

NOTES:

1. ABUTMENT SPALL REPAIR LOCATIONS SHOWN GRAPHICALLY. REPAIR AREAS ARE BASED ON FIELD INSPECTION OBSERVATIONS TAKEN 6/02. THE CONCRETE REPAIR QUANTITIES FOR ITEMS 602551 AND 602586, AS SHOWN ON THE QUANTITY SUMMARY SHEET, HAVE BEEN INCREASED BY 25% TO ACCOUNT FOR LATENT DEFECTS THAT MAY HAVE OCCURRED SINCE THE 6/02 INSPECTION. ALL PROPOSED REPAIR LOCATIONS SHALL BE VERIFIED BY THE CONTRACTOR IN THE PRESENCE OF THE ENGINEER PRIOR TO BEGINNING ANY WORK. REFERENCE APPLICABLE SPECIAL PROVISIONS. THE ACTUAL LIMITS OF THE REPAIRS SHALL BE DEFINED AND DOCUMENTED BY THE ENGINEER. THE CONTRACTOR SHALL PROVIDE ACCESS TO THE REPAIR AREAS AT ALL TIMES DURING CONSTRUCTION.

2. LENGTH OF CONCRETE CRACKS SHOWN GRAPHICALLY. REPAIR LENGTH BASED ON FIELD INSPECTION OBSERVATIONS TAKEN 6/02. THE REPAIR OF CONCRETE STRUCTURE BY EPOXY INJECTION FOR ITEM 602611, AS SHOWN ON SUMMARY QUANTITY SHEET, HAS BEEN INCREASED BY 25% TO ACCOUNT FOR LATENT DEFECTS THAT MAY HAVE OCCURRED SINCE THE 6/02 INSPECTION. ALL PROPOSED REPAIR LOCATIONS SHALL BE VERIFIED BY THE CONTRACTOR IN THE PRESENCE OF THE ENGINEER PRIOR TO BEGINNING ANY WORK. REFERENCE APPLICABLE SPECIAL PROVISIONS. THE ACTUAL LIMITS OF THE REPAIRS SHALL BE DEFINED AND DOCUMENTED BY THE ENGINEER. THE CONTRACTOR SHALL PROVIDE ACCESS TO THE REPAIR AREAS AT ALL TIMES DURING CONSTRUCTION.

3. APPLY ANTI-GRAFFITI COATING TO ALL EXPOSED SURFACES OF THE ABUTMENT. PAYMENT FOR THIS WORK WILL BE MADE UNDER ITEM 602588 - ANTI-GRAFFITI COATING.

LEGEND

DEEP SPALL REPAIR | CRACK REPAIR | DELAMINATED CONCRETE AND/OR SHALLOW SPALL REPAIR

PREL. TRACING ____ W.R.A. ____ DESIGN ____ J.T.L./F.J.O. ____ CHKD. ____ W.A.G. ____

M:\313031\4\ab02br715d.dgn

SUBSTRUCTURE REPAIRS - WINGWALLS	BR. 1-715D 6048	CONTRACT	COUNTY	F.A.P. NO.	SHEET NO.	TOTAL SHTS.
		22-074-09	NEW CASTLE	SEE TITLE SHEET	125	152

REHABILITATION OF BRIDGE NOS. 1-715, 1-715A, & 1-715D ON SR 273 OVER I-95

REVISIONS

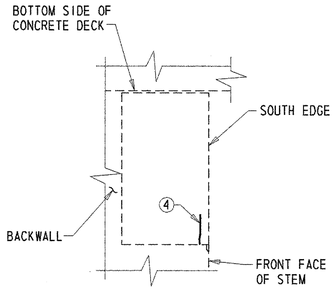

NORTHEAST CHEEKWALL - INTERIOR ELEVATION

SCALE: 3/8"=1'-0"

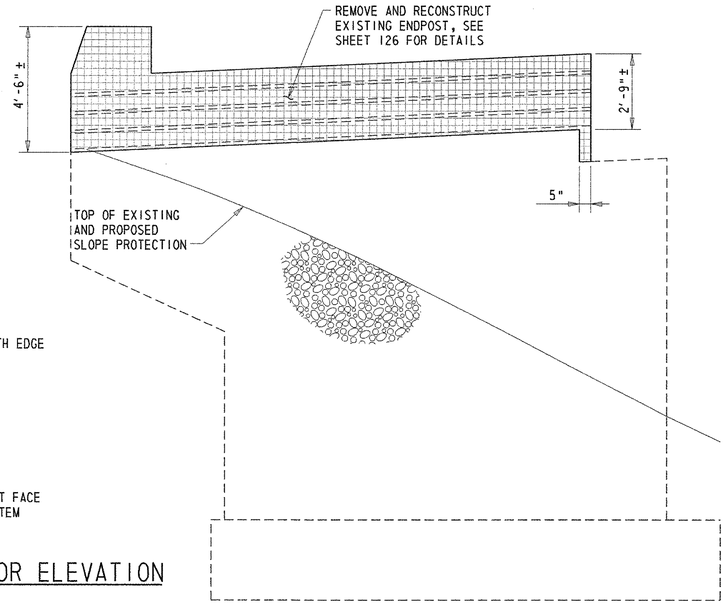

NORTHWEST WINGWALL - ELEVATION

SCALE: 3/8"=1'-0"

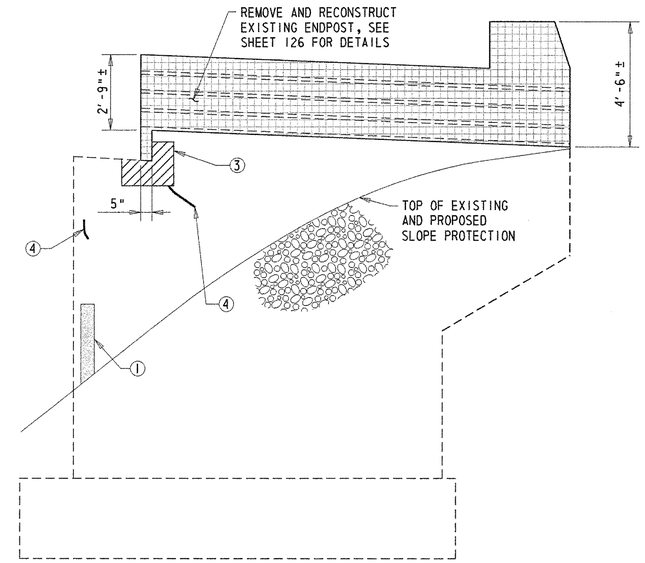

NORTHEAST WINGWALL - ELEVATION

SCALE: 3/8"=1'-0"

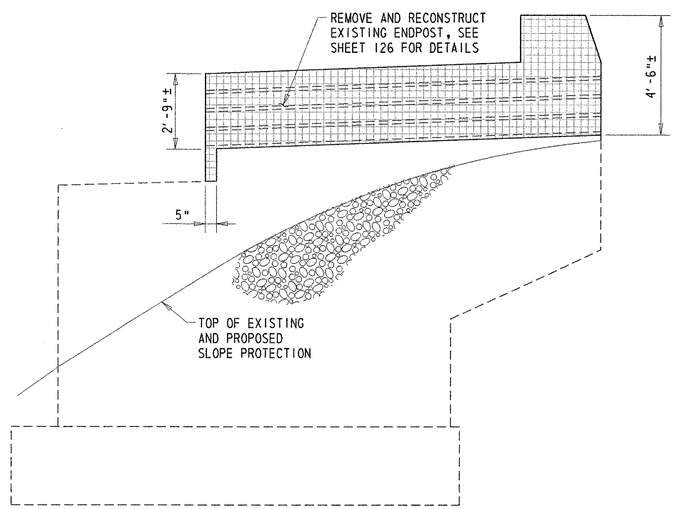

SOUTHWEST WINGWALL - ELEVATION

SCALE: 3/8"=1'-0"

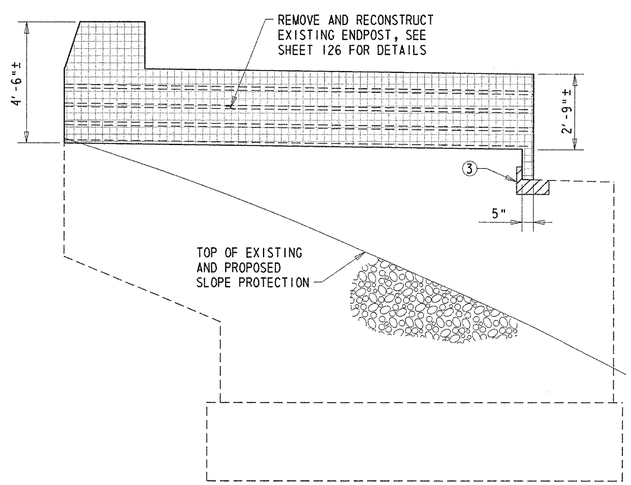

SOUTHEAST WINGWALL - ELEVATION

SCALE: 3/8"=1'-0"

REPAIR LEGEND

1. REPAIR DELAMINATED CONCRETE AND/OR SHALLOW SPALL - ITEM 602551.
2. REPAIR SHALLOW SPALL - ITEM 602551.
3. REPAIR DEEP SPALL - ITEM 602586.
4. SEAL VERTICAL AND/OR DIAGONAL CRACKS BY EPOXY INJECTION - ITEM 602611.

NOTES:

1. WINGWALL SPALL REPAIR LOCATIONS SHOWN GRAPHICALLY. REPAIR AREAS ARE BASED ON FIELD INSPECTION OBSERVATIONS TAKEN 6/02. THE CONCRETE REPAIR QUANTITIES FOR ITEMS 602551 AND 602586, AS SHOWN ON THE QUANTITY SUMMARY SHEET, HAVE BEEN INCREASED BY 25% TO ACCOUNT FOR LATENT DEFECTS THAT MAY HAVE OCCURRED SINCE THE 6/02 INSPECTION. ALL PROPOSED REPAIR LOCATIONS SHALL BE VERIFIED BY THE CONTRACTOR IN THE PRESENCE OF THE ENGINEER PRIOR TO BEGINNING ANY WORK. REFERENCE APPLICABLE SPECIAL PROVISIONS. THE ACTUAL LIMITS OF THE REPAIRS SHALL BE DEFINED AND DOCUMENTED BY THE ENGINEER. THE CONTRACTOR SHALL PROVIDE ACCESS TO THE REPAIR AREAS AT ALL TIMES DURING CONSTRUCTION.
2. LENGTH OF CONCRETE CRACKS SHOWN GRAPHICALLY. REPAIR LENGTH BASED ON FIELD INSPECTION OBSERVATIONS TAKEN 6/02. THE REPAIR OF CONCRETE STRUCTURE BY EPOXY INJECTION FOR ITEM 602611, AS SHOWN ON SUMMARY QUANTITY SHEET, HAS BEEN INCREASED BY 25% TO ACCOUNT FOR LATENT DEFECTS THAT MAY HAVE OCCURRED SINCE THE 6/02 INSPECTION. ALL PROPOSED REPAIR LOCATIONS SHALL BE VERIFIED BY THE CONTRACTOR IN THE PRESENCE OF THE ENGINEER PRIOR TO BEGINNING ANY WORK. REFERENCE APPLICABLE SPECIAL PROVISIONS. THE ACTUAL LIMITS OF THE REPAIRS SHALL BE DEFINED AND DOCUMENTED BY THE ENGINEER. THE CONTRACTOR SHALL PROVIDE ACCESS TO THE REPAIR AREAS AT ALL TIMES DURING CONSTRUCTION.
3. APPLY ANTI-GRAFFITI COATING TO ALL EXPOSED SURFACES OF WINGWALLS AND PROPOSED ENDPOSTS. PAYMENT FOR THIS WORK WILL BE MADE UNDER ITEM 602588 - ANTI-GRAFFITI COATING.
4. TWO-STRAND RAILING NOT SHOWN FOR CLARITY.

LEGEND

- ENDPOST RECONSTRUCTION
- DEEP SPALL REPAIR
- CRACK REPAIR
- DELAMINATED CONCRETE AND/OR SHALLOW SPALL REPAIR

PREL. TRACING W.R.A. DESIGN J.T.L./F.J.O. CHKD. W.A.G.

M:\3130314\ww01br715D.dgn

ENDPOST MODIFICATIONS

BR. 1-715D 6048	CONTRACT	COUNTY	F.A.P. NO.	SHEET NO.	TOTAL SHTS.
	22-074-09	NEW CASTLE	SEE TITLE SHEET	126	152

REHABILITATION OF BRIDGE NOS. 1-715, 1-715A, & 1-715D ON SR 273 OVER I-95

REVISIONS

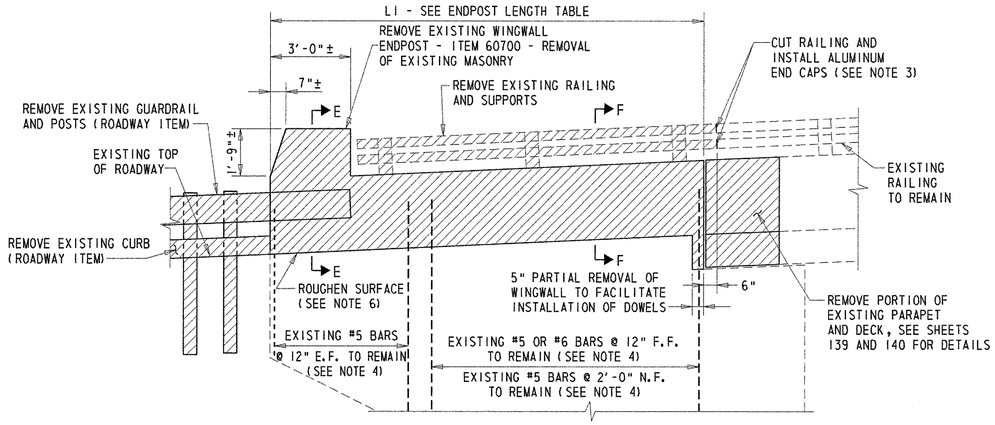

EXISTING ENDPOST ELEVATION (INTERIOR) - REMOVAL LIMITS

SCALE: 3/8"=1'-0"

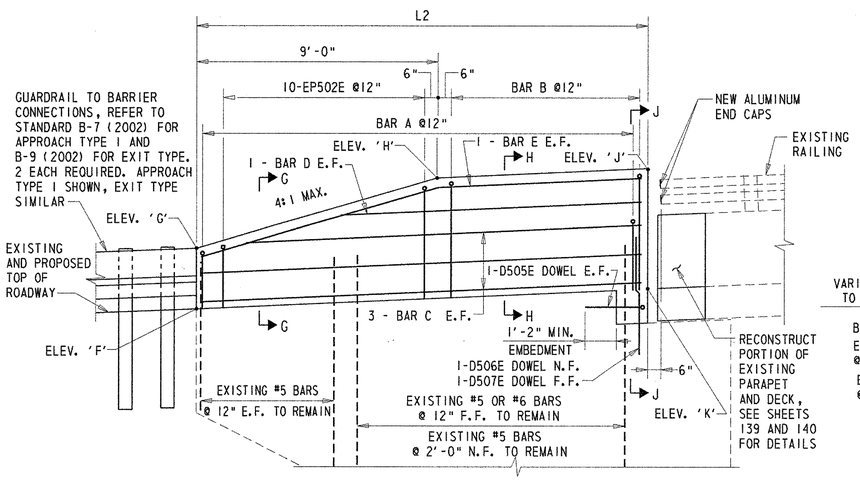

PROPOSED ENDPOST ELEVATION (INTERIOR)

SCALE: 3/8"=1'-0"

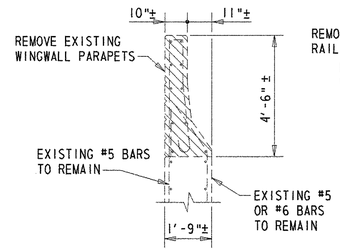

SECTION E-E

SCALE: 3/8"=1'-0"

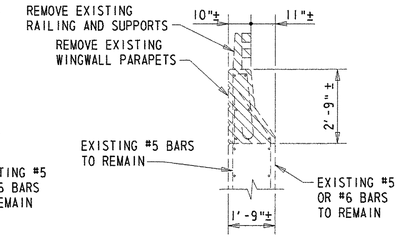

SECTION F-F

SCALE: 3/8"=1'-0"

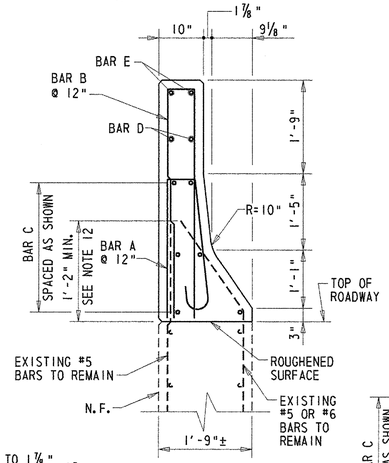

SECTION H-H

SCALE: 3/4"=1'-0"

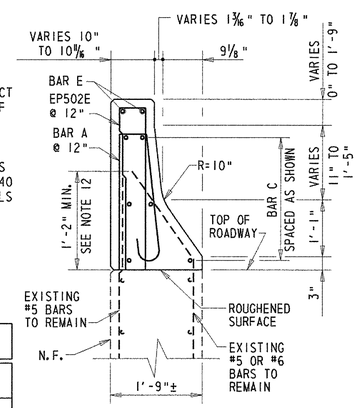

SECTION G-G

SCALE: 3/4"=1'-0"

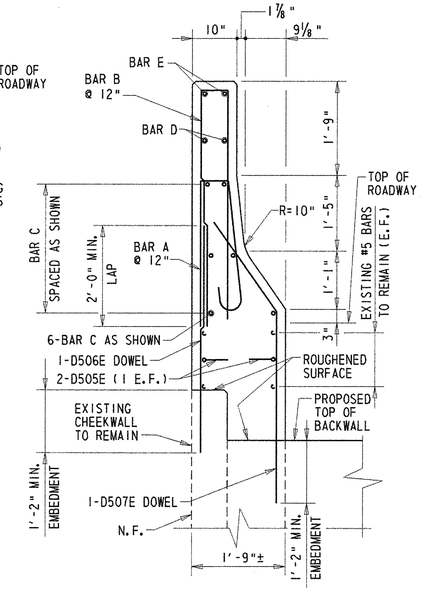

SECTION J-J

SCALE: 3/4"=1'-0"

NOTES:

1. NORTHEAST WINGWALL SHOWN. NORTHWEST, SOUTHEAST, AND SOUTHWEST WINGWALLS SIMILAR.
2. TRAFFIC FACE OF PROPOSED ENDPOST TO MATCH EXISTING BRIDGE PARAPET.
3. CUT EXISTING ALUMINUM RAILING SO THAT THE GAP BETWEEN THE RAILING AND THE PROPOSED ENDPOST DOES NOT EXCEED 6". COST FOR CUTTING AND REMOVING EXISTING ALUMINUM RAILING AND INSTALLATION OF NEW ALUMINUM END CAPS WILL BE INCLUDED IN ITEM 607000 - REMOVAL OF EXISTING MASONRY.
4. ALL EXISTING EXPOSED REINFORCEMENT SHALL BE CLEANED, BLASTED AND EPOXY COATED. COST OF THIS ITEM TO BE INCLUDED IN ITEM 607000 - REMOVAL OF EXISTING MASONRY.
5. CONTRACTOR MAY BEND EXISTING REINFORCING STEEL TO PROVIDE MINIMUM COVER REQUIRED.
6. CLEAN AND APPLY EPOXY BONDING COMPOUND TO ALL REMOVAL AND ROUGHENED SURFACES. COST OF THIS ITEM SHALL BE INCLUDED IN ITEM 602017 - P.C.C. MASONRY, PARAPET, CLASS A.
7. APPLY ANTI-GRAFFITI COATING TO ALL SURFACES OF THE ENDPOST. PAYMENT FOR THIS WORK WILL BE MADE UNDER ITEM 602588 - ANTI-GRAFFITI COATING.
8. ANY EXISTING REINFORCING STEEL TO REMAIN THAT IS DAMAGED DURING THE REMOVAL OPERATIONS SHALL BE REPAIRED OR REPLACED AT THE SOLE EXPENSE OF THE CONTRACTOR.
9. IN THE OPINION OF THE ENGINEER, IF REINFORCING STEEL TO REMAIN EXHIBITS SECTION LOSS OF 20 PERCENT OR MORE OF ITS ORIGINAL CROSS SECTION AREA, IT SHALL BE CUT OUT AND A NEW BAR OF THE SAME DIAMETER SHALL BE INSTALLED. IF THE MINIMUM REQUIRED LAP IS NOT AVAILABLE THE NEW BAR SHALL BE WELDED OR AN APPROVED MECHANICAL SPLICE SHALL BE PROVIDED. THE ENGINEER SHALL BE THE SOLE JUDGE OF WHETHER REINFORCING STEEL IS TO BE REUSED OR REPLACED.
10. IN THE EVENT THAT THE NEW BAR IS UNABLE TO BE WELDED OR MECHANICALLY SPLICED TO THE EXISTING REINFORCING STEEL, A NEW EPOXY COATED BAR SHALL BE DRILLED AND GROUTED ADJACENT TO THE EXISTING BAR LOCATION. SEE DEVELOPMENT LENGTH TABLE ON SHEET 146 FOR EMBEDMENT OF NEW BAR INTO EXISTING STEM. PAYMENT FOR THE DRILLING AND GROUTING WILL BE MADE UNDER ITEM 602579 - DRILLING HOLES AND INSTALLING DOWELS. PAYMENT FOR THE NEW REINFORCING STEEL BAR WILL BE MADE UNDER ITEM 603500 - REPAIRING BAR REINFORCEMENT.
11. E.F. = EACH FACE
    F.F. = FAR FACE
    N.F. = NEAR FACE
12. EXISTING REINFORCING STEEL SHALL EXTEND THE MINIMUM DIMENSION SHOWN FROM THE ROUGHENED SURFACE. IN THE EVENT THAT THE REINFORCING STEEL DOES NOT HAVE ADEQUATE LENGTH, A NEW BAR SHALL BE DRILLED AND GROUTED ADJACENT TO THE EXISTING BAR LOCATION. PAYMENT FOR THE DRILLING AND GROUTING WILL BE MADE UNDER ITEM 602579 - DRILLING HOLES AND INSTALLING DOWELS. PAYMENT FOR THE NEW REINFORCING STEEL BAR WILL BE MADE UNDER ITEM 603500 - REPAIRING BAR REINFORCEMENT.
13. CONTRACTOR SHALL CONFIRM EXISTING REINFORCEMENT BARS PRIOR TO INSTALLING DOWELS.
14. NO STRIATIONS SHALL BE CAST INTO THE REAR FACE OF THE CONCRETE ENDPOST.

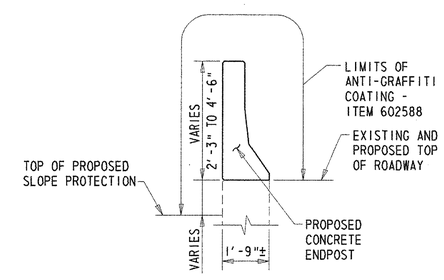

ANTI-GRAFFITI COATING - TYPICAL SECTION

SCALE: 3/8"=1'-0"

ELEVATION SCHEDULE

	F		G		H		J		K	
LOCATION	STATION	ELEVATION	STATION	ELEVATION	STATION	ELEVATION	STATION	ELEVATION	STATION	ELEVATION
NORTHEAST	33+08.21	102.04	33+08.21	104.29	33+17.33	106.94	33+25.42	107.31	33+25.42	102.81
NORTHWEST	33+00.33	103.40	33+00.33	105.65	33+08.63	108.27	33+19.52	108.75	33+19.52	104.25
SOUTHEAST	35+57.54	110.41	35+57.54	112.66	35+48.43	114.72	35+37.52	114.50	35+37.52	110.00
SOUTHWEST	35+20.38	111.25	35+20.38	113.50	35+12.08	115.57	35+05.46	115.34	35+05.46	110.84

NOTES:

1. ALL STATIONS AND ELEVATIONS ARE SHOWN FOR INFORMATIONAL PURPOSES ONLY AND SHALL BE FIELD SURVEYED PRIOR TO REMOVING AND RECONSTRUCTING THE ENDPOSTS. COST FOR FIELD SURVEY WILL BE INCLUDED UNDER ITEM 763501 - CONSTRUCTION ENGINEERING.
2. ENDPOST LENGTHS AND ELEVATIONS ARE MEASURED ALONG FLOWLINES.

BAR SCHEDULE

LOCATION	A	B	C	D	E
NORTHEAST	18-EP501E	9-EP503E	EP504E	EP508E	EP512E
NORTHWEST	22-EP501E	13-EP503E	EP505E	EP509E	EP513E
SOUTHEAST	21-EP501E	11-EP503E	EP506E	EP510E	EP514E
SOUTHWEST	17-EP501E	8-EP503E	EP507E	EP511E	EP515E

ENDPOST LENGTH TABLE

LOCATION	L1	L2
NORTHEAST	16'-3 1/2" ±	16'-11 7/8"
NORTHWEST	20'-0 3/8" ±	20'-9 5/8"
SOUTHEAST	18'-0 1/2" ±	19'-9 1/8"
SOUTHWEST	15'-3 3/4" ±	16'-2 1/16"

PREL. TRACING ____ W.R.A. ____ DESIGN ____ J.T.L./F.J.O. ____ CHKD. ____ W.A.G. ____

M:\313031\4\ep01br715d.dgn

SUBSTRUCTURE REPAIRS – PIER 1

BR. 1-715D 6048	CONTRACT	COUNTY	F.A.P. NO.	SHEET NO.	TOTAL SHTS.
	22-074-09	NEW CASTLE	SEE TITLE SHEET	127	152

REHABILITATION OF BRIDGE NOS. 1-715, 1-715A, & 1-715D ON SR 273 OVER I-95

REVISIONS

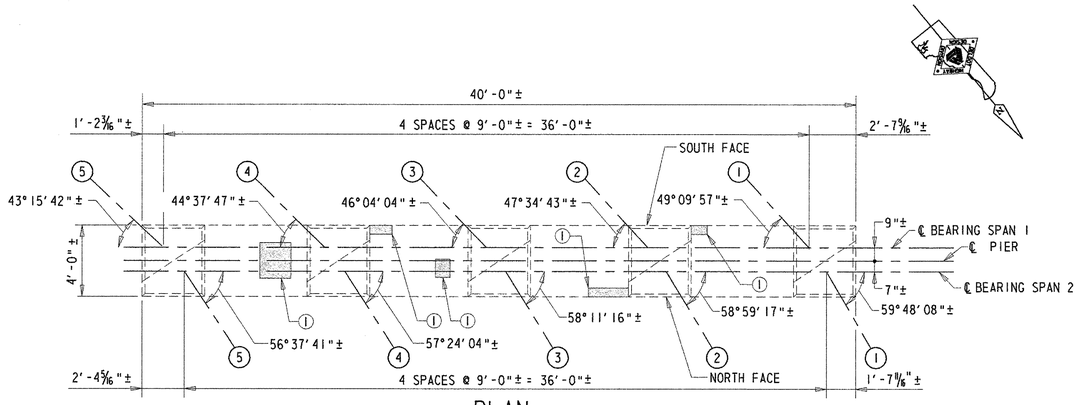

PLAN

SCALE: 1/4"=1'-0"

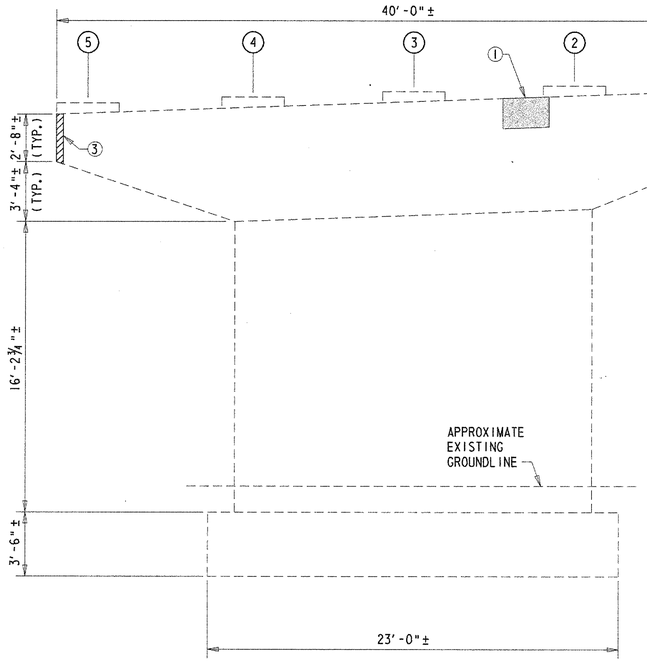

NORTH ELEVATION

SCALE: 1/4"=1'-0"

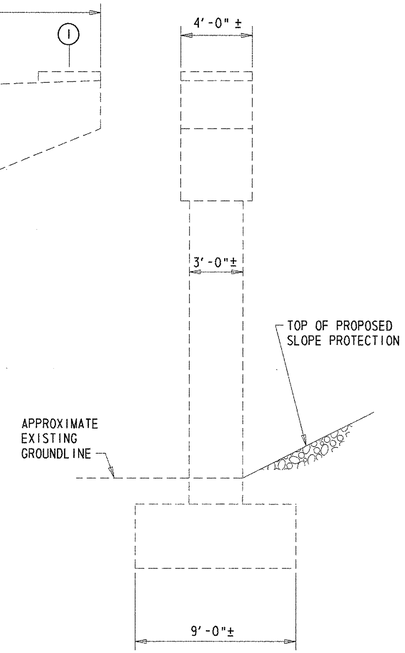

WEST ELEVATION

SCALE: 1/4"=1'-0"

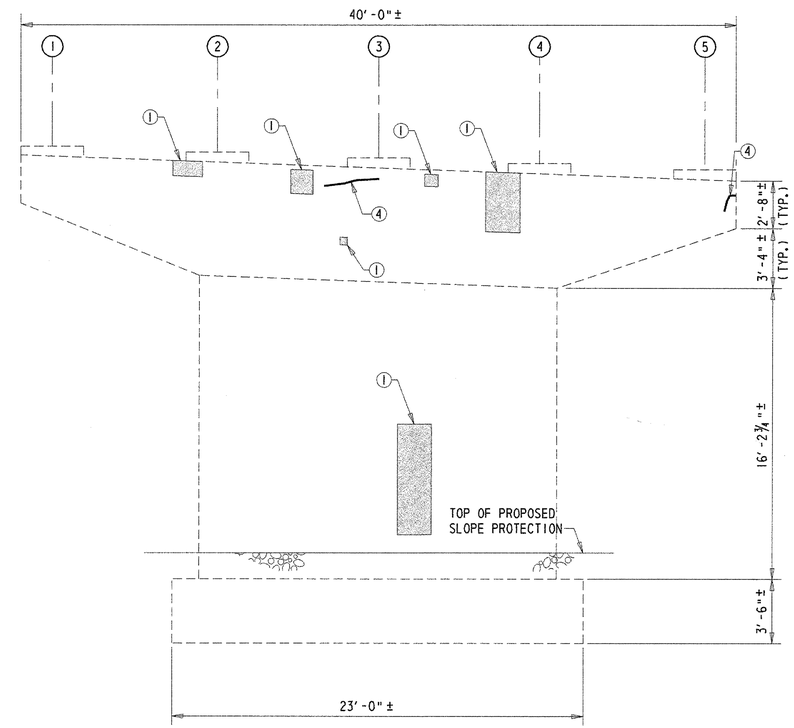

SOUTH ELEVATION

SCALE: 1/4"=1'-0"

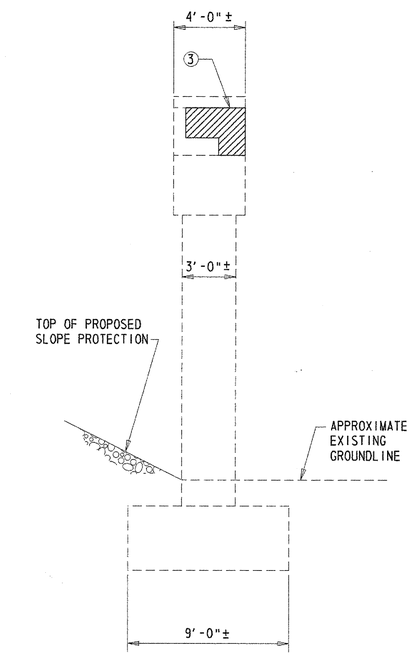

EAST ELEVATION

SCALE: 1/4"=1'-0"

REPAIR LEGEND

1. REPAIR DELAMINATED CONCRETE AND/OR SHALLOW SPALL - ITEM 602551.
2. REPAIR SHALLOW SPALL - 602551.
3. REPAIR DEEP SPALL - ITEM 602586.
4. SEAL VERTICAL AND/OR DIAGONAL CRACKS BY EPOXY INJECTION - ITEM 602611.

NOTES:

1. PIER SPALL REPAIR LOCATIONS SHOWN GRAPHICALLY. REPAIR AREAS ARE BASED ON FIELD INSPECTION OBSERVATIONS TAKEN 5/02. THE CONCRETE REPAIR QUANTITIES FOR ITEMS 602551 AND 602586, AS SHOWN ON THE QUANTITY SUMMARY SHEET, HAVE BEEN INCREASED BY 25% TO ACCOUNT FOR LATENT DEFECTS THAT MAY HAVE OCCURRED SINCE THE 5/02 INSPECTION. ALL PROPOSED REPAIR LOCATIONS SHALL BE VERIFIED BY THE CONTRACTOR, IN THE PRESENCE OF THE ENGINEER, PRIOR TO BEGINNING ANY WORK. REFERENCE APPLICABLE SPECIAL PROVISIONS. THE ACTUAL LIMITS OF THE REPAIRS SHALL BE DEFINED AND DOCUMENTED BY THE ENGINEER. THE CONTRACTOR SHALL PROVIDE ACCESS TO THE REPAIR AREAS AT ALL TIMES DURING CONSTRUCTION.
2. LENGTH OF CONCRETE CRACKS SHOWN GRAPHICALLY. REPAIR LENGTH BASED ON FIELD INSPECTION OBSERVATIONS TAKEN 5/02. THE REPAIR OF CONCRETE STRUCTURE BY EPOXY INJECTION FOR ITEM 602611, AS SHOWN ON SUMMARY QUANTITY SHEET, HAS BEEN INCREASED BY 25% TO ACCOUNT FOR LATENT DEFECTS THAT MAY HAVE OCCURRED SINCE THE 5/02 INSPECTION. ALL PROPOSED REPAIR LOCATIONS SHALL BE VERIFIED BY THE CONTRACTOR IN THE PRESENCE OF THE ENGINEER PRIOR TO BEGINNING ANY WORK. REFERENCE APPLICABLE SPECIAL PROVISIONS. THE ACTUAL LIMITS OF THE REPAIRS SHALL BE DEFINED AND DOCUMENTED BY THE ENGINEER. THE CONTRACTOR SHALL PROVIDE ACCESS TO THE REPAIR AREAS AT ALL TIMES DURING CONSTRUCTION.
3. APPLY ANTI-GRAFFITI COATING TO ALL EXPOSED SURFACES OF THE PIER CAP AND COLUMNS. PAYMENT FOR THIS WORK WILL BE MADE UNDER ITEM 602588 - ANTI-GRAFFITI COATING.
4. FOR SPALL REPAIR DETAILS, SEE SHEET 123.
5. IF SOUND CONCRETE IS NOT ENCOUNTERED AT A DEPTH OF 6", ALL REMOVAL OPERATIONS SHALL STOP AND THE ENGINEER SHALL BE NOTIFIED IMMEDIATELY.

LEGEND

DEEP SPALL REPAIR | CRACK REPAIR | DELAMINATED CONCRETE AND/OR SHALLOW SPALL REPAIR

PREL. TRACING ____ W.R.A. ____ DESIGN ____ J.T.L./F.J.O. ____ CHKD. ____ W.A.G. ____

M:\3130314\pr01br715d.dgn

SUBSTRUCTURE REPAIRS - PIER 2

BR. 1-715D 6048	CONTRACT	COUNTY	F.A.P. NO.	SHEET NO.	TOTAL SHTS.
	22-074-09	NEW CASTLE	SEE TITLE SHEET	128	152

REHABILITATION OF BRIDGE NOS. 1-715, 1-715A, & 1-715D ON SR 273 OVER I-95

REVISIONS

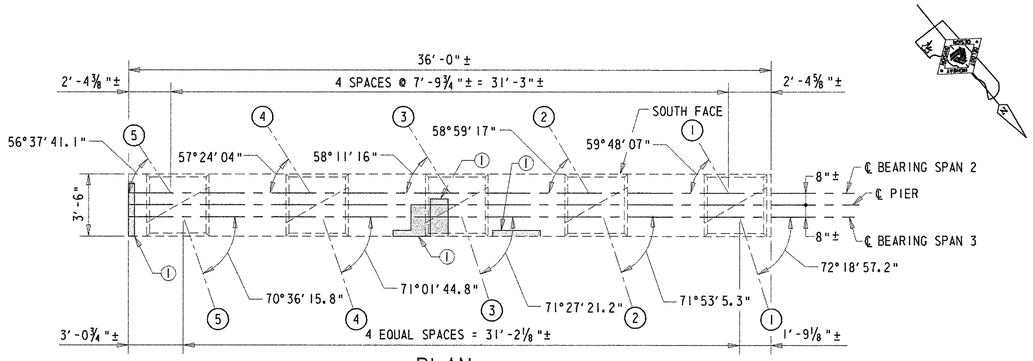

PLAN

SCALE: ¼"=1'-0"

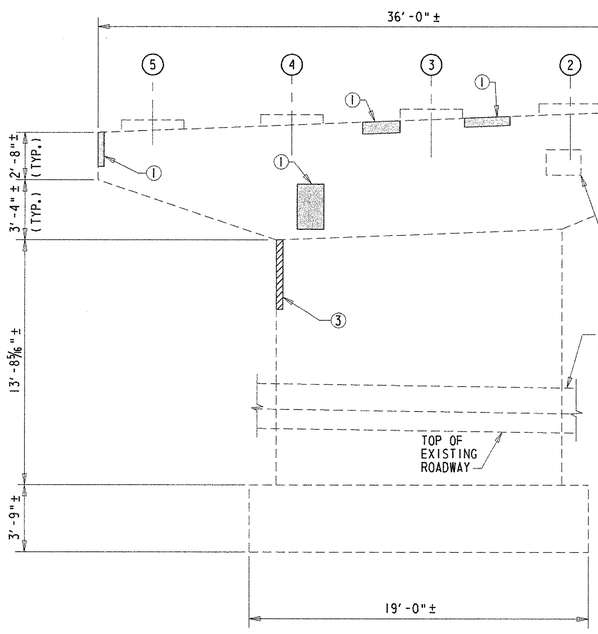

NORTH ELEVATION

SCALE: ¼"=1'-0"

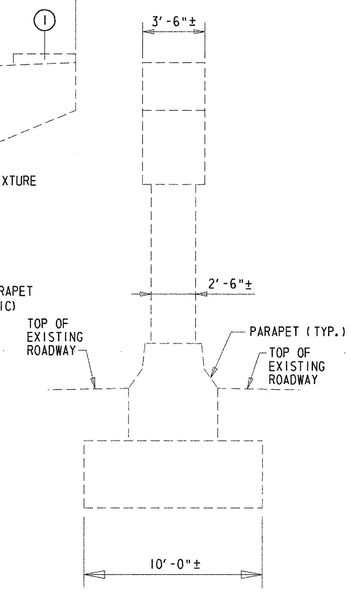

WEST ELEVATION

SCALE: ¼"=1'-0"

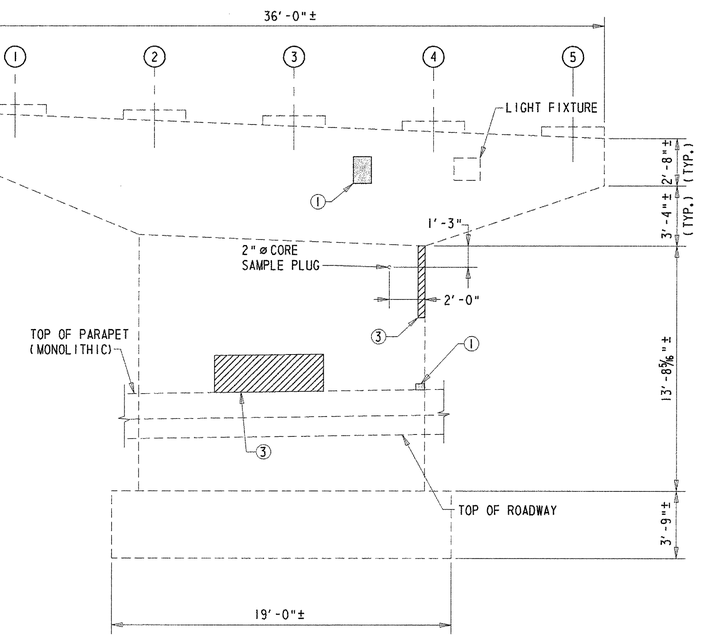

SOUTH ELEVATION

SCALE: ¼"=1'-0"

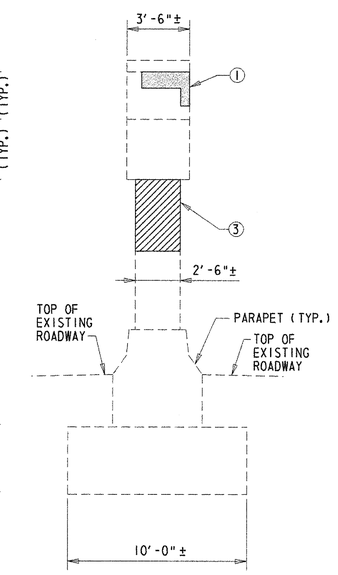

EAST ELEVATION

SCALE: ¼"=1'-0"

REPAIR LEGEND

① REPAIR DELAMINATED CONCRETE AND/OR SHALLOW SPALL - ITEM 602551.

② REPAIR SHALLOW SPALL - 602551.

③ REPAIR DEEP SPALL - ITEM 602586.

④ SEAL VERTICAL AND/OR DIAGONAL CRACKS BY EPOXY INJECTION - ITEM 602611.

NOTES:

1. PIER SPALL REPAIR LOCATIONS SHOWN GRAPHICALLY. REPAIR AREAS ARE BASED ON FIELD INSPECTION OBSERVATIONS TAKEN 5/02. THE CONCRETE REPAIR QUANTITIES FOR ITEMS 602551 AND 602586, AS SHOWN ON THE QUANTITY SUMMARY SHEET, HAVE BEEN INCREASED BY 25% TO ACCOUNT FOR LATENT DEFECTS THAT MAY HAVE OCCURRED SINCE THE 5/02 INSPECTION. ALL PROPOSED REPAIR LOCATIONS SHALL BE VERIFIED BY THE CONTRACTOR, IN THE PRESENCE OF THE ENGINEER, PRIOR TO BEGINNING ANY WORK. REFERENCE APPLICABLE SPECIAL PROVISIONS. THE ACTUAL LIMITS OF THE REPAIRS SHALL BE DEFINED AND DOCUMENTED BY THE ENGINEER. THE CONTRACTOR SHALL PROVIDE ACCESS TO THE REPAIR AREAS AT ALL TIMES DURING CONSTRUCTION.

2. LENGTH OF CONCRETE CRACKS SHOWN GRAPHICALLY. REPAIR LENGTH BASED ON FIELD INSPECTION OBSERVATIONS TAKEN 5/02. THE REPAIR OF CONCRETE STRUCTURE BY EPOXY INJECTION FOR ITEM 602611, AS SHOWN ON SUMMARY QUANTITY SHEET, HAS BEEN INCREASED BY 25% TO ACCOUNT FOR LATENT DEFECTS THAT MAY HAVE OCCURRED SINCE THE 5/02 INSPECTION. ALL PROPOSED REPAIR LOCATIONS SHALL BE VERIFIED BY THE CONTRACTOR IN THE PRESENCE OF THE ENGINEER PRIOR TO BEGINNING ANY WORK. REFERENCE APPLICABLE SPECIAL PROVISIONS. THE ACTUAL LIMITS OF THE REPAIRS SHALL BE DEFINED AND DOCUMENTED BY THE ENGINEER. THE CONTRACTOR SHALL PROVIDE ACCESS TO THE REPAIR AREAS AT ALL TIMES DURING CONSTRUCTION.

3. APPLY ANTI-GRAFFITI COATING TO ALL EXPOSED SURFACES OF THE PIER CAP AND COLUMNS. PAYMENT FOR THIS WORK WILL BE MADE UNDER ITEM 602588 - ANTI-GRAFFITI COATING.

4. FOR SPALL REPAIR DETAILS, SEE SHEET 123.

5. IF SOUND CONCRETE IS NOT ENCOUNTERED AT A DEPTH OF 6", ALL REMOVAL OPERATIONS SHALL STOP AND THE ENGINEER SHALL BE NOTIFIED IMMEDIATELY.

LEGEND

DEEP SPALL REPAIR | CRACK REPAIR | DELAMINATED CONCRETE AND/OR SHALLOW SPALL REPAIR

PREL. TRACING ____ W.R.A. ____ DESIGN ____ J.T.L./F.J.O. ____ CHKD. ____ W.A.C. ____

M:\313031\pr02br715d.dgn

SOUTH ABUTMENT – SLOPE PROTECTION REPLACEMENT

BR. 1-715D 6048	CONTRACT	COUNTY	F.A.P. NO.	SHEET NO.	TOTAL SHTS.
	22-074-09	NEW CASTLE	SEE TITLE SHEET	129	152

REHABILITATION OF BRIDGE NOS. 1-715, 1-715A, & 1-715D ON SR 273 OVER I-95

REVISIONS

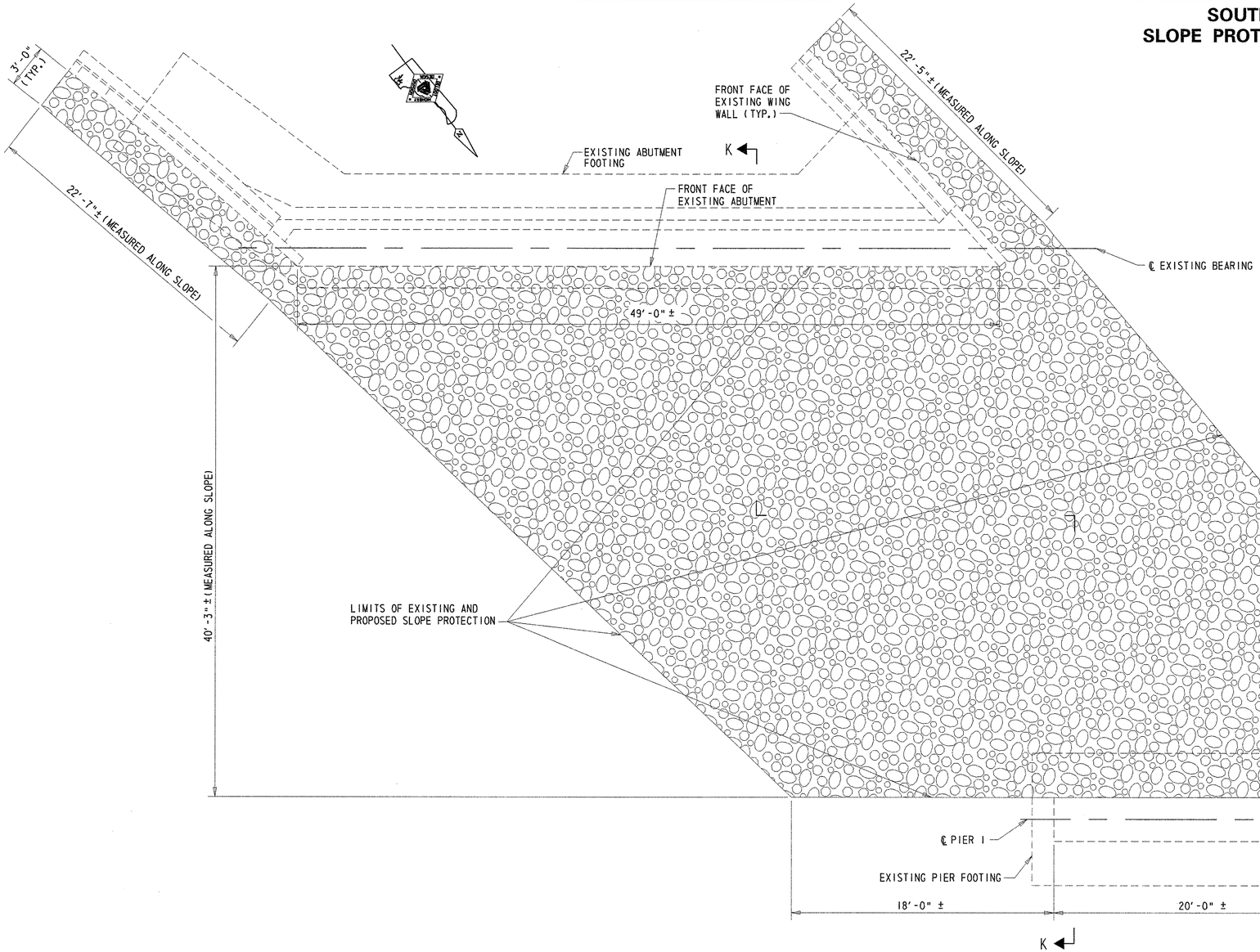

NOTE:

PAYMENT FOR REMOVAL OF THE EXISTING CONCRETE SLOPE PAVING AND ANY ADDITIONAL EXCAVATION NECESSARY BEYOND THE REMOVAL OF THE EXISTING CONCRETE SLOPE PROTECTION TO FACILITATE THE PLACEMENT OF THE NEW RIPRAP SLOPE PROTECTION WILL BE INCLUDED IN ITEM 712006 - RIPRAP, R-5.

SLOPE PROTECTION - PLAN

SCALE: 1/4"=1'-0"

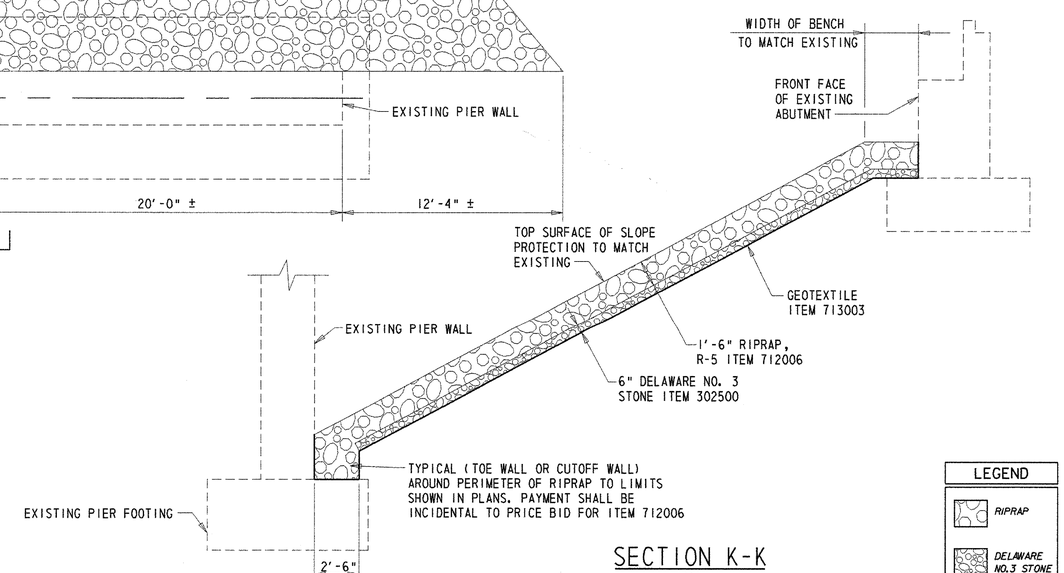

SECTION K-K

SCALE: 1/4"=1'-0"

LEGEND

- RIPRAP
- DELAWARE NO.3 STONE

PREL. TRACING ____ W.R.A. ____ DESIGN ____ J.T.L./F.J.O. ____ CHKD. ____ W.A.G. ____

M:\3130314\ab04br715D.dgn

NORTH ABUTMENT – SLOPE PROTECTION REPLACEMENT

BR. 1-715D 6048	CONTRACT	COUNTY	F.A.P. NO.	SHEET NO.	TOTAL SHTS.
	22-074-09	NEW CASTLE	SEE TITLE SHEET	130	152

REHABILITATION OF BRIDGE NOS. 1-715, 1-715A, & 1-715D ON SR 273 OVER I-95

REVISIONS

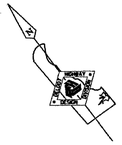

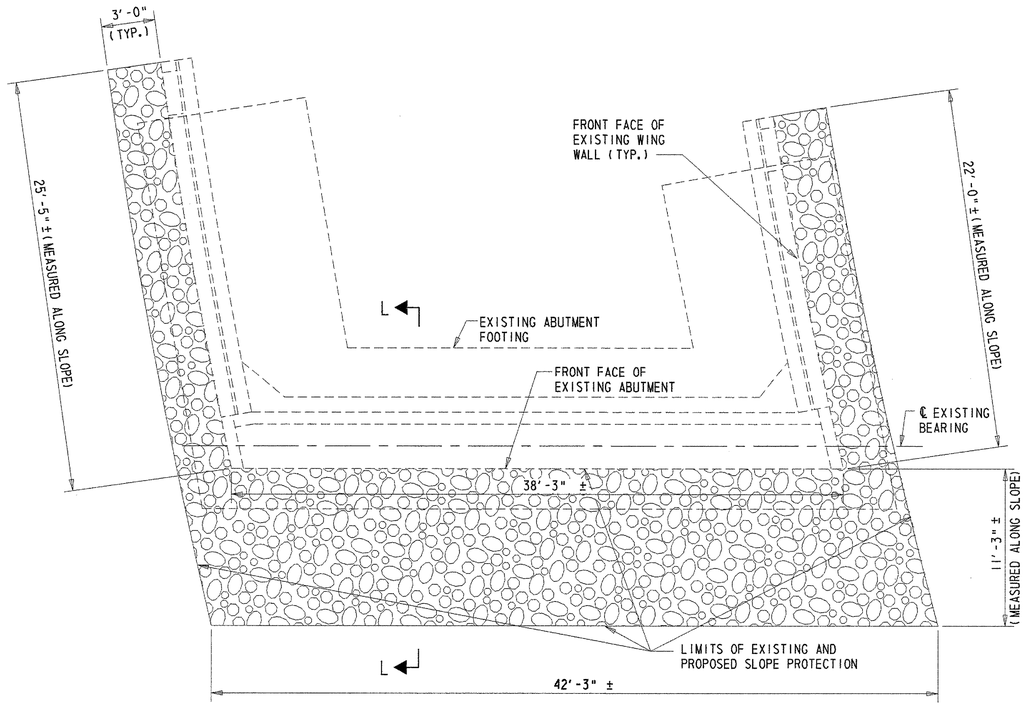

SLOPE PROTECTION - PLAN

SCALE: 1/4"=1'-0"

NOTE:

PAYMENT FOR REMOVAL OF THE EXISTING CONCRETE SLOPE PAVING AND ANY ADDITIONAL EXCAVATION NECESSARY BEYOND THE REMOVAL OF THE EXISTING CONCRETE SLOPE PROTECTION TO FACILITATE THE PLACEMENT OF THE NEW RIPRAP SLOPE PROTECTION WILL BE INCLUDED IN ITEM 712006 - RIPRAP, R-5.

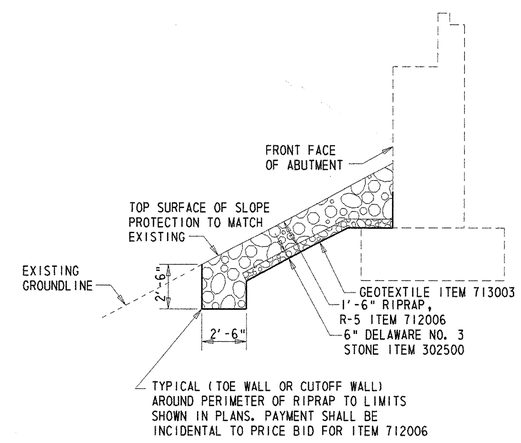

SECTION L-L

SCALE: 1/4"=1'-0"

LEGEND

RIPRAP

DELAWARE NO.3 STONE

PREL. TRACING W.R.A. DESIGN J.T.L./F.J.O. CHKD. W.A.C.

M:\313031\ab03br715D.dgn

SUPERSTRUCTURE – TYPICAL SECTIONS

BR. 1-715D 6048	CONTRACT	COUNTY	F.A.P. NO.	SHEET NO.	TOTAL SHTS.
	22-074-09	NEW CASTLE	SEE TITLE SHEET	131	152

REHABILITATION OF BRIDGE NOS. 1-715, 1-715A, & 1-715D ON SR 273 OVER I-95

REVISIONS

3 MODIFIED NOTE 2	
12/17/03 WAG/GM	

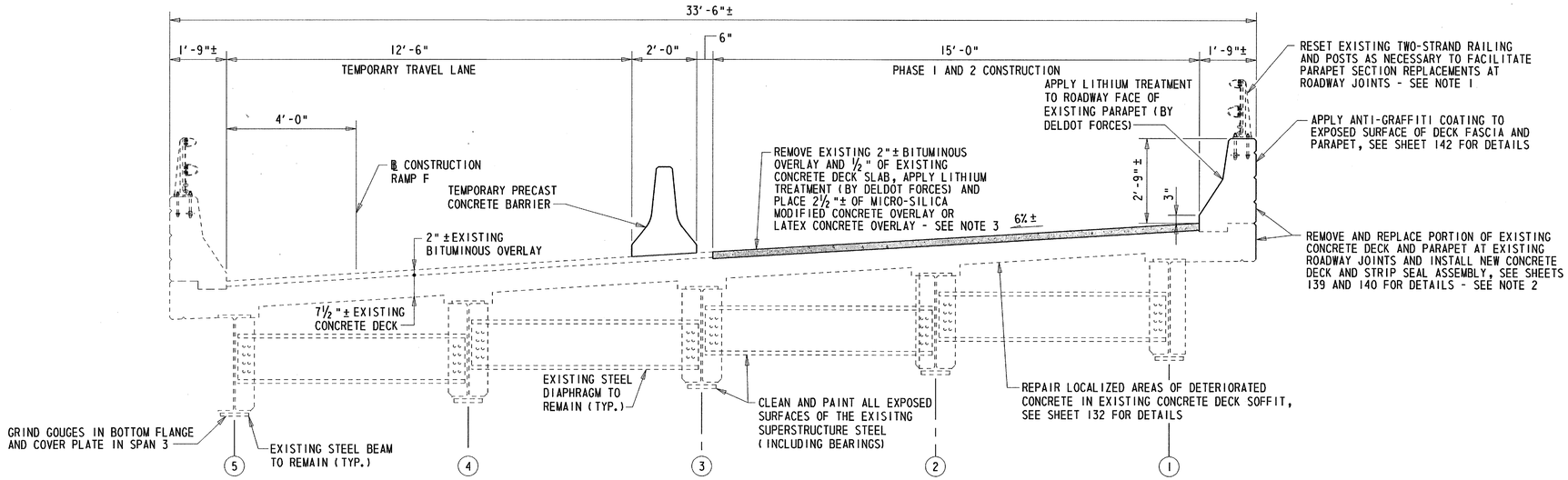

SUPERSTRUCTURE TYPICAL SECTION - PHASE 1 AND 2

LOOKING STATION AHEAD
SCALE: ½"=1'-0"

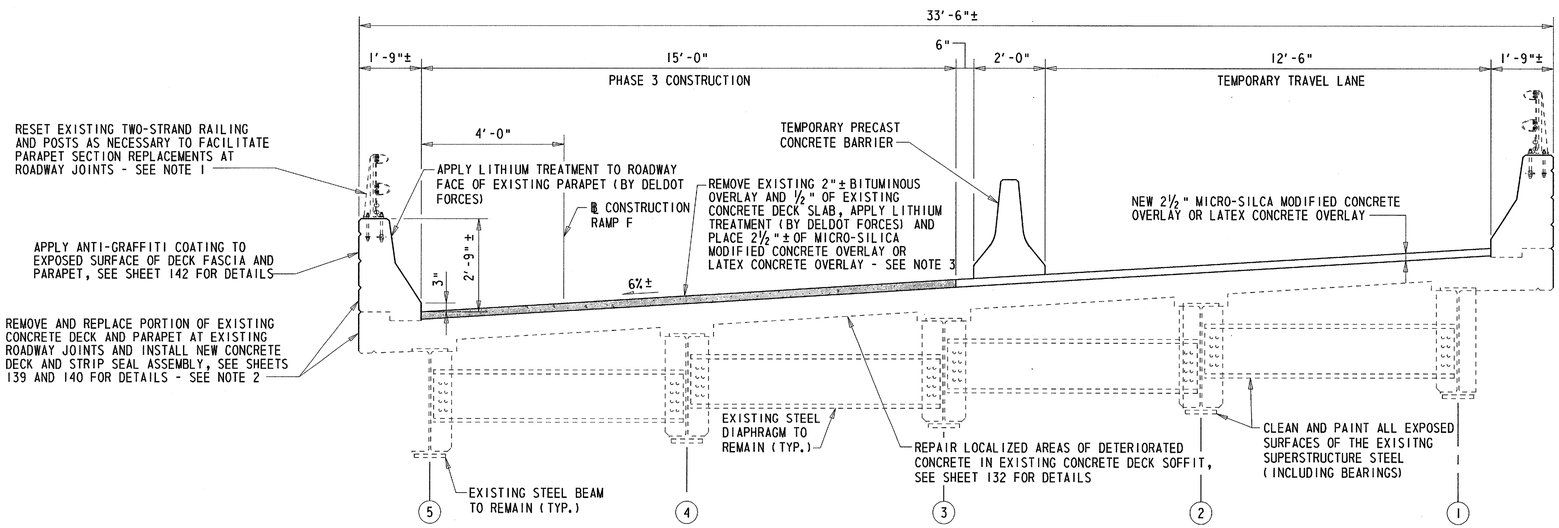

SUPERSTRUCTURE TYPICAL SECTION - PHASE 3

LOOKING STATION AHEAD
SCALE: ½"=1'-0"

NOTES:

1. COST FOR RESETTING TWO-STRAND RAILING AND POSTS WILL BE INCLUDED IN ITEM 602017 - P.C.C. MASONRY, PARAPET, CLASS A.

3 2. COST FOR REMOVING ~~AND REPLACING~~ A PORTION OF THE CONCRETE DECK AND PARAPET WILL BE INCLUDED IN ITEM ~~602013 - P.C.C. MASONRY, SUPERSTRUCTURE, CLASS D AND ITEM 602017 - P.C.C. MASONRY, PARAPET, CLASS A, RESPECTIVELY.~~ 602580 - PARTIAL REMOVAL OF P.C.C MASONRY.

3. FOLLOWING THE REMOVAL OF THE EXISTING BITUMINOUS OVERLAY AND INITIAL ½" REMOVAL OF THE CONCRETE DECK SLAB, AND BEFORE APPLYING THE LITHIUM TREATMENT, THE CONTRACTOR SHALL VISUALLY INSPECT THE CONDITION OF THE EXPOSED DECK SURFACE IN THE PRESENCE OF THE ENGINEER. THIS VISUAL INSPECTION SHALL DOCUMENT ALL AREAS OF THE DECK SURFACE IN NEED OF REPAIR. REFERENCE APPLICABLE SPECIAL PROVISIONS. THE ACTUAL LIMITS OF THE REPAIRS SHALL BE DEFINED AND DOCUMENTED BY THE ENGINEER.

4. MILLING OF EXISTING BITUMINOUS OVERLAY WILL BE PAID FOR UNDER ITEM 760006 - PAVEMENT MILLING, HOT MIX 2" DEPTH. IN THE EVENT THAT THE BITUMINOUS OVERLAY THICKNESS EXCEEDS 2", PAYMENT FOR THE REMOVAL OF ALL BITUMINOUS OVERLAY IN EXCESS OF 2" WILL BE INCIDENTAL TO ITEM 760006 - PAVEMENT MILLING, HOT MIX 2" DEPTH.

5. SEE 'PROJECT NOTES' FOR INFORMATION REGARDING SCHEDULING OF LITHIUM TREATMENT APPLICATION.

6. REMOVAL OF THE INTIAL ½" OF THE EXISTING CONCRETE DECK SLAB WILL BE PAID FOR UNDER ITEM 602544 OR ITEM 602584, WHICHEVER IS APPLICABLE.

7. REFER TO SHEETS 134 THRU 136 FOR PROPOSED OVERLAY ELEVATIONS AND INFORMATION REGARDING THE CROSS SLOPE.

PREL. TRACING _____ W.R.A. _____ DESIGN _____ J.T.L./F.J.O. _____ CHKD. _____ W.A.G.

SUPERSTRUCTURE REPAIRS - BEAMS AND DECK SOFFIT

REHABILITATION OF BRIDGE NOS. 1-715, 1-715A, & 1-715D ON SR 273 OVER I-95

REVISIONS	

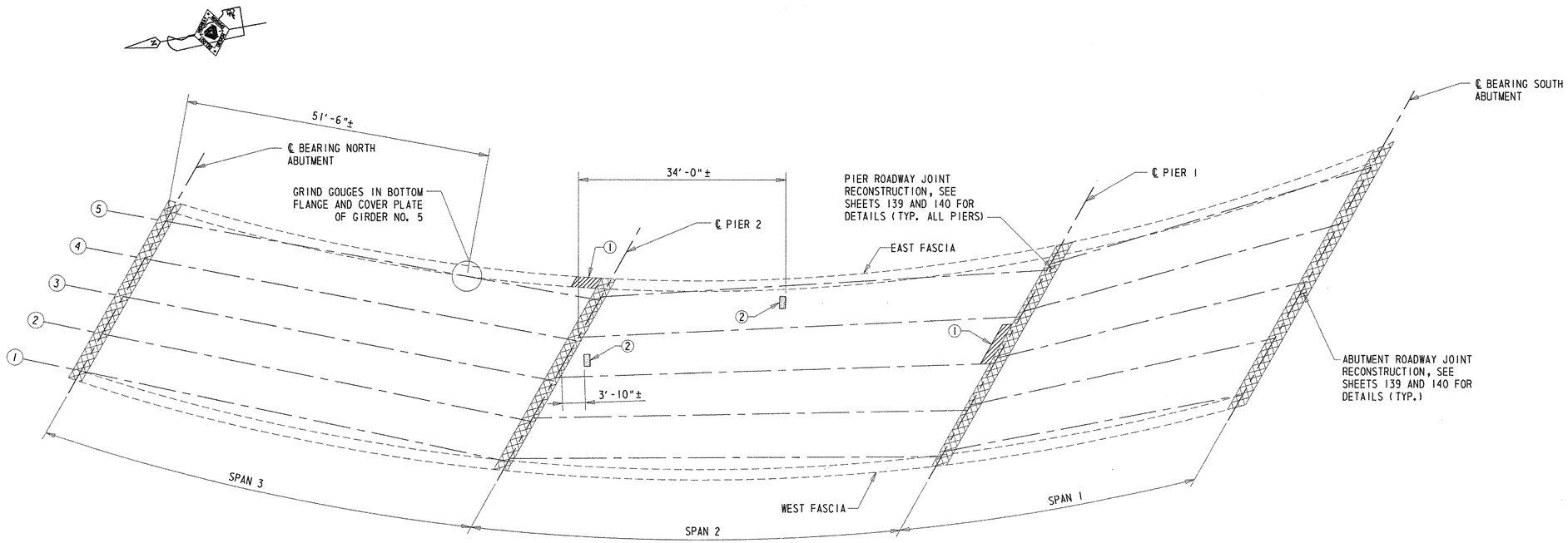

BEAM AND DECK SOFFIT REPAIRS - PLAN

SCALE: 1"=10'-0"

NOTES:

1. DECK SOFFIT REPAIR LOCATIONS SHOWN GRAPHICALLY LOOKING DOWN ON STUCTURE. REPAIR AREAS ARE BASED ON FIELD INSPECTION OBSERVATIONS TAKEN 6/02. THE CONCRETE REPAIR QUANTITY FOR ITEM 602524, AS SHOWN ON THE QUANTITY SUMMARY SHEET, HAS BEEN INCREASED BY 25% TO ACCOUNT FOR LATENT DEFECTS THAT MAY HAVE OCCURRED SINCE THE 6/02 INSPECTION. ALL PROPOSED REPAIR LOCATIONS SHALL BE VERIFIED BY THE CONTRACTOR IN THE PRESENCE OF THE ENGINEER PRIOR TO BEGINNING ANY WORK. REFERENCE APPLICABLE SPECIAL PROVISIONS. THE ACTUAL LIMITS OF THE REPAIRS SHALL BE DEFINED AND DOCUMENTED BY THE ENGINEER. THE CONTRACTOR SHALL PROVIDE ACCESS TO THE REPAIR AREAS AT ALL TIMES DURING CONSTRUCTION.

2. ALL DIMENSIONS ARE APPROXIMATE.

3. THE GOUGE IN THE BOTTOM FLANGE SHALL BE GROUND DOWN TO A FINISH OF 125 MICROINCHES PER INCH RMS AND TAPERED TO THE ORIGINAL SURFACE USING A 10:1 SLOPE. SURFACE QUALITY SHALL CONFORM TO THE REQUIREMENTS OF ASTM A 6. NONDESTRUCTIVE TESTING METHODS (MAGNETIC PARTICLE AND/OR DYE PENETRANT) SHALL BE UTILIZED TO CONFIRM THAT THE AREA CONTAINING THE GOUGE DOES NOT CONTAIN ANY CRACKS AND/OR TEARS IN THE FLANGES, WEBS, COVER PLATES, WELDS OR CONNECTIONS. TESTING OF THE EXISTING WELDS SHALL BE IN ACCORDANCE WITH SECTION 826.12b. THIS TESTING IS TO BE PERFORMED BY THE CONTRACTOR (OR HIS REPRESENTATIVE) IN THE PRESENCE OF THE ENGINEER. IF CRACKS OR TEARS ARE PRESENT, THE ENGINEER SHALL BE NOTIFIED IMMEDIATELEY. COST FOR GRINDING THE GOUGES IN THE BOTTOM FLANGE AND COVER PLATE AND PERFORMING NONDESTRUCTIVE TESTING SHALL BE INCIDENTAL TO THE CONTRACT. THE COST OF ANY NECESSARY MAINTENANCE OF TRAFFIC WILL BE PAID FOR UNDER THE OTHER PERTINENT ITEMS IN THE CONTRACT.

4. LIMITS OF DECK SOFFIT REPAIRS SHALL BE PERFORMED IN ACCORDANCE WITH THE DEEP AND SHALLOW SPALL REPAIR DETAILS SHOWN ON SHEET 123. HOWEVER, PAYMENT FOR DECK SOFFIT REPAIRS WILL BE PAID FOR UNDER ITEM 602524.

REPAIR LEGEND

① REPAIR DEEP SPALL - ITEM 602524.

② REPAIR SHALLOW SPALL - ITEM 602524.

LEGEND

JOINT RECONSTRUCTION	DEEP SPALL REPAIR	CRACK REPAIR	DELAMINATED CONCRETE AND/OR SHALLOW SPALL REPAIR

PREL. TRACING _____ W.R.A. _____ DESIGN _____ J.T.L./F.J.O. _____ CHKD. _____ W.A.G. _____

BR. 1-715D 6048	CONTRACT	COUNTY	F.A.P. NO.	SHEET NO.	TOTAL SHTS.
	22-074-09	NEW CASTLE	SEE TITLE SHEET	133	152

SUPERSTRUCTURE REPAIRS - PARAPET

REHABILITATION OF BRIDGE NOS. 1-715, 1-715A, & 1-715D ON SR 273 OVER I-95

REVISIONS

NOTES:

1. LENGTH OF CONCRETE CRACKS SHOWN GRAPHICALLY. REPAIR LENGTH BASED ON FIELD INSPECTION OBSERVATIONS TAKEN 6/02. THE REPAIR OF CONCRETE STRUCTURE BY EPOXY INJECTION FOR ITEM 602611, AS SHOWN ON SUMMARY QUANTITY SHEET, HAS BEEN INCREASED BY 25% TO ACCOUNT FOR LATENT DEFECTS THAT MAY HAVE OCCURRED SINCE THE 6/02 INSPECTION. ALL PROPOSED REPAIR LOCATIONS SHALL BE VERIFIED BY THE CONTRACTOR IN THE PRESENCE OF THE ENGINEER PRIOR TO BEGINNING ANY WORK. REFERENCE APPLICABLE SPECIAL PROVISIONS. THE ACTUAL LIMITS OF THE REPAIRS SHALL BE DEFINED AND DOCUMENTED BY THE ENGINEER. THE CONTRACTOR SHALL PROVIDE ACCESS TO THE REPAIR AREAS AT ALL TIMES DURING CONSTRUCTION.
2. CONTROL JOINTS IN PARAPET AND METAL BRIDGE RAILING NOT SHOWN FOR CLARITY.
3. FOR DETAILS OF SHALLOW AND DEEP SPALL REPAIRS, SEE SHEET 123.

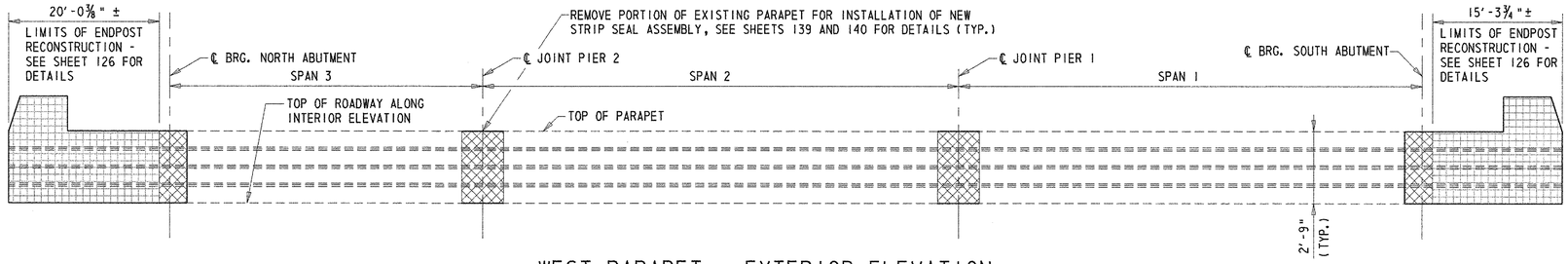

WEST PARAPET - EXTERIOR ELEVATION

NOT TO SCALE

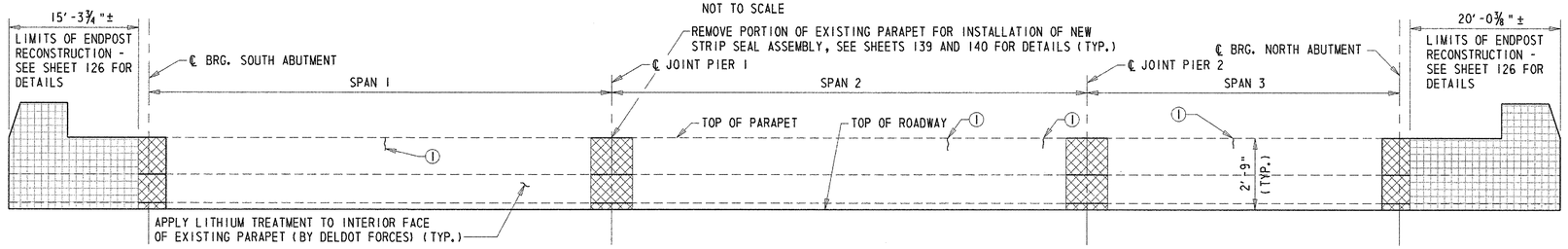

WEST PARAPET - INTERIOR ELEVATION

NOT TO SCALE

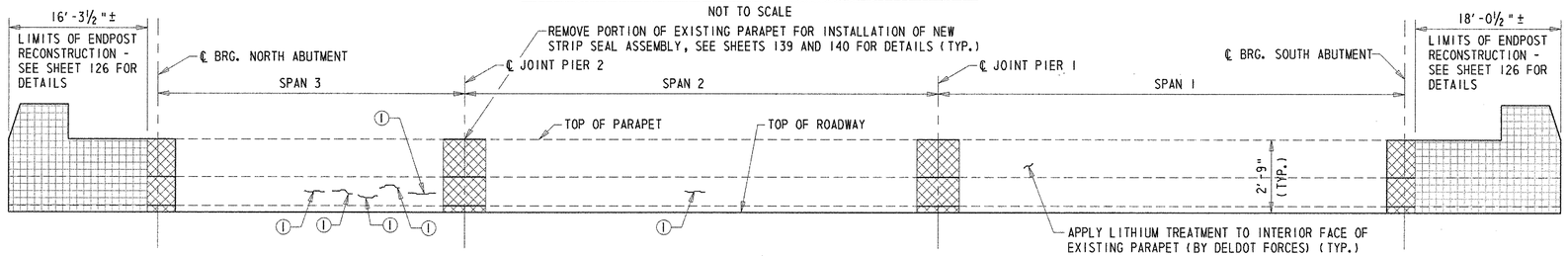

EAST PARAPET - INTERIOR ELEVATION

NOT TO SCALE

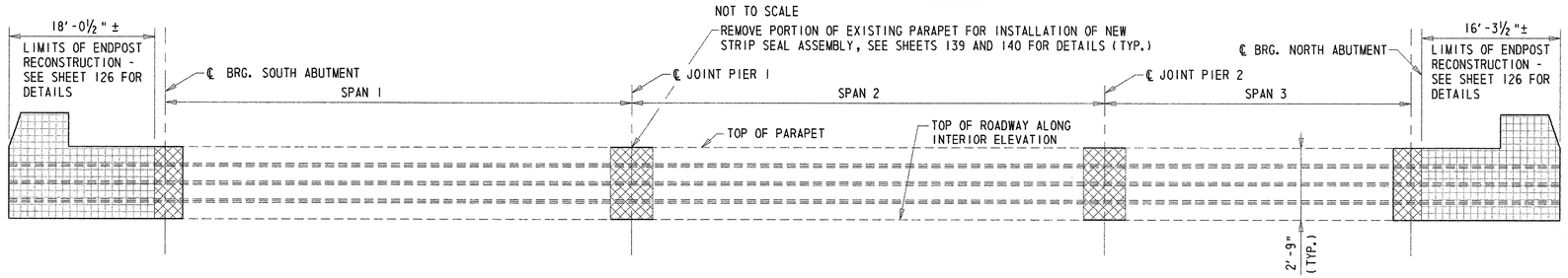

EAST PARAPET - EXTERIOR ELEVATION

NOT TO SCALE

REPAIR LEGEND

(1) SEAL VERTICAL, HORIZONTAL AND/OR DIAGONAL CRACKS BY EPOXY INJECTION - SEE NOTE 1.

LEGEND

ENDPOST RECONSTRUCTION | PARAPET RECONSTRUCTION | DEEP SPALL REPAIR | CRACK REPAIR | DELAMINATED CONCRETE AND/OR SHALLOW SPALL REPAIR

PREL. TRACING _____ W.R.A. _____ DESIGN _____ J.T.L./F.J.O. _____ CHKD. _____ W.A.C. _____

M:\313031A\MD01BR715D.DGN

FINISHED ROADWAY ELEVATIONS – I

BR. 1-715D 6048	CONTRACT	COUNTY	F.A.P. NO.	SHEET NO.	TOTAL SHTS.
	22-074-09	NEW CASTLE	SEE TITLE SHEET	134	152

REHABILITATION OF BRIDGE NOS. 1-715, 1-715A, & 1-715D ON SR 273 OVER I-95

REVISIONS

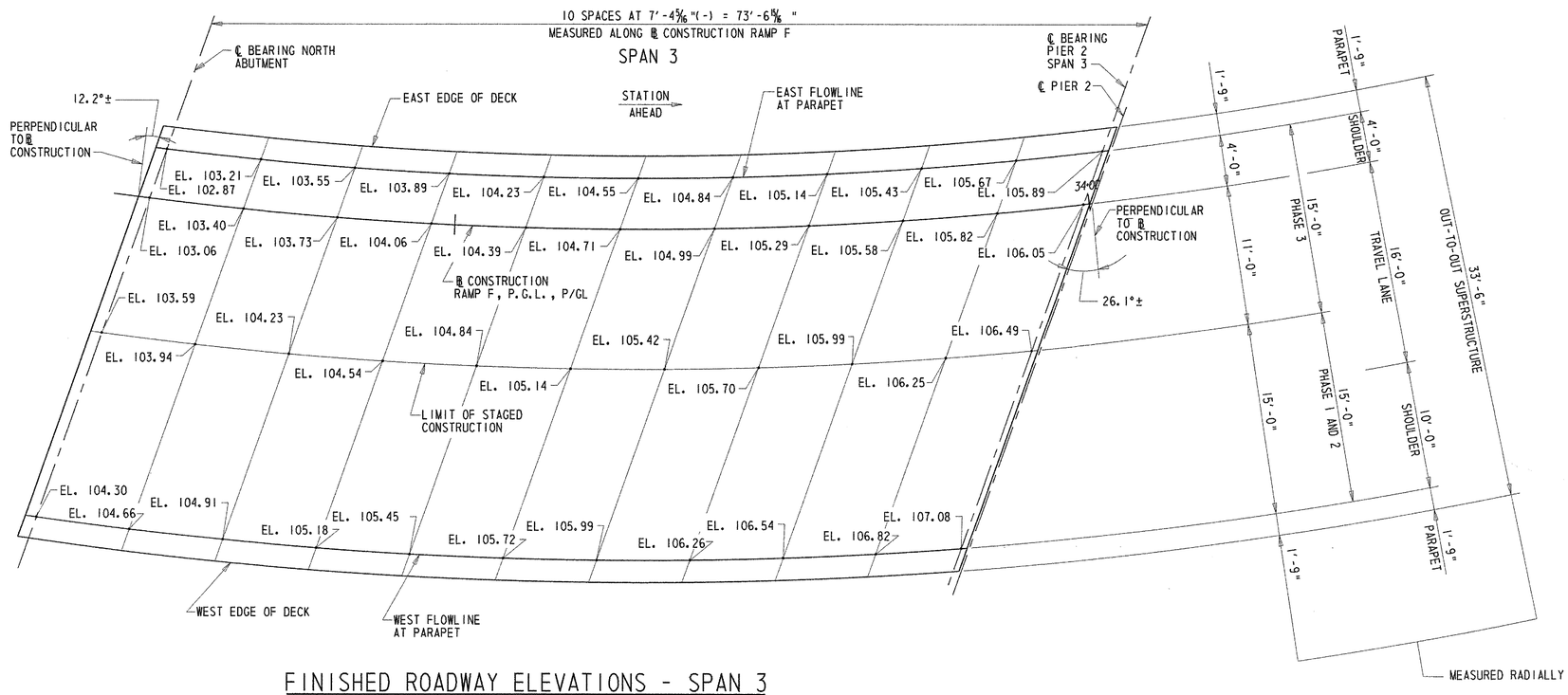

FINISHED ROADWAY ELEVATIONS - SPAN 3

SCALE: 3/16" = 1'-0"

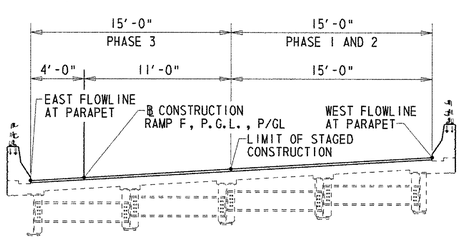

LOCATIONS OF FINISHED ROADWAY ELEVATIONS

LOOKING STATION AHEAD

SCALE: 3/16" = 1'-0"

NOTES:

1. THE ELEVATIONS SHOWN ARE FOR INFORMATIONAL PURPOSES ONLY. CONTRACTOR SHALL SURVEY THE EXISTING DECK AT LOCATIONS SHOWN ON THESE PLANS PRIOR TO REMOVING THE BITUMINOUS OVERLAY. THIS SURVEY SHALL BE USED TO VERIFY FINISHED ELEVATIONS FOR THE CONCRETE OVERLAY. COST OF THIS WORK WILL BE INCLUDED IN 763501 - CONSTRUCTION ENGINEERING.

2. DUE TO THE VARYING NATURE OF THE EXISTING BITUMINOUS OVERLAY THICKNESS, THE EXISTING CROSS SLOPE MAY NOT MATCH THE CROSS SLOPE SHOWN ON THE PLANS. THE CROSS SLOPE OF THE PROPOSED CONCRETE OVERLAY SHALL CLOSELY MATCH THE CROSS SLOPE SHOWN ON THE PLANS WHILE MAINTAINING 2'-9" PARAPET HEIGHT AND 2" MIN. THICKNESS FOR THE OVERLAY. THE CONTRACTOR SHALL CONTACT THE ENGINEER IN THE EVENT THAT THIS CRITERIA IS UNABLE TO BE MET.

PRELIM. TRACING W.R.A. DESIGN J.T.L./F.J.O. CHKD. W.A.G.

M:\3\30314\fd01br715d.dgn

FINISHED ROADWAY ELEVATIONS – II

BR. 1-715D 6048	CONTRACT	COUNTY	F.A.P. NO.	SHEET NO.	TOTAL SHTS.
	22-074-09	NEW CASTLE	SEE TITLE SHEET	135	152

REHABILITATION OF BRIDGE NOS. 1-715, 1-715A, & 1-715D ON SR 273 OVER I-95

REVISIONS

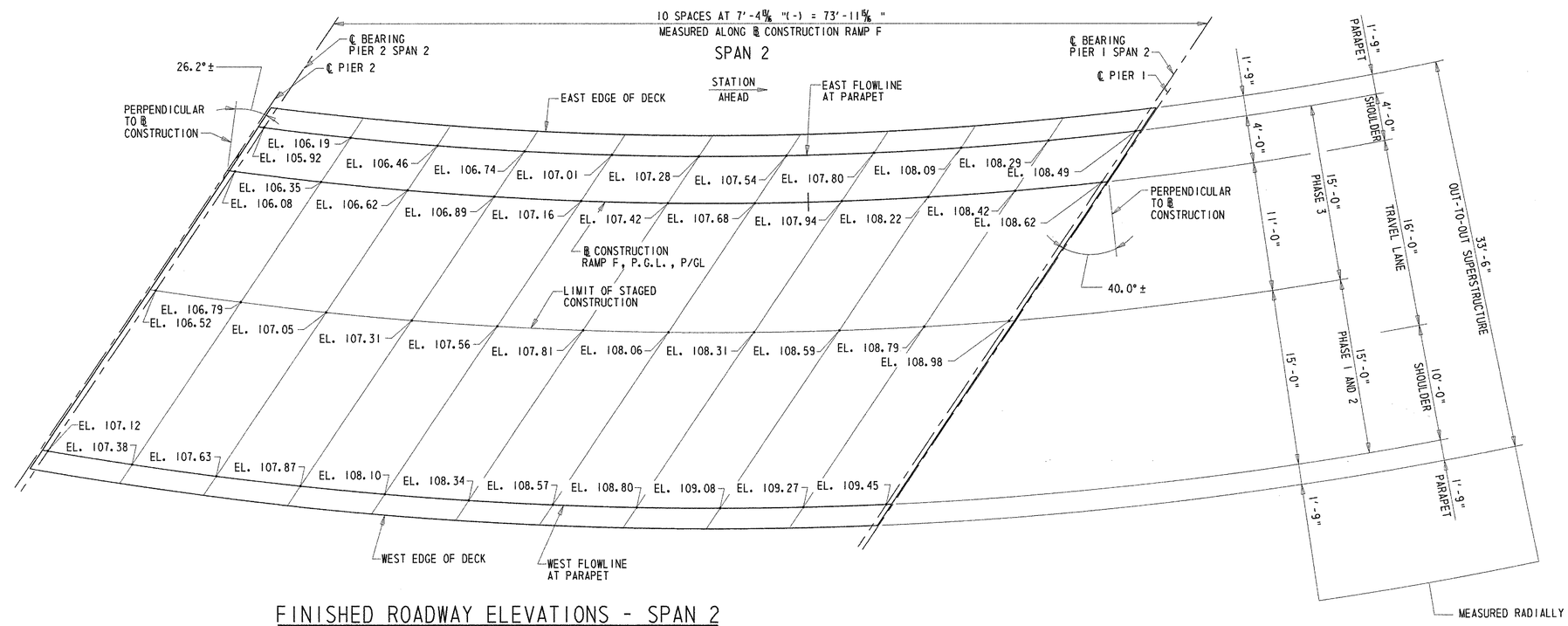

FINISHED ROADWAY ELEVATIONS - SPAN 2

SCALE: 3/16" = 1'-0"

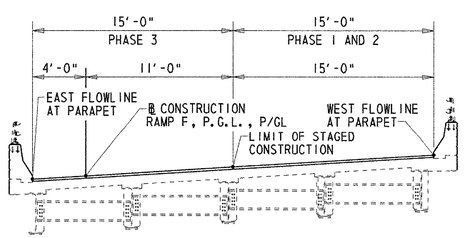

LOCATIONS OF FINISHED ROADWAY ELEVATIONS

LOOKING STATION AHEAD

SCALE: 3/16" = 1'-0"

NOTES:

1. THE ELEVATIONS SHOWN ARE FOR INFORMATIONAL PURPOSES ONLY. CONTRACTOR SHALL SURVEY THE EXISTING DECK AT LOCATIONS SHOWN ON THESE PLANS PRIOR TO REMOVING THE BITUMINOUS OVERLAY. THIS SURVEY SHALL BE USED TO VERIFY FINISHED ELEVATIONS FOR THE CONCRETE OVERLAY. COST OF THIS WORK WILL BE INCLUDED IN 763501 - CONSTRUCTION ENGINEERING.

2. DUE TO THE VARYING NATURE OF THE EXISTING BITUMINOUS OVERLAY THICKNESS, THE EXISTING CROSS SLOPE MAY NOT MATCH THE CROSS SLOPE SHOWN ON THE PLANS. THE CROSS SLOPE OF THE PROPOSED CONCRETE OVERLAY SHALL CLOSELY MATCH THE CROSS SLOPE SHOWN ON THE PLANS WHILE MAINTAINING 2'-9" PARAPET HEIGHT AND 2" MIN. THICKNESS FOR THE OVERLAY. THE CONTRACTOR SHALL CONTACT THE ENGINEER IN THE EVENT THAT THIS CRITERIA IS UNABLE TO BE MET.

PREL. TRACING ____ W.R.A. ____ DESIGN ____ J.T.L./F.J.O. ____ CHKD. ____ W.A.G.

M:\3130314\fd02br715d.dgn

FINISHED ROADWAY ELEVATIONS – III

BR. 1-715D 6048	CONTRACT	COUNTY	F.A.P. NO.	SHEET NO.	TOTAL SHTS.
	22-074-09	NEW CASTLE	SEE TITLE SHEET	136	152

REHABILITATION OF BRIDGE NOS. 1-715, 1-715A, & 1-715D ON SR 273 OVER I-95

REVISIONS

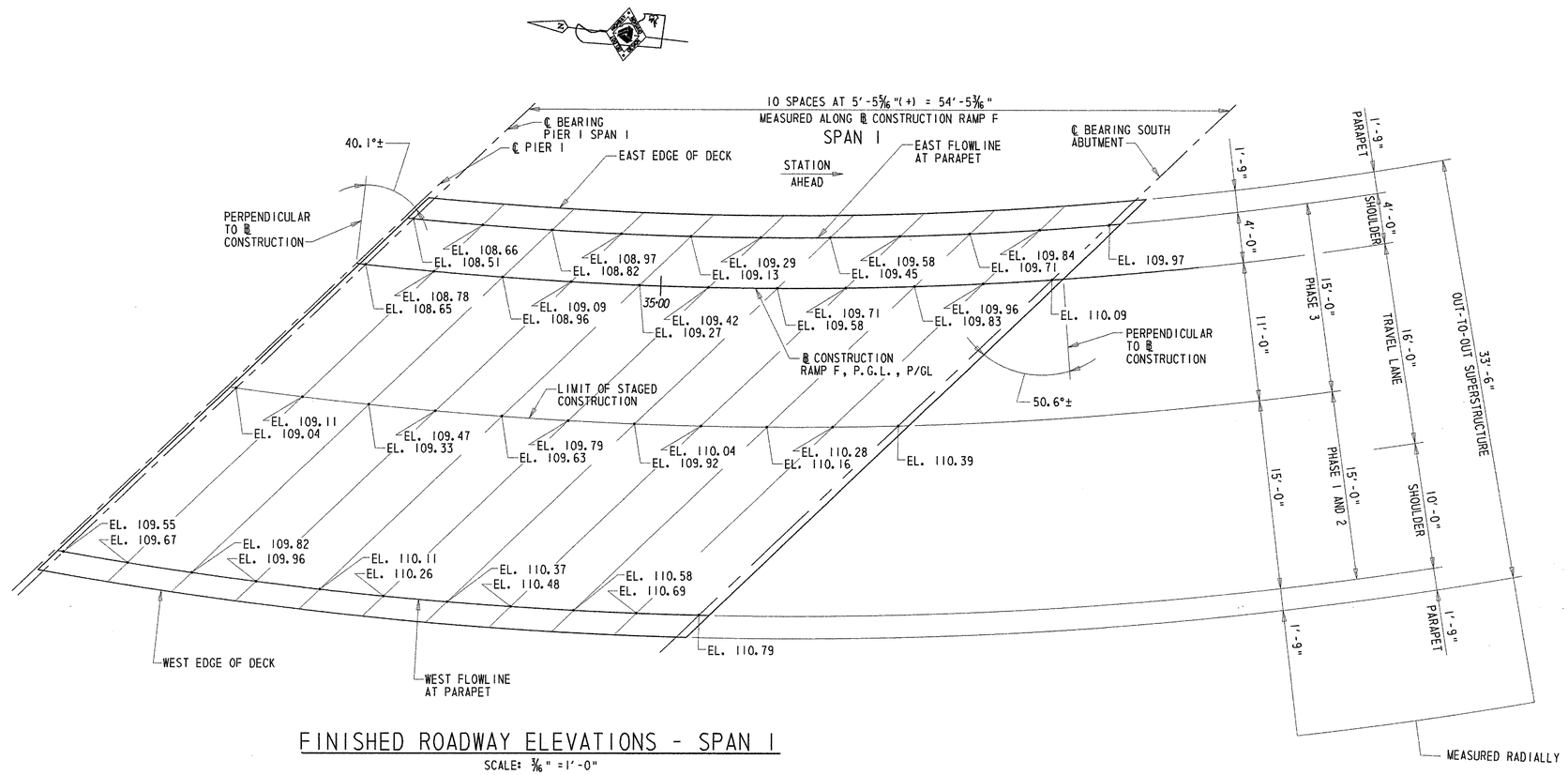

FINISHED ROADWAY ELEVATIONS - SPAN 1

SCALE: 3/16" = 1'-0"

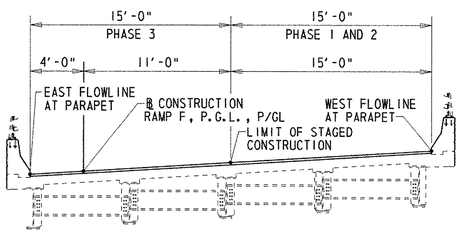

LOCATIONS OF FINISHED ROADWAY ELEVATIONS

LOOKING STATION AHEAD

SCALE: 3/16" = 1'-0"

NOTES:

1. THE ELEVATIONS SHOWN ARE FOR INFORMATIONAL PURPOSES ONLY. CONTRACTOR SHALL SURVEY THE EXISTING DECK AT LOCATIONS SHOWN ON THESE PLANS PRIOR TO REMOVING THE BITUMINOUS OVERLAY. THIS SURVEY SHALL BE USED TO VERIFY FINISHED ELEVATIONS FOR THE CONCRETE OVERLAY. COST OF THIS WORK WILL BE INCLUDED IN 763501 - CONSTRUCTION ENGINEERING.

2. DUE TO THE VARYING NATURE OF THE EXISTING BITUMINOUS OVERLAY THICKNESS, THE EXISTING CROSS SLOPE MAY NOT MATCH THE CROSS SLOPE SHOWN ON THE PLANS. THE CROSS SLOPE OF THE PROPOSED CONCRETE OVERLAY SHALL CLOSELY MATCH THE CROSS SLOPE SHOWN ON THE PLANS WHILE MAINTAINING 2'-9" PARAPET HEIGHT AND 2" MIN. THICKNESS FOR THE OVERLAY. THE CONTRACTOR SHALL CONTACT THE ENGINEER IN THE EVENT THAT THIS CRITERIA IS UNABLE TO BE MET.

PREL. TRACING ____ W.R.A. ____ DESIGN ____ J.T.L./F.J.O. ____ CHKD. ____ W.A.G. ____

M:\3130314\fd03br715d.dgn

JOINT REPAIRS - ABUTMENTS

BR. 1-715D 6048	CONTRACT	COUNTY	F.A.P. NO.	SHEET NO.	TOTAL SHTS.
	22-074-09	NEW CASTLE	SEE TITLE SHEET	137	152

REHABILITATION OF BRIDGE NOS. 1-715, 1-715A, & 1-715D ON SR 273 OVER I-95

REVISIONS

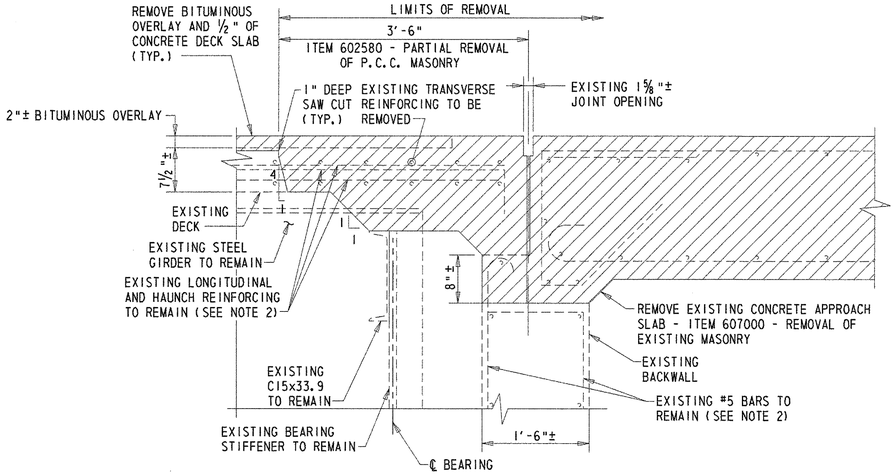

EXISTING TYPICAL SECTION @ ABUTMENTS

SCALE: 1"=1'-0"

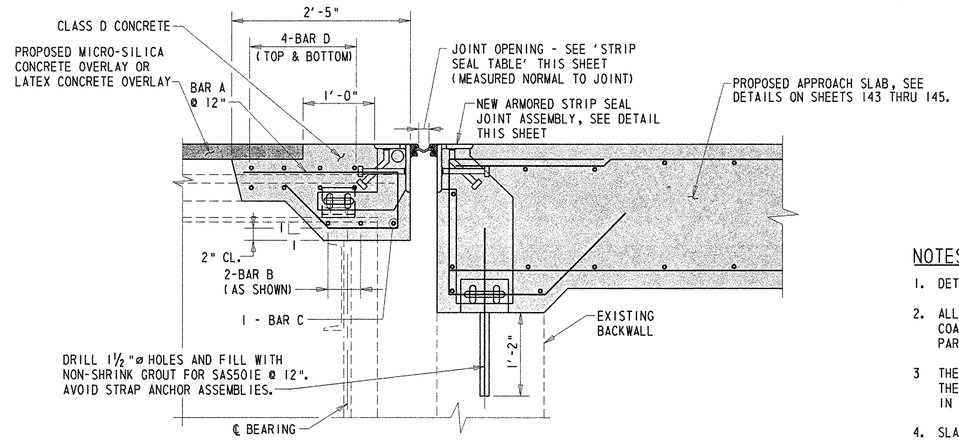

PROPOSED TYPICAL SECTION @ ABUTMENTS

SCALE: 1"=1'-0"

NOTES:

1. DETAILS SHOWN FOR SOUTH ABUTMENT. NORTH ABUTMENT SIMILAR.
2. ALL EXPOSED REINFORCEMENT STEEL SHALL BE BLAST CLEANED AND EPOXY COATED. COST OF THIS WORK WILL BE INCLUDED IN ITEM 602580 - PARTIAL REMOVAL OF P.C.C. MASONRY.
3. THE 1" DEEP SAW CUT SHALL BE PERFORMED UPON COMPLETION OF REMOVING THE 1/2" OF CONCRETE DECK. COST FOR THE SAW CUT WILL BE INCLUDED IN ITEM 602580 - PARTIAL REMOVAL OF P.C.C. MASONRY.
4. SLAB THICKNESS IS AS SHOWN ON THE ORIGINAL CONTRACT DRAWINGS. FINISHED DECK SURFACE SHALL MATCH ELEVATION OF EXISTING SURFACE REGARDLESS OF THE RESULTING THICKNESS COMPARED TO THE VALUE SHOWN ON THE ORIGINAL CONTRACT DRAWINGS.
5. LIMITS OF JOINT REMOVAL AND RECONSTRUCTION ARE MEASURED NORMAL TO THE JOINT.
6. CLEAN AND APPLY EPOXY BONDING COMPOUND TO ALL REMOVAL AND ROUGHENED SURFACES PRIOR TO PLACING CONCRETE. COST OF THIS WORK WILL BE INCLUDED IN ITEM 602013 - P.C.C. MASONRY, SUPERSTRUCTURE, CLASS D.
7. THE PERMANENT NEOPRENE STRIP SEAL SHALL BE CONTINUOUS ACROSS THE SPLICE IN THE JOINT ASSEMBLY REQUIRED FOR STAGED CONSTRUCTION.
8. UPON COMPLETION OF CONCRETE REMOVAL, EXISTING SURFACE SHALL BE LEVELED AND SMOOTHED USING AN EPOXY GROUT. COST WILL BE INCLUDED IN ITEM 605511 - PREFABRICATED EXPANSION JOINT SYSTEM, 3".
9. ALL STRUCTURAL STEEL AND ANCHOR BOLTS FOR JOINT MODIFICATIONS SHALL CONFORM TO ASTM A709, GRADE 36. GRADE 50 STEEL MAY BE SUBSTITUTED FOR GRADE 36 AT NO ADDITIONAL COST TO THE DEPARTMENT.
10. COST OF DRILLING AND GROUTING 1"ø ANCHOR BOLTS WILL BE INCLUDED IN ITEM 605511 - PREFABRICATED EXPANSION JOINT SYSTEM, 3".
11. PRIOR TO FABRICATION OF THE ROADWAY JOINT MATERIAL, THE CONTRACTOR SHALL FIELD VERIFY THE CROSS-SLOPE OF THE ROADWAY AT THE INDIVIDUAL JOINT LOCATIONS.

BAR SCHEDULE

LOCATION	BAR	PHASE 1 AND 2	PHASE 3
SOUTH ABUTMENT	A	S501E	S511E
	B	S602E	S612E
	C	S605E	S616E
	D	S603E	S614E
NORTH ABUTMENT	A	S521E	S531E
	B	S622E	S633E (BAY 3) S632E (BAY 4)
	C	S625E	S637E
	D	S623E	S635E

STRIP SEAL TABLE

TEMP. (F)	S. ABUTMENT	N. ABUTMENT
40	2 1/16"	2 1/8"
50	2 1/16"	2 1/16"
60	2"	2"
70	1 15/16"	1 15/16"
80	1 15/16"	1 7/8"
90	1 7/8"	1 13/16"

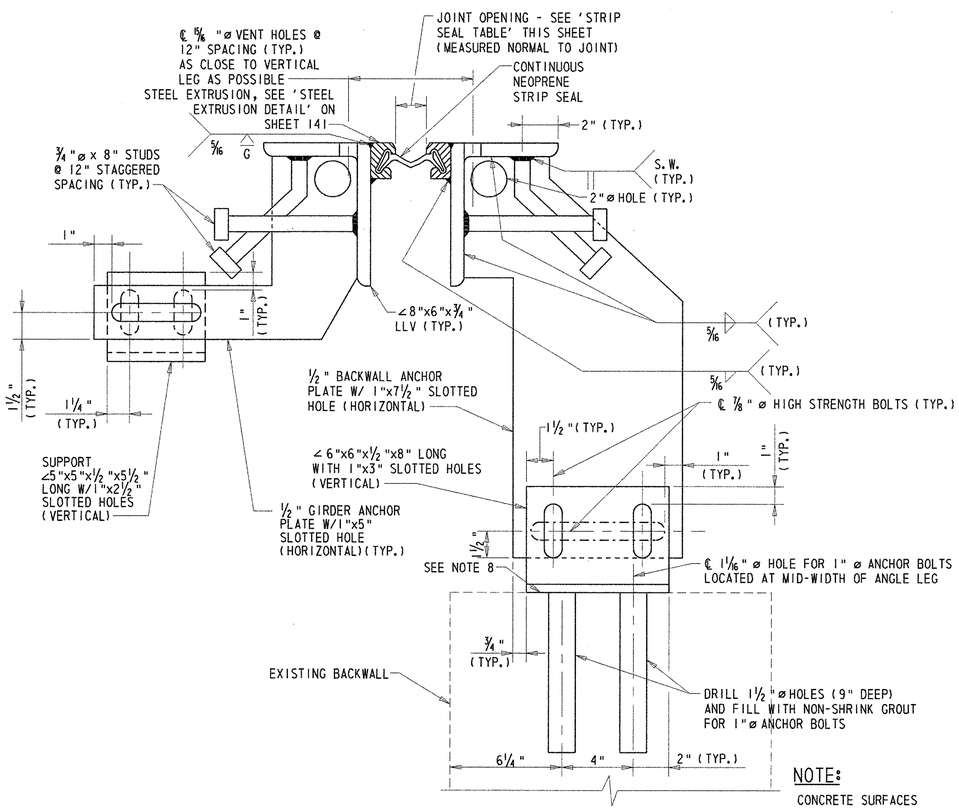

NEW ARMORED STRIP SEAL JOINT ASSEMBLY

SCALE: 3"=1'-0"

NOTE:

CONCRETE SURFACES AND GIRDER NOT SHOWN FOR CLARITY.

PREL. TRACING W.R.A. DESIGN J.T.L./F.J.O. CHKD. W.A.G.

M:\3130314\EX01br715d.dgn

BR. 1-715D 6048	CONTRACT	COUNTY	F.A.P. NO.	SHEET NO.	TOTAL SHTS.
	22-074-09	NEW CASTLE	SEE TITLE SHEET	138	152

JOINT REPAIRS - PIERS

REHABILITATION OF BRIDGE NOS. 1-715, 1-715A, & 1-715D ON SR 273 OVER I-95

REVISIONS

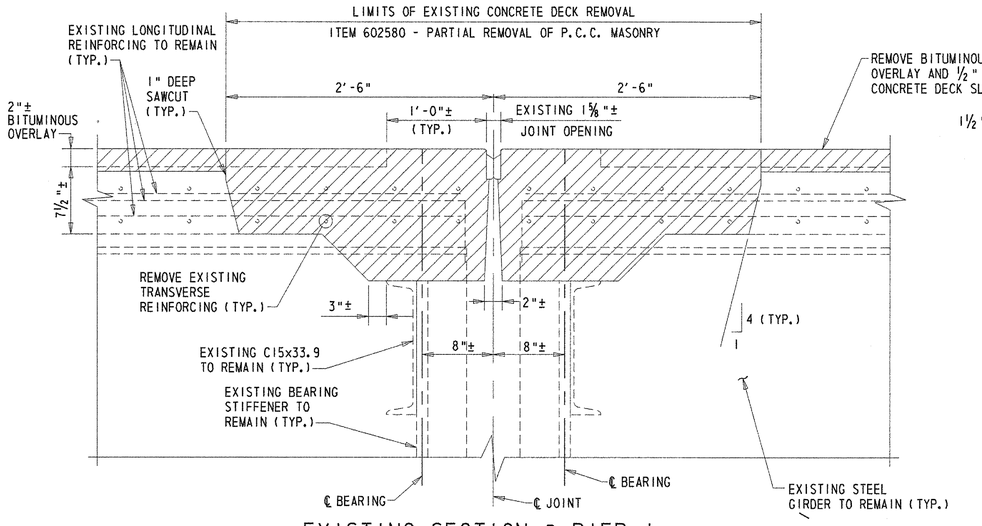

EXISTING SECTION @ PIER 1

SCALE: 1½"=1'-0"

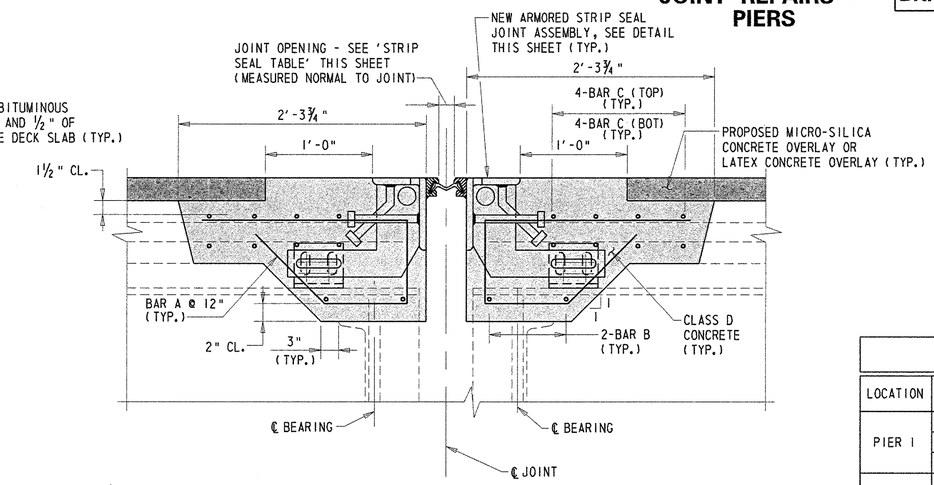

PROPOSED TYPICAL SECTION (ALL PIERS)

SCALE: 1½"=1'-0"

BAR SCHEDULE				
LOCATION	BAR	PHASE 1 AND 2	PHASE 3	COMMENTS
PIER 1	A	S541E	S551E	
	B	S642E	S652E	S653E IN PHASE 3, BAY 3, SPAN2
	C	S643E	S655E	
PIER 2	A	S561E	S571E	
	B	S662E	S672E	S673E IN PHASE 3, BAY 3, SPAN 1 S674E IN PHASE 3, BAY 3, SPAN 2
	C	S663E	S675E	

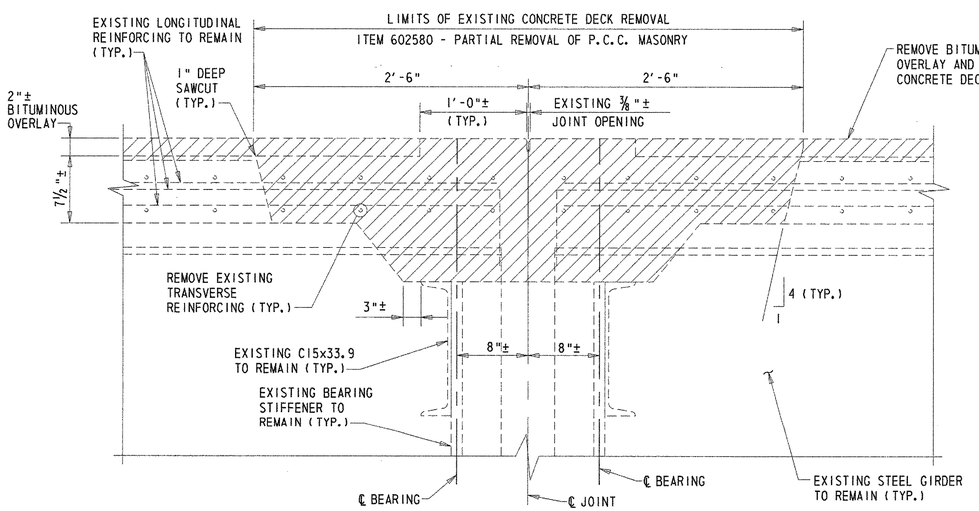

EXISTING SECTION @ PIER 2

SCALE: 1½"=1'-0"

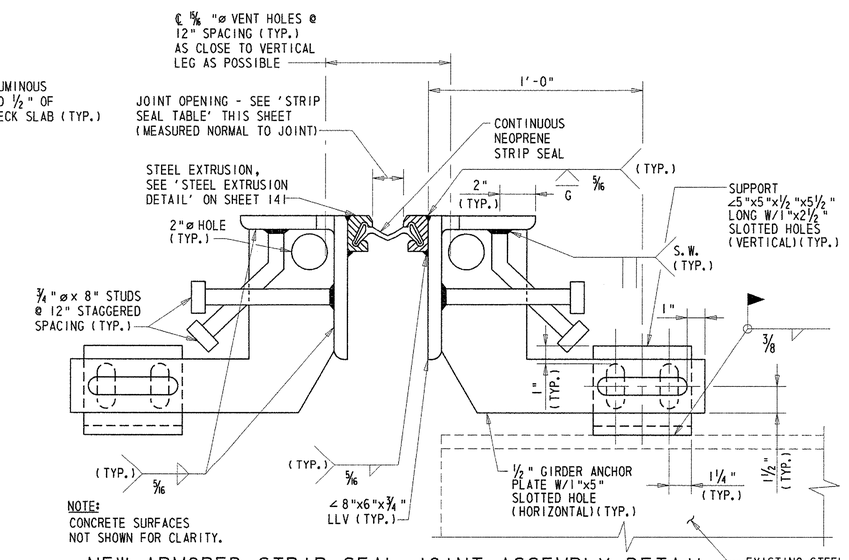

NOTE:
CONCRETE SURFACES NOT SHOWN FOR CLARITY.

NEW ARMORED STRIP SEAL JOINT ASSEMBLY DETAIL

SCALE: 3"=1'-0"

NOTES:

1. ALL EXPOSED REINFORCEMENT STEEL SHALL BE BLAST CLEANED AND EPOXY COATED. COST OF THIS WORK WILL BE INCLUDED IN ITEM 602580 - PARTIAL REMOVAL OF P.C.C. MASONRY.
2. SLAB THICKNESS IS AS SHOWN ON THE ORIGINAL CONTRACT DRAWINGS. FINISHED DECK SURFACE SHALL MATCH ELEVATION OF EXISTING SURFACE REGARDLESS OF THE RESULTING THICKNESS COMPARED TO THE VALUE SHOWN ON THE ORIGINAL CONTRACT DRAWINGS.
3. THE 1" DEEP SAW CUT SHALL BE PERFORMED UPON COMPLETION OF REMOVING THE ½" OF CONCRETE DECK. COST FOR THE SAW CUT WILL BE INCLUDED IN ITEM 602580 - PARTIAL REMOVAL OF P.C.C. MASONRY.
4. LIMITS OF JOINT REMOVAL AND RECONSTRUCTION ARE MEASURED NORMAL TO THE JOINT.
5. CLEAN AND APPLY EPOXY BONDING COMPOUND TO ALL REMOVAL AND ROUGHENED SURFACES PRIOR TO PLACING CONCRETE. COST OF THIS WORK WILL BE INCLUDED IN ITEM 602013 - P.C.C. MASONRY, SUPERSTRUCTURE, CLASS D.
6. THE PERMANENT NEOPRENE STRIP SEAL SHALL BE CONTINUOUS ACROSS THE SPLICE IN THE JOINT ASSEMBLY REQUIRED FOR STAGED CONSTRUCTION.
7. ALL STRUCTURAL STEEL FOR JOINT MODIFICATIONS SHALL CONFORM TO ASTM A 709, GRADE 36. GRADE 50 STEEL MAY BE SUBSTITUTED FOR GRADE 36 AT NO ADDITIONAL COST TO THE DEPARTMENT.
8. PRIOR TO FABRICATION OF THE ROADWAY JOINT MATERIAL, THE CONTRACTOR SHALL FIELD VERIFY THE CROSS-SLOPE OF THE ROADWAY AT THE INDIVIDUAL JOINT LOCATIONS.

STRIP SEAL TABLE		
TEMP. (F)	PIER 1	PIER 2
40	2⅛"	2"
50	2 1/16"	2"
60	2"	2"
70	1 15/16"	2"
80	1⅞"	2"
90	1 13/16"	2"

PREL. TRACING ____ W.R.A. ____ DESIGN ____ J.T.L./F.J.O. ____ CHKD. ____ W.A.G.

M:\313031A\EX02br715d.dgn

JOINT REPAIR PLAN - 1

BR. 1-715D 6048

CONTRACT	COUNTY	F.A.P. NO.	SHEET NO.	TOTAL SHTS.
22-074-09	NEW CASTLE	SEE TITLE SHEET	139	152

REHABILITATION OF BRIDGE NOS. 1-715, 1-715A, & 1-715D ON SR 273 OVER I-95

REVISIONS

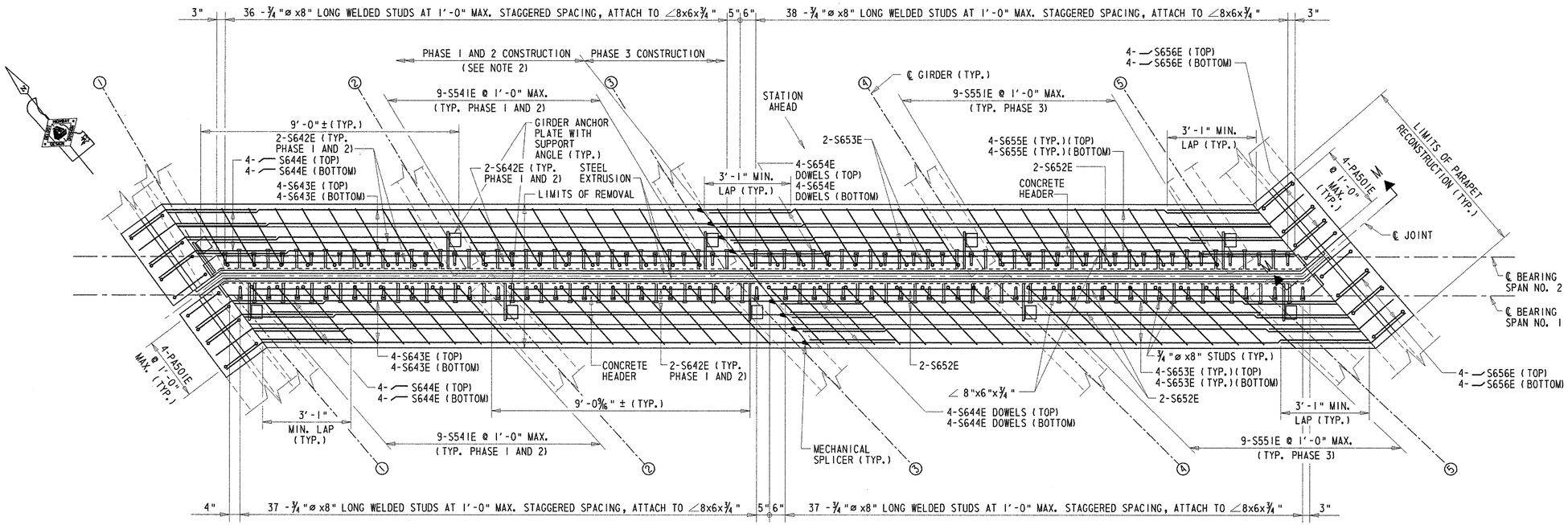

PLAN - PIER 1

SCALE: 1/2"=1'-0"

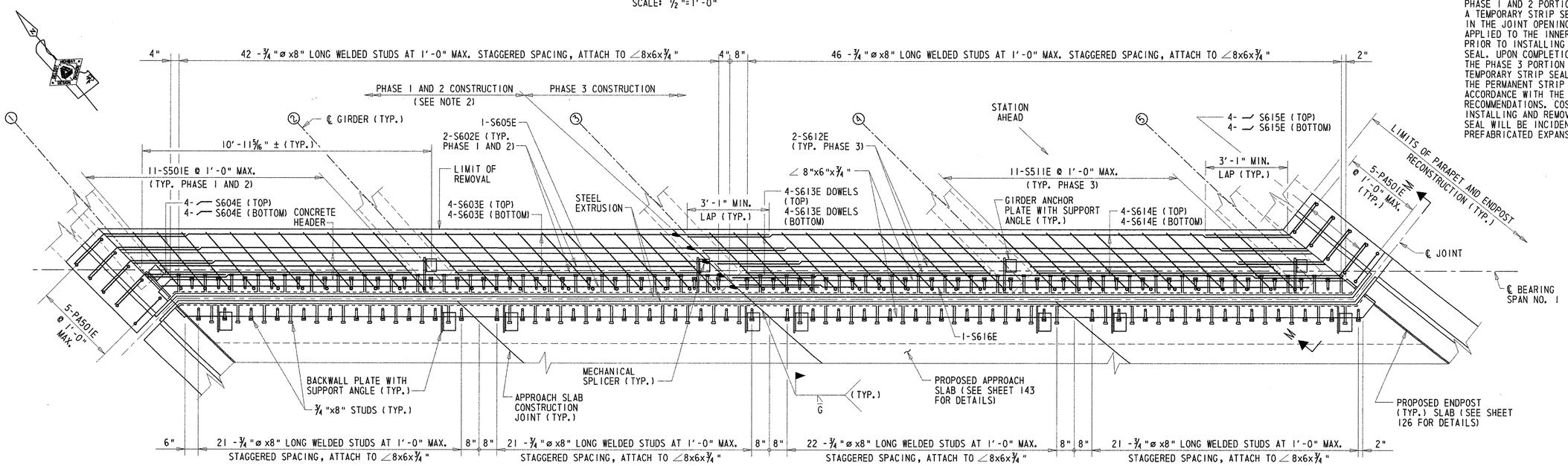

PLAN - SOUTH ABUTMENT

SCALE: 1/2"=1'-0"

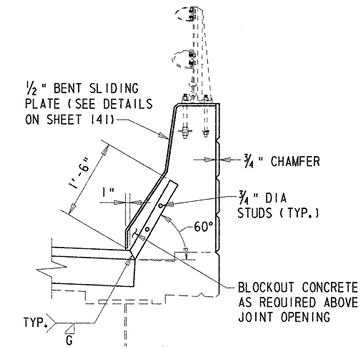

SECTION M-M

SCALE: 3/4"=1'-0"

NOTES:

1. BENT SLIDING PLATE NOT SHOWN IN PLAN VIEWS FOR CLARITY. SEE DETAILS ON SHEET 141.
2. UPON COMPLETION OF RECONSTRUCTING THE PHASE 1 AND 2 PORTION OF THE ROADWAY JOINT, A TEMPORARY STRIP SEAL SHALL BE INSTALLED IN THE JOINT OPENING. NO ADHESIVE SHALL BE APPLIED TO THE INNER PORTIONS OF THE EXTRUSION PRIOR TO INSTALLING THE TEMPORARY STRIP SEAL. UPON COMPLETION OF RECONSTRUCTING THE PHASE 3 PORTION OF THE ROADWAY JOINT, THE TEMPORARY STRIP SEAL SHALL BE REMOVED AND THE PERMANENT STRIP SEAL SHALL BE INSTALLED IN ACCORDANCE WITH THE MANUFACTURER'S RECOMMENDATIONS. COST OF FURNISHING, INSTALLING AND REMOVING THE TEMPORARY STRIP SEAL WILL BE INCIDENTAL TO ITEM 605511 - PREFABRICATED EXPANSION JOINT SYSTEMN, 3".

PRELIM. TRACING ____ W.R.A. ____ DESIGN ____ J.T.L./F.J.O. ____ CHKD. ____ W.A.G. ____

M:\3130314\EX05br715D.dgn

JOINT REPAIR PLAN - II

BR. 1-715D 6048	CONTRACT	COUNTY	F.A.P. NO.	SHEET NO.	TOTAL SHTS.
	22-074-09	NEW CASTLE	SEE TITLE SHEET	140	152

REHABILITATION OF BRIDGE NOS. 1-715, 1-715A, & 1-715D ON SR 273 OVER I-95

REVISIONS

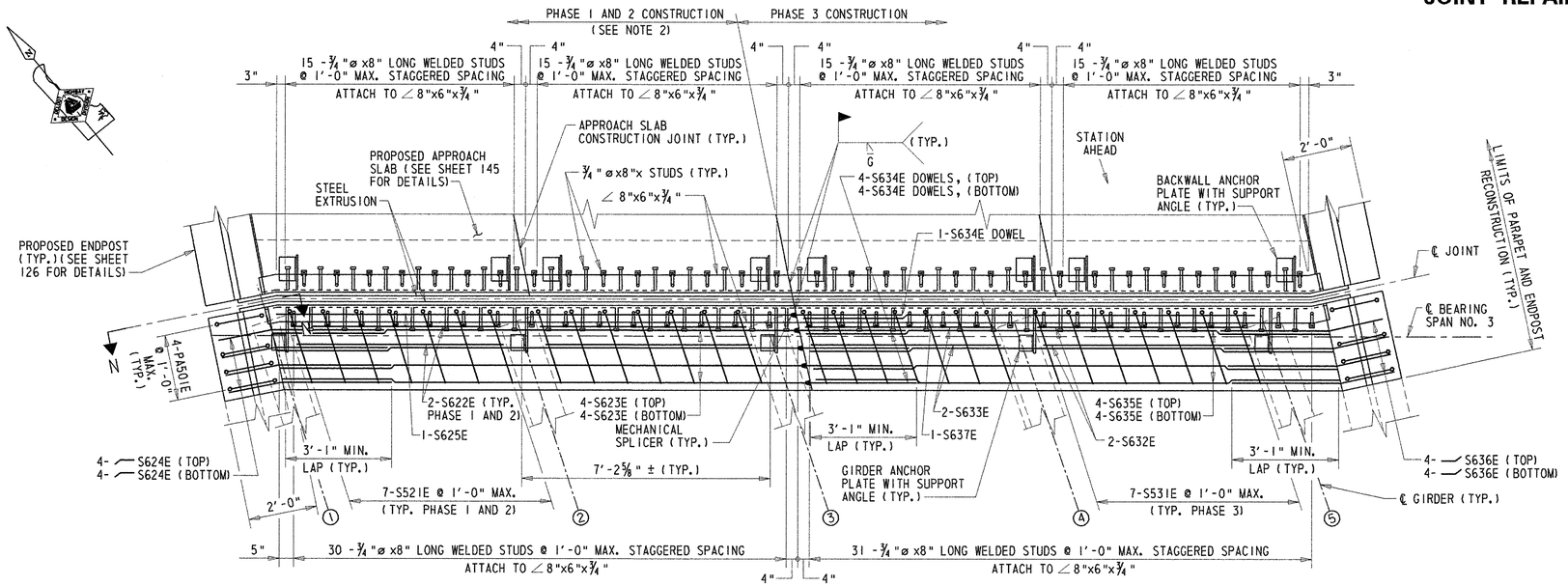

PLAN - NORTH ABUTMENT

SCALE: 1/2"=1'-0"

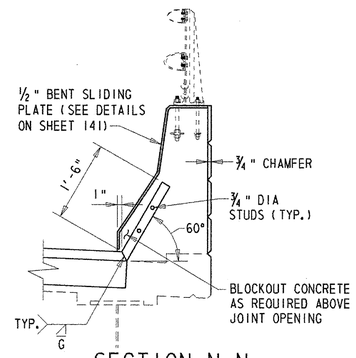

SECTION N-N

SCALE: 3/4"=1'-0"

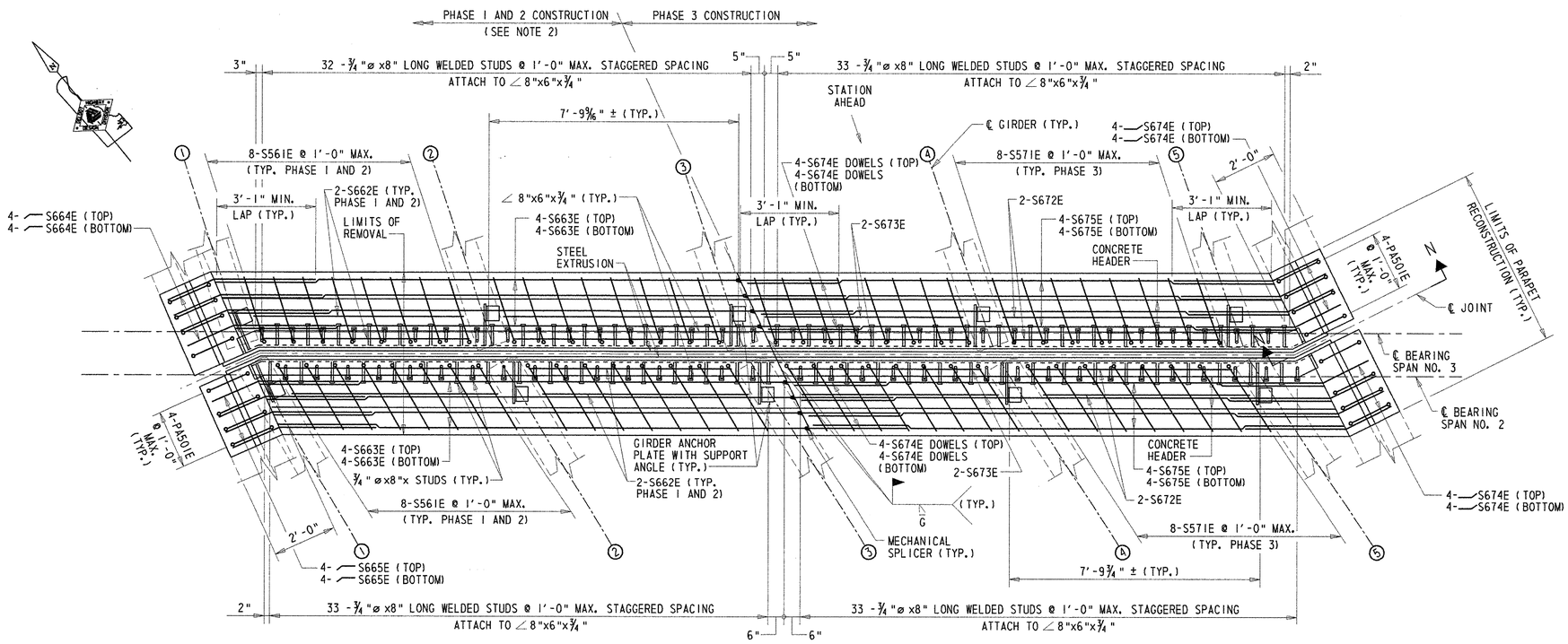

PLAN - PIER 2

SCALE: 1/2"=1'-0"

NOTES:

1. BENT SLIDING PLATE NOT SHOWN IN PLAN VIEWS FOR CLARITY. SEE DETAILS ON SHEET 141.
2. UPON COMPLETION OF RECONSTRUCTING THE PHASE 1 AND 2 PORTION OF THE ROADWAY JOINT, A TEMPORARY STRIP SEAL SHALL BE INSTALLED IN THE JOINT OPENING. NO ADHESIVE SHALL BE APPLIED TO THE INNER PORTIONS OF THE EXTRUSION PRIOR TO INSTALLING THE TEMPORARY STRIP SEAL. UPON COMPLETION OF RECONSTRUCTING THE PHASE 3 PORTION OF THE ROADWAY JOINT, THE TEMPORARY STRIP SEAL SHALL BE REMOVED AND THE PERMANENT STRIP SEAL SHALL BE INSTALLED IN ACCORDANCE WITH THE MANUFACTURER'S RECOMMENDATIONS. COST OF FURNISHING, INSTALLING AND REMOVING THE TEMPORARY STRIP SEAL WILL BE INCIDENTAL TO ITEM 605511 - PREFABRICATED EXPANSION JOINT SYSTEMN, 3".

PREL. TRACING W.R.A. DESIGN J.T.L./F.J.O. CHKD. W.A.G.

M:\3130314\EX03br715D.dgn

MISCELLANEOUS JOINT REPAIR DETAILS

BR. 1-715D 6048	CONTRACT	COUNTY	F.A.P. NO.	SHEET NO.	TOTAL SHTS.
	22-074-09	NEW CASTLE	SEE TITLE SHEET	141	152

REHABILITATION OF BRIDGE NOS. 1-715, 1-715A, & 1-715D ON SR 273 OVER I-95

REVISIONS

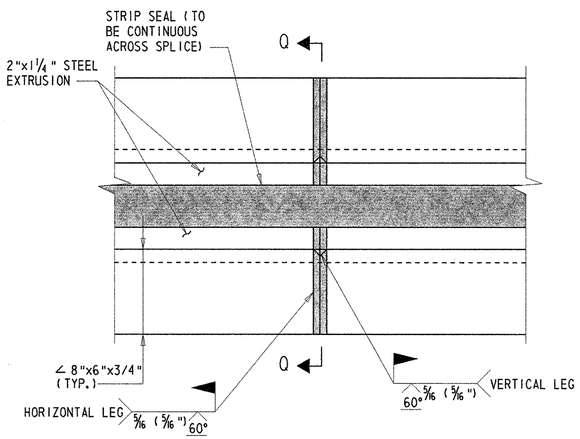

FIELD SPLICE DETAIL

SCALE: 3"=1'-0"

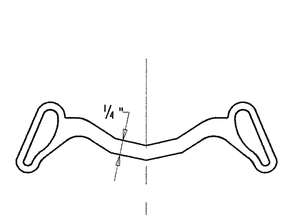

3" STRIP SEAL

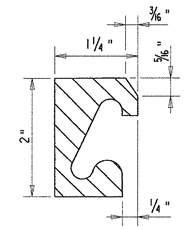

STEEL EXTRUSION DETAIL

EXPANSION JOINT SEAL

NOT TO SCALE

EXTRUSION NOTE:

LUBRICANT-ADHESIVE FOR USE IN INSTALLING AND BONDING NEOPRENE SEAL ELEMENTS TO STEEL EXPANSION DAM COMPONENTS SHALL BE A ONE-QUART MOISTURE-CURING POLYURETHANE AND HYDROCARBON SOLVENT MIXTURE HAVING THE FOLLOWING PHYSICAL PROPERTIES:

AVERAGE WEIGHT, POUNDS PER GALLON	8 ± 10%
SOLIDS CONTENT	65%
ADHESIVE SHALL REMAIN LIQUID FROM	5° TO 120° F
FILM STRENGTH AS PER ASTM D-412	2000 PSI
ELONGATION	250%

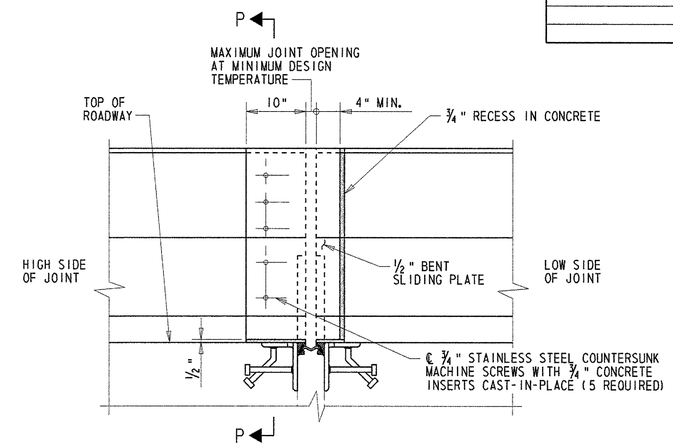

BENT SLIDING PLATE DETAIL - ELEVATION

SCALE: 1"=1'-0"

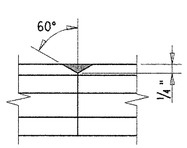

FRONT FACE

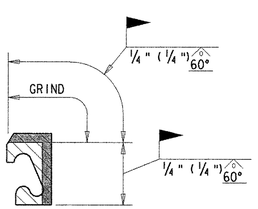

SECTION

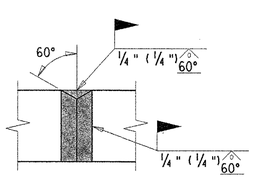

REAR FACE

STEEL EXTRUSION FIELD SPLICE DETAIL

NOT TO SCALE

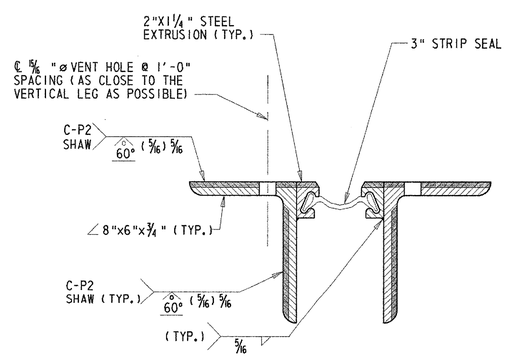

SECTION Q-Q

SCALE: 3"=1'-0"

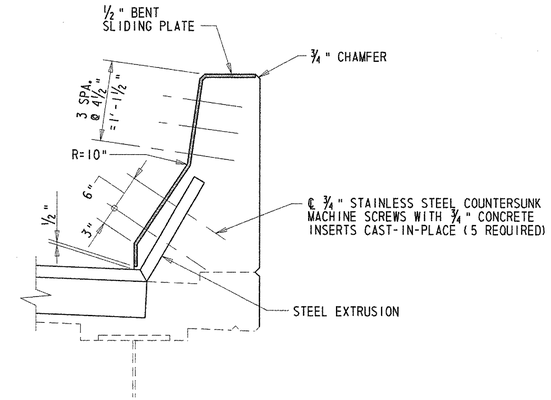

SECTION P-P

SCALE: 1"=1'-0"

BENT SLIDING PLATE NOTES:

1. EXISTING TWO-STRAND RAILING NOT SHOWN FOR CLARITY.
2. COST OF FURNISHING AND INSTALLING THE BENT SLIDING PLATE, COUNTERSUNK SCREWS AND INSERTS WILL BE PAID UNDER ITEM 605511 - PREFABRICATED EXPANSION JOINT SYSTEM, 3".
3. PAINT SYSTEM TO BE APPLIED TO THE ARMORING ANGLE, EXTRUSION AND BENT SLIDING PLATE SHALL MATCH COLOR APPLIED TO SUPERSTRUCTURE STEEL.
4. TOP PORTION OF BENT SLIDING PLATE SHALL BE CLIPPED AT ENDPOST LOCATIONS.

PREL. TRACING ____ W.R.A. ____ DESIGN ____ J.T.L./F.J.O. ____ CHKD. ____ W.A.G.

M:\313031\4\EX04br715d.dgn

BR. 1-715D 6048	CONTRACT	COUNTY	F.A.P. NO.	SHEET NO.	TOTAL SHTS.
	22-074-09	NEW CASTLE	SEE TITLE SHEET	142	152

SUPERSTRUCTURE MISCELLANEOUS DETAILS

REHABILITATION OF BRIDGE NOS. 1-715, 1-715A, & 1-715D ON SR 273 OVER I-95

REVISIONS

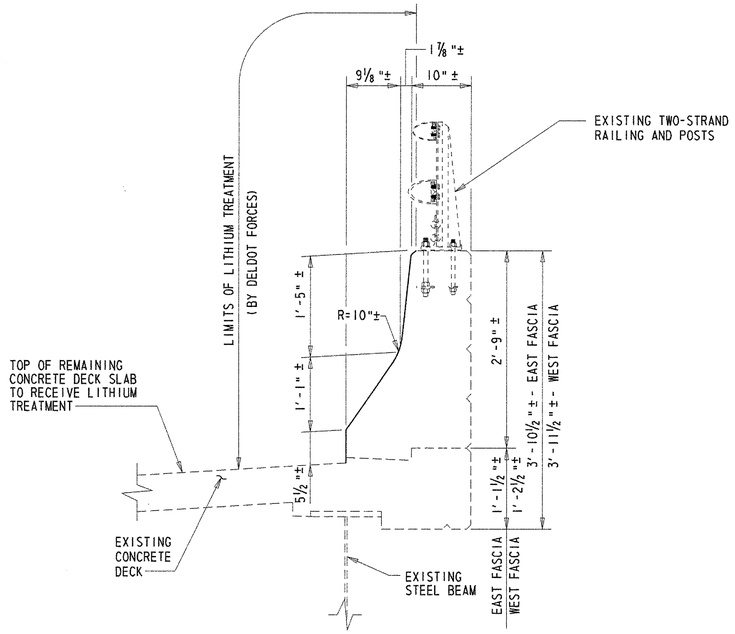

LITHIUM TREATMENT LIMITS (BY DELDOT FORCES) - TYPICAL SECTION

SCALE: 1"=1'-0"

LITHIUM TREATMENT NOTES:

1. EXISTING 2"± BITUMINOUS OVERLAY TO BE REMOVED NOT SHOWN.
2. LONGITUDINAL LIMITS OF THE LITHIUM TREATMENT SHALL EXTEND FROM ROADWAY JOINT AT THE SOUTH ABUTMENT TO ROADWAY JOINT AT THE NORTH ABUTMENT.
3. SEE 'PROJECT NOTES' FOR INFORMATION REGARDING SCHEDULING OF LITHIUM TREATMENT APPLICATION.

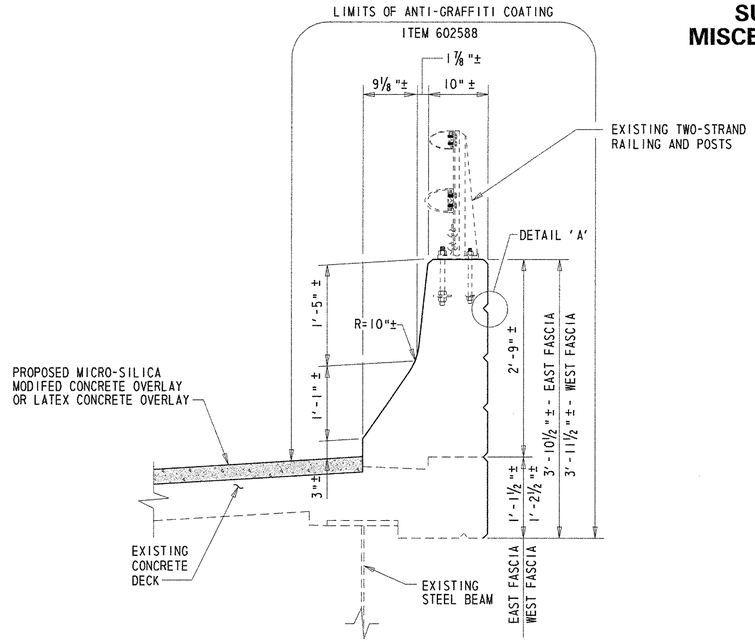

ANTI-GRAFFITI COATING LIMITS - TYPICAL SECTION

SCALE: 1"=1'-0"

NOTE:

LONGITUDINAL LIMITS OF THE ANTI-GRAFFITI COATING SHALL EXTEND FROM END OF RECONSTRUCTED CONCRETE ENDPOST AT THE SOUTH ABUTMENT TO END OF RECONSTRUCTED CONCRETE ENDPOST AT THE NORTH ABUTMENT.

NOTE:

LOCATION AND SIZE OF STRIATIONS IN PROPOSED PARAPET AT THE ROADWAY JOINTS SHALL MATCH STRIATIONS IN THE EXISTING PARAPET TO REMAIN.

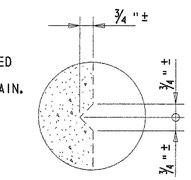

DETAIL 'A'

SCALE: 3"=1'-0"

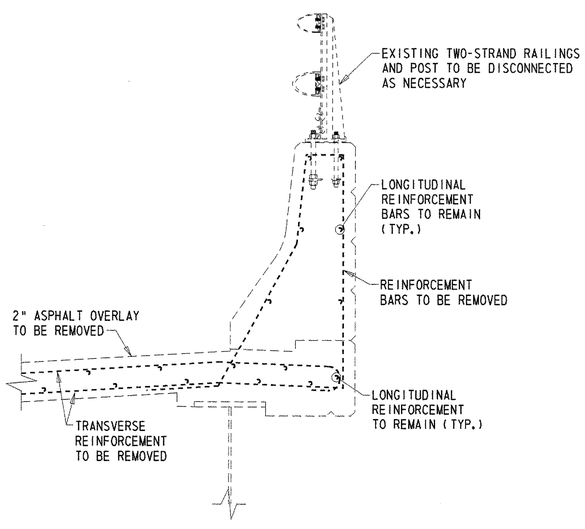

EXISTING PARAPET REINFORCEMENT DETAIL - TYPICAL SECTION

SCALE: 1"=1'-0"

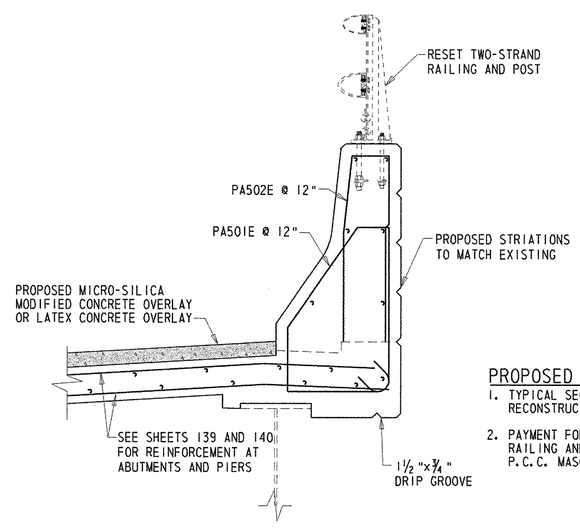

PROPOSED PARAPET REINFORCEMENT DETAIL - TYPICAL SECTION

SCALE: 1"=1'-0"

PROPOSED PARAPET NOTES:

1. TYPICAL SECTION SHOWN FOR PARAPET/MEDIAN BARRIER RECONSTRUCTION AT THE EXISTING ROADWAY JOINTS ONLY.
2. PAYMENT FOR REMOVAL AND RESETTING OF TWO-STRAND RAILING AND POSTS WILL BE MADE UNDER ITEM 602017 - P.C.C. MASONRY, PARAPET, CLASS A.

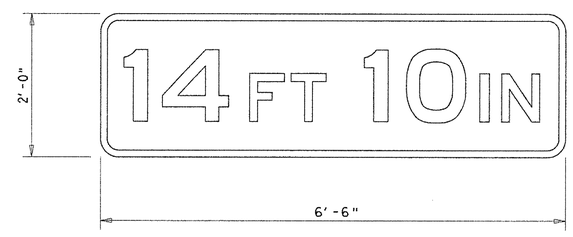

LOW CLEARANCE SIGN

NOT TO SCALE

LOW CLEARANCE SIGN NOTES:

1. LOW CLEARANCE SIGN SHALL CONFORM TO TYPE W12-2p OF THE FEDERAL HIGHWAY ADMINISTRATION'S CURRENT STANDARD HIGHWAY SIGNS MANUAL.
2. LOW CLEARANCE SIGN SHALL BE INSTALLED USING A MINIMUM OF THREE (3) 1/2" ø STAINLESS STEEL EXPANSION ANCHORS CONFORMING TO ASTM A 276 OR A 493 AND HAVE A MINIMUM EMBEDMENT OF 3 1/2".
3. THE CONTRACTOR SHALL FIELD MEASURE THE MINIMUM VERTICAL CLEARANCE OVER THE TRAVEL LANES OF WB SR 273 IN THE PRESENCE OF THE ENGINEER PRIOR TO THE FABRICATION OF THE LOW CLEARANCE SIGN.
4. COST FOR MEASURING THE MINIMUM VERTICAL CLEARANCE, FURNISHING THE EXPANSION ANCHORS, AND FURNISHING AND INSTALLING THE LOW CLEARANCE SIGN WILL BE INCIDENTAL TO THE CONTRACT. THE COST OF ANY NECESSARY MAINTENANCE OF TRAFFIC WILL BE PAID FOR UNDER THE OTHER PERTINENT ITEMS IN THE CONTRACT.

PREL. TRACING W.R.A. DESIGN J.T.L./F.J.O. CHKD. W.A.G.

M:\313031\MD03br715d.dgn

SOUTH APPROACH SLAB DETAILS – I

BR. 1-715D 6048	CONTRACT	COUNTY	F.A.P. NO.	SHEET NO.	TOTAL SHTS.
	22-074-09	NEW CASTLE	SEE TITLE SHEET	143	152

REHABILITATION OF BRIDGE NOS. 1-715, 1-715A, & 1-715D ON SR 273 OVER I-95

REVISIONS

1 DELETED SHEET	
11/25/03 WAG/GM	

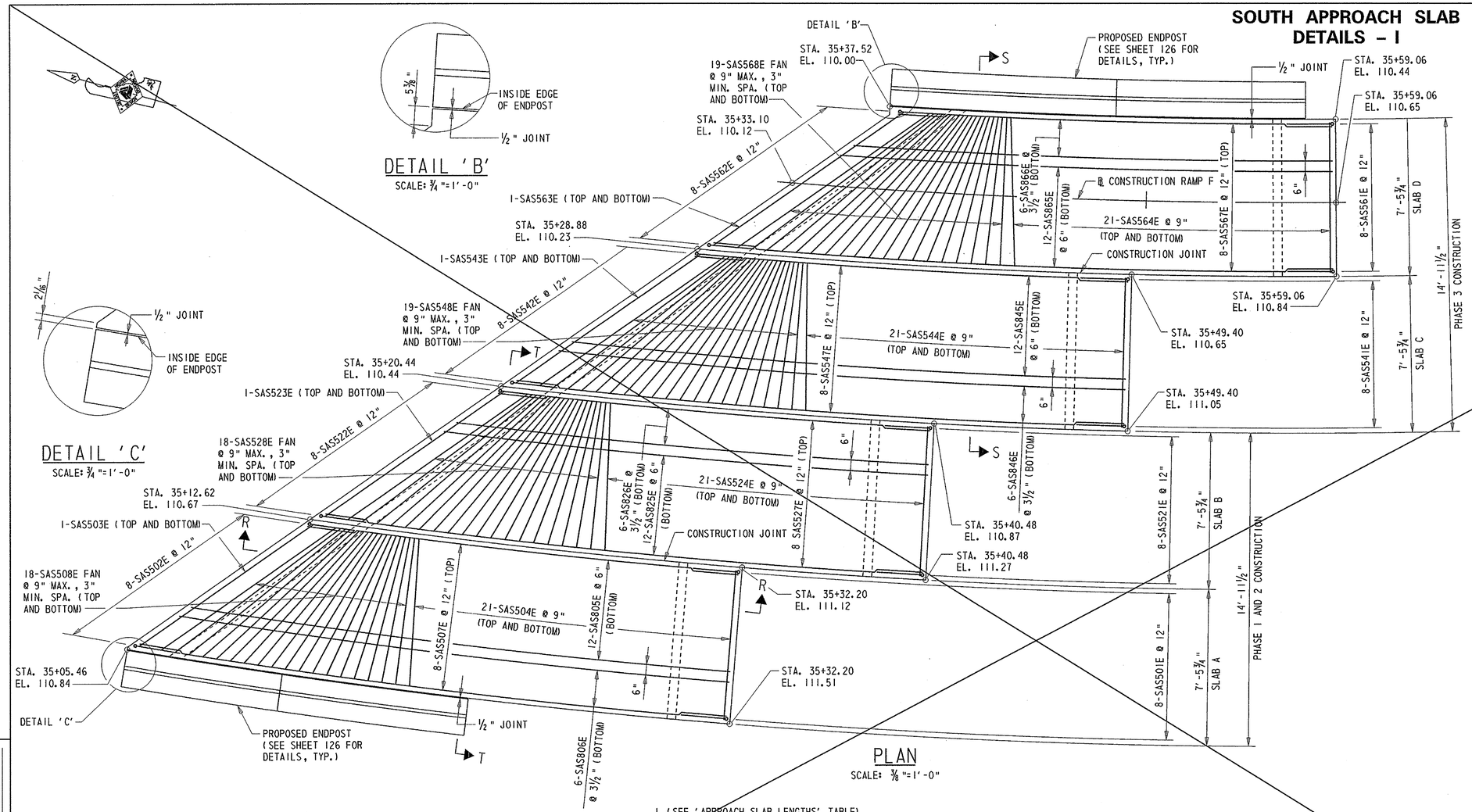

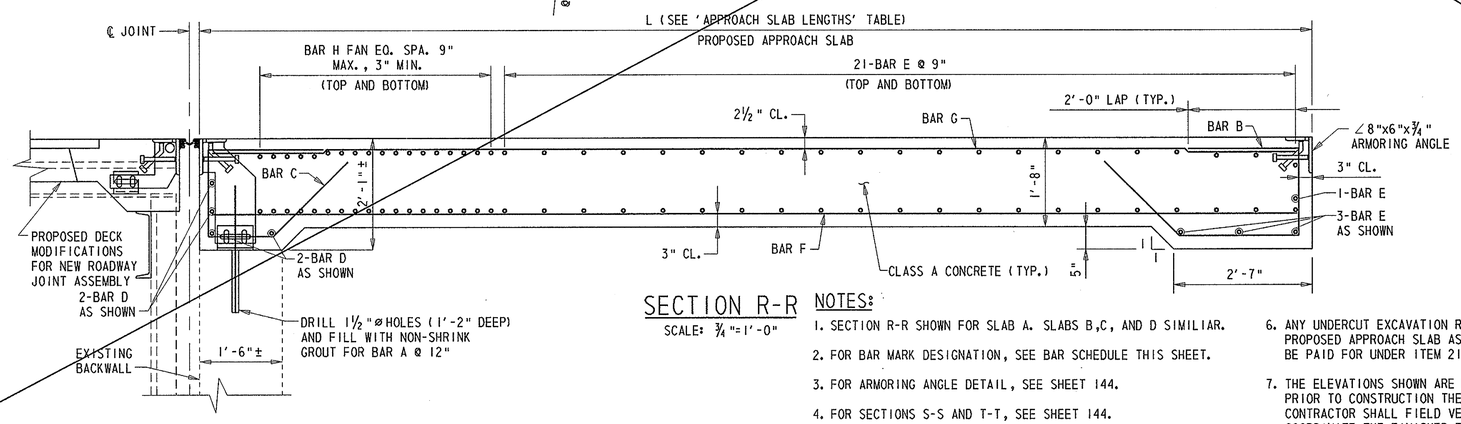

SECTION R-R

SCALE: ¾"=1'-0"

NOTES:

1. SECTION R-R SHOWN FOR SLAB A. SLABS B,C, AND D SIMILIAR.
2. FOR BAR MARK DESIGNATION, SEE BAR SCHEDULE THIS SHEET.
3. FOR ARMORING ANGLE DETAIL, SEE SHEET 144.
4. FOR SECTIONS S-S AND T-T, SEE SHEET 144.
5. PAYMENT FOR REMOVING THE EXISTING APPROACH SLAB CONCRETE AND ASPHALT OVERLAY AND ANY NECESSARY GRADING AND COMPACTION WILL BE PAID FOR UNDER ITEM 607000 - REMOVAL OF EXISTING MASONRY.
6. ANY UNDERCUT EXCAVATION REQUIRED WITHIN THE LIMITS OF THE PROPOSED APPROACH SLAB AS DETERMINED BY THE ENGINEER SHALL BE PAID FOR UNDER ITEM 212000 - UNDERCUT EXCAVATION.
7. THE ELEVATIONS SHOWN ARE FOR INFORMATIONAL PURPOSES ONLY. PRIOR TO CONSTRUCTION THE CONCRETE APPROACH SLABS. THE CONTRACTOR SHALL FIELD VERIFY ALL ELEVATIONS SHOWN AND COORDINATE THE FINISHED ELEVATIONS WITH THE ADJACENT CONCRETE ENDPOSTS AND TOP OF OVERLAY ELEVATIONS.

APPROACH SLAB LENGTHS

	PHASE 1		PHASE 3	
	SLAB A	SLAB B	SLAB C	SLAB D
L	VARIES 20'-9" TO 28'-11¾"	VARIES 20'-9" TO 29'-6¼"	VARIES 20'-9" TO 29'-11⅞"	VARIES 21'-3⅛" TO 30'-6¼"

BAR SCHEDULE

	PHASE 1		PHASE 3	
	SLAB A	SLAB B	SLAB C	SLAB D
BAR A	D503E	D503E	D504E	D504E
BAR B	SAS501E	SAS521E	SAS541E	SAS561E
BAR C	SAS502E	SAS522E	SAS542E	SAS562E
BAR D	SAS503E	SAS523E	SAS543E	SAS563E
BAR E	SAS504E	SAS524E	SAS544E	SAS564E
BAR F	SAS805E	SAS825E	SAS845E	SAS865E
BAR G	SAS507E	SAS527E	SAS547E	SAS567E
BAR H	SAS508E	SAS528E	SAS548E	SAS568E

PREL. TRACING ____ W.R.A. ____ DESIGN ____ J.T.L./F.J.O. ____ CHKD. ____ W.A.G.

M:\313031\as03br715d.dgn

SOUTH APPROACH SLAB DETAILS - I

BR. 1-715D 6048

CONTRACT	COUNTY	F.A.P. NO.	SHEET NO.	TOTAL SHTS.
22-074-09	NEW CASTLE	SEE TITLE SHEET	143A	152

REHABILITATION OF BRIDGE NOS. 1-715, 1-715A, & 1-715D ON SR 273 OVER I-95

REVISIONS

△ ADDED SHEET	
11/25/03 WAG/GM	

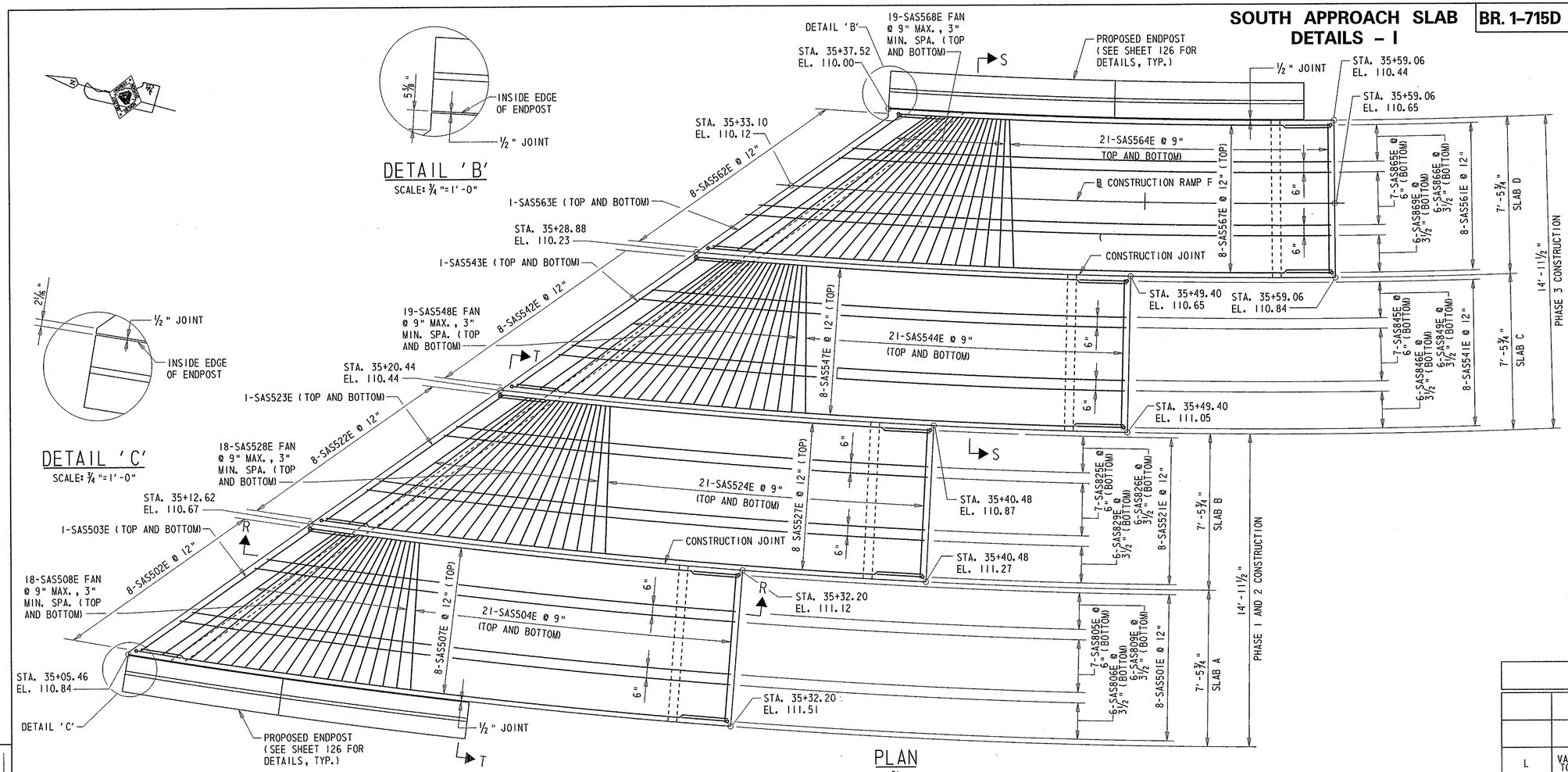

PLAN

SCALE: 3/8"=1'-0"

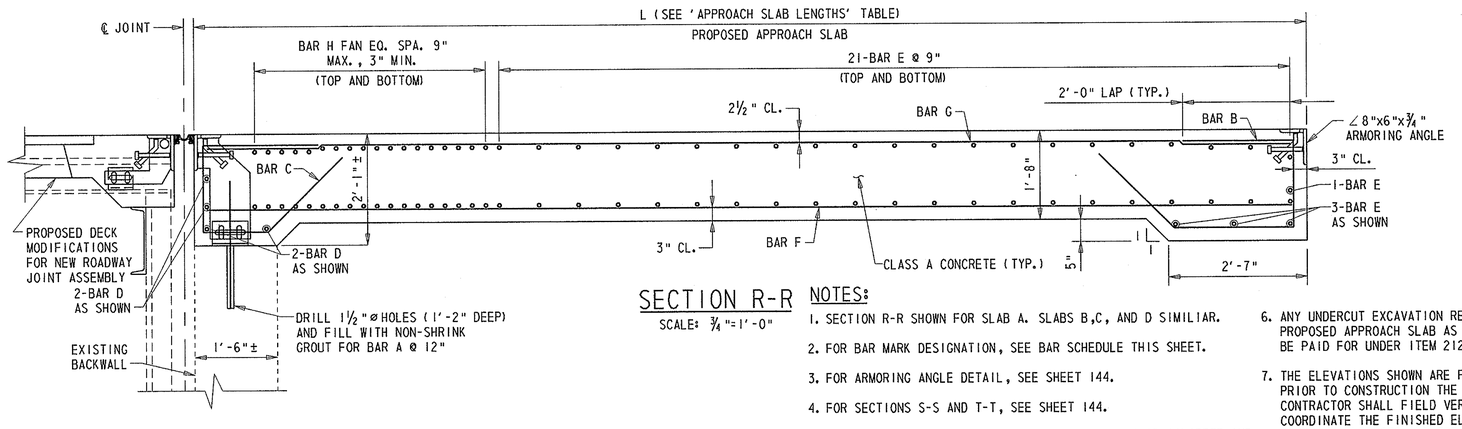

SECTION R-R

SCALE: 3/4"=1'-0"

NOTES:

1. SECTION R-R SHOWN FOR SLAB A. SLABS B,C, AND D SIMILIAR.
2. FOR BAR MARK DESIGNATION, SEE BAR SCHEDULE THIS SHEET.
3. FOR ARMORING ANGLE DETAIL, SEE SHEET 144.
4. FOR SECTIONS S-S AND T-T, SEE SHEET 144.
5. PAYMENT FOR REMOVING THE EXISTING APPROACH SLAB CONCRETE AND ASPHALT OVERLAY AND ANY NECESSARY GRADING AND COMPACTION WILL BE PAID FOR UNDER ITEM 607000 - REMOVAL OF EXISTING MASONRY.
6. ANY UNDERCUT EXCAVATION REQUIRED WITHIN THE LIMITS OF THE PROPOSED APPROACH SLAB AS DETERMINED BY THE ENGINEER SHALL BE PAID FOR UNDER ITEM 212000 - UNDERCUT EXCAVATION.
7. THE ELEVATIONS SHOWN ARE FOR INFORMATIONAL PURPOSES ONLY. PRIOR TO CONSTRUCTION THE CONCRETE APPROACH SLABS. THE CONTRACTOR SHALL FIELD VERIFY ALL ELEVATIONS SHOWN AND COORDINATE THE FINISHED ELEVATIONS WITH THE ADJACENT CONCRETE ENDPOSTS AND TOP OF OVERLAY ELEVATIONS.

APPROACH SLAB LENGTHS

	PHASE 1		PHASE 3	
	SLAB A	SLAB B	SLAB C	SLAB D
L	VARIES 20'-9" TO 28'-11 3/4"	VARIES 20'-9" TO 29'-6 1/4"	VARIES 20'-9" TO 29'-11 7/8"	VARIES 21'-3 1/8" TO 30'-6 1/4"

BAR SCHEDULE

	PHASE 1		PHASE 3	
	SLAB A	SLAB B	SLAB C	SLAB D
BAR A	D503E	D503E	D504E	D504E
BAR B	SAS501E	SAS521E	SAS541E	SAS561E
BAR C	SAS502E	SAS522E	SAS542E	SAS562E
BAR D	SAS503E	SAS523E	SAS543E	SAS563E
BAR E	SAS504E	SAS524E	SAS544E	SAS564E
BAR F	SAS805E SAS806E SAS809E	SAS825E SAS826E SAS829E	SAS845E SAS846E SAS849E	SAS865E SAS866E SAS869E
BAR G	SAS507E	SAS527E	SAS547E	SAS567E
BAR H	SAS508E	SAS528E	SAS548E	SAS568E

PREL. TRACING ____ W.R.A. ____ DESIGN ____ J.T.L./F.J.O. ____ CHKD. ____ W.A.G. ____

M:\313031\as03br715dAdgn

SOUTH APPROACH SLAB DETAILS – II

BR. 1-715D 6048	CONTRACT	COUNTY	F.A.P. NO.	SHEET NO.	TOTAL SHTS.
	22-074-09	NEW CASTLE	SEE TITLE SHEET	144	152

REHABILITATION OF BRIDGE NOS. 1-715, 1-715A, & 1-715D ON SR 273 OVER I-95

REVISIONS

2 DELETED SHEET	
11/25/03 WAG/GM	

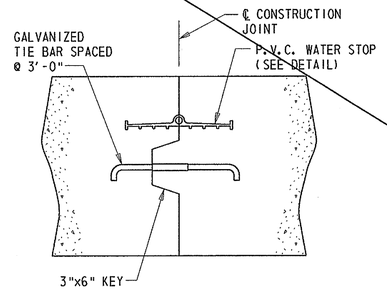

CONSTRUCTION JOINT DETAIL

SCALE: 1½"=1'-0"

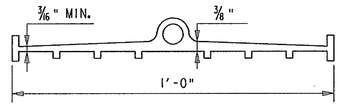

P.V.C. WATER STOP

SCALE: N.T.S.

NOTES:

1. COSTS FOR GALVANIZED TIE BARS, P.V.C. WATERSTOPS, AND ½" PREFORMED EXPANSION JOINT MATERIAL WITH SILICONE SEALANT SHALL BE INCIDENTAL TO ITEM 602009 - "PORTLAND CEMENT CONCRETE MASONRY, APPROACH SLAB, CLASS A".

3. THE SILICONE SEALANT SHALL BE APPLIED TO THE JOINT OPENING PER THE MANUFACTURER'S RECOMMENDATIONS.

4. SILICONE SEALANT MATERIAL SHALL BE A LOW MODULUS, ONE COMPONENT COMPOUND UTILIZING A BONDING PRIMER (IF RECOMMENDED BY THE MANUFACTURER) AND SHALL CONFORM TO THE FOLLOWING WHEN TESTED AT 73 ± 3°F AND 45-55 PERCENT HUMIDITY:

SHORE A HARDNESS, AT 7 DAYS (ASTM D 2240)	10-25
TENSILE STRENGTH AT 150% ELONGATION (ASTM D 412 DIE C)	45psi
MIN. ELONGATION (ASTM D 412 DIE C)	700%
MIN. ADHESION IN PEEL (FED. SPEC. TT-S-00230)	20 lb/in.
MAX. FLOW	0.3
TACK-FREE TIME	20-75 MINUTES

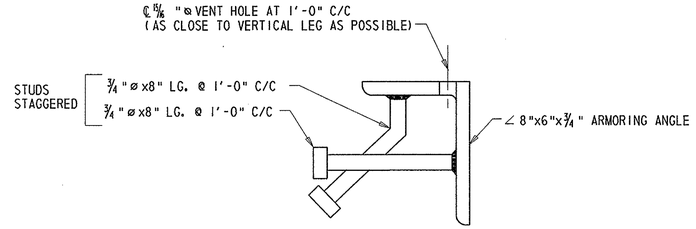

ARMORING ANGLE DETAIL

SCALE: 3"=1'-0"

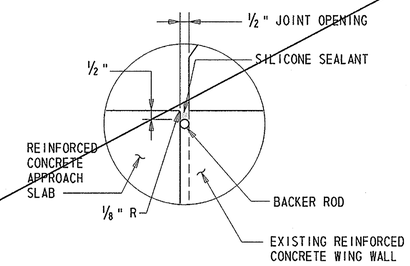

DETAIL 'D'

SCALE: 3"=1'-0"

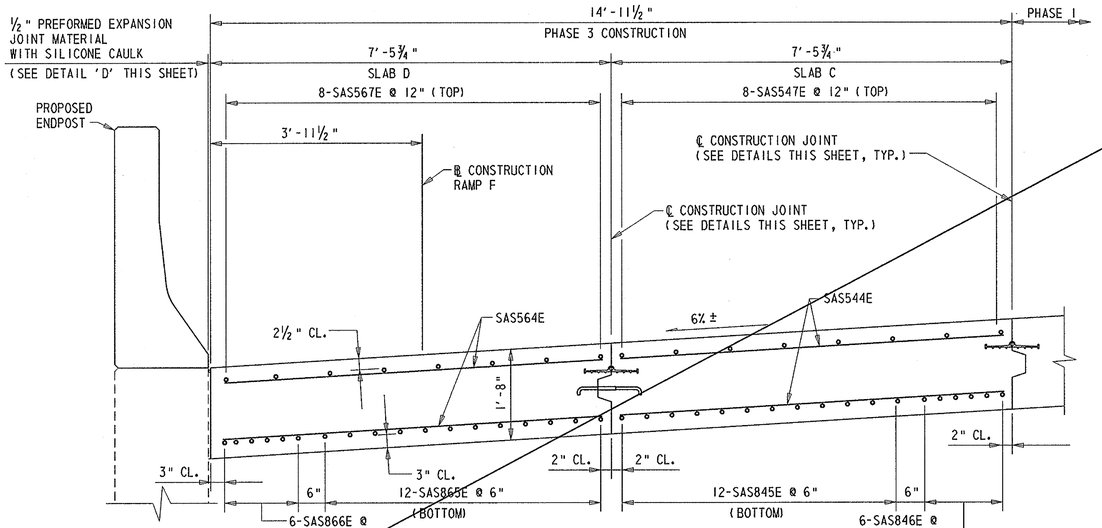

SECTION S-S

SCALE: ¾"=1'-0"

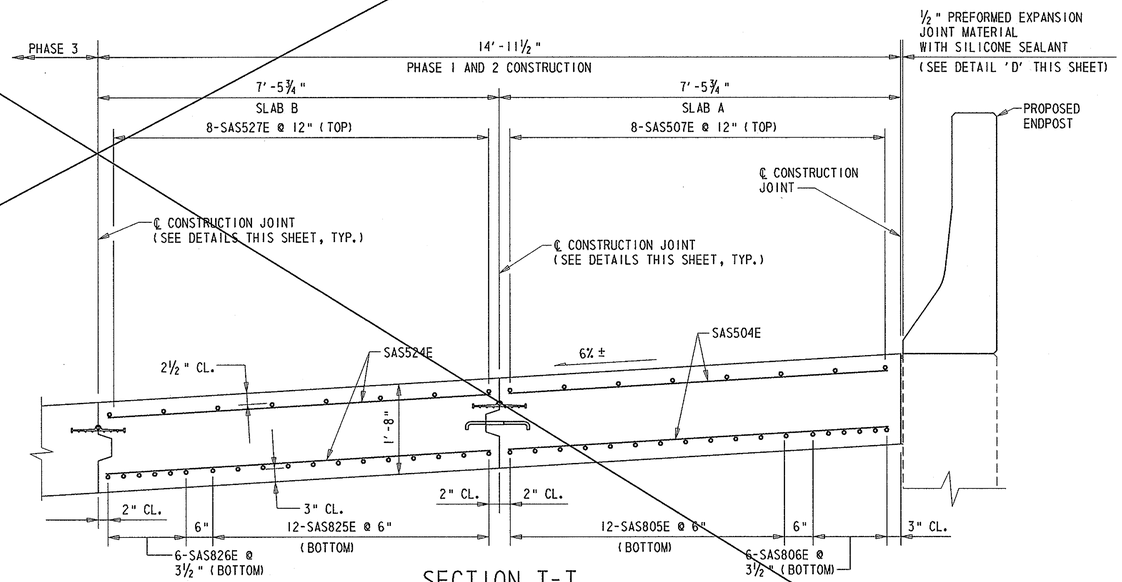

SECTION T-T

SCALE: ¾"=1'-0"

PREL. TRACING ____ W.R.A. ____ DESIGN ____ J.T.L./F.J.O. ____ CHKD. ____ W.A.G.

M:\31303IA\as02br715d.dgn

SOUTH APPROACH SLAB DETAILS – II

BR. 1-715D 6048

CONTRACT	COUNTY	F.A.P. NO.	SHEET NO.	TOTAL SHTS.
22-074-09	NEW CASTLE	SEE TITLE SHEET	144A	152

REHABILITATION OF BRIDGE NOS. 1-715, 1-715A, & 1-715D ON SR 273 OVER I-95

REVISIONS

△2 ADDED SHEET	
11/25/03 WAG/GM	

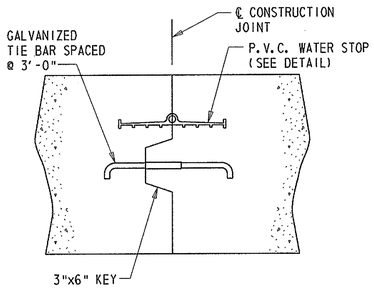

CONSTRUCTION JOINT DETAIL

SCALE: 1½"=1'-0"

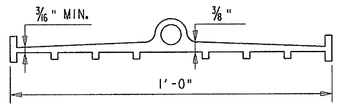

P.V.C. WATER STOP

SCALE: N.T.S.

NOTES:

1. COSTS FOR GALVANIZED TIE BARS, P.V.C. WATERSTOPS, AND ½" PREFORMED EXPANSION JOINT MATERIAL WITH SILICONE SEALANT SHALL BE INCIDENTAL TO ITEM 602009 - "PORTLAND CEMENT CONCRETE MASONRY, APPROACH SLAB, CLASS A".

3. THE SILICONE SEALANT SHALL BE APPLIED TO THE JOINT OPENING PER THE MANUFACTURER'S RECOMMENDATIONS.

4. SILICONE SEALANT MATERIAL SHALL BE A LOW MODULUS, ONE COMPONENT COMPOUND UTILIZING A BONDING PRIMER (IF RECOMMENDED BY THE MANUFACTURER) AND SHALL CONFORM TO THE FOLLOWING WHEN TESTED AT 73 ± 3°F AND 45-55 PERCENT HUMIDITY:

SHORE A HARDNESS, AT 7 DAYS (ASTM D 2240)	10-25
TENSILE STRENGTH AT 150% ELONGATION (ASTM D 412 DIE C)	45psi
MIN. ELONGATION (ASTM D 412 DIE C)	700%
MIN. ADHESION IN PEEL (FED. SPEC. TT-S-00230)	20 lb/in.
MAX. FLOW	0.3
TACK-FREE TIME	20-75 MINUTES

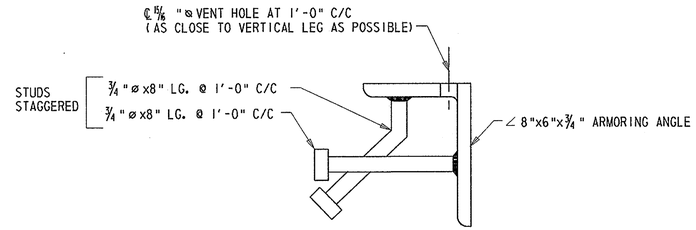

ARMORING ANGLE DETAIL

SCALE: 3"=1'-0"

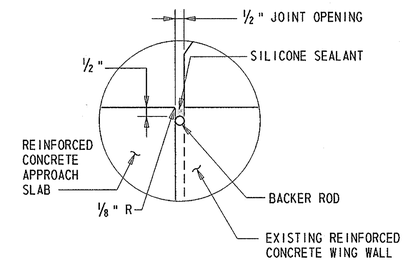

DETAIL 'D'

SCALE: 3"=1'-0"

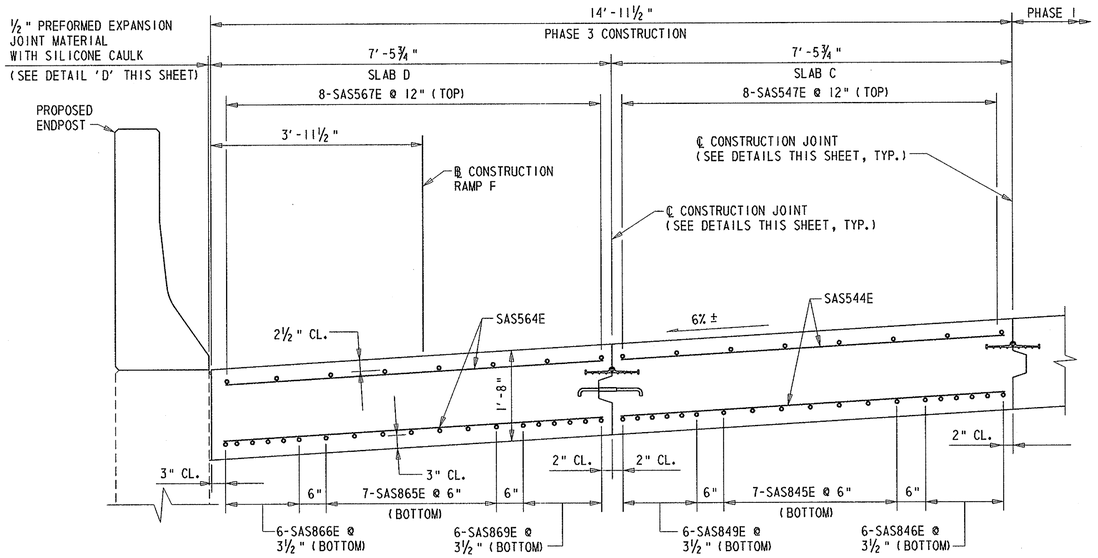

SECTION S-S

SCALE: ¾"=1'-0"

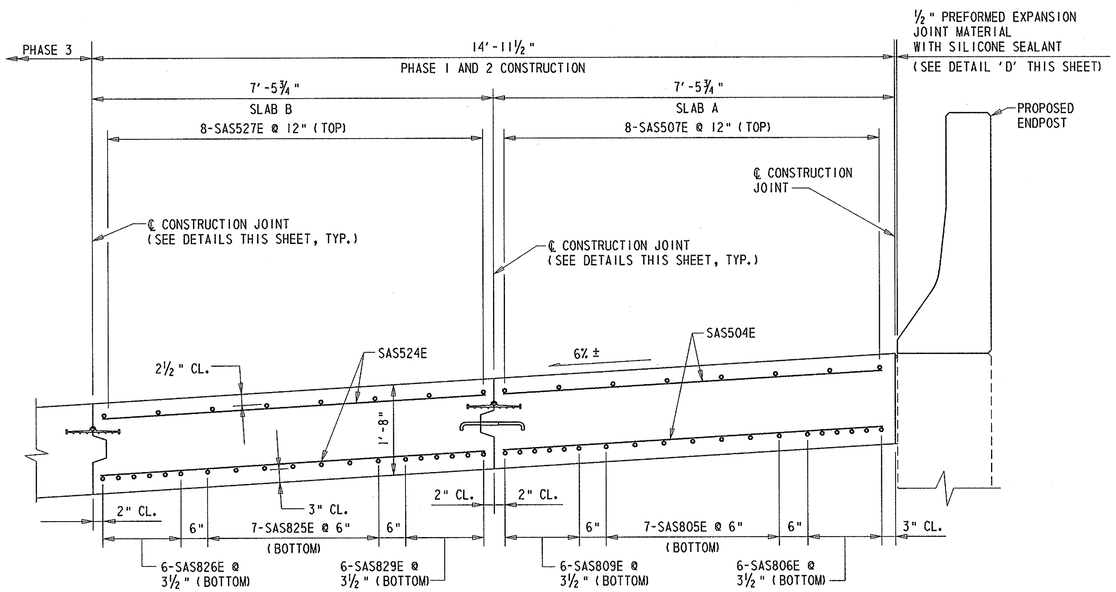

SECTION T-T

SCALE: ¾"=1'-0"

PREL. TRACING ____ W.R.A. ____ DESIGN ____ J.T.L./F.J.O. ____ CHKD. ____ W.A.G.

M:\3130314\as02br715dAdgn

BR. 1-715D 6048	CONTRACT	COUNTY	F.A.P. NO.	SHEET NO.	TOTAL SHTS.
	22-074-09	NEW CASTLE	SEE TITLE SHEET	145	152

REHABILITATION OF BRIDGE NOS. 1-715, 1-715A, & 1-715D ON SR 273 OVER I-95

REVISIONS

NORTH APPROACH SLAB DETAILS

NOTE:

THE ELEVATIONS SHOWN ARE FOR INFORMATIONAL PURPOSES ONLY. PRIOR TO CONSTRUCTION THE CONCRETE APPROACH SLABS, THE CONTRACTOR SHALL FIELD VERIFY ALL ELEVATIONS SHOWN AND COORDINATE THE FINISHED ELEVATIONS WITH THE ADJACENT CONCRETE ENDPOSTS AND TOP OF OVERLAY ELEVATIONS.

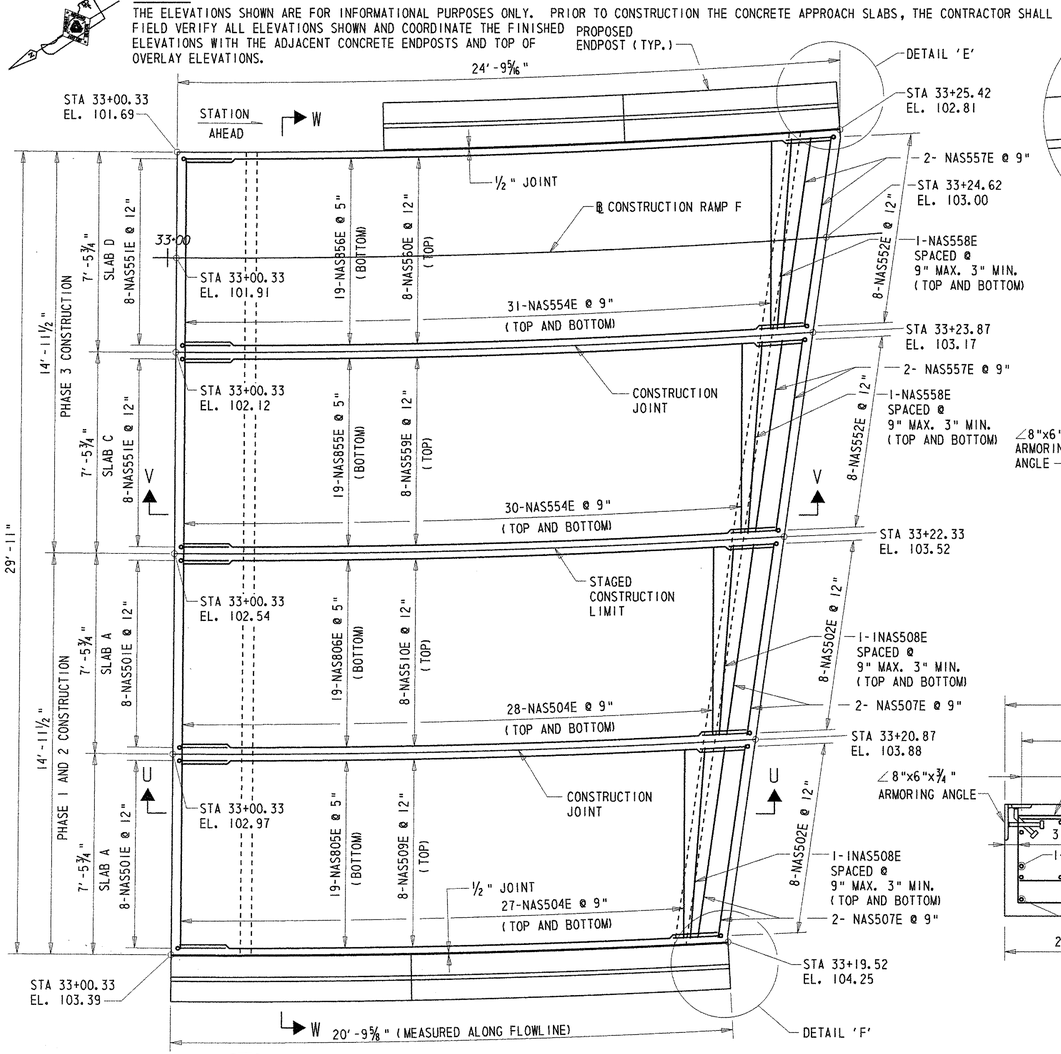

PLAN

SCALE: 3/8"=1'-0"

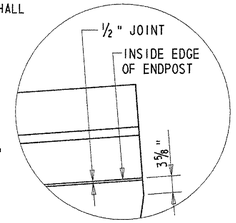

DETAIL 'E'

SCALE: 3/4"=1'-0"

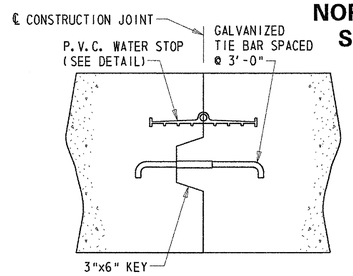

CONSTRUCTION JOINT DETAIL

SCALE: 1 1/2"=1'-0"

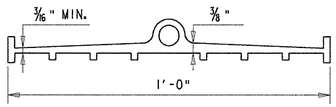

P.V.C. WATER STOP

SCALE: N.T.S.

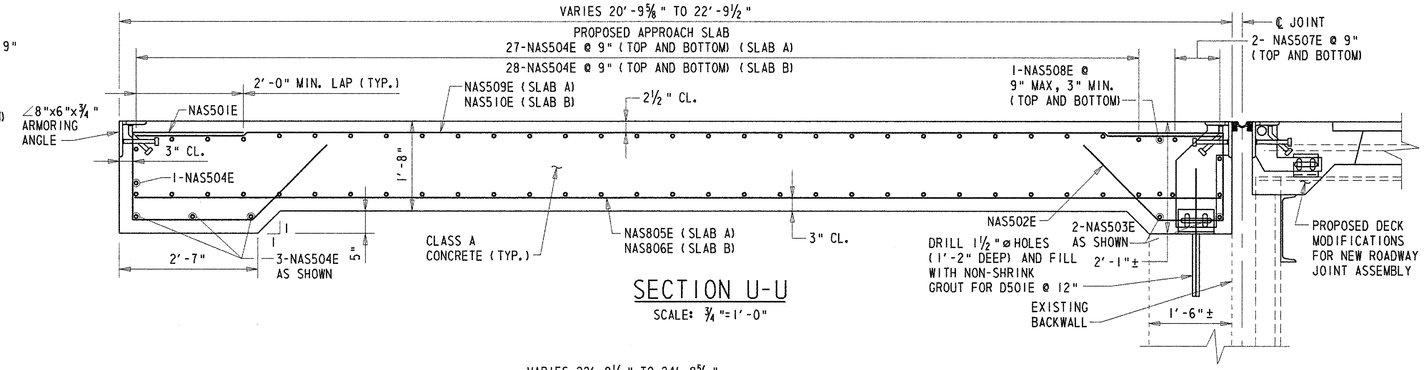

SECTION U-U

SCALE: 3/4"=1'-0"

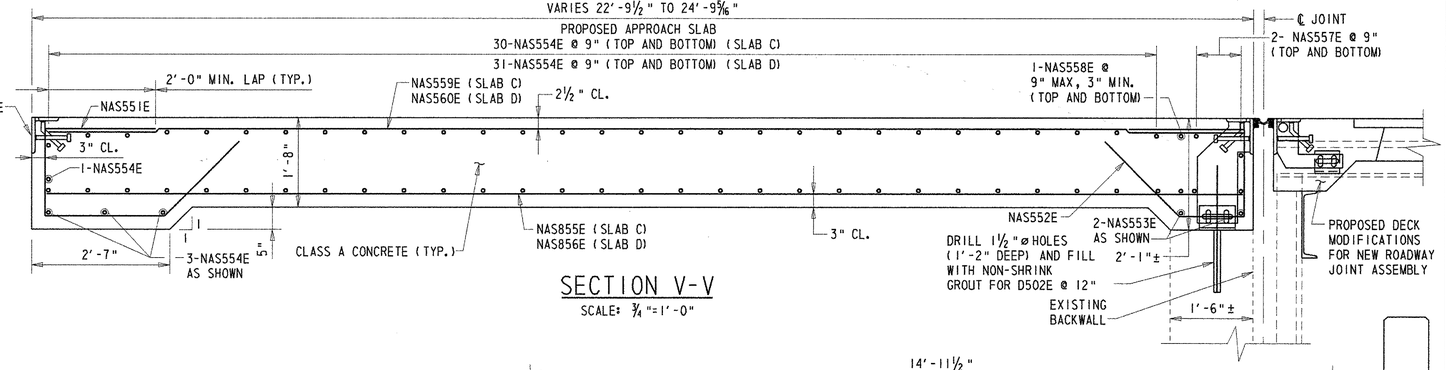

SECTION V-V

SCALE: 3/4"=1'-0"

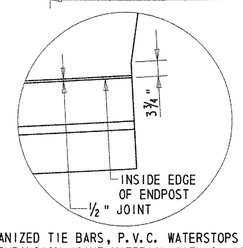

DETAIL 'F'

SCALE: 3/4"=1'-0"

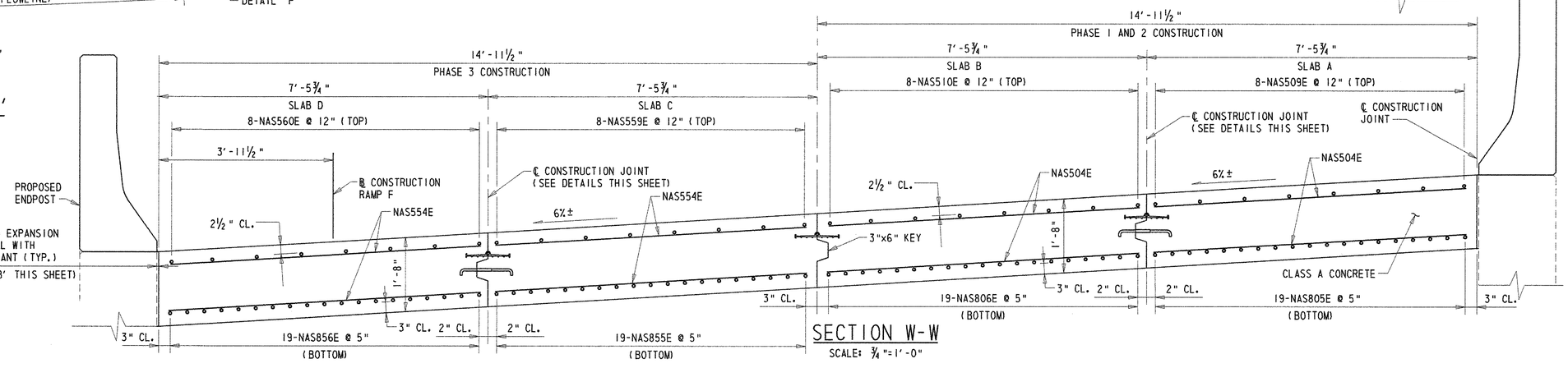

SECTION W-W

SCALE: 3/4"=1'-0"

NOTE:

1. COSTS FOR GALVANIZED TIE BARS, P.V.C. WATERSTOPS AND 1/2" PREFORMED EXPANSION JOINT MATERIAL WITH SILICONE SEALANT SHALL BE INCIDENTAL TO ITEM 602009 - "PORTLAND CEMENT CONCRETE MASONRY, APPROACH SLAB, CLASS A".
2. FOR ARMORING ANGLE DETAIL, SEE SHEET 144.
3. PAYMENT FOR REMOVING THE EXISTING APPROACH SLAB CONCRETE AND ASPHALT OVERLAY AND ANY NECESSARY EXCAVATION, GRADING AND COMPACTION WILL BE PAID FOR UNDER ITEM 607000 - REMOVAL OF EXISTING MASONRY.
4. ANY UNDERCUT EXCAVATION REQUIRED WITHIN THE LIMITS OF THE PROPOSED APPROACH SLAB AS DETERMINED BY THE ENGINEER SHALL BE PAID FOR UNDER ITEM 212000 - UNDERCUT EXCAVATION.

PREL. TRACING W.R.A. DESIGN J.T.L./F.J.O. CHKD. W.A.C.

M:\313031\4\AS01BR715D.DGN

REINFORCING STEEL DEVELOPMENT LENGTH AND LAP TABLES

BR. 1-715D 6048	CONTRACT	COUNTY	F.A.P. NO.	SHEET NO.	TOTAL SHTS.
	22-074-09	NEW CASTLE	SEE TITLE SHEET	146	152

REHABILITATION OF BRIDGE NOS. 1-715, 1-715A, & 1-715D ON SR 273 OVER I-95

REVISIONS

BAR SIZE	* LOCATION CATEGORY			3 TIMES BAR DIAMETER	6 TIMES BAR DIAMETER	= C/C SPACING
	A	B	C			
#4	1'-9"	1'-6"	1'-3"	1½"	3"	3½"
#5	2'-2"	1'-11"	1'-6"	1⅞"	3¾"	4⅜"
#6	2'-9"	2'-5"	2'-0"	2¼"	4½"	5¼"
#7	3'-9"	3'-4"	2'-8"	2⅝"	5¼"	6⅛"

CASE NO. 1

FOR BARS COATED WITH EPOXY WITH COVER LESS THAN 3 TIMES THE BAR DIAMETER OR CLEAR SPACING BETWEEN BARS LESS THAN 6 TIMES THE BAR DIAMETER.

BAR SIZE	* LOCATION CATEGORY		
	A	B	C
#4	1'-8"	1'-2"	1'-0"
#5	2'-1"	1'-6"	1'-2"
#6	2'-7"	1'-11"	1'-6"
#7	3'-7"	2'-7"	2'-1"

CASE NO. 2

FOR BARS COATED WITH EPOXY NOT IN CASE NO. 1

* LOCATION CATEGORY

A-BARS IN HORIZONTAL LAYERS IN TOP OF POUR WITH 12" OR MORE OF CONCRETE BELOW THEM SUCH AS IN: FOOTINGS, PIER CAPS, ETC.
B-ALL BARS NOT IN CATEGORY A SPACED LESS THAN 6" APART.
C-ALL BARS NOT IN CATEGORY A SPACED 6" OR MORE APART.

DEVELOPEMENT LENGTH DIMENSIONS FOR GRADE 60 REINFORCING STEEL IN 3000 P.S.I. CONCRETE EPOXY COATED REINFORCING

BAR SIZE	* LOCATION CATEGORY			3 TIMES BAR DIAMETER	6 TIMES BAR DIAMETER	= C/C SPACING
	A	B	C			
#4	2'-11"	2'-7"	2'-1"	1½"	3"	3½"
#5	3'-8"	3'-3"	2'-7"	1⅞"	3¾"	4⅜"
#6	4'-8"	4'-2"	3'-4"	2¼"	4½"	5¼"
#7	6'-4"	5'-7"	4'-6"	2⅝"	5¼"	6⅛"

CASE NO. 1

FOR BARS COATED WITH EPOXY WITH COVER LESS THAN 3 TIMES THE BAR DIAMETER OR CLEAR SPACING BETWEEN BARS LESS THAN 6 TIMES THE BAR DIAMETER.

BAR SIZE	* LOCATION CATEGORY		
	A	B	C
#4	2'-9"	2'-0"	1'-7"
#5	3'-6"	2'-6"	2'-0"
#6	4'-5"	3'-2"	2'-7"
#7	6'-0"	4'-4"	3'-6"

CASE NO. 2

FOR BARS COATED WITH EPOXY NOT IN CASE NO. 1

* LOCATION CATEGORY

A-BARS IN HORIZONTAL LAYERS IN TOP OF POUR WITH 12" OR MORE OF CONCRETE BELOW THEM SUCH AS IN: FOOTINGS, PIER CAPS, ETC.
B-ALL BARS NOT IN CATEGORY A SPACED LESS THAN 6" APART.
C-ALL BARS NOT IN CATEGORY A SPACED 6" OR MORE APART.

BAR LAP DIMENSIONS FOR GRADE 60 REINFORCING STEEL IN 3000 P.S.I. CONCRETE EPOXY COATED REINFORCING

NOTE:

BASED ON EXISTING PLANS, THE STRENGTH OF THE EXISTING CONCRETE IS 3000 P.S.I.

BAR SIZE	* LOCATION CATEGORY			3 TIMES BAR DIAMETER	6 TIMES BAR DIAMETER	= C/C SPACING
	A	B	C			
#4	1'-9"	1'-6"	1'-3"	1½"	3"	3½"
#5	2'-2"	1'-11"	1'-6"	1⅞"	3¾"	4⅜"
#6	2'-7"	2'-3"	1'-10"	2¼"	4½"	5¼"
#7	3'-1"	2'-9"	2'-2"	2⅝"	5¼"	6⅛"

CASE NO. 1

FOR BARS COATED WITH EPOXY WITH COVER LESS THAN 3 TIMES THE BAR DIAMETER OR CLEAR SPACING BETWEEN BARS LESS THAN 6 TIMES THE BAR DIAMETER.

BAR SIZE	* LOCATION CATEGORY		
	A	B	C
#4	1'-8"	1'-2"	1'-0"
#5	2'-1"	1'-6"	1'-2"
#6	2'-5"	1'-9"	1'-5"
#7	2'-11"	2'-1"	1'-8"

CASE NO. 2

FOR BARS COATED WITH EPOXY NOT IN CASE NO. 1

* LOCATION CATEGORY

A-BARS IN HORIZONTAL LAYERS IN TOP OF POUR WITH 12" OR MORE OF CONCRETE BELOW THEM SUCH AS IN: FOOTINGS, PIER CAPS, ETC.
B-ALL BARS NOT IN CATEGORY A SPACED LESS THAN 6" APART.
C-ALL BARS NOT IN CATEGORY A SPACED 6" OR MORE APART.

DEVELOPEMENT LENGTH DIMENSIONS FOR GRADE 60 REINFORCING STEEL IN 4500 P.S.I. CONCRETE EPOXY COATED REINFORCING

BAR SIZE	* LOCATION CATEGORY			3 TIMES BAR DIAMETER	6 TIMES BAR DIAMETER	= C/C SPACING
	A	B	C			
#4	2'-11"	2'-7"	2'-1"	1½"	3"	3½"
#5	3'-8"	3'-3"	2'-7"	1⅞"	3¾"	4⅜"
#6	4'-5"	3'-10"	3'-1"	2¼"	4½"	5¼"
#7	5'-3"	4'-7"	3'-8"	2⅝"	5¼"	6⅛"

CASE NO. 1

FOR BARS COATED WITH EPOXY WITH COVER LESS THAN 3 TIMES THE BAR DIAMETER OR CLEAR SPACING BETWEEN BARS LESS THAN 6 TIMES THE BAR DIAMETER.

BAR SIZE	* LOCATION CATEGORY		
	A	B	C
#4	2'-9"	2'-0"	1'-7"
#5	3'-6"	2'-6"	2'-0"
#6	4'-2"	3'-0"	2'-5"
#7	4'-11"	3'-6"	2'-10"

CASE NO. 2

FOR BARS COATED WITH EPOXY NOT IN CASE NO. 1

* LOCATION CATEGORY

A-BARS IN HORIZONTAL LAYERS IN TOP OF POUR WITH 12" OR MORE OF CONCRETE BELOW THEM SUCH AS IN: FOOTINGS, PIER CAPS, ETC.
B-ALL BARS NOT IN CATEGORY A SPACED LESS THAN 6" APART.
C-ALL BARS NOT IN CATEGORY A SPACED 6" OR MORE APART.

BAR LAP DIMENSIONS FOR GRADE 60 REINFORCING STEEL IN 4500 P.S.I. CONCRETE EPOXY COATED REINFORCING

PREL. TRACING _____ W.R.A. _____ DESIGN _____ J.T.L./F.J.O. _____ CHKD. _____ W.A.C. _____

M:\3130314\MD04BR715D.DGN

(1) MARK NUMBER WITH SUFFIX 'E' DENOTES EPOXY COATED REINFORCING STEEL.

(2) MARK 'LOCATION PREFIXES' ARE AS FOLLOWS: (X)NAS = NORTH APPROACH SLAB, (X)SAS = SOUTH APPROACH SLAB, (X)D = DOWEL, (X)PA = PARAPET, (X)S = SLAB, (X)EP = ENDPOST - WHERE (X) DENOTES SPECIFIC LOCATION [IF APPLICABLE].

SPECIFICATIONS					BENDING DIMENSIONS											
QTY.	SIZE	LENGTH	MARK	TYPE	A	B	C	D	E	F/R	G	H	J	K	O
NORTH APPROACH SLAB															
(PHASES 1 AND 2)															
18	5	2-04.0	D501E	STR		2-04.0									
16	5	7-03.2	NAS501E	16	2-00.0	1-07.4	2-02.6	1-05.0				1-00.0		1-00.0	3-02.6
16	5	6-02.4	NAS502E	16	2-00.0	1-07.4	1-02.0	1-05.0				1-00.0		1-00.0	2-02.0
4	5	7-02.4	NAS503E	STR		7-02.4									
118	5	7-00.6	NAS504E	STR		7-00.6									
19	8	* 20-10.0	NAS805E	9		*20-10.0				332-02.4		0-02.0			*20-10.0
						(B AND D VARY FROM 20-04.0 TO 21-04.0)									
19	8	* 21-10.2	NAS806E	9		*21-10.2				324-08.6		0-02.0			*21-10.2
						(B AND D VARY FROM 21-04.0 TO 22-04.4)									
4	5	7-02.4	NAS507E	STR		7-02.4									
2	5	7-01.4	NAS508E	STR		7-01.4									
8	5	20-08.4	NAS509E	9		*20-08.4				332-02.4		0-02.0			*20-08.4
						(B AND D VARY FROM 20-02.4 TO 21-02.4)									
8	5	21-08.6	NAS510E	9		*21-08.6				324-08.6		0-02.0			*21-08.6
						(B AND D VARY FROM 21-02.4 TO 22-03.0)									
(PHASE 3)															
18	5	2-04.0	D502E	STR		2-04.0									
16	5	7-03.2	NAS551E	16	2-00.0	1-07.4	2-02.6	1-05.0				1-00.0		1-00.0	3-02.6
16	5	6-02.4	NAS552E	16	2-00.0	1-07.4	1-02.0	1-05.0				1-00.0		1-00.0	2-02.0
4	5	7-02.6	NAS553E	STR		7-02.6									
130	5	7-00.6	NAS554E	STR		7-00.6									
19	8	* 22-10.4	NAS855E	9		*22-10.4				317-03.0		0-02.4			*22-10.4
						(B AND D VARY FROM 22-04.4 TO 23-04.8)									
19	8	* 23-10.6	NAS856E	9		*23-10.6				309-09.2		0-02.6			*23-10.6
						(B AND D VARY FROM 23-04.6 TO 24-02.8)									
4	5	7-01.6	NAS557E	STR		7-01.6									
2	5	7-02.6	NAS558E	STR		7-02.6									
8	5	* 22-09.0	NAS559E	9		*22-09.0				317-03.0		0-02.2			*22-09.0
						(B AND D VARY FROM 22-03.0 TO 23-03.0)									
8	5	* 23-09.2	NAS560E	9		*23-09.2				309-09.2		0-02.4			*23-09.2
						(B AND D VARY FROM 23-03.2 TO 24-03.2)									
SOUTH APPROACH SLAB															
(PHASES 1 AND 2)															
24	5	2-04.0	D503E	STR		2-04.0									
8	5	7-03.2	SAS501E	16	2-00.0	1-07.4	2-02.6	1-05.0				1-00.0		1-00.0	3-02.6
8	5	6-10.2	SAS502E	16	2-00.0	1-07.4	1-09.6	1-05.0				1-00.0		1-00.0	2-09.6
4	5	10-04.6	SAS503E	STR		10-04.6									
46	5	7-00.6	SAS504E	STR		7-00.6									
12	8	* 23-04.4	SAS805E	9		*23-04.4				331-05.6		0-02.4			*23-04.4
						(B AND D VARY FROM 20-06.2 TO 26-02.6)									
6	8	* 27-06.7	SAS806E	9		*27-06.7				335-02.6		0-03.2			*27-06.7
						(B AND D VARY FROM 28-05.0 TO 26-08.6)									
8	5	* 24-04.0	SAS507E	9		*24-04.0				332-02.4		0-02.4			*24-04.0
						(B AND D VARY FROM 20-04.6 TO 28-03.4)									
18	5	* 8-08.6	SAS508E	STR		* 8-08.6									
						(B VARIES FROM 7-00.6 TO 10-04.6)									
8	5	7-03.2	SAS521E	16	2-00.0	1-07.4	2-02.6	1-05.0				1-00.0		1-00.0	3-02.6
8	5	6-10.4	SAS522E	16	2-00.0	1-07.4	1-10.0	1-05.0				1-00.0		1-00.0	2-10.0
4	5	10-08.0	SAS523E	STR		10-08.0									
46	5	7-00.6	SAS524E	STR		7-00.6									
12	8	* 25-11.0	SAS825E	9		*25-11.0				325-08.4		0-03.0			*25-11.0
						(B AND D VARY FROM 22-11.2 TO 28-10.6)									
6	8	* 21-06.0	SAS826E	9		*21-06.0				321-09.6		0-02.0			*21-06.0
						(B AND D VARY FROM 20-07.4 TO 22-04.4)									
8	5	* 24-07.0	SAS527E	9		*24-07.0				324-08.6		0-02.6			*24-07.0
						(B AND D VARY FROM 20-04.6 TO 28-09.2)									
18	5	* 8-10.3	SAS528E	STR		* 8-10.3									
						(B VARIES FROM 7-00.6 TO 10-08.0)									

SPECIFICATIONS					BENDING DIMENSIONS											
QTY.	SIZE	LENGTH	MARK	TYPE	A	B	C	D	E	F/R	G	H	J	K	O
(PHASE 3)															
25	5	2-04.0	D504E	STR		2-04.0									
8	5	7-03.2	SAS541E	16	2-00.0	1-07.4	2-02.6	1-05.0				1-00.0		1-00.0	3-02.6
8	5	6-11.6	SAS542E	16	2-00.0	1-07.4	1-11.2	1-05.0				1-00.0		1-00.0	2-11.2
4	5	11-00.0	SAS543E	STR		11-00.0									
46	5	7-00.6	SAS544E	STR		7-00.6									
12	8	* 23-08.1	SAS845E	9		*23-08.1				316-05.2		0-02.4			*23-08.1
						(B AND D VARY FROM 27-04.6 TO 29-03.0)									
6	8	* 28-03.7	SAS846E	9		*28-03.7				320-02.2		0-03.6			*28-03.7
						(B VARIES FROM 27-04.6 TO 29-03.0)									
8	5	* 24-09.1	SAS547E	9		*24-09.1				317-03.0		0-03.0			*24-09.1
						(B AND D VARY FROM 20-04.6 TO 29-01.4)									
19	5	* 9-00.3	SAS548E	STR		* 9-00.3									
						(B VARIES FROM 7-00.6 TO 11-00.0)									
8	5	7-03.2	SAS561E	16	2-00.0	1-07.4	2-02.6	1-05.0				1-00.0		1-00.0	3-02.6
8	5	7-00.4	SAS562E	16	2-00.0	1-07.4	2-00.0	1-05.0				1-00.0		1-00.0	3-00.0
4	5	11-04.6	SAS563E	STR		11-04.6									
46	5	7-00.6	SAS564E	STR		7-00.6									
12	8	* 26-02.1	SAS865E	9		*26-02.1				310-09.0		0-03.2			*26-02.1
						(B AND D VARY FROM 22-05.4 TO 29-10.6)									
6	8	* 21-06.4	SAS866E	9		*21-06.4				306-09.2		0-02.2			*21-06.4
						(B AND D VARY FROM 20-07.6 TO 22-05.2)									
8	5	* 25-01.4	SAS567E	9		*25-01.4				309-09.2		0-03.0			*25-01.4
						(B AND D VARY FROM 20-06.2 TO 29-09.0)									
19	5	* 9-02.6	SAS568E	STR		* 9-02.6									
						(B VARIES FROM 7-00.6 TO 11-04.6)									
JOINT AND PARPET RECONSTRUCTION															
(SOUTH ABUTMENT, PHASES 1 AND 2)															
22	5	5-02.2	S501E	16	2-00.0	0-10.0	1-01.6	1-02.4				0-10.2		0-10.2	
4	6	9-02.4	S602E	STR		9-02.4									
8	6	21-07.2	S603E	STR		21-07.2									
8	6	5-01.0	S604E	4			1-07.0	3-06.0				1-01.4		1-01.2	4-07.2
1	6	21-07.2	S605E	STR		21-07.2									
						(THREAD 1 END FOR MECHANICAL SPLICER)									
5	5	7-08.0	PA501E	P1	0-05.4	1-04.2	0-10.2	1-10.0	0-05.2	2-03.2	0-05.4	1-05.0		0-11.0	
5	5	6-02.2	PA502E	P2	0-07.0	1-03.0	1-04.0	0-05.2	2-07.0			1-04.0		0-01.6	0-07.0
(SOUTH ABUTMENT, PHASE 3)															
22	5	5-02.2	S511E	16	2-00.0	0-10.0	1-01.6	1-02.4				0-10.2		0-10.2	
4	6	9-01.6	S612E	STR		9-01.6									
9	6	3-09.0	S613E	STR		3-09.0									
						(THREAD 1 END FOR MECHANICAL SPLICER)									
8	6	22-08.2	S614E	STR		22-08.2									
8	6	5-01.0	S615E	4			1-07.0	3-06.0				1-02.6		0-11.6	4-05.6
1	6	21-04.2	S616E	STR		21-04.2									
5	5	7-08.0	PA501E	P1	0-05.4	1-04.2	0-10.2	1-10.0	0-05.2	2-03.2	0-05.4	1-05.0		0-11.0	
5	5	6-02.2	PA502E	P2	0-07.0	1-03.0	1-04.0	0-05.2	2-07.0			1-04.0		0-01.6	0-07.0
(NORTH ABUTMENT, PHASES 1 AND 2)															
14	5	4-10.4	S521E	16	2-00.0	0-10.0	0-10.0	1-02.4				0-10.2		0-10.2	
4	6	5-10.0	S622E	STR		5-10.0									
8	6	15-03.2	S623E	STR		15-03.2									
						(THREAD 1 END FOR MECHANICAL SPLICER)									
8	6	5-01.0	S624E	4			1-07.0	3-06.0				0-03.4		1-06.4	
1	6	15-01.2	S625E	STR		15-01.2									
						(THREAD 1 END FOR MECHANICAL SPLICER)									
4	5	7-08.0	PA501E	P1	0-05.4	1-04.2	0-10.2	1-10.0	0-05.2	2-03.2	0-05.4	1-05.0		0-11.0	
4	5	6-02.2	PA502E	P2	0-07.0	1-03.0	1-04.0	0-05.2	2-07.0			1-04.0		0-01.6	0-07.0
(NORTH ABUTMENT, PHASE 3)															
14	5	4-10.4	S531E	16	2-00.0	0-10.0	0-10.0	1-02.4				0-10.2		0-10.2	
3	6	5-09.6	S632E	STR		5-09.6									
3	6	5-04.4	S633E	STR		5-04.4									
9	6	3-09.0	S634E	STR		3-09.0									
						(THREAD 1 END FOR MECHANICAL SPLICER)									
8	6	15-01.6	S635E	STR		15-01.6									
8	6	5-01.0	S636E	4			1-07.0	3-06.0				0-04.0		1-06.4	5-00.4
1	6	13-01.2	S637E	STR		13-01.2									
4	5	7-08.0	PA501E	P1	0-05.4	1-04.2	0-10.2	1-10.0	0-05.2	2-03.2	0-05.4	1-05.0		0-11.0	
4	5	6-02.2	PA502E	P2	0-07.0	1-03.0	1-04.0	0-05.2	2-07.0			1-04.0		0-01.6	0-07.0

* DENOTES AVERAGE LENGTH

REINFORCING BAR LIST - I

BR. 1-715D 6048

CONTRACT	COUNTY	F.A.P. NO.	SHEET NO.	TOTAL SHTS.
22-074-09	NEW CASTLE	SEE TITLE SHEET	147	152

REHABILITATION OF BRIDGE NOS. 1-715, 1-715A, & 1-715D ON SR 273 OVER I-95

REVISIONS

△ DELETED SHEET	
11/25/03 WAG/GM	

NOTES:

1. STANDARD BAR BENDS INCLUDE ONLY TYPES 1-32, S1-S12, AND T1-T16.
2. ALL DIMENSIONS ARE OUT-TO-OUT OF BAR EXCEPT "A" AND "G" ON STANDARD 180° AND 135° HOOKS.
3. "J" DIMENSIONS ON 180° HOOKS TO BE SHOWN ONLY WHERE NECESSARY TO RESTRICT HOOK SIZE, OTHERWISE STANDARD HOOKS ARE TO BE USED.
4. WHERE "J" IS NOT SHOWN, "J" WILL BE KEPT EQUAL TO OR LESS THAN "H" ON TRUSS BARS. WHERE "J" CAN EXCEED "H", IT SHOULD BE SHOWN.
5. "H" DIMENSIONS STIRRUPS TO BE SHOWN WHERE NECESSARY TO FIT WITHIN CONCRETE.
6. UNLESS OTHERWISE NOTED, DIAMETER "D" IS THE SAME FOR ALL BENDS AND HOOKS ON A BAR.
7. WHERE SLOPE DIFFERS FROM 45° DIMENSIONS, "H" AND "K" MUST BE SHOWN.
8. WHERE BARS ARE TO BE BENT MORE ACCURATELY THAN STANDARD BENDING TOLERANCES, BENDING DIMENSIONS WHICH REQUIRE CLOSER FABRICATION SHOULD HAVE LIMITS INDICATED.
9. FIGURES IN CIRCLES SHOW TYPES.
10. FOR RECOMMENDED DIAMETER "D", OF BENDS, HOOKS, ETC., SEE 'CRSI' OR 'ACI' TABLES.
11. TYPE S1-S12, T1-T16 APPLY TO BAR SIZES #3 THROUGH #6.

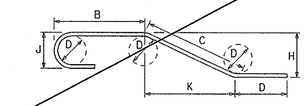

STANDARD BAR BENDS

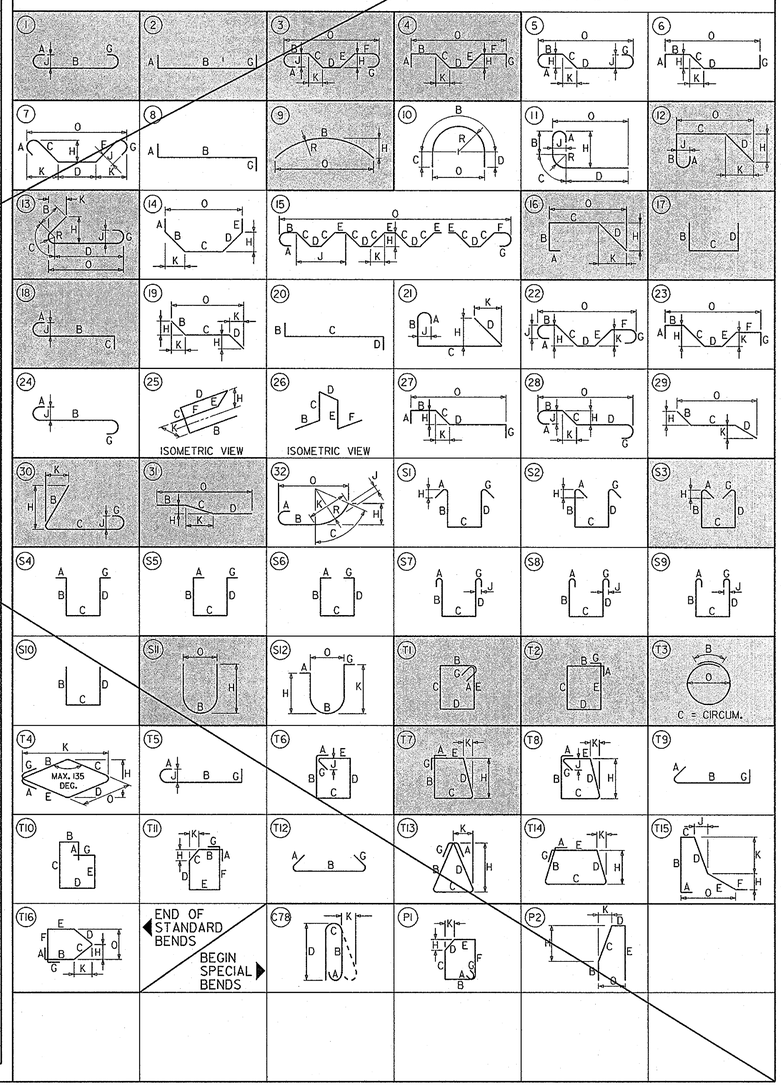

PREL. TRACING ____ W.R.A. ____ DESIGN ____ J.T.L./F.J.O. ____ CHKD. ____ W.A.G. ____

M:\313031\BR01br715D.dgn

(1) MARK NUMBER WITH SUFFIX 'E' DENOTES EPOXY COATED REINFORCING STEEL.

(2) MARK 'LOCATION PREFIXES' ARE AS FOLLOWS: (X)NAS = NORTH APPROACH SLAB, (X)SAS = SOUTH APPROACH SLAB, (X)D = DOWEL, (X)PA = PARAPET, (X)S = SLAB, (X)EP = ENDPOST - WHERE (X) DENOTES SPECIFIC LOCATION [IF APPLICABLE].

SPECIFICATIONS					BENDING DIMENSIONS										
QTY.	SIZE	LENGTH	MARK	TYPE	A	B	C	D	E	F/R	G	H	J	K	O
NORTH APPROACH SLAB															
(PHASES 1 AND 2)															
18	5	2-04 0	D501E	STR		2-04 0									
16	5	7-03 2	NAS501E	16	2-00 0	1-07 4	2-02 6	1-05 0				1-00 0		1-00 0	3-02 6
16	5	6-02 4	NAS502E	16	2-00 0	1-07 4	1-02 0	1-05 0				1-00 0		1-00 0	2-02 0
4	5	7-02 4	NAS503E	STR		7-02 4									
118	5	7-00 6	NAS504E	STR		7-00 6									
19	8	* 20-10 0	NAS805E	9		*20-10 0				332-02 4		0-02 0			*20-10 0
						(B AND D VARY FROM 20-04 0 TO 21-04 0)									
19	8	* 21-10 2	NAS806E	9		*21-10 2				324-08 6		0-02 0			*21-10 2
						(B AND D VARY FROM 21-04 0 TO 22-04 4)									
4	5	7-02 4	NAS507E	STR		7-02 4									
2	5	7-01 4	NAS508E	STR		7-01 4									
8	5	20-08 4	NAS509E	9		*20-08 4				332-02 4		0-02 0			*20-08 4
						(B AND D VARY FROM 20-02 4 TO 21-02 4)									
8	5	21-08 6	NAS510E	9		*21-08 6				324-08 6		0-02 0			*21-08 6
						(B AND D VARY FROM 21-02 4 TO 22-03 0)									
(PHASE 3)															
18	5	2-04 0	D502E	STR		2-04 0									
16	5	7-03 2	NAS551E	16	2-00 0	1-07 4	2-02 6	1-05 0				1-00 0		1-00 0	3-02 6
16	5	6-02 4	NAS552E	16	2-00 0	1-07 4	1-02 0	1-05 0				1-00 0		1-00 0	2-02 0
4	5	7-02 6	NAS553E	STR		7-02 6									
130	5	7-00 6	NAS554E	STR		7-00 6									
19	8	* 22-10 4	NAS855E	9		*22-10 4				317-03 0		0-02 4			*22-10 4
						(B AND D VARY FROM 22-04 4 TO 23-04 6)									
19	8	* 23-10 6	NAS856E	9		*23-10 6				309-09 2		0-02 6			*23-10 6
						(B AND D VARY FROM 23-04 6 TO 24-02 6)									
4	5	7-02 6	NAS557E	STR		7-02 6									
2	5	7-01 6	NAS558E	STR		7-01 6									
8	5	* 22-09 0	NAS559E	9		*22-09 0				317-03 0		0-02 2			*22-09 0
						(B AND D VARY FROM 22-03 0 TO 23-03 0)									
8	5	* 23-09 2	NAS560E	9		*23-09 2				309-09 2		0-02 4			*23-09 2
						(B AND D VARY FROM 23-03 2 TO 24-03 2)									
SOUTH APPROACH SLAB															
(PHASES 1 AND 2)															
24	5	2-04 0	D503E	STR		2-04 0									
8	5	7-03 2	SAS501E	16	2-00 0	1-07 4	2-02 6	1-05 0				1-00 0		1-00 0	3-02 6
8	5	6-10 2	SAS502E	16	2-00 0	1-07 4	1-09 6	1-05 0				1-00 0		1-00 0	2-09 6
4	5	10-04 6	SAS503E	STR		10-04 6									
46	5	7-00 6	SAS504E	STR		7-00 6									
7	8	* 24-04 0	SAS805E	9		*24-04 0				332-01 2		0-02 4			*24-04 0
						(B AND D VARY FROM 20-06 2 TO 26-02 6)									
6	8	* 27-06 7	SAS806E	9		*27-06 7				335-02 6		0-03 2			*27-06 7
						(B AND D VARY FROM 28-05 0 TO 26-08 6)									
8	5	* 24-04 0	SAS507E	9		*24-04 0				332-02 4		0-02 4			*24-04 0
						(B AND D VARY FROM 20-04 6 TO 28-03 4)									
18	5	* 8-08 6	SAS508E	STR		* 8-08 6									
						(B VARIES FROM 7-00 6 TO 10-04 6)									
6	8	21-03 6	SAS809E	9		21-03 6				329-03 4		0-02 0			21-03 6
						(B AND D VARY FROM 20-06 0 TO 22-01 4)									
8	5	7-03 2	SAS521E	16	2-00 0	1-07 4	2-02 6	1-05 0				1-00 0		1-00 0	3-02 6
8	5	6-10 4	SAS522E	16	2-00 0	1-07 4	1-10 0	1-05 0				1-00 0		1-00 0	2-10 0
4	5	10-08 0	SAS523E	STR		10-08 0									
46	5	7-00 6	SAS524E	STR		7-00 6									
7	8	* 24-09 0	SAS825E	9		*24-09 0				324-09 2		0-02 6			*24-09 0
						(B AND D VARY FROM 23-00 0 TO 26-06 0)									
6	8	* 21-06 0	SAS826E	9		*21-06 0				321-09 6		0-02 0			*21-06 0
						(B AND D VARY FROM 20-07 4 TO 22-04 4)									
8	5	* 24-07 0	SAS527E	9		*24-07 0				324-08 6		0-02 6			*24-07 0
						(B AND D VARY FROM 20-04 6 TO 28-09 2)									
18	5	* 8-10 0	SAS528E	STR		*8-10 3									
						(B VARIES FROM 7-00 6 TO 10-08 0)									
6	8	27-11 3	SAS829E	9		*27-11 3				327-06 0		0-03 4			* 27-11 3
						(B AND D VARY FROM 27-01 2 TO 28-09 4)									

SPECIFICATIONS					BENDING DIMENSIONS										
QTY.	SIZE	LENGTH	MARK	TYPE	A	B	C	D	E	F/R	G	H	J	K	O
(PHASE 3)															
25	5	2-04 0	D504E	STR		2-04 0									
8	5	7-03 2	SAS541E	16	2-00 0	1-07 4	2-02 6	1-05 0				1-00 0		1-00 0	3-02 6
8	5	6-11 6	SAS542E	16	2-00 0	1-07 4	1-11 2	1-05 0				1-00 0		1-00 0	2-11 2
4	5	11-00 0	SAS543E	STR		11-00 0									
46	5	7-00 6	SAS544E	STR		7-00 6									
7	8	* 24-09 4	SAS845E	9		*24-09 4				317-01 4		0-02 6			*24-09 4
						(B AND D VARY FROM 22-11 2 TO 26-07 6)									
6	8	* 28-03 7	SAS846E	9		*28-03 7				320-02 2		0-03 6			*28-03 7
						(B VARIES FROM 27-04 6 TO 29-03 0)									
8	5	* 24-09 1	SAS547E	9		*24-09 1				317-03 0		0-03 0			*24-09 1
						(B AND D VARY FROM 20-04 6 TO 29-01 4)									
19	5	* 9-00 3	SAS548E	STR		* 9-00 3									
						(B VARIES FROM 7-00 6 TO 11-00 0)									
6	8	* 21-05 1	SAS849E	9		*21-05 1				314-05 0		0-02 0			21-05 1
						(B VARIES FROM 20-06 2 TO 22-04 0)									
8	5	7-03 2	SAS561E	16	2-00 0	1-07 4	2-02 6	1-05 0				1-00 0		1-00 0	3-02 6
8	5	7-00 4	SAS562E	16	2-00 0	1-07 4	2-00 0	1-05 0				1-00 0		1-00 0	3-00 0
4	5	11-04 6	SAS563E	STR		11-04 6									
46	5	7-00 6	SAS564E	STR		7-00 6									
7	8	* 25-02 6	SAS865E	9		*25-02 6				309-09 2		0-03 2			*25-02 6
						(B AND D VARY FROM 23-03 2 TO 27-02 2)									
6	8	* 21-06 4	SAS866E	9		*21-06 4				306-09 2		0-02 2			*21-06 4
						(B AND D VARY FROM 20-07 6 TO 22-05 2)									
8	5	* 25-01 4	SAS567E	9		*25-01 4				309-09 2		0-03 0			*25-01 4
						(B AND D VARY FROM 20-06 2 TO 29-09 0)									
19	5	* 9-02 6	SAS568E	STR		* 9-02 6									
						(B VARIES FROM 7-00 6 TO 11-04 6)									
6	8	* 28-09 6	SAS869E	9		* 28-09 6				312-06 4		0-03 6			*28-09 6
						(B AND D VARY FROM 27-10 2 TO 29-09 2)									
JOINT AND PARPET RECONSTRUCTION															
(SOUTH ABUTMENT, PHASES 1 AND 2)															
22	5	5-02 2	S501E	16	2-00 0	0-10 0	1-01 6	1-02 4				0-10 2		0-10 2	
4	6	9-02 4	S602E	STR		9-02 4									
8	6	21-07 2	S603E	STR		21-07 2									
						(THREAD 1 END FOR MECHANICAL SPLICER)									
8	6	5-01 0	S604E	4			1-07 0	3-06 0				1-01 4		1-01 2	4-07 2
1	6	21-07 2	S605E	STR		21-07 2									
						(THREAD 1 END FOR MECHANICAL SPLICER)									
5	5	7-08 0	PA501E	P1	0-05 4	1-04 2	0-10 2	1-10 0	0-05 2	2-03 2	0-05 4	1-05 0		0-11 0	
5	5	6-02 2	PA502E	P2	0-07 0	1-03 0	1-04 0	0-05 2	2-07 0			1-04 0		0-01 6	0-07 0
(SOUTH ABUTMENT, PHASE 3)															
22	5	5-02 2	S511E	16	2-00 0	0-10 0	1-01 6	1-02 4				0-10 2		0-10 2	
4	6	9-01 6	S612E	STR		9-01 6									
9	6	3-09 0	S613E	STR		3-09 0									
						(THREAD 1 END FOR MECHANICAL SPLICER)									
8	6	22-08 2	S614E	STR		22-08 2									
8	6	5-01 0	S615E	4			1-07 0	3-06 0				1-02 6		0-11 6	4-05 6
1	6	21-04 2	S616E	STR		21-04 2									
5	5	7-08 0	PA501E	P1	0-05 4	1-04 2	0-10 2	1-10 0	0-05 2	2-03 2	0-05 4	1-05 0		0-11 0	
5	5	6-02 2	PA502E	P2	0-07 0	1-03 0	1-04 0	0-05 2	2-07 0			1-04 0		0-01 6	0-07 0
(NORTH ABUTMENT, PHASES 1 AND 2)															
14	5	4-10 4	S521E	16	2-00 0	0-10 0	0-10 0	1-02 4				0-10 2		0-10 2	
4	6	5-10 0	S622E	STR		5-10 0									
8	6	15-03 2	S623E	STR		15-03 2									
						(THREAD 1 END FOR MECHANICAL SPLICER)									
8	6	5-01 0	S624E	4			1-07 0	3-06 0				0-03 4		1-06 4	
1	6	15-01 2	S625E	STR		15-01 2									
						(THREAD 1 END FOR MECHANICAL SPLICER)									
4	5	7-08 0	PA501E	P1	0-05 4	1-04 2	0-10 2	1-10 0	0-05 2	2-03 2	0-05 4	1-05 0		0-11 0	
4	5	6-02 2	PA502E	P2	0-07 0	1-03 0	1-04 0	0-05 2	2-07 0			1-04 0		0-01 6	0-07 0
(NORTH ABUTMENT, PHASE 3)															
14	5	4-10 4	S531E	16	2-00 0	0-10 0	0-10 0	1-02 4				0-10 2		0-10 2	
3	6	5-09 6	S632E	STR		5-09 6									
3	6	5-04 4	S633E	STR		5-04 4									
9	6	3-09 0	S634E	STR		3-09 0									
						(THREAD 1 END FOR MECHANICAL SPLICER)									
8	6	15-01 6	S635E	STR		15-01 6									
8	6	5-01 0	S636E	4			1-07 0	3-06 0				0-04 0		1-06 4	5-00 4
1	6	13-01 2	S637E	STR		13-01 2									
4	5	7-08 0	PA501E	P1	0-05 4	1-04 2	0-10 2	1-10 0	0-05 2	2-03 2	0-05 4	1-05 0		0-11 0	
4	5	6-02 2	PA502E	P2	0-07 0	1-03 0	1-04 0	0-05 2	2-07 0			1-04 0		0-01 6	0-07 0

* DENOTES AVERAGE LENGTH

REINFORCING BAR LIST - 1

BR. 1-715D 6048

CONTRACT	COUNTY	F.A.P. NO.	SHEET NO.	TOTAL SHTS.
22-074-09	NEW CASTLE	SEE TITLE SHEET	147A	152

REHABILITATION OF BRIDGE NOS. 1-715, 1-715A, & 1-715D ON SR 273 OVER I-95

REVISIONS

1 ADDED SHEET	
11/25/03 WAG/GM	

NOTES:

1. STANDARD BAR BENDS INCLUDE ONLY TYPES 1-32, S1-S12, AND T1-T16.
2. ALL DIMENSIONS ARE OUT-TO-OUT OF BAR EXCEPT "A" AND "G" ON STANDARD 180° AND 135° HOOKS.
3. "J" DIMENSIONS ON 180° HOOKS TO BE SHOWN ONLY WHERE NECESSARY TO RESTRICT HOOK SIZE, OTHERWISE STANDARD HOOKS ARE TO BE USED.
4. WHERE "J" IS NOT SHOWN, "J" WILL BE KEPT EQUAL TO OR LESS THAN "H" ON TRUSS BARS. WHERE "J" CAN EXCEED "H", IT SHOULD BE SHOWN.
5. "H" DIMENSIONS STIRRUPS TO BE SHOWN WHERE NECESSARY TO FIT WITHIN CONCRETE.
6. UNLESS OTHERWISE NOTED, DIAMETER "D" IS THE SAME FOR ALL BENDS AND HOOKS ON A BAR.
7. WHERE SLOPE DIFFERS FROM 45° DIMENSIONS, "H" AND "K" MUST BE SHOWN.
8. WHERE BARS ARE TO BE BENT MORE ACCURATELY THAN STANDARD BENDING TOLERANCES, BENDING DIMENSIONS WHICH REQUIRE CLOSER FABRICATION SHOULD HAVE LIMITS INDICATED.
9. FIGURES IN CIRCLES SHOW TYPES.
10. FOR RECOMMENDED DIAMETER "D", OF BENDS, HOOKS, ETC., SEE 'CRSI' OR 'ACI' TABLES.
11. TYPE S1-S12, T1-T16 APPLY TO BAR SIZES #3 THROUGH #6.

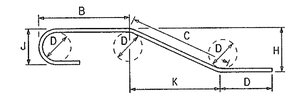

STANDARD BAR BENDS

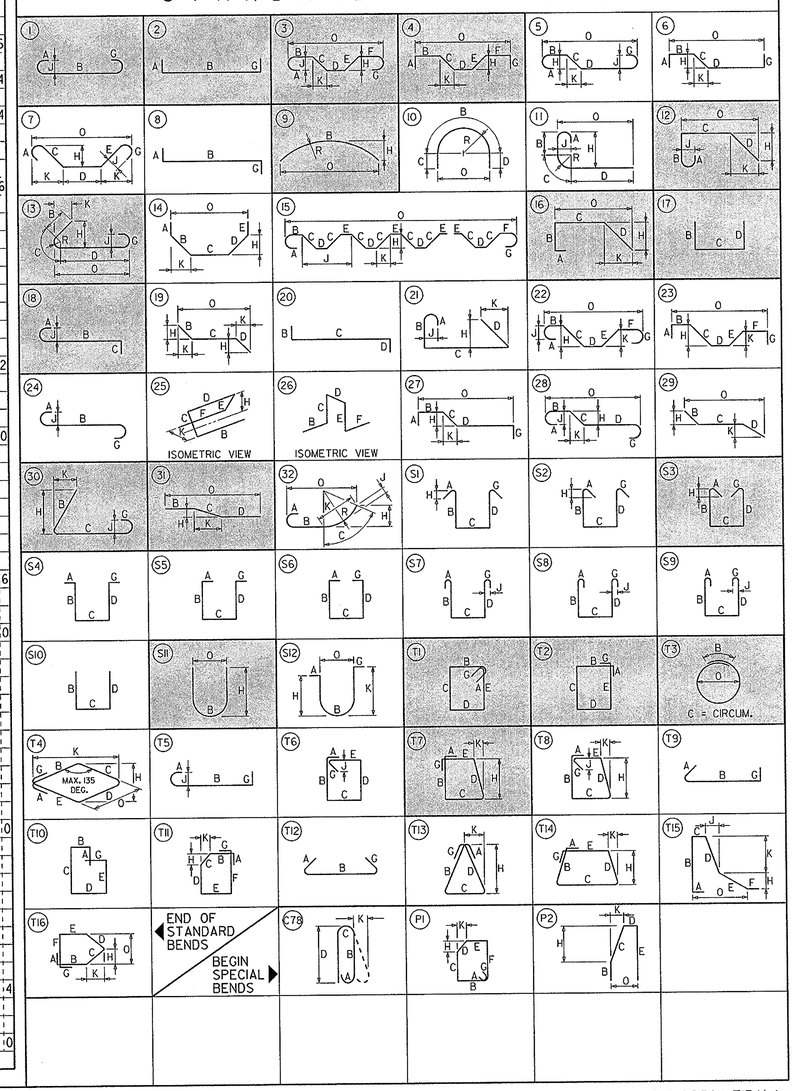

PREL. TRACING _____ W.R.A. DESIGN _____ J.T.L./F.J.O. CHKD. _____ W.A.C.

M:\313031\BR01br715dAdgn

(1) MARK NUMBER WITH SUFFIX 'E' DENOTES EPOXY COATED REINFORCING STEEL.

(2) MARK 'LOCATION PREFIXES' ARE AS FOLLOWS: (X)NAS = NORTH APPROACH SLAB, (X)SAS = SOUTH APPROACH SLAB, (X)D = DOWEL, (X)PA = PARAPET, (X)S = SLAB, (X)EP = ENDPOST - WHERE (X) DENOTES SPECIFIC LOCATION [IF APPLICABLE].

REINFORCING BAR LIST – II

BR. 1–715D 6048

CONTRACT	COUNTY	F.A.P. NO.	SHEET NO.	TOTAL SHTS.
22-074-09	NEW CASTLE	SEE TITLE SHEET	148	152

REHABILITATION OF BRIDGE NOS. 1–715, 1–715A, & 1–715D ON SR 273 OVER I–95

REVISIONS

SPECIFICATIONS					BENDING DIMENSIONS										
QTY.	SIZE	LENGTH	MARK	TYPE	A	B	C	D	E	F/R	G	H	J	K	O
(PIER NO. 1, PHASES 1 AND 2)															
36	5	4-10.0	S541E	16	2-00.0	0-10.0	0-09.4	1-02.4				0-10.2		0-10.2	
8	6	7-03.2	S642E	STR		7-03.2									
16	6	18-08.2	S643E	STR		18-08.2									
						(THREAD 1 END FOR MECHANICAL SPLICER)									
16	6	5-01.0	S644E	4			1-07.0	3-06.0				0-11.2		1-03.4	4-09.4
8	5	7-08.0	PA501E	P1	0-05.4	1-04.2	0-10.2	1-10.0	0-05.2	2-03.2	0-05.4	1-05.0		0-11.0	
8	5	6-02.2	PA502E	P2	0-07.0	1-03.0	1-04.0	0-05.2	2-07.0			1-04.0		0-01.6	0-07.0
(PIER NO. 1, PHASE 3)															
36	5	4-10.0	S551E	16	2-00.0	0-10.0	0-09.4	1-02.4				0-10.2		0-10.2	
6	6	7-03.0	S652E	STR		7-03.0									
2	6	7-02.2	S653E	STR		7-02.2									
16	6	3-09.0	S654E	STR		3-09.0									
						(THREAD 1 END FOR MECHANICAL SPLICER)									
16	6	19-00.6	S655E	STR		19-00.6									
16	6	5-01.0	S656E	4			1-07.0	3-06.0				1-00.2		1-02.2	4-08.2
8	5	7-08.0	PA501E	P1	0-05.4	1-04.2	0-10.2	1-10.0	0-05.2	2-03.2	0-05.4	1-05.0		0-11.0	
8	5	6-02.2	PA502E	P2	0-07.0	1-03.0	1-04.0	0-05.2	2-07.0			1-04.0		0-01.6	0-07.0
(PIER NO. 2, PHASES 1 AND 2)															
32	5	4-08.4	S561E	16	2-00.0	0-10.0	0-08.0	1-02.4				0-10.2		0-10.2	
8	6	6-03.4	S662E	STR		6-03.4									
16	6	16-04.4	S663E	STR		16-04.4									
						(THREAD 1 END FOR MECHANICAL SPLICER)									
16	6	5-01.0	S664E	4			1-07.0	3-06.0				0-07.4		1-05.2	4-11.2
8	5	7-08.0	PA501E	P1	0-05.4	1-04.2	0-10.2	1-10.0	0-05.2	2-03.2	0-05.4	1-05.0		0-11.0	
8	5	6-02.2	PA502E	P2	0-07.0	1-03.0	1-04.0	0-05.2	2-07.0			1-04.0		0-01.6	0-07.0
(PIER NO. 2, PHASE 3)															
32	5	4-08.4	S571E	16	2-00.0	0-10.0	0-08.0	1-02.4				0-10.2		0-10.2	
4	6	6-03.0	S672E	STR		6-03.0									
4	6	6-00.0	S673E	STR		6-00.0									
16	6	3-09.0	S674E	STR		3-09.0									
						(THREAD 1 END FOR MECHANICAL SPLICER)									
16	6	16-04.2	S675E	STR		16-04.2									
16	6	5-01.0	S676E	4			1-07.0	3-06.0				0-08.2		1-05.0	4-11.0
8	5	7-08.0	PA501E	P1	0-05.4	1-04.2	0-10.2	1-10.0	0-05.2	2-03.2	0-05.4	1-05.0		0-11.0	
8	5	6-02.2	PA502E	P2	0-07.0	1-03.0	1-04.0	0-05.2	2-07.0			1-04.0		0-01.6	0-07.0

SPECIFICATIONS					BENDING DIMENSIONS										
QTY.	SIZE	LENGTH	MARK	TYPE	A	B	C	D	E	F/R	G	H	J	K	O
ENDPOSTS															
(NORTHEAST)															
18	5	5-00.6	EP501E	C78	0-07.0	1-11.0	0-05.6	2-01.0						0-02.6	
10	5	* 6-06.4	EP502E	S11		0-08.2						*3-01.6			0-05.2
						(H VARIES FROM 2-01.0 TO 4-02.4)									
9	5	8-11.0	EP503E	S11		0-08.2						4-04.0			0-05.2
6	5	16-07.6	EP504E	STR		16-07.6									
2	5	12-01.0	EP508E	STR		12-01.0									
2	5	16-10.6	EP512E	31		7-09.2	9-01.4					2-02.4		8-10.2	16-07.4
2	5	2-10.0	D505E	18	0-07.0	2-03.0							0-05.0		
1	5	5-05.0	D506E	STR		5-05.0									
1	5	5-00.2	D507E	31		3-07.0	1-05.2					0-10.0		1-02.0	4-09.0
(NORTHWEST)															
22	5	5-00.6	EP501E	C78	0-07.0	1-11.0	0-05.6	2-01.0						0-02.6	
10	5	* 6-06.4	EP502E	S11		0-08.2						*3-01.6			0-05.2
						(H VARIES FROM 2-01.0 TO 4-02.4)									
13	5	8-11.0	EP503E	S11		0-08.2						4-04.0			0-05.2
6	5	20-05.4	EP505E	STR		20-05.4									
2	5	15-11.2	EP509E	STR		15-11.2									
2	5	20-08.6	EP513E	31		11-07.2	9-01.4					2-02.4		8-10.2	20-05.4
2	5	2-10.0	D505E	18	0-07.0	2-03.0							0-05.0		
1	5	5-05.0	D506E	STR		5-05.0									
1	5	5-00.2	D507E	31		3-07.0	1-05.2					0-10.0		1-02.0	4-09.0
(SOUTHEAST)															
21	5	5-00.6	EP501E	C78	0-07.0	1-11.0	0-05.6	2-01.0						0-02.6	
10	5	* 6-06.4	EP502E	S11		0-08.2						*3-01.6			0-05.2
						(H VARIES FROM 2-01.0 TO 4-02.4)									
11	5	8-11.0	EP503E	S11		0-08.2						4-04.0			0-05.2
6	5	19-05.0	EP506E	STR		19-05.0									
2	5	14-11.0	EP510E	STR		14-11.0									
2	5	19-08.2	EP514E	31		10-06.6	9-01.4					2-02.4		8-10.2	19-05.0
2	5	2-10.0	D505E	18	0-07.0	2-03.0							0-05.0		
1	5	5-05.0	D506E	STR		5-05.0									
1	5	5-00.2	D507E	31		3-07.0	1-05.2					0-10.0		1-02.0	4-09.0
(SOUTHWEST)															
17	5	5-00.6	EP501E	C78	0-07.0	1-11.0	0-05.6	2-01.0						0-02.6	
10	5	* 6-06.4	EP502E	S11		0-08.2						*3-01.6			0-05.2
						(H VARIES FROM 2-01.0 TO 4-02.4)									
8	5	8-11.0	EP503E	S11		0-08.2						4-04.0			0-05.2
6	5	15-10.0	EP507E	STR		15-10.0									
2	5	11-04.0	EP511E	STR		11-04.0									
2	5	16-01.2	EP515E	31		6-11.6	9-01.4					2-02.4		8-10.2	15-10.0
2	5	2-10.0	D505E	18	0-07.0	2-03.0							0-05.0		
1	5	5-05.0	D506E	STR		5-05.0									
1	5	5-00.2	D507E	31		3-07.0	1-05.2					0-10.0		1-02.0	4-09.0

* DENOTES AVERAGE LENGTH

NOTES:

1. STANDARD BAR BENDS INCLUDE ONLY TYPES 1-32, S1-S12, AND T1-T16.
2. ALL DIMENSIONS ARE OUT-TO-OUT OF BAR EXCEPT 'A' AND 'G' ON STANDARD 180° AND 135° HOOKS.
3. 'J' DIMENSIONS ON 180° HOOKS TO BE SHOWN ONLY WHERE NECESSARY TO RESTRICT HOOK SIZE, OTHERWISE STANDARD HOOKS ARE TO BE USED.
4. WHERE 'J' IS NOT SHOWN, 'J' WILL BE KEPT EQUAL TO OR LESS THAN 'H' ON TRUSS BARS. WHERE 'J' CAN EXCEED 'H', IT SHOULD BE SHOWN.
5. 'H' DIMENSIONS STIRRUPS TO BE SHOWN WHERE NECESSARY TO FIT WITHIN CONCRETE.
6. UNLESS OTHERWISE NOTED, DIAMETER 'D' IS THE SAME FOR ALL BENDS AND HOOKS ON A BAR.
7. WHERE SLOPE DIFFERS FROM 45° DIMENSIONS, 'H' AND 'K' MUST BE SHOWN.
8. WHERE BARS ARE TO BE BENT MORE ACCURATELY THAN STANDARD BENDING TOLERANCES, BENDING DIMENSIONS WHICH REQUIRE CLOSER FABRICATION SHOULD HAVE LIMITS INDICATED.
9. FIGURES IN CIRCLES SHOW TYPES.
10. FOR RECOMMENDED DIAMETER 'D', OF BENDS, HOOKS, ETC., SEE 'CRSI' OR 'ACI' TABLES.
11. TYPE S1-S12, T1-T16 APPLY TO BAR SIZES #3 THROUGH #6.

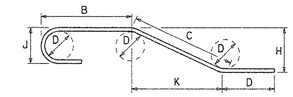

STANDARD BAR BENDS

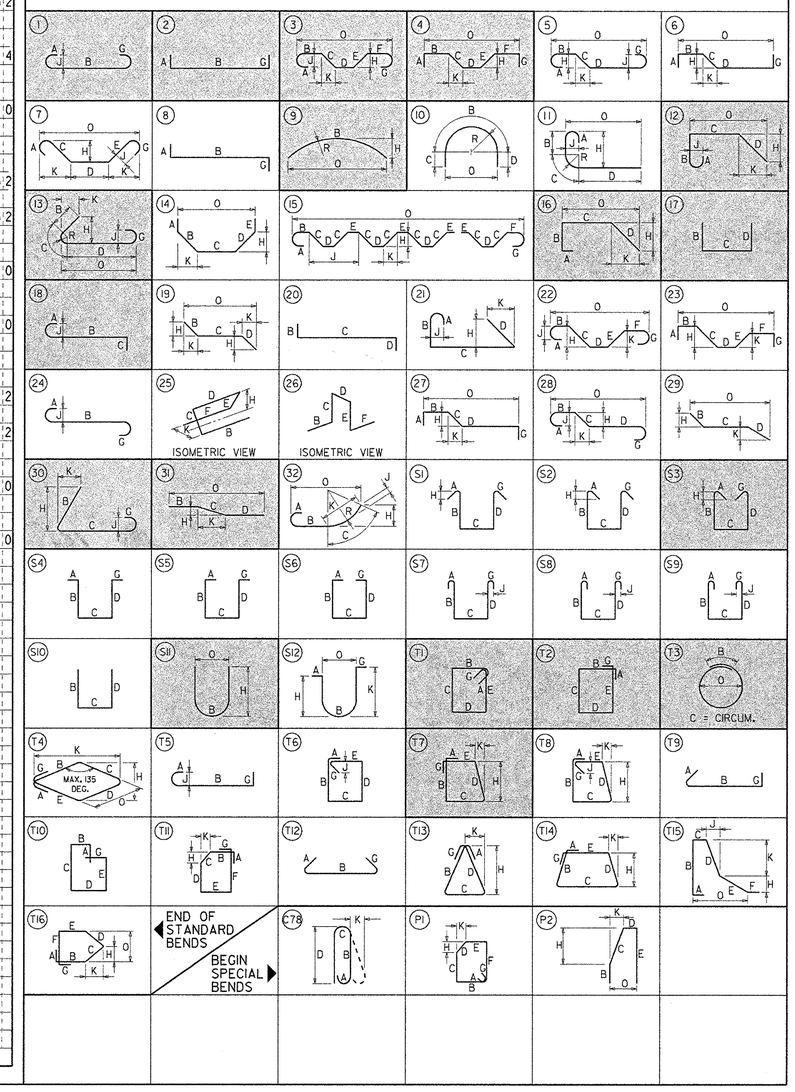

PREL. TRACING ____ W.R.A. ____ DESIGN ____ J.T.L./F.J.O. ____ CHKD. ____ W.A.G. ____

M:\3130314\BR02br715D.dgn

QUANTITY SUMMARY

CONTRACT	COUNTY	F.A.P. NO.	SHEET NO.	TOTAL SHTS.
22-074-09	NEW CASTLE	SEE TITLE SHEET	149	152

REHABILITATION OF BRIDGE NOS. A 1 715, 1 715A, 1 715D ON SR 273 OVER I-95

REVISIONS

2 ADDED/REVISED ITEMS	
11/25/03 JMP/GM	

LEGEND

- • ESTIMATED FIXED QUANTITY ITEMS
- •• FIXED PRICE

ITEM NUMBER		202000	208000	209001	209002	209006	211000	212000	251000	252001	252002	268000	302007	302500	401657	401660	401663	503517	601502	602009	602013	602017	602524	602551	602574	602575	602576	602577
ITEM TITLE		EXCAVATION AND EMBANKMENT •	EXCAVATION AND BACKFILL FOR PIPE TRENCHES	BORROW, TYPE A	BORROW, TYPE B	BORROW, TYPE F	REMOVAL OF STRUCTURES AND OBSTRUCTIONS	UNDERCUT EXCAVATION	SILT FENCE	INLET SEDIMENT CONTROL, CURB INLET	INLET SEDIMENT CONTROL, AT GRADE INLET	STABILIZED CONSTRUCTION ENTRANCE	GRADED AGGREGATE BASE COURSE, TYPE B	DELAWARE NO. 3 STONE	SUPERPAVE, TYPE C HOT-MIX, 160 GYRATIONS, PG 76-22	SUPERPAVE, TYPE B HOT-MIX, 160 GYRATIONS, PG 76-22	SUPERPAVE BITUMINOUS CONCRETE BASE COURSE, 160 GYRATIONS, PG 64-22	P.C.C. PATCHING, 2" DEPTH	TEMPORARY PROTECTIVE SHIELD	PCC MASONRY, APPROACH SLAB, CLASS A •	PCC MASONRY, SUPERSTRUCTURE, CLASS D	PCC MASONRY, PARAPET, CLASS A	TROWEL GRADE MORTAR REPAIRS	REHABILITATION OF EXISTING CONCRETE STRUCTURES	DECK REPAIR, 1/4" TO 1" DEPTH	DECK REPAIR, 1" TO 3" DEPTH	DECK REPAIR, 3" TO < FULL DEPTH	DECK REPAIR, FULL DEPTH
UNIT		CY	CY	CY	CY	CY	LS	CY	LF	EA	EA	TON	CY	TON	TON	TON	TON	SY	LS	CY	CY	CY	SF	SF	SF	SF	SF	SF
SHEET NOS. 11, 45	FROM STA. E 60+00 TO STA. E 64+23	-	-	-	-	-	-	-	675	-	-	-	569	-	189	288	875	-	-	-	-	-	-	-	-	-	-	-
SHEET NOS. 12, 46	FROM STA. C 9+50 TO STA. C 31+92; STA. E 52+50 TO STA. E 60+00; STA. F 24+50 TO STA. F 41+00	-	-	-	-	-	-	-	7,704	8	-	-	5,012 ~~4,992~~	-	1,763 ~~1,752~~	2,242	5,627 ~~5,606~~	-	-	-	-	-	-	-	-	-	-	-
SHEET NOS. 13, 47	FROM STA. A 12+62 TO STA. A 25+00; STA. F 41+00 TO STA. F 49+19	-	-	-	-	-	-	-	3,155	8	2	-	1,754 ~~1,731~~	-	633 ~~620~~	738	2,096 ~~2,067~~	-	-	-	-	-	-	-	-	-	-	-
SHEET NOS. 14, 48	FROM STA. F 16+21 TO STA. F 24+50	-	-	-	-	-	-	-	1,659	2	-	-	1,520	-	498	712	2,163	-	-	-	-	-	-	-	-	-	-	-
MOT / E&S		-	-	-	-	-	-	-	1,120	-	-	-	-	-	-	200	200	-	-	-	-	-	-	-	-	-	-	-
BRIDGE NO. 1-715		-	-	-	-	-	-	-	-	-	-	-	-	160	-	-	-	-	LS	-	64	18	187	983	-	-	-	-
BRIDGE NO. 1-715A		-	-	-	-	-	LS	-	-	-	-	-	-	75	-	-	-	-	LS	76	32	17	42	521	140	70	35	35
BRIDGE NO. 1-715D		-	-	-	-	-	-	-	-	-	-	-	-	58	-	-	-	-	LS	94	22	17	28	144	60	30	15	15
SHEET NO. 14A	SR 273 PAVEMENT REHAB	-	-	-	-	-	-	-	-	-	-	-	-	-	867	-	-	160	-	-	-	-	-	-	-	-	-	-
PROPOSAL		14,592 ~~13,939~~	50	600	100	100	LS	500	14,313	18	2	500	8,855 ~~8,812~~	293	3,950 ~~3,859~~	4,180	10,961 ~~10,911~~	160	LS	170	118	52	257	1,648	200	100	50	50
TOTAL		14,592 ~~13,939~~	50	600	100	100	LS	500	14,313	18	2	500	8,855 ~~8,812~~	293	3,950 ~~3,859~~	4,180	10,961 ~~10,911~~	160	LS	170	118	52	257	1,648	200	100	50	50

PREL. TRACING ____ J.A.D. ____ DESIGN ____ R.R.W./J.A.G. ____ CHKD. ____ J.M.P. ____

QUANTITY SUMMARY

CONTRACT	COUNTY	F.A.P. NO.	SHEET NO.	TOTAL SHTS.
22-074-09	NEW CASTLE	SEE TITLE SHEET	150	152

REHABILITATION OF BRIDGE NOS. A 1 715, 1 715A, 1 715D ON SR 273 OVER I-95

REVISIONS

2 ADDED/REVISED ITEMS	
11/25/03 JMP/GM	

LEGEND

- * ESTIMATED FIXED QUANTITY ITEMS
- ** FIXED PRICE

ITEM NUMBER	602579	602580	602586	602588	602603	602611	602657	603500	604000 △2	605511	605522	605532	605533	605584	605607	605619	605622	605636	605690	607000	612529	701011	701012 △2	707005	710001 △2	712006	713003	715001
ITEM TITLE	DRILLING HOLES AND INSTALLING DOWELS	PARTIAL REMOVAL OF PCC MASONRY	REHABILITATION OF CONCRETE STRUCTURE	ANTI-GRAFFITI COATING	HIGH EARLY STRENGTH CONCRETE	REPAIR OF CONCRETE STRUCTURES, BY EPOXY INJECTION	HIGH STRENGTH FIBER COMPOSITE WRAP	REPAIRING BAR REINFORCEMENT	BAR REINFORCEMENT, EPOXY COATED	PREFABRICATED EXPANSION JOINT SYSTEM, 3"	URETHANE PAINT SYSTEM, EXISTING STEEL	CLEANING EXISTING STEEL STRUCTURES, (NON-HAZARDOUS BASE)	CLEANING EXISTING STEEL STRUCTURE, HAZARDOUS BASE	STEEL STRUCTURE REPAIR	JACKING BRIDGE	MOISTURE CURED URETHANE PAINT SYSTEM (OVERCOATING)	CLEANING OF STEEL STRUCTURE BY PRESSURE WASHING	CLEAN AND LUBRICATE BRIDGE BEARINGS	COATING WARRANTY	REMOVAL OF EXISTING MASONRY	PIPE VIDEO INSPECTION	PORTLAND CEMENT CONCRETE CURB, TYPE 2	PORTLAND CEMENT CONCRETE CURB, TYPE 3	DOWNSPOUT SPLASH APRONS	ADJUSTING AND REPAIRING EXISTING DRAINAGE INLET	RIPRAP, R-5	GEOTEXTILES, RIPRAP	PERFORATED PIPE UNDERDRAINS, 6"
UNIT	EA	CY	CF	SY	CY	LF	SF	LB	LB	LF	LS	LS	LS	LB	LS	LS	LS	EA	NONE	CY	LF	LF	LF	EA	EA	SY	SY	LF
SHEET NOS. 11, 45 — FROM STA. E 60+00 TO STA. E 64+23	-	-	-	-	-	-	-	-	-	-	-	-	-	-	-	-	-	-	-	-	-	-	-	2	-	-	-	750
SHEET NOS. 12, 46 — FROM STA. C 9+50 TO STA. C 31+92; STA. E 52+50 TO STA. E 60+00; STA. F 24+50 TO STA. F 41+00	-	-	-	-	-	-	-	-	-	-	-	-	-	-	-	-	-	-	-	-	125	65	4,613 ~~4,248~~	14	9	-	-	6,255
SHEET NOS. 13, 47 — FROM STA. A 12+62 TO STA. A 25+00; STA. F 41+00 TO STA. F 49+19	-	-	-	-	-	-	-	-	-	-	-	-	-	-	-	-	-	-	-	-	219	-	2,562 ~~2,180~~	1	8	-	-	2,961
SHEET NOS. 14, 48 — FROM STA. F 16+21 TO STA. F 24+50	-	-	-	-	-	-	-	-	-	-	-	-	-	-	-	-	-	-	-	-	44	-	1,365 ~~1,265~~	4	2	-	-	1,650
MOT / E&S	-	-	-	-	-	-	-	-	-	-	-	-	-	-	-	-	-	-	-	-	-	-	-	-	-	-	-	-
BRIDGE NO. 1-715	895	143	69	2,632	62	104	525	40	37,000	628	LS	LS	LS	-	LS	LS	LS	144	-	8	-	-	-	-	-	810	1012	-
BRIDGE NO. 1-715A	100	46	52	1,531	-	43	1,333	30	24,500 ~~24,100~~	221	LS	LS	LS	1,532	LS	LS	LS	60	-	78	-	-	-	-	-	432	579	-
BRIDGE NO. 1-715D	126	34	15	840	-	77	-	30	24,250 ~~24,100~~	165	LS	LS	LS	-	LS	LS	LS	30	-	119	-	-	-	-	-	329	470	-
SHEET NO. 14A — SR 273 PAVEMENT REHAB	-	-	-	-	-	-	-	-	-	-	-	-	-	-	-	-	-	-	-	-	-	-	-	-	19	-	-	-
PROPOSAL	1,121	223	136	5,003	62	224	1,858	100	85,750 ~~85,200~~	1,014	LS	LS	LS	1,532	LS	LS	LS	234	NONE	205	388	65	8,540 ~~7,615~~	21	38 ~~19~~	1,571	2,061	11,616
TOTAL	1,121	223	136	5,003	62	224	1,858	100	85,750 ~~85,200~~	1,014	LS	LS	LS	1,532	LS	LS	LS	234	NONE	205	388	65	8,540 ~~7,615~~	21	38 ~~19~~	1,571	2,061	11,616

PREL. TRACING ____ J.A.D. ____ DESIGN ____ R.R.W./J.A.G. ____ CHKD. ____ J.M.P.

QUANTITY SUMMARY

CONTRACT	COUNTY	F.A.P. NO.	SHEET NO.	TOTAL SHTS.
22-074-09	NEW CASTLE	SEE TITLE SHEET	151	152

REHABILITATION OF BRIDGE NOS. A 1 715, 1 715A, 1 715D ON SR 273 OVER I-95

REVISIONS

△2 ADDED/REVISED ITEMS	
11/25/03 JMP/GM	

LEGEND

- • ESTIMATED FIXED QUANTITY ITEMS
- •• FIXED PRICE

ITEM NUMBER	715002	715500	720050 △2	720051	720501	720506	720515	720518	720527 △2	720552	720567	720585	720586 △2	725001	725002 △2	726001 △2	727520 △2	732002	733002	734013	734017	735006	735533	735534	743003 △2	743500 △2	743501 △2	743504
ITEM TITLE	PERFORATED PIPE UNDERDRAINS, 6"	UNDERDRAIN OUTLET PIPE, 6"	GALVANIZED STEEL BEAM GUARDRAIL, TYPE 1	GALVANIZED STEEL BEAM GUARDRAIL, TYPE 2	CRASH CUSHION (SAND BARRELS)	RELOCATING PORTABLE P.C.C. SAFETY BARRIER	RELOCATING GUARDRAIL	RELOCATING CRASH CUSHION (SAND BARRELS)	PLASTIC DRUMS	REFLECTOR PANELS	FURNISH AND MAINTAIN P.C.C. PORTABLE SAFETY BARRIER	GUARDRAIL END TREATMENT ATTENUATOR, TYPE 1	GUARDRAIL END TREATMENT ATTENUATOR, TYPE 2	GUARDRAIL TO BARRIER CONNECTION (EXIT TYPE)	GUARDRAIL TO BARRIER CONNECTION APPROACH TYPE 1	END ANCHORAGE	CONSTRUCTION SAFETY FENCE	TOPSOIL, 6" DEPTH	TOPSOILING, 6" DEPTH	PERMANENT GRASS SEEDING, DRY GROUND	TEMPORARY GRASS SEEDING, DRY GROUND	MULCHING, STRAW	SOIL RETENTION BLANKET MULCH, TYPE 3	SOIL RETENTION BLANKET MULCH, TYPE 4	ARROWPANELS, TYPE C	WARNING LIGHTS, TYPE A	WARNING LIGHTS, TYPE B	WARNING SIGNS
UNIT	LF	LF	LF	LF	EA	LF	LF	EA	EA-DY	EA	LF	EA	EA	EA	EA	EA	LF	SY	SY	SY	SY	SY	SY	SY	EA-DY	EA-DY	EA-DY	EA
SHEET NOS. 11, 45 — FROM STA. E 60+00 TO STA. E 64+23	-	12	-	-	-	-	-	-	-	-	-	-	-	-	-	-	-	-	-	-	-	-	-	-	-	-	-	-
SHEET NOS. 12, 46 — FROM STA. C 9+50 TO STA. C 31+92; STA. E 52+50 TO STA. E 60+00; STA. F 24+50 TO STA. F 41+00	1,260	78	3,013 ~~2,740~~	-	-	-	-	-	-	-	-	2	1	3	6 ~~5~~	2	-	-	-	-	-	-	-	-	-	-	-	-
SHEET NOS. 13, 47 — FROM STA. A 12+62 TO STA. A 25+00; STA. F 41+00 TO STA. F 49+19	-	9	1,423 ~~1,088~~	174	-	-	-	-	-	-	-	2	1	3	1	5 ~~3~~	-	-	-	-	-	-	-	-	-	-	-	-
SHEET NOS. 14, 48 — FROM STA. F 16+21 TO STA. F 24+50	-	12	1,165 ~~1,265~~	-	-	-	-	-	-	-	-	2	-	-	-	-	-	-	-	-	-	-	-	-	-	-	-	-
MOT / E&S	-	-	-	-	9	7,790	1,300	8	41,000	250	8,350	-	-	-	-	-	-	-	-	-	-	-	-	-	275	4,000	12,000	33
BRIDGE NO. 1-715	-	-	-	-	-	-	-	-	-	-	-	-	-	-	-	-	-	-	-	-	-	-	-	-	-	-	-	-
BRIDGE NO. 1-715A	-	-	-	-	-	-	-	-	-	-	-	-	-	-	-	-	-	-	-	-	-	-	-	-	-	-	-	-
BRIDGE NO. 1-715D	-	-	-	-	-	-	-	-	-	-	-	-	-	-	-	-	-	-	-	-	-	-	-	-	-	-	-	-
SHEET NO. 14A — SR 273 PAVEMENT REHAB	-	-	-	-	-	-	-	-	1,350	-	-	-	-	-	-	-	-	-	-	-	-	-	-	-	30	40	120	-
PROPOSAL	1,260	111	5,601 ~~5,093~~	174	9	7,790	1,300	8	42,350 ~~41,000~~	250	8,350	6	2	6	7 ~~6~~	7 ~~5~~	1200	8,820	1,368	10,188	19,688	9,500	7,646	2,547	305 ~~275~~	4,040 ~~4,000~~	12,120 ~~12,000~~	33
TOTAL	1,260	111	5,601 ~~5,093~~	174	9	7,790	1,300	8	42,350 ~~41,000~~	250	8,350	6	2	6	7 ~~6~~	7 ~~5~~	1200	8,820	1,368	10,188	19,688	9,500	7,646	2,547	305 ~~275~~	4,040 ~~4,000~~	12,120 ~~12,000~~	33

PREL. TRACING ____ J.A.D. ____ DESIGN ____ R.R.W./J.A.G. ____ CHKD. ____ J.M.P. ____

11/24/2003

QUANTITY SUMMARY

CONTRACT	COUNTY	F.A.P. NO.	SHEET NO.	TOTAL SHTS.
22-074-09	NEW CASTLE	SEE TITLE SHEET	152	152

REHABILITATION OF BRIDGE NOS. A 1 715, 1 715A, 1 715D ON SR 273 OVER I-95

REVISIONS

2 ADDED/REVISED ITEMS	
11/25/03 JMP/GM	

LEGEND

- * ESTIMATED FIXED QUANTITY ITEMS
- ** FIXED PRICE

ALTERNATIVE A

ITEM	602543	602544
ITEM TITLE	FURNISHING LATEX CONCRETE	CONSTRUCTING LATEX CONCRETE OVERLAY
UNIT	CY	SY
BRIDGE NO. 1-715A	106	1416
BRIDGE NO. 1-715D	45	643
PROPOSAL	151	2059
TOTAL	151	2059

ALTERNATIVE B

ITEM	602583	602584
ITEM TITLE	FURNISHING MICRO-SILICA MODIFIED CONCRETE	CONSTRUCTING MICRO-SILICA MODIFIED CONCRETE OVERLAY
UNIT	CY	SY
BRIDGE NO. 1-715A	106	1416
BRIDGE NO. 1-715D	45	643
PROPOSAL	151	2059
TOTAL	151	2059

ITEM NUMBER	743506	743514	743525	743537	743541	746591	748015	748019	748027	748507	748518	748525	748530	748535	749502	758000	759502	760006	762001	762002	763000	763500	763501	763505	763508	763509
			2					2		2								2	2					2		
ITEM TITLE	TEMPORARY BARRICADES, TYPE III	FURNISH AND MAINTAIN MESSAGE BOARD	TEMPORARY WARNING SIGNS	FURNISH AND MAINTAIN TRUCK-MOUNTED ATTENUATOR, TYPE II	WOODEN SIGN SUPPORT, 6"x8"	FURNISH AND MAINTAIN PORTABLE LIGHT ASSEMBLY	PERMANENT PAVEMENT STRIPING, SYMBOL/LEGEND ALKYD-THERMOPLASTIC	TEMPORARY MARKINGS, PAINT 4"	PERMANENT PAVEMENT STRIPING, ALKYD-THERMOPLASTIC, 12"	PERMANENT PAVEMENT STRIPING, EPOXY RESIN PAINT, 6"	BLACKOUT TAPE, 6"	TEMPORARY MARKINGS, TAPE, 4"	REMOVAL OF PAVEMENT STRIPING	PERMANENT PAVEMENT STRIPING, EPOXY RESIN PAINT, BLACK, 4"	SIGN PANEL OVERLAY ON EXISTING SIGN	REMOVAL OF EXISTING PORTLAND PAVEMENT, CEMENT CONCRETE PAVEMENT, CURB, SIDEWALK, ETC.	FIELD OFFICE E&M, SPECIAL 1	PAVEMENT MILLING, HOT MIX 2" DEPTH	SAW CUTTING, HOT-MIX	SAW CUTTING CONCRETE, FULL DEPTH	INTIAL EXPENSE	MAINTENANCE OF TRAFFIC	CONSTRUCTION ENGINEERING	TRAFFIC OFFICERS	PROJECT CONTROL SYSTEM DEVELOPMENT PLAN	CPM SCHEDULE UPDATES AND/OR REVISIONS
UNIT	EA-DY	EA-DY	EA-DY	EA-DY	EA	EA-DY	SF	LF	SF	LF	LF	LF	LF	LF	SF	SY	EA-MO	SY	LF	LF	LS	LS	LS	HOUR	LS	EA-MO
SHEET NOS. 11, 45 — FROM STA. E 60+00 TO STA. E 64+23	-	-	-	-	-	-	-	-	96	847	-	-	-	-	-	-	-	-	9	184	-	-	-	-	-	-
SHEET NOS. 12, 46 — FROM STA. C 9+50 TO STA. C 31+92; STA. E 52+50 TO STA. E 60+00; STA. F 24+50 TO STA. F 41+00	-	-	-	-	-	-	-	-	168	8,999	-	-	-	838	-	-	-	-	402 ~~36~~	416	-	-	-	-	-	-
SHEET NOS. 13, 47 — FROM STA. A 12+62 TO STA. A 25+00; STA. F 41+00 TO STA. F 49+19	-	-	-	-	-	-	-	-	116	4,416	-	-	-	1,920	-	-	-	-	516 ~~53~~	387	-	-	-	-	-	-
SHEET NOS. 14, 48 — FROM STA. F 16+21 TO STA. F 24+50	-	-	-	-	-	-	-	-	-	1,911	-	-	-	-	-	-	-	-	10	28	-	-	-	-	-	-
MOT / E&S	230	300	9,230	275	4	100	506	45,000	-	-	13,000	19,700	10,000	-	600	-	-	-	-	-	-	-	-	800	-	-
BRIDGE NO. 1-715	-	-	-	-	-	-	-	-	-	-	-	-	-	-	-	-	-	-	-	-	-	-	-	-	-	-
BRIDGE NO. 1-715A	-	-	-	-	-	-	-	-	-	-	-	-	-	-	-	-	-	1,416	-	-	-	-	-	-	-	-
BRIDGE NO. 1-715D	-	-	-	-	-	-	-	-	-	-	-	-	-	-	-	-	-	643	-	-	-	-	-	-	-	-
SHEET NO. 14A — SR 273 PAVEMENT REHAB	-	-	180	-	-	-	-	5,000	-	9,537	-	-	-	-	-	-	-	7,795	-	-	-	-	-	80	-	-
PROPOSAL	230	300	9,410 ~~9,230~~	275	4	100	506	50,000 ~~45,000~~	380	25,710 ~~16,173~~	13,000	19,700	10,000	2,758	600	16,392	10	9,855 ~~2,059~~	937 ~~108~~	1,015	LS	LS	LS	880 ~~800~~	LS	10
TOTAL	230	300	9,410 ~~9,230~~	275	4	100	506	50,000 ~~45,000~~	380	25,710 ~~16,173~~	13,000	19,700	10,000	2,758	600	16,392	10	9,855 ~~2,059~~	937 ~~108~~	1,015	LS	LS	LS	880 ~~800~~	LS	10

PREL. TRACING ____ J.A.D. ____ DESIGN ____ R.R.W./J.A.G. ____ CHKD. ____ J.M.P. ____

11/24/2003