DELAWARE STATE HIGHWAY DEPARTMENT
DELAWARE TURNPIKE
JOHN F. KENNEDY MEMORIAL HIGHWAY
CONSTRUCTION CONTRACT NO. 7060

ROUTE 273 INTERCHANGE IMPROVEMENT

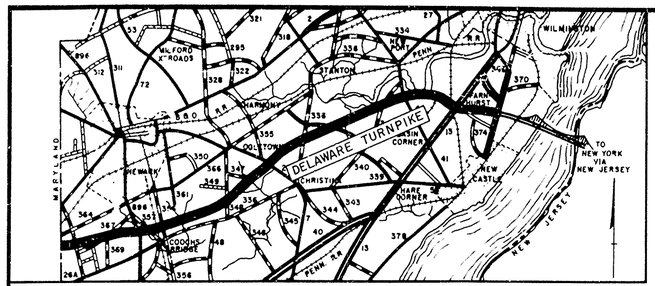

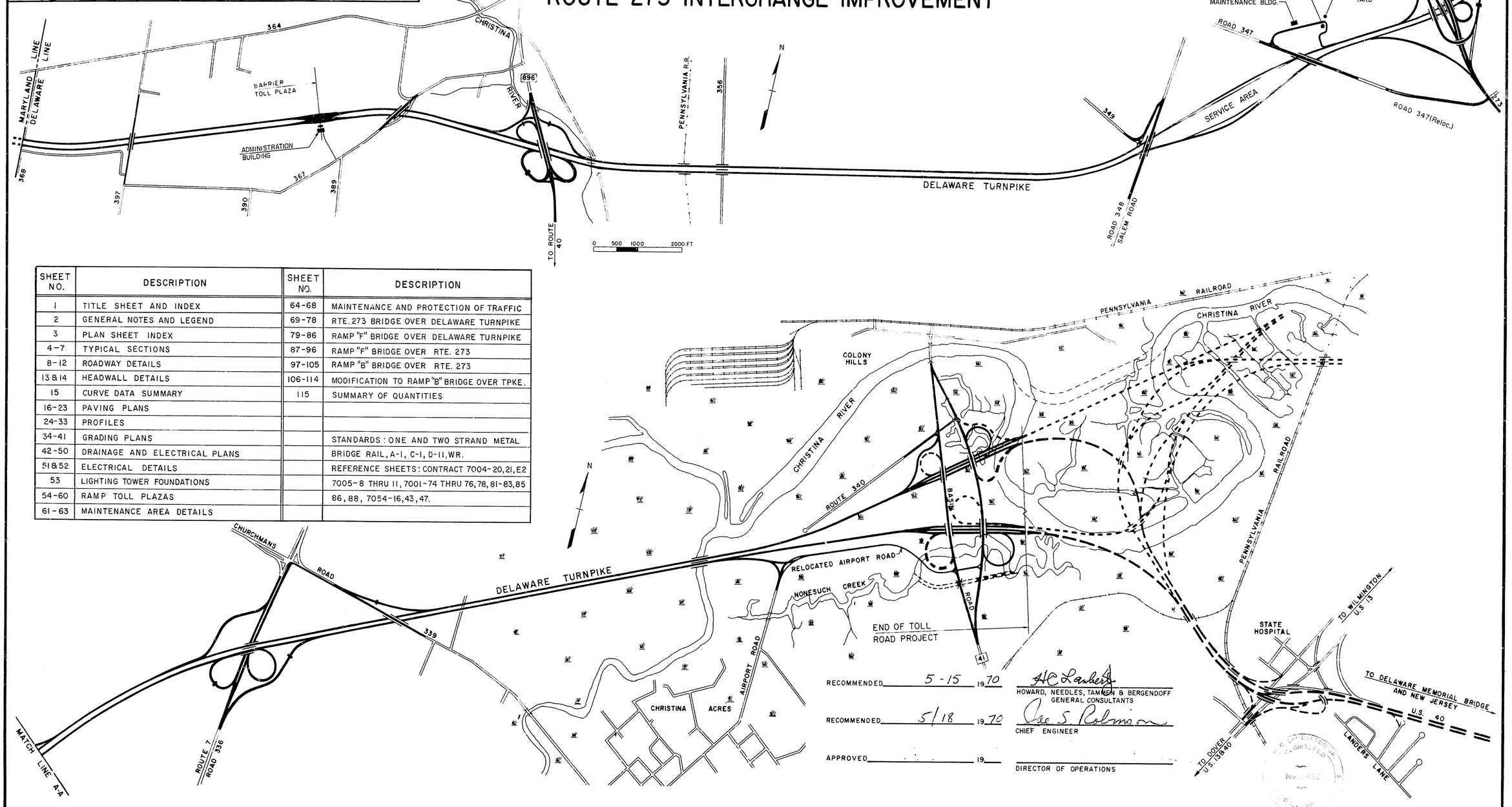

SHEET NO.	DESCRIPTION	SHEET NO.	DESCRIPTION
1	TITLE SHEET AND INDEX	64-68	MAINTENANCE AND PROTECTION OF TRAFFIC
2	GENERAL NOTES AND LEGEND	69-78	RTE. 273 BRIDGE OVER DELAWARE TURNPIKE
3	PLAN SHEET INDEX	79-86	RAMP "F" BRIDGE OVER DELAWARE TURNPIKE
4-7	TYPICAL SECTIONS	87-96	RAMP "F" BRIDGE OVER RTE. 273
8-12	ROADWAY DETAILS	97-105	RAMP "B" BRIDGE OVER RTE. 273
13 & 14	HEADWALL DETAILS	106-114	MODIFICATION TO RAMP "B" BRIDGE OVER TPKE.
15	CURVE DATA SUMMARY	115	SUMMARY OF QUANTITIES
16-23	PAVING PLANS		
24-33	PROFILES		
34-41	GRADING PLANS		STANDARDS: ONE AND TWO STRAND METAL
42-50	DRAINAGE AND ELECTRICAL PLANS		BRIDGE RAIL, A-1, C-1, D-11, WR.
51 & 52	ELECTRICAL DETAILS		REFERENCE SHEETS: CONTRACT 7004-20, 21, E2
53	LIGHTING TOWER FOUNDATIONS		7005-8 THRU 11, 7001-74 THRU 76, 78, 81-83, 85
54-60	RAMP TOLL PLAZAS		86, 88, 7054-16, 43, 47.
61-63	MAINTENANCE AREA DETAILS		

RECOMMENDED 5-15 19 70 — H C Lambert
HOWARD, NEEDLES, TAMMEN & BERGENDOFF
GENERAL CONSULTANTS

RECOMMENDED 5/18 19 70 — Lee S. Robinson
CHIEF ENGINEER

APPROVED 19 ___
DIRECTOR OF OPERATIONS

DELAWARE TURNPIKE	CONT. NO.	TITLE	SHEET NO.	TOTAL SHEETS
	7060	GENERAL NOTES & LEGEND	2	115

GENERAL NOTES

Horizontal alignment is based on 1927 North American datum Delaware Coordinate System.

Vertical Control based on U.S.C. & G.S. datum.

Base Sheets providing existing topography, horizontal alignment, and grade were prepared from final plans used for the construction of what is now the existing Delaware Turnpike. Also survey field information was used to incorporate the latest additions or changes in topographical features. A screened image is used to show this existing information. Work to be performed in this Contract is shown in full, non screened lines and construction notes.

All existing underdrain systems are to remain in operation if not replaced in this contract or specifically directed to be removed by the Engineer.

All transverse joints in proposed concrete pavement are to be spaced to line up with the transverse joints in the existing pavement.

The boring records of the existing borings shown on the plans and the pile driving records for the existing bridges are available for the contractors inspection at the office of the Engineer.

For General Notes pretaining to Structures see the General Plan Sheets for the individual bridges.

Curb transitions from Concrete Curb Type I to match the new bridge parapets shall be accomplished in a 10 ft. transition section.

Utilities shown on the plans to be either relocated or removed by others will be completed prior to starting or in conjuction with this contract.

For General Notes pertaining to Typical Sections and Maintenance of Traffic see sheets 4 and 64 respectively.

Grading plans at 1"=50' showing the details of the suggested Maintenance and Protection of Traffic scheme are available for the contractors inspection at the office of the Engineer.

All existing inlets not to remain in service shall be removed to a depth of two feet below template grade, all pipes not to removed shall be plugged and the inlet completely backfilled.

All existing pipes not to remain in service shall be completely removed if not two feet below template grade, all other pipes to be abandoned shall be plugged at both ends.

All headwalls on pipes to be abandoned shall be removed, regardless of depth.

GENERAL LEGEND

EXISTING CONSTRUCTION

Edge of Pavement
Edge of Shoulder
Concrete Curb
Sidewalk
Fence and Limited Access Line
Right-of-Way Line
Overhead Sign Structure
Sanitary Sewer
Gas Main
Gas Manhole
Water Main
Overhead Telephone Line
Underground Telephone Line
Telephone Manhole
Overhead Power Line
Underground Power Line
Pipe and Inlet
Pipe and Headwall
Downspout and C.M.P.
Drainage Manhole
Paved or Rubble Gutter
Underdrain

PROPOSED CONSTRUCTION

℄ and Profile Grade of Proposed Construction
Edge of Pavement
Edge of Paved Shoulder
Concrete Curb
Asphaltic Concrete Curb
6" Asphaltic Concrete Nose Pavement
Sodded or Rubble Gutter
Guardrail
Fence and Limited Access Line
Right-of-Way Line
Pipe and Headwall
Pipe and Inlet
Pipe and Flared End Section
Manhole
Energy Dissipator
Underdrain
Relocated Underground Telephone Line (By Others)
Relocated Overhead Power Line (By Others)
Relocated Underground Power Line (By Others)
Relocated Telephone Line (By Others)
Sanitary Sewer Line
Water Line

ELECTRICAL NOTES

1. Stations and dimensions for lighting standards, and the location of junction boxes, load centers and conduit runs shown on the Plans are all approximate, but are to be followed as close as possible, unless otherwise ordered by the Engineer.
2. Existing concrete foundations of lighting standards which are being relocated shall be removed or demolished as directed. The complete lighting standard assemblies shall be reinstalled on new concrete foundations, as prescribed in the Specifications.
3. All required repairs to the existing conduit raceways, where indicated on the Plans, shall be made with same type and size of conduits as the existing raceways.
4. Frames, covers and cable rack assemblies of junction boxes designated to be removed or demolished, shall be salvaged (see Specifications)
5. Drainage tees shall be provided at all low points of all conduit runs. Wherever possible conduits shall be sloped to drain to junction boxes.
6. All distribution cables shall be 600 V. insulation and color-coded (see Spec's).
7. All cable ends not connected shall be test capped by means of insulating and sealing them in the same manner as required by the Specifications for cable splices.
8. The following notations are used throughout lighting plans and detail sheets:
   a. Circuit designation, such as 3N indicates the photoelectrically controlled lighting circuit #3 from North service load center, and TPN denotes the 24hr. circuit for Toll Plaza service cabinet from North service load center.
   b. Lighting Standard Identifications, such as 5-3N-A next to a lighting standard symbol, the first figure indicates the lighting standard number. The second figure indicates the circuit number and the third figure designates the luminaire phase connection.
   c. Notations such as 2"-3#6 when pointing to conduit, the first figure indicates the size of conduit, the second figure indicates the number of cables and third figure designates the size of cables.
   d. Notations such as 3#2 or $\frac{3\#2}{(\text{Circ.}\#3N)}$ when pointing to conduit, the first figure indicates the number of cables and the second figure indicates the size of cables. The third figure (in parenthesis) when shown, indicates the circuit number and load center which the circuit is originated. Circuit numbers are indicated only for those conduits in which more than one circuit is required to be installed or at circuit splitting points.
9. All concrete foundations for new or relocated lighting standards shall be Type I, except for the eight (8) new lighting standards as shown on "Insert A," Sheet No. 46 which shall be Type. II.
10. Concrete foundations for High-Mast Lighting Towers shall be located as tabulated on Sheet No. 53. Concrete junction boxes adjacent to towers shall be placed 5'-0" from face of pedestal measured to junction box wall, as shown on the plans and/or directed by the Engineer.
11. All conduits on Sign Structures (where required) and bridge piers for sign lighting to a point 5'-0" from face of sign pedestal or pier, enclosed circuit breaker and all secondary wiring, shall be by others.
12. Underbridge lighting luminaires, metal boxes, all exposed conduits and fittings, and all wiring from concrete junction box, shall be by others.
13. High-mast lighting towers, luminaires, lowering device, enclosed circuit breaker, conduit between pedestal and concrete junction box, and all wiring from junction box, shall be by others.

ELECTRICAL LEGEND

PROPOSED CONSTRUCTION

New or Relocated Type A Lighting Standard on New Concrete Foundation.
Relocated Type B Lighting Standard on New Concrete Foundation.
New or Relocated Type C Lighting Standard on New Concrete Foundation.
Existing Type A Lighting Standard to be Relocated
Existing Type B Lighting Standard to be Relocated — See Note 2
Existing Type C Lighting Standard to be Relocated
Underbridge Lighting Luminaire (By others, Contract No. 7056 - See Note 12)
Concrete Foundation for High-Mast Lighting Tower (Tower by others, Contract No. 7056 - See Note 13)
Concrete Junction Box
Service Load Center
New or Modified Toll Plaza Service Cabinet
3" Metallic Conduit (Unless Otherwise Noted)
2" Metallic Conduit
3" Non-Metallic Conduit
2" Non-Metallic Conduit
3" Metallic Conduit (Unless Otherwise Noted), Installed by Jacking.
Existing Conduits or Direct Burial Cables to be Removed or Abandoned (Type and size as per symbol designation)
Metallic to Non-Metallic Conduit Adapter.
Capped Conduit
Overhead Service Power Line
Service or Line Pole

DELAWARE TURNPIKE	CONT. NO.	TITLE	SHEET NO.	TOTAL SHEETS
	7060	PLAN SHEET INDEX	3	115

LEGEND

- ○ PAVING PLAN SHEETS
- ⬡ GRADING PLAN SHEETS
- □ DRAINAGE AND ELECTRICAL PLAN SHEETS

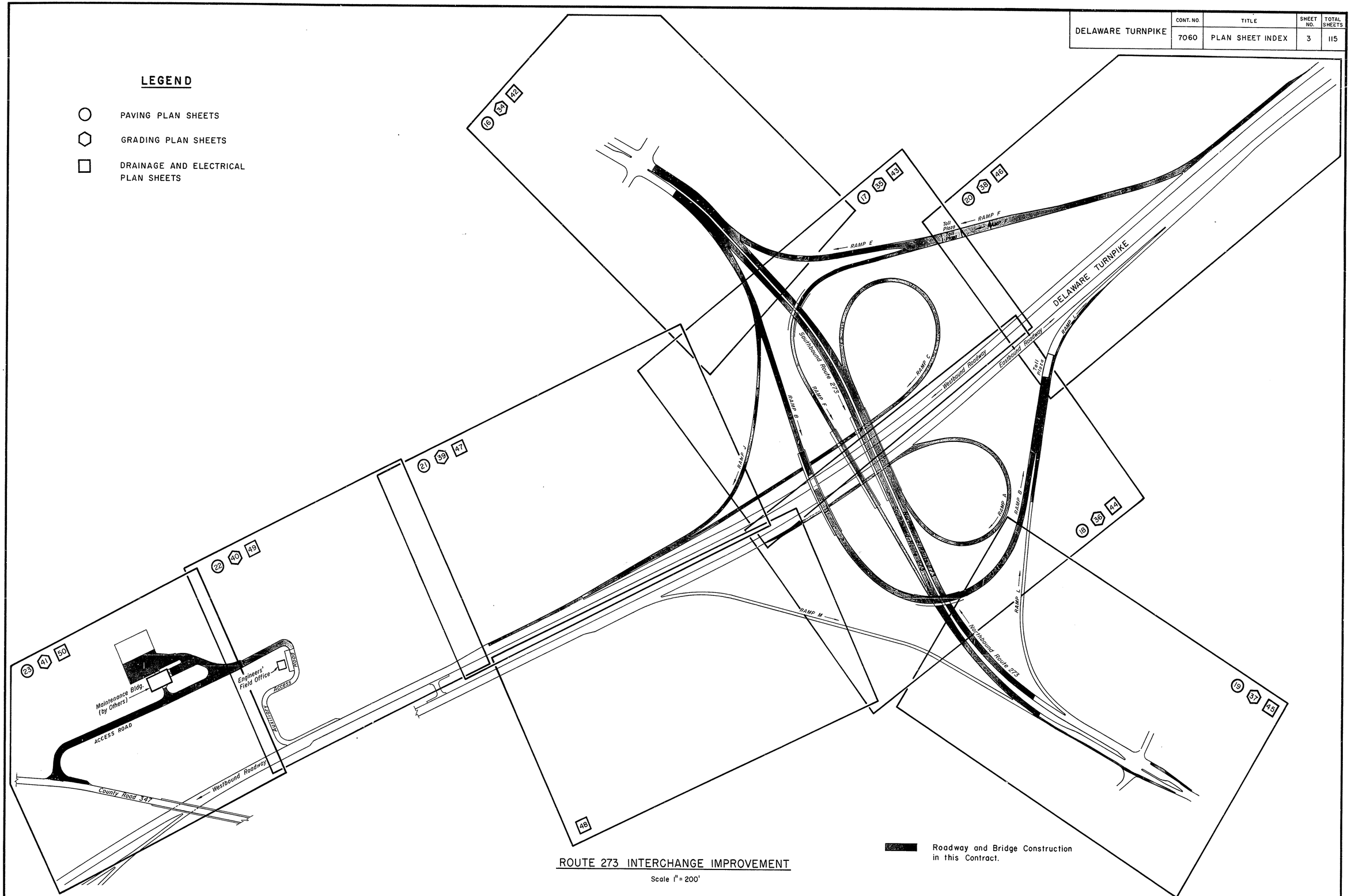

Roadway and Bridge Construction in this Contract.

ROUTE 273 INTERCHANGE IMPROVEMENT

Scale 1" = 200'

DELAWARE TURNPIKE	CONT. NO.	TITLE	SHEET NO.	TOTAL SHEETS
	7060	TYPICAL SECTIONS	4	115

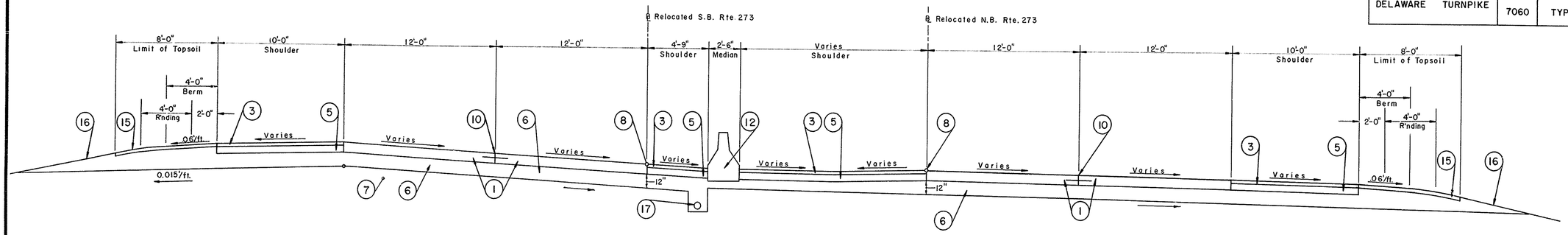

ROUTE 273 SUPERELEVATED SECTION

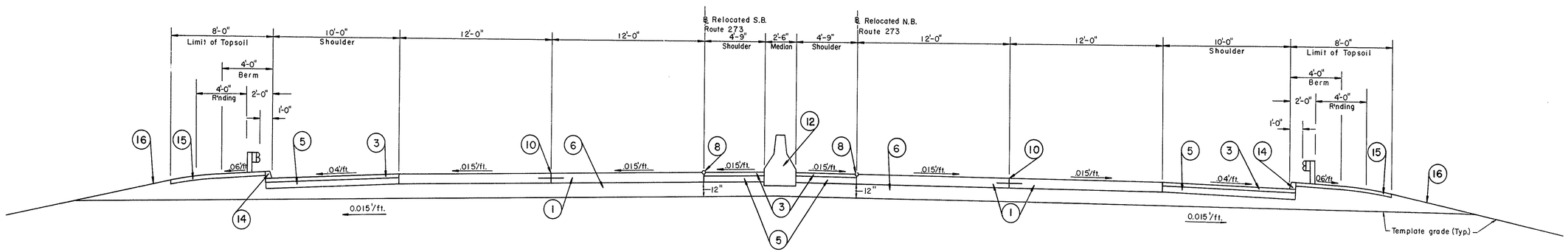

ROUTE 273 NORMAL SECTION

LEGEND

1. 9" Reinforced Concrete Pavement
2. 6" Hot-Mix, Hot Laid Asphaltic Concrete Pavement (1-1/2" Wearing Course and 4-1/2" Binder Course)
3. 3" Hot-Mix, Hot Laid Asphaltic Concrete (1-1/2" Wearing Course and 1-1/2" Binder Course)
4. Bituminous Surface Treatment
5. 6" Soil Cement Base Course
6. Select Borrow
7. Common Borrow (Fill), Existing Ground (Cut)
8. Point of Application of Grade
9. Existing 9" Reinforced Concrete Pavement to Remain Unless Noted on Paving Plans
10. Dowelled Longitudinal Saw-Cut Joint
11. Longitudinal Construction Joint (Drilled and Grouted Dowels)
12. Concrete Median Barrier
13. Portland Cement Concrete Curb, Type I
14. Hot-Mix, Hot Laid Asphaltic Concrete Curb
15. 4" Topsoil, Seeding and Mulching
16. Seeding and Mulching
17. 6" Perforated Corrugated Metal Pipe Underdrain

TYPICAL SECTION GENERAL NOTES

1. Subgrade cross-slope to be same as roadway cross-slope, except as specifically shown on sections or as controlled by note 2.
2. Subgrade cross-slope shall be not less than 0.015 ft./ft. to provide drainage for the Subbase. In curve transitions where the pavement cross-slope becomes less than 0.015 ft./ft. the minimum cross-slope shall be maintained until abrupt reversal of the subgrade cross-slope can be accomplished.
3. Unsuitable material below the template grade shall be removed to the limits specified by the Engineer and replaced with select borrow. When required by the Engineer, underdrains shall be installed in areas from which unsuitable material has been removed.
4. For Wire Mesh Reinforcement for Portland cement concrete pavement see Standard Sheet A-1.
5. Side slopes in cut or fill generally conform to the following criteria: (See grading plans for exact side slopes)

   0' to 6' height, use 6:1

   6' to 10' height, grade to zero at 40'

   10' to 20' height, use 3:1] Requires Guard Rail

   Over 20' height, use 2:1]
6. For the location and limits of pavement removal, median barrier, curb and guard rail see Paving Plan sheets.
7. For type, depth and location of side ditches see "Drainage and Electrical Plan" and "Grading Plan" sheets
8. For Pavement cross-slopes see Profile sheets.
9. All typical sections are drawn to a scale of $\frac{1}{4}$" = 1'-0".

DELAWARE TURNPIKE	CONT. NO.	TITLE	SHEET NO.	TOTAL SHEETS
	7060	TYPICAL SECTIONS	5	115

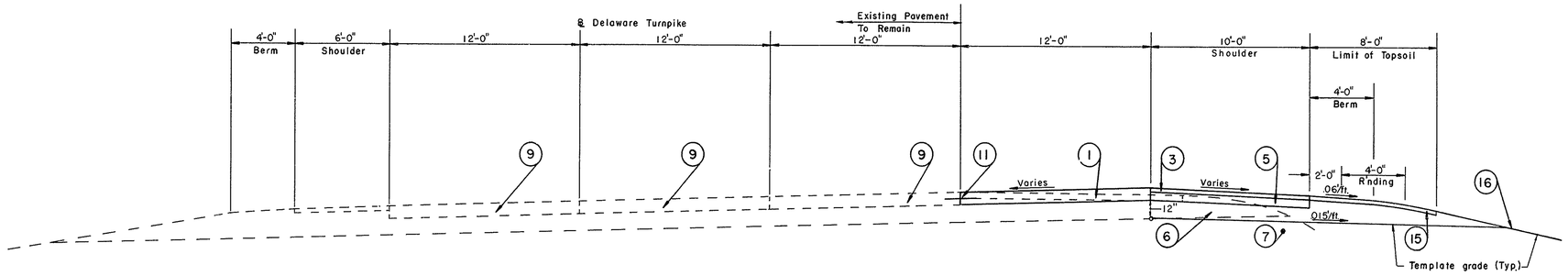

TYPICAL ACCELERATION & DECELERATION LANE

Adjacent to Existing Del. Tpke.

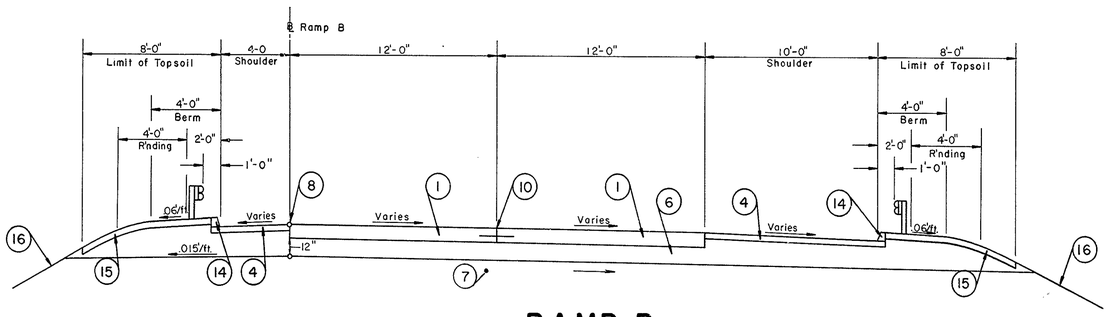

RAMP B

Tangent Section

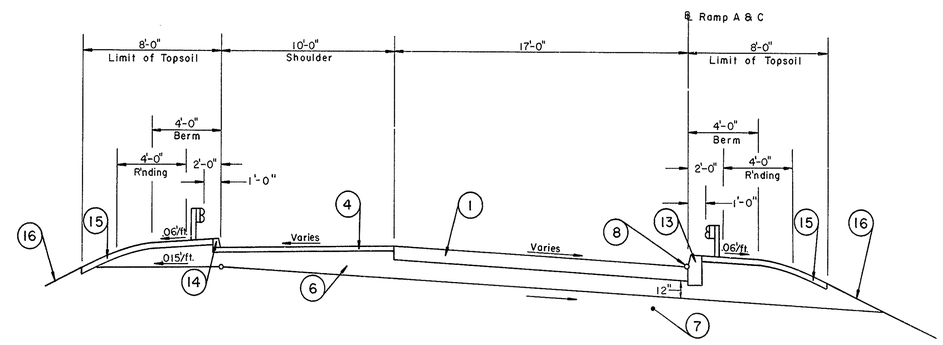

TYPICAL LOOP

Ramp A & C

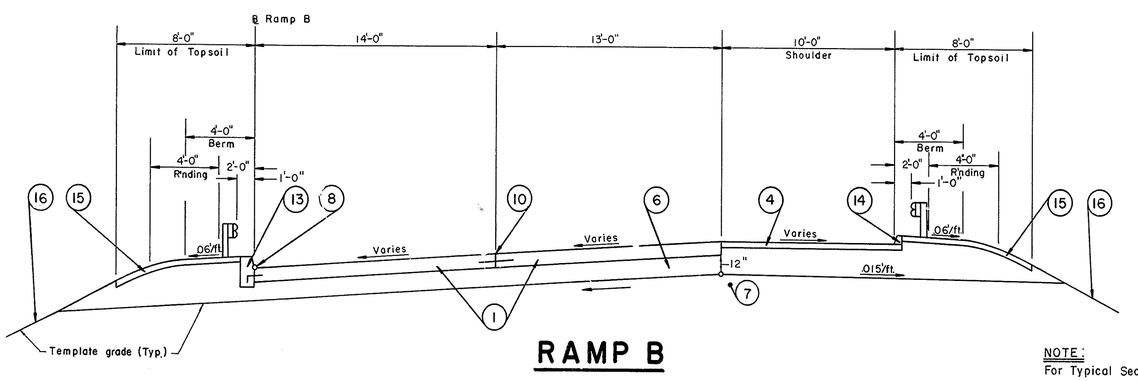

RAMP B

Superelevated Section

NOTE:
For Typical Section General Notes and Legend see Sheet No. 4

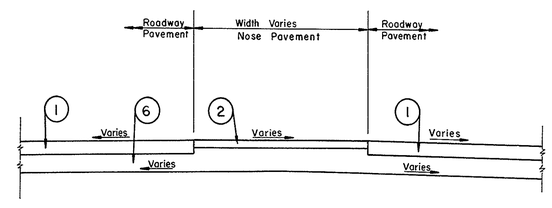

TYPICAL NOSE PAVEMENT SECTION

DELAWARE TURNPIKE	CONT. NO.	TITLE	SHEET NO.	TOTAL SHEETS
	7060	TYPICAL SECTIONS	6	115

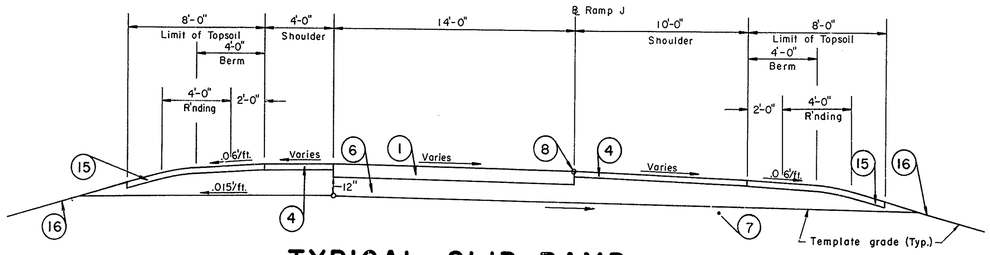

TYPICAL SLIP RAMP

(Ramp J & Tangent Section of Ramp C)

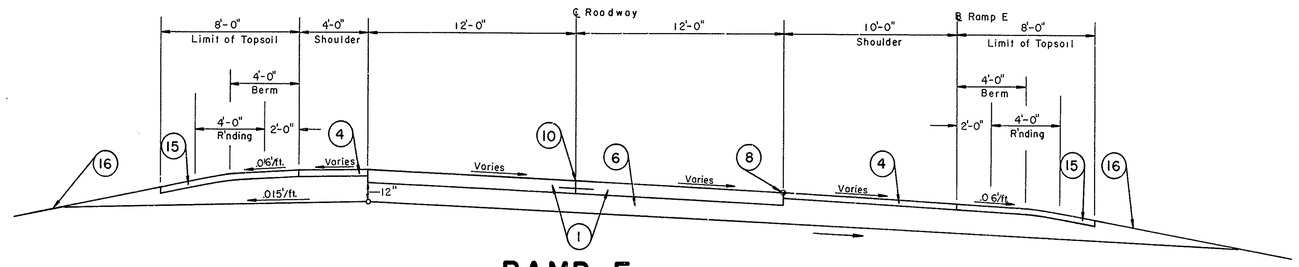

RAMP E

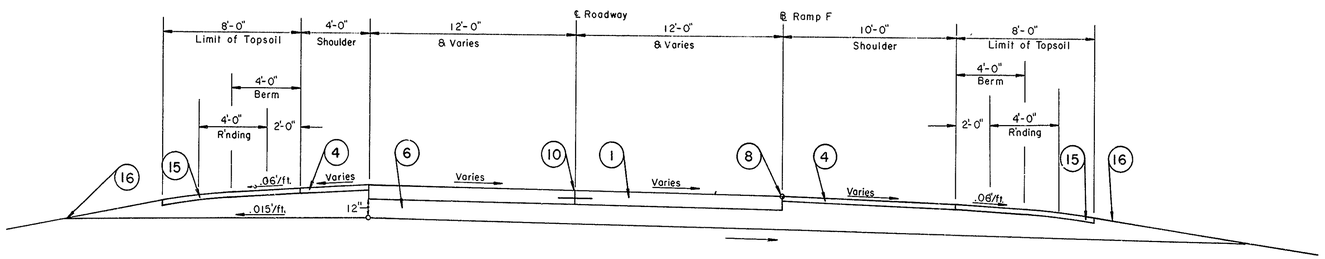

RAMP 'F' BEFORE TOLL PLAZA

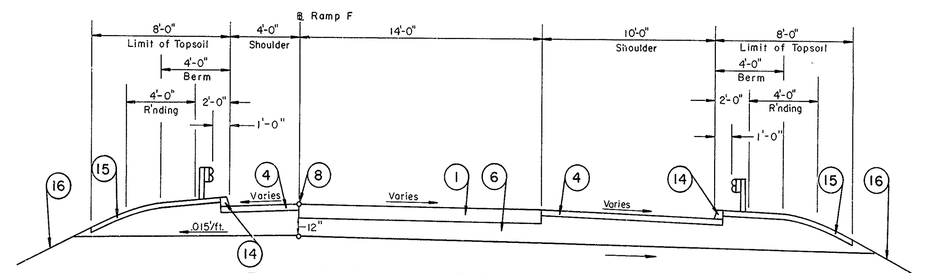

RAMP F AFTER TOLL PLAZA

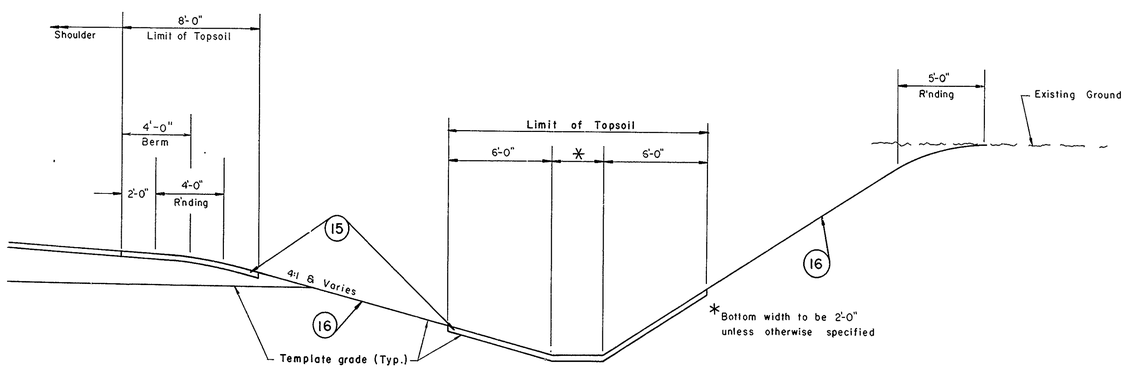

TYPICAL DITCH SECTION

NOTE:
For Typical Section General Notes and Legend See Sheet No. 4.

DELAWARE TURNPIKE	CONT. NO.	TITLE	SHEET NO.	TOTAL SHEETS
	7060	TYPICAL SECTIONS	7	115

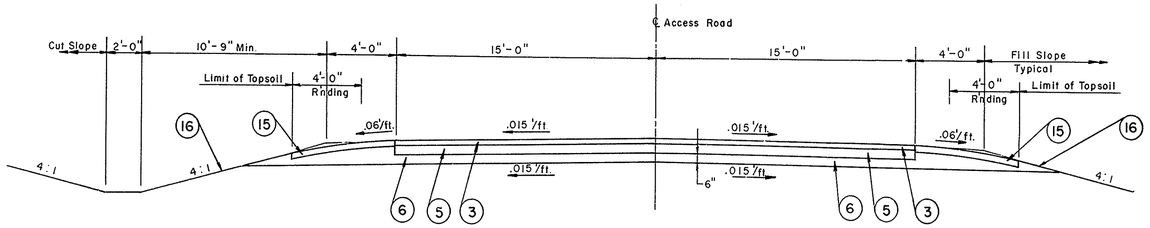

ACCESS ROAD NORMAL SECTION

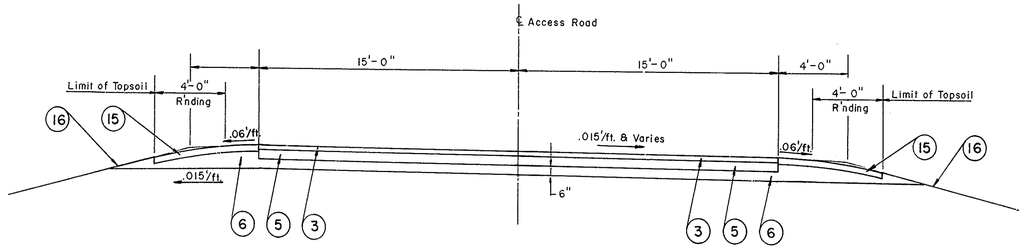

ACCESS ROAD SUPERELEVATED SECTION

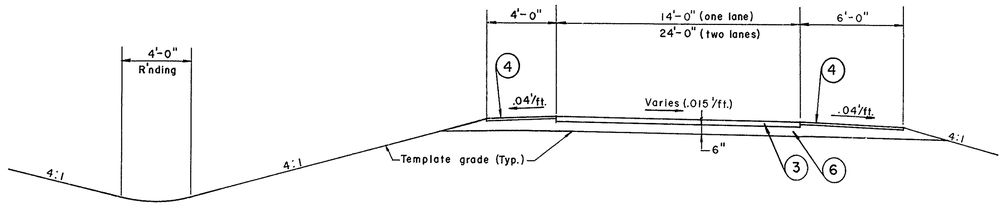

TYPICAL SECTION DETOUR ROAD

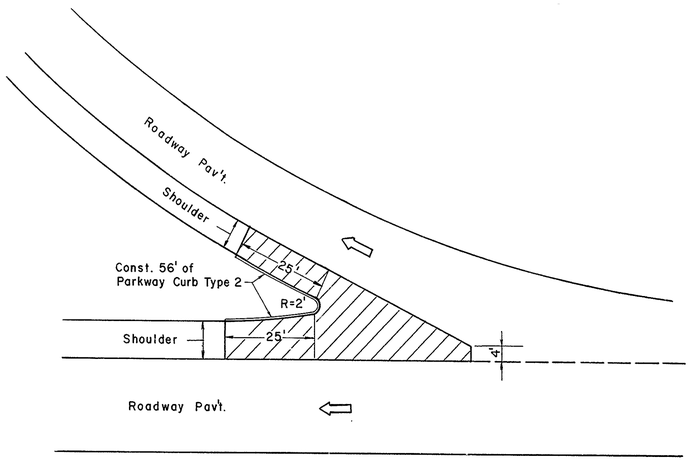

Note: For Nose Geometry
See Paving Plans

CURB AT APPROACH NOSE

NO SCALE

Note: For Typical Section
General Notes and Legend.
See Sheet No. 4.

DELAWARE TURNPIKE	CONT. NO.	TITLE	SHEET NO.	TOTAL SHEETS
	7060	ROADWAY DETAILS	8	115

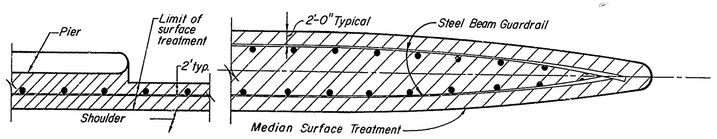

OBSTRUCTION ADJACENT TO SHOULDER

CENTER OF MEDIAN OBSTRUCTION

SPECIAL SURFACE TREATMENT WHEN GUARDRAIL RESTRICTS MOWING

No Scale

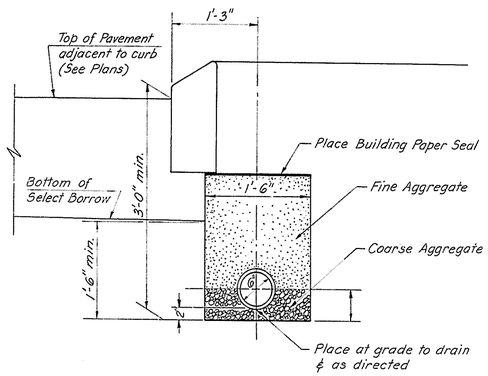

PERFORATED UNDERDRAIN TRENCH DETAIL

Scale: 1"=1'-0"

Notes:

1. Where laterals are required, they shall be connected at an angle of 45° to the longitudinal drain.
2. For underdrain locations see Plans.

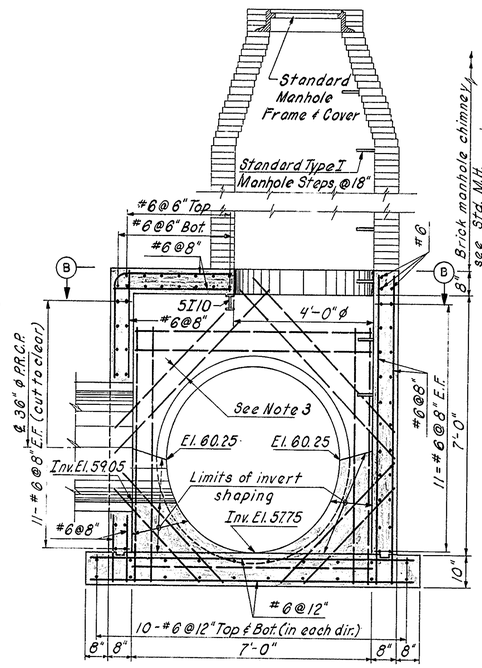

SECTION A-A

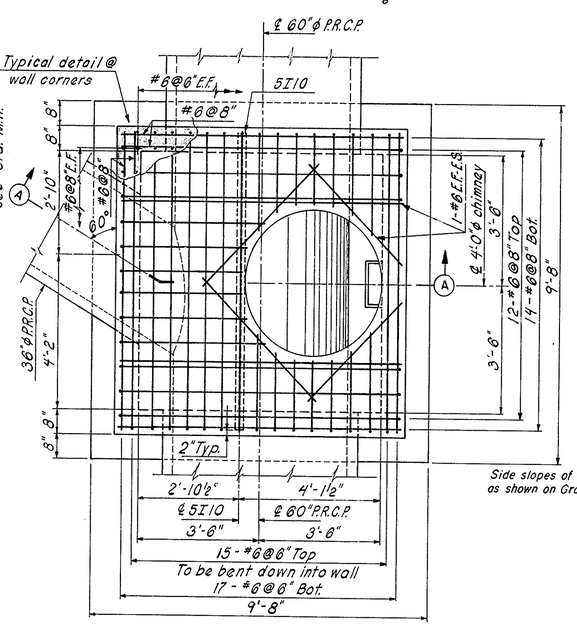

SECTIONAL PLAN B-B

SPECIAL EXTRA-DEPTH MANHOLE

NOTES:

1. All reinforcing steel to have a minimum cover of 1½".
2. Any reinforcing bars in conflict with pipe shell are to be cut a min. of 1½" from pipe.
3. 2-#6 @ 6" E.F. Typical additional reinforcing around all pipe openings. Total of 30 required for each 60" ø P.R.C.P.; 32 required for the 36" ø P.R.C.P.

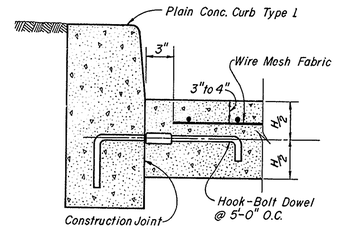

CONCRETE PAVEMENT TO CURB DETAIL

Scale: 1/8" = 1"

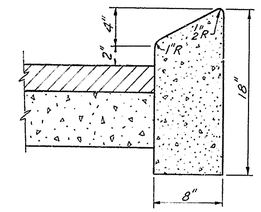

PARKWAY CURB TYPE 2

Scale: 1½" = 1'-0"

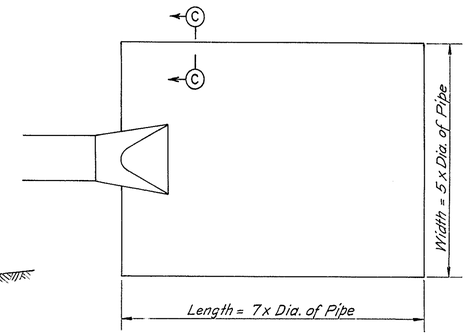

PLAN

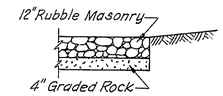

SECTION C-C

RUBBLE MASONRY PLACEMENT AT FLARED END SECTIONS

No scale

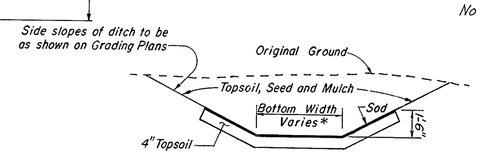

SODDED DITCH

No scale

*Bottom width of ditch as indicated on Drainage Plans.

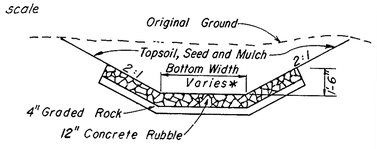

PLAIN RUBBLE GUTTER

No scale

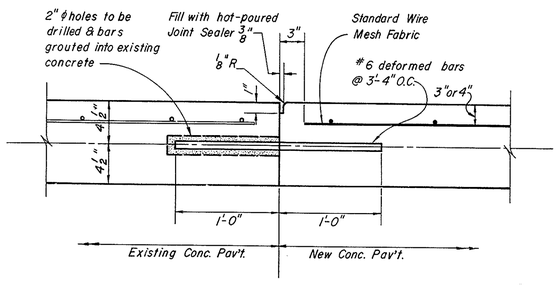

TYPICAL DOWELLED LONGITUDINAL JOINT WITH EXISTING PAVEMENT

Scale: 1½" = 1'-0"

NOTE: To be used at all locations were new and existing concrete abut.

DELAWARE TURNPIKE	CONT. NO.	TITLE	SHEET NO.	TOTAL SHEETS
	7060	ROADWAY DETAILS	9	115

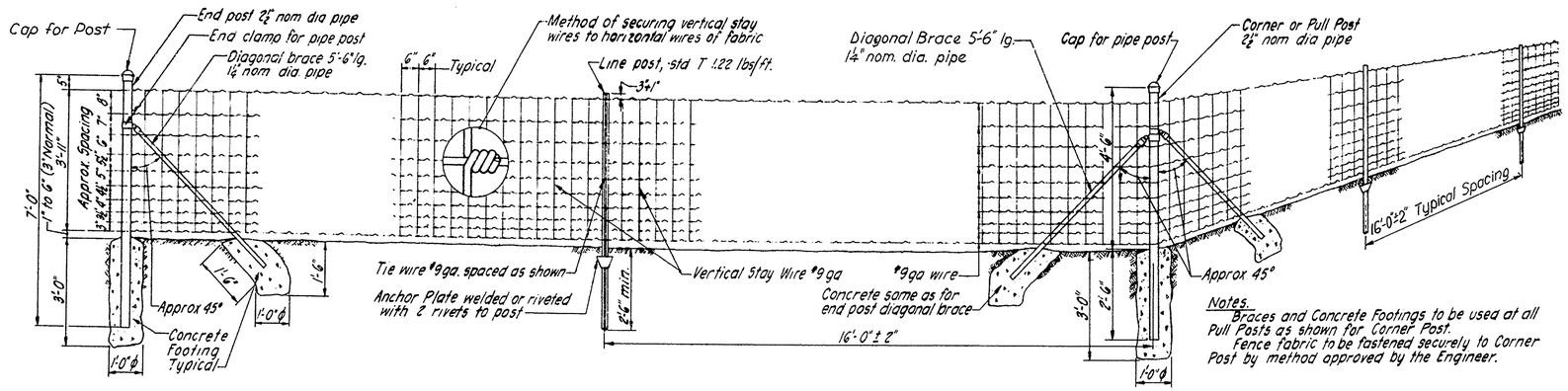

Notes.
Braces and Concrete Footings to be used at all Pull Posts as shown for Corner Post.
Fence fabric to be fastened securely to Corner Post by method approved by the Engineer.

WOVEN WIRE FENCE

½" = 1'-0"

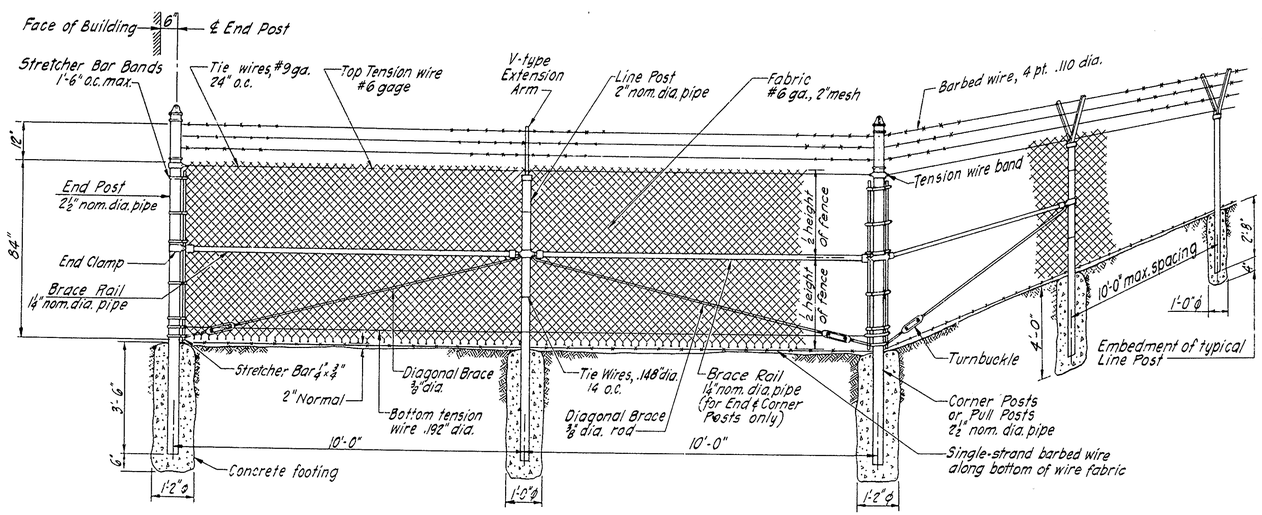

CHAIN LINK FENCE

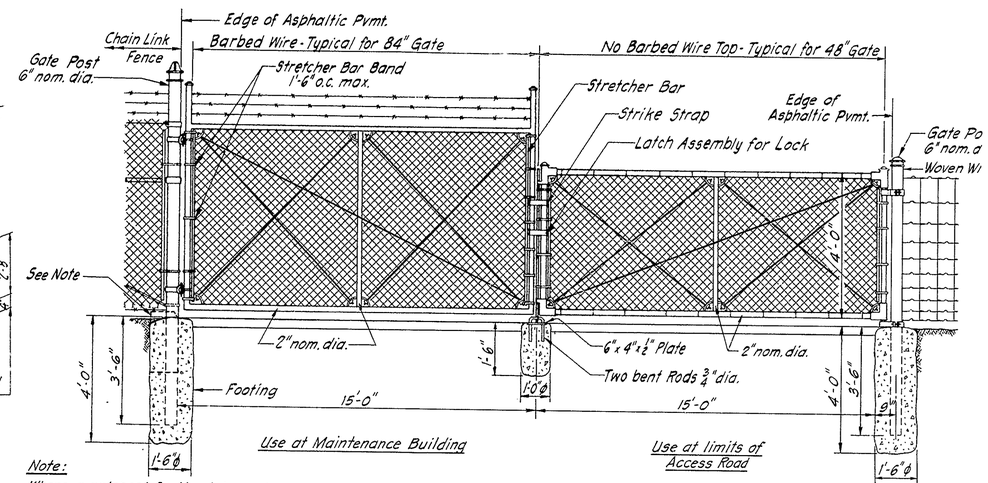

Note:
Where a gatepost footing interrupts a line of curbing, the upper portion of the footing contours shall match that of the curb. Vertical segments of ½" premoulded joint filler shall separate the curb from the gatepost footing.

VEHICULAR GATE FOR CHAIN LINK FENCE

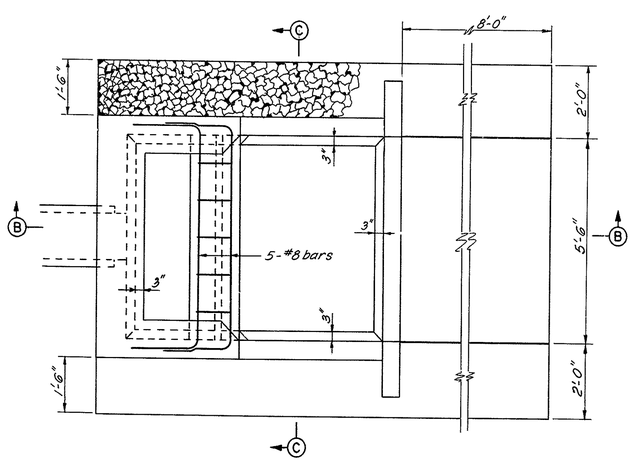

PLAN

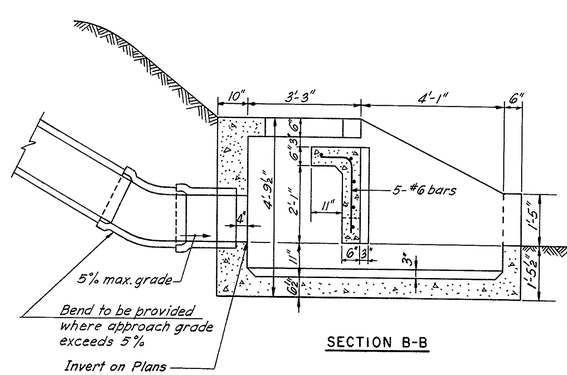

SECTION B-B

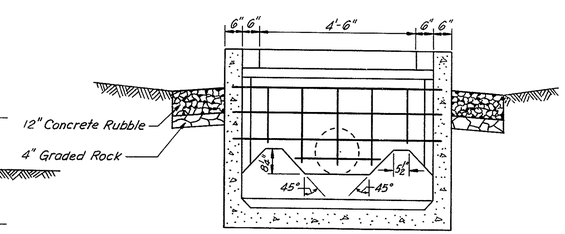

#5 bars placed @ 12" o.c., except where noted.

SECTION C-C

ENERGY DISSIPATOR

½" = 1'-0"

Reinforcing is continuous at all corners. All laps are 1'-6".

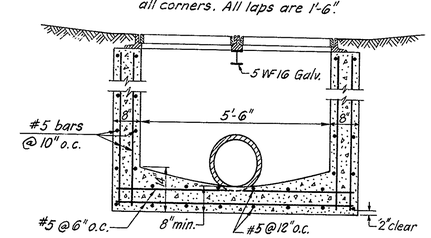

DOUBLE TYPE S INLET (Modified)

For Inlets 15' to 20' in depth

½" = 1'-0"

DELAWARE TURNPIKE	CONT NO.	TITLE	SHEET NO.	TOTAL SHEETS
	7060	ROADWAY DETAILS	10	115

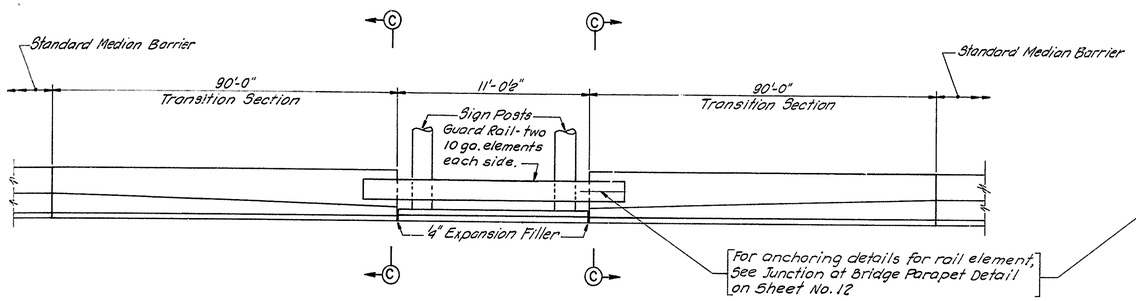

TRANSITION AT SIGN STANDARD
4" = 1'-0"

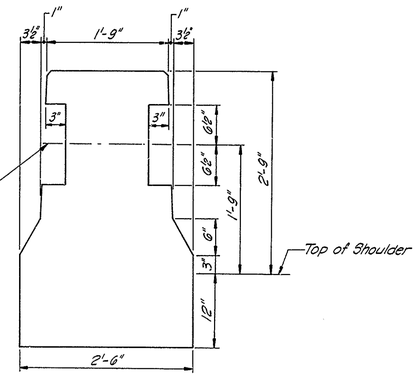

SECTION C-C
1" = 1'-0"

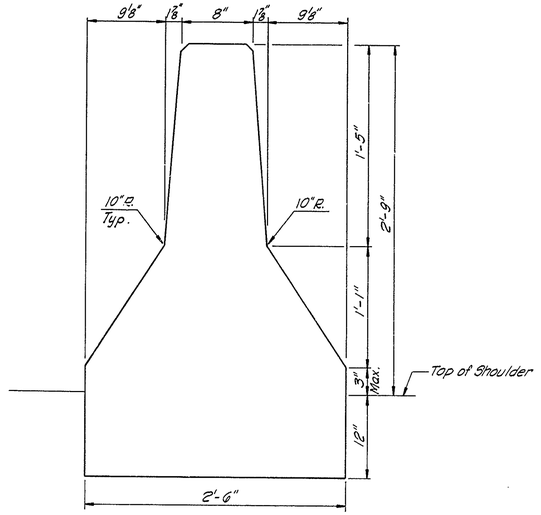

33"x 30" STANDARD MEDIAN BARRIER
1½" = 1'-0"

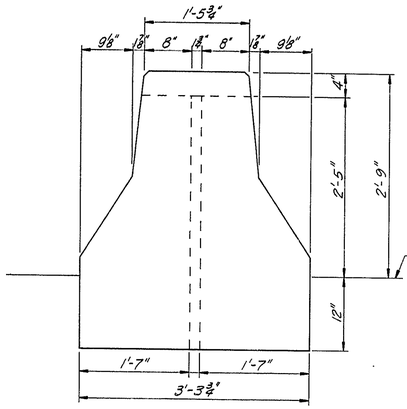

SECTION A-A
1" = 1'-0"

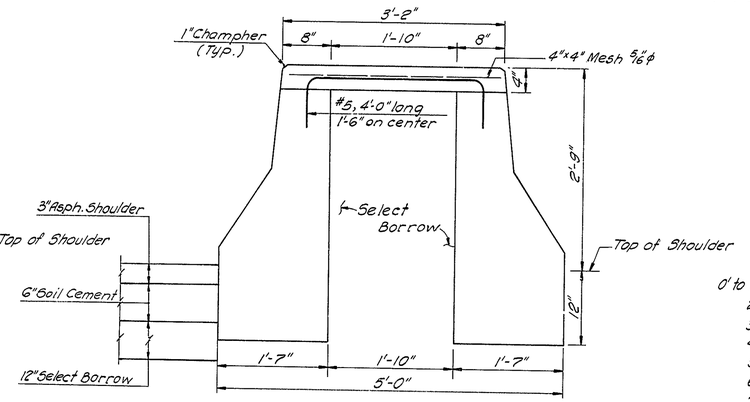

SECTION B-B
1" = 1'-0"

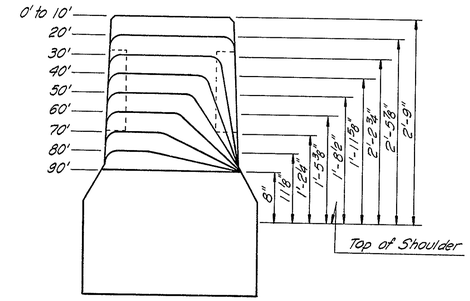

TRANSITION - SECTION C-C TO CURB

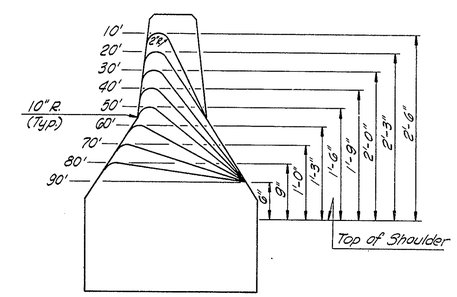

TRANSITION - STANDARD BARRIER TO CURB

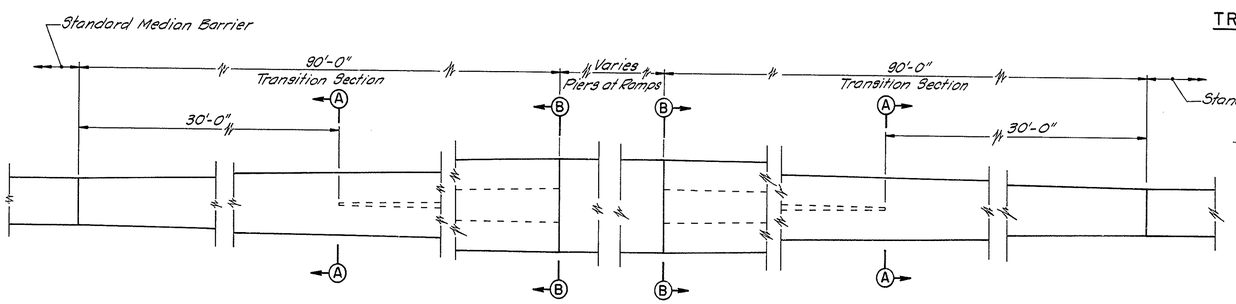

TRANSITION AT RAMP B&F PIERS

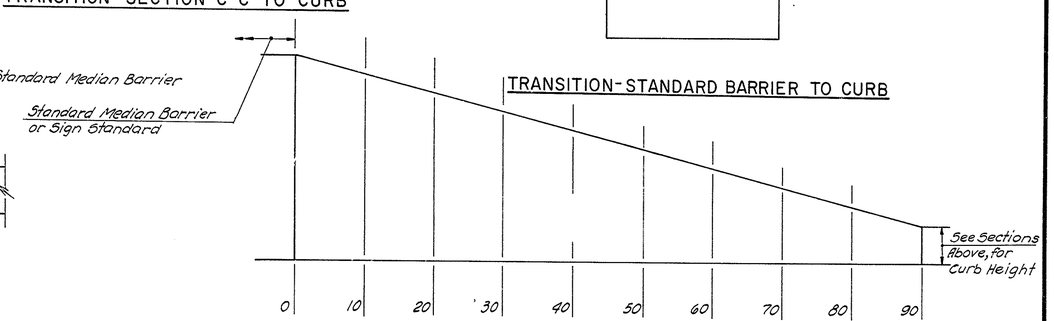

TRANSITION TO CURB SECTION
Hor. 1" = 10'-0"
Vert. 1" = 1'-0"

MEDIAN BARRIER DETAILS

	Length of Twist	Length of Taper (And Twist)	Minimum Length of Tangent Rail Before Obstruction	Minimum Length of Rail Beyond Obstruction
Shoulder Installation	25'	62'-6"	50'	25'
Median Installation	25'	37'-6"	50'	Symmetrical About Obstruction

	DIST. FROM BEGINNING OF TAPER	6.25	12.50	18.75	25.00	31.25	37.50	43.75	50.00	56.25	62.50	68.75	75.00	81.25	87.50	93.75	100.00	106.25	112.50	118.75	125.00	131.25	137.50	143.75	150.00
END OFFSET	C=5'	.18	.59	1.27	2.13	3.32	5.00																		
	C=6'	.22	.71	1.50	2.66	4.15	6.00																		
	C=10'	.13	.42	.90	1.60	2.52	3.66	4.95	6.45	8.19	10.00														
	C=10'	.02	.07	.16	.28	.43	.63	.85	1.11	1.41	1.74	2.10	2.50	2.93	3.40	3.91	4.44	5.02	5.63	6.27	6.94	7.66	8.40	9.18	10.00

TABLE OF OFFSETS FROM TANGENT FOR PLACING GUARDRAIL TAPER

DELAWARE TURNPIKE	CONT NO	TITLE	SHEET NO.	TOTAL SHEETS
	7060	ROADWAY DETAILS	11	115

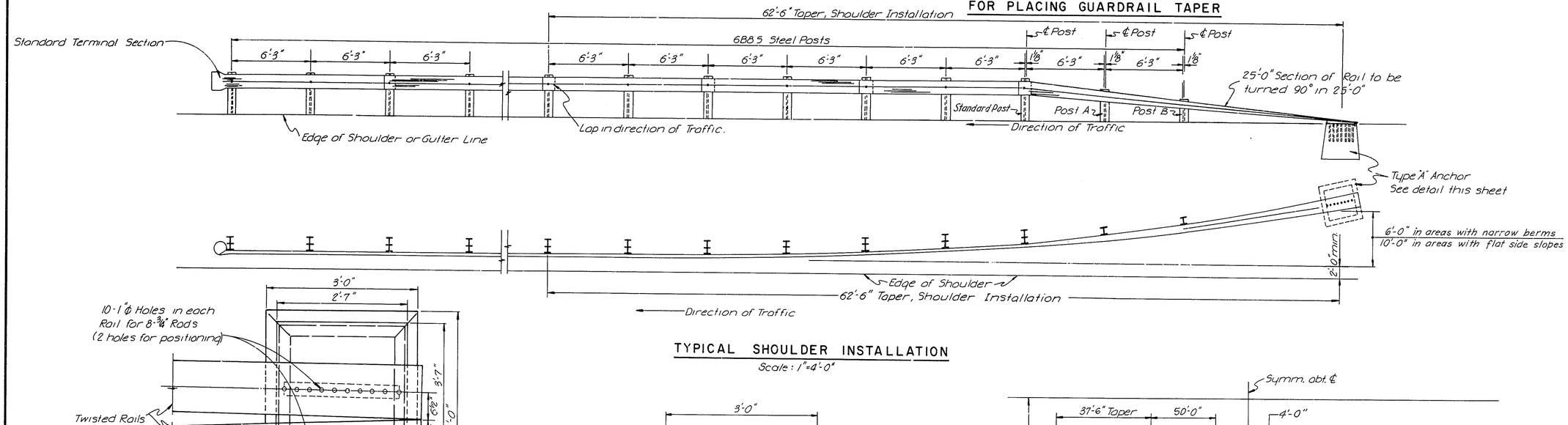

TYPICAL SHOULDER INSTALLATION

Scale: 1"=4'-0"

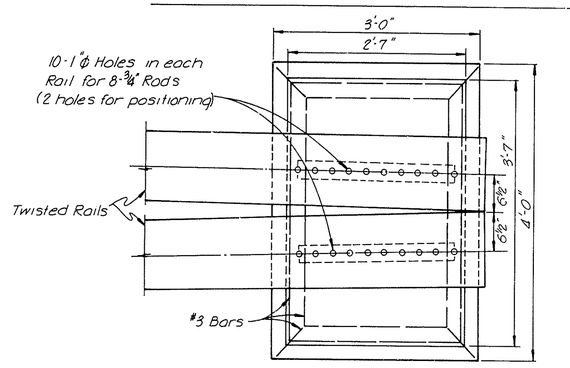

TYPE B ANCHOR BLOCK

Scale 1"=1'-0"

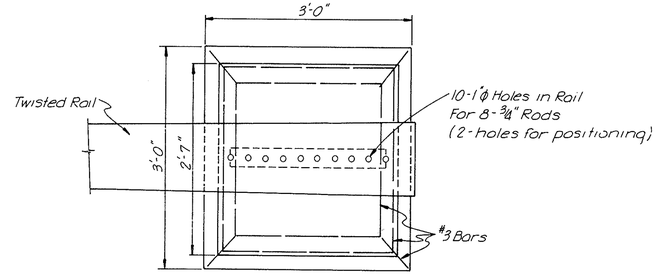

TOP VIEW (SINGLE RAIL)

Scale 1"=1'-0"

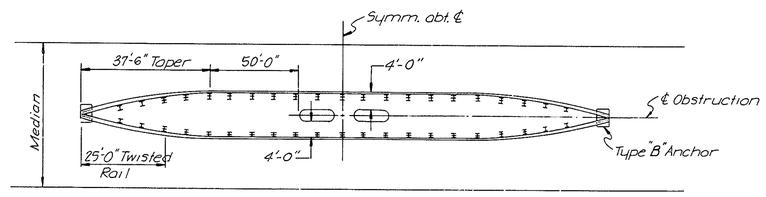

GUARDRAIL TREATMENT AT OBSTRUCTIONS IN CENTER OF MEDIAN

Scale: none

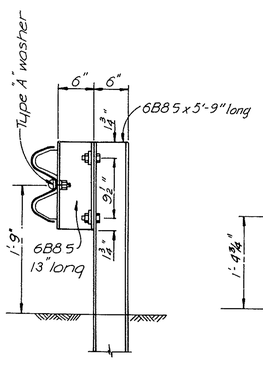

STANDARD POST

Scale ¾"=1'-0"

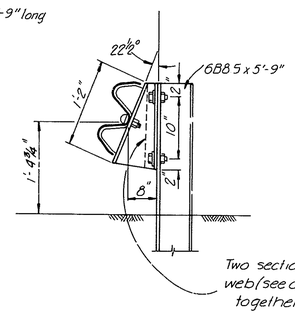

POST A

Scale ¾"=1'-0"

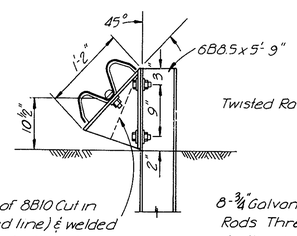

POST B

Scale ¾"=1'-0"

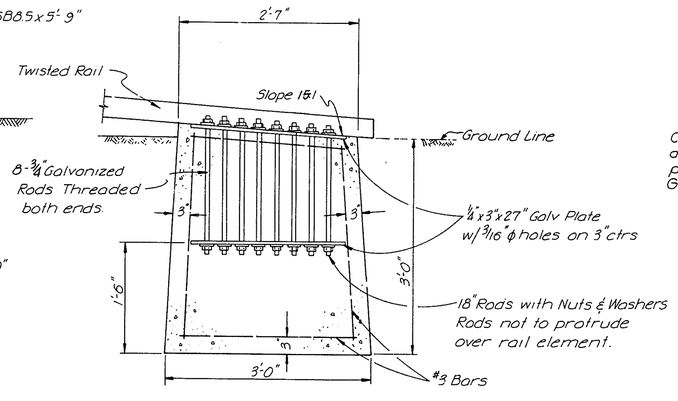

TYPE A ANCHOR BLOCK

Scale 1"=1'-0"

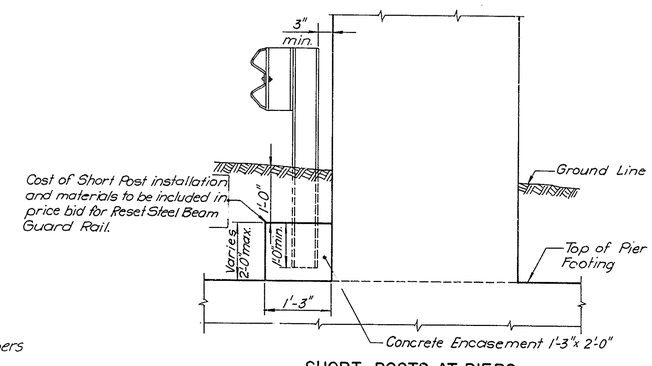

SHORT POSTS AT PIERS

¾"=1'-0"

Note: Concrete block to be 2'-0" x 2'-0" except as shown above at pier shaft where short posts are required at pier base or any other sub-surface structure where the fill is not deep enough for a normal length post.

DELAWARE TURNPIKE	CONT NO	TITLE	SHEET NO.	TOTAL SHEETS
	7060	ROADWAY DETAILS	12	115

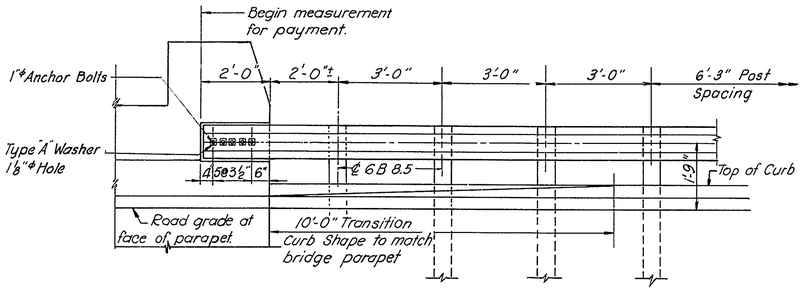

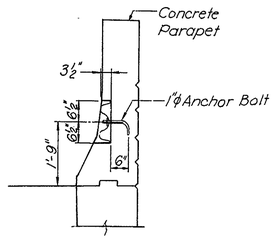

GUARD RAIL JUNCTION AT BRIDGE PARAPET
NEW CONSTRUCTION
1/2" = 1'-0"

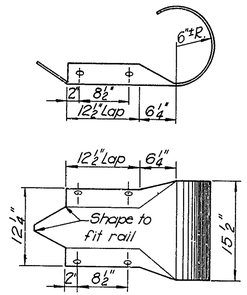

STANDARD TERMINAL SECTION
1" = 1'-0"

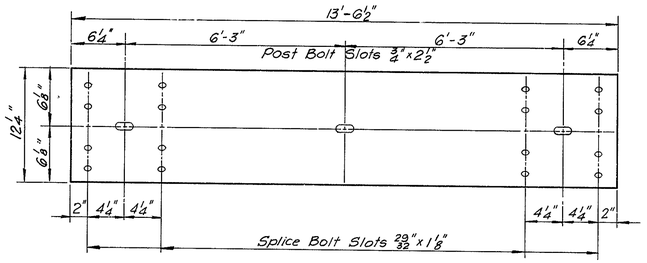

RAIL DETAIL
1 1/2" = 1'-0"

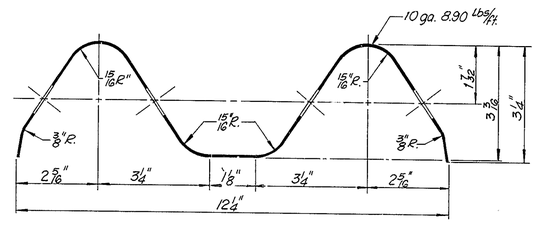

RAIL SECTION
Half Size

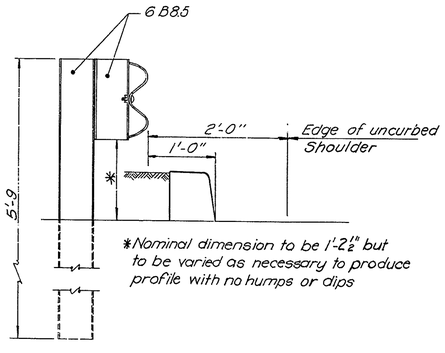

TYPICAL SECTION AT SHOULDER
1" = 1'-0"

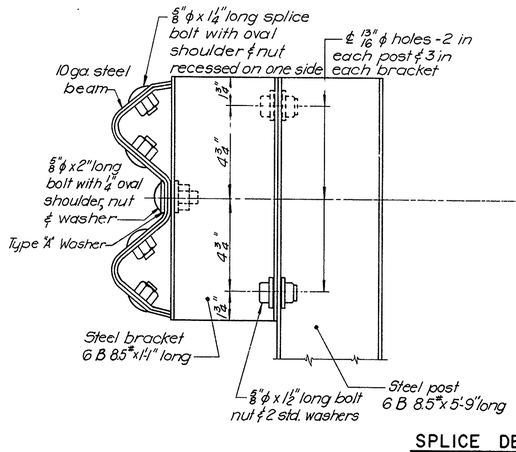

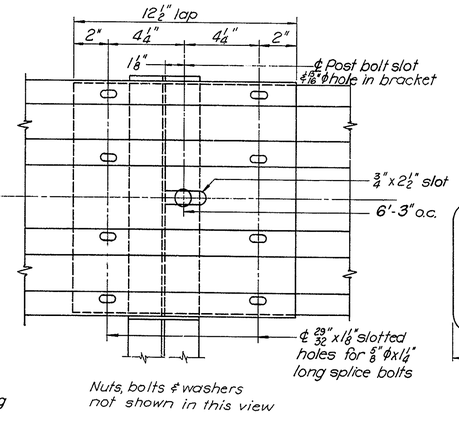

SPLICE DETAILS
3" = 1'-0"

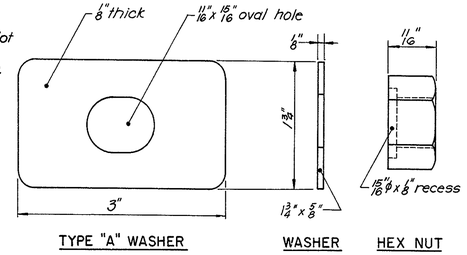

TYPE "A" WASHER WASHER HEX NUT

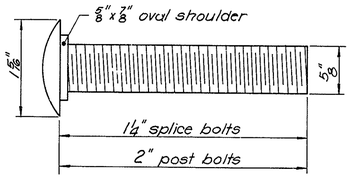

RAIL HARDWARE
Full Size

DELAWARE TURNPIKE	CONT NO	TITLE	SHEET NO.	TOTAL SHEETS
	7060	HEADWALL DETAILS	13	115

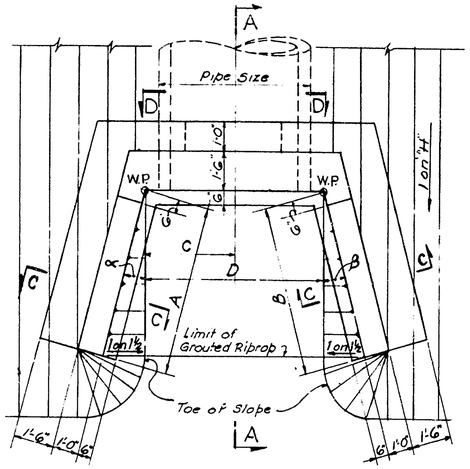

PLAN
(SKEW = 0°)

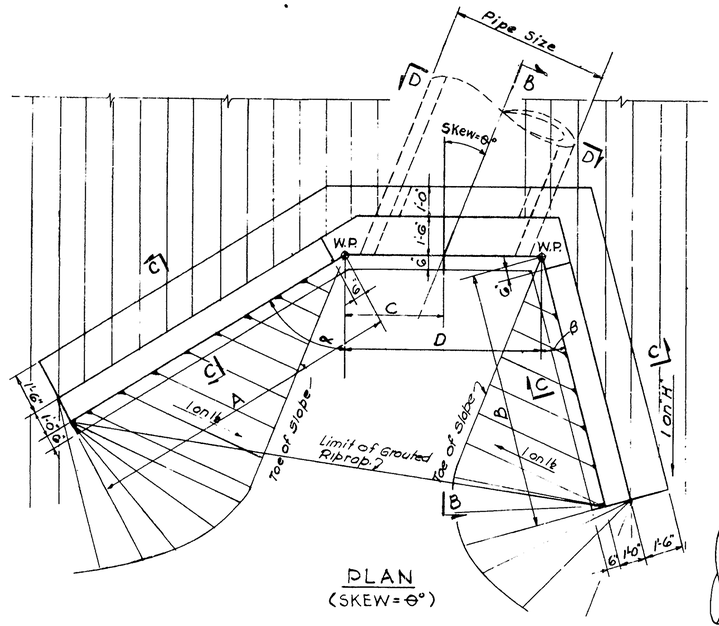

PLAN
(SKEW = θ°)

WING WALLS

SCHEDULE OF DIMENSIONS

TYPE	PIPE SIZE	DIRECTION OF θ	θ	α	β	A	B	C	D	E	F	G	H	QUANTITIES / WALL REINF. (LBS.)	CONC. (CU. YDS.)	GROUTED RIP RAP (SQ. YDS.)
WW-A	48"φ	—	0°	15°	15°	6'-6"	6'-6"	3'-0"	6'-0"	4'-3"	4'-3"	8'-0"	2	300	7.0	6.0
WW-B	60"φ	—	0°	15°	15°	8'-3"	8'-3"	3'-6"	7'-0"	4'-6"	4'-6"	9'-1"	2	400	9.0	8.5
WW-C	60"×38"	R	30°	60°	15°	8'-8"	5'-6"	4'-0"	8'-0"	6'-3"	5'-11"	7'-2½"	4	400	9.0	7.5
WW-D	60"×38"	R	30°	60°	30°	8'-8"	4'-8"	4'-0"	8'-7"	6'-3"	6'-3"	7'-2½"	4	400	9.0	7.0
WW-E	66"φ	L	41°	15°	60°	6'-0"	12'-9"	6'-0"	12'-0"	5'-10"	5'-6"	9'-8"	2	450	11.0	10.0
WW-F	54"φ	—	0°	15°	15°	7'-6"	7'-6"	3'-3"	6'-6"	4'-5"	4'-5"	8'-7"	2	350	8.0	7.0
WW-G	54"φ	R	26°	60°	30°	12'-6"	7'-4"	3'-10"	8'-8"	5'-3"	5'-3"	8'-7"	3	500	12.0	12.0
WW-H	60"φ	R	23°	60°	15°	10'-4"	8'-5"	3'-9"	7'-7"	7'-7"	6'-9"	9'-1"	4	500	120	11.0

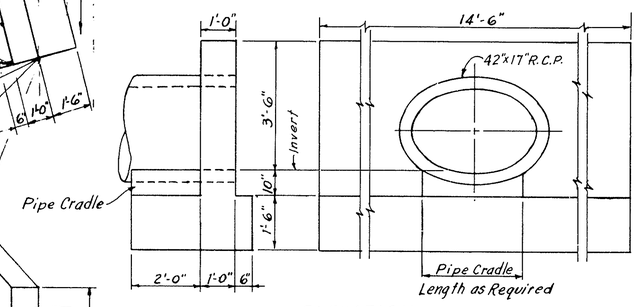

ELEVATION

HEADWALL DETAILS - 42"x27" ELLIPTICAL R.C.P.

QUANTITIES/WALL			
REINF.	CONCRETE (CU. YDS.)		
(LBS.)	WALL	FOOTING	TOTAL
90	1.61	2.82	4.43

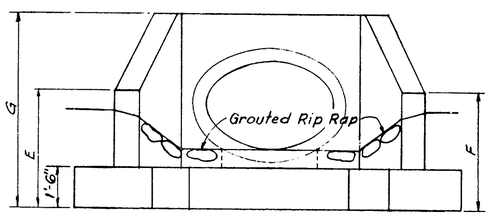

ELEVATION

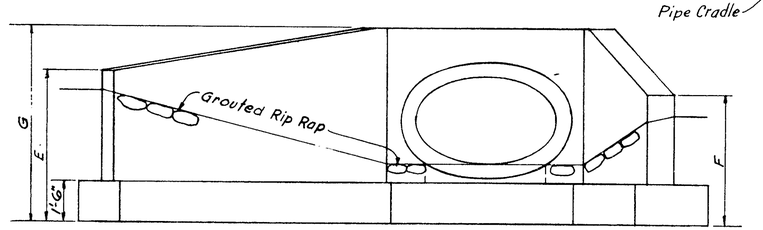

ELEVATION

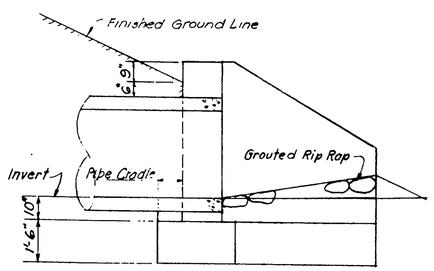

SECTION A-A

SECTION B-B SIMILAR

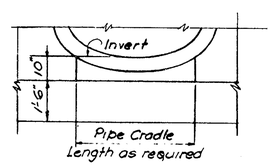

SECTION D-D

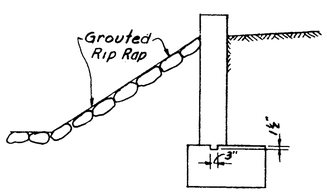

SECTION C-C

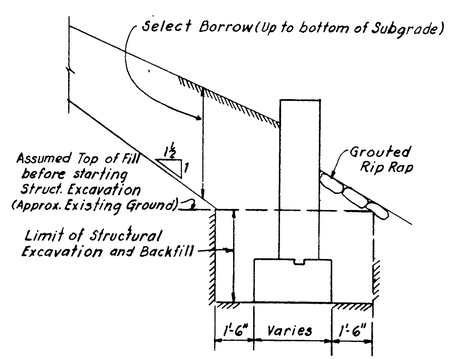

PAYMENT LINES FOR EXCAVATION AND BACKFILL

NOTES:

1. DESIGN SPECIFICATIONS: A.A.S.H.O.
2. MATERIAL AND FABRICATION SPECIFICATIONS: State of Delaware, State Highway Department. Standard Specifications for Highway Construction, June 1, 1965, and as given in the Special Provisions.
3. DESIGN STRESSES: Reinforcing Steel = 18,000 p.s.i. Concrete; f'_c = 1,200 p.s.i. n = 10
4. Splices for stress bars shall be a minimum of 30 diameters, all other splices a minimum of 20 diameters.
5. All exposed concrete edges shall be bevelled 1"×1" unless otherwise noted.
6. For location of Headwalls see Roadway Plan sheets.
7. For Bar List see Sheet No. 14.
8. Headwalls for Culverts 36" or less shall conform to the State Standard Detail Sheets.
9. The cost of Grouted Rip-rap is to be included in the price bid for the Wingwall Concrete.

CULVERT HEAD WALLS - DETAILS

NOT TO SCALE

DELAWARE TURNPIKE	CONT. NO	TITLE	SHEET NO	TOTAL SHEETS
	7060	HEADWALL DETAILS	14	115

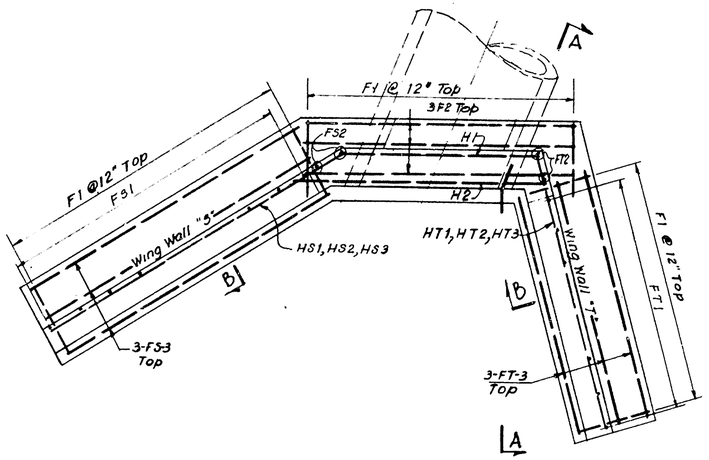

PLAN

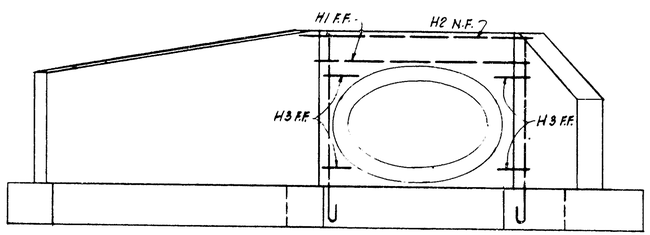

ELEVATION

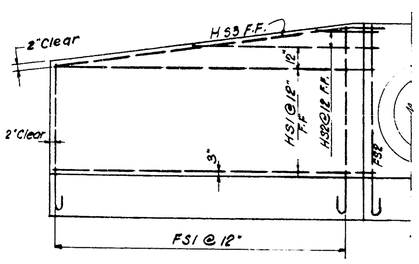

ELEVATION WINGWALL "S"

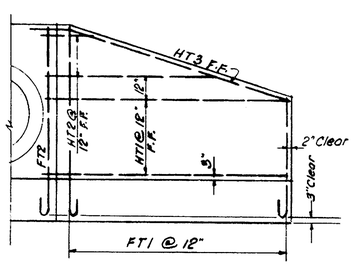

ELEVATION WINGWALL "T"

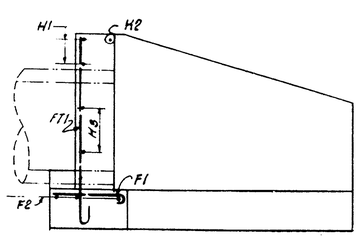

SECTION A-A

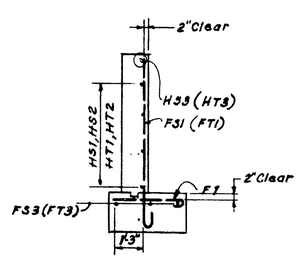

SECTION B-B

WING WALLS - BAR LIST

TYPE	MARK	SIZE	AMT. REQD.	LENGTH	BAR TYPE	A	B	C	Δ
WW-A	F1	5	21	3'-1"	I	2'-6"	7"	5"	
	F2		3	10'-0"	STR.				
	FS1		1 EA. TOT. 7	4'-5" TO 8'-7"	I	3'-10" TO 7'-6"	7"	5"	7"
	FS2		2	8'-2"	I	7'-7"	7"	5"	
	FT1		1 EA. TOT. 7	4'-5" TO 8'-1"	I	3'-10" TO 7'-6"	7"	5"	7"
	FT2		2	8'-2"	I	7'-7"	7"	5"	
	H1		2	7'-0"	STR.				
	H2		1	7'-7"					
	H3		4	1'-6"					
	HS1		3	7'-6"					
	HS2		1 EA. TOT. 2	3'-5" TO 4'-6"	STR.				1'-5"
	HS3		1	8'-5"	II	1'-8"	6'-9"	8 3/16"	
	HT1		3	7'-6"	STR.				
	HT2		1 EA. TOT. 2	3'-3" TO 4'-6"	STR.				1'-3"
	HT3		1	8'-5"	II	1'-8"	6'-9"	8 3/16"	
	FS3		3	7'-6"	STR.				
	FT3	5	3	7'-6"	STR.				
WW-B	F1	5	23	3'-1"	I	2'-6"	7"	5"	
	F2		3	11'-0"	STR.				
	FS1		1 EA. TOT. 8	4'-9" TO 8'-11"	I	4'-2" TO 8'-4"	7"	5"	7"
	FS2		2	9'-1"	I	8'-6"	7"	5"	
	FT1		1 EA. TOT. 8	4'-9" TO 8'-11"	I	4'-2" TO 8'-4"	7"	5"	7"
	FT2		2	9'-1"	I	8'-6"	7"	5"	
	H1		2	8'-0"	STR.				
	H2		1	8'-7"					
	H3		4	1'-6"					
	HS1		3	9'-3"					
	HS2		1 EA. TOT. 3	3'-8" TO 5'-11"	STR				1'-4"
	HS3		1	10'-3"	II	1'-8"	6'-7"	7 3/16"	
	HT1		3	9'-3"	STR.				
	HT2		1 EA. TOT. 3	3'-3" TO 5'-11"	STR.				1'-4"
	HT3		1	10'-3"	II	1'-8"	6'-7"	7 3/16"	
	FS3		3	9'-3"	STR.				
	FT3	5	3	9'-3"	STR.				
WW-C	F1	5	23	3'-1"	I	2'-6"	7"	5"	
	F2		2	10'-11"	STR.				
	FS1		1 EA. TOT. 9	5'-5" TO 7'-2"	I	5'-10" TO 6'-7"	7"	5"	1 1/4"
	FS2		2	7'-4"	I	6'-9"	7"	5"	
	FT1		1 EA. TOT. 5	6'-1" TO 7'-2"	I	5'-6" TO 6'-7"	7"	5"	8"
	FT2		2	7'-4"	I	6'-9"	7"	5"	
	H1		2	7'-10"	STR.				
	H2		1	10'-1"					
	H3		4	1'-6"					
	HS1		5	9'-8"					
	HS2		1	4'-0"	STR.				
	HS3		1	9'-8"	II	1'-8"	8'-0"	13/16"	
	HT1		4	6'-6"	STR				
	HT2		1	5'-10"	STR.				
	HT3		1	6'-8"	II	1'-8"	5'-0"	3/8"	
	FS3		3	9'-8"	STR.				
	FT3	5	3	6'-6"	STR.				
WW-D	F1	5	23	3'-1"	I	2'-6"	7"	5"	
	F2		2	11'-1"	STR.				
	FS1		1 EA. TOT. 9	6'-5" TO 7'-3"	I	5'-10" TO 6'-8"	7"	5"	1 1/4"
	FS2		2	7'-4"	I	6'-9"	7"	5"	
	FT1		1 EA. TOT. 5	6'-5" TO 7'-3"	I	5'-10" TO 6'-8"	7"	5"	2 1/8"
	FT2		2	7'-4"	I	6'-9"	7"	5"	
	H1		2	8'-2"	STR.				
	H2		1	10'-8"					
	H3		4	1'-6"					
	HS1		5	9'-8"					
	HS2		1	4'-0"	STR.				
	HS3		1	9'-8"	II	1'-8"	8'-0"	13/16"	
	HT1		5	5'-6"	STR.				
	HT2		1	4'-0"	STR.				
	HT3		1	5'-7"	II	1'-6"	4'-1"	2 3/16"	
	FS3		3	9'-8"	STR.				
	FT3	5	3	5'-8"	STR.				

TYPE	MARK	SIZE	AMT REQD	LENGTH	BAR TYPE	A	B	C	Δ
WW-E	F1	5	31	3'-1"	I	2'-6"	7"	5"	
	F2		3	14'-0"	STR.				
	FS1		1 EA. TOT. 6	6'-0" TO 9'-6"	I	5'-5" TO 9'-1"	7"	5"	9"
	FS2		2	9'-9"	I	9'-2"	7"	5"	
	FT1		1 EA. TOT. 13	5'-7" TO 9'-8"	I	5'-0" TO 9'-1"	7"	5"	4"
	FT2		2	9'-9"	I	9'-2"	7"	5"	
	H1		2	11'-6"	STR.				
	H2		1	13'-0"					
	H3		4	1'-6"					
	HS1		4	7'-0"					
	HS2		1 EA. TOT. 3	2'-8" TO 4'-9"	STR				1'-06"
	HS3		1	7'-8"	II	1'-8"	6'-0"	8 1/2"	
	HT1		5	13'-9"	STR.				
	HT2		1 EA. TOT. 3	3'-8" TO 9'-2"	STR.				3'-0"
	HT3		1	14'-0"	II	1'-8"	12'-4"	4"	
	FS3		3	7'-0"	STR.				
	FT3	5	3	13'-9"	STR.				
WW-F	F1	5	23	3'-1"	I	2'-6"	7"	5"	
	F2		3	8'-6"	STR.				
	FS1		1 EA. TOT. 7	4'-7" TO 8'-7	I	4'-0" TO 8'-0	7"	5"	8"
	FS2		2	8'-9"	I	8'-2"	7"	5"	
	FT1		1 EA. TOT. 7	4'-7" TO 8'-7	I	4'-0" TO 8'-0"	7"	5"	8"
	FT2		2	8'-9"	I	8'-2"	7"	5"	
	H1		2	8'-0"	STR.				
	H2		1	7'-6"					
	H3		4	1'-6"					
	HS1		4	8'-6"					
	HS2		1	4'-7"	STR				
	HS3		1	8'-8"	II	1'-8"	7'-0"	7 1/4"	
	HT1		4	8'-6"	STR.				
	HT2		1	4'-7"	STR.				
	HT3		1	8'-8"	II	1'-8"	7'-0"	7 1/4"	
	FS3		3	8'-6"	STR.				
	FT3	5	3	8'-6"	STR.				
WW-G	F1	5	30	3'-1"	I	2'-6"	7"	5"	
	F2		3	10'-3"	STR.				
	FS1		1 EA. TOT. 12	5'-5" TO 8'-7"	I	4'-10" TO 8'-0"	7"	5"	3 1/2"
	FS2		2	8'-9"	I	8'-2"	7"	5"	
	FT1		1 EA. TOT. 7	5'-5" TO 8'-7"	I	4'-10" TO 8'-0"	7"	5"	6 1/2"
	FT2		2	8'-9"	I	6'-7"	7"	5"	
	H1		2	7'-6"	STR.				
	H2		1	9'-3"					
	H3		4	1'-6"					
	HS1		4	13'-6"					
	HS2		1	4'-7"	STR				
	HS3		1	13'-8"	II	1'-8"	12'-0"	3 1/4"	
	HT1		4	8'-4"	STR.				
	HT2		1	2'-10"	STR.				
	HT3		1	8'-8"	II	1'-8"	7'-0"	5 1/2"	
	FS3		3	13'-6"	STR.				
	FT3	5	3	13'-6"	STR.				
WW-H	F1	5	28	3'-1"	I	2'-6"	7"	5"	
	F2		2	10'-9"	STR.				
	FS1		1 EA. TOT. 10	7'-9" TO 9'-1"	I	7'-2" TO 8'-6"	7"	5"	1 3/4"
	FS2		2	9'-3"	I	8'-8"	7"	5"	
	FT1		1 EA. TOT. 8	6'-11" TO 9'-1"	I	6'-4" TO 8'-6"	7"	5"	3 9/16"
	FT2		2	9'-3"	I	8'-8"	7"	5"	
	H1		2	7'-5"	STR.				
	H2		1	9'-8"					
	H3		4	1'-6"					
	HS1		6	11'-4"					
	HS2		1	6'-7"	STR.				
	HS3		1	11'-4	II	1'-8"	9'-8	1 3/16"	
	HT1		5	9'-5"	STR.				
	HT2		1 EA. TOT. 2	3'-5" TO 6'-9"	STR.				
	HT3		1	9'-9"	II	1'-8"	8'-1"	9 3/16"	
	FS3		3	11'-4"	STR.				
	FT3	5	3	9'-5"	STR.				

All bar dimensions are out to out

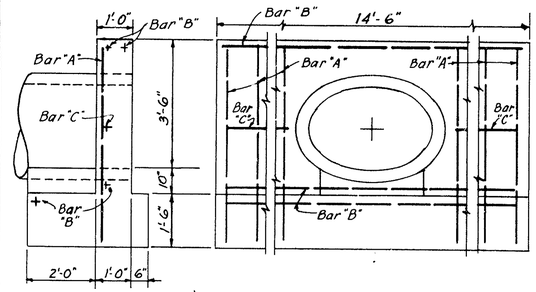

BAR LIST & DETAILS
HEADWALL FOR 42" x 27" ELLIP. R.C.P.

Spacing of Vertical Bars	1/2" REINFORCING BARS								
	BARS "A"			BARS "B"			BARS "C"		
	NO.	Length	Total Length	NO.	Length	Total Length	NO.	Length	Total Length
11"	12	5'-6"	66'	4	14'	56'	2	4'-6	9'

NOTES:

1-) For Location of Headwalls see Drainage and Electrical Plan Sheets.

2-) For dimensions of Headwall see Sheet No. 13.

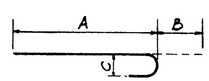

TYPE I

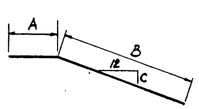

TYPE II

CULVERT HEAD WALLS - BAR LIST

NOT TO SCALE

DELAWARE TURNPIKE	CONT NO	TITLE	SHEET NO.	TOTAL SHEETS
	7060	CURVE DATA SUMMARY	15	115

CURVE DATA					COORDINATES					
					PC(PCC,PRC)		PI		PT(PCC,PRC)	
NO.	R	Δ	T	L	N	E	N	E	N	E
SOUTHBOUND ROUTE 273										
SB1	1200.000'	11°-43'-47.9"	123.267'	245.672'	607938.706	428124.055	607982.732	428008.918	608049.245	427905.136
SB2	1600.000'	24°-25'-51.3"	346.384'	682.241'	608049.245	427905.136	608236.151	427613.505	608526.938	427425.290
SB3	1588.000'	19°-16'-30.5"	269.662'	534.227'	609287.120	426933.255	609513.499	426786.729	609678.819	426573.687
SB4	1600.000'	11°-51'-41.2"	166.211'	331.234'	609984.486	426179.787	610086.384	426048.475	610159.116	425899.021
NORTHBOUND ROUTE 273										
NB1	1612.000'	16° 42' 33.4"	236.736'	470.111'	607948.786	428176.087	608033.338	427954.966	608177.896	427767.491
NB2	1500.000'	19°-27'-05.9"	257.096'	509.243'	608177.896	427767.491	608334.886	427563.892	608550.716	427424.194
NB3	1600.000'	19°-16'-30.6"	271.699'	538.264'	609293.639	426943.329	609521.729	426795.696	609688.299	426581.044
NB4	1288.513'	16°-56'-58.7"	191.991'	381.177'	610028.090	426143.170	610145.793	425991.491	610214.163	425812.086
RAMP A										
A1A	6036.000'	1°-53'-54.5"	100.009'	200.000'	608869.957	427026.172	608934.729	427102.373	609001.989	427176.385
A1	640.000'	26°-51'-26.6"	152.808'	300.000'	609001.989	427176.385	609104.759	427289.472	609145.354	427436.790
A2	320.000'	35°-48'-35.5"	103.388'	200.000'	609145.354	427436.790	609172.820	427536.462	609136.776	427633.363
A3	230.000'	161°-58'-41.5"	1450.379'	650.222'	609136.776	427633.363	608631.128	428992.744	608691.405	427543.619
A4	320.000'	46°-06'-28.3"	136.188'	257.515'	608691.405	427543.619	608697.065	427407.549	608799.047	427317.290
A5	640.000'	8°-35'-48.7"	48.104'	96.028'	608799.047	427317.290	608835.070	427285.409	608875.453	427259.270
A6	306.360'	24°-28'-08.1"	66.430'	130.835'	608708.955	427407.719	608738.365	427348.154	608789.806	427306.121
RAMP B										
B1	1101.000'	10°-43'-13.7"	103.305'	206.006'	610165.573	425793.568	610128.785	425890.100	610074.682	425978.104
B2	1200.000'	31°-40'-38.2"	340.440'	663.447'	610074.682	425978.104	609896.386	426268.121	609592.354	426421.302
B3	2000.000'	13°-12'-26.5"	231.539'	461.025'	609037.259	426711.334	608830.483	426815.515	608652.978	426964.183
B4	1215.750'	7°-09'-43.1"	76.083'	151.969'	608652.978	426964.183	608594.650	427013.035	608542.868	427068.779
B5	600 000'	14°-19'-26.2"	75.393'	150.000'	608554.407	427079.498	608503.095	427134.735	608467.044	427200.951
B6	430.000'	95°-04'-57.4"	469.942'	713.587'	608467.044	427200.951	608242.330	427613.685	608673.348	427800.951
B7	600.000'	14°-19'-26.2"	75.393'	150.000'	608673.348	427800.951	608742.497	427830.994	608816.929	427842.996
B8	1200.000'	7°-09'-43.1"	75.098'	150.000'	608816.929	427842.996	608891.069	427854.951	608966.121	427857.569
B10	749.485'	7°-22'-22.6"	48.289'	96.446'	608536.091	427062.483	608503.225	427097.863	608475.171	427137.168
B11	495.000'	6°-57'-03.5"	30.063'	60.052'	608475.171	427137.168	608457.706	427161.637	608443.331	427188.040
B12	842.560'	7°-09'-43.1"	52.729'	105.320'	608812.631	427869.652	608864.687	427878.045	608917.384	427879.884
B13	1800.000'	2°-41'-38.8"	42.327'	84.638'	609033.706	427883.941	609076.007	427885.417	609118.192	427888.879
RAMP C										
C1	640.000'	17°-54'-17.7"	100.822'	200.000'	609340.716	426958.123	609425.356	426903.339	609522.738	426877.231
C2	320.000'	26°-51'-26.6"	76.404'	150.000'	609522.738	426877.231	609596.536	426857.445	609671.312	426873.133
C3	230.000'	172°-16'-15.2"	3404.807'	691.540'	609671.312	426873.133	613003.571	427572.250	609607.562	427327.638
C4	320.000'	25°-38'-39.7"	72.833'	143.225'	609607.562	427327.638	609534.918	427322.405	609471.694	427286.249
C5	640.000'	16°-23'-19.2"	92.161'	183.063'	609471.694	427286.249	609391.691	427240.497	609327.848	427174.031
C6	5888.500'	3°-37'-38.1"	186.457'	372.789'	609327.848	427174.031	609198.683	427039.561	609078.284	426897.187
C7	10406.216'	2°-05'-50.6"	190.488'	380.934'	608847.345	426645.782	608724.343	426500.330	608606.746	426350.474
C8	2500.000'	3°-35'-20.2"	78.324'	156.598'	608606.746	426350.474	608558.393	426288.857	608513.992	426224.333
C9	520.000'	8°-47'-35.8"	39.981'	79.805'	609463.255	427301.006	609428.548	427281.158	609397.283	427256.238
C10	812.455'	7°-35'-43.3"	53.930'	107.703'	609397.283	427256.238	609355.111	427222.623	609317.751	427183.729
RAMP E										
E1	1487.050'	5°-00'-00.4"	64.928'	129.773'	610110.340	427284.863	610085.968	427224.684	610066.933	427162.609
E2	1000.000'	15°-28'-34.8"	135.884'	270.113'	609960.297	426814.857	609920.460	426684.944	609916.733	426549.111
E3	550.000'	39°-22'-58.7"	196.836'	378.049'	609916.733	426549.111	609911.335	426352.349	610032.009	426196.842
E4	1324.513'	6°-25'-48.5"	74.401'	148.646'	610056.531	426165.240	610102.144	426106.461	610140.887	426042.943
E7	2208.139'	1°-49'-22.0"	35.127'	70.249'	610015.961	427104.827	610009.014	427070.393	610000.975	427036.198
E8	901.000'	3°-49'-05.9"	30.033'	60.044'	610000.975	427036.198	609994.102	427006.962	609985.297	426978.248
RAMP F										
F1	1000.000'	24°-09'-30.4"	214.002'	421.645'	610700.960	428563.143	610546.485	428415.040	610466.152	428216.688
F2	500.000'	17°-11'-19.4"	75.568'	150.000'	609890.054	426858.159	609861.687	426788.118	609813.889	426729.587
F3	310.000'	73°-18'-49.6"	230.704'	396.666'	609813.889	426729.587	609667.962	426550.898	609454.898	426639.372
F4	500.000'	17°-11'-19.4"	75.568'	150.000'	609454.898	426639.372	609385.108	426668.352	609326.999	426716.662
F5	2500.000'	9°-31'-52.7"	208.422'	415.882'	608461.927	427417.653	608301.659	427550.896	608165.666	427708.837
F6	594.706'	6°-44'-10.4"	35.000'	69.919	610012.254	427106.329	609995.401	427075.653	609982.263	427043.213
F7	471.226'	17°-11'-19.4"	71.219'	141.368'	609448.762	426624.595	609382.989	426651.908	609328.224	426697.437

CURVE DATA					COORDINATES					
					PC(PCC,PRC)		PI		PT(PCC,PRC)	
NO.	R	Δ	T	L	N	E	N	E	N	E
RAMP J										
J1	750.000'	30°-34'-19.0"	204.980'	400.186'	609781.658	426302.635	609618.870	426427.201	609415.355	426451.655
J2	2122.403'	11°-55'-26.8"	221.653'	441.704'	609415.355	426451.655	609195.285	426478.098	608974.500	426458.500
J3	750.000'	8°-38'-42.3"	56.690'	113.164'	608974.500	426458.500	608918.032	426453.488	608862.960	426440.045
J4	500.000'	28°-15'-49.9"	125.888'	246.649'	608862.960	426440.045	608740.663	426410.192	608647.083	426325.987
J5	750.000'	11°-47'-32.9"	77.455'	154.363'	608647.083	426325.987	608589.506	426274.178	608543.732	426211.695
J6	3000.000'	3°-51'-09.5"	100.900'	201.725'	608197.035	425738.445	608137.406	425657.050	608083.380	425571.831
RAMP L										
L1	2250.000'	3°-37'-32.5"	71.214'	142.381'	608773.683	427911.196	608844.827	427908.027	608916.029	427909.363
L2	951.593'	1°-16'-48.0"	10.630'	21.259'	609501.662	427920.351	609512.290	427920.550	609522.911	427920.987
L3	655.947'	25°-28'-55.7"	148.318'	291.731'	609621.915	427935.068	609766.181	427969.498	609881.601	428062.647
L4	1090.446'	4°-24'-41.2"	42.000'	83.958'	609082.262	427898.480	609124.255	427899.267	609166.184	427896.823
ACCESS ROAD										
AR1	90.000'	64°-17'-39.0"	56.560'	100.993'	607063.412	423217.239	607119.792	423212.730	607148.309	423261.575
AR2	2000.000'	2°-05'-42.9"	36.573'	73.138'	607395.351	423684.708	607413.791	423716.292	607433.374	423747.181
AR3	2000.000'	1°-29'-24.0"	26.007'	52.011'	607628.914	424055.619	607642.839	424077.584	607657.330	424099.179
AR4	36.332'	101°-03'-09.6"	44.116'	64.079'	607764.084	424258.265	607788.665	424294.897	607748.000	424312.000
AR5	50.850'	101°-03'-09.6"	61.743'	89.683'	607775.162	424247.855	607809.567	424299.124	607752.652	424323.061
AR6	21.815'	101°-03'-09.6"	26.488'	38.475'	607753.005	424268.674	607767.764	424290.669	607743.348	424300.939
AR7	75.000'	150°-04'-03.9"	280.567'	196.438'	606995.588	423307.405	606993.894	423026.843	607135.355	423269.138
AR8	50.000'	90°-00'-00.0"	50.000'	78.540'	606973.040	423159.259	606977.026	423209.100	607026.867	423205.114
DELAWARE TURNPIKE										
5	6000.000'	14°-46'-05.9"	777.576'	1546.534'	608401.520	426329.523	608817.861	426986.246	609387.854	427515.144
9	12000.000'	13°-16'-00.1"	1395.524'	2778.568'	605628.355	422364.701	606626.102	423340.402	607373.313	424519.029
10	6000.000'	14°-46'-05.9"	777.576'	1546.534'	608507.120	426307.460	608923.461	426964.183	609493.454	427493.081
11	11459.160'	25°-11'-36.4"	2560.737'	5038.691'	610649.051	428565.363	612526.168	430307.145	613483.292	432682.286
ROUTE 347										
1	1200.000'	7°-32'-52.5"	79.156'	158.083'	606965.791	423219.147	606972.101	423298.051	606967.992	423377.100

STATION LINE INTERSECTIONS				
NO.	STATION	COORDINATES N	COORDINATES E	STATION
X1	54+64.79 SB	608424.423	427497.498	35+62.72 B
X2	363+84.95 EB	608999.237	427119.590	61+52.81 SB
X3	363+41.96 WB	609078.706	427068.153	62+47.48 SB
X4	63+60.26 SB	609173.383	427006.872	26+26.92 C
X5	69+66.99 SB	609639.236	426622.659	34+06.90 F
X6	54+59.40 NB	608428.005	427512.710	35+78.35 B
X7	363+97.10 EB	609007.351	427128.632	61+54.71 NB
X8	363+54.09 WB	609086.752	427077.239	62+49.30 NB
X9	63+62.11 NB	609181.459	427015.939	26+14.78 C
X10	69+76.57 NB	609652.284	426625.774	33+93.48 F
X11	25+86.42 B	608957.182	426753.983	29+59.64 C
X12	360+05.84 WB	608863.291	426810.193	26+95.86 B
X13	360+50.16 EB	608782.968	426864.087	27+92.60 B
X14	40+51.46 F	609082.280	426901.909	27+65.91 C
X15	362+16.38 WB	608996.537	426973.193	41+62.97 F
X16	362+70.61 EB	608923.773	427033.687	42+57.59 F
X17	35+20.12 B	608417.489	427455.483	49+16.56 F
X26	42+93.60 F	608896.086	427056.705	8+40.19 A
X27	61+16.37 SB	608968.647	427139.390	9+50.20 A
X28	61+18.26 NB	608976.751	427148.439	9+62.34 A

Note: Curve and Intersection call outs are shown on the Paving Plans, sheets 16 thru 23.

DELAWARE TURNPIKE	CONT. NO.	TITLE	SHEET NO.	TOTAL SHEETS
	7060	PAVING PLAN	16	115

Revision #1: Median Barrier Transitions added – 7-8-70

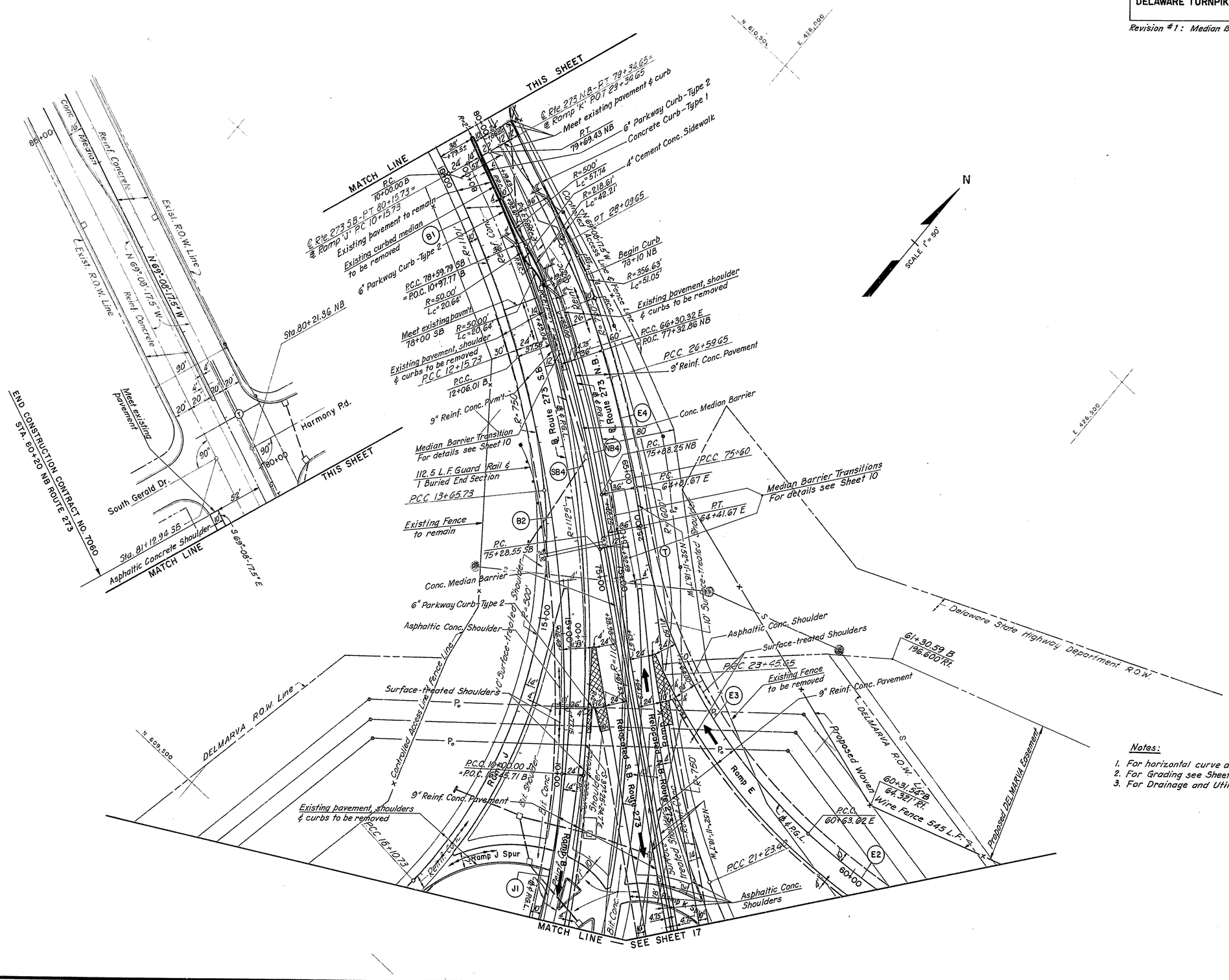

Notes:

1. For horizontal curve data and coordinates see Sheet 15.
2. For Grading see Sheet 34.
3. For Drainage and Utilities see Sheet 42.

DELAWARE TURNPIKE	CONT. NO.	TITLE	SHEET NO.	TOTA SHEETS
	7060	PAVING PLAN	17	115

Revision #1: Guard Railing around Median Piers deleted - 7-8-70

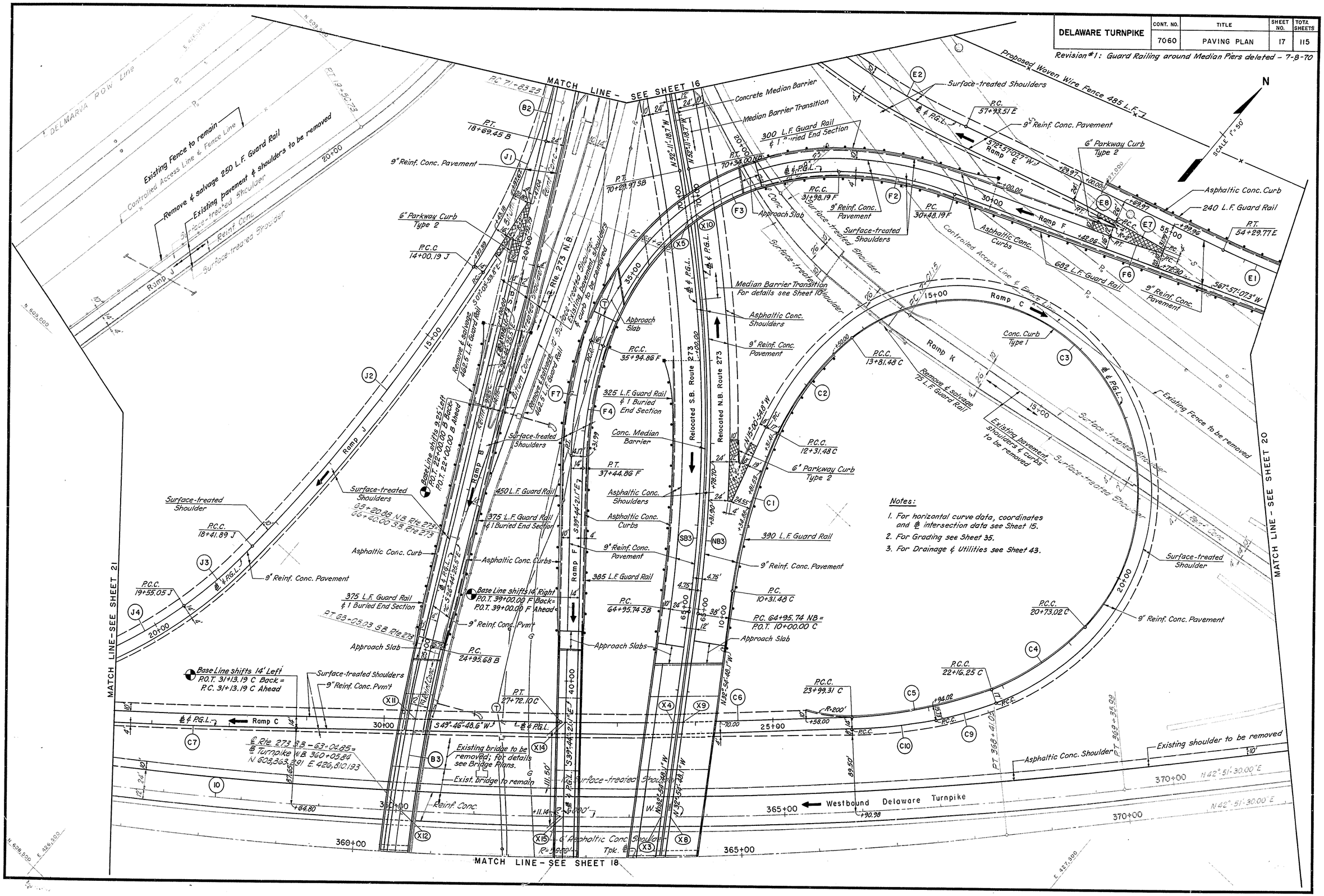

DELAWARE TURNPIKE	CONT. NO.	TITLE	SHEET NO.	TOTAL SHEETS
	7060	PAVING PLAN	18	115

Revision #1: Proposed P.O.W. Line 7-14-70

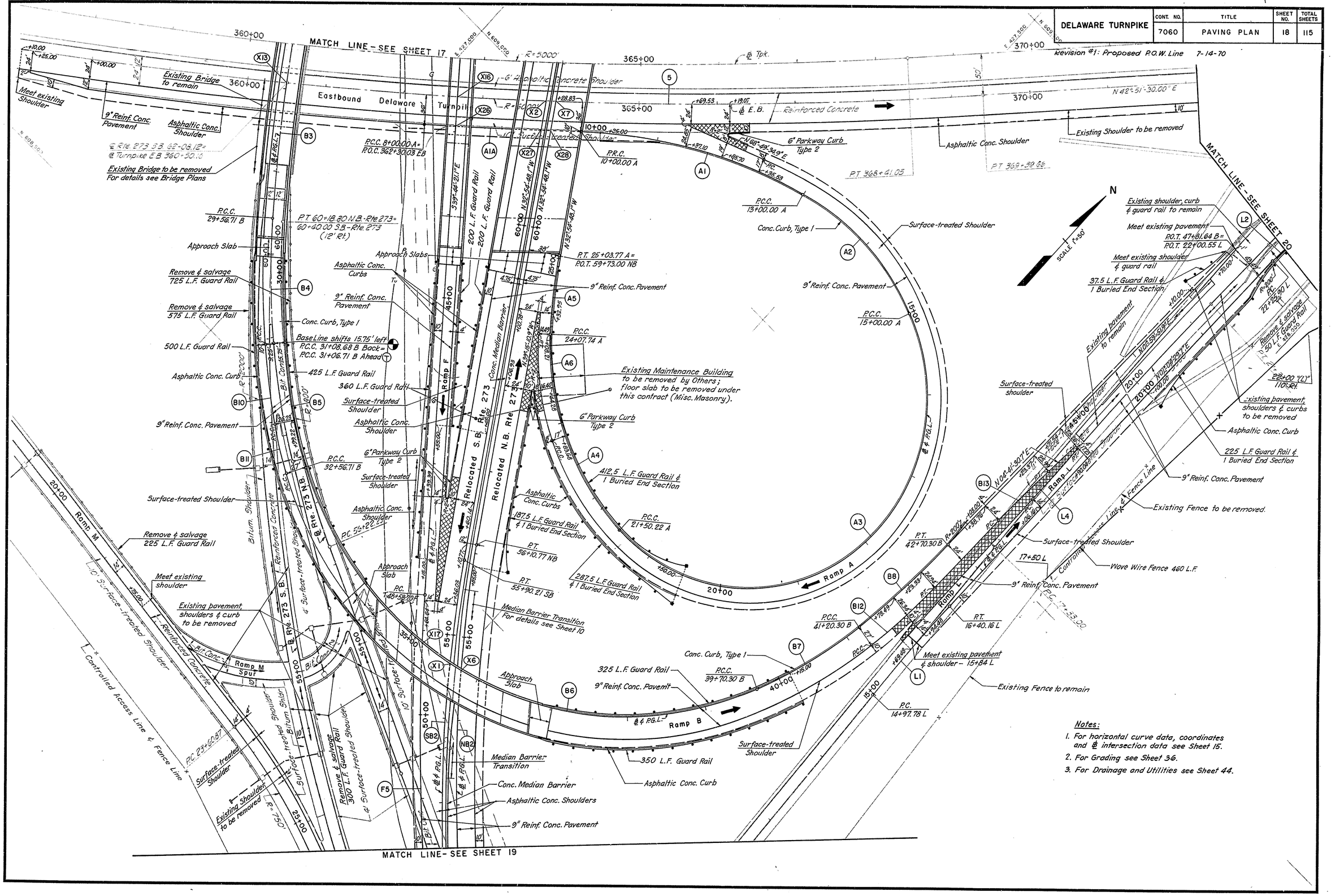

Notes:

1. For horizontal curve data, coordinates and ℄ intersection data see Sheet 15.
2. For Grading see Sheet 36.
3. For Drainage and Utilities see Sheet 44.

DELAWARE TURNPIKE	CONT. NO.	TITLE	SHEET NO.	TOTAL SHEETS
	7060	PAVING PLAN	19	115

Revision #1 : Median Barrier Transition added – 7-8-70

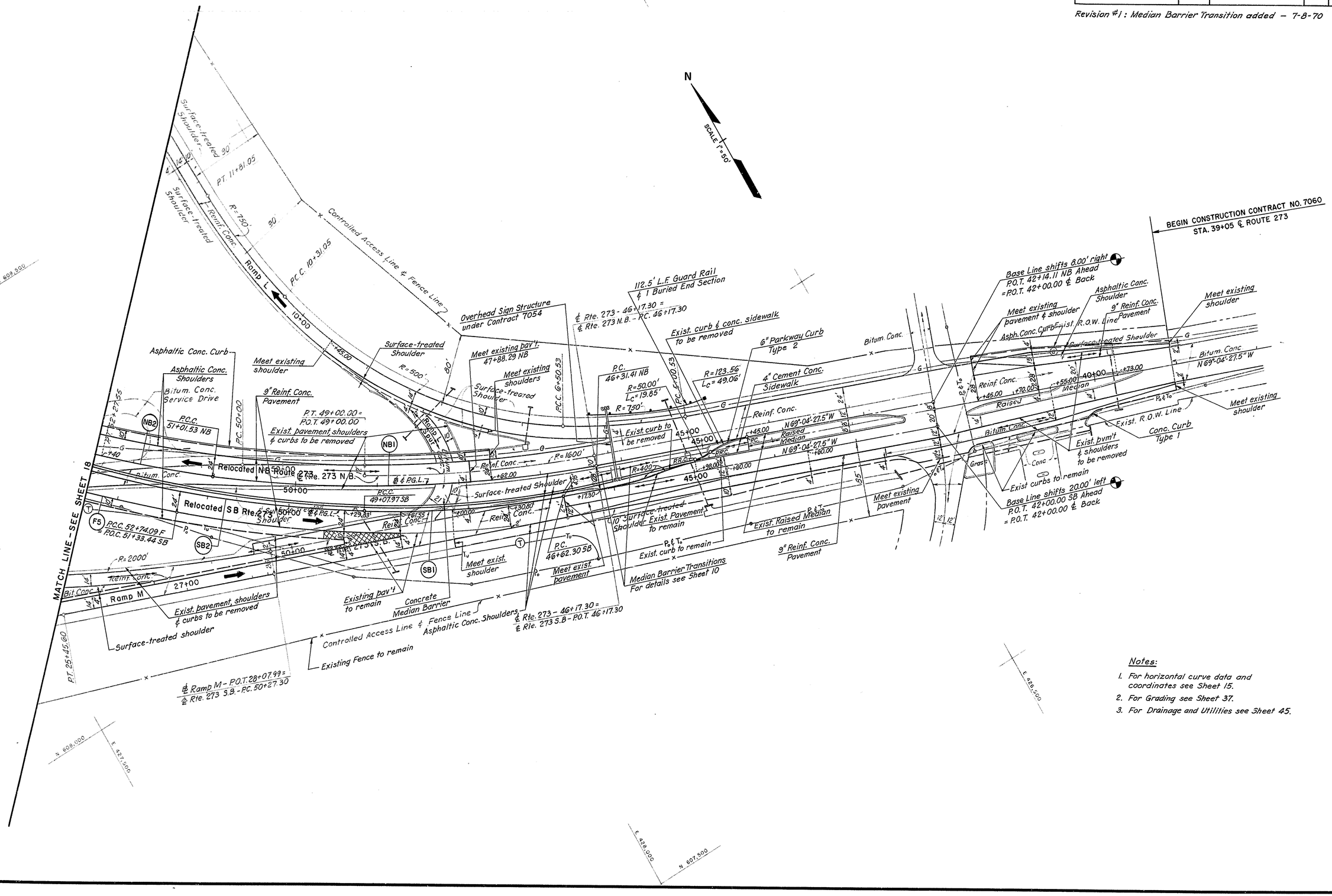

Notes:

1. For horizontal curve data and coordinates see Sheet 15.
2. For Grading see Sheet 37.
3. For Drainage and Utilities see Sheet 45.

DELAWARE TURNPIKE	CONT. NO.	TITLE	SHEET NO.	TOTAL SHEETS
	7060	PAVING PLAN	20	115

Revision #1 : Proposed R.O.W. Line 7-14-70

Notes:

1. For horizontal curve data and coordinates see Sheet 15.
2. For Grading see Sheet 38.
3. For Drainage & Utilities see Sheet 46.

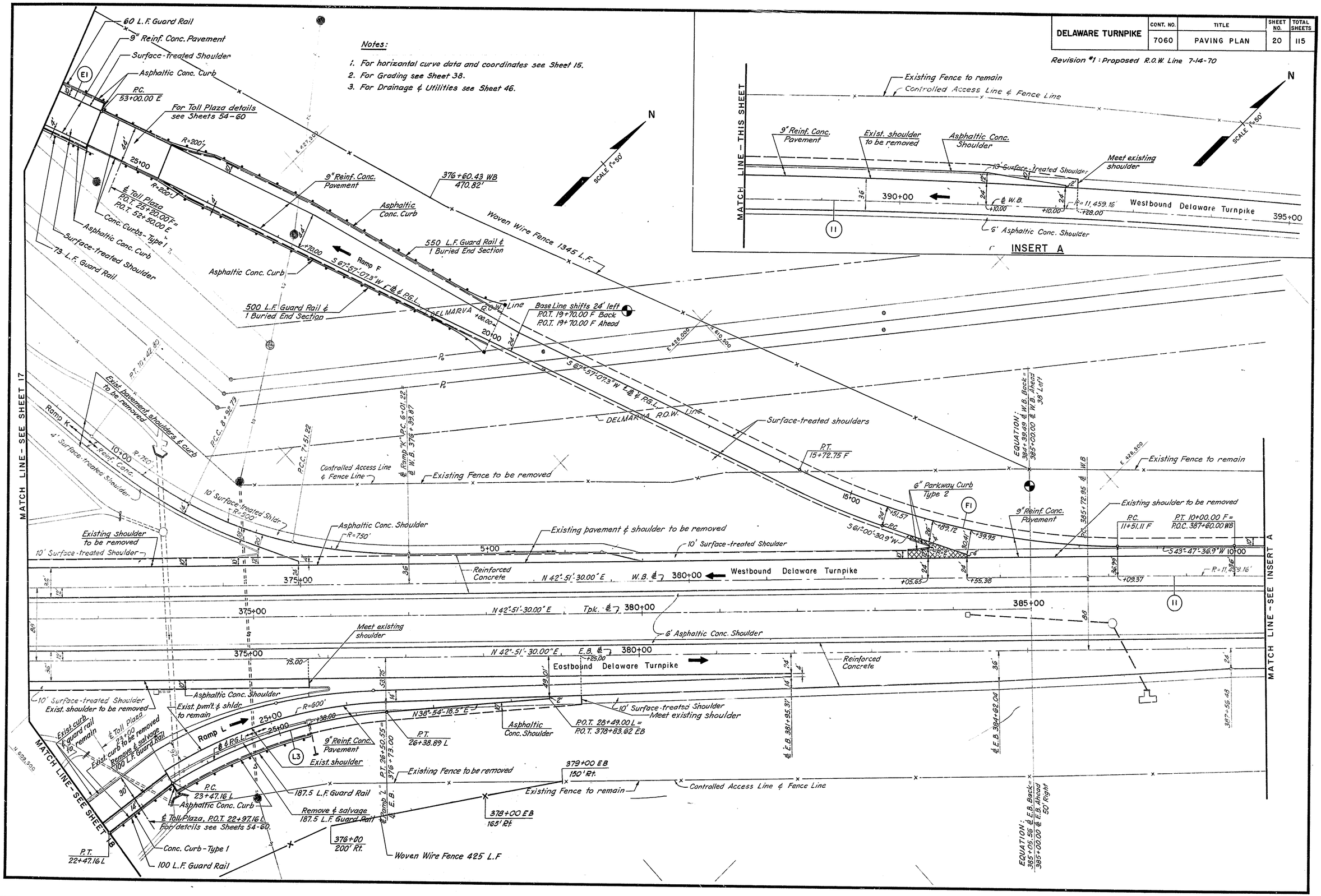

DELAWARE TURNPIKE	CONT. NO.	TITLE	SHEET NO.	TOTAL SHEETS
	7060	PAVING PLAN	21	115

N

SCALE 1"=50'

Notes:

1. *For horizontal curve data and coordinates see Sheet 15.*
2. *For Grading see Sheet 39.*
3. *For Drainage and Utilities see Sheet 47.*

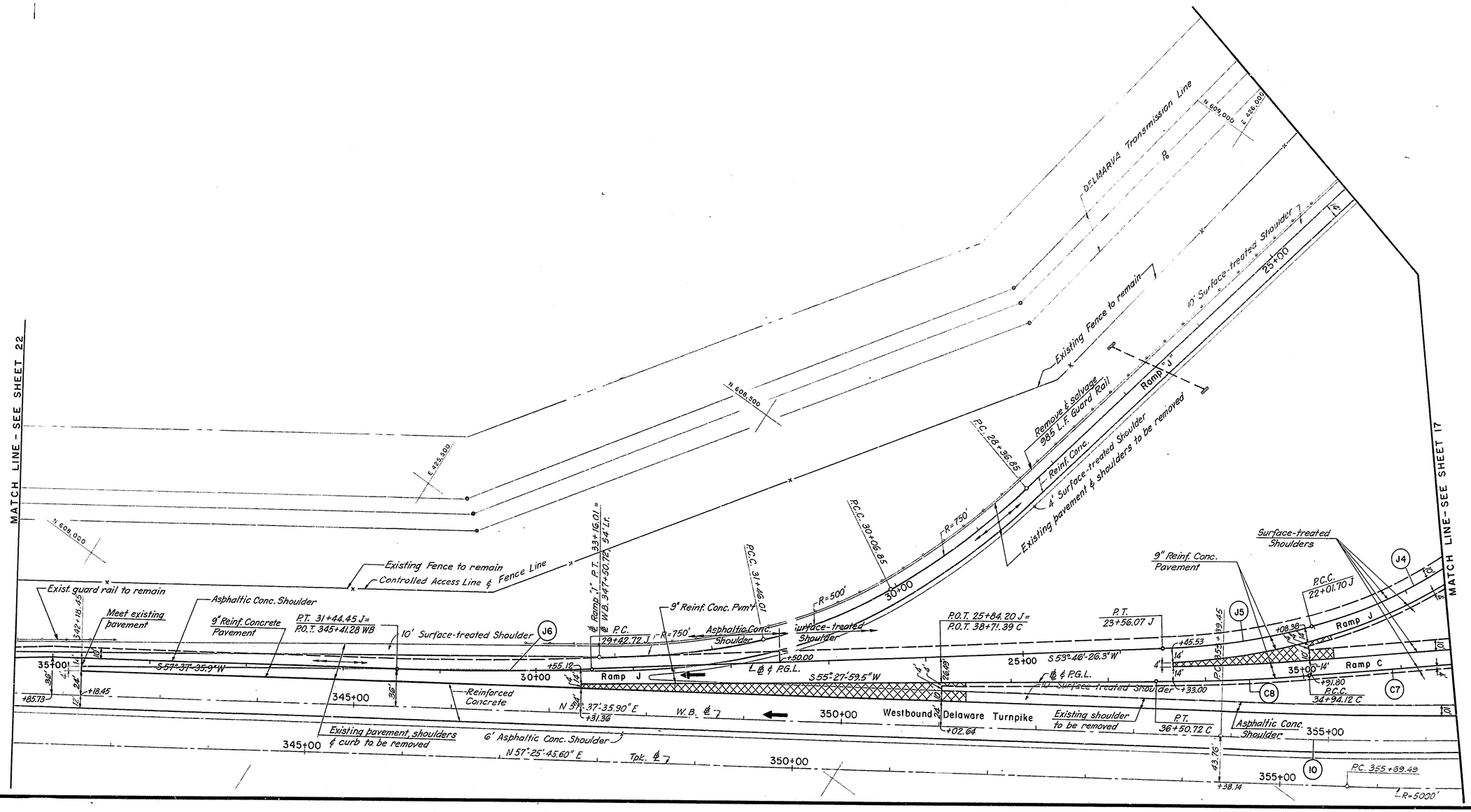

DELAWARE TURNPIKE	CONT. NO.	TITLE	SHEET NO.	TOTAL SHEETS
	7060	PAVING PLAN	22	115

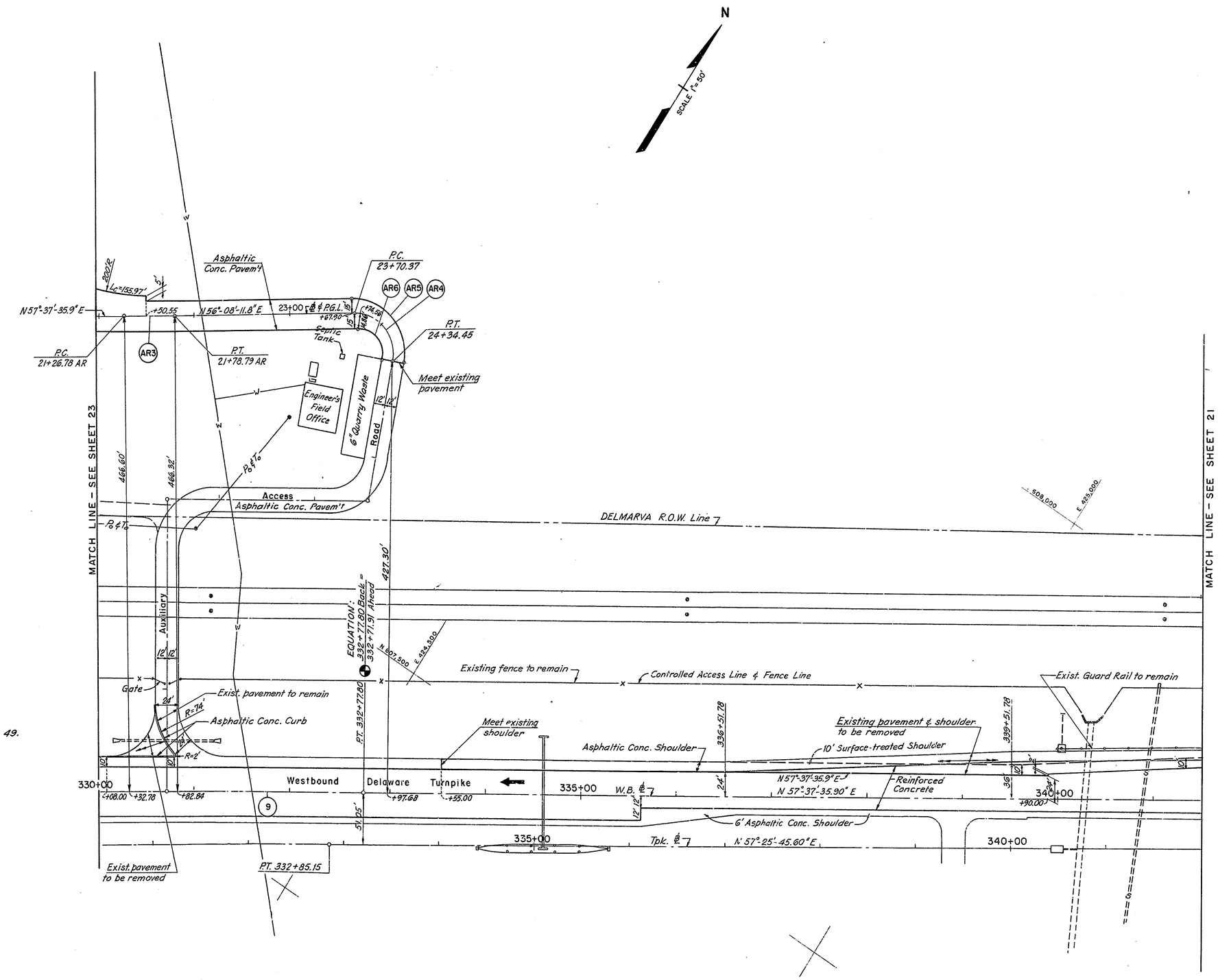

Notes:

1. For horizontal curve data and coordinates see Sheet 15.
2. For Grading see Sheet 40.
3. For Drainage and Utilities see Sheet 49.

DELAWARE TURNPIKE	CONT. NO.	TITLE	SHEET NO.	TOTAL SHEETS
	7060	PAVING PLAN	23	115

Revision #1: Conc. Curb added, Woven Wire Fence changed — 7-8-70

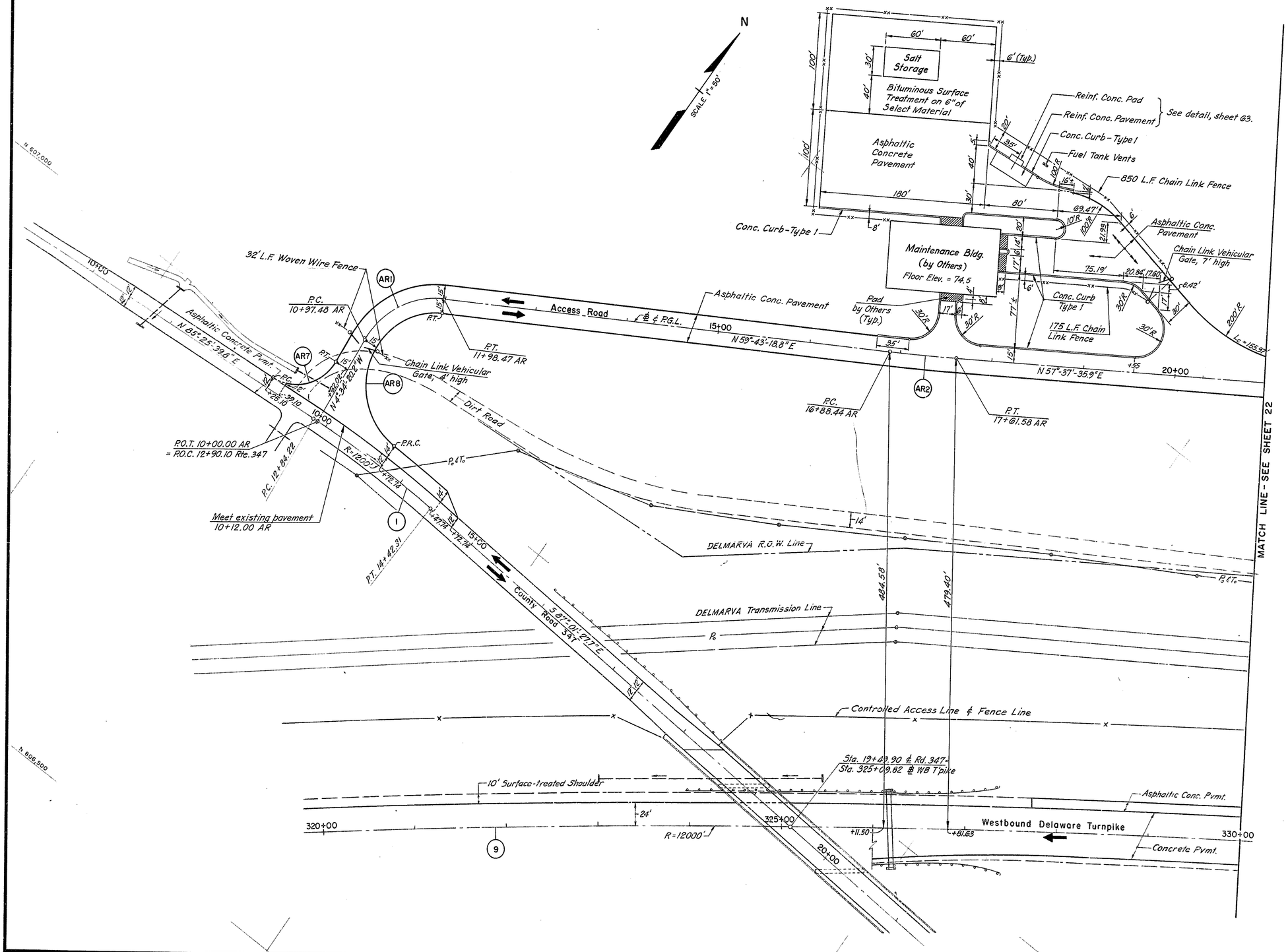

Notes:

1. For horizontal curve data and coordinates see Sheet 15.
2. For Grading see Sheet 41.
3. For Drainage & Utilities see Sheet 50.

DELAWARE TURNPIKE	CONT. NO.	TITLE	SHEET NO.	TOTAL SHEETS
	7060	PROFILES	24	115

PROFILES

SCALE: HOR. 1" = 50'
VERT. 1" = 5'

NOTE:
Right and Left references are based on looking in direction of increasing stations.

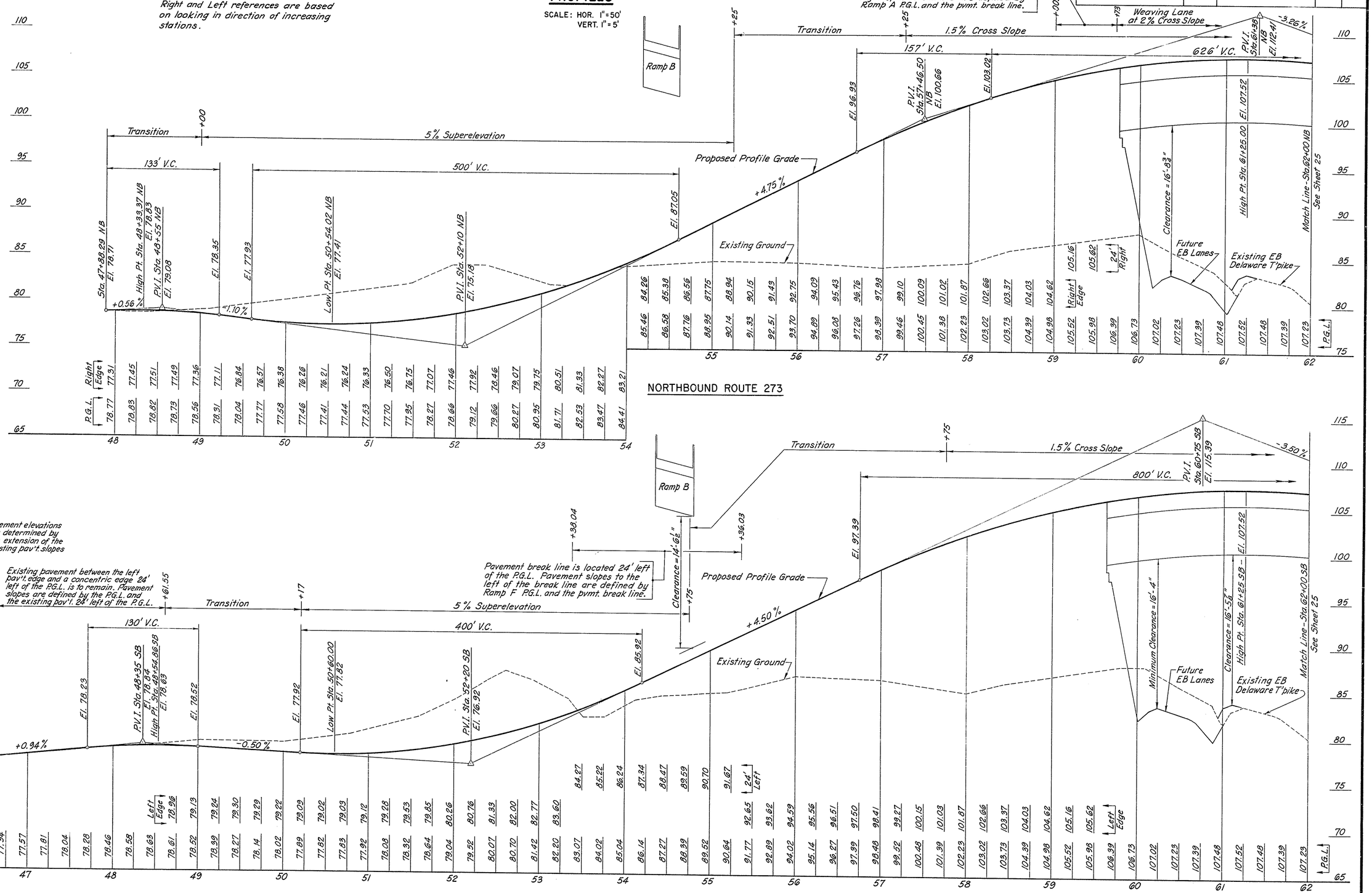

DELAWARE TURNPIKE	CONT. NO.	TITLE	SHEET NO.	TOTAL SHEETS
	7060	PROFILES	25	115

PROFILES

SCALE: HOR. 1" = 50'
VERT. 1" = 5'

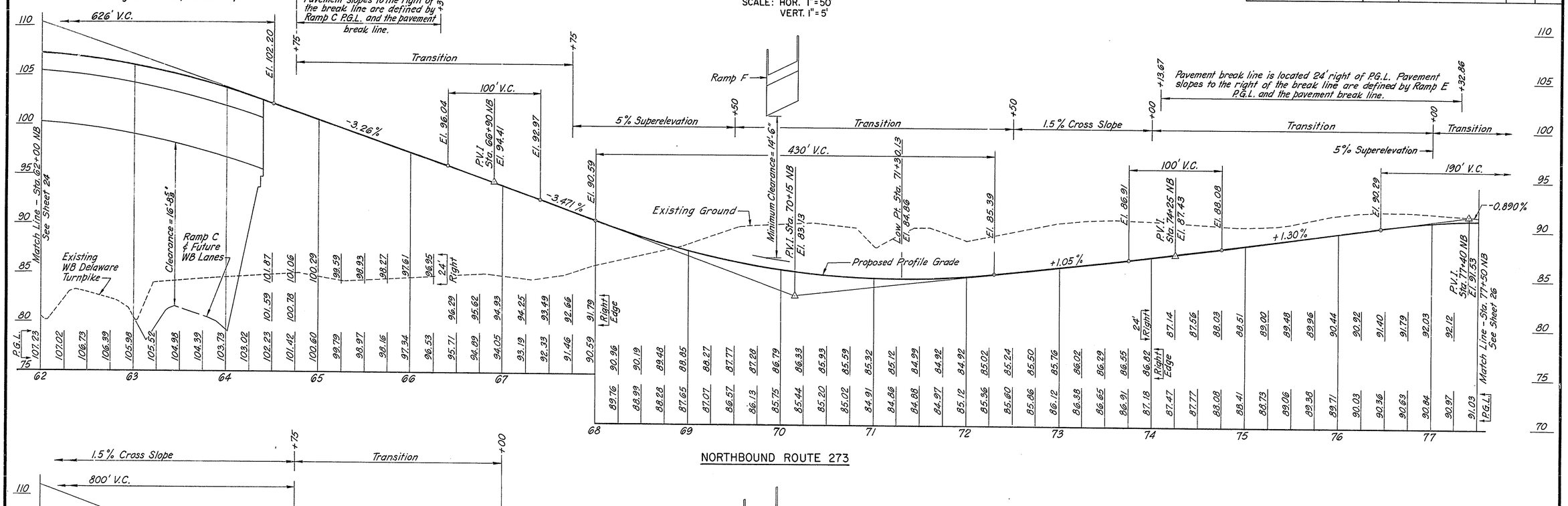

NORTHBOUND ROUTE 273

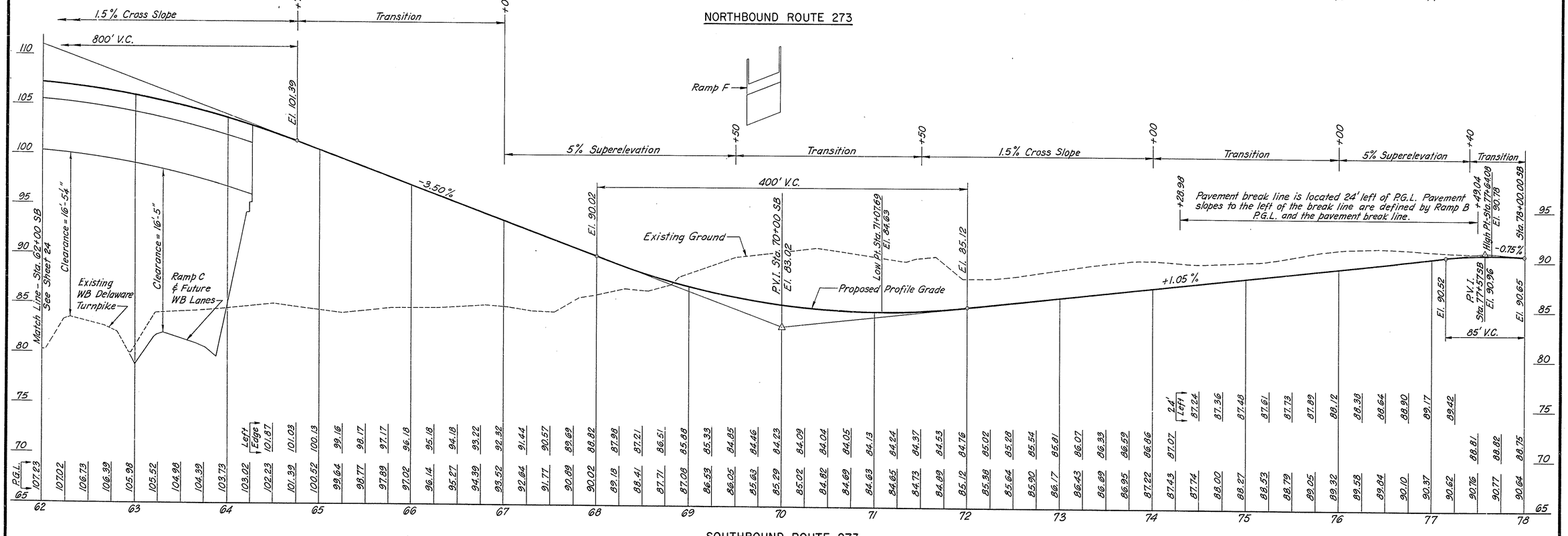

SOUTHBOUND ROUTE 273

DELAWARE TURNPIKE	CONT. NO.	TITLE	SHEET NO.	TOTAL SHEETS
	7060	PROFILES	26	115

PROFILES

SCALE: HOR. 1" = 50'
VERT. 1" = 5'

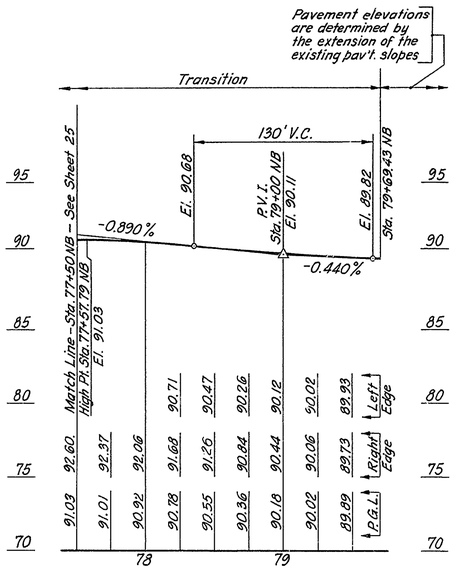

NORTHBOUND ROUTE 273

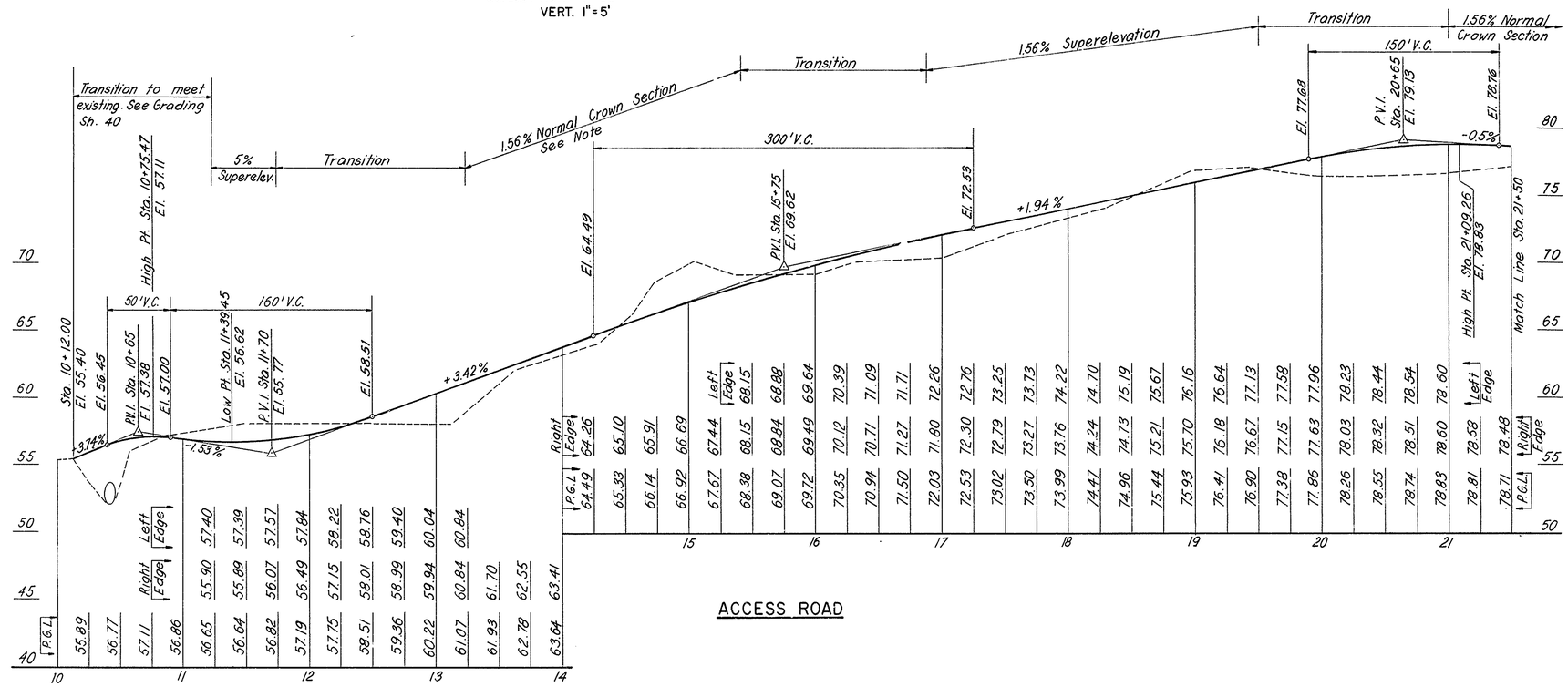

ACCESS ROAD

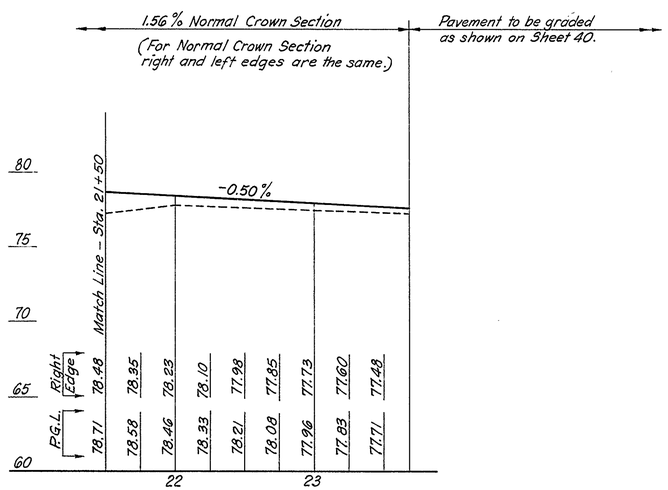

ACCESS ROAD

DELAWARE TURNPIKE	CONT. NO.	TITLE	SHEET NO.	TOTAL SHEETS
	7060	PROFILES	27	115

PROFILES

SCALE: HOR. 1"=50'
VERT. 1"=5'

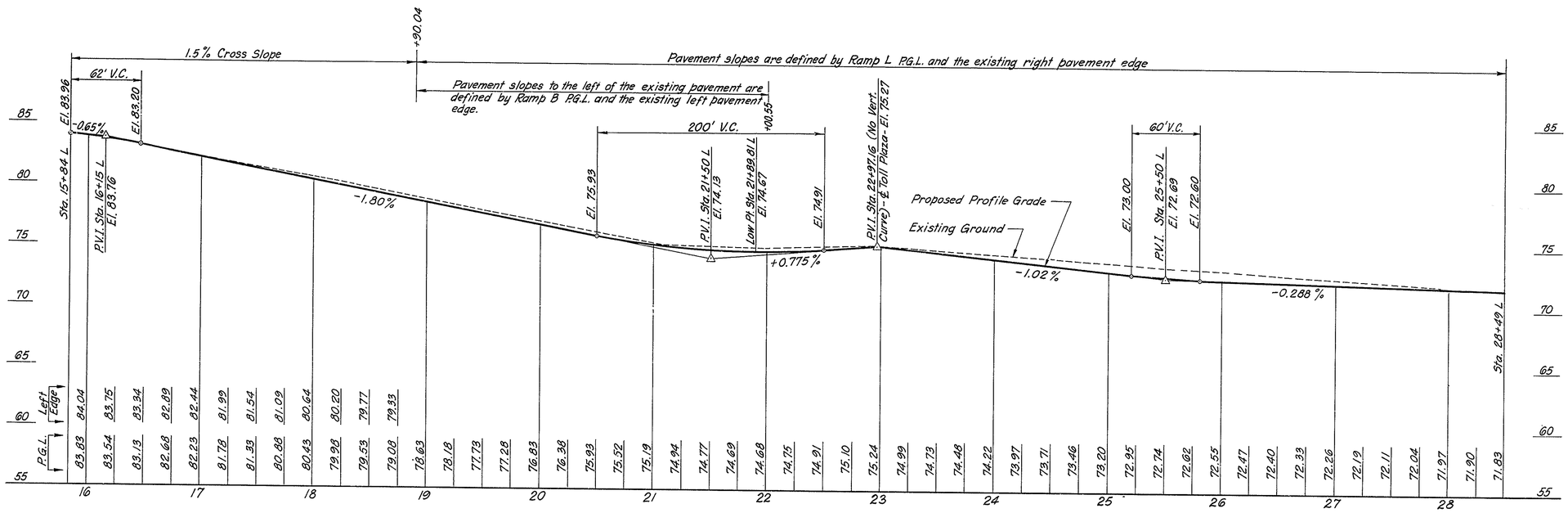

RAMP L

DELAWARE TURNPIKE	CONT. NO.	TITLE	SHEET NO.	TOTAL SHEETS
	7060	PROFILES	28	115

PROFILES

SCALE: HOR. 1" = 50'
VERT. 1" = 5'

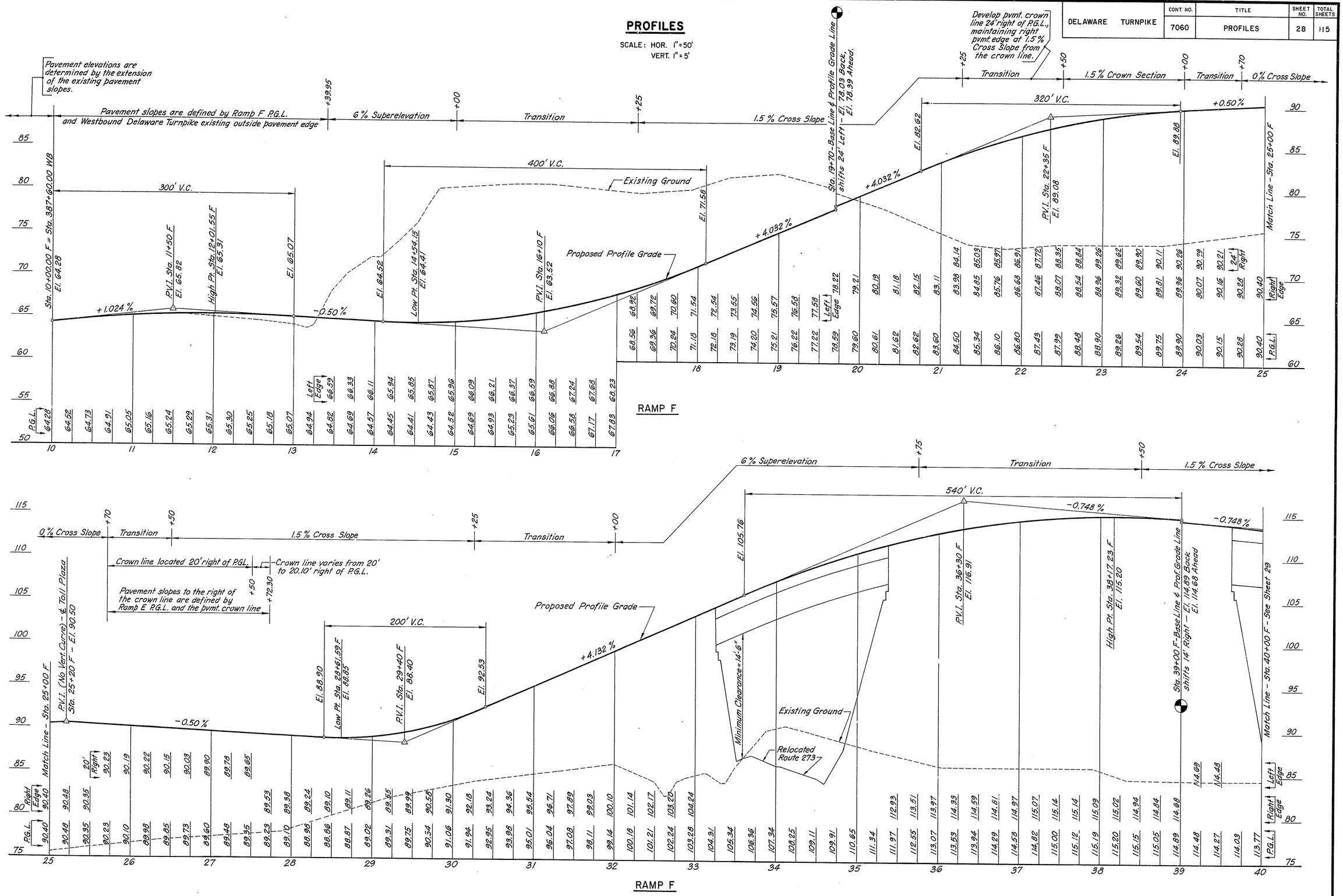

DELAWARE TURNPIKE	CONT. NO.	TITLE	SHEET NO.	TOTAL SHEETS
	7060	PROFILES	29	115

PROFILES

SCALE: HOR. 1" = 50'
VERT. 1" = 5'

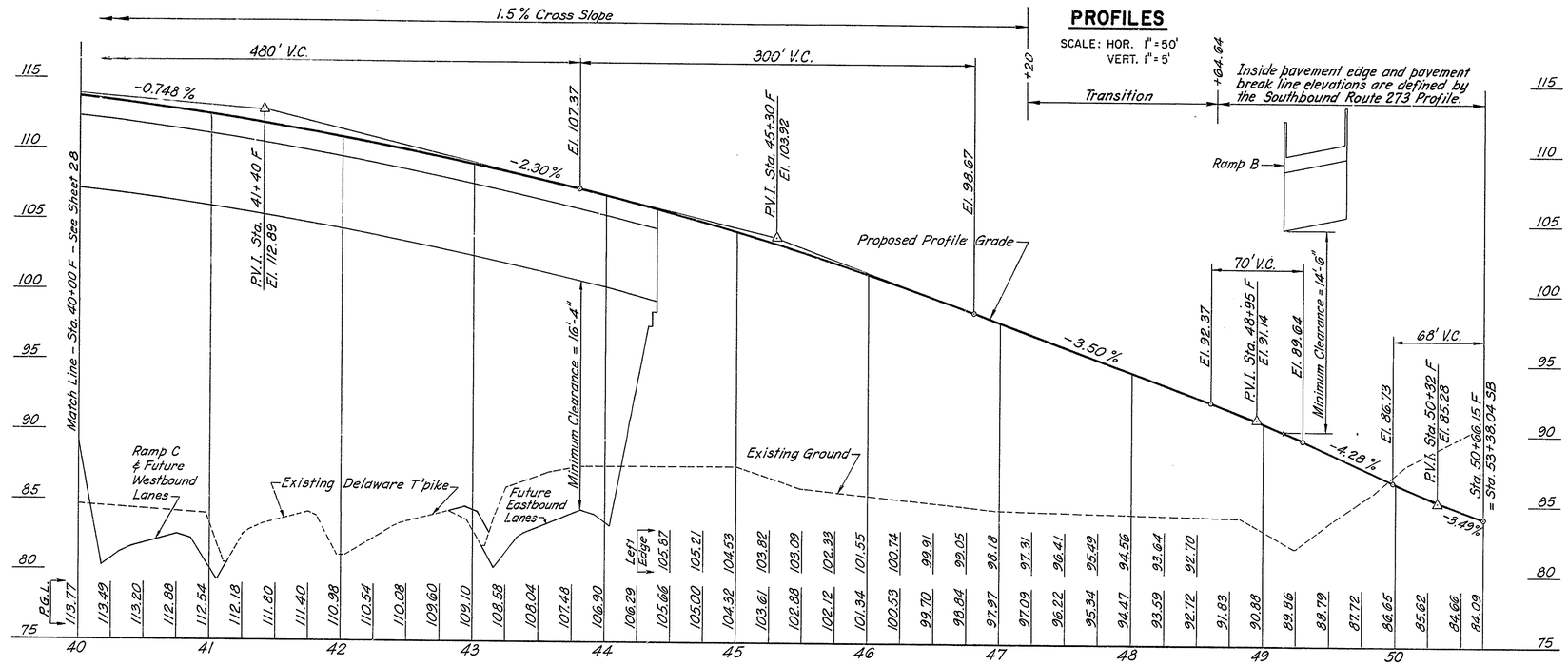

RAMP F

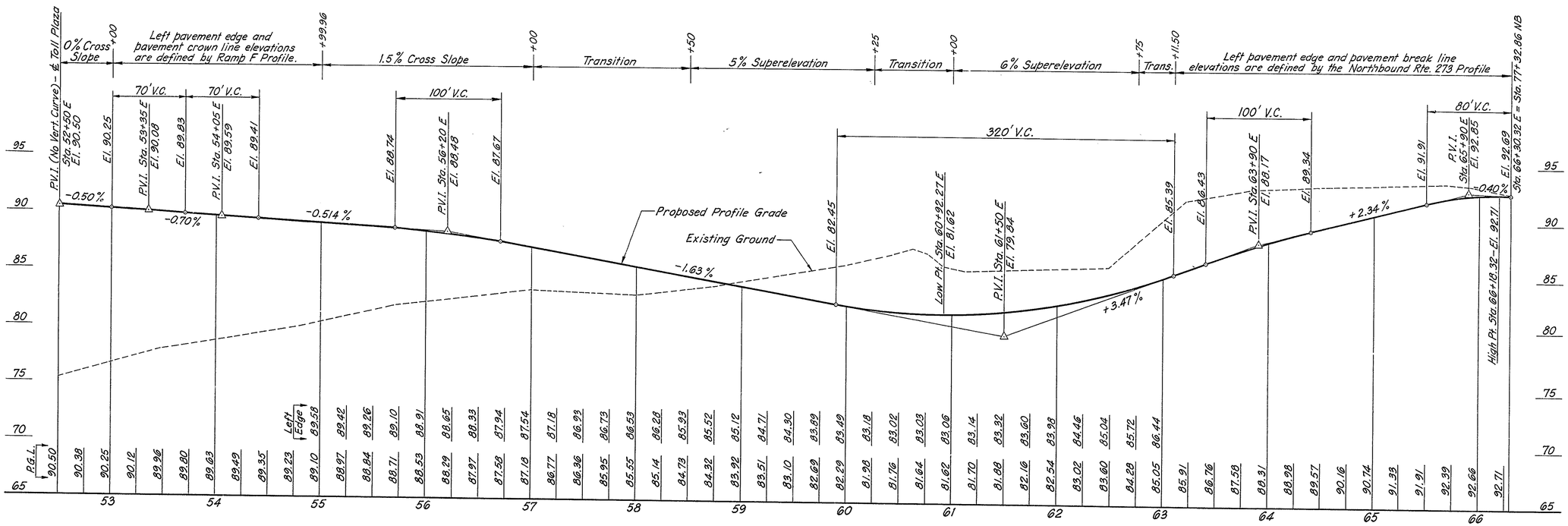

RAMP E

DELAWARE TURNPIKE	CONT. NO.	TITLE	SHEET NO.	TOTAL SHEETS
	7060	PROFILES	30	115

PROFILES

SCALE: HOR. 1" = 50'
VERT. 1" = 5'

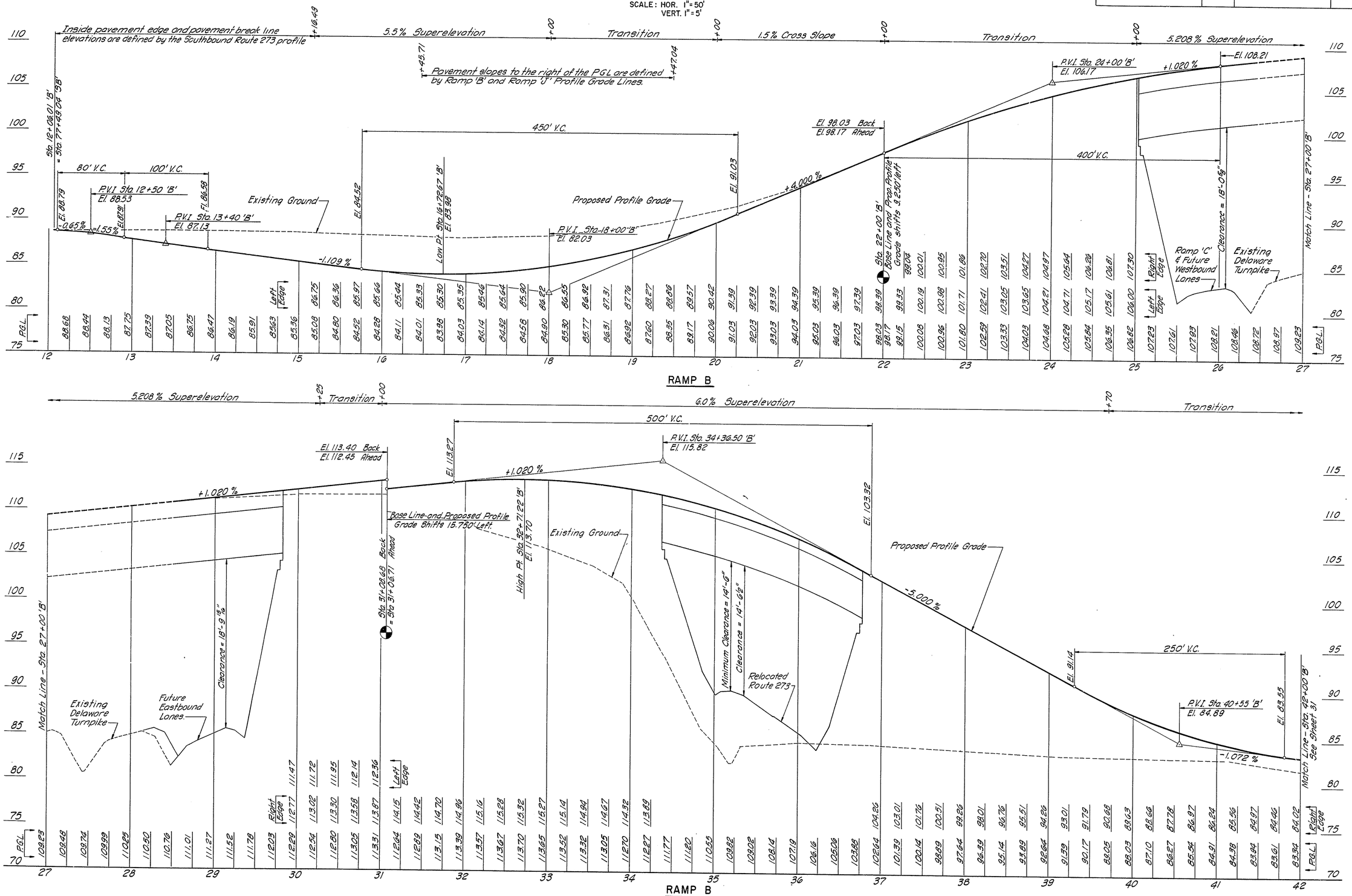

DELAWARE TURNPIKE	CONT. NO.	TITLE	SHEET NO.	TOTAL SHEETS
	7060	PROFILES	31	115

PROFILES

SCALE: HOR 1"=50'
VERT. 1"=5'

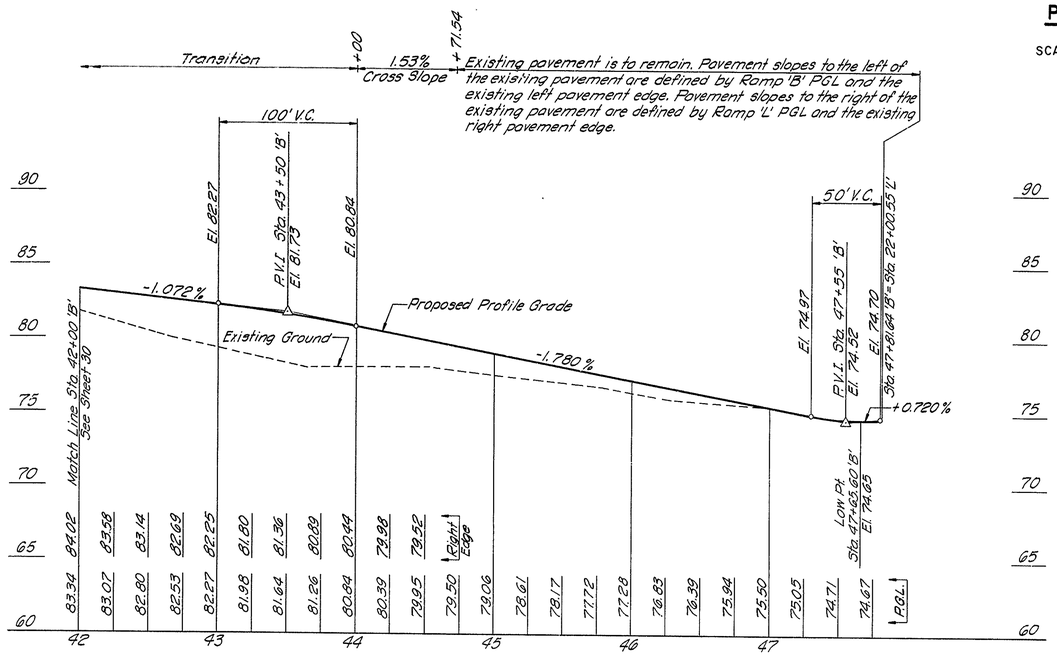

RAMP B

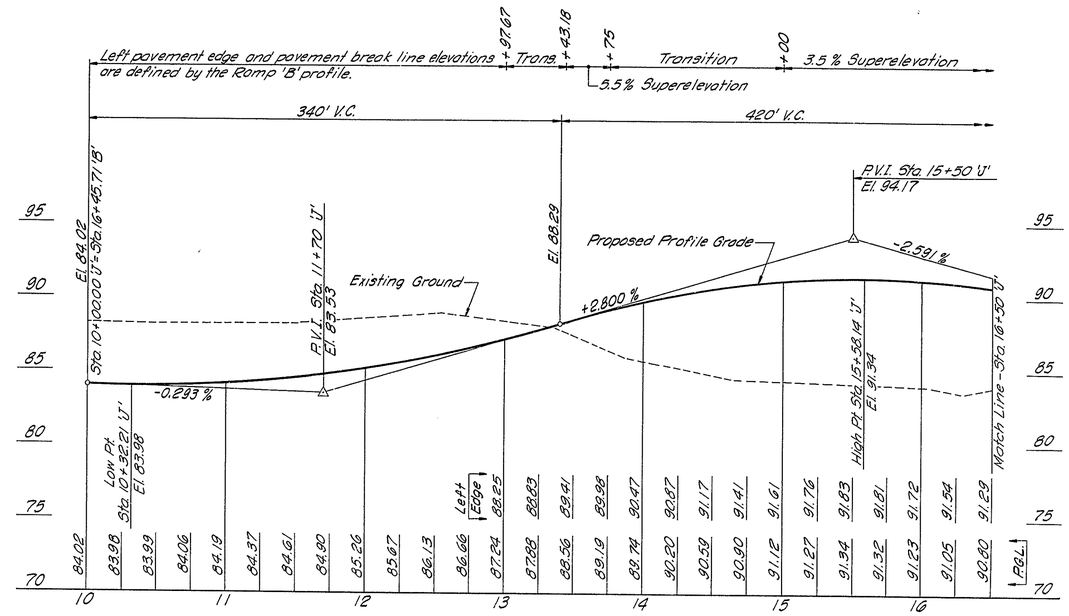

RAMP J

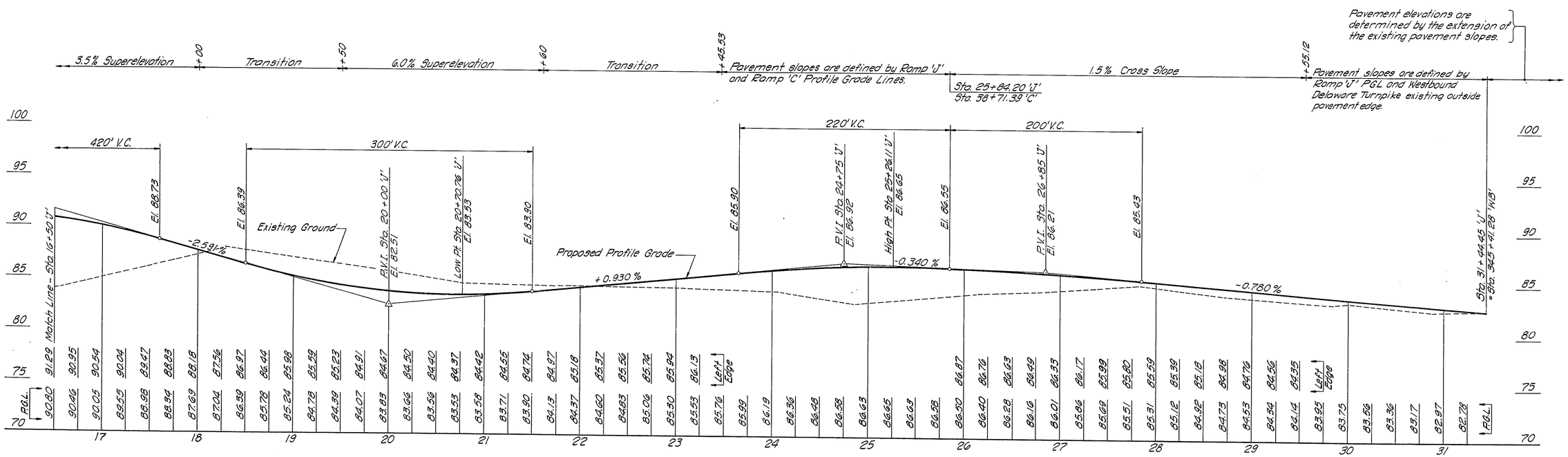

RAMP J

DELAWARE TURNPIKE	CONT NO.	TITLE	SHEET NO.	TOTAL SHEETS
	7060	PROFILES	32	115

PROFILES

SCALE: HOR. 1" = 50'
VERT. 1" = 5'

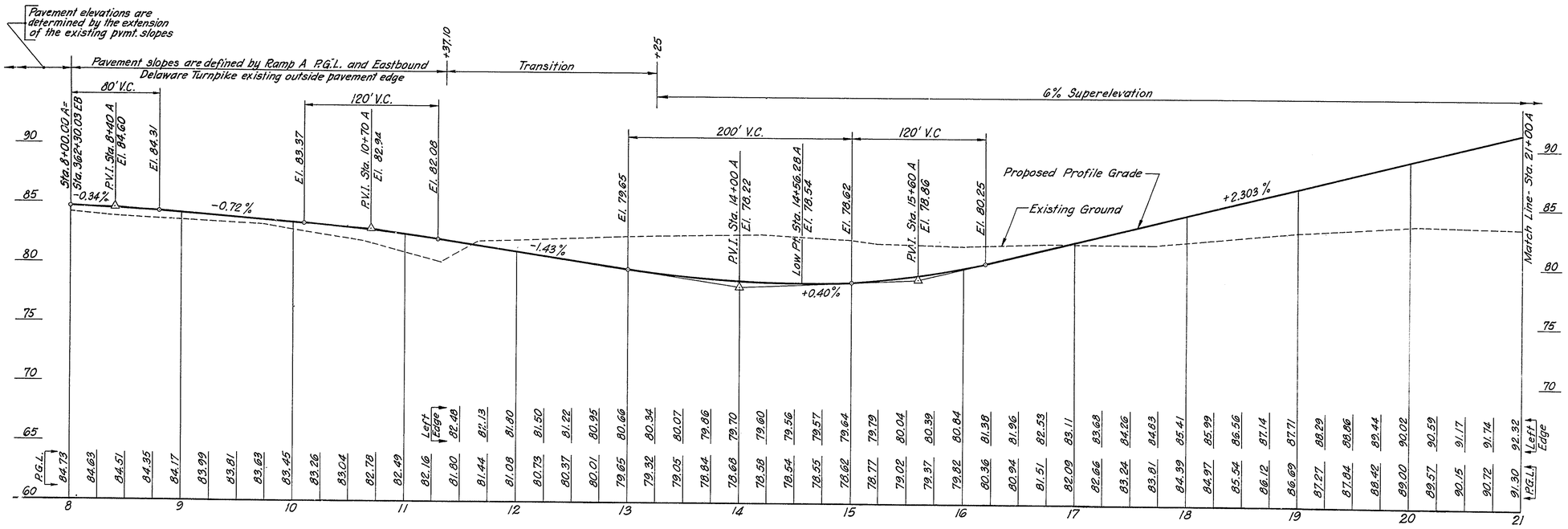

RAMP A

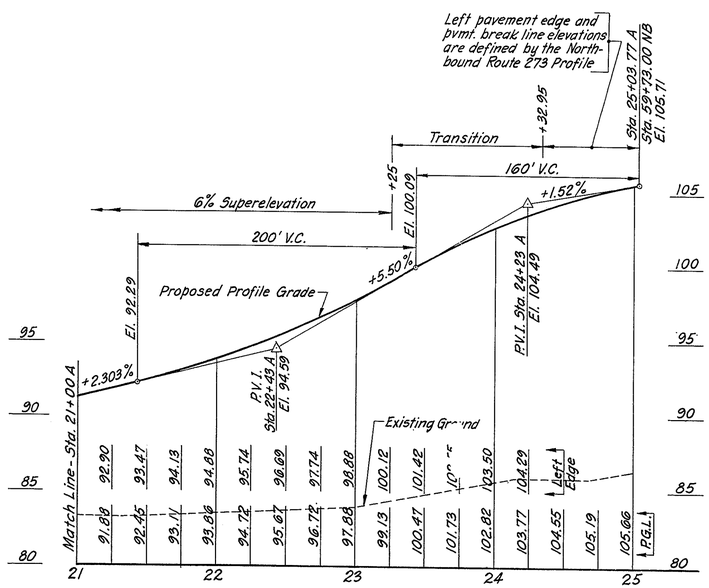

RAMP A

DELAWARE TURNPIKE	CONT. NO.	TITLE	SHEET NO.	TOTAL SHEETS
	7060	PROFILES	33	115

PROFILES

SCALE: HOR. 1"=50'
VERT. 1"=5'

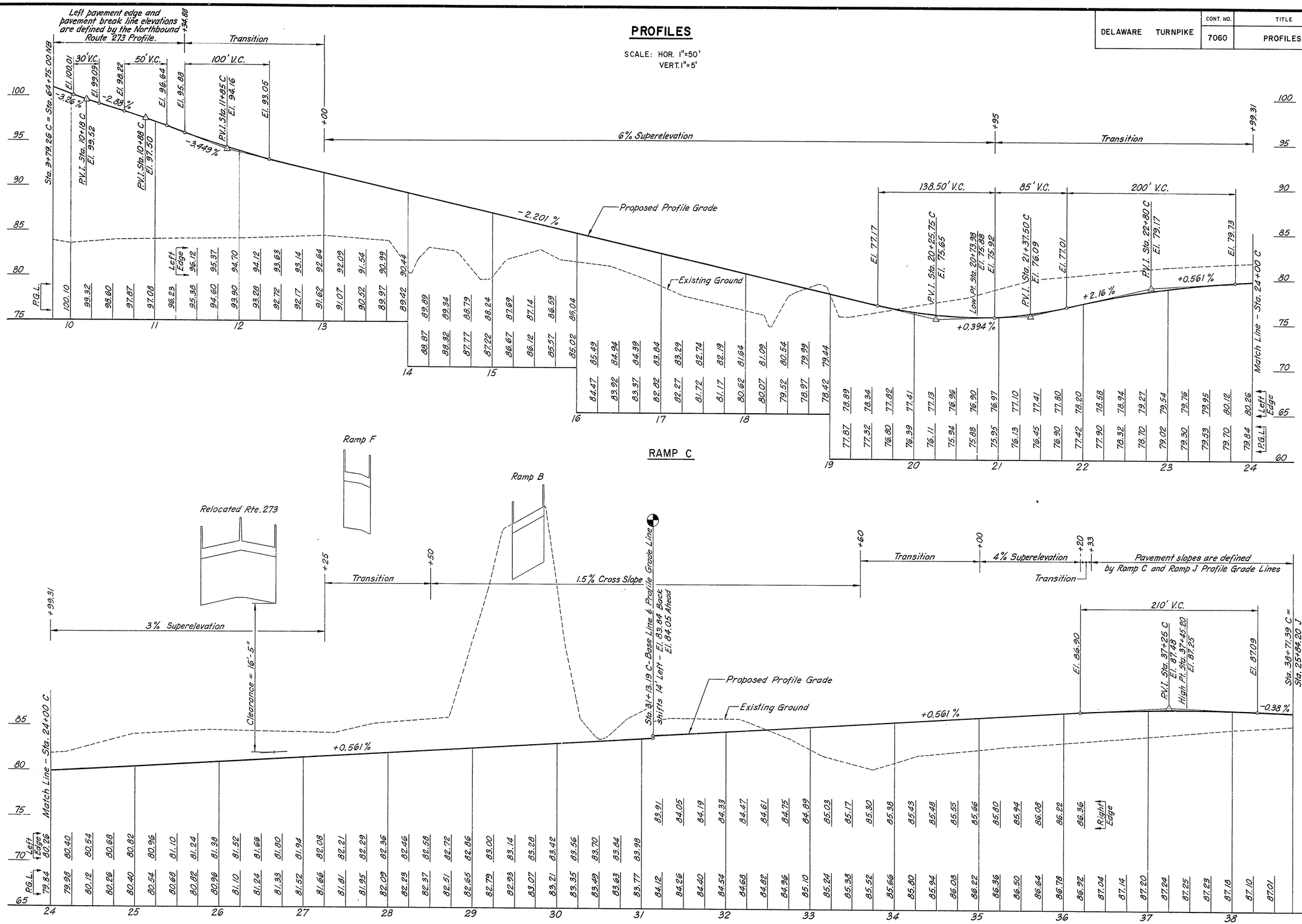

RAMP C

DELAWARE TURNPIKE	CONT. NO.	TITLE	SHEET NO.	TOTAL SHEETS
	7060	GRADING PLAN	34	115

Revision #1: Minor grading adjustments – 7-8-70

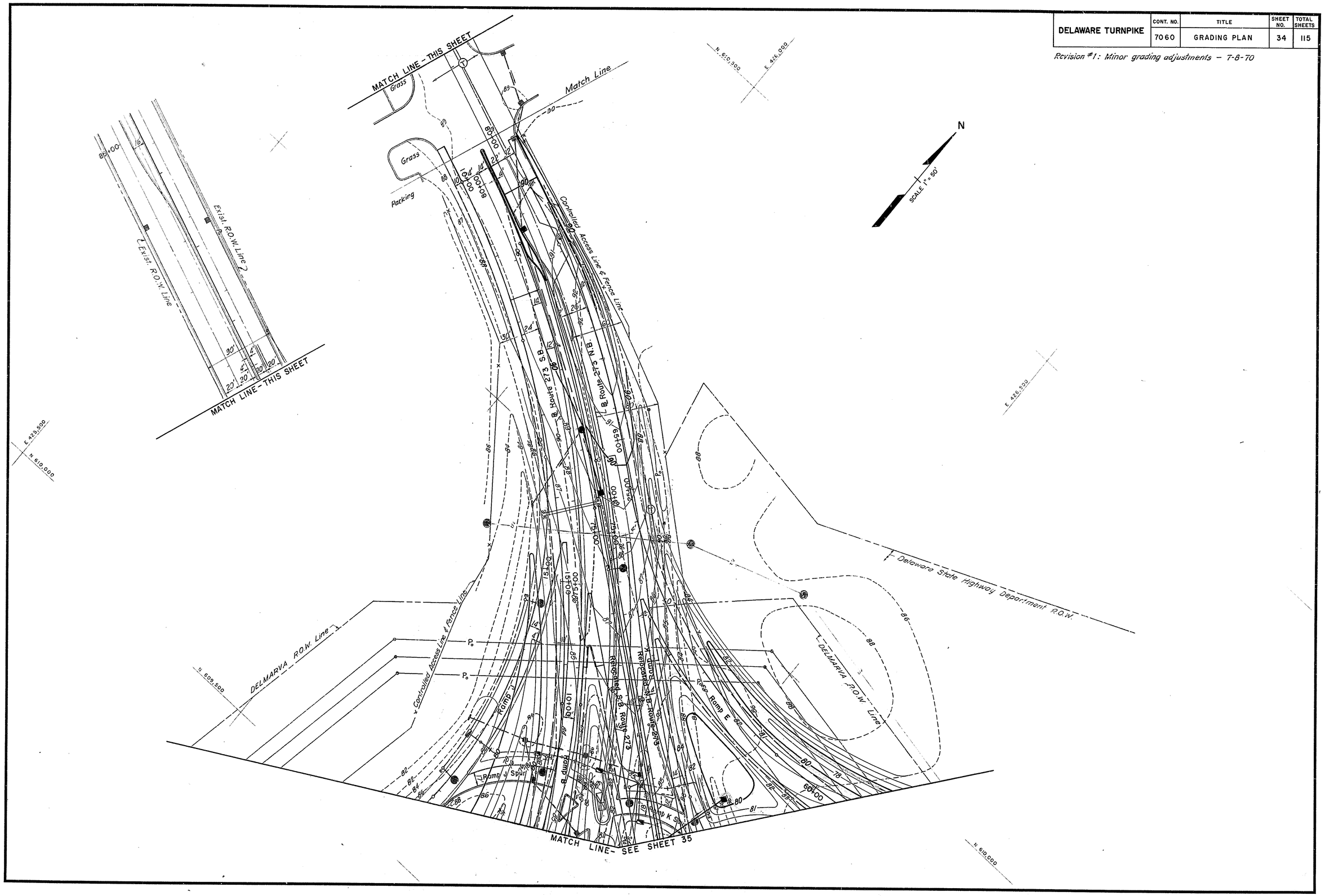

DELAWARE TURNPIKE	CONT. NO.	TITLE	SHEET NO.	TOTAL SHEETS
	7060	GRADING PLAN	35	115

Revision #1: Minor grading and drainage adjustments — 7-8-70

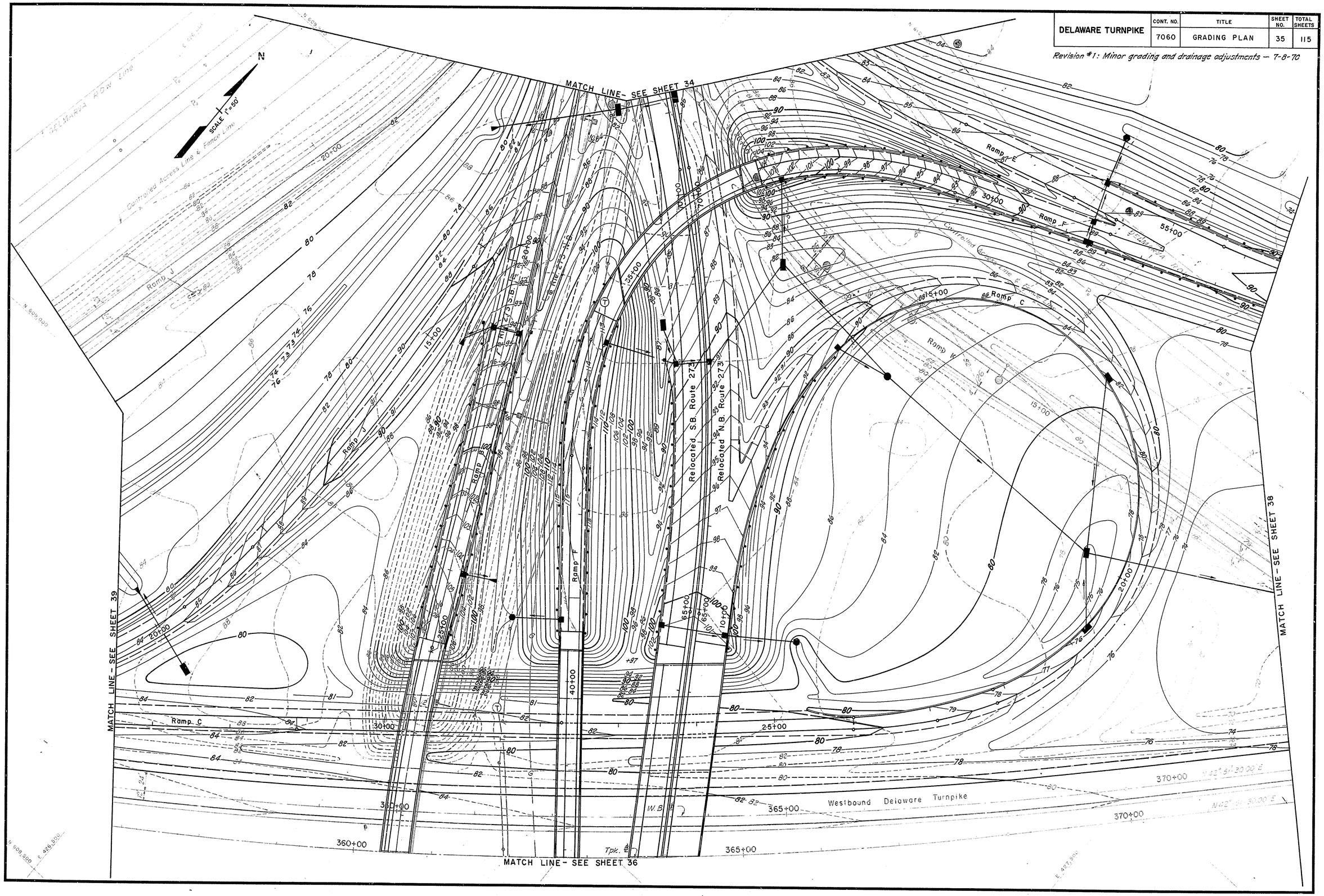

DELAWARE TURNPIKE	CONT. NO.	TITLE	SHEET NO.	TOTAL SHEETS
	7060	GRADING PLAN	36	115

Revision #1: Minor Grading Changes 7-10-70

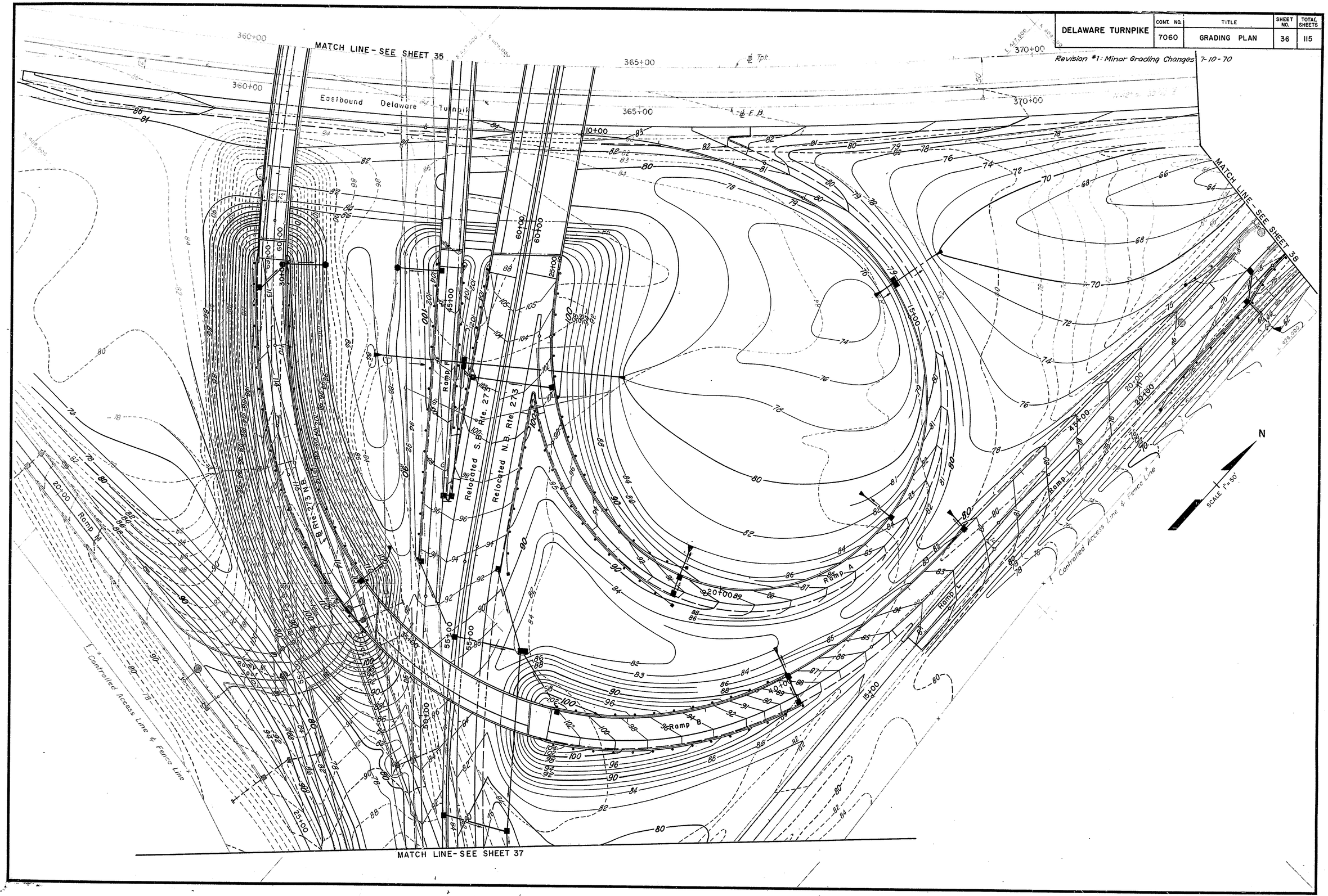

DELAWARE TURNPIKE	CONT. NO.	TITLE	SHEET NO.	TOTAL SHEETS
	7060	GRADING PLAN	37	115

Revision #1: Minor Grading Changes 7-10-70

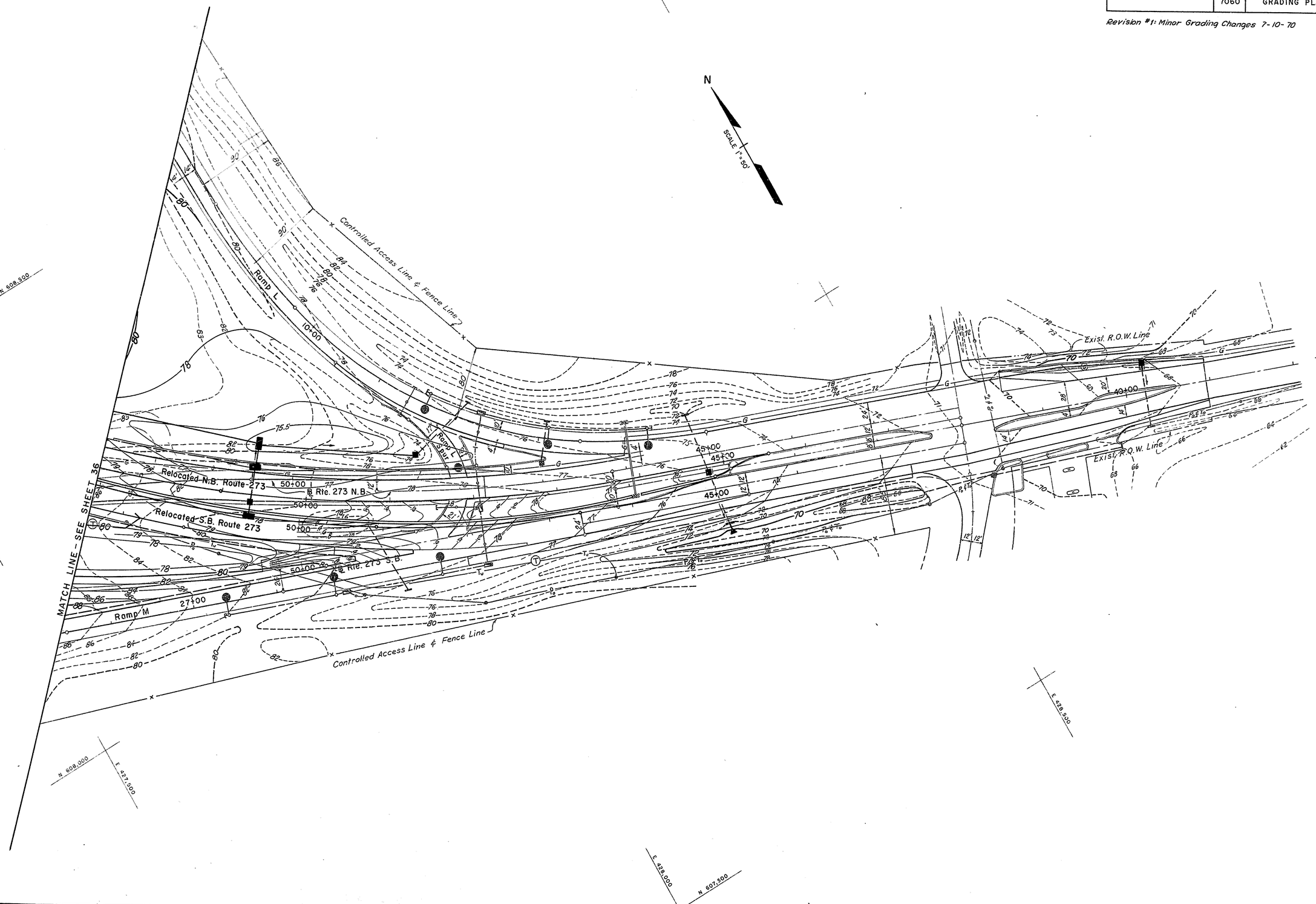

DELAWARE TURNPIKE	CONT. NO.	TITLE	SHEET NO.	TOTAL SHEETS
	7060	GRADING PLAN	38	115

Revision #1: Minor Grading Changes 7-10-70

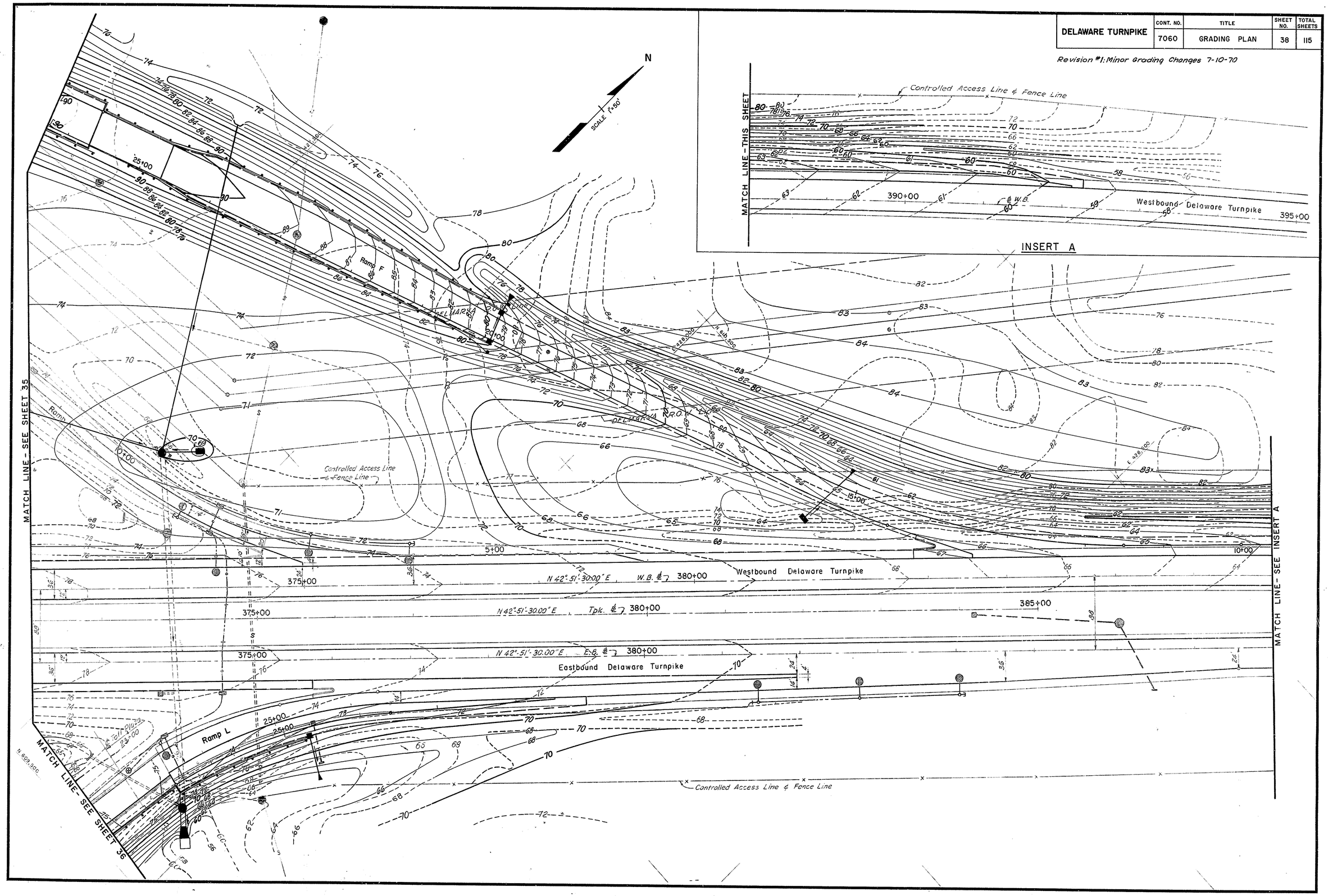

DELAWARE TURNPIKE	CONT. NO.	TITLE	SHEET NO.	TOTAL SHEETS
	7060	GRADING PLAN	39	115

Revision # 1: Minor Grading Changes 7-10-70

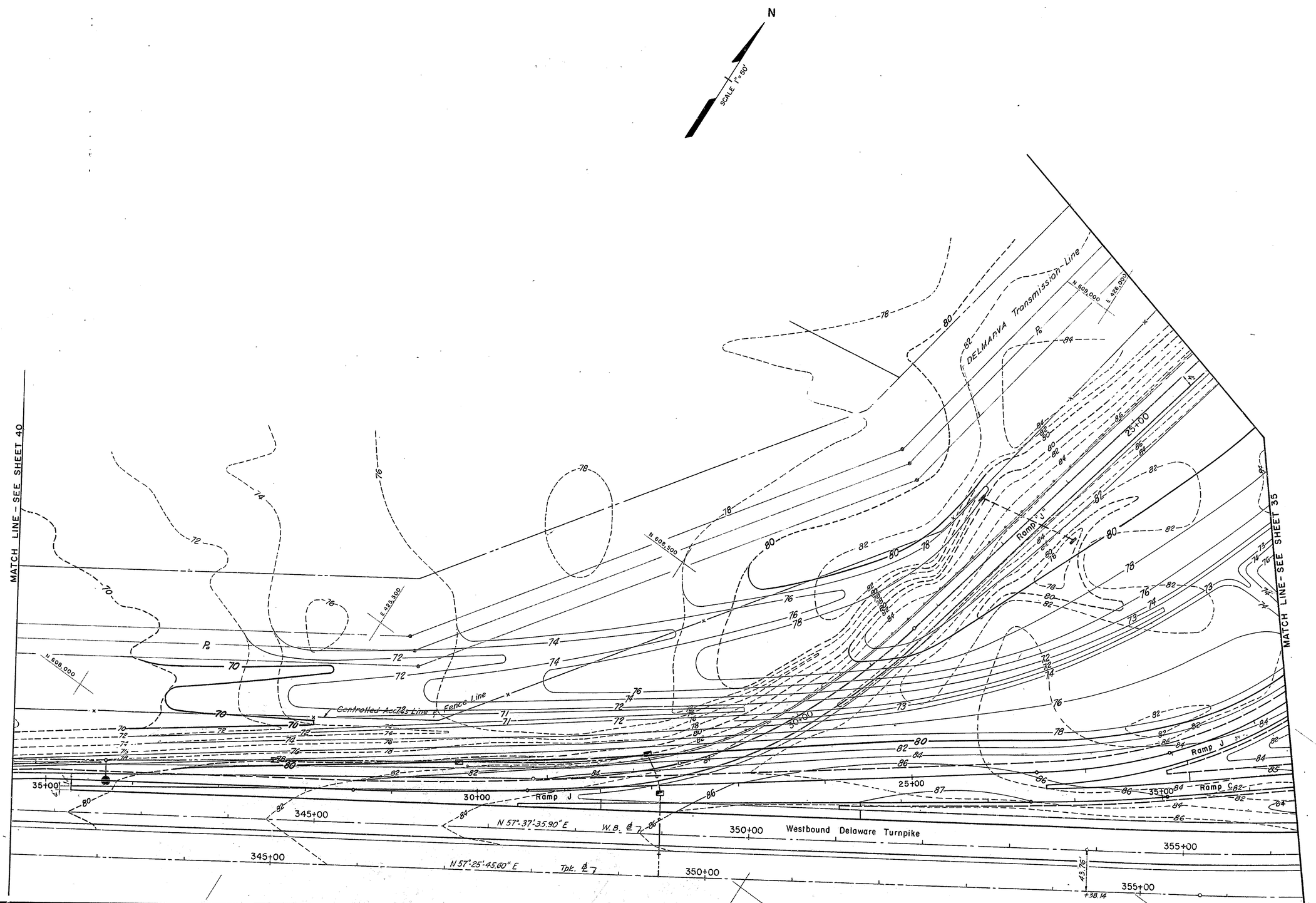

DELAWARE TURNPIKE	CONT. NO.	TITLE	SHEET NO.	TOTAL SHEETS
	7060	GRADING PLAN	40	115

Revision #1: Minor Grading Changes 7-10-70

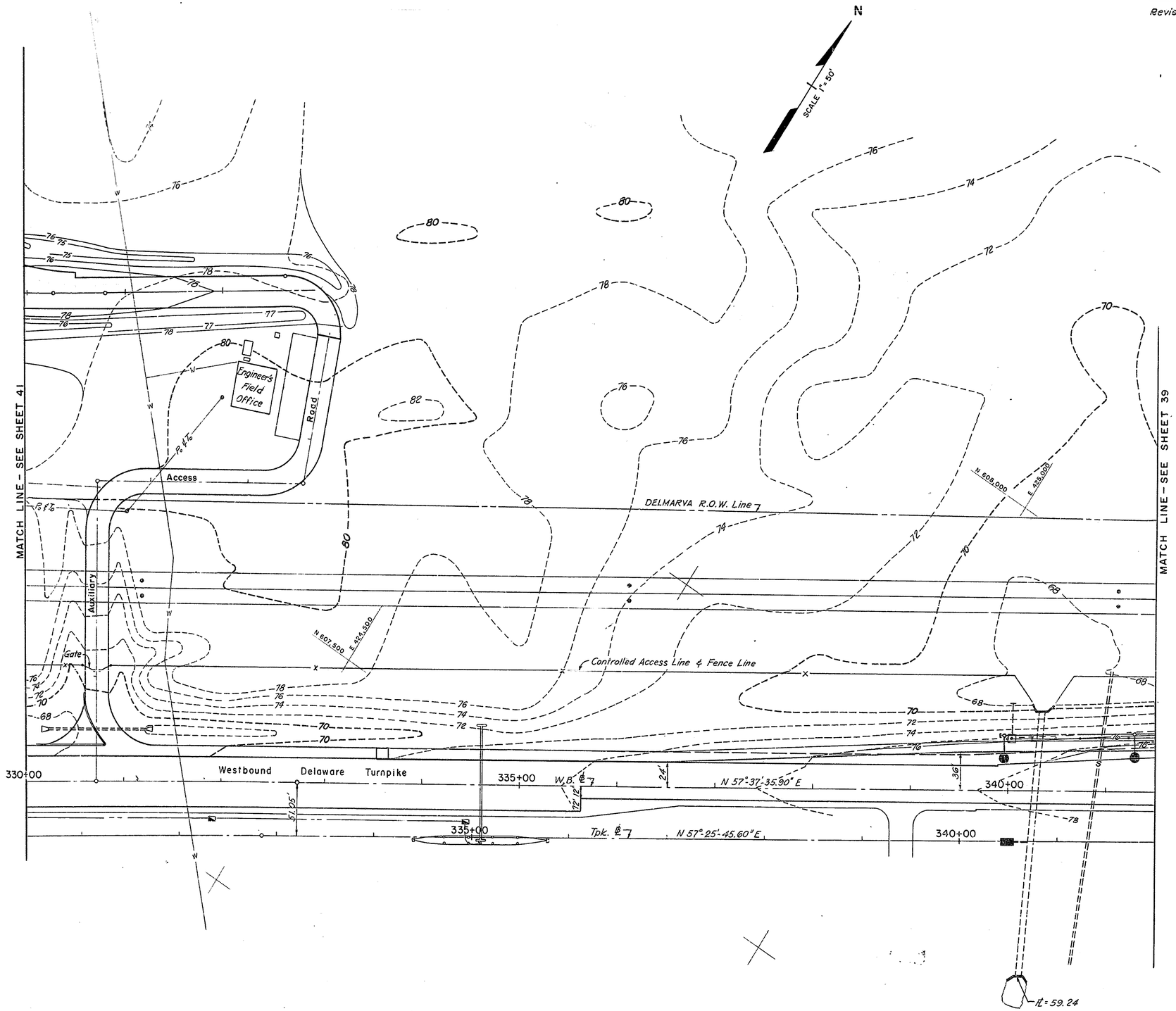

DELAWARE TURNPIKE	CONT. NO.	TITLE	SHEET NO.	TOTAL SHEETS
	7060	GRADING PLAN	41	115

Revision #1: Minor Grading Changes 7-10-70

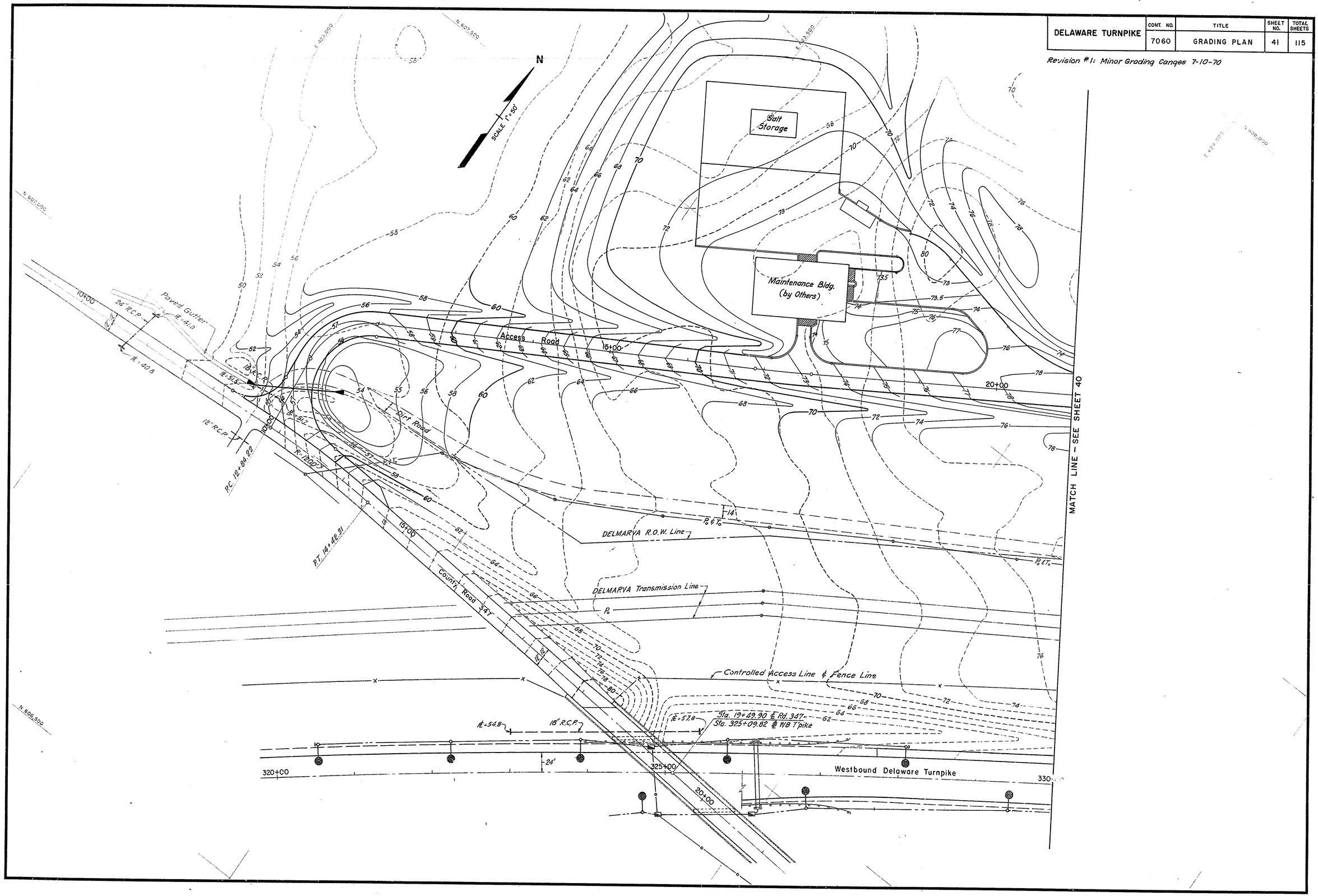

DELAWARE TURNPIKE	CONT. NO.	TITLE	SHEET NO.	TOTAL SHEETS
	7060	DRAINAGE AND ELECTRICAL PLAN	42	115

Revision #1: Minor Drainage Changes 7-10-70
Revision #2: Relocation of Sanitary Sewer 8-31-70.
Revision #3: Vertical Alignment Change to Proposed Sanitary Line

UTILITY NOTES

1. Existing Gas Main to remain; changes in grade will be made by DELMARVA Power & Light Co. in those areas where the depth of the main is insufficient to be clear of the proposed construction.
2. Proposed Power Line relocation, by DELMARVA Power & Light Co.
3. Telephone Line to be relocated by Diamond State Tel. Co.
4. Proposed Relocated Transmission Tower and Lines, by DELMARVA Power & Light Co.

ELECTRICAL NOTES

1. For Legend and General Notes, see Sheet No. 2.
2. For various construction details regarding lighting installations, see Sheet Nos. 51 & 52.
3. Extend 2" metallic conduit from junction box to conduit stub provided by others. Connect 3 #6 service cables to enclosed circuit breaker.
4. Primary service shall consist of two (2) 4" Metallic conduits; one with 1 #2 (15KV) phase cable and 1 #2 (Covered) neutral cable, and the other one (spare) with drag wire only.
5. All conduits shall be 3", unless otherwise noted.

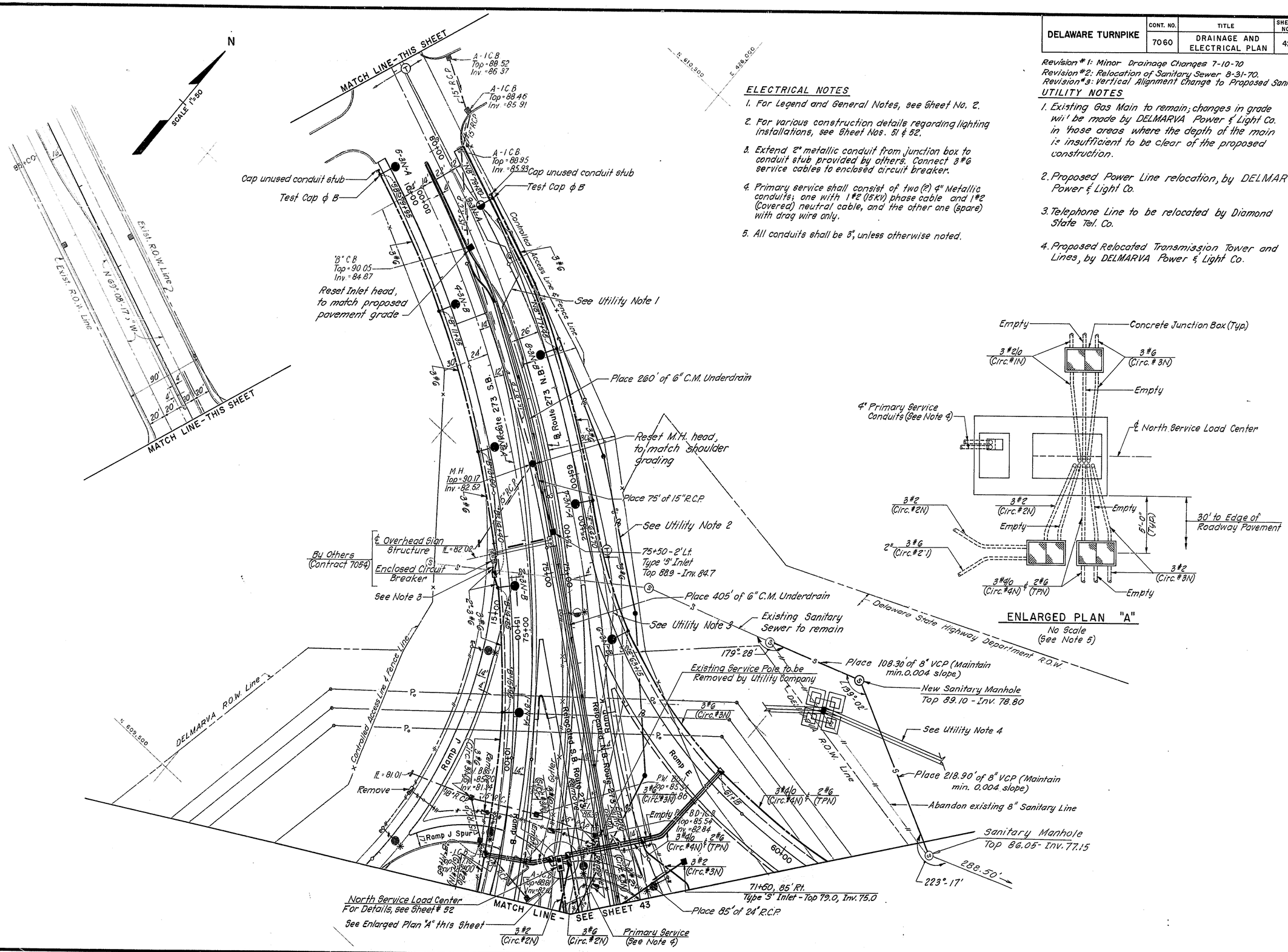

DELAWARE TURNPIKE	CONT. NO.	TITLE	SHEET NO.	TOTAL SHEETS
	7060	DRAINAGE AND ELECTRICAL PLAN	43	115

Revision #1: Minor Drainage Changes 7-10-70

Revision #2: Vertical Alignment Change to Proposed Sanitary Line

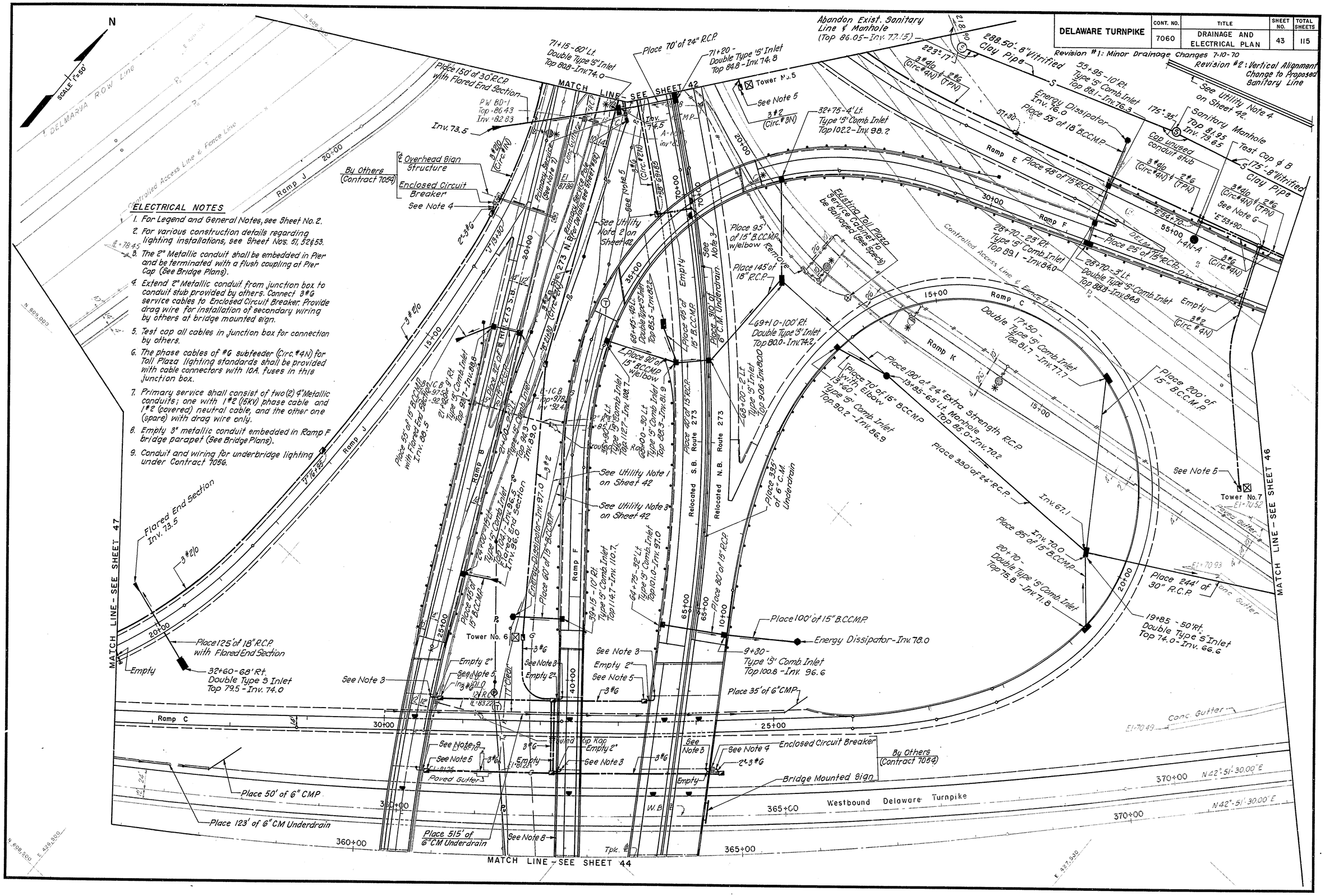

ELECTRICAL NOTES

1. For Legend and General Notes, see Sheet No. 2.
2. For various construction details regarding lighting installations, see Sheet Nos. 51, 52 & 53.
3. The 2" Metallic conduit shall be embedded in Pier and be terminated with a flush coupling at Pier Cap (See Bridge Plans).
4. Extend 2" Metallic conduit from junction box to conduit stub provided by others. Connect 3#6 service cables to Enclosed Circuit Breaker. Provide drag wire for installation of secondary wiring by others at bridge mounted sign.
5. Test cap all cables in junction box for connection by others.
6. The phase cables of #6 subfeeder (Circ. #4N) for Toll Plaza lighting standards shall be provided with cable connectors with 10A. fuses in this junction box.
7. Primary service shall consist of two (2) 4" Metallic conduits; one with 1#2 (15KV) phase cable and 1#2 (covered) neutral cable, and the other one (spare) with drag wire only.
8. Empty 3" metallic conduit embedded in Ramp F bridge parapet (See Bridge Plans).
9. Conduit and wiring for underbridge lighting under Contract 7056.

DELAWARE TURNPIKE	CONT. NO.	TITLE	SHEET NO.	TOTAL SHEETS
	7060	DRAINAGE AND ELECTRICAL PLAN	44	115

Revision #1: Minor Drainage Changes 7-10-70

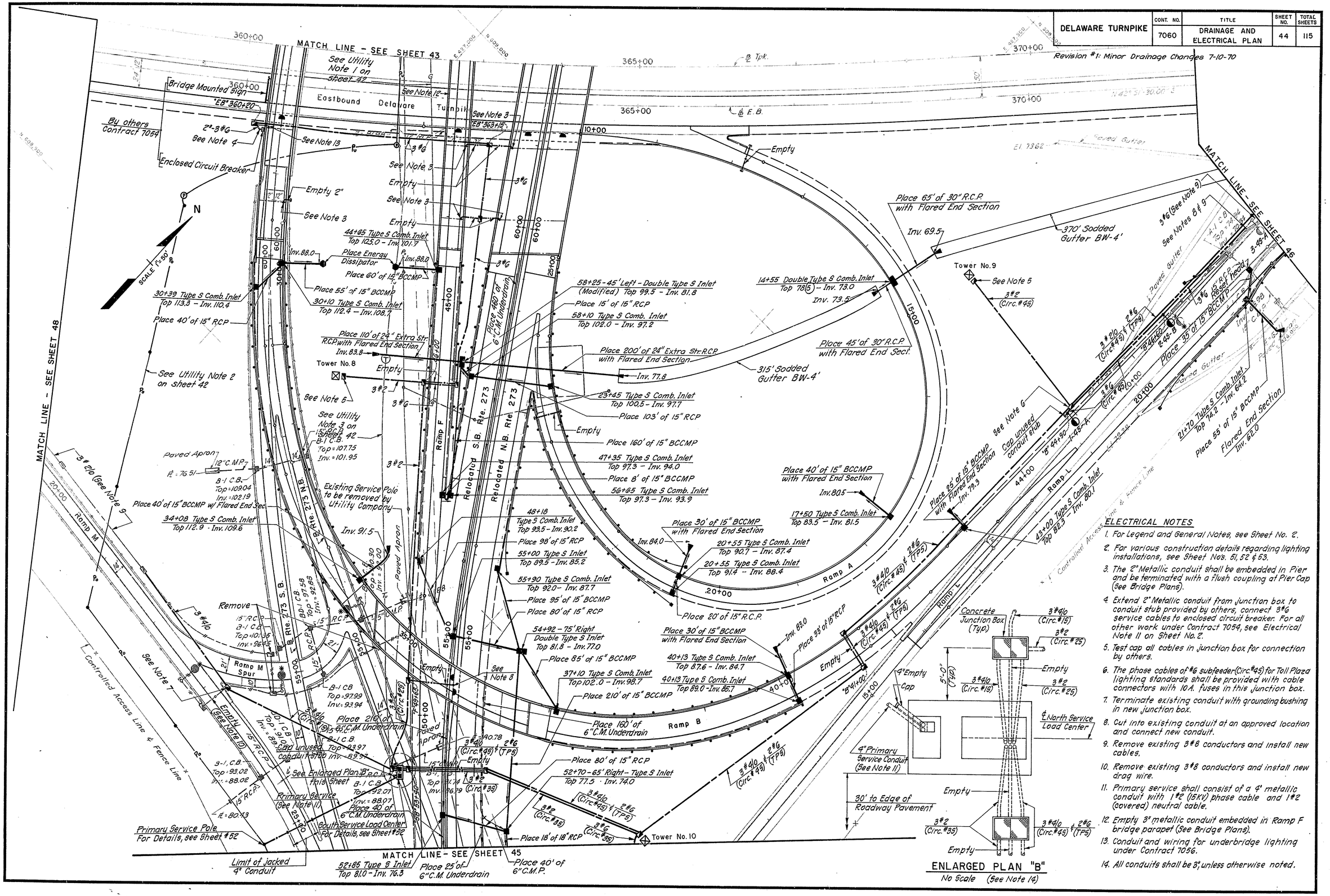

ELECTRICAL NOTES

1. For Legend and General Notes, see Sheet No. 2.
2. For various construction details regarding lighting installations, see Sheet Nos. 51, 52 & 53.
3. The 2" Metallic conduit shall be embedded in Pier and be terminated with a flush coupling at Pier Cap (See Bridge Plans).
4. Extend 2" Metallic conduit from junction box to conduit stub provided by others, connect 3#6 service cables to enclosed circuit breaker. For all other work under Contract 7054, see Electrical Note 11 on Sheet No. 2.
5. Test cap all cables in junction box for connection by others.
6. The phase cables of #6 subfeeder (Circ.#45) for Toll Plaza lighting standards shall be provided with cable connectors with 10A. fuses in this junction box.
7. Terminate existing conduit with grounding bushing in new junction box.
8. Cut into existing conduit at an approved location and connect new conduit.
9. Remove existing 3#8 conductors and install new cables.
10. Remove existing 3#8 conductors and install new drag wire.
11. Primary service shall consist of a 4" metallic conduit with 1#2 (15KV) phase cable and 1#2 (covered) neutral cable.
12. Empty 3" metallic conduit embedded in Ramp F bridge parapet (See Bridge Plans).
13. Conduit and wiring for underbridge lighting under Contract 7056.
14. All conduits shall be 3", unless otherwise noted.

DELAWARE TURNPIKE	CONT. NO.	TITLE	SHEET NO.	TOTAL SHEETS
	7060	DRAINAGE AND ELECTRICAL PLAN	45	115

Revision #1: Minor Drainage Changes 7-10-70

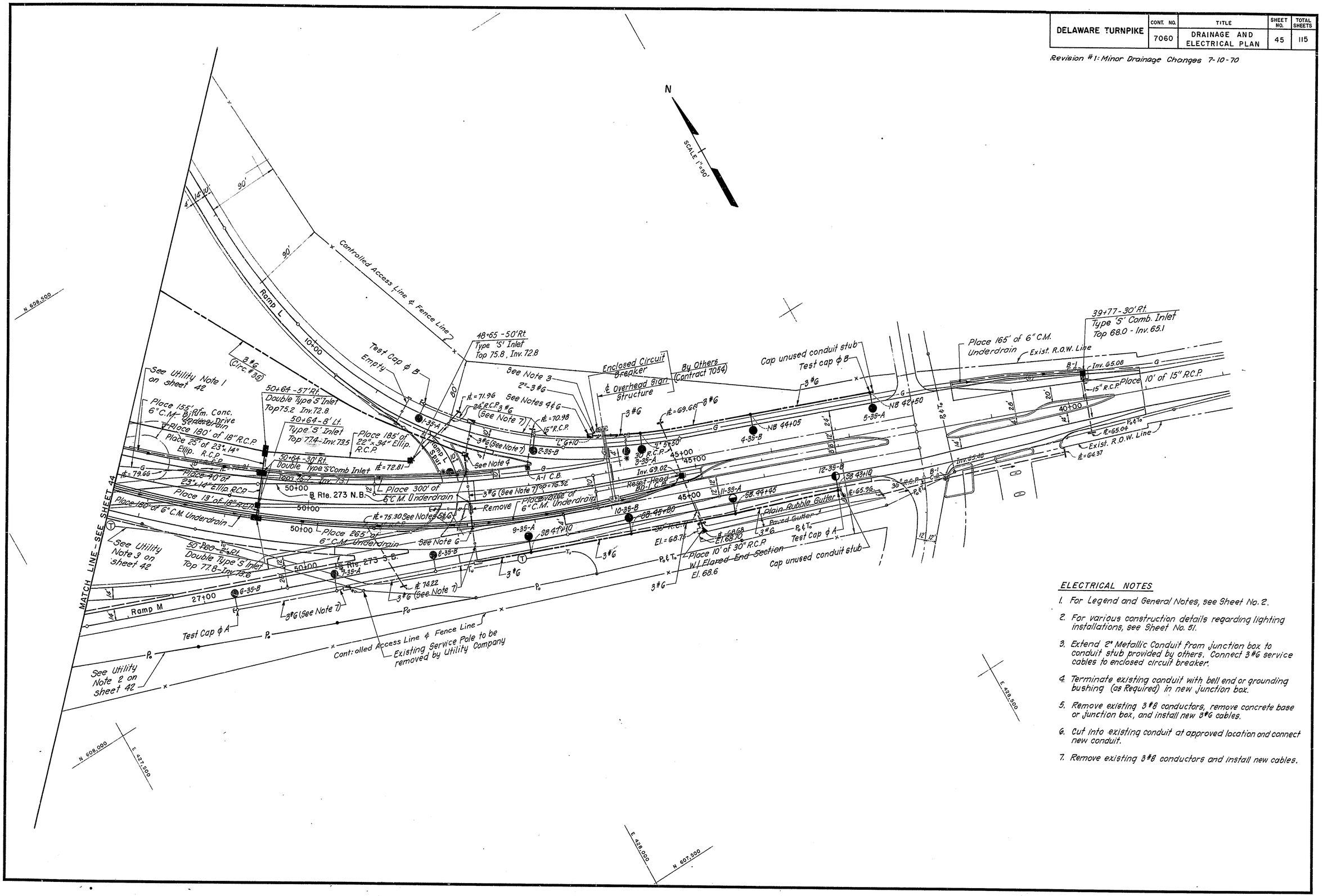

ELECTRICAL NOTES

1. For Legend and General Notes, see Sheet No. 2.
2. For various construction details regarding lighting installations, see Sheet No. 51.
3. Extend 2" Metallic Conduit from junction box to conduit stub provided by others. Connect 3 #6 service cables to enclosed circuit breaker.
4. Terminate existing conduit with bell end or grounding bushing (as Required) in new junction box.
5. Remove existing 3 #8 conductors, remove concrete base or junction box, and install new 3 #6 cables.
6. Cut into existing conduit at approved location and connect new conduit.
7. Remove existing 3 #8 conductors and install new cables.

DELAWARE TURNPIKE	CONT. NO.	TITLE	SHEET NO.	TOTAL SHEETS
	7060	DRAINAGE AND ELECTRICAL PLAN	46	115

Revision #1: Minor Drainage Changes 7-10-70
Revision #2: Vertical Alignment Change to Proposed and Existing Sanitary Line.

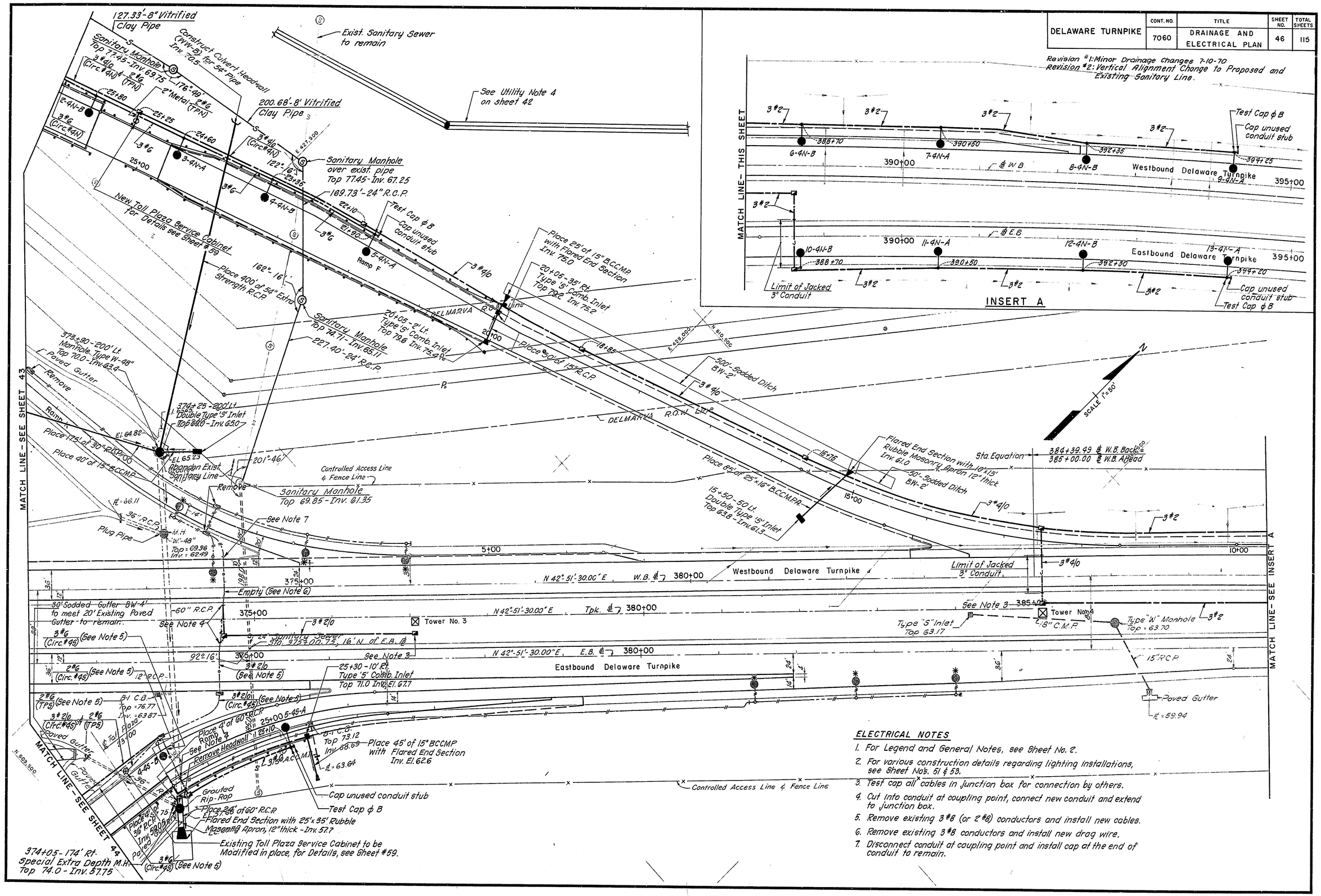

ELECTRICAL NOTES

1. For Legend and General Notes, see Sheet No. 2.
2. For various construction details regarding lighting installations, see Sheet Nos. 51 & 53.
3. Test cap all cables in junction box for connection by others.
4. Cut into conduit at coupling point, connect new conduit and extend to junction box.
5. Remove existing 3#8 (or 2#8) conductors and install new cables.
6. Remove existing 3#8 conductors and install new drag wire.
7. Disconnect conduit at coupling point and install cap at the end of conduit to remain.

DELAWARE TURNPIKE	CONT. NO.	TITLE	SHEET NO.	TOTAL SHEETS
	7060	DRAINAGE AND ELECTRICAL PLAN	47	115

Revision #1: Minor Grading Changes 7-10-70

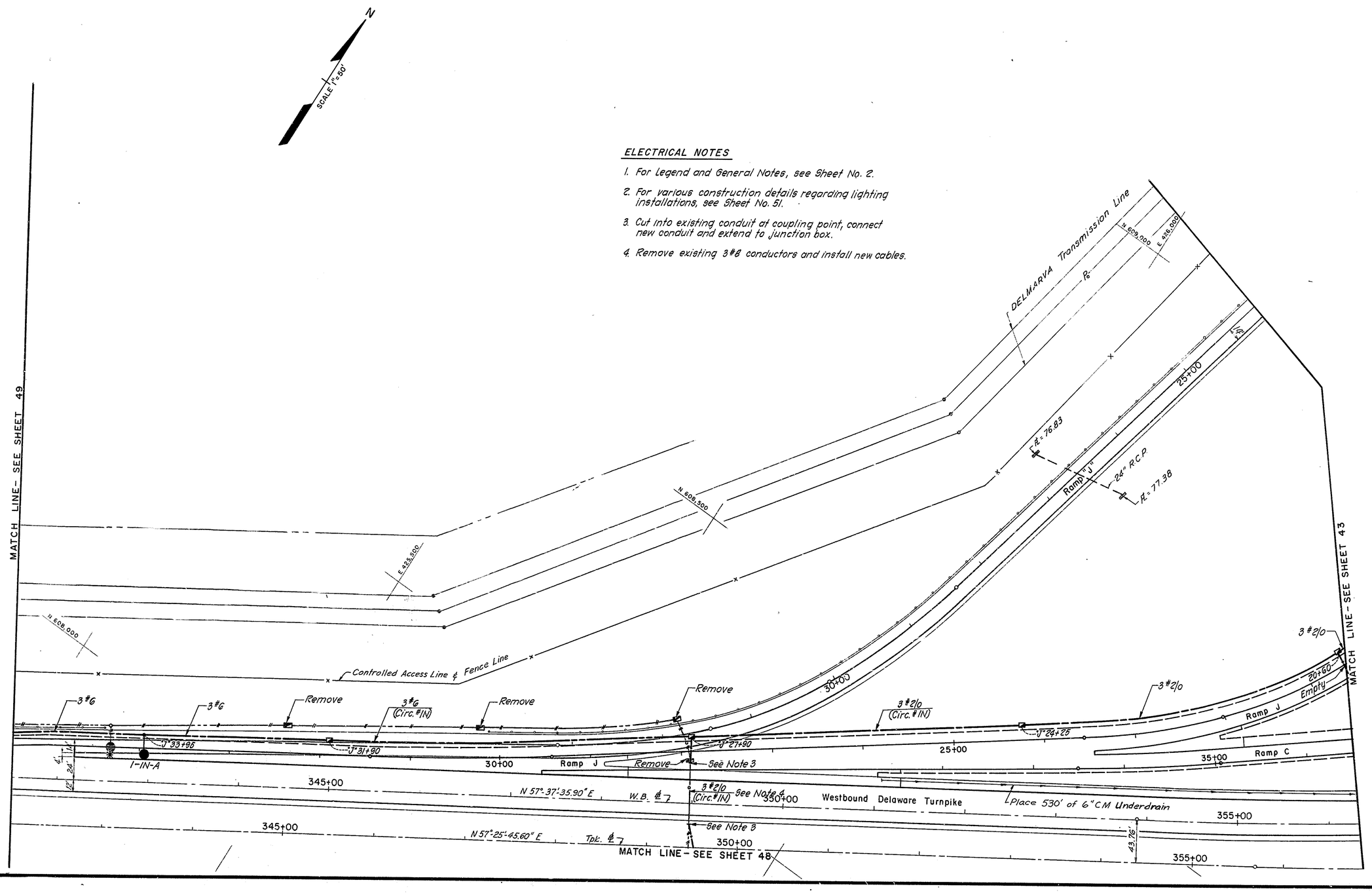

ELECTRICAL NOTES

1. For Legend and General Notes, see Sheet No. 2.
2. For various construction details regarding lighting installations, see Sheet No. 51.
3. Cut into existing conduit at coupling point, connect new conduit and extend to junction box.
4. Remove existing 3 #8 conductors and install new cables.

DELAWARE TURNPIKE	CONT. NO.	TITLE	SHEET NO.	TOTAL SHEETS
	7060	DRAINAGE AND ELECTRICAL PLAN	48	115

Revision #1: Minor Drainage Changes 7-10-70

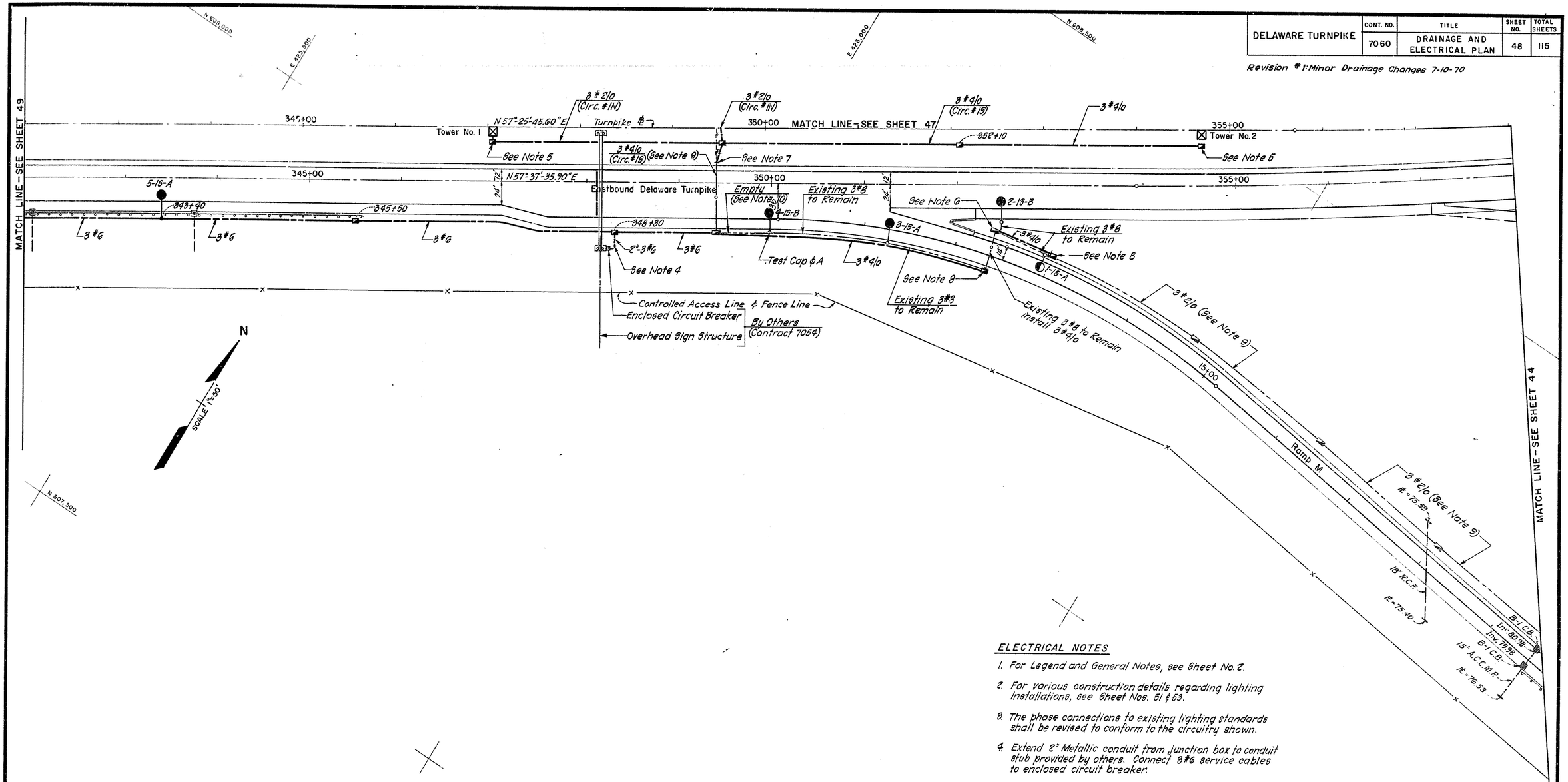

ELECTRICAL NOTES

1. For Legend and General Notes, see Sheet No. 2.
2. For various construction details regarding lighting installations, see Sheet Nos. 51 & 53.
3. The phase connections to existing lighting standards shall be revised to conform to the circuitry shown.
4. Extend 2" Metallic conduit from junction box to conduit stub provided by others. Connect 3 #6 service cables to enclosed circuit breaker.
5. Test cap all cables in junction box for connection by others.
6. The phase cables of existing #8 subfeeder for lighting standards 1-1S-A, 2-1S-B, 3-1S-A and 4-1S-B shall be provided with cable connectors with 10A. fuses in this junction box.
7. Cut into existing conduit at coupling point, connect new conduit an. extend to junction box.
8. Terminate existi. conduit with bell end or grounding bushing (as requ.red) in new junction box.
9. Remove existing 3 #8 conductors and install new cables.
10. Remove existing 3 #8 conductors and install new drag wire.

DELAWARE TURNPIKE	CONT. NO.	TITLE	SHEET NO.	TOTAL SHEETS
	7060	DRAINAGE AND ELECTRICAL PLAN	49	115

Revision #1: Minor Drainage Changes 7-10-70

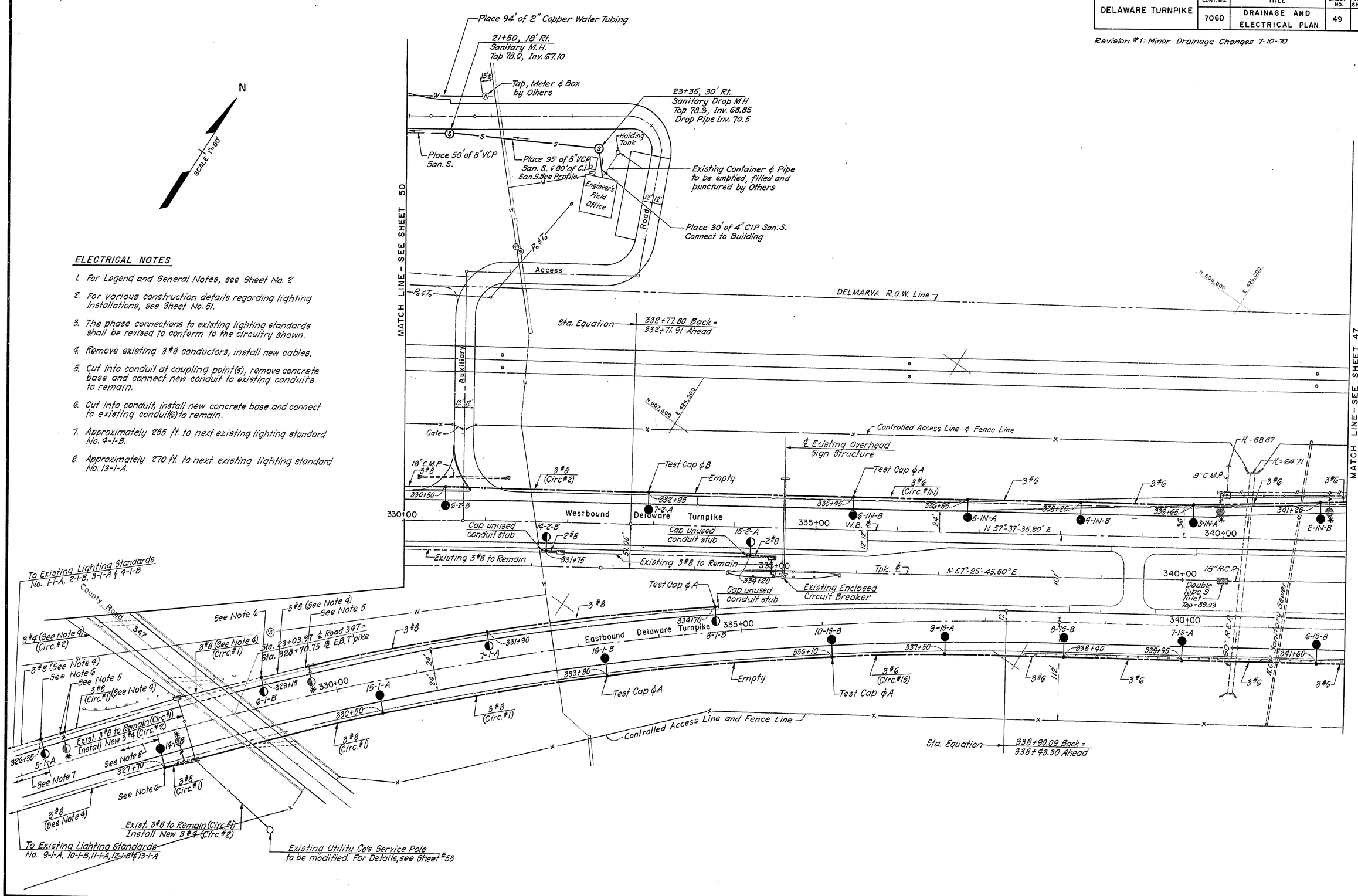

ELECTRICAL NOTES

1. For Legend and General Notes, see Sheet No. 2
2. For various construction details regarding lighting installations, see Sheet No. 51.
3. The phase connections to existing lighting standards shall be revised to conform to the circuitry shown.
4. Remove existing 3#8 conductors, install new cables.
5. Cut into conduit at coupling point(s), remove concrete base and connect new conduit to existing conduits to remain.
6. Cut into conduit, install new concrete base and connect to existing conduit(s) to remain.
7. Approximately 265 ft. to next existing lighting standard No. 4-1-B.
8. Approximately 270 ft. to next existing lighting standard No. 13-1-A.

DELAWARE TURNPIKE	CONT. NO.	TITLE	SHEET NO.	TOTAL SHEETS
	7060	DRAINAGE AND ELECTRICAL PLAN	50	115

Revision #1: Sanitary Sewer Line relocated – 9-18-70.

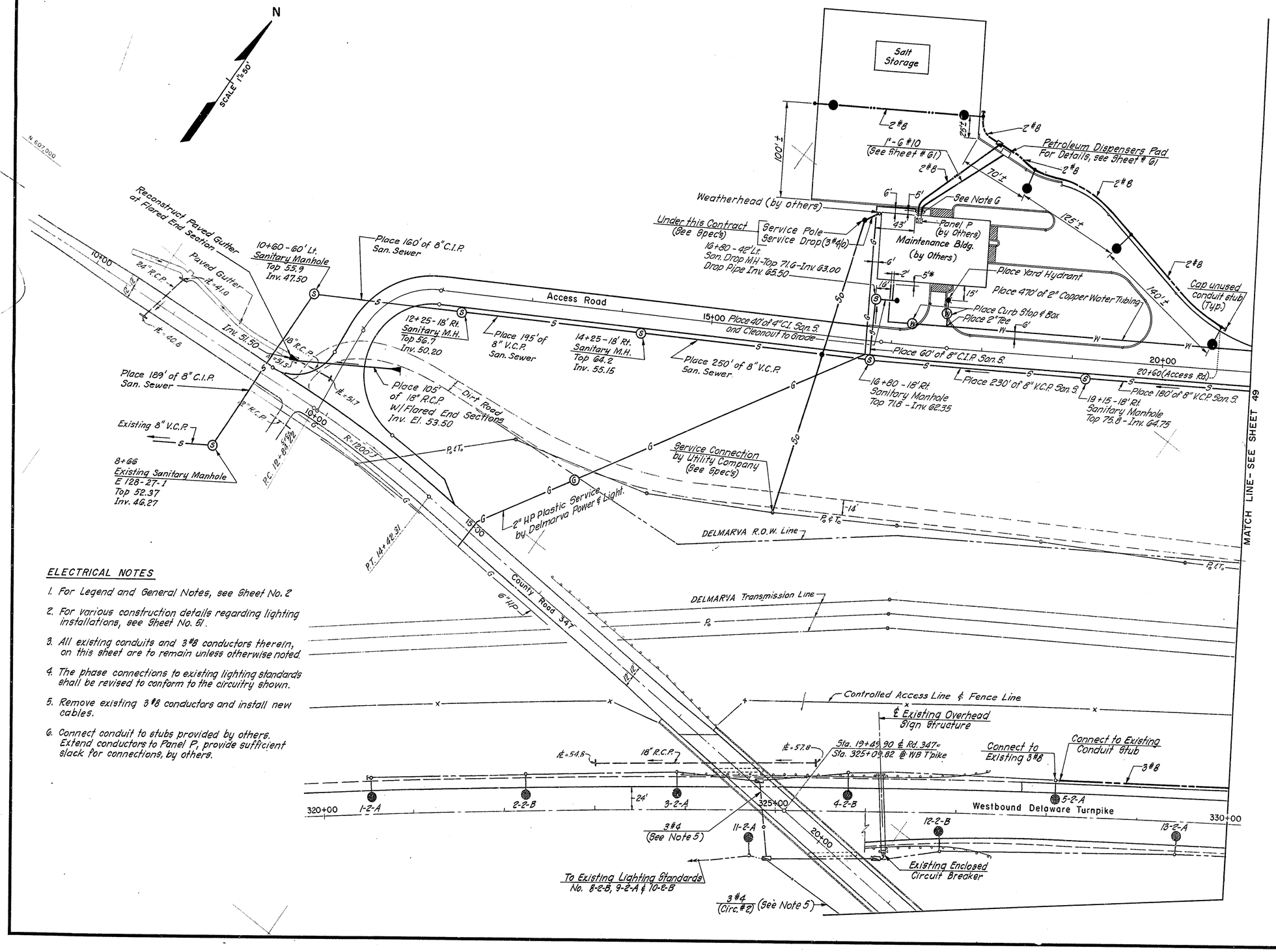

* Building Lines by others. Connections to Lines by others by 7060 Contractor.

ELECTRICAL NOTES

1. For Legend and General Notes, see Sheet No. 2
2. For various construction details regarding lighting installations, see Sheet No. 51.
3. All existing conduits and 3#8 conductors therein, on this sheet are to remain unless otherwise noted.
4. The phase connections to existing lighting standards shall be revised to conform to the circuitry shown.
5. Remove existing 3#8 conductors and install new cables.
6. Connect conduit to stubs provided by others. Extend conductors to Panel P, provide sufficient slack for connections, by others.

DELAWARE TURNPIKE	CONT. NO.	TITLE	SHEET NO.	TOTAL SHEETS
	7060	LIGHTING DETAILS-I	51	115

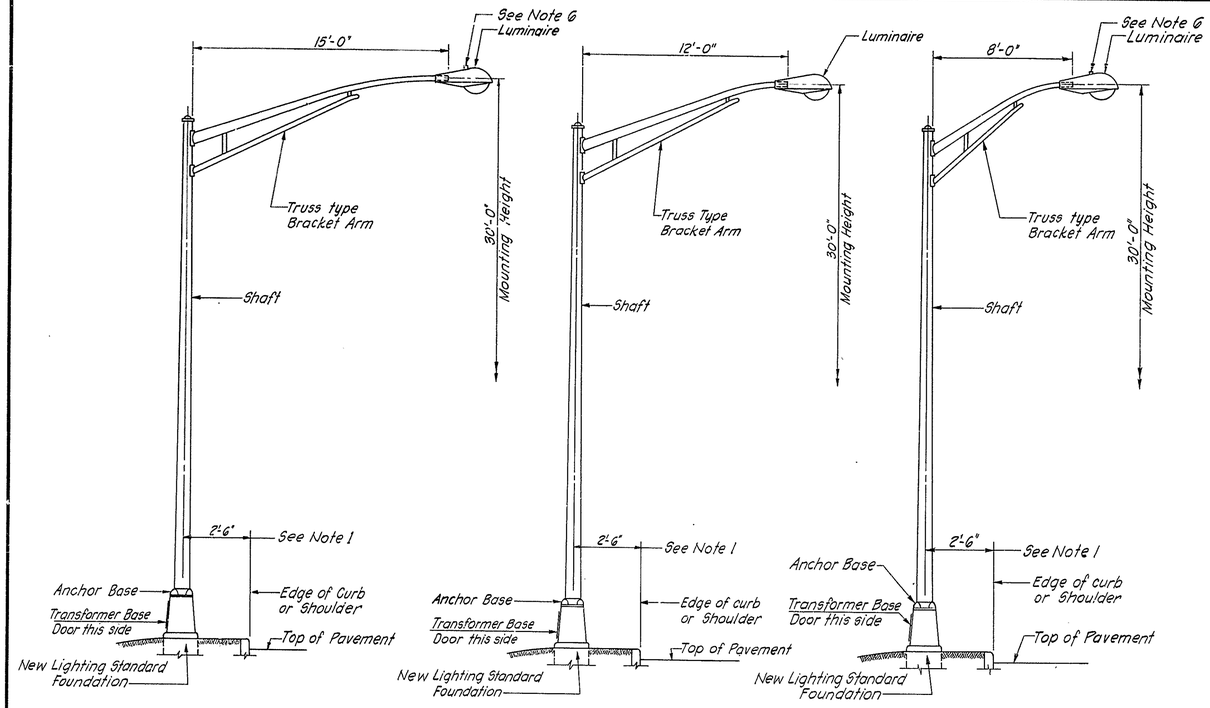

NEW OR RELOCATED TYPE A — RELOCATED TYPE B — NEW OR RELOCATED TYPE C

LIGHTING STANDARD INSTALLATION

No Scale

(Guard Rail installation where required, shall be coordinated with lighting standard locations.)

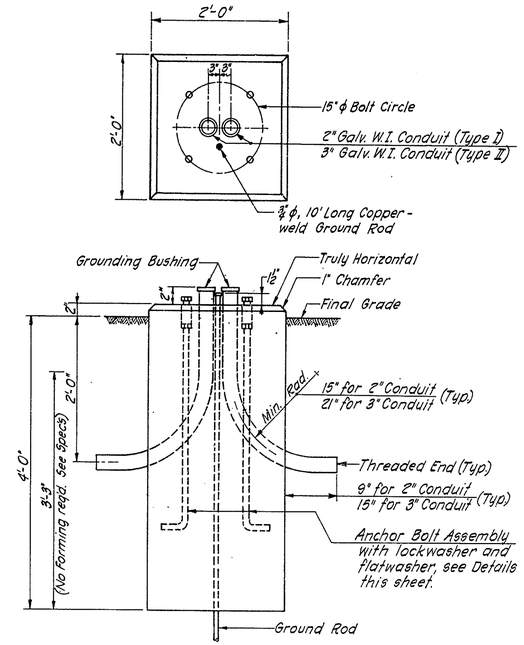

LIGHTING STANDARD FOUNDATION TYPE I OR TYPE II

1" = 1'-0"

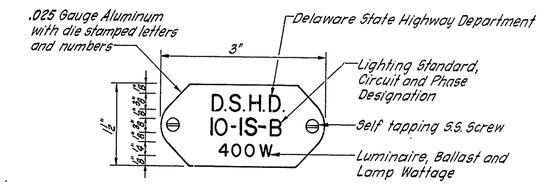

LIGHTING STANDARD IDENTIFICATION PLATE

No Scale

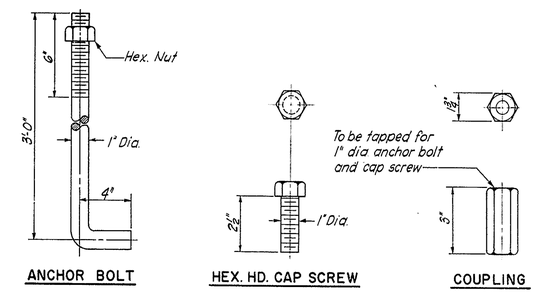

LIGHTING STANDARD ANCHOR BOLT ASSEMBLY

No Scale

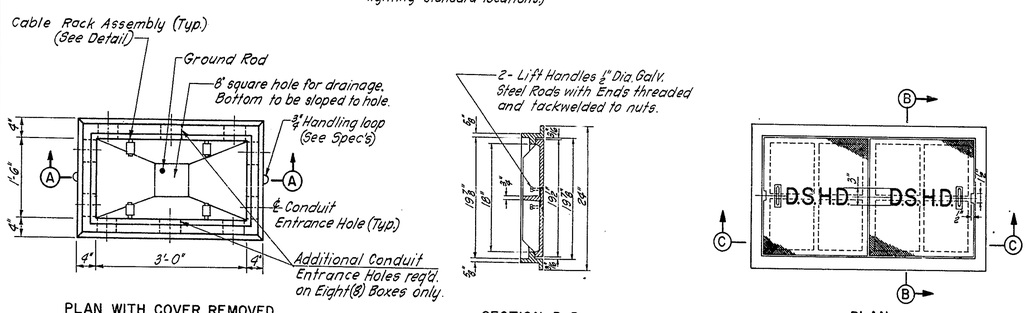

PLAN WITH COVER REMOVED

¾" = 1'-0"

SECTION B-B

1" = 1'-0"

PLAN

1" = 1'-0"

CONDUIT DRAINAGE DETAIL

No Scale

LIGHTING STANDARD WIRING

No Scale

(See Note 5)

CABLE RACK ASSEMBLY

½" = 1'-0"

(See Note 8)

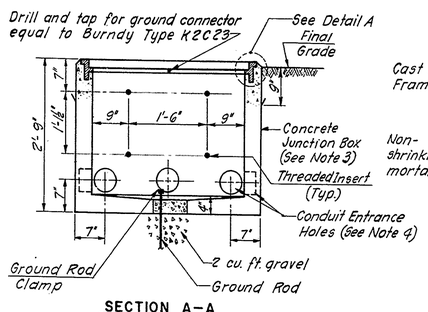

SECTION A-A

¾" = 1'-0"

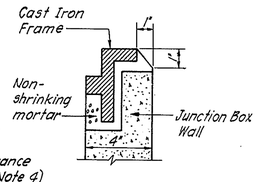

DETAIL A

3" = 1'-0"

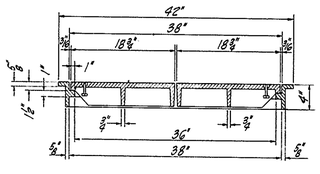

SECTION C-C

1" = 1'-0"

FRAME AND COVER

(See Note 7)

CONCRETE JUNCTION BOX DETAILS

NOTES

1. This dimension may vary, as directed, in order to maintain alignment with existing lighting standards.
2. Lighting circuit cables shall be #2, #6 or #8 A.W.G. as noted on the Plans.
3. Concrete junction box shall be reinforced with #3 bars 12" o.c. throughout.
4. Conduit entrance holes shall be 5" Dia. with 1" knockout wall.
5. For lighting standards at the Maintenance building site both connector kits shall be ESNA, Style 82 with 5A. fuses.
6. Photoelectric control unit, where required (See Specifications).
7. Frame and cover shall be equal to Flockhart Foundry Co.'s Dwg. No. 18664, and completely H.D. Galvanized after fabrication.
8. Cable rack assembly shall be manufactured by the McGraw-Edison Power System Division, or approved equal, and shall consist of the following components:
   - Rack — Cat. No. DU 1782
   - Support — Cat. No. DU 551
   - Insulator — Cat. No. DE 1141
   - Locking Clip — Cat. No. WOU 4M1

   (4 assemblies per junction box are required)

DELAWARE TURNPIKE	CONT. NO.	TITLE	SHEET NO.	TOTAL SHEETS
	7060	LIGHTING DETAILS - II	52	115

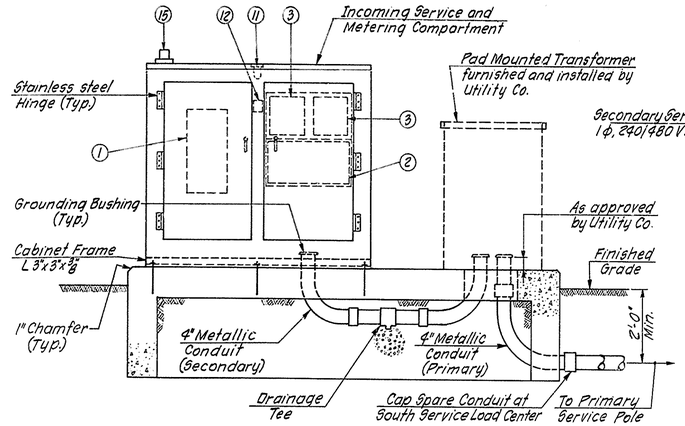

SECTION A-A
1/2" = 1'-0"
(Distribution conduits and Ground Rods are not shown)

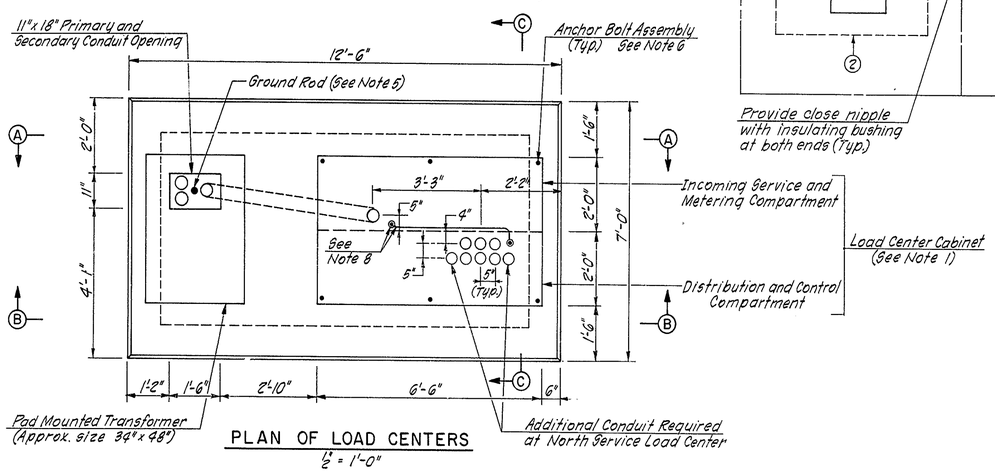

PLAN OF LOAD CENTERS
1/2" = 1'-0"

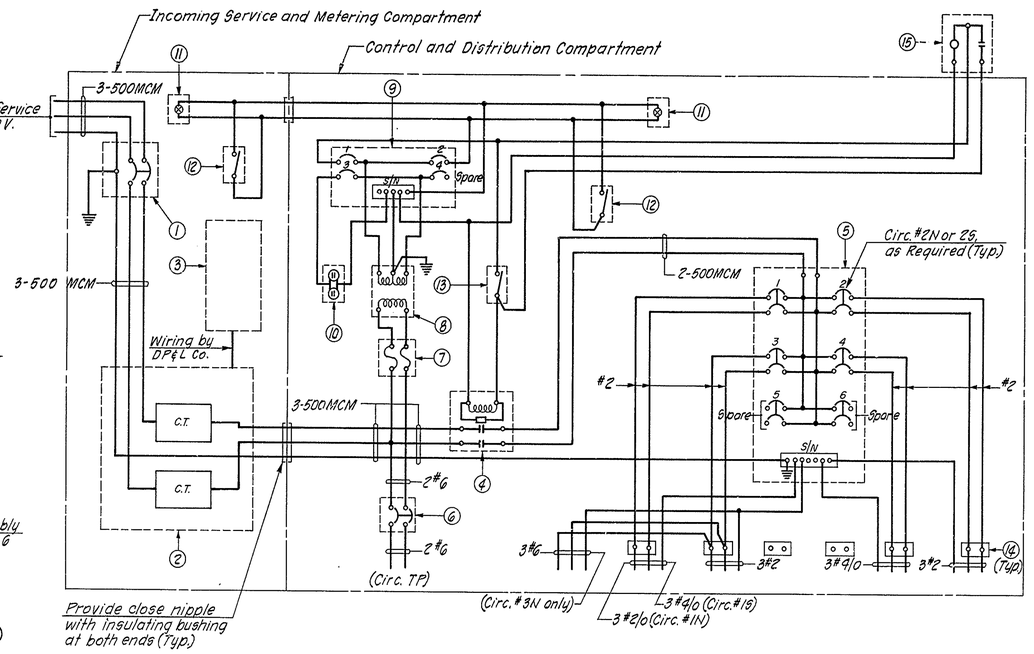

LOAD CENTER WIRING DIAGRAM
No Scale

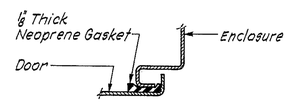

DETAIL "A"
No Scale
(Typical all around doors)

LIST OF EQUIPMENT

(1) Main Circuit Breaker: 600V, 400A., 2 Pole, Groundable neutral, with 400A. interchangeable trip, within NEMA I surface mounted enclosure, equal to Westinghouse Electric Corp's Cat. # S-LA 2400.

(2) Metering Device and Current Transformers: To be furnished by the Utility Company and installed under this Contract.

(3) Meter: To be furnished and installed by Utility Company.

(4) Magnetic Contactor: 600V, 400A., 2 Pole, complete with auxiliary relay for 120V. control, within NEMA I surface mounted enclosure, equal to ASCO Cat. # 91083BC.

(5) Distribution Panelboard: Single phase, 3 Wire, 240/480V. with solid neutral, 400A. Main Lugs, complete with Four (4) 100A., Frame and 70A. trip, and Two (2) 225A. Frame with 125A., trip Circuit Breakers, within NEMA I surface mounted enclosure, equal to Westinghouse Electric Corp. Type WEHB.
Circuit Breaker Nos. 1, 2, 3 & 5 with 70A. Trip
Circuit Breaker Nos. 4 & 6 with 125A. Trip.

(6) Toll Plaza Service Circuit Breaker: 480V, 2 Pole, 100A., with 50A. Trip, within NEMA I surface mounted enclosure, equal to Westinghouse Electric Corp's Cat. # S-EHB 2050.

(7) Fuse Block: 480V, Two Pole, Barrier Type, with Two (2) 10A. Cartridge Type Midget Fuses (13/32 inch in Dia. and 1 1/2" long), enclosed within a 6x6x4 inches NEMA I surface mounted box.

(8) Control Transformer: Single phase, 2 KVA, 480-120/240V., dry type, for outdoor-wall mounted use, equal to Westinghouse Electric Corp's. Cat. # GE185.

(9) Control Panelboard: Single phase, 3 Wire, 120/240V. with solid neutral, 60A Main Lugs, complete with Four (4) Single Pole, 20A. Trip Circuit Breakers, within NEMA I surface mounted enclosure, equal to Westinghouse Electric Corp's Cat. # 8LEB4.

(10) Duplex Receptacle: 125V., polarized type, duplex receptacle in conduit box with mounting lugs and cover, equal to:
Harvey-Hubbell Cat. # 5362 (Receptacle)
Crouse-Hinds Cat. # FS109 (Box) and DS1020g. (Cover).

(11) Cabinet Light: Vaportight ceiling fixture, 60W. size, complete with guard and 40W. lamp, equal to Russell & Stoll Co's Cat. # 4942 Series.

(12) Light Switch: Single Pole, 20A., 250V. Toggle Switch in conduit box with mounting lugs and cover, equal to:
Harvey-Hubbell Cat. # 9815 (Switch)
Crouse-Hinds Cat. # FS1019 (Box) and DS32g (Cover).

(13) By-Pass Switch: Same as (12)

(14) Terminal Block: 600V, 125A. to accommodate #4/0 cables, similar to General Electric Co's Cat. # GR 2960 Series.

(15) Photoelectric Control: 120V. Control, complete with twist-lock mounting device, equal to Fisher-Pierce Cat. # 6607A.

NOTES

1. For construction of Load Center Cabinet, see Specifications.
2. For orientation of conduits, see Enlarged Plan "A" and "B" on Sheet No.'s 42 & 44, respectively.
3. All control wiring within Load Center Cabinet shall be #12 A.W.G. with RHW insulation and neoprene covering. Wiring shall be exposed, neatly arranged, laced, tagged and securely fastened.
4. All installations on primary service pole, installations within the incoming service and metering compartment, and the location of primary and secondary conduits shall be subject to D.P.&L. Co's approval (See Spec's).
5. All primary cables shall be terminated with a minimum of 10' slack (above pad) at Pad Mounted Transformer for Utility Co's connection. A 3/4" ϕ x 10'-0" long copperweld Ground Rod shall be installed in the secondary area, top extending 4" to 6" above pad.
6. Anchor bolt assemblies shall consist of 5/8" ϕ x 11" long bolt with 3" hook, washer and hex nut, and shall be Hot-Dipped Galvanized (6 Required).
7. All circuit breakers, switches etc. within cabinet shall be identified with Nameplates (See Spec's).
8. Provide 1 1/2" ϕ holes in concrete pad for ground rod installation (2 req'd). Install #2/0 Bare tinned ground conductor for Load Center Cabinet grounding system.

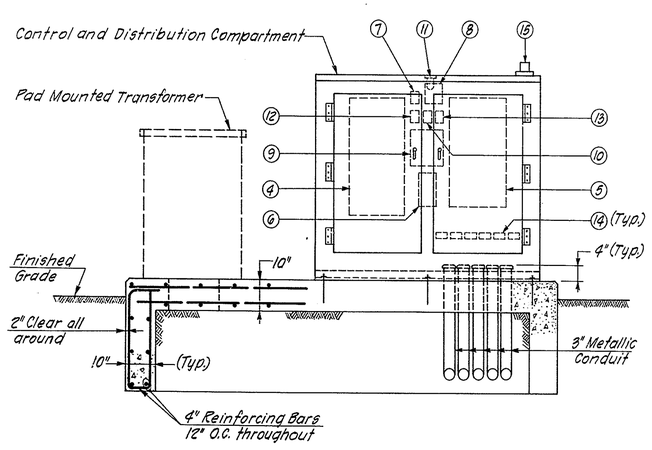

SECTION B-B
1/2" = 1'-0"

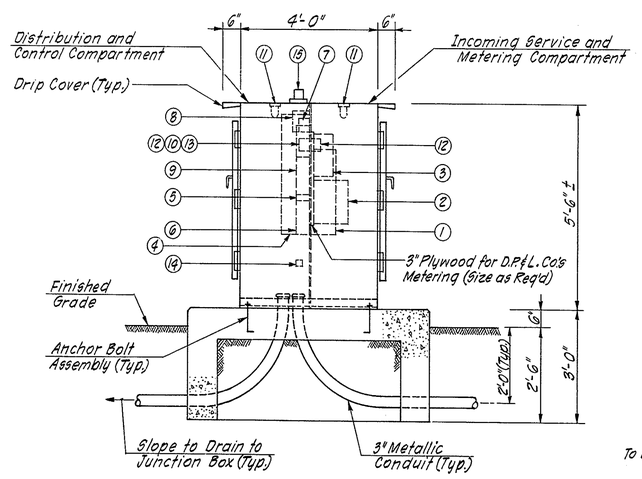

SECTION C-C
1/2" = 1'-0"
(Primary and Secondary conduits, and Ground Rods are not shown in Sections B-B and C-C)

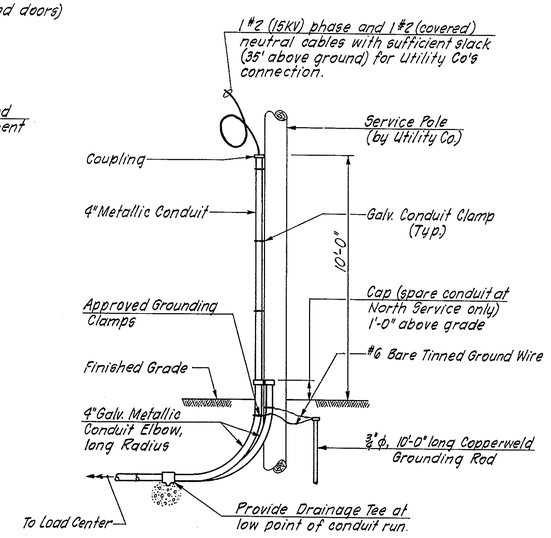

PROPOSED PRIMARY SERVICE POLE
No Scale

DELAWARE TURNPIKE	CONT. NO.	TITLE	SHEET NO.	TOTAL SHEETS
	7060	LIGHTING TOWER FOUNDATIONS	53	115

Revision #1: Changed threaded size of Anchor Bolts — 5/6/71

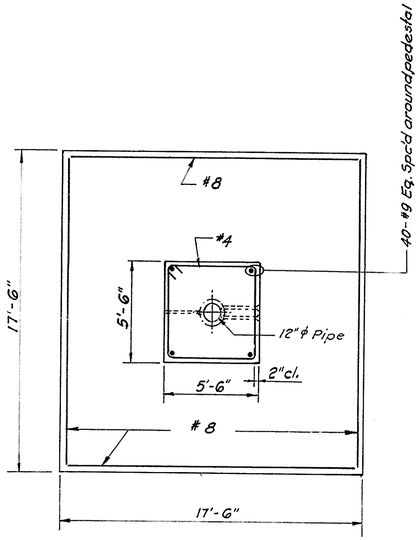

PLAN

SOIL BEARING FOOTING

Max. allow. Soil Pressure 3T/□'

4"=1'-0"

PILE LEGEND

○ - Denotes vertical pile

○ - Denotes pile battered 1½:12 in direction shown.

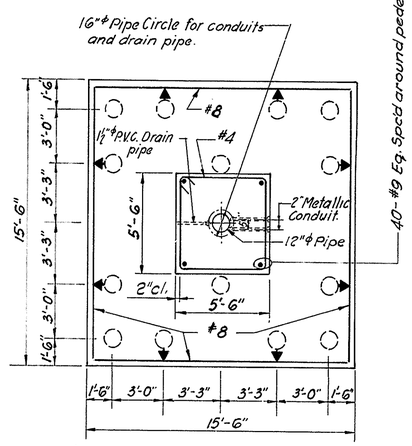

PLAN

PILE FOOTING

Treated Timber Piles (24 Ton. Capacity)

4"=1'-0"

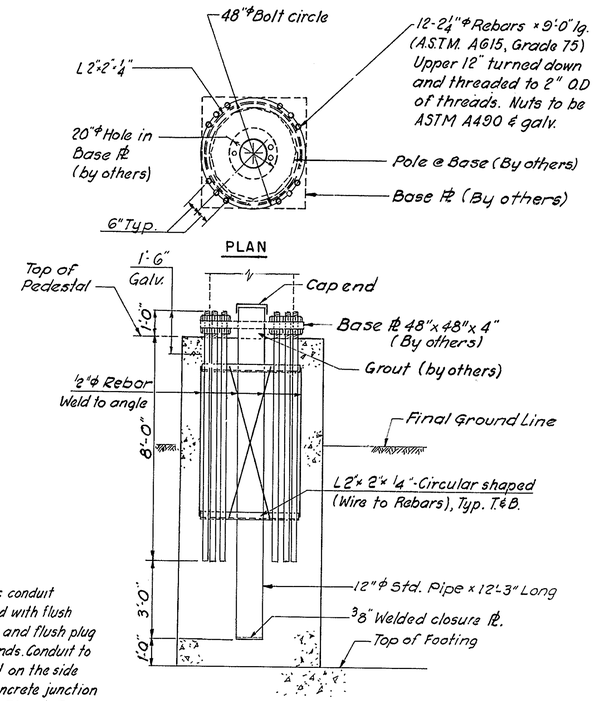

ELEVATION

ANCHOR BOLT DETAIL

3/8"=1'-0"

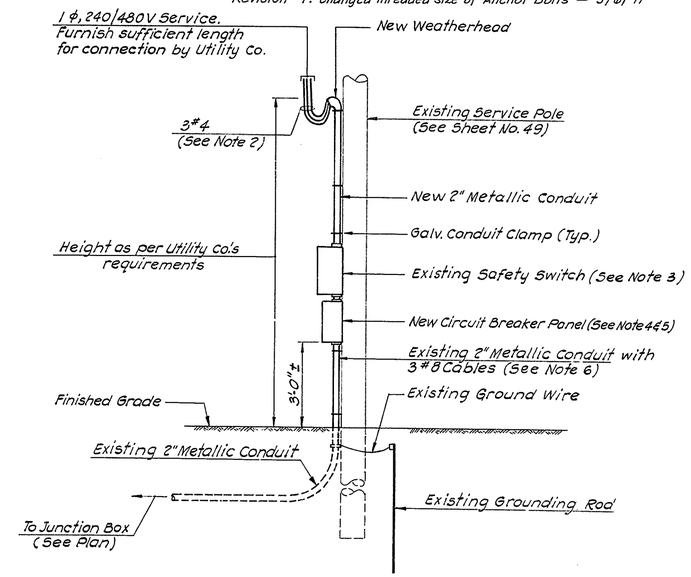

MODIFICATION OF EXISTING SERVICE POLE AT COUNTY ROAD 347

No Scale

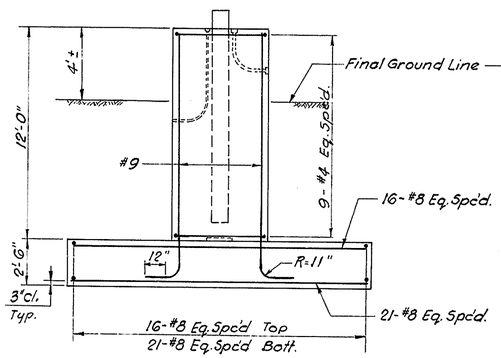

ELEVATION

4"=1'-0"

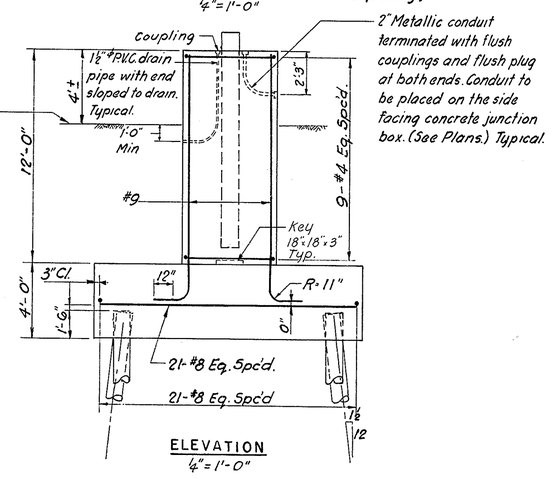

ELEVATION

4"=1'-0"

NOTES: (FOUNDATIONS)

All Stationing and offsets are taken off of existing Base Lines

All Concrete Masonry for Lighting Tower foundation including conduits and drain pipe, shall be paid for as "P.C.C. Masonry-Miscellaneous."

Anchorage assembly & 12"ϕ Std. Pipe will be paid for under item "Anchorage Assembly for Future High Mast Lighting Tower".

All Bar reinforcement, except anchor bars to be ASTM A615, Grade 40.

NOTES (ELECTRICAL)

1. All installations on Service Pole shall conform to the Utility Company's requirements.
2. Remove existing cables and install new service cables as noted.
3. Replace existing fuses with new 60A fuses.
4. Circuit Breaker Panel shall be furnished with three 2-pole, 480V., 100A. (TEF) frame (50A. trip) circuit breakers (one spare) and neutral bar, in NEMA 3R enclosure.
5. Circuit breaker panel shall be furnished with approved heavy duty padlock keyed identically with existing safety switch. The panel shall be fastened to the service pole with 3/8"ϕ, 2½" long galvanized lag screws.
6. Retain existing cables (Circ. #1) install new 3#4 cables (Circ. #2)

LIGHTING TOWERS

TOWER NO.	TOP OF FTG. ELEV.	TYPE OF FTG. ✳	EST. PILE TIP ELEV.	BORING	TOWER STATION	TOWER OFFSET
1	74.70	Pile	+54.0	D-78	346+55 WB ℄	℄ Median
2	79.00	Pile	+54.0	D-79	354+20 WB ℄	℄ Median
3	65.00	Soil Brg.	-	D-80	376+45 WB ℄	℄ Median
4	56.00	Soil. Brg.	-	D-81	385+10 WB ℄	℄ Median
5	76.50	Pile	+42.0	D-82	20+58 Rmp. K	40' Rt.
6	89.50	Soil Brg.	-	D-83	361+48 WB ℄	212' Lt.
7	66.00	Pile	+44.0	D-84	12+25 Rmp. K	62' Rt.
8	79.50	Pile	+55.0	D-85	58+27 NB-273	63' Lt.
9	63.00	Pile	+45.0	D-86	369+12 EB ℄	212' Rt.
10	72.00	Soil Brg.	-	D-87	51+60 NB-273	250' Rt.

✳ Footing Types indicated in Table may be revised:

a) - From Soil Brg. to Piles (as directed by the Engineer) If ground water elevation during excavation is above bottom of footing.

b) - From Piles to Soil Brg. (as directed by the Engineer) If ground water elevation during excavation is below bottom of footing.

DELAWARE TURNPIKE	CONT. NO.	TITLE	SHEET NO.	TOTAL SHEETS
	7060	RAMP TOLL PLAZAS LAYOUTS	54	115

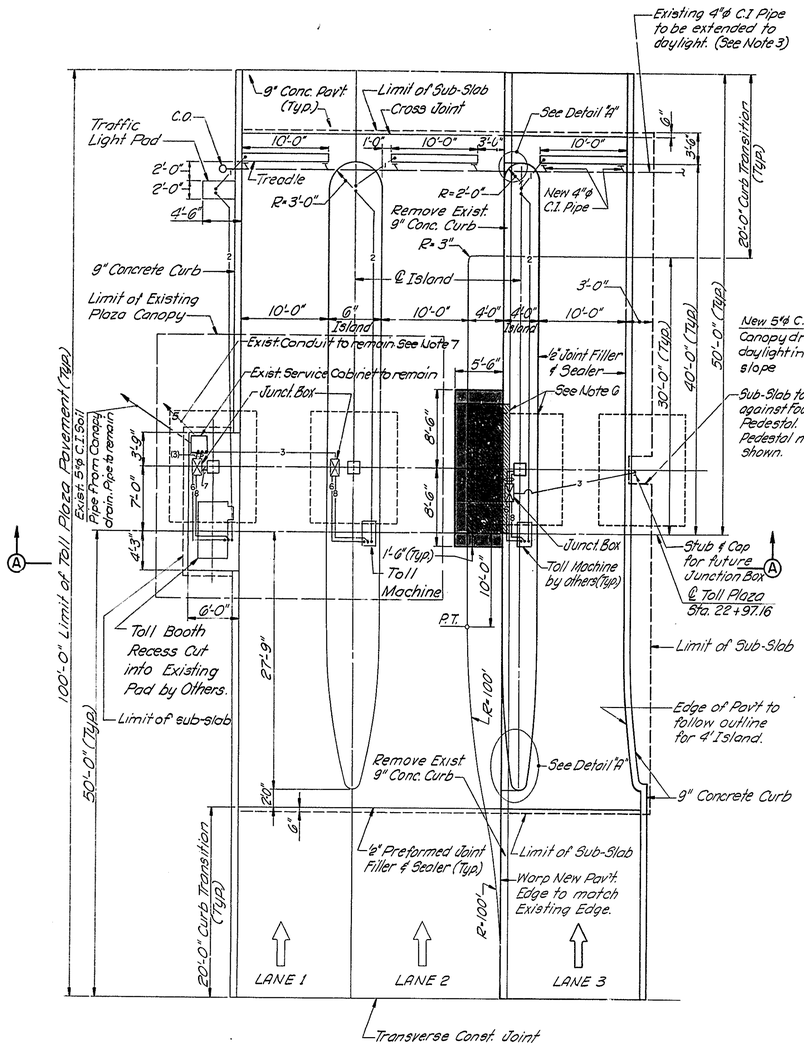

PLAN

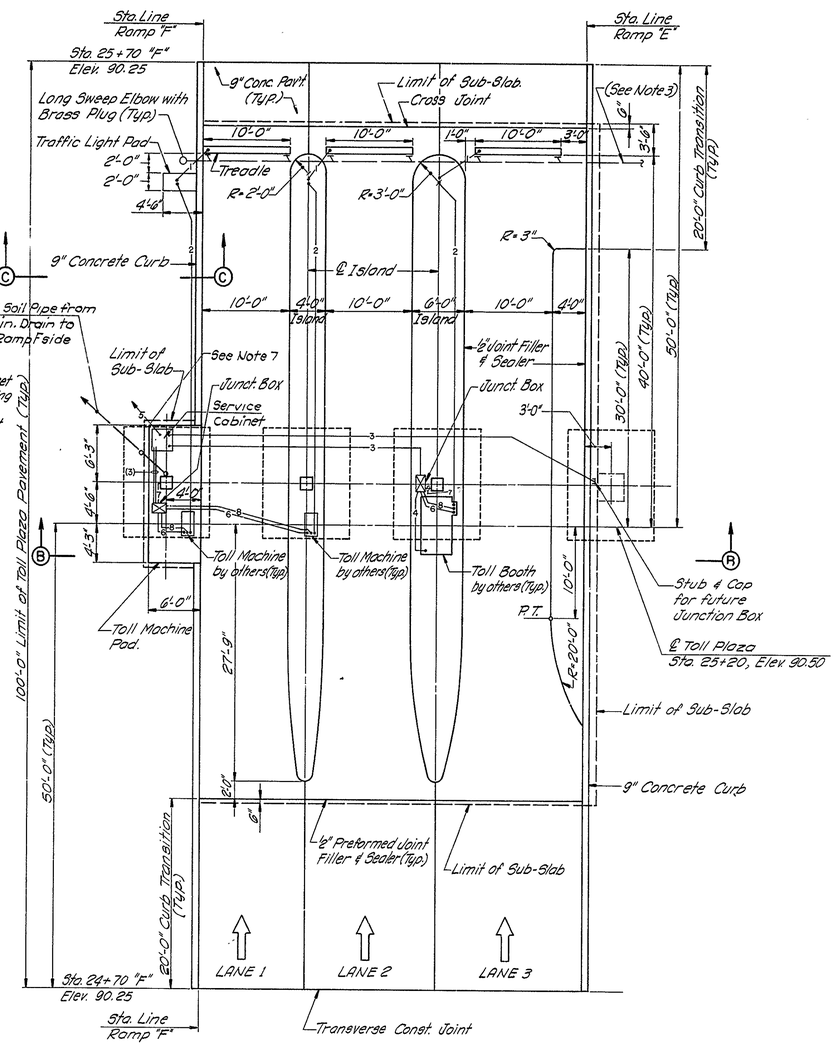

PLAN

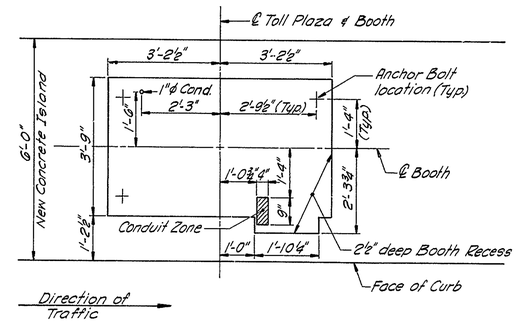

TOLL BOOTH RECESS
RAMP "F"
½" = 1'-0"

LEGEND

Remove 8" Pav't.

Remove 10" Subslab

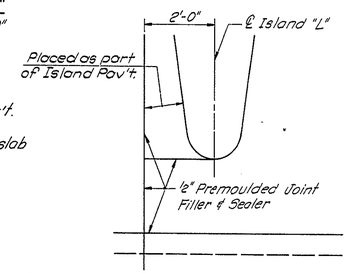

DETAIL "A"
(Similar for back of Island)
½" = 1'-0"

NOTES:

1.- Heavy lines indicate proposed work, fine lines indicate existing or work by others.
2.- For Sections noted but not shown on this Sheet see Sheet 55
3.- Treadle drain shall be run to daylight at a slope of ⅛"/ft. Direction of drain may be reversed at the Contractor's option.
4.- Conduit shall be terminated in Concrete Junction Box, as part of Toll Plaza electrical work.
5.- For the Toll Plaza Canopy Details see Sheets 57 and 58
6.- At the existing Ramp L Toll Plaza sheet piling shall be placed adjacent to the existing subslab so as to maintain traffic on the existing plaza and retain subgrade and embankment. Piling shall be cutoff in place as directed. Piling and placement shall be approved by the Engineer, and the cost included in the price bid for the "Ramp L Toll Plaza Widening."
7.- Wiring for new incoming power will be required at the Ramp L & F service cabinets. Wiring from the service cabinet for the toll booths and the tolling machines will be terminated at the Pad or Island junction boxes as shown on the Plans. All ends of terminated wires will be capped. For additional information and details, see sheets 46, 59 and 60.
8.- For existing plaza information, see Reference Drawing.

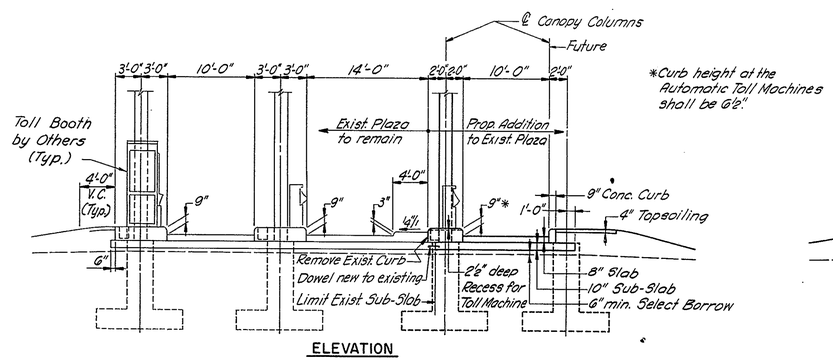

*Curb height at the Automatic Toll Machines shall be 6'-2".

ELEVATION
RAMP "L"
⅛" = 1'-0"

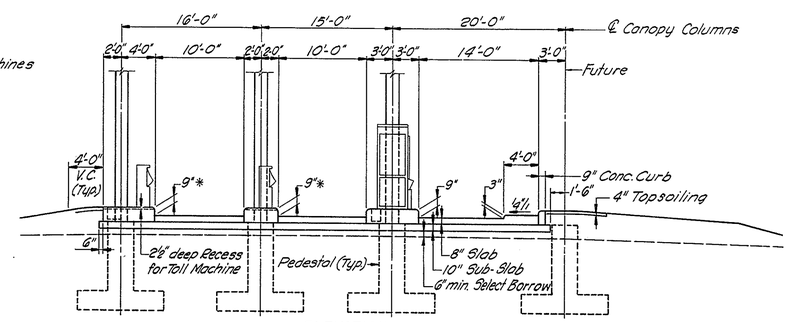

ELEVATION
RAMP "F"
⅛" = 1'-0"

DELAWARE TURNPIKE	CONT. NO.	TITLE	SHEET NO.	TOTAL SHEETS
	7060	RAMP TOLL PLAZA CONCRETE DETAILS	55	115

For dimensions of the existing Ramp Plazas see Reference drawing Sheet 20 of 7004

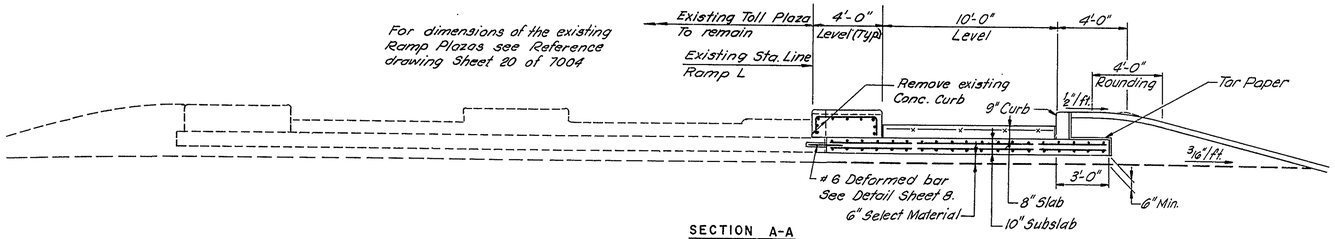

SECTION A-A
1/4" = 1'-0"

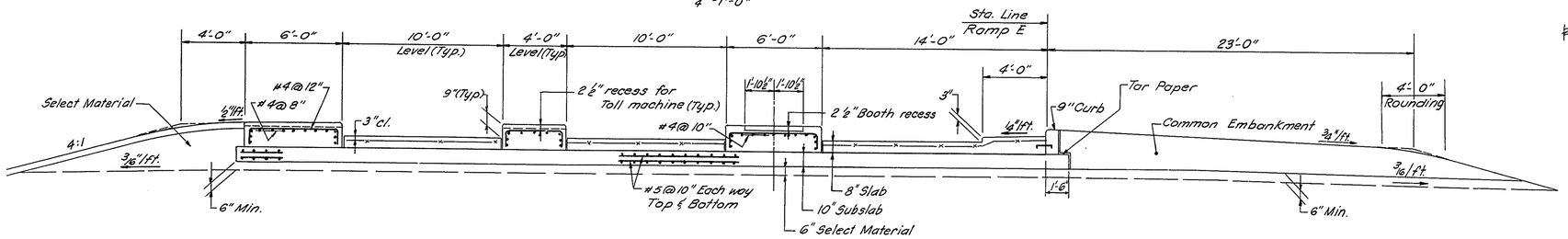

SECTION B-B
1/4" = 1'-0"

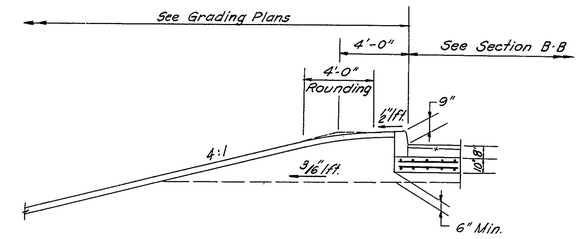

SECTION C-C
1/4" = 1'-0"

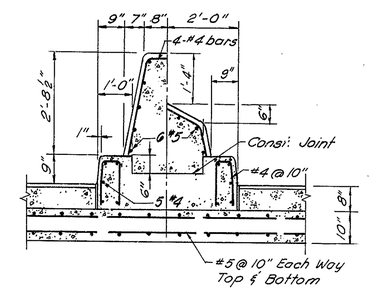

SECTION D-D
1/2" = 1'-0"

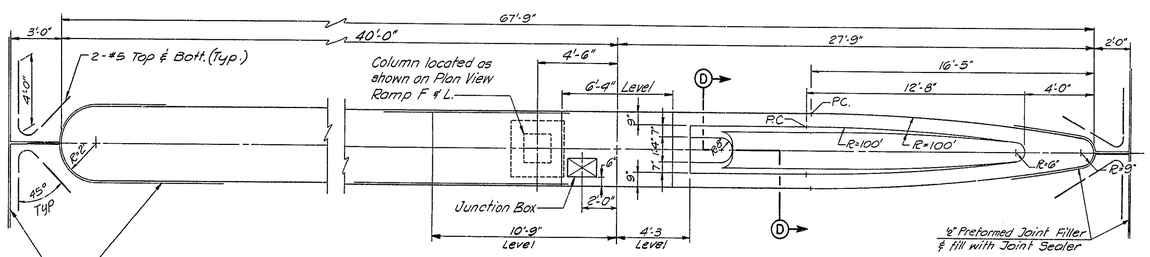

PLAN - 4' ISLAND

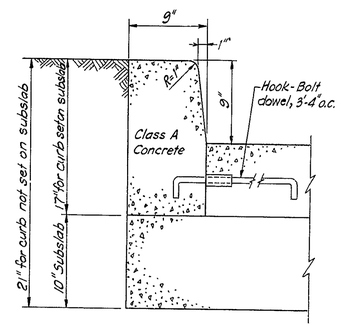

CURB DETAIL
1½" = 1'-0"

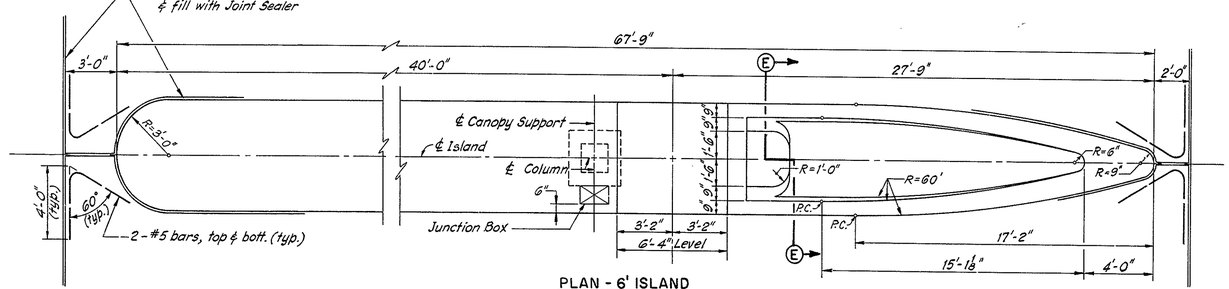

PLAN - 6' ISLAND

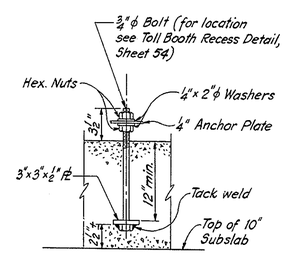

TOLL BOOTH
ANCHOR BOLT DETAIL
1½" = 1'-0"

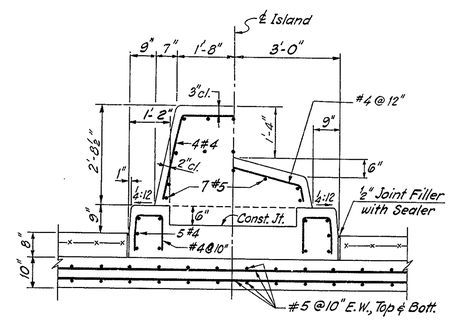

SECTION E-E
1/2" = 1'-0"

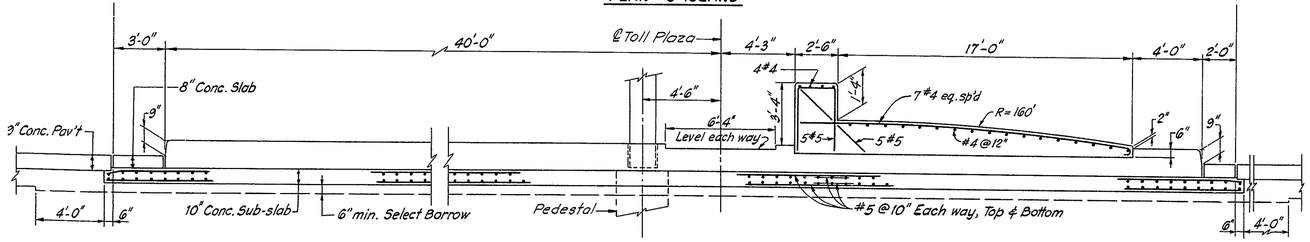

LONGITUDINAL SECTION

ISLAND LAYOUTS
1/4" = 1'-0"

DELAWARE TURNPIKE	CONT. NO.	TITLE	SHEET NO.	TOTAL SHEETS
	7060	RAMP TOLL PLAZA CONCRETE DETAILS	56	115

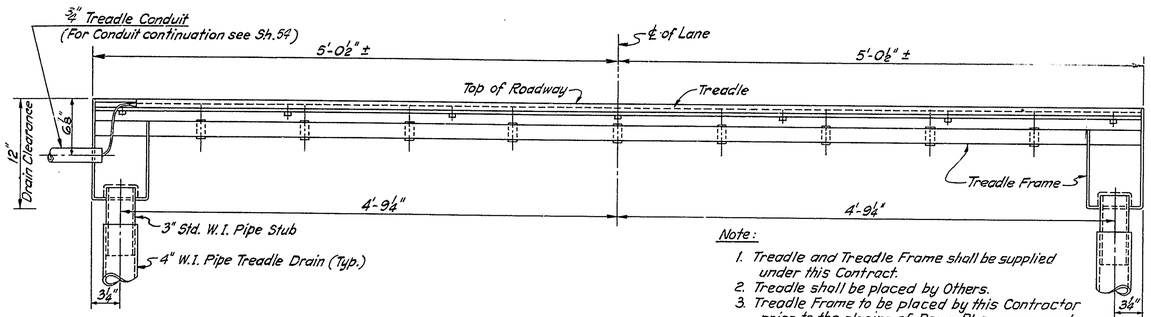

Note:
1. Treadle and Treadle Frame shall be supplied under this Contract.
2. Treadle shall be placed by Others.
3. Treadle Frame to be placed by this Contractor prior to the placing of Ramp Plaza pavement.

TREADLE DRAIN DETAIL
1 1/2" = 1'-0"

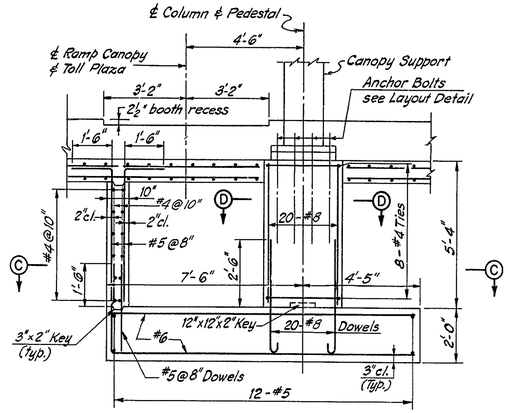

SECTION A-A
3/8" = 1'-0"

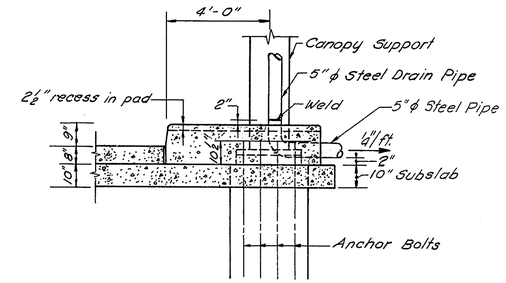

SECTION B-B
3/8" = 1'-0"

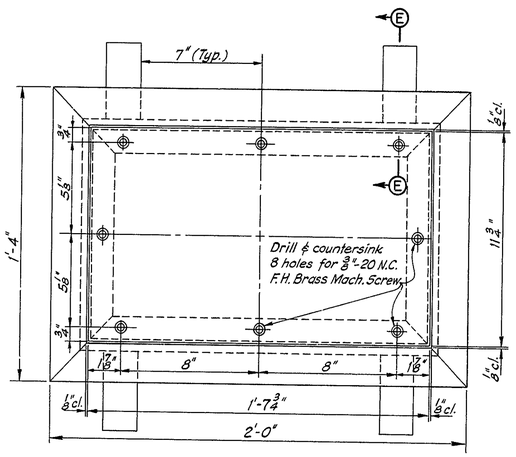

JUNCTION BOX PLAN
3" = 1'-0"

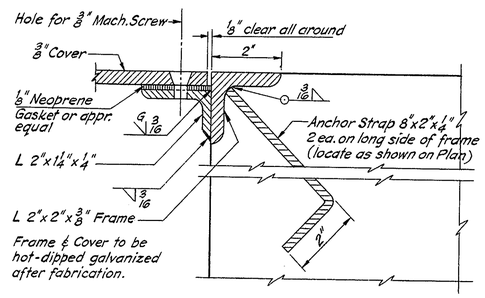

SECTION E-E
Half size

Note
Footings and pedestals under Islands will be the same except where noted otherwise.

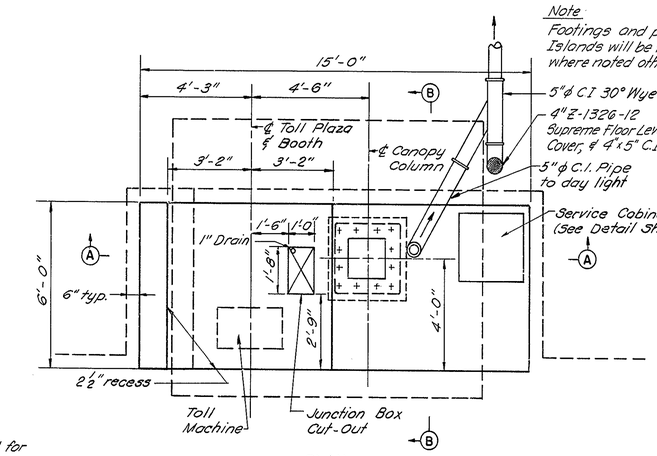

PLAN
NEW CONCRETE PAD
3/8" = 1'-0"

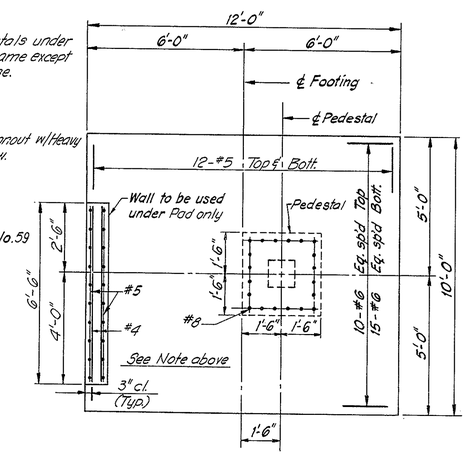

SECTION C-C
3/8" = 1'-0"

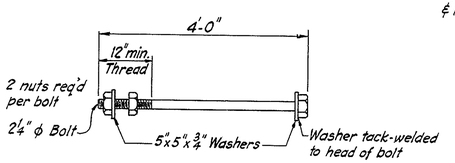

ANCHOR BOLT DETAIL
3/4" = 1'-0"

Note:
Anchor bolts placed for future canopy columns shall be greased and wrapped in burlap.

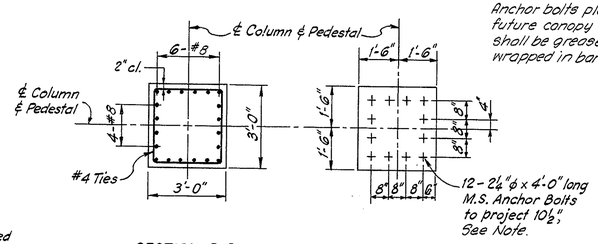

SECTION D-D **ANCHOR BOLT LAYOUT**
CANOPY PEDESTAL
3/8" = 1'-0"

DELAWARE TURNPIKE	CONT. NO.	TITLE	SHEET NO.	TOTAL SHEETS
	7060	RAMP TOLL PLAZA CANOPY DETAILS	57	115

Revision #1: Change to Conduit Location 7-14-70

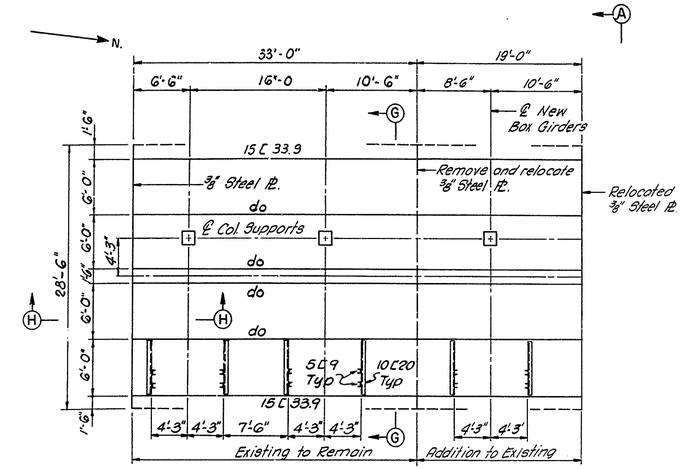

ROOF FRAMING PLAN
RAMP "L"
1/8" = 1'-0"

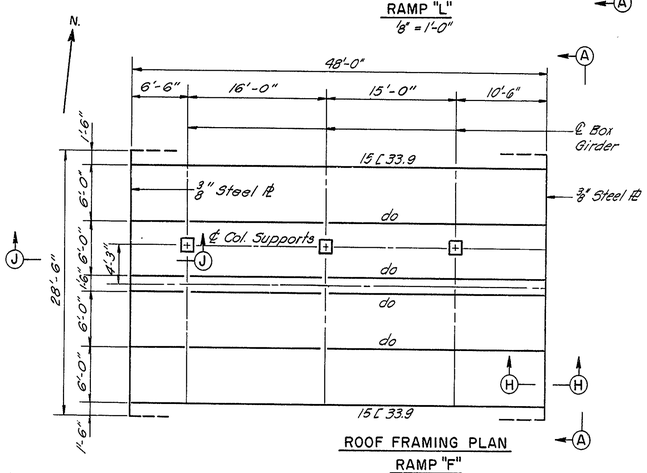

ROOF FRAMING PLAN
RAMP "F"
1/8" = 1'-0"

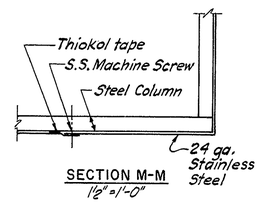

SECTION M-M
1/2" = 1'-0"

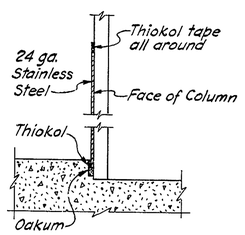

SECTION N-N
1/2" = 1'-0"

RAMP TOLL PLAZA
BASE DETAIL
1/2" = 1'-0"

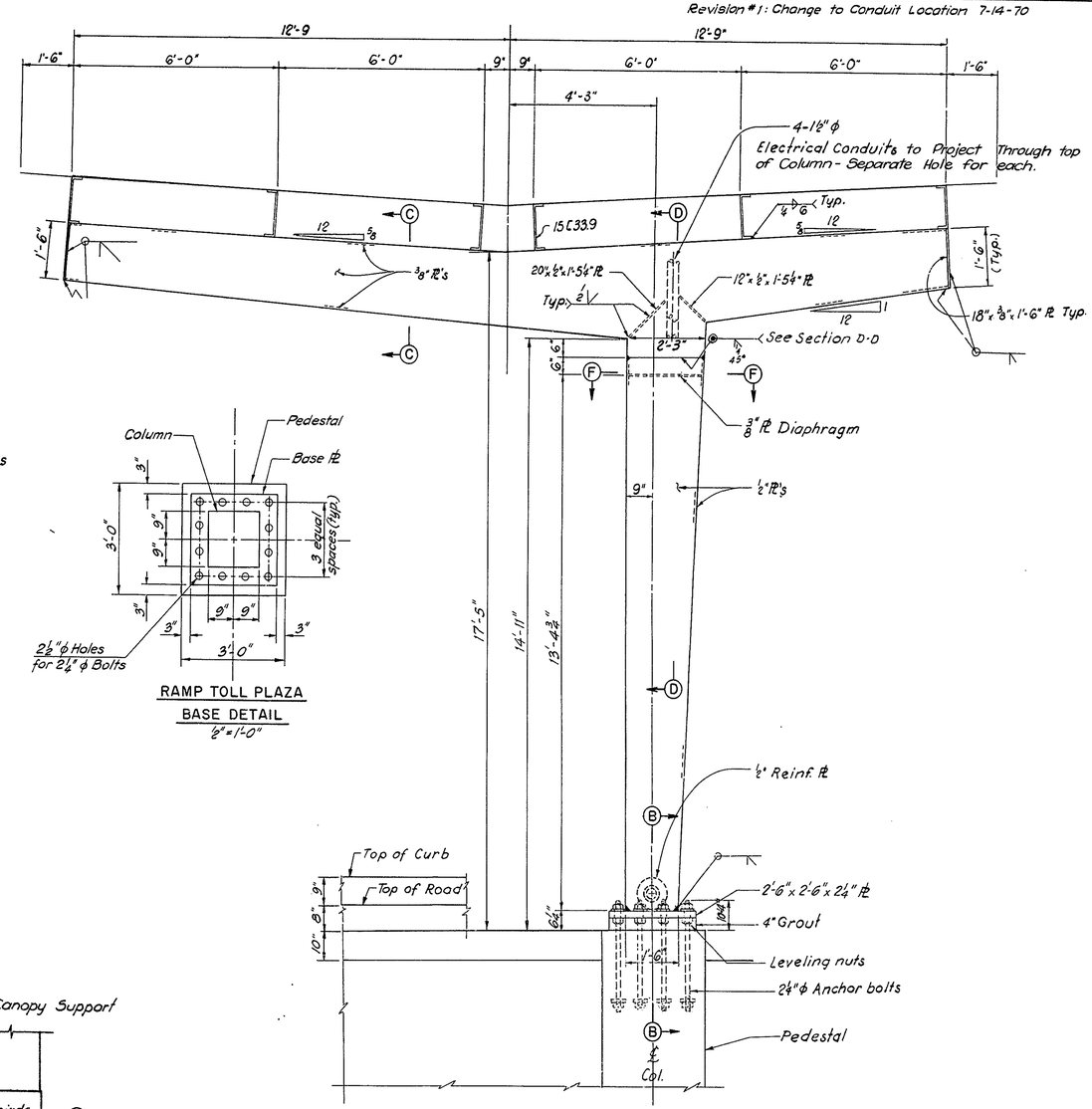

VIEW A-A
1/2" = 1'-0"

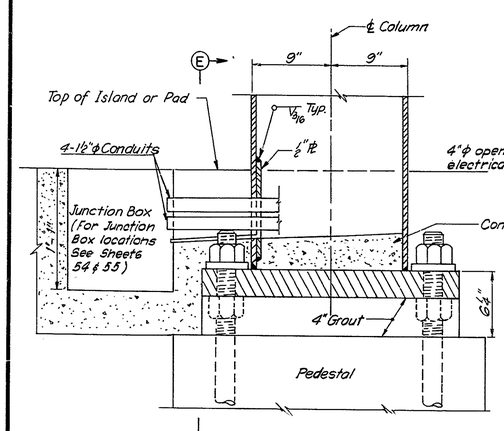

SECTION B-B
1/2" = 1'-0"

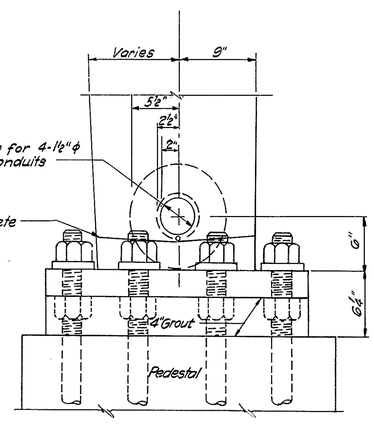

SECTION E-E
1/2" = 1'-0"

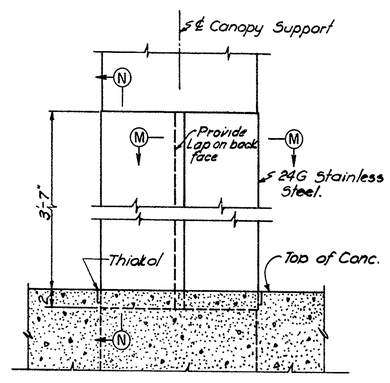

COLUMN COVER
(Back Face of Canopy Support all Columns)
1/2" = 1'-0"

NOTES:

1- At Ramp "L" the Contractor is responsible for field checking the Existing Plaza prior to fabricating the Proposed Canopy extension.
2- At Ramp "F" the Contractor shall utilize the Existing Structural Items removed from the Existing Ramp "K" Toll Plaza. See Specifications
3- A separate hole in the top of the Girder will be provided for each Electrical Conduit
4- For Section noted but not shown on this sheet see Sheet 58.

DELAWARE TURNPIKE	CONT. NO.	TITLE	SHEET NO.	TOTAL SHEETS
	7060	RAMP TOLL PLAZAS CANOPY DETAILS	58	118

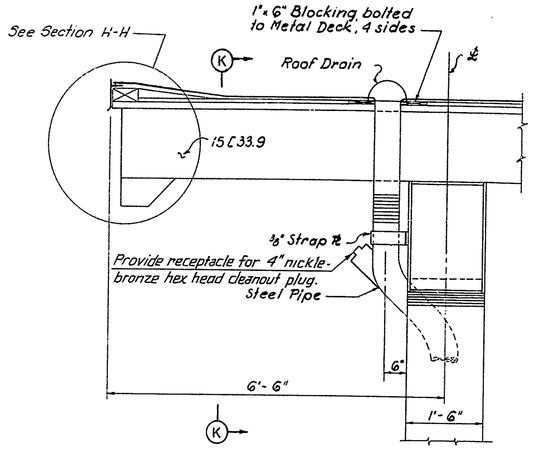

SECTION J-J
3/4" = 1'-0"

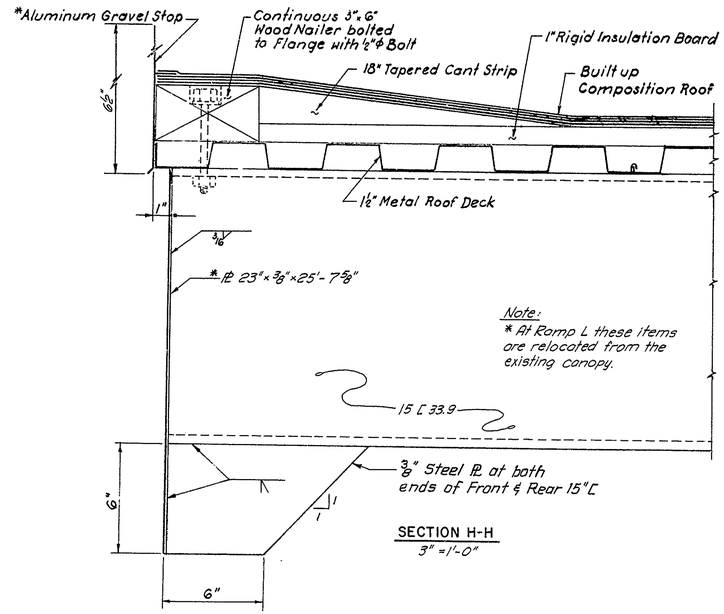

SECTION H-H
3" = 1'-0"

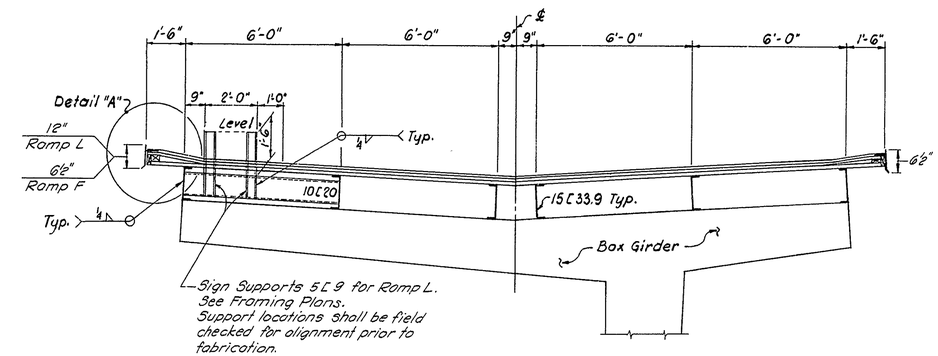

SECTION G-G
3/8" = 1'-0"

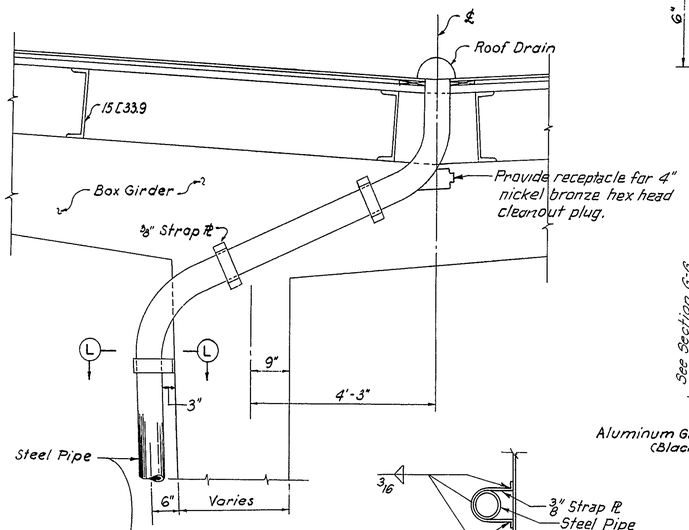

SECTION K-K
3/4" = 1'-0"

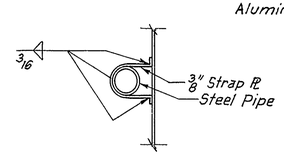

SECTION L-L
3/4" = 1'-0"

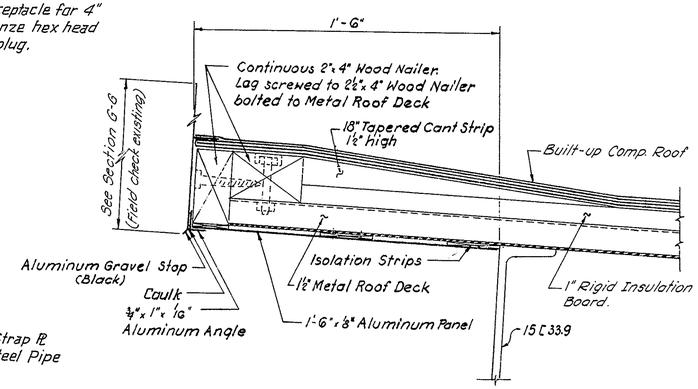

DETAIL A
3" = 1'-0"

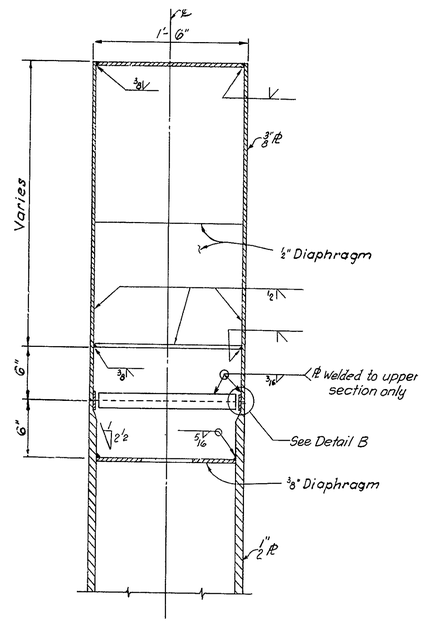

SECTION D-D
1 1/2" = 1'-0"

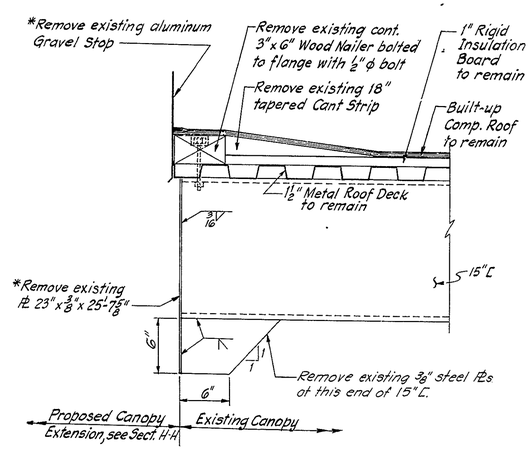

ALTERATIONS TO EXISTING CANOPY
RAMP L
1 1/2" = 1'-0"

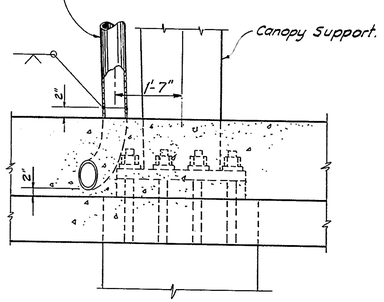

DRAINAGE CONNECTION DETAIL AT RAMP F
3/4" = 1'-0"

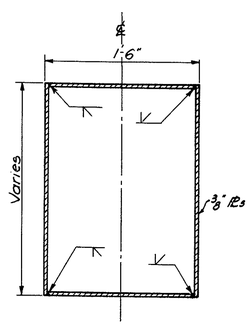

SECTION C-C
1 1/2" = 1'-0"

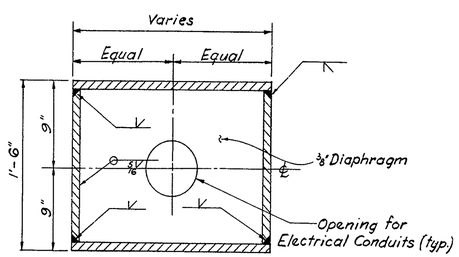

SECTION F-F
1 1/2" = 1'-0"

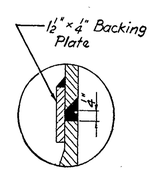

DETAIL B
No Scale

DELAWARE TURNPIKE	CONT NO	TITLE	SHEET NO.	TOTAL SHEETS
	7060	RAMP TOLL PLAZAS CABINET DETAILS	59	115

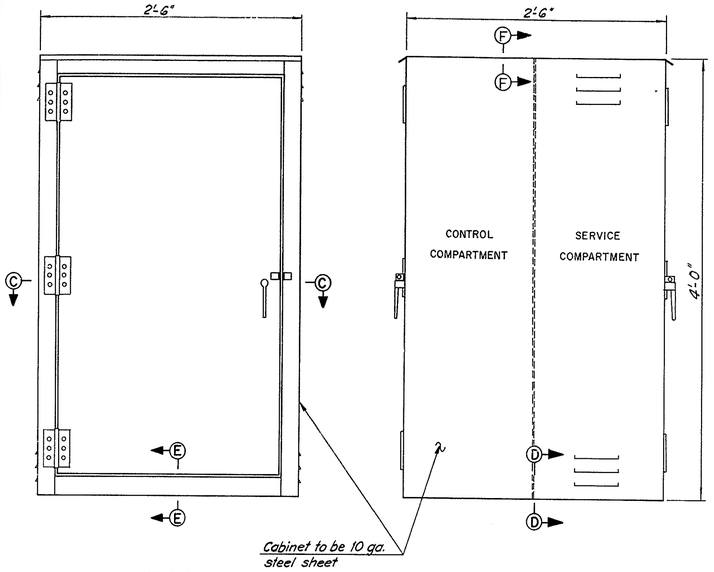

VIEW A-A

VIEW B-B

NEW SERVICE CABINET

1½" = 1'-0"

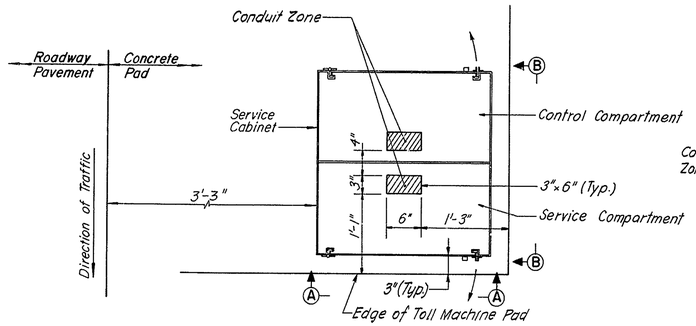

NEW SERVICE CABINET - PLAN LAYOUT

1" = 1'-0"

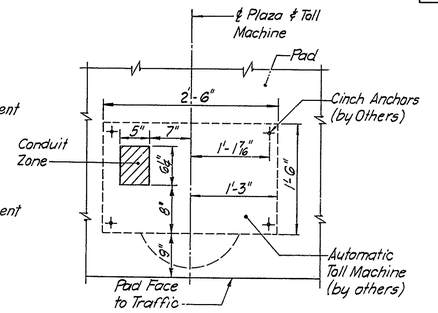

AUTOMATIC TOLL MACHINE CONDUIT LAYOUT

1" = 1'-0"

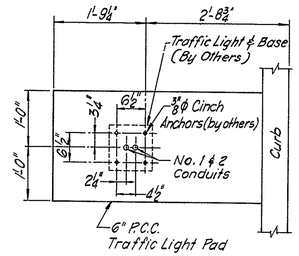

TRAFFIC LIGHT CONDUIT LAYOUT

¾" = 1'-0"

CONDUIT SCHEDULE

NO.	DESIGNATION	SIZE
1	Treadle	¾"
2	Traffic Light on Island	1"
3	Auto. Machine & Booth Power	1"
4	Booth Accessories	1"
5	Incoming Power	2"
6	Canopy Traffic Signal	¾"
7	Canopy Lane Lights & Sign	¾"
8	Auto. Machine Power	1"
9	Spare Conduit	2"

CIRCUIT SCHEDULE

NO.	DESIGNATION
C	To Collection Equipment
B	To Booth Electrical
L	To Lane Lights
P	To Photo-Cell Control
S	Spare
H	To Booth Heater

NOTES: Circuit Subscript No's indicate Lane designations. SO-Indicates Spaces only.

NOTES

1. All wiring within the new or modified cabinets, unless otherwise noted, shall be No. 12 A.W.G.. All wires shall be color-coded (see Specifications).
2. Modifications to the existing service cabinet (in place) complete with all new equipment and wiring therein, shall be as shown on the Wiring Diagram. The existing meter shall be removed by Utility Company.
3. Remove and salvage the existing panelboard, transformer, safety switch, and 3 pole contactor in the Modified Service Cabinet. Install new equipment, as shown and specified, as required (See Specifications).
4. All conduits shall be bonded and connected to the ground rod with a #6 bare tinned copper ground wire. The ground rod (not shown) shall be installed within the conduit zone of the service compartment.
5. Provide 2" close nipple with insulating bushings at both ends.

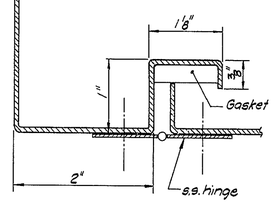

NOTES:
Padlock lugs & hinges bolted w/ss. Flat head screws. Screws shall be of the nonremovable type.

DETAIL C-C

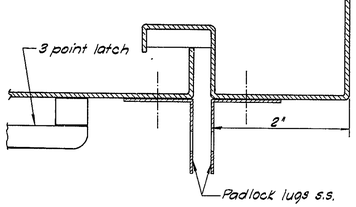

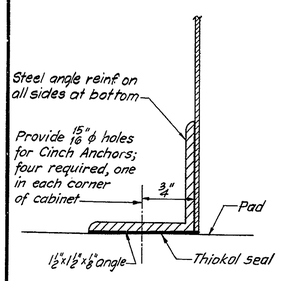

DETAIL D-D

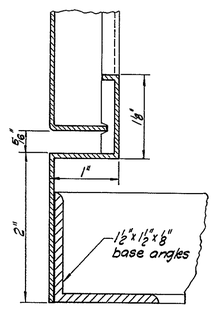

DETAIL E-E

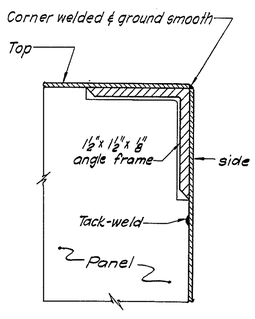

DETAIL F-F

CABINET DETAILS

No Scale

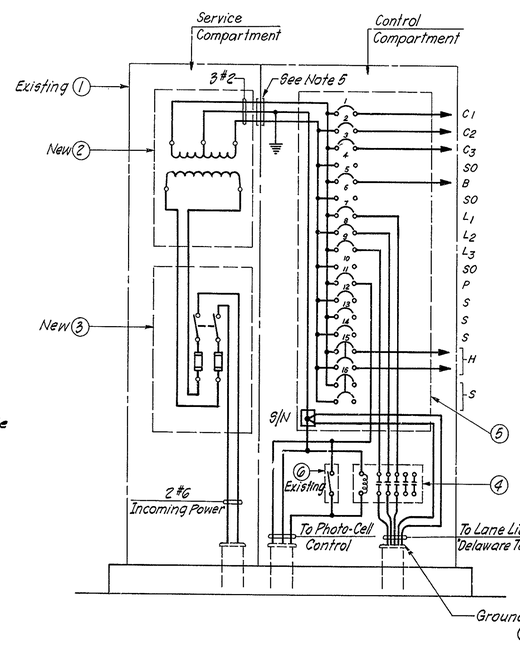

WIRING DIAGRAM

MODIFIED SERVICE CABINET AT RAMP PLAZA L

No Scale

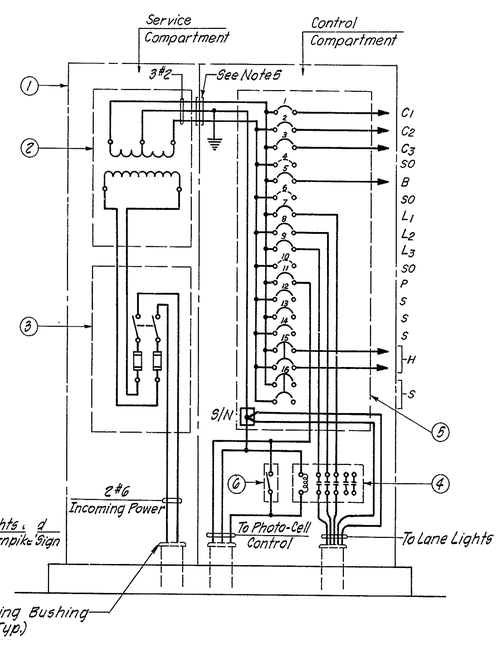

WIRING DIAGRAM

NEW SERVICE CABINET AT RAMP PLAZA F

No Scale

LIST OF EQUIPMENT

① Service Cabinet: Housing, trims, door and equipment mounting plate all shall be #10 gauge sheet steel. Cabinet shall be of weatherproof construction (See Specifications).

② Dry-Type Transformer: Single phase, 15 KVA, 480-120/240V. four (4) 2½% taps above and below normal, equal to General Electric Co's. Type QM, Cat. # 9T21B9109.

③ Safety Switch: 60A, 480V. 2 Pole (with two 45A. fuses) within NEMA I enclosure equal to General Electric Co's. Cat. # TC7226G2.

④ Contactor: 30A, 600V, 5 Pole, with 120V. control within NEMA I enclosure, equal to A9C0 Co's. Cat. # 3416C, except with 2 auxiliary contacts.

⑤ Distribution Panelboard: 1φ, 3 wire, 120/240V., Solid Neutral, 100A. main with lugs, complete with eleven (11) single pole (15A trip), two (2) double pole (30A. trip) bolt in type branch circuit breakers, and three (3) spaces only for future circuit breakers.
The panelboard shall be either column type (as shown) or standard type, equal to General Electric Co's. Cat. # NLAB K318L or Cat. # NLAB318L, respectively.

⑥ By Pass Switch: Single pole toggle switch equal to Hubbell Cat. # 3031 in conduit box with switch cover, equal to Crouse-Hinds Cat. # FS1019 & FS1020G.

DELAWARE TURNPIKE	CONT. NO.	TITLE	SHEET NO.	TOTAL SHEETS
	7060	RAMP PLAZA CANOPY LIGHTING DETAILS	60	115

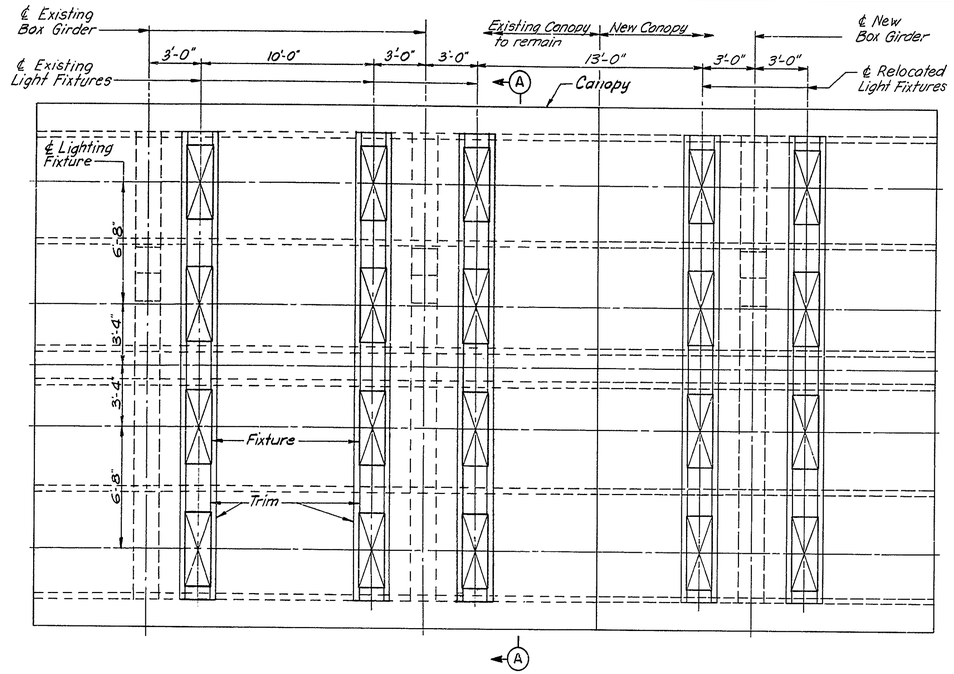

RAMP L
CANOPY LANE LIGHT LAYOUT
1/4" = 1'-0"

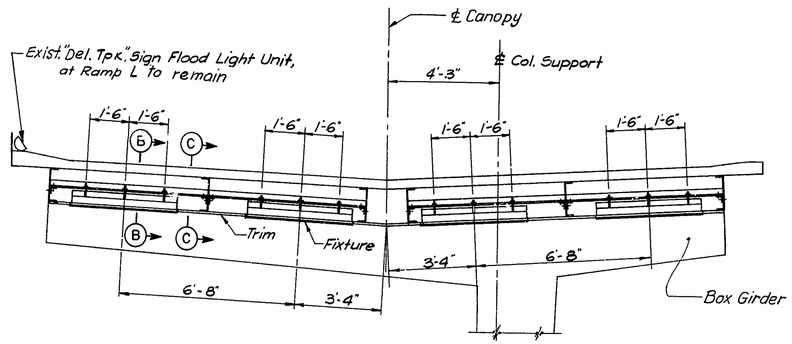

SECTION A-A
3/8" = 1'-0"

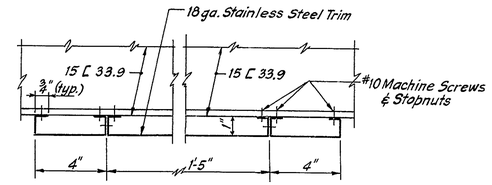

SECTION C-C
3" = 1'-0"

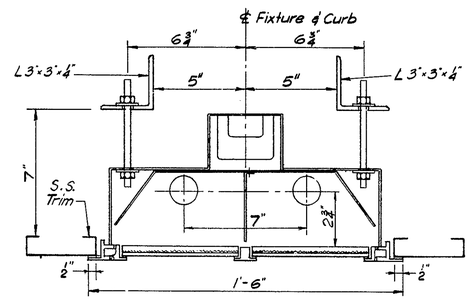

SECTION B-B
3" = 1'-0"

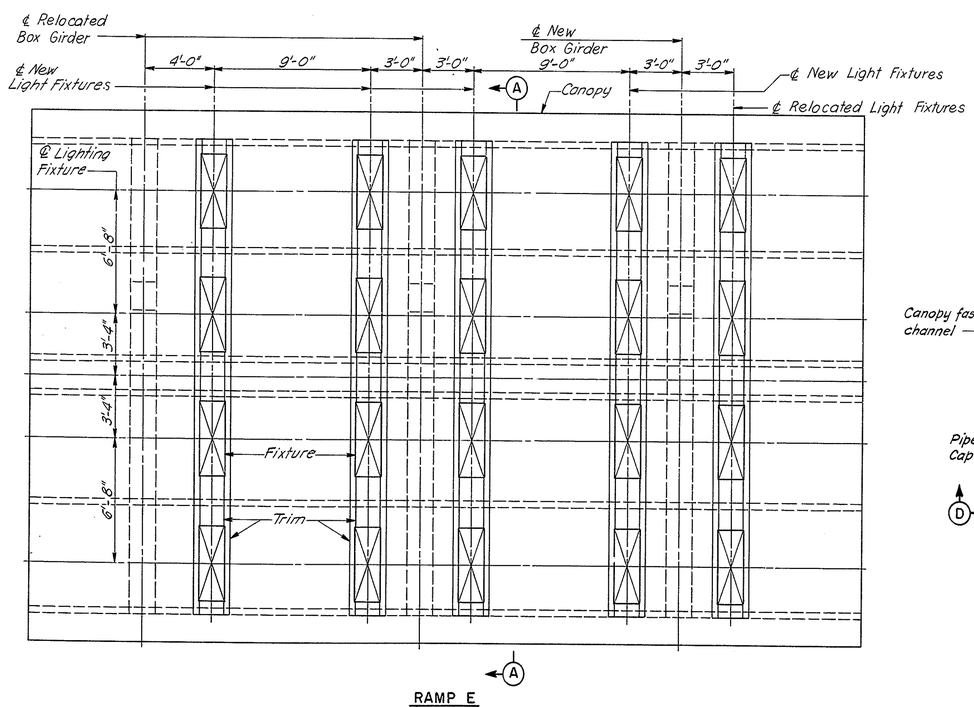

RAMP E
CANOPY LANE LIGHT LAYOUT
1/4" = 1'-0"

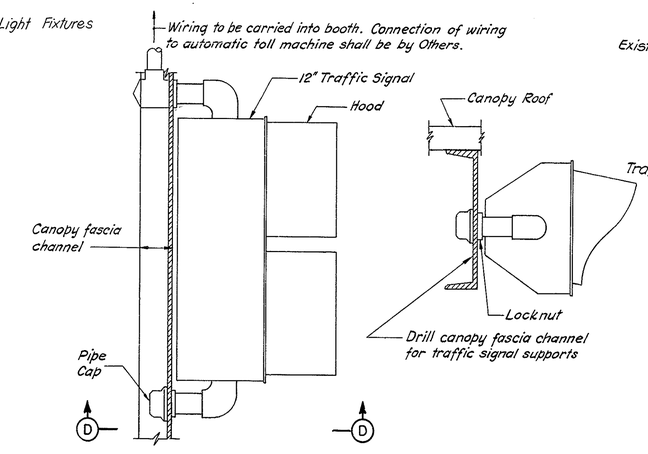

PLAN VIEW

SECTION D-D

CANOPY TRAFFIC SIGNAL
No scale

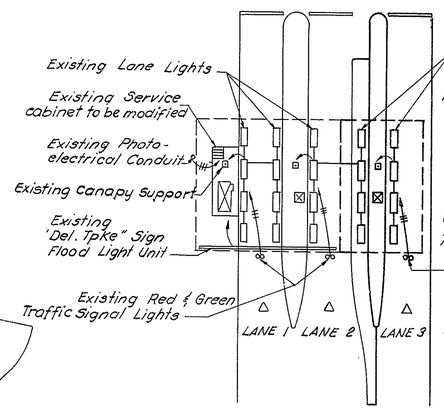

PLAN

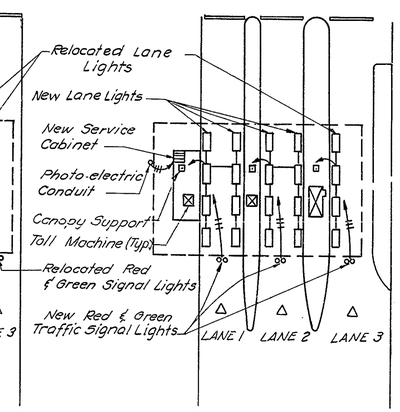

PLAN

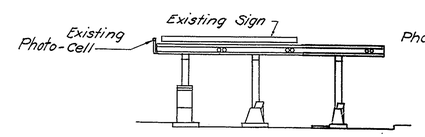

ELEVATION

RAMP L
1/16" = 1'-0"

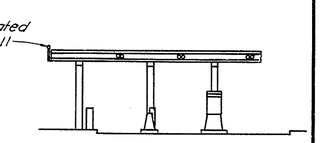

ELEVATION

RAMP F
1/16" = 1'-0"

DELAWARE TURNPIKE	CONT. NO.	TITLE	SHEET NO.	TOTAL SHEETS
	7060	FUEL DISPENSER DETAILS	61	115

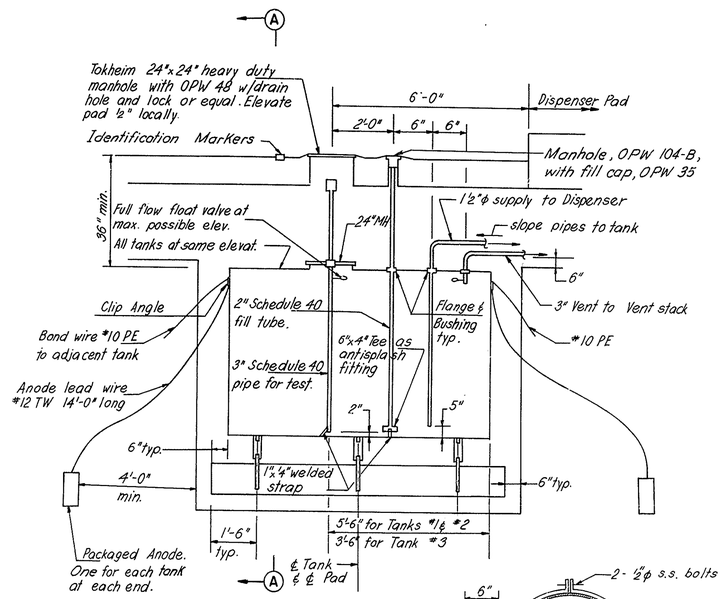

TANK DETAIL
No Scale

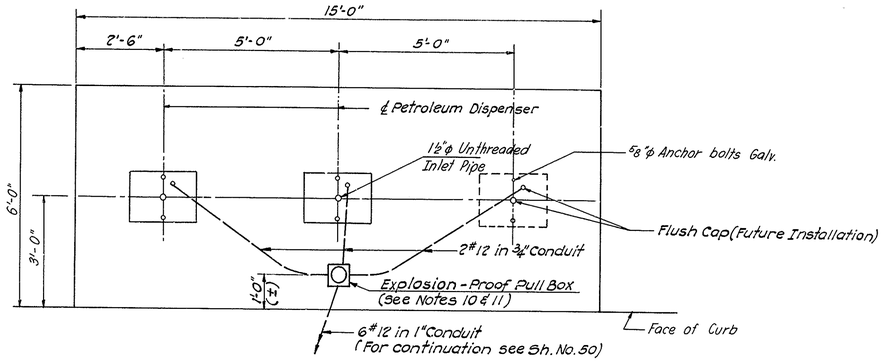

DISPENSER PAD DETAIL
½" = 1'-0"

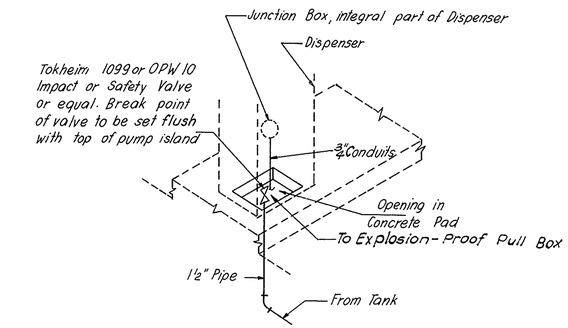

METHOD OF CONNECTING DISPENSERS
No Scale

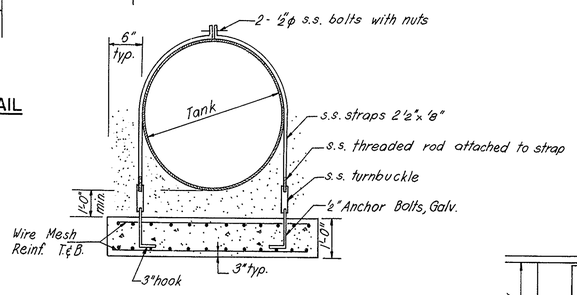

SECTION A-A
No Scale

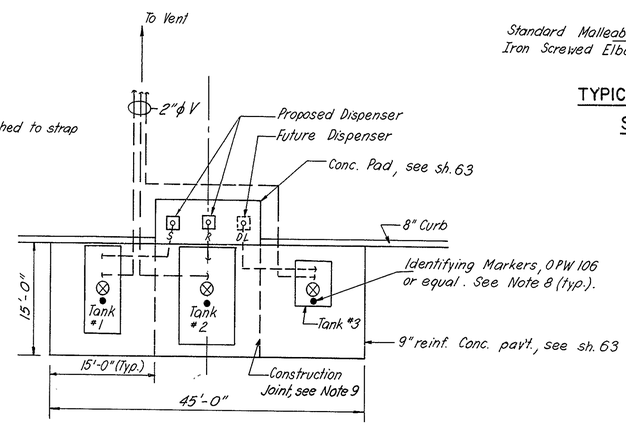

TANK FARM LAYOUT
1" = 10'-0"

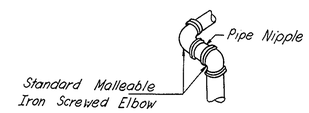

TYPICAL CLOSE COUPLE SWING JOINTS
No Scale

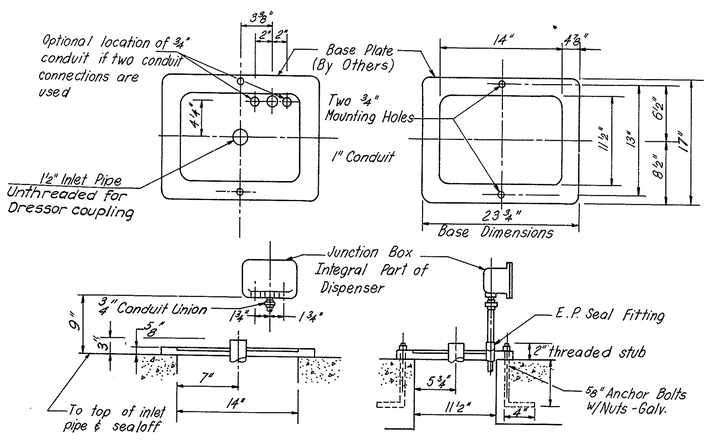

PETROLEUM DISPENSER TEMPLATE
No Scale

Note:
Template shown for Bennet Models 378B-D Dispenser. If the Director so indicates, this template may be varied to suit other Dispensers.

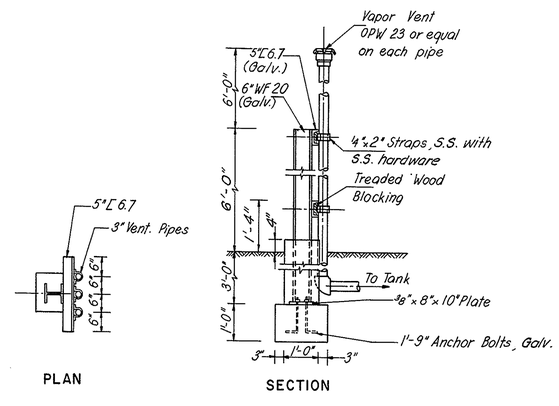

VENT & VENT STANCHION
½" = 1'-0"

NOTES:

1. Close Coupled Swing Joints as detailed, shall be placed at the following locations:
   a) On vent lines, immediately adjacent to storage tanks
   b) On vent lines, immediately adjacent to the stacks
   c) On product lines, immediately adjacent to tanks
   d) On product lines, immediately adjacent to dispensers.

   Where swing joints are to be placed under concrete pads on pressure lines the Contractor may elect to utilize a slack length of flexible hose in lieu of swing joints.

2. All product, fill, vent and siphon lines are to be placed in a pocket of either select material or Delaware #106 material. The pocket shall extend a minimum of 6 inches around the pipe.

3. Flexible hose must meet API standards for petroleum service, if used in lieu of swing joints.

4. After allowing for stabilization of conditions subsequent to anodic installation, the Contractor shall measure current flow in at least 4 widely separated anode lead wires, by means of installed anode station terminal boxes, and report current flows in milliamperes to the Engineer, by written report. Current flow shall be remeasured one and two months after first report.

5. 2" wide color code bands shall be placed on exposed vent pipes. Colors as directed.

6. After construction & testing of tanks and systems, the Contractor shall clean and sponge dry the interior of all product tanks.

7. Tanks shall be backfilled in accordance with article 2.18 of the Standard Specifications.

8. Letter plates for dispenser product to be marked "S" for Tank #1, "R" for Tank #2, "DL" for Tank #3. Identification Markers to be OPW 106 or approved equal.

9. For concrete pav't. joint details, see DSHD standard sheet A-1.

10. Explosion-Proof Box shall be equal to Crouse-Hinds Cat. # EGJ422 and furnished with sealing nubs. The box shall be installed flush with top of concrete pad.

11. Terminate 2#12 wires for future dispenser with test caps in pull box.

12. See Specifications for type of wires and installation of wires to be used for the petroleum dispensers

DELAWARE TURNPIKE	CONT. NO.	TITLE	SHEET NO.	TOTAL SHEETS
	7060	SANITARY DETAILS	62	115

Revision #1: Sanitary Sewer Line relocated – 9-18-70

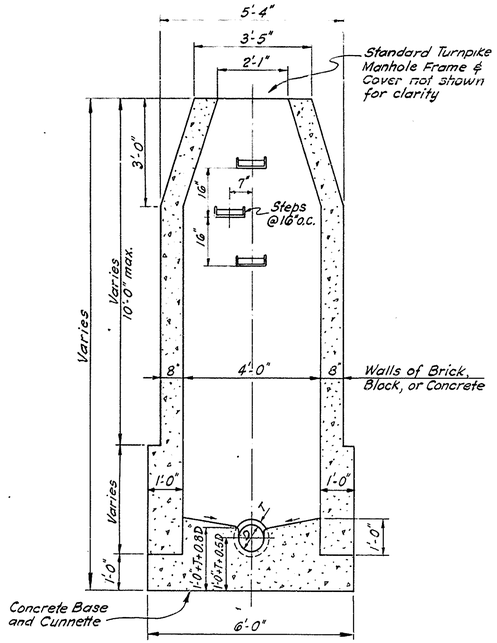

SANITARY MANHOLE

$\frac{1}{2}$" = 1'-0"

NOTE: These steps for sanitary manholes only.

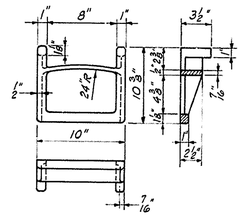

TYPICAL CAST IRON MANHOLE STEP

3" = 1'-0"

NOTES:

All manhole frames and covers shall be "NEENAH" No. R 1010, lid type C, non-rocking design, with type G streamlined lift handles. Manhole frames and covers shall be galvanized.

The term "Standard Turnpike Manhole Frame and Cover" shall be used to describe this casting.

The legend "Turnpike Sanitary Sewer" shall be embossed on each manhole cover.

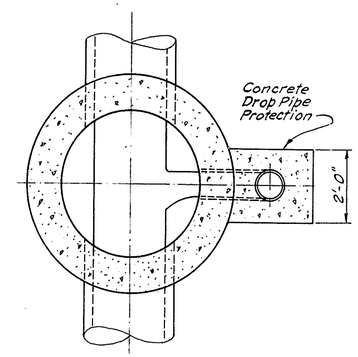

SECTION A-A

$\frac{1}{2}$" = 1'-0"

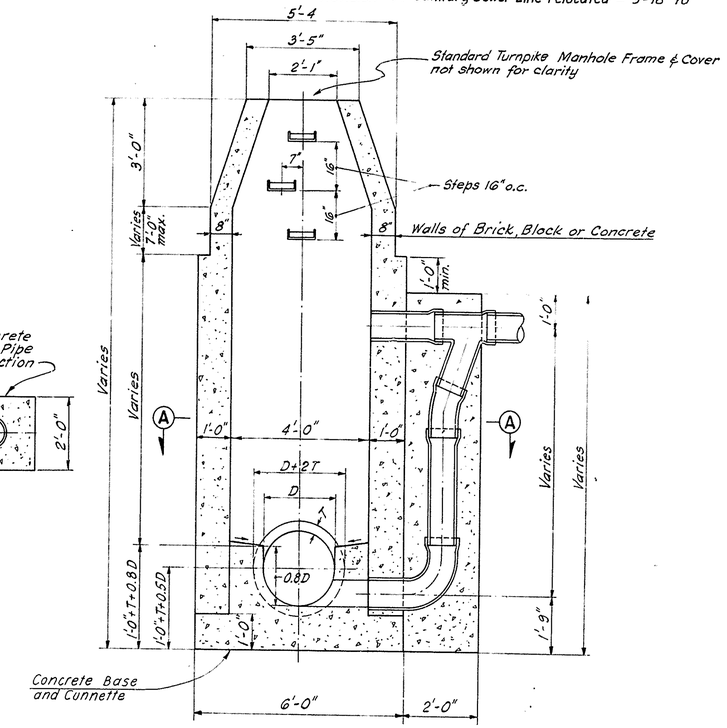

SANITARY DROP MANHOLE

$\frac{1}{2}$" = 1'-0"

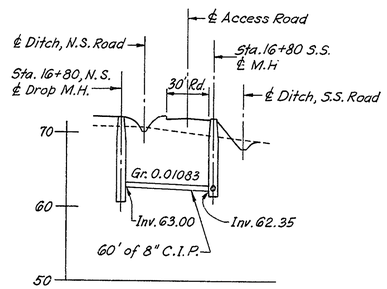

MAINTENANCE BLDG. TO ACCESS RD.

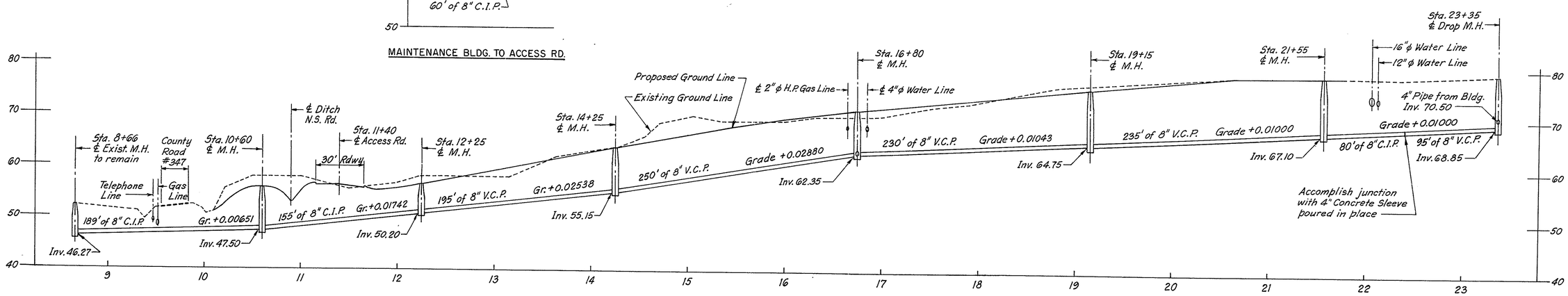

SOUTH SIDE OF ACCESS ROAD

SANITARY SEWER PROFILES

SCALE: HORIZONTAL 1" = 50'
VERTICAL 1" = 10'

DELAWARE TURNPIKE	CONT. NO.	TITLE	SHEET NO.	TOTAL SHEETS
	7060	MAINTENANCE AREA DETAILS	63	115

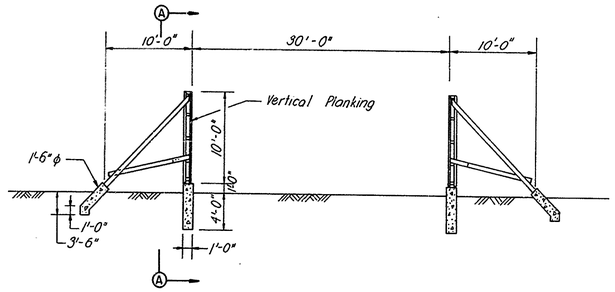

ELEVATION VIEW
1/8" = 1'-0"

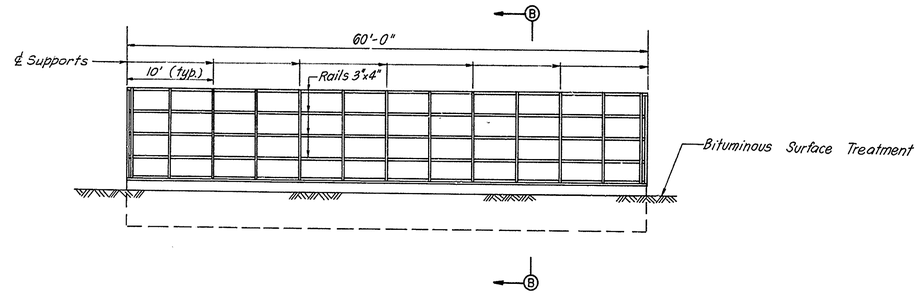

SECTION A-A
1/8" = 1'-0"

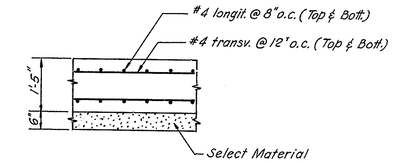

DISPENSER PAD SECTION
1/2" = 1'-0"

Notes:

1. All hardware to be galvanized.
2. All bolts 1/2" ϕ with washers adjacent to head and nut.
3. Vertical planking nailed to horizontal rails, except at wall supports where 1/2" ϕ bolt connections are used.

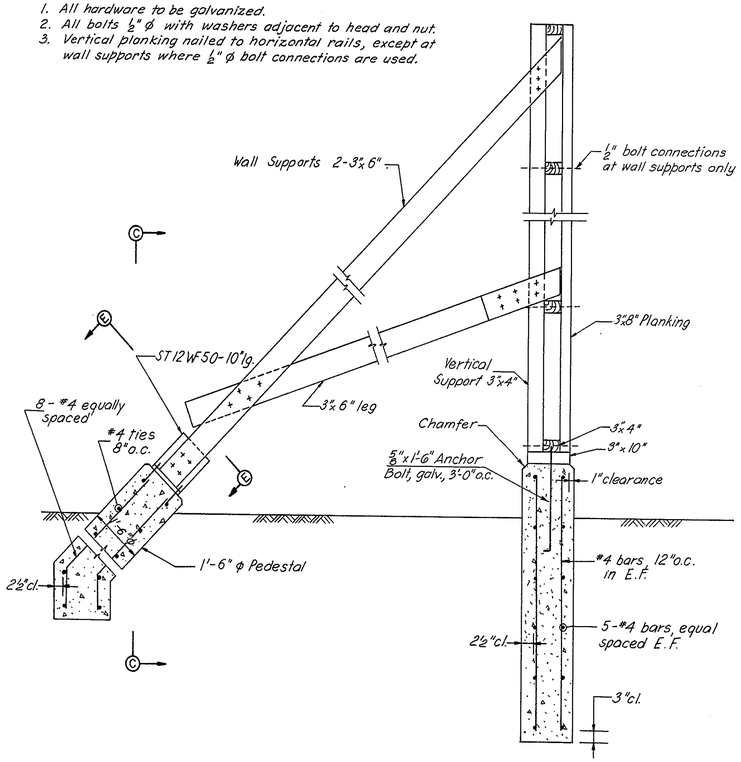

SECTION B-B

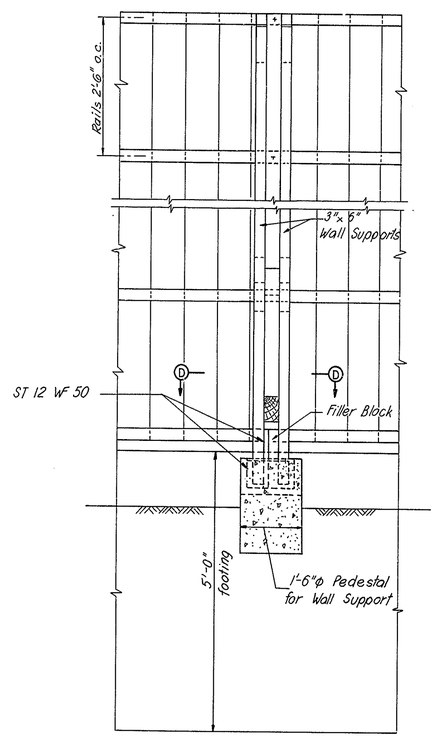

SECTION C-C

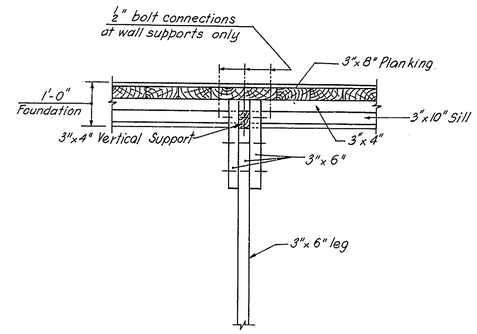

SECTION D-D
3/4" = 1'-0"

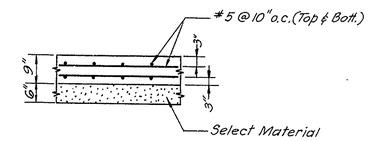

9" PAVEMENT SECTION
1/2" = 1'-0"

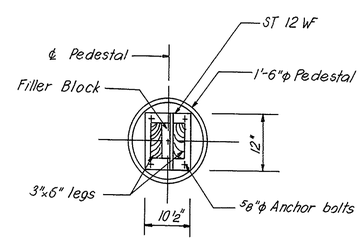

SECTION E-E

Notes:

1. For location of Salt Storage area see sheets 23, 41, 50.
2. For 9" Pav't and Dispenser Pad location and details see sheets 23, 41, 50 and 61.

SALT STORAGE
3/4" = 1'-0"

DELAWARE TURNPIKE	CONT. NO.	TITLE	SHEET NO.	TOTAL SHEETS
	7060	MAINTENANCE AND PROTECTION OF TRAFFIC	64	115

GENERAL NOTES:

These maintenance and protection of traffic and construction schedule plans are intended to provide a general guide to be followed by the Contractor during construction and detailed 1"=50' plans showing barrier curb, cone and sign locations are available for inspection at the Engineers office. It is recognized that minor features of this item will be subject to daily modifications. Any change in the general plan must be approved by the Engineer.

All lane closings must have prior approval of the Engineer.

Cone placement for approaches to barrier curb installations shall be 50' feet in length except as otherwise shown or noted.

For Details see sheets 67 & 68.

Two Flashing Lights shall be placed on the first unit of each section of Timber Barrier Curb.

Two Flashing Lights shall be placed on each Sign Support.

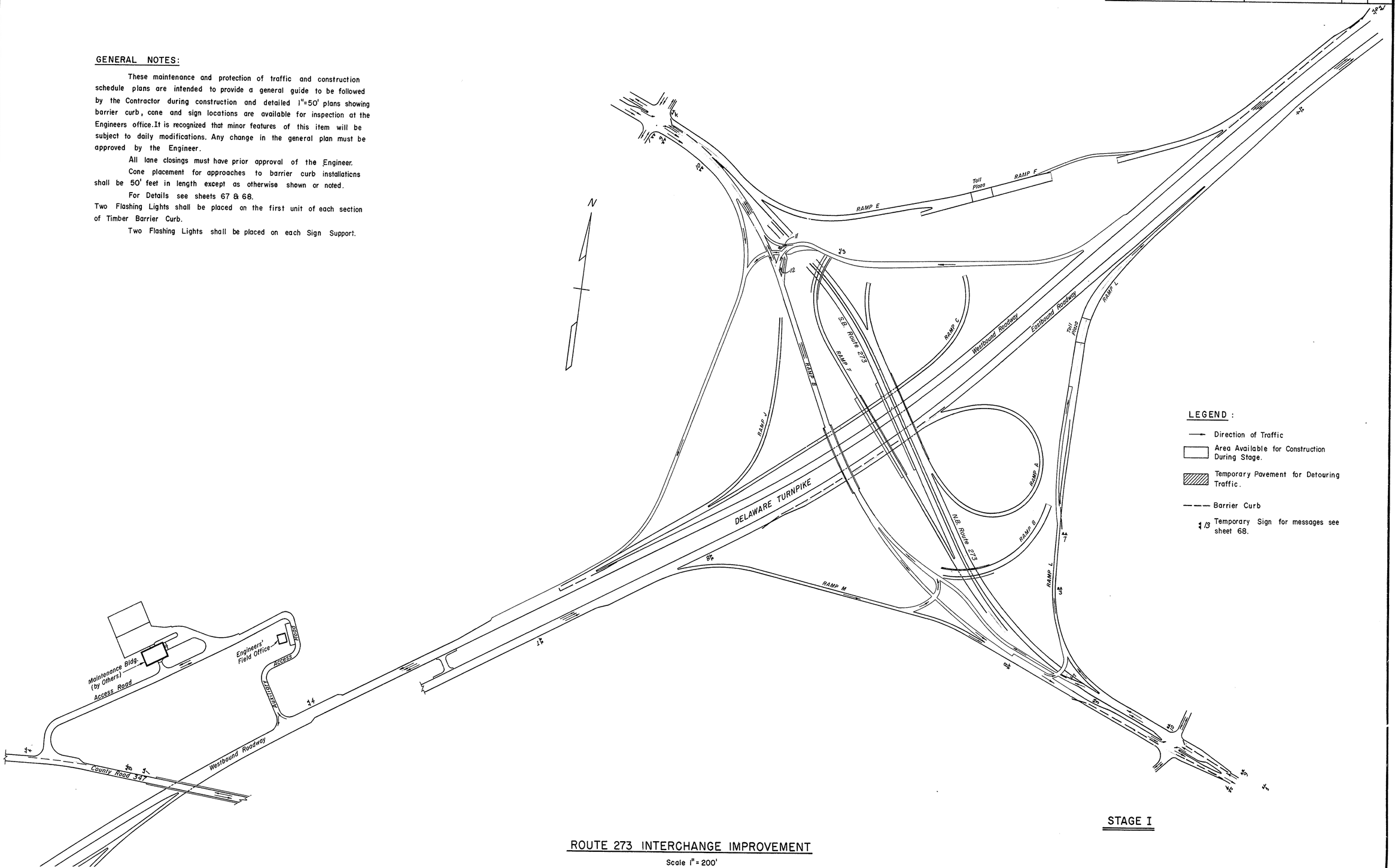

STAGE I

ROUTE 273 INTERCHANGE IMPROVEMENT

Scale 1" = 200'

DELAWARE TURNPIKE	CONT. NO.	TITLE	SHEET NO.	TOTAL SHEETS
	7060	MAINTENANCE AND PROTECTION OF TRAFFIC	65	115

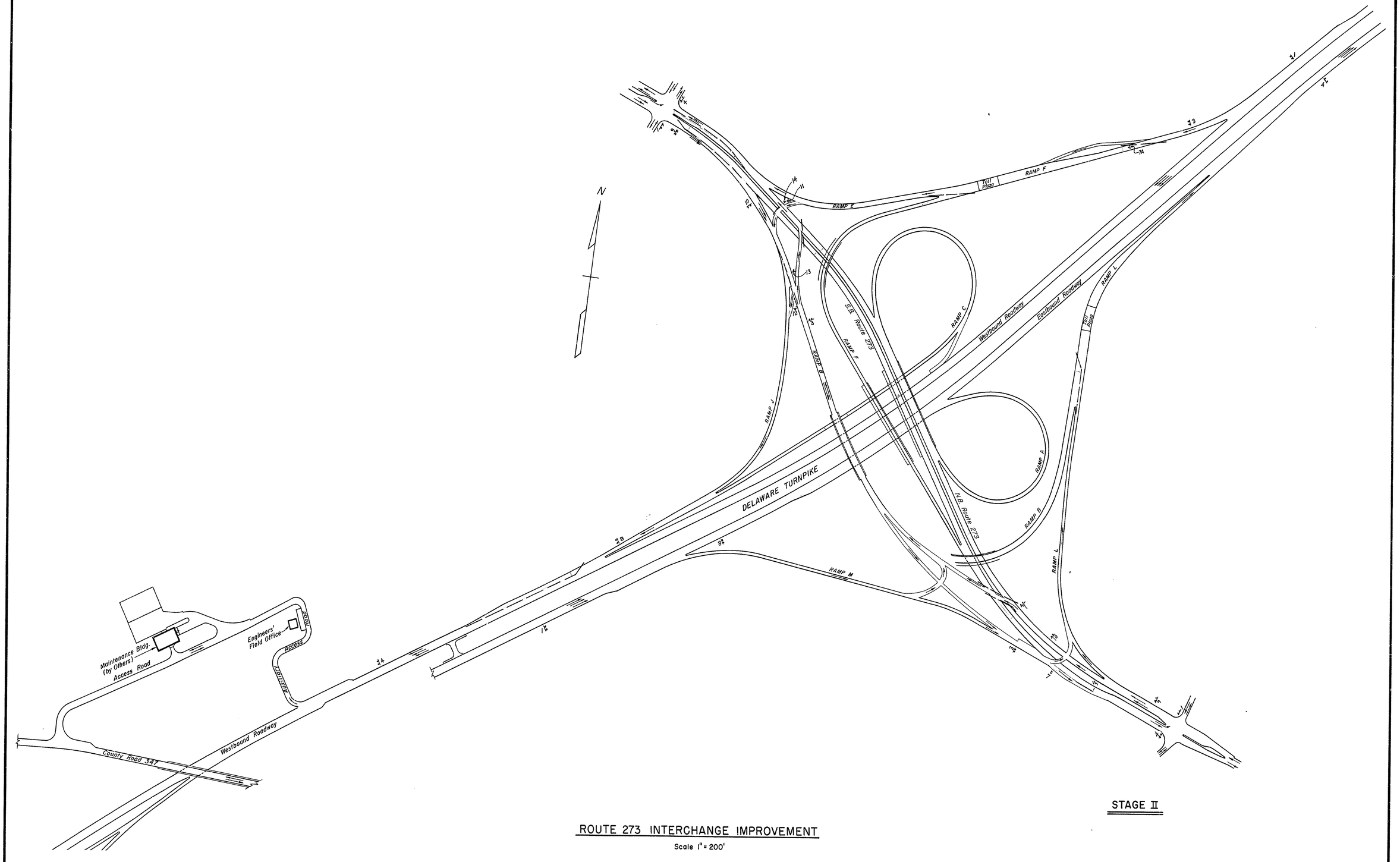

STAGE II

ROUTE 273 INTERCHANGE IMPROVEMENT

Scale 1" = 200'

DELAWARE TURNPIKE	CONT. NO.	TITLE	SHEET NO.	TOTAL SHEETS
	7060	MAINTENANCE AND PROTECTION OF TRAFFIC	66	115

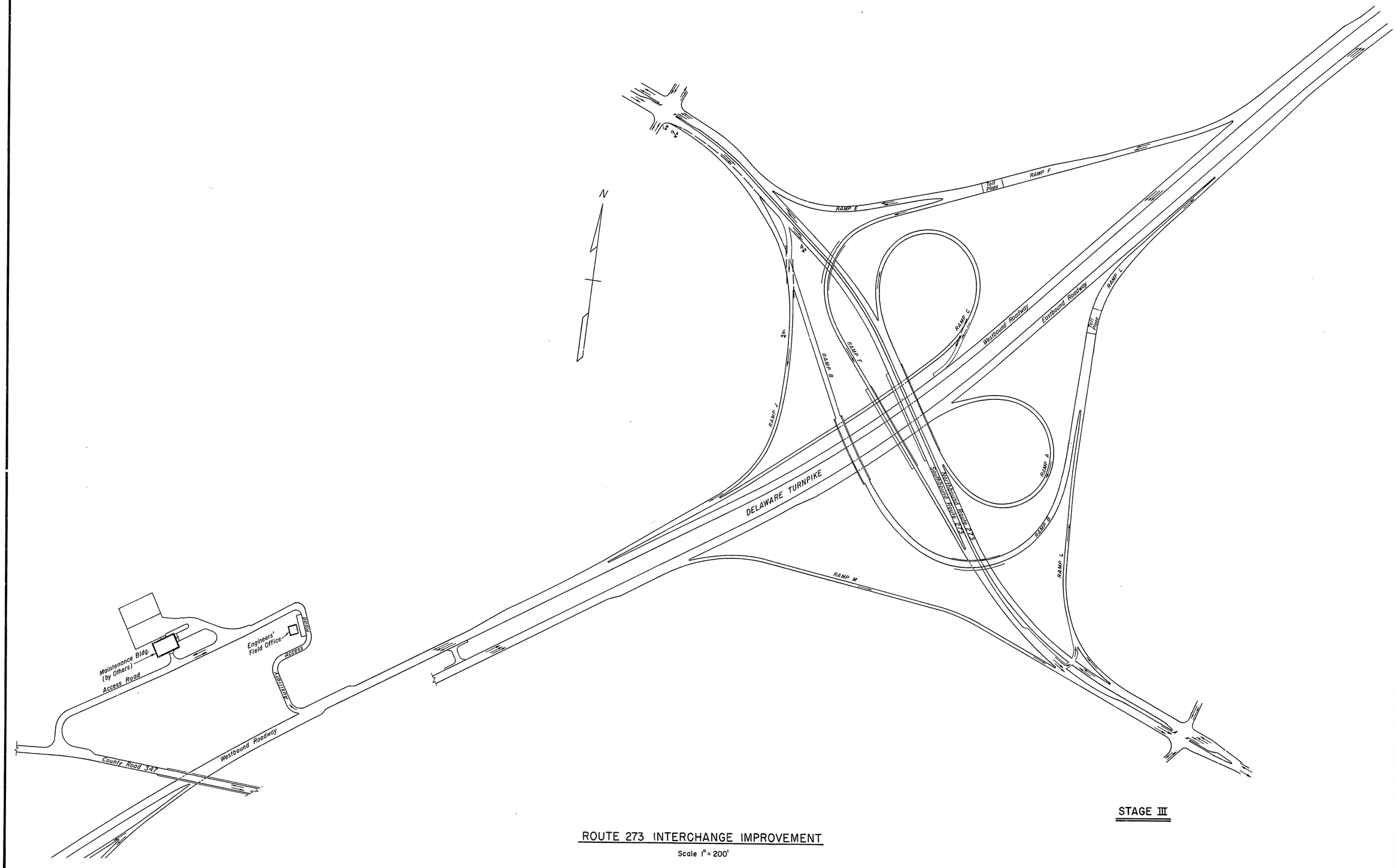

STAGE III

ROUTE 273 INTERCHANGE IMPROVEMENT

Scale 1" = 200'

DELAWARE TURNPIKE	CONT. NO.	TITLE	SHEET NO.	TOTAL SHEETS
	7060	MAINTENANCE AND PROTECTION OF TRAFFIC	67	115

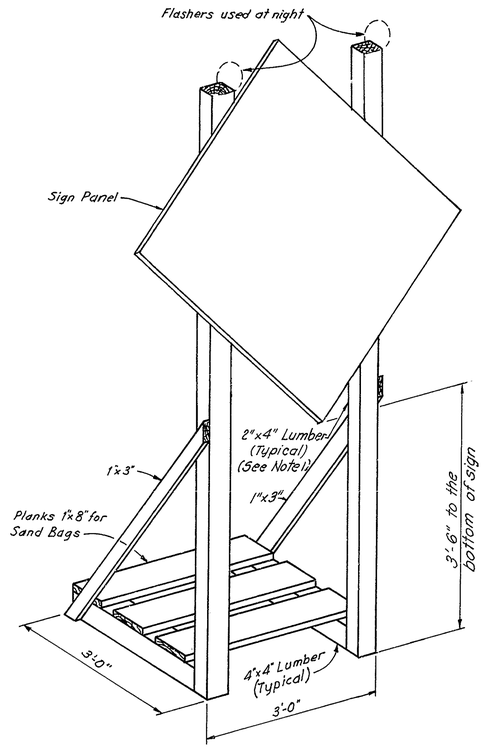

SIGN SUPPORT

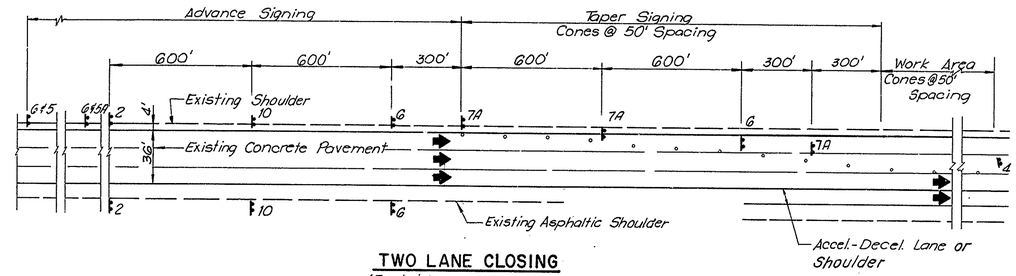

TWO LANE CLOSING
(For bridge painting only)

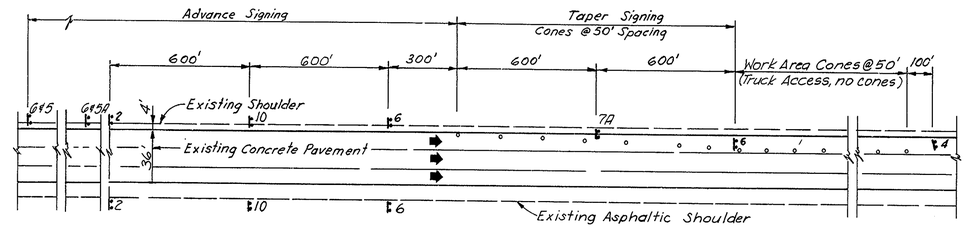

LANE CLOSING
(See note 4 & 7)

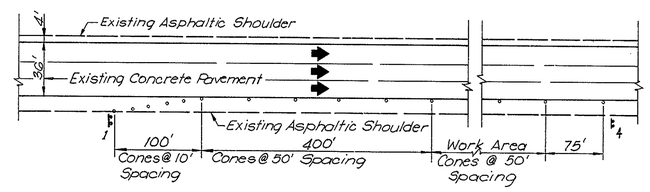

SHOULDER CLOSING

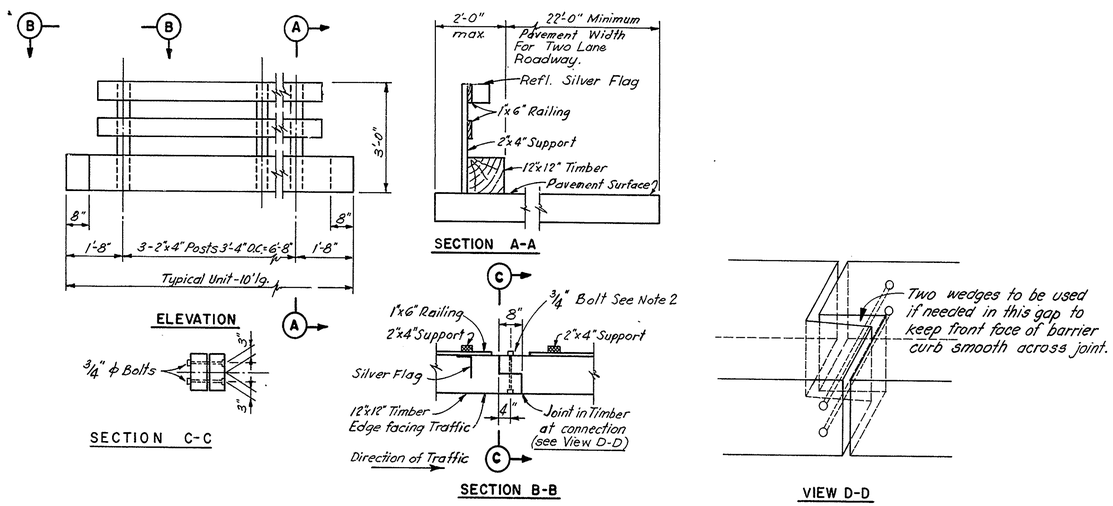

TIMBER BARRIER CURB

NOTES:

1. - Sign Support frame to be painted white.
2. - Barrier Curb sections shall be connected by bolting together 12" x 12" timber sections with 3/4" ϕ bolts, nuts & washers. Countersink Bolt head in front edge of curb.
3. - Full Shoulder Closing layout shows right shoulder closing, left shoulder closing similar.
4. - Only one lane closing to be in place at any given time, and to be allowed to remain in place only during daylight hours.
5. - A shoulder closing on the Turnpike Roadway is to be placed 400' in front of the first section of the continous Timber Barrier Curb.
6. - Full Lane Closing layout shows left lane closing, right lane closing similar.
7. - Lane Closing to be used for contractor access point to median for pier construction.

DELAWARE TURNPIKE	CONT. NO.	TITLE	SHEET NO.	TOTAL SHEETS
	7060	MAINTENANCE AND PROTECTION OF TRAFFIC	68	115

SIGN NO. 1

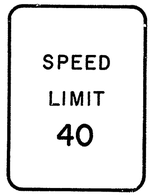

SIGN NO. 2

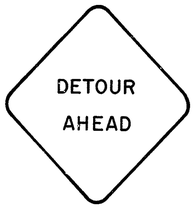

SIGN NO. 3

SIGN NO. 4

SIGN NO. 5

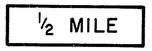

SIGN NO. 5A

SIGN NO. 6 & 6A

* Sign No. 6A shall have the same Text as sign No. 6 except that LEFT shall read RIGHT.

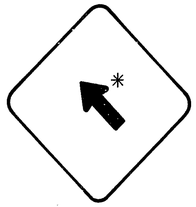

SIGN NO. 7 & 7A

* Sign No. 7A is same as Sign No. 7 except arrow points upward to the right.

SIGN NO.	SIZE W x H	LEGEND				COLOR		RADIUS	BORDER	MARGIN
		SIZE	VERT. SPCG.	SHIELD	ARROW	LEGEND	BKGRD.			
1	4'x4'	7"D				Black	Yellow Refl.	3"	1"	1"
2	4'x5'	8"D 16"D				"	Silver Refl	3"	7/8"	3/4"
3	4'x4'	8"D				"	Yellow Refl.	3"	1"	1"
4	4'x4'	7"D				"	"	3"	1"	1"
5 & 5A	3'-6"x1'-6"	8"D				"	"	1 1/2"	1/2"	—
6 & 6A	4'x4'	7"D				"	"	3"	1"	1"
7 & 7A	4'x4'				29 1/4"	"	"	3"	1"	1"
8	4'x4'	7"D				"	"	3"	1"	1"
9	4'x4'	7"D				"	"	3"	1"	1"
10	4'x5'	8"D				"	Silver Refl.	3"	7/8"	3/4"
11		4"E 10"B —		2'x9" 2'x2' 1'x9"		"	"	1 1/2"	3/8" / 3/8"	3/8" / 3/8"
12	6'-0"x5'-6"	4" 6" 8"-6"	5" 6" 5" 5" 6"	9" 18"	Int "B" @ 45°	Silver Refl.	Green Refl.	3"	1"	—
13	11'-0"x7'-6"	6" 8"-6" 4" 6" 8"-6"	5" 5" 5" 5" 5" 5"	18" 9" 18"	Int "D" @ 60°	"	"	3"	1"	—
14	6'-0"x6'-0"	4" 6" 8"-6"	5" 6" 5" 6"	9" 18"	Int "A" @ 0°	"	"	3"	1"	—

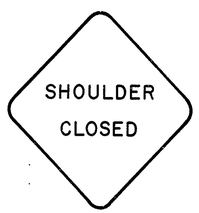

SIGN NO. 8

SIGN NO. 9

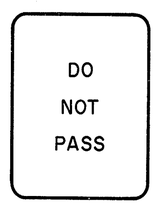

SIGN NO. 10

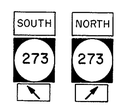

SIGN NO. 11

SIGN NO. 12

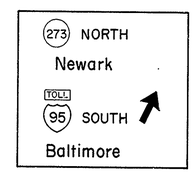

SIGN NO. 13

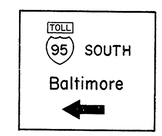

SIGN NO. 14

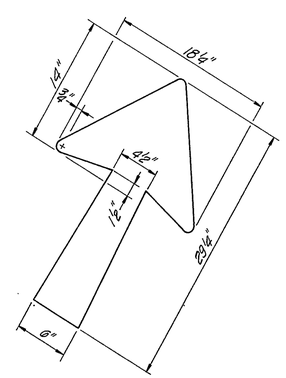

TYPE "A-3" ARROW

DELAWARE TURNPIKE	CONT. NO	TITLE	SHEET NO.	TOTAL SHEETS
	7060		69	115

LEGEND

⊕ denotes Boring

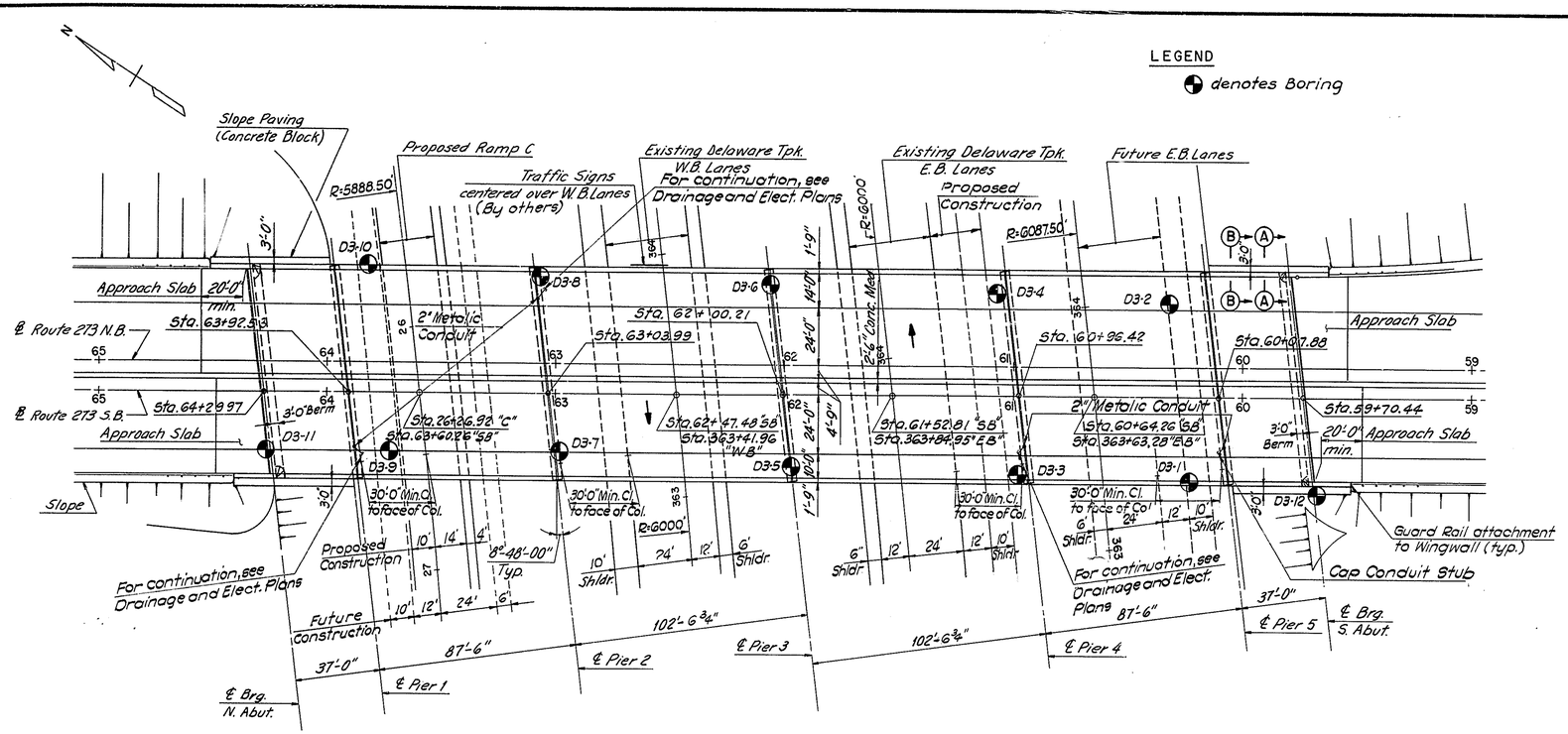

PLAN

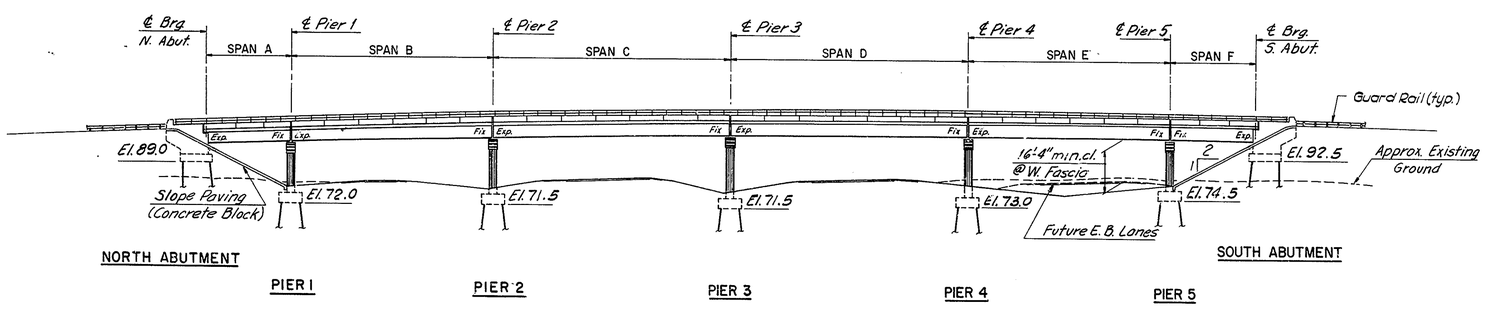

ELEVATION

SECTION B-B
No Scale

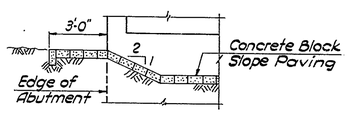

SECTION A-A
No Scale

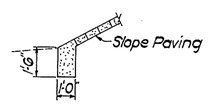

TOE WALL DETAIL
1/4"=1'-0"
Include with cost for Slope Paving

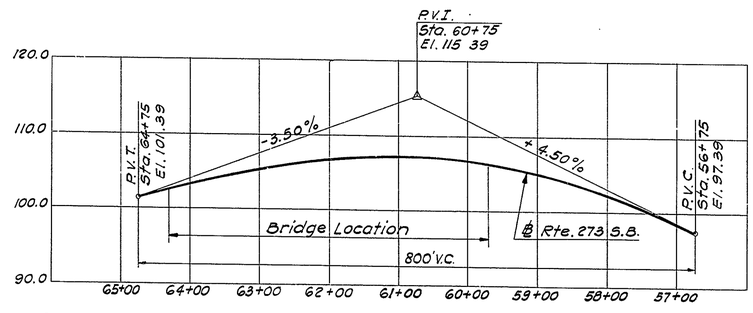

PROFILE
Vertical: 1"=10"
Horiz.: 1"=100'

ESTIMATED QUANTITIES

ITEM NO.	DESCRIPTION	UNIT	QUANTITY
4	Excavation for Structures	C.Y.	1,743
7	Select Borrow - Grade A	C.Y.	359
11	Hot-mix, Hot-laid Asphaltic conc. Pvmt.	Tons	565
18	Portland Cement concrete Masonry		
	Footings	C.Y.	739
	Substructure above footing	C.Y.	646
	Superstructure	C.Y.	1,210
	Approach Slabs	C.Y.	157
19	Superficial Waterproofing	S.Y.	195
20	Bar Reinforcement	Lbs.	537,073
22	Structural Steel (Estimated WT.=1,278,000#)	L.S.	1
22A	Aluminum Railing - Two Strand	L.F.	969
31	6"φ Perf. Corr. Metal Pipe Under drain	L.F.	234
35	14"φ Cast-in-Place concrete Piles	L.F.	11,694
	Coal Tar Epoxy Underseal	S.Y.	4,089
	Protective coating for Concrete	S.F.	3,345
	Slope Paving (Concrete Block)	S.Y.	865

GENERAL NOTES

Construction Specifications: Delaware State Highway Department Standard Specifications dated June 1, 1965 and Special Provisions.

Design Specifications: A.A.S.H.O. Standard Specifications for Highway Bridges dated 1969.

Design Live Load: HS20-44

Design Stresses: Concrete fc=1200 p.s.i. structural and Reinforcing Steel fs=20,000 p.s.i.

Concrete: All exposed edges shall be chamfered 3/4" unless otherwise noted. Concrete cover on reinforcing shall be 2" min. unless otherwise shown in the plans.

Bar Reinforcement: Bar Reinforcement shall be deformed billet-steel bars (A-615) grade 40
All bar laps shall be 30 diameters minimum of the smaller bar spliced unless otherwise noted.
In computing the total length shown for each bent bar, dimension of legs adjoining each bend (not 135° or 180° hooks) were carried to the point of intersection of both legs and no deductions were made for the shorter distance along the curve. The contractor shall take this fact into consideration when ordering and fabricating bent bars.
The first digit of the bar mark denotes the bar size, i.e. A501 is a No. 5 bar.

Structural Steel: Structural Steel shall conform to the requirements of A.S.T.M. Designation A36 except as noted.

Piles: All piles shall be 14"φ cast-in-place concrete piles driven to a minimum bearing capacity of 50 tons.

NO.	REVISION	BY	DATE
3			
2			
1			

	BY	DATE
MADE	J.S. & N.P.	3-70
CHECKED	T.J.Q.	4-70
IN CHARGE	A.J.C.	

DELAWARE STATE HIGHWAY DEPARTMENT

DELAWARE TURNPIKE

ROUTE 273 INTERCHANGE IMPROVEMENTS

ROUTE 273 BRIDGE OVER DELAWARE TURNPIKE

GENERAL PLAN & ELEVATION

HOWARD, NEEDLES, TAMMEN & BERGENDOFF
consulting engineers
NEW YORK KANSAS CITY

SCALE: 1"=30' & AS SHOWN

CONTRACT NO. 7060

DWG. NO. 1 OF 10

DELAWARE TURNPIKE	CONT NO	TITLE	SHEET NO	TOTAL SHEETS
	7060		70	115

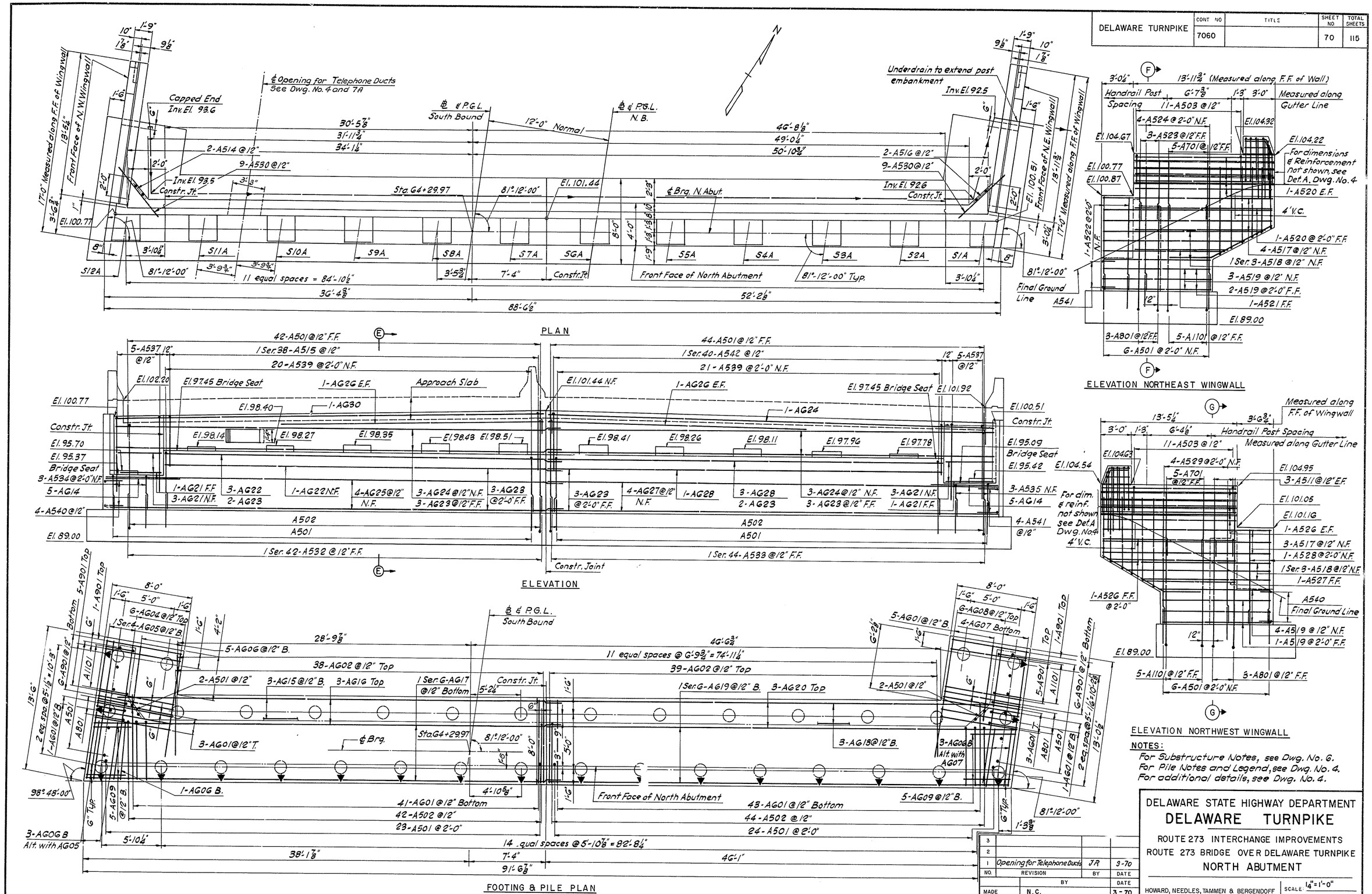

NO.	REVISION	BY	DATE
3			
2			
1	Opening for Telephone Ducts	JR	3-70

	BY	DATE
MADE	N.C.	3-70
CHECKED	M.S.T.	4-70
IN CHARGE	A.J.C.	

DELAWARE STATE HIGHWAY DEPARTMENT

DELAWARE TURNPIKE

ROUTE 273 INTERCHANGE IMPROVEMENTS

ROUTE 273 BRIDGE OVER DELAWARE TURNPIKE

NORTH ABUTMENT

HOWARD, NEEDLES, TAMMEN & BERGENDOFF
consulting engineers
NEW YORK KANSAS CITY

SCALE: ¼" = 1'-0"

CONTRACT NO. 7060

DWG. NO. 2 OF 10

NOTES:

For Substructure Notes, see Dwg. No. 6.
For Pile Notes and Legend, see Dwg. No. 4.
For additional details, see Dwg. No. 4.

DELAWARE TURNPIKE	CONT. NO.	TITLE	SHEET NO.	TOTAL SHEETS
	7060		71	115

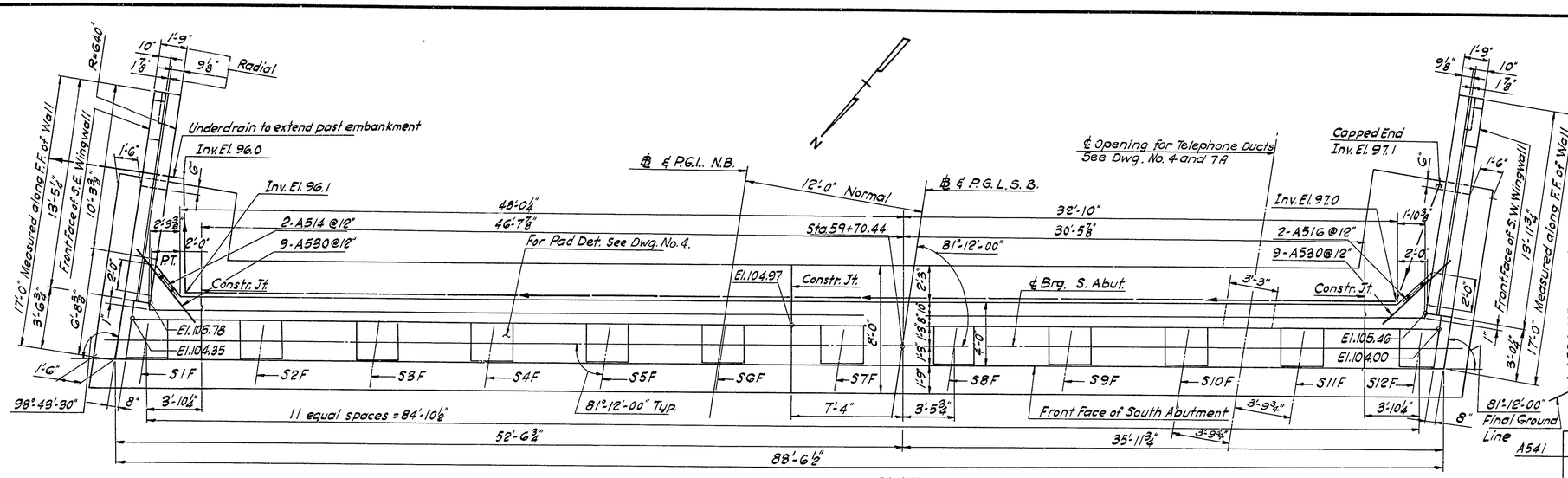

PLAN

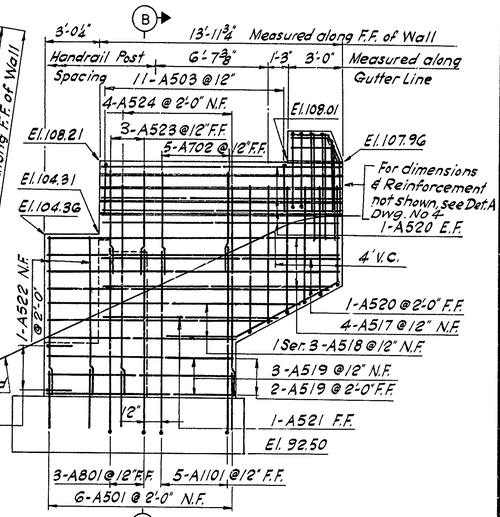

ELEVATION SOUTHWEST WINGWALL

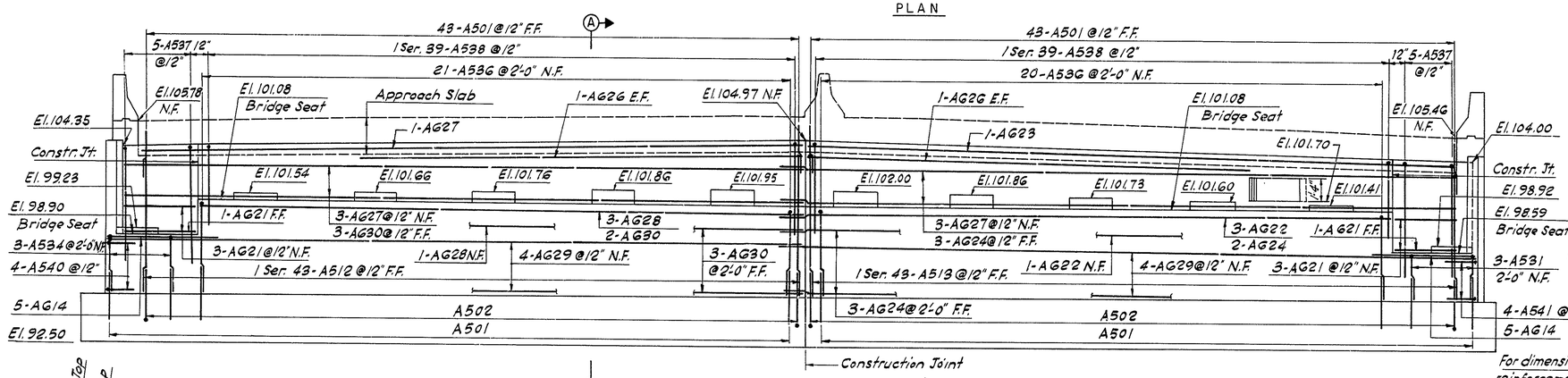

ELEVATION

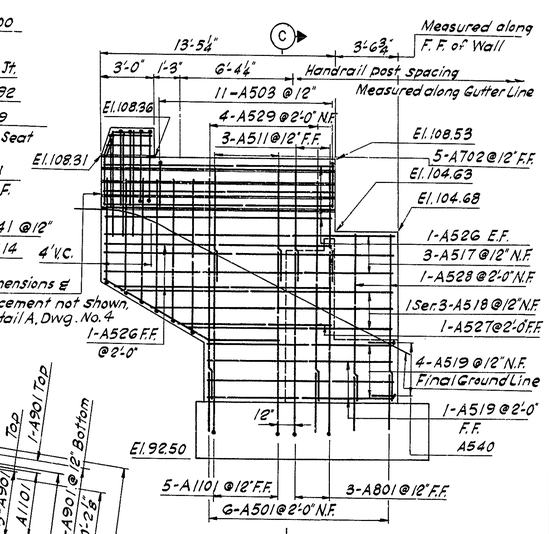

ELEVATION SOUTHEAST WINGWALL

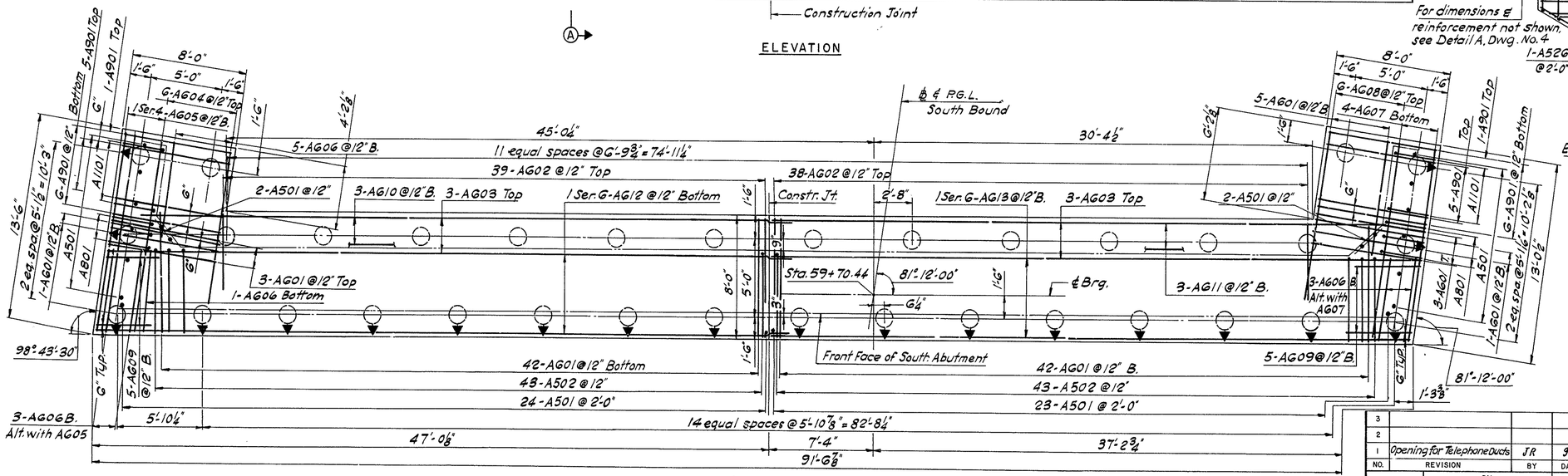

FOOTING & PILE PLAN

NOTES:

For Substructure Notes, see Dwg. No. 6.
For Pile Notes and Legend, see Dwg. No. 4.
For additional details, see Dwg. No. 4

NO.	REVISION	BY	DATE
3			
2			
1	Opening for Telephone Ducts	JR	3-70

	BY	DATE
MADE	N. C.	3-70
CHECKED	M. S. T.	4-70
IN CHARGE	A. J. C.	

DELAWARE STATE HIGHWAY DEPARTMENT

DELAWARE TURNPIKE

ROUTE 273 INTERCHANGE IMPROVEMENTS

ROUTE 273 BRIDGE OVER DELAWARE TURNPIKE

SOUTH ABUTMENT

HOWARD, NEEDLES, TAMMEN & BERGENDOFF
consulting engineers
NEW YORK KANSAS CITY

SCALE: 1/4" = 1'-0"

CONTRACT NO. 7060

DWG. NO. 3 OF 10

DELAWARE TURNPIKE	CONT NO	TITLE	SHEET NO.	TOTAL SHEETS
	7060		72	115

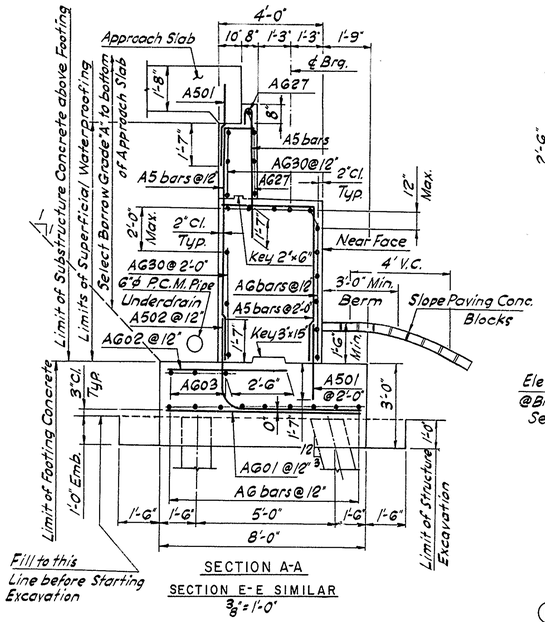

SECTION A-A

SECTION E-E SIMILAR

3/8" = 1'-0"

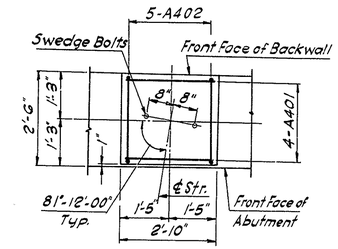

PLAN

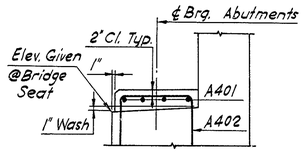

ELEVATION

TYPICAL PAD DETAIL

NO SCALE

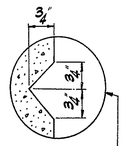

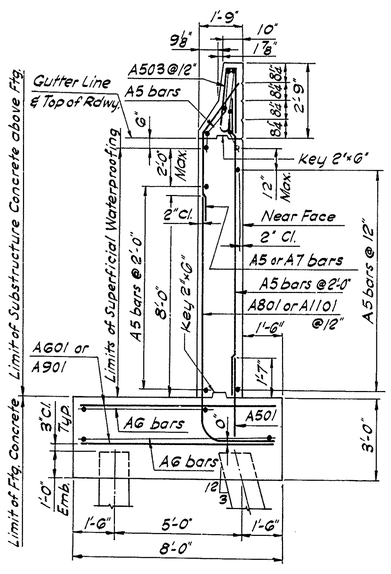

SECTION B-B

SECTION C-C, F-F & G-G SIMILAR

3/8" = 1'-0"

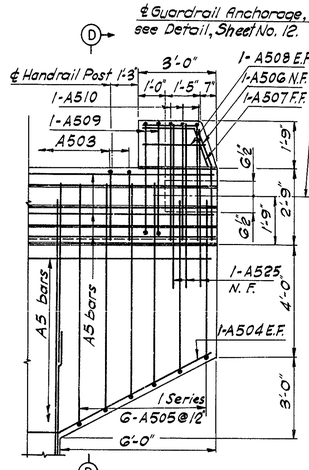

DETAIL A

3/8" = 1'-0"

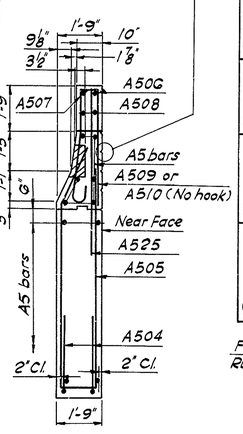

SECTION D-D

3/8" = 1'-0"

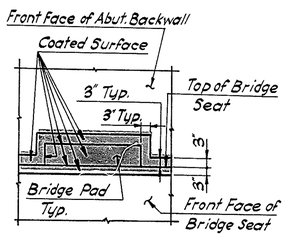

APPLICATION LIMITS OF EPOXY PROTECTIVE COATING FOR CONCRETE

NO SCALE

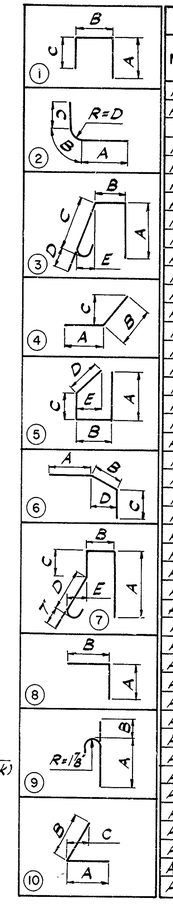

REINFORCING BAR SCHEDULE

MARK	NO. REQUIRED S. ABUT.	NO. REQUIRED N. ABUT.	TYPE	LENGTH	A	B	C	D	E
A401	48	48	1	6'-4"	1'-11"	2'-6"	1'-11"		
A402	60	60	1	5'-11"	1'-11"	2'-1"	1'-11"		
A501	149	149	Str.	3'-2"					
A502	86	86	2	8'-5"	4'-9½"	0'-10"	2'-9½"	0'-6"	
A503	22	22	3	5'-9"	2'-6"	0'-5½"	2'-2"	0'-7"	0'-2½"
A504	4	4	4	10'-9"	4'-0"	6'-9"	3'-0"		
A505	2 Ser. 6	2 Ser. 6	5	13'-7" to 18'-7"	5'-9" to 8'-3"	1'-4"	4'-3" to 6'-9"	2'-3"	1'-4"
A506	2	2	6	6'-5"	2'-2"	1'-8"	2'-7"	0'-6"	
A507	2	2	4	3'-10"	2'-2"	1'-8"	1'-7"		
A508	4	4	Str.	2'-6"					
A509	4	4	7	9'-3"	4'-3"	0'-5½"	1'-9"	2'-2"	0'-2½"
A510	6	6	1	6'-6"	4'-3"	0'-5½"	1'-9"		
A511	3	3	4	6'-1"	3'-10"	2'-3"	1'-4"		
A512	1 Ser. 43	—	8	9'-2" to 9'-9"	8'-0" to 8'-7"	1'-2"			
A513	1 Ser. 43	—	8	8'-10" to 9'-9"	7'-8" to 8'-7"	1'-2"			
A514	2	2	Str.	7'-10"					
A515	—	1 Ser. 38	9	6'-5" to 6'-11"	4'-10" to 5'-4"	1'-7"			
A516	2	2	Str.	7'-8"					
A517	7	7	Str.	16'-8"					
A518	2 Ser. 3	2 Ser. 3	Str.	12'-6" to 16'-6"					
A519	11	11	Str.	10'-8"					
A520	10	10	Str.	13'-8"					
A521	1	1	Str.	11'-8"					
A522	2	2	Str.	8'-7"					
A523	3	3	4	5'-7"	3'-4"	2'-3"	1'-4"		
A524	4	4	Str.	11'-6"					
A525	6	6	Str.	6'-0"					
A526	10	10	Str.	13'-1"					
A527	1	1	Str.	9'-0"					
A528	2	2	Str.	8'-10"					
A529	4	4	Str.	11'-10"					
A530	18	18	Str.	6'-3"					
A531		3	8	6'-6"	2'-11"	3'-7"			
A532	—	1 Ser. 42	8	9'-1" to 9'-9"	7'-11" to 8'-7"	1'-2"			
A533	—	1 Ser. 44	8	8'-9" to 9'-9"	7'-7" to 8'-7"	1'-2"			
A534	3	3	8	6'-9"	3'-2"	3'-7"			
A535	—	3	8	6'-10"	3'-3"	3'-7"			
A536	41	—	8	9'-0"	5'-5"	3'-7"			
A537	10	10	9	8'-10"	7'-3"	1'-7"			
A538	2 Ser. 39	—	9	6'-4" to 6'-9"	4'-9" to 5'-3"	1'-7"			
A539	—	41	8	8'-10"	5'-3"	3'-7"			
A540	4	4	10	3'-10"	1'-11"	1'-11"	0'-4"		
A541	4	4	4	3'-10"	1'-11"	1'-11"	1'-0"		

REINFORCING BAR SCHEDULE

MARK	NO. REQUIRED S. ABUT.	NO. REQUIRED N. ABUT.	TYPE	LENGTH	A	B	C	D	E
A542		1 Ser. 40	9	6'-9" to 6'-11"	4'-8" to 5'-4"	1'-7"			
A543	6	6	Str.	3'-0"					
AG01	99	99	Str.	7'-6"					
AG02	77	77	Str.	4'-9"					
AG03	6	—	Str.	42'-7"					
AG04	6	6	Str.	10'-0"					
AG05	1 Ser. 4	1 Ser. 4	Str.	12'-6" to 13'-0"					
AG06	12	12	Str.	6'-0"					
AG07	4	4	Str.	12'-6"					
AG08	6	6	Str.	10'-10"					
AG09	10	10	Str.	4'-0"					
AG10	3	—	Str.	45'-4"					
AG11	3	—	Str.	42'-10"					
AG12	1 Ser. 6	—	Str.	48'-0" to 48'-8"					
AG13	1 Ser. 6	—	Str.	44'-4" to 45'-0"					
AG14	10	10	Str.	7'-3"					
AG15	—	3	Str.	43'-9"					
AG16	—	3	Str.	40'-3"					
AG17	—	1 Ser. 6	Str.	46'-2" to 47'-1"					
AG18	—	3	Str.	44'-0"					
AG19	—	1 Ser. 6	Str.	45'-6" to 46'-3"					
AG20	—	3	Str.	43'-6"					
AG21	8	8	Str.	4'-6"					
AG22	4	4	Str.	40'-0"					
AG23	1	16	Str.	43'-3"					
AG24	8	7	Str.	44'-3"					
AG25	—	4	Str.	45'-1"					
AG26	4	4	Str.	26'-0"					
AG27	7	4	Str.	44'-6"					
AG28	4	4	Str.	39'-0"					
AG29	8	—	Str.	44'-9"					
AG30	8	1	Str.	42'-6"					
AG31	3	3	Str.	8'-0"					
A701	—	10	4	6'-9"	4'-6"	2'-3"	1'-4"		
A702	10	—	4	7'-6"	5'-3"	2'-3"	1'-4"		
A801	6	6	2	12'-2"	1'-11"	1'-4½"	8'-10½"	0'-10"	
A901	24	24	Str.	7'-6"					
A1101	10	10	2	11'-11"	1'-6½"	1'-11"	8'-5½"	1'-2"	

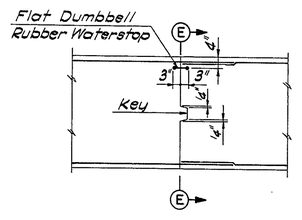

CONSTRUCTION JOINT DETAIL

3/8" = 1'-0"

PILE LEGEND:

Indicates Vertical Pile

Indicates Pile battered 3:12 in direction shown.

Approximate Pile Tip Elev.
North Abutment +30.0
South Abutment +34.0

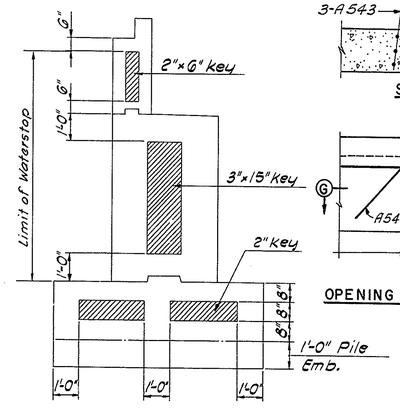

SECTION E-E

3/8" = 1'-0"

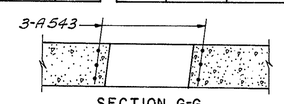

SECTION G-G

3/8" = 1'-0"

NOTE:

For Substructure Notes see Dwg. No. 6
For Railing Notes see Dwg. No. 8

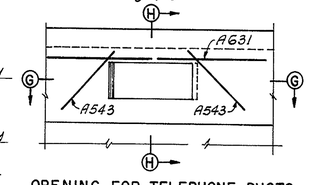

OPENING FOR TELEPHONE DUCTS

3/8" = 1'-0"

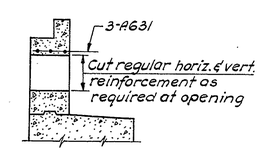

SECTION H-H

3/8" = 1'-0"

NO.	REVISION	BY	DATE
3			
2			
1	Opening for Telephone Ducts, Dimension at Approach Slab	JR	9-70

	BY	DATE
MADE	N.C.	3-70
CHECKED	M.S.T.	4-70
IN CHARGE	A.J.C.	

DELAWARE STATE HIGHWAY DEPARTMENT

DELAWARE TURNPIKE

ROUTE 273 INTERCHANGE IMPROVEMENTS

ROUTE 273 BRIDGE OVER DELAWARE TURNPIKE

WINGWALLS

HOWARD, NEEDLES, TAMMEN & BERGENDOFF
consulting engineers
NEW YORK KANSAS CITY

SCALE: As Shown

CONTRACT NO. 7060

DWG. NO 4 OF 10

DELAWARE TURNPIKE	CONT. NO.	TITLE	SHEET NO.	TOTAL SHEETS
	7060		73	115

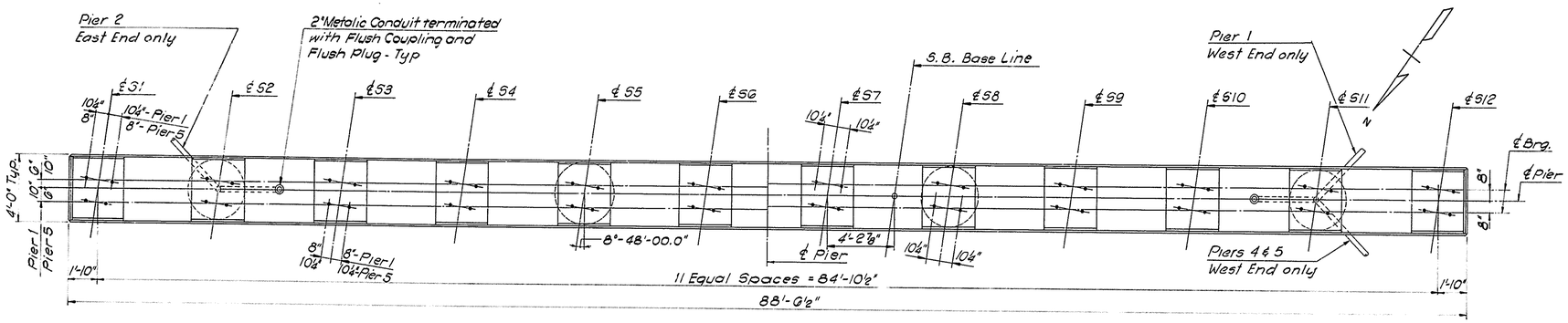

PIERS 1 & 5

PLAN

PIERS 2,3 & 4

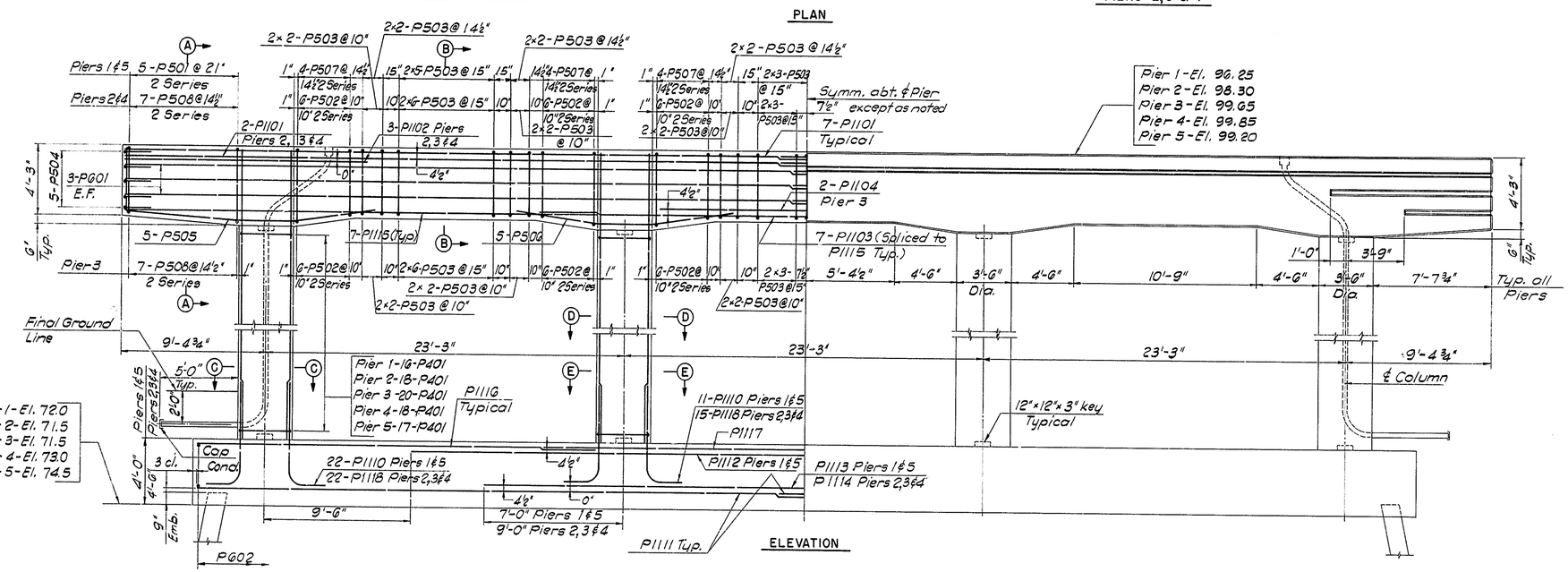

ELEVATION

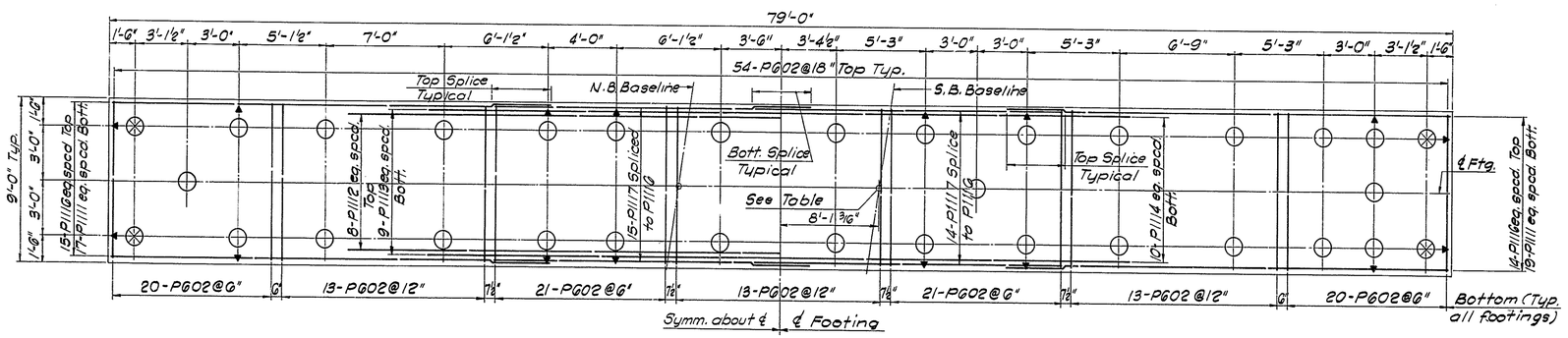

PIERS 1 & 5

FOOTING PLAN

PIERS 2,3 & 4

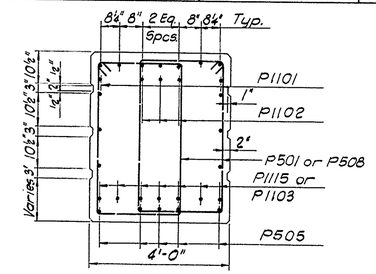

SECTION A-A

½"=1'-0"

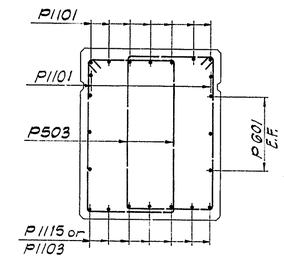

SECTION B-B

½"=1'-0"

LEGEND:

○ Indicates vertical piles

←○ Indicates piles battered 2:12 in direction shown

←⊗ Indicates piles battered 3:12 in direction shown

NOTE:

For Substructure Notes and Reinforcing Bar Schedule see Dwg. No. 6
Work this Dwg. with Dwg. No. 6 & 10.

PIER	STATION BASELINE S.B.	APPROX. PILE TIP ELEV.
1	63+92.70	25.0
2	63+03.99	32.0
3	62+00.21	30.0
4	60+96.42	24.0
5	60+07.71	32.0

NO.	REVISION	BY	DATE
3			
2			
1			

	BY	DATE
MADE	J.A.L.	3-70
CHECKED	J.R.	4-70
IN CHARGE	A.J.C.	

DELAWARE STATE HIGHWAY DEPARTMENT

DELAWARE TURNPIKE

ROUTE 273 INTERCHANGE IMPROVEMENTS
ROUTE 273 BRIDGE OVER DELAWARE TURNPIKE

PIER 1 THRU 5

HOWARD, NEEDLES, TAMMEN & BERGENDOFF
consulting engineers
NEW YORK KANSAS CITY

SCALE: ¼"=1'-0" & AS SHOWN
CONTRACT NO. 7060
DWG. NO. 5 OF 10

DELAWARE TURNPIKE	CONT. NO.	TITLE	SHEET NO.	TOTAL SHEETS
	7060		74	115

PIER	SPAN	STR.	PAD ELEV.	STR.	PAD ELEV.	STR.	PAD ELEV.	STR.	PAD ELEV.	STR.	PAD ELEV.	STR.	PAD ELEV.	STR.	PAD ELEV.	STR.	PAD ELEV.	STR.	PAD ELEV.	STR.	PAD ELEV.	STR.	PAD ELEV.	STR.	PAD ELEV.
1	A	S1A	96.55	S2A	96.78	S3A	96.96	S4A	97.10	S5A	97.25	S6A	97.40	S7A	97.49	S8A	97.41	S9A	97.32	S10A	97.24	S11A	97.10	S12A	96.78
	B	S1B	96.49	S2B	96.69	S3B	96.87	S4B	97.01	S5B	97.16	S6B	97.31	S7B	97.40	S8B	97.32	S9B	97.23	S10B	97.15	S11B	97.01	S12B	96.71
2	B	S1B	98.56	S2B	98.75	S3B	98.92	S4B	99.06	S5B	99.19	S6B	99.33	S7B	99.41	S8B	99.32	S9B	99.22	S10B	99.13	S11B	98.98	S12B	98.67
	C	S1C	98.51	S2C	98.66	S3C	98.83	S4C	98.97	S5C	99.10	S6C	99.24	S7C	99.32	S8C	99.23	S9C	99.13	S10C	99.03	S11C	98.88	S12C	98.62
3	C	S1C	99.94	S2C	100.08	S3C	100.24	S4C	100.36	S5C	100.49	S6C	100.61	S7C	100.68	S8C	100.58	S9C	100.47	S10C	100.35	S11C	100.19	S12C	99.92
	D	S1D	99.90	S2D	100.04	S3D	100.20	S4D	100.32	S5D	100.45	S6D	100.57	S7D	100.64	S8D	100.53	S9D	100.43	S10D	100.31	S11D	100.15	S12D	99.88
4	D	S1D	100.27	S2D	100.40	S3D	100.54	S4D	100.66	S5D	100.77	S6D	100.88	S7D	100.94	S8D	100.82	S9D	100.70	S10D	100.57	S11D	100.40	S12D	100.12
	E	S1E	100.24	S2E	100.41	S3E	100.55	S4E	100.66	S5E	100.77	S6E	100.89	S7E	100.94	S8E	100.82	S9E	100.71	S10E	100.59	S11E	100.41	S12E	100.08
5	E	S1E	99.72	S2E	99.88	S3E	100.01	S4E	100.11	S5E	100.22	S6E	100.32	S7E	100.36	S8E	100.23	S9E	100.11	S10E	99.98	S11E	99.79	S12E	99.45
	F	S1F	99.76	S2F	99.94	S3F	100.07	S4F	100.17	S5F	100.27	S6F	100.37	S7F	100.42	S8F	100.29	S9F	100.16	S10F	100.03	S11F	99.85	S12F	99.49

REINFORCING BAR SCHEDULE

MARK	PIER NO. 1	2	3	4	5	TYPE	LENGTH	MARK	PIER NO. 1	2	3	4	5	TYPE	LENGTH
P401	64	72	80	72	68	5	11'-1"	P1103	7	7	7	7	7	Str.	30'-3"
P402	20	20	20	20	20	3	6'-6"	P1104	—	—	2	—	—	Str.	15'-3"
P403	28	28	28	28	28	4	8'-2"	P1105	66	—	—	—	—	Str.	19'-9"
P404	28	28	28	28	28	3	7'-6"	P1106	—	74	—	—	—	Str.	21'-7"
P405	20	20	20	20	20	4	7'-2"	P1107	—	—	74	—	—	Str.	23'-0"
P501	20	—	—	—	20	2	13'-4" to 14'-3"	P1108	—	—	—	74	—	Str.	21'-8"
P502	—	72	72	72	—	2	13'-2" to 14'-3"	P1109	—	—	—	—	66	Str.	20'-2"
P503	54	60	60	60	54	2	13'-3"	P1110	66	—	—	—	66	1	8'-7"
P504	10	10	10	10	10	4	6'-10"	P1111	34	38	38	38	34	Str.	41'-0"
P505	10	10	10	10	10	6	21'-1"	P1112	8	—	—	—	8	Str.	50'-9"
P506	10	10	10	10	10	7	15'-9"	P1113	9	—	—	—	9	Str.	37'-3"
P507	48	—	—		48	2	14'-3" to 13'-5"	P1114	—	10	10	10	—	Str.	41'-3"
P508	—	28	28	28	—	2	13'-4 to 14'-3"	P1115	14	14	14	14	14	Str.	30'-8"
								P1116	30	28	28	28	30	Str.	25'-11"
P601	12	12	12	12	12	Str.	45'-1"	P1117	15	14	14	14	15	Str.	33'-9"
P602	175	175	175	175	175	Str.	8'-6"	P1118	—	74	74	74	—	1	9'-1"
P1101	14	18	18	18	14	Str.	45'-10"								
P1102	—	6	6	6	—	Str.	15'-9"								

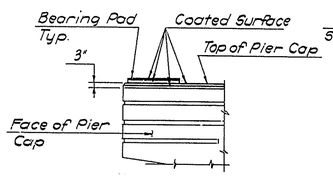

APPLICATION LIMITS OF EPOXY PROTECTIVE COATING FOR CONCRETE

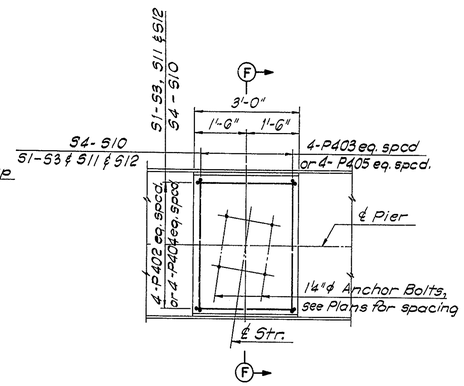

TYPICAL PAD PLAN

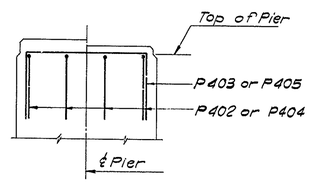

SECTION F - F

SUBSTRUCTURE NOTES:

For General Notes, see Dwg. No. 1
N.F. denotes Near Face
F.F. denotes Far Face
E.F. denotes Each Face
Minimum Reinforcing Steel cover:
3" Footing
2" Above Footing
For Epoxy Protective Coating at Abutments, see Dwg. No. 4, for Piers, see this Dwg.
Pad Elevations given denote top of finished Concrete Pad.
For Shoes, Anchor Bolts, & Pile Details, see Dwg. No. 10
Backfill behind Abutments to be placed only after Bridge Deck Slab has been completed.

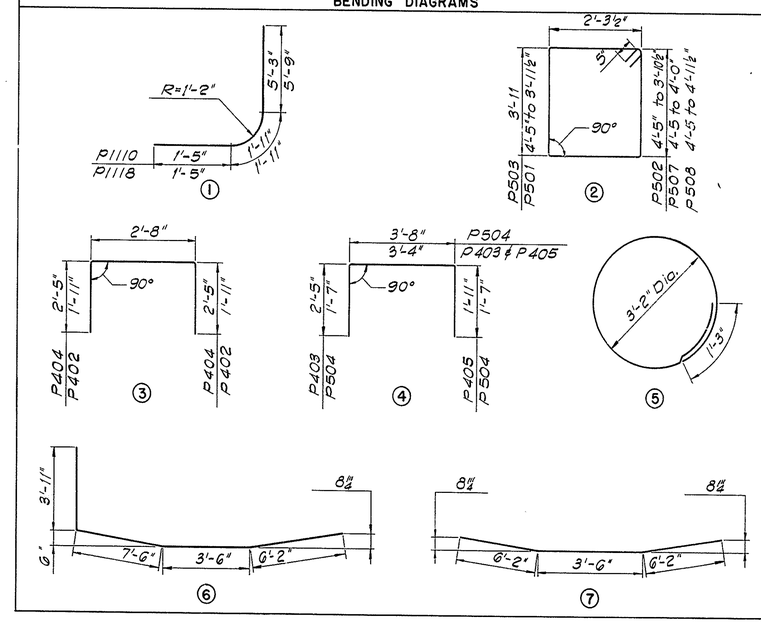

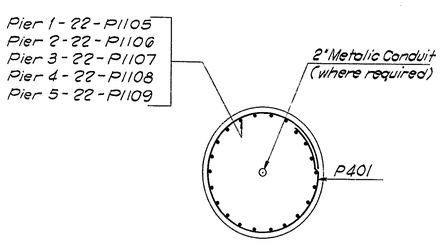

SECTION C - C

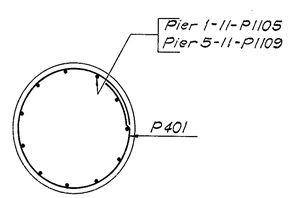

SECTION D - D

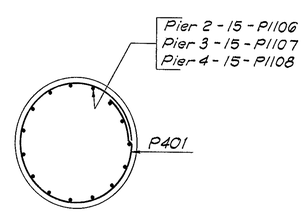

SECTION E - E

NO.	REVISION	BY	DATE
3			
2			
1	Pad elev. due to flange ℄ change on Dwg. No. 7	JR	9-70

	BY	DATE
MADE	J.A.L.	3-70
CHECKED	Jn. R.	4-70
IN CHARGE	A.J.C.	

DELAWARE STATE HIGHWAY DEPARTMENT

DELAWARE TURNPIKE

ROUTE 273 INTERCHANGE IMPROVEMENTS

ROUTE 273 BRIDGE OVER DELAWARE TURNPIKE

PIER DETAILS - 1 THRU 5

HOWARD, NEEDLES, TAMMEN & BERGENDOFF
consulting engineers
NEW YORK KANSAS CITY

SCALE: ½" = 1'-0"
CONTRACT NO. 7060
DWG. NO. 6 OF 10

DELAWARE TURNPIKE	CONT. NO.	TITLE	SHEET NO.	TOTAL SHEETS
	7060		75	115

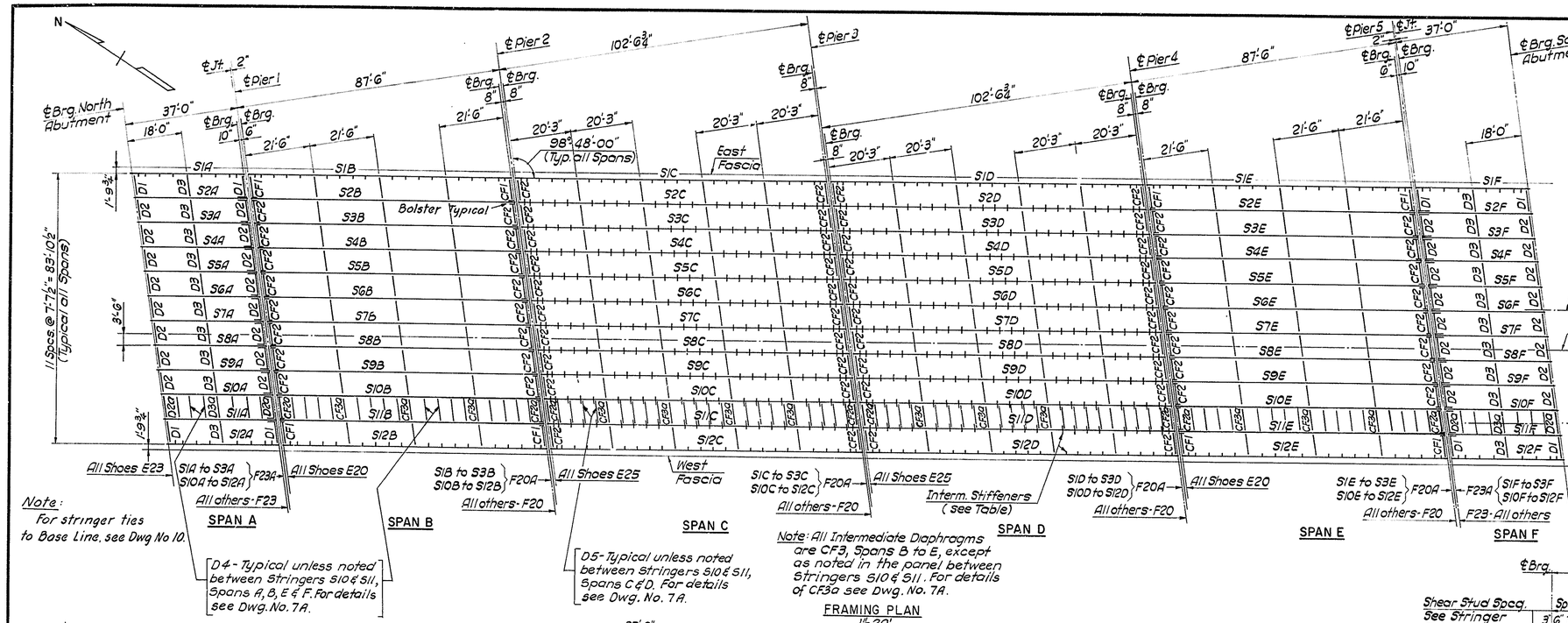

Note: For stringer ties to Base Line, see Dwg No. 10.

D4 - Typical unless noted between Stringers S10 & S11, Spans A, B, E & F. For details see Dwg. No. 7A.

D5 - Typical unless noted between Stringers S10 & S11, Spans C & D. For details see Dwg. No. 7A.

Note: All Intermediate Diaphragms are CF3, Spans B to E, except as noted in the panel between Stringers S10 & S11. For details of CF3a see Dwg. No. 7A.

FRAMING PLAN
1" = 20'

INTERM. STIFFENER TABLE		
Span	Stringer	Size
A & F	S1A, S12A S1F, S12F	1 ∠s 5 × ⅜ I.F.
B & E	S1B, S12B S1E, S12E	1 ∠s 7 × ½ I.F.
C & D	S1C, S12C S1D, S12D	1 ∠s 7 × ½ I.F.
	S2C to S11C S2D to S11D	2 ∠s 7 × ½

I.F. denotes Inside Face

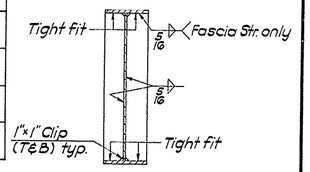

INTERMEDIATE STIFFENER DETAIL
No Scale

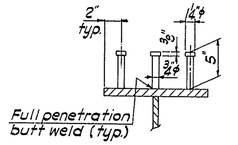

SHEAR STUD DETAIL
No Scale

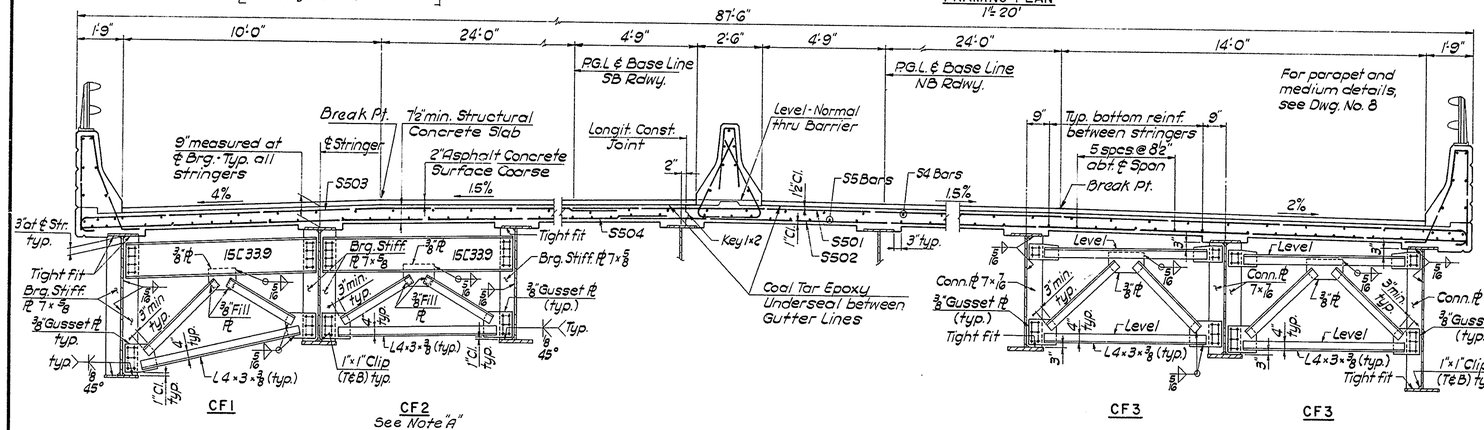

END DIAPHRAGMS

INTERMEDIATE DIAPHRAGMS

Note "A"

End diaphragms D2 and CF2 between Stringers S10 and S11 have been revised to Diaphragms D2a in Spans A and F and CF2a in Spans B, C, D and E. For details see Dwg. No. 7A.

CROSS SECTION - SPAN B & E
⅜" = 1'-0"
Span C & D similar
Looking North

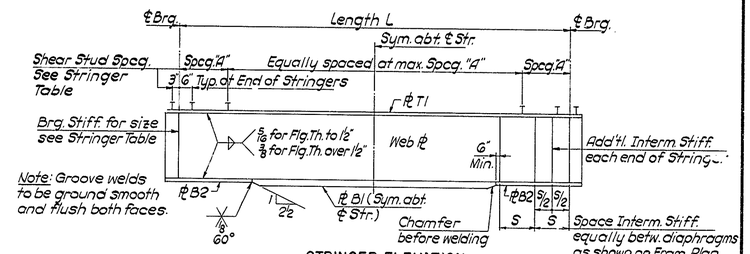

STRINGER ELEVATION
No Scale

STRINGER SCHEDULE								
Span	Stringer	Length L ℄ Brg. to ℄ Brg.	Web ∠s or Wf Beam	∠s T1	**∠s B1	**∠s B2	* Brg. Stiffs.	Shear Stud Spcg. "A" (Inches)
A	S1A & S12A	36'-7 3/16"	60 × ⅜	∠s 12 × ¾ × F.L.	∠s 12 × ¾ × F.L.	-	1 ∠s 5 × 7/16 1 ∠s 7 × 7/16	-
	S2A to S11A	36'-7 3/16"	36WF135	-	-	-	2 ∠s 7 × 7/16	-
B	S1B & S12B	87'-4 5/16"	60 × ⅜	∠s 14 × ⅞ × F.L.	∠s 16 × 1¼ × 43'-0"	∠s 16 × ⅝	2 ∠s 7 × ⅝	24
	S2B to S11B	87'-4 5/16"	48 × ½	∠s 14 × ¾ × F.L.	∠s 16 × (½) × 49'-9"	∠s 16 × ⅛		18
C	S1C & S12C	102'-5¼"	60 × ⅜	∠s 14 × ⅞ × F.L.	∠s 16 × ½ × 56'-6"	∠s 16 × 1		24
	S2C to S11C	102'-5¼"			∠s 16 × (½) × 56'-6"	∠s 16 × ⅛		23
D	S1D & S12D	102'-5¼"			∠s 16 × ½ × 56'-6"	∠s 16 × 1		24
	S2D to S11D	102'-5¼"			∠s 16 × (½) × 56'-6"	∠s 16 × ⅛		23
E	S1E & S12E	87'-4 5/16"	60 × ⅜	∠s 14 × ⅞ × F.L.	∠s 16 × 1¼ × 43'-0"	∠s 16 × ⅝		24
	S2E to S11E	87'-4 5/16"	48 × ½	∠s 14 × ¾ × F.L.	∠s 16 × (½) × 49'-9"	∠s 16 × ⅛	2 ∠s 7 × ⅝	18
F	S1F & S12F	36'-7 3/16"	60 × ⅜	∠s 12 × ¾ × F.L.	∠s 12 × ¾ × F.L.	-	1 ∠s 5 × 7/16 1 ∠s 7 × 7/16	-
	S2F to S11F	36'-7 3/16"	36WF135	-	-	-	2 ∠s 7 × 7/16	-

¾"-S2 thru S9
1⅞"-S10 and S11
Spans B, C, D & E

F.L. denotes Full Length
* Brg. Stiffener at outside face of fascia stringer to be normal to ℄ Stringer, all others to be parallel to ℄ Brg.

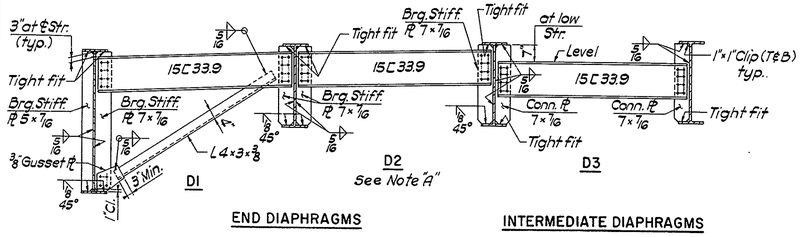

END DIAPHRAGMS

INTERMEDIATE DIAPHRAGMS

DIAPHRAGMS - SPAN A & F
⅜" = 1'-0"

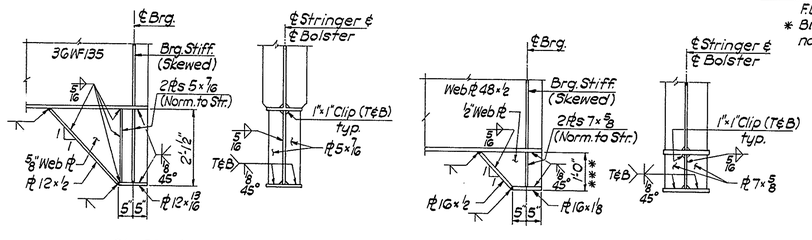

Str. S2A to S11A at Pier 1
Str. S2F to S11F at Pier 5

Str. S2B to S11B at Piers 1 & 2
Str. S2E to S11E at Piers 4 & 5

BOLSTER DETAILS
½" = 1'-0"

*** Contractor elected to use full length ∠s B1 and eliminate ∠s B2. The original height of bolster shown was reduced by the amount of increased bottom flange thickness at ends.

NOTES:
For Structural Steel Notes, see Dwg. No. 10
For Miscellaneous details, see Dwg. No. 10.
For Concrete Deck, see Dwg. No. 8.
For Joint Details, see Dwg. No. 9.

** Contractor elected to use full length ∠s B1 and eliminate ∠s B2

NO.	REVISION	BY	DATE
3			
2			
1	Diaphs. S10 & S11 revisions for Tel. Ducts, Conth. changes in bett. flgs. of welded Str.	JR	9-70

	BY	DATE
MADE	T.J.Q.	3-70
CHECKED	N.F.O.	4-70
IN CHARGE	A.J.C.	

DELAWARE STATE HIGHWAY DEPARTMENT
DELAWARE TURNPIKE
ROUTE 273 INTERCHANGE IMPROVEMENTS
ROUTE 273 BRIDGE OVER DELAWARE TURNPIKE
FRAMING PLAN & CROSS SECTION

HOWARD, NEEDLES, TAMMEN & BERGENDOFF
consulting engineers
NEW YORK KANSAS CITY

SCALE: AS SHOWN
CONTRACT NO. 7060
DWG. NO. 7 OF 10

DELAWARE TURNPIKE	CONT. NO.	TITLE	SHEET NO.	TOTAL SHEETS
	7060		75A	115

NEW SHEET ADDED

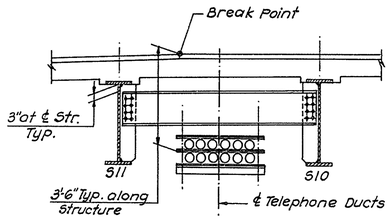

D2a

Details the same as for D2 except as shown.

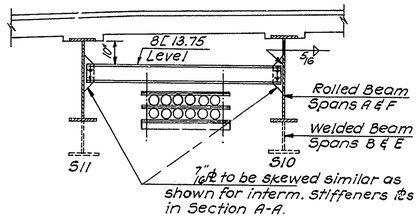

D4

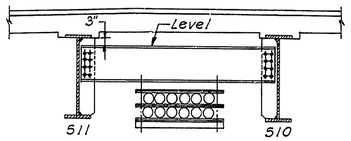

D3a

Details the same as for D3 except as shown

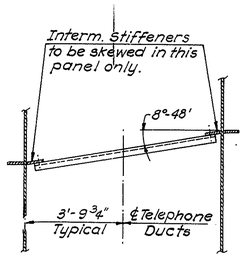

SECTION A-A

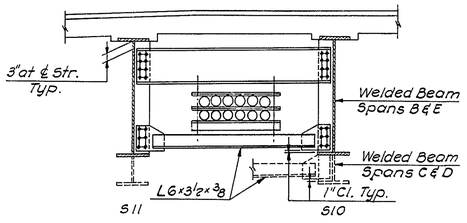

CF2a

Details the same as CF2 except as shown.

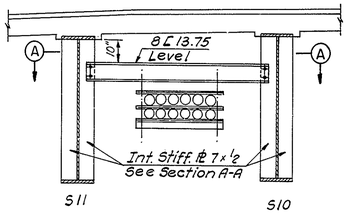

D5

NOTES:

For details of Diaphragms D2, D3, CF2 and CF3 see Dwg. No. 7

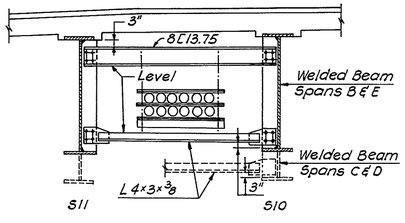

CF3a

Details the same as CF3 except as shown.

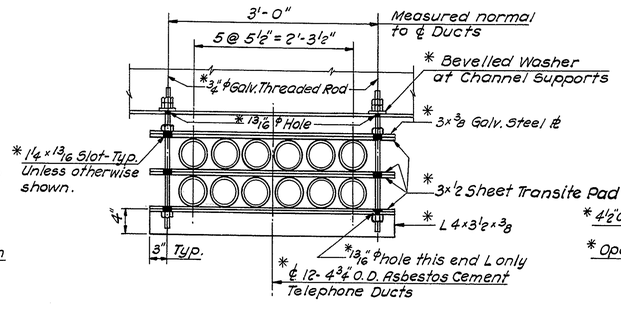

TYPICAL SUPPORT FOR TELEPHONE DUCTS

1" = 1'-0"

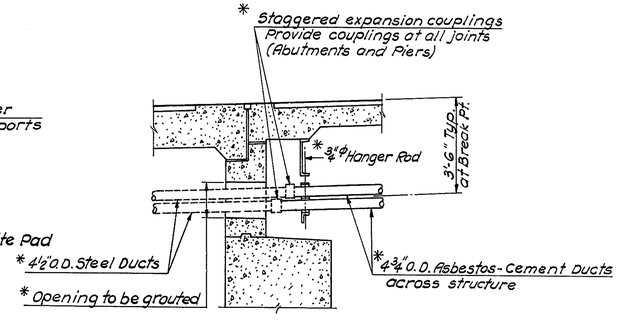

TELEPHONE DUCT DETAIL AT ABUTMENT

* All work and material shown to be done or furnished by the Diamond State Telephone Co.

NO.	REVISION	BY	DATE
3			
2			
1			

	BY	DATE
MADE	N.D.P	8-70
CHECKED	J.R.	8-70
IN CHARGE	A.J.C.	

DELAWARE STATE HIGHWAY DEPARTMENT

DELAWARE TURNPIKE

ROUTE 273 INTERCHANGE IMPROVEMENTS

ROUTE 273 BRIDGE OVER DELAWARE TURNPIKE

TELEPHONE DUCT SUPPORTS & DETAILS

HOWARD, NEEDLES, TAMMEN & BERGENDOFF
consulting engineers
NEW YORK KANSAS CITY

SCALE: 3/8" = 1'-0" & AS SHOWN

CONTRACT NO. 7060

DWG. NO. 7A OF 10

NEW SHEET ADDED

DELAWARE TURNPIKE	CONT. NO.	TITLE	SHEET NO.	TOTAL SHEETS
	7060		76	115

REINFORCING BAR SCHEDULE

MARK	NO.	TYPE	A	B	LENGTH
DECK SLAB					
S401	114	Str.			38'-9"
S402	228	Str.			44'-11"
S403	228	Str.			52'-9"
S404	112	1	6'-0"	0'-8"	6'-8"
S405	560	1	4'-0"	0'-8"	4'-8"
S406	86	Str.			12'-9"
S407	200	Str.			14'-6"
S408	238	Str.			14-5"
S409	28	Str.			12'-7"
S410	28	Str.			14'-4"
S411	28	Str.			14'-3"
S501	992	2	52'-8"	0'-7"	53'-3"
S502	992	Str.			49'-6"
S503	992	2	37'-3"	0'-7"	37'-10"
S504	992	Str.			40'-3"
S505	196	Str.			38'-9"
S506	392	Str.			44'-11"
S507	392	Str.			52'-9"
S508	1000	4			8'-2"
S509	500	7			4-8"
S510	500	5			8'-6"
APPROACH SLABS					
AS401	168	3	1'-9"	1'-4"	5'-9"
AS501	42	Str.			42'-4"
AS502	2Ser. 6	Str.			3'-7" to 35'-10"
AS503	42	Str.			38'-4"
AS504	2Ser. 5	Str.			6'-0" to 31'-10"
AS505	12	Str.			42'-0"
AS506	12	Str.			38'-0"
AS601	2Ser. 86	6	19'-8" to 26'-3"	0'-8"	21'-0" to 27'-7"
AS602	2Ser. 78	6	19'-8" to 25'-6"	0'-8"	21'-0" to 27'-0"

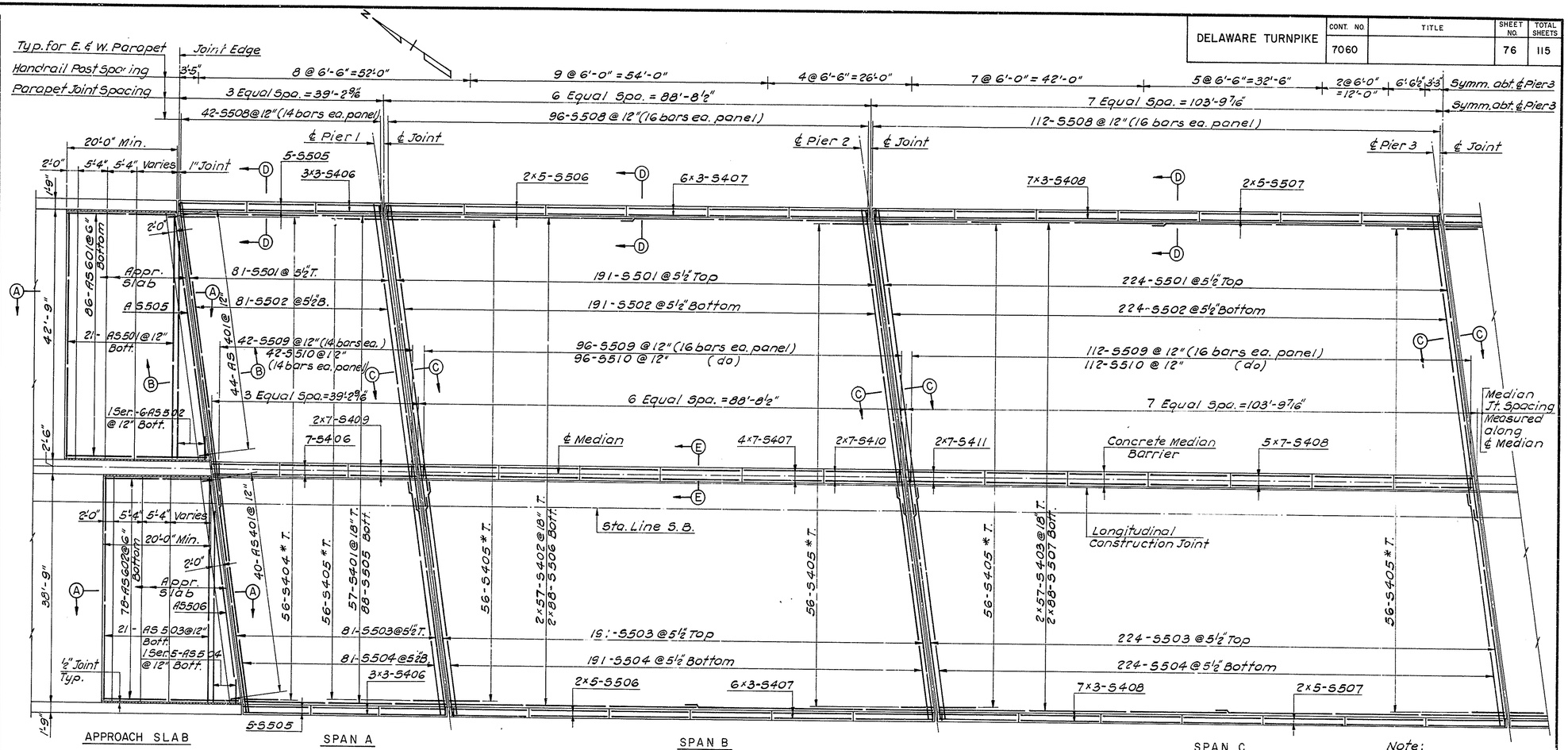

SLAB PLAN

Note:
* Alternate with Longitudinal top bars

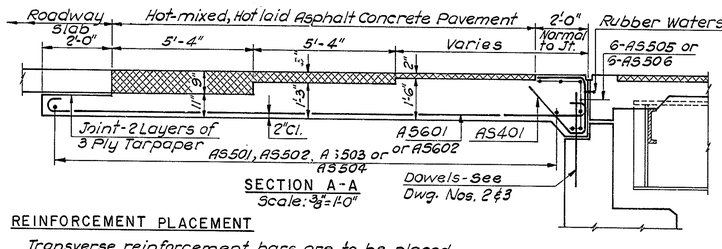

SECTION A-A
Scale: 3/8" = 1'-0"

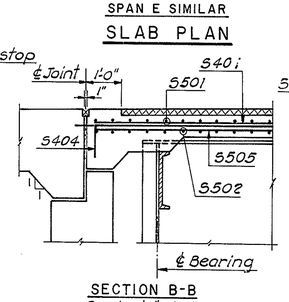

SECTION B-B
Scale: ½" = 1'-0"

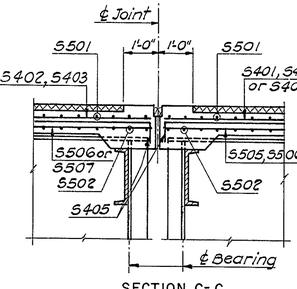

SECTION C-C
Scale: ½" = 1'-0"

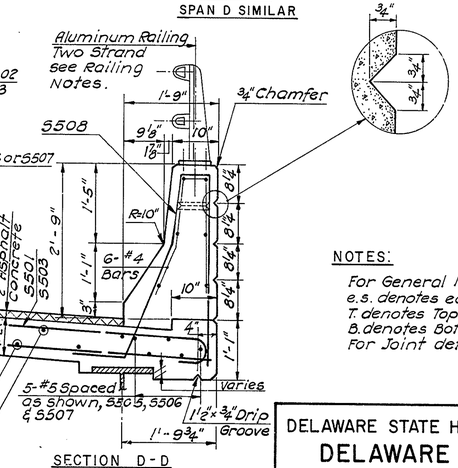

SECTION D-D
Scale: ¾" = 1'-0"

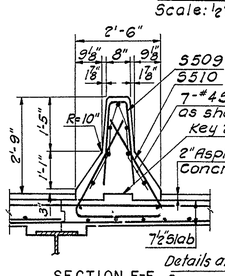

SECTION E-E
Scale: ½" = 1'-0"

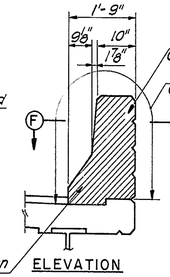

ELEVATION

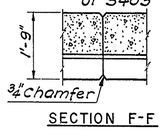

SECTION F-F

INTERMEDIATE PARAPET JOINT
Scale: ½" = 1'-0"

REINFORCEMENT PLACEMENT

Transverse reinforcement bars are to be placed parallel to piers and abutments with the spacing measured normal to transverse reinforcement bars.

Transverse series bars in approach slabs are to be placed parallel to the last transverse bar.

For location of top and bottom longitudinal bars between stringers see Cross Section Dwg. No. 7.

RAILING NOTES:

Aluminum Railing - Two Strand shall conform to the details as shown on the Delaware State Highway Department Dwg. "Std. for One and Two Strand Metal Bridge Rail".

Rail Post and Intermediate Parapet Joint Spacing to be measured along Gutter Line.

BENDING DIAGRAMS

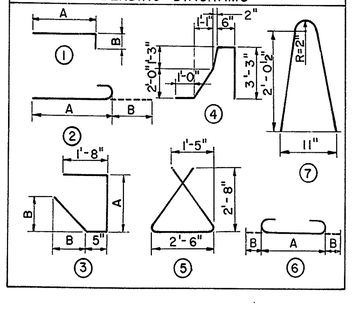

NOTES:

For General Notes see Dwg. No. 1
e.s. denotes each side
T. denotes Top
B. denotes Bottom
For Joint details see Dwg. No. 9

NO.	REVISION	BY	DATE
3			
2			
1	Height of Med. Barrier & bott. longit. slab bars lowered at Barrier.	J.P.	2-19-71

	BY	DATE
MADE	N.D.P.	4-70
CHECKED	L.D.	4-70
IN CHARGE	A.J.C.	

DELAWARE STATE HIGHWAY DEPARTMENT

DELAWARE TURNPIKE

ROUTE 273 INTERCHANGE IMPROVEMENTS
ROUTE 273 BRIDGE OVER DELAWARE TURNPIKE
CONCRETE DECK & APPROACH SLABS

HOWARD, NEEDLES, TAMMEN & BERGENDOFF
consulting engineers
NEW YORK KANSAS CITY

SCALE: 1" = 10' & AS SHOWN
CONTRACT NO. 7060
DWG. NO. 8 OF 10

DELAWARE TURNPIKE	CONT. NO.	TITLE	SHEET NO.	TOTAL SHEETS
	7060		77	115

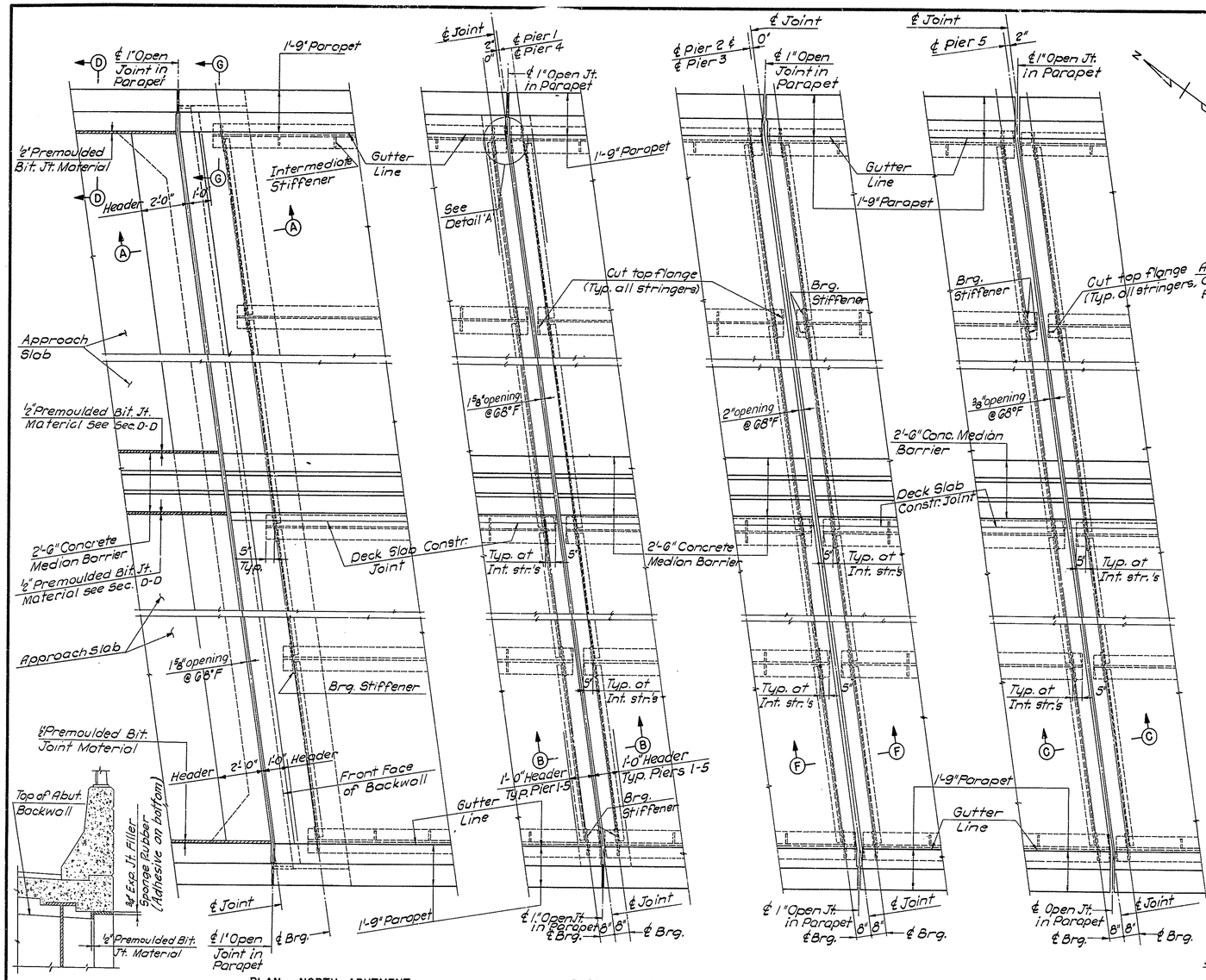

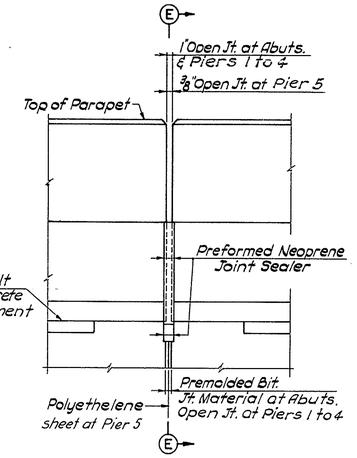

SECTION ALONG GUTTER LINE
1" = 1'-0"

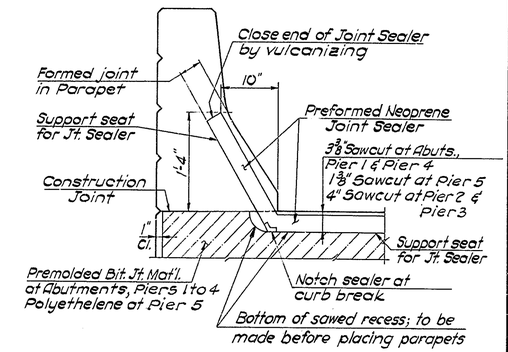

SECTION E-E
1" = 1'-0"

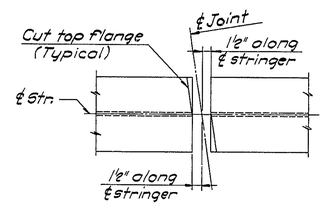

DETAIL "A"
1" = 1'-0"
Typical at Fascia Stringers at all Piers

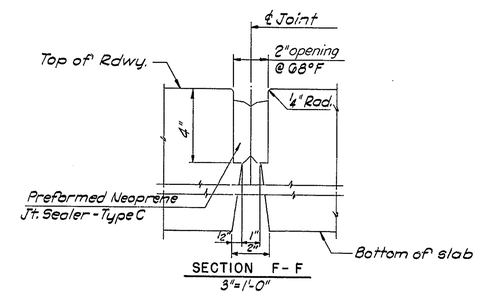

SECTION F-F
3" = 1'-0"

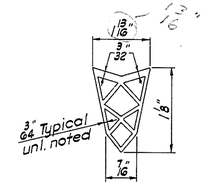

TYPE B

NOTES:

Any changes in the shape or dimensions of preformed neoprene joint sealer must be approved by the Engineer.
The minimum thicknes of any web shall not be less than as specified.
The sealer shall be supplied in one piece for the full width of each joint. One shop splice will be permitted for lengths in excess of 50 feet.
It is absolutely essential that the joint openings in slabs be sawcut accurately to smooth straight lines.
The size of the opening shall be adjusted to allow for the temperature at the time of construction.
The joints shall be thoroughly cleaned. The sealer shall be installed by suitable machine tools only and thoroughly secured in place with a lubricant which shall cover both sides of the sealer over the full area in contact with the sides of the joint.
Cost of joints to be included in the price bid for the item "Portland cement Concrete Masonry - Superstructure."

SECTION G-G
½" = 1'-0"
(Typ. of all Abut. corners)

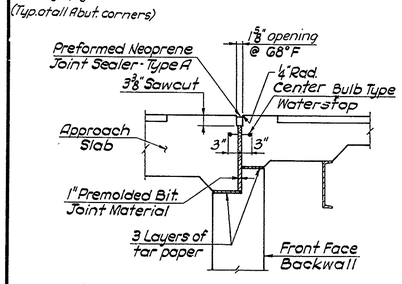

SECTION A-A
½" = 1'-0"

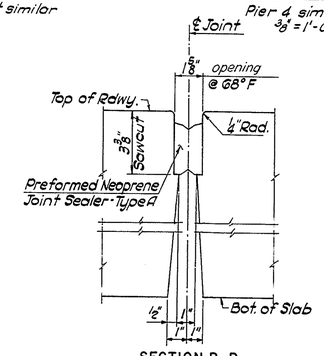

SECTION B-B
3" = 1'-0"

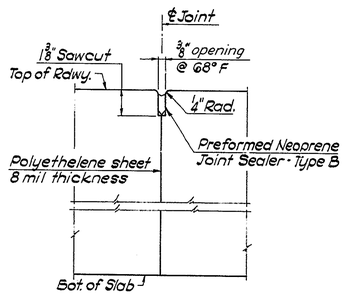

SECTION C-C
3" = 1'-0"

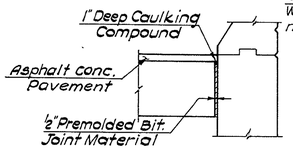

SECTION D-D
½" = 1'-0"

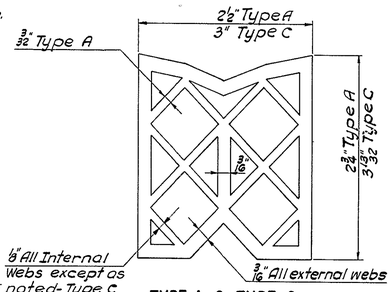

TYPE A & TYPE C

PREFORMED NEOPRENE JOINT SEALER
No Scale

NO.	REVISION	BY	DATE
3			
2			
1			

	BY	DATE
MADE	J.L.	3-70
CHECKED	N.F.O.	4-70
IN CHARGE	A.J.C.	

DELAWARE STATE HIGHWAY DEPARTMENT

DELAWARE TURNPIKE

ROUTE 273 INTERCHANGE IMPROVEMENTS
ROUTE 273 BRIDGE OVER DELAWARE TURNPIKE

JOINT DETAILS

HOWARD, NEEDLES, TAMMEN & BERGENDOFF
consulting engineers
NEW YORK KANSAS CITY

SCALE: AS SHOWN
CONTRACT NO. 7060
DWG. NO. 9 OF 10

DELAWARE TURNPIKE	CONT. NO.	TITLE	SHEET NO.	TOTAL SHEETS
	7060		78	115

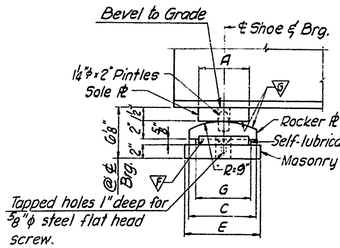

SIDE ELEVATION

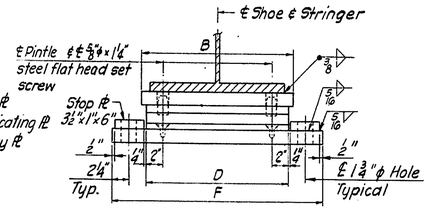

END ELEVATION

EXPANSION SHOE

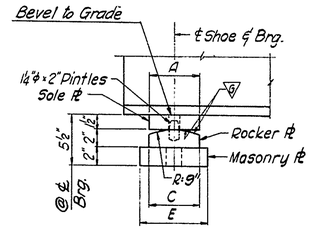

SIDE ELEVATION

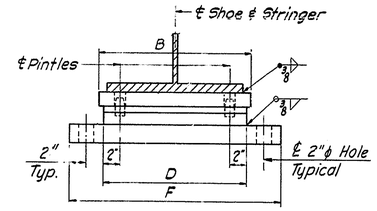

END ELEVATION

FIXED SHOE

Suffix A for Fixed Shoes denotes 1 5/16" x 1¾" Slotted holes in Sole Pl. for pintles, see Detail "C".

SHOE	DIMENSIONS						
	A	B	C	D	E	F	G
E20	6"	1'-5½"	7½"	1'-4½"	8½"	2'-1"	6"
E23	6"	1'-1"	7½"	1'-0"	8"	1'-8½"	6"
E25	6"	1'-5½"	9"	1'-4½"	9½"	2'-1"	7"
F20	6"	1'-5½"	6"	1'-4½"	7"	2'-0½"	
F20A	6"	1'-5½"	6"	1'-4½"	7"	2'-0½"	
F23	6"	1'-1"	6"	1'-0"	7"	1'-8"	
F23A	6"	1'-1"	6"	1'-0"	7"	1'-8"	

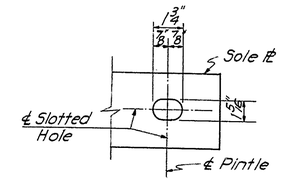

DETAIL "C"
No Scale

SHOE NOTES:

Material for shoes (exclusive of self-lubricating plates), shall be structural steel conforming to the requirements of A.S.T.M. Specifications A242 and shall have an atmospheric corrosion resistance equal to a min. of four times that of A.S.T.M. A36 steel.

Top of masonry plates, bottom of rocker plates and top and bottom of sole plates shall be planed, straightened or otherwise treated to secure true level surfaces.

Contact surfaces noted on the plans with finish symbols shall be finished in accordance with the Standards of the Association of Iron and Steel Engineers to the class of finish prescribed.

The plates comprising the expansion shoes shall be set so as to be truly centered under full dead load at a temperature of 68°F.

Concrete pads shall be formed integral with pier or abutment and not less than ⅛" nor more than ¼" above finished elevation. Dress down pads by rubbing, grinding, or as otherwise approved by the Engineer, to true level surfaces at the finished elevation.

Anchor bolts, hexagon nuts and washers shall be hot dipped galvanized conforming to ASTM A153

Templates shall be used to accurately set the anchor bolts.

ROCKER SHOE DETAILS
1½"=1'-0"

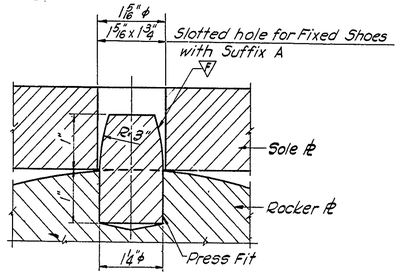

PINTLE DETAIL
¾"=1"

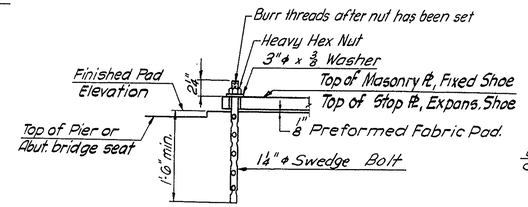

ANCHOR BOLT DETAIL
No Scale

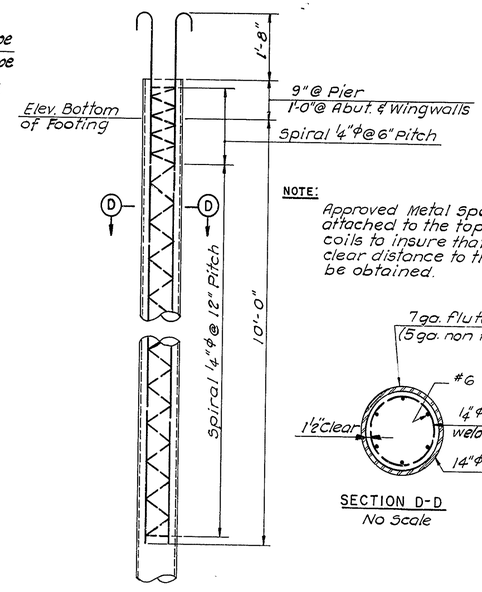

NOTE:
Approved Metal Spacers shall be attached to the top and bottom coils to insure that the minimum clear distance to the shell will be obtained.

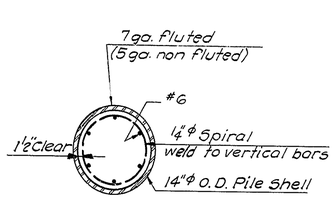

SECTION D-D
No Scale

STRUCTURAL STEEL NOTES:

For General Notes see Dwg. No. 1

⅞"φ High-Strength Bolts to be used for all bolted connections.

Shear Stud spacing shown is maximum spacing.

All Stiffeners, Connection Plates and ends of stringers shall be truly vertical in erected position.

A fully butt-welded shop web splice may be used for built-up stringers. The splice location and details subject to the approval of the Engineer.

Unless otherwise shown all welding shall comply with the current "Specifications for Welded Highway and Railway Bridges" of the American Welding Socity.

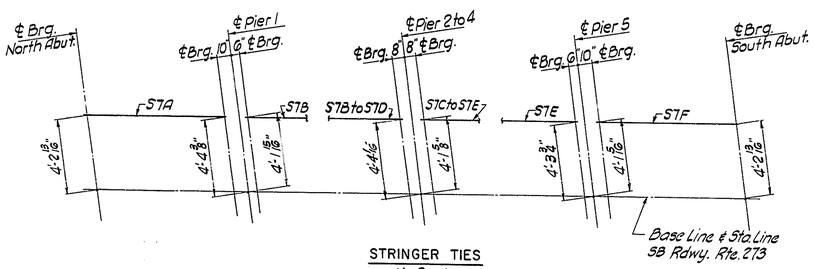

STRINGER TIES
No Scale

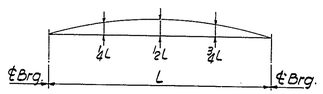

CAMBER DIAGRAM

Stringer	CAMBER (INCHES)																															
	S1A, S12A S1F, S12F		S2A, S6A, S7A, S11A S2F, S6F, S7F, S11F		S3A, S5A, S8A, S10A S3F, S5F, S8F, S10F		S4A, S9A S4F, S9F		S1B, S12B S1E, S12E		S2B, S11B S2E, S11E		S3B, S5B, S8B, S10B S3E, S5E, S8E, S10E		S4B, S9B S4E, S9E		S6B, S7B S6E, S7E		S1C, S12C S1D, S12D		S2C, S11C S2D, S11D		S3C, S5C, S8C, S10C S3D, S5D, S8D, S10D		S4C, S9C S4D, S9D		S6C, S7C S6D, S7D	
	¼℄ ¾L	½L	¼℄ ¾L	½L	¼℄ ¾L	½L	¼℄ ¾L	½L	¼℄ ¾L	½L	¼℄ ¾L	½L	¼℄ ¾L	½L	¼℄ ¾L	½L	¼℄ ¾L	½L	¼℄ ¾L	½L	¼℄ ¾L	½L	¼℄ ¾L	½L	¼℄ ¾L	½L	¼℄ ¾L	½L	¼℄ ¾L	½L
Structural Steel	.01	.01	.02	.03	.02	.03	.02	.03	.20	.28	.33	.46	.33	.46	.33	.46	.33	.46	.35	.49	.37	.52	.37	.52	.37	.52	.37	.52	.37	.52
Concrete Deck Slab	.02	.04	.10	.14	.10	.14	.10	.14	.61	.84	1.08	1.50	1.08	1.50	1.08	1.50	1.08	1.50	1.01	1.41	1.22	1.69	1.22	1.69	1.22	1.69	1.22	1.69	1.22	1.69
Ppt., Rail., 2" Wear. Surf.	.02	.03	.05	.07	.04	.05	.02	.03	.19	.27	.18	.25	.13	.18	.09	.12	.16	.23	.32	.44	.22	.30	.16	.21	.11	.15	.21	.28		
Full Dead Load	.05	.08	.17	.24	.16	.22	.14	.20	1.00	1.39	1.59	2.21	1.54	2.14	1.50	2.08	1.57	2.19	1.68	2.34	1.81	2.51	1.75	2.42	1.70	2.36	1.80	2.49		
Vertical Curve	.16	.20	.16	.20	.16	.20	.16	.20	.86	1.15	.86	1.15	.86	1.15	.86	1.15	.86	1.15	1.19	1.57	1.19	1.57	1.19	1.57	1.19	1.57	1.19	1.57		
Total Camber	-	-	-	-	-	-	-	-	1.86	2.54	2.45	3.36	2.40	3.29	2.36	3.23	2.43	3.34	2.87	3.91	3.00	4.08	2.94	3.99	2.89	3.93	2.99	4.06		

Camber not required when it is less than 1 inch, mill camber to be turned upward.

14"φ CAST IN PLACE CONCRETE PILE

50 ton tappered piles of equivalent cross section and strength will be considered by the Engineer in place of the detail shown

NO.	REVISION	BY	DATE
3			
2			
1			

	BY	DATE
MADE	R.M.L.	3-70
CHECKED	N.F.O.	3-70
IN CHARGE	A.J.C.	

DELAWARE STATE HIGHWAY DEPARTMENT

DELAWARE TURNPIKE

ROUTE 273 INTERCHANGE IMPROVEMENTS

ROUTE 273 BRIDGE OVER DELAWARE TURNPIKE

MISCELLANEOUS DETAILS

HOWARD, NEEDLES, TAMMEN & BERGENDOFF
consulting engineers
NEW YORK KANSAS CITY

SCALE: AS SHOWN

CONTRACT NO. 7060

DWG. NO. 10 OF 10

DELAWARE TURNPIKE	CONT. NO.	TITLE	SHEET NO.	TOTAL SHEETS
	7060		79	115

LEGEND

denotes Boring

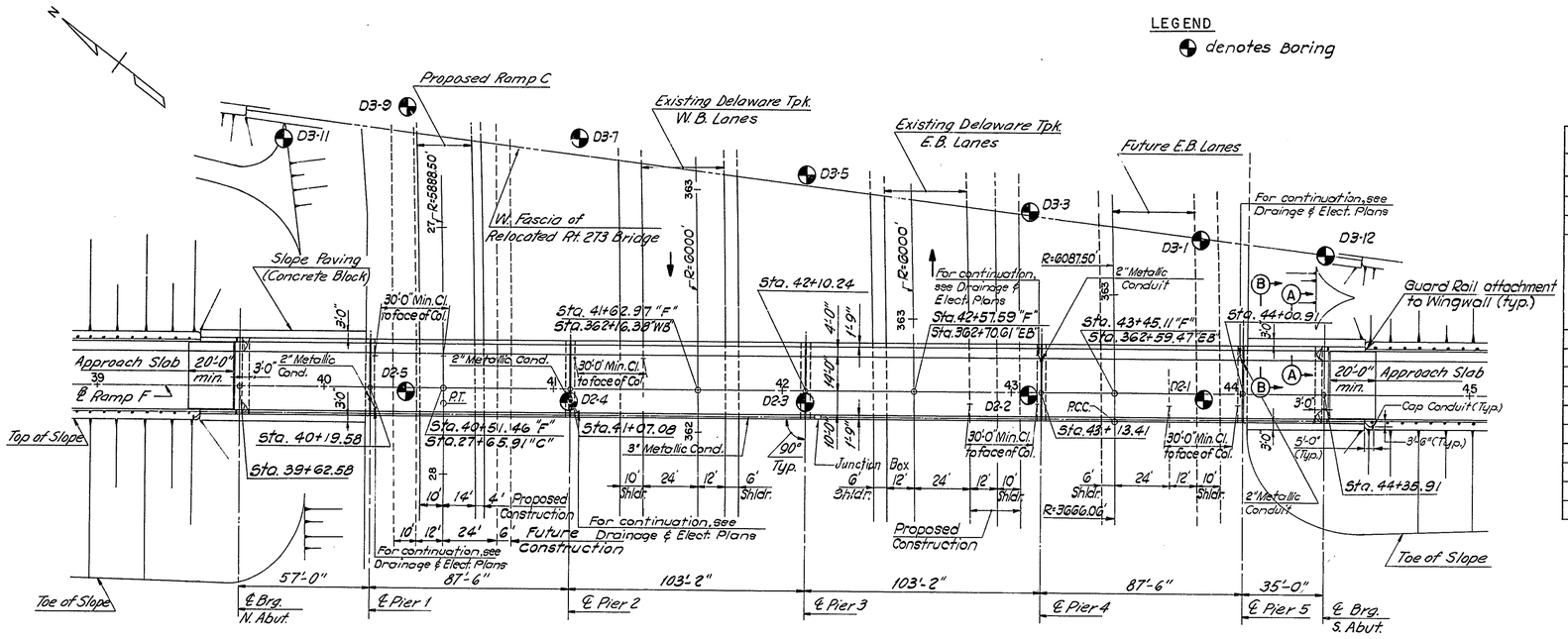

PLAN

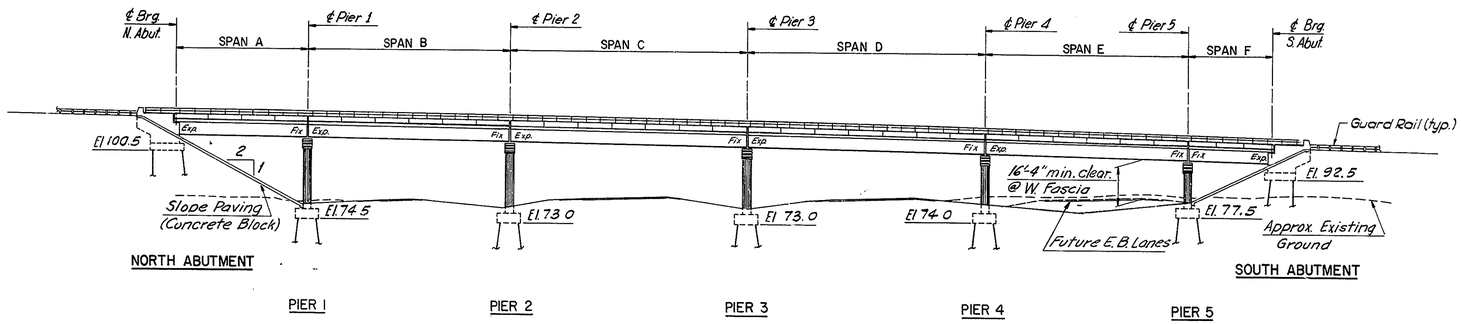

ELEVATION

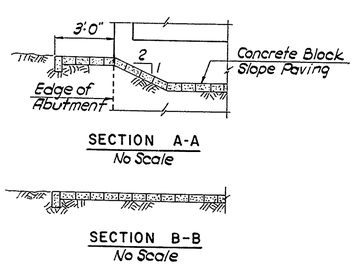

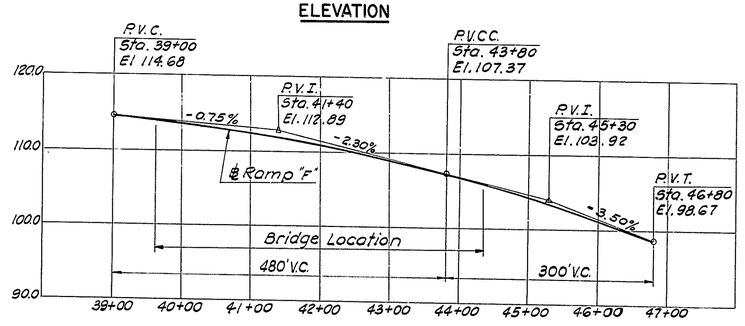

PROFILE
Vertical: 1" = 10'
Horiz. : 1" = 100'

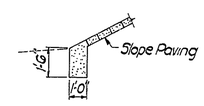

TOE WALL DETAIL
4" = 1'-0"
Include with cost for Slope Paving

ESTIMATED QUANTITIES

ITEM NO.	DESCRIPTION	UNIT	QUANTITY
4	Excavation for Structures	C.Y.	587
7	Select Borrow - Grade A	C.Y.	121
11	Hot-mix, Hot-laid Asphaltic conc. Pvmt.	Tons	197
18	Portland Cement concrete Masonry		
	Footings	C.Y.	249
	Substructure above footing	C.Y.	285
	Superstructure	C.Y.	526
	Approach Slabs	C.Y.	52
19	Superficial Waterproofing	S.Y.	92
20	Bar Reinforcement	Lbs.	170,874
22	Structural Steel (Estimated WT.=503,000#)	L.S.	1
22A	Aluminum Railing - Two Strand	L.F.	997
31	6"ϕ Perf. Corr. Metal-Pipe Underdrain	L.F.	118
35	14"ϕ Cast-in-Place Concrete Piles	L.F.	5,010
	Coal Tar Epoxy Underseal	S.Y.	1,447
	Protective Coating for Concrete	S.F.	1,187
	Slope Paving (Concrete Block)	S.Y.	414

GENERAL NOTES

Construction Specifications: Delaware State Highway Department Standard Specifications dated June 1, 1965 and Special Provisions.

Design Specifications: A.A.S.H.O. Standard Specifications for Highway Bridges dated 1969

Design Live Load: HS20-44

Design Stresses: Concrete fc = 1200 p.s.i. Structural and Reinforcing Steel fs = 20,000 p.s.i.

Concrete:
All exposed edges shall be chamfered 3/4" unless otherwise noted. Concrete cover on reinforcing shall be 2" min. unless otherwise shown in the plans.

Bar Reinforcement: Bar Reinforcement shall be deformed billet-steel bars (A-615) grade 40
All bar laps shall be 30 diameters minimum of the smaller bar spliced, unless noted.
In computing the total length shown for each bent bar, dimension of legs adjoining each bend (not 135° or 180° hooks) were carried to the point of intersection of both legs and no deductions were made for the shorter distance along the curve. The Contractor shall take this fact into consideration when ordering and fabricating bent bars.
The first digit of the bar mark denotes the bar size, i.e. A501 is a No. 5 bar

Structural Steel: Structural Steel shall conform to the requirements of A.S.T.M. Designation A36 except as noted.

Piles: All piles shall be 14" ϕ cast-in-place concrete piles driven to a minimum bearing capacity of 50 tons.

NO.	REVISION	BY	DATE
3			
2			
1			

	BY	DATE
MADE	J. S.	2-70
CHECKED	T.J.Q.	4-70
IN CHARGE	A.J.C.	

DELAWARE STATE HIGHWAY DEPARTMENT

DELAWARE TURNPIKE

ROUTE 273 INTERCHANGE IMPROVEMENTS

RAMP F BRIDGE OVER DELAWARE TURNPIKE

GENERAL PLAN & ELEVATION

HOWARD, NEEDLES, TAMMEN & BERGENDOFF
consulting engineers
NEW YORK KANSAS CITY

SCALE: 1" = 30' & AS SHOWN

CONTRACT NO. 7060

DWG. NO. 1 OF 8

DELAWARE TURNPIKE	CONT. NO.	TITLE	SHEET NO.	TOTAL SHEETS
	7060		80	115

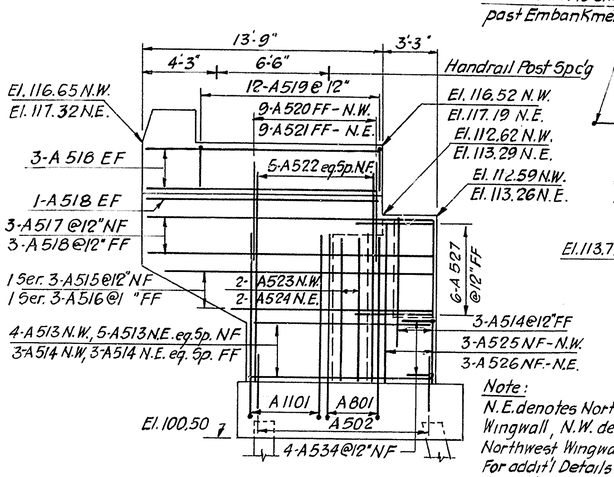

NORTHEAST & NORTHWEST WINGWALL

Note:
N.E. denotes Northeast Wingwall, N.W. denotes Northwest Wingwall.
For addit'l Details & Reinf. see Typical Wingwall Elevation Dwg. No. 3.
Bars are typical for each Wingwall unless otherwise noted.

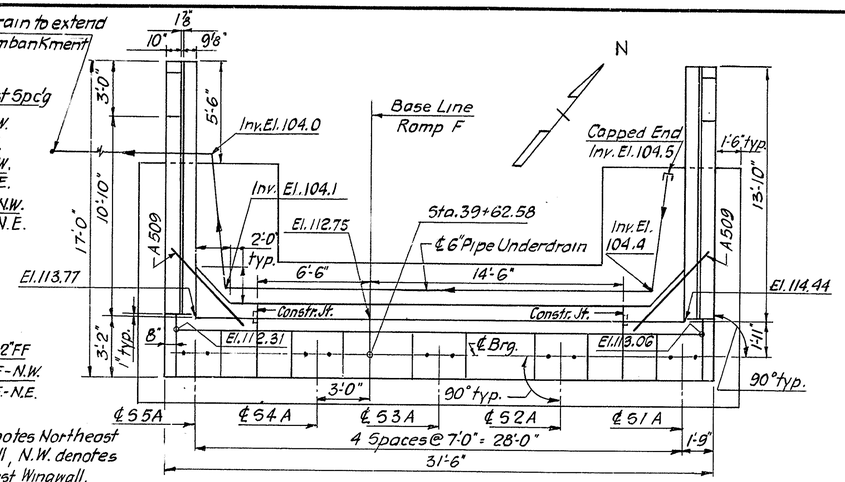

PLAN

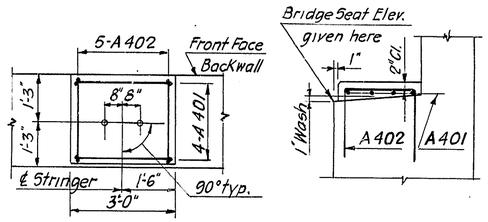

PLAN ELEVATION

TYPICAL PAD DETAILS
½" = 1'-0"

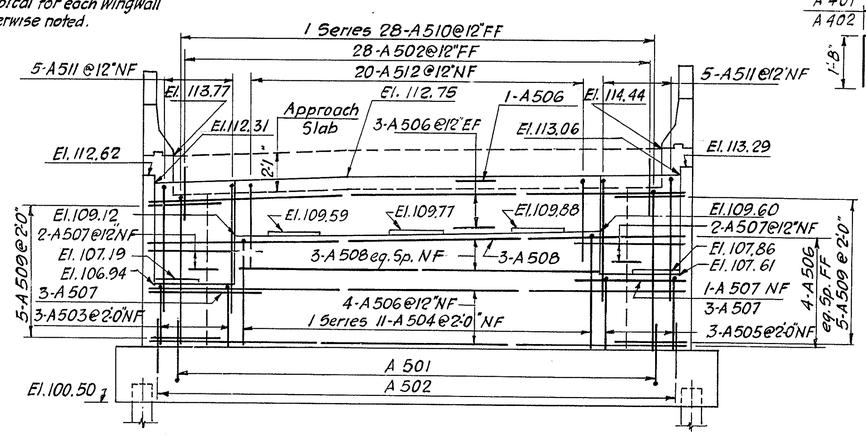

ELEVATION

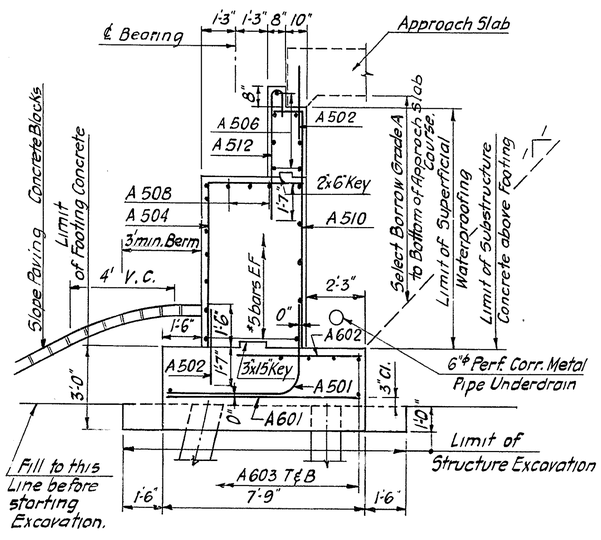

TYPICAL ABUTMENT SECTION
⅜" = 1'-0"

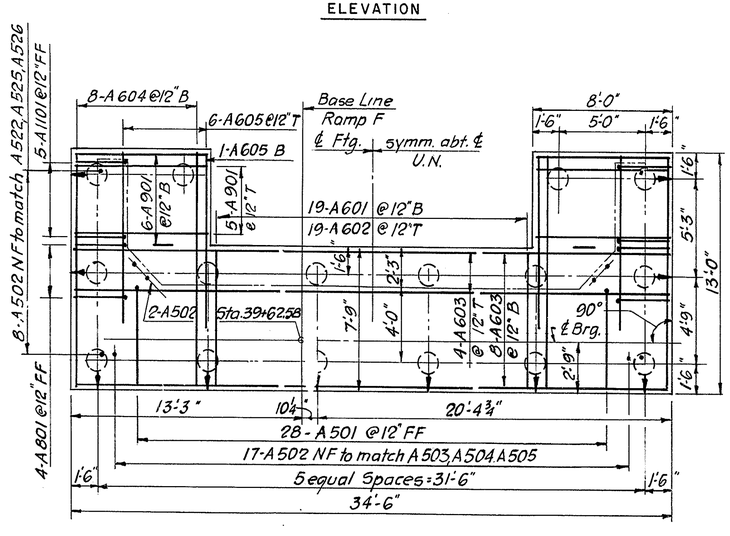

FOOTING & PILE PLAN

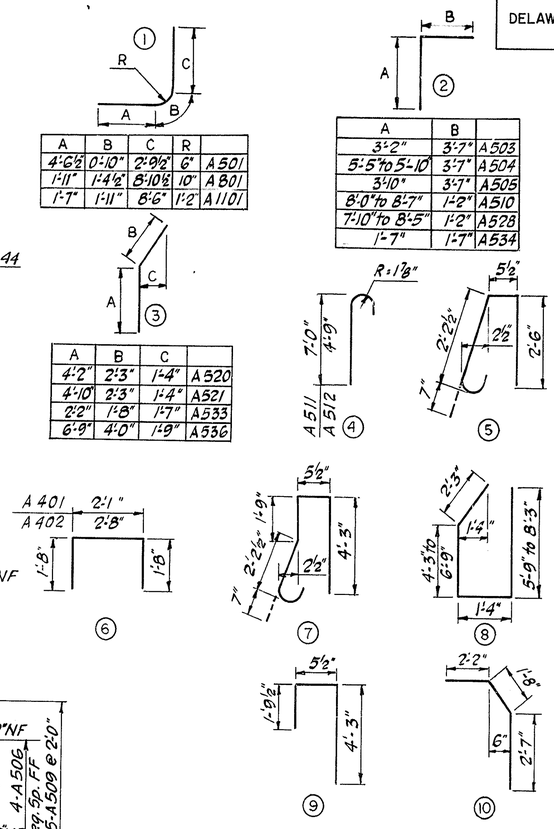

A	B	C	R	
4'-6½"	0'-10"	2'-0½"	6"	A 501
1'-11"	1'-4½"	8'-10½"	10"	A 801
1'-7"	1'-11"	8'-6"	1'-2"	A 1101

A	B	C	
4'-2"	2'-3"	1'-4"	A 520
4'-10"	2'-3"	1'-4"	A 521
2'-2"	1'-8"	1'-7"	A 533
6'-9"	4'-0"	1'-9"	A 536

A	B	
3'-2"	3'-7"	A 503
5'-5" to 5'-10"	3'-7"	A 504
3'-10"	3'-7"	A 505
8'-0" to 8'-7"	1'-2"	A 510
7'-10" to 8'-5"	1'-2"	A 528
1'-7"	1'-7"	A 534

REINFORCING BAR SCHEDULE

MARK	NO. REQUIRED NO. ABUT.	SO. ABUT.	TOTAL	TYPE	LENGTH
A 401	20	20	40	6	5'-5"
A 402	25	25	50	6	6'-0"
A 501	28	28	56	1	8'-2"
A 502	65	65	130	Str.	3'-2"
A 503	3	3	6	2	6'-9"
A 504	1 Ser. 11	1 Ser. 11	22	2	9'-0" to 9'-5"
A 505	3	3	6	2	7'-5"
A 506	15	15	30	Str.	31'-0"
A 507	11	11	22	Str.	6'-8"
A 508	6	6	12	Str.	20'-8"
A 509	16	16	32	Str.	6'-0"
A 510	1 Ser. 28		28	2	9'-2" to 9'-9"
A 511	10	10	20	4	8'-7"
A 512	20	20	40	4	6'-4"
A 513	9	9	18	Str.	10'-8"
A 514	12	12	24	Str.	7'-6"
A 515	2 Ser. 3	2 Ser. 3	12	Str.	11'-9" to 15'-9"
A 516	2 Ser. 3	2 Ser. 3	12	Str.	7'-7" to 12'-7"
A 517	6	6	12	Str.	16'-8"
A 518	22	22	44	Str.	13'-6"
A 519	24	24	48	5	5'-9"
A 520	9	9	18	3	6'-5"
A 521	9	9	18	3	7'-1"
A 522	10	10	20	Str.	12'-7"
A 523	2	2	4	Str.	7'-11"
A 524	2	2	4	Str.	8'-7"
A 525	3	3	6	Str.	8'-11"
A 526	3	3	6	Str.	9'-6"
A 527	12	12	24	Str.	4'-6"
A 528		1 Ser. 28	28	2	9'-0" to 9'-7"
A 529	4	4	8	7	9'-3"
A 530	6	6	12	9	6'-6"
A 531	2 Ser. 6	2 Ser. 6	24	8	13'-7" to 13'-7"
A 532	2	2	4	10	6'-5"
A 533	2	2	4	3	3'-10"
A 534	8	8	16	2	3'-2"
A 535	4	4	8	Str.	2'-6"
A 536	4	4	8	3	10'-9"
A 601	19	19	38	Str.	7'-3"
A 602	19	19	38	Str.	4'-8"
A 603	12	12	24	Str.	34'-0"
A 604	16	16	32	Str.	12'-6"
A 605	14	14	28	Str.	10'-0"
A 801	8	8	16	1	12'-2"
A 901	22	22	44	Str.	7'-6"
A 1101	10	10	20	1	12'-0"

NOTES:
For Substructure Notes see Dwg. No. 3.
For Wall Details and additional reinf. at wall cantilever and End Block see Typical Wingwall Elevation Dwg. No. 3.
For Railing Notes see Dwg. No. 6.

LEGEND
indicates Vertical Pile.
indicates Pile battered 3:12 in direction shown.
Approximate Pile Tip Elevation:
North Abutment + 35.
South Abutment + 40.

NO.	REVISION	BY	DATE
3			
2			
1			

	BY	DATE
MADE	R.M.L.	4-70
CHECKED	L.D.	4-70
IN CHARGE	A.J.C.	

DELAWARE STATE HIGHWAY DEPARTMENT
DELAWARE TURNPIKE
ROUTE 273 INTERCHANGE IMPROVEMENTS
RAMP F BRIDGE OVER DELAWARE TURNPIKE
NORTH ABUTMENT

HOWARD, NEEDLES, TAMMEN & BERGENDOFF
consulting engineers
NEW YORK KANSAS CITY

SCALE: ¼" = 1'-0" U.N.
CONTRACT NO. 7060
DWG. NO. 2 OF 8

DELAWARE TURNPIKE	CONT. NO.	TITLE	SHEET NO.	TOTAL SHEETS
	7060		81	115

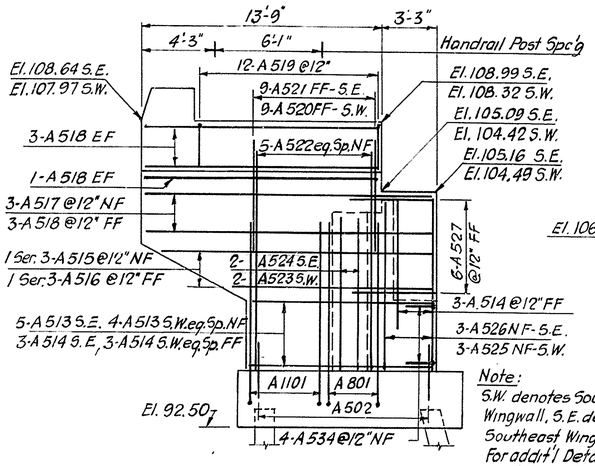

SOUTHEAST & SOUTHWEST WINGWALL

Note:
S.W. denotes Southwest Wingwall, S.E. denotes Southeast Wingwall.
For addit'l Details & Reinf. see typical Wingwall Elevation.
Bars are typical for each Wingwall unless otherwise noted.

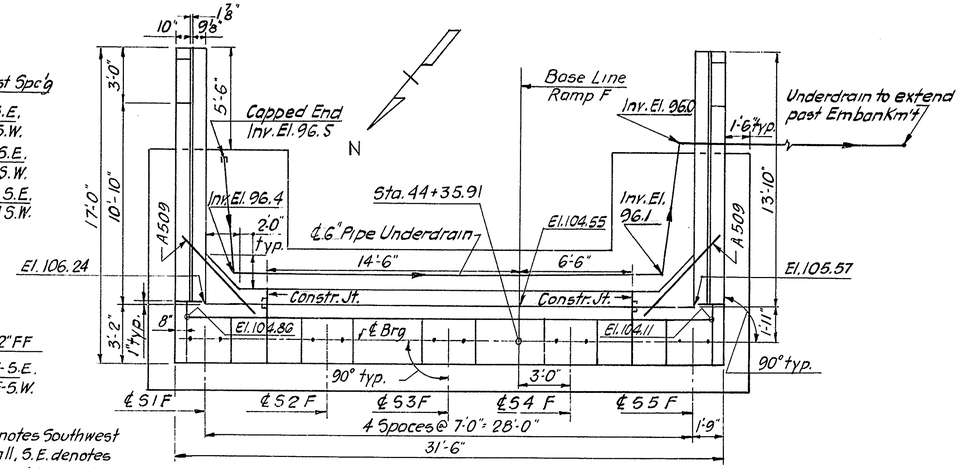

PLAN

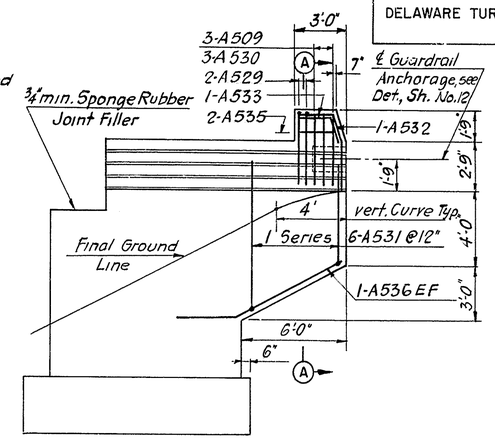

TYPICAL WINGWALL ELEVATION

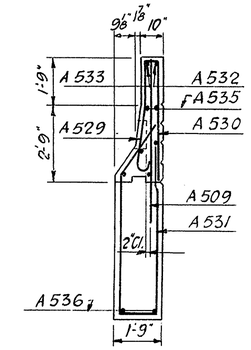

SECTION A-A
3/8" = 1'-0"

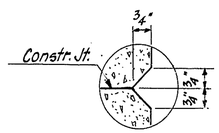

DETAIL A
No Scale

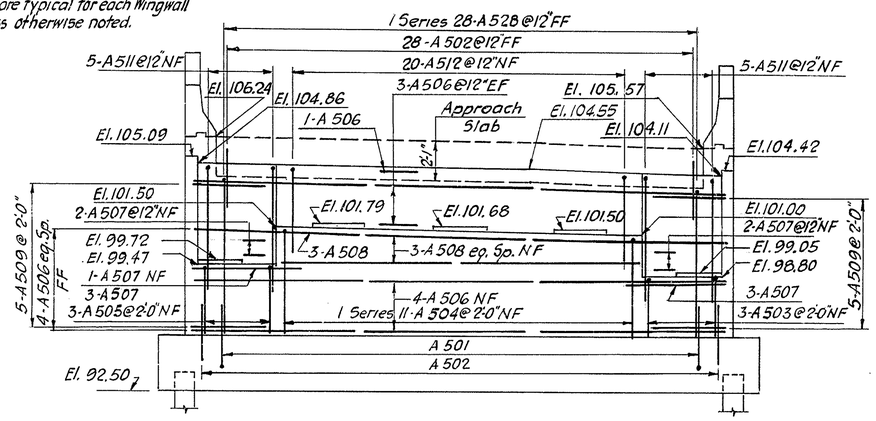

ELEVATION

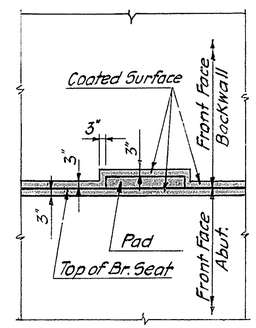

APPLICATION LIMITS OF
EPOXY PROTECTIVE COATING
FOR CONCRETE
No Scale

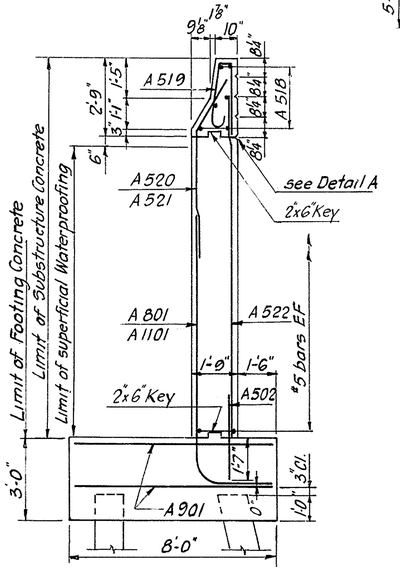

TYPICAL WINGWALL SECTION
3/8" = 1'-0"

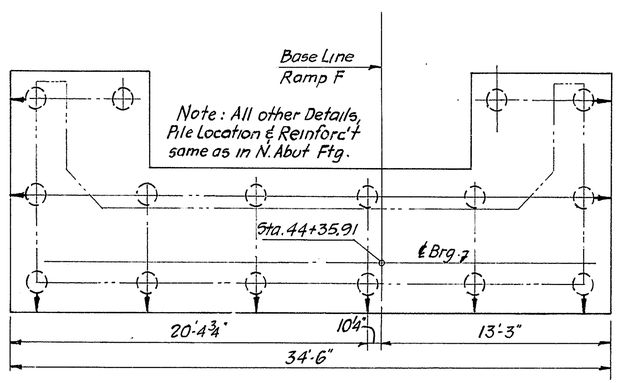

FOOTING & PILE PLAN

SUBSTRUCTURE NOTES:

For General Notes see Dwg. No. 1
NF denotes Near Face.
FF denotes Far Face
EF denotes Each Face.
Minimum Reinf. Steel Cover: 3" in Footing, 2" above Footing.
Pad Elevations given denote Top of finished Concrete Pad.
For Shoes, Anchor Bolts & Pile Details see Dwg. No. 8
Backfill behind Abutments to be placed only after Bridge Deck Slab has been completed.
For Epoxy Protective Coating Limits for Piers see Dwg. No. 4
Work this Dwg. with Dwg. No. 2.

NO.	REVISION	BY	DATE
3			
2			
1			

	BY	DATE
MADE	R.M.L.	4-70
CHECKED	L.D.	4-70
IN CHARGE	A.J.C.	

DELAWARE STATE HIGHWAY DEPARTMENT
DELAWARE TURNPIKE
ROUTE 273 INTERCHANGE IMPROVEMENTS
RAMP F BRIDGE OVER DELAWARE TURNPIKE
SOUTH ABUTMENT

HOWARD, NEEDLES, TAMMEN & BERGENDOFF
consulting engineers
NEW YORK KANSAS CITY

SCALE: 1/4" = 1'-0" U.N.
CONTRACT NO. 7060
DWG. NO. 3 OF 8

DELAWARE TURNPIKE	CONT. NO.	TITLE	SHEET NO.	TOTAL SHEETS
	7060		82	115

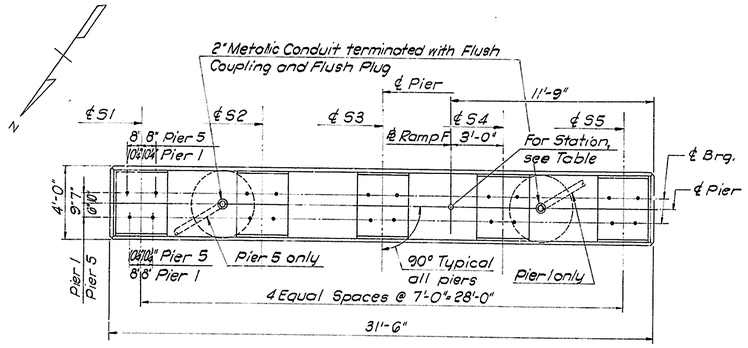

PLAN - PIERS 1 & 5

4" = 1'-0"

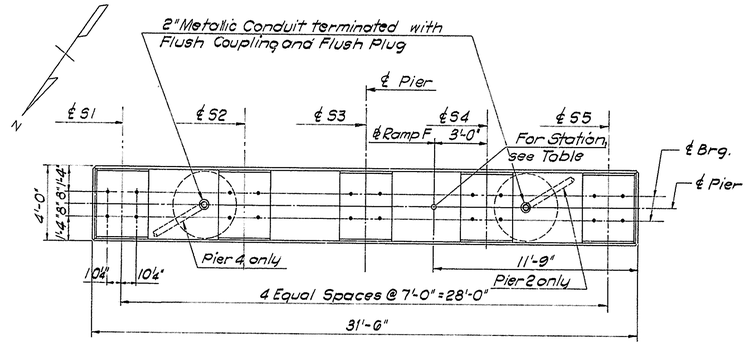

PLAN - PIERS 2, 3 & 4

4" = 1'-0"

PIER	SPAN	STR.	PAD ELEV.	STR.	PAD ELEV.	STR.	PAD ELEV.	STR.	PAD ELEV.	STR.	PAD ELEV.
1	A	S1A	107.32	S2A	107.22	S3A	107.11	S4A	106.93	S5A	106.65
	B	S1B	107.23	S2B	107.13	S3B	107.02	S4B	106.84	S5B	106.56
2	B	S1B	106.19	S2B	106.08	S3B	105.98	S4B	105.80	S5B	105.52
	C	S1C	106.07	S2C	105.96	S3C	105.85	S4C	105.67	S5C	105.40
3	C	S1C	104.51	S2C	104.40	S3C	104.29	S4C	104.11	S5C	103.84
	D	S1D	104.44	S2D	104.32	S3D	104.21	S4D	104.03	S5D	103.77
4	D	S1D	102.54	S2D	102.42	S3D	102.31	S4D	102.13	S5D	101.87
	E	S1E	102.50	S2E	102.39	S3E	102.29	S4E	102.11	S5E	101.83
5	E	S1E	100.62	S2E	100.52	S3E	100.42	S4E	100.24	S5E	99.95
	F	S1F	100.61	S2F	100.55	S3F	100.45	S4F	100.27	S5F	99.94

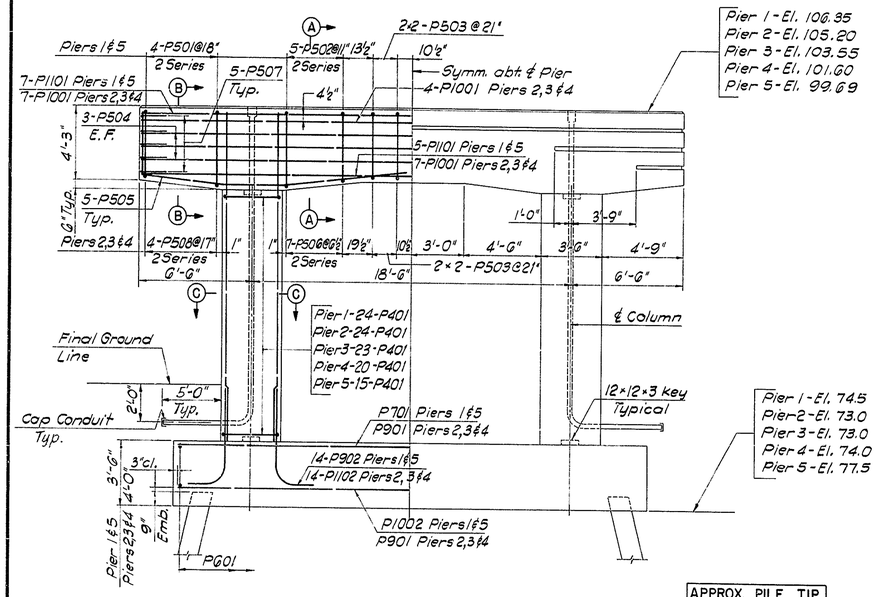

TYPICAL ELEVATION

4" = 1'-0"

APPROX. PILE TIP ELEVATION	
Pier 1	30.0
Pier 2	32.0
Pier 3	32.0
Pier 4	32.0
Pier 5	40.0

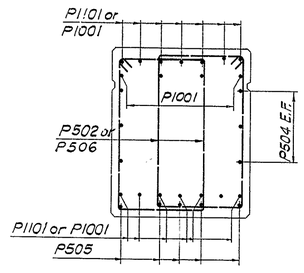

SECTION A - A

½" = 1'-0"

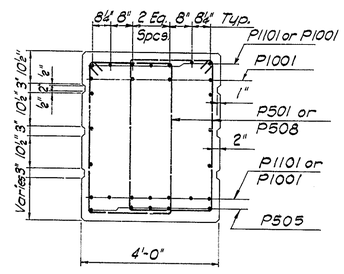

SECTION B - B

½" = 1'-0"

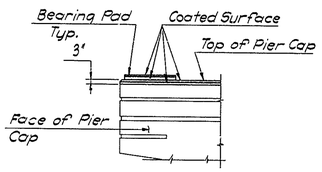

APPLICATION LIMITS OF EPOXY PROTECTIVE COATING FOR CONCRETE

REINFORCING BAR SCHEDULE							
MARK	PIER NO. 1	2	3	4	5	TYPE	LENGTH
P401	48	48	46	40	30	6	11'-1"
P402	12	12	12	12	12	3	7'-0"
P403	12	12	12	12	12	2	7'-8"
P404	8	8	8	8	8	3	6'-2"
P405	8	8	8	8	8	2	6'-10"
P501	16	—	—	—	16	4	13'-3" to 14'-3"
P502	20	—	—	—	20	4	13'-6" to 14'-3"
P503	8	8	8	8	8	4	13'-3"
P504	6	6	6	6	6	Str.	31'-2"
P505	10	10	10	10	10	5	18'-2"
P506	—	28	28	28	—	4	13'-7" to 14'-3"
P507	10	10	10	10	10	2	6'-10"
P508	—	16	16	16	—	4	13'-2" to 14'-3"
P601	65	63	63	63	65	Str.	8'-6"
P701	9	—	—	—	9	Str.	27'-0"
P901	—	20	20	20	—	Str.	27'-0"
P902	28	—	—	—	28	1	7'-0"
P903	28	—	—	—	—	Str.	27'-11"
P904	—	—	—	—	28	Str.	18'-3"
P1001	—	18	18	18	—	Str.	31'-2"
P1002	10	—	—	—	10	Str.	27'-0"
P1101	12	—	—	—	12	Str.	31'-2"
P1102	—	28	28	28	—	1	8'-7"
P1103	—	28	—	—	—	Str.	27'-9"
P1104	—	—	28	—	—	Str.	26'-1"
P1105	—	—	—	28	—	Str.	23'-2"

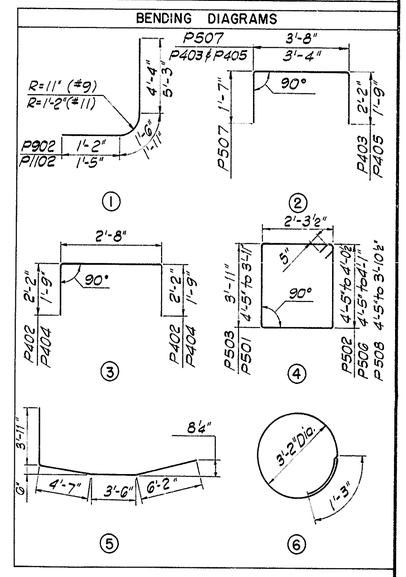

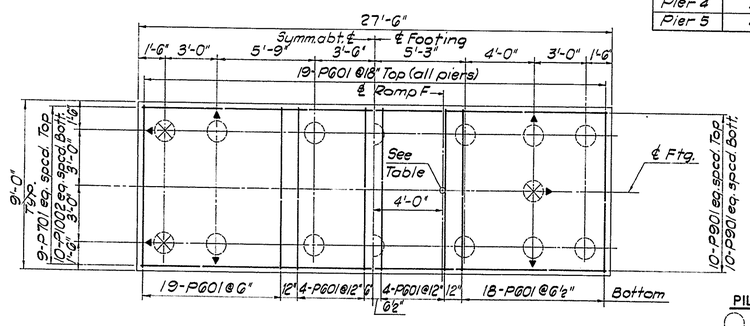

PIERS 1 & 5 PIERS 2,3 & 4

FOOTING PLAN

4" = 1'-0"

PIER	STATION
1	40+19.58
2	41+07.08
3	42+10.24
4	43+13.41
5	44+00.91

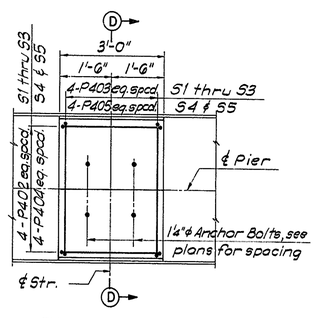

TYPICAL PAD PLAN

½" = 1'-0"

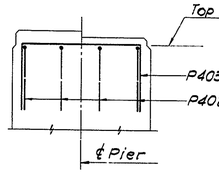

SECTION D - D

½" = 1'-0"

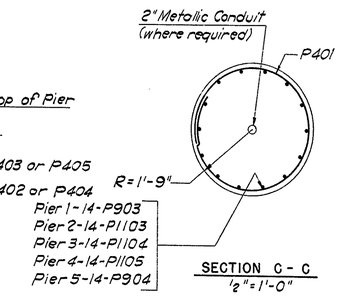

SECTION C - C

½" = 1'-0"

PILE LEGEND:

- ○ Indicates vertical piles
- ○→ Indicates piles battered 2:12 in the direction shown
- ⊗→ Indicates piles battered 3:12 in the direction shown

NOTE:

For Substructure Notes see Dwg. No. 3

NO.	REVISION	BY	DATE
3			
2			
1	Pad Elev. due to flange ℄ change on Dwg. No. 5	JR	9-70

	BY	DATE
MADE	J.A.L.	3-70
CHECKED	Jn.R.	4-70
IN CHARGE	A.J.C.	

DELAWARE STATE HIGHWAY DEPARTMENT

DELAWARE TURNPIKE

ROUTE 273 INTERCHANGE IMPROVEMENTS

RAMP F BRIDGE OVER DELAWARE TURNPIKE

PIERS 1 THRU 5

HOWARD, NEEDLES, TAMMEN & BERGENDOFF
consulting engineers
NEW YORK KANSAS CITY

SCALE: AS SHOWN

CONTRACT NO. 7060

DWG. NO. 4 OF 8

DELAWARE TURNPIKE	CONT. NO.	TITLE	SHEET NO.	TOTAL SHEETS
	7060		83	115

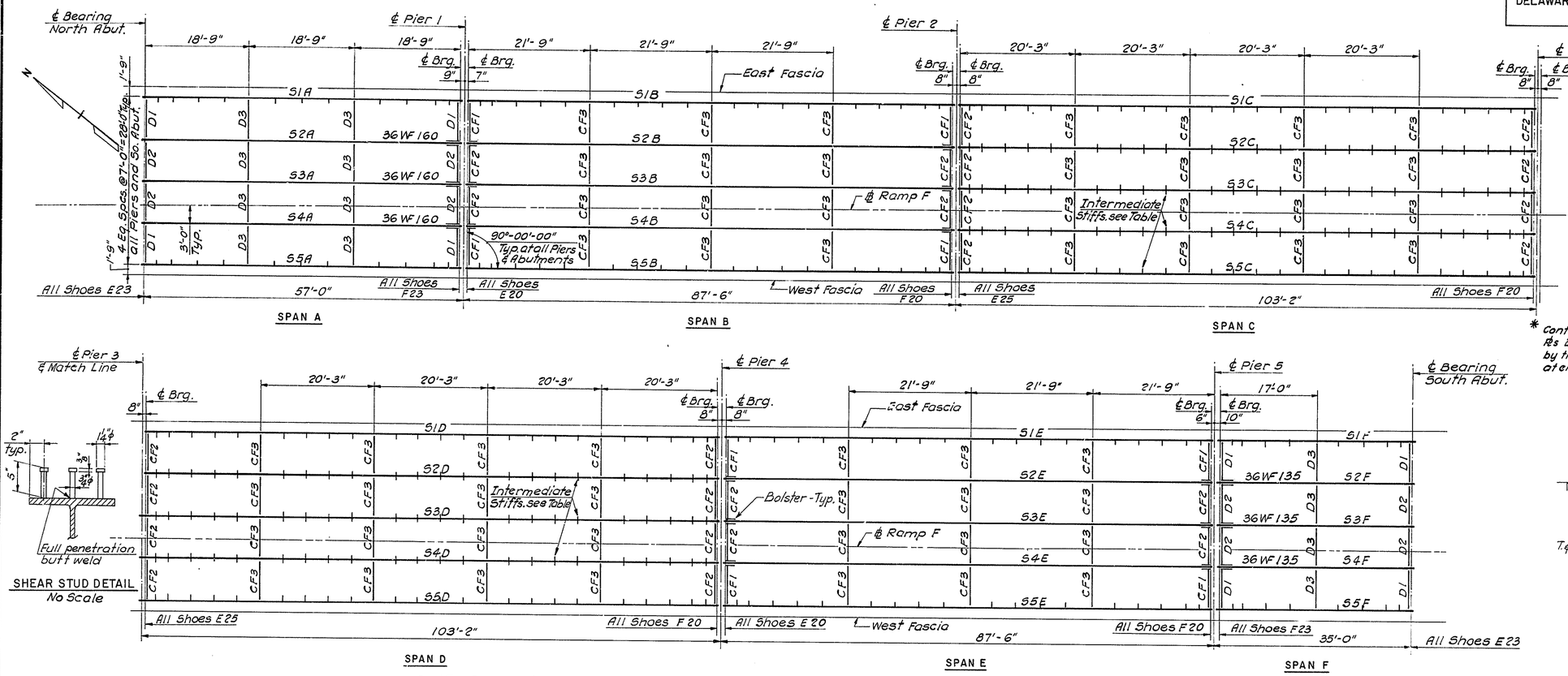

FRAMING PLAN
1" = 10"

** Contractor elected to use full length ℔s. B1 and eliminate ℔s. B2

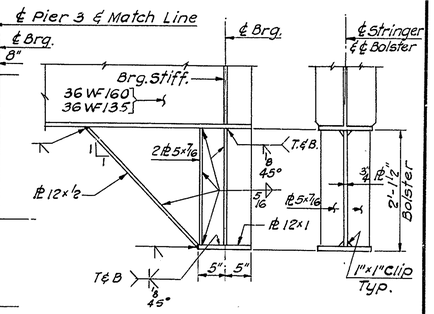

STR. S2A TO S4A & S2F TO S4F
Bolster at Pier end only

* Contractor elected to use full length ℔s B1 and eliminate ℔s B2. The original height of bolster shown, was reduced by the amount of increased bottom flange thickness at ends.

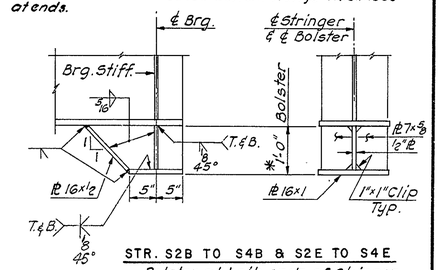

STR. S2B TO S4B & S2E TO S4E
Bolster at both ends of Stringer

BOLSTER DETAILS
3/4" = 1'-0"

SHEAR STUD DETAIL
No Scale

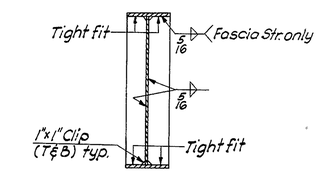

INTERMEDIATE STIFFENER DETAIL
No Scale

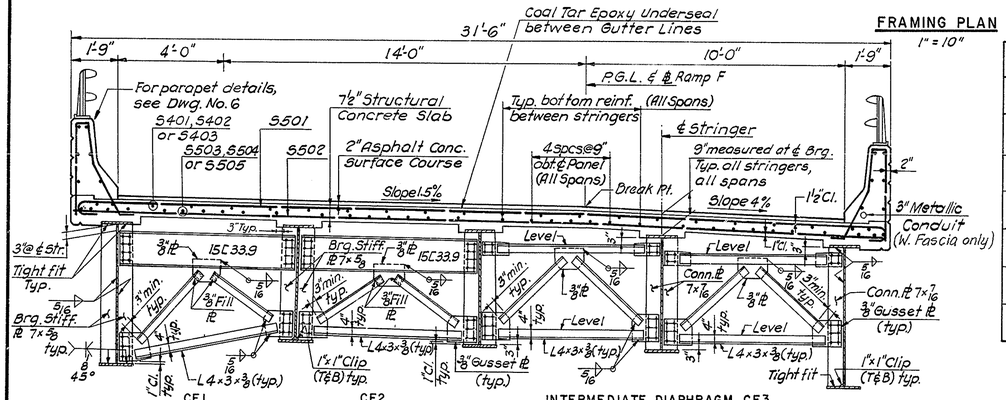

CROSS SECTION - SPAN B & E
SPAN C & D SIMILAR
3/8" = 1'-0"

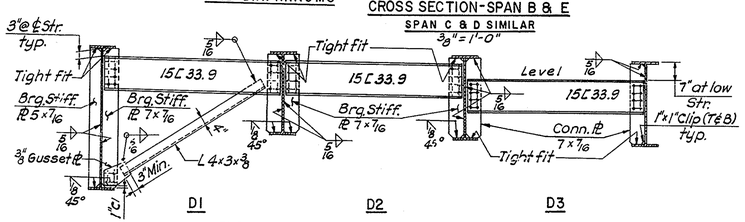

STRINGER TABLE

Span	Stringer	Length L ℄ Brg. to ℄ Brg.	Bearing Stiffeners	Interm. Stiffeners	Web ℔	℔ T1	** ℔ B1	** ℔ B2	Shear Stud Spacing "A" (Inches)
A	S1A & S5A	56'-3"	1 ℔s 5x7/16; 1 ℔ 7x7/16	℔ 5x3/8	60x3/8	12x3/4 F.L.	12x3/4 F.L.	—	24
	S2A to S4A	56'-3"	2 ℔s 7x7/16	—	—	—	—	—	14
B	S1B & S5B	86'-3"	2 ℔s 7x5/8	℔ 7x1/2	60x3/8	14x3/4 F.L.	16x1x45'-0"	16x5/8	24
	S2B to S4B	86'-3"		—	48x1/2	14x3/4 F.L.	16x1 1/2x45'-6"	16x1	20
C	S1C & S5C	101'-10"		℔ 7x1/2	60x3/8	14x7/8 F.L.	16x1 3/8x55'-3"	16x7/8	24
	S2C to S4C	101'-10"					16x1 1/2x55'-3"	16x1	
D	S1D & S5D	101'-10"					16x1 3/8x55'-3"	16x7/8	
	S2D to S4D	101'-10"				14x7/8 F.L.	16x1 1/2x55'-3"	16x1	
E	S1E & S5E	86'-4"		℔ 7x1/2	60x3/8	14x3/4 F.L.	16x1x45'-0"	16x5/8	24
	S2E to S4E	86'-4"	2 ℔s 7x5/8	—	48x1/2	14x3/4 F.L.	16x1 1/2x45'-6"	16x1	20
F	S1F & S5F	34'-2"	2 ℔s 7x7/16	℔ 5x3/8	60x3/8	12x3/4 F.L.	12x3/4 F.L.	—	None Req'd
	S2F to S4F	34'-2"	1 ℔s 5x7/16; 1 ℔ 7x7/16	—	—	—	—	—	None Req'd

F.L. denotes Full Length

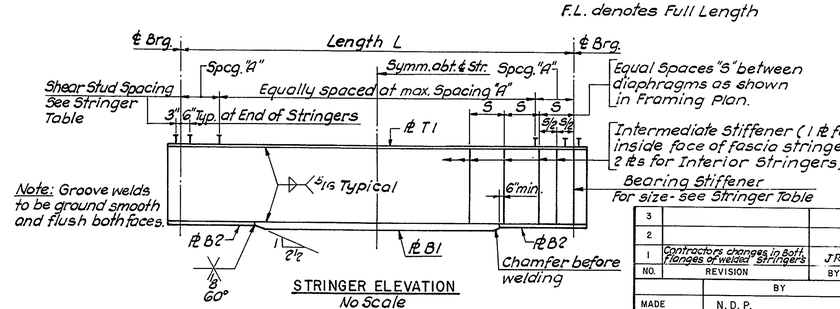

STRINGER ELEVATION
No Scale

NOTES:

For Structural Steel Notes & Misc. Details, see Dwg. No. 8.
For Concrete Deck, see Dwg. No. 6.
For Joint Details, see Dwg. No. 7.

NO.	REVISION	BY	DATE
3			
2			
1	Contractors changes in Salt Flanges of welded stringers	J.R	9-70

	BY	DATE
MADE	N. D. P.	3-70
CHECKED	M. T.	4-70
IN CHARGE	A. J. C.	

DELAWARE STATE HIGHWAY DEPARTMENT
DELAWARE TURNPIKE
ROUTE 273 INTERCHANGE IMPROVEMENTS
RAMP F BRIDGE OVER DELAWARE TURNPIKE
FRAMING PLAN & CROSS SECTION

HOWARD, NEEDLES, TAMMEN & BERGENDOFF
consulting engineers
NEW YORK KANSAS CITY

SCALE: AS SHOWN
CONTRACT NO. 7060
DWG. NO. 5 OF 8

DELAWARE TURNPIKE	CONT. NO.	TITLE	SHEET NO.	TOTAL SHEETS
	7060		84	115

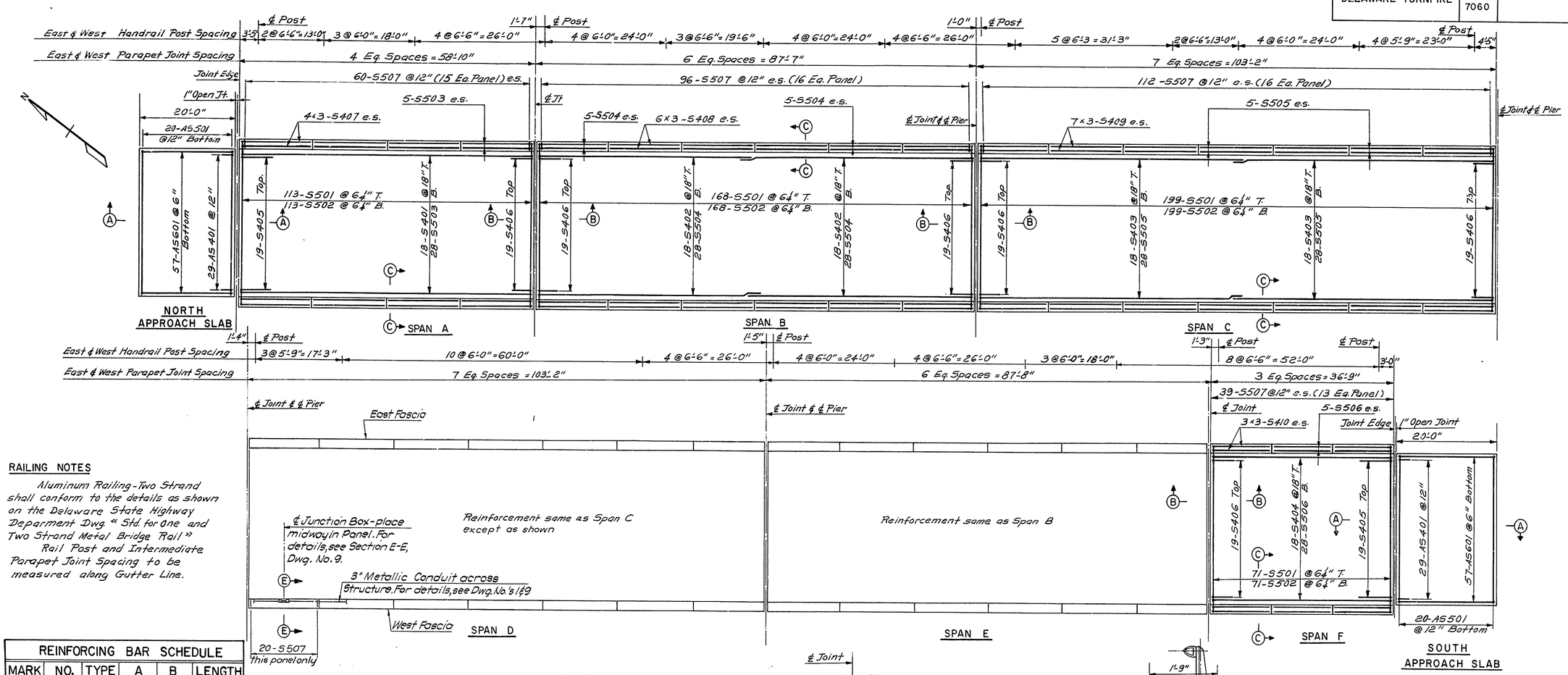

RAILING NOTES

Aluminum Railing-Two Strand shall conform to the details as shown on the Delaware State Highway Deparment Dwg. "Std. for One and Two Strand Metal Bridge Rail"

Rail Post and Intermediate Parapet Joint Spacing to be measured along Gutter Line.

REINFORCING BAR SCHEDULE

MARK	NO.	TYPE	A	B	LENGTH
DECK SLAB					
S401	18	Str.			58'-6"
S402	72	Str.			44'-2"
S403	72	Str.			52'-0"
S404	18	Str.			36'-5"
S405	38	1	6'-0"	0'-8"	6'-8"
S406	190	1	4'-0"	0'-8"	4'-8"
S407	48	Str.			14'-2"
S408	144	Str.			14'-3"
S409	168	Str.			14'-5"
S410	36	Str.			11'-11"
S501	918	2	31'-2"	0'-7"	32'-4"
S502	918	Str.			31'-2"
S503	38	Str.			58'-6"
S504	152	Str.			44'-2"
S505	152	Str.			52'-0"
S506	38	Str.			36'-5"
S507	1034	3			8'-3"
APPROACH SLAB					
A5401	58	4			5'-9"
A5501	52	Str.			27'-8"
A5601	114	2	19'-8"	0'-8"	21'-0"

BENDING DIAGRAMS

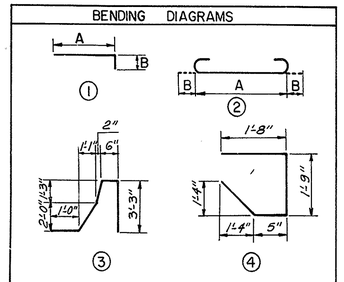

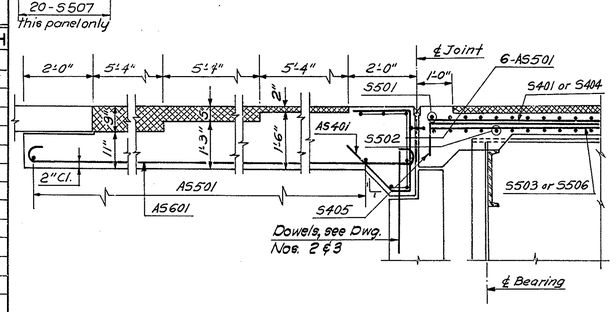

SECTION A-A
6" = 1'-0"

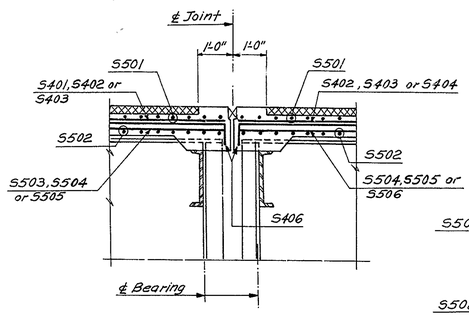

SECTION B-B
6" = 1'-0"

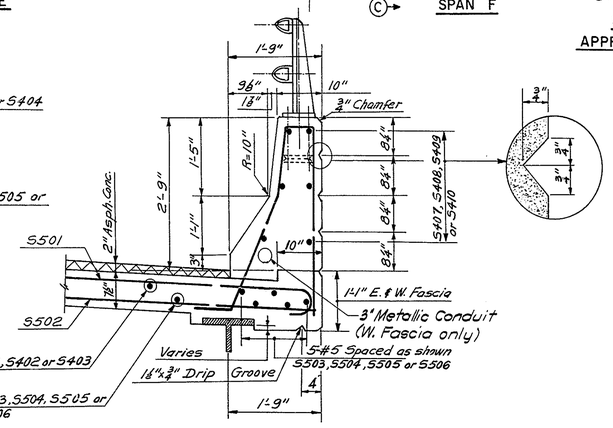

SECTION C-C
¾" = 1'-0"

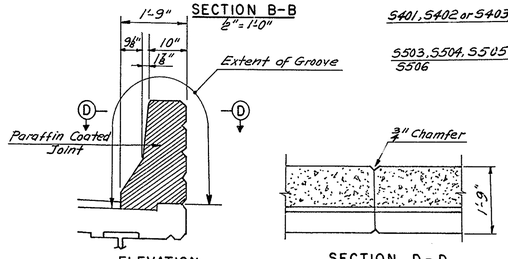

ELEVATION

SECTION D-D

INTERMEDIATE PARAPET JOINT
6" = 1'-0"

NOTES

For General Notes, see Dwg. No. 1
T. denotes top.
B. denotes bottom.
e.s. denotes each side.
For Joint details see Dwg. No. 7.
For location of top and bottom longitudinal bars between stringers see Cross Section Dwg. No. 5.

NO.	REVISION	BY	DATE
3			
2			
1			

	BY	DATE
MADE	V.Y.	3-70
CHECKED	J.A.E.	4-70
IN CHARGE	A.J.C.	

DELAWARE STATE HIGHWAY DEPARTMENT

DELAWARE TURNPIKE

ROUTE 273 INTERCHANGE IMPROVEMENTS
RAMP F BRIDGE OVER DELAWARE TURNPIKE
CONCRETE DECK & APPROACH SLABS

HOWARD, NEEDLES, TAMMEN & BERGENDOFF
consulting engineers
NEW YORK KANSAS CITY

SCALE: 1" = 10' & AS SHOWN
CONTRACT NO. 7060
DWG. NO. 6 OF 8

DELAWARE TURNPIKE	CONT. NO.	TITLE	SHEET NO.	TOTAL SHEETS
	7060		85	115

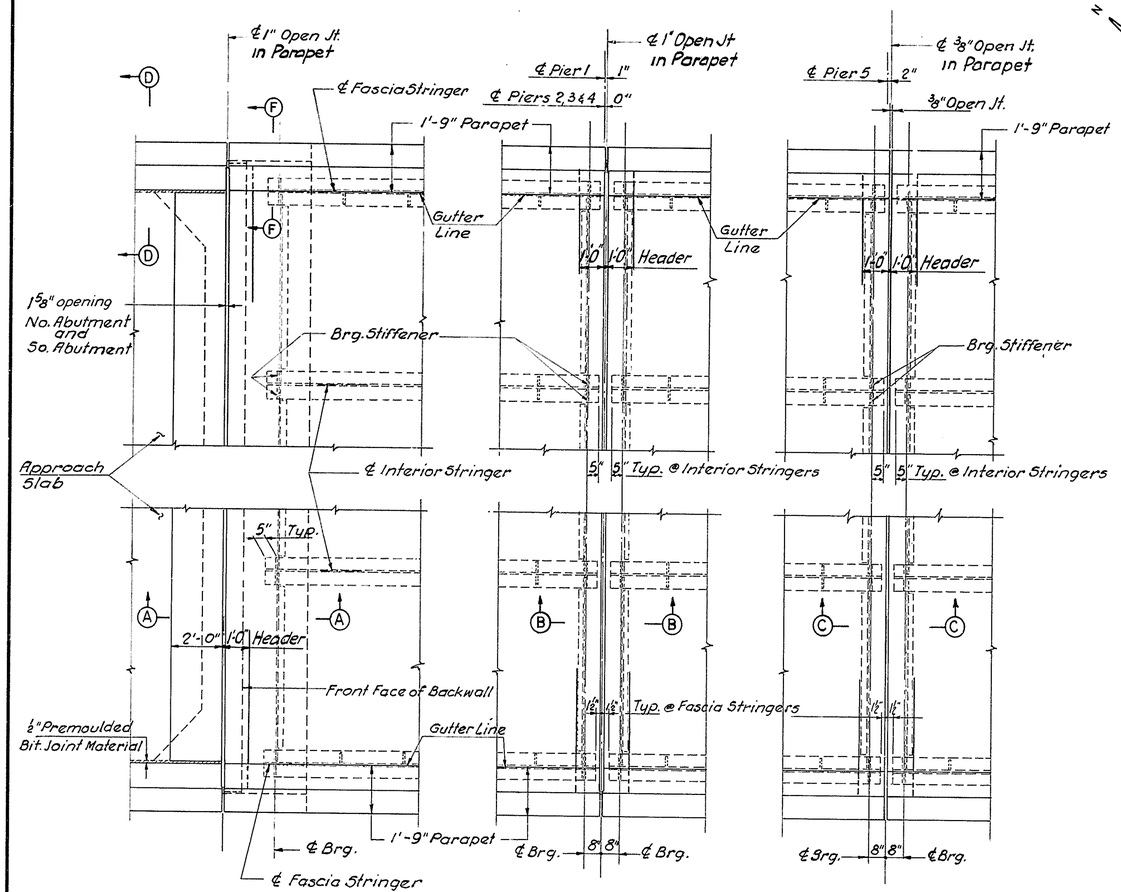

PLAN NORTH ABUTMENT
South Abutment similar

PLAN PIER 1 TO 4

PLAN PIER 5

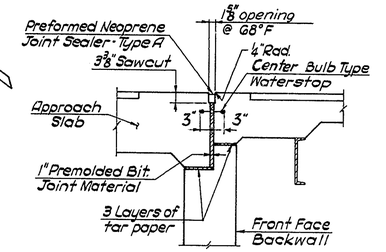

SECTION A-A
½" = 1'-0"

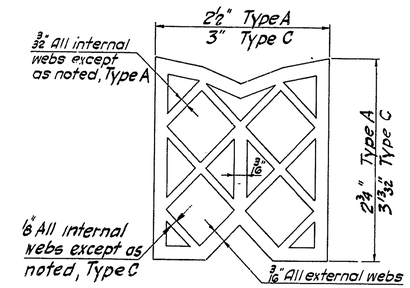

TYPE A & TYPE C

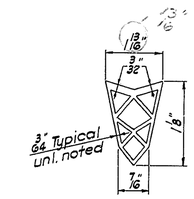

TYPE B

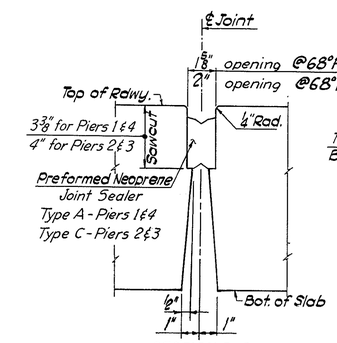

SECTION B-B
3" = 1'-0"

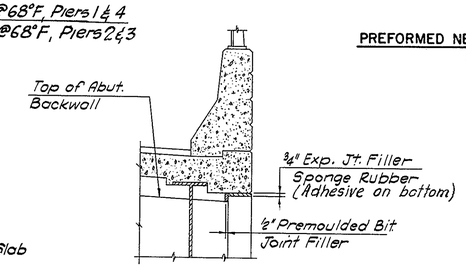

SECTION F-F
½" = 1'-0"
(Typ. at all Abut. corners)

PREFORMED NEOPRENE JOINT SEALER
No Scale

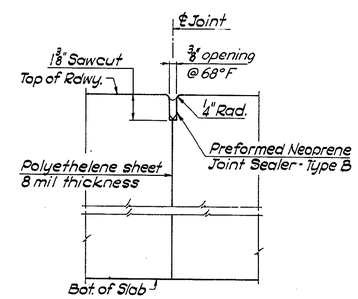

SECTION C-C
3" = 1'-0"

NOTES:

Any changes in the shape or dimensions of preformed neoprene joint sealer must be approved by the Engineer.
The minimum thicknes of any web shall not be less than as specified.
The sealer shall be supplied in one piece for the full width of each joint. One shop splice will be permitted for lengths in excess of 50 feet.
It is absolutely essential that the joint openings in slabs be sawcut accurately to smooth straight lines.
The size of the opening shall be adjusted to allow for the temperature at the time of construction.
The joints shall be thoroughly cleaned. The sealer shall be installed by suitable machine tools only and thoroughly secured in place with a lubricant which shall cover both sides of the sealer over the full area in contact with the sides of the joint.
Cost of joints to be included in the price bid for the item "Portland Cement Concrete Masonry - Superstructure."

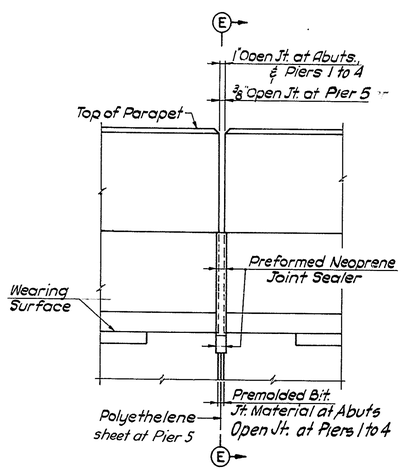

SECTION ALONG GUTTER LINE
1½" = 1'-0"

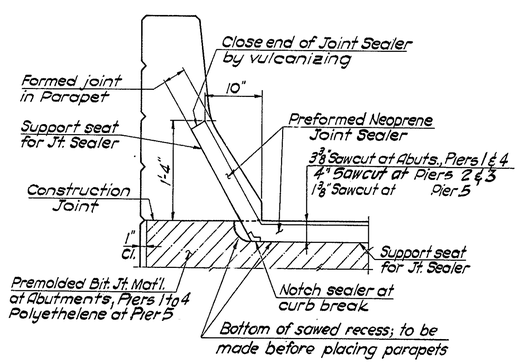

SECTION E-E
1½" = 1'-0"

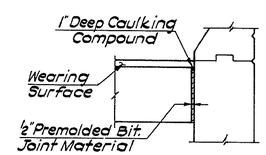

SECTION D-D
½" = 1'-0"

NO.	REVISION	BY	DATE
3			
2			
1			

	BY	DATE
MADE	J. D.	3 - 70
CHECKED	N.F.O.	4 - 70
IN CHARGE	A.J.C.	

DELAWARE STATE HIGHWAY DEPARTMENT

DELAWARE TURNPIKE

ROUTE 273 INTERCHANGE IMPROVEMENTS

RAMP F BRIDGE OVER DELAWARE TURNPIKE

JOINT DETAILS

HOWARD, NEEDLES, TAMMEN & BERGENDOFF
consulting engineers
NEW YORK KANSAS CITY

SCALE: 3/8" = 1'-0" AS SHOWN

CONTRACT NO. 7060

DWG. NO. 7 OF 8

DELAWARE TURNPIKE	CONT. NO.	TITLE	SHEET NO.	TOTAL SHEETS
	7060		86	115

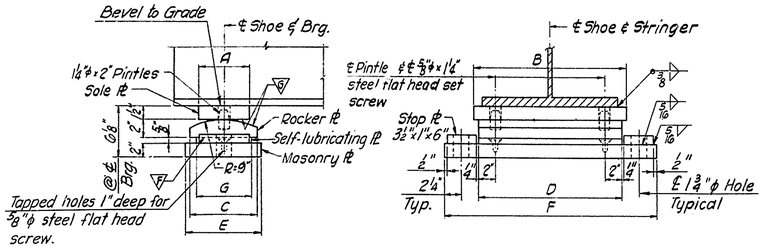

SIDE ELEVATION — END ELEVATION

EXPANSION SHOE

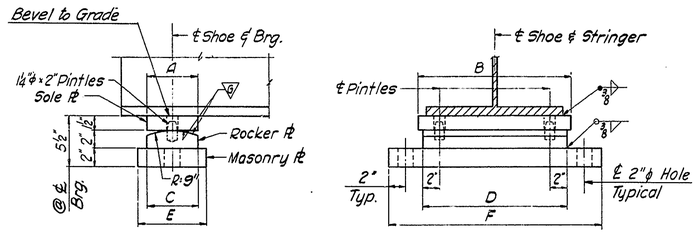

SIDE ELEVATION — END ELEVATION

FIXED SHOE

SHOE	DIMENSIONS						
	A	B	C	D	E	F	G
E20	6"	1'-5½"	7½"	1'-4½"	8½"	2'-1"	6"
E23	6"	1'-1"	7½"	1'-0"	8"	1'-8½"	6"
E25	6"	1'-5½"	9"	1'-4½"	9½"	2'-1"	7"
F20	6"	1'-5½"	6"	1'-4½"	7"	2'-0½"	
F23	6"	1'-1"	6"	1'-0"	7"	1'-8"	

STRUCTURAL STEEL NOTES:

For General Notes, see Dwg. No. 1
⅞"φ High Strength Bolts to be used for all bolted connections.
Shear Stud spacing shown is maximum spacing.
All Stiffeners, Connection Plates and end of stringers shall be truly vertical in erected position.
A fully butt-welded shop web splice may be used for built-up stringers. The splice location and details subject to the approval of the Engineer.
Unless otherwise shown all welding shall comply with current "Specifications for Welded Highway and Railway Bridges" of the American Welding Society.

SHOE NOTES:

Material for shoes (exclusive of self-lubricating plates), shall be structural steel conforming to the requirements of A.S.T.M. Specifications A242 and shall have an atmospheric corrosion resistance equal to a min. of four times that of A.S.T.M.-A 36 steel.

Top of masonry plates, bottom of rocker plates and top and bottom of sole plates shall be planed, straightened or otherwise treated to secure true level surfaces.

Contact surfaces noted on the plans with finish symbols shall be finished in accordance with the Standards of the Association of Iron and Steel Engineers to the class of finish prescribed.

The plates comprising the expansion shoes shall be set so as to be truly centered under full dead load at a temperature of 68°F.

Concrete pads shall be formed integral with pier or abutment and not less than ⅛" nor more than ¼" above finished elevation. Dress down pads by rubbing, grinding, or as otherwise approved by the Engineer, to true level surfaces at the finished elevation.

Anchor bolts, hexagon nuts and washers shall be hot dipped galvanized conforming to ASTM A153

Templates shall be used to accurately set the anchor bolts.

ROCKER SHOE DETAILS
1½"=1'-0"

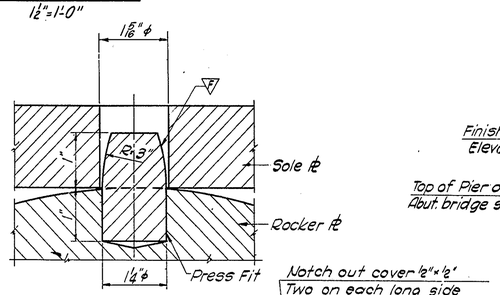

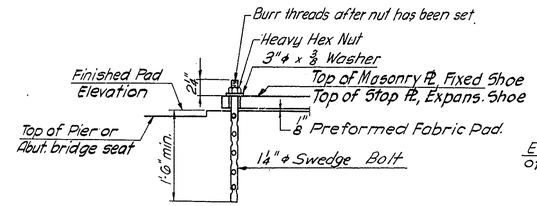

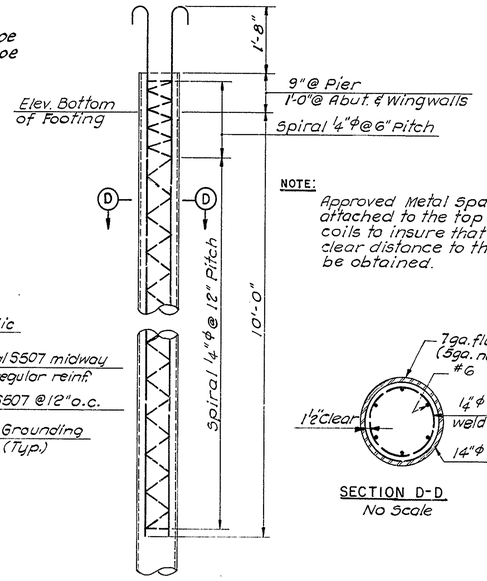

NOTE:
Approved Metal Spacers shall be attached to the top and bottom coils to insure that the minimum clear distance to the shell will be obtained.

PINTLE DETAIL
¾"=1"

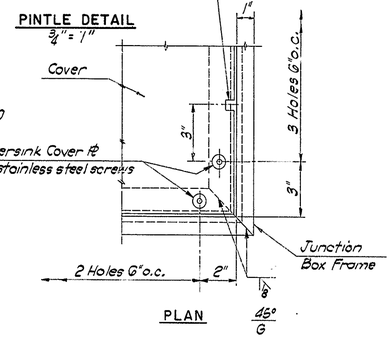

PLAN

ANCHOR BOLT DETAIL
No Scale

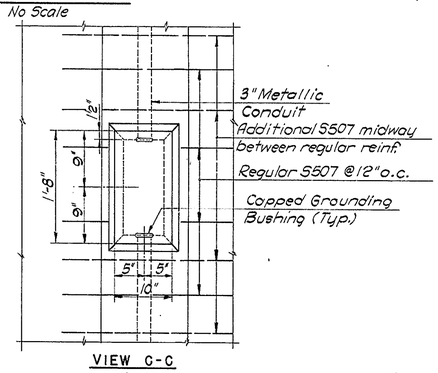

VIEW C-C
1"=1'-0"

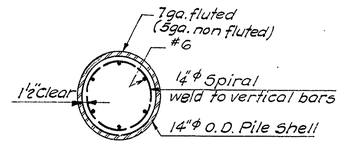

SECTION D-D
No Scale

14"φ CAST IN PLACE CONCRETE PILE
No Scale

Note:
50 Ton tapered piles of equivalent cross section and strength will be considered by the Engineer in place of the detail shown.

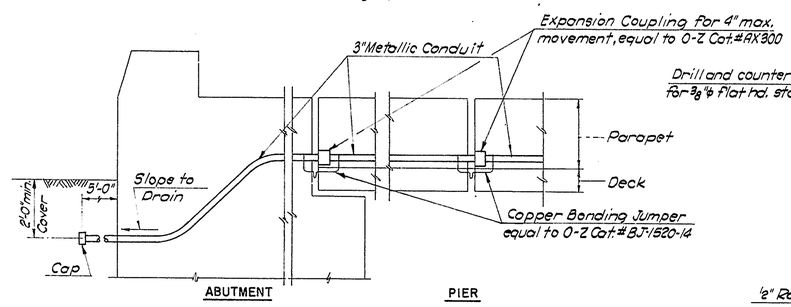

JOINT DETAILS FOR CONDUIT IN WEST FASCIA
No Scale

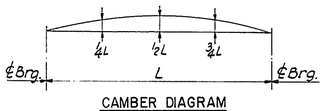

CAMBER DIAGRAM

Stringer	CAMBER (INCHES)															
	S1A, S5A		S2A to S4A		S1B, S5A S1E, S5E		S2B to S4B S2E to S4E		S1C, S5C S1D, S5D		S2C to S4C S2D to S4D		S1F, S5F		S2F to S4F	
	¼ & ¾L	½L	¼ & ¾L	½L	¼ & ¾L	½L	¼ & ¾L	½L	¼ & ¾L	½L	¼ & ¾L	½L	¼ & ¾L	½L	¼ & ¾L	½L
Structural Steel	.04	.05	.10	.14	.20	.27	.32	.45	.34	.48	.36	.50	.01	.01	.02	.02
Concrete Deck Slab	.13	.19	.40	.56	.61	.85	1.03	1.43	.96	1.32	1.13	1.58	.02	.03	.07	.11
Ppt. Rail, & 2" Wear. Surf.	.04	.05	.08	.11	.17	.24	.19	.26	.26	.36	.23	.31	.01	.02	.04	.05
Full Dead Load	.21	.29	.58	.81	.98	1.36	1.54	2.14	1.56	2.16	1.72	2.38	.04	.06	.13	.18
Vertical Curve	.12	.16	.12	.16	.28	.36	.28	.36	.40	.50	.40	.50	.06	.07	.06	.07
Total Camber	–	–	–	–	1.26	1.72	1.82	2.50	1.96	2.66	2.12	2.89	–	–	–	–

Camber not required when it is less than 1 inch, mill camber to be turned upward.

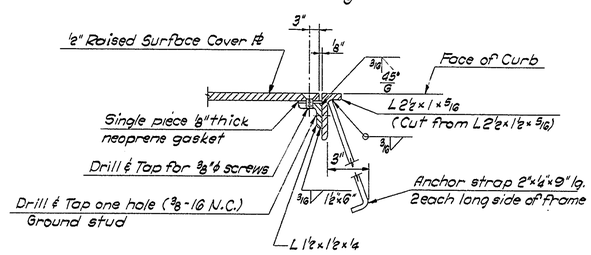

JUNCTION BOX FRAME AND COVER
3"=1'-0"

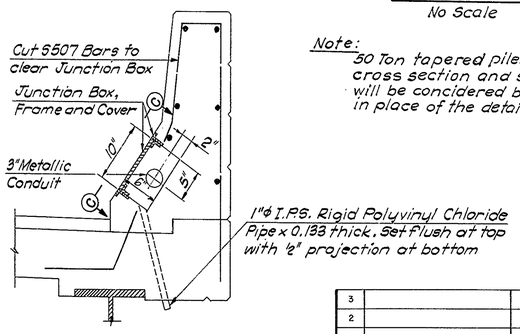

SECTION E-E
1"=1'-0"

For location, see Dwg. No. 6.

ELECTRICAL NOTES:

Junction box frame and cover shall be H.D. Galvanized after fabrication, conforming to ASTM Specification A123
All Metallic Conduits and Fittings shall be H.D. Galv. (See Spec's.)
Grounding bushing shall be equal to O-Z Type IGB
No separate payment shall be made for the junction box construction but all costs for forming, framing, cover and all hardware shall be included in the price bid for the item "Portland Cement Concrete Masonry-Superstructure."

NO.	REVISION	BY	DATE
3			
2			
1			

	BY	DATE
MADE	N.D.P.	3-70
CHECKED	N.F.O.	4-70
IN CHARGE	A.J.C.	

DELAWARE STATE HIGHWAY DEPARTMENT
DELAWARE TURNPIKE
ROUTE 273 INTERCHANGE IMPROVEMENTS
RAMP F BRIDGE OVER DELAWARE TURNPIKE
MISCELLANEOUS DETAILS

HOWARD, NEEDLES, TAMMEN & BERGENDOFF
consulting engineers
NEW YORK KANSAS CITY

SCALE: AS SHOWN
CONTRACT NO. 7060
DWG. NO. 8 OF 8

DELAWARE TURNPIKE	CONT. NO.	TITLE	SHEET NO.	TOTAL SHEETS
	7060		87	115

LEGEND

denotes Boring

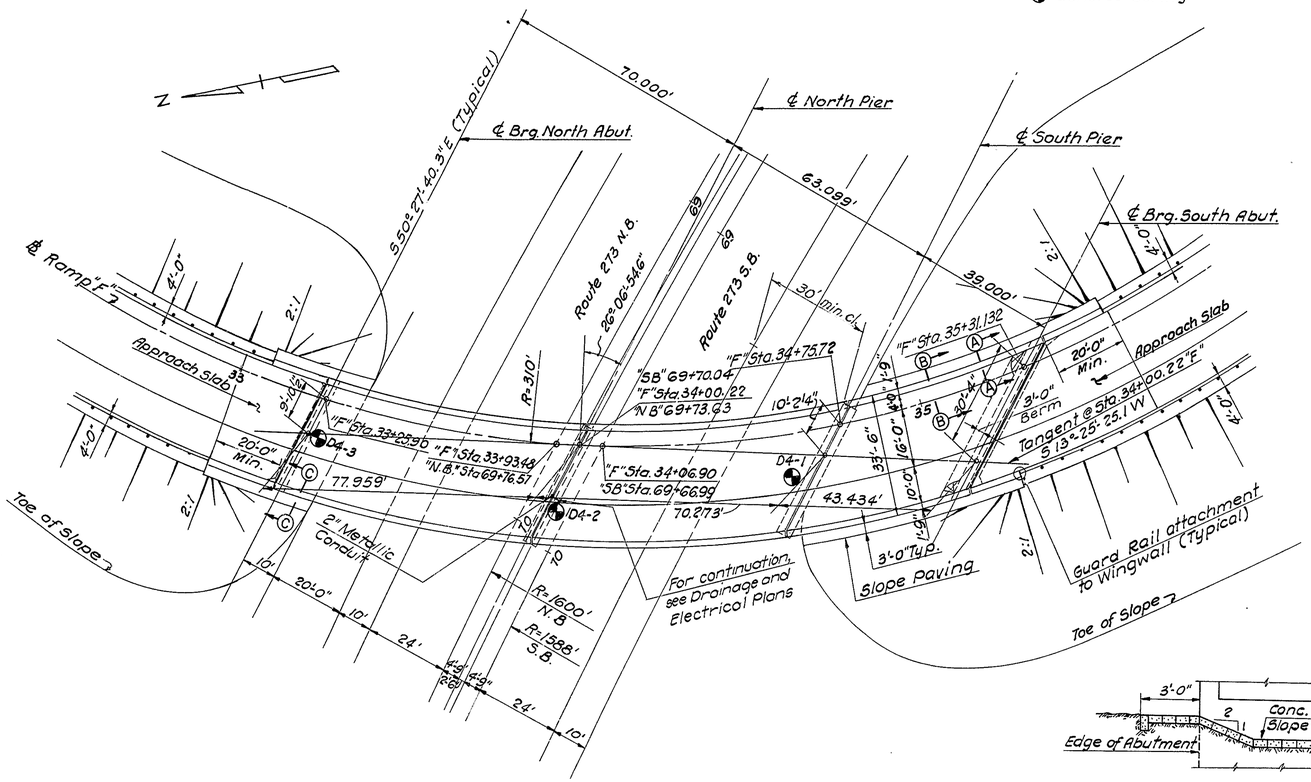

PLAN

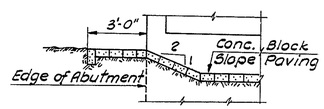

SECTION A-A
Not to Scale

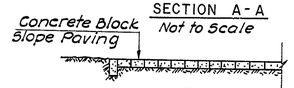

SECTION B-B
Not to Scale

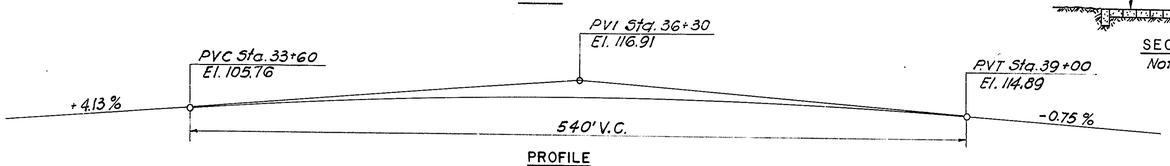

PROFILE
No Scale

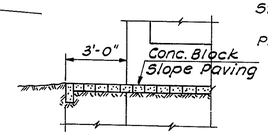

SECTION C-C
Not to Scale

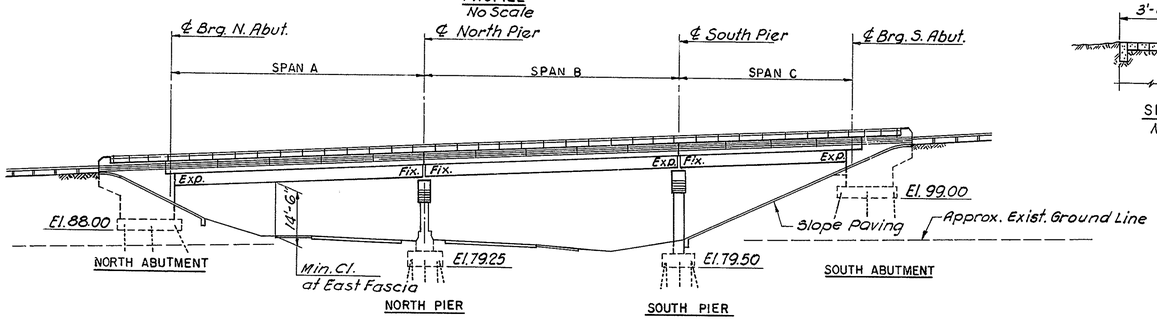

ELEVATION

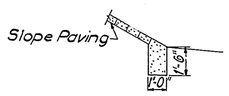

TOE WALL DETAIL
Scale ¼"=1'-0"
Include with cost for Slope Paving

ESTIMATED QUANTITIES

ITEM NO.	DESCRIPTION	UNIT	QUANTITY
4	Excavation for Structures	C.Y.	202
7	Select Borrow-Grade A	C.Y.	206
11	Hot-mix, Hot laid Asphaltic Concrete Pavement	Tons	116
18	Portland Cement Concrete Masonry		
	Footings	C.Y.	168
	Substructure above footings	C.Y.	276
	Superstructure	C.Y.	244
	Approach Slabs	C.Y.	90
19	Superficial Waterproofing	S.Y.	144
20	Bar Reinforcement	Lbs.	102,461
22	Structural Steel (Estimated WT.=201,000#)	L.S.	1
22A	Aluminum Railing - Two Strand	L.F.	472
31	6"φ Perforated Corrugated Metal Pipe Underdrain	L.F.	159
35	14"φ Cast-in-place Concrete Piles	L.F.	3,904
	Coal Tar Epoxy Underseal	S.Y.	665
	Protective Coating for Concrete	S.F.	647
	Slope Paving (Concrete Block)	S.Y.	329

GENERAL NOTES:

Construction Specifications: Delaware State Highway Department Standard Specifications dated June 1, 1965 and Special Provisions.

Design Specifications: A.A.S.H.O. Standard Specifications for Highway Bridges dated 1969.

Design Live Load: H.S 20-44

Design Stresses: Concrete fc=1200 p.s.i. Structural and Reinforcing Steel fs=20,000 p.s.i.

Concrete:
All exposed edges shall be chamfered ¾" unless otherwise noted.
Concrete cover on reinforcing shall be 2" min. unless otherwise shown in the plans.

Bar Reinforcement: Bar reinforcement shall be deformed billet-steel bars (A-615) grade 40.
All bar laps shall be 30 diameters minimum of the smaller bar spliced, unless otherwise noted.
In computing the total length shown for each bent bar, dimensions of legs adjoining each bend (not 135° or 180° hooks) were carried to the point of intersection of both legs and no deductions were made for the shorter distance along the curve. The Contractor shall take this fact into consideration when ordering and fabricating bent bars.
The first digit of the bar mark denotes the bar size, i.e. A501 is a No. 5 bar.

Structural Steel: Structural Steel shall conform to the requirements of A.S.T.M. Designation A36 except as noted.

Piles: All piles shall be 14"φ cast-in-place concrete piles driven to a minimum bearing capacity of 50 tons.

NO.	REVISION	BY	DATE
3			
2			
1			

	BY	DATE
MADE	J.D. & N.D.P.	
CHECKED	J.S.	
IN CHARGE	A.J.C.	

DELAWARE STATE HIGHWAY DEPARTMENT

DELAWARE TURNPIKE

ROUTE 273 INTERCHANGE IMPROVEMENTS
RAMP F BRIDGE OVER ROUTE 273

GENERAL PLAN & ELEVATION

HOWARD, NEEDLES, TAMMEN & BERGENDOFF
consulting engineers
NEW YORK KANSAS CITY

SCALE: 1"=20' & AS SHOWN
CONTRACT NO. 7060
DWG. NO. 1 OF 10

DELAWARE TURNPIKE	CONT. NO.	TITLE	SHEET NO.	TOTAL SHEETS
	7060		88	115

LEGEND:

○ Indicates Vertical Pile.
⬡ Indicates Pile battered 3:12 in direction shown.
Approximate pile tip elevation:
North Abutment +38.0
South Abutment + 45.0

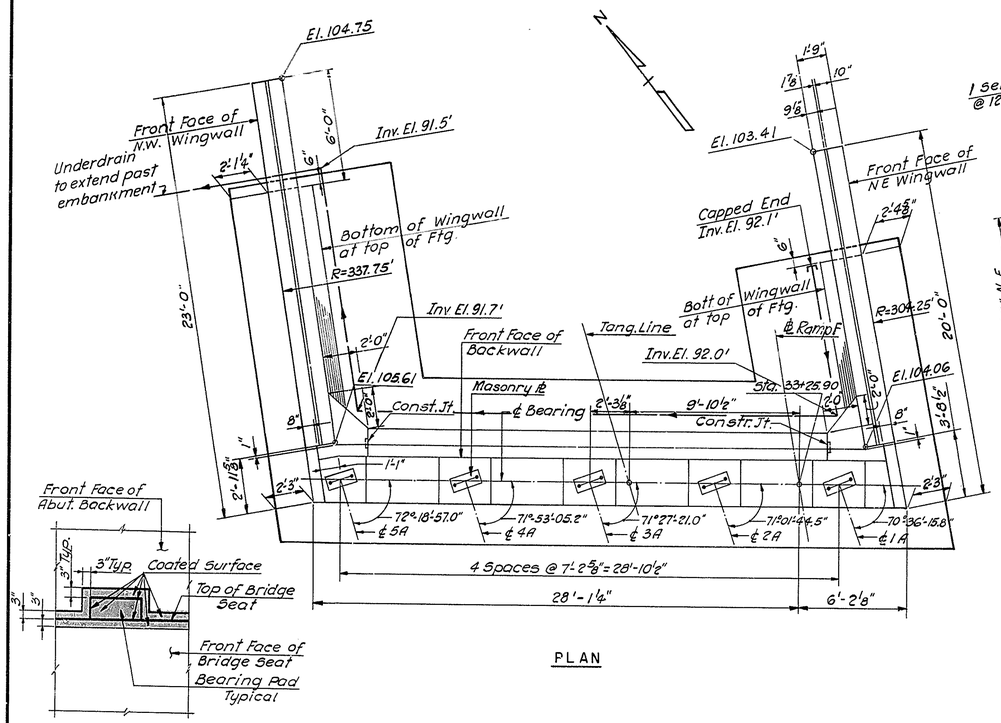

PLAN

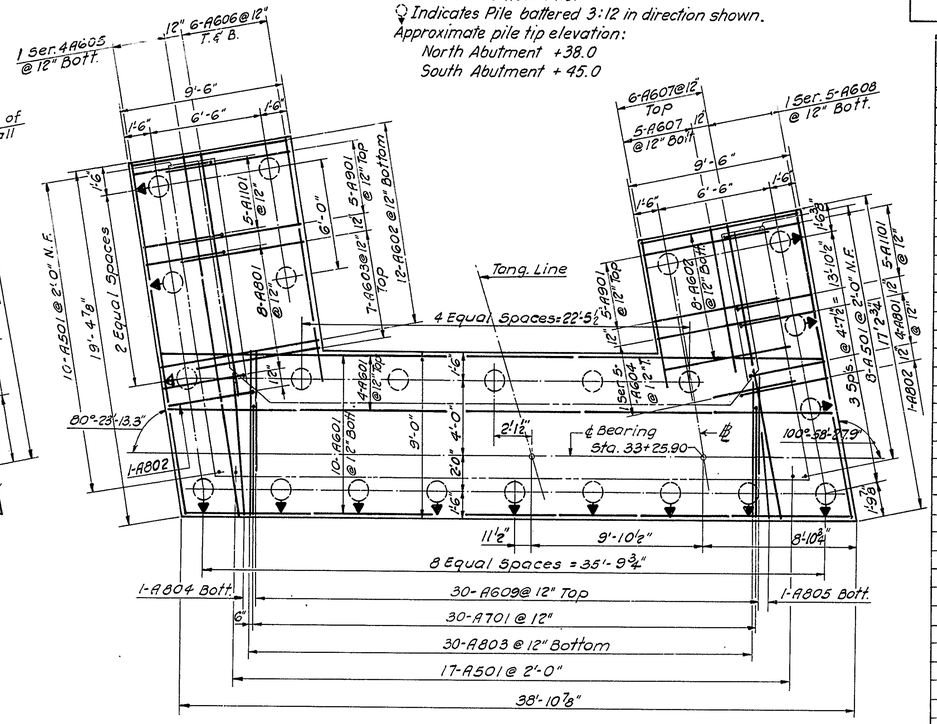

FOOTING & PILE PLAN

REINFORCING BAR SCHEDULE

MARK	NO.	TYPE	A	B	C	LENGTH
NORTH ABUTMENT & WINGWALLS						
A401	20	12	1'-9"	2'-8"		6'-2"
A402	25	12	1'-9"	2'-1"		5'-7"
A501	66	Str.				3'-2"
A502	1 Ser. 17	1	3'-7"	8'-0" to 9'-9"		11'-7" to 13'-4"
A503	2	Str.				13'-2"
A504	2	Str.				11'-9"
A505	1 Ser. 30	1	1'-2"	10'-8" to 12'-4"		11'-10" - 13'-6"
A506	23	Str.				34'-0"
A507	33	2	4'-7"	1'-7"		6'-2"
A508	8	Str.				5'-6"
A509	1 Ser. 8	Str.				15'-1" to 16'-2"
A510	3	Str.				30'-4"
A511	26	3	6'-0"	2'-1"	1'-3"	8'-1"
A512	32	4				5'-9"
A513	7	Str.				16'-8"
A514	4	Str.				13'-8"
A515	1	Str.				16'-6"
A516	1 Ser. 3	Str.				17'-4" to 21'-4"
A517	4	Str.				22'-8"
A518	10	Str.				19'-9"
A519	4	Str.				10'-3"
A520	1	Str.				8'-9"
A521	1	Str.				5'-3"
A522	4	3	6'-9"	4'-0"	1'-9"	10'-9"
A523	8	Str.				4'-6"
A524	22	Str.				6'-6"
A525	6	Str.				13'-8"
A526	1 Ser. 3	Str.				15'-0" to 19'-0"
A527	4	Str.				19'-8"
A528	3	Str.				10'-1"
A529	1 Ser. 2	Str.				11'-8" to 15'-6"
A530	10	Str.				16'-0"
A531	1	Str.				7'-3"
A532	1 Ser. 6	Str.				14'-2" to 14'-8"
A533	6	6				6'-6"
A534	2 Ser. 6	5				13'-7" to 18'-7"
A535	6	Str.				6'-0"
A536	4	Str.				2'-6"
A537	2	8	2'-2"	1'-8"	2'-7"	6'-5
A538	2	3	2'-2"	1'-8"	1'-7"	3'-10"
A539	4	7				9'-3"
A540	10	3	1'-7"	1'-7"	1'-6½"	3'-2"
A541	9	9				3'-2"
A601	14	Str.				38'-4"
A602	20	Str.				9'-0"
A603	7	Str.				7'-3"
A604	1 Ser. 5	Str.				4'-10" to 7'-3"
A605	1 Ser. 4	Str.				18'-11" to 19'-6"
A606	12	Str.				13'-5"
A607	11	Str.				8'-0"
A608	1 Ser. 5	Str.				16'-0" to 16'-8"
A609	30	Str.				5'-5"
A610	9	Str.				8'-9"
A611	5	Str.				7'-6"
A701	30	11	5'-0"	1'-3"	3'-2"	9'-5"
A801	12	10	3'-5"	1'-6"	6'-3"	11'-2"
A802	2	11	4'-2"	1'-5"	6'-4"	11'-11"
A803	30	Str.				8'-6"
A804	1	Str.				8'-0"
A805	1	Str.				4'-9"
A901	10	Str.				9'-0"
A902	5	Str.				10'-0"
A903	5	Str.				8'-10"
A1101	10	10	3'-0"	2'-1"	5'-10"	10'-11"

APPLICATION LIMITS OF EPOXY PROTECTIVE COATING FOR CONCRETE
(Part Elevation at Abut.)
No Scale

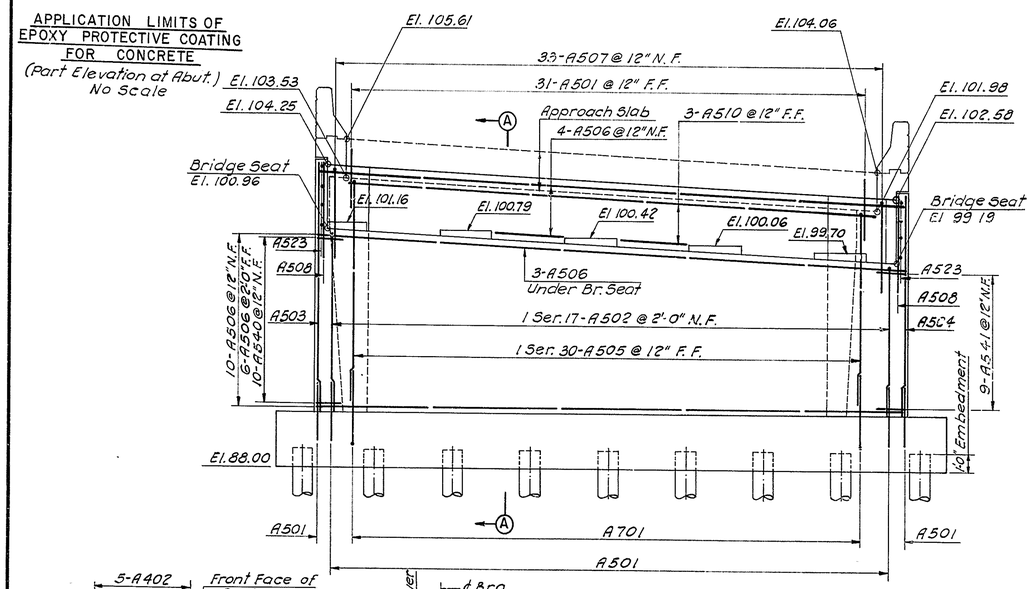

ELEVATION

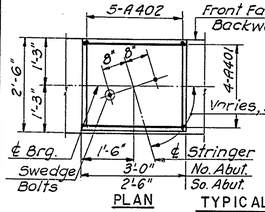

PLAN

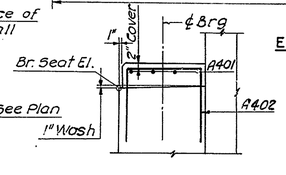

ELEVATION

TYPICAL PAD DETAILS
Scale: ½" = 1'-0"

NOTES:

For Substructure Notes, see Dwg. No. 5.
For Wingwall details see Dwg. No. 4

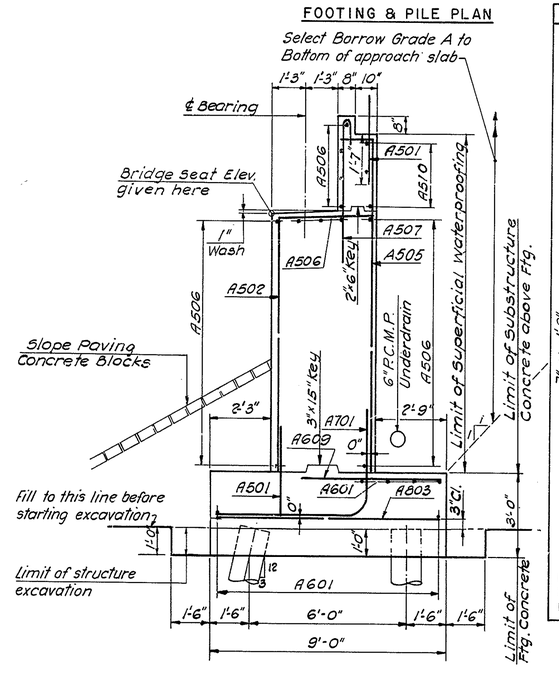

SECTION A-A
Scale: ⅜" = 1'-0"

BENDING DIAGRAMS

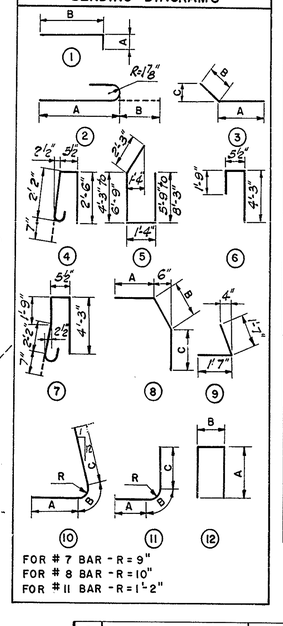

NO.	REVISION	BY	DATE
3			
2			
1			

	BY	DATE
MADE	N.D.P.	2-70
CHECKED	L.D.	4-70
IN CHARGE	A.J.C.	

DELAWARE STATE HIGHWAY DEPARTMENT

DELAWARE TURNPIKE

ROUTE 273 INTERCHANGE IMPROVEMENTS
RAMP F BRIDGE OVER ROUTE 273

NORTH ABUTMENT

HOWARD, NEEDLES, TAMMEN & BERGENDOFF
consulting engineers
NEW YORK KANSAS CITY

SCALE: 1/4" = 1'-0" & AS SHOWN
CONTRACT NO. 7060
DWG. NO. 2 OF 10

DELAWARE TURNPIKE	CONT. NO.	TITLE	SHEET NO.	TOTAL SHEETS
	7060		89	115

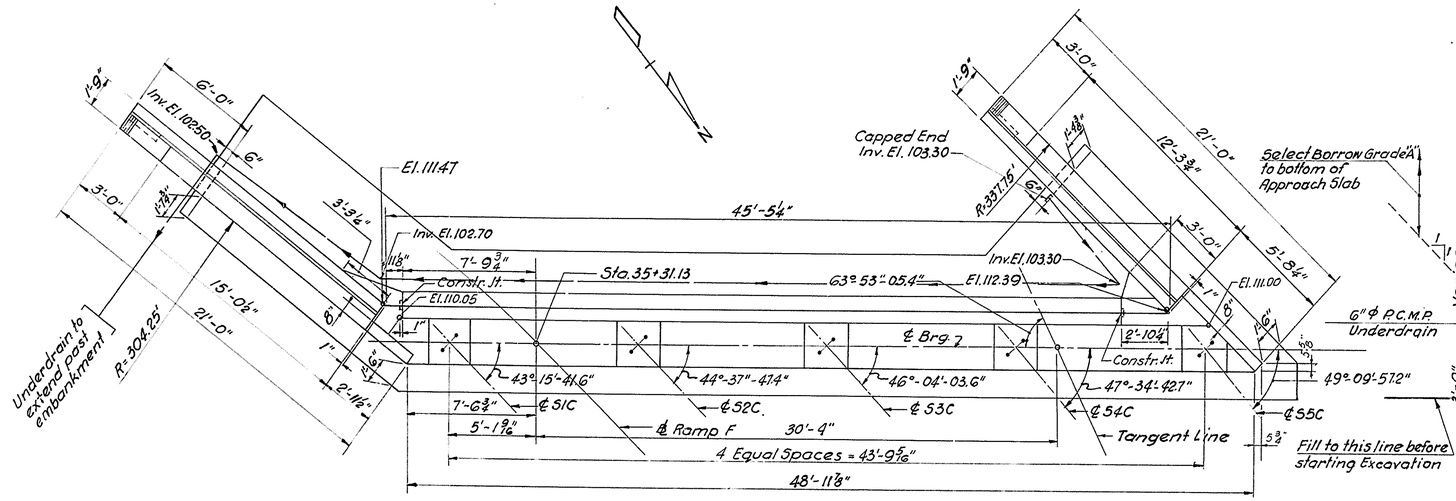

PLAN

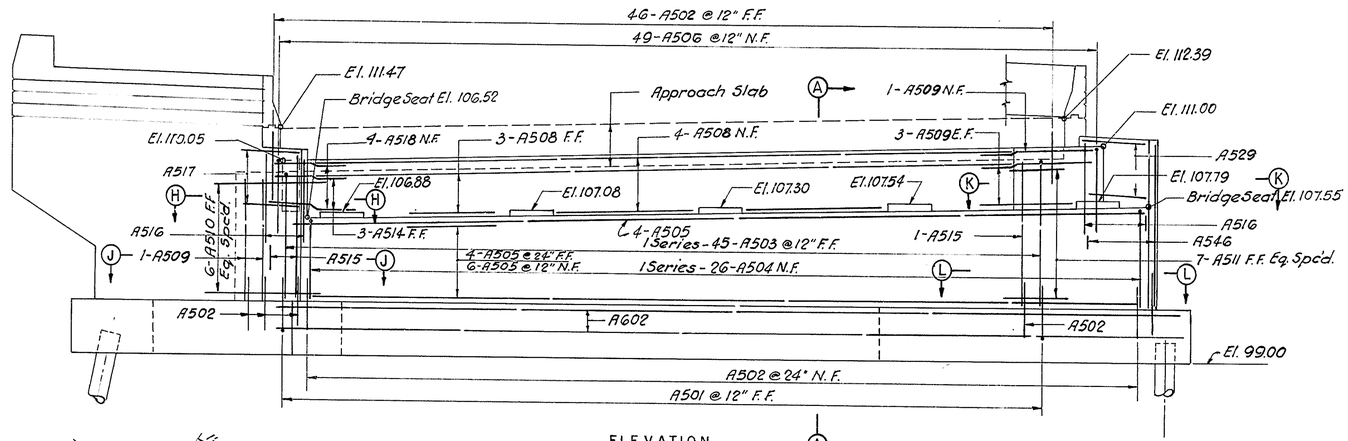

ELEVATION

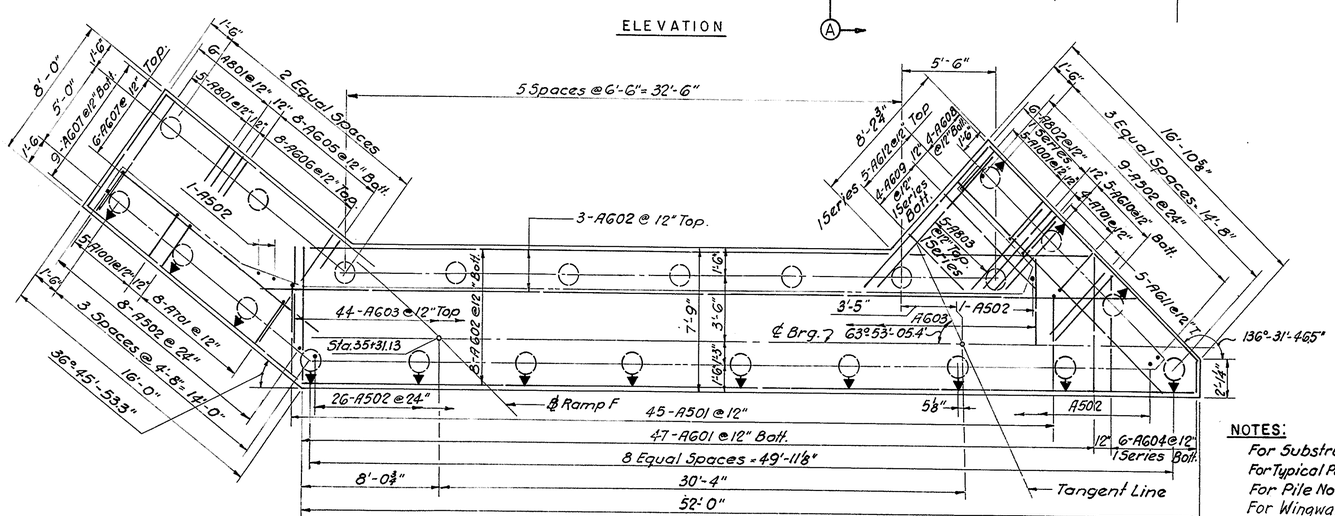

FOOTING & PILE PLAN

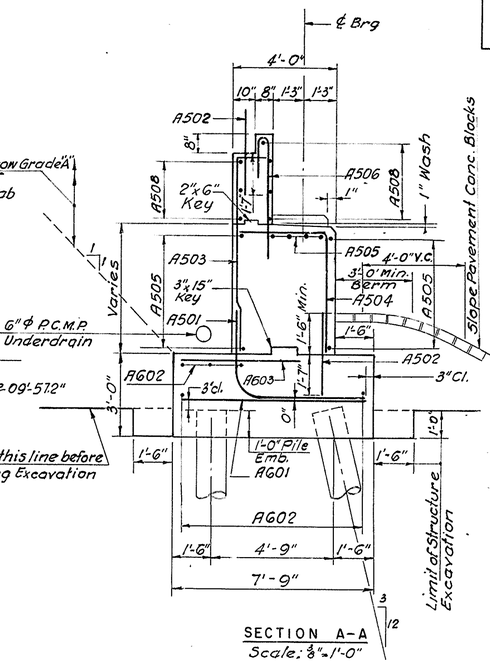

SECTION A-A
Scale: ⅜" = 1'-0"

BENDING DIAGRAMS

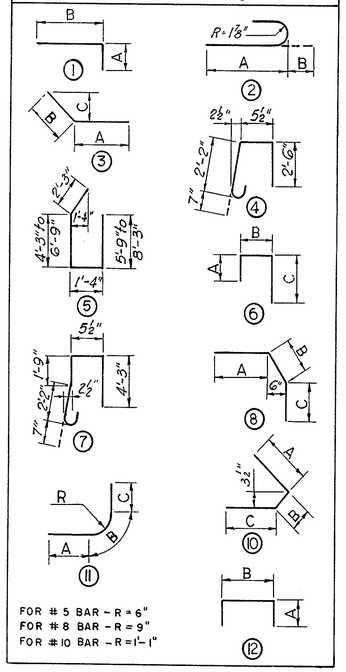

REINFORCING BAR SCHEDULE

MARK	NO.	TYPE	A	B	C	LENGTH
SOUTH ABUTMENT & WINGWALLS						
A401	20	12	1'-7"	2'-2"		5'-4"
A402	25	12	1'-7"	2'-1"		5'-3"
A501	45	11	2'-10"	10"	4'-6"	8'-2"
A502	92	STR.				3'-2"
A503	1 Ser. 45	1	7'-0" to 8'-0"	1'-2"		8'-2" to 9'-2"
A504	1 Ser. 26	1	4'-4 5/8" to 5'-3 1/2"	3'-6½"		7'-11" to 8'-10"
A505	14	STR.				49'-0"
A506	49	2	5'-0"	1'-7"		6'-7"
A508	7	STR.				41'-3"
A509	9	STR.				6'-9"
A510	6	STR.				6'-3"
A511	7	STR.				4'-4"
A512	29	4				5'-9"
A513	9	STR.				17'-8"
A514	3	STR.				4'-0"
A515	5	STR.				8'-0"
A516	13	STR.				4'-9"
A518	4	3	2'-0"	1'-3"	1'-0"	3'-3"
A519	4	STR.				10'-0"
A520	3	STR.				20'-8"
A521	1 Ser. 3	STR.				15'-3" to 19'-3"
A522	4	3	6'-9"	4'-0"	1'-9"	10'-9"
A523	2	STR.				16'-6"
A524	1	STR.				14'-0"
A525	2	STR.				12'-6"
A526	6	STR.				11'-3"
A527	8	STR.				14'-8"
A528	6	STR.				12'-3"
A529	4	STR.				7'-2"
A530	9	STR.				14'-10"
A533	6	6	4'-3"	5½"	1'-9"	6'-6"
A534	2 Ser. 6	5				13'-7" to 18'-7"
A535	6	STR.				6'-0"
A536	4	STR.				2'-6"
A537	2	8	2'-2"	1'-8"	2'-7"	6'-5"
A538	2	3	2'-2"	1'-8"	1'-7"	3'-10"
A539	4	7				9'-3"
A540	3	STR.				8'-6"
A542	1 Ser. 2	STR.				17'-0" to 19'-8"
A543	3	STR.				20'-8"
A544	1	STR.				14'-0"
A546	3	STR.				8'-10"
A548	6	3	1'-7"	1'-7"	1'-0"	3'-2"
A549	6	10	1'-7"	5"	1'-7"	3'-7"
AG01	47	STR.				7'-3"
AG02	11	STR.				52'-0"
AG03	44	STR.				4'-6"
AG04	1 Ser. 6	STR.				6'-3" to 2'-0"
AG05	8	STR.				7'-6"
AG06	8	STR.				7'-2"
AG07	15	STR.				15'-8"
AG08	4	STR.				16'-5"
AG09	1 Ser. 4	STR.				4'-3" to 7'-3"
AG10	5	STR.				5'-0"
AG11	5	STR.				4'-8"
AG12	1 Ser. 5	STR.				3'-9" to 7'-0"
AG13	13	3	7'-10"	2'-0"	1'-3"	9'-10"
AG14	9	3	8'-9"	2'-0"	1'-3"	10'-9"
A701	12	11	5'-0"	1'-3"	2'-1'	8'-4"
A801	11	STR.				7'-6"
A802	1 Ser. 6	STR.				11'-0" to 6'-0"
A803	1 Ser. 5	STR.				9'-6" to 5'-9"
A1001	10	11	4'-7"	1'-9½"	1'-8"	8'-1"

NOTES:

For Substructure Notes see Dwg. No. 5.
For Typical Pad Detail see Dwg. No. 2.
For Pile Notes see Dwg. No. 2.
For Wingwall details, Sections H-H, J-J, K-K & L-L see Dwg. No. 4.

NO.	REVISION	BY	DATE
3			
2			
1			

	BY	DATE
MADE	J.D.	3-70
CHECKED	L.D.	4-70
IN CHARGE	A.J.C.	

DELAWARE STATE HIGHWAY DEPARTMENT

DELAWARE TURNPIKE

ROUTE 273 INTERCHANGE IMPROVEMENTS
RAMP F BRIDGE OVER ROUTE 273

SOUTH ABUTMENT

HOWARD, NEEDLES, TAMMEN & BERGENDOFF
consulting engineers
NEW YORK KANSAS CITY

SCALE: ¼" = 1'-0" U.N.
CONTRACT NO. 7060
DWG. NO. 3 OF 10

DELAWARE TURNPIKE	CONT. NO.	TITLE	SHEET NO.	TOTAL SHEETS
	7060		90	115

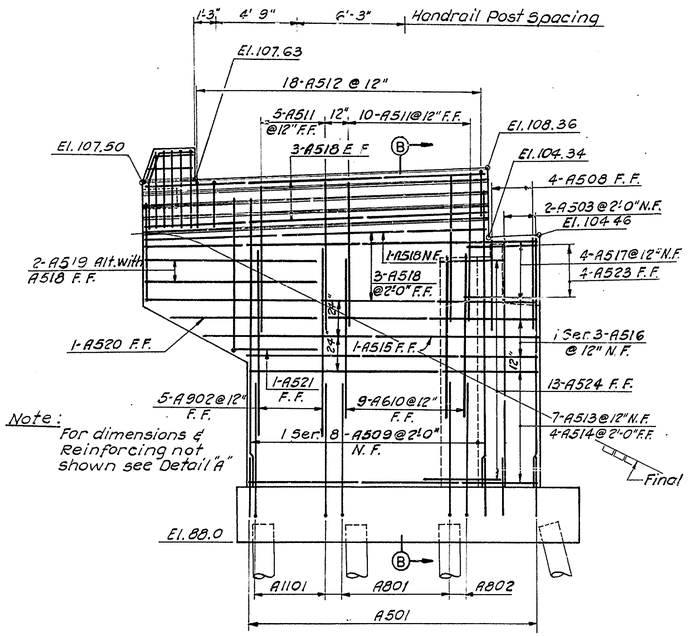

Note: For dimensions & Reinforcing not shown see Detail "A"

ELEVATION
NORTHWEST WINGWALL

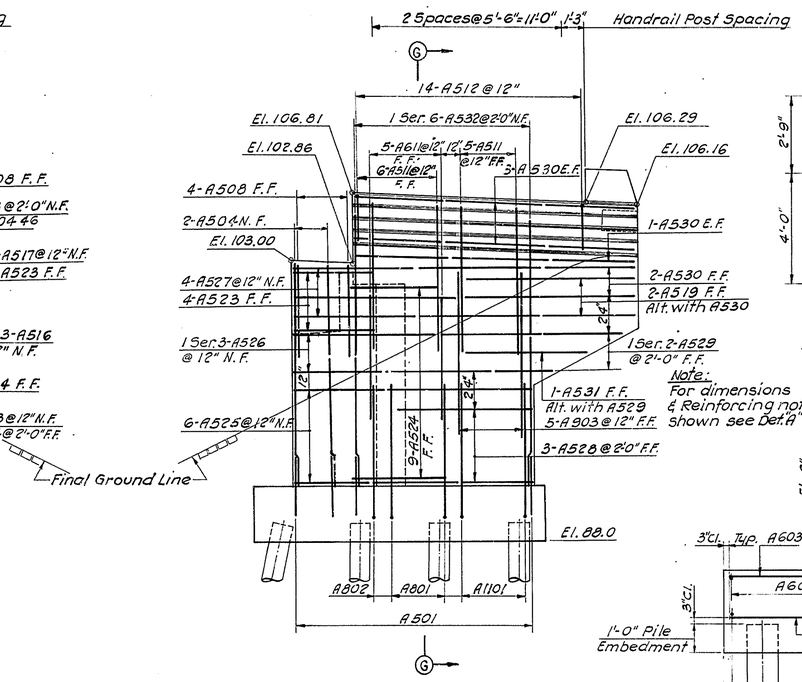

ELEVATION
NORTHEAST WINGWALL

NORTH ABUTMENT WINGWALLS
1/4"=1'-0"

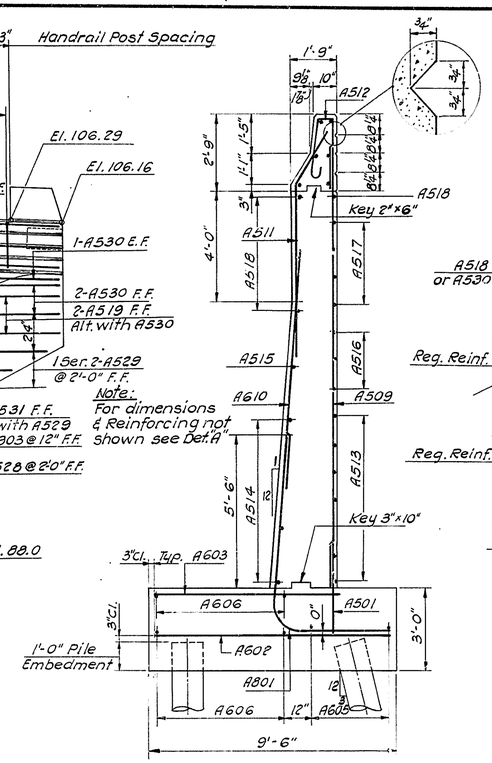

Note: For dimensions & Reinforcing not shown see Det. "A"

SECTION B-B
(Section G-G similar)
Scale: 3/8"=1'-0"

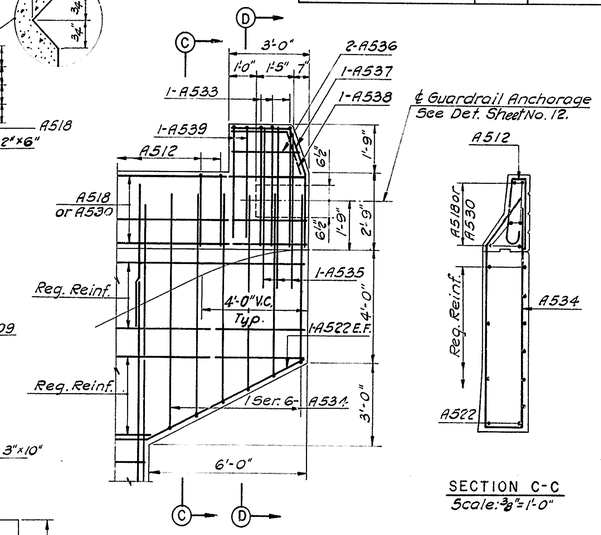

DETAIL A
Scale: 3/8"=1'-0"

SECTION C-C
Scale: 3/8"=1'-0"

SECTION D-D
Scale: 3/8"=1'-0"

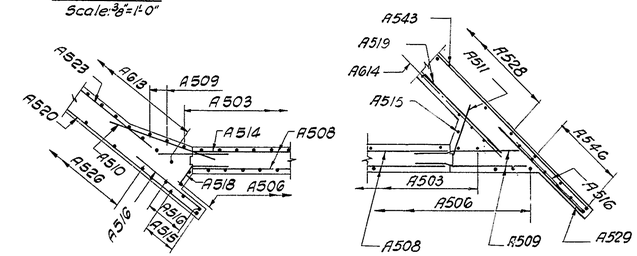

SECTION H-H
1/4"=1'-0"

SECTION K-K
1/4"=1'-0"

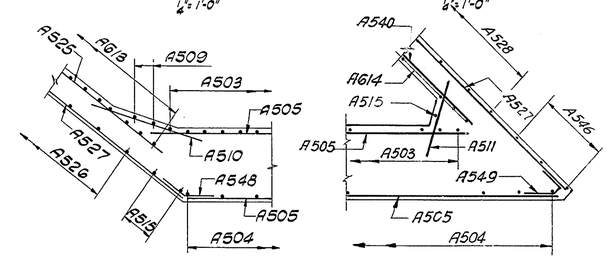

SECTION J-J
1/4"=1'-0"

SECTION L-L
1/4"=1'-0"

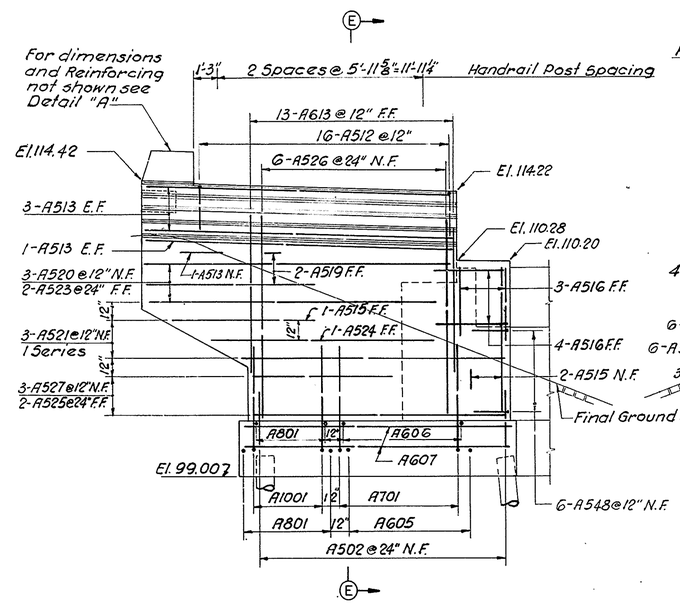

ELEVATION
SOUTHEAST WINGWALL

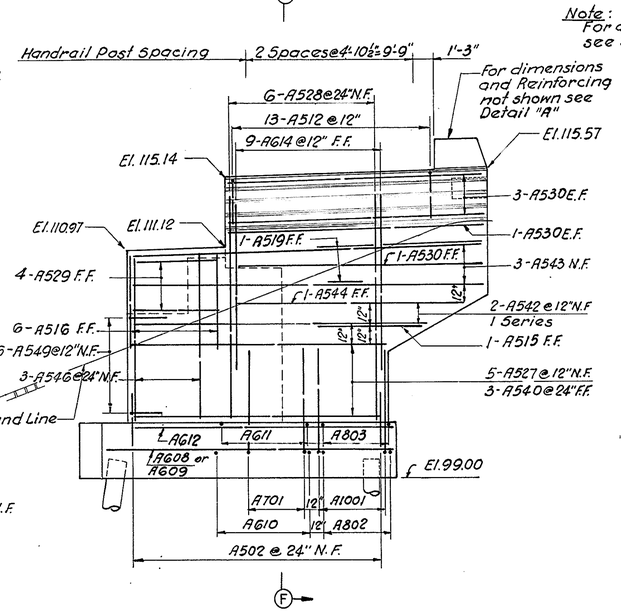

ELEVATION
SOUTHWEST WINGWALL

SOUTH ABUTMENT WINGWALLS
1/4"=1'-0"

Note: For additional Details in Parapet see Section B-B.

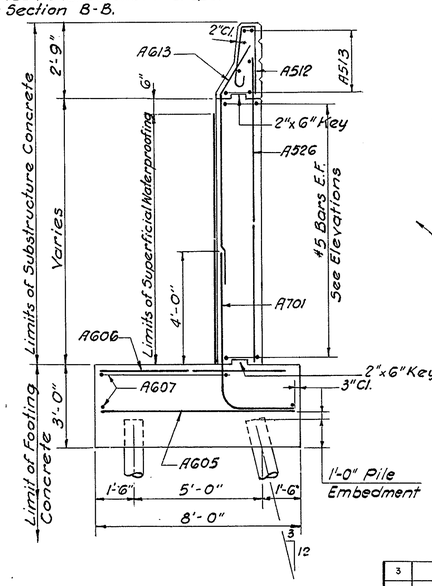

SECTION E-E
(Section F-F similar)
Scale: 3/8"=1'-0"

NOTES:
For Substructure Notes see Dwg. No. 5
For Railing Notes see Dwg. No. 8
For location of Sections H-H, J-J, K-K & L-L see Dwg. No. 3.

NO.	REVISION	BY	DATE
3			
2			
1			

	BY	DATE
MADE	N.D.P. & J.D.	3-70
CHECKED	L.D.	4-70
IN CHARGE	A.J.C.	

DELAWARE STATE HIGHWAY DEPARTMENT
DELAWARE TURNPIKE
ROUTE 273 INTERCHANGE IMPROVEMENTS
RAMP F BRIDGE OVER ROUTE 273
ABUTMENT WINGWALLS

HOWARD, NEEDLES, TAMMEN & BERGENDOFF
consulting engineers
NEW YORK KANSAS CITY

SCALE: AS SHOWN
CONTRACT NO. 7060
DWG. NO. 4 OF 10

DELAWARE TURNPIKE	CONT. NO.	TITLE	SHEET NO.	TOTAL SHEETS
	7060		91	115

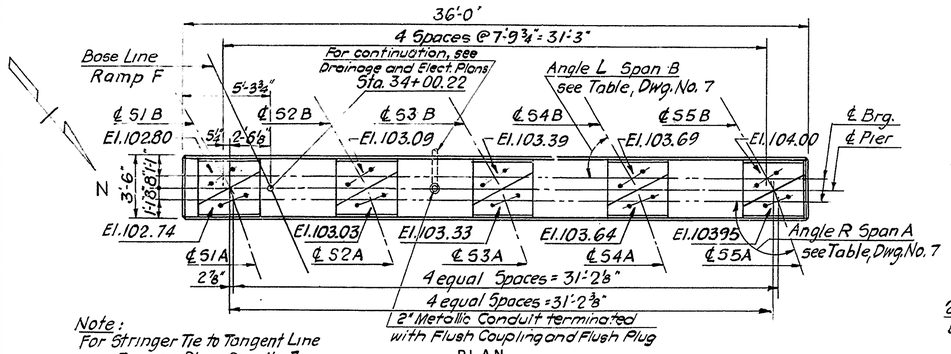

Note: For Stringer Tie to Tangent Line see Framing Plan, Dwg. No. 7

PLAN
¼" = 1'-0"

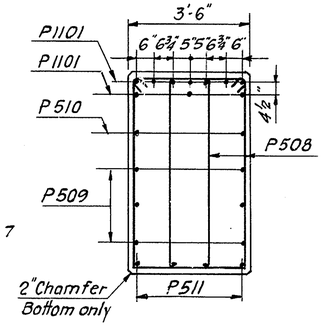

SECTION B-B
½" = 1'-0"

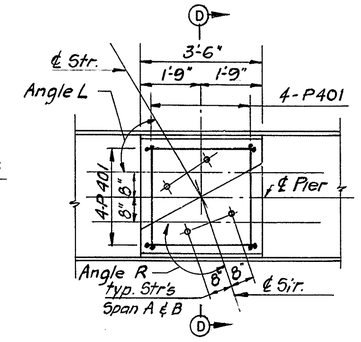

TYPICAL PAD PLAN
½" = 1'-0"

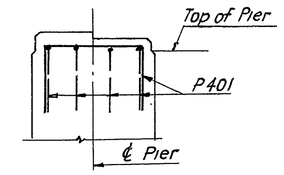

SECTION D-D
½" = 1'-0"

REINFORCING BAR SCHEDULE			
MARK	NUMBER	TYPE	LENGTH
P401	40	1	5'-6"
P501	38	Str.	15'-8"
P502	1 Series 17	5	14'-6" to 15'-0"
P503	17	6	8'-2"
P504	8	1	7'-10"
P505	4	1	6'-0"
P506	18	1	5'-4"
P507	17	3	18'-6"
P508	4 Series 14	3	10'-4" to 16'-4"
P509	2 Series 4	Str.	16'-6" to 34'-10"
P510	2	Str.	35'-8"
P511	8	4	14'-3"
P512	6	1	6'-3"
P601	11	Str.	18'-6"
P801	40	Str.	11'-8"
P802	72	2	11'-10"
P901	26	Str.	9'-6"
P1101	10	Str.	35'-8"

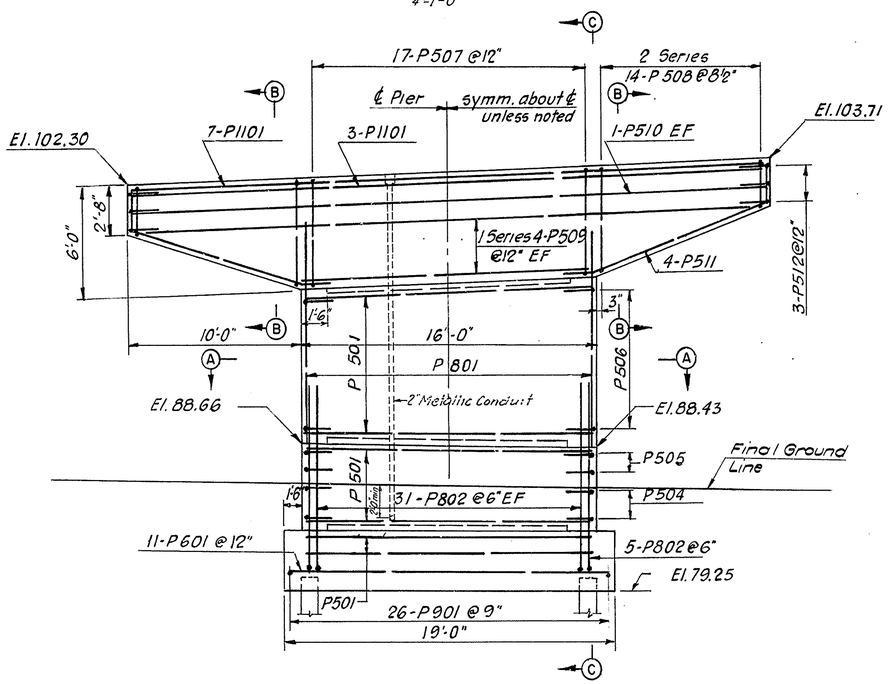

ELEVATION
¼" = 1'-0"

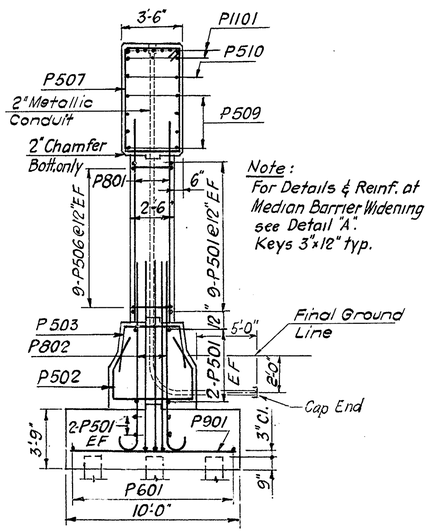

Note: For Details & Reinf. at Median Barrier Widening see Detail "A". Keys 3"x12" typ.

SECTION C-C
¼" = 1'-0"

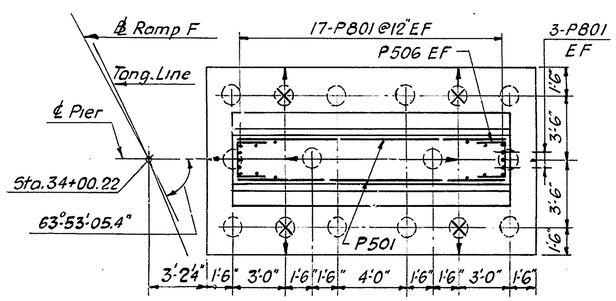

SECTION A-A
PILE PLAN
¼" = 1'-0"

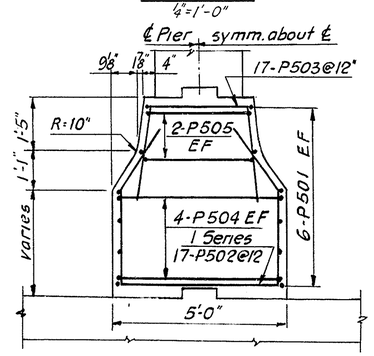

DETAIL "A"
½" = 1'-0"

SUBSTRUCTURE NOTES:

For General Notes see Dwg. No 1
N.F. denotes Near Face.
F.F. denotes Far Face.
E.F. denotes Each Face.
Minimum Reinforcing Steel cover: 3" in Footing, 2" above Footing.
For Epoxy Protective Coating at Abutments see Dwg. No. 2; for Piers see Dwg. No. 6
Pad Elevations given denote Top of finished Concrete Pad.
For Shoes, Anchor Bolts & Pile Details see Dwg. No. 10
Backfill behind Abutments to be placed only after Bridge Deck Slab has been completed.

LEGEND

- indicates vertical Pile.
- indicates Pile battered 2:12 in the direction shown.
- indicates Pile battered 2½:12 in the direction shown.

Approx. Pile Tip Elevation + 38.0.

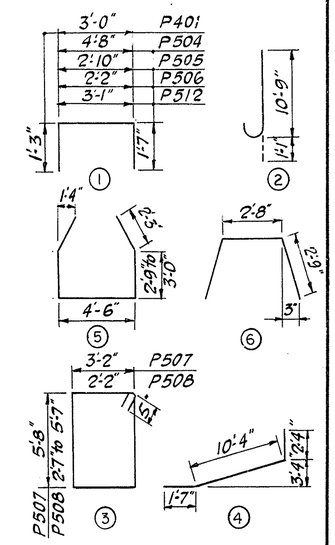

3			
2			
1			
NO.	REVISION	BY	DATE
	BY		DATE
MADE	R.M.L.		1-70
CHECKED	Jn. R.		3-70
IN CHARGE	A. J. C.		

DELAWARE STATE HIGHWAY DEPARTMENT

DELAWARE TURNPIKE

ROUTE 273 INTERCHANGE IMPROVEMENTS
RAMP F BRIDGE OVER ROUTE 273

NORTH PIER

HOWARD, NEEDLES, TAMMEN & BERGENDOFF
consulting engineers
NEW YORK KANSAS CITY

SCALE: AS SHOWN
CONTRACT NO. 7060
DWG. NO. 5 OF 10

DELAWARE TURNPIKE	CONT. NO.	TITLE	SHEET NO.	TOTAL SHEETS
	7060		92	115

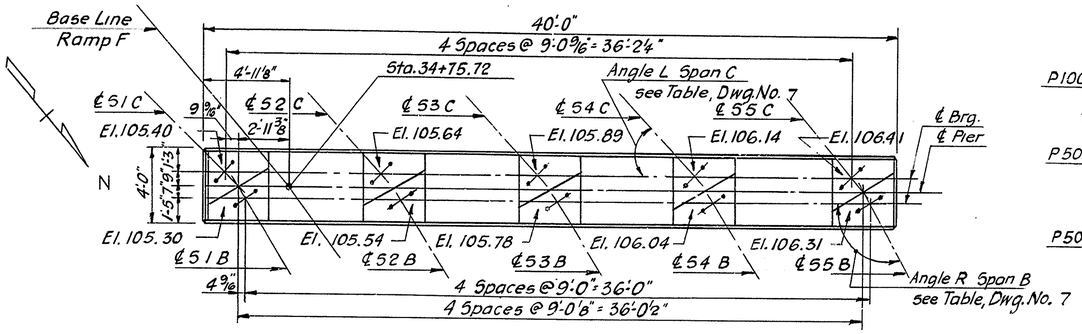

PLAN

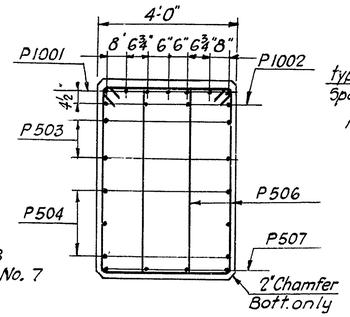

SECTION B-B
1/2" = 1'-0"

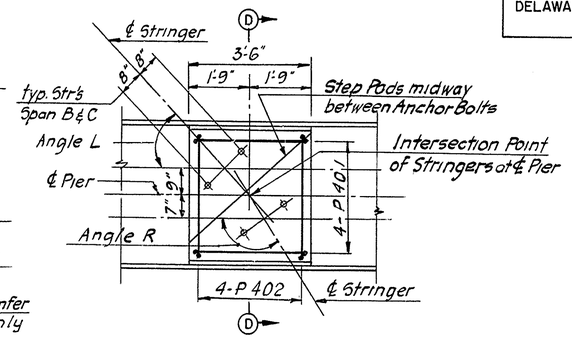

PAD PLAN
1/2" = 1'-0"

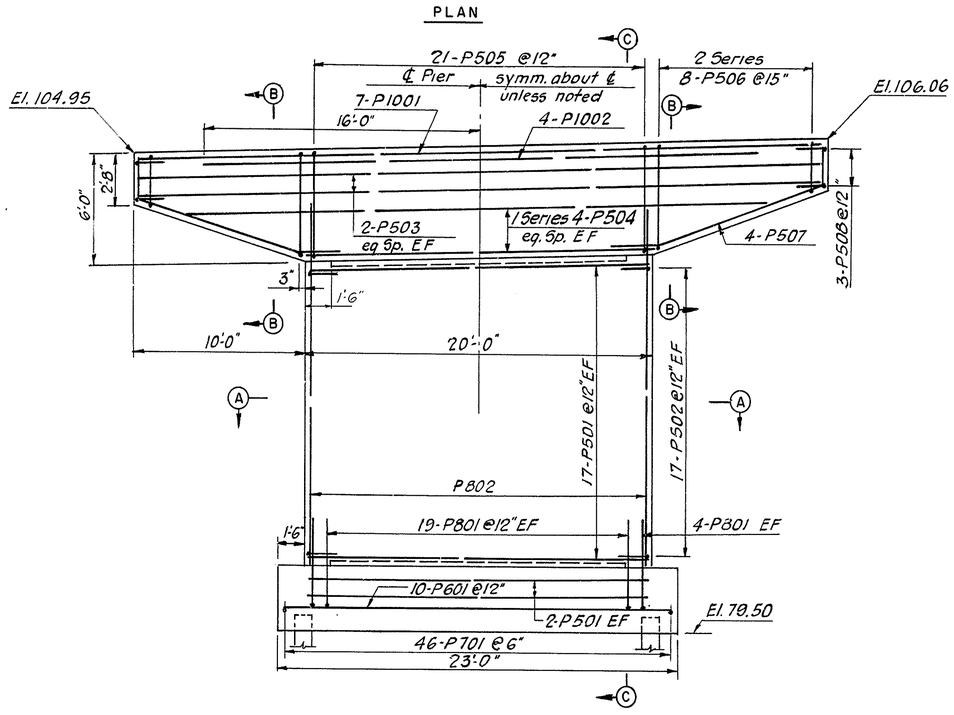

ELEVATION

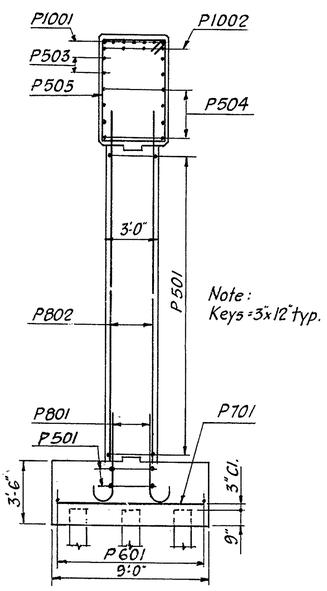

SECTION C-C

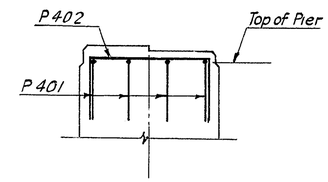

SECTION D-D
1/2" = 1'-0"

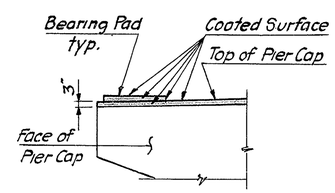

APPLICATION LIMITS OF
EPOXY PROTECTIVE COATING
FOR CONCRETE

REINFORCING BAR SCHEDULE

MARK	NUMBER	TYPE	LENGTH
P401	20	1	5'-6"
P402	20	1	6'-0"
P501	38	Str.	19'-8"
P502	34	1	5'-10"
P503	4	Str.	39'-8"
P504	2 Series 4	Str.	19'-10" to 34'-6"
P505	21	3	19'-6"
P506	4 Series 8	3	11'-1" to 16'-11"
P507	8	4	14'-3"
P508	6	1	6'-9
P601	10	Str.	22'-6"
P701	46	Str.	8'-6"
P801	46	2	6'-1"
P802	46	Str.	19'-5"
P1001	7	Str.	39'-8"
P1002	4	Str.	32'-0"

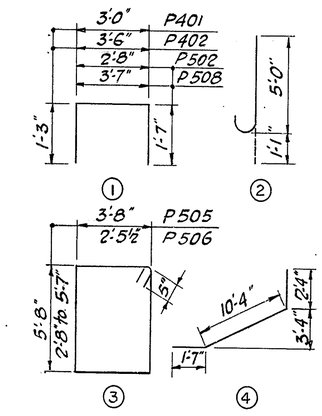

NOTE:
For Substructure Notes see Dwg. No. 5

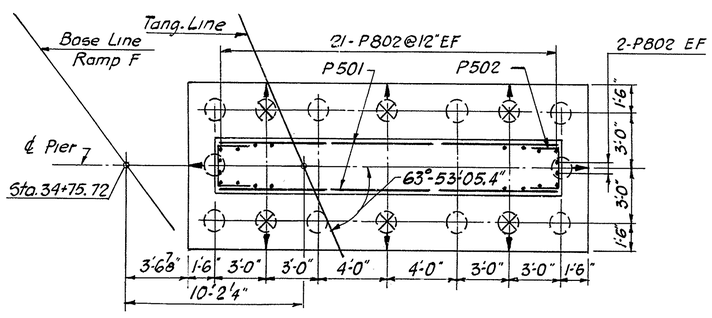

SECTION A-A
PILE PLAN

LEGEND

- indicates vertical Pile.
- indicates Pile battered 3:12 in the direction shown.
- indicates Pile battered 2:12 in the direction shown.
- Approx. Pile Tip Elevation +38.0

NO.	REVISION	BY	DATE
3			
2			
1			

	BY	DATE
MADE	R.M.L.	1-70
CHECKED	Jn. R.	3-70
IN CHARGE	A.J.C.	

DELAWARE STATE HIGHWAY DEPARTMENT

DELAWARE TURNPIKE

ROUTE 273 INTERCHANGE IMPROVEMENTS
RAMP F BRIDGE OVER ROUTE 273

SOUTH PIER

HOWARD, NEEDLES, TAMMEN & BERGENDOFF
consulting engineers
NEW YORK KANSAS CITY

SCALE: 1/4" = 1'-0" & AS SHOWN
CONTRACT NO. 7060
DWG. NO. 6 OF 10

DELAWARE TURNPIKE	CONT. NO.	TITLE	SHEET NO.	TOTAL SHEETS
	7060		93	115

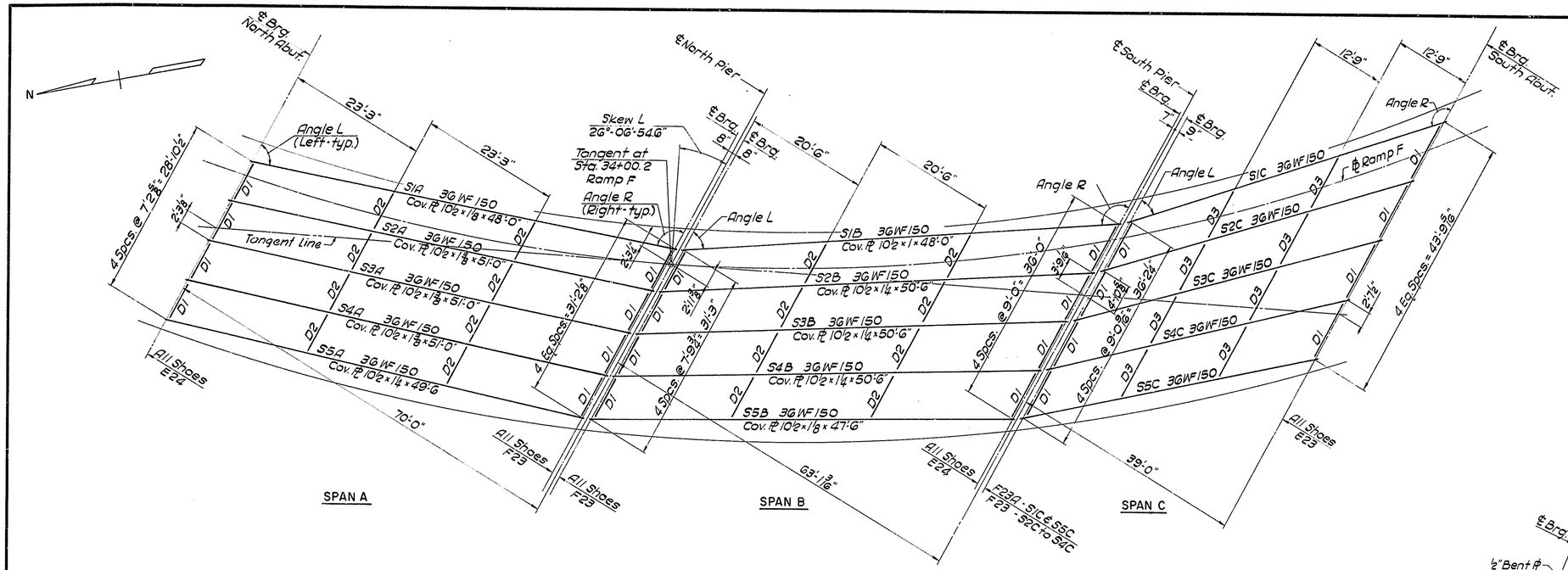

FRAMING PLAN
1" = 10'

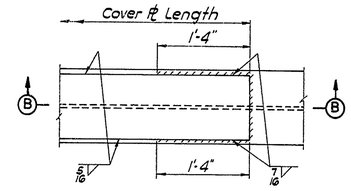

COVER PLATE DETAIL
1" = 1'-0"

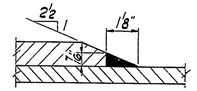

SECTION B-B
No Scale

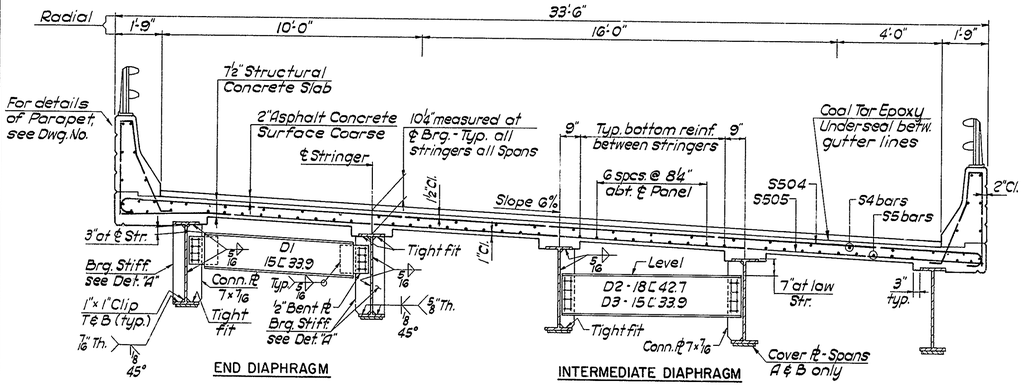

TYPICAL CROSS SECTION
3/8" = 1'-0"

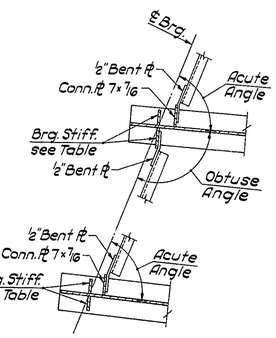

DETAIL "A"
No Scale

BRG. STIFFENER TABLE					
Span	Str.	Left Brg.		Right Brg.	
		Acute L	Obtuse L	Obtuse L	Acute L
A & B	S1A, S1B	PL 5x5/8	PL 7x5/8	PL 5x5/8	PL 5x5/8
	S2A, S2B			PL 7x5/8	
	S3A, S3B				
	S4A, S4B		PL 7x5/8		
	S5A, S5B	PL 5x5/8	PL 5x5/8	PL 7x5/8	PL 5x5/8
C	S1C	PL 5x7/16	PL 7x7/16	PL 5x7/16	PL 5x7/16
	S2C			PL 7x7/16	
	S3C				
	S4C		PL 7x7/16		
	S5C	PL 5x7/16	PL 5x7/16	PL 7x7/16	PL 5x7/16

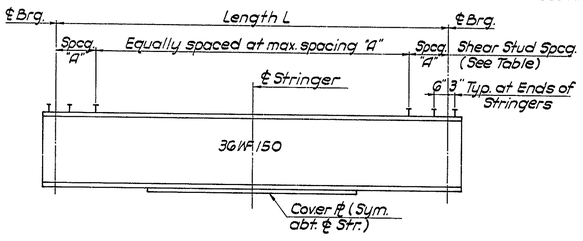

STRINGER ELEVATION
No Scale

STRUCTURAL STEEL NOTES:

For General Notes see Dwg. No. 1

7/8" ϕ High-Strength Bolts to be used for all bolted connection.

Shear Stud spacing shown is maximum spacing.

All Stiffeners, Connection Plates and ends of stringers shall be truly vertical in erected position.

Unless otherwise shown all welding shall comply with the current "Specifications for Welded Highway and Railway Bridges" of the American Welding Society.

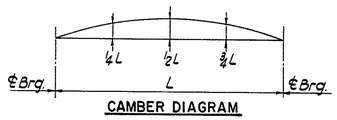

CAMBER DIAGRAM

CAMBER (INCHES)																								
Stringer	S1A		S2A to S4A		S5A		S1B		S2B to S4B		S5B		S1C		S2C		S3C		S4C		S5C	
	1/4 ℄ 3/4 L	1/2 L	1/4 ℄ 3/4 L	1/2 L	1/4 ℄ 3/4 L	1/2 L	1/4 ℄ 3/4 L	1/2 L	1/4 ℄ 3/4 L	1/2 L	1/4 ℄ 3/4 L	1/2 L	1/4 ℄ 3/4 L	1/2 L	1/4 ℄ 3/4 L	1/2 L	1/4 ℄ 3/4 L	1/2 L	1/4 ℄ 3/4 L	1/2 L	1/4 ℄ 3/4 L	1/2 L
Structural Steel	0.29	0.40	0.29	0.41	0.27	0.38	0.29	0.40	0.29	0.40	0.26	0.36	0.10	0.14	0.10	0.14	0.09	0.12	0.08	0.11	0.07	0.10
Concrete Deck Slab	0.81	1.13	0.95	1.32	0.96	1.34	0.83	1.16	0.95	1.33	0.91	1.27	0.37	0.52	0.40	0.56	0.37	0.52	0.34	0.48	0.32	0.44
Pot. Rail. & 2" Wear. Surf.	0.20	0.27	0.16	0.23	0.16	0.23	0.21	0.28	0.16	0.23	0.16	0.23	0.09	0.13	0.08	0.11	0.07	0.10	0.06	0.09	0.06	0.09
Full Dead Load	1.30	1.80	1.40	1.96	1.39	1.95	1.33	1.84	1.40	1.96	1.33	1.86	0.56	0.79	0.58	0.81	0.53	0.74	0.48	0.68	0.45	0.63
Total Camber	1.30	1.80	1.40	1.96	1.39	1.95	1.33	1.84	1.40	1.96	1.33	1.86	–	–	–	–	–	–	–	–	–	–

Camber not required when it is less than 1 inch, mill camber to be turned upward.

STRINGER TABLE					
Span	Str.	Length L ℄ Brg. to ℄ Brg.	Angle L (Left)	Angle R (Right)	Shear Stud Spcg. "A" (Inches)
A	S1A	73'-0 1/16"	70°-36'-15.8"	109°-23'-44.2"	14
	S2A	73'-3 3/4"	71°-01'-44.5"	108°-58'-15.5"	13
	S3A	73'-1 9/16"	71°-27'-21.0"	108°-32'-39.0"	13
	S4A	72'-11 3/8"	71°-53'-05.2"	108°-06'-54.8"	13
	S5A	72'-9 1/4"	72°-18'-57.0"	107°-41'-03.0"	14 1/2
B	S1B	74'-0 3/4"	56°-37'-41.1"	123°-22'-18.9"	14
	S2B	73'-4 15/16"	57°-24'-04.2"	122°-35'-55.8"	13
	S3B	72'-9 3/16"	58°-11'-16.1"	121°-48'-43.9"	13
	S4B	72'-11 13/16"	58°-59'-17.1"	121°-00'-42.9"	13
	S5B	71'-0 3/4"	59°-48'-07.3"	120°-11'-52.7"	14
C	S1C	55'-9 3/4"	43°-15'-41.6"	136°-44'-18.4"	14
	S2C	54'-5 3/8"	44°-37'-47.4"	135°-22'-12.6"	12 1/2
	S3C	53'-1 3/8"	46°-04'-03.6"	133°-55'-56.4"	12 1/2
	S4C	51'-9 3/4"	47°-34'-42.7"	132°-25'-17.3"	12
	S5C	50'-6 1/16"	49°-09'-57.2"	130°-50'-02.8"	13

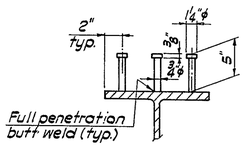

SHEAR STUD DETAIL
No Scale

NO.	REVISION	BY	DATE
3			
2			
1			

	BY	DATE
MADE	T. J. Q.	
CHECKED	N. F. O.	
IN CHARGE	A. J. C.	

DELAWARE STATE HIGHWAY DEPARTMENT

DELAWARE TURNPIKE

ROUTE 273 INTERCHANGE IMPROVEMENTS
RAMP F BRIDGE OVER ROUTE 273

FRAMING PLAN & CROSS SECTION

HOWARD, NEEDLES, TAMMEN & BERGENDOFF
consulting engineers
NEW YORK KANSAS CITY

SCALE: AS SHOWN
CONTRACT NO. 7060
SHEET NO. 7 OF 10

DELAWARE TURNPIKE	CONT. NO	TITLE	SHEET NO.	TOTAL SHEETS
	7060		94	115

REINFORCING BAR SCHEDULE

MARK	NO.	TYPE	A	B	LENGTH
		DECK SLAB			
S401	40	Str.			38'-8"
S402	40	Str.			39'-0"
S403	40	Str.			30'-8"
S404	38	1	6'-0"	0'-8"	6'-8"
S405	76	1	4'-0"	0'-8"	4'-8"
S406	30	Str.			14'-11"
S407	30	Str.			14'-10"
S408	24	Str.			14'-5"
S409	30	Str.			14'-9"
S410	30	Str.			14'-4"
S411	24	Str.			13'-0"
S501	92	Str.			38'-8"
S502	92	Str.			39'-0"
S503	92	Str.			30'-8"
S504	358	2	33'-2"	0'-7	34'-4"
S505	358	Str.			33'-2"
S506	1Ser. 11	4	22'-0"to30'-9"	0'-7"	22'-7"to31'-4"
S507	1Ser. 11	Str.			22'-0"to30'-9"
S508	1Ser. 21	4	19'-7"to31'-5	0'-7"	20'-2"to32'0"
S509	1Ser. 21	Str.			19'-7"to31'-5"
S510	8	Str.			15'-0"
S511	6	Str.			8'-0"
S512	2	Str.			60'-0"
S513	2	Str.			43'-0"
S514	2	Str.			55'-0"
S515	2	Str.			37'-0"
S516	2	Str.			35'-0"
S517	1Ser. 25	4	18'-0"to31'-5"	0'-7"	18'-7"to32'-0"
S518	1Ser. 25	Str.			18'-0"to31'-5"
S519	1Ser. 30	4	19'-0"to31'-5	0'-7"	19'-0"to32'-0"
S520	1Ser. 30	Str.			19'-0"to31'-5"
S521	431	3			8'-2"
S522	1Ser. 11	4	21'-6"to30'-9"	0'-7"	22'-1"to31'-4"
S523	1Ser. 11	Str.			21'-6"to30'-9
S601	1Ser. 15	4	2'-6"to29'-5	0'-8"	3'-2"to30'-1"
S602	1Ser. 15	Str.			2'-6"to29'-5"
S603	1Ser. 9	4	14'-0"to21'-1"	0'-8"	14'-8"to21'-9"
S604	1Ser. 9	Str.			14'-0"to21'-1"
S605	1Ser. 14	4	5'-0"to13'-0"	0'-8"	5'-8"to13'-8"
S606	1Ser. 14	Str.			5'-0"to13'-0"
S607	1Ser. 11	4	12'-6"to19'-0"	0'-8"	13'-2"to19'-8"
S608	1Ser. 11	Str.			12'-6"to19'-0"
S609	1Ser. 19	4	6'-0"to12'-4"	0'-8"	6'-8"to13'-0"
S610	1Ser. 19	Str.			6'-0"to12'-4"
S611	1Ser. 13	4	10'-8"to17'-5"	0'-8"	11'-4"to18'-1"
S612	1Ser. 13	Str.			10'-8"to17'-5"
S613	1Ser. 16	4	12'-0"to18'-7"	0'-8"	12'-8"to19'-3"
S614	1Ser. 16	Str.			12'-0"to18'-7"
S615	1Ser. 25	4	6'-0"to11'-6	0'-8"	6'-8"to12'-2"
S616	1Ser. 25	Str.			6'-0"to11'-6"
S617	2	4	32'-0"	0'-8"	32'-8"
S618	2	Str.			32'-0"
S619	4	4	34'-6"	0'-8"	35'-2"
S620	4	Str.			34'-6"
S621	4	4	40'-8"	0'-8"	40'-8"
S622	4	Str.			40'-0"
S623	2	4	47'-6"	0'-8"	48'-2"
S624	2	Str.			47'-6"
S625	1Ser. 16	4	6'-0"to10'-0	0'-8"	6'-8"to10'-8"
S626	1Ser. 16	Str.			6'-0"to10'-0"
S627	1Ser. 9	4	13'-2"to20'-7"	0'-8"	13'-10"to21'-3"
S628	1Ser. 9	Str.			13'-2"to20'-7"
S629	1Ser. 12	4	5'-0"to12'-3"	0'-8"	5'-8"to12'-11"
S630	1Ser. 12	Str.			5'-0"to12'-3"
		APPROACH SLABS			
A5401	75	5	1'-9"	1'-4"	5'-9"
A5501	42	Str.			29'-8"
A5502	1Ser. 4	Str.			4'-0"to23'-6
A5503	6	Str.			30'-3"
A5504	1Ser. 33	Str.			2'-6"to29'-0
A5505	6	Str.			45'-6"
A5601	1Ser. 60	2	19'-8"to25'-4"	0'-8"	21'-0"to26'-8
A5602	1Ser. 60	2	19'-8"to35'-4"	0'-8"	21'-0"to36'-10"

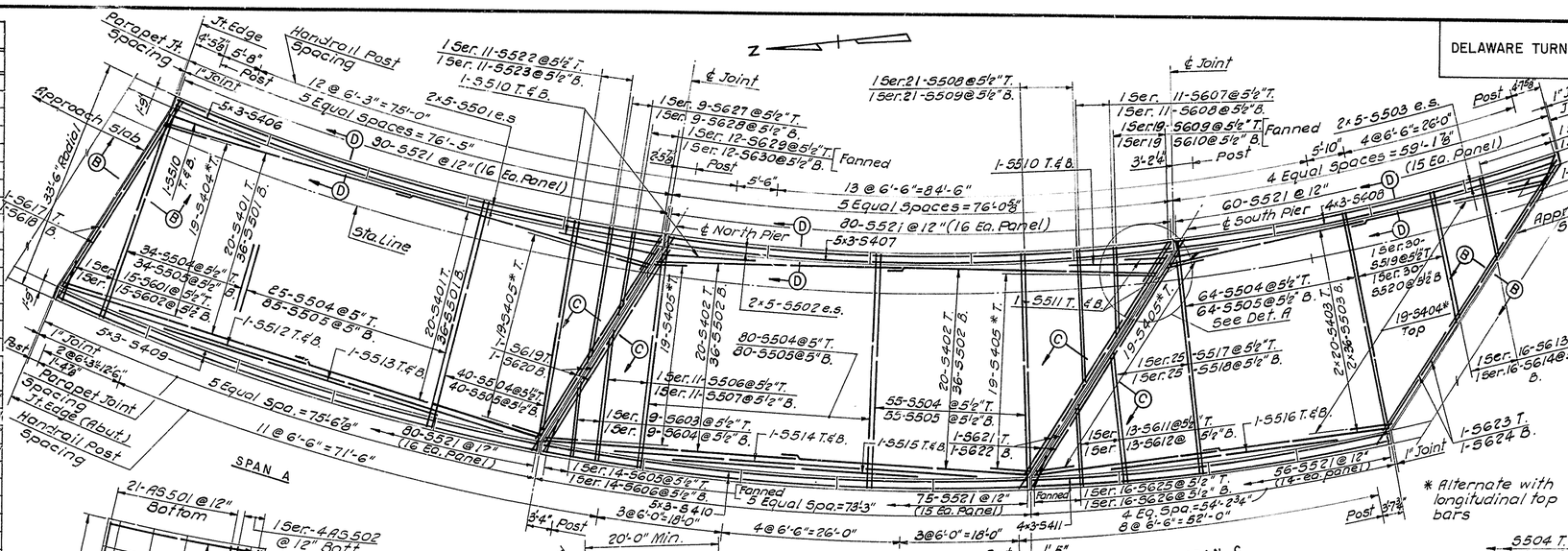

SLAB PLAN

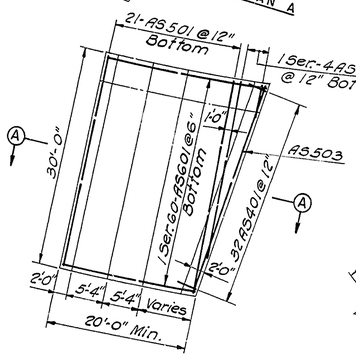

NORTH SLAB

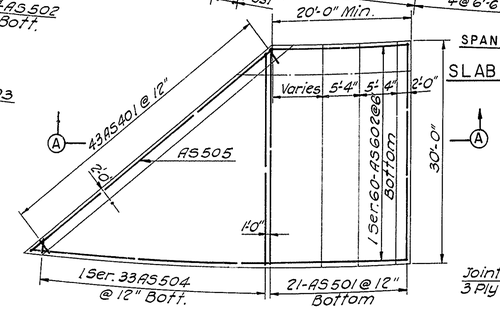

APPROACH SLABS

SOUTH SLAB

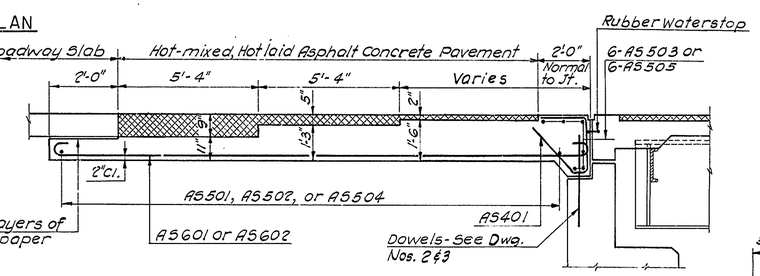

SECTION A-A
Scale: 3/8"=1'-0"

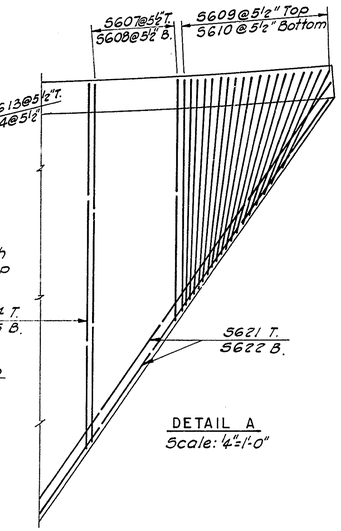

DETAIL A
Scale: ¼"=1'-0"

* Alternate with longitudinal top bars

REINFORCEMENT PLACEMENT

Transverse full length bars are to be placed radially with the spacing measured along the West Fascia stringers.
Transverse series bars are to be placed parallel to the last transverse radial bar (except for fanned bars)
For location of top and bottom longitudinal bars between stringers see Cross Section Dwg. No. 7.

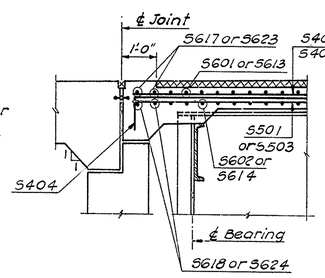

SECTION B-B
Scale ½"=1'-0"

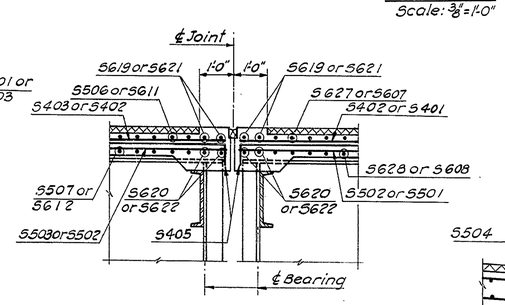

SECTION C-C
Scale: ½"=1'-0"

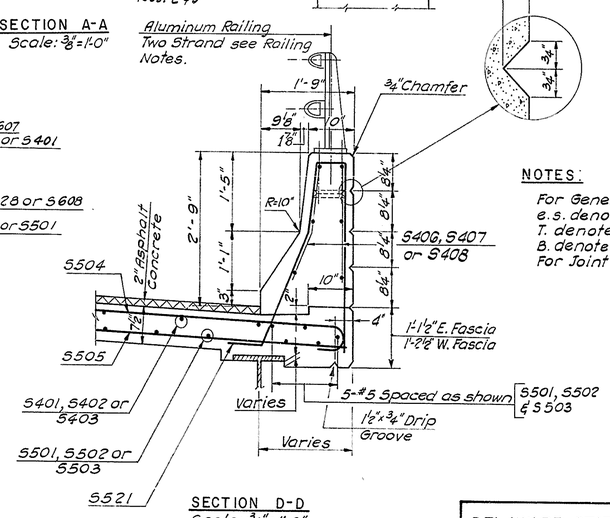

SECTION D-D
Scale: ¾"=1'-0"

NOTES:

For General Notes see Dwg. No. 1
e.s. denotes each side.
T. denotes Top
B. denotes Bottom
For Joint details see Dwg. No. 9.

BENDING DIAGRAMS

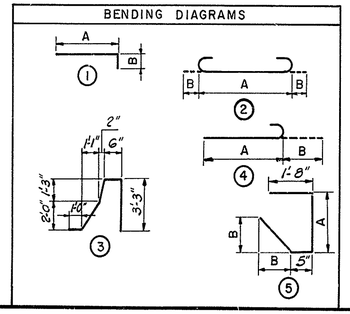

RAILING NOTES:

Aluminum Railing-Two Strand shall conform to the details as shown on the Delaware State Highway Department Dwg. "Std. for One and Two Strand Metal Bridge Rail"
Rail Members shall be curved to the curvature of the Parapet.
Rail Post and Intermediate Parapet Joint Spacing to be measured along Gutter Line.

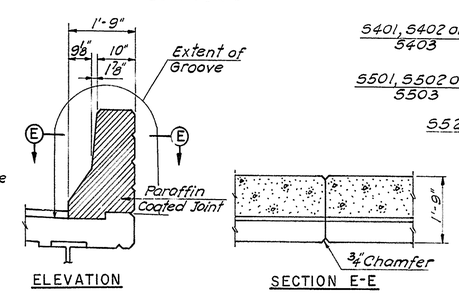

ELEVATION

SECTION E-E

INTERMEDIATE PARAPET JOINT
Scale: ½"=1'-0"

NO.	REVISION	BY	DATE
3			
2			
1			
	BY		DATE
MADE	N.D.P.		
CHECKED	L.D.		
IN CHARGE	A.J.C.		

DELAWARE STATE HIGHWAY DEPARTMENT

DELAWARE TURNPIKE

ROUTE 273 INTERCHANGE IMPROVEMENTS
RAMP F BRIDGE OVER ROUTE 273
CONCRETE DECK & APPROACH SLABS

HOWARD, NEEDLES, TAMMEN & BERGENDOFF
consulting engineers
NEW YORK KANSAS CITY

SCALE 1"=10'-8" AS SHOWN
CONTRACT NO 7060
DWG. NO 8 OF 10

DELAWARE TURNPIKE	CONT. NO.	TITLE	SHEET NO.	TOTAL SHEETS
	7060		95	115

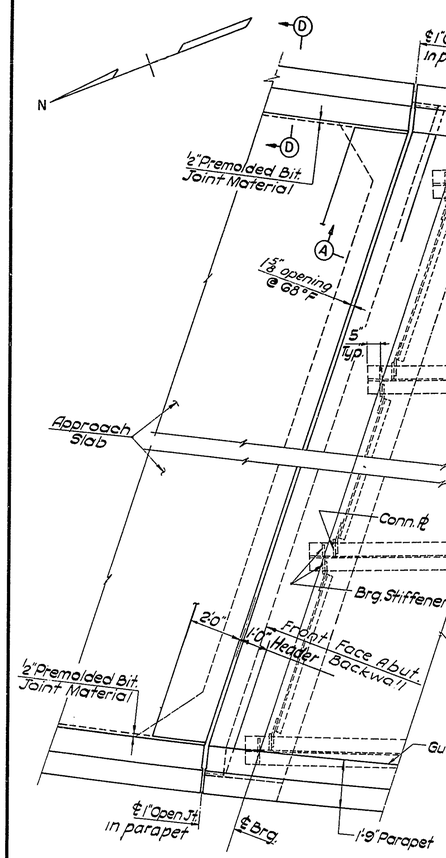

PLAN - NORTH ABUTMENT
South Abutment similar

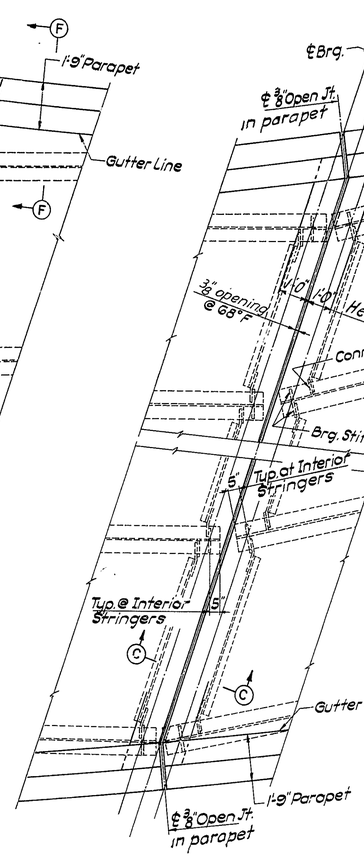

PLAN - NORTH PIER

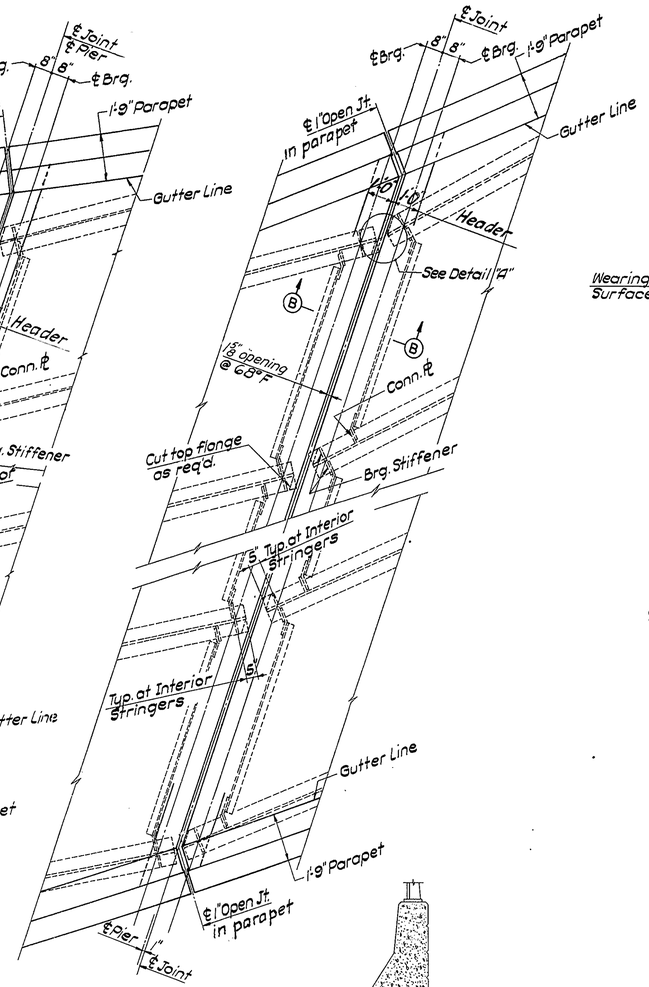

PLAN - SOUTH PIER

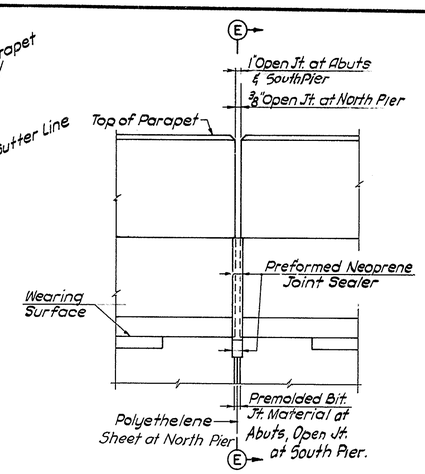

SECTION ALONG GUTTER LINE
1½"=1'-0"

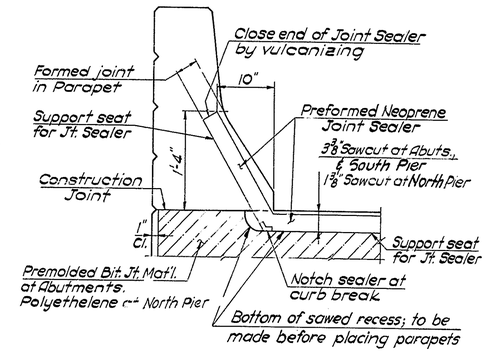

SECTION E-E
1½"=1'-0"

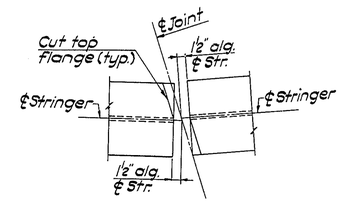

DETAIL "A"
1½"=1'-0"
Typical at Fascia Stringers at all Piers

NOTES:

Any changes in the shape or dimensions of preformed neoprene joint sealer must be approved by the Engineer.
The minimum thicknes of any web shall not be less than as specified.
The sealer shall be supplied in one piece for the full width of each joint. One shop splice will be permitted for lengths in excess of 50 feet.
It is absolutely essential that the joint openings in slabs be sawcut accurately to smooth straight lines.
The size of the opening shall be adjusted to allow for the temperature at the time of construction.
The joints shall be thoroughly cleaned. The sealer shall be installed by suitable machine tools only and thoroughly secured in place with a lubricant which shall cover both sides of the sealer over the full area in contact with the sides of the joint.
Cost of joints to be included in the price bid for the item "Portland Cement Concrete Masonry - Superstructure."

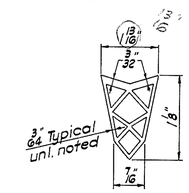

TYPE B

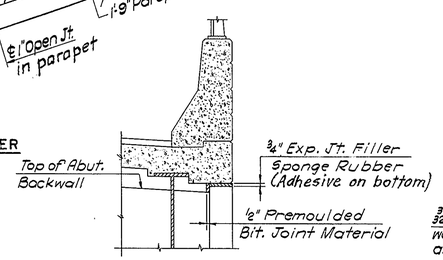

SECTION F-F
½"=1'-0"
(Typ. all Abut. corners)

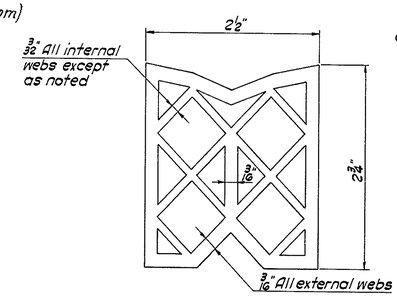

TYPE A

PREFORMED NEOPRENE JOINT SEALER
No Scale

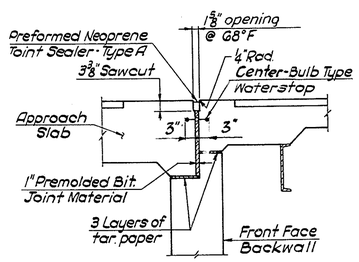

SECTION A-A
½"=1'-0"

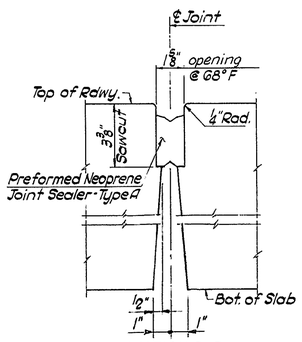

SECTION B-B
3"=1'-0"

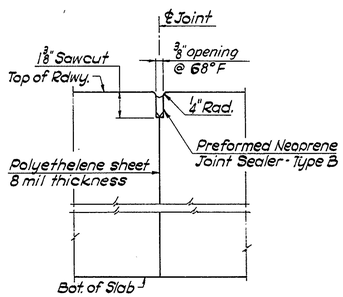

SECTION C-C
3"=1'-0"

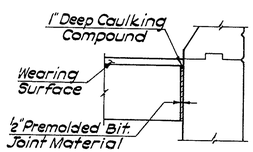

SECTION D-D
½"=1'-0"

NO.	REVISION	BY	DATE
3			
2			
1			

	BY	DATE
MADE	T. J. Q.	2-70
CHECKED	N. F. O.	3-70
IN CHARGE	A. J. C.	

DELAWARE STATE HIGHWAY DEPARTMENT

DELAWARE TURNPIKE

ROUTE 273 INTERCHANGE IMPROVEMENTS
RAMP F BRIDGE OVER ROUTE 273

JOINT DETAILS

HOWARD, NEEDLES, TAMMEN & BERGENDOFF
consulting engineers
NEW YORK KANSAS CITY

SCALE: 3/8"=1'-0" & AS SHOWN
CONTRACT NO. 7060
DWG. NO. 9 OF 10

DELAWARE TURNPIKE	CONT. NO.	TITLE	SHEET NO.	TOTAL SHEETS
	7060		96	115

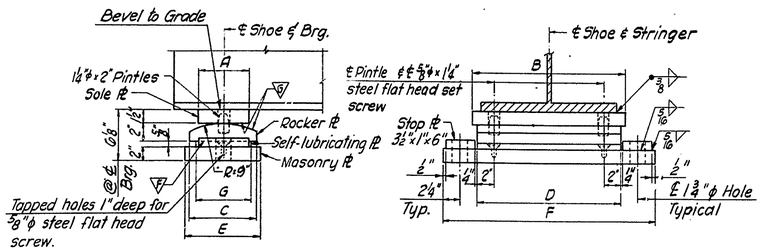

SIDE ELEVATION

END ELEVATION

EXPANSION SHOE

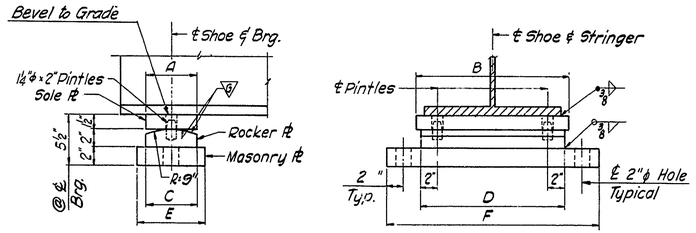

SIDE ELEVATION

END ELEVATION

FIXED SHOE

Suffix A for Fixed Shoes denotes 1 5/16" x 1¾" Slotted holes in Sole Pl for pintles, see Detail "C".

SHOE	DIMENSIONS						
	A	B	C	D	E	F	G
E23	6"	1'-1"	7½"	1'-0"	8"	1'-8½"	6"
E24	6"	1'-1"	8½"	1'-0"	9"	1'-8½"	6½"
F23	6"	1'-1"	6"	1'-0"	7"	1'-8"	
F23A	6"	1'-1"	6"	1'-0"	7"	1'-8"	

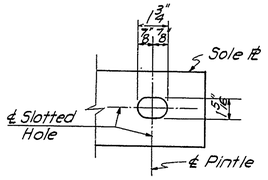

DETAIL "C"
No Scale

ROCKER SHOE DETAILS
1½"=1'-0"

SHOE NOTES:

Material for shoes (exclusive of self-lubricating plates), shall be structural steel conforming to the requirements of A.S.T.M. Specifications A242 and shall have an atmospheric corrosion resistance equal to a min. of four times that of A.S.T.M.-A36 steel.

Top of masonry plates, bottom of rocker plates and top and bottom of sole plates shall be planed, straightened or otherwise treated to secure true level surfaces.

Contact surfaces noted on the plans with finish symbols shall be finished in accordance with the Standards of the Association of Iron and Steel Engineers to the class of finish prescribed.

The plates comprising the expansion shoes shall be set so as to be truly centered under full dead load at a temperature of 68°F.

Concrete pads shall be formed integral with pier or abutment and not less than ⅛" nor more than ¼" above finished elevation. Dress down pads by rubbing, grinding, or as otherwise approved by the Engineer, to true level surfaces at the finished elevation.

Anchor bolts, hexagon nuts and washers shall be hot dipped galvanized conforming to ASTM A153

Templates shall be used to accurately set the anchor bolts.

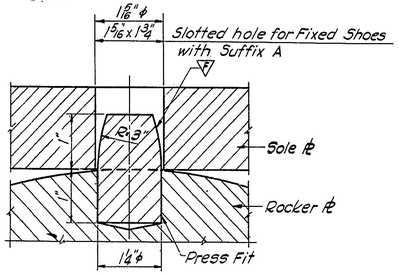

PINTLE DETAIL
¾"=1"

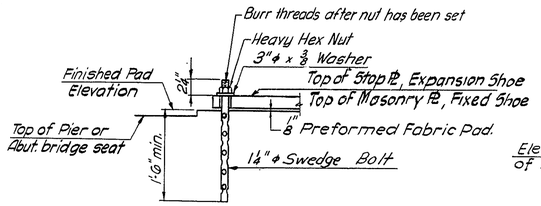

ANCHOR BOLT DETAIL
No Scale

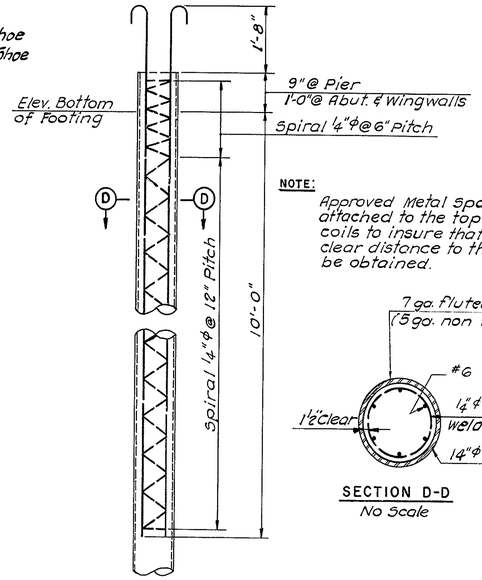

NOTE:
Approved Metal spacers shall be attached to the top and bottom coils to insure that the minimum clear distance to the shell will be obtained.

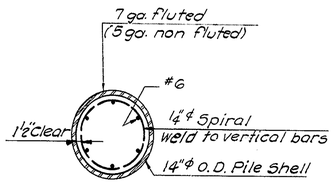

SECTION D-D
No Scale

14"φ CAST IN PLACE CONCRETE PILE

50 ton tapered piles of equivalent cross section and strength will be considered by the Engineer in place of the detail shown.

NO.	REVISION	BY	DATE
3			
2			
1			

	BY	DATE
MADE	R.M.L.	3-70
CHECKED	N.F.O.	4-70
IN CHARGE	A.J.C.	

DELAWARE STATE HIGHWAY DEPARTMENT

DELAWARE TURNPIKE

ROUTE 273 INTERCHANGE IMPROVEMENTS
RAMP F BRIDGE OVER ROUTE 273
MISCELLANEOUS DETAILS

HOWARD, NEEDLES, TAMMEN & BERGENDOFF
consulting engineers
NEW YORK KANSAS CITY

SCALE: AS SHOWN
CONTRACT NO. 7060
DWG. NO. 10 OF 10

DELAWARE TURNPIKE	CONT. NO	TITLE	SHEET NO.	TOTAL SHEETS
	7060		97	115

LEGEND

denotes Boring

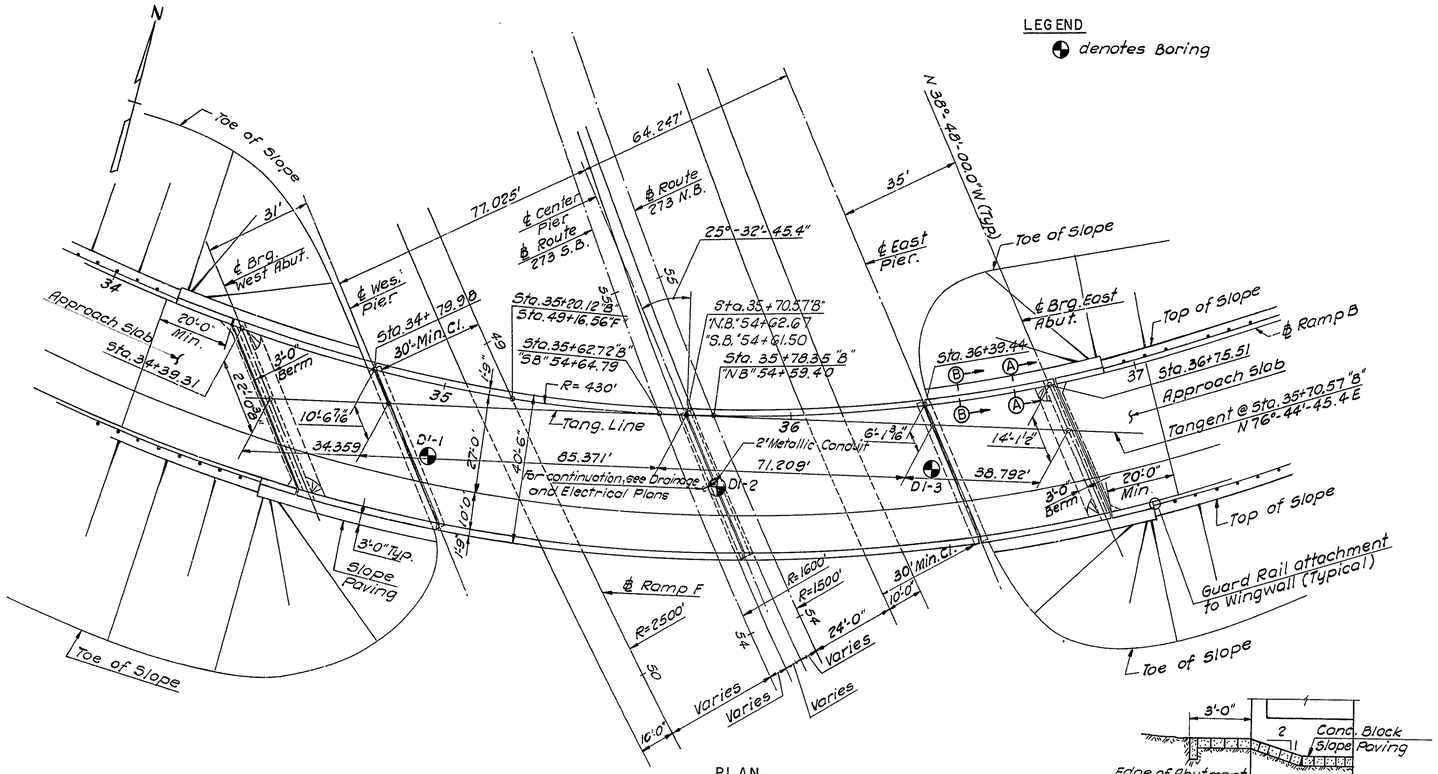

PLAN

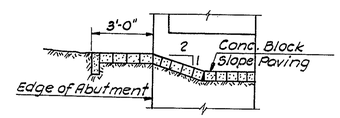

SECTION A-A
Not to Scale

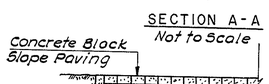

SECTION B-B
Not to Scale

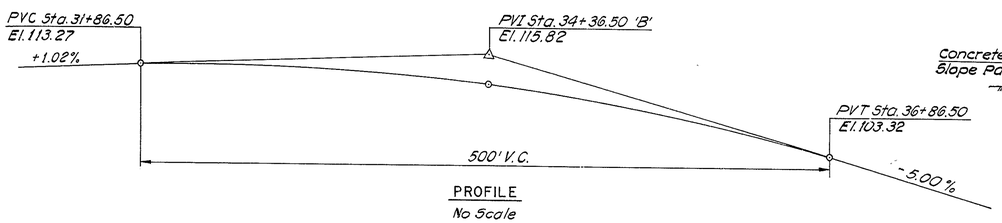

PROFILE
No Scale

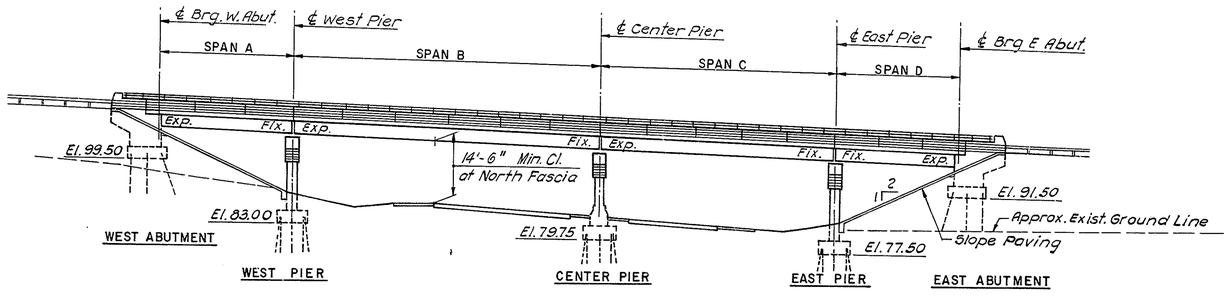

ELEVATION

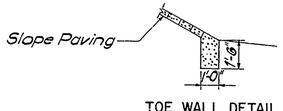

TOE WALL DETAIL
Scale 1/4"=1'-0"
Include with cost for Slope Paving

ESTIMATED QUANTITIES

ITEM NO.	DESCRIPTION	UNIT	QUANTITY
4	Excavation for Structures	C.Y.	305
7	Select Borrow- Grade A	C.Y.	180
11	Hot-mix, Hot-laid Asphaltic Concrete Pavement	Tons	145
18	Portland Cement Concrete Masonry		
	Footings	C.Y.	193
	Substructure above footings	C.Y.	321
	Superstructure	C.Y.	340
	Approach Slabs	C.Y.	113
19	Superficial Waterproofing	S.Y.	118
20	Bar Reinforcement	Lbs.	126,325
22	Structural Steel (Estimated WT. = 276,000#)	L.S.	1
22A	Aluminum Railing- Two Strand	L.F.	514
31	6"φ Perforated Corrugated Metal Pipe Underdrain	L.F.	143
35	14"φ Cast-in-Place Concrete Piles	L.F.	3,856
	Coal Tar Epoxy Underseal	S.Y.	831
	Protective Coating for Concrete	S.F.	1,015
	Slope Paving (Concrete Block)	S.Y.	467

GENERAL NOTES:

Construction Specifications: Delaware State Highway Department Standard Specifications dated June 1, 1965 and Special Provisions.

Design Specifications: A.A.S.H.O. Standard Specifications for Highway Bridges dated 1969

Design Live Load: HS20-44

Design Stresses: Concrete fc=1200 p.s.i. Structural and Reinforcing Steel fs=20,000 p.s.i.

Concrete:
All exposed edges shall be chamfered 3/4" unless otherwise noted.
Concrete cover on reinforcing shall be 2" min. unless otherwise shown in the plans.

Bar Reinforcement: Bar Reinforcement shall be deformed billet-steel bars (A-615) grade 40.
All bar laps shall be 30 diameters minimum of the smaller bar spliced, unless otherwise noted.
In computing the total length shown for each bent bar, dimensions of legs adjoining each bend (not 135° or 180° hooks) were carried to the point of intersection of both legs and no deductions were made for the shorter distance along the curve. The Contractor shall take this fact into consideration when ordering and fabricating bent bars.
The first digit of the bar mark denotes the bar size, i.e. A501 is a No. 5 bar.

Structural Steel: Structural Steel shall conform to the requirements of A.S.T.M. Designation A36 except as noted.

Piles: All piles shall be 14"φ cast-in place concrete piles driven to a minimum bearing capacity of 50 tons.

NO.	REVISION	BY	DATE
3			
2			
1			

	BY	DATE
MADE	N. D. P.	2-70
CHECKED	J. S.	4-70
IN CHARGE	A. J. C.	

DELAWARE STATE HIGHWAY DEPARTMENT

DELAWARE TURNPIKE

ROUTE 273 INTERCHANGE IMPROVEMENTS
RAMP B BRIDGE OVER ROUTE 273

GENERAL PLAN & ELEVATION

HOWARD, NEEDLES, TAMMEN & BERGENDOFF
consulting engineers
NEW YORK KANSAS CITY

SCALE: 1"=20' & AS SHOWN
CONTRACT NO. 7060
DWG. NO. 1 OF 9

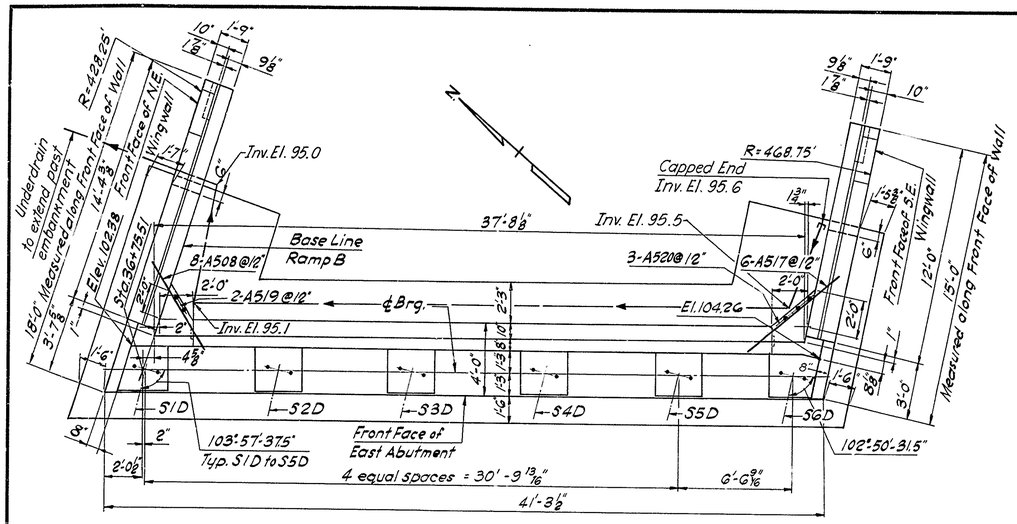

PLAN

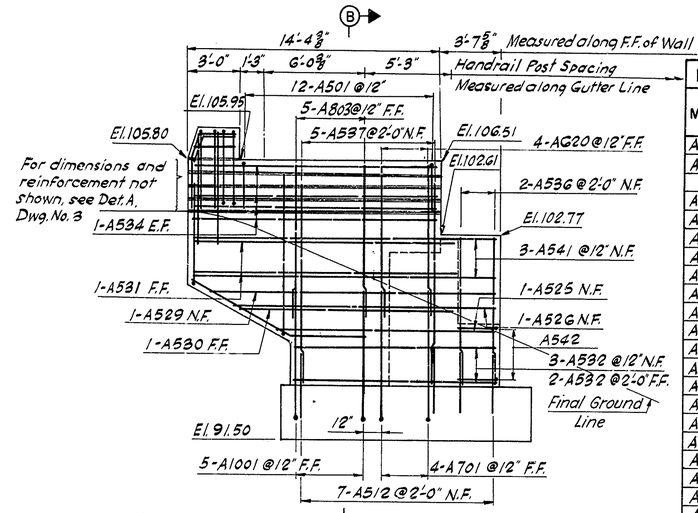

ELEVATION N.E. WINGWALL

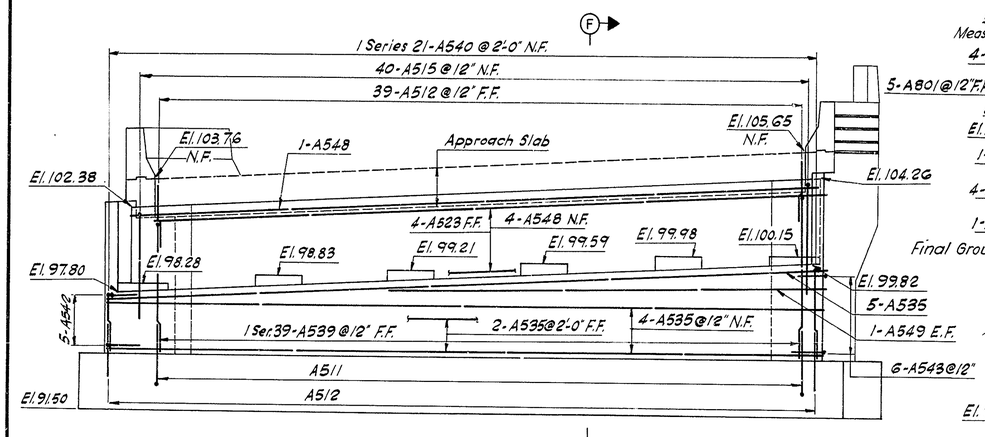

ELEVATION

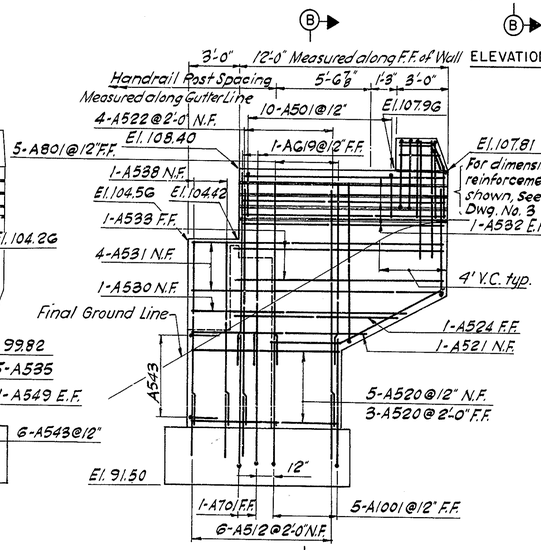

ELEVATION S.E. WINGWALL

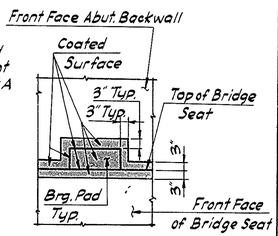

APPLICATION LIMITS OF EPOXY PROTECTIVE COATING FOR CONCRETE

No. Scale

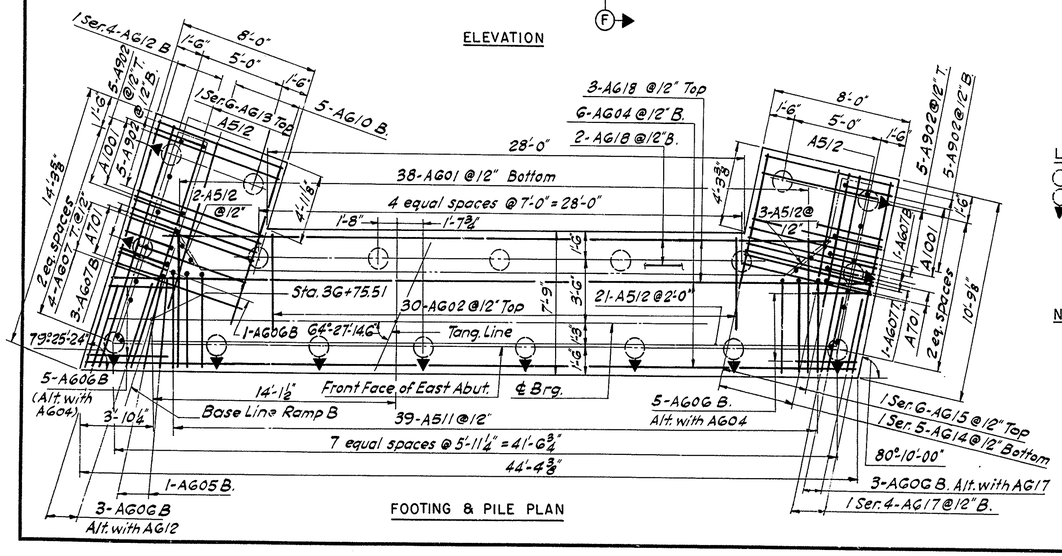

FOOTING & PILE PLAN

LEGEND

- ○ Indicates Vertical Pile.
- ○ Indicates Pile battered 3:12 in direction shown.

Approximate Pile tip Elev.
East Abutment +38.0
West Abutment +55.0

NOTES:
For Substructure Notes see Dwg. No. 5.
Work this Dwg. with Dwg. No. 3.

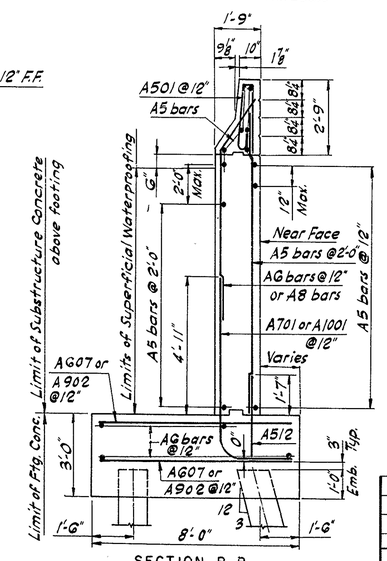

SECTION B-B

(Section C-C similar)
Scale: 3/8" = 1'-0"

CONT. NO.	TITLE	SHEET NO.	TOTAL SHEETS
7060	DELAWARE TURNPIKE	98	115

REINFORCING BAR SCHEDULE

MARK	NO. REQUIRED W. ABUT.	NO. REQUIRED E. ABUT.	TYPE	LENGTH
A401	24	24	1	5'-6"
A402	30	30	1	5'-1"
A501	23	22	2	5'-8"
A502	4	4	3	10'-9"
A503	4	4	4	9'-2"
A504	6	6	1	6'-5"
A505	2 Ser. 6	2 Ser. 6	5	18'-7" to 18'-7"
A506	2	2	6	6'-5"
A507	2	2	3	3'-10"
A508	6	14	Str.	6'-0"
A509	4	4	Str.	2'-6"
A510	1	—	Str.	17'-3"
A511	50	39	7	8'-2"
A512	95	78	Str.	3'-2"
A513	1 Ser. 50	—	8	8'-5" to 10'-0"
A514	1 Ser. 27	—	8	7'-0" to 8'-6"
A515	52	40	9	8'-0"
A516	9	—	Str.	5'-0"
A517	8	6	Str.	6'-7"
A518	1	—	Str.	8'-4"
A519	3	2	Str.	7'-0"
A520	9	11	Str.	8'-8"
A521	2	1	Str.	10'-8"
A522	4	4	Str.	12'-9"
A523	—	4	Str.	37'-4"
A524	11	1	Str.	9'-7"
A525	5	1	Str.	13'-6"
A526	1	1	Str.	15'-6"
A527	2	—	Str.	17'-6"
A528	4	—	Str.	19'-6"
A529	8	1	Str.	16'-10"
A530	—	2	Str.	12'-6"
A531	4	6	Str.	14'-8"
A532	—	13	Str.	11'-8"
A533	—	2	Str.	12'-2"
A534	—	8	Str.	14'-0"
A535	—	11	Str.	40'-11"
A536	2	2	Str.	8'-1"
A537	6	5	Str.	10'-11"
A538	—	2	Str.	9'-10"
A539	—	1 Ser. 39	8	8'-2" to 10'-0"

REINFORCING BAR SCHEDULE

MARK	NO. REQUIRED W. ABUT.	NO. REQUIRED E. ABUT.	TYPE	LENGTH
A540	—	1 Ser. 21	8	6'-7" to 8'-7"
A541	—	3	Str.	17'-8"
A542	—	5	10	3'-2"
A543	—	6	3	3'-2"
A544	1	—	Str.	50'-6"
A545	4	—	Str.	51'-0"
A546	4	—	Str.	48'-3"
A547	11	—	Str.	52'-6"
A548	—	5	Str.	39'-6"
A549	—	2	Str.	30'-0"
A550	2	—	Str.	25'-0"
A551	6	—	11	3'-8"
A552	5	—	3	3'-2"
AG01	49	38	Str.	7'-3"
AG02	45	30	Str.	4'-9"
AG03	22	—	Str.	29'-9"
AG04	—	6	Str.	43'-10"
AG05	2	2	Str.	4'-6"
AG06	10	17	Str.	4'-0"
AG07	13	11	Str.	7'-6"
AG08	1 Ser. 3	—	Str.	10'-0" to 11'-3"
AG09	2	—	Str.	10'-6"
AG10	2	5	Str.	9'-9"
AG11	15	—	Str.	15'-0"
AG12	—	1 Ser. 4	Str.	13'-0" to 13'-9"
AG13	—	1 Ser. 6	Str.	9'-6" to 10'-0"
AG14	—	1 Ser. 5	Str.	6'-0" to 7'-0"
AG15	—	1 Ser. 6	Str.	8'-0" to 9'-0"
AG16	6	—	3	9'-3"
AG17	—	1 Ser. 4	Str.	10'-6" to 11'-0"
AG18	—	5	Str.	38'-6"
AG19	—	2	3	10'-3"
AG20	—	4	3	8'-9"
A701	7	6	7	9'-1"
A801	5	5	3	11'-0"
A802	5	—	3	9'-9"
A803	—	5	3	9'-3"
A901	11	—	Str.	4'-0"
A902	10	20	Str.	7'-6"
A1001	10	10	7	9'-1"

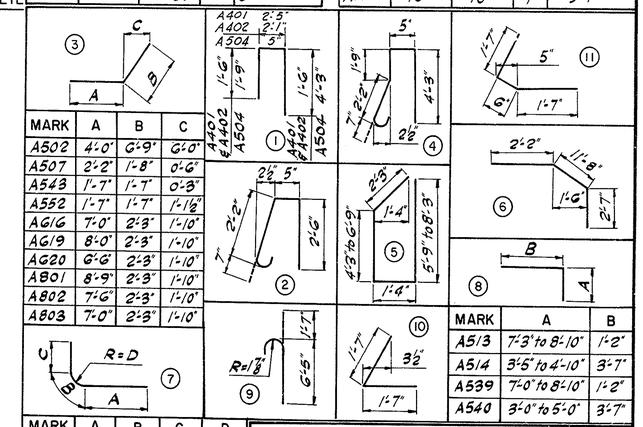

MARK	A	B	C
A502	4'-0"	6'-9"	6'-0"
A507	2'-2"	1'-8"	0'-6"
A543	1'-7"	1'-7"	0'-3"
A552	1'-7"	1'-7"	1'-1 1/2"
AG16	7'-0"	2'-3"	1'-10"
AG19	8'-0"	2'-3"	1'-10"
AG20	6'-6"	2'-3"	1'-10"
A801	8'-9"	2'-3"	1'-10"
A802	7'-6"	2'-3"	1'-10"
A803	7'-0"	2'-3"	1'-10"

MARK	A	B	C	D
A511	4'-6 1/2"	0'-10"	2'-9 1/2"	0'-6"
A701	2'-0"	1'-3"	5'-10"	0'-9"
A1001	1'-9"	1'-9 1/2"	5'-6 1/2"	1'-1"

MARK	A	B
A513	7'-3" to 8'-10"	1'-2"
A514	3'-5" to 4'-10"	3'-7"
A539	7'-0" to 8'-10"	1'-2"
A540	3'-0" to 5'-0"	3'-7"

NO.	REVISION	BY	DATE
3			
2			
1	Spacing of Stringers to agree with Dwg. No. 6.	J. R.	10-29-70

	BY	DATE
MADE	N.C.	3-70
CHECKED	M.T.	4-70
IN CHARGE	A.J.C.	

DELAWARE STATE HIGHWAY DEPARTMENT

DELAWARE TURNPIKE

ROUTE 273 INTERCHANGE IMPROVEMENTS
RAMP B BRIDGE OVER ROUTE 273

EAST ABUTMENT

HOWARD, NEEDLES, TAMMEN & BERGENDOFF
consulting engineers
NEW YORK KANSAS CITY

SCALE: 1/4" = 1'-0" & AS SHOWN
CONTRACT NO. 7060
DWG. NO. 2 OF 9

DELAWARE TURNPIKE	CONT. NO.	TITLE	SHEET NO.	TOTAL SHEETS
	706C		99	115

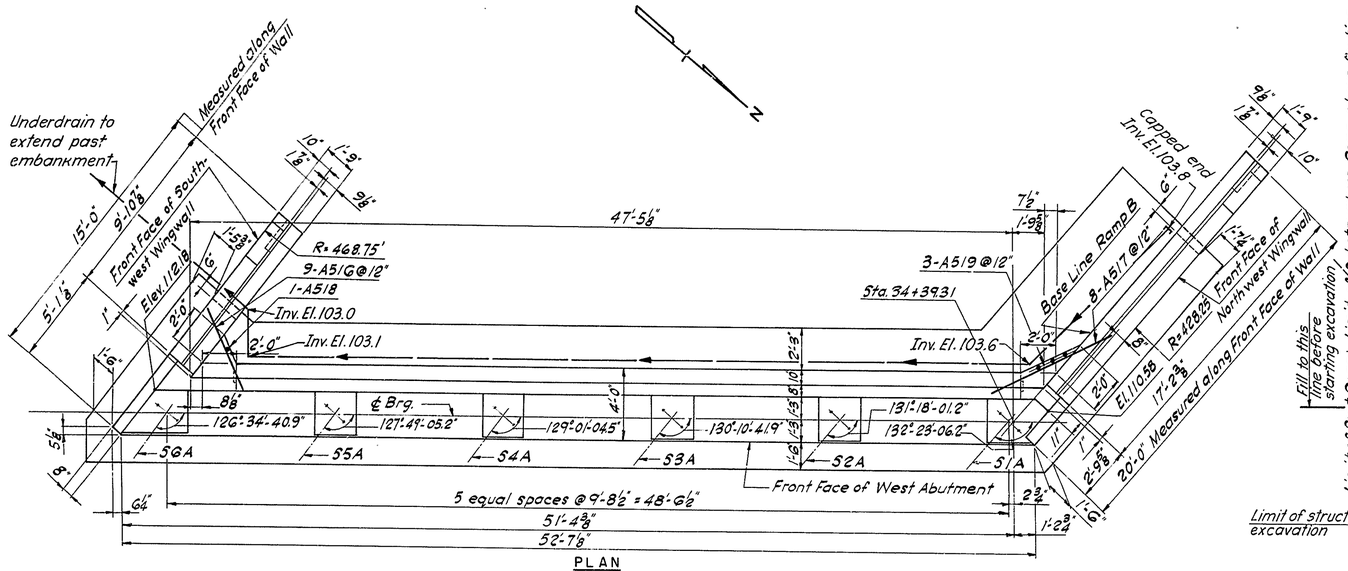

PLAN

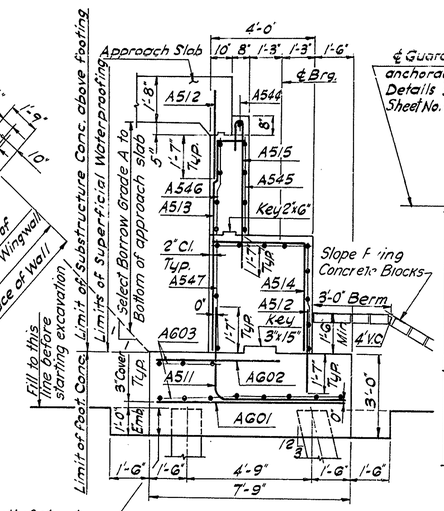

SECTION A-A
(Section F-F similar)
Scale: ⅜"=1'-0"

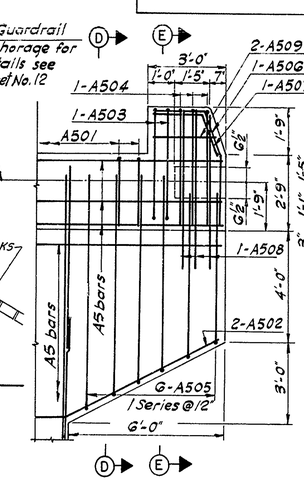

DETAIL A
⅜"=1'-0"

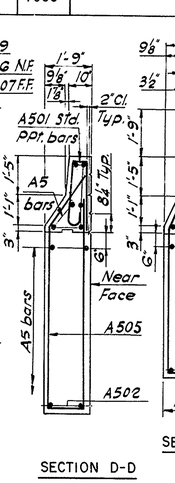

SECTION D-D
⅜"=1'-0"

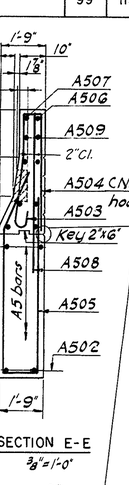

SECTION E-E
⅜"=1'-0"

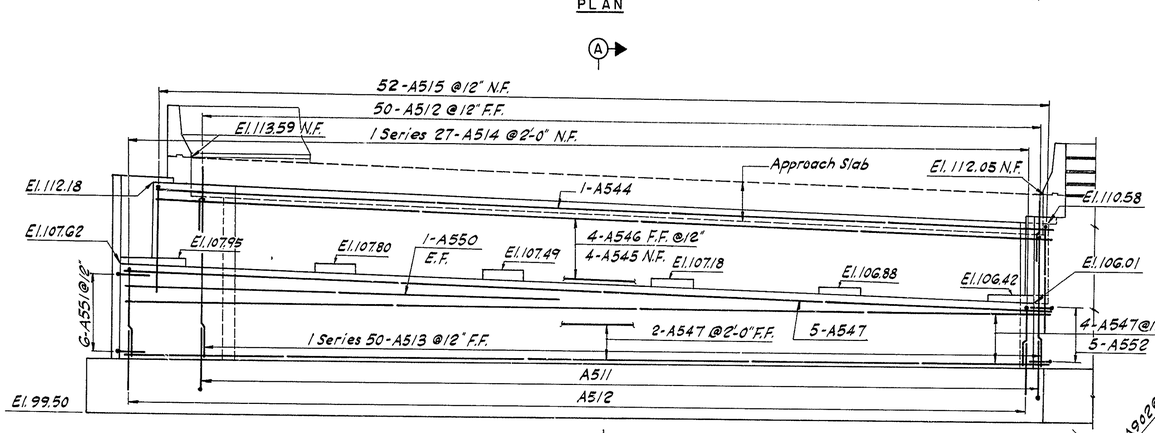

ELEVATION

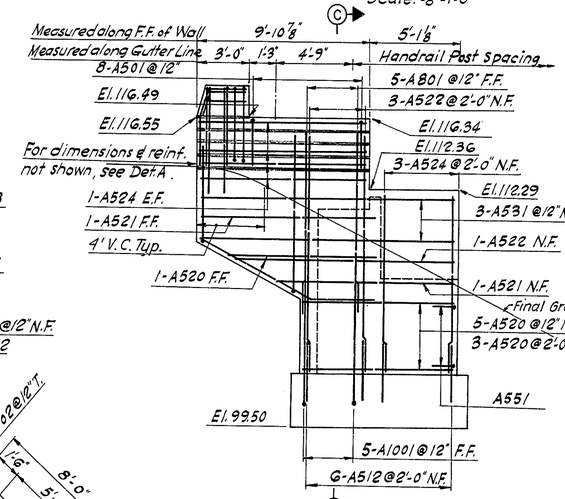

ELEVATION S.W. WINGWALL

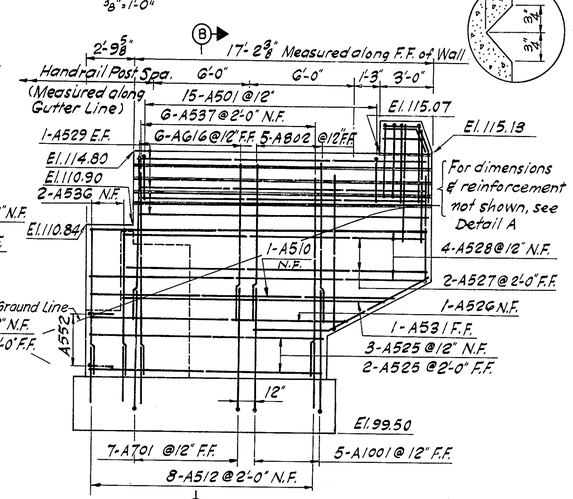

ELEVATION N.W. WINGWALL

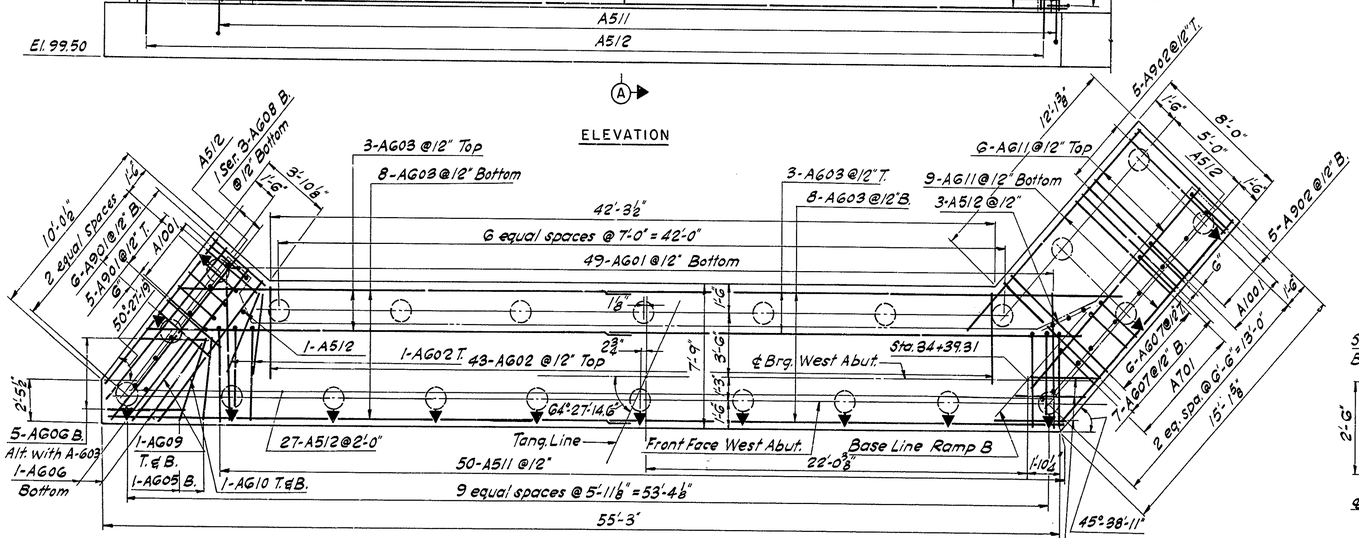

FOOTING PLAN

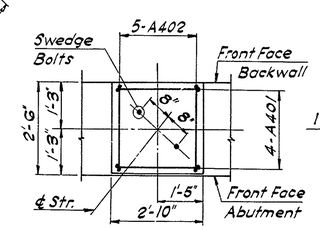

PLAN

TYPICAL PAD DETAILS
No Scale

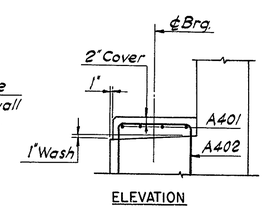

ELEVATION

NOTES:
For Substructure Notes see Dwg. No. 5
For Pile Notes & Legend see Dwg. No. 2
For Railing Notes see Dwg. No. 7

NO.	REVISION	BY	DATE
3			
2			
1			

	BY	DATE
MADE	N. C.	3-70
CHECKED	M. S. T.	4-70
IN CHARGE	A. J. C.	

DELAWARE STATE HIGHWAY DEPARTMENT
DELAWARE TURNPIKE
ROUTE 273 INTERCHANGE IMPROVEMENTS
RAMP B BRIDGE OVER ROUTE 273
WEST ABUTMENT

HOWARD, NEEDLES, TAMMEN & BERGENDOFF
consulting engineers
NEW YORK KANSAS CITY

SCALE: 1/4"=1'-0" & As Shown
CONTRACT NO. 7060
DWG. NO. 3 OF 9

DELAWARE TURNPIKE	CONT. NO.	TITLE	SHEET NO.	TOTAL SHEETS
	7060		100	115

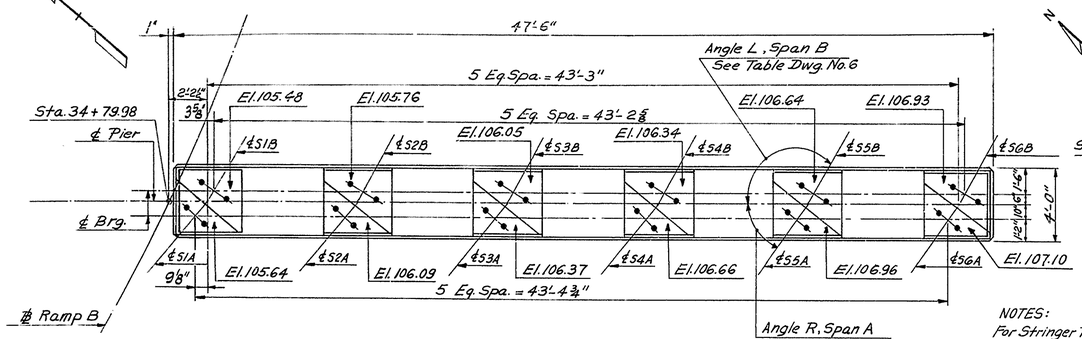

PLAN - WEST PIER

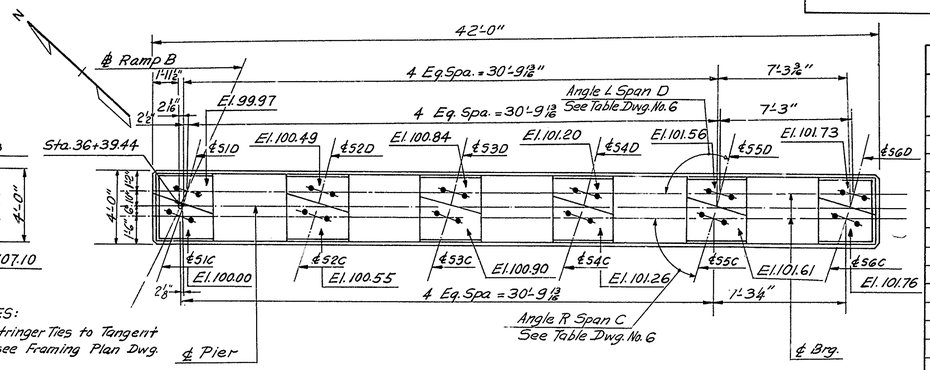

NOTES:
For Stringer Ties to Tangent line see Framing Plan Dwg. No. 6

PLAN - EAST PIER

REINFORCING BAR SCHEDULE

MARK	NO. REQ'D EAST PIER	NO. REQ'D WEST PIER	TYPE	LENGTH
P401	30	30	2	5'-6"
P402	24	24	2	6'-0"
P501		30	Str.	23'-2"
P502	4		Str.	41'-8"
P503	2-Ser. 4		Str.	18'-8" to 36'-8"
P504	30		Str.	17'-8"
P505	26	26	2	5'-10"
P506		4	Str.	47'-2"
P507		2-Ser. 4	Str.	24'-2" to 42'-2"
P508	8	8	3	16'-8"
P509	4-Ser. 10	4-Ser. 10	1	11'-6" to 19'-0"
P510	18	24	1	21'-6"
P511	6	6	2	6'-8"
P601	42	53	Str.	8'-6"
P602		10	Str.	26'-0"
P603	10		Str.	20'-6"
P801	42	52	4	6'-1"
P802	42		Str.	15'-6"
P803		52	Str.	15'-4"
P1101		7	Str.	47'-2"
P1102		3	Str.	35'-6"
P1103	7		Str.	41'-8"
P1104	3		Str.	30'-0"

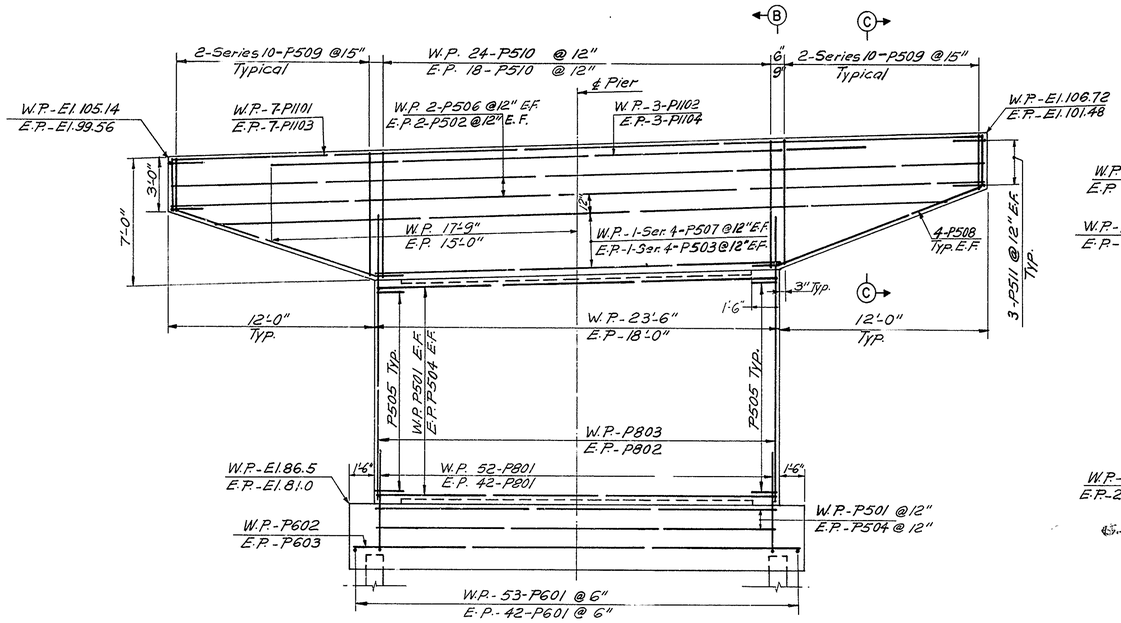

ELEVATION - EAST & WEST PIER

W.P. denotes West Pier
E.P. denotes East Pier

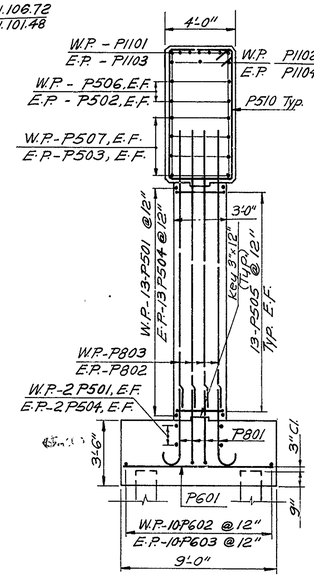

SECTION B-B

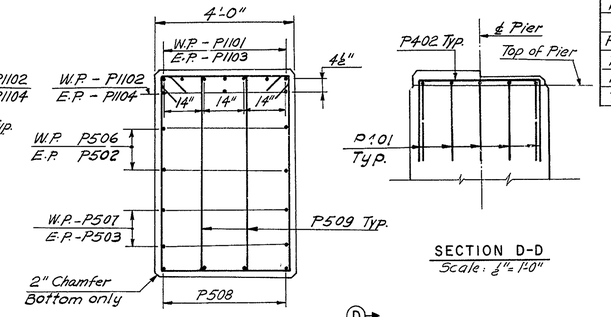

SECTION D-D
Scale: ¼" = 1'-0"

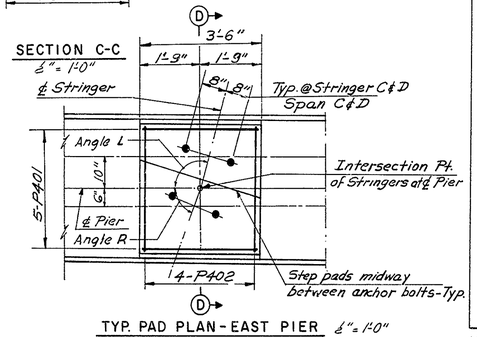

TYP. PAD PLAN - EAST PIER ¼" = 1'-0"

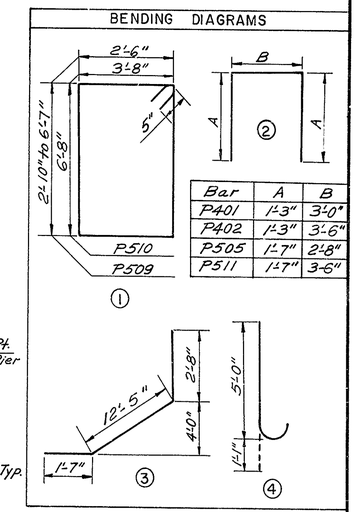

Bar	A	B
P401	1'-3"	3'-0"
P402	1'-3"	3'-6"
P505	1'-7"	2'-8"
P511	1'-7"	3'-6"

NOTE:
For Substructure Notes see Dwg. No. 5

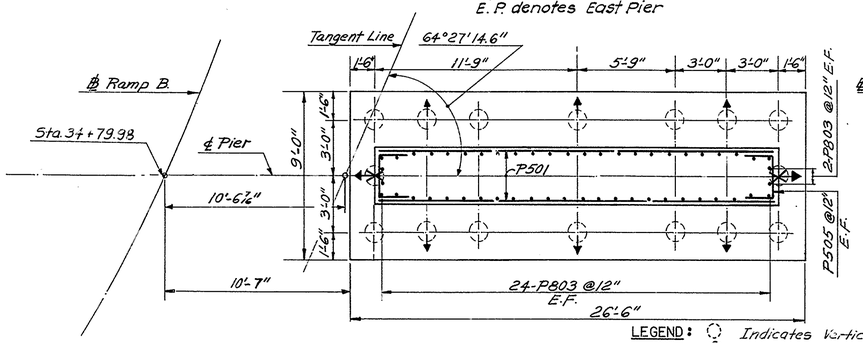

SECTION A-A
PILE PLAN - WEST PIER

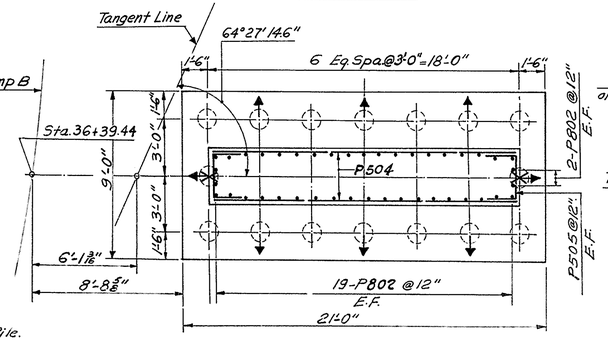

SECTION A-A
PILE PLAN - EAST PIER

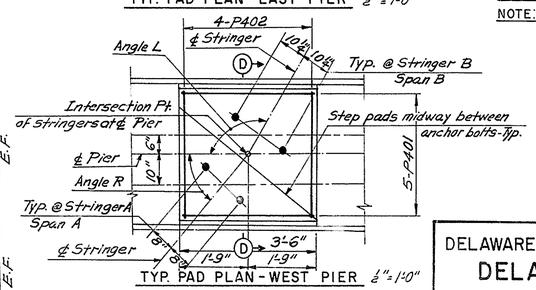

TYP. PAD PLAN - WEST PIER ¼" = 1'-0"

LEGEND:
- Indicates Vertical Pile.
- Indicates Pile battered 2:12 in direction shown.
- Indicates Pile battered 3:12 in direction shown.

Approximate Pile Tip Elevation W.P. + 50.0 & E.P. + 38.0

NO	REVISION	BY	DATE
3			
2			
1	Pad Elev. due to flange 2 Change on Dwg. No. 6	JR	9-70

	BY	DATE
MADE	V.Y.	3-70
CHECKED	Jn. R.	4-70
IN CHARGE	A.J.C	

DELAWARE STATE HIGHWAY DEPARTMENT

DELAWARE TURNPIKE

ROUTE 273 INTERCHANGE IMPROVEMENTS
RAMP B BRIDGE OVER ROUTE 273

EAST & WEST PIER

HOWARD, NEEDLES, TAMMEN & BERGENDOFF
consulting engineers
NEW YORK KANSAS CITY

SCALE ¼" = 1'-0" AS SHOWN

DELAWARE TURNPIKE	CONT NO	TITLE	SHEET NO	TOTAL SHEETS
	7060		101	115

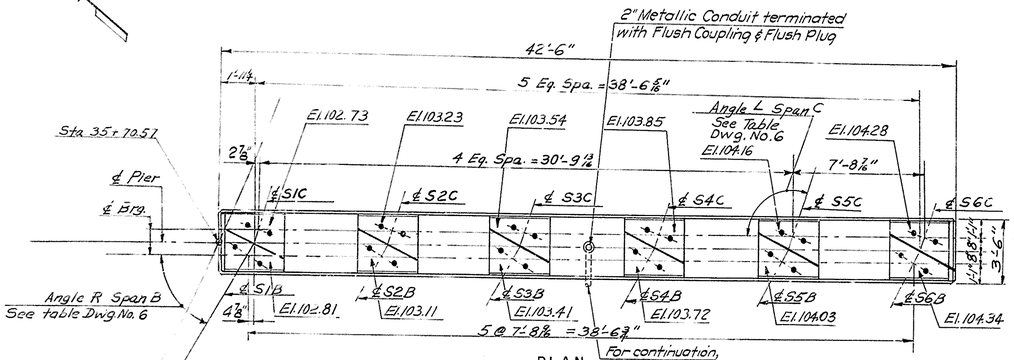

PLAN

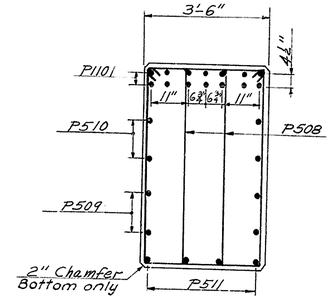

NOTE
For Stringer Ties to Tangent line see Framing Plan Dwg. No. 6

SECTION B-B
Scale: ½" = 1'-0"

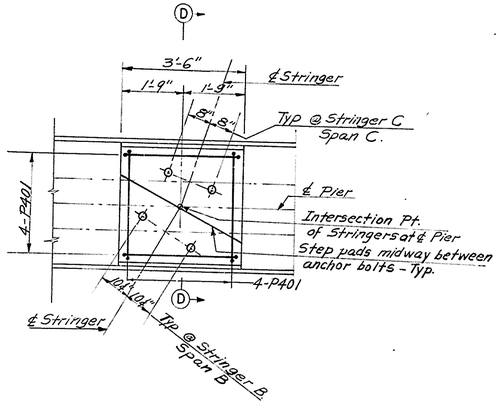

TYPICAL PAD PLAN
Scale: ½" = 1'-0"

REINFORCING BAR SCHEDULE			
MARK	NUMBER	TYPE	LENGTH
P401	48	2	5'-6"
P501	36	Str.	18'-2"
P502	19	3	14'-6" to 16'-2"
P503	19	6	7'-4"
P504	8	2	7'-10"
P505	4	2	6'-0"
P506	16	2	5'-4"
P507	19	1	20'-6"
P508	4-Ser. 15	1	10'-3" to 18'-5"
P509	2 Ser. 4	Str.	19'-3" to 37'-3"
P510	4	Str.	42'-2"
P511	8	5	16'-8"
P512	6	2	6'-2"
P601	11	Str.	20'-6"
P901	29	Str.	9'-6"
P902	80	4	13'-0"
P903	44	Str.	10'-6"
P1101	14	Str.	42'-2"

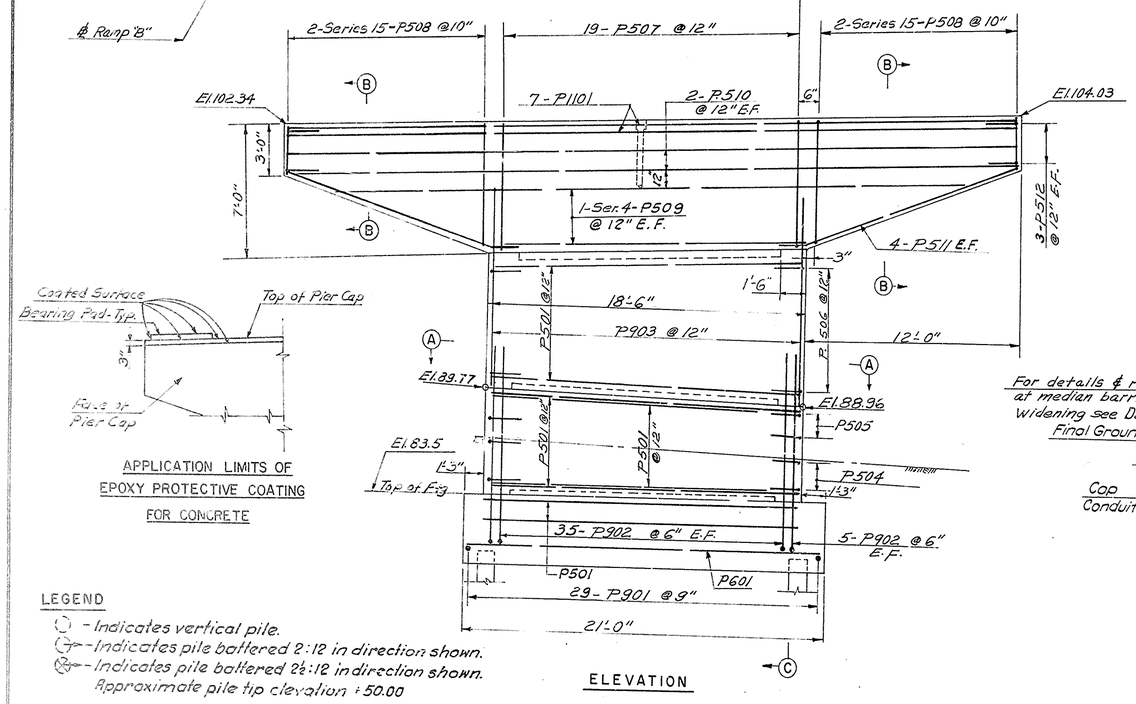

APPLICATION LIMITS OF EPOXY PROTECTIVE COATING FOR CONCRETE

ELEVATION

LEGEND
- Indicates vertical pile.
- Indicates pile battered 2:12 in direction shown.
- Indicates pile battered 2½:12 in direction shown.
Approximate pile tip elevation ±50.00

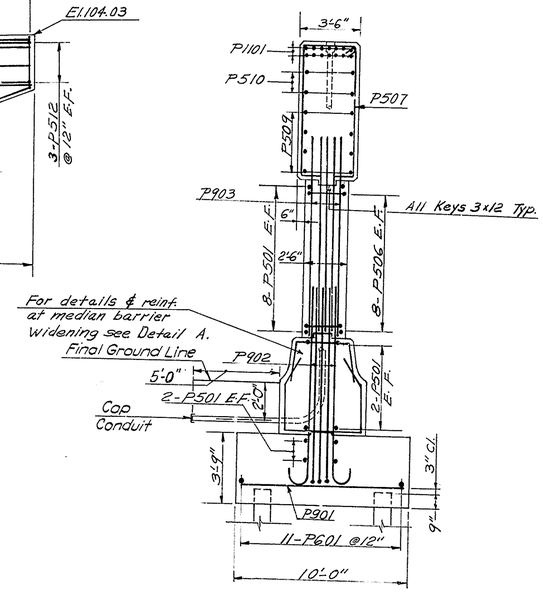

SECTION C-C

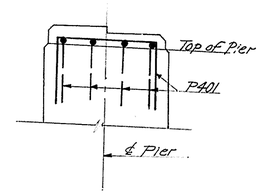

SECTION D-D
Scale: ½" = 1'-0"

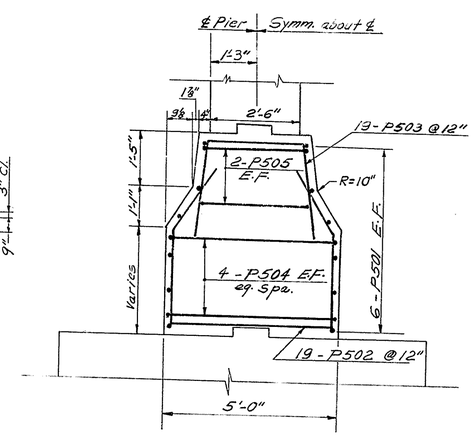

DETAIL A
½" = 1'-0"

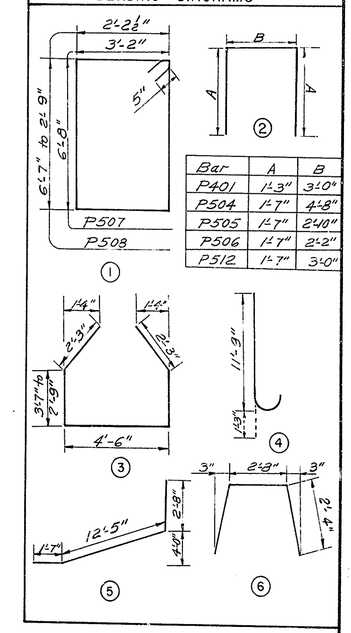

Bar	A	B
P401	1'-3"	3'-0"
P504	1'-7"	4'-8"
P505	1'-7"	2'-10"
P506	1'-7"	2'-2"
P512	1'-7"	3'-0"

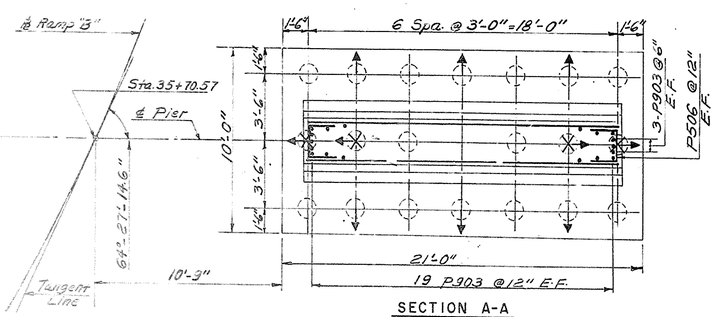

SECTION A-A
PILE PLAN

SUBSTRUCTURE NOTES

For General Notes, see Dwg. No. 1.
N.F. denotes Near Face.
F.F. denotes Far Face.
E.F. denotes Each Face.
Minimum Reinforcing steel cover: 3" in footing; 2" above footing.
For Epoxy Protective Coating Limits for Abutments see Dwg. No. 2 for Piers see this Dwg.
Pad elevations given denote top of finished concrete Pad.
For Shoes, Anchor Bolts & Pile details see Dwg. No. 9
Backfill behind abutments to be placed only after bridge deck slab has ben completed.

NO.	REVISION	BY	DATE
3			
2			
1	Pad Ele. due to flange ℄ change on Dwg. No. 6	JR	9-70

	BY	DATE
MADE	V. Y.	3-70
CHECKED	Jn. R.	4-70
IN CHARGE	A. J. C.	

DELAWARE STATE HIGHWAY DEPARTMENT

DELAWARE TURNPIKE

ROUTE 273 INTERCHANGE IMPROVEMENTS
RAMP B BRIDGE OVER ROUTE 273

CENTER PIER

HOWARD, NEEDLES, TAMMEN & BERGENDOFF
consulting engineers
NEW YORK KANSAS CITY

SCALE: ¼" = 1'-0" & AS SHOWN
CONTRACT NO. 7060
DWG. NO. 5 OF 9

DELAWARE TURNPIKE	CONT. NO.	TITLE	SHEET NO.	TOTAL SHEETS
	7060		102	115

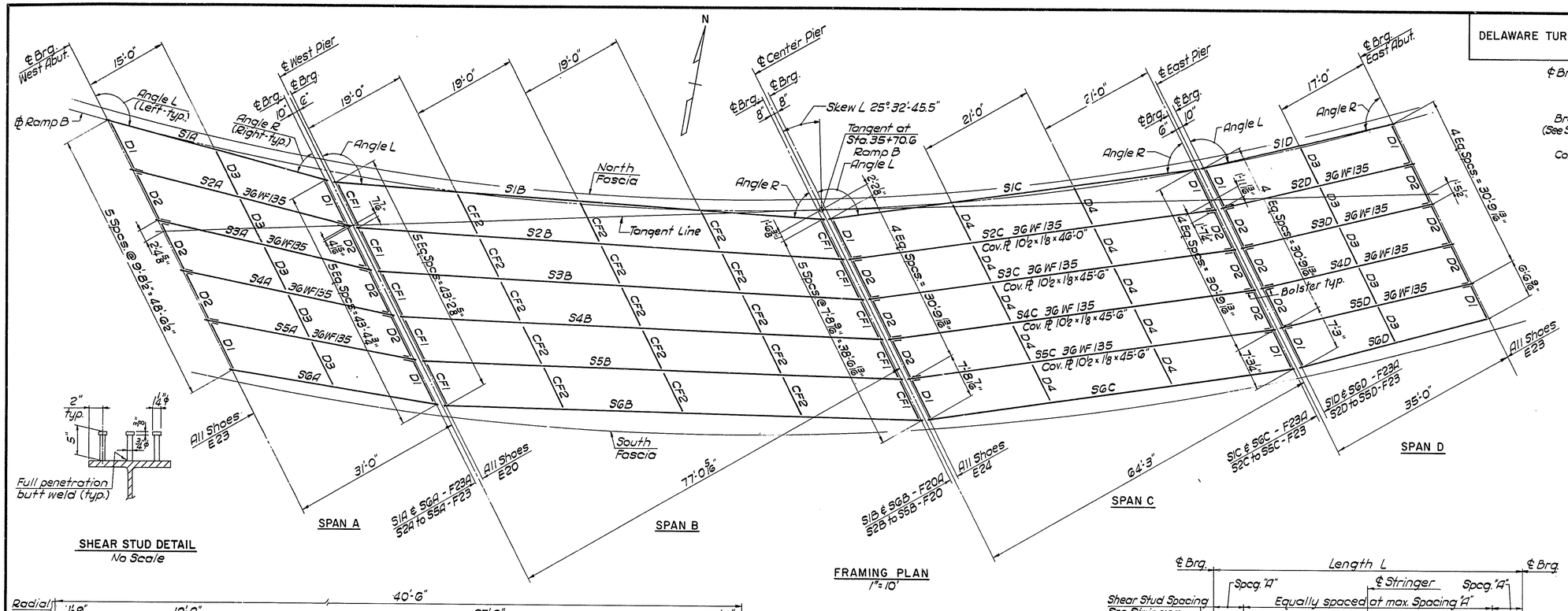

SHEAR STUD DETAIL
No Scale

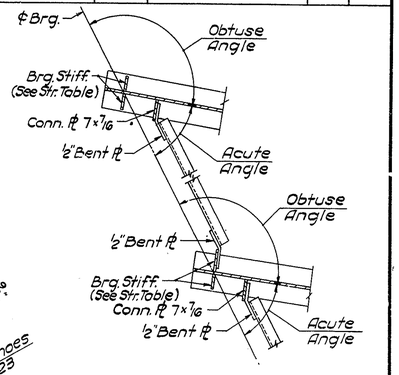

TYPICAL PLAN AT END DIAPHRAGMS
No Scale

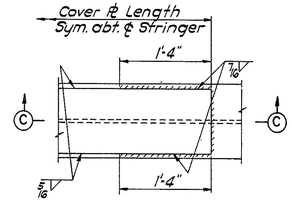

COVER PLATE DETAIL
1"=1'-0"
(Bottom Flange only)

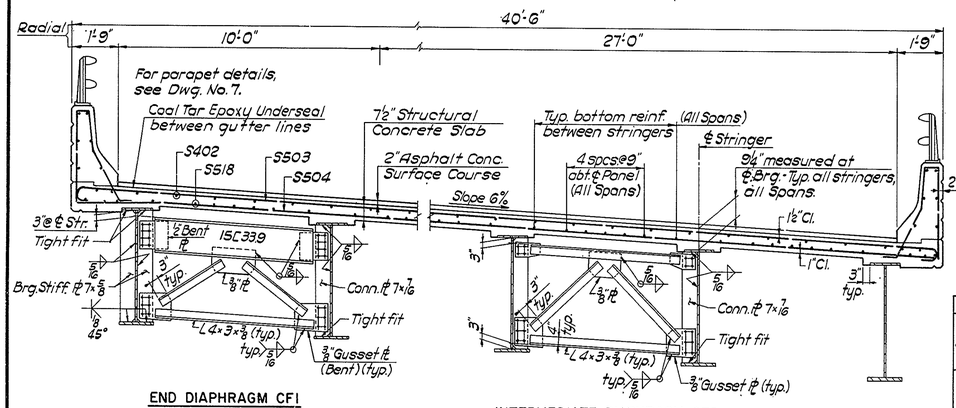

END DIAPHRAGM CF1

INTERMEDIATE DIAPHRAGM CF2

CROSS SECTION - SPAN B
3/8"=1'-0"

FRAMING PLAN
1"=10'

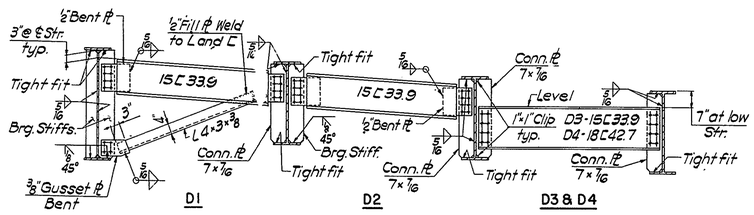

END DIAPHRAGMS
3/8"=1'-0"

INTERMEDIATE DIAPHRAGM
3/8"=1'-0"

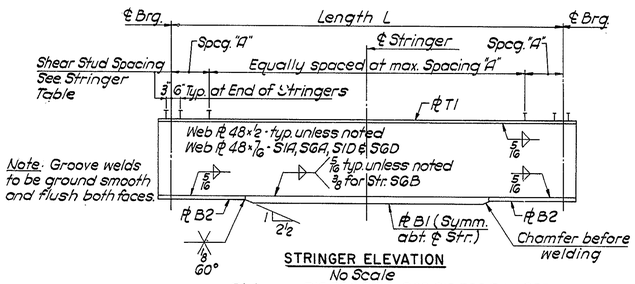

Note: Groove welds to be ground smooth and flush both faces.

STRINGER ELEVATION
No Scale
Stringers S1A, S6A, S1B to S6B, S1C, S6C, S1D & S6D

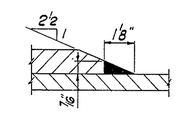

SECTION C-C
No Scale

STRINGER SCHEDULE

Stringer	Pl T1	** Pl B1	** Pl B2
S1A & S6A S1D & S6D	12 × 3/4 × F.L.	12 × 3/4 × F.L.	-
S1B	14 × 3/4 × F.L.	16 × 1 1/2 × 49'-0"	16 × 1
S2B to S5B	14 × 3/4 × F.L.	16 × 1 1/2 × 49'-6"	16 × 1
S6B	14 × 3/4 × F.L.	16 × 1 5/8 × 44'-0"	16 × 1 1/8
S1C & S6C	12 × 3/4 × F.L.	12 × 1 1/8 × F.L.	-

F.L. denotes Full Length

** Contractor elected to use full length Pls. B1 and eliminate Pls. B2

STRINGER TABLE

Span	Str.	Length L ℄ Brg. to ℄ Brg.	Angle L (Left)	Angle R (Right)	Bearing Stiffeners: Left Brg. Obtuse L	Left Brg. Acute L	Right Brg. Obtuse L	Right Brg. Acute L	Shear Stud Spacing "A" (Inches)
A	S1A	40'-10 1/8"	132°-23'-06.2"	47°-36'-53.8"	Pl 5×7/16	Pl 5×7/16	Pl 7×7/16	Pl 5×7/16	None Req'd.
	S2A	40'-1 7/8"	131°-18'-01.2"	48°-41'-58.8"	Pl 7×7/16	↑	↑	↑	↑
	S3A	39'-5 13/16"	130°-10'-41.9"	49°-49'-18.1"	↑	↑	↑	↑	↑
	S4A	38'-9 15/16"	129°-01'-04.5"	50°-58'-55.5"	↑	↑	↑	↑	↑
	S5A	38'-2 1/4"	127°-49'-05.2"	52°-10'-54.8"	↑	↑	Pl 7×7/16	↑	↑
	S6A	37'-6 13/16"	126°-34'-40.9"	53°-25'-19.1"	Pl 7×7/16	Pl 5×7/16	Pl 5×7/16	Pl 5×7/16	None Req'd.
B	S1B	88'-10 7/8"	121°-26'-09.6"	58°-33'-50.4"	Pl 7×5/8	Pl 7×5/8	Pl 7×5/8	Pl 7×5/8	20 1/2
	S2B	88'-5 1/2"	120°-55'-16.5"	59°-04'-43.5"	↑	↑	↑	↑	19
	S3B	87'-11 7/16"	120°-24'-03.2"	59°-35'-56.8"	↑	↑	↑	↑	↑
	S4B	87'-5 15/16"	119°-52'-29.7"	60°-07'-30.3"	↑	↑	↑	↑	↑
	S5B	87'-0 1/4"	119°-20'-39.0"	60°-39'-24.0"	↑	↑	↑	↑	19
	S6B	86'-6 7/8"	118°-48'-22.2"	61°-11'-37.8"	Pl 7×5/8	Pl 7×5/8	Pl 7×5/8	Pl 7×5/8	21
C	S1C	66'-11 13/16"	109°-34'-22.2"	70°-25'-37.8"	Pl 5×1/2	Pl 5×1/2	Pl 7×1/2	Pl 5×1/2	19
	S2C	↑	↑	↑	Pl 7×1/2	↑	↑	↑	12 1/2
	S3C	↑	↑	↑	↑	↑	↑	↑	13
	S4C	↑	↑	↑	↑	↑	↑	↑	13
	S5C	66'-11 13/16"	109°-34'-22.2"	70°-25'-37.8"	↑	↑	Pl 7×1/2	↑	13
	S6C	66'-9 1/16"	109°-13'-29.0"	70°-46'-31.0"	Pl 7×1/2	Pl 5×1/2	Pl 5×1/2	Pl 5×1/2	19 1/2
D	S1D	35'-2 1/2"	103°-57'-37.5"	76°-02'-22.5"	Pl 5×7/16	Pl 5×7/16	Pl 7×7/16	Pl 5×7/16	None Req'd.
	S2D	↑	↑	↑	Pl 7×7/16	↑	↑	↑	↑
	S3D	↑	↑	↑	↑	↑	↑	↑	↑
	S4D	↑	↑	↑	↑	↑	↑	↑	↑
	S5D	35'-2 1/2"	103°-57'-37.5"	76°-02'-22.5"	↑	↑	Pl 7×7/16	↑	↑
	S6D	35'-0 1/2"	102°-50'-31.5"	77°-09'-28.5"	Pl 7×7/16	Pl 5×7/16	Pl 5×7/16	Pl 5×7/16	None Req'd.

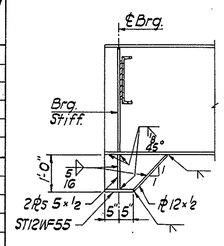

BOLSTER DETAIL
1/2"=1'-0"
Req'd. at ends of all 36 WF Stringers

STRUCTURAL STEEL NOTES:

For General Notes see Dwg. No. 1

7/8" ϕ High-Strenght Bolts to be used for all bolted connections.

Shear Stud spacing shown is maximum spacing.

All Stiffeners, Connection Plates and ends of stringers shall be truly vertical in erected position.

A fully butt-welded shop web splice may be used for built-up stringers. The splice location and details subject to the approval of the Engineer.

Unless otherwise shown all welding shall comply with the current "Specifications for Welded Highway and Railway Bridges" of the American Welding Society.

NO.	REVISION	BY	DATE
3			
2			
1	Contractors change in bott. flange of welded stringers	J.R.	9-70

	BY	DATE
MADE	T.J.Q.	3-70
CHECKED	N.F.O.	4-70
IN CHARGE	A.J.C.	

DELAWARE STATE HIGHWAY DEPARTMENT

DELAWARE TURNPIKE

ROUTE 273 INTERCHANGE IMPROVEMENTS
RAMP B BRIDGE OVER ROUTE 273

FRAMING PLAN & CROSS SECTION

HOWARD, NEEDLES, TAMMEN & BERGENDOFF
consulting engineers
NEW YORK KANSAS CITY

SCALE: AS SHOWN
CONTRACT NO. 7060
DWG. NO. 6 OF 9

DELAWARE TURNPIKE	CONT. NO.	TITLE	SHEET NO.	TOTAL SHEETS
	7060		103	115

REINFORCING BAR SCHEDULE

MARK	NO.	TYPE	A	B	LENGTH
		DECK SLAB			
S401	1Ser.26	Str.			40'-5" TO 42'-8"
S402	52	Str.			45'-9"
S403	52	Str.			35'-0"
S404	26	Str.			37'-4"
S405	50	1	0'-8"	6'-0"	6'-8"
S406	150	1	0'-8"	4'-0"	4'-8"
S407	18	Str.			14'-0"
S408	36	Str.			14'-9"
S409	30	Str.			13'-6"
S410	36	Str.			12'-3"
S411	48	Str.			13'-4"
S412	36	Str.			14'-5"
S501	1Ser.32	4	19'-9" 38'-0"	0'-7"	20'-4" 38'-7"
S502	1Ser.32	Str.			19'-9" 38'-0"
S503	361	2	40'-2"	0'-7"	41'-4"
S504	361	Str.			40'-2"
S505	1Ser.32	4	17'-9" 38'-0"	0'-7"	17'-10" 38'-7"
S506	1Ser.32	Str.			17'-3" 38'-0"
S507	1Ser.25	4	20'-4" 38'-0"	0'-7"	20'-11" 38'-7"
S508	1Ser.25	Str.			20'-4" 38'-0"
S509	1Ser.20	4	18'-5" 37'-7"	0'-7"	19'-0" 38'-2"
S510	1Ser.20	Str.			18'-5" 37'-7"
S511	1Ser.18	4	20'-5" 37'-7"	0'-7"	21'-0" 38'-2"
S512	1Ser.18	Str.			20'-5" 37'-7"
S513	2	Str.			30'-0"
S514	2	Str.			20'-0"
S515	2	Str.			55'-0"
S516	8	Str.			13'-0"
S517	35	Str.			40'-5" 42'-6"
S518	90	Str.			45'-9"
S519	90	Str.			34'-11"
S520	45	Str.			37'-4"
S521	492	3			8'-2"
S522	5	Str.			42'-8"
S523	5	Str.			40'-5"
S601	1Ser.17	4	4'-0" 11'-6"	0'-8"	4'-8" 12'-2"
S602	1Ser.17	Str.			4'-0" 11'-6"
S603	1Ser.13	4	12'-1" 19'-2"	0'-8"	12'-9" 19'-10"
S604	1Ser.13	Str.			12'-1" 19'-2"
S605	1Ser.16	4	4'-0" 13'-0"	0'-8"	4'-8" 13'-8"
S606	1Ser.16	Str.			4'-0" 13'-0"
S607	1Ser.9	4	13'-8" 19'-7"	0'-8"	14'-4" 20'-3"
S608	1Ser.9	Str.			13'-8" 19'-7"
S609	1Ser.9	4	11'-3" 16'-7"	0'-8"	11'-11" 17'-3"
S610	1Ser.9	Str.			11'-3" 16'-7"
S611	1Ser.14	4	4'-0" 10'-8"	0'-8"	4'-8" 11'-4"
S612	1Ser.14	Str.			4'-0" 10'-8"
S613	1Ser.7	4	11'-4" 17'-5"	0'-8"	12'-0" 18'-1"
S614	1Ser.7	Str.			11'-4" 17'-5"
S615	1Ser.9	4	4'-0" 10'-4"	0'-8"	4'-8" 11'-0"
S616	1Ser.9	Str.			4'-0" 10'-4"
S617	1Ser.11	4	4'-0" 12'-4"	0'-8"	4'-8" 13'-0"
S618	1Ser.11	Str.			4'-0" 12'-4"
S619	1Ser.7	4	13'-4" 19'-5"	0'-8"	14'-0" 20'-1"
S620	1Ser.7	Str.			13'-4" 19'-5"
S621	1Ser.23	4	21'-3" 37'-8"	0'-8"	21'-11" 38'-4"
S622	1Ser.23	Str.			21'-3" 37'-8"
S623	1Ser.21	4	21'-3" 37'-8"	0'-8"	21'-11" 38'-4"
S624	1Ser.21	Str.			21'-3" 37'-8"
S625	1Ser.17	4	21'-6" 37'-2"	0'-8"	21'-2" 37'-10"
S626	1Ser.17	Str.			21'-6" 37'-2"
S627	2	4	51'-0"	0'-8"	51'-8"
S628	2	Str.			51'-0"
S629	4	4	47'-8"	0'-8"	48'-4"
S630	4	Str.			47'-8"
S631	4	4	42'-8"	0'-8"	43'-4"
S632	4	Str.			42'-8"
S633	4	4	40'-0"	0'-8"	40'-8"
S634	4	Str.			40'-0"
S635	2	4	39'-0"	0'-8"	39'-8"
S636	2	Str.			39'-0"

REINFORCEMENT PLACEMENT

Tranverse full length bars are to be placed radially with the spacing measured along the South Fascia stringers.

Transverse series bars are to be parallel to the last transverse radial bars (except for fanned bars).

For location of top & bott. longitudinal bars between stringers see cross section-Dwg. No. 6.

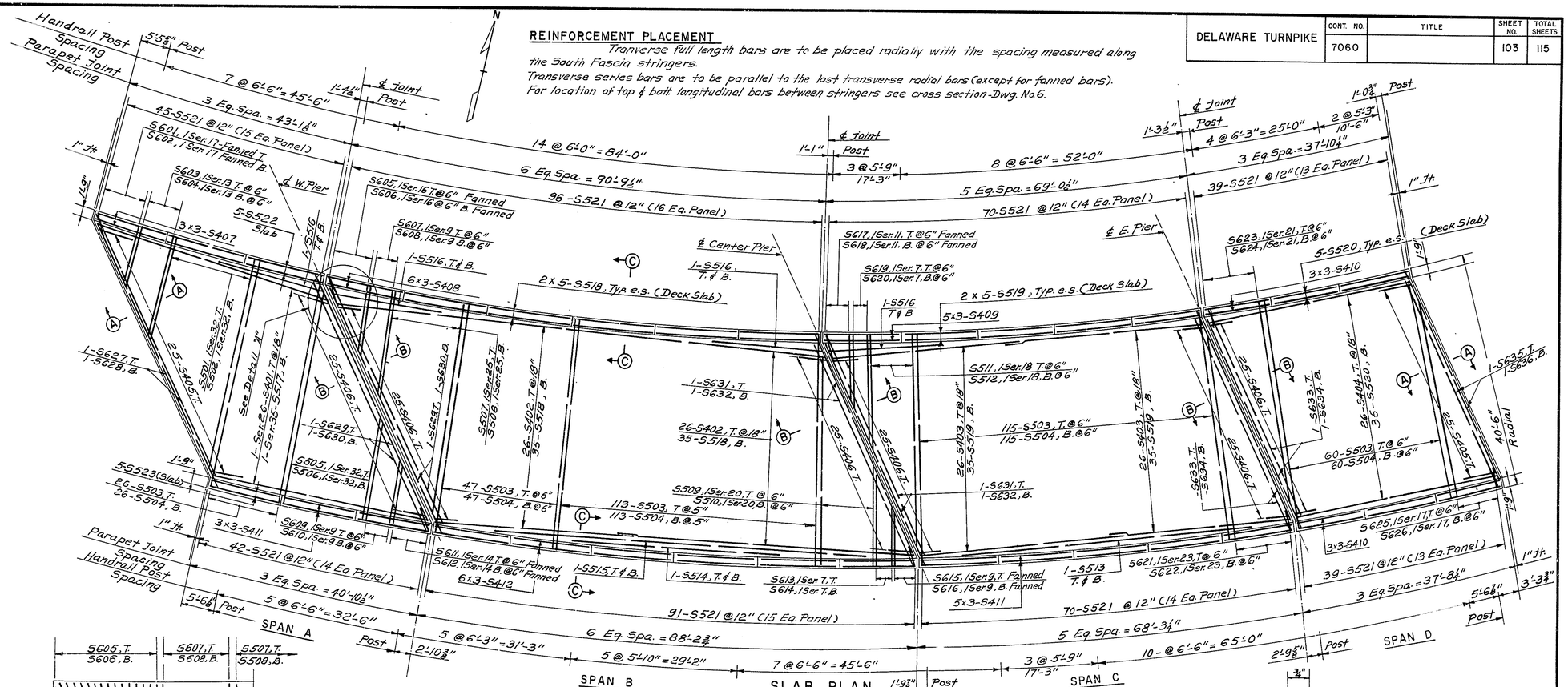

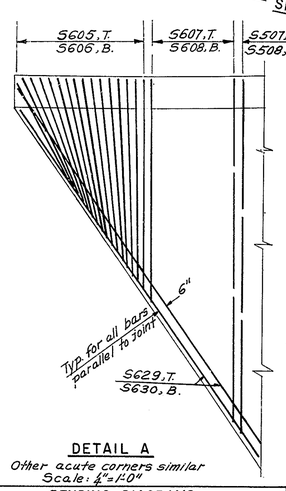

DETAIL A

Other acute corners similar

Scale: ¼" = 1'-0"

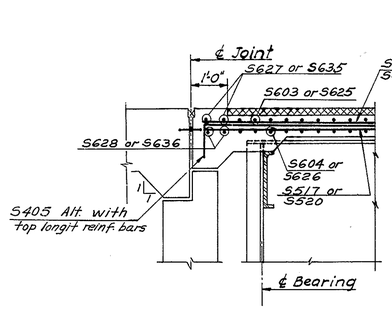

SECTION A-A

Scale: ½" = 1'-0"

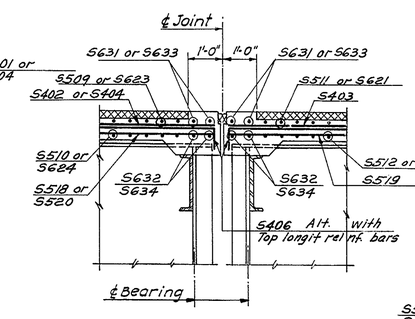

SECTION B-B

Scale: ½" = 1'-0"

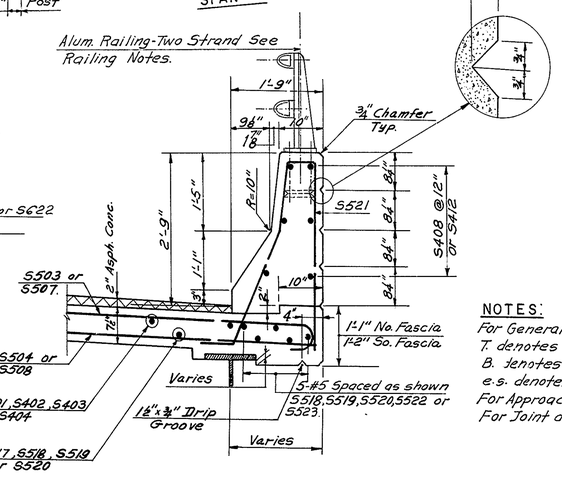

SECTION C-C

Scale = ¾" = 1'-0"

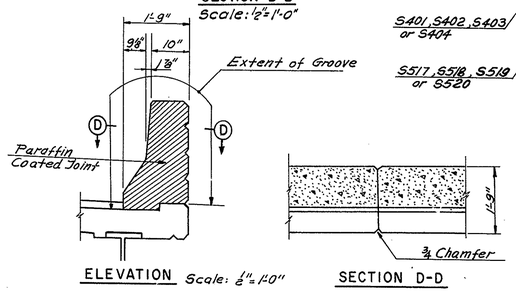

ELEVATION Scale: ½" = 1'-0"

SECTION D-D

INTERMEDIATE PARAPET JOINT

BENDING DIAGRAMS

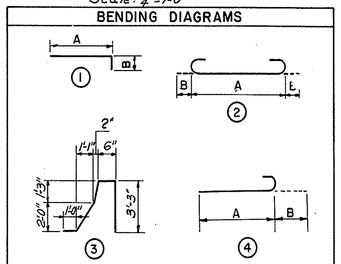

RAILING NOTES:

Aluminum Railing-Two Strand- shall conform to the details as shown on the Delaware State Hwy Dept. Dwg: "Standard for One and Two Strand Metal Bridge Rail."

Rail members shall be curved to the curvature of the Parapet.

Rail Post & Intermediate Parapet Joint Spacing to be measured along the Gutter line.

NOTES:

For General Notes see Dwg. No. 1.

T. denotes Top.

B. denotes Bottom.

e.s. denotes each side.

For Approach Slab details see Dwg. No. 9.

For Joint details see Dwg. No. 3.

NO.	REVISION	BY	DATE
3			
2			
1			

	BY	DATE
MADE	V.Y.	3-70
CHECKED	L.D.	3-70
IN CHARGE	A.J.C.	

DELAWARE STATE HIGHWAY DEPARTMENT

DELAWARE TURNPIKE

ROUTE 273 INTERCHANGE IMPROVEMENTS

RAMP B BRIDGE OVER ROUTE 273

CONCRETE DECK

HOWARD, NEEDLES, TAMMEN & BERGENDOFF consulting engineers

NEW YORK KANSAS CITY

SCALE: 1" = 10' & AS SHOWN

CONTRACT NO. 7060

DWG. NO. 7 OF 9

DELAWARE TURNPIKE	CONT. NO.	TITLE	SHEET NO.	TOTAL SHEETS
	7060		104	115

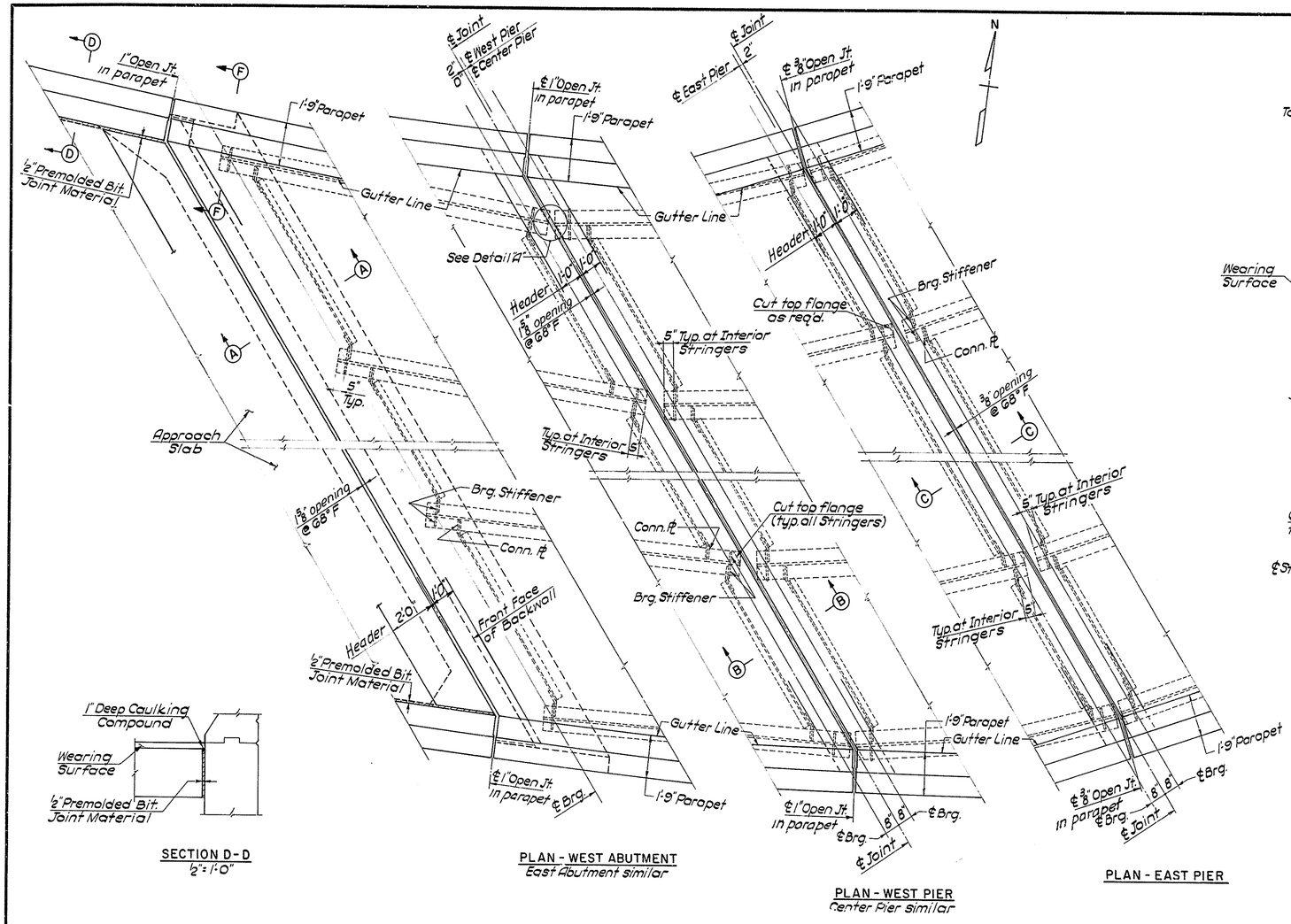

SECTION D-D
½" = 1'-0"

PLAN - WEST ABUTMENT
East Abutment similar

PLAN - WEST PIER
Center Pier similar

PLAN - EAST PIER

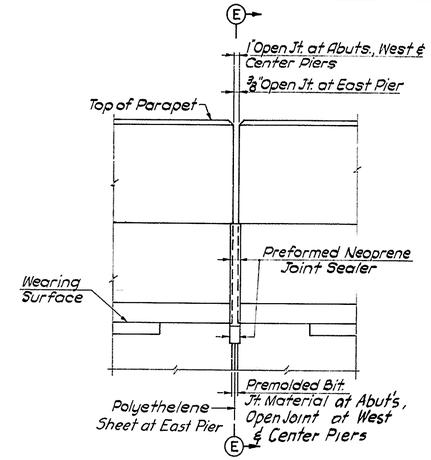

SECTION ALONG GUTTER LINE
1" = 1'-0"

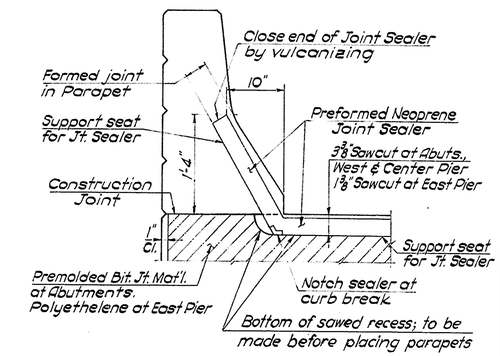

SECTION E-E
1" = 1'-0"

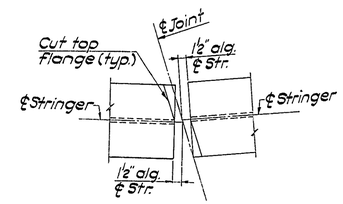

DETAIL "A"
1" = 1'-0"
Typical at Fascia Stringers at all Piers

NOTES:

Any changes in the shape or dimensions of preformed neoprene joint sealer must be approved by the Engineer.
The minimum thicknes of any web shall not be less than as specified.
The sealer shall be supplied in one piece for the full width of each joint. One shop splice will be permitted for lengths in excess of 50 feet.
It is absolutely essential that the joint openings in slabs be sawcut accurately to smooth straight lines.
The size of the opening shall be adjusted to allow for the temperature at the time of construction.
The joints shall be thoroughly cleaned. The sealer shall be installed by suitable machine tools only and thoroughly secured in place with a lubricant which shall cover both sides of the sealer over the full area in contact with the sides of the joint.
Cost of joints to be included in the price bid for the item "Portland Cement Concrete Masonry - Superstructure."

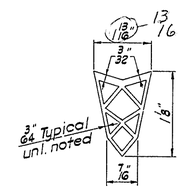

TYPE B

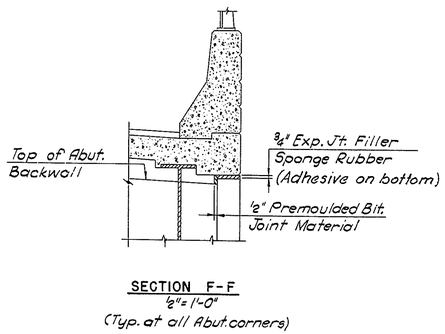

SECTION F-F
½" = 1'-0"
(Typ. at all Abut. corners)

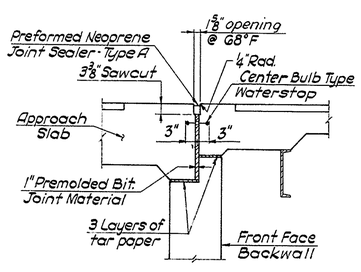

SECTION A-A
½" = 1'-0"

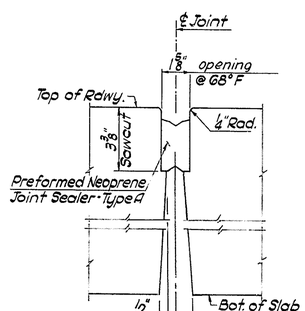

SECTION B-B
3" = 1'-0"

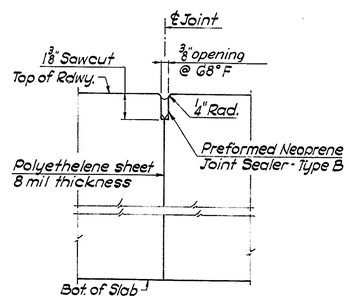

SECTION C-C
3" = 1'-0"

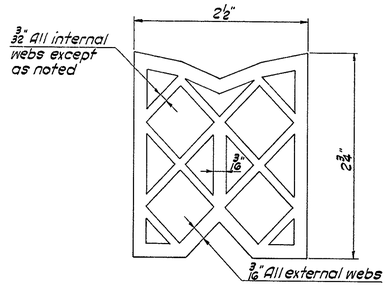

TYPE A

PREFORMED NEOPRENE JOINT SEALER
No Scale

NO.	REVISION	BY	DATE
3			
2			
1			

	BY	DATE
MADE	T. J. Q.	4-70
CHECKED	N. F. O.	4-70
IN CHARGE	A. J. C.	

DELAWARE STATE HIGHWAY DEPARTMENT

DELAWARE TURNPIKE

ROUTE 273 INTERCHANGE IMPROVEMENTS
RAMP B BRIDGE OVER ROUTE 273

JOINT DETAILS

HOWARD, NEEDLES, TAMMEN & BERGENDOFF
consulting engineers
NEW YORK KANSAS CITY

SCALE: 3/8" = 1'-0" & AS SHOWN
CONTRACT NO. 7060
DWG. NO. 8 OF 9

DELAWARE TURNPIKE	CONT. NO.	TITLE	SHEET NO.	TOTAL SHEETS
	7060		105	115

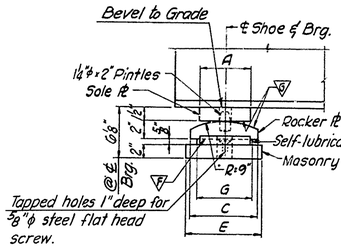

SIDE ELEVATION

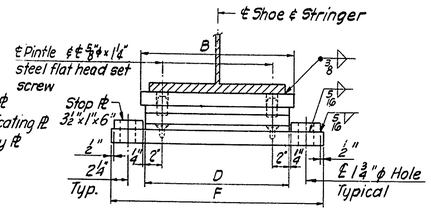

END ELEVATION

EXPANSION SHOE

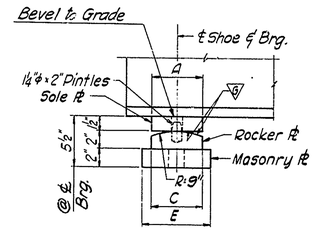

SIDE ELEVATION

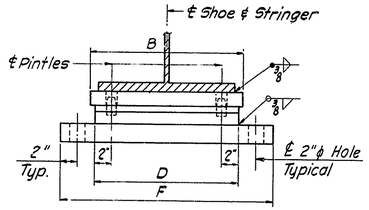

END ELEVATION

FIXED SHOE

Suffix A for Fixed Shoes denotes 1 5/16" x 1¾" Slotted holes in Sole Pl for pintles, see Detail "C".

SHOE	DIMENSIONS						
	A	B	C	D	E	F	G
E20	6"	1'-5½"	7½"	1'-4½"	8½"	2'-1"	6"
E23	6"	1'-1"	7½"	1'-0"	8"	1'-8½"	6"
E24	6"	1'-1"	8½"	1'-0"	9"	1'-8½"	6½"
F20	6"	1'-5½"	6"	1'-4½"	7"	2'-0½"	
F20A	6"	1'-5½"	6"	1'-4½"	7"	2'-0½"	
F23	6"	1'-1"	6"	1'-0"	7"	1'-8"	
F23A	6"	1'-1"	6"	1'-0"	7"	1'-8"	

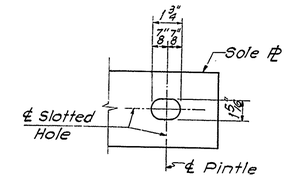

DETAIL 'C'
No Scale

SHOE NOTES:

Material for shoes (exclusive of self-lubricating plates), shall be structural steel conforming to the requirements of A.S.T.M. Specifications A242 and shall have an atmospheric corrosion resistance equal to a min. of four times that of A.S.T.M.-A36 steel.

Top of masonry plates, bottom of rocker plates and top and bottom of sole plates shall be planed, straightened or otherwise treated to secure true level surfaces.

Contact surfaces noted on the plans with finish symbols shall be finished in accordance with the Standards of the Association of Iron and Steel Engineers to the class of finish prescribed.

The plates comprising the expansion shoes shall be set so as to be truly centered under full dead load at a temperature of 68°F.

Concrete pads shall be formed integral with pier or abutment and not less than ⅛" nor more than ¼" above finished elevation. Dress down pads by rubbing, grinding, or as otherwise approved by the Engineer, to true level surfaces at the finished elevation.

Anchor bolts, hexagon nuts and washers shall be hot dipped galvanized conforming to ASTM A153.

Templates shall be used to accurately set the anchor bolts.

ROCKER SHOE DETAILS
1½" = 1'-0"

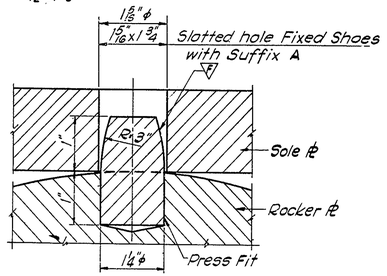

PINTLE DETAIL
¾" = 1"

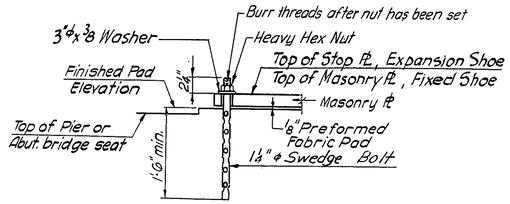

ANCHOR BOLT DETAIL
No Scale

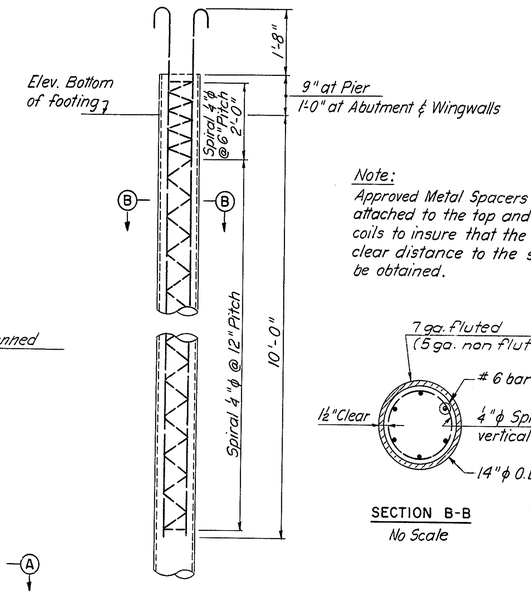

Note:
Approved Metal Spacers shall be attached to the top and bottom coils to insure that the minimum clear distance to the shell will be obtained.

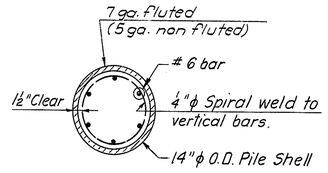

SECTION B-B
No Scale

14"φ CAST IN PLACE CONCRETE PILE
No Scale

50 ton tapered piles of equivalent cross section and strength will be considered by the Engineer in place of the detail shown

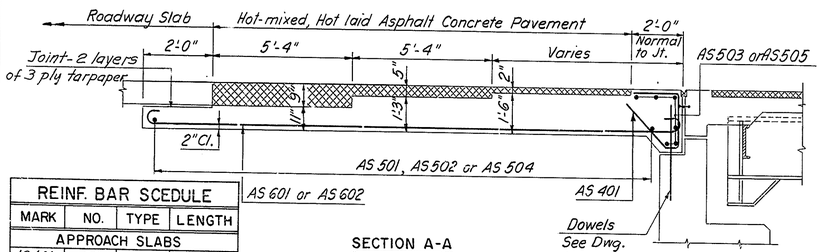

SECTION A-A
⅜" = 1'-0"

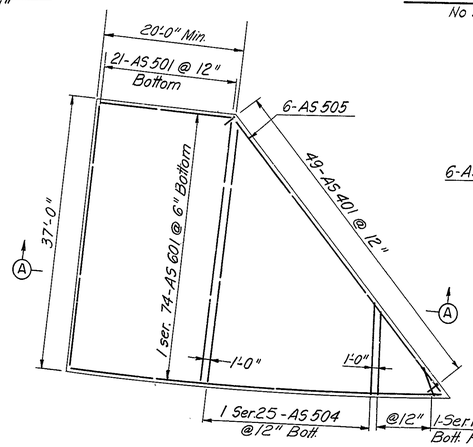

WEST SLAB

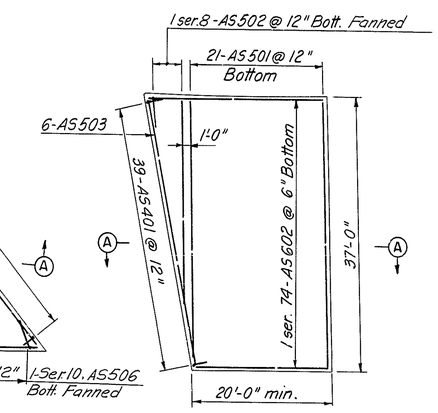

EAST SLAB

APPROACH SLABS
1" = 10'

REINF. BAR SCHEDULE			
MARK	NO.	TYPE	LENGTH
APPROACH SLABS			
AS401	88	2	5'-9"
AS501	42	Str.	36'-8"
AS502	1 Ser. 8	Str.	3'-0 to 31'-0"
AS503	6	Str.	37'-3"
AS504	1 Ser. 25	Str.	9'-3" to 35'-6"
AS505	6	Str.	4'-9'-6"
AS506	1 Ser. 10	Str.	4'-3" to 8'-3"
AS601	1 Ser. 74	1	21'-0 to 5'-4"
AS602	1 Ser. 74	1	21'-0" to 27'-4"

BENDING DIAGRAMS

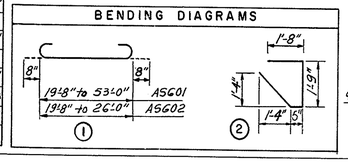

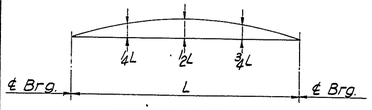

CAMBER DIAGRAM

CAMBER (INCHES)																																				
Stringer	S1A		S2A, S5A		S3A, S4A		S6A		S1B		S2B, S5B		S3B, S4B		S6B		S1C		S2C		S3C, S4C		S5C		S6C		S1D		S2D, S5D		S3D, S4D		S6D	
	¼ & ¾L	½L	¼ & ¾L	½L	¼ & ¾L	½L	¼ & ¾L	½L	¼ & ¾L	½L	¼ & ¾L	½L	¼ & ¾L	½L	¼ & ¾L	½L	¼ & ¾L	½L	¼ & ¾L	½L	¼ & ¾L	½L	¼ & ¾L	½L	¼ & ¾L	½L	¼ & ¾L	½L	¼ & ¾L	½L	¼ & ¾L	½L	¼ & ¾L	½L
Structural Steel	0.02	0.02	0.03	0.04	0.03	0.04	0.01	0.02	0.32	0.44	0.32	0.44	0.32	0.44	0.29	0.40	0.12	0.16	0.21	0.29	0.21	0.29	0.21	0.29	0.11	0.16	0.01	0.01	0.02	0.03	0.02	0.03	0.01	0.01
Concrete Deck Slab	0.06	0.09	0.14	0.19	0.13	0.18	0.05	0.06	0.84	1.17	1.00	1.40	1.00	1.40	0.91	1.28	0.41	0.59	0.76	1.06	0.74	1.04	0.74	1.04	0.46	0.64	0.03	0.05	0.08	0.12	0.08	0.12	0.04	0.05
Ppt, Rail, & 2" Wear. Surf.	0.04	0.06	0.06	0.09	0.04	0.06	0.03	0.04	0.25	0.36	0.18	0.24	0.12	0.17	0.20	0.28	0.11	0.15	0.11	0.16	0.08	0.11	0.11	0.16	0.10	0.14	0.02	0.03	0.04	0.05	0.03	0.04	0.02	0.03
Full Dead Load	0.12	0.17	0.23	0.32	0.20	0.28	0.09	0.12	1.41	1.97	1.50	2.08	1.44	2.01	1.40	1.96	0.64	0.90	1.08	1.51	1.03	1.44	1.06	1.49	0.67	0.94	0.06	0.09	0.14	0.20	0.13	0.19	0.07	0.09
Total Camber	–	–	–	–	–	–	–	–	1.41	1.97	1.50	2.08	1.44	2.01	1.40	1.96	–	–	1.08	1.51	1.03	1.44	1.06	1.49	–	–	–	–	–	–	–	–	–	–

Camber not required when it is less than 1 inch; mill camber to be turned upward.

NO.	REVISION	BY	DATE
3			
2			
1			

	BY	DATE
MADE	N.F.O. & R.M.L.	3-70
CHECKED	L.D. & N.F.O.	4-70
IN CHARGE	A.J.C.	

DELAWARE STATE HIGHWAY DEPARTMENT

DELAWARE TURNPIKE

ROUTE 273 INTERCHANGE IMPROVEMENTS
RAMP B BRIDGE OVER ROUTE 273

MISCELLANEOUS DETAILS

HOWARD, NEEDLES, TAMMEN & BERGENDOFF
consulting engineers
NEW YORK KANSAS CITY

SCALE: AS SHOWN
CONTRACT NO. 7060
DWG. NO. 9 OF 9

DELAWARE TURNPIKE	CONT. NO.	TITLE	SHEET NO.	TOTAL SHEETS
	7060		106	115

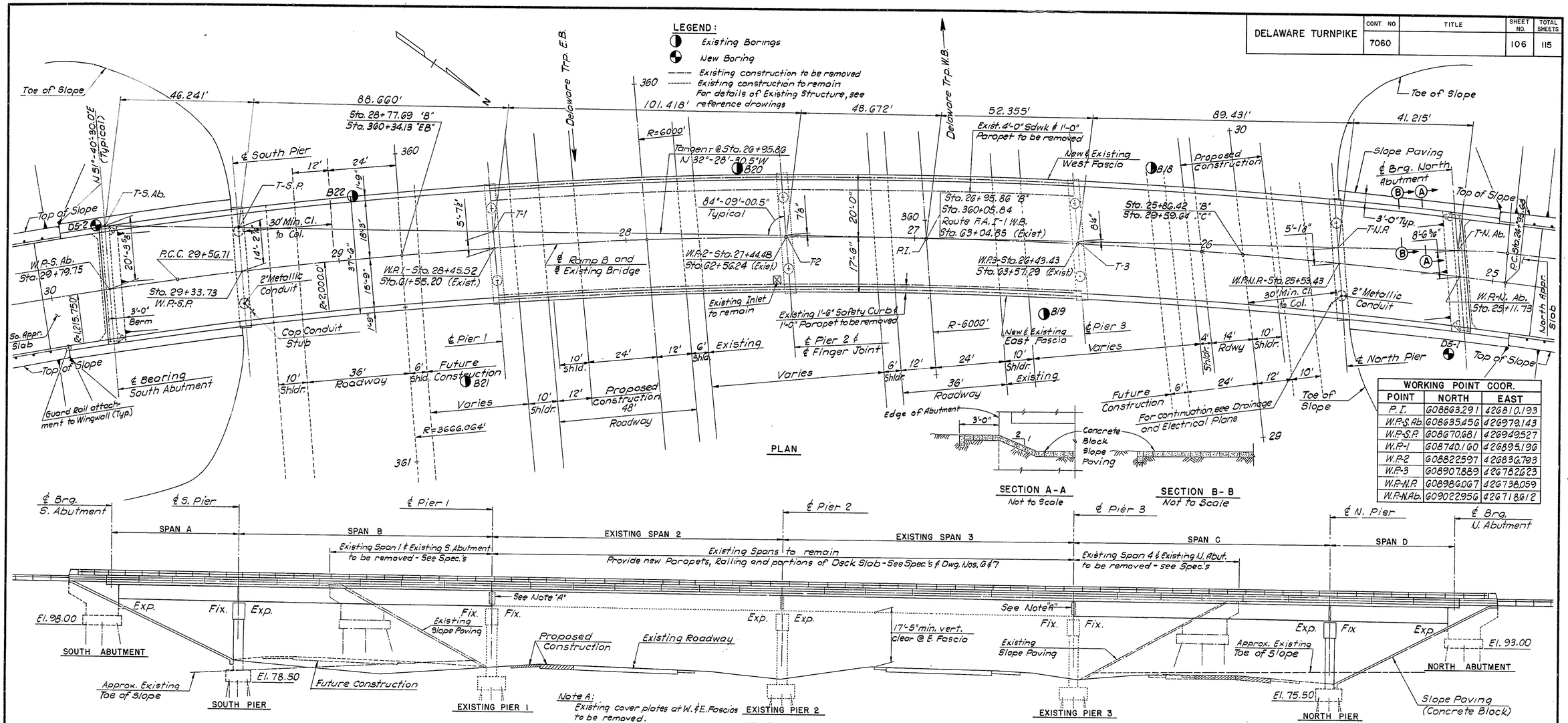

WORKING POINT COOR.		
POINT	NORTH	EAST
P.I.	608863.291	426810.193
W.P.-S.Ab.	608635.456	426979.143
W.P.-S.P.	608670.681	426949.527
W.P.-1	608740.160	426895.196
W.P.-2	608822.597	426836.793
W.P.-3	608907.889	426782.623
W.P.-N.P.	608986.067	426738.059
W.P.-N.Ab.	609022.956	426718.612

Note A:
Existing cover plates at W. & E. Fascias to be removed.

ELEVATION

ESTIMATED QUANTITIES			
ITEM NO.	DESCRIPTION	UNIT	QUANTITY
4	Excavation for Structures	C.Y.	620
7	Select Borrow-Grade A	C.Y.	166
11	Hot-mix, Hot-laid Asphaltic concrete Pavement	Tons	239
18	Portland Cement Concrete Masonry		
	Footings	C.Y.	177
	Substructure above footings	C.Y.	209
	Superstructure	C.Y.	426
	Approach Slabs	C.Y.	72
19	Superficial Waterproofing	S.Y.	110
20	Bar Reinforcement	Lbs.	128,628
22	Structural Steel (Estimated WT. = 275,000#)	L.S.	1
22 A	Aluminum Railing - Two Strand	L.F.	987
31	6" ϕ Perforated Corrugated Metal Pipe Underdrain	L.F.	135
35	14" ϕ Cast-in-Place Concrete Piles	L.F.	2,700
	Coal Tar Epoxy Underseal	S.Y.	1,736
	Protective Coating for Concrete	S.F.	894
	Slope Paving (Concrete Block)	S.Y.	482
	Partial Removal of Existing Structure	L.S.	1

GENERAL NOTES:

Construction Specifications: Delaware State Highway Department Standard Specifications dated June 1, 1965 and Special Provisions.
Design Specifications: A.A.S.H.O. Standard Specifications for Highway Bridges dated 1969.
Design Live Load: HS20-44
Design Stresses: Concrete fc = 1200 p.s.i. Structural and Reinforcing Steel fs = 20,000 p.s.i.
Concrete:
All exposed edges shall be chamfered ¾" unless otherwise noted. Concrete cover on reinforcing shall be 2" min. unless otherwise shown in the plans.
Bar Reinforcement. Bar Reinforcement shall be deformed billet-steel bars (A-615) grade 40.
All bar laps shall be 30 diameters minimum of the smaller bar spliced, unless otherwise noted.
In computing the total length shown for each bent bar, dimensions of legs adjoining each bend (not 135° or 180° hooks) were carried to the point of intersection of both legs and no deductions were made for the shorter distance along the curve. The Contractor shall take this fact into consideration when ordering and fabricating bent bars.
The first digit of the bar mark denotes the bar size, i.e. A501 is a No. 5 bar.
Structural Steel: Structural Steel shall conform to the requirements of A.S.T.M. Designation A36 except as noted.
Piles: All piles shall be 14" ϕ cast-in-place concrete piles driven to a minimum bearing capacity of 50 tons.

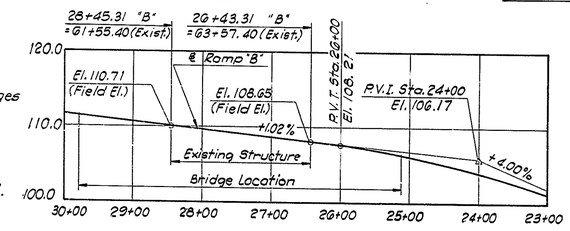

PROFILE
Vertical: 1" = 10'
Horizontal: 1" = 100'

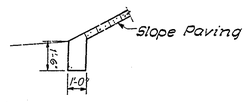

TOE WALL DETAIL
Scale 1/4" = 1'-0"
Include with cost for Slope Paving

NO.	REVISION	BY	DATE
3			
2			
1			

	BY	DATE
MADE	J.A.L.	3-70
CHECKED	J.S.	4-70
IN CHARGE	A.J.C.	

DELAWARE STATE HIGHWAY DEPARTMENT

DELAWARE TURNPIKE

ROUTE 273 INTERCHANGE IMPROVEMENTS
RAMP B BRIDGE OVER DELAWARE TURNPIKE

GENERAL PLAN & ELEVATION

HOWARD, NEEDLES, TAMMEN & BERGENDOFF
consulting engineers
NEW YORK KANSAS CITY

SCALE: 1/16" = 1'-0"
CONTRACT NO. 7060
DWG. NO. 1 OF 9

DELAWARE TURNPIKE	CONT. NO.	TITLE	SHEET NO.	TOTAL SHEETS
	7060		107	115

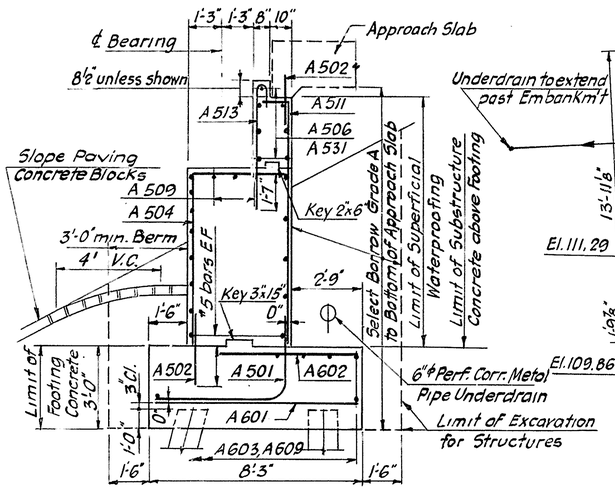

TYPICAL ABUTMENT SECTION
3/8" = 1'-0"

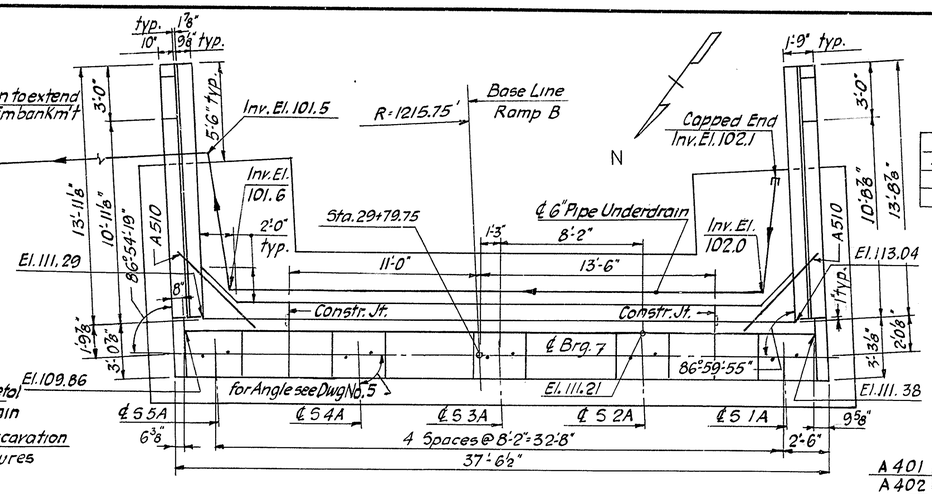

PLAN

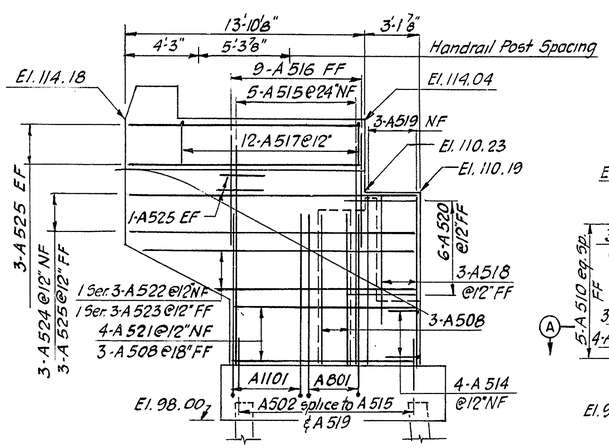

ELEVATION
SOUTHEAST WINGWALL

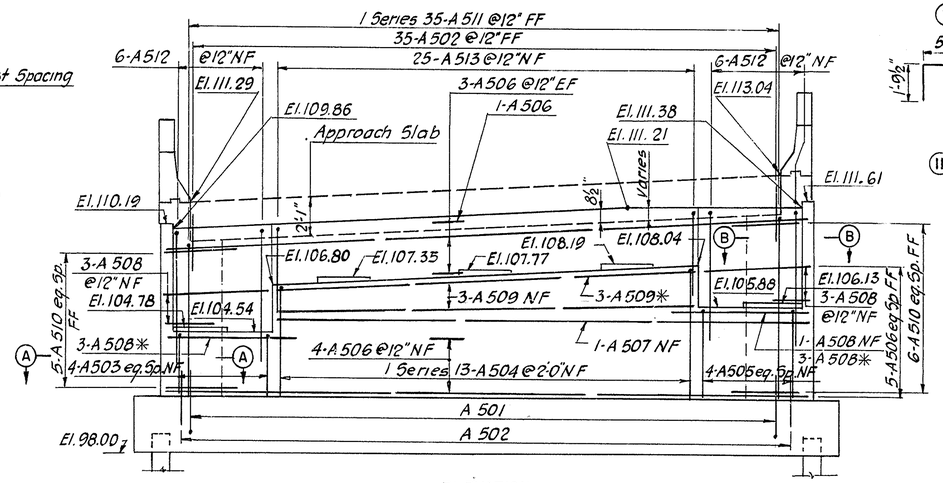

ELEVATION

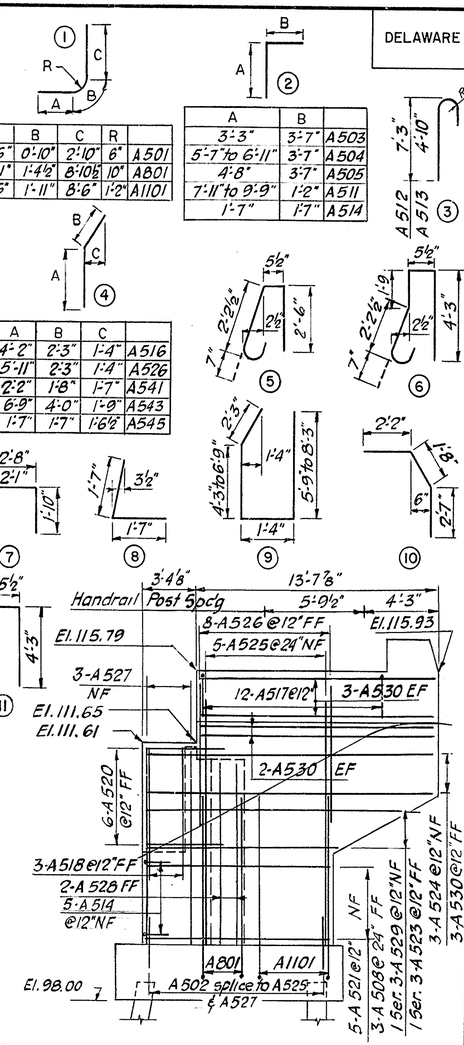

ELEVATION
SOUTHWEST WINGWALL

A	B	C	R	
4'-6"	0'-10"	2'-10"	6"	A 501
1'-11"	1'-4½"	8'-10½"	10"	A 801
1'-6"	1'-11"	8'-6"	1'-2"	A 1101

A	B	
3'-3"	3'-7"	A 503
5'-7" to 6'-11"	3'-7"	A 504
4'-8"	3'-7"	A 505
7'-11" to 9'-9"	1'-2"	A 511
1'-7"	1'-7"	A 514

A	B	C	
4'-2"	2'-3"	1'-4"	A 516
5'-11"	2'-3"	1'-4"	A 526
2'-2"	1'-8"	1'-7"	A 541
6'-9"	4'-0"	1'-9"	A 543
1'-7"	1'-7"	1'-6½"	A 545

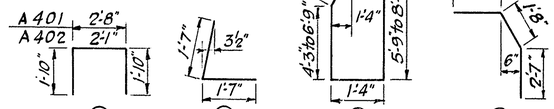

REINFORCING BAR SCHEDULE

MARK	NO. REQUIRED SO. ABUT.	NO. ABUT.	TOTAL	TYPE	LENGTH
A 401	20	20	40	7	6'-4"
A 402	25	25	50	7	5'-9"
A 501	35	35	70	1	8'-2"
A 502	77	77	154	Str.	3'-2"
A 503	4	4	8	2	6'-10"
A 504	1 Ser. 13	1 Ser. 13	26	2	9'-2" to 10'-6"
A 505	4	4	8	2	8'-3"
A 506	16		16	Str.	37'-0"
A 507	1		1	Str.	30'-8"
A 508	22	17	39	Str.	8'-0"
A 509	6	6	12	Str.	24'-2"
A 510	17	17	34	Str.	6'-0"
A 511	1 Ser. 35	1 Ser. 35	70	2	9'-1" to 10'-11"
A 512	12	13	25	3	8'-10"
A 513	25	25	50	3	6'-5"
A 514	9		9	2	3'-2"
A 515	5	5	10	Str	11'-10"
A 516	9	9	18	4	6'-5"
A 517	24	23	47	5	5'-9"
A 518	6	6	12	Str	7'-4"
A 519	3		3	Str	9'-0"
A 520	12	12	24	Str	4'-0"
A 521	9	8	17	Str.	10'-8"
A 522	1 Ser. 3		3	Str.	11'-10" to 15'-10"
A 523	2 Ser 3	2 Ser. 3	12	Str.	8'-9" to 12'-9"
A 524	6	6	12	Str.	16'-8"
A 525	18	5	23	Str.	13'-7"
A 526	8	8	16	4	8'-2"
A 527	3	3	6	Str.	10'-5"
A 528	2	2	4	Str.	9'-9"
A 529	1 Ser. 3	2 Ser. 3	9	Str.	11'-0" to 15'-0"
A 530	13		13	Str.	13'-5"
A 531		16	16	Str.	37'-10"
A 532		1	1	Str.	31'-0"
A 533		13	13	Str.	13'-1"
A 534		3	3	Str.	8'-10"
A 535		3	3	Str.	7'-10"
A 536		13	13	Str.	13'-9"
A 537	4	4	8	6	9'-3"
A 538	6	6	12	11	6'-6"
A 539	2 Ser. 6	2 Ser 6	24	9	13'-7" to 18'-7"
A 540	2	2	4	10	6'-5"
A 541	2	2	4	4	3'-10"
A 542	4	4	8	Str.	2'-6"
A 543	4	4	8	4	10'-9"
A 544		5	5	8	3'-2"
A 545		4	4	4	3'-2"
A 601	23	25	48	Str.	7'-9"
A 602	23	25	48	Str.	5'-3"
A 603	13		13	Str.	40'-0"
A 604	1 Ser. 9		9	Str.	12'-2" to 12'-7"
A 605	14	14	28	Str.	10'-3"
A 606	1 Ser. 9		9	Str.	12'-5" to 12'-10"
A 607		1 Ser. 9	9	Str.	11'-2" to 12'-9"
A 608		1 Ser. 9	9	Str.	12'-3" to 13'-11"
A 609		13	13	Str.	40'-9"
A 801	7	7	14	1	12'-2"
A 901	20	21	41	Str.	8'-3"
A 1101	10	10	20	1	11'-11"

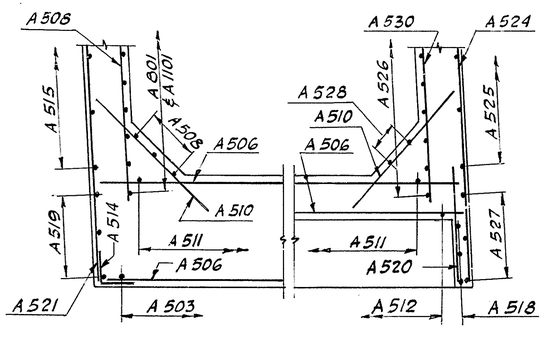

SECTION A-A
3/8" = 1'-0"
Section E-E similar

SECTION B-B
3/8" = 1'-0"
Section F-F similar

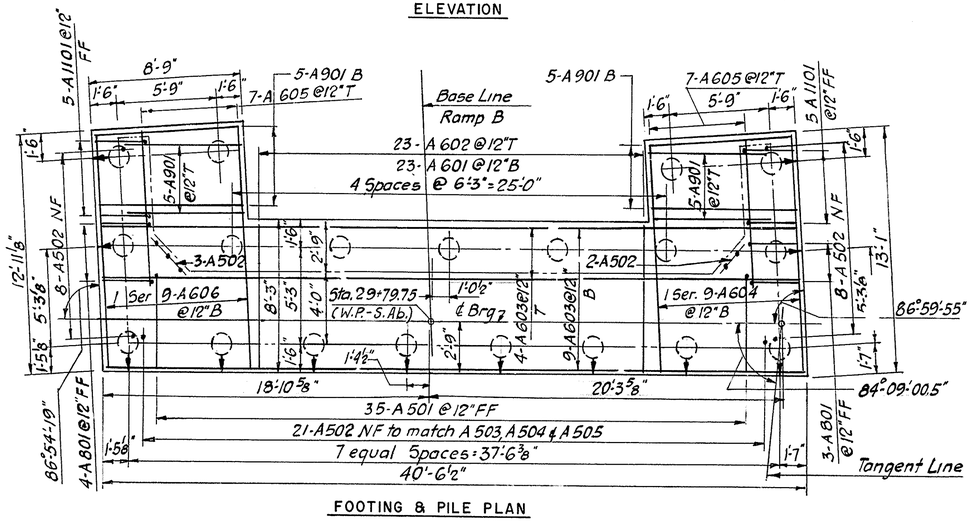

FOOTING & PILE PLAN

NOTES:

For Substructure Notes see Dwg. No. 4
For Wall Details & additional Reinforcing at Wall Cantilever & End Block see typical Wingwall Elevation & Section C-C, Dwg. No. 3
* denotes bars under Bridge Seat.
For Pile Notes & Legend see Dwg. No. 3
For Railing Notes see Dwg. No. 6

NO.	REVISION	BY	DATE
3			
2			
1			

	BY	DATE
MADE	R.M.L.	3-70
CHECKED	L.D.	3-70
IN CHARGE	A.J.C.	

DELAWARE STATE HIGHWAY DEPARTMENT

DELAWARE TURNPIKE

ROUTE 273 INTERCHANGE IMPROVEMENTS
RAMP B BRIDGE OVER DELAWARE TURNPIKE
SOUTH ABUTMENT

HOWARD, NEEDLES, TAMMEN & BERGENDOFF
consulting engineers
NEW YORK KANSAS CITY

SCALE: 1" = 1'-0" & AS SHOWN
CONTRACT NO. 7060
DWG. NO. 2 OF 9

DELAWARE TURNPIKE	CONT. NO.	TITLE	SHEET NO.	TOTAL SHEETS
	7060		108	115

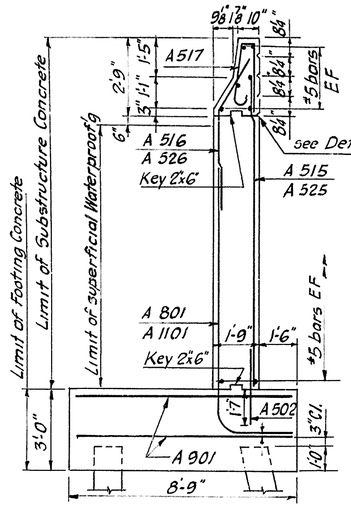

TYPICAL WINGWALL SECTION
3/8" = 1'-0"

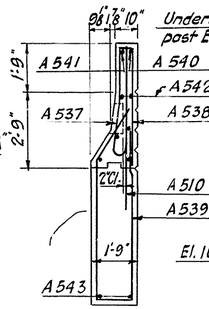

SECTION C-C
3/8" = 1'-0"

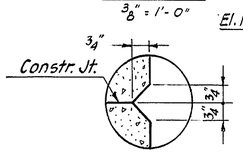

DETAIL "A"

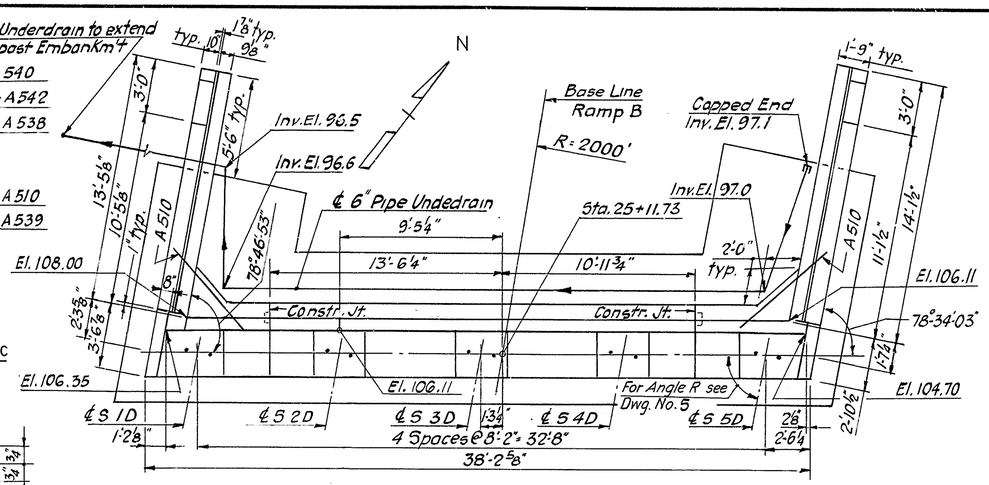

PLAN

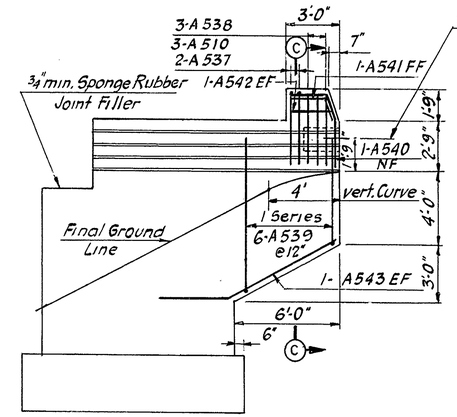

TYPICAL WINGWALL ELEVATION

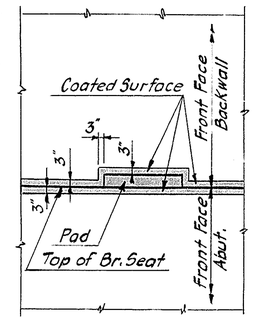

APPLICATION LIMITS OF EPOXY PROTECTIVE COATING FOR CONCRETE
No. Scale

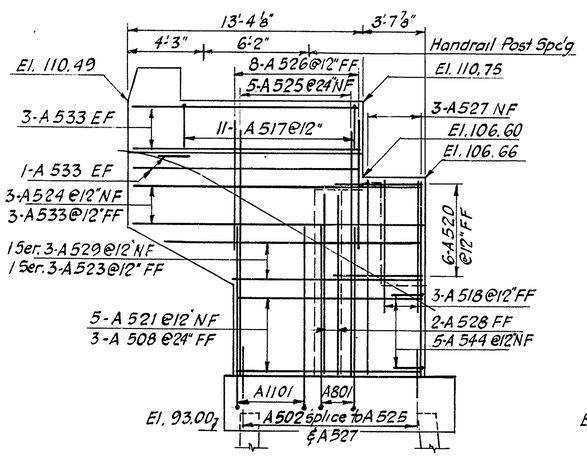

ELEVATION
NORTHWEST WINGWALL

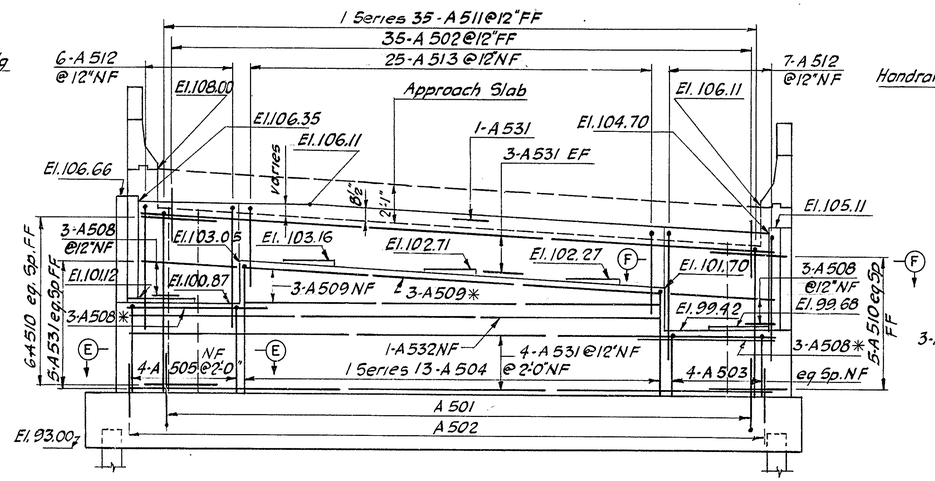

ELEVATION

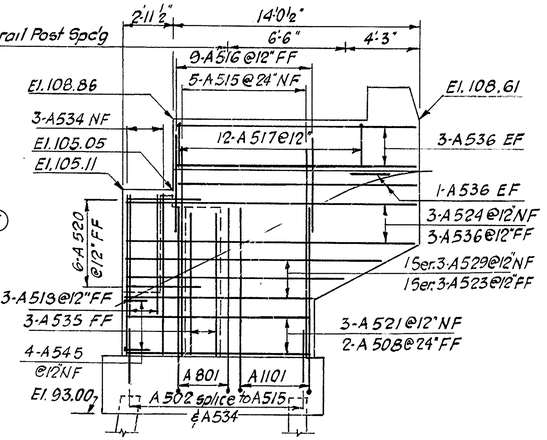

ELEVATION
NORTHEAST WINGWALL

NOTES:
For Substructure Notes see Dwg. No. 4.
For Sections E-E & F-F see Dwg. No. 2.
For additional Abutment Notes see Dwg. No. 2.

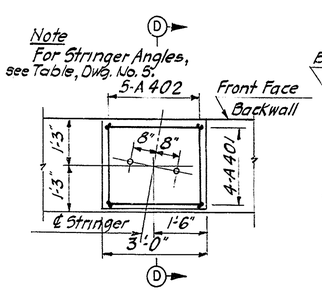

TYPICAL PAD PLAN
1/2" = 1'-0"

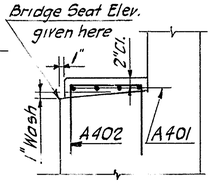

SECTION D-D
1/2" = 1'-0"

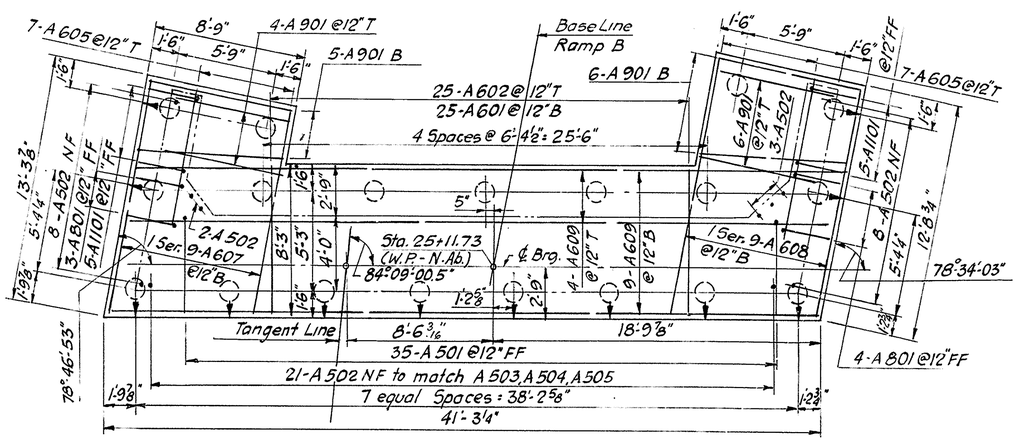

FOOTING & PILE PLAN

LEGEND
indicates Vertical Pile.
indicates Pile battered 3:12 in direction shown.
Approximate Pile Tip Elevation:
South Abutment 55.0
North Abutment + 50.0

NO.	REVISION	BY	DATE
3			
2			
1			

	BY	DATE
MADE	R.M.L.	3-70
CHECKED	L.D.	3-70
IN CHARGE	A.J.C.	

DELAWARE STATE HIGHWAY DEPARTMENT
DELAWARE TURNPIKE
ROUTE 273 INTERCHANGE IMPROVEMENTS
RAMP B BRIDGE OVER DELAWARE TURNPIKE
NORTH ABUTMENT

HOWARD, NEEDLES, TAMMEN & BERGENDOFF
consulting engineers
NEW YORK KANSAS CITY

SCALE: 1/4" = 1'-0" & AS SHOWN
CONTRACT NO. 7060
DWG. NO. 3 OF 9

DELAWARE TURNPIKE	CONT. NO.	TITLE	SHEET NO.	TOTAL SHEETS
	7060		109	115

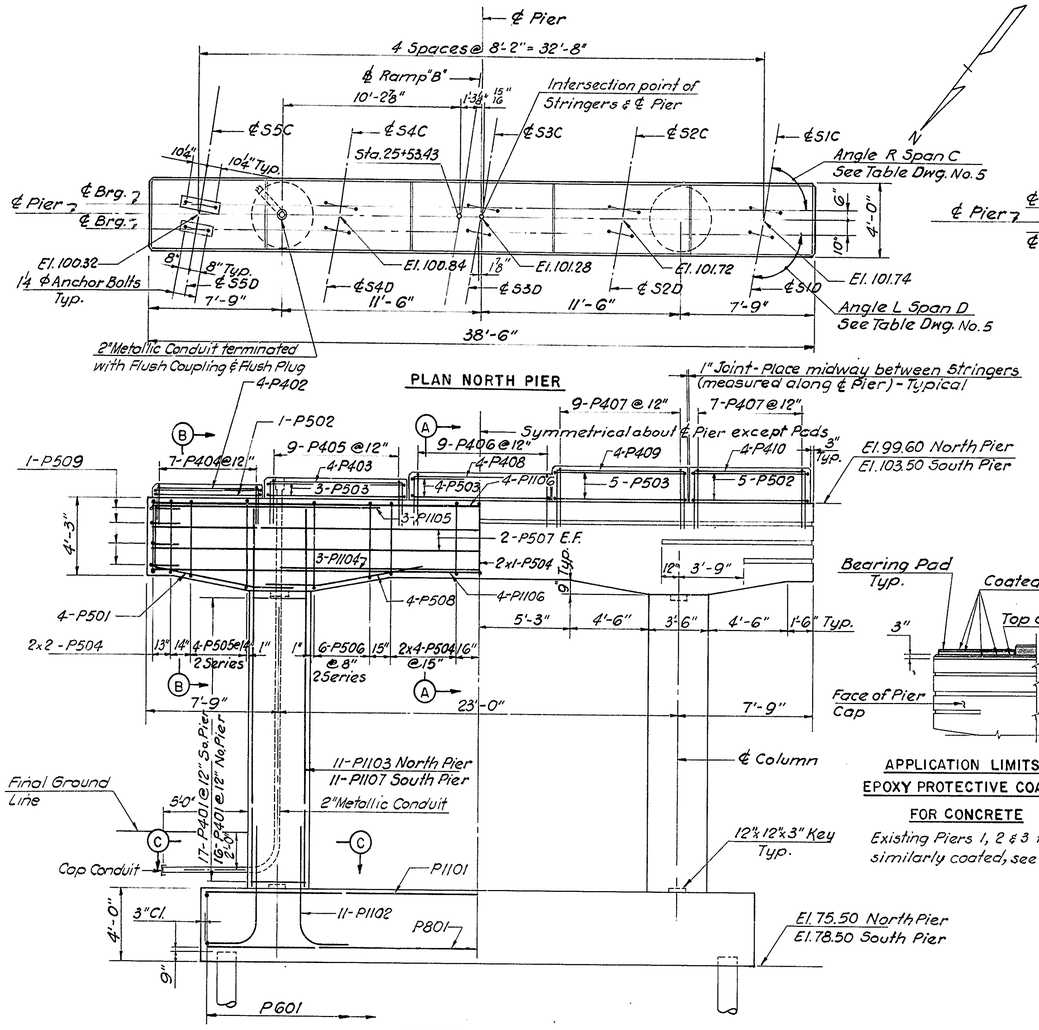

PLAN NORTH PIER

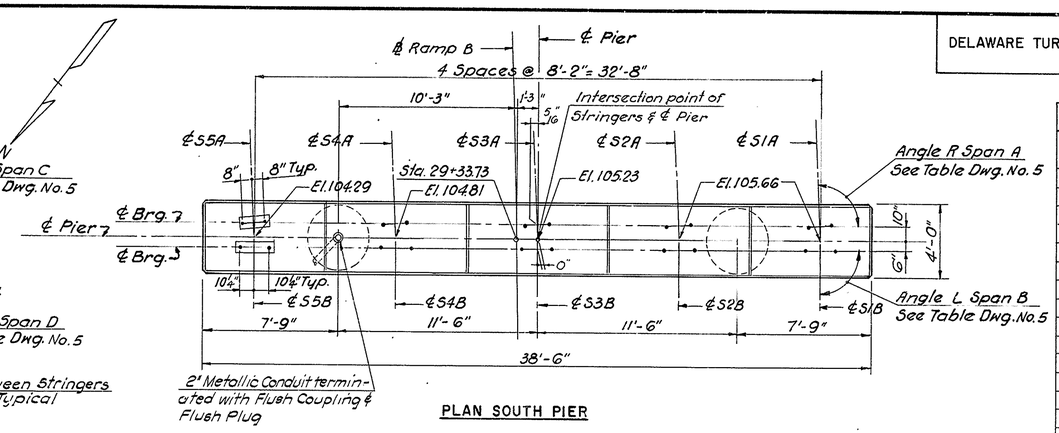

PLAN SOUTH PIER

ELEVATION

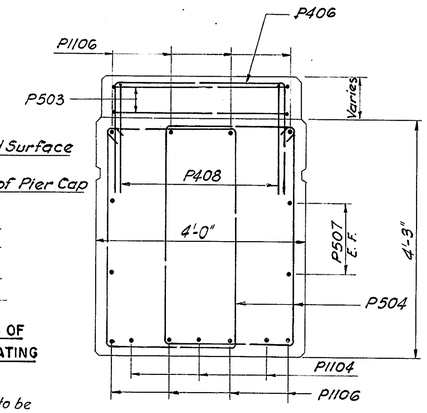

APPLICATION LIMITS OF EPOXY PROTECTIVE COATING FOR CONCRETE

Existing Piers 1, 2 & 3 to be similarly coated, see Dwg. No. 9.

SECTION A-A

Scale ¾" = 1'-0"

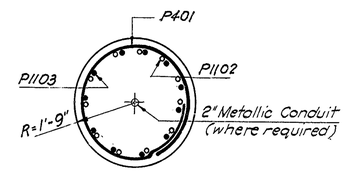

SECTION C-C

Scale ½" = 1'-0"

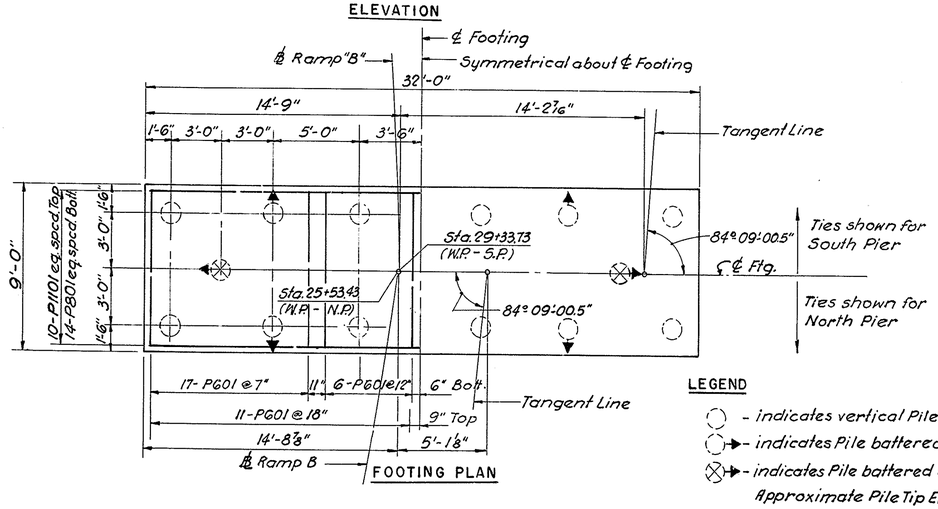

FOOTING PLAN

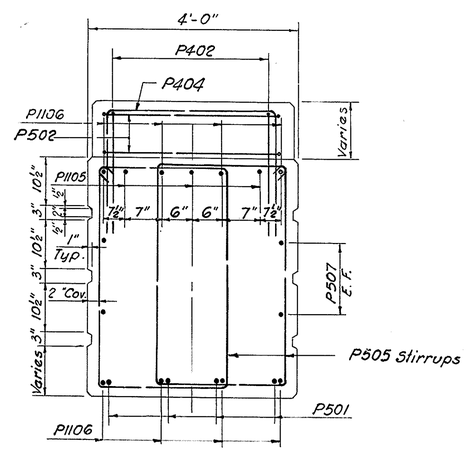

SECTION B-B

Scale ¾" = 1'-0"

LEGEND

- indicates vertical Pile
- indicates Pile battered 2:12 in the direction shown
- indicates Pile battered 3:12 in the direction shown

Approximate Pile Tip Elevation — No. Pier El. 40.00; So. Pier El. 45.00

SUBSTRUCTURE NOTES

For General Notes, see Dwg. No. 1.
N.F. denotes Near Face.
F.F. denotes Far Face.
E.F. denotes Each Face.
Minimum Reinforcing steel cover: 3" in footing; 2" above footing.
For Epoxy Protective Coating Limits for Abutments see Dwg. No. 3 for Piers see this Dwg.
Pad elevations given denote top of finished concrete Pad.
For Shoes, Anchor Bolts & Pile details see Dwg. No. 9
Backfill behind abutments to be placed only after bridge deck slab has ben completed.

REINFORCING SCHEDULE

MARK	NO. REQ'D NO. PIER	NO. REQ'D SO. PIER	TYPE	LENGTH
P401	32	34	4	11'-1"
P402	4	4	3	10'-0"
P403	4	4	3	12'-11"
P404	7	7	3	7'-0"
P405	9	9	3	8'-6"
P406	9	9	3	9'-2"
P407	16	16	3	10'-1"
P408	4	4	3	13'-7"
P409	4	4	3	14'-5"
P410	4	4	3	13'-2"
P501	8	8	5	12'-2"
P502	7	7	2	20'-7"
P503	12	12	2	23'-0"
P504	26	26	2	13'-6"
P505	4 Series of 4	4 Series of 4	2	13'-10" to 15'-0"
P506	4 Series of 6	4 Series of 6	2	13'-8" to 15'-0"
P507	4	4	STR	38'-2"
P508	8	8	6	8'-10"
P509	8	8	3	6'-8"
P601	68	68	STR	8'-6"
P801	14	14	STR	31'-6"
P1101	10	10	STR	31'-6"
P1102	22	22	1	8'-8"
P1103	22	–	STR	19'-8"
P1104	3	3	STR	23'-0"
P1105	6	6	STR	13'-7"
P1106	8	8	STR	38'-2"
P1107	–	22	STR	20'-7"

BENDING DIAGRAMS

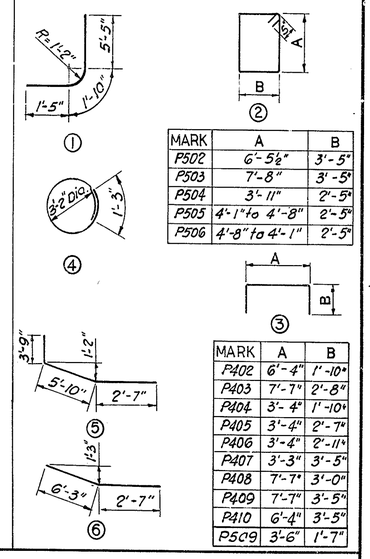

MARK	A	B
P502	6'-5½"	3'-5"
P503	7'-8"	3'-5"
P504	3'-11"	2'-5"
P505	4'-1" to 4'-8"	2'-5"
P506	4'-8" to 4'-1"	2'-5"

MARK	A	B
P402	6'-4"	1'-10"
P403	7'-7"	2'-8"
P404	3'-4"	1'-10"
P405	3'-4"	2'-7"
P406	3'-4"	2'-11"
P407	3'-3"	3'-5"
P408	7'-7"	3'-0"
P409	7'-7"	3'-5"
P410	6'-4"	3'-5"
P509	3'-6"	1'-7"

NO.	REVISION	BY	DATE
3			
2			
1			

	BY	DATE
MADE	J.D.	3-70
CHECKED	Jn.R.	4-70
IN CHARGE	A.J.C.	

DELAWARE STATE HIGHWAY DEPARTMENT

DELAWARE TURNPIKE

ROUTE 273 INTERCHANGE IMPROVEMENTS
RAMP B BRIDGE OVER DELAWARE TURNPIKE
NORTH & SOUTH PIER

HOWARD, NEEDLES, TAMMEN & BERGENDOFF
consulting engineers
NEW YORK KANSAS CITY

SCALE: 1/4" = 1'-0" & AS SHOWN
CONTRACT NO. 7060
SHEET NO. 4 OF 9

DELAWARE TURNPIKE	CONT. NO.	TITLE	SHEET NO.	TOTAL SHEETS
	7060		110	115

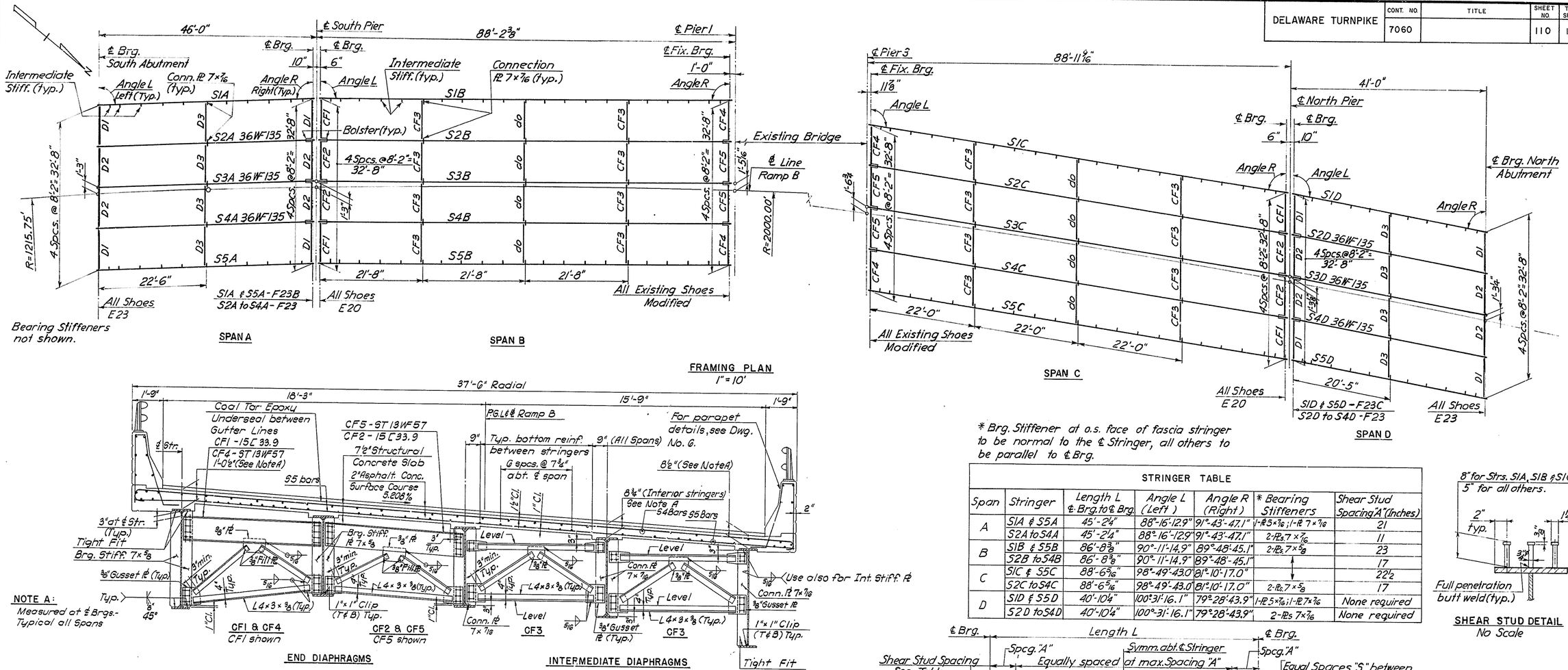

* Brg. Stiffener at o.s. face of fascia stringer to be normal to the ℄ Stringer, all others to be parallel to ℄ Brg.

FRAMING PLAN
1" = 10'

NOTE A:
Measured at ℄ Brgs.- Typical all Spans

TYPICAL CROSS SECTION LOOKING NORTH
3/8" = 1'-0"

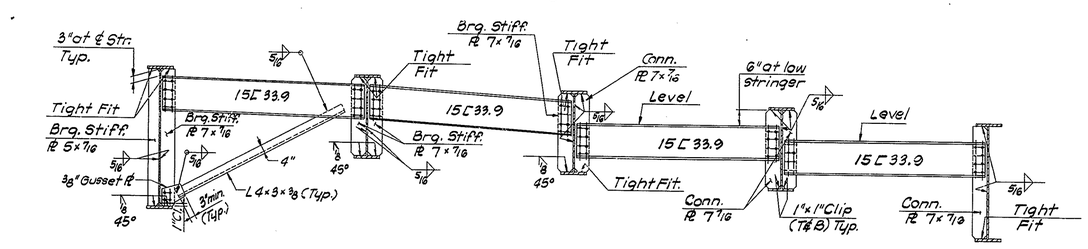

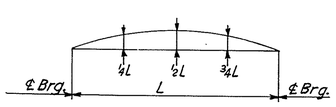

CAMBER DIAGRAM

CAMBER (INCHES)																
STRINGERS	S1A & S5A		S2A to S4A		S1B & S5B		S2B to S4B		S1C & S5C		S2C to S4C		S1D & S5D		S2D to S4D	
	1/4 & 3/4 L	1/2 L	1/4 & 3/4 L	1/2 L	1/4 & 3/4 L	1/2 L	1/4 & 3/4 L	1/2 L	1/4 & 3/4 L	1/2 L	1/4 & 3/4 L	1/2 L	1/4 & 3/4 L	1/2 L	1/4 & 3/4 L	1/2 L
Structural Steel	0.02	0.02	0.05	0.07	0.19	0.26	0.30	0.42	0.22	0.30	0.32	0.45	0.01	0.01	0.03	0.04
Concrete Deck Slab	0.09	0.12	0.30	0.42	0.86	1.19	1.37	1.91	1.05	1.46	1.41	1.96	0.06	0.08	0.19	0.27
Ppt., Rail & 2" Wear. Surf.	0.02	0.02	0.04	0.06	0.16	0.22	0.18	0.25	0.17	0.23	0.19	0.26	0.02	0.03	0.07	0.10
Full Dead Load	0.13	0.16	0.39	0.55	1.21	1.67	1.85	2.58	1.44	1.99	1.92	2.67	0.09	0.12	0.29	0.41
Total Camber	—	—	—	—	1.21	1.67	1.85	2.58	1.44	1.99	1.92	2.67	—	—	—	—

Camber not required when it is less than 1 inch, mill camber to be turned upward.

STRINGER TABLE

Span	Stringer	Length L ℄ Brg. to ℄ Brg.	Angle L (Left)	Angle R (Right)	* Bearing Stiffeners	Shear Stud Spacing "A" (Inches)
A	S1A & S5A	45'-2 1/4"	88°-16'-12.9"	91°-43'-47.1"	1-Pl 5×7/16 ; 1-Pl 7×7/16	21
	S2A to S4A	45'-2 1/4"	88°-16'-12.9"	91°-43'-47.1"	2-Pls 7×7/16	11
B	S1B & S5B	86'-8 3/8"	90°-11'-14.9"	89°-48'-45.1"	2-Pls 7×5/8	23
	S2B to S4B	86'-8 3/8"	90°-11'-14.9"	89°-48'-45.1"	↕	17
C	S1C & S5C	88'-6 5/16"	98°-49'-43.0"	81°-10'-17.0"		22 1/2
	S2C to S4C	88'-6 5/16"	98°-49'-43.0"	81°-10'-17.0"	2-Pls 7×5/8	17
D	S1D & S5D	40'-10 1/4"	100°-31'-16.1"	79°-28'-43.9"	1-Pl 5×7/16 ; 1-Pl 7×7/16	None required
	S2D to S4D	40'-10 1/4"	100°-31'-16.1"	79°-28'-43.9"	2-Pls 7×7/16	None required

8" for Strs. S1A, S1B & S1C
5" for all others.

Full penetration butt weld (typ.)

SHEAR STUD DETAIL
No Scale

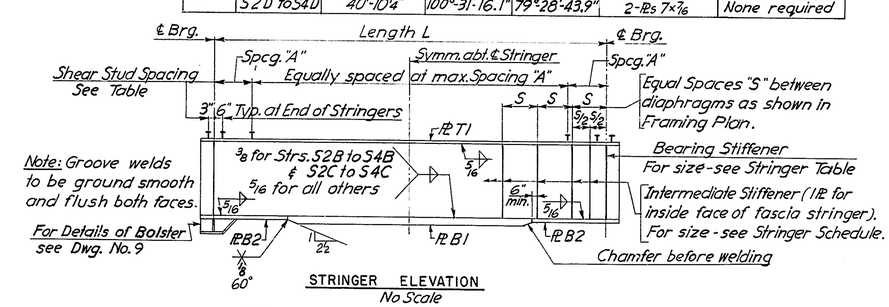

STRINGER ELEVATION
No Scale
Stringers S1A, S5A, S1B to S5B, S1C to S5C, S1D & S5D

NOTES:
For Structural Steel Notes, see Dwg. No. 9.

	Stringer	Web Pl	Pl T1	** Pl B1	** Pl B2	Interm. Stiff.
	S1A & S5A	60×3/8	12×3/4×F.L.	12×3/4×F.L.	—	Pl 5×3/8
	S1B & S5B	60×3/8	14×3/4×F.L.	16×1 1/8×42'-9"	16×3/4	Pl 7×1/2
**	S2B to S4B	48×1/2	↕	16×1 5/8×46'-0"	16×1 1/8	—
	S1C & S5C	60×3/8		16×1 1/4×42'-0"	16×7/8	Pl 7×1/2
**	S2C to S4C	48×1/2	14×7/8×F.L.	16×1 3/4×50'-0"	16×1 1/8	—
	S1D & S5D	60×3/8	12×3/4×F.L.	12×3/4×F.L.	—	Pl 5×3/8

** Contractor elected to use full length Pls. B1 and eliminate Pls. B2 at the interior stringers of Spans B & C.

NO.	REVISION	BY	DATE
3			
2			
1	Contractors changes in bottom flange at welded stringers.	J. R.	9-70

	BY	DATE
MADE	M.V.	3-70
CHECKED	M.T.	4-70
IN CHARGE	A.J.C.	

DELAWARE STATE HIGHWAY DEPARTMENT

DELAWARE TURNPIKE

ROUTE 273 INTERCHANGE IMPROVEMENTS
RAMP B BRIDGE OVER DELAWARE TURNPIKE

FRAMING PLAN & CROSS SECTION

HOWARD, NEEDLES, TAMMEN & BERGENDOFF
consulting engineers
NEW YORK KANSAS CITY

SCALE: AS SHOWN
CONTRACT NO. 7060
DWG. NO. 5 OF 9

DELAWARE TURNPIKE	CONT NO	TITLE	SHEET NO.	TOTAL SHEETS
	7060		III	115

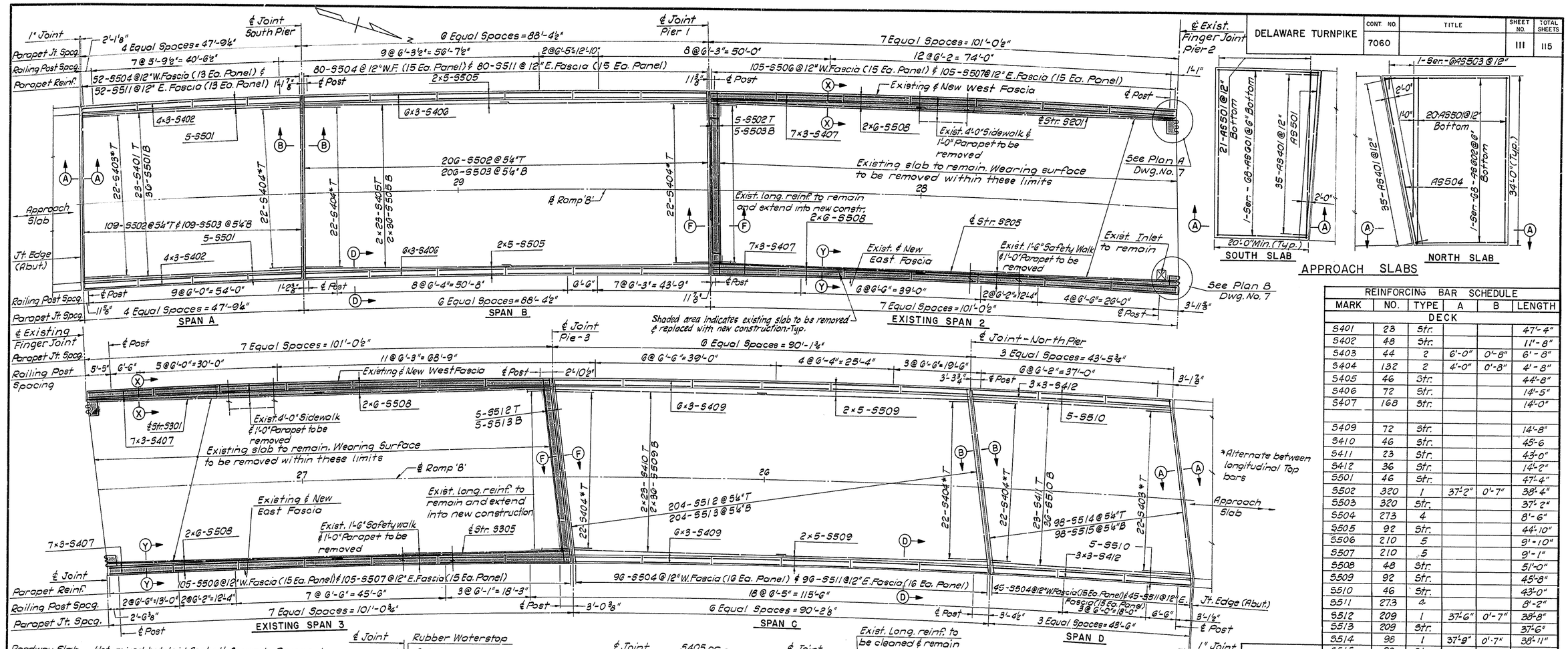

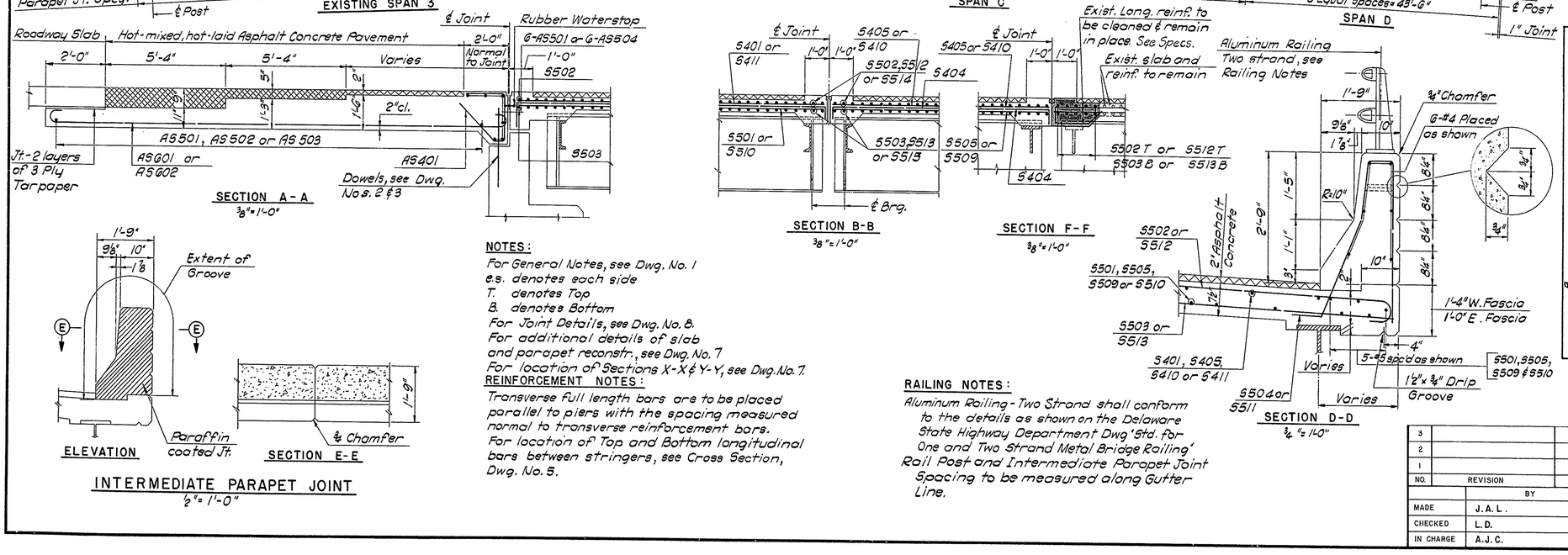

INTERMEDIATE PARAPET JOINT
½" = 1'-0"

NOTES:

For General Notes, see Dwg. No. 1
e.s. denotes each side
T. denotes Top
B. denotes Bottom
For Joint Details, see Dwg. No. 8.
For additional details of slab and parapet reconstr., see Dwg. No. 7
For location of Sections X-X & Y-Y, see Dwg. No. 7.

REINFORCEMENT NOTES:

Transverse full length bars are to be placed parallel to piers with the spacing measured normal to transverse reinforcement bars.
For location of Top and Bottom longitudinal bars between stringers, see Cross Section, Dwg. No. 5.

RAILING NOTES:

Aluminum Railing - Two Strand shall conform to the details as shown on the Delaware State Highway Department Dwg 'Std. for One and Two Strand Metal Bridge Railing'
Rail Post and Intermediate Parapet Joint Spacing to be measured along Gutter Line.

REINFORCING BAR SCHEDULE					
MARK	NO.	TYPE	A	B	LENGTH
DECK					
S401	23	Str.			47'-4"
S402	48	Str.			11'-8"
S403	44	2	6'-0"	0'-8"	6'-3"
S404	132	2	4'-0"	0'-8"	4'-8"
S405	46	Str.			44'-8"
S406	72	Str.			14'-5"
S407	168	Str.			14'-0"
S409	72	Str.			14'-8"
S410	46	Str.			45'-6
S411	23	Str.			43'-0"
S412	36	Str.			14'-2"
S501	46	Str.			47'-4"
S502	320	1	37'-2"	0'-7"	38'-4"
S503	320	Str.			37'-2"
S504	273	4			8'-6"
S505	92	Str.			44'-10"
S506	210	5			9'-10"
S507	210	5			9'-1"
S508	48	Str.			51'-0"
S509	92	Str.			45'-8"
S510	46	Str.			43'-0"
S511	273	4			8'-2"
S512	209	1	37'-6"	0'-7"	38'-8"
S513	209	Str.			37'-6"
S514	98	1	37'-9"	0'-7"	38'-11"
S515	98	Str.			37'-9"
APPROACH SLABS					
AS401	70	3	1'-9"	1'-4"	5'-9"
AS501	47	Str.			33'-8"
AS503	156	6			4'-0" to 28'-0"
AS504	6	Str.			34'-2"
AS601	68	1	19'-8" to 21'-2"	0'-8"	21'-0" to 27'-6"
AS602	68	1	19'-8" to 26'-4"	0'-8"	21'-0" to 27'-8"

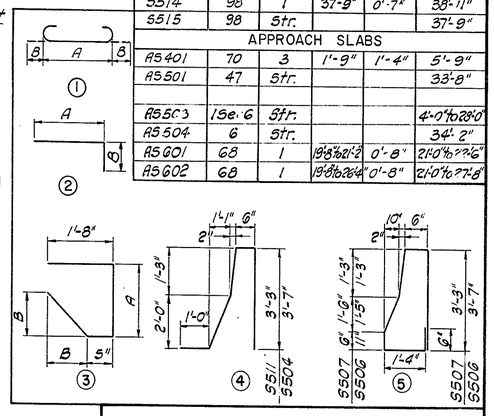

NO.	REVISION	BY	DATE
3			
2			
1			

	BY	DATE
MADE	J. A. L.	3-70
CHECKED	L. D.	4-70
IN CHARGE	A. J. C.	

DELAWARE STATE HIGHWAY DEPARTMENT

DELAWARE TURNPIKE

ROUTE 273 INTERCHANGE IMPROVEMENTS
RAMP B BRIDGE OVER DELAWARE TURNPIKE

CONCRETE DECK & APPROACH SLABS

HOWARD, NEEDLES, TAMMEN & BERGENDOFF
consulting engineers
NEW YORK KANSAS CITY

SCALE: 1" = 10'-8" AS SHOWN
CONTRACT NO. 7060
DWG. NO. 6 OF 9

DELAWARE TURNPIKE	CONT NO	TITLE	SHEET NO.	TOTAL SHEETS
	7060		112	115

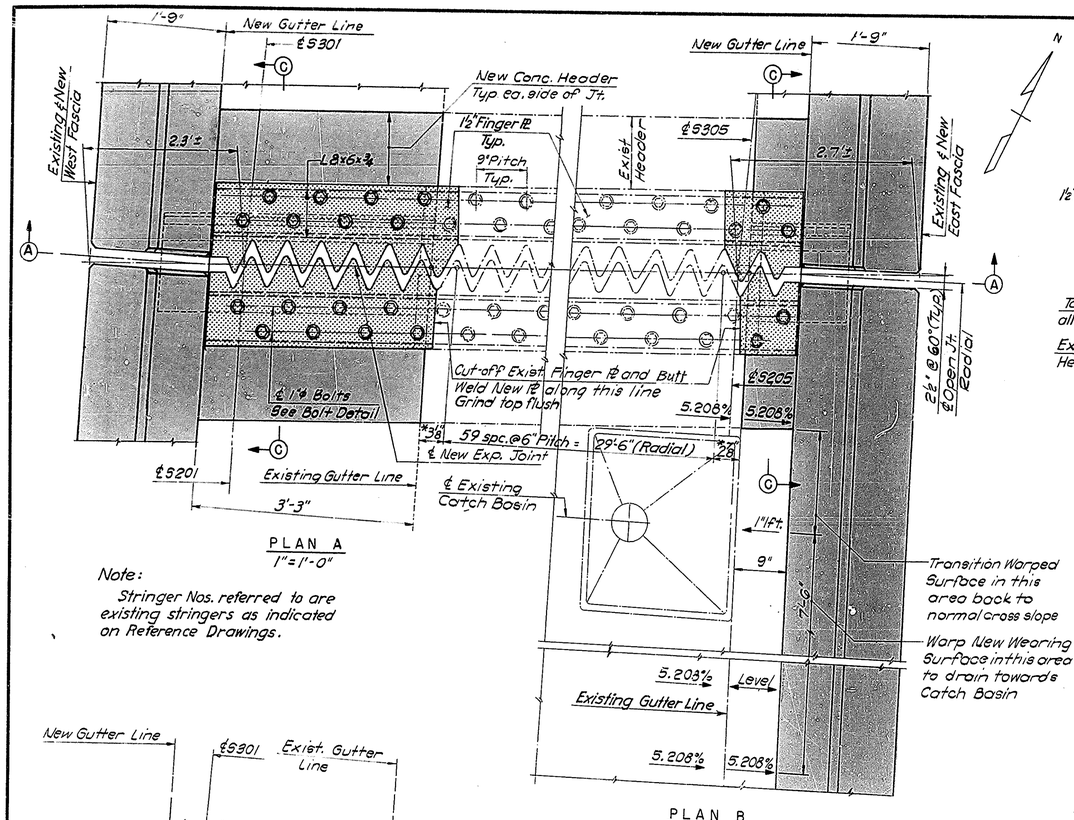

PLAN A
1" = 1'-0"

Note:
Stringer Nos. referred to are existing stringers as indicated on Reference Drawings.

PLAN B
1" = 1'-0"

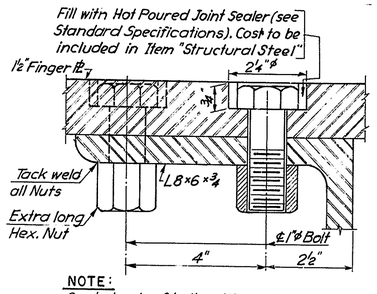

NOTE:
Coat shank of bolts with rust inhibiting compound and oil all nuts.

BOLT DETAIL
Half Scale

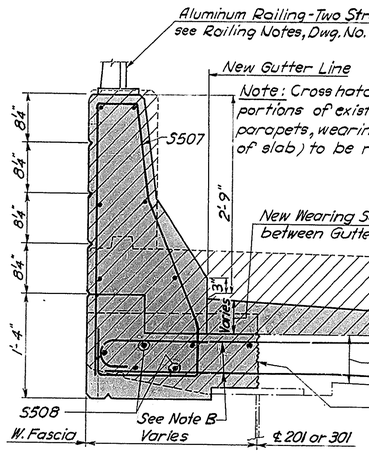

SECTION X-X
1" = 1'-0"

Note:
W. Parapet dimensions same as E. Parapet except as shown.

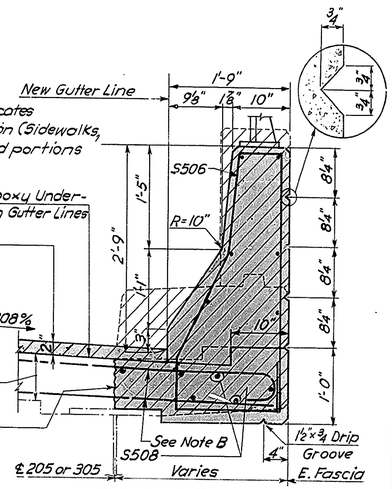

SECTION Y-Y
1" = 1'-0"

NOTE A:
Cut Existing Slab along ℄ Stringers, clean existing shear connectors, roughen cut in existing concrete slab and coat with an approved epoxy bonding compound.

NOTE B:
Existing transverse reinforcement (#5 @ 5½") to be cleaned and remain in new construction (See Specs.)

NOTE C:
Existing Shear Connector to be removed if it interferes with location of new support angle.

NOTE D:
℄ 1" ϕ Bolts in counterbored holes (Typ.) See Bolt Detail.

NOTE E:
5/16" Pl. to be welded to L 8×6×¾ and ST 13WF57 in field and to remain in place after concrete has been poured.

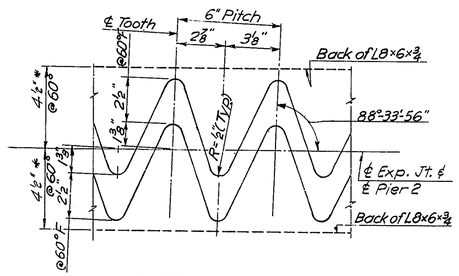

FINGER PLATE DETAIL
3" = 1'-0"

* Contractor shall verify the actual tooth arrangement & dimensions in the field before proceeding with Fabrication

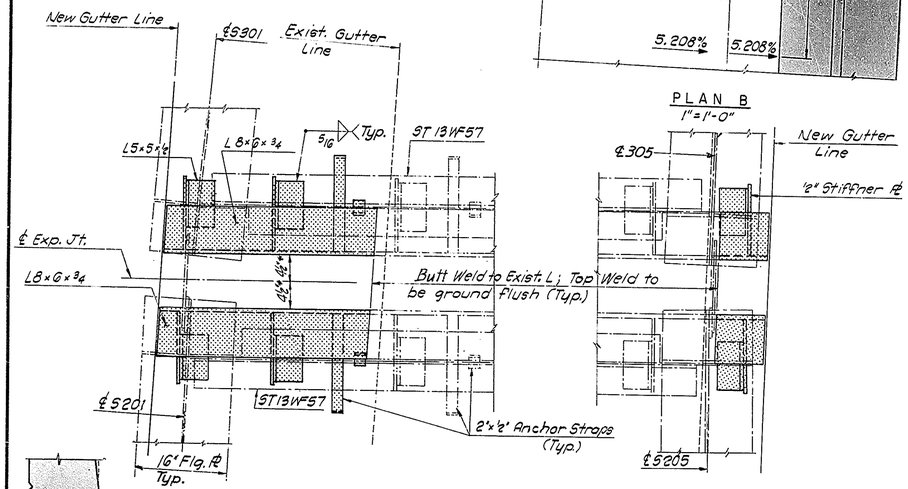

SECTION B-B
1" = 1'-0"

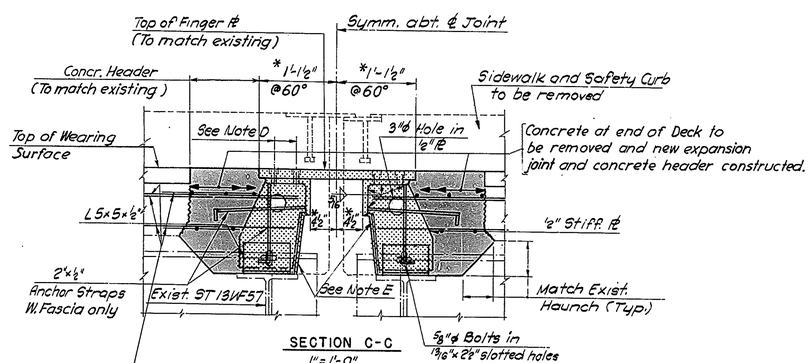

SECTION C-C
1" = 1'-0"

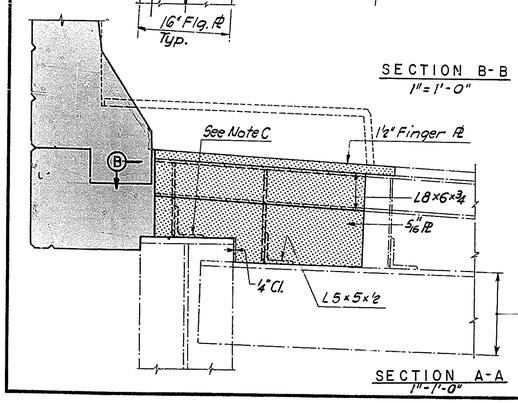

SECTION A-A
1" = 1'-0"

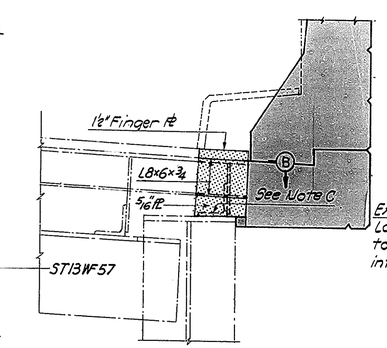

Existing Transverse and Longitudinal reinforcing to remain and extend into new construction

NOTES:
- Indicates Existing Construction to remain
- Indicates Existing Construction to be removed
- For location of Plan A, Plan B, Section X-X & Y-Y, see Dwg. No. 6
- Shaded areas indicate New Construction
- Indicates new Structural Steel

NO.	REVISION	BY	DATE
3			
2			
1			
		BY	DATE
MADE	M.V.		3-70
CHECKED	J.R.		4-70
IN CHARGE	A.J.C.		

DELAWARE STATE HIGHWAY DEPARTMENT
DELAWARE TURNPIKE
ROUTE 273 INTERCHANGE IMPROVEMENTS
RAMP B BRIDGE OVER DELAWARE TURNPIKE
MODIFICATIONS AT EXISTING SPANS 2 & 3

HOWARD, NEEDLES, TAMMEN & BERGENDOFF
consulting engineers
NEW YORK KANSAS CITY

SCALE: AS SHOWN
CONTRACT NO. 7060
DWG. NO. 7 OF 9

DELAWARE TURNPIKE	CONT. NO.	TITLE	SHEET NO.	TOTAL SHEETS
	7060		113	115

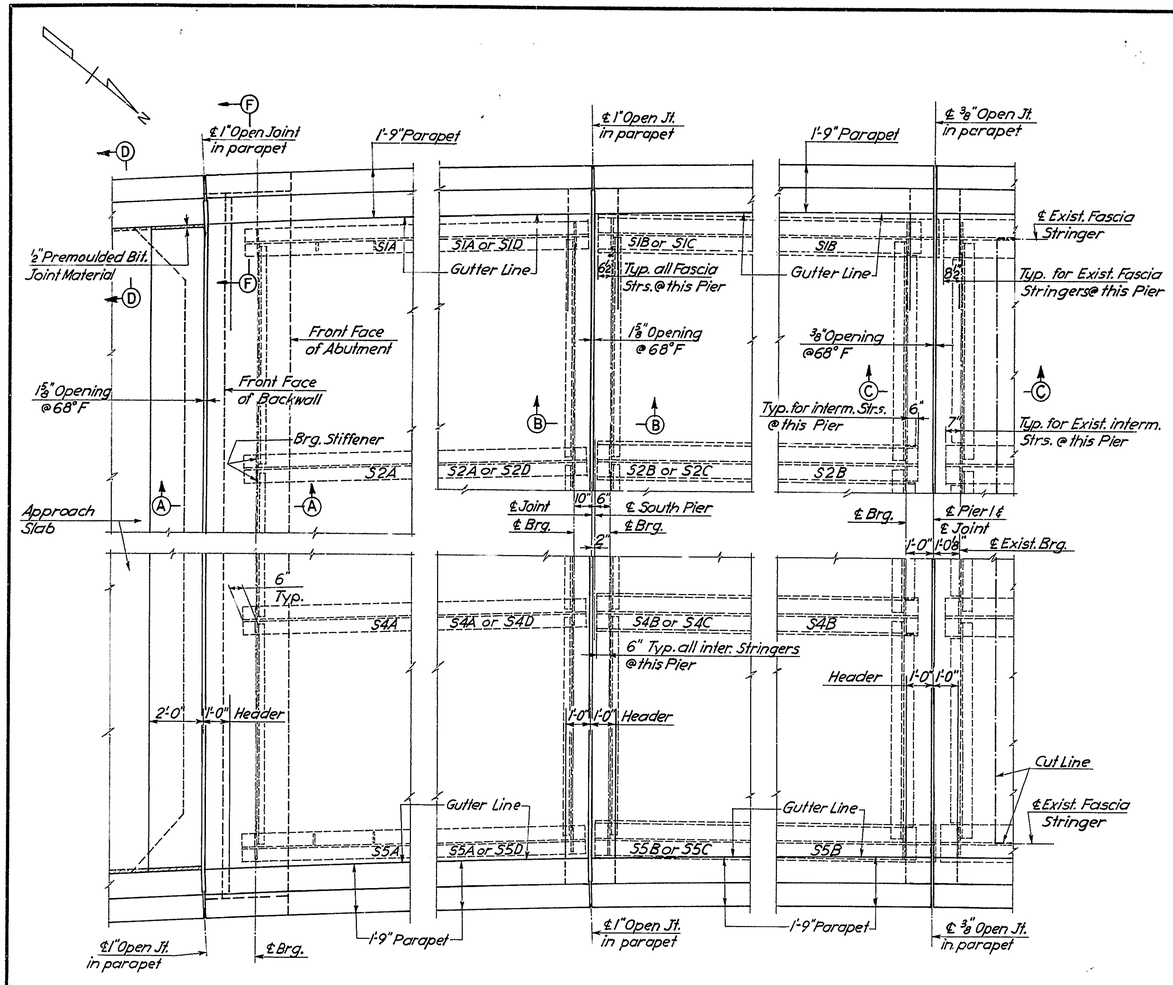

PLAN-SOUTH ABUTMENT
North Abutment similar

PLAN-SOUTH PIER
North Pier similar

PLAN-EXISTING PIER 1
Existing Pier 3 similar except as shown

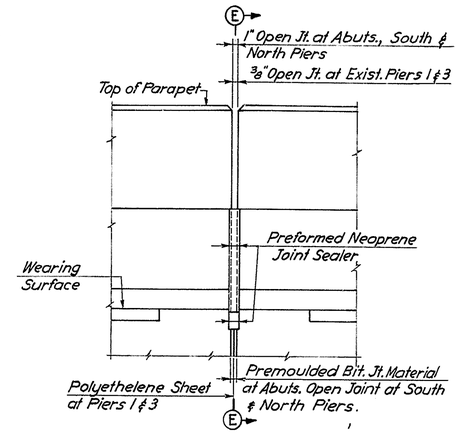

SECTION ALONG GUTTER LINE
1" = 1'-0"

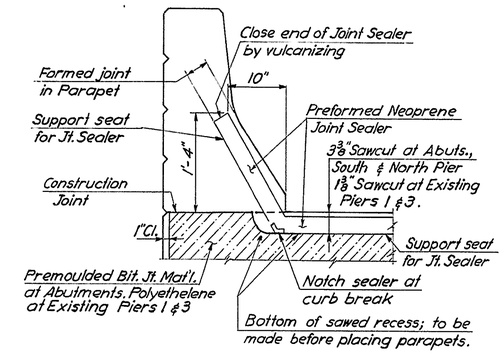

SECTION E-E
1" = 1'-0"

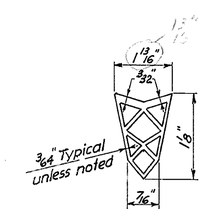

TYPE B

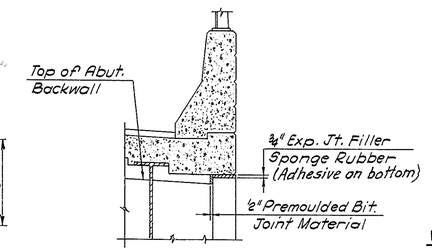

SECTION F-F
1/2" = 1'-0"
(Typ. at all Abut. corners)

NOTES:

Any changes in the shape or dimensions of preformed neoprene joint sealer must be approved by the Engineer.

The minimum thickness of any web shall not be less than as specified.

The sealer shall be supplied in one piece for the full width of each joint. One shop splice will be permitted for lengths in excess of 50 feet.

It is absolutely essential that the joint openings in slabs be sawcut accurately to smooth straight lines.

The size of the opening shall be adjusted to allow for the temperature at the time of construction.

The joints shall be thoroughly cleaned. The sealer shall be installed by suitable machine tools only and thoroughly secured in place with a lubricant which shall cover both sides of the sealer over the full area in contact with the sides of the joint.

Cost of joints to be included in the price bid for the item "Portland Cement Concrete Masonry-Superstructure."

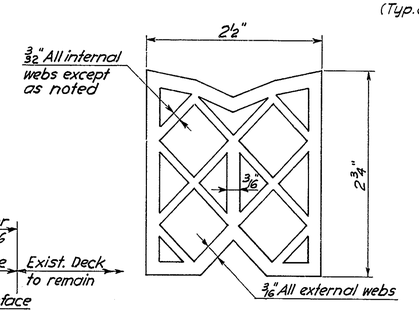

TYPE A

PREFORMED NEOPRENE JOINT SEALER
No Scale

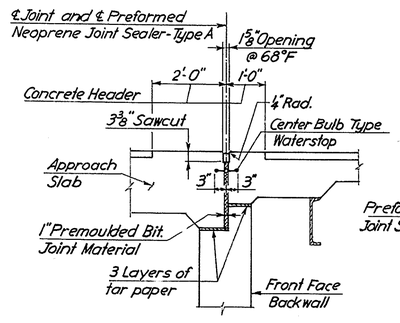

SECTION A-A
1/2" = 1'-0"

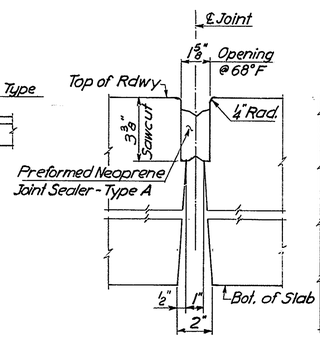

SECTION B-B
3" = 1'-0"

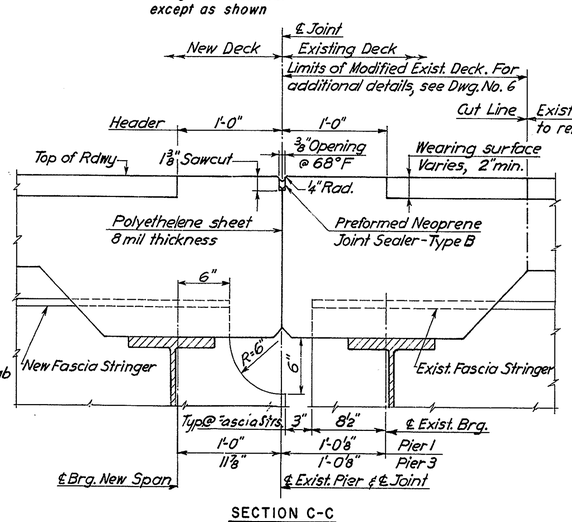

SECTION C-C
1 1/2" = 1'-0"

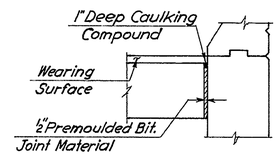

SECTION D-D
1/2" = 1'-0"

NO.	REVISION	BY	DATE
3			
2			
1			

	BY	DATE
MADE	M.V.	3-70
CHECKED	N.F.O.	4-70
IN CHARGE	A.J.C.	

DELAWARE STATE HIGHWAY DEPARTMENT

DELAWARE TURNPIKE

ROUTE 273 INTERCHANGE IMPROVEMENTS
RAMP B BRIDGE OVER DELAWARE TURNPIKE

JOINT DETAILS

HOWARD, NEEDLES, TAMMEN & BERGENDOFF
consulting engineers
NEW YORK KANSAS CITY

SCALE: 3/8" = 1'-0" & AS SHOWN
CONTRACT NO. 7060
DWG. NO. 8 OF 9

DELAWARE TURNPIKE	CONT. NO.	TITLE	SHEET NO.	TOTAL SHEETS
	7060		114	115

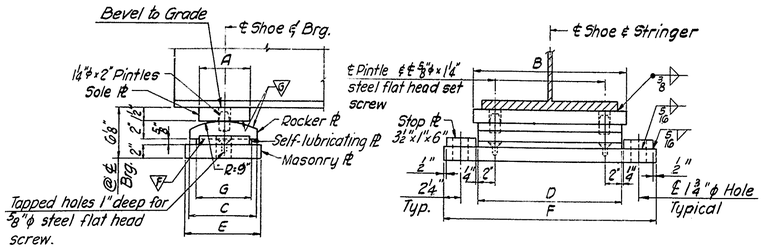

SIDE ELEVATION

END ELEVATION

EXPANSION SHOE

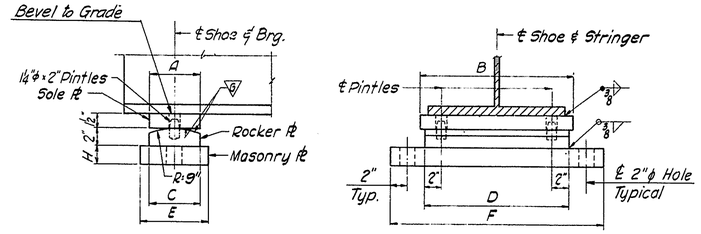

SIDE ELEVATION

END ELEVATION

FIXED SHOE

SHOE	DIMENSIONS (Inches)							
	A	B	C	D	E	F	G	H
E20	6"	1'-5½"	7½"	1'-4½"	8½"	2'-1"	6"	
E23	6"	1'-1"	7½"	1'-0"	8"	1'-8⅝"	6"	
F23	6"	1'-1"	6"	1'-0"	7"	1'-8"		2"
F23B	6"	1'-1"	6"	1'-0"	7"	1'-8"		2⅜"
F23C	6"	1'-1"	6"	1'-0"	7"	1'-8"		2½"

SHOE NOTES:

Material for shoes (exclusive of self-lubricating plates), shall be structural steel conforming to the requirements of A.S.T.M. Specifications A242 and shall have an atmospheric corrosion resistance equal to a min. of four times that of A.S.T.M.-A36 steel.

Top of masonry plates, bottom of rocker plates and top and bottom of sole plates shall be planed, straightened or otherwise treated to secure true level surfaces.

Contact surfaces noted on the plans with finish symbols shall be finished in accordance with the Standards of the Association of Iron and Steel Engineers to the class of finish prescribed.

The plates comprising the expansion shoes shall be set so as to be truly centered under full dead load at a temperature of 68°F.

Concrete pads shall be formed integral with pier or abutment and not less than ⅛" nor more than ¼" above finished elevation. Dress down pads by rubbing, grinding, or as otherwise approved by the Engineer, to true level surfaces at the finished elevation.

Anchor bolts, hexagon nuts and washers shall be hot dipped galvanized conforming to ASTM A153

Templates shall be used to accurately set the anchor bolts.

ROCKER SHOE DETAILS
1½"=1'-0"

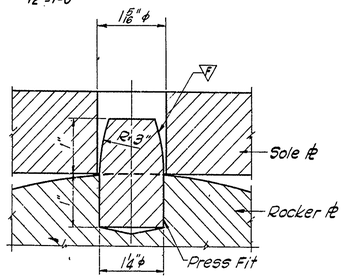

PINTLE DETAIL
¾"=1'

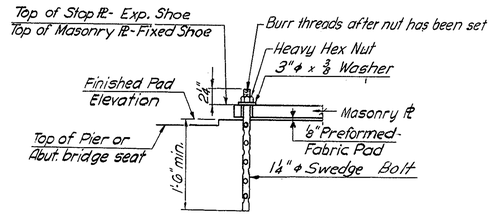

ANCHOR BOLT DETAIL
No Scale

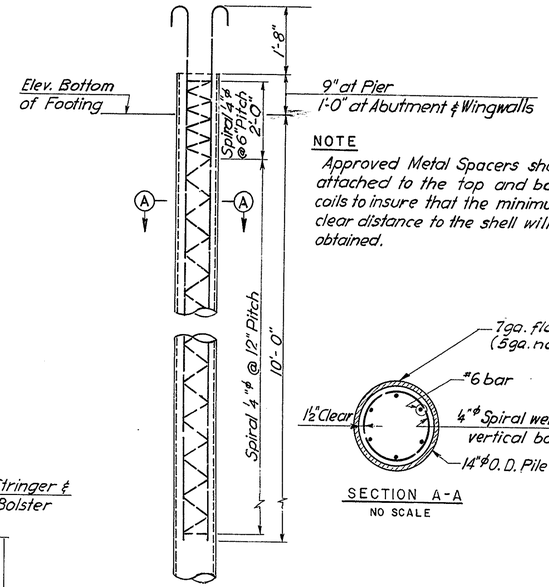

NOTE

Approved Metal Spacers shall be attached to the top and bottom coils to insure that the minimum clear distance to the shell will be obtained.

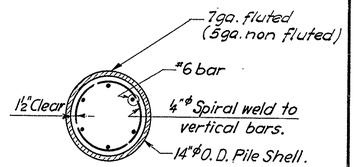

SECTION A-A
NO SCALE

14"φ CAST-IN-PLACE CONCRETE PILE
NO SCALE

Note:
50 Ton tapered piles of equivalent cross section and strength will be considered by the Engineer in place of the detail shown.

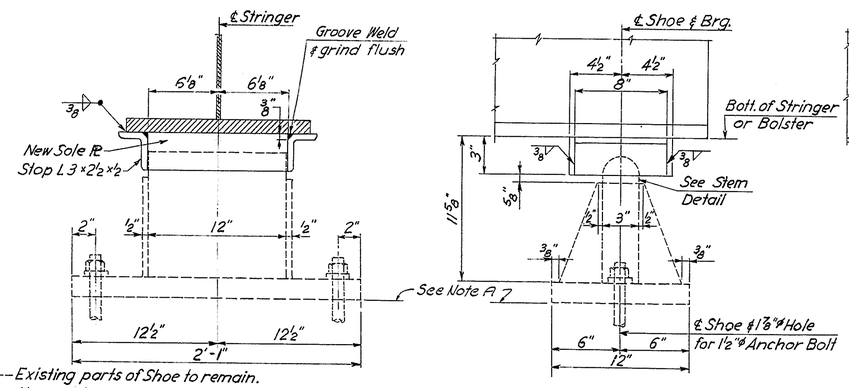

---Existing parts of Shoe to remain.
— New parts - to be furnished.

EXISTING FIXED SHOE—PIERS 1 & 3
2"=1'-0"

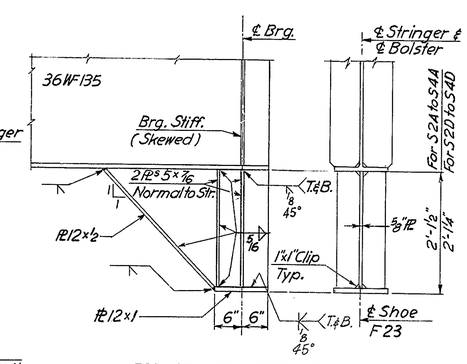

FOR STR. S2A TO S4A & S2D TO S4D
Bolster at Pier end only

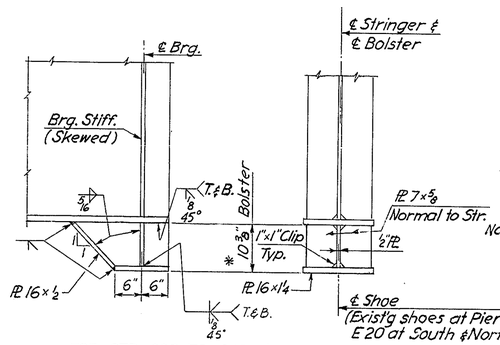

FOR STR. S2B TO S4B & S2C TO S4C
Bolster at both ends of Stringer

BOLSTER DETAILS
¾"=1'-0"

* Contractor elected to use full length Pls B1 and eliminate Pls B2. The original height of bolster shown, was reduced by the amount of increased bottom flange thickness at ends.

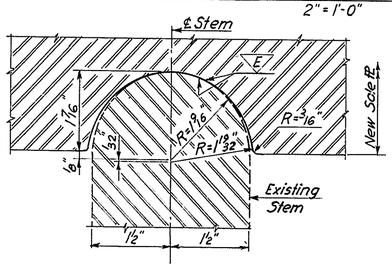

STEM DETAIL
¾"=1'

NOTE A

Existing Pads and Pier taps of Piers 1, 2 & 3 (excepting the areas occupied by the existing Masonry Pls.) to be given an Epoxy Protective Coating, see detail Dwg. No. 4 for limits.

STRUCTURAL STEEL NOTES

For General Notes see Dwg. No. 1

⅞"φ High Strength Bolts to be used for all bolted connections.

Shear Stud spacing shown is maximum spacing.

All Stiffeners, Connection Plates and ends of stringers shall be truly vertical in erected position.

A fully butt-welded shop web splice may be used for built-up stringers. The splice location and details subject to the approval of the Engineer.

Unless otherwise shown all welding shall comply with the current "Specifications for Welded Highway and Railway Bridges" of the American Welding Society.

NO.	REVISION	BY	DATE
3			
2			
1	Contractor's change in bottom flanges of welded stringers.	J.R.	9-70

	BY	DATE
MADE	M.V.	
CHECKED	N.F.O.	
IN CHARGE	A.J.C.	

DELAWARE STATE HIGHWAY DEPARTMENT

DELAWARE TURNPIKE

ROUTE 273 INTERCHANGE IMPROVEMENTS
RAMP B BRIDGE OVER DELAWARE TURNPIKE
MISCELLANEOUS DETAILS

HOWARD, NEEDLES, TAMMEN & BERGENDOFF
consulting engineers
NEW YORK KANSAS CITY

SCALE: AS SHOWN
CONTRACT NO. 7060
DWG. NO. 9 OF 9

DELAWARE TURNPIKE	CONT NO.	TITLE	SHEET NO.	TOTAL SHEETS
	7060	SUMMARY OF QUANTITIES	115	115

ITEM	DESCRIPTION	UNIT	NEAT	PROPOSAL
–	Maintenance and Protection of Traffic	L.S.	—	—
–	Timber Barrier Curb	L.F.	4,500	5,000
–	Flagmen	M.H.	4,000	4,000
–	Traffic Cones	Ea.	250	250
–	Temporary Traffic Signs	S.F.	1,000	1,000
1	Clearing and Grubbing	L.S.	—	—
2	Excavation and Embankment (Plan Quantity)	C.Y.	340,500	340,500
2	Undercut Excavation	C.Y.	1,000	1,000
2A	Removal of Existing Masonry	C.Y.	390	500
4	Excavation for Structures	C.Y.	4,900	5,000
4A	Excavation for Pipe Trenches	C.Y.	4,450	4,750
5	Common Borrow	C.Y.	45,000	45,000
7	Select Borrow	C.Y.	56,000	60,000
8D	Soil Cement Stabilized Base Course	S.Y.	27,900	30,000
8D	Portland Cement	Bbl.	3,150	3,380
11	Hot-Mix, Hot Laid Asphaltic Concrete	Ton	7,000	7,500
14	R.C.-70 Asphalt for Bituminous Surface Treatment	Gal.	8,250	9,000
14	R.C.-250 Asphalt for Bituminous Surface Treatment	Gal.	9,900	10,750
14	Coarse Aggregate for Bituminous Surface Treatment	Ton	660	750
15	Portland Cement Concrete Pavement, 9" Thick	S.Y.	48,500	50,000
15	Drilling Holes and Grouting Dowels into Exist. Pavement	Ea.	525	550
18	Portland Cement Concrete Masonry - Footings	C.Y.	1,526	1,530
18	Portland Cement Concrete Masonry - Substructure	C.Y.	1,737	1,740
18	Portland Cement Concrete Masonry - Superstructure	C.Y.	2,746	2,750
18	Portland Cement Concrete Masonry - Approach Slabs	C.Y.	484	484
18	Portland Cement Concrete Masonry - Miscellaneous	C.Y.	463	470
19	Superficial Waterproofing	S.Y.	6,590	6,600
20	Bar Reinforcement	Lbs.	1,118,611	1,225,000
22	Structural Steel (Approx. Wt. 2,533,000 Lbs.)	L.S.	—	—
22A	Aluminum Bridge Railing	L.F.	3,939	3,940
23	Portland Cement Rubble Masonry	C.Y.	43.5	50
26	15" Reinforced Concrete Pipe	L.F.	907	950
26	18" Reinforced Concrete Pipe	L.F.	576	590
26	24" Reinforced Concrete Pipe	L.F.	785	800
26	30" Reinforced Concrete Pipe	L.F.	674	690
26	36" Reinforced Concrete Pipe	L.F.	4	6
26	60" Reinforced Concrete Pipe	L.F.	28	30
26	23"x 14" Reinforced Concrete Elliptical Pipe	L.F.	65	70
26	34" x 22" Reinforced Concrete Elliptical Pipe	L.F.	185	190
26	24" Extra Strength Reinforced Concrete Pipe (Class IV)	L.F.	552	565
26	54" Extra Strength Reinforced Concrete Pipe (Class V)	L.F.	410	415
26	Reinforced Concrete Flared End Sections for 15" Pipe	Ea.	2	2
26	Reinforced Concrete Flared End Sections for 18" Pipe	Ea.	3	3
26	Reinforced Concrete Flared End Sections for 24" Pipe	Ea.	2	2
26	Reinforced Concrete Flared End Sections for 30" Pipe	Ea.	4	4
26	Reinforced Concrete Flared End Sections for 60" Pipe	Ea.	1	1
28	5" Cast Iron Pipe	L.F.	90	100
29	6" Corrugated Metal Pipe, Plain	L.F.	45	100
29	15" Corrugated Metal Pipe, Coated	L.F.	1,868	2,000
29	18" Corrugated Metal Pipe, Coated	L.F.	65	70
29	25"x 16" Corrugated Metal Pipe Arch, Coated	L.F.	85	90
29	15" Corrugated Metal Flared End Sections	Ea.	9	9
29	25"x 16" Corrugated Metal Pipe Arch Flared End Sections	Ea.	1	1
31	6" Perforated Corrugated Metal Pipe Underdrain	L.F.	2,465	3,000
32	Treated Timber Piles	L.F.	1,575	1,600
35	Cast-in-Place Concrete Piles, 14" Diameter	L.F.	27,164	28,000
36	Plain Rubble Gutter, 12" Thick	S.Y.	381	400
38	Portland Cement Concrete Curb, Type I	L.F.	5,850	6,000
38A	Hot-Mix, Hot Laid Asphaltic Concrete Curb	L.F.	7,450	7,800
40	Portland Cement Concrete Parkway Curb, Type 2	L.F.	1,140	1,200
41	Portland Cement Concrete Sidewalk	S.F.	1,120	1,150
44	Drop Inlet Type S	Ea.	9	9
44	Drop Inlet Double Type S	Ea.	10	10
44	Drop Inlet Double Type S, Modified	Ea.	1	1
44	Type S Combination Inlet	Ea.	33	33
44	Double Type S Combination Inlet	Ea.	5	5
44	Energy Dissipator	Ea.	5	5
45	Standard Manholes	Ea.	2	2
45	Special Extra Depth Manholes	Ea.	1	1

ITEM	DESCRIPTION	UNIT	NEAT	PROPOSAL
46	Adjusting and Repairing Minor Installations	Ea.	4	4
50	Woven Wire Fence	L.F.	3,485	3,500
51	Topsoil, 4" Thick	S.Y.	25,000	25,000
52	Topsoiling, 4" Thick	S.Y.	30,000	30,000
53	Seeding	Acre	95.4	100
54	Mulching	S.Y.	461,800	500,000
55	Sodding	S.Y.	2,162	2,500
61	Calcium Chloride for Dust Control	Ton	10	10
65	Removal of Existing P.C.C. Curb	L.F.	2,900	3,000
65	Removal of Existing P.C.C. Pavement	S.Y.	16,600	17,000
—	Special Fill	Ton	1,000	1,000
—	Special Surface Treatment	S.Y.	4,835	5,000
—	Portland Cement Concrete Median Barrier	L.F.	2,100	2,100
—	P.C.C. Median Barrier Transition at Pier	Ea.	4	4
—	P.C.C. Median Barrier Transition at Sign Structures	Ea.	3	3
—	P.C.C. Median Barrier Transition to Curb	Ea.	2	2
—	Slope Paving (Concrete Block)	S.Y.	2,557	2,575
—	4" Cast Iron Sanitary Sewer Pipe	L.F.	70	80
—	8" Cast Iron Sanitary Sewer Pipe	L.F.	260	270
—	8" Vitrified Clay Sanitary Sewer Pipe	L.F.	2,242	2,250
—	Sanitary Sewer Manholes	Ea.	11	11
—	Sanitary Sewer Drop Manholes	Ea.	2	2
—	2" Copper Tubing	L.F.	564	575
—	Remove and Salvage Steel Beam Guard Rail	L.F.	4,400	4,400
—	Reset Steel Beam Guard Rail	L.F.	8,700	8,800
—	Steel Beam Guard Rail Buried End Sections (25 L.F.)	Ea.	17	17
—	Chain Link Fence	L.F.	1,060	1,070
—	Chain Link Vehicular Gate (4' high)	Ea.	1	1
—	Chain Link Vehicular Gate (7' high)	Ea.	1	1
—	Protective Coating for Concrete	S.F.	7,088	7,100
—	Coal-Tar Epoxy Underseal	S.Y.	8,768	8,770
—	Painting Existing Structural Steel to Remain (Ramp B)	L.S.	—	—
—	Constructing Toll Plaza at Ramp F	L.S.	—	—
—	Widening Existing Toll Plaza at Ramp L	L.S.	—	—
—	Constructing Toll Plaza Canopy at Ramp F	L.S.	—	—
—	Widening Existing Toll Plaza Canopy at Ramp L	L.S.	—	—
—	Maintenance of Existing Engineer's Field Office	Month	10	10
—	Partial Removal of Existing Structure (Ramp B)	L.S.	—	—
—	Petroleum Storage and Distribution System	L.S.	—	—
—	Salt Storage Bin	L.S.	—	—
—	Anchorage Assemblies for Future High Mast Towers	Units	10	10
—	4" Galvanized Metallic Conduit	L.F.	350	360
—	4" Galvanized Metallic Conduit, Installed by Jacking	L.F.	35	35
—	3" Galvanized Metallic Conduit	L.F.	1,765	1,800
—	3" Galvanized Metallic Conduit, Installed by Jacking	L.F.	100	105
—	2" Galvanized Metallic Conduit	L.F.	935	960
—	3" Non-metallic Conduit	L.F.	11,240	11,500
—	2" Non-metallic Conduit	L.F.	10,405	10,600
—	#4/0 Single Conductor Cable, 600 V	L.F.	15,225	16,600
—	#2/0 Single Conductor Cable, 600 V	L.F.	11,625	12,700
—	#2 Single Conductor Cable, 600 V	L.F.	12,945	14,100
—	#4 Single Conductor Cable, 600 V	L.F.	1,695	1,850
—	#6 Single Conductor Cable, 600 V	L.F.	34,455	37,200
—	#8 Single Conductor Cable, 600 V	L.F.	8,750	9,500
—	#2 Single Conductor Cable, 15 KV	L.F.	380	400
—	#2 Neutral Conductor with Covering	L.F.	380	400
—	Concrete Junction Box	Ea.	64	64
—	Lighting Standard Foundation, Type I or II	Ea.	60	60
—	Lighting Standard, Type A	Ea.	25	25
—	Lighting Standard, Type C	Ea.	4	4
—	Relocating Existing Lighting Standard, Type A, B or C	Ea.	31	31
—	North Service Load Center Installation	L.S.	—	—
—	South Service Load Center Installation	L.S.	—	—
—	Overhead Service Installation to Maintenance Building	L.S.	—	—
—	Revisions to Existing Electrical Installations	L.S.	—	—

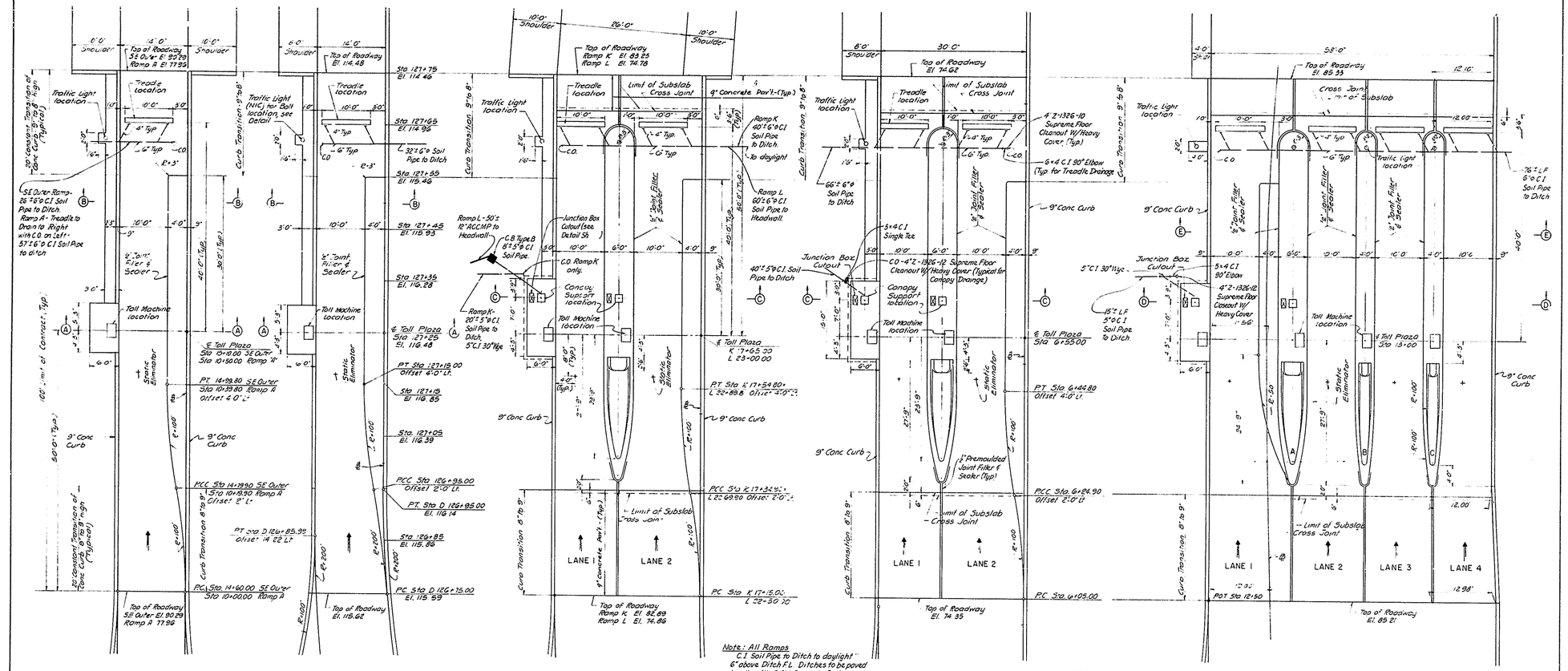

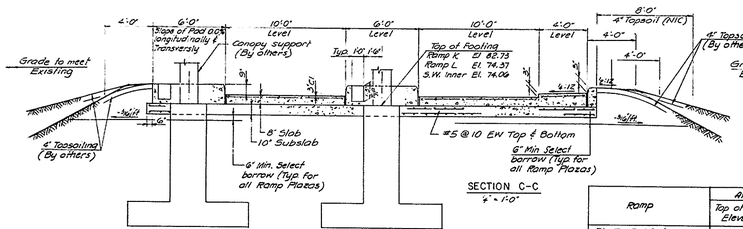

Ramp	At ℄ Toll Plaza	
	Top of Rdwy Elevation	Height of Curb
Rte 7 - S.E Outer	90.54	8 11/16"
Rte 896 - Ramp A	78.21	8 7/16"
Rte 896 - Ramp D	118.48	8 1/2"
Rte 273 - Ramp K	83.48	8 3/4"
Rte 273 - Ramp L	75.12	8 1/8"
Rte 7 - SW Inner	74.89	8 3/8"
Churchmans Rd. - Ramp A	85.65	8 3/16"

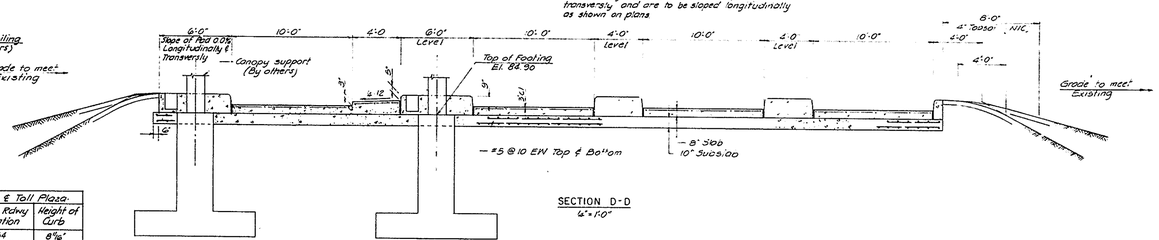

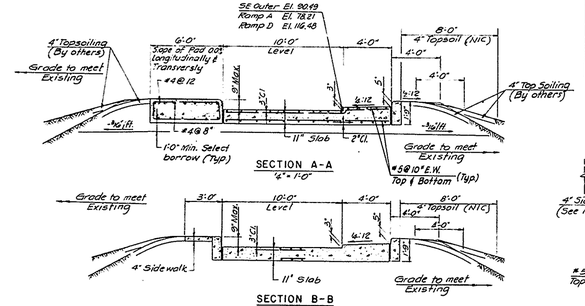

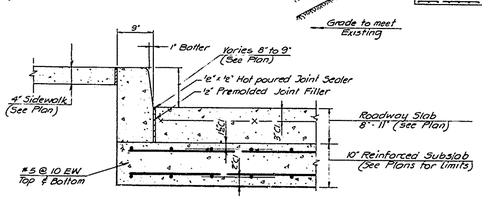

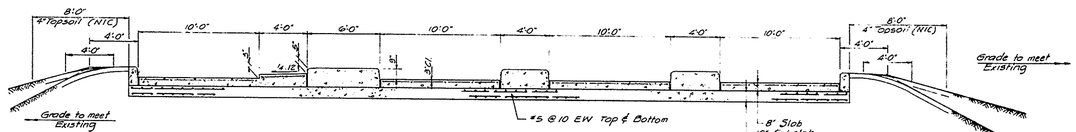

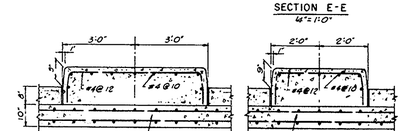

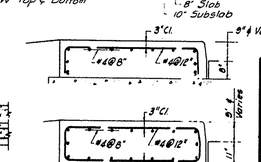

NO.	DATE	REVISIONS
1	5-16-63	GENERAL REVISIONS

HOWARD, NEEDLES, TAMMEN & BERGENDOFF
CONSULTING ENGINEERS
NEW YORK, N.Y. KANSAS CITY, MO.

DEL'AWARE TURNPIKE
RAMP TOLL PLAZAS
PLANS & TYPICAL SECTIONS I

SCALE AS NOTED
DATE 5-16-63
7004
DRAWING NO. 20

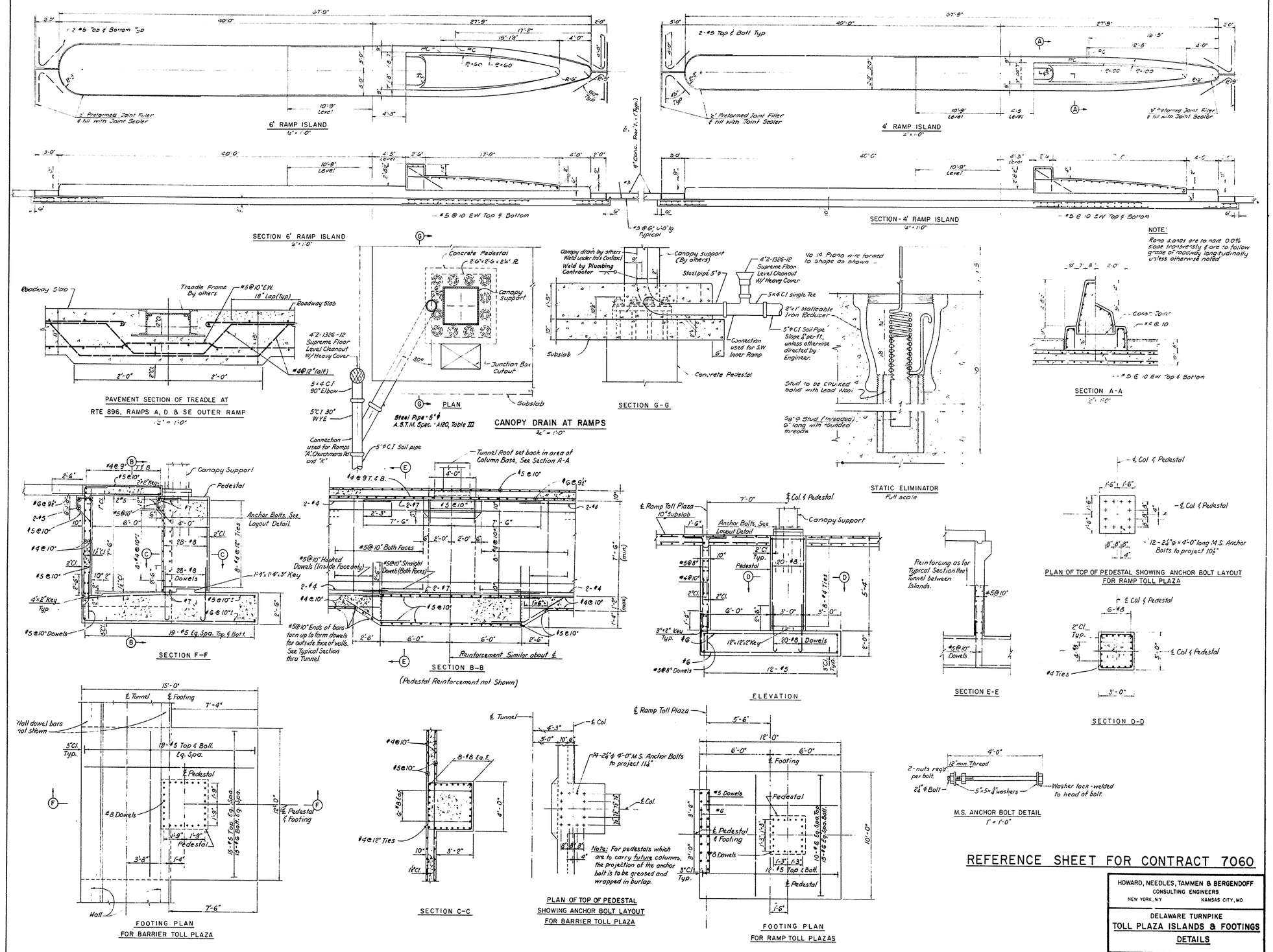

REFERENCE SHEET FOR CONTRACT 7060

HOWARD, NEEDLES, TAMMEN & BERGENDOFF CONSULTING ENGINEERS NEW YORK, N.Y. KANSAS CITY, MO	
DELAWARE TURNPIKE **TOLL PLAZA ISLANDS & FOOTINGS DETAILS**	
SCALE AS NOTED DATE 5-15-65	7004 — DRAWING NO. 21

NO.	DATE	REVISIONS
1	2-26-66	GENERAL REVISIONS

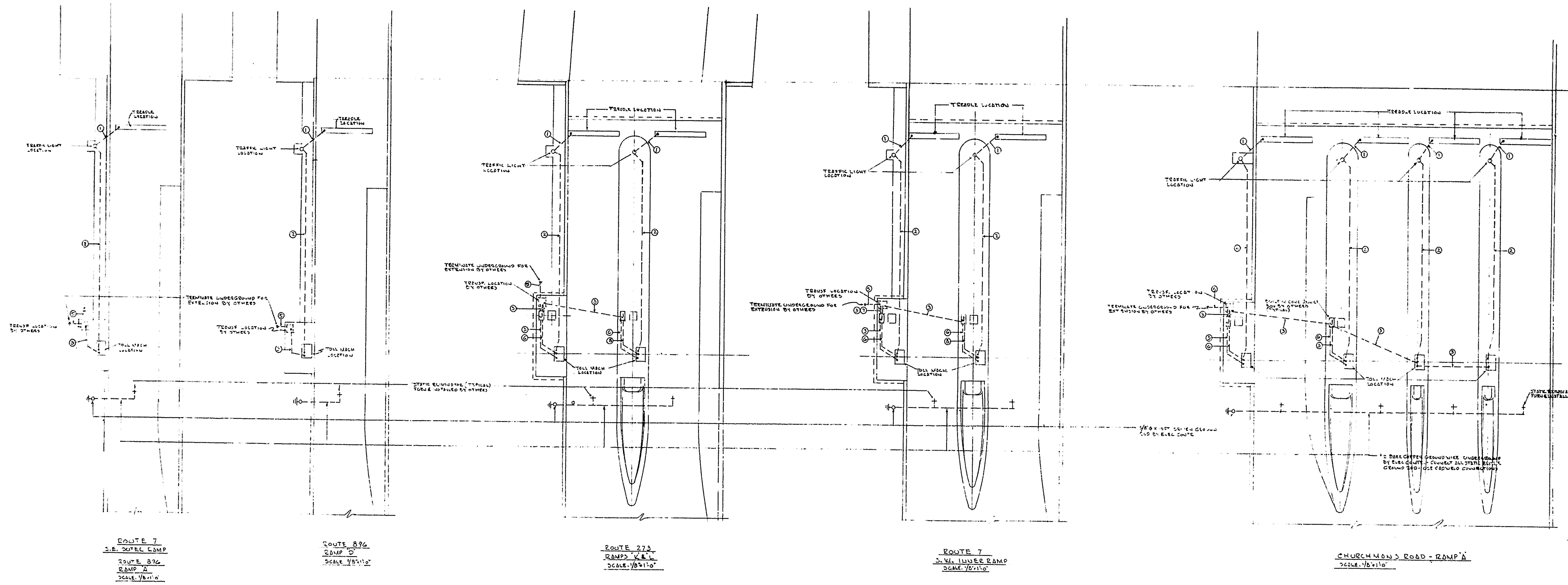

PLAN OF INTERCHANGE TOLL PLAZAS

LEGEND ⚠

No	DESIGNATION	CONDUIT SIZE	REMARKS
1	TREADLE	3/4"	ALL CONDUITS TO BE INSTALLED CONCEALED IN CONC. SUB-SLAB CONSTRUCTION
2	ISLAND TRAFFIC LIGHT	1"	
3	COIN UNIT POWER	1"	
4	NOT USED	—	
5	AREA LIGHTING CIRCUIT	3/4"	
6	CANOPY TRAFFIC SIGNAL	3/4"	
7	CANOPY LIGHTS & CANOPY SIGN	3/4"	
8	COIN UNIT POWER	3/4"	

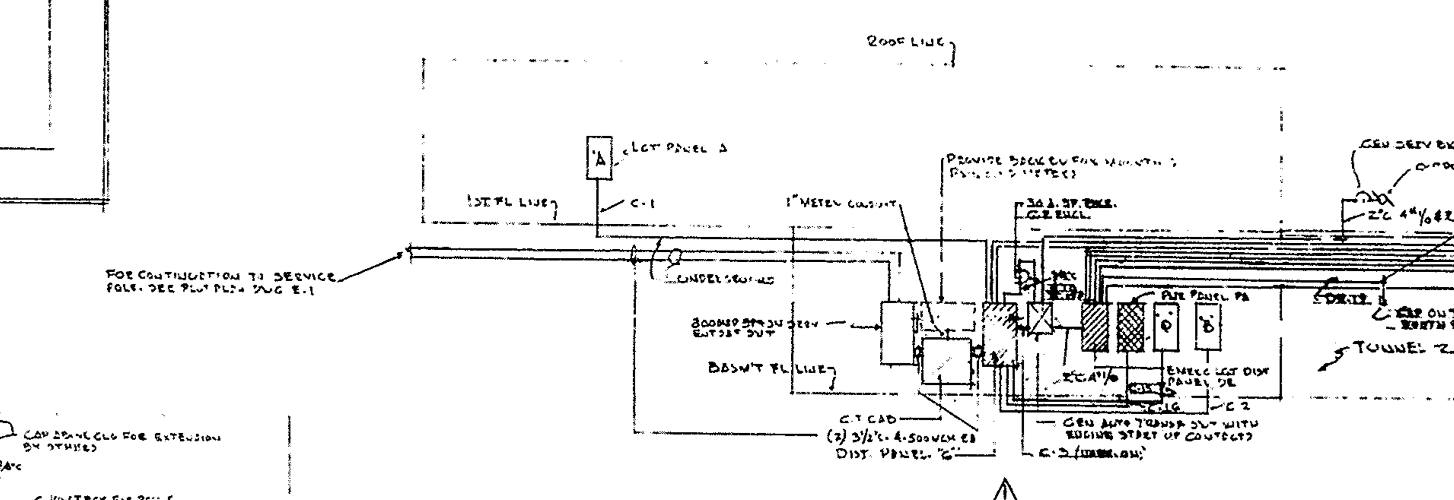

⚠

ELECTRIC SERVICE & FEEDER CONDUIT RISER DIAGRAM
NO SCALE.

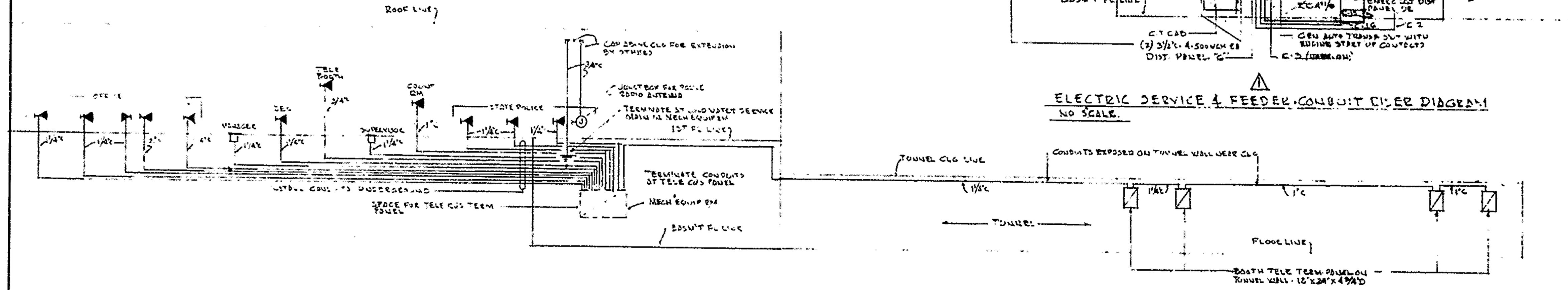

TELEPHONE SYSTEM CONDUIT RISER DIAGRAM
NO SCALE
USE EXTRA DEEP WALL & FLOOR BOXES REDUCED FOR CONDUIT SIZES AS NOTED

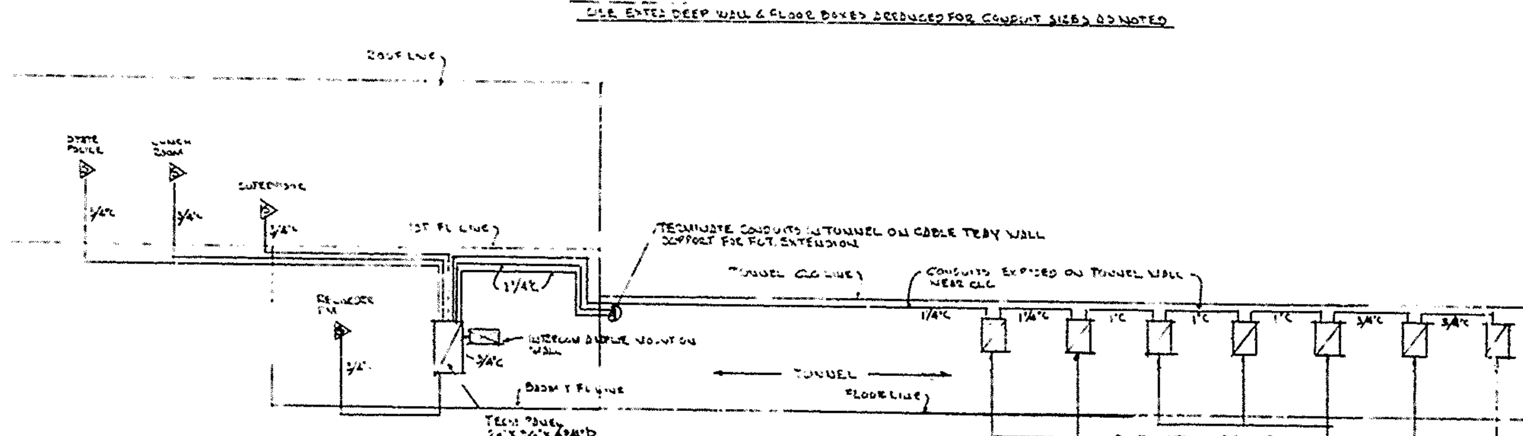

⚠

INTERCOM SYSTEM CONDUIT RISER DIAGRAM
NO SCALE

NOTE 1) ALL EQUIPMENT & WIRING BY OTHERS
2) ALL CONDUITS, OUTLET BOXES, TERMINAL PANELS, ETC. BY ELEC CONTR.

⚠ SCHEDULE OF DISTRIBUTION PANEL 'C'

CIRC NO	DESIGNATION	CONN LOAD	BRANCH CIRCUIT	CIRCUIT BREAKER	REMARKS
1	LIGHT PANEL 'A'	27 KW	2"C 4#2	100A 3P	
2	LIGHT PANEL B	5.2 KW	1"C. 4#8	40A 3P	
3	AUTO-TRANSFER SW.	50 KW	2"C. 4#1/0	150A 3P	
4	CIRCUIT NOT USED	—	—	—	
5		—	—	—	
6		—	—	—	
7	SIGN PANEL 'A' 120/208V 3φ	5 KW	1 1/2"C 4#4	20A 3P	SEE NOTE 'A'
8	SIGN PANEL B 120/208V 3φ	5 KW	1 1/2"C. 4#4	20A 3P	SEE NOTE A
9	DUMBWAITER	1 1/2 HP 208V 3φ	3/4"C 3#12	20A 3P	
10	KITCHENETTE UNIT 120/208V 1φ	12 KW	1 1/4"C 3#4	70A 3P	
11	AIR COND FAN COIL UNIT 208V 3φ	1/2 HP	3/4"C. 3#12	20A 3P	
12	AIR COND CONDENSING UNIT 208V 1φ	3 1/3 HP	3/4"C. 3#8	40A 2P	
13	FUTURE ADDITIONAL PANEL	7.5 KW	1 1/4"C	50A 3P	SPACE ONLY FOR BKR
14	FUTURE ADDITIONAL PANEL	7.5 KW	1 1/4"C.	50A 3P	SPACE ONLY FOR BKR
15	LIGHT PANEL 'Q'	22.0 KW	2"C. 4#2	100A 3P	
16	POWER PANEL PA	16.5 KW	2"C. 4#2	100A 3P	
17	TUNNEL UNIT HEATERS 120V	10@90W	3/4"C 2#8	20A-1P	
18	SPARE	—	—	20A 3P	

NOTE 'A' FURNISH & INSTALL 3CA3P ASCO #343AC CONTACTOR IN VICINITY OF PANEL 'C' AND CONTROL EACH FROM SUPERVISOR'S OFFICE WHERE SHOWN

⚠ SCHEDULE OF EMERGENCY LIGHT DISTRIBUTION PANEL DE (SPLIT BUS PANEL)

CIRC NO	DESIGNATION	CONN LOAD	BRANCH CIRCUIT	CIRCUIT BREAKER	NORM ON	NORM OFF	REMARKS
1	TUNNEL STAIR LGTS & TOILET RM LGTS, TOILET RM EXH FAN	800W	3/4"C 2#10	20A 1P	✓		
2	BOOTH ELEC PANEL G	5 KW	2"C 4#2	20A 3P	✓		
3	BOOTH ELEC PANELS D.E.F	15KW	2"C 4#1/0	50A 3P	✓		
4	BOOTH ELEC PANELS A.B.C	15KW	2 1/2"C 4#2/0	50A 3P	✓		
5	TUNNEL EMER. LIGHTS	1000W	3/4"C 2#10	20A 1P	✓		
6	BUILDING EXIT LIGHTS	150W	3/4"C 2#10	20A 1P	✓		
7	TOLL EQUIP CONSOLE	500W	3/4"C 2#12	20A 1P	✓		
8	INTERCOM SYSTEM	500W		20A 1P	✓		
9	DOOR ENTRANCE SIGNAL SYSTEM	50W		20A 1P	✓		
10	RECORDER ROOM LIGHTS	560W		20A 1P	✓		
11	RECORDER ROOM RECEPTS			20A 1P	✓		
12	RECORDER ROOM EXH FAN	1/15HP		20A 1P	✓		
13	TELE EQUIP RECPT			20A 1P	✓		
14	GENERATOR BATTERY CHARGER			20A 1P	✓		
15	RECORDER ROOM RECPTS			20A 1P	✓		
16	EMERGENCY LIGHTS	300W		20A 1P		✓	
17	SPARE (FUT BOOTH ELEC PANELS)	—	2"C (EMPTY)	50A 3P	✓		SPACE ONLY FOR BKR
18	SPARE (FUT BOOTH ELEC PANELS)	—	2"C (EMPTY)	50A 3P	✓		
19	SPARE (FUT BOOTH ELEC PANELS)	—	2"C (EMPTY)	50A 3P	✓		
20	SPARE	—	—	20A 1P		✓	

⚠ SCHEDULE OF POWER PANEL 'PA'

CIRC NO	DESIGNATION	LOAD	BRANCH CIRCUIT	CIRCUIT BREAKER	REMARKS
1	A/C HEAT UNIT 208V 1φ	1.5HP	3/4"C 2#12	20A 2P	
2		1.5HP		20A 2P	
3		1.5HP		20A 2P	
4		.25HP		20A 2P	
5		1.25HP		20A 2P	
6		.25HP		20A 2P	
7		1.5HP		20A 2P	
8		1.5HP		20A 2P	
9		1.5HP		20A 2P	
10	GAS FIRED HEAT BOILER CONTROLS - 120V	—		20A 1P	
11	FUTURE ADD A/C-HEAT UNIT 208V 1φ	1.5HP	3/4"C	20A 2P	
12		1.5HP	EMPTY	20A 2P	
13		1.5HP	3/4"C	20A 2P	
14		1.5HP	EMPTY	20A 2P	
15	TEMPERATURE CONTROL PANEL		3/4"C 2#12	20A 1P	
16	SUMP PUMP 120V	1/4HP	3/4"C 2#12	20A 1P	
17	ZONE HEAT CIRC PUMP #1	1/4HP 120V	3/4"C 2#12	20A 1P	
18	#2	1/6HP, 120V		20A 1P	
19	#3	1/6HP, 120V		20A 1P	
20	#4	1/2HP, 208V 1φ		20A 2P	
21	DOM HOT WATER CIRC PUMP	1/6HP 120V		20A 1P	
22	SPARE	—	—	20A 1P	
23	SPARE	—	—	20A 3P	

SCHEDULE OF LIGHTING PANELS

LIGHT PANEL 'A'
40 - 20AMP SINGLE POLE CIRCUIT BKRS
LUGS FOR #2 WIRE - NEUTRAL AT TOP

LIGHT PANEL 'B'
12 - 20AMP SINGLE POLE CIRCUIT BKRS
LUGS FOR #8 WIRE - NEUTRAL AT TOP

LIGHT PANEL - Q
14 - 20AMP. SINGLE POLE CIRCUIT BKRS
PROVIDE 100AMP. 3P ASCO BULL #910 REMOTE CONTROL SWITCH IN PANEL MAINS. 120 VOLT COIL
LUGS FOR #2 WIRE - NEUTRAL AT TOP

ADMINISTRATION BUILDING DIAGRAMS & SCHEDULES

REFERENCE SHEET FOR CONTRACT 7060

No.	DATE	REVISION
⚠	5/31/63	GENERAL REVISIONS REV. SCHEDULES & DIAGRAMS.

HOWARD, NEEDLES, TAMMEN & BERGENDOFF
CONSULTING ENGINEERS
NEW YORK, N.Y. KANSAS CITY, MO.

ELECTRICAL — TOLL PLAZA-TUNNEL PLAN, PLAZA PLANS & DETAILS

ADMINISTRATION BUILDING

FACILITIES FOR DELAWARE TURNPIKE
DELAWARE STATE HIGHWAY DEPT.
NEW CASTLE COUNTY • DELAWARE

W. ELLIS PRESTON AIA
ARCHITECTS • ENGINEERS
903 JEFFERSON STREET
WILMINGTON, DELAWARE

DRAWN BY A.B.J
CHECKED BY A.B.J
APPROVED BY [signature]
DATE 5-15-63
COMMISSION NO. 7004
DRAWING NO. E-2

WILPRINT P180

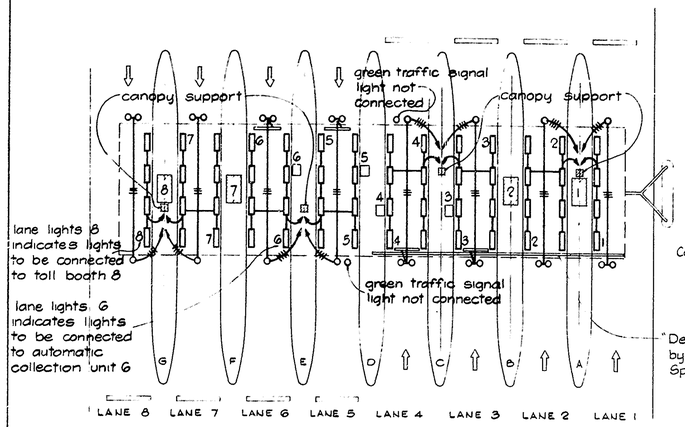

PLAN

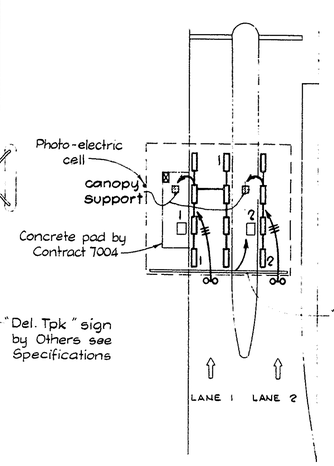

PLAN

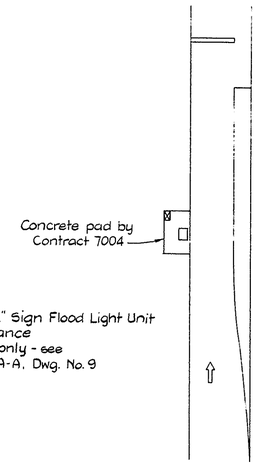

PLAN

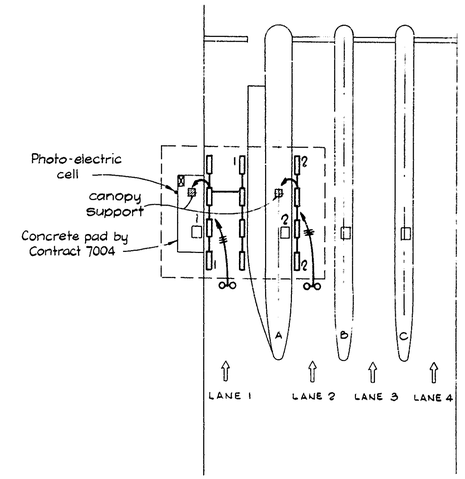

PLAN

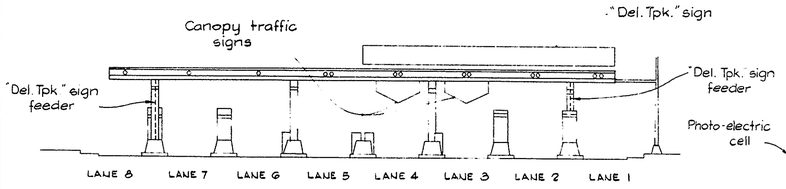

ELEVATION LOOKING EAST

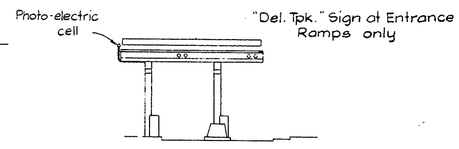

ELEVATION

ROUTE 7
SOUTHWEST INNER RAMP
ENTRANCE
(from race track)
ROUTE 273
RAMP "K" EXIT
RAMP "L" ENTRANCE
scale: 1/16" = 1'-0"

ELEVATION

ROUTE 7
SOUTHEAST OUTER RAMP
ROUTE 896
RAMPS "A" & "D"
scale: 1/16" = 1'-0"

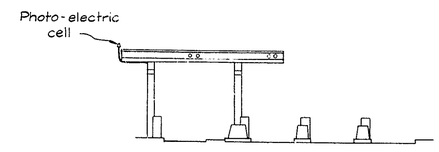

ELEVATION

CHURCHMAN'S ROAD
EXIT
(to race track)
scale: 1/16" = 1'-0"

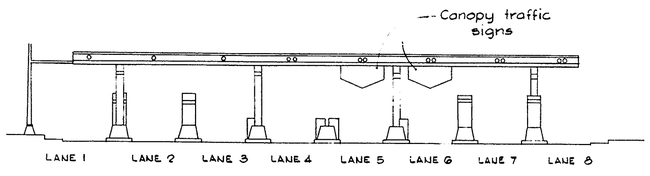

ELEVATION LOOKING WEST

BARRIER TOLL PLAZA
scale: 1/16" = 1'-0"

SYMBOLS

- toll booth
- automatic collection unit
- service panel
- lane light
- red & green signal lights
- red signal light
- canopy traffic sign flood light unit

NOTES

1. All traffic signals shall be controlled from their respective toll booth or automatic collection unit. Canopy traffic sign floodlight unit shall be connected to the green signal light circuit.
2. For Electrical Details see Dwg. No. 7 & 9

REFERENCE SHEET FOR CONTRACT 7060

HOWARD, NEEDLES, TAMMEN & BERGENDOFF
CONSULTING ENGINEERS
NEW YORK, N.Y. KANSAS CITY, MO.

DELAWARE TURNPIKE
TOLL BOOTHS & CANOPIES
CANOPY LIGHTING PLANS

SCALE _____
DATE: MAY 10, 1963
7005
DRAWING NO. 8 OF 12

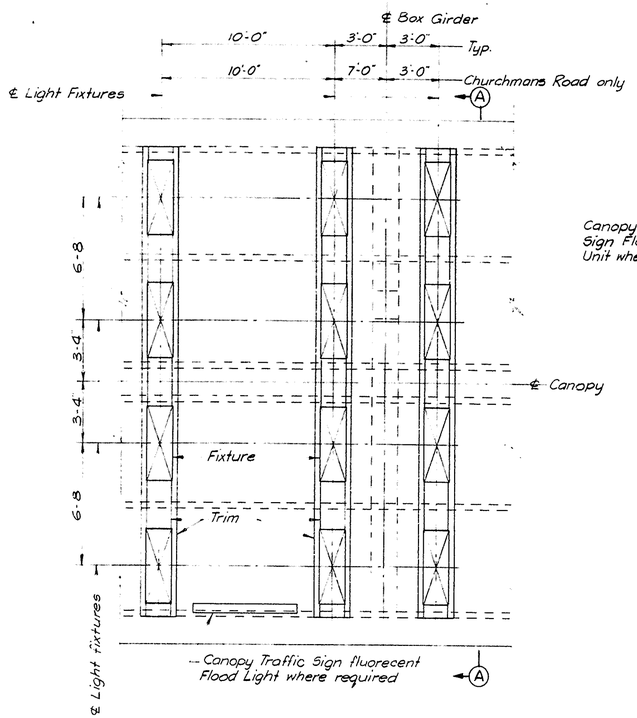

TYPICAL REFLECTED CEILING PLAN OF CANOPY

1/4" = 1'-0"

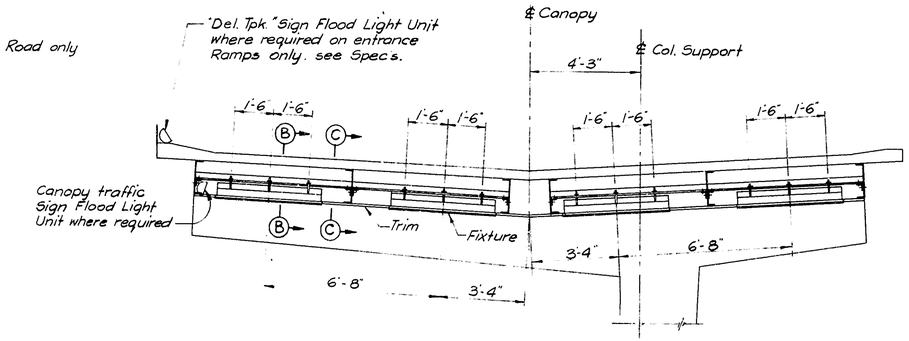

SECTION A-A

3/8" = 1'-0"

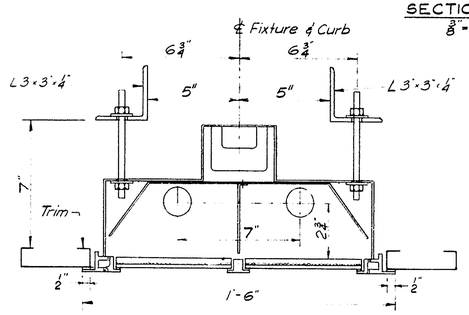

SECTION B-B

THROUGH LANE LIGHTS

3" = 1'-0"

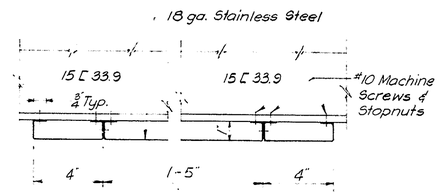

SECTION C-C

THROUGH LANE LIGHT TRIM

3" = 1'-0"

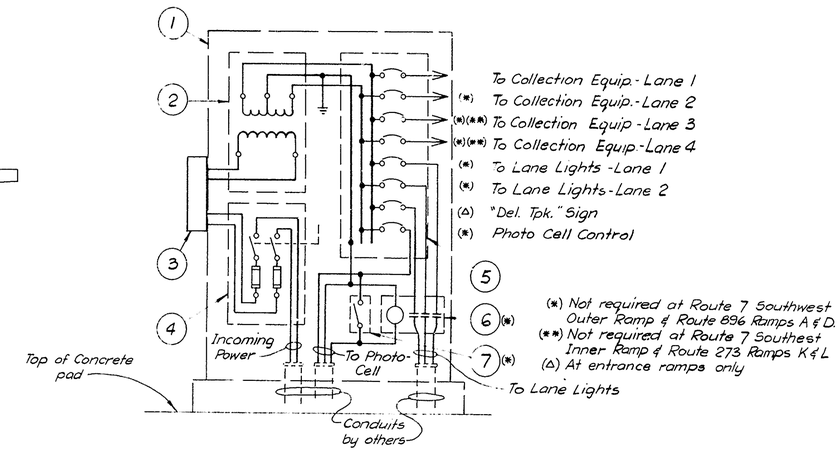

1 - Service Panel see detail below.
2 - 480-120/240 Volt Dry Type Transformer equal to G.E. Type M with 2 1/2% taps above & below
(7.5 KVA for 4 Lane ramps)
(5 KVA for 2 Lane ramps)
(3 KVA for 1 Lane ramps)
3. - Metering equipment furnished by Utility Co., installed this Contract.
4. - Safety Switch 600V - 30 Amp., in Nema 1 enclosure equal to G.E. Cat.# TH3361.
5. - Column Type B Circuit Breaker Panel Board.
6. - Contactor - Nema size 1 equal to G.E. Cat. # CR105D102.
7. - By-pass Switch equal to H & H Cat.#2991 & 2881 Cover in FS Conduit Box.

SERVICE PANEL

No Scale

Note: Not required at Barrier Toll Plaza.

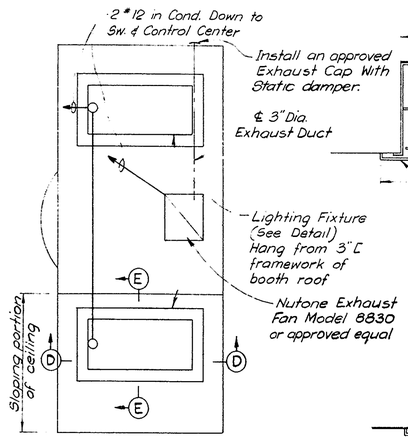

TYPICAL REFLECTED BOOTH CEILING PLAN

3/4" = 1'-0"

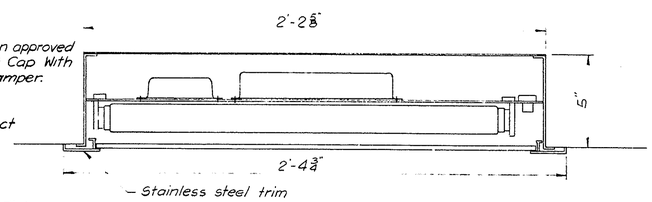

SECTION D-D

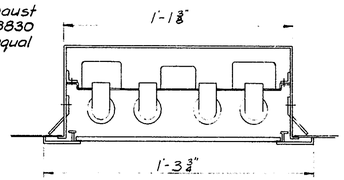

SECTION E-E

BOOTH LIGHTING FIXTURE DETAIL

3" = 1'-0"

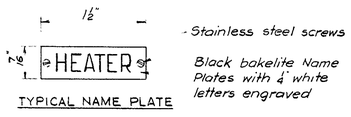

TYPICAL NAME PLATE

All Toggle Sw's. shall be 20 A., 125V Bryant 5861-I

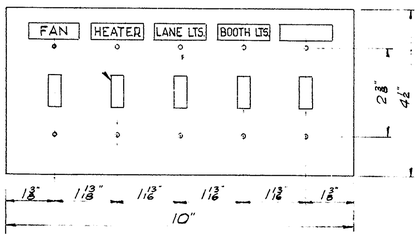

SWITCH PLATE DETAILS

Half Scale

NOTE: Plate shall be Stainless Steel .040"

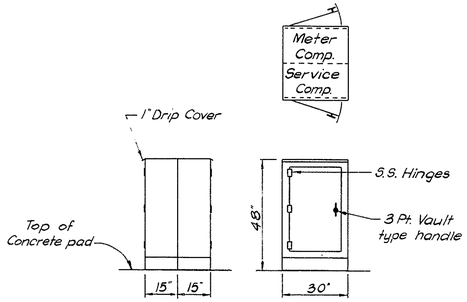

SERVICE PANEL

3/8" = 1'-0"

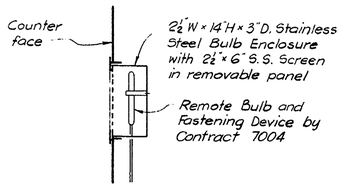

TEMPERATURE CONTROL DEVICE

No Scale

For location see Sheet 3

HOWARD, NEEDLES, TAMMEN & BERGENDOFF
CONSULTING ENGINEERS
NEW YORK, N.Y. KANSAS CITY, MO

DELAWARE TURNPIKE
TOLL BOOTHS & CANOPIES
ELECTRICAL DETAILS

SCALE: As noted
DATE: MAY 10, 1963
7005
DRAWING NO. 9 OF 12

REFERENCE SHEET FOR CONTRACT 7060

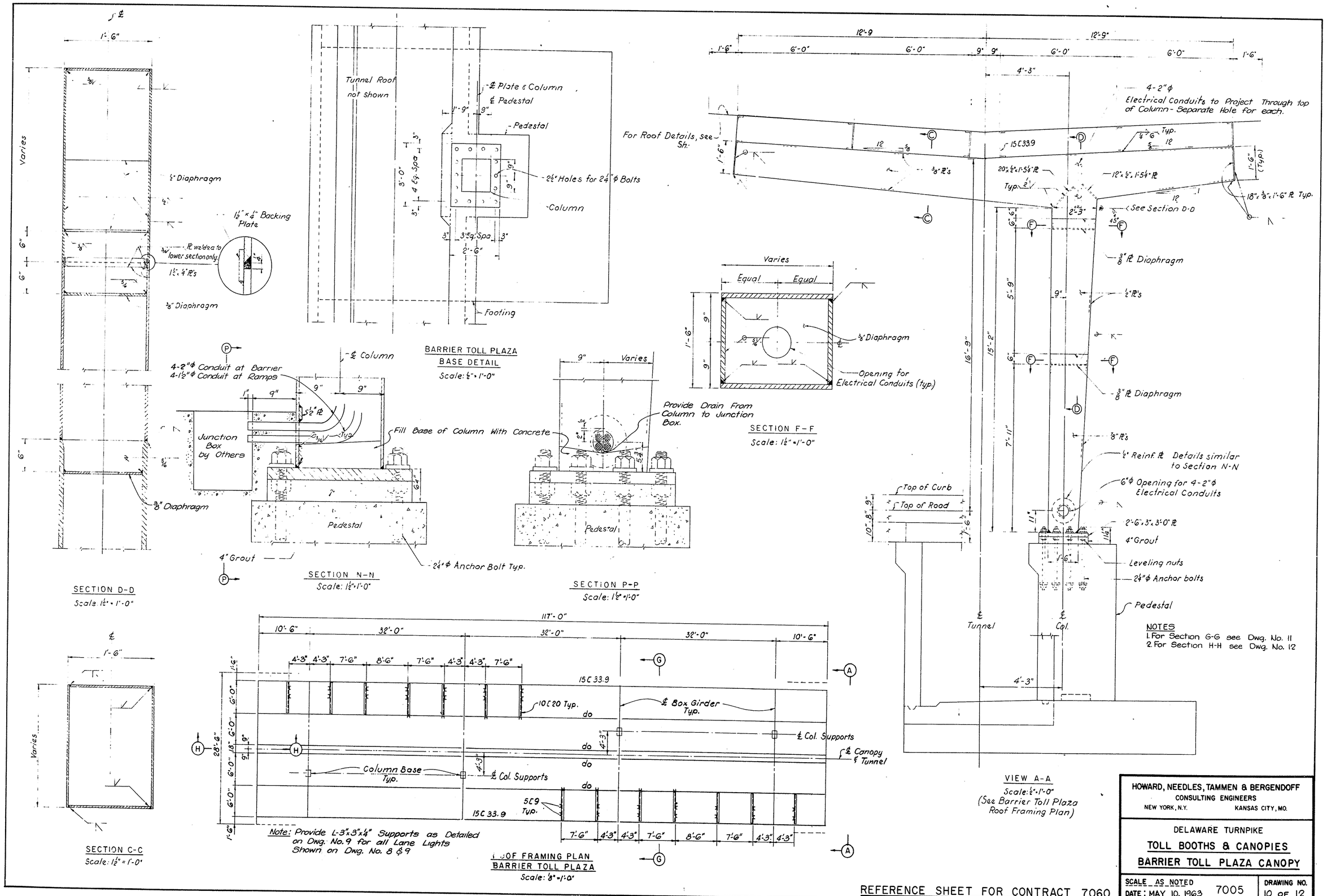
SECTION D-D
Scale: 1½" = 1'-0"
½" Diaphragm
1½" × 4" Backing Plate
⅜" Diaphragm
Varies
BARRIER TOLL PLAZA
BASE DETAIL
Scale: ½" = 1'-0"
Tunnel Roof not shown
℄ Plate & Column
℄ Pedestal
Pedestal
2½" Holes for 2¼" φ Bolts
Column
Footing
4-2" φ Conduit at Barrier
4-1½" φ Conduit at Ramps
℄ Column
Junction Box by Others
Fill Base of Column With Concrete
Pedestal
4" Grout
2¼" φ Anchor Bolt Typ.
SECTION N-N
Scale: 1½" = 1'-0"
Provide Drain From Column to Junction Box.
SECTION P-P
Scale: 1½" = 1'-0"
Varies
Equal
Equal
⅜" Diaphragm
Opening for Electrical Conduits (typ.)
SECTION F-F
Scale: 1½" = 1'-0"
For Roof Details, see Sh.
4-2" φ Electrical Conduits to Project Through top of Column - Separate Hole for each.
15 C 33.9
See Section D-D
⅜" Pl Diaphragm
½" Pl's
⅜" Pl Diaphragm
⅜" Pl's
½" Reinf. Pl Details similar to Section N-N
6" φ Opening for 4-2" φ Electrical Conduits
2'-6" × 3" × 3'-0" Pl
4" Grout
Leveling nuts
2¼" φ Anchor bolts
Pedestal
Top of Curb
Top of Road
℄ Tunnel
℄ Col.
NOTES
1. For Section G-G see Dwg. No. 11
2. For Section H-H see Dwg. No. 12
VIEW A-A
Scale: ½" = 1'-0"
(See Barrier Toll Plaza Roof Framing Plan)
SECTION C-C
Scale: 1½" = 1'-0"
117'-0"
15 C 33.9
10 C 20 Typ.
℄ Box Girder Typ.
℄ Col. Supports
℄ Canopy & Tunnel
Column Base Typ.
5 C 9 Typ.
Note: Provide L-3"×3"×¼" Supports as Detailed on Dwg. No. 9 for all Lane Lights Shown on Dwg. No. 8 & 9
ROOF FRAMING PLAN
BARRIER TOLL PLAZA
Scale: ⅛" = 1'-0"
REFERENCE SHEET FOR CONTRACT 7060
HOWARD, NEEDLES, TAMMEN & BERGENDOFF
CONSULTING ENGINEERS
NEW YORK, N.Y.
KANSAS CITY, MO.
DELAWARE TURNPIKE
TOLL BOOTHS & CANOPIES
BARRIER TOLL PLAZA CANOPY
SCALE AS NOTED
DATE: MAY 10, 1963
7005
DRAWING NO.
10 OF 12

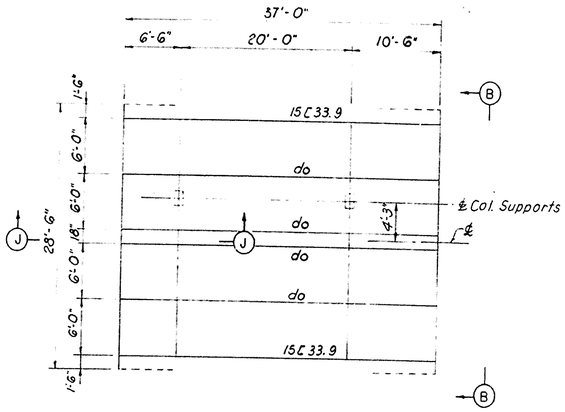

ROOF FRAMING PLAN
CHURCHMANS ROAD
Scale: 1/8" = 1'-0"

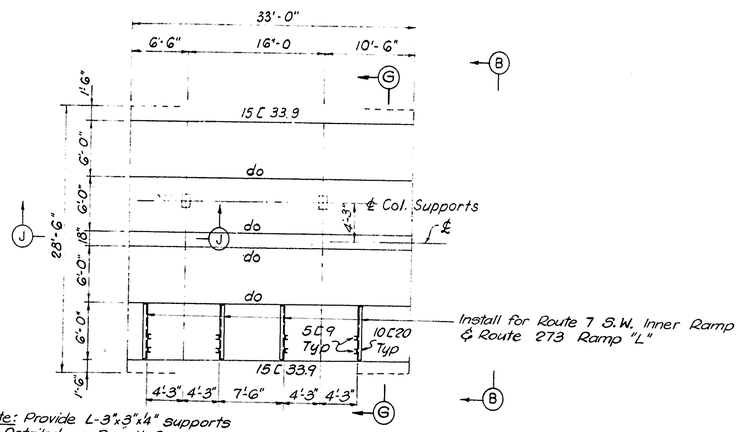

Install for Route 7 S.W. Inner Ramp & Route 273 Ramp "L"

Note: Provide L-3"x3"x1/4" supports as Detailed on Dwg. No. 9 for all Lane Lights Shown on Dwg. No. 8

ROOF FRAMING PLAN
ROUTE 273 RAMPS "K" & "L"
ROUTE 7 S.W. INNER RAMP
Scale: 1/8" = 1'-0"

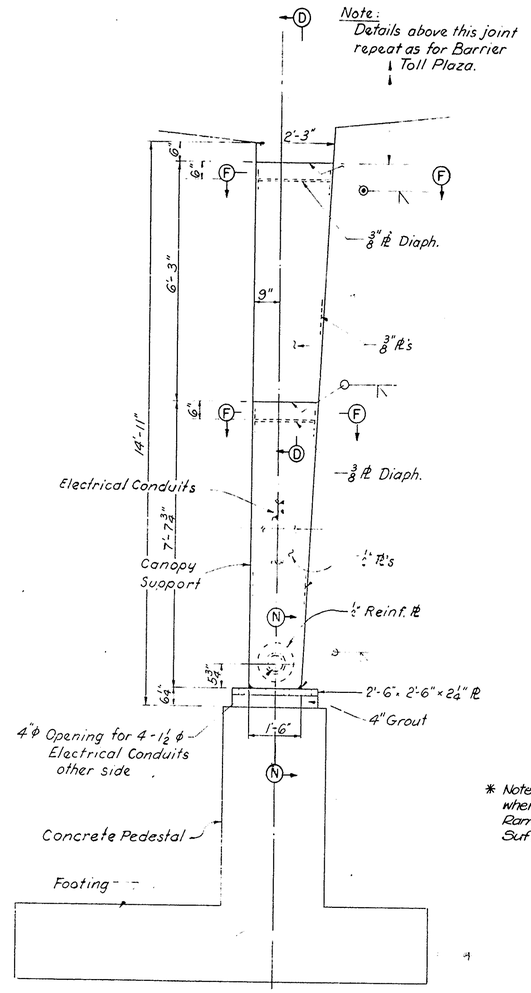

VIEW B-B
Scale: 1/2" = 1'-0"
(See Ramp Toll Plaza Roof Framing Plan)

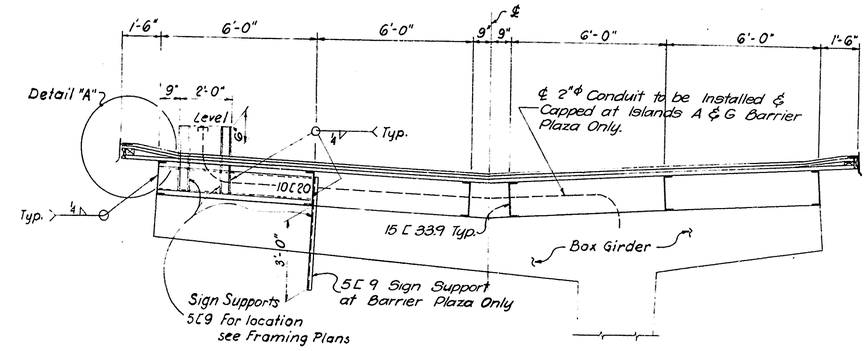

SECTION G-G
Scale: 3/8" = 1'-0"

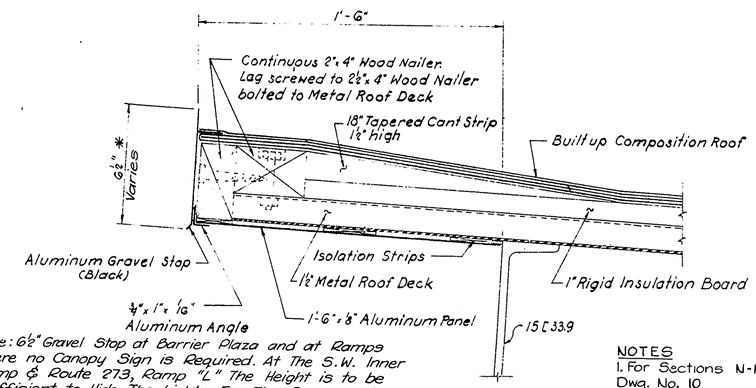

* Note: 6 1/2" Gravel Stop at Barrier Plaza and at Ramps where no Canopy Sign is Required. At The S.W. Inner Ramp & Route 273, Ramp "L" The Height is to be Sufficient to Hide The Lights For The Canopy Sign.

DETAIL "A"
Scale: 3" = 1'-0"

NOTES
1. For Sections N-N, F-F, & D-D see Dwg. No. 10

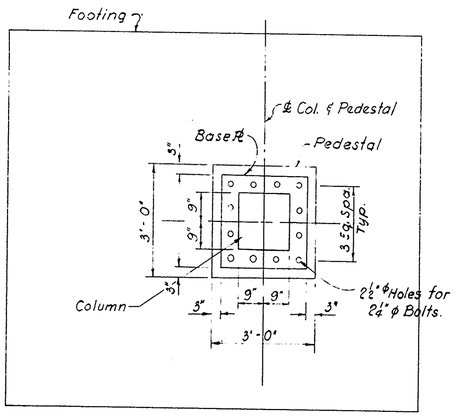

RAMP TOLL PLAZA
BASE DETAIL
Scale: 1/2" = 1'-0"

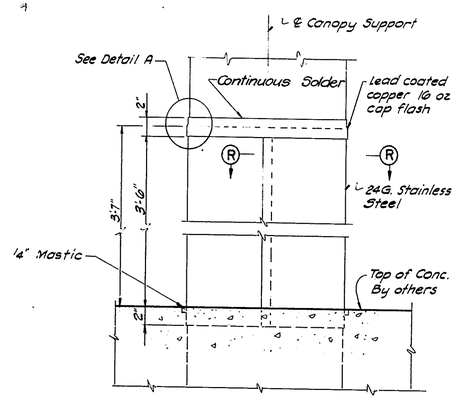

COLUMN COVER
(Back Face of Canopy Support all Columns)
1/2" = 1'-0"

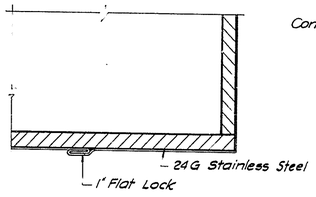

SECTION R-R
3" = 1'-0"

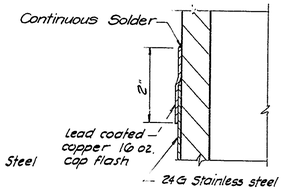

DETAIL "A"
Half size

REFERENCE SHEET FOR CONTRACT 7060

HOWARD, NEEDLES, TAMMEN & BERGENDOFF
CONSULTING ENGINEERS
NEW YORK, N.Y. KANSAS CITY, MO.

DELAWARE TURNPIKE
TOLL BOOTHS & CANOPIES
RAMP PLAZA CANOPIES

SCALE AS NOTED
DATE: MAY 10, 1963
7005
DRAWING NO. 11 OF 12

COUNTY	CONTRACT	FED. ROAD DIV. NO.	STATE	FED. AID PROJ. NO.	FISCAL YEAR	SHEET NO.	TOTAL SHEETS
NEW CASTLE	7001	2	DEL			74	170

REFERENCE SHEET FOR CONTRACT 7060

NOTE: Elevations shown on these Reference Sheets are from a different datum than that used for the Proposed Construction.

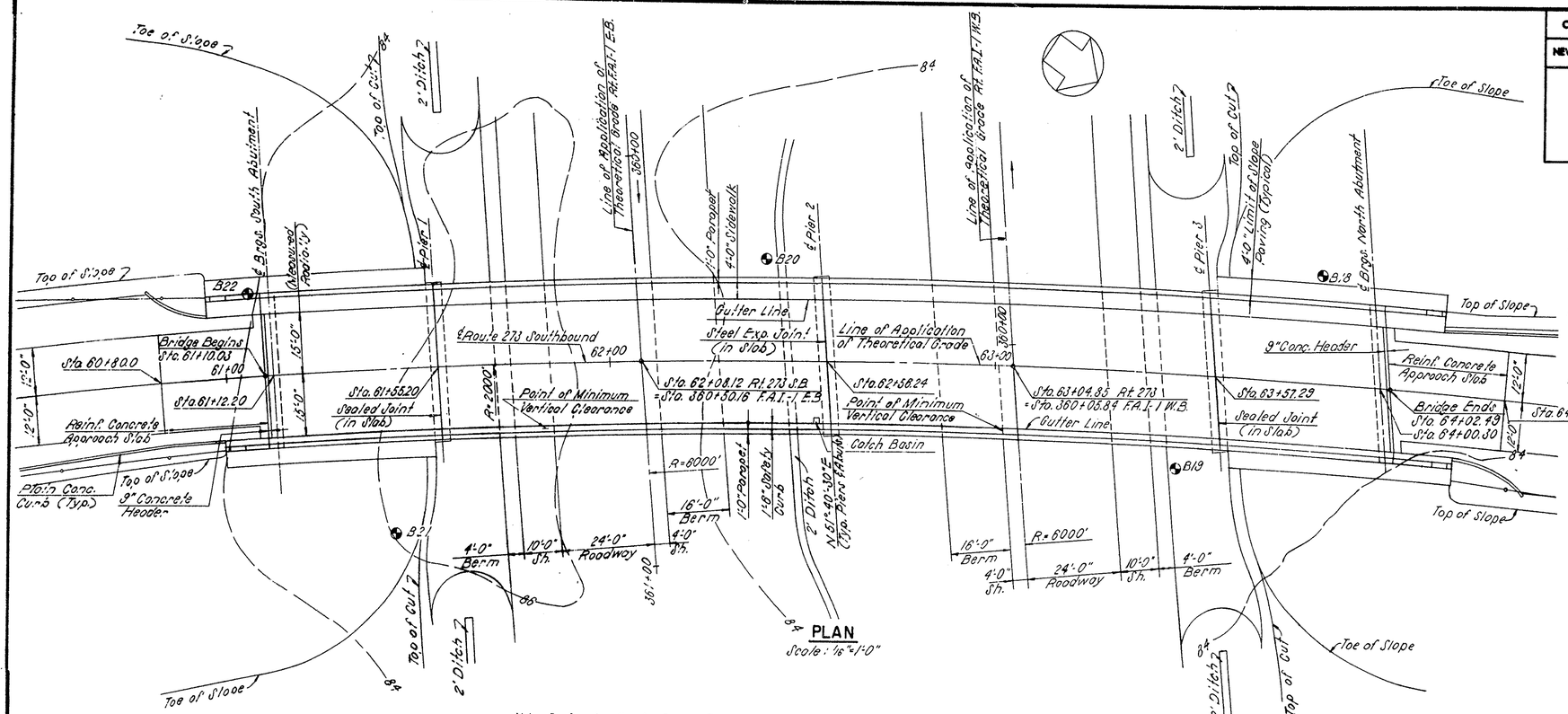

PLAN
Scale: 1/16" = 1'-0"

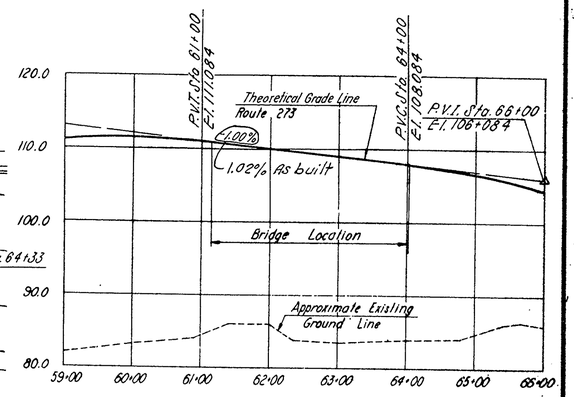

PROFILE OF ROUTE 273
Scales: Vertical 1" = 10' Horizontal 1" = 100'

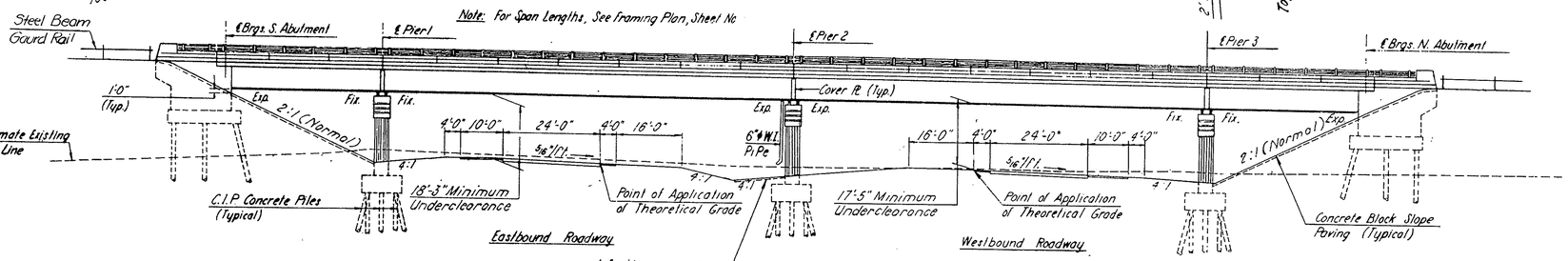

ELEVATION
Scale: 1/16" = 1'-0"

Note: 1. For Typical Roadway Sections of Delaware Turnpike, see Sheet No. 2 (Highway Plans)
2. For Typical Roadway Sections o. Rt 273, see Sheet No 3 (Highway Plans)
3. For Footing Elevations, see Pier and Abutment Sheets.

QUANTITIES ROUTE 273 STRUCTURE

ITEM	UNIT	QUANTITY
EXCAVATION FOR STRUCTURES	C.Y.	690
SELECT BORROW – GRADE A	C.Y.	105
HOT-MIX HOT-LAID ASPHALTIC CONCRETE PAVEMENT	TONS	112
PORTLAND CEMENT CONCRETE MASONRY:		
* CONCRETE FOR FOOTINGS	C.Y.	260
* CONCRETE FOR SUBSTRUCTURE	C.Y.	290
* CONCRETE FOR SUPERSTRUCTURE	C.Y.	430
* CONCRETE FOR APPROACH SLAB	C.Y.	50
*BAR REINFORCEMENT	LB.	218,000
STRUCTURAL STEEL (APPROXIMATELY 344,000 LBS.)	L.S.	1
6" ϕ PERFORATED CORRUGATED METAL PIPE UNDERDRAIN	L.F.	110
12" ϕ CAST IN PLACE CONCRETE PILES	L.F.	5,200
12" ϕ STEEL SHELL TEST PILES	L.F.	470
ALUMINUM RAILING (TWO RAIL)	L.F.	630
SLOPE PAVING	S.Y.	120
BRIDGE DRAINAGE PIPES (APPROXIMATELY 30 L.F.)	L.S.	1
BRIDGE CATCH BASIN	L.S.	1
RC-1 ASPHALT FOR TACK COAT	GAL.	100
SUPERFICIAL WATERPROOFING	S.Y.	150
6" ϕ CORRUGATED METAL PIPE UNDERDRAIN	L.F.	10
PROTECTIVE COATING FOR CONCRETE	S.F.	885
COAL TAR EPOXY UNDERSEAL	S.Y.	1025

Notes: 1. Items indicated (*) are Fixed Quantity Items. See Special Provisions.
2. For Layout of Piers and Abutments see Sheet No. 80
3. For General Notes see Sheet No. 88.
4. For Boring Data, see Sheet No. 89.

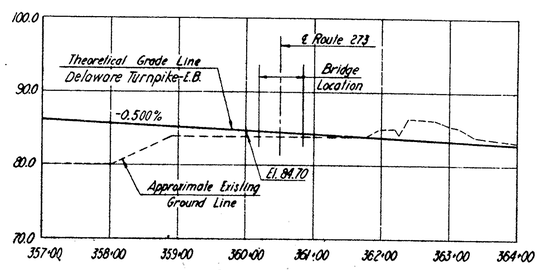

PROFILE OF DELAWARE TURNPIKE — EASTBOUND
Scales: Vertical 1" = 10' Horizontal 1" = 100'

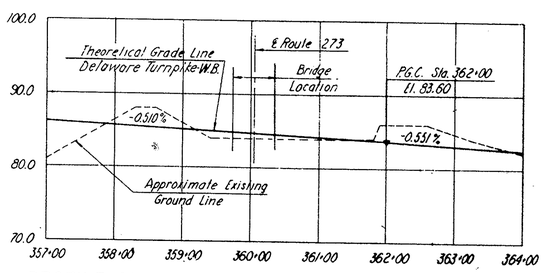

PROFILE OF DELAWARE TURNPIKE — WESTBOUND
Scales Vertical 1" = 10' Horizontal 1" = 100'

In charge of: P.H. Aldenhoven
Made by: K.E.
Checked by: J.D.
Traced by:
Checked by:

DELAWARE
STATE HIGHWAY DEPARTMENT
DELAWARE TURNPIKE

UNDERPASS - ROUTE 273

GENERAL PLAN

DWG. NO.	SCALE	DATE	
1 OF 16	AS NOTED	MAY 1962	GOODKIND & O'DEA CONSULTING ENGINEERS
CONTRACT NO.			

COUNTY	CONTRACT	FED. ROAD DIV. NO.	STATE	FED. AID PROJ. NO.	FISCAL YEAR	SHEET NO.	TOTAL SHEETS
NEW CASTLE	7001	2	DEL.			75	170

REFERENCE SHEET FOR CONTRACT 7060

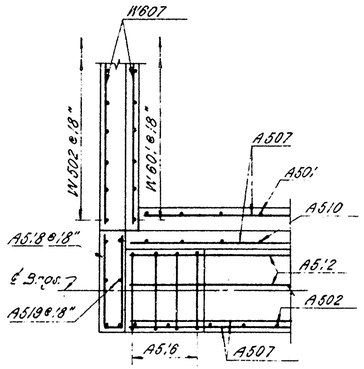

DETAIL 1
Scale: 3/8" = 1'-0"

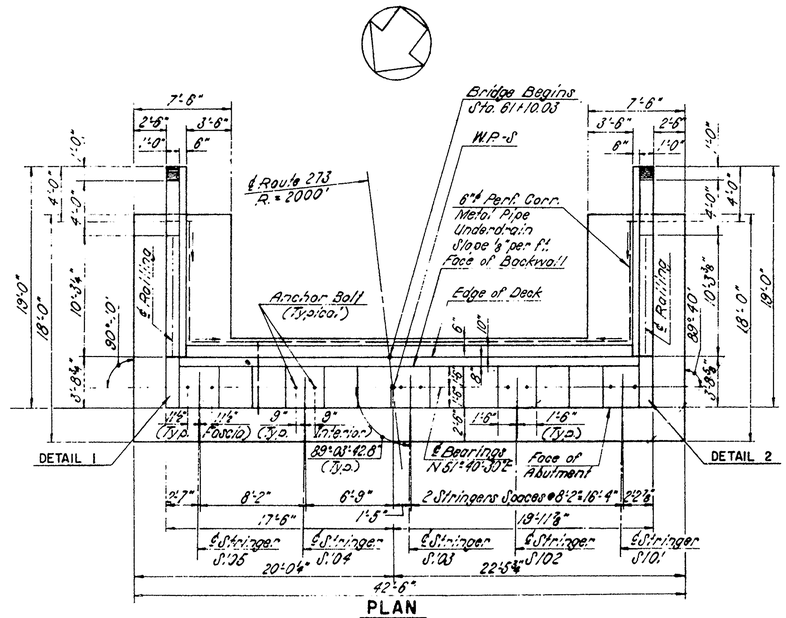

PLAN
Scale: 3/8" = 1'-0"

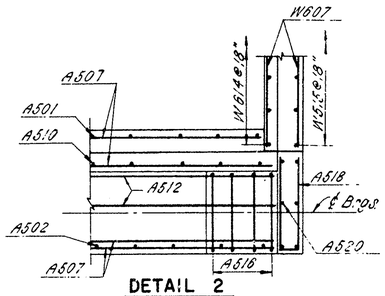

DETAIL 2
Scale: 3/8" = 1'-0"

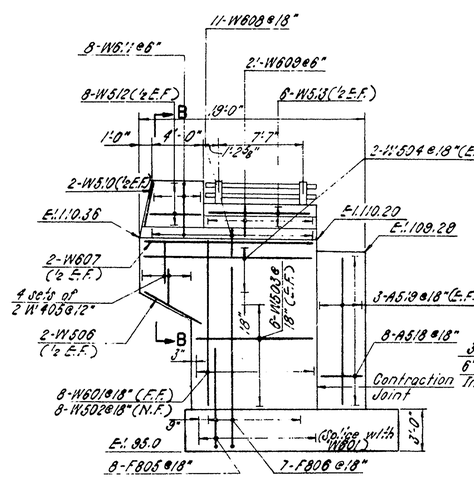

S.E. WINGWALL
Scale: 3/8" = 1'-0"

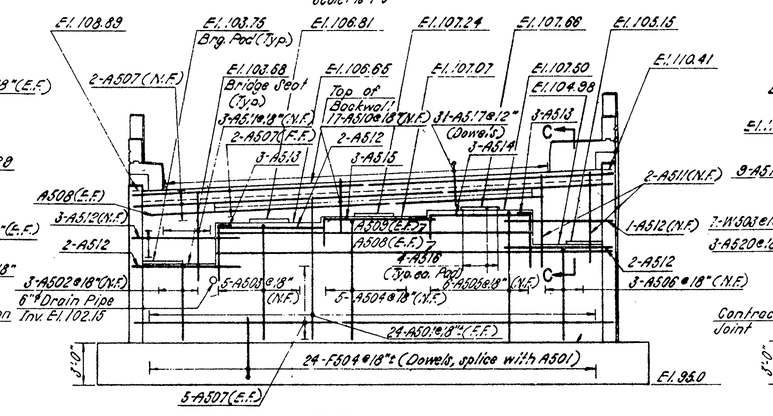

ELEVATION
Scale: 3/16" = 1'-0"

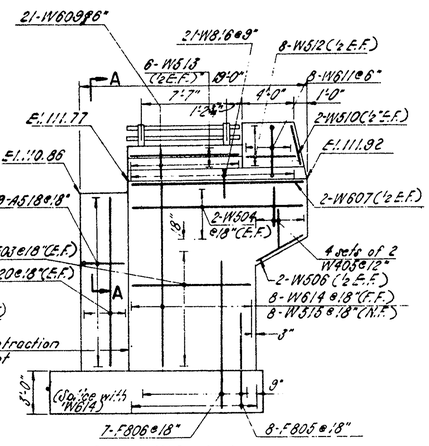

S.W. WINGWALL
Scale: 3/16" = 1'-0"

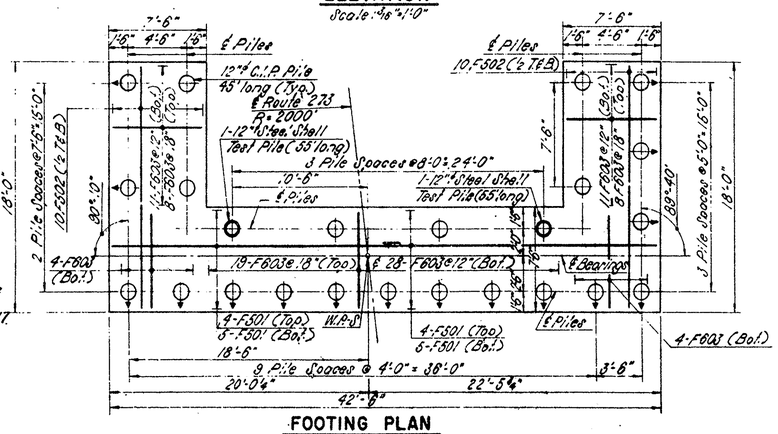

FOOTING PLAN
Scale: 3/16" = 1'-0"

NOTES:
1. Bearing Pad elevations shown are bottom of base plate elevations.
2. Top of Cheekwall, Parapet, Pylon, and Railing to follow grade.
3. Piles and footing reinforcing (in Elevation) not shown.
4. For Contraction Joint Detail, see Sheet No. 77.
5. For Layout Plan, see Sheet No. 80.

NOTES:
1. ○ Indicates Cast-in-Place Concrete Pile battered 1:4 in direction of arrow.
2. ○ Indicates vertical Cast-in-Place Concrete Pile.
3. For Pile Reinforcing Detail, see Sheet No. 77.
4. ◉ Indicates vertical 12"ϕ Steel Test Pile.

In charge of P.H. AML
Made by N.E.
Checked by J.D.
Traced by
Checked by

BAR LIST

MARK	SIZE	TYPE	LENGTH	SOUTH	NORTH	TOTAL	LOCATION
Footing							
F501	5	St.	21'-10"	18	18	36	Longitudinal - Top & Bot.
F502	5	St.	17'-6"	20	20	40	Longitudinal - (Wingwall) T & B
F603	6	St.	7'-0"	93	94	187	Transverse - Top & Bot.
F504	5	Bl.	5'-2"	24	24	48	Dowels (Abutment)
F805	8	Bl.	8'-7"	16	16	32	Dowels (Wingwall)
F806	8	Bl.	11'-7"	14	14	28	Dowels (Wingwall)
Abutment							
A501	5	St.	*	24	24	48	Vertical, F.F.
A502	5	Bl.	8'-9"	3	3	6	Vertical, N.F.
A503	5	Bl.	11'-10"	5	5	10	Vertical, N.F.
A504	5	Bl.	12'-3"	5	5	10	Vertical, N.F.
A505	5	Bl.	12'-8"	6	6	12	Vertical, N.F.
A506	5	Bl.	10'-2"	3	3	6	Vertical, N.F.
A507	5	St.	37'-2"	14	14	28	Horizontal
A508	5	St.	30'-5"	4	4	8	Horizontal
A509	5	St.	24'-6"	2	2	4	Horizontal
A510	5	St.	4'-0"	17	17	34	Vertical, N.F. Backwall
A511	5	St.	6'-4"	5	5	10	Vertical, N.F. Backwall
A512	5	St.	8'-4"	10	10	20	Horizontal (Pedestals & Backwall)
A513	5	Bl.	5'-0"	6	6	12	Horizontal (Seat)
A514	5	Bl.	9'-6"	3	3	6	Horizontal (Seat)
A515	5	Bl.	10'-6"	3	3	6	Horizontal (Seat)
A516	5	Bl.	5'-6"	20	20	40	Transverse (Pads)
A517	5	Bl.	5'-2"	31	31	62	Dowels (Approach Slab)
A518	5	Bl.	7'-8"	13	13	26	Horizontal (Cheekwall)
A519	5	St.	11'-0"	6	6	12	Vertical E.F. (Cheekwall)
A520	5	St.	12'-6"	6	6	12	Vertical E.F. (Cheekwall)
A521	5	Bl.	7'-0"	-	8	8	Horizontal (Cheekwall)
Wingwalls							
W601	5	St.	12'-0"	8	8	16	Vertical, F.F.
W602	5	St.	12'-0"	8	8	16	Vertical, N.F.
W603	5	St.	10'-0"	26	26	52	Horizontal, E.F.
W604	5	St.	14'-0"	8	8	16	Horizontal, E.F.
W605	4	Bl.	8'-6"	16	16	32	Vertical Ends
W606	5	St.	5'-6"	4	4	8	Horizontal, Ends
W607	6	St.	14'-10"	4	4	8	Horizontal, Top
W608	6	St.	4'-6"	11	11	22	Transverse, Safety Curb
W609	6	Bl.	6'-10"	42	42	84	Vertical, Parapet
W610	6	St.	3'-0"	4	4	8	Vertical, Pylon
W611	6	Bl.	10'-0"	16	16	32	Stirrup, Pylon
W612	5	St.	*	16	16	32	Horizontal, Pylons
W613	5	St.	10'-0"	12	12	24	Horizontal, Parapet
W614	6	St.	13'-5"	8	8	16	Vertical, F.F.
W615	5	St.	13'-6"	8	8	16	Vertical, N.F.
W816	8	Bl.	7'-7"	21	21	42	Transverse, Sidewalk
W517	5	Bl.	3'-6"	22	22	44	Transverse, Sidewalk & Curb
W518	5	St.	15'-0"	16	16	32	Longitudinal, Sidewalk
W519	5	St.	4'-0"	11	11	22	Transverse, Sidewalk - Bottom

* A501 - Groups of 24 bars 9'-6" to 10'-11¼" Δ = 4"
* W512 - 46 groups of 4 bars 3'-9" to 4'-6" Δ = 3"
All reinforcing dimensions are out to out.

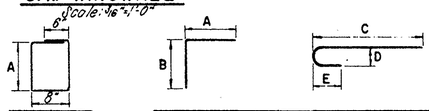

MARK	A
W608	2'-7"
W611	4'-2"

MARK	A	B
A502	3'-5"	3'-4"
A503	3'-5"	8'-3"
A504	3'-5"	8'-10"
A505	3'-5"	9'-3"
A506	3'-5"	6'-9"
A513	1'-0"	4'-0"
A514	7'-9"	1'-9"
A515	9'-0"	1'-6"
A517	1'-8"	3'-6"
W609	2'-0"	2'-6"
W816	4'-2"	3'-5"

MARK	C	D	E
F504	4'-4"	5"	5"
F805	7'-0"	10"	9"
F806	10'-0"	10"	9"

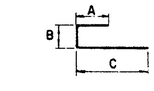

MARK	A	B	C
A518	1'-6"	2'-6"	1'-6"
W405	3'-8"	1'-2"	3'-8"
A518	3'-6"	8"	3'-6"
W517	1'-0"	5"	2'-7"
A521	3'-2"	8"	3'-2"

DELAWARE
STATE HIGHWAY DEPARTMENT
DELAWARE TURNPIKE

UNDERPASS - ROUTE 273

SOUTH ABUTMENT

DWG. NO.	SCALE	DATE
2 OF 16	AS NOTED	MAY 1962

CONTRACT NO.

GOODKIND & O'DEA
CONSULTING ENGINEERS

COUNTY	CONTRACT	FED. ROAD DIV. NO.	STATE	FED. AID PROJ. NO.	FISCAL YEAR	SHEET NO.	TOTAL SHEETS
NEW CASTLE	7001	2	DEL.			76	170

REFERENCE SHEET FOR CONTRACT 7060

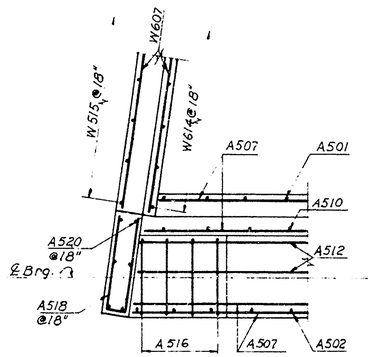

DETAIL 1
Scale: 3/8"=1'-0"

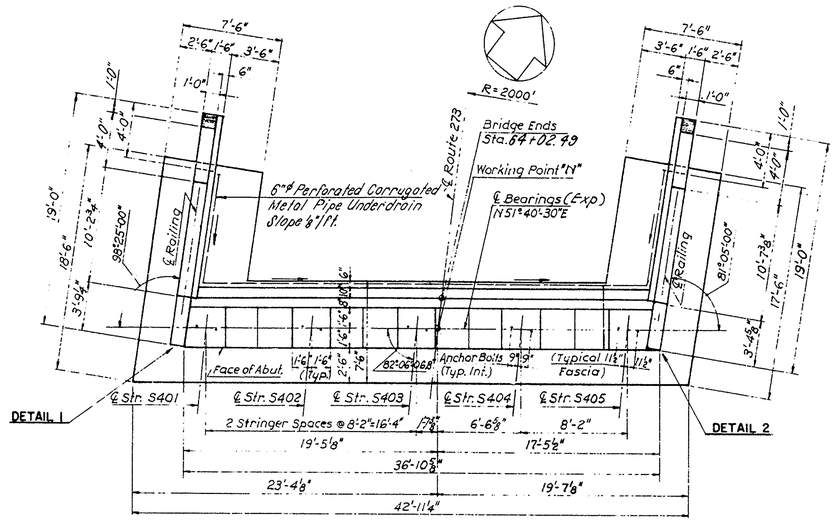

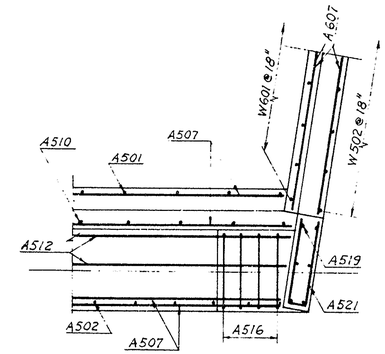

DETAIL 2
Scale: 3/8"=1'-0"

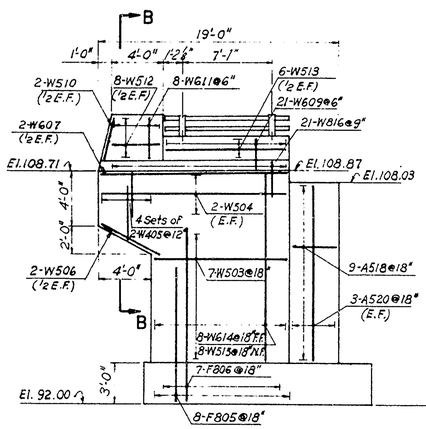

N.W. WINGWALL
Scale: 3/16"=1'-0"

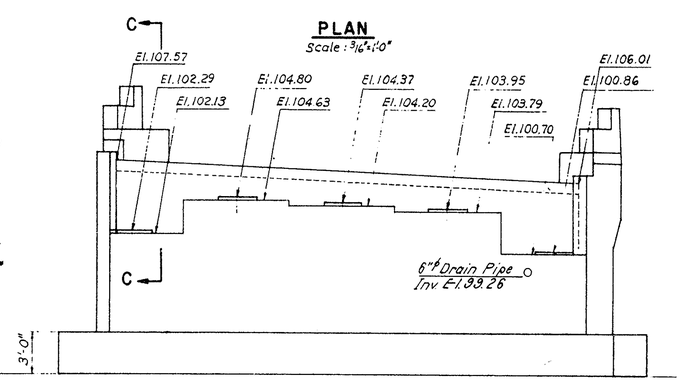

PLAN
Scale: 3/16"=1'-0"

ELEVATION
Scale: 3/16"=1'-0"

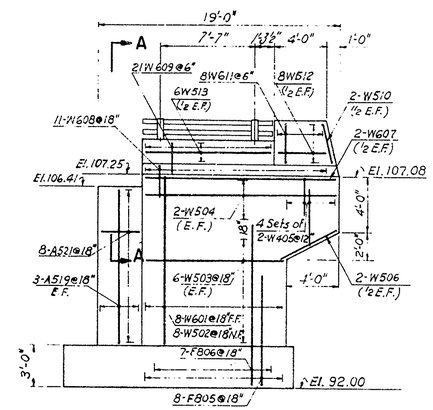

N.E. WINGWALL
Scale: 3/16"=1'-0"

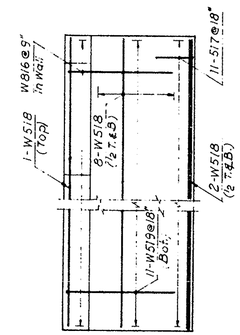

SIDEWALK

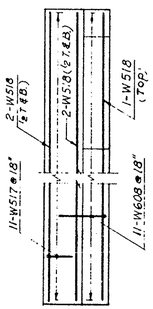

SAFETY CURB

Scale: 3/8"=1'-0"

NOTES:
1. North Abutment reinforcing similar to South Abutment, see Sheet No. 75.
2. For Additional Notes, see Sheet No. 75.
3. For Layout Plan, see Sheet No. 80.

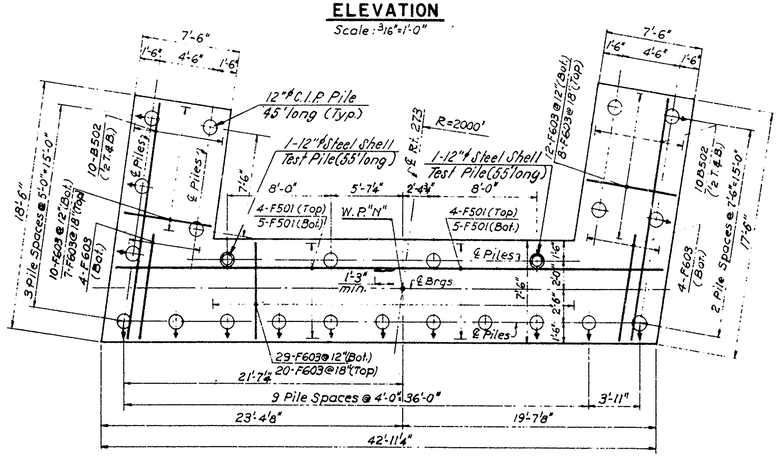

FOOTING PLAN
Scale: 3/16"=1'-0"

In Charge of P.H.
Made by N.E.
Checked by J.D.
Traced by
Checked by

DELAWARE
STATE HIGHWAY DEPARTMENT
DELAWARE TURNPIKE

UNDERPASS-ROUTE 273
NORTH ABUTMENT

DWG. NO.	SCALE	DATE	
3 OF 16	AS NOTED	MAY 1962	GOODKIND & O'DEA CONSULTING ENGINEERS
CONTRACT NO.			

COUNTY	CONTRACT	FED. ROAD DIV. NO.	STATE	FED. AID PROJ. NO.	FISCAL YEAR	SHEET NO.	TOTAL SHEETS
NEW CASTLE	7001	2	DEL.			78	170

REFERENCE SHEET FOR CONTRACT 7060

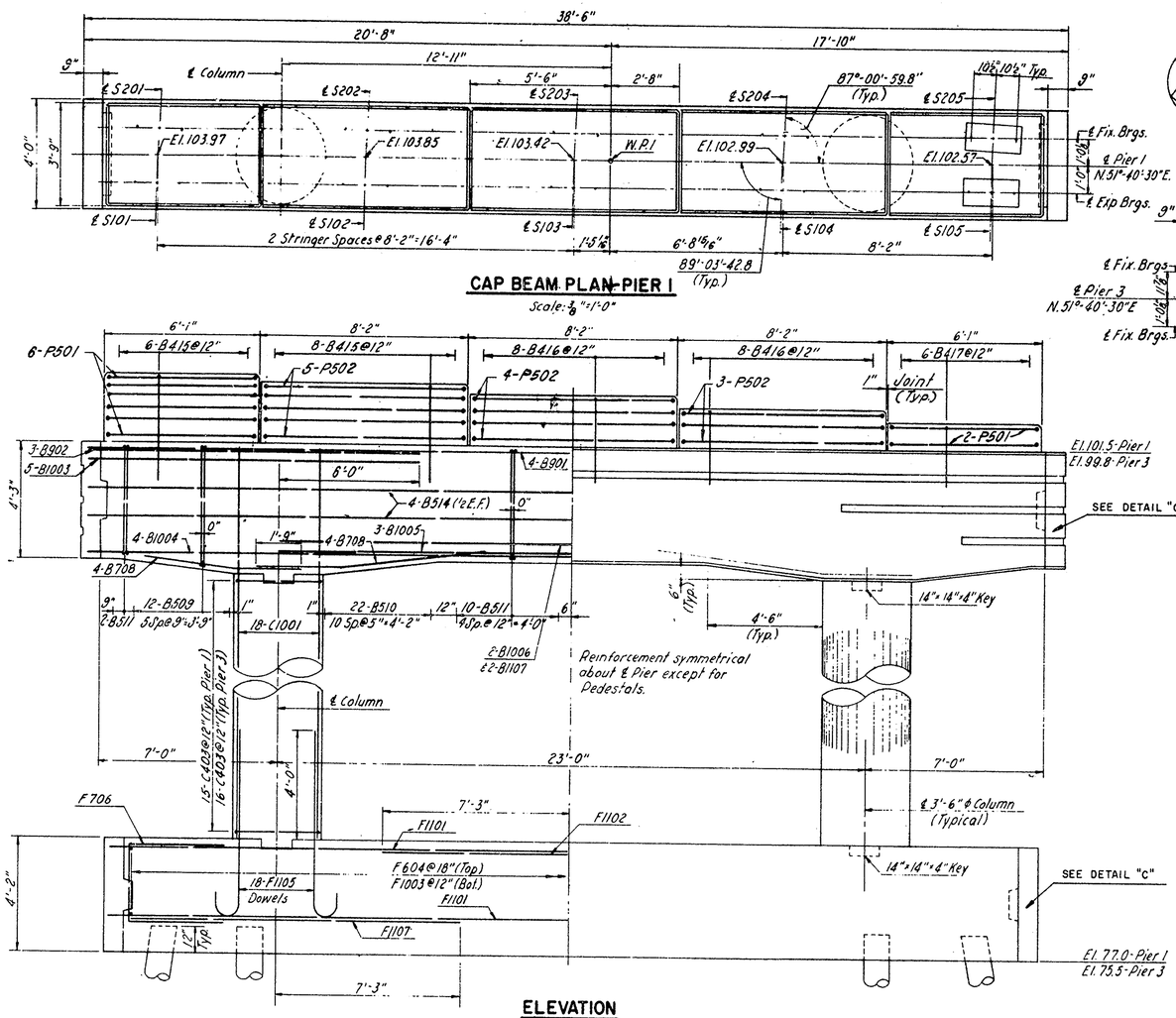

CAP BEAM PLAN-PIER 1

Scale: 3/8"=1'-0"

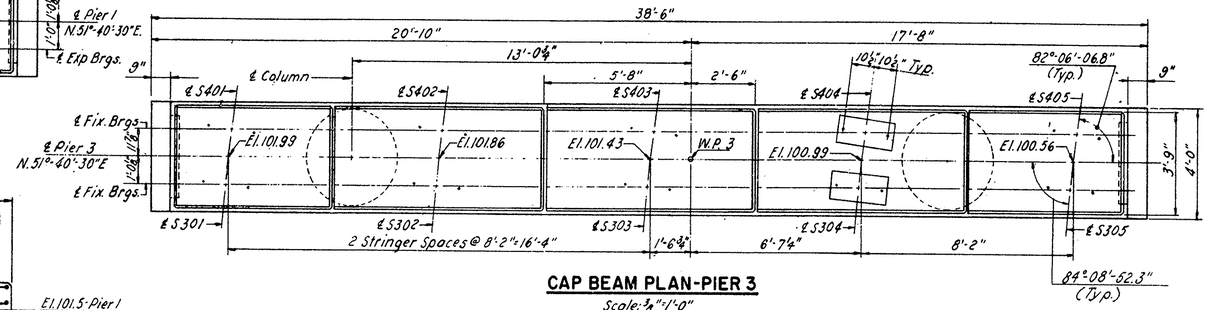

CAP BEAM PLAN-PIER 3

Scale: 3/8"=1'-0"

ELEVATION

Scale: 3/8"=1'-0"

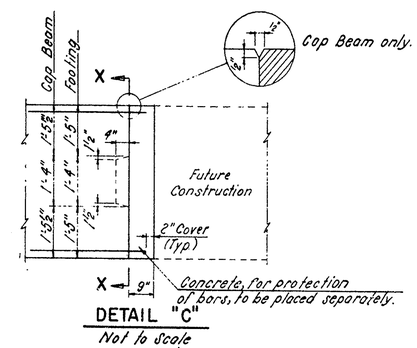

DETAIL "C"

Not to Scale

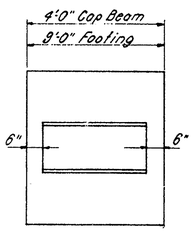

SECTION X-X

Not to Scale

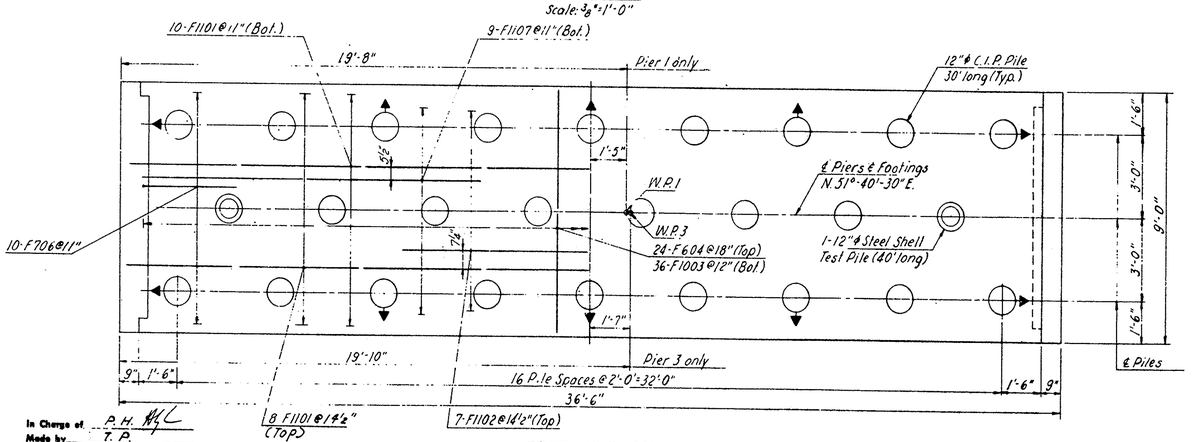

FOOTING PLAN

Scale: 3/8"=1'-0"

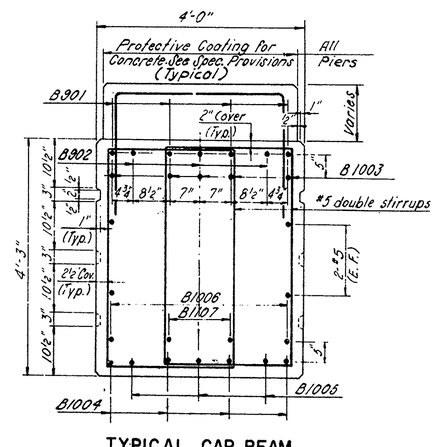

TYPICAL CAP BEAM SECTION

PIERS 1 & 3

Scale: 3/4"=1'-0"

In Charge of P.H.
Made by T.P.
Checked by J.D.
Traced by
Checked by

DELAWARE
STATE HIGHWAY DEPARTMENT
DELAWARE TURNPIKE

UNDERPASS - ROUTE 273

PIERS 1 & 3

DWG. NO.	SCALE	DATE
5 OF 16	AS NOTED	MAY 1962

CONTRACT NO.

GOODKIND, O'DEA & CO.
CONSULTING ENGINEERS

COUNTY	CONTRACT	FED. ROAD DIV. NO.	STATE	FED. AID PROJ. NO.	FISCAL YEAR	SHEET NO.	TOTAL SHEETS
NEW CASTLE	7001	2	DEL.			81	170

REFERENCE SHEET FOR CONTRACT 7060

Notes:

1. For Expansion Joint Details, see Sheet No 83
2. For Details 1, 2, 3 & 4, see Sheet No 82
3. For Details of C-1, C-2, T-1, CF-1, CF-2, CF-3 & CF-4, see Sheet No. 82
4. For Details of CF-5 & CF-6, see Sheet No 82.
5. For Bolster Detail, see Sheet No. 88.
6. For Flange Plate Detail, see Sheet No. 82.
7. For Shear Connector Detail, see Sheet No. 82.
8. For Section B-B, see Sheet No. 82.
9. All Framing Plan dimensions are horizontal.
10. All Cross-Frames & Diaphragms placed parallel to ℄ Brgs.
11. For Layout Plan, see Sheet No. 80.

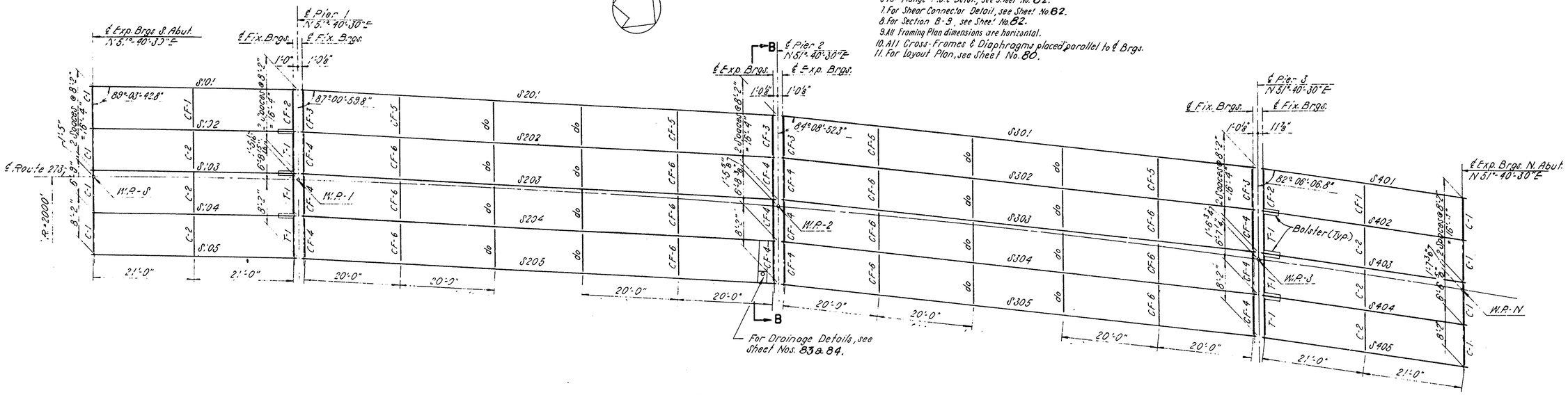

FRAMING PLAN

Scale: 1" = 10'

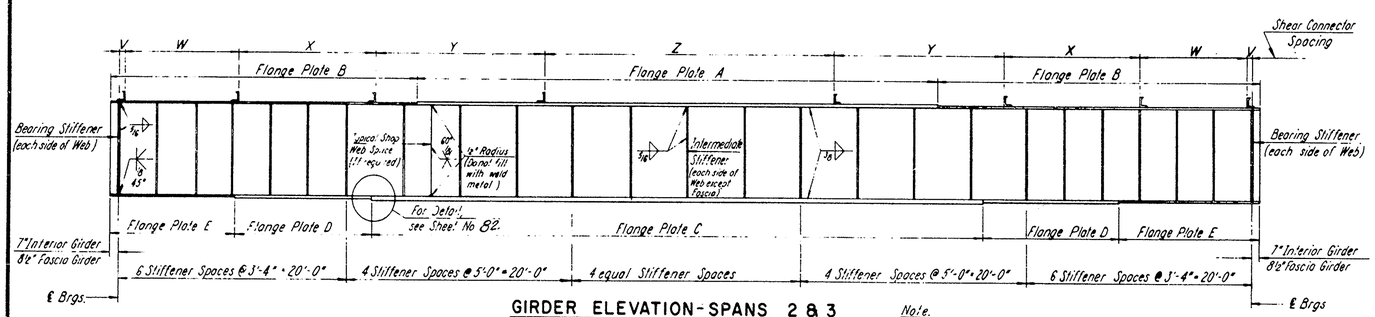

GIRDER ELEVATION - SPANS 2 & 3

Not to Scale

Note: For Fabrication Notes, see Sheet No. 82.

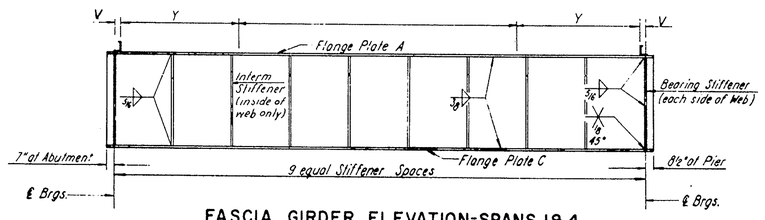

FASCIA GIRDER ELEVATION - SPANS 1 & 4

Not to Scale

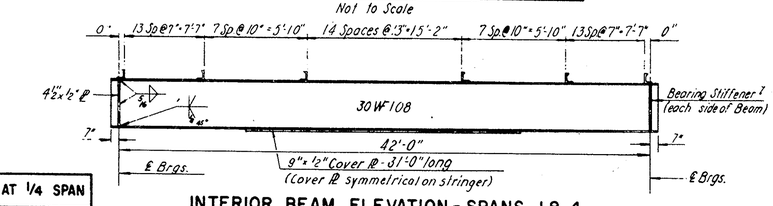

INTERIOR BEAM ELEVATION - SPANS 1 & 4

Not to Scale

GIRDER SCHEDULE

GIRDER MARK	LENGTH c. to c. Brgs.	WEB SIZE	FLANGE PLATES A SIZE	A LENGTH	B SIZE	B LENGTH	C SIZE	C LENGTH	D SIZE	D LENGTH	E SIZE	E LENGTH	BEARING STIFFENER	INTER. STIFFENER	SHEAR CONNECTOR SPACING V	W	X	Y	Z	MAXIMUM MOMENTS D.L.	S.D.L.	L.L.+I	MAXIMUM SHEARS D.L.	S.D.L.	L.L.+I
S101, S401	42'-0"	60"×⅜	16"×¾"	43'-3½"	-	-	16"×¾"	43'-3½"	-	-	-	-	7½"×¾"	*7½"×½"	-3"	-	-	9 Sp @ 1'-5" = 11'-3"	10 Sp @ 2'-0" = 20'-0"	206	122	452	19.7	11.6	51.7
S201, S301	99'-0"	60"×⅜	16"×1"	50'-6"	16"×¾"	24'-11½"	16"×2⅛"	67'-6"	16"×1½"	7'-9"	16"×¾"	8'-8½"	7½"×¾"	*7"×½"	±2"	9 Sp @ 1'-11½" = 8'-3"	9 Sp @ 1'-3" = 9'-9"	8 Sp @ 1'-7½" = 11'-4"	20 Sp @ 2'-0" = 40'-0"	1266	680	1386	51.0	27.5	59.6
S202-S204 S302-S304	59'-0"	60"×⅜	16"×1"	47'-6"	16"×¾"	26'-9"	16"×2"	69'-6"	16"×1⅓"	6'-5"	16"×⅜"	8'-11"	7½"×½"	7½"×½"	-2"	10 Sp @ 1'-11½" = 9'-2"	9 Sp @ 1'-3" = 9'-9"	9 Sp @ 1'-7½" = 12'-9"	18 Sp @ 2'-0" = 36'-0"	1305	605	1368	52.7	24.4	59.3
S103, S403	42'-0"	60"×⅜	16"×¾"	43'-3½"	-	-	16"×¾"	43'-3½"	-	-	-	-	7½"×½"	*7½"×½"	-3"	-	-	9 Sp @ 1'-5" = 11'-3"	10 Sp @ 2'-0" = 20'-0"	198	103	427	18.9	9.8	49.2
S203, S303	99'-0"	60"×⅜	16"×⅞"	43'-5"	16"×¾"	28'-6"	16"×1⅞"	69'-0"	16"×1¼"	6'-3"	16"×¾"	9'-5½"	7½"×½"	*7½"×½"	±1"	7 Sp @ 1'-11½" = 7'-7"	9 Sp @ 1'-3" = 10'-6"	8 Sp @ 1'-7½" = 11'-4"	20 Sp @ 2'-0" = 40'-0"	1179	571	1247	47.5	23.1	54.0

MARK	DEFLECTION AT MIDSPAN STEEL	CONC. DECK	S.D.L.		TOTAL	DEFLECTION AT 1/4 SPAN STEEL	CONC. DECK	S.D.L.		TOTAL
S101, S401	-	⅛"	-		⅛"	-	-	-		-
S102-S104 S402-S404	⅛"	⅜"	⅛"		⅝"	1/16"	5/16"	1/16"		7/16"
S103, S403	—	⅛"	—		⅛"	—	—	—		—
S201, S301	½"	1⅛"	9/16"		2 3/16"	⅜"	⅛"	7/16"		1 11/16"
S202-S204 S302-S304	½"	1¼"	½"		2¼"	⅜"	15/16"	⅜"		1 11/16"
S205, S305	7/16"	1¼"	½"		2 3/16"	5/16"	13/16"	⅜"		1⅝"

* On inside face of web only.

Note:
1. For Details of S102 - S104 & S402 - S404 see "Interior Beam Elevation Spans 1 & 4"

In charge of P.H. AGL
Made by T.P.
Checked by J.D.
Traced by
Checked by

DELAWARE
STATE HIGHWAY DEPARTMENT
DELAWARE TURNPIKE

UNDERPASS - ROUTE 273

FRAMING PLAN

DWG. NO.	SCALE	DATE
8 OF 16	AS NOTED	MAY 1962

CONTRACT NO.

GOODKIND & O'DEA
CONSULTING ENGINEERS

COUNTY	CONTRACT	FED. ROAD DIV. NO.	STATE	FED. AID PROJ. NO.	FISCAL YEAR	SHEET NO.	TOTAL SHEETS
NEW CASTLE	7001	2	DEL			82	170

REFERENCE SHEET FOR CONTRACT 7060

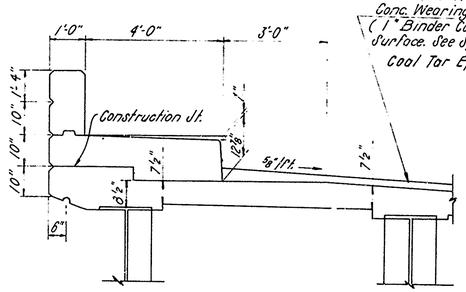

DETAIL 5
Scale: 1/2"=1'-0"

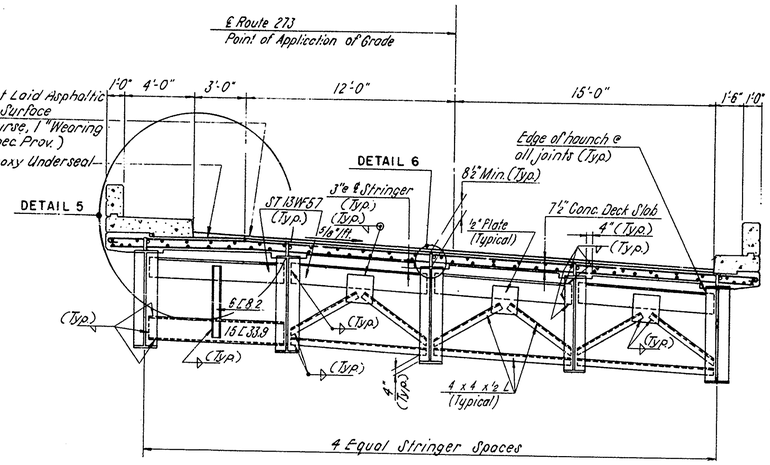

SECTION B-B
Scale: 1/4"=1'-0"

Notes:
1. For Location of Section B-B, see Sheet No. 83.
2. Shear Connectors not shown.
3. For Sidewalk and Parapet reinforcing and dimensions, see Sheet No. 83.

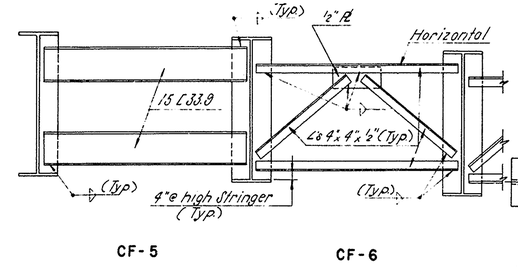

CF-5 CF-6

INTERMEDIATE CROSS FRAMES - SPANS 2 & 3
Scale: 3/8"=1'-0"

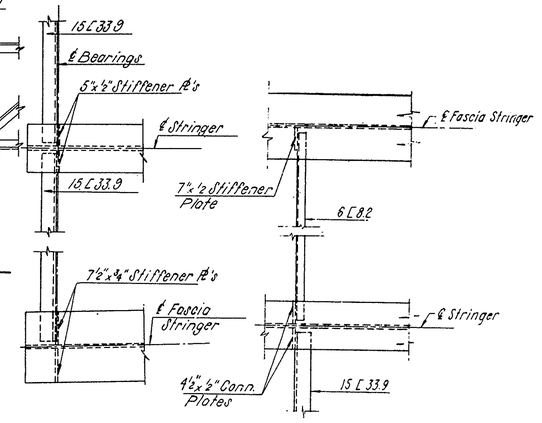

DETAIL 3
Scale: 3/4"=1'-0"

DETAIL 4
Scale: 3/4"=1'-0"

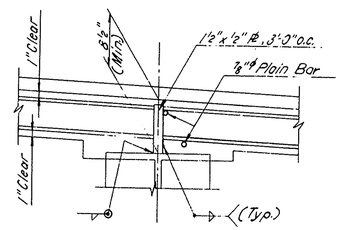

DETAIL 6
Scale: 1"=1'-0"

Note:
An alternate type of shear connector for the composite construction may be allowed by the Engineer. A drawing showing the type, design and details for the proposed alternate shear connector must be submitted to the Engineer for approval before permission for its use will be granted.

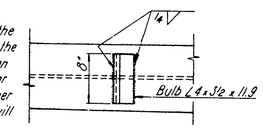

SHEAR CONNECTOR DETAIL
Scale: 1"=1'-0"

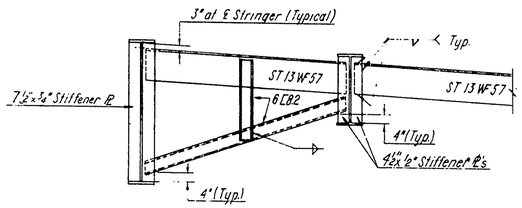

CF-2 T-1

AT PIERS

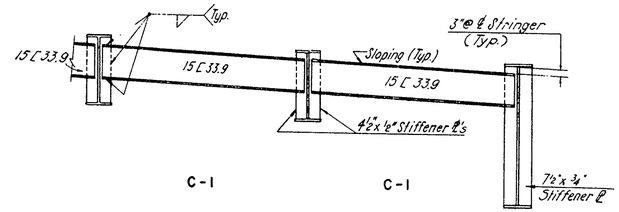

C-1 C-1

AT ABUTMENTS

END CROSS FRAMES - SPANS 1 & 4
Scale: 3/8"=1'-0"

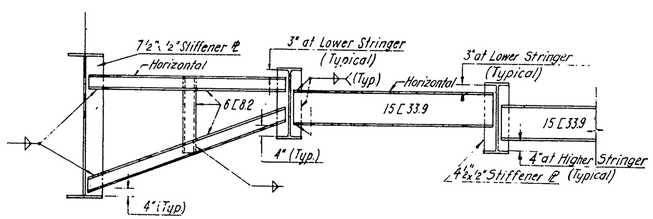

CF-1 C-2

INTERMEDIATE CROSS FRAMES - SPANS 1 & 4
Scale: 3/8"=1'-0"

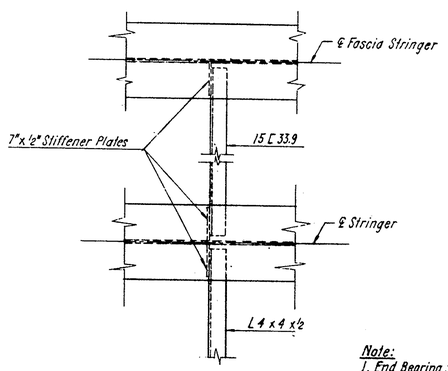

DETAIL 1
Scale: 3/4"=1'-0"

Note:
1. End Bearing Stiffener Plates are to be placed parallel to ℄ Pier
2. For Detail of Diaphragms at Pier with Expansion Brgs., See Sheet No. 83.
3. For Cross Frame Layout, see "Framing Plan", Sheet No. 81.
4. All welds shown are ⅜ unless otherwise noted.
5. For Location of Details 1, 2, 3, & 4, see Sheet No. 81.

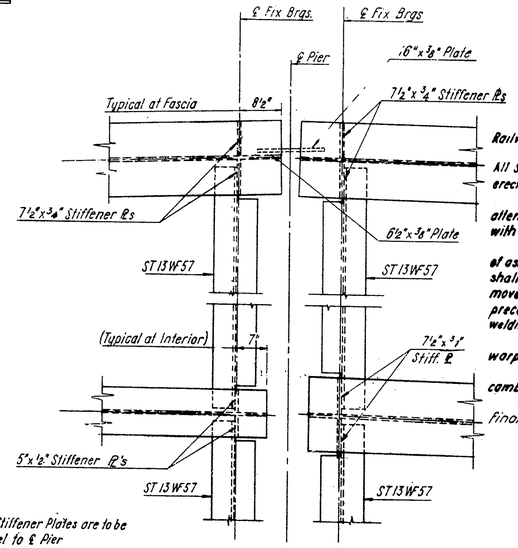

DETAIL 2
Scale: 3/4"=1'-0"

NOTES

All structural steel to be welded shall conform to A.S.T.M. Spec. A-373, except as noted in Spec. Provs.

All welding shall comply with the provisions of the current Specifications for Welded Highway and Railway Bridges of the American Welding Society. (See Special Provisions)

Shop splices in the web plates will be allowed as shown.

All Stiffener Plates and Cross frame Connection Plates shall be vertical when Stringers are in final erected position.

Flange plates of girders to be completely welded before assembly with web plates. Particular attention is directed to the requirement that the ends of all butt welds in the flanges shall be made with extensions as described in Article 505-k of the 1956 A.W.S. Specifications.

Web plate splices shall be entirely welded with complete penetration groove welds in advance of assembly. In order to avoid locked in stresses when welding flange plates to web plates, welding shall begin at the center of the girders and proceed outward to the ends, leaving the ends free to move as the welds contract. Also when welding the flange plates to the web plates, special precaution must be exercised in the positioning of the electrodes so that the major portion of the welding heat is applied to the thicker flange plates.

Finished girders shall be true to line and shape and free from any distortion, warpage or other shrinkage losses.

Loss of Camber in Girder due to shrinkage shall be compensated for by additional camber to be determined by fabricator.

Beams and Girders to be cut and ground so that ends are vertical in their final erected position.

No field splices of Girders will be permited.

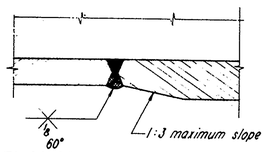

FLANGE PLATE DETAIL
Not to Scale

Note:
Detail typical for all flange plate splices.

In charge of P.H. R.L.
Made by T.P.
Checked by J.P.
Traced by
Checked by P.H.

DELAWARE
STATE HIGHWAY DEPARTMENT
DELAWARE TURNPIKE

UNDERPASS - ROUTE 273

STEEL DETAILS

DWG. NO.	SCALE	DATE
9 OF 16	AS NOTED	MAY 1962

CONTRACT NO.

GOODKIND & O'DEA
CONSULTING ENGINEERS

COUNTY	CONTRACT	FED. ROAD DIV. NO.	STATE	FED. AID PROJ. NO.	FISCAL YEAR	SHEET NO.	TOTAL SHEETS
NEW CASTLE	7001	2	DEL			83	170

REFERENCE SHEET FOR CONTRACT 7060

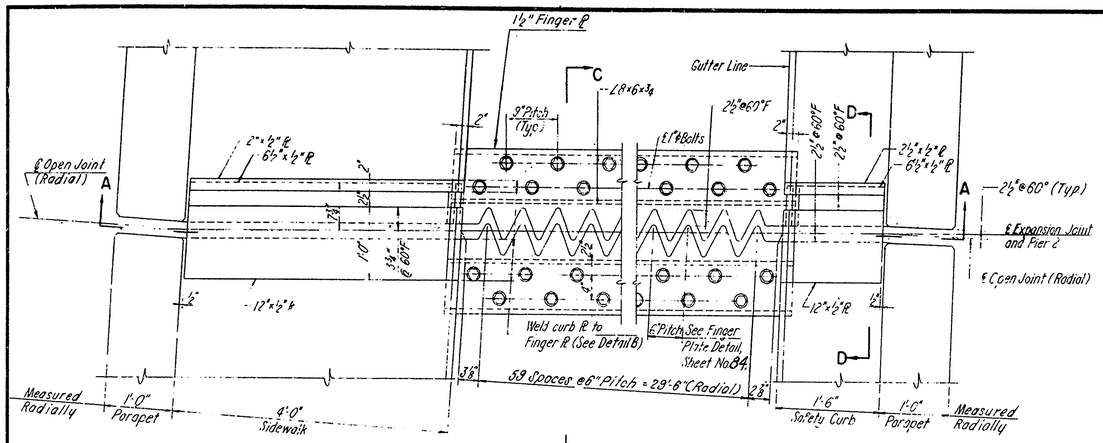

PLAN AT EXPANSION JOINT

Scale 1"=1'-0"

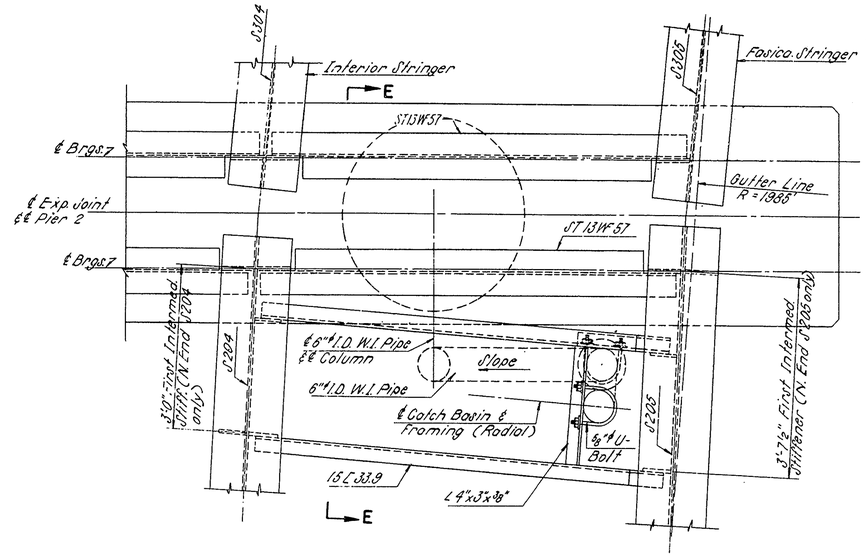

DRAINAGE PLAN AT EXPANSION JOINT-PIER 2

Scale: ¼"=1'-0"

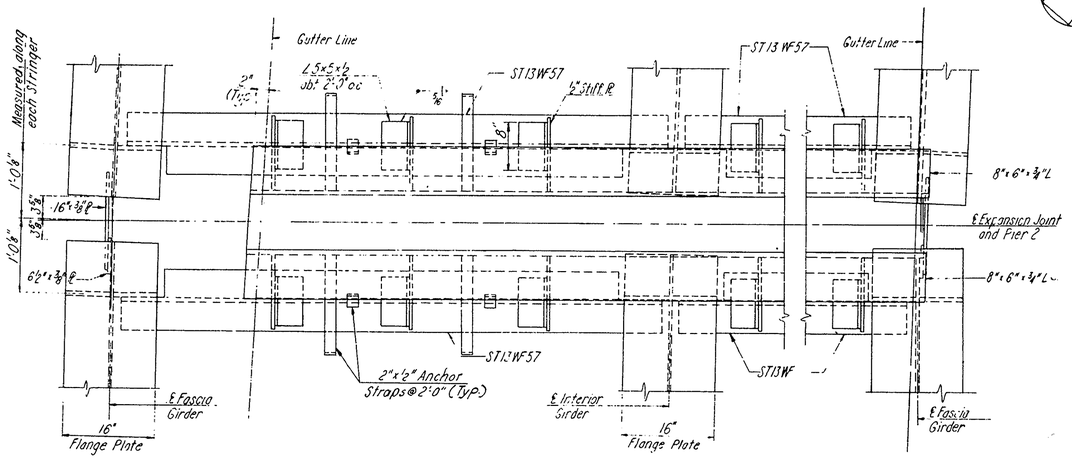

SECTION B-B

Scale 1"=1'-0"

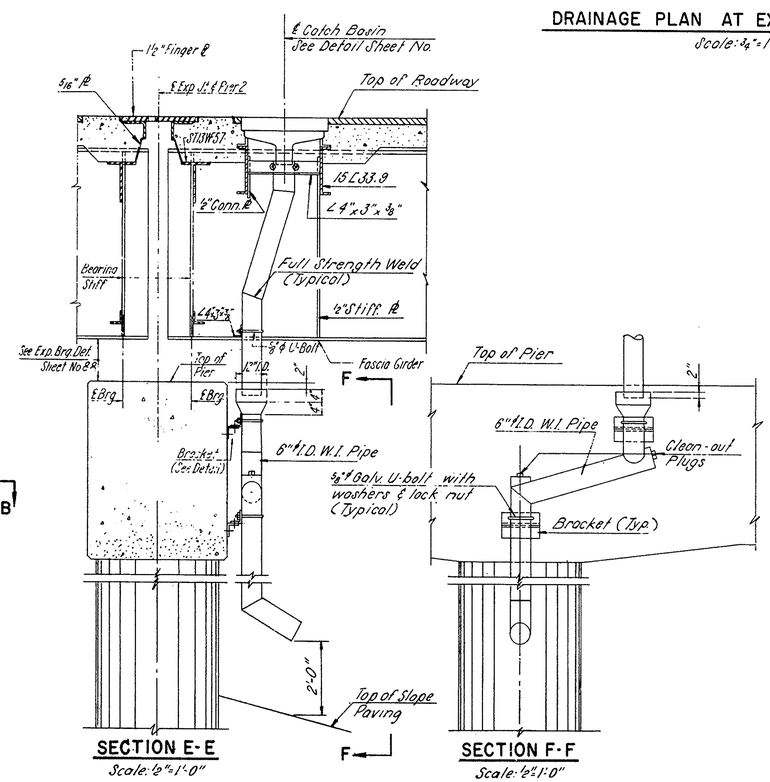

SECTION E-E

Scale: ½"=1'-0"

SECTION F-F

Scale: ½"=1'-0"

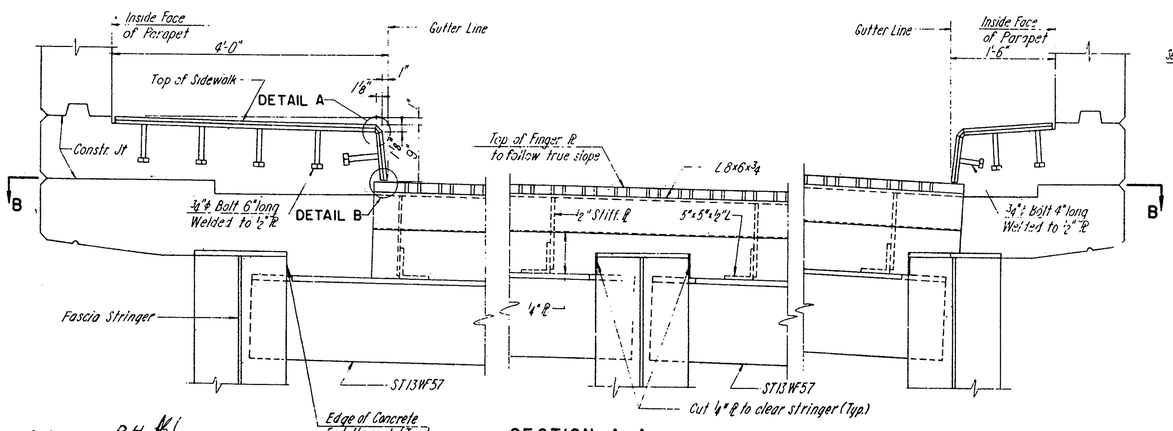

SECTION A-A

Scale: 1"=1'-0"

Notes: 1. For Sections C-C & D-D see Sheet No. 84.
2. For Details A & B, see Sheet No. 84.
3. For Finger Plate and Bolt Details see Sheet No. 84.

Note: 1 For Catch Basin and Drainage Details, see Sheet No. 84.

In charge of P.H. ML
Made by T.P.
Checked by J.D.
Traced by
Checked by

DELAWARE
STATE HIGHWAY DEPARTMENT
DELAWARE TURNPIKE

UNDERPASS - ROUTE 273

STEEL EXPANSION JOINT

DWG. NO.	SCALE	DATE
10 OF 16	AS NOTED	MAY 1956

CONTRACT NO.

GOODKIND & O'DEA
CONSULTING ENGINEERS

COUNTY	CONTRACT	FED. ROAD DIV. NO.	STATE	FED. AID PROJ. NO.	FISCAL YEAR	SHEET NO.	TOTAL SHEETS
NEW CASTLE	7001	2	DEL.			85	110

REFERENCE SHEET FOR CONTRACT 7060

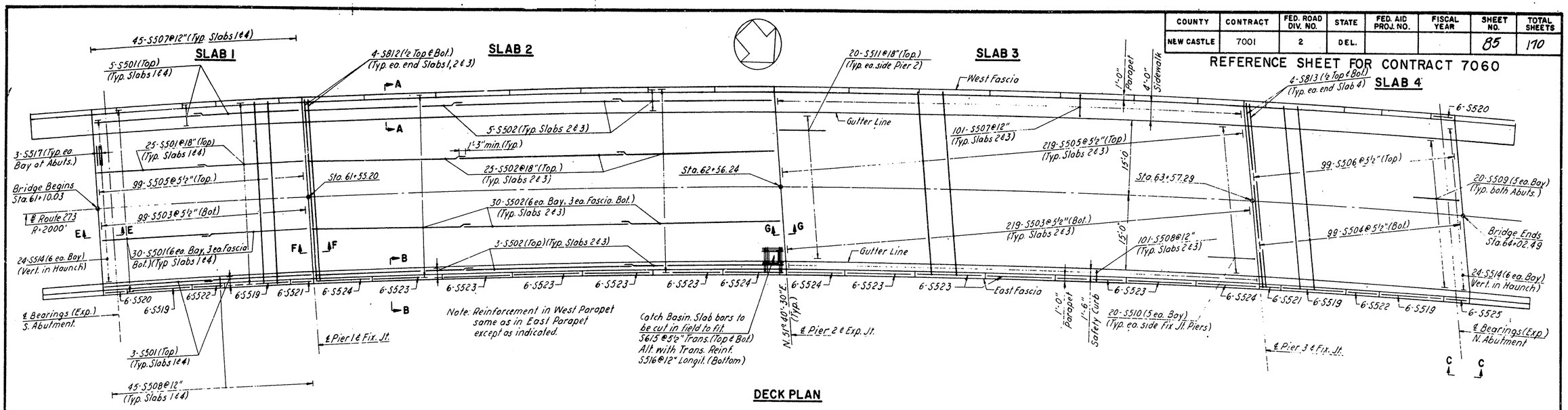

DECK PLAN

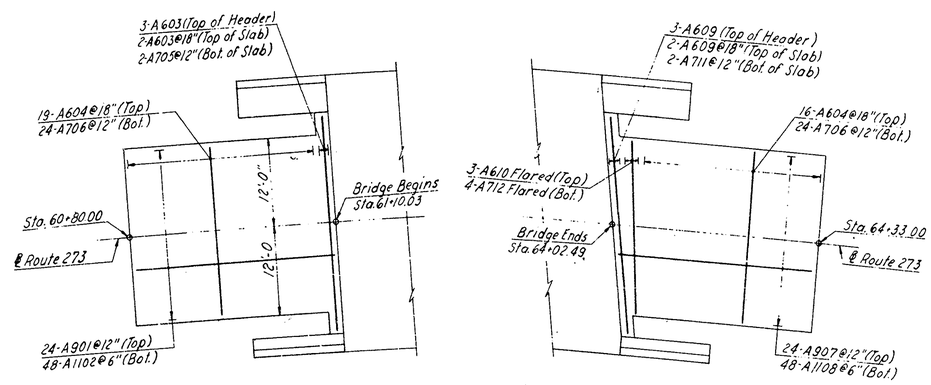

SOUTH APPROACH

NORTH APPROACH

APPROACH SLABS

BAR LIST

MARK	SIZE	TYPE	LENGTH	NUMBER BY SLAB 1	2	3	4	TOTAL	LOCATION AND DESCRIPTION
S501	5	St.	23'-1"	126	–	–	126	252	Longit. (Top & Bot.)
S502	5	St.	34'-5"	–	189	189	–	378	Longit. (Top & Bot.)
S503	5	St.	37'-2"	99	219	219	–	537	Trans. (Bot.)
S504	5	St.	37'-6"	–	–	–	99	99	Trans. (Bot.)
S505	5	Bt.	38'-4"	99	219	219	–	537	Trans. (Top.)
S506	5	Bt.	38'-8"	–	–	–	99	99	Trans. (Top)
S507	5	Bt.	7'-4"	45	101	101	45	292	Trans. (Sidewalk)
S508	5	Bt.	4'-10"	45	101	101	45	292	Trans. (Safety Curb)
S509	5	Bt.	13'-8"	20	–	–	20	40	Longit. Ends at Abutments
S510	5	Bt.	13'-0"	20	20	20	20	80	Longit. Ends at Piers (Fixed Joint)
S511	5	St.	10'-0"	–	20	20	–	40	Longit. Ends at Piers (Expansion Joint)
S812	8	St.	37'-2"	8	8	8	–	24	Trans. Ends (Top & Bot.)
S813	8	St.	37'-6"	–	–	–	8	8	Trans. Ends (Top & Bot.)
S514	5	Bt.	2'-3"	24	–	–	24	48	Vert. in Haunch at Abutments
S615	6	St.	5'-0"	–	12	–	–	12	Trans. (Top. & Bot.) at Catch Basin
S516	5	St.	5'-9"	–	6	–	–	6	Longit. (Bot.) at Catch Basin
S517	5	St.	6'-9"	12	–	–	12	24	Trans.-Haunch at Abutments
S618	6	Bt.	8'-8"	178	400	400	178	1156	Vert. Stirrups in Parapet
S519	5	St.	13'-8"	24	–	–	24	48	Longit.-Parapet
S520	5	St.	4'-8"	12	–	–	6	18	Longit.-Parapet
S521	5	St.	4'-5"	12	–	–	12	24	Longit.-Parapet
S522	5	St.	6'-9"	12	–	–	12	24	Longit.-Parapet
S523	5	St.	14'-10"	–	60	60	–	120	Longit.-Parapet
S524	5	St.	12'-3"	–	24	24	–	48	Longit.-Parapet
S525	5	St.	4'-6"	–	–	–	6	6	Longit.-Parapet (East Parapet only)

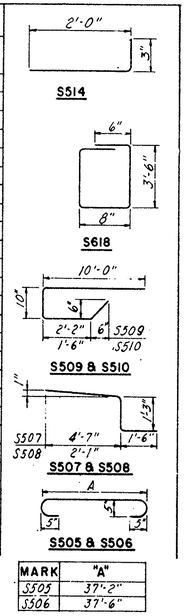

MARK	"A"
S505	37'-2"
S506	37'-6"

BAR LIST-APPROACH SLABS

MARK	SIZE	TYPE	LENGTH	NUMBER BY SLAB S. APPR.	N. APPR.	TOTAL	LOCATION AND DESCRIPTION
A901	9	St.	29'-6"	24	–	24	Longit. (Top)
A1102	11	Bt.	32'-8"	48	–	48	Longit (Bot.)
A603	6	St.	29'-6"	5	–	5	Trans. (Top & Header)
A604	6	St.	23'-6"	19	16	35	Trans. (Top)
A705	7	St.	29'-6"	2	–	2	Trans. (Bot.)
A706	7	St.	23'-6"	24	24	48	Trans. (Bot.)
A907	9	St.	*	–	24	24	Longit. (Top) 6 sets of 4; From 31'-10" to 28'-1", Δ= 9"
A1108	11	Bt.	*	–	48	48	Longit. (Bot.) 6 sets of 8; from 35'-0" to 31'-3", Δ= 9"
A609	6	St.	29'-10"	–	5	5	Trans. (Top & Header)
A610	6	St.	23'-8"	–	3	3	Trans. (Top)
A711	7	St.	29'-10"	–	2	2	Trans. (Bot.)
A712	7	St.	23'-8"	–	4	4	Trans. (Bot.)

*Denotes Series Bar

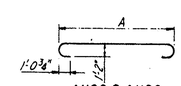

A1102 & A1108

MARK	"A"
A1102	29'-6"
A1108	Varies from 28'-1" to 31'-10" Δ= 9"

NOTE:
For Layout Plan, see Sheet No. 80.

In charge of R.H. H.L.
Made by N.E.
Checked by J.D.
Traced by
Checked by

DELAWARE
STATE HIGHWAY DEPARTMENT
DELAWARE TURNPIKE

UNDERPASS-ROUTE 273

DECK PLAN

DWG. NO	SCALE	DATE
12 OF 16	1"=10'	MAY 1962

CONTRACT NO.

GOODKIND & O'DEA
CONSULTING ENGINEERS

COUNTY	CONTRACT	FED. ROAD DIV. NO.	STATE	FED. AID PROJ. NO.	FISCAL YEAR	SHEET NO.	TOTAL SHEETS
NEW CASTLE	7001	2	DEL.			86	170

REFERENCE SHEET FOR CONTRACT 7060

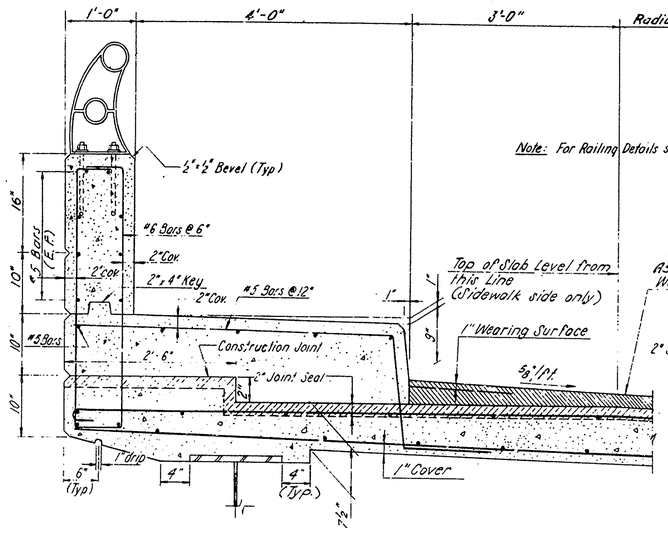

SECTION A-A
Scale: 1"=1'-0"

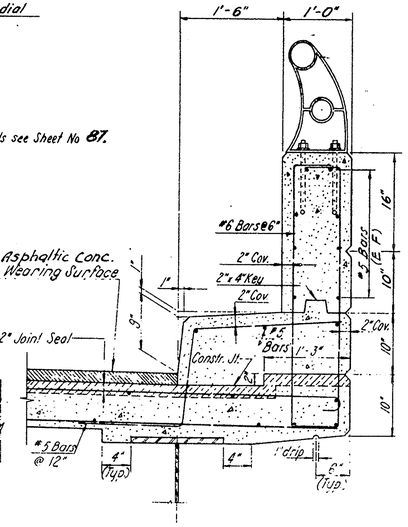

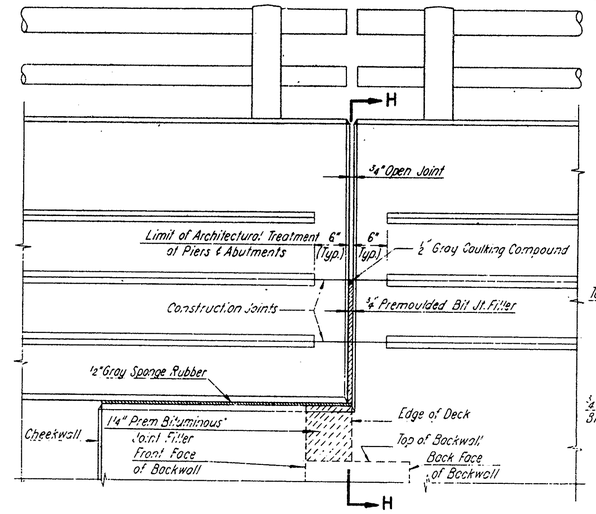

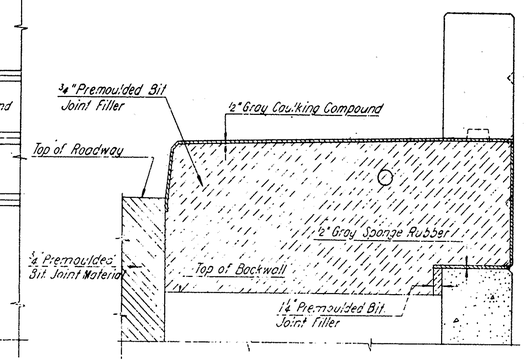

SECTION H-H
Scale: 1"=1'-0"

SECTION B-B
Scale: 1"=1'-0"

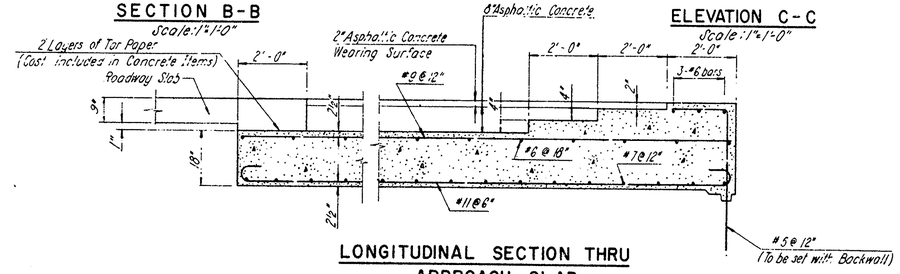

LONGITUDINAL SECTION THRU APPROACH SLAB
Scale: 1/2"=1'-0"

ELEVATION C-C
Scale: 1"=1'-0"

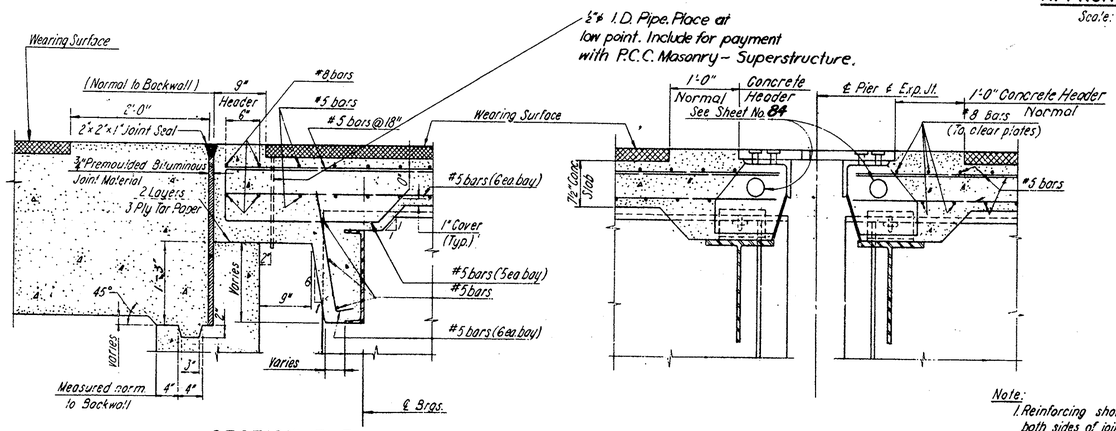

SECTION E-E
Scale: 1"=1'-0"

SECTION G-G
Scale: 1"=1'-0"

Note:
1. Reinforcing shown is typical both sides of joints.
2. For Structural Steel Details, see Sheet No. 82.
3. For Expansion Joint Details, see Sheet No. 84.

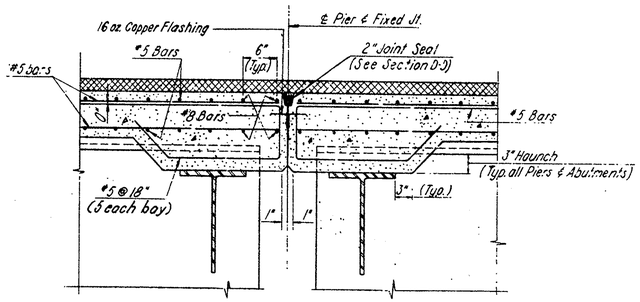

SECTION F-F
Scale: 1"=1'-0"

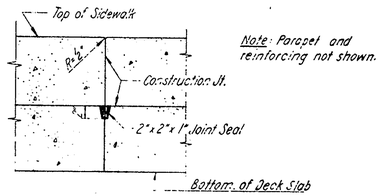

Note: Parapet and reinforcing not shown.

SECTION D-D
Scale: 1"=1'-0"

Note:
For Location of Sections see "Deck Plan" Sheet No 85.

In charge of P.H. PHL
Made by N.E.
Checked by J.D.
Traced by
Checked by P.H.

DELAWARE
STATE HIGHWAY DEPARTMENT
DELAWARE TURNPIKE

UNDERPASS - ROUTE 273
DECK DETAILS

DWG. NO.	SCALE	DATE	
13 OF 16	AS NOTED	MAY 1962	GOODKIND & O'DEA CONSULTING ENGINEERS

CONTRACT NO.

COUNTY	CONTRACT	FED. ROAD DIV. NO.	STATE	FED. AID PROJ. NO.	FISCAL YEAR	SHEET NO.	TOTAL SHEETS
NEW CASTLE	7001	2	DEL.			88	170

REFERENCE SHEET FOR CONTRACT 7060

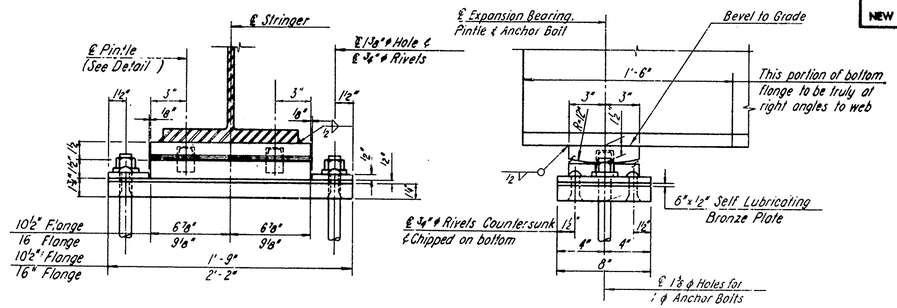

EXPANSION BEARING - ABUTMENTS

Scale: 2"=1'-0"

PIERS 1 & 3		PIER 2	
STRINGER	TF	STRINGER	TE
101	2¼"	201-205	2"
102-104	3½"		
105	2⅛"		
305	1⅞"		
402-404	3⅛"		
All others are 1¾"			

BASE PLATE TABLE

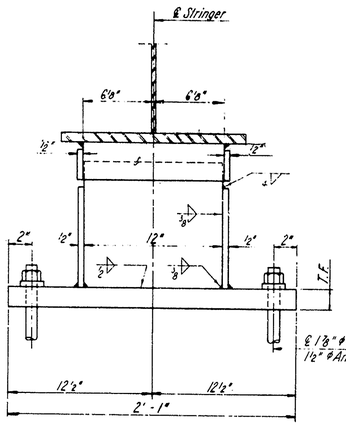

FIXED BEARING - PIERS 1 & 3

Scale: 2"=1'-0"

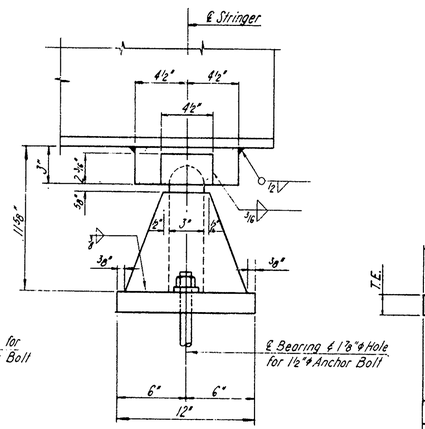

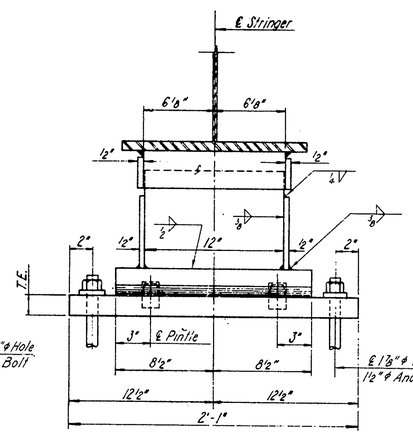

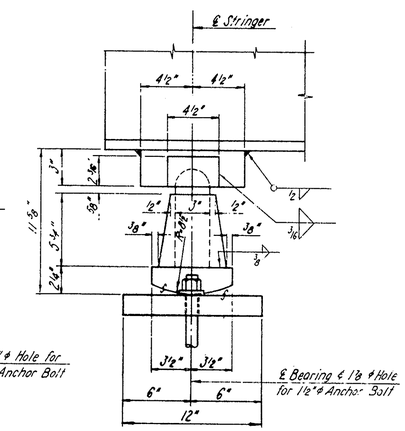

EXPANSION BEARING PIER 2

Scale: 2"=1'-0"

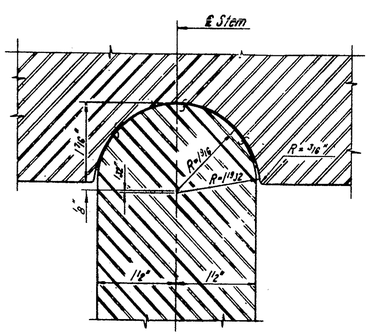

STEM DETAIL

Scale: ¾"=1"

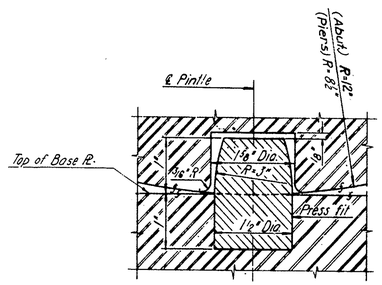

PINTLE DETAIL

Scale: ¾"=1"

Note: For Anchor Bolt Detail, see Sheet No 77 & 80.

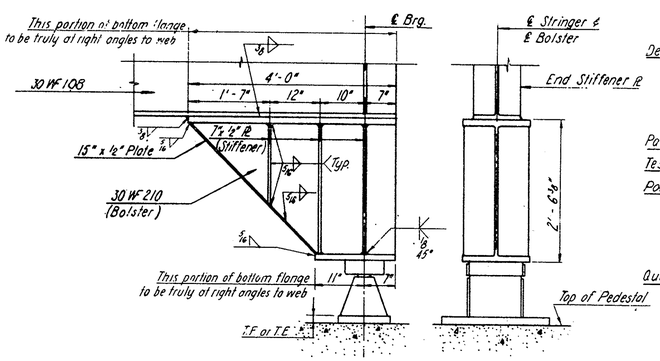

BOLSTER DETAIL

Scale: ¾"=1'-0"

GENERAL NOTES

Design Specifications: A.A.S.H.O. - 1957.

Loading: H-20-S16-44 Modified

Material and Fabrication Specifications: State of Delaware, State Highway Department, Standard Specifications, April 1, 1957.
A.W.S. 1956 Standard Specifications for Welded Highway and Railway Bridges.

Design:
Stresses - Structural and Reinforcing Steel: 18,000 psi.
Concrete. fc'=1,200 psi, n=10
Composite Construction based on no temporary intermediate supports to be used during construction.

Painting: For Shop and Field painting of Structural Steel see Spec. Provisions.

Test Piles: Piles shall be driven according to Standard Specifications.

Portland Cement Concrete Masonry: The cost of furnishing and placing all bituminous joint filler, flashing, joint seal, caulking compound, sponge rubber, tar paper, and concrete water-reducing retarder admixture to be included in this item See Special Provisions
All exposed concrete edges shall be bevelled 1"x1" unless otherwise noted

Quantities: Quantities shown shall not relieve the Contractor of the responsibility of checking them in preparing his bid.

In charge of P.H. AGL
Made by H.E.
Checked by J.D.
Traced by
Checked by

DELAWARE
STATE HIGHWAY DEPARTMENT
DELAWARE TURNPIKE

UNDERPASS-ROUTE 273

BEARINGS

DWG. NO.	SCALE	DATE
15 OF 16	AS NOTED	MAY 1962

CONTRACT NO.

GOODKIND & O'DEA
CONSULTING ENGINEERS

DELAWARE TURNPIKE	CONT NO	TITLE	SHEET NO	TOTAL SHEETS
	7054	PLAN	16	49

REFERENCE SHEET FOR CONTRACT 7060

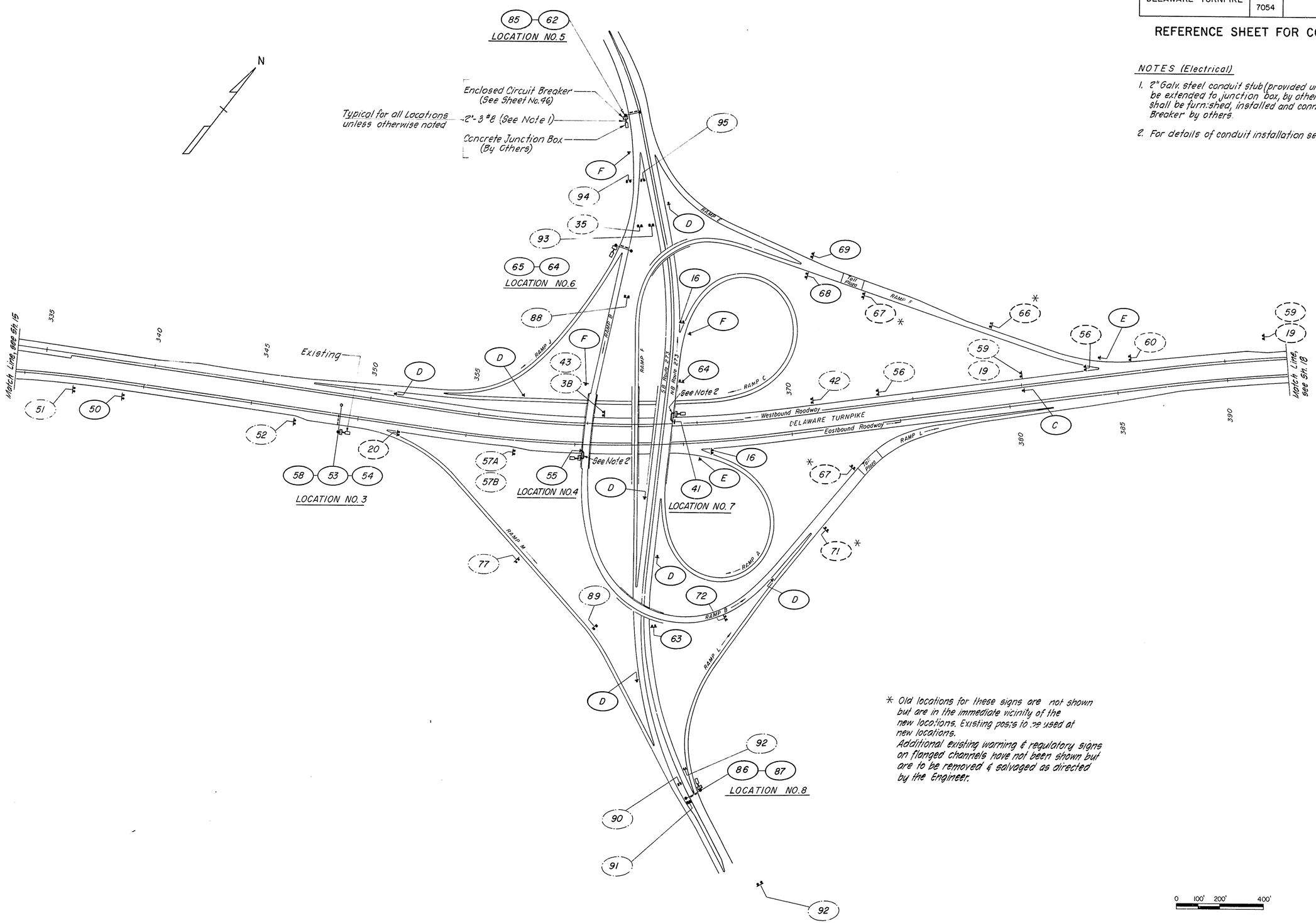

NOTES (Electrical)

1. 2" Galv. steel conduit stub (provided under this Contract) shall be extended to junction box, by others. Service cables (3 #6) shall be furnished, installed and connected to Enclosed Circuit Breaker by others.
2. For details of conduit installation see Sheet 46 & 47.

* Old locations for these signs are not shown but are in the immediate vicinity of the new locations. Existing posts to be used at new locations.
Additional existing warning & regulatory signs on flanged channels have not been shown but are to be removed & salvaged as directed by the Engineer.