CONTRACT	COUNTY	STATE	F.H.W.A. REG. NO.	FEDERAL AID PROJECT NUMBER	SHEET NUMBER	TOTAL SHEETS
	NEW CASTLE	DEL	3		1	351

THE STATE OF DELAWARE

DEPARTMENT OF TRANSPORTATION
DIVISION OF HIGHWAYS

SPECIFICATION AND CONSTRUCTION PLANS FOR:

I-495 / EDGEMOOR ROAD INTERCHANGE

DESIGN DESIGNATION

FUNCTIONAL CLASS
TYPE OF CONSTRUCTION
A.D.T. CURRENT
A.D.T. PROJECTED
D.H.V. PROJECTED
DESIGN SPEED
% TRUCKS
DIRECTION DISTRIBUTION %

SCALES

PLAN SHEET: 1"= 30 Feet
PROFILE SHEET:
Horizontal: 1"= 30 Feet
Vertical: 1"= 5 Feet
DETAIL SHEET: 1"= NTS Feet

MASTER QUANTITY SHEETS #2 THRU #6

		INDEX SHEET NO.	CONTRACT NO.	FED. AID PROJECT NO.
PART A	EDGEMOOR ROAD BRIDGE OVER AMTRAK (BR. 567)	1A	81-071-01	BRM-1231 (2)
PART B	I-495 EDGEMOOR ROAD INTERCHANGE	1B	82-091-04	IR-495-3 (44)
PART C	EDGEMOOR ROAD AND GOVERNOR PRINTZ BLVD. RECONSTRUCTION	1C	84-021-01	M-1137 (1)
PART D	I-495 AT EDGEMOOR ROAD RAMPS D AND E	1D	82-091-04	IR-495-3 (44)

STATE OF DELAWARE

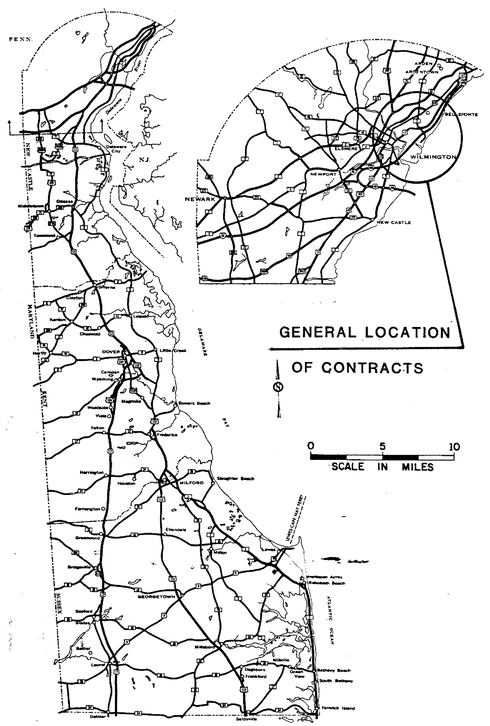

GENERAL LOCATION OF CONTRACT

MASTER LIST OF STANDARD SHEETS

C-1, C-2, C-3, C-4, C-5, D-1-11, D-2-4, D-3-4, D-7-5, D-8-6, D-12-3, D-14-2, D-15, D-16, E-1, G-2-9, G-3-5, G-4-7, G-5, G-6-6, G-7-1, G-8, H-1, H-2, M-3, M-4, M-5, P-1, S-3, T-1-1, T-2, T-3-1

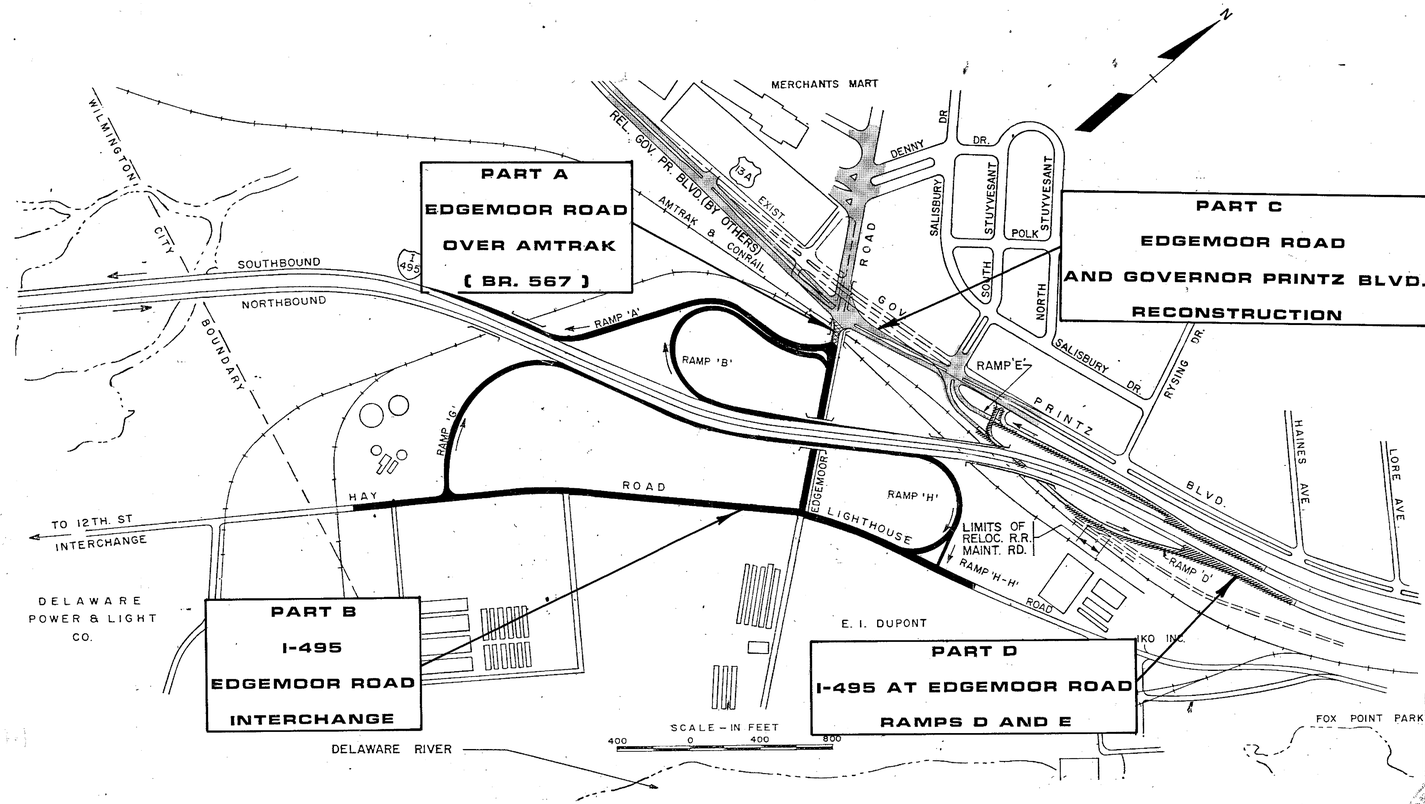

PREPARED AND RECOMMENDED BY

STEINMAN, BOYNTON, GRONQUIST & BIRDSALL

CONSULTING ENGINEERS

DIVISION OF HIGHWAYS

RECOMMENDED	RECOMMENDED	RECOMMENDED	RECOMMENDED	APPROVED
PROJECT ENGINEER	REVIEW ENGINEER	Acting BRIDGE ENGINEER	DEPUTY DIRECTOR OF HIGHWAYS	DIRECTOR OF HIGHWAYS
RECOMMENDED Sept 11 19 85	RECOMMENDED 9/11 19 85	RECOMMENDED 9/13 19 85	RECOMMENDED 9-11 19 85	APPROVED 9/12/ 19 85
SEAL	SEAL	SEAL	SEAL	SEAL

DEPARTMENT OF TRANSPORTATION
FEDERAL HIGHWAY ADMINISTRATION

APPROVED _____ 19 ____

DIVISION ADMINISTRATOR

CONTRACT	COUNTY	F.A.P. NO.	SHEET NO.	TOTAL SHTS.
	NEW CASTLE		2	

I-495 / EDGEMOOR ROAD INTERCHANGE

MASTER QUANTITY SHEET

SECTION Nº		201	201	201	202X △1	204	207	208	209	209	209	209 △1	209	S.P.	S.P.	210	210	S.P.** △1	S.P. △1	S.P.	S.P.	303	303	309	401	401	402	501	502A	602* 2	602*	602*
SECTION TITLE		CLEARING AND GRUBBING	CLEARING AND GRUBBING	CLEARING AND GRUBBING	EXCAVATION AND EMBANKMENT	MUCK EXCAVATION	EXCAVATION AND BACKFILL FOR STRUCTURES	EXCAVATION AND BACKFILL FOR PIPE TRENCHES	BORROW TYPE A	BORROW TYPE B	BORROW TYPE C	BORROW TYPE F	BORROW TYPE G	FURNISHING OF BORROW, TYPE C, FOR STRUCTURE, PIPE, AND UTILITY TRENCH BACKFILL	SETTLEMENT PLATFORM	REMOVAL OF STRUCTURES AND OBSTRUCTIONS	REMOVAL OF STRUCTURES AND OBSTRUCTIONS	SUPPLY OF FLY ASH	FLY ASH EMBANKMENT	UNDERCUT EXCAVATION	CRUSHER RUN (T.R.M.)	CRUSHER RUN BASE COURSE	SUBBASE DRAINAGE DITCH	BITUMINOUS CONCRETE BASE COURSE (DEEP LIFT)	HOT MIX, HOT LAID BITUMINOUS CONCRETE PAVEMENT (TYPE B)	HOT MIX, HOT LAID BITUMINOUS CONCRETE PAVEMENT (TYPE C)	HOT MIX BITUMINOUS CONCRETE AND / OR ASPHALT COLD PATCH (T.R.M.)	PORTLAND CEMENT CONCRETE PAVEMENT CLASS B, 10" THICK	PATCHING PORTLAND CEMENT CONCRETE PAVEMENT	PORTLAND CEMENT CONCRETE MASONRY CLASS B, ABUTMENT FOOTINGS	PORTLAND CEMENT CONCRETE MASONRY CLASS B, FOOTINGS	PORTLAND CEMENT CONCRETE MASONRY CLASS A RETAINING WALL
PART	UNIT	L.S.	L.S.	L.S.	C.Y.	C.Y.	C.Y.	C.Y.	C.Y.	C.Y.	C.Y.	C.Y.	C.Y.	C.Y.	EA.	L.S.	L.S.	C.Y.	C.Y.	C.Y.	TONS	S.Y.-IN.	L.F.	TONS	TONS	TONS	TONS	S.Y.	S.Y.	C.Y.	C.Y.	C.Y.
A	81-071-01 BRM-123(12)	L.S.					2,280				2,200	2,800		2,090																~~664~~ 644		
C	84-021-01 M-113(1)		L.S.		23,484	21,500	250	2,665	31,809	27,098		130,003	3,073	3,043	6		L.S.			500	300	24,191	60	980	654	554	250	32,251	172			
B	82-091-04 IR-495-3(44)				28,642	111,982	981	4,130	22,326	133,027	167	76,514	4,719	3,370		L.S.		51,252	51,252	118	400	290,518	140	9,006	4,184	3,172	250	20,537	72	105		
D	82-091-04 IR-495-3(44)				7,283	3,880	945	2,927	10,160	2,205		42,126	3,187	1,879								94,360	283	328	203	178	100	9,269			149	297
B + D	82-091-04 IR-495-3(44) SUB-TOTAL			L.S. (99%)	35,925	115,862	1,926	7,057	32,486	135,232	167	218,640	7,906	5,249		L.S.		51,252	51,252	118	400	384,878	423	9,334	4,387	3,350	350	29,806	72	105	149	297
D	82-091-04 NON-PART.			L.S. (1%)	337							633										12,368		393	165	102						
PROPOSAL		L.S.	L.S.	L.S.	59,746	137,362	4,456	9,722	64,295	162,330	2,367	352,076	10,979	10,382	6	L.S.	L.S.	51,252	51,252	618	700	421,437	483	10,707	5,206	4,006	600	62,057	244	~~763~~ 749	149	297

SECTION Nº		602* 2	602*	602*	602* 2	602* 2	S.P.	S.P.	S.P.	S.P.	S.P.	S.P.	S.P.	S.P.	S.P.	S.P.	S.P.	S.P.	S.P.	605*	605A* 2	606 2	606	S.P.	608*	609	S.P.	S.P.	S.P.	S.P.	S.P.	S.P.
SECTION TITLE		PORTLAND CEMENT CONCRETE MASONRY CLASS A ABUTMENT ABOVE FOOTINGS	PORTLAND CEMENT CONCRETE MASONRY CLASS B, PIER FOOTINGS	PORTLAND CEMENT CONCRETE MASONRY CLASS A, PIER ABOVE FOOTINGS	PORTLAND CEMENT CONCRETE MASONRY CLASS D, SUPERSTRUCTURE	PORTLAND CEMENT CONCRETE MASONRY CLASS A, APPROACH SLABS	REMOVAL OF EXISTING BRIDGES EDGEMOOR RD OVER AMTRAK	REMOVAL OF EXISTING BRIDGES GOV PRINTZ BLVD	MODIFICATION OF EXISTING CATENARY STRUCTURES	NEW CATENARY STRUCTURES	AMTRAK CATENARY MATERIAL	OVERHEAD CONDUCTORS	RELOCATION OF EXISTING OVERHEAD CONDUCTORS	REMOVAL OF EXISTING OVERHEAD CONDUCTORS	MODIFICATION OF EXISTING CATENARY STRUCTURES (W403 AND W404)	AMTRAK CATENARY MATERIAL	CYLINDRICAL CAST IN PLACE FOUNDATIONS	CYLINDRICAL CAST IN PLACE FOUNDATIONS	GUY ANCHORS	BAR REINFORCEMENT	BAR REINFORCEMENT EPOXY COATED	STEEL STRUCTURES (EDGEMOOR RD OVER AMTRAK) (APPROX ~~250,000~~ 229,000 LBS.)	STEEL STRUCTURES (I-495 - CONRAIL, EDGEMOOR BRANCH) (I-495 - EDGEMOOR ROAD) (APPROX 273,700 LBS.)	CLEANING AND PAINTING EXISTING STEEL STRUCTURES	REMOVAL OF EXISTING MASONRY	COARSE AGGREGATE FOR FOUNDATION STABILIZATION	PORTLAND CEMENT CONCRETE MONOLITHIC NOSE	CULVERT PIPE 15" ø	CULVERT PIPE 18" ø	CULVERT PIPE 24" ø	CULVERT PIPE 30" ø	CULVERT PIPE 36" ø
PART	UNIT	C.Y.	C.Y.	C.Y.	C.Y.	C.Y.	L.S.	L.S.	L.S.	L.S.	L.S.	L.F.	L.F.	L.F.	L.S.	L.S.	L.S.	L.S.	EA.	LBS.	LBS.	L.S.	L.S.	L.S.	C.Y.	TONS	C.Y.	L.F.	L.F.	L.F.	L.F.	L.F.
A	81-071-01 BRM-123(12)	~~968~~ 912	256	374	~~673~~ 693	~~359~~ 320	L.S.		L.S.	L.S.	L.S.	2,270	12,930	1,860			L.S.		2	155,600	~~241,612~~ ~~235,070~~	L.S.				630						
C	84-021-01 M-113(1)							L.S.																	20	450		1,504	517	265	74	8
B	82-091-04 IR-495-3(44)	165	114	159	373	178														105,000	106,200		L.S.	L.S.	169	100	12	2,031	1,135	468	165	225
D	82-091-04 IR-495-3(44)														L.S.	L.S.		L.S.	2	48,458					133	60		79	276			105
B + D	82-091-04 IR-495-3(44) SUB-TOTAL	165	114	159	373	178									L.S.	L.S.		L.S.	2	153,458	106,200		L.S.	L.S.	302	160	12	2,110	1,411	468	165	330
D	82-091-04 NON-PART.																															
PROPOSAL		~~1,127~~ 1077	370	533	~~1,046~~ 1066	~~530~~ 528	L.S.	L.S.	L.S.	L.S.	L.S.	2,270	12,930	1,860	L.S.	L.S.	L.S.	L.S.	4	309,058	~~341,270~~ 347,612	L.S.	L.S.	L.S.	322	1,240	12	3,614	1,928	733	239	338

* FIXED QUANTITY ITEM : REFER TO SECTION 109.6 OF STANDARD SPECIFICATIONS
** FIXED PRICE
*** TO BE DETERMINED IN THE FIELD

REVISIONS

ADDENDUM NO. △ TRANSFERRED 3 QUANTITIES TO SHEET 6, SEC. 202 NOT FIXED QUANTITY ITEM 11/18/85 R.T.C.	2	REVISED QUANTITIES DUE TO ABUT. RELOCATION, MAA - 5/1/87

PRELIM. TRACING _____ DESIGN _____ CHKD. _____

CONTRACT	COUNTY	F.A.P. NO.	SHEET NO.	TOTAL SHTS.
	NEW CASTLE		3	357

I-495 / EDGEMOOR ROAD INTERCHANGE

MASTER QUANTITY SHEET

SECTION Nº		615	615	615	615	615	615	S.P.	616	616	617	620	620	620	620	620	620	620	620	620	620	620	624	624	625	625	625	S.P.	S.P.	628	S.P.	S.P.
SECTION TITLE		18 IN. REINFORCED CONCRETE PIPE CLASS III	24 IN. REINFORCED CONCRETE PIPE CLASS III	30 IN. REINFORCED CONCRETE PIPE CLASS III	36 IN. REINFORCED CONCRETE PIPE CLASS III	42 IN. REINFORCED CONCRETE PIPE CLASS III	72 IN. REINFORCED CONCRETE PIPE CLASS III	PRECAST REINFORCED CONCRETE BOX CULVERT 6' X 3'	19' X 30' REINFORCED CONCRETE ELLIPTICAL PIPE CLASS IV	76' X 48' REINFORCED CONCRETE ELLIPTICAL PIPE CLASS III	18 IN. 16 GA. GALVANIZED CORRUGATED STEEL PIPE	FLARED END SECTIONS 24 IN. REINFORCED CONCRETE	FLARED END SECTIONS 30 IN. REINFORCED CONCRETE	FLARED END SECTIONS 36 IN. REINFORCED CONCRETE	FLARED END SECTIONS 72 IN. REINFORCED CONCRETE	FLARED END SECTIONS FOR CULVERT PIPE 15" ø	FLARED END SECTIONS FOR CULVERT PIPE 18" ø	FLARED END SECTIONS FOR CULVERT PIPE 24" ø	FLARED END SECTIONS FOR CULVERT PIPE 30" ø	FLARED END SECTIONS FOR CULVERT PIPE 36" ø	FLARED END SECTIONS CORRUGATED METAL PIPE 15 IN.	FLARED END SECTIONS CORRUGATED METAL PIPE 18 IN.	FLARED END SECTIONS 19 IN. X 30 IN. REINF. CONCRETE	CAST - IN - PLACE CONCRETE PILES 12"ø	STEEL SHELL TEST PILES 12"ø	STEEL H PILES HP 12 X 53	STEEL H TEST PILES HP 12 X 53	STEEL H PILES LOAD TEST	CONCRETE HEADWALL	TEMPORARY SHEETING LEFT IN PLACE	CONCRETE SLOPE PAVING	REMOVAL OF EXISTING CONCRETE SLOPE PAVEMENT	PREFABRICATED EXPANSION JOINT SYSTEMS 5/8" X 1 5/8"
PART	UNIT	L.F.	L.F.	L.F.	L.F.	L.F.	L.F.	L.F.	L.F.	L.F.	L.F.	EA.	EA.	EA.	EA.	EA.	EA.	EA.	EA.	EA.	EA.	EA.	L.F.	L.F.	L.F.	L.F.	L.S.	L.S.	S.F.	S.Y.	S.F.	L.F.
A	81-071-01 BRM-123(12)																								21,295	276			2,350	625		
C	84-021-01 M-113(7)	198	446	361	34			120		66		2	2			2		1			9							L.S.	27,450			
B	82-091-04 IR-495-3(44)		150		25		83		36			2		2	2	3	12	5	3	2	9	7	2	1,612	183	5,020	730	L.S.		4,410	842		54
D	82-091-04 IR-495-3(44)		104		778	241					40															900				~~4,067~~ 7,119	16	550	
B + D	82-091-04 IR-495-3(44) SUB-TOTAL		254		803	241	83		36		40	2		2	2	3	12	5	3	2	9	7	2	1,612	183	5,920	730	L.S.		~~8,437~~ 11,529	858	550	54
D	82-091-04 NON-PART.																															
PROPOSAL		198	700	361	837	241	83	120	36	36	40	4	2	2	2	5	12	6	3	2	18	7	2	1,612	183	27,215	1,006	L.S.	L.S.	~~38,277~~ 41,329	1,483	550	54

SECTION Nº		S.P.	S.P.	S.P.	S.P.	S.P.	S.P.	S.P.	S.P.	S.P.	S.P.	S.P.	S.P.	704	705	706	707	707	S.P.	708	708	709	710	710	710	710	710	711	711	711	711	711
SECTION TITLE		PREFABRICATED EXPANSION JOINT SYSTEMS 2 1/2" X 2 3/4"	PREFABRICATED EXPANSION JOINT SYSTEMS 3" X 3"	PREFABRICATED EXPANSION JOINT SYSTEMS 4" X 4 3/4"	PREFABRICATED EXPANSION JOINT SYSTEMS (AS 300 BY ACME)	REPLACEMENT OF PREFORMED EXPANSION JOINT SYSTEM	REPLACEMENT OF PREFORMED ELASTOMERIC JOINT SEAL 1 5/8" X 1 5/8"	REPLACEMENT OF PREFORMED ELASTOMERIC JOINT SEAL 3" X 3"	STANDPIPE LOCATION PIER # 2 SOUTHBOUND	STANDPIPE LOCATION PIER # 2 NORTHBOUND	RETROFITTING FATIGUE DAMAGED COVER PLATE TERMINALS	BEARING REPAIRS	6" ø PERFORATED PIPE UNDERDRAIN	PORTLAND CEMENT CONCRETE GUTTER	PORTLAND CEMENT CONCRETE CURB, TYPE I	PORTLAND CEMENT CONCRETE PARKWAY CURB, TYPE I	INTEGRAL PORTLAND CEMENT CONCRETE CURB AND GUTTER TYPE 2	INTEGRAL PORTLAND CEMENT CONCRETE CURB AND GUTTER TYPE 3	PORTLAND CEMENT CONCRETE PARKWAY CURB, TYPE I (MONOLITHIC)	4 IN. THICK PORTLAND CEMENT CONCRETE SIDEWALK	6 IN. THICK PORTLAND CEMENT CONCRETE SIDEWALK	HOT MIX, HOT LAID BITUMINOUS CONCRETE CURB TYPE I	CORRUGATED METAL DOWNSPOUTS 16 GA. 8" ø	CORRUGATED METAL DOWNSPOUTS 16 GA. 12" ø	CORRUGATED METAL DOWNSPOUTS 16 GA. 15" ø	CORRUGATED METAL DOWNSPOUTS 16 GA. 18" ø	INTAKE BASINS FOR CORRUGATED METAL DOWNSPOUTS	CATCH BASINS A	CATCH BASINS A-A	CATCH BASINS A-A MODIFIED	CATCH BASINS B	CATCH BASINS J
PART	UNIT	L.F.	L.F.	L.F.	L.F.	L.F.	L.F.	L.F.	L.S.	L.S.	EA.	EA.	L.F.	S.Y.	L.F.	L.F.	L.F.	L.F.	L.F.	S.F	S.F	L.F.	L.F.	L.F.	L.F.	L.F.	EA.	EA.	EA.	EA.	EA.	EA.
A	81-071-01 BRM-123(12)	98		94									300																			
C	84-021-01 M-113(7)													377	7,122	3,406	50	3,439	1,340	32,765					443	50		24	2		8	11
B	82-091-04 IR-495-3(44)		72		19	166	274	204	L.S.	L.S.	56	14	185	797	8,435	1,090		9,693		14,736	2,586	2,375		12	822	640		35	7		9	25
D	82-091-04 IR-495-3(44)													560	3,880					58		1,033	104				2	4	6	3		
B + D	82-091-04 IR-495-3(44) SUB-TOTAL		72		19	166	274	204	L.S.	L.S.	56	14	185	1,357	12,315	1,090		9,693		14,794	2,586	3,408	104	12	822	640	2	39	13	3	9	25
D	82-091-04 NON-PART.																					395										
PROPOSAL		98	72	94	19	166	274	204	L.S.	L.S.	56	14	485	1,734	19,437	4,496	50	13,132	1,340	47,559	2,586	3,803	104	12	1,265	690	2	63	15	3	17	36

* FIXED QUANTITY ITEM : REFER TO SECTION 109.6 OF STANDARD SPECIFICATIONS
** FIXED PRICE
*** TO BE DETERMINED IN THE FIELD

REVISIONS

Addendum No. 2 Added Flared End Sections, C.M.P. 15" & 18" & Revised Ramp Sheeting 1-9-86 R.T.C.

CHKD. ____ DESIGN ____

CONTRACT	COUNTY	F.A.P. NO.	SHEET NO.	TOTAL SHTS.
	NEW CASTLE		4	-

I-495 / EDGEMOOR ROAD INTERCHANGE

MASTER QUANTITY SHEET

△1

SECTION №		711	711	711	711	712	712	712	712	S.P.	713	S.P.	S.P.	715	716	718	S.P.	S.P.	S.P.	S.P.	719	719	720	720	720	720	S.P.	721	722	723	724	724
SECTION TITLE		CATCH BASINS	CATCH BASINS	CATCH BASINS	INLET	MANHOLES	MANHOLES	MANHOLES	MANHOLES	JUNCTION BOX-TYPE A	ADJUSTING AND REPAIRING EXISTING CATCH BASINS AND MANHOLES	MODIFICATION OF RAILROAD MANHOLE # 1	MODIFICATION OF RAILROAD MANHOLE # 2	GALVANIZED STEEL BEAM GUARD RAIL (STEEL POST)	TWISTED END ANCHORAGES	MEDIAN BARRIER BEAM GUARD RAIL (STEEL POST)	RELOCATE EXISTING STEEL BEAM GUARDRAIL	GUARDRAIL TO BARRIER CONNECTION (APPROACH TYPE)	GUARDRAIL TO BARRIER CONNECTION (EXIT TYPE)	ADDITIONAL STEEL BEAM GUARDRAIL	RIGHT - OF - WAY FENCE	RIGHT OF WAY FENCE GATES	CHAIN LINK FENCE	CHAIN LINK FENCE	CHAIN LINK FENCE	CHAIN LINK FENCE EXTENSION ARMS AND BARBED WIRE	RELOCATION OF CHAIN LINK FENCE	VEHICULAR GATES	TOPSOIL 4"	TOPSOILING 4"	PERMANENT ROADSIDE SEEDING AND MULCHING	PERMANENT SEEDING SUBURBAN DEVELOPMENTS
		J MODIFIED	PW-BD-2 MODIFIED#1	PW-BD-2 MODIFIED#2	TYPE D-2	TYPE A	TYPE B	TYPE D	TYPE D-D														6 FT.	TERMINAL POSTS	3'-6"	6 FT.		22' WIDE				
PART	UNIT	EA.	EA.	EA.	EA.	EA.	EA.	EA.	EA.	EA.	EA.	L.S.	L.S.	L.F.	EA.	L.F.	L.F.	EA.	EA.	L.F.	L.F.	EA.	L.F.	EA.	L.F.	L.F.	L.F.	EA.	S.Y.	S.Y.	S.Y.	S.Y.
A	81-071-01 BRM-123(12)																	1	2						153							
C	84-021-01 M-113(1)	3				1				3	10			4,301	5								146	4			320	1	10,448			10,448
B	82-091-04 IR-495-3(44)	4		1	2				1	3	2			6,940	5		3,730	5	5		4,743	2	1,625	10		195	1,962		100	42,632	42,632	
D	82-091-04 IR-495-3(44)		2	1		1	1	2			3	L.S.	L.S.	2,521	5		2,010	3	1	100			100	19			1,100		1,110	2,594	3,704	
B + D	82-091-04 IR-495-3(44) SUB-TOTAL	4	2	2	2		1	1	3	3	5	L.S.	L.S.	9,461	10		5,740	8	6	100	4,743	2	1,725	29		195	3,062		1,210	45,226	46,336	
D	82-091-04 NON-PART.										2					118																
PROPOSAL		7	2	2	2	1	1	1	3	6	17	L.S.	L.S.	13,762	15	118	5,740	9	8	100	4,743	2	1,871	33	153	195	3,382	1	11,658	45,226	46,336	10,448

△2

SECTION №		724	725	725	725	S.P.	S.P.	S.P.	S.P.	726	728	730	731	S.P.	733	734	S.P.	735**	736	738**	739	S.P.**	S.P.	S.P.	S.P.	S.P.	S.P.	S.P.	S.P.	S.P.	S.P.	S.P.
SECTION TITLE		CROWNVETCH SEEDING AND MULCHING	(TWPC) EROSION CONTROL EXCAVATION AND EMBANKMENT	(TWPC) EROSION CONTROL EXCELSIOR BLANKET	(TWPC) EROSION CONTROL SEEDING I	SILT FENCE	TEMPORARY WEIR	PERMANENT SOIL REINFORCING MAT	BALED HAY OR STRAW	MULCHING EXCELSIOR BLANKET	PLANTING ILEX AQUIPERNYI (MALE) 3' TO 4' B & B	WATERING	SAND	DELAWARE #106 STONE	RIPRAP (PLAIN)	LATERAL OR LONGITUDINAL DITCHING	CLEANING AND SHAPING EXISTING DRAINAGE DITCH	CALCIUM CHLORIDE FOR DUST CONTROL	REMOVAL OF EXISTING PORTLAND CEMENT CONCRETE PAVEMENT, CURB, SIDEWALK, ETC.	FLAGMAN	FIELD OFFICE	TRAINEE (~~25~~) (15)	INITIAL EXPENSE	CONSTRUCTION ENGINEERING	CONSTRUCTION ENGINEERING	CONSTRUCTION ENGINEERING	MAINTENANCE OF TRAFFIC	MAINTENANCE OF TRAFFIC	MAINTENANCE OF RAILROAD TRAFFIC	MAINTENANCE OF RAILROAD TRAFFIC	MAINTENANCE AND PROTECTION OF RAILROAD TRAFFIC	MAINTENANCE AND PROTECTION OF RAILROAD TRAFFIC
PART	UNIT	S.Y.	C.Y.	S.Y.	ACRE	L.F.	EA.	S.Y.	EA.	S.Y.	EA.	M/GAL	TONS	TON	S.Y.	L.F.	L.F.	TONS	S.Y.	HRS.	EA.	HOURS	L.S.	L.S.	L.S.	L.S.	L.S.	L.S.	L.S.	L.S.	L.S.	L.S.
A	81-071-01 BRM-123(12)																					~~5,200~~ 3,120		L.S.					L.S.		L.S.	
C	84-021-01 M-113(1)	9,113	5,400	2,350	3.5	3,820			250	16,150	90	4	100	750	362		2,670	50	21,494	1,650	1	~~5,200~~ 3,120				L.S.	L.S.					
B	82-091-04 IR-495-3(44)	53,536	5,000	61,135	15	11,470	1		500	42,632			100	577	2,554	1,015		50	2,035	1,950	1	~~10,400~~ 6,240										
D	82-091-04 IR-495-3(44)	8,875	360	3,623	1.8	750		2,864	875					20	546	497		5		1000		~~5,200~~ 3,120										
B + D	82-091-04 IR-495-3(44) SUB-TOTAL	62,411	5,360	64,758	16.8	12,220	1	2,864	1,375	42,632			100	597	3,100	1,512		55	2,035	2,950	1	~~15,600~~ 9,360			L.S. (99%)			L.S. (99%)		L.S.		L.S.
D	82-091-04 NON-PART.	326											100												L.S. (1%)			L.S. (1%)				
PROPOSAL		71,850	10,760	67,108	20.3	16,040	1	2,864	1,625	58,782	90	4	300	1,347	3,462	1,512	2,670	105	23,529	4,600	2	~~26,000~~ 15,600	L.S.	L.S.	L.S.	L.S.	L.S.	L.S.	L.S.	L.S.	L.S.	L.S.

* FIXED QUANTITY ITEM : REFER TO SECTION 109.6 OF STANDARD SPECIFICATIONS
** FIXED PRICE
*** TO BE DETERMINED IN THE FIELD

REVISIONS
ADDENDUM NO. △ ADDED FENCE SIZE TO 720
11/18/85 R.T.C.
Addendum No. 2 Revised No. of Trainees to 25 R.T.C.

DESIGN ____ CHKD. ____
PREL. TRACING ____

CONTRACT	COUNTY	F.A.P. NO.	SHEET NO.	TOTAL SHTS.
	NEW CASTLE		5	

I-495 / EDGEMOOR ROAD INTERCHANGE

MASTER QUANTITY SHEET

2 △1

SECTION Nº		S.P.	S.P.	S.P.	S.P.	S.P.	S.P.	S.P.	S.P.	S.P.	S.P.	S.P.		S.P.		S.P.															
SECTION TITLE		SAW CUTTING ASPHALT PAVEMENT	SAW CUTTING FOR P.C.C. PAVEMENT	CONCRETE MONUMENTS	RELOCATION OF N.C.S. VERTICAL CONTROL BENCH MARK	1½" GALVANIZED CONDUIT UNDER NEW PAVEMENT OR IN SODDED TRENCH	2½" GALVANIZED CONDUIT UNDER NEW PAVEMENT OR IN SODDED TRENCH	2½" GALVANIZED CONDUIT UNDER EXISTING PAVEMENT	TEMPORARY PROTECTIVE SHIELD	PERMANENT PROTECTIVE BARRIER	ARROW BOARDS	TEMPORARY BARRICADES		WARNING SIGNS		BARRICADE WARNING LIGHTS			PERMANENT PAVEMENT STRIPING 4" LINE	PERMANENT PAVEMENT STRIPING 6" LINE	PERMANENT PAVEMENT STRIPING SYMBOLS	PAINTING OF WHITE OR YELLOW 4" LINE	PORTABLE P.C.C. SAFETY BARRIER	RELOCATION OF PORTABLE P.C.C. SAFETY BARRIER	FURNISHING END SECTION PORTABLE P.C.C. SAFETY BARRIER	MODIFIED P.C.C. SAFETY BARRIER TYPE 1	MODIFIED P.C.C. SAFETY BARRIER TYPE 2	PORTLAND CEMENT CONCRETE SAFETY BARRIER WALL TYPE A	PORTLAND CEMENT CONCRETE SAFETY BARRIER WALL TYPE B	PORTLAND CEMENT CONCRETE SAFETY BARRIER WALL TYPE C	RETAINING WALL C-S	RETAINING WALL "E"
											TYPE B	TYPE II	TYPE III	TEMPORARY	STATIONARY	TYPE A	TYPE B	TYPE C													
PART	UNIT	L.F.	L.F.	EA.	EA.	L.F.	L.F.	L.F.	L.S.	L.F.	EACH/DAY	EACH		EACH		EACH			L.F.	L.F.	S.F.	L.F.	L.F.	L.F.	EA.	L.F.	L.F.	L.F.	L.F.	L.F.	L.S.	L.S.
A	81-071-01 BRM-123(12)								L.S.	~~364~~ 376									800		48											
C	84-021-01 M-1137(1)	1063	782	20	1	1,477	2,404	205			550	12	35	2	16	15	70	66	20,400	3,000	786		620	320	4							
B	82-091-04 IR-495-3(44)	300	460	43							600	33	46	3	42	10	100	108	2,900	26,300	4,031	13,000	2,370	2,850	2	894	200					
D	82-091-04 IR-495-3(44)	98	427								140	66		35	37		84	259		6,422	1,480		2,915					421	259	296	L.S.	L.S.
B + D	82-091-04 IR-495-3(44) SUB-TOTAL	398	887	43							740	99	46	38	79	10	184	367	2,900	32,722	5,511	13,000	5,285	2,850	2	894	200	421	259	296	L.S.	L.S.
D	82-091-04 NON-PART.	335					170				70	13	2	7	9	2	22	32		978		500	605	100	1							
PROPOSAL		1,796	1,669	63	1	1,477	2,574	205	L.S.	~~364~~ 376	1,360	124	83	47	104	27	276	465	24,100	36,700	6,345	13,500	6,510	3,270	7	894	200	421	259	296	L.S.	L.S.

SECTION Nº		S.P.	S.P.	S.P.	S.P.	S.P.	S.P.	S.P.	S.P.	S.P.	S.P.	S.P.	S.P.	S.P.	S.P.	S.P.	S.P.	S.P.	S.P.	S.P.	S.P.	S.P.	S.P.	S.P.	S.P.	S.P.	S.P.	S.P.	S.P.	S.P.	S.P.
SECTION TITLE		RETAINING WALL "F"	RETAINING WALL "H"	RETAINING WALL "T"	CONDUIT JUNCTION WELL TYPE 1	INSTALLATION OF DETECTOR WIRE	SUPPLY OF 7/16" SPAN WIRE	INSTALL OR MOVE SPAN WIRE	CABINET BASE	POLE BASE TYPE 2 AND POLE INSTALLATION	SIGN PANEL	LUMINAIRES	ELECTRIFICATION (PART B)	ELECTRIFICATION (PART D)	TRI-CHORD TRUSS TYPE OVERHEAD SIGN SUPPORT AND FOUNDATION LOCATION 1	GROUND-MOUNT BREAKAWAY TYPE SIGN SUPPORT AND FOUNDATION LOCATION 2	GROUND-MOUNT BREAKAWAY TYPE SIGN SUPPORT AND FOUNDATION LOCATION 3-D	GROUND-MOUNT BREAKAWAY TYPE SIGN SUPPORT AND FOUNDATION LOCATION 3	GROUND-MOUNT BREAKAWAY TYPE SIGN SUPPORT AND FOUNDATION LOCATION 4	CANTILEVER SIGN SUPPORT AND FOUNDATION LOCATION 5	CANTILEVER SIGN SUPPORT AND FOUNDATION LOCATION 6	REMOVAL OF EXISTING SIGN AND FOUNDATION LOCATION 9	4" P.V.C. C AND S DUCT BANK	6" P.V.C. ELECTRIC DUCT BANK	36"ø STEEL CASING PIPE FOR ELECTRIC DUCTS	INSTALLATION OF ELECTRIC MANHOLE	JACKED STEEL PIPE AND ELECTRICAL DUCT SYSTEM	4" P.V.C. TELEPHONE DUCT BANK	4" P.V.C. TELEPHONE DUCT BANK (CONCRETE ENCASED)	JACKED STEEL PIPE AND TELEPHONE DUCT SYSTEM	16"ø STEEL CASING FOR TELEPHONE DUCTS	TELEPHONE MANHOLES
PART	UNIT	L.S.	L.S.	L.S.	EA.	L.F.	L.F.	EA.	EA.	EA.	S.F.	EA.	L.S.	L.S.	L.S.	L.S.	L.S.	L.S.	L.S.	L.S.	L.S.	L.S.	L.F.	L.F.	L.F.	EA.	L.F.	L.F.	L.F.	L.F.	L.F.	EA.
A	81-071-01 BRM-123(12)																							648	240	5	225	1,484	120	233	275	2
C	84-021-01 M-1137(1)	L.S.			38	2,294	995	4	3	8																						
B	82-091-04 IR-495-3(44)		L.S.	L.S.							2,142	9	L.S.					L.S.	L.S.	L.S.	L.S.	L.S.										
D	82-091-04 IR-495-3(44)										938	3		L.S.	L.S.	L.S.	L.S.						890									
B + D	82-091-04 IR-495-3(44) SUB-TOTAL		L.S.	L.S.							3,080	12	L.S.	L.S.	L.S.	L.S.	L.S.	L.S.	L.S.	L.S.	L.S.	L.S.	890									
D	82-091-04 NON-PART.				2	211	198	1																								
PROPOSAL		L.S.	L.S.	L.S.	40	2,505	1,193	5	3	8	3,080	12	L.S.	L.S.	L.S.	L.S.	L.S.	L.S.	L.S.	L.S.	L.S.	L.S.	890	648	240	5	225	1,484	120	233	275	2

* FIXED QUANTITY ITEM : REFER TO SECTION 109.6 OF STANDARD SPECIFICATIONS
** FIXED PRICE
*** TO BE DETERMINED IN THE FIELD

REVISIONS
2 REVISED QUANTITY DUE TO ALIGNMENT RELOCATION, MAA SURVEY
△1 ADDENDUM NO. △1 ADDED "FURNISHING" TO S.P.
END SEC. PORT. P.C.C. SAFETY BARRIER
11/ 22 / 95 R.T.C.

DESIGN _____ CHKD. _____
PRELIM. TRACING _____

CONTRACT	COUNTY	F.A.P. NO.	SHEET NO.	TOTAL SHTS.
	NEW CASTLE		6	

I-495 / EDGEMOOR ROAD INTERCHANGE

MASTER QUANTITY SHEET

SECTION №		S.P.	S.P.	S.P.	S.P.	S.P.	S.P.	S.P.	S.P.	S.P.	S.P.	S.P.	S.P.	S.P.	S.P.	S.P.	S.P.	S.P.	ALTERNATE A △1 209	ALTERNATE A △1 S.P.**	ALTERNATE A △1 S.P.	ALTERNATE B △1 209	2 622500
SECTION TITLE		INSTALLATION OF GAS PIPELINE (12" DIA.)	INSTALLATION OF STEEL CASING FOR GAS PIPELINE	JACKED STEEL PIPE AND GAS PIPELINE	VAULT FOR GAS TRANSMISSION LINE VALVE	REINFORCED CONCRETE SEWER PIPE CLASS IV 12"	REINFORCED CONCRETE SEWER PIPE CLASS IV 24"	REINFORCED CONCRETE SEWER PIPE CLASS IV 48"	REINFORCED CONCRETE SEWER PIPE CLASS V 48"	SANITARY SEWER MANHOLES A-2	SANITARY SEWER MANHOLES A-2/60	ADJUSTING AND REPAIRING EXISTING SANITARY MANHOLES	ABANDON SANITARY SEWER MANHOLE	MODIFY EXISTING SANITARY CHAMBER	10" DUCTILE IRON PIPE	24" DUCTILE IRON PIPE	8" P.V.C. PIPE	DEMOLITION OF BUILDING (CHURCH OF DELIVERANCE)	BORROW TYPE F	SUPPLY OF FLY ASH	FLY ASH EMBANKMENT	BORROW TYPE F	TEMPORARY STEEL SHEET PILES, PZ 22 (UNPROTECTED)
PART	UNIT	L.F.	L.F.	L.F.	EA.	L.F.	L.F.	L.F.	L.F.	EA.	EA.	EA.	EA.	L.S.	L.F.	L.F.	L.F.	L.S.	C.Y.	C.Y.	C.Y.	C.Y.	SF
A	81-071-01 BRM-123(12)	955	240	150	1														2,800			2,800	1914
C	84-021-01 M-1137(1)					125	25	1,421	503	1	8	1	17	L.S.			90	L.S.	130,003			130,003	
B	82-091-04 IR-495-3(44)									2		2			290	130			176,514	51,252	51,252	227,766	
D	82-091-04 IR-495-3(44)																		42,126			42,126	
B + D	82-091-04 IR-495-3(44) SUB-TOTAL									2		2			290	130			218,640	51,252	51,252	269,892	
D	82-091-04 NON-PART.																		633			633	
PROPOSAL		955	240	150	1	125	25	1,421	503	3	8	3	17	L.S.	290	130	90	L.S.	352,076	51,252	51,252	403,328	1914

* FIXED QUANTITY ITEM : REFER TO SECTION 109.6 OF STANDARD SPECIFICATIONS
** FIXED PRICE
*** TO BE DETERMINED IN THE FIELD

REVISIONS

ADDENDUM NO. △1 ADDED ALTERNATE A & B FOR FLY ASH & BORROW 11/18/85 R.T.C.
2 ADDED ITEM 622500, MAA 5/11/87

PREL. TRACING _____ DESIGN _____ CHKD. _____

COUNTY	CONTRACT	P. R. A. REG. NO.	STATE	FED. AID PROJECT NO.	SHEET NO.	TOTAL SHEETS
New Castle	81-071-01	3	DEL.	BRM 1231(2)	1A	35

EDGEMOOR ROAD OVER AMTRAK-CONRAIL
GENERAL NOTES AND QUANTITIES

NO.	REVISIONS	BY	DATE
1	Addendum No. 2 Revised No. of Trainees	RTC	1-6-86
2	ADDED ITEM 622500 & REVISED ITEMS DUE TO N. ABUT. RELOCATION	MAA	3/11/87

PART A

GENERAL NOTES

1. Design Criteria are based on 1983 Standard Specifications for Highway Bridges, American Association of State Highway and Transportation Officials.
Material and workmanship are to conform with State of Delaware, Department of Highways & Transportation Standard Specifications dated Jan. 1, 1974, and Supplemental Specifications dated Jan. 1, 1980, unless otherwise noted and/or specified by special provisions.

2. The location of borings and boring logs are made available to the bidders for their information only. Available soil samples taken at the site may be examined by arrangement with the Delaware Department of Highways. The Contractor shall make his own interpretation and judgements of the boring results and assume full responsibility for same.

3. Elevations are based on U.S.C. & G.S. datum, 1929.

4. Steel H-Piles, HP 12 x 53 shall be used for this bridge. Contractor shall use mechanical pile tip pruyn point HP75750 by Associated Pile and Fitting Corporation or approved equal. No auger shall be permitted for piles. No more than one mechanical pile splice permitted per pile except at the South Abutment or as approved by the engineer. Piles shall be driven to practical refusal.

5. Concrete:
   Class D: F'c = 4,500 psi, (For Deck, Parapets, Approach Slabs)
   Class A: F'c = 4,000 psi, (Above Footings)
   Class B: F'c = 3,000 psi, (Footings)
   Cover over reinforcing bars shall be 2 inches unless otherwise noted on the drawings. The Contractor may use slip form for barrier. All exposed edges of concrete shall be chamfered 3/4" x 3/4" unless otherwise shown. Concrete in areas under bearing plates shall be constructed 1/8" high and ground smooth to the theoretical elevations shown on plans.

6. Bar reinforcement shall meet requirements of A.S.T.M. A615 Grade 60. Lapped splices unless otherwise noted, are to be a minimum of 30 bar diameters. All deck and barrier reinforcing steel including approach slab shall be epoxy coated.

7. Stay-in-place metal forms for the bridge deck shall be used. All shop drawings for stay-in-place metal forms shall be submitted to the Engineer for approval.

8. All structural steel shall conform to A.S.T.M. A588 (AASHTO M-222) unpainted. All welds shall conform to Welding Code AWS D1.1 as modified by the A.A.S.H.T.O. Standard Specification for Welding Structural Steel Highway Bridges except that the electro slag weldments on main structural members will not be permitted. All dimensions shown on the drawings are for structures at a normal temperature of +68°F. The shop drawings shall show clearly the nature, dimensions and locations of all welds, bolts size, open holes, etc.,

9. Anchor bolts shall be Swedge Anchor bolts A307 Steel, galvanized after fabrication, including threading. Set anchor bolts by using templates or use circumferentially corrugated metal sleeves. Set bolts with high strength non-shrink grout completely filling the holes.

10. Protective shield shall be approved by the Del. DOT and Rail Road Engineer. During removal operations, the contractor shall not be allowed to drop waste concrete, debris and other material to the area below the bridge where there are railroad tracks. Protective planking and outside shields are required to catch the material. If the engineer determines that approved protective devices are not being employed, the work shall be suspended until approved protection is provided.

11. Any material falling on the area below and adjacent to the bridge or outside the protective shield planking shall be immediately remove and disposed of by the contractor.

12. Whenever items in the contract require materials to be removed and disposed of, transportation to the approved area shall be included in the unit price bid for those items.

13. It will be the contractor's obligation and responsibility to use methods and equipment which will insure the satisfactory completion of the required work with a minimum of delay.

14. The Contract Drawings indicate approximate location of existing utilities. It shall be the contractor's responsibility to protect these or any other utilities that may be in the area of the work covered by the contract.

15. All work on or above Railroad property shall be coordinated with Rail Road. The contractor shall advise Rail Road of the time schedule at least 30 days in advance and obtain approval from Rail Road for all work to be performed adjacent to Rail Road so that it may be properly supervised by Railroad personnel. Whenever the term 'Railroad' is used without further qualification, it shall mean or be taken to mean Amtrak and/or Conrail.

16. The Contractor is notified that in addition to catenary wires attached to the underside of the bridge there are overhead electric high tension wires in the vicinity of the proposed North and South Abutments. Caution shall be exercised when work in this area. 2

UTILITY RELOCATION QUANTITIES

SECTION	ITEM	UNIT	QUANTITY ESTIMATED	QUANTITY AS-BUILT
S.P.	6" P.V.C. ELECTRIC DUCT BANK	L.F.	648	
S.P.	36" ø STEEL CASING PIPE FOR ELECTRIC DUCTS	L.F.	240	
S.P.	INSTALLATION OF ELECTRIC MANHOLE	EA.	5	
S.P.	JACKED STEEL PIPE AND ELECTRICAL DUCT SYSTEM	L.F.	225	
S.P.	4" P.V.C. TELEPHONE DUCT BANK	L.F.	1,484	
S.P.	4" P.V.C. TELEPHONE DUCT BANK (CONCRETE ENCASED)	L.F.	120	
S.P.	JACKED STEEL PIPE AND TELEPHONE DUCT SYSTEM	L.F.	233	
S.P.	16" ø STEEL CASING FOR TELEPHONE DUCTS	L.F.	275	
S.P.	TELEPHONE MANHOLES	EA.	2	
S.P.	INSTALLATION OF GAS PIPELINE 12" ø	L.F.	955	
S.P.	INSTALLATION OF STEEL CASING FOR GAS PIPELINE	L.F.	240	
S.P.	JACKED STEEL PIPE AND GAS PIPELINE	L.F.	150	
S.P.	VAULT FOR GAS TRANSMISSION LINE VALVE	EA.	1	
S.P.	GUY ANCHORS	EA.	2	
S.P.	CYLINDRICAL CAST IN PLACE FOUNDATIONS	L.S.	L.S.	

QUANTITIES

SECTION	ITEM	UNIT	QUANTITY ESTIMATED	QUANTITY AS-BUILT
201	CLEARING AND GRUBBING	L.S.	L.S.	
2 622500	TEMPORARY STEEL SHEET PILES, PZ22 (UNPROTECTED)	SF	1914	
207	EXCAVATION AND BACKFILL FOR STRUCTURES	C.Y.	2,280	
209	BORROW TYPE C (BACKFILL)	C.Y.	2,200	
S.P.	FURNISHING BORROW TYPE C, FOR STRUCTURE, PIPE AND UTILITY TRENCH BACKFILL	C.Y.	2,090	
209	BORROW TYPE F (COMMON BORROW)	C.Y.	2,800	
S.P.	REMOVAL OF EXISTING BRIDGE — EDGEMOOR ROAD OVER AMTRAK	L.S.	L.S.	
2 602(*)	PORTLAND CEMENT CONCRETE MASONRY - ABUTMENT FOOTINGS	C.Y.	644 ~~664~~	
2 602(*)	PORTLAND CEMENT CONCRETE MASONRY - ABUTMENTS ABOVE FOOTINGS	C.Y.	912 ~~962~~	
602(*)	PORTLAND CEMENT CONCRETE MASONRY - PIER FOOTINGS	C.Y.	256	
602(*)	PORTLAND CEMENT CONCRETE MASONRY - PIERS ABOVE FOOTINGS	C.Y.	374	
2 602(*)	PORTLAND CEMENT CONCRETE MASONRY - SUPERSTRUCTURE	C.Y.	623 ~~673~~	
2 602(*)	PORTLAND CEMENT CONCRETE MASONRY - APPROACH SLABS	C.Y.	350 ~~352~~	
605(*)	BAR REINFORCEMENT	Lbs.	155,600	
2 605A(*)	BAR REINFORCEMENT - EPOXY COATED	Lbs.	241,612 ~~235,070~~	
2 606	STEEL STRUCTURES (APPROXIMATE 669,000 ~~652,000~~ Lbs)	L.S.	L.S.	
609	COARSE AGGREGATE FOR FOUNDATION STABILIZATION	TON	630	
625	STEEL "H" PILES - HP12x53	L.F.	21,295	
625	STEEL "H" TEST PILES - HP 12x53	L.F.	276	
S.P.	TRAINEES ~~(5)~~ (3)	HR.	3,120 ~~5,200~~ 2	
628	CONCRETE SLOPE PAVING	S.Y.	625	
S.P.	TEMPORARY SHEETING LEFT IN PLACE	S.F.	2,350	
S.P.	6 IN. PERFORATED PIPE UNDERDRAINS	L.F.	300	
S.P.	PREFABRICATED EXPANSION JOINT SYSTEM 2 1/2" x 2 3/4"	L.F.	98	
S.P.	PREFABRICATED EXPANSION JOINT SYSTEM 4" x 4 3/4"	L.F.	94	
S.P.	CHAIN LINK FENCE 3'-6" HIGH	L.F.	153	
2 S.P.	PERMANENT PROTECTIVE BARRIER	L.F.	376 ~~364~~	
S.P.	GUARD RAIL TO BARRIER CONNECTION APPROACH TYPE	Each	1	
S.P.	GUARD RAIL TO BARRIER CONNECTION EXIT TYPE	Each	2	
S.P.	MAINTENANCE OF RAIL ROAD TRAFFIC	L.S.	L.S.	
S.P.	MAINTENANCE AND PROTECTION OF RAILROAD TRAFFIC	L.S.	L.S.	
S.P.	TEMPORARY PROTECTIVE SHIELD	L.S.	L.S.	
S.P.	CONSTRUCTION ENGINEERING	L.S.	L.S.	
S.P.	INITIAL EXPENSE	L.S.	L.S.	
S.P.	MODIFICATION OF EXISTING CATENARY STRUCTURES	L.S.	L.S.	
S.P.	NEW CATENARY STRUCTURES	L.S.	L.S.	
S.P.	AMTRAK CATENARY MATERIAL	L.S.	L.S.	
S.P.	OVERHEAD CONDUCTORS	L.F.	2,270	
S.P.	RELOCATION OF EXISTING OVERHEAD CONDUCTORS	L.F.	12,930	
S.P.	REMOVAL OF EXISTING OVERHEAD CONDUCTORS	L.F.	1,860	
S.P.	PERMANENT PAVEMENT STRIPING 4"	L.F.	800	
S.P.	PERMANENT PAVEMENT STRIPING SYMBOLS	S.F.	48	

* FIXED QUANTITY ITEMS

INDEX OF DRAWINGS

SHEET NO.	TITLE
1A	GENERAL NOTES AND QUANTITIES
2A	GENERAL PLAN
3A	DEMOLITION PLAN
4A	NORTH ABUTMENT - FOOTING PLAN
5A	NORTH ABUTMENT
6A	NORTH ABUTMENT - WINGWALL DETAILS
7A	NORTH ABUTMENT - BAR LIST
8A	SOUTH ABUTMENT
9A	SOUTH ABUTMENT - WINGWALL DETAILS
10A	SOUTH ABUTMENT - FOOTING PLAN
11A	PIERS 1 AND 2
12A	PIER DETAILS
13A	FRAMING PLAN
14A	STRUCTURAL STEEL DETAILS
15A	BEARINGS, TABLE OF ELEVATIONS AND CAMBER
16A	DECK SLAB PLAN
17A	SLAB DETAILS
18A	EXPANSION JOINT DETAILS
19A	PERMANENT PROTECTIVE BARRIER
20A	DANGER SIGN AND GUARD RAIL DETAILS
21A	APPROACH SLAB - NORTH ABUTMENT
22A	APPROACH SLAB - SOUTH ABUTMENT
23A	SLOPE PAVING DETAILS
24A	GEOLOGIC SECTIONS
25A	Catenary Work (over Amtrak)
55A	Utility Relocation Plans
74A	Signing & Striping

DELAWARE
DEPARTMENT OF TRANSPORTATION
DIVISION OF HIGHWAYS

D.
T. E. R.
C. R. P.

SCALE

APPROVED BY:

BRIDGE ENGINEER

STEINMAN BOYNTON GRONQUIST & BIRDSALL
CONSULTING ENGINEERS
89 HUDSON STREET
HOBOKEN, N.J. 07030

COUNTY	CONTRACT	P. R. A. REG. NO.	STATE	FED. AID PROJECT NO.	SHEET NO.	TOTAL SHEETS
New Castle	81-071-01	3	DEL.	BRM 1231(2)	2A	351

NO.	REVISIONS	BY	DATE
2	RELOCATED N. ABUT., ADDED SH. 2B	MAA	5/1/87

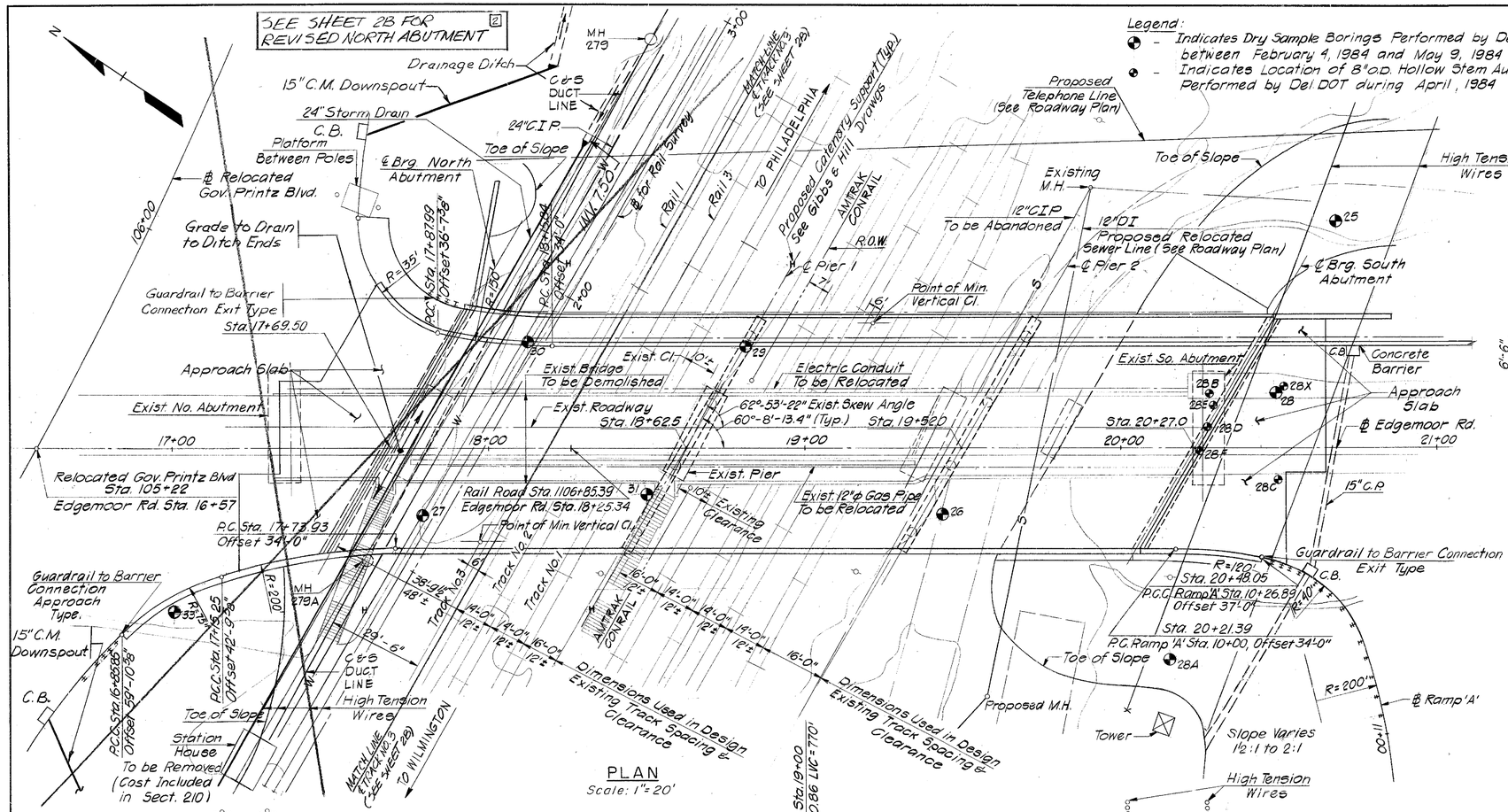

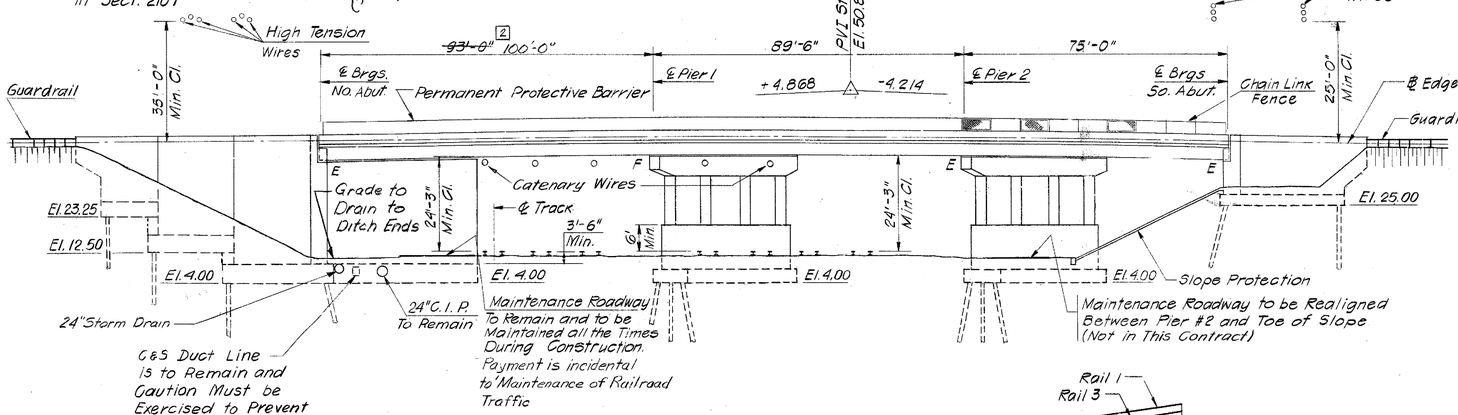

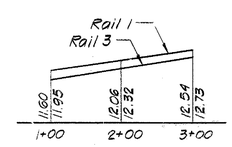

RAIL PROFILES

Scale: Horiz. 1" = 100'
Vert. 3/8" = 1'

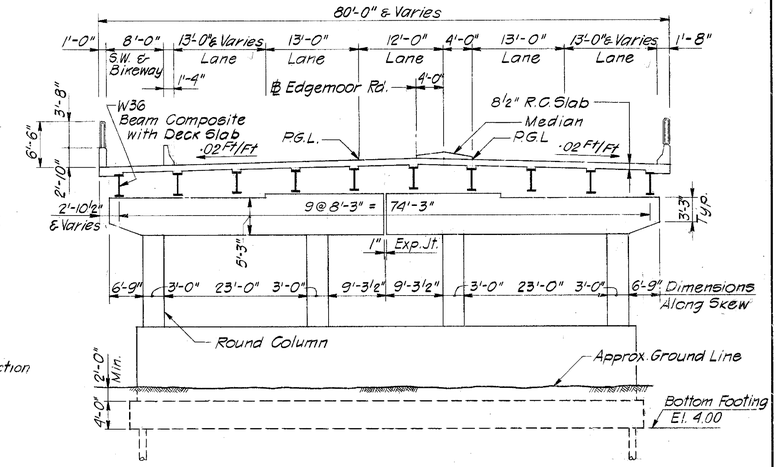

TYPICAL BRIDGE SECTION

Scale: 1"=10'-0"

Notes:

Design Specifications — AASHTO 1983

Design Loadings —
A-Live Load: HS 20-44, Tandem 24K Axles at 4' or 35 Ton Type 3 Unit Vehicle whichever Governs
B-Dead Load: 25 p.s.f. Provision for 2" Wearing Surface
C-Live Load Deflection: Max 1/1000 of Span Length

For General Notes See Sheet No. 1.

2 DESIGN LOADINGS —
D-LIVE LOAD: 85 psf PEDESTRIAN LOADING, CANTILEVER SLAB @ SIDEWALK AND BIKEWAY.

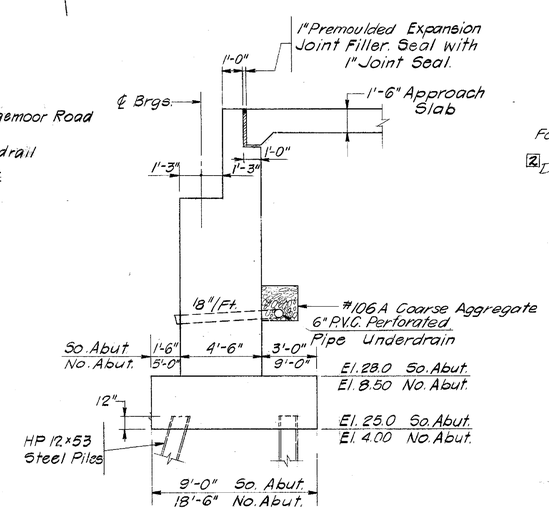

TYPICAL ABUTMENT SECTION

N.T.S.

DELAWARE
DEPARTMENT OF TRANSPORTATION
DIVISION OF HIGHWAYS

EDGEMOOR ROAD BRIDGE OVER AMTRAK - CONRAIL

GENERAL PLAN

D. R. P.	SCALE	APPROVED BY:
T. N. P.	As Shown	
C. R. P.		BRIDGE ENGINEER

STEINMAN BOYNTON GRONQUIST & BIRDSALL
CONSULTING ENGINEERS
89 HUDSON STREET
HOBOKEN, N.J. 07030

CONTRACT	COUNTY	FEDERAL AID PROJECT Nº	SHEET Nº	TOTAL SHEETS
81-071-01	New Castle	BRM 1231 (2)	2B-A	351

EDGEMOOR ROAD BRIDGE OVER AMTRACK--CONRAIL GENERAL PLAN

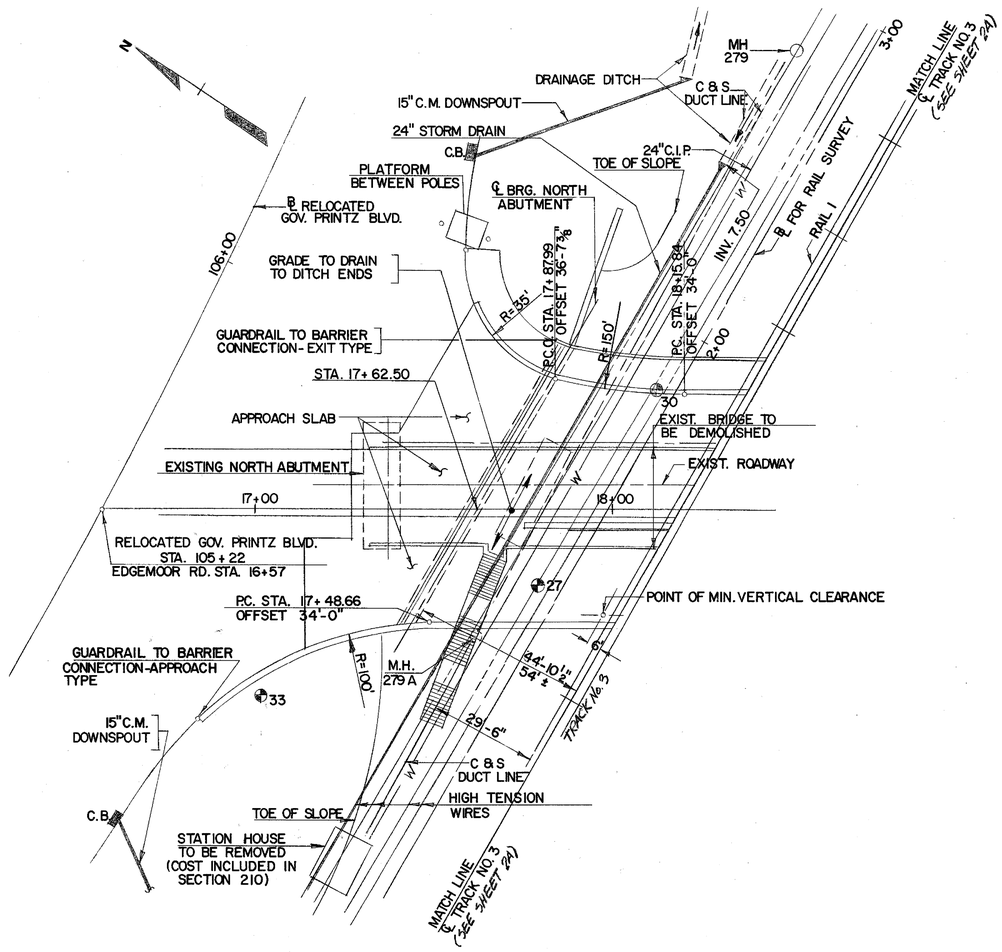

PLAN NEAR N. ABUT.
1"=20'

REVISIONS

4 ADDED SH. 2B TO SHOW REVISED N. ABUTMENT, MAA 5/1/87

PREL. TRACING ____ DESIGN ____ CHKD. ____

COUNTY	CONTRACT	P. R. A. REG. NO.	STATE	FED. AID PROJECT NO.	SHEET NO.	TOTAL SHEETS
New Castle	81-071-01	3	DEL.	BRM 1231(2)	3A	351

EDGEMOOR ROAD OVER AMTRAK-CONRAIL
DEMOLITION PLAN

NO.	REVISIONS	BY	DATE
1	Added Detail for Temp. Prot. Shield	RTC	8-28-86
2	Added Notes For Partial Removal Of Existing Pier #1.	MAA	5/1/87

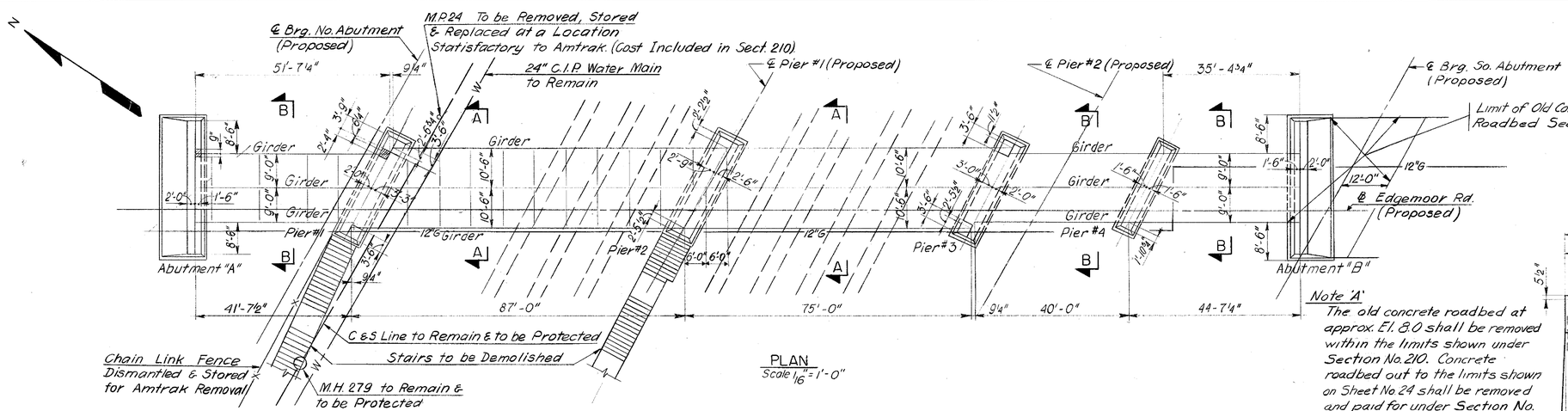

PLAN
Scale 1/16" = 1'-0"

Note 'A'
The old concrete roadbed at approx. El. 8.0 shall be removed within the limits shown under Section No. 210. Concrete roadbed out to the limits shown on Sheet No 24 shall be removed and paid for under Section No. 207 as directed by the Engineer

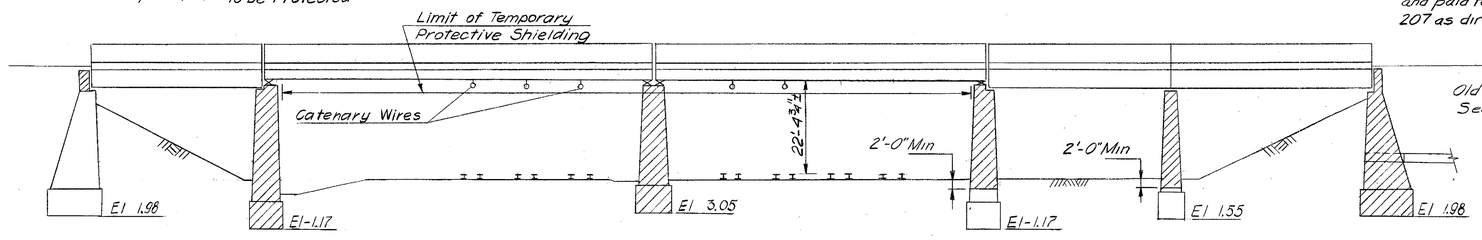

ELEVATION
Scale 1/16" = 1'-0"

Proposed Demolition Limit of Substructure (See Revision Pier #1) 1

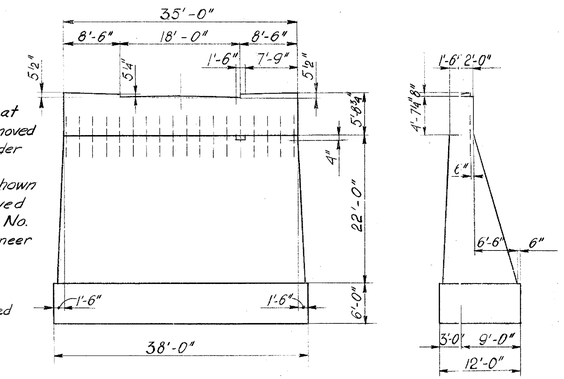

ABUTMENTS A & B
Scale 1/16" = 1'-0"

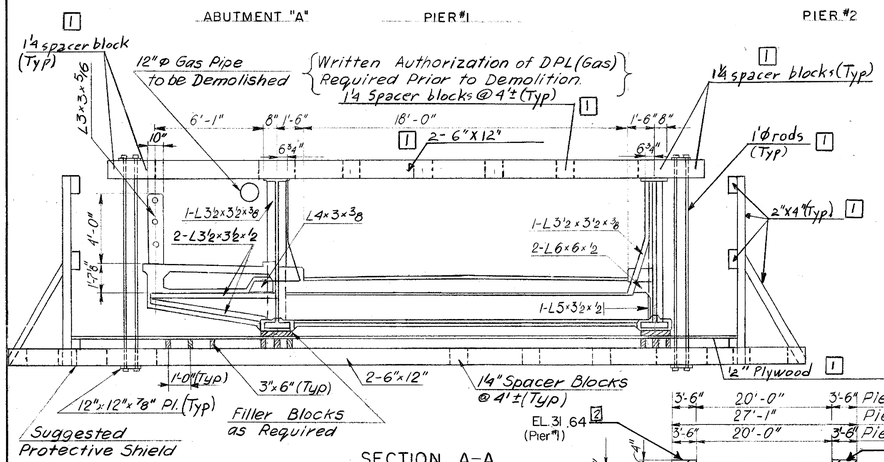

SECTION A-A
Scale: ¼" = 1'-0"

Use 2'-3" Max Spacing of frames 1

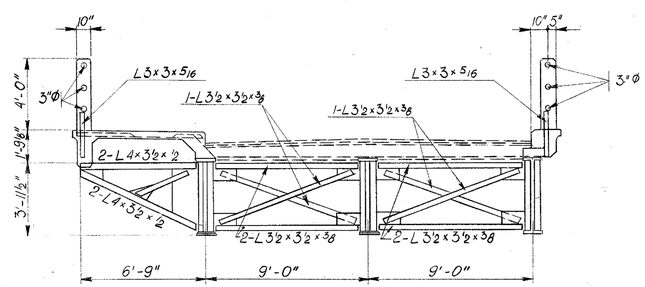

SECTION B-B
Scale 1/4" = 1'-0"

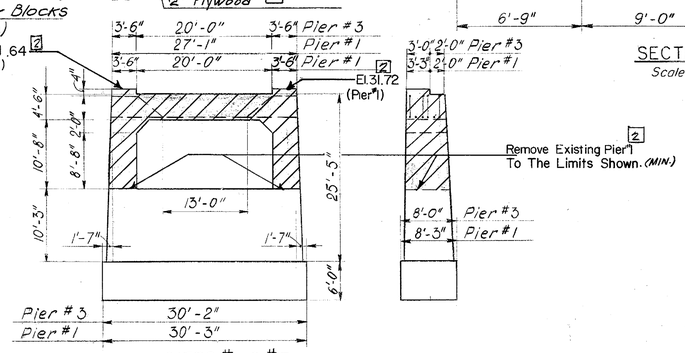

PIERS #1 & #3
Scale 1/16" = 1'-0"

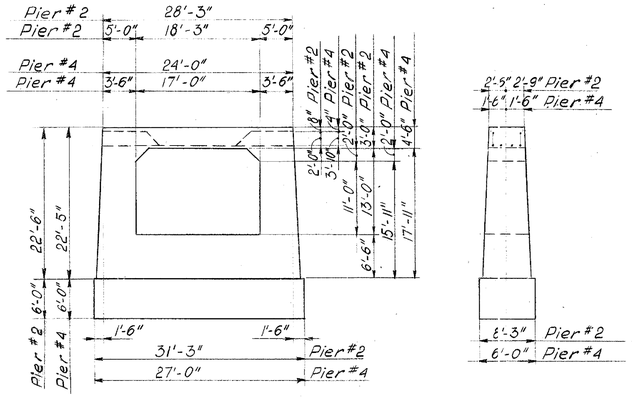

PIERS #2 & #4
Scale 1/16" = 1'-0"

Notes:

1. For General Notes See Sheet No. 1
2. Additional Notes for Temporary Protective Shielding See Sheet No. 17
3. Limit of Demolition is Minimum. Contractor May Remove more at no Extra Cost to the State.
2 4. Contractor Shall Remove Pier #1 To The Elevation Shown. (MIN.)

APPROXIMATE REMOVAL QUANTITIES

SECTION	ITEM	UNIT	QUANTITY
	P.C.C. Masonry	C.Y.	760
	Steel Structures	Lbs.	250,000

For Information only
Payment Will be Made Under Item "Removal of Existing Bridge - Edgemoor Road over Amtrak." (See Special Provisions)

DELAWARE
DEPARTMENT OF TRANSPORTATION
DIVISION OF HIGHWAYS

D.
T. I. B.
C. R. P.

SCALE As Shown

APPROVED BY:
BRIDGE ENGINEER

STEINMAN BOYNTON GRONQUIST & BIRDSALL
CONSULTING ENGINEERS
89 HUDSON STREET
HOBOKEN, N.J. 07030

COUNTY	CONTRACT	P. R. A. REG. NO.	STATE	FED. AID PROJECT NO.	SHEET NO.	TOTAL SHEETS
New Castle	81-071-01	3	DEL.	BRM 1231 (2)	4A	351

EDGEMOOR ROAD OVER AMTRAK-CONRAIL
NORTH ABUTMENT - FOOTING PLAN

NO.	REVISIONS	BY	DATE
2	REVISED PILE PLAN & TEMP. SHEETING DETAIL (ADDED SH. 4B)	MAA	5/1187

Notes:

1. For General Notes See Sheet No 1
2. For Sections L-L, K-K, M-M and N-N Locations See Sheet No 5 & 6.

SEE REVISED DETAIL SHEET 4B [2]

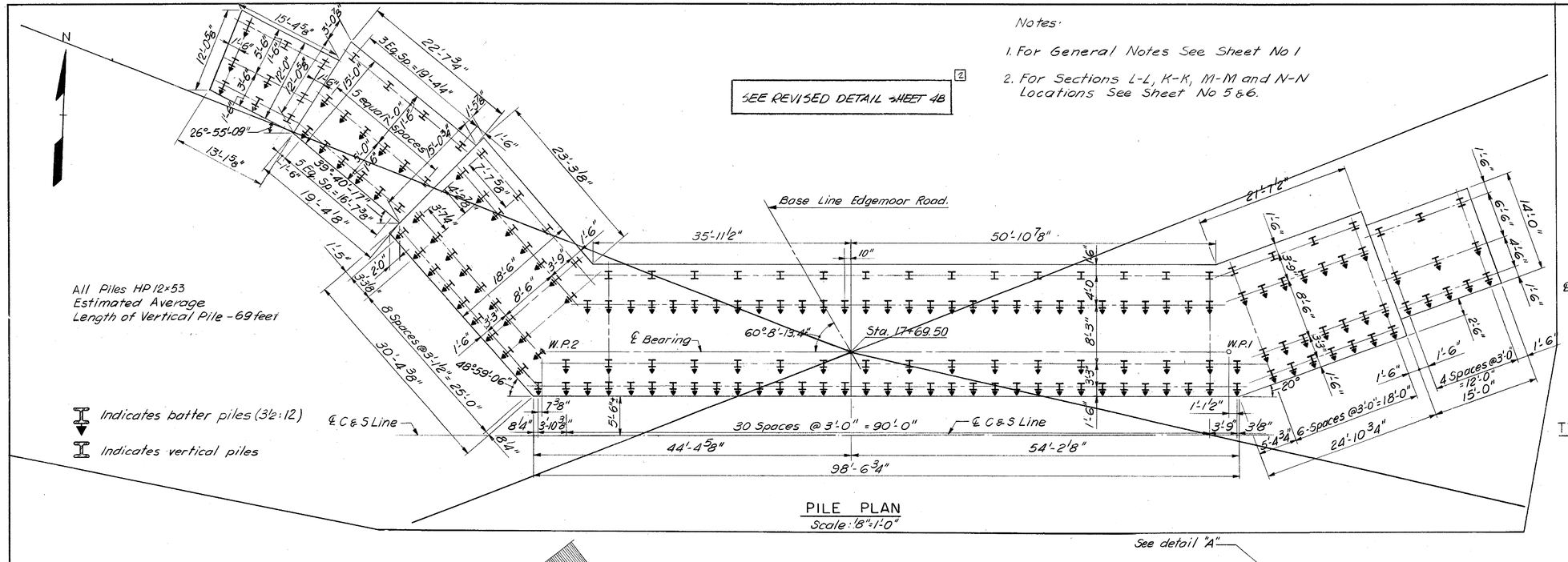

PILE PLAN
Scale: 1/8" = 1'-0"

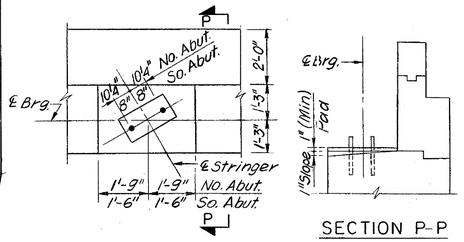

SECTION P-P

TYPICAL CONCRETE UNDER BEARING PLATES
Scale: 3/8" = 1'-0"

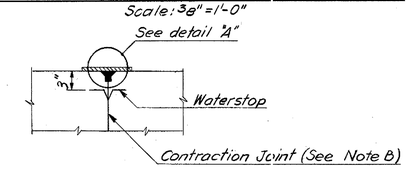

CONTRACTION JOINT
N.T.S.

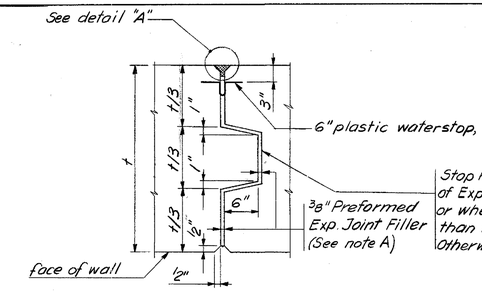

EXPANSION JOINT
N.T.S.

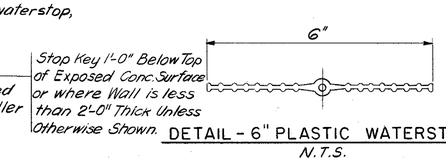

DETAIL - 6" PLASTIC WATERSTOP
N.T.S.

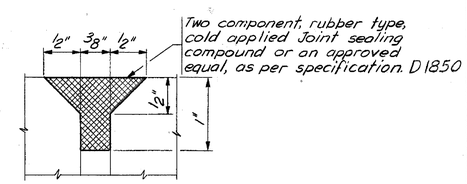

DETAIL "A" - SEALER
N.T.S.

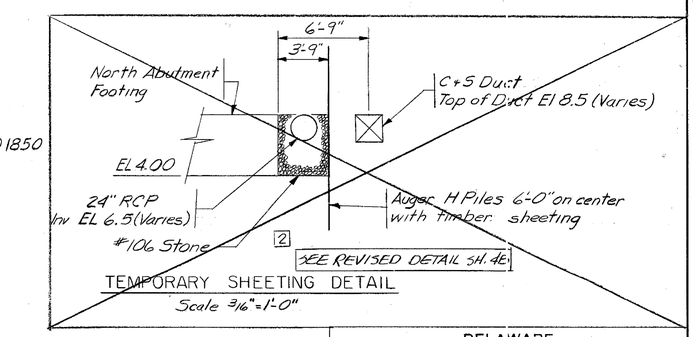

TEMPORARY SHEETING DETAIL
Scale 3/16" = 1'-0"

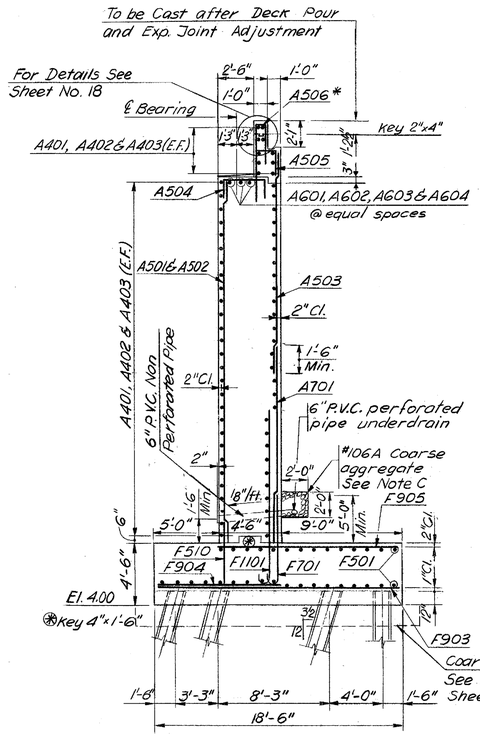

SECTION F-F
Scale: 3/16" = 1'-0"

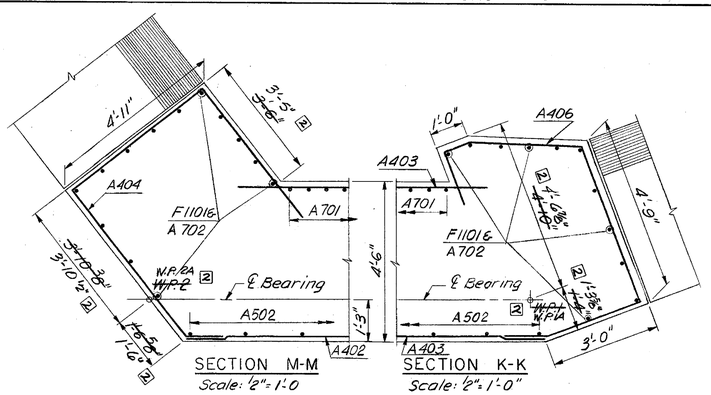

SECTION M-M
Scale: 1/2" = 1'-0"

SECTION K-K
Scale: 1/2" = 1'-0"

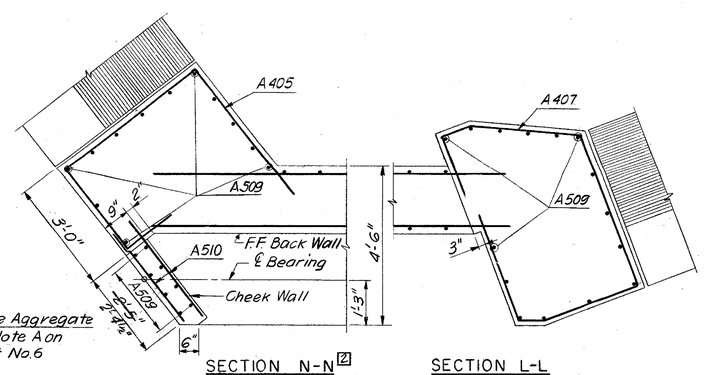

SECTION N-N
Scale: 1/2" = 1'-0"

SECTION L-L
Scale: 1/2" = 1'-0"

NOTES:

A. Provide Preformed Expansion Joint Filler as per Specifications. N153-84I

B. Contraction Joints Shall be tight and shall be paraffin coated.

C. Provide Geo-Textile Fabric as per Engineer's Instruction. Typar 3341 (Du Pont); Mirafi 140N (Celanese); Propex 4545 (Amoco) or Equal

DELAWARE
DEPARTMENT OF TRANSPORTATION
DIVISION OF HIGHWAYS

D. R. P.	SCALE	APPROVED BY:
T. E. R.	As Shown	
C. R. P.		BRIDGE ENGINEER

STEINMAN BOYNTON GRONQUIST & BIRDSALL
CONSULTING ENGINEERS
89 HUDSON STREET
HOBOKEN, N.J. 07030

CONTRACT	COUNTY	FEDERAL AID PROJECT Nº	SHEET Nº	TOTAL SHEETS
81-071-01	N.C.	BRM 1231 (2)	4B-A	351

EDGEMOOR ROAD OVER AMTRAK-CONRAIL
NORTH ABUTMENT ~ FOOTING PLAN

NOTES:

1) FOR GENERAL NOTES SEE SHEET #1.
2) PILE LOCATIONS DENOTED BY ASTERISK (*) SHALL BE PRE-AUGERED TO A DEPTH OF 8'-0 (EL-~4.0) TO VERIFY AVOIDANCE OF EXISTING PIER 1 FOOTING.
3) IF A CONFLICT IS ENCOUNTERED, THE AFFECTED PILES IN ROW 1 & ROW 2 MAY BE RELOCATED 6" BACK.
4) PREAUGERED HOLES SHALL BE BACKFILLED WITH BORROW TYPE C.
5) PAYMENT FOR TEMPORARY PZ-22 SHEET PILING SHALL BE MADE UNDER SECTION 622500 - TEMPORARY STEEL SHEET PILES, PZ-22 (UNPROTECTED).

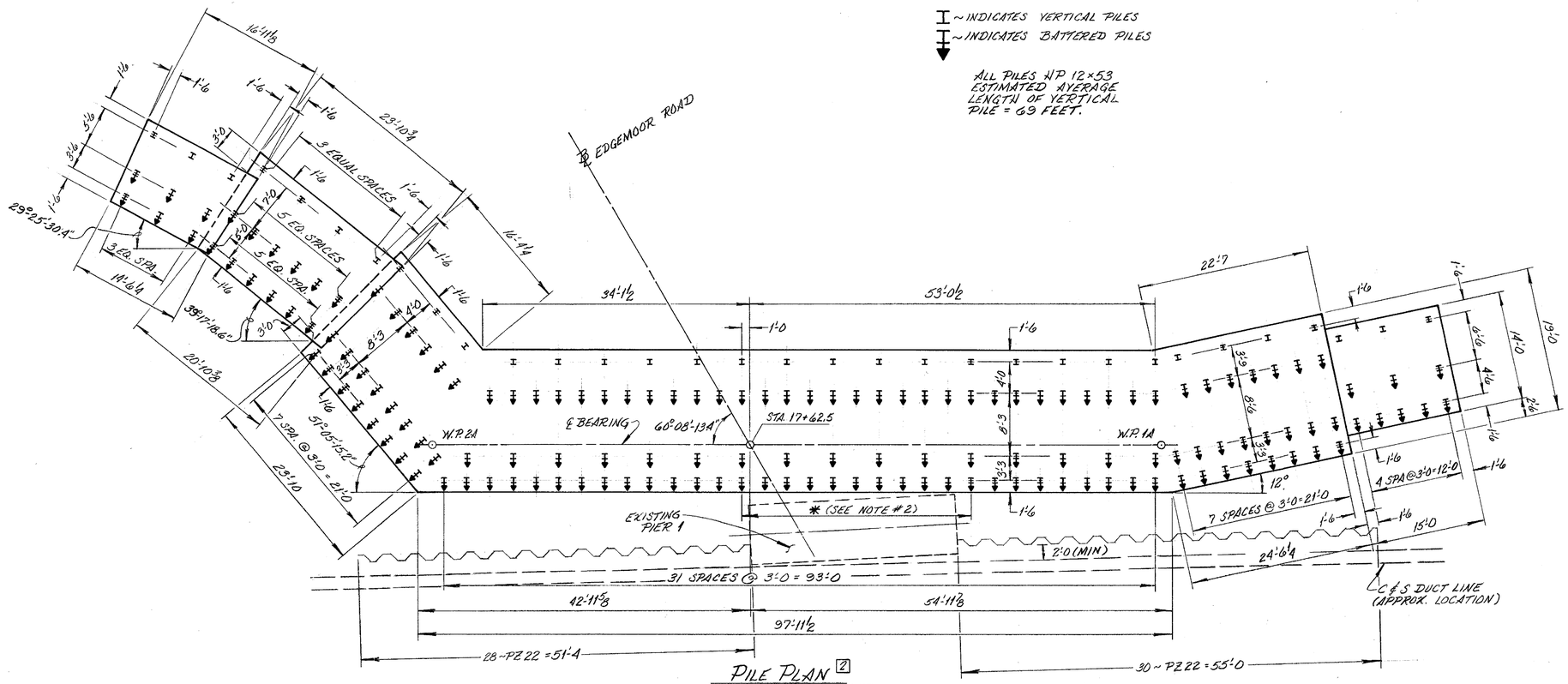

PILE PLAN [2]
SCALE ~ 1/8" = 1'-0

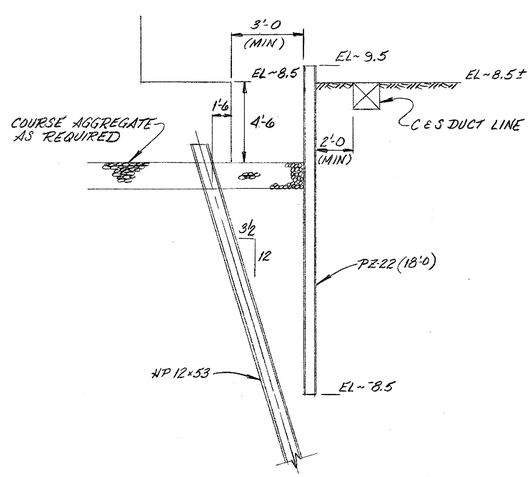

TEMPORARY SHEETING DETAIL [2]
SCALE ~ 1/4" = 1'-0

(*) Fixed Quantity Items.

ESTIMATED QUANTITIES

	SECTION	ITEM	UNIT	QUANTITY
	207	Excavation and Backfill for Structures	C.Y.	1,550
	209	Borrow Type C (Backfill)	C.Y.	1,900
	209	Borrow Type F (Common Borrow)	C.Y.	400
2	602 (*)	P.C.C. Masonry - Abutment Footing	C.Y.	644
2	602 (*)	P.C.C. Masonry - Abutment Above Footing	C.Y.	695
	605 (*)	Bar Reinforcement	Lbs.	67,800
	605A (*)	Bar Reinforcement - Epoxy Coated	Lbs.	2,700
	609	Coarse Aggregate for Foundation Stabilization	Ton	
	625	Steel "H" Piles HP 12×53	L.F.	13,555
2	622500	TEMP. STEEL SHEET PILE, PZ-22 (UNPROT.)	SF	1914
	S.P.	6" Perforated Pipe Underdrains	L.F.	165
	S.P.	Furnishing Borrow Type C, for Structure, Pipe and Utility Trench Backfill	C.Y.	1,100

REVISIONS

2 REVISED PILE PLAN, TEMP. SH. DETAILS, 1 QUANTITIES, MAA - 5/1/87

PREL. TRACING [signature] 04.29.87 DESIGN M.A.A. CHKD.

COUNTY	CONTRACT	P. R. A. REG. NO.	STATE	FED. AID PROJECT NO.	SHEET NO.	TOTAL SHEETS
New Castle	81-071-01	3	DEL.	BRM 1231(2)	5A	351

EDGEMOOR ROAD OVER AMTRAK-CONRAIL
NORTH ABUTMENT

NO.	REVISIONS	BY	DATE
2	RELOCATED NORTH ABUT., ADDED SHEET 5B & 5C	MAA	5/1/87

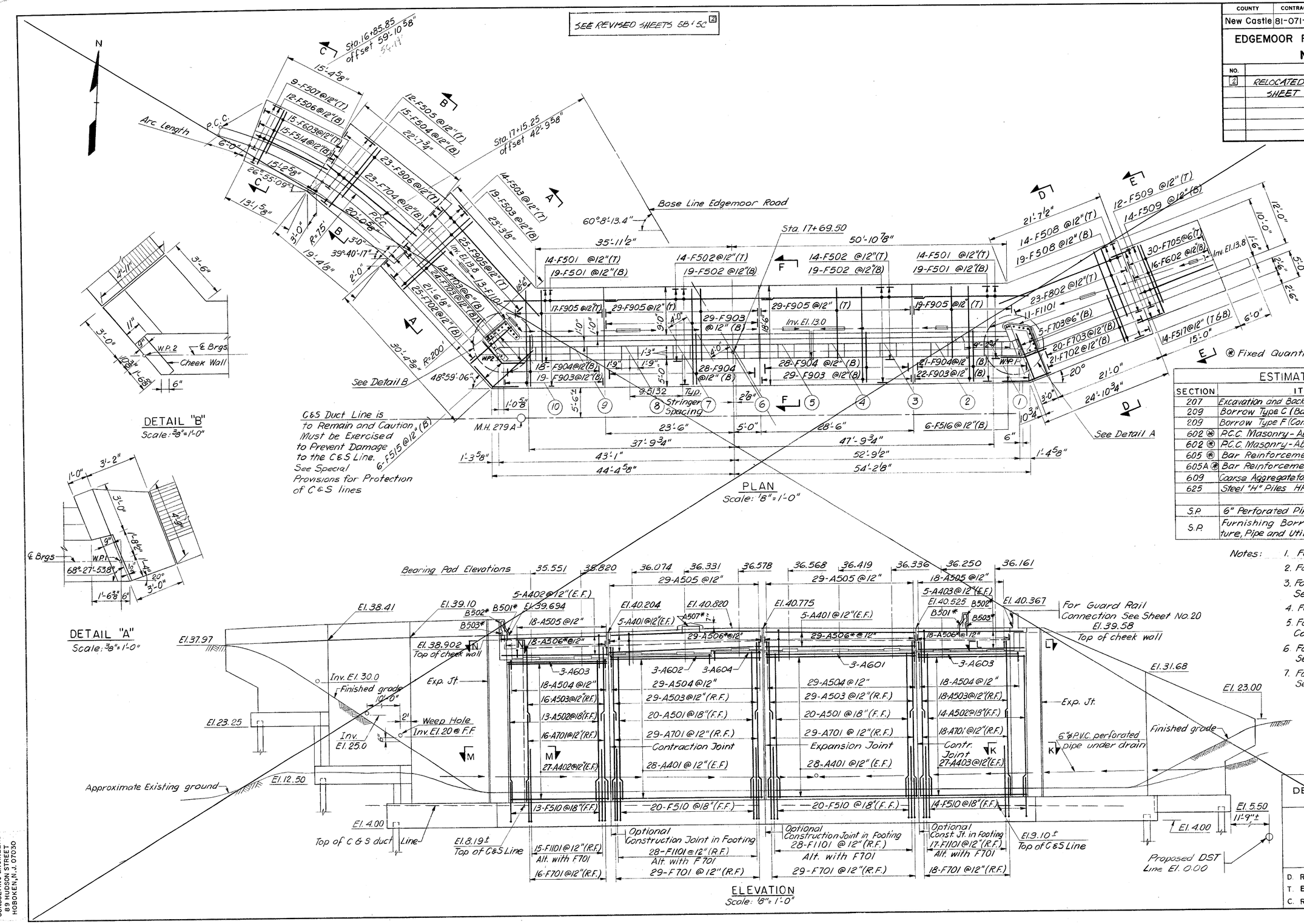

ESTIMATED QUANTITIES

SECTION	ITEM	UNIT	QUANTITY
207	Excavation and Backfill for Structures	C.Y.	1,550
209	Borrow Type C (Backfill)	C.Y.	1,900
209	Borrow Type F (Common Borrow)	C.Y.	400
602 ⊛	P.C.C. Masonry - Abutment Footing	C.Y.	535
602 ⊛	P.C.C. Masonry - Abutment Above Footing	C.Y.	745
605 ⊛	Bar Reinforcement	Lbs.	67,800
605A ⊛	Bar Reinforcement - Epoxy Coated	Lbs.	2,700
609	Coarse Aggregate for Foundation Stabilization	Ton	374
625	Steel "H" Piles HP 12×53	L.F.	13,555
S.P.	6" Perforated Pipe Underdrains	L.F.	165
S.P.	Furnishing Borrow Type C, for Structure, Pipe and Utility Trench Backfill	C.Y.	1,100

⊛ Fixed Quantity Items.

Notes:
1. For General Notes See Sheet No. 1.
2. For Sections A-A to F-F See Sheet No. 6
3. For Sections L-L, K-K, M-M & N-N See Sheet No. 4.
4. For Bar List See Sheet No. 7.
5. For Construction of Curved Wingwall Contractor May Use 4' Segment
6. For Excavation Pay Limits See Sheet No. 10.
7. For Bearing Pad Details See Sheet No. 4.

DELAWARE
DEPARTMENT OF TRANSPORTATION
DIVISION OF HIGHWAYS

D. R. P.
T. E. R.
C. R. P.

SCALE: As Shown

APPROVED BY:

BRIDGE ENGINEER

STEINMAN BOYNTON GRONQUIST & BIRDSALL
CONSULTING ENGINEERS
89 HUDSON STREET
HOBOKEN, N.J. 07030

CONTRACT	COUNTY	FEDERAL AID PROJECT Nº	SHEET Nº	TOTAL SHEETS
81-071-01	N. C.	BRM 1231 (2)	5B-A	351

EDGEMOOR ROAD OVER AMTRAK-CONRAIL
NORTH ABUTMENT

NOTES:
1) FOR GENERAL NOTES SEE SHEET #1.
2) FOR SECTIONS A-A THRU F-F SEE SHEET #6.
3) FOR SECTIONS K-K THRU N-N SEE SHEET #4.
4) FOR BAR LIST SEE SHEET #7.
5) FOR CONSTRUCTION OF CURVED WINGWALL CONTRACTOR MAY USE 4' SEGMENT.
6) FOR EXCAVATION PAY LIMITS SEE SHEET #10.
7) FOR BEARING PAD DETAILS SEE SHEET #4.

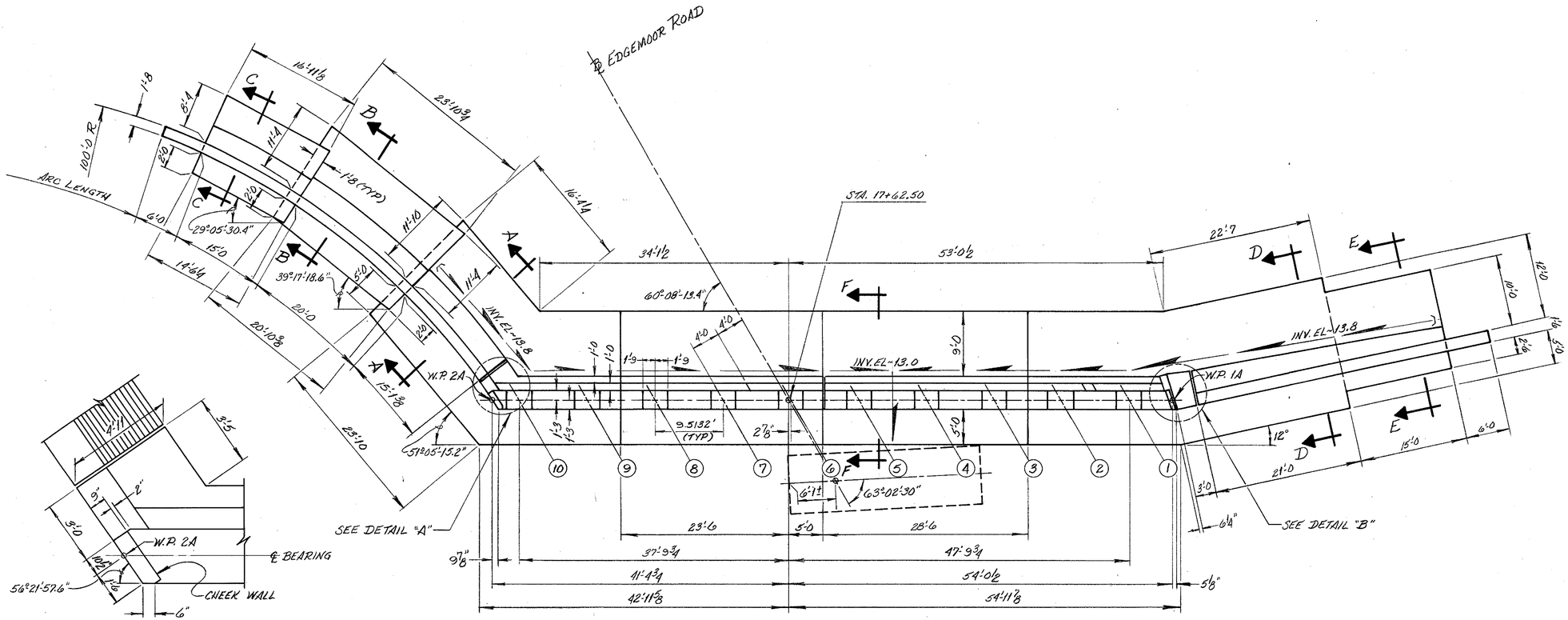

PLAN
SCALE ~ 1/8" = 1'-0

DETAIL "A"
SCALE ~ 3/8" = 1'-0

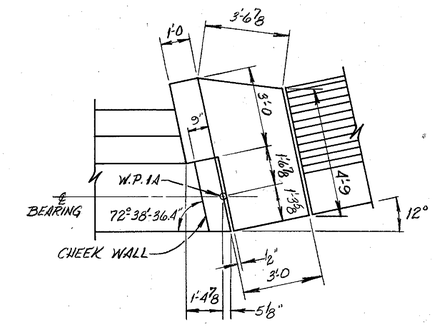

DETAIL "B"
SCALE ~ 3/8" = 1'-0

BEARING PAD ELEVATIONS										
GIRDER NUMBER	1	2	3	4	5	6	7	8	9	10
ELEVATION	35.963	36.038	36.129	36.209	36.286	36.440	36.189	35.928	35.664	35.397

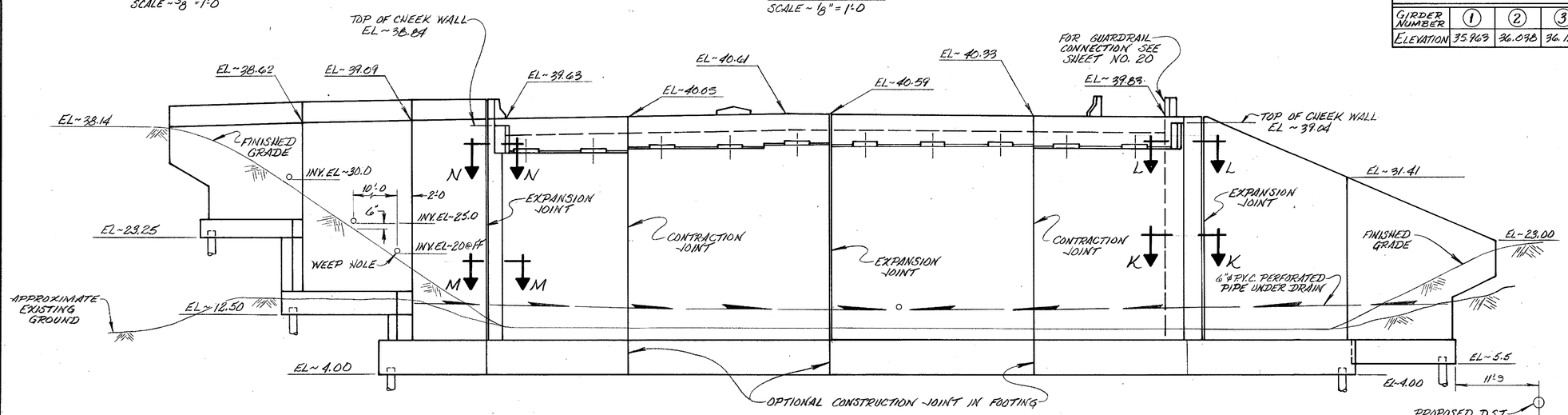

ELEVATION
SCALE ~ 1/8" = 1'-0

REVISIONS
2 REVISED NORTH ABUTMENT ADDED SHEET 5B. M.A.A. 5-1-87

PREL. TRACING 04-27-87 DESIGN M.A.A. CHKD.

CONTRACT	COUNTY	FEDERAL AID PROJECT Nº	SHEET Nº	TOTAL SHEETS
81-071-01	N.C.	BRM 1231 (2)	5GA	351

EDGEMOOR ROAD
OVER
AMTRAK-CONRAIL
NORTH ABUTMENT~REINFORCEMENT

NOTES:

1) FOR GENERAL NOTES SEE SHEET #1.
2) FOR SECTIONS A-A THRU F-F SEE SHEET #6.
3) FOR SECTIONS K-K THRU N-N SEE SHEET #4.
4) FOR BAR LIST SEE SHEET #7.
5) * ~ DENOTES EPOXY COATED BARS.

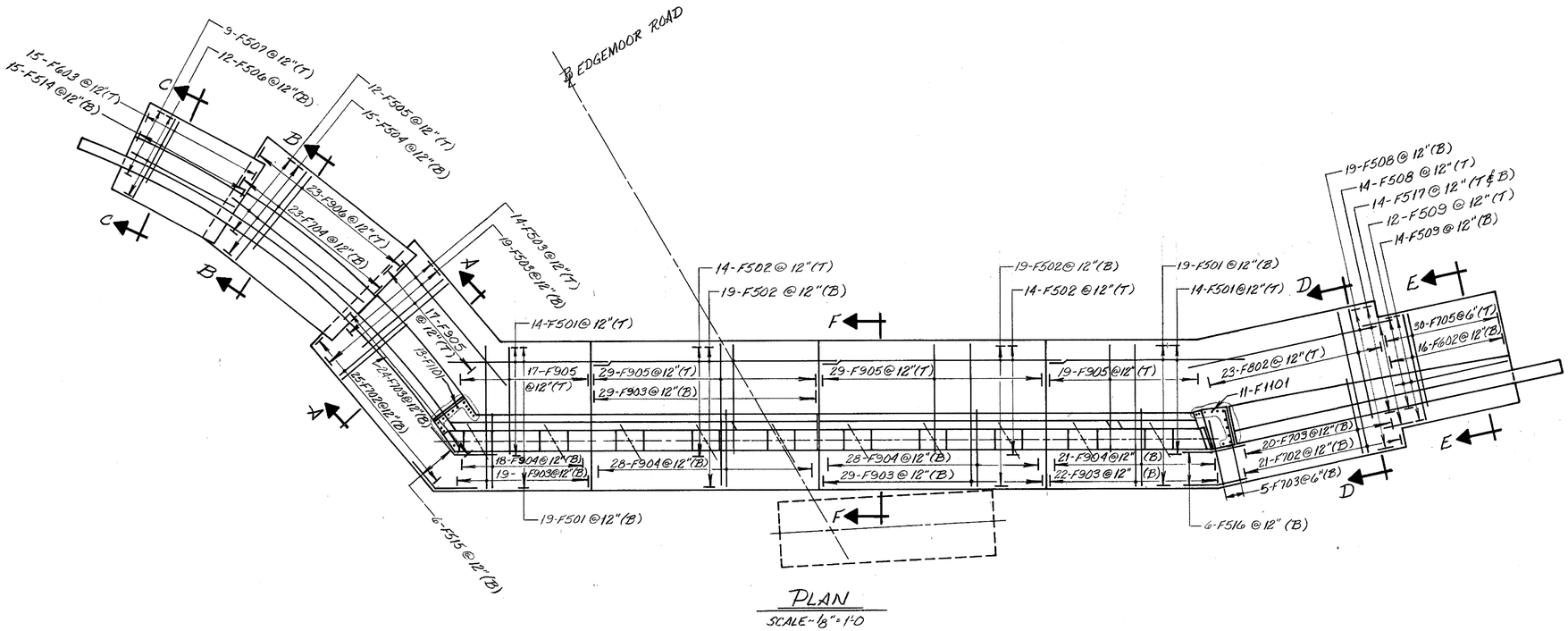

PLAN
SCALE ~ 1/8" = 1'-0

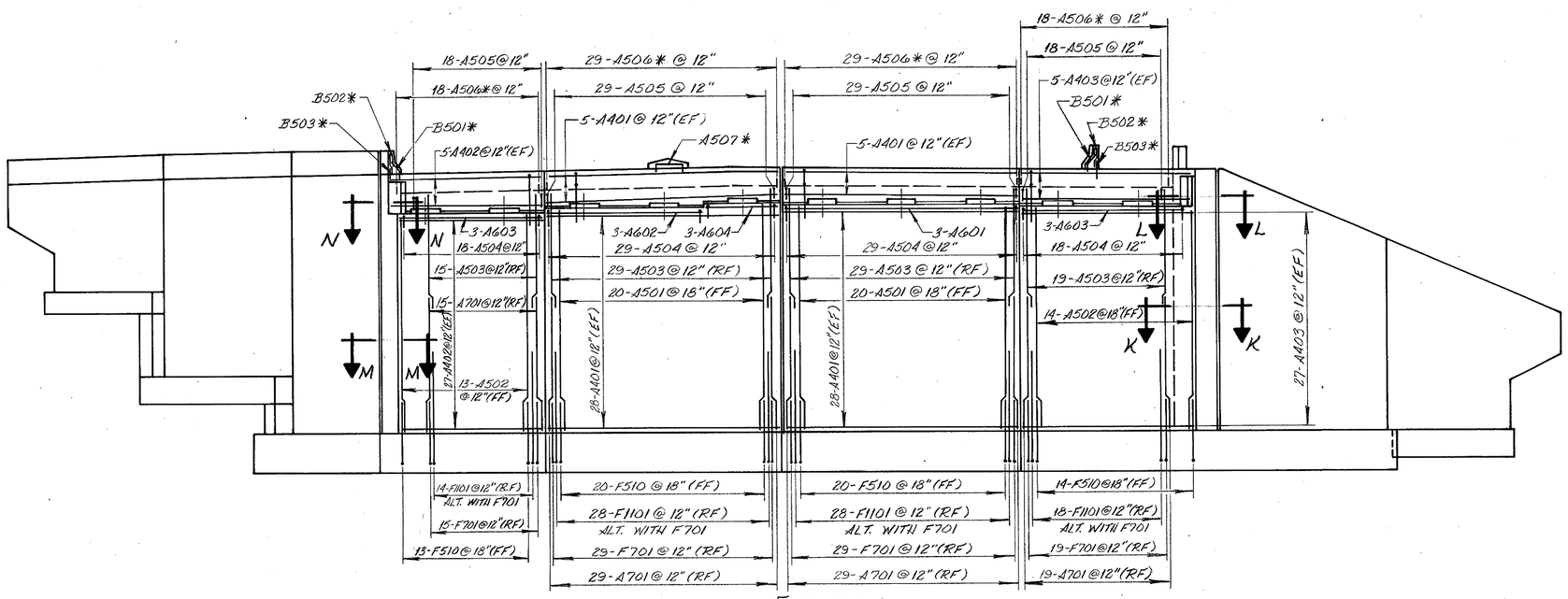

ELEVATION
SCALE ~ 1/8" = 1'-0

REVISIONS

2 REVISED NORTH ABUTMENT, ADDED SHEET 5C. M.A.A. 5-1-87

PREL. TRACING 04-30-87 DESIGN M.A.A. CHKD.

COUNTY	CONTRACT	P. R. A. REG. NO.	STATE	FED. AID PROJECT NO.	SHEET NO.	TOTAL SHEETS
New Castle	81-071-01	3	DEL.	BRM 1231(2)	6A	351

EDGEMOOR ROAD OVER AMTRAK-CONRAIL
NORTH ABUTMENT-WINGWALL DETAILS

NO.	REVISIONS	BY	DATE
2	REVISED N.W. WINGWALL	MAA	5/1/87

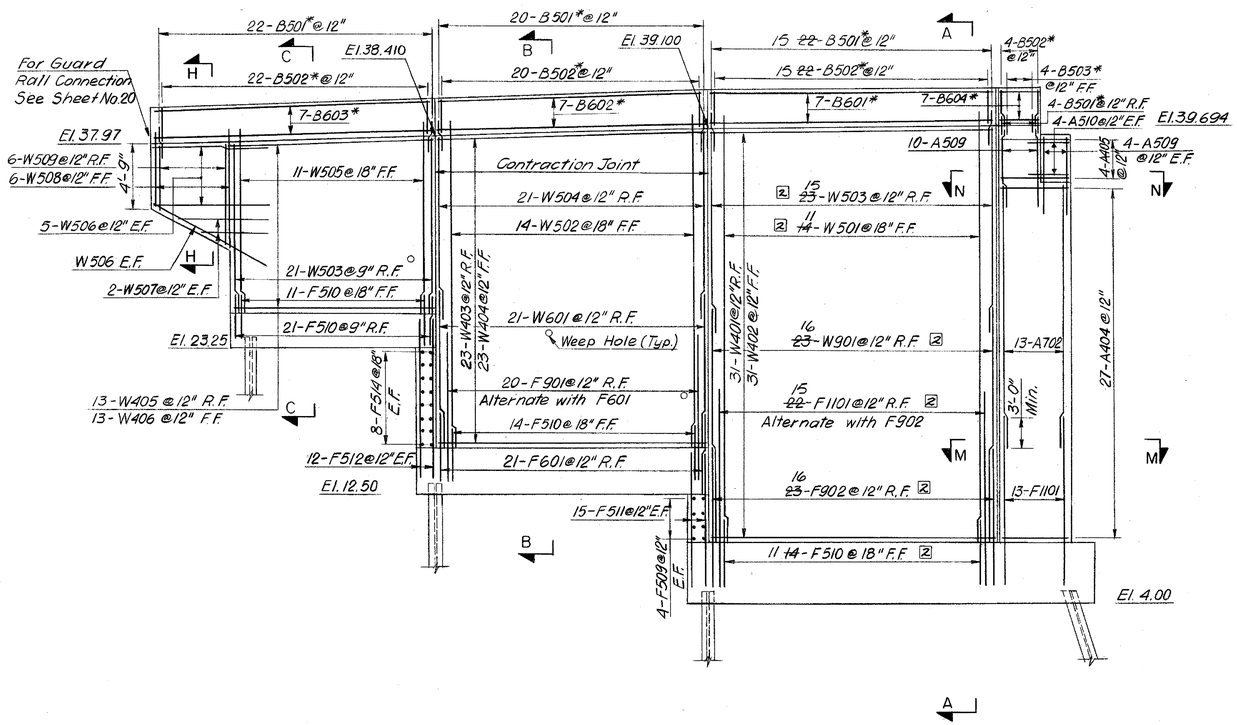

ELEVATION

(NORTH WEST WINGWALL)

Scale: 3/16" = 1'-0"

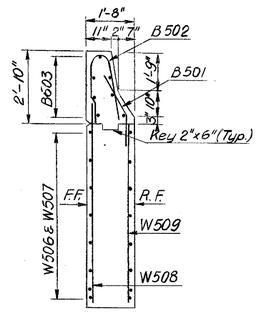

SECTION H-H

Scale: 3/8" = 1'-0"

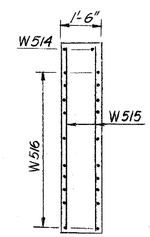

SECTION J-J

Scale: 3/8" = 1'-0"

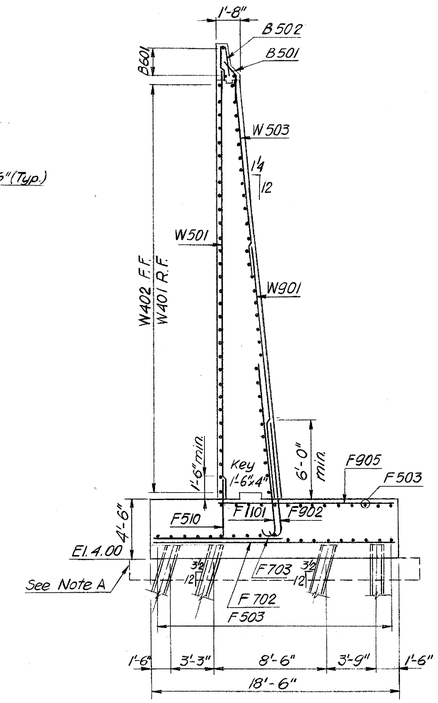

SECTION A-A

Scale: 3/16" = 1'-0"

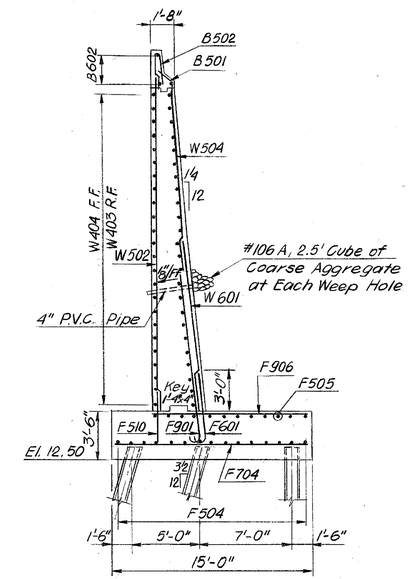

SECTION B-B

Scale: 3/16" = 1'-0"

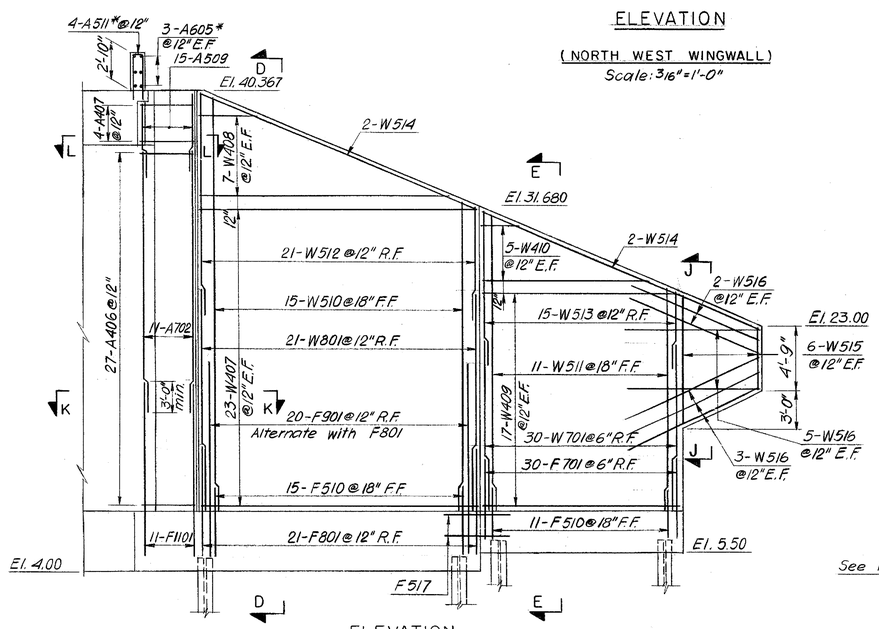

ELEVATION

(NORTH EAST WINGWALL)

Scale: 3/16" = 1'-0"

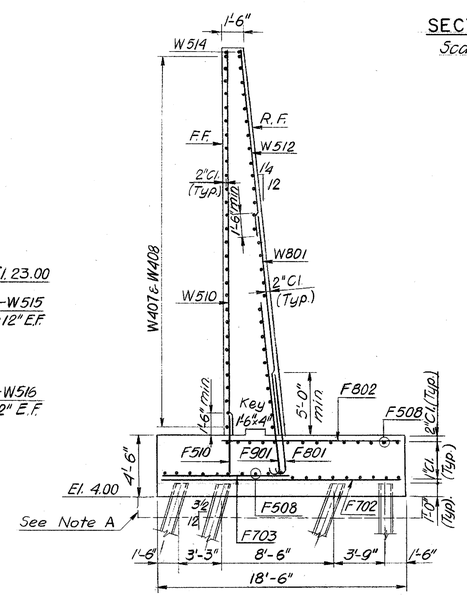

SECTION D-D

Scale: 3/16" = 1'-0"

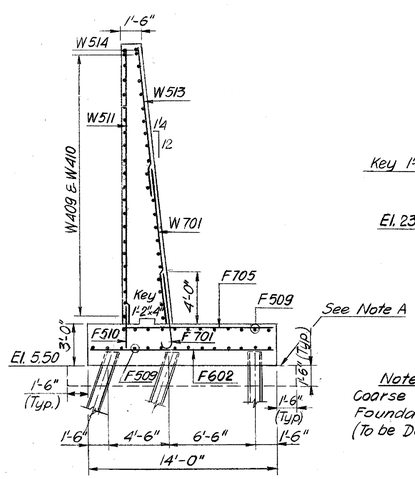

SECTION E-E

Scale: 3/16" = 1'-0"

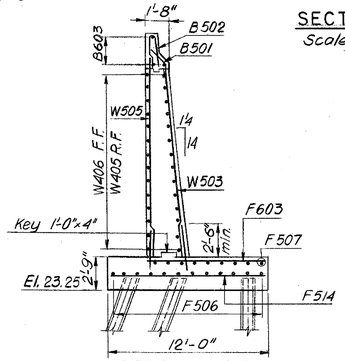

SECTION C-C

Scale: 3/16" = 1'-0"

Note A
Coarse Aggregate for Foundation Stabilization (To be Determined in the Field)

DELAWARE
DEPARTMENT OF TRANSPORTATION
DIVISION OF HIGHWAYS

D. R. P.	SCALE	APPROVED BY:
T. Z. K.	As Shown	
C. R. P.		BRIDGE ENGINEER

STEINMAN BOYNTON GRONQUIST & BIRDSALL
CONSULTING ENGINEERS
829 HUDSON STREET
HOBOKEN, N.J. 07030

NOTE: FIELD CUT AND/OR BEND AS REQUIRED [2]

NO.	REVISIONS	BY	DATE
2	ADDED NOTE	MAA	5/11/87

COUNTY	CONTRACT	P. R. A. REG. NO.	STATE	FED. AID PROJECT NO.	SHEET NO.	TOTAL SHEETS
New Castle	81-071-01	3	DEL	BRM 1231 (2)	7A	351

BAR LIST

MARK	SZ.	NO.	LENGTH	TYPE	A	B	C	D	E	F	G	H	J	K	L	R	S	REMARKS
F 1101	11	134	15'-0"	1	1'-7"	13'-5"												
F 901	9	40	14'-8"	1	1'-3"	13'-5"												
F 902	9	23	10'-8"	1	1'-3"	9'-5"												
F 903	9	99	18'-0"															
F 904	9	95	9'-6"															
F 905	9	119	13'-6"															
F 906	9	23	12'-0"															
F 801	8	21	9'-4"	1	0'-11"	8'-5"												
F 802	8	23	13'-6"															
F 701	7	122	8'-3"	1	0'-10"	7'-5"												
F 702	7	46	18'-0"															
F 703	7	62	8'-0"															
F 704	7	23	14'-6"															
F 705	7	30	11'-6"															
F 601	6	21	6'-0"	1	0'-8"	5'-4"												
F 602	6	16	13'-6"															
F 603	6	15	9'-0"															
F 501	5	66	20'-9"															
F 502	5	66	30'-3"															
F 503	5	33	26'-9"															
F 504	5	15	20'-4" to 23'-6"															Varies by 2¾"
F 505	5	12	21'-0" to 23'-6"															Varies by 2¾"
F 506	5	12	14'-2" to 16'-5"															Varies by 2½"
F 507	5	9	14'-9" to 16'-5"															Varies by 2½"
F 508	5	33	24'-4"															
F 509	5	34	14'-6"															
F 510	5	132	5'-6"															
F 511	5	30	10'-8"															
F 512	5	24	11'-9"															
F 513																		No Bar
F 514	5	31	11'-6"															
F 515	5	6	10'-0"	2	5'-0"	5'-0"	3'-9"											
F 516	5	6	10'-0"	2	5'-0"	5'-0"	1'-9"											
F 517	5	28	4'-0"															
A 701	7	92	15'-0"															
A 702	7	24	20'-6"															
A 601	6	3	28'-2"															
A 602	6	3	18'-6"															
A 603	6	6	17'-9"															
A 604	6	3	9'-2"															
* A 605	6	6	21'-8"															
A 501	5	40	27'-3"															
A 502	5	27	26'-9"															
A 503	5	92	16'-3"															
A 504	5	94	5'-2"	3	1'-0"	1'-0"	3'-2"											
A 505	5	94	2'-11"	3		1'-3"	1'-8"											
* A 506	5	94	8'-8"	3	5'-1"	2'-11"	0'-8"											
* A 507	5	1	3'-10"	3	0'-9"	0'-9"	2'-4"											
* A 509	5	33	5'-3"															
* A 510	5	8	3'-3"															
* A 511	5	4	8'-0"	3	3'-8"	3'-0"	0'-8"											

BAR LIST

MARK	SZ.	NO.	LENGTH	TYPE	A	B	C	D	E	F	G	H	J	K	L	R	S	REMARKS
A 401	4	66	28'-2"															
A 402	4	64	18'-2"															
A 403	4	64	19'-5"															
A 404	4	27	15'-2"	4	1'-0"	5'-3"	4'-7"	4'-4"	4'-0"									
A 405	4	4	12'-10"	5	1'-3"	2'-8"	4'-7"	4'-4"	2'-0"									
A 406	4	27	13'-9"	6	1'-0"	2'-10"	4'-5"	3'-2"	0'-10"	1'-6"	0'-4"	1'-3"						
A 407	4	4	16'-4"	7	0'-7"	2'-10"	4'-5"	3'-2"	0'-10"	1'-6"	0'-3"	1'-3"	3'-0"					
NORTH WEST WINGWALL																		
W 901	9	23	19'-0"															
W 601	6	21	13'-0"															
W 501	5	14	32'-1"															
W 502	5	14	24'-0"															
W 503	5	44	11'-10"															
W 504	5	21	11'-2"															
W 505	5	11	13'-0"															
W 506	5	12	8'-10"															
W 507	5	2×2	5'-0" to 7'-0"															
W 508	5	6	5'-7" to 8'-7"															Varies by 7"
W 509	5	6	4'-4" to 7'-4"															Varies by 7"
W 401	4	31	21'-7"															
W 402	4	31	21'-1"															
W 403	4	23	20'-6"															
W 404	4	23	19'-8"															
W 405	4	13	15'-6"															
W 406	4	13	14'-11"															
NORTH EAST WINGWALL																		
W 801	8	21	17'-0"															
W 701	7	30	12'-0"															
W 510	5	15	22'-11" to 31'-6"															Varies by 7½"
W 511	5	11	16'-7" to 22'-10"															Varies by 7½"
W 512	5	21	7'-10" to 16'-2"															Varies by 5"
W 513	5	15	5'-8" to 11'-6"															Varies by 5"
W 514	5	4	22'-4"															
W 515	5	2×6	4'-7" to 9'-2"															Varies by 11"
W 516	5	20	9'-0"															
W 407	4	46	20'-8"															
W 408	4	14	4'-11" to 19'-5"															Varies by 2'-5"
W 409	4	34	14'-8"															
W 410	4	10	3'-9" to 13'-5"															Varies by 2'-5"
* B 601	6	7	21'-4"															
* B 602	6	7	19'-10"															
* B 603	6	7	21'-1"															
* B 604	6	9	2'-8"															
* B 501	5	69	3'-6"	2	1'-6"	2'-6"	1'-1"											
* B 502	5	69	5'-4"	8	2'-7"	2'-7"	0'-2"									3½"		
* B 503	5	5	2'-0"															

* Denotes Epoxy Coated Bars.
All Bar Dimensions are from out to out. Radii are to ℄ of Bar.

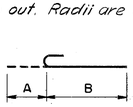

TYPE 1

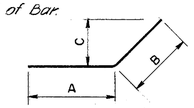

TYPE 2

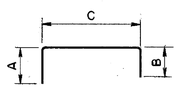

TYPE 3

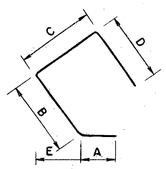

TYPE 4

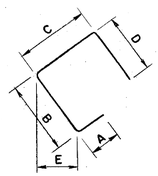

TYPE 5

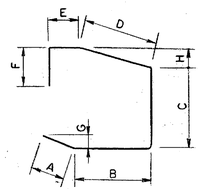

TYPE 6

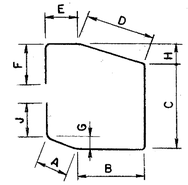

TYPE 7

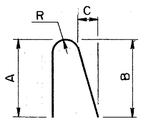

TYPE 8

DELAWARE
DEPARTMENT OF TRANSPORTATION
DIVISION OF HIGHWAYS

EDGEMOOR ROAD BRIDGE OVER AMTRAK - CONRAIL

NORTH ABUTMENT - BAR LIST

D.	SCALE:	APPROVED BY:
T. N. P.		
C. R. P.		BRIDGE ENGINEER

STEINMAN BOYNTON GRONQUIST & BIRDSALL
CONSULTING ENGINEERS
89 HUDSON STREET
HOBOKEN, N.J. 07030

COUNTY	CONTRACT	P. R. A. REG. NO.	STATE	FED. AID PROJECT NO.	SHEET NO.	TOTAL SHEETS
New Castle	81-071-01	3	DEL.	BRM 1231(2)	8A	351

EDGEMOOR ROAD OVER AMTRAK-CONRAIL
SOUTH ABUTMENT

NO.	REVISIONS	BY	DATE

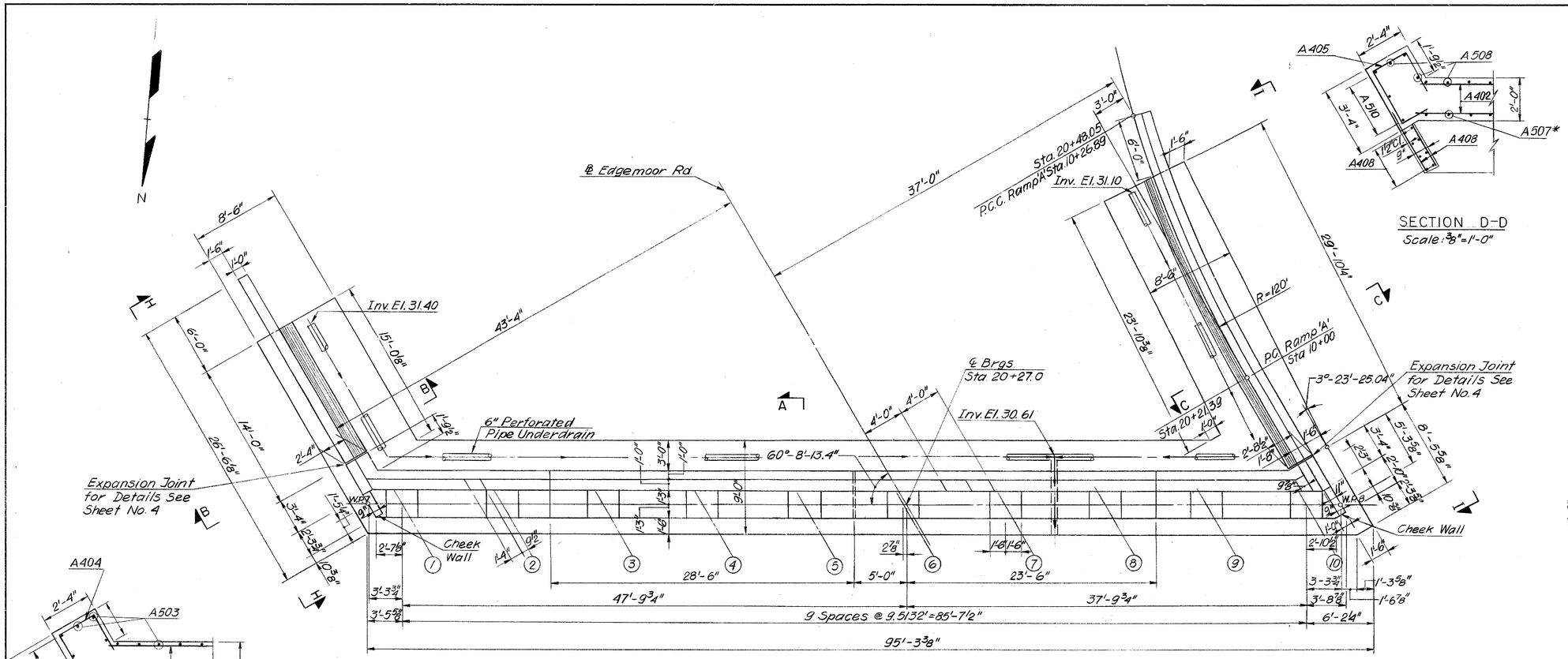

PLAN
Scale: 3/16"=1'-0"

SECTION D-D
Scale: 3/8"=1'-0"

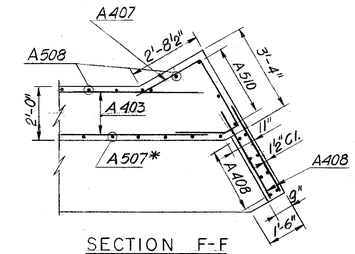

SECTION F-F
Scale: 3/8"=1'-0"

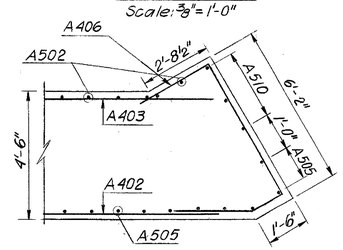

SECTION G-G
Scale: 3/8"=1'-0"

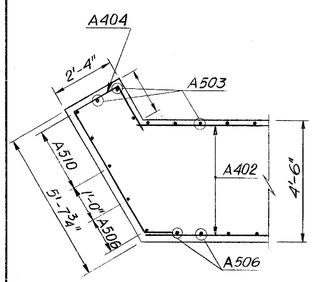

SECTION E-E
Scale: 3/8"=1'-0"

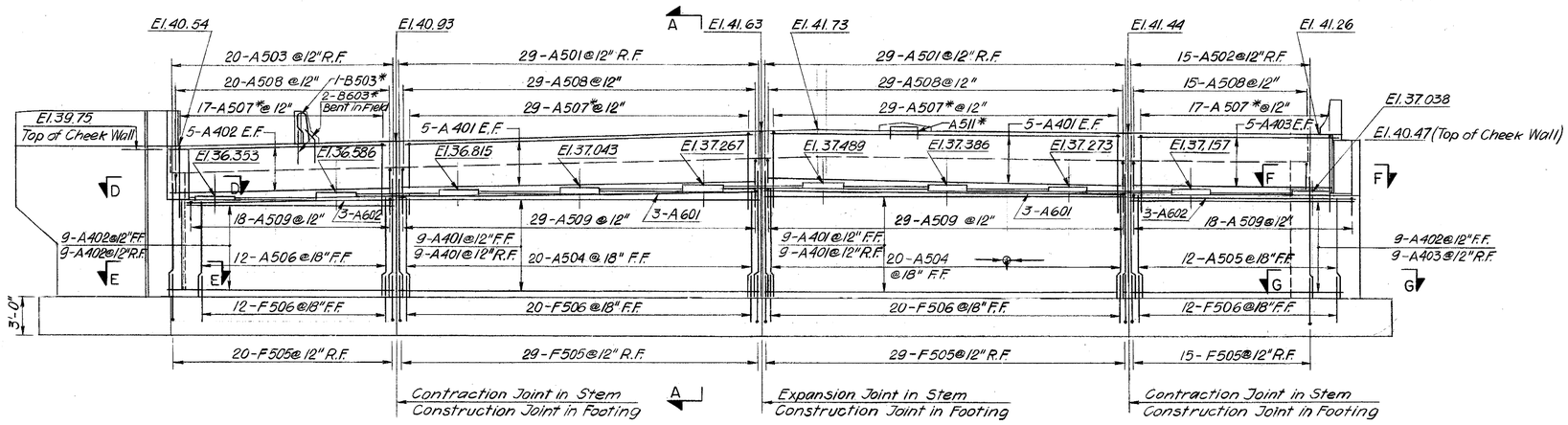

ELEVATION
Scale: 3/16"=1'-0"

Notes:

1. General Notes See Sheet No. 1.
2. For Section B-B & C-C See Sheet No. 9
3. For Wingwall and its Corners Reinforcement See Sheet No. 10.
4. For Elevations H-H and I-I See Sheet No. 9
5. For Excavation Pay Limits See Sheet No. 10.
6. For Bearing Pad Details See Sheet No. 4
7. For Construction of Curved Wingwall Contractor May Use 4' Segment.
8. For H-pile location see sheet No 10

DELAWARE
DEPARTMENT OF TRANSPORTATION
DIVISION OF HIGHWAYS

D. R. P.	SCALE	APPROVED BY:
T. Z. K.	As Shown	
C. P. C.		BRIDGE ENGINEER

STEINMAN BOYNTON
GRONQUIST & BIRDSALL
CONSULTING ENGINEERS
89 HUDSON STREET
HOBOKEN, N.J. 07030

COUNTY	CONTRACT	P. B. A. REG. NO.	STATE	FED. AID PROJECT NO.	SHEET NO.	TOTAL SHEETS
New Castle	81-071-01	3	DEL	BRM 1231 (2)	9 A	357

EDGEMOOR ROAD OVER AMTRAK-CONRAIL
SOUTH ABUTMENT-WINGWALL DETAILS

NO.	REVISIONS	BY	DATE

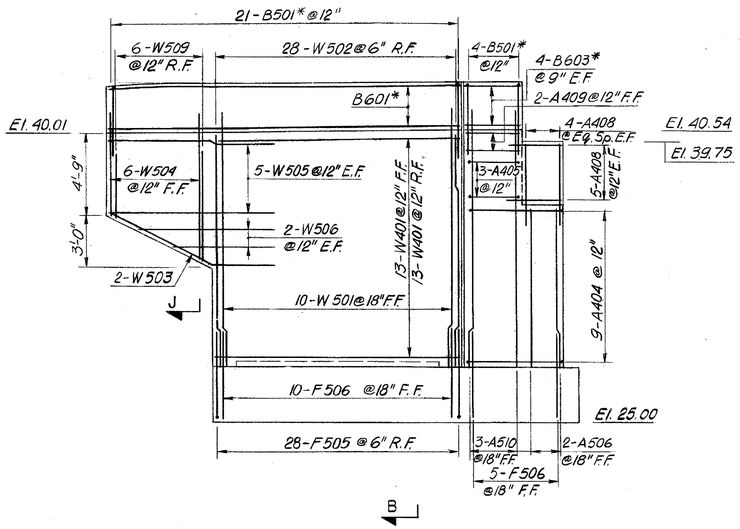

ELEVATION H-H
Scale: 1/4" = 1'-0"

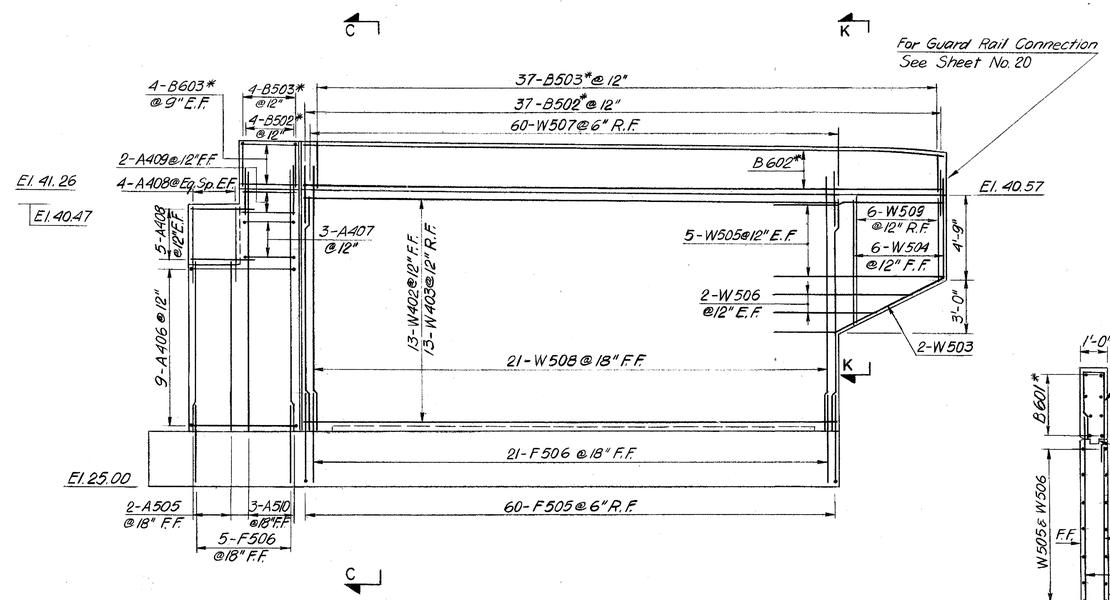

ELEVATION I-I
Scale: 1/4" = 1'-0"

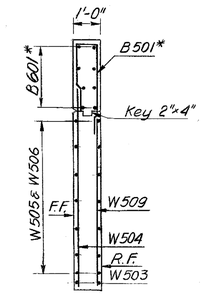

SECTION J-J
Scale: 3/8" = 1'-0"

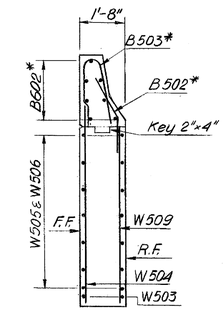

SECTION K-K
Scale: 3/8" = 1'-0"

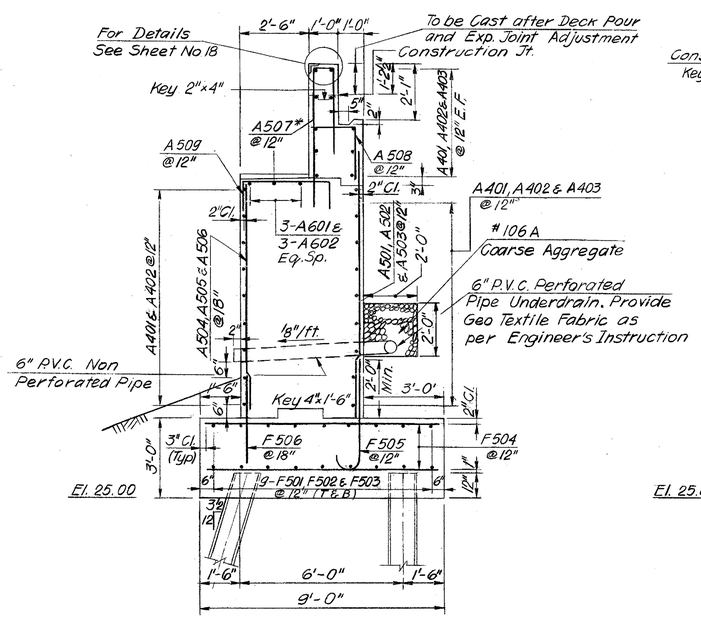

SECTION A-A
Scale: 3/8" = 1'-0"

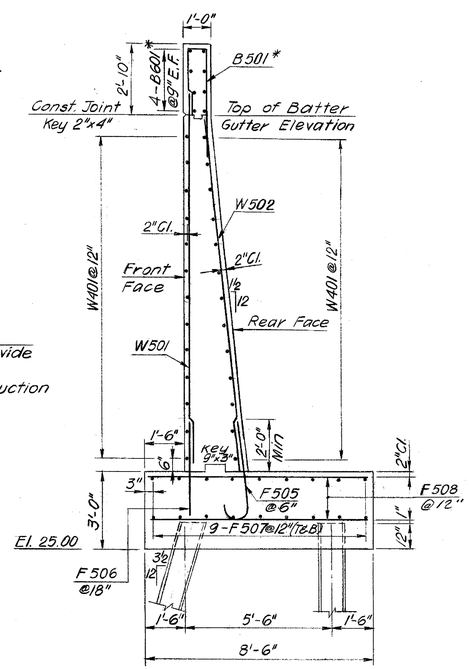

SECTION B-B
Scale: 3/8" = 1'-0"

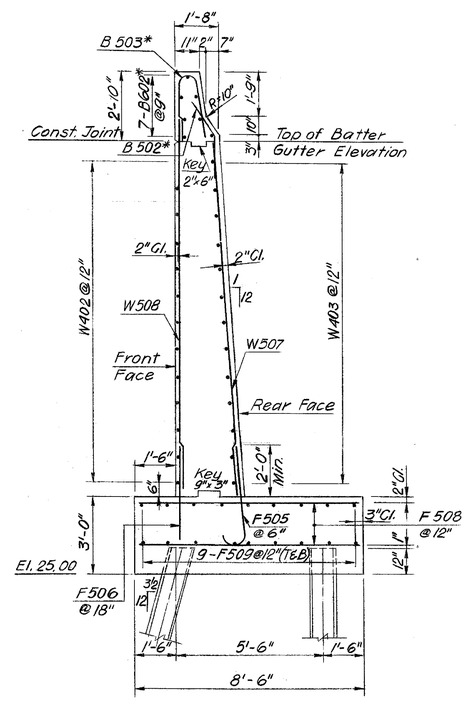

SECTION C-C
Scale: 3/8" = 1'-0"

ESTIMATED QUANTITIES

SECTION	ITEM	UNIT	QUANTITY
207	Excavation and Backfill for Structures	C.Y.	130
209	Borrow Type C (Backfill)	C.Y.	300
209	Borrow Type F (Common Borrow)	C.Y.	2,400
602 ⊛	P.C.C. Masonry - Abutment Footing	C.Y.	129
602 ⊛	P.C.C. Masonry - Abutment Above Footing	C.Y.	217
605 ⊛	Bar Reinforcement	Lbs.	14,700
605A ⊛	Bar Reinforcement - Epoxy Coated	Lbs.	1,500
625	Steel "H" Piles - HP 12 x 53	L.F.	3,694
S.P.	6" Perforated Pipe Underdrains	L.F.	135
S.P.	Furnishing Borrow Type C, for Structure, Pipe and Utility Trench Backfill	C.Y.	90

⊛ Fixed Quantity Items

DELAWARE
DEPARTMENT OF TRANSPORTATION
DIVISION OF HIGHWAYS

D. R. P.	SCALE	APPROVED BY:
T. Z. K.	As Shown	
C. P. C.		BRIDGE ENGINEER

STEINMAN BOYNTON GRONQUIST & BIRDSALL
CONSULTING ENGINEERS
89 HUDSON STREET
HOBOKEN, N.J. 07030

COUNTY	CONTRACT	F. R. A. REG. NO.	STATE	FED. AID PROJECT NO.	SHEET NO.	TOTAL SHEETS
New Castle	81-071-01	3	DEL.	BRM 1231 (2)	10A	351

EDGEMOOR ROAD OVER AMTRAK-CONRAIL
SOUTH ABUTMENT-FOOTING PLAN

NO.	REVISIONS	BY	DATE

Electric Power Lines Clearance Note
Contractor shall maintain at all times a clearance of 13'-0" between power lines and all materials; equipment, leads etc, in each direction

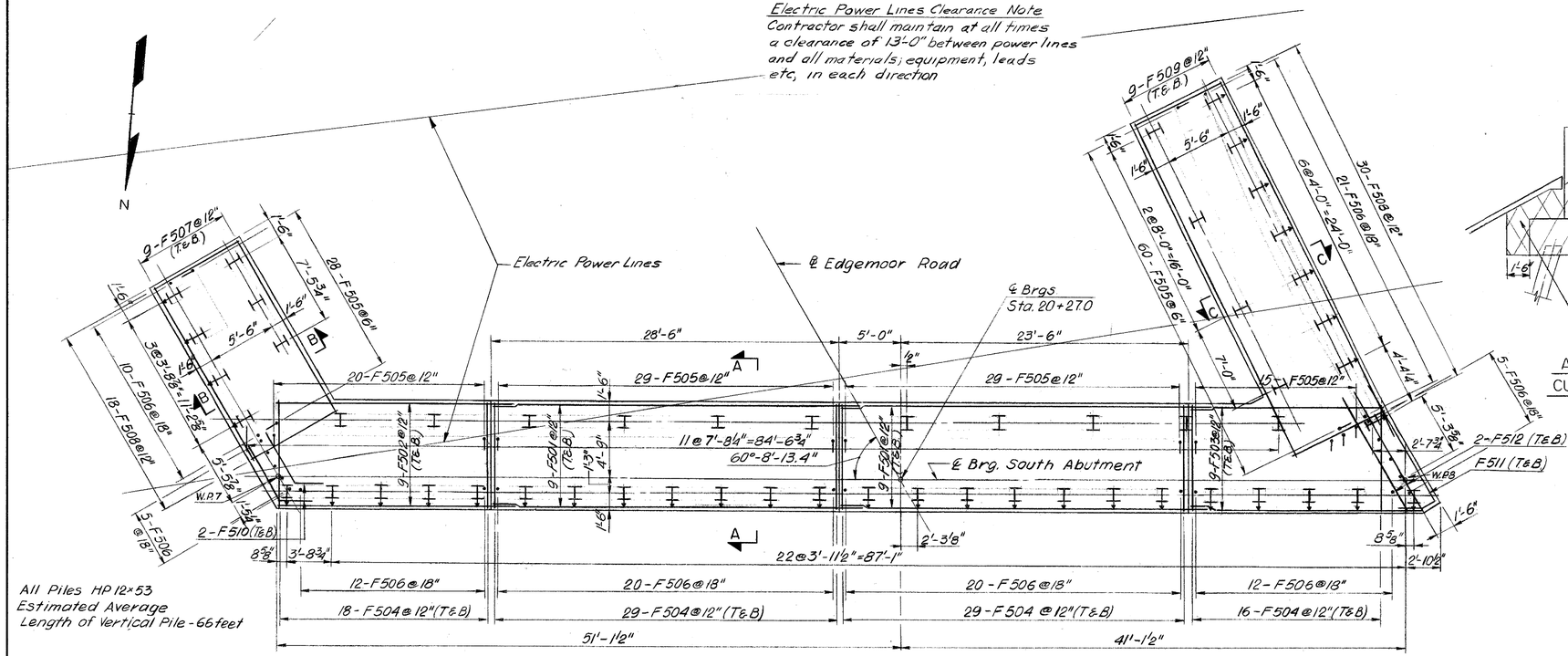

All Piles HP 12×53
Estimated Average Length of Vertical Pile - 66 feet

Indicates batter piles (1:6)

Indicates vertical piles

FOOTING PLAN
Scale: 3/16" = 1'-0

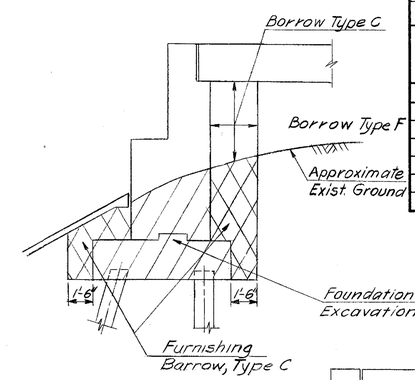

ABUTMENT
CUT SECTION

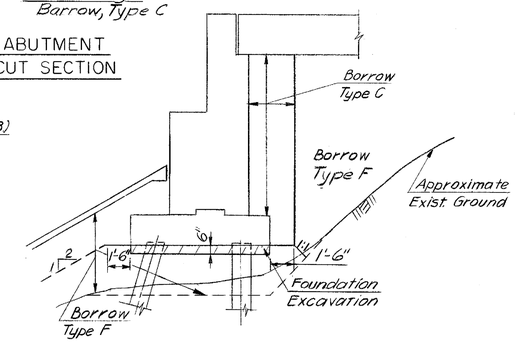

ABUTMENT
FILL SECTION

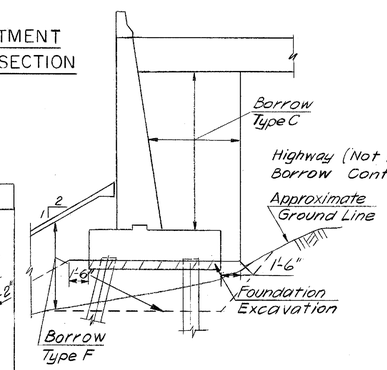

RETAINING WALL FILL SECTION

EXCAVATION PAY LIMITS
N.T.S.
Note:
For General Notes See Sheet No. 1.

REINFORCING BAR LIST

MARK	SIZE	LENGTH	NUMBER	TYPE	REMARKS
F501	5	30'-6"	36	Straight	
F502	5	19'-7"	18	do	
F503	5	15'-0" to 19'-8"	18	do	Varies by 7"
F504	5	8'-6"	184	do	
F505	5	5'-2"	181	Bent	
F506	5	3'-6"	105	Straight	
F507	5	17'-0"	18	do	
F508	5	8'-0"	48	do	
F509	5	30'-0"	18	do	
F510	5	8'-0"	4	Bent	
F511	5	12'-7"	2	do	
F512	5	9'-10"	4	Straight	
A601	6	28'-0"	6	Straight	
A602	6	16'-0"	6	do	
A603*	6	3'-0"	2	do	
A501	5	10'-1"	58	Straight	
A502	5	10'-3"	15	do	
A503	5	9'-6"	20	do	
A504	5	8'-6"	40	do	
A505	5	8'-9"	14	do	
A506	5	8'-1"	14	do	

MARK	SIZE	LENGTH	NUMBER	TYPE	REMARKS
A507	5	9'-0"	92	Bent	
A508	5	3'-9"	93	do	
A509	5	5'-2"	94	do	
A510	5	13'-4"	6	Straight	
A511*	5	3'-10"	1	Bent	
A401	4	28'-2"	56	Straight	
A402	4	16'-7"	37	do	
A403	4	15'-0"	19	do	
A404	4	10'-9"	9	Bent	
A405	4	8'-0"	3	do	
A406	4	12'-8"	9	do	
A407	4	8'-5	3	do	
A408	4	5'-0"	36	Straight	
A409	4	3'-0"	4	do	
W501	5	13'-4"	10	Straight	
W502	5	11'-9"	28	do	
W503	5	9'-6"	2×2	Bent	
W504	5	5'-7" to 8'-7"	2×6	Straight	Varies by 7"
W505	5	8'-10"	2×10	do	
W506	5	5'-0" to 7'-0"	2×4	do	
W507	5	12'-4"	60	do	
W508	5	13'-8"	21	do	
W509	5	4'-4" to 7'-4"	2×6	do	Varies by 7"

MARK	SIZE	LENGTH	NUMBER	TYPE	REMARKS
W401	4	13'-8"	26	Straight	
W402	4	29'-6"	13	do	
W403	4	30'-0"	13	do	
B601*	6	19'-8"	16	Straight	
B602*	6	35'-9"	7	do	
B603*	6	3'-0"	16	do	
B501*	5	7'-2"	25	Bent	
B502*	5	3'-6"	41	do	
B503*	5	5'-4"	42	do	

BENDING DIAGRAMS

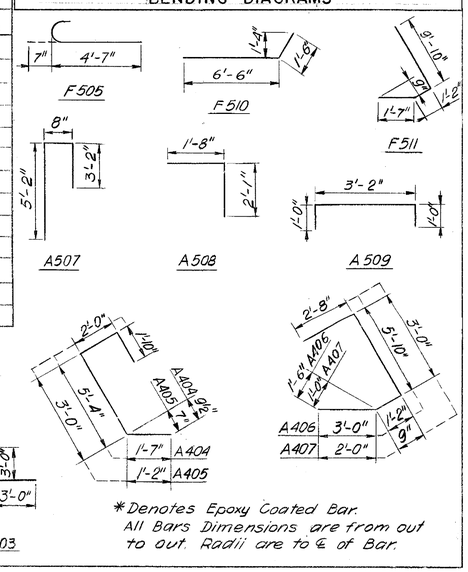

*Denotes Epoxy Coated Bar.
All Bars Dimensions are from out to out. Radii are to ℄ of Bar.

DELAWARE
DEPARTMENT OF TRANSPORTATION
DIVISION OF HIGHWAYS

D. R. P.	SCALE	APPROVED BY:
T. Z. K.	As Shown	
C. P. C.		BRIDGE ENGINEER

STEINMAN BOYNTON GRONQUIST & BIRDSALL
CONSULTING ENGINEERS
89 HUDSON STREET
HOBOKEN, N.J. 07030

COUNTY	CONTRACT	P. R. A. REG. NO.	STATE	FED. AID PROJECT NO.	SHEET NO.	TOTAL SHEETS
New Castle	81-071-01	3	DEL.	BRM 1231(2)	11A	351

EDGEMOOR ROAD OVER AMTRAK-CONRAIL
PIERS 1 AND 2

NO.	REVISIONS	BY	DATE

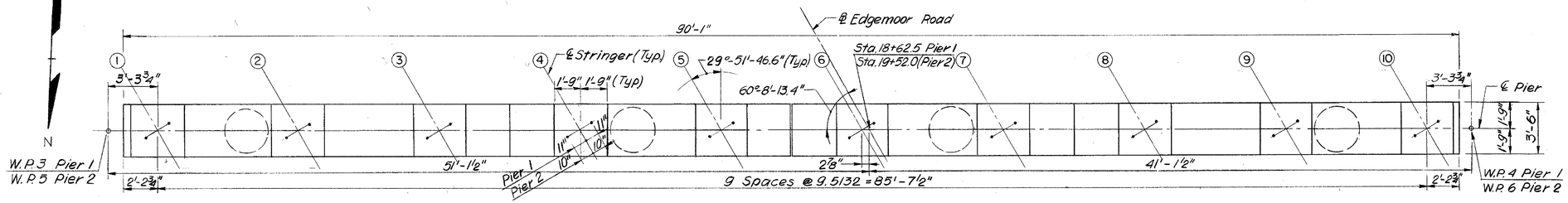

PIER CAP PLAN
Scale: 1/4" = 1'-0"

Note: Elevations in ( ) are for Pier 2

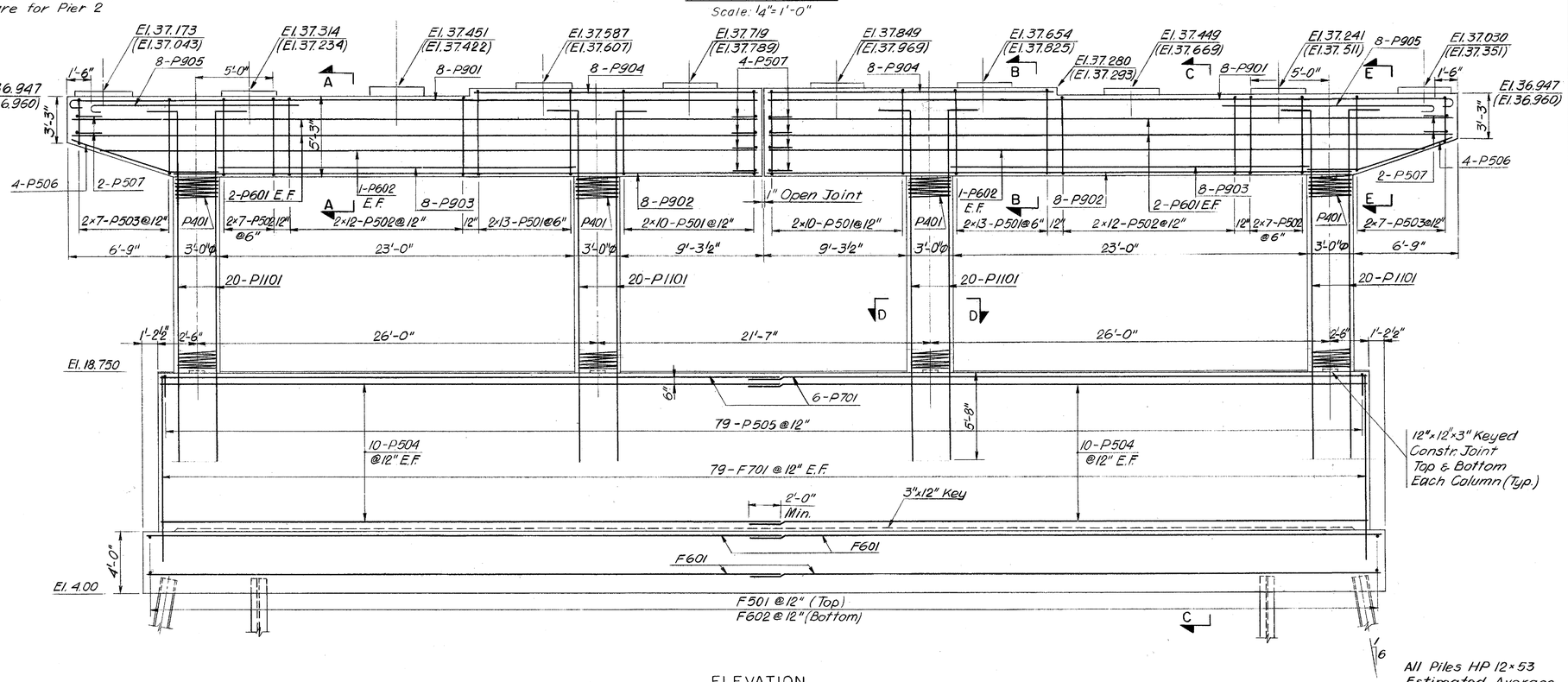

ELEVATION
Scale: 1/4" = 1'-0"

All Piles HP 12×53
Estimated Average Length of Vertical Pile:
Pier 1 - 57 feet
Pier 2 - 44 feet

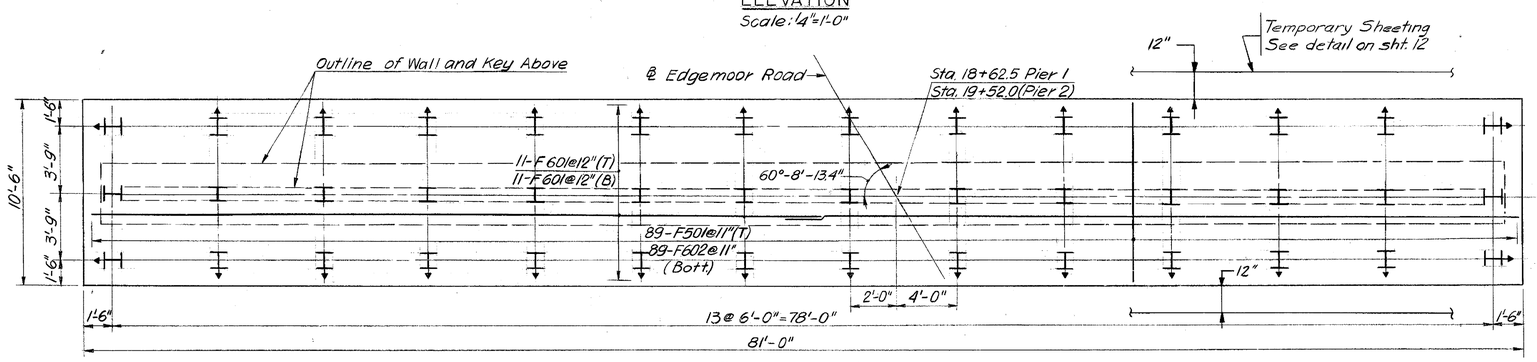

FOOTING PLAN
Scale: 1/4" = 1'-0"

ESTIMATED QUANTITIES

SECTION	ITEM	UNIT	QUANTITY PIER 1	QUANTITY PIER 2
207	Excavation and Backfill for Structures	C.Y.	300	300
602 ❀	P.C.C. Masonry-Footing	C.Y.	126	126
602 ❀	P.C.C. Masonry-above Footing	C.Y.	187	187
609	Coarse Aggregate for Foundation Stabilization	Ton	128	128
605 ❀	Bar Reinforcement	Lbs.	36,500	36,600
625	Steel "H" Piles HP 12×53	L. F.	2,414	1,868
S.P.	Temporary Sheeting	S.F.	1,630	720

❀ Fixed Quantity Items.

Notes:

1. For General Notes See Sheet No. 1.
2. For Bearings Details See Sheet No. 15.
3. For Bar List See Sheet No. 12.
4. For Sections A-A, B-B, C-C, D-D & E-E See Sheet No. 12.

Legend:
I Indicates Vertical Pile
I Indicates Batter Pile (1:6)

DELAWARE
DEPARTMENT OF TRANSPORTATION
DIVISION OF HIGHWAYS

D. R. P.	SCALE	APPROVED BY:
T. Z. K.	As Shown	
C. R. P.		BRIDGE ENGINEER

STEINMAN BOYNTON
GRONQUIST & BIRDSALL
CONSULTING ENGINEERS
89 HUDSON STREET
HOBOKEN, N.J. 07030

COUNTY	CONTRACT	P. R. A. REG. NO.	STATE	FED. AID PROJECT NO.	SHEET NO.	TOTAL SHEETS
New Castle	81-071-01	3	DEL	BRM 1231 (2)	12A	351

EDGEMOOR ROAD OVER AMTRAK-CONRAIL
PIER DETAILS

NO.	REVISIONS	BY	DATE

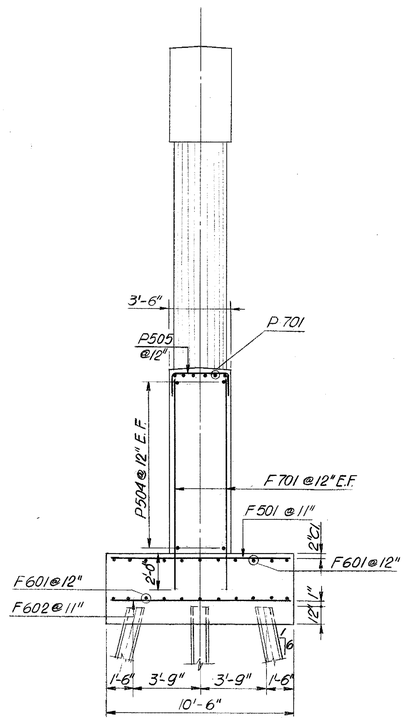

SECTION C-C
Scale: 1/4" = 1'-0"

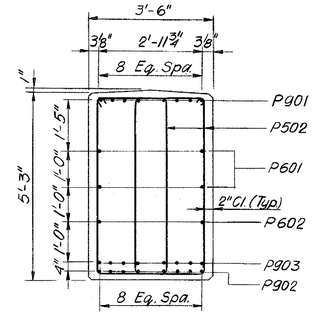

SECTION A-A
Scale: 1/2" = 1'-0"

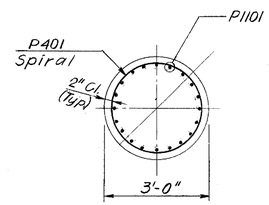

SECTION D-D

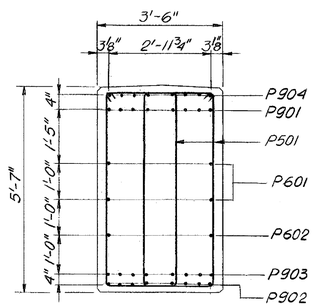

SECTION B-B
Scale: 1/2" = 1'-0"

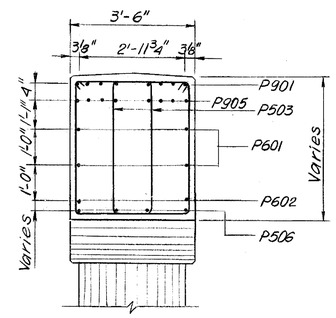

SECTION E-E
Scale: 1/2" = 1'-0"

Notes:

1. For General Notes See Sheet No. 1.
2. For Sections A-A, B-B, C-C, D-D and E-E Locations See Sheet No. 11.
3. Temporary Sheeting Must be Cut off at Top of Tie Level During Construction. After Construction it Must be Cut off 18" below Existing Ground or 24" below Bottom of Tie, whichever is Greater.

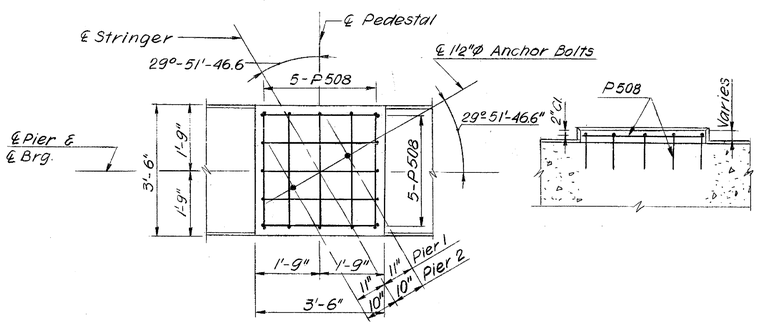

PLAN

ELEVATION

PEDESTAL DETAILS
FOR STRINGERS: 2 TO 8 PIER 1 / 3 TO 10 PIER 2
Scale: 1/2" = 1'-0"

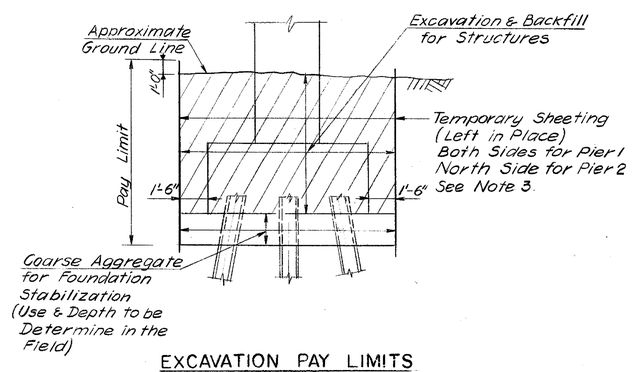

EXCAVATION PAY LIMITS
N.T.S.

REINFORCING BAR LIST

MARK	SIZE	LENGTH	NUMBER	TYPE	REMARKS
F701	7	12'-6"	2×158	Straight	
F601	6	41'-3"	2×44	do	
F602	6	10'-2"	2×89	do	
F501	5	10'-2"	2×89	do	
P1101	11	25'-0"	2×80	Bent	
P901	9	45'-11"	2×16	do	
P902	9	37'-11"	2×16	Straight	
P903	9	24'-0"	2×16	do	
P904	9	18'-8"	2×16	do	
P905	9	14'-6"	2×16	Bent	
P701	7	40'-0"	2×12	Straight	
P601	6	44'-8"	2×8	do	
P602	6	42'-3"	2×4	do	
P501	5	15'-8"	2×92	Bent	
P502	5	15'-0"	2×76	do	
P503	5	11'-2" to 14'-10"	2×28	do	Varies by 3¾"
P504	5	40'-0"	2×40	Straight	
P505	5	5'-2"	2×79	Bent	
P506	5	9'-11"	2×8	do	
P507	5	5'-1"	2×12	do	
P508	5	6'-2"	150	do	(70 for Pier 1)
P401	1/2"Φ	461'-3"	2×4	Spirals	

BENDING DIAGRAMS

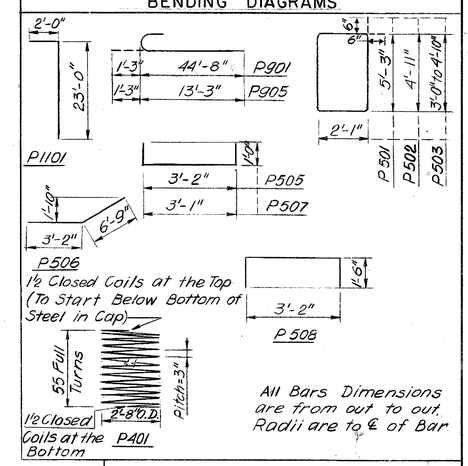

All Bars Dimensions are from out to out. Radii are to ℄ of Bar.

DELAWARE
DEPARTMENT OF TRANSPORTATION
DIVISION OF HIGHWAYS

D. R. P.	SCALE	APPROVED BY:
T. Z. K.	As Shown	
C. R. P.		BRIDGE ENGINEER

STEINMAN BOYNTON GRONQUIST & BIRDSALL
CONSULTING ENGINEERS
89-HUDSON STREET
HOBOKEN, N.J. 07030

COUNTY	CONTRACT	P. R. A. REG. NO.	STATE	FED. AID PROJECT NO.	SHEET NO.	TOTAL SHEETS
New Castle	81-071-01	3	DEL.	BRM 1231(2)	13A	35

EDGEMOOR ROAD OVER AMTRAK-CONRAIL
FRAMING PLAN

NO.	REVISIONS	BY	DATE
2	REVISED SPAN I LENGTH & DETAILS	MAA	5/1/87

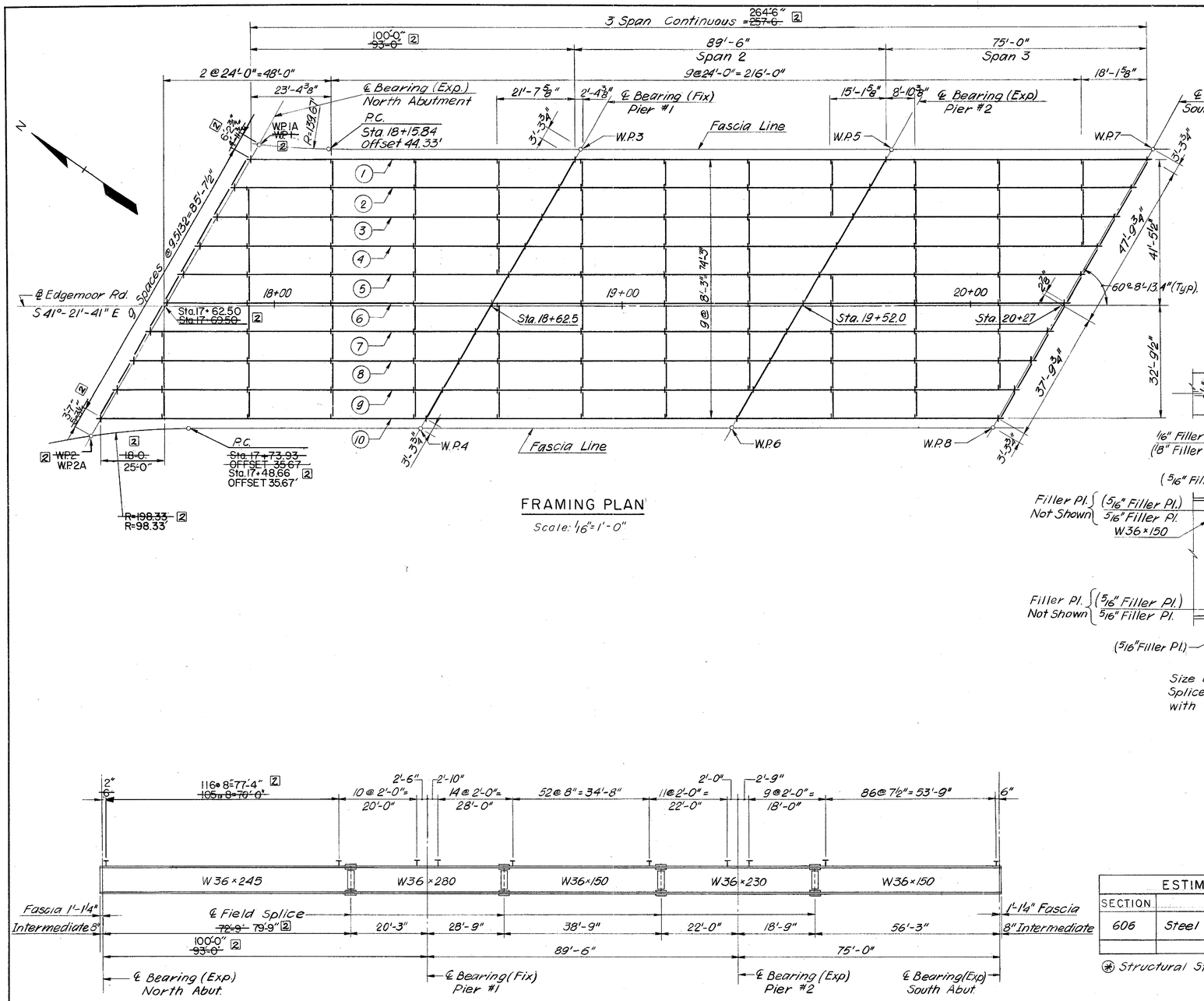

FRAMING PLAN

Scale: 1/16" = 1'-0"

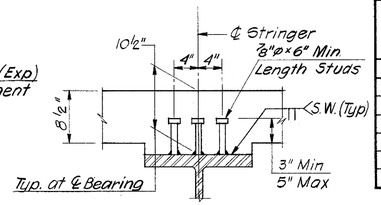

SHEAR CONNECTOR DETAIL

N.T.S.

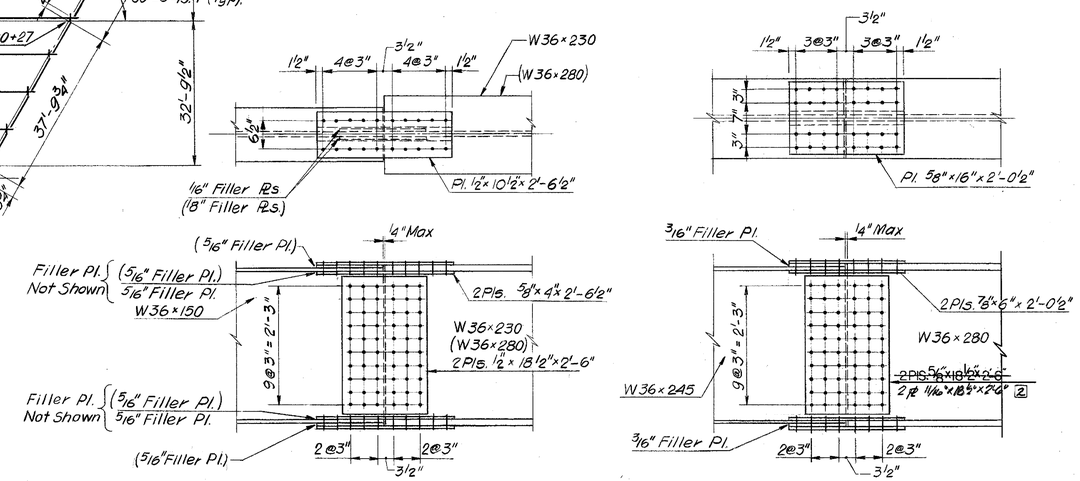

Size of Filler Plates for Field Splice in ( ) are for W36×280 with W36×150.

FIELD SPLICE

Scale: 3/4" = 1'-0"

STRINGER ELEVATION

N.T.S.

ESTIMATED QUANTITIES			
SECTION	ITEM	UNIT	QUANTITY
606	Steel Structures ⊛	Lump Sum	669,000 Lb. 2 ~~652,000 Lb.~~

⊛ Structural Steel for Bearings is Included.

Notes:

1. For General Notes See Sheet No. 1.
2. For Diaphragms and Stiffeners Details See Sheet No. 14.
3. The Installation of Shear Connectors will not be Permitted Prior to the Erection of the Structural Steel and the Placing of the Deck Forms.
4. For Camber Diagram See Sheet No. 15.
5. All Bolts are 7/8"φ ASTM A-325 Type 1, Mechanically Galvanized.
6. Provide Holes in Stringers 1 & 10 for Grounding and Bonding Connections. For Locations and Details See Sheet No 19 & 20.
7. All filler plates shall be corrosion resistant steel.

DELAWARE
DEPARTMENT OF TRANSPORTATION
DIVISION OF HIGHWAYS

D. P. C.	SCALE	APPROVED BY:
T. N. P.	As Shown	
C. R. P.		BRIDGE ENGINEER

STEINMAN BOYNTON GRONQUIST & BIRDSALL
CONSULTING ENGINEERS
89 HUDSON STREET
HOBOKEN, N.J. 07030

COUNTY	CONTRACT	P. R. A. REG. NO.	STATE	FED. AID PROJECT NO.	SHEET NO.	TOTAL SHEETS
New Castle	81-071-01	3	DEL	BRM 1231(2)	14A	351

EDGEMOOR ROAD OVER AMTRAK-CONRAIL
STRUCTURAL STEEL DETAILS

NO.	REVISIONS	BY	DATE
2	REVISED LAYOUT PLAN	MAA	5/1/87

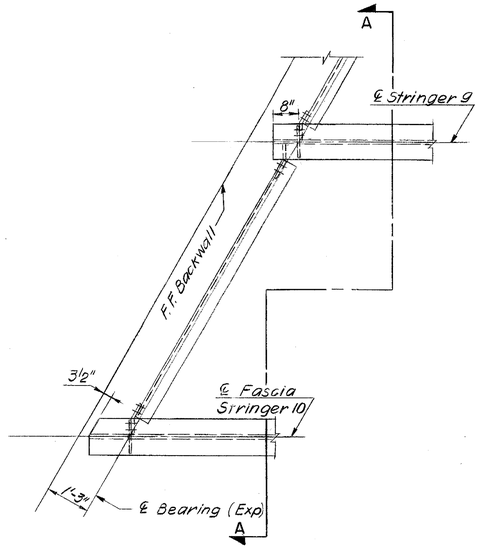

END DIAPHRAGM DETAIL AT NO. ABUTMENT

(SO. ABUTMENT SIMILAR)
Scale: ½"=1'-0"

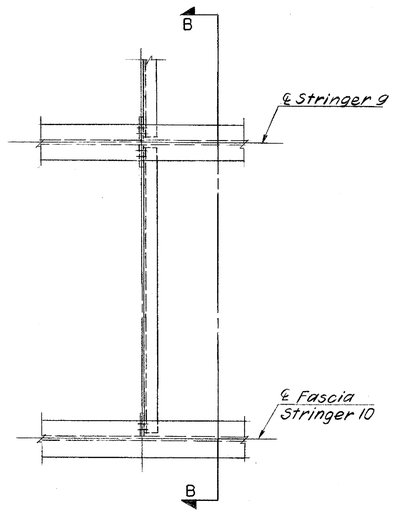

INTERMEDIATE DIAPHRAGM
Scale: ½"=1'-0"

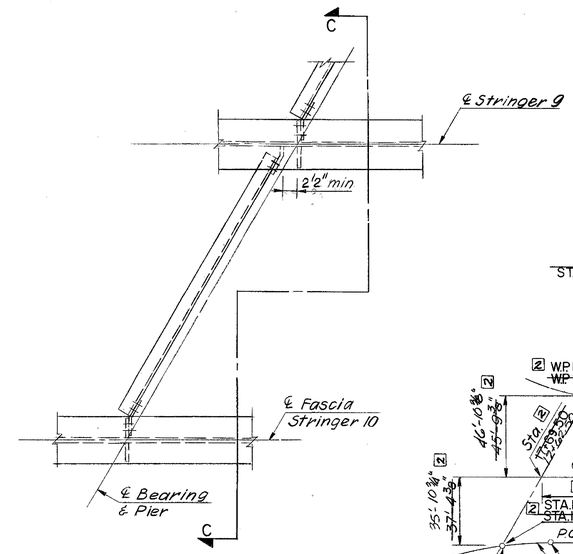

DIAPHRAGM AT PIER
Scale: ½"=1'-0"

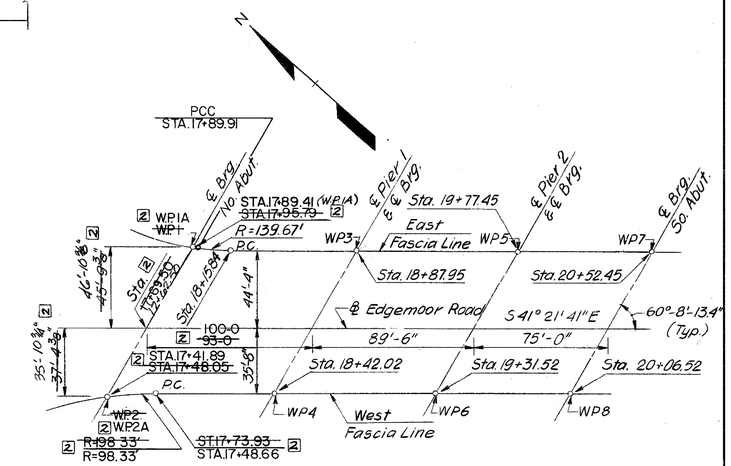

LAYOUT PLAN
N.T.S.

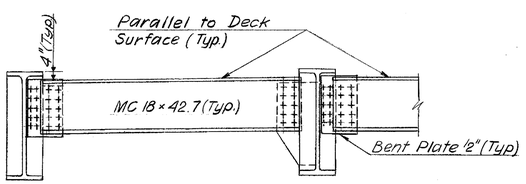

SECTION A-A
Scale: ½"=1'-0"

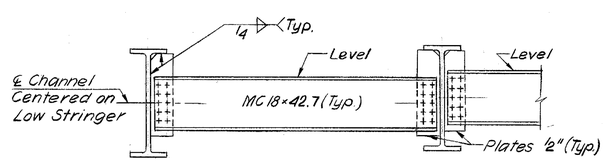

SECTION B-B
Scale: ½"=1'-0"

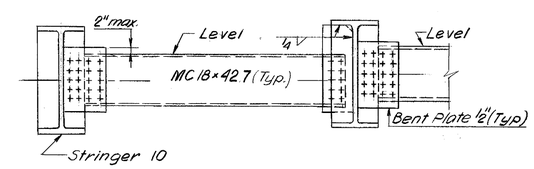

SECTION C-C
Scale: ½"=1'-0"

Notes:

1. For General Notes See Sheet No. 1.
2. For Framing Plan See Sheet No. 13.
3. All Bolts are ⅞"φ ASTM A-325, Type 1 Mechanically Galvanized.
4. Bolt Holes in Diaphragm Shall be 15/16"φ.
5. Bolt Holes in Connector Plates may be 1 1/16"φ.
6. Bearing Stiffeners, Ends of Stringers and Interior Diaphragms Connection Plates Shall be Vertical after Application of Full Dead Load.

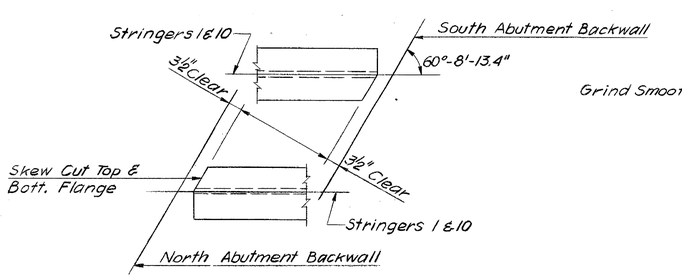

FASCIA STRINGER DETAILS
Scale: ¾"=1'-0"

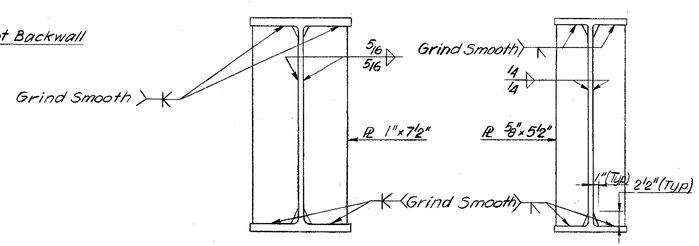

NO. ABUTMENT, PIER 1 & PIER 2 — SO. ABUTMENT

BEARING STIFFENERS
Scale: 1"=1'-0"

DELAWARE
DEPARTMENT OF TRANSPORTATION
DIVISION OF HIGHWAYS

D. R. P.	SCALE	APPROVED BY:
T. Z. K.	As Shown	
C. R. P.		BRIDGE ENGINEER

STEINMAN BOYNTON GRONQUIST & BIRDSALL
CONSULTING ENGINEERS
89 HUDSON STREET
HOBOKEN, N.J. 07030

COUNTY	CONTRACT	P. R. A. REG. NO.	STATE	FED. AID PROJECT NO.	SHEET NO.	TOTAL SHEETS
New Castle	81-071-01	3	DEL	BRM 1231(2)	15A	351

EDGEMOOR ROAD OVER AMTRAK-CONRAIL
BEARINGS, TABLE OF ELEVS AND CAMBER

NO.	REVISIONS	BY	DATE
2	REVISED GIRDER CAMBER	MAA	5/1/87

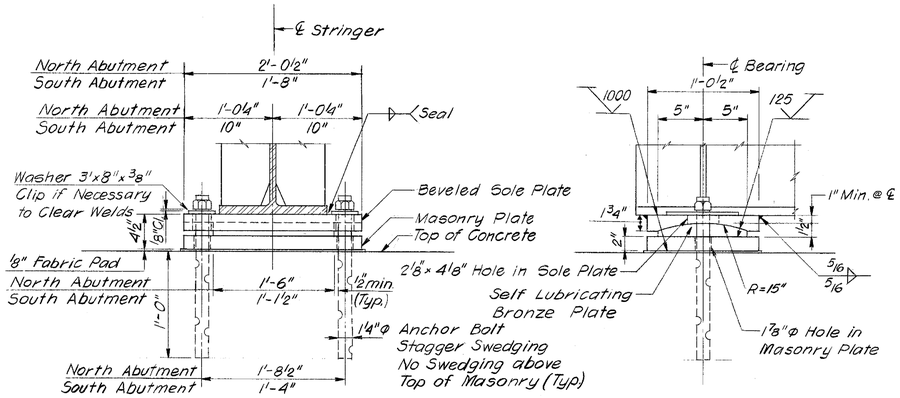

EXPANSION BEARING ABUTMENTS

Scale: 1½"=1'-0"

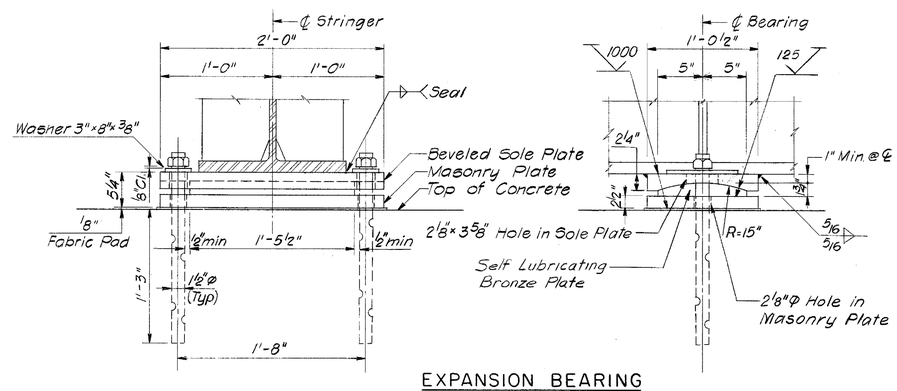

EXPANSION BEARING PIER #2

Scale: 1½"=1'-0"

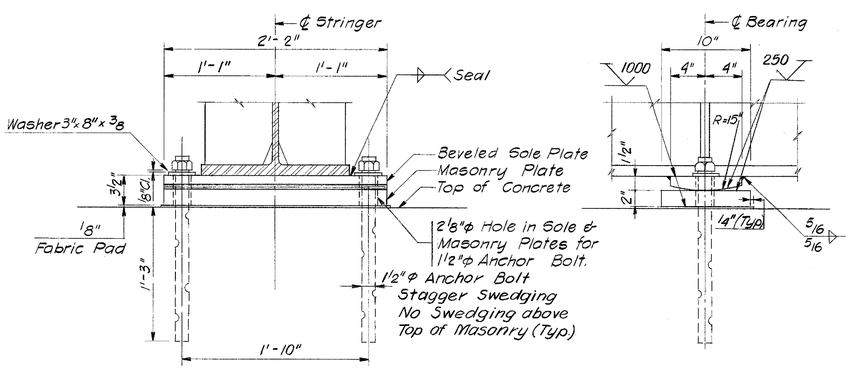

FIXED BEARING PIER #1

Scale: 1½"=1'-0"

FINISHED BRIDGE SLAB ELEVATIONS

STRINGER CENTER LINE B'RINGS	ONE	TWO	THREE	FOUR	FIVE	SIX	SEVEN	EIGHT	NINE	TEN
NO ABUT	40.428	40.517	40.603	40.686	40.835	40.845	40.593	40.341	40.087	39.818
PIER 1	41.393	41.533	41.671	41.806	41.939	42.069	41.875	41.669	41.461	41.251
PIER 2	41.358	41.548	41.736	41.922	42.104	42.284	42.140	41.984	41.826	41.666
SO ABUT	40.613	40.833	41.063	41.290	41.515	41.737	41.634	41.521	41.405	41.286
STATIONS										
17+60	---	---	---	---	---	---	---	---	40.173	40.008
17+70	---	---	---	---	---	40.852	40.695	40.530	40.365	40.200
17+80	---	---	---	40.702	40.867	41.032	40.875	40.710	40.545	40.380
17+90	---	40.540	40.705	40.870	41.035	41.200	41.043	40.878	40.713	40.548
18+00	40.532	40.697	40.862	41.027	41.192	41.357	41.200	41.035	40.870	40.705
18+10	40.677	40.842	41.007	41.172	41.337	41.502	41.345	41.180	41.015	40.850
18+20	40.810	40.975	41.140	41.305	41.470	41.635	41.478	41.313	41.148	40.983
18+30	40.931	41.096	41.261	41.426	41.591	41.756	41.599	41.434	41.269	41.104
18+40	41.040	41.205	41.370	41.535	41.700	41.865	41.708	41.543	41.378	41.213
18+50	41.138	41.303	41.468	41.633	41.798	41.953	41.806	41.641	41.476	41.311
18+60	41.224	41.389	41.554	41.719	41.884	42.049	41.892	41.727	41.562	41.397
18+70	41.298	41.463	41.628	41.793	41.958	42.123	41.966	41.801	41.636	41.471
18+80	41.360	41.525	41.690	41.855	42.020	42.185	42.028	41.863	41.698	41.533
18+90	41.410	41.575	41.740	41.905	42.070	42.235	42.078	41.913	41.748	41.583
19+00	41.449	41.614	41.779	41.944	42.109	42.274	42.117	41.952	41.787	41.622
19+10	41.476	41.641	41.806	41.971	42.136	42.301	42.144	41.979	41.814	41.649
19+20	41.491	41.656	41.821	41.986	42.151	42.315	42.159	41.994	41.829	41.664
19+30	41.494	41.659	41.824	41.989	42.154	42.319	42.162	41.997	41.832	41.667
19+40	41.485	41.650	41.815	41.980	42.145	42.310	42.154	41.989	41.824	41.659
19+50	41.465	41.630	41.795	41.960	42.125	42.290	42.133	41.968	41.803	41.638
19+60	41.433	41.598	41.763	41.928	42.093	42.258	42.101	41.936	41.771	41.606
19+70	41.389	41.554	41.719	41.884	42.049	42.214	42.057	41.892	41.727	41.562
19+80	41.333	41.498	41.663	41.828	41.993	42.158	42.001	41.836	41.671	41.506
19+90	41.266	41.431	41.596	41.761	41.926	42.091	41.934	41.769	41.604	41.439
20+00	41.186	41.351	41.516	41.681	41.846	42.011	41.855	41.690	41.525	41.360
20+10	41.095	41.260	41.425	41.590	41.755	41.920	41.763	41.598	41.433	---
20+20	40.992	41.157	41.322	41.487	41.652	41.817	41.660	---	---	---
20+30	40.877	41.042	41.207	41.372	41.537	41.702	---	---	---	---
20+40	40.751	40.916	41.081	---	---	---	---	---	---	---
20+50	40.613	---	---	---	---	---	---	---	---	---

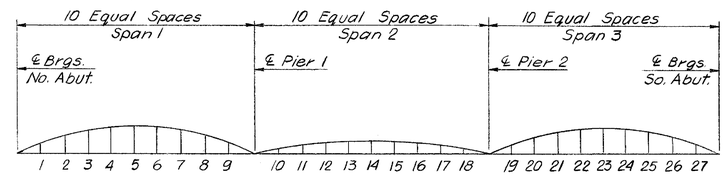

Note: The Reference Line is a Theoretical Straight Line in Each Span Connecting the Points Located at the Top of the Web at the Center Line of Bearing.

CAMBER DIAGRAM

N.T.S.

2 SEE REVISED SHEET 15B

GIRDER CAMBER (INCHES)

Girder		C/L Brg. N.Abut	1	2	3	4	5	6	7	8	9	C/L Pier 1	10	11	12	13	14
1	D.L.Steel	-	0.174	0.322	0.428	0.479	0.474	0.416	0.318	0.198	0.082	-	-0.021	-0.008	0.021	0.052	0.072
and	D.L. Conc	-	0.486	0.902	1.197	1.342	1.328	1.166	0.891	0.555	0.230	-	-0.068	-0.026	0.066	0.170	0.233
	S.I.D.L.	-	0.133	0.248	0.331	0.374	0.374	0.333	0.258	0.163	0.065	-	-0.004	0.028	0.071	0.108	0.128
10	V.C. Ord.	-	0.339	0.979	1.285	1.469	1.530	1.469	1.285	0.979	0.339	-	0.510	0.907	1.191	1.361	1.417
	Total	-	1.132	2.451	3.241	3.664	3.706	3.384	2.752	1.895	0.716	-	0.417	0.901	1.351	1.691	1.850

Girder			15	16	17	18	C/L Pier 2	19	20	21	22	23	24	25	26	27	C/L Brg. So.Abut
1	D.L.Steel	-	0.070	0.048	0.019	-0.004	-	0.029	0.079	0.130	0.175	0.204	0.209	0.189	0.143	0.077	-
and	D.L. Conc	-	0.227	0.158	0.061	-0.013	-	0.124	0.315	0.527	0.715	0.834	0.859	0.776	0.591	0.320	-
	S.I.D.L.	-	0.123	0.096	0.054	0.013	-	0.029	0.080	0.134	0.177	0.203	0.206	0.184	0.138	0.075	-
10	V.C. Ord.	-	1.361	1.191	0.907	0.510	-	0.358	0.637	0.836	0.955	0.995	0.955	0.836	0.637	0.358	-
	Total	-	1.781	1.493	1.041	0.507	-	0.540	1.111	1.627	2.022	2.236	2.229	1.985	1.509	0.830	-

GIRDER CAMBER (INCHES)

Girder		C/L Brg. N.Abut	1	2	3	4	5	6	7	8	9	C/L Pier 1	10	11	12	13	14
2	D.L.Steel	-	0.174	0.322	0.428	0.479	0.474	0.416	0.318	0.198	0.082	-	-0.021	-0.008	0.021	0.052	0.072
to	D.L. Conc	-	0.584	1.084	1.439	1.613	1.596	1.402	1.071	0.667	0.277	-	-0.082	-0.031	0.082	0.204	0.280
	S.I.D.L.	-	0.133	0.248	0.331	0.374	0.374	0.333	0.258	0.163	0.065	-	-0.004	0.028	0.071	0.108	0.128
9	V.C. Ord.	-	0.339	0.979	1.285	1.469	1.530	1.469	1.285	0.979	0.339	-	0.510	0.907	1.191	1.361	1.417
	Total	-	1.230	2.633	3.483	3.935	3.974	3.620	2.932	2.007	0.763	-	0.403	0.896	1.365	1.725	1.897

Girder			15	16	17	18	C/L Pier 2	19	20	21	22	23	24	25	26	27	C/L Brg. So.Abut
2	D.L.Steel	-	0.070	0.048	0.019	-0.004	-	0.029	0.075	0.125	0.169	0.198	0.204	0.184	0.140	0.076	-
to	D.L. Conc	-	0.273	0.190	0.073	-0.015	-	0.149	0.379	0.633	0.859	1.003	1.033	0.933	0.710	0.385	-
	S.I.D.L.	-	0.123	0.096	0.054	0.013	-	0.029	0.080	0.134	0.177	0.203	0.206	0.184	0.138	0.075	-
9	V.C. Ord.	-	1.361	1.191	0.907	0.510	-	0.358	0.637	0.836	0.955	0.995	0.955	0.836	0.637	0.358	-
	Total	-	1.827	1.525	1.053	0.504	-	0.565	1.171	1.728	2.160	2.399	2.398	2.137	1.625	0.894	-

NOTES

1. FOR GENERAL NOTES SEE SHEET NO. 1.
2. AFTER ALL GIRDERS HAVE BEEN ASSEMBLED AND FALSE-WORK REMOVED, THE ENGINEER SHALL TAKE ELEVATIONS ALONG THE TOPS OF THE GIRDERS AT POINTS WHERE THE ELEVATIONS ARE SHOWN IN THE TABLE. THE DIFFERENCE BETWEEN THESE ELEVATIONS AND THE GIVEN GRADE ELEVATIONS PLUS THE AMOUNT OF DEFLECTION DUE TO DEAD LOAD OF CONCRETE* WILL BE THE THICKNESS OF SLAB OVER THE GIRDERS AT THESE POINTS. THE MIN. SLAB THICKNESS OVER THE GIRDERS SHALL NOT BE LESS THAN 8 1/2" AT THE EDGE OF FLANGE. IF THE GIRDERS HAVE EXCESS CAMBER AND THIS MIN. CANNOT BE OBTAINED, THE GRADE LINE SHALL BE ADJUSTED TO OBTAIN THIS MIN. THICKNESS.
   *AND SECONDARY DEAD LOAD
3. ALL BEARINGS SHALL BE SHOP ASSEMBLED AND MATCH MARKED TO ENSURE PROPER FIT.
4. THE SURFACE FINISH OF METAL IN CONTACT INDICATED BY THE SYMBOL √ SHALL MEET THE REQUIREMENT AS DEFINED IN ANSI B 46.1. ALL SLIDING SURFACE TO BE FINISHED IN THE DIRECTION OF EXPANSION OR ROTATION.
5. FINISHED SURFACES SHALL BE COATED WITH MULTIPURPOSE GREASE BEFORE SHIPMENT. COATING SHALL BE REMOVED WITH A SOLVENT PRIOR TO ERECTION.
6. SELF-LUBRICATING BRONZE BEARING PLATES SHALL CONFORM TO THE REQUIREMENTS OF ASTM B 22, COPPER ALLOY UNS C 90500 MODIFIED WITH UP TO 2 1/2% LEAD MAXIMUM. THE SLIDING SURFACES OF THE PLATES SHALL BE PROVIDED WITH ANNULAR GROOVES OR CYLINDRICAL RECESSES OR A COMBINATION THEREOF, WHICH SHALL BE FILLED WITH A LUBRICATING COMPOUND. THE LUBRICATING COMPOUND SHALL BE COMPRESSED INTO THE RECESSES UNDER SUFFICIENT PRESSURE TO FORM A NON-PLASTIC LUBRICATING INSET. THE LUBRICATING INSET SHALL COMPRISE NOT LESS THAN 25 PERCENT OF THE TOTAL AREA OF THE PLATE. THE FRICTIONAL COEFFICIENT SHALL NOT EXCEED 0.10. THE COMPOUND SHALL BE FREE OF ANY MATERIAL THAT CAUSE ABRASIVE OR CORROSIVE ACTION UPON THE METAL SURFACES AND ALSO SHALL BE ABLE TO WITHSTAND EXTREMELY HIGH PRESSURES AND THE ATMOSPHERIC ELEMENTS OVER LONG PERIOD OF TIME.
7. PRIOR TO ASSEMBLY IN PLACE, THE STEEL SURFACE WHICH WILL BEAR ON THE SELF-LUBRICATING BEARING PLATE SHALL BE THROUGHLY LUBRICATED WITH ADDITIONAL ANTI-OXIDENT LUBRICANT FURNISHED BY THE MANUFACTURER.

DELAWARE
DEPARTMENT OF TRANSPORTATION
DIVISION OF HIGHWAYS

D. P. K.	SCALE	APPROVED BY:
T. Z. K.	As Shown	
C. P. C.		BRIDGE ENGINEER

STEINMAN BOYNTON
GRONQUIST & BIRDSALL
CONSULTING ENGINEERS
89 HUDSON STREET
HOBOKEN, N.J. 07030

CONTRACT	COUNTY	FEDERAL AID PROJECT Nº	SHEET Nº	TOTAL SHEETS
81-071-01	N. C.	BRM. 123(2)	15 B	351

EDGMOOR ROAD OVER AMTRAK—CONRAIL, TABLE OF CAMBER

GIRDER CAMBER (INCHES)

Girder		C/L Brg. N. Abut.	1	2	3	4	5	6	7	8	9	C/L Pier 1	10	11	12	13	14
1 and 10	D.L. Steel	-	0.227	0.423	0.564	0.638	0.638	0.569	0.444	0.287	0.126	-	-0.059	-0.078	-0.077	-0.069	-0.046
	D.L. Conc.	-	0.783	1.456	1.936	2.176	2.161	1.909	1.470	0.928	0.394	-	-0.146	-0.145	-0.070	0.030	0.102
	S.I.D.L.	-	0.089	0.165	0.221	0.251	0.252	0.226	0.177	0.114	0.047	-	-0.009	0.003	0.023	0.041	0.052
	V.C. Ord.	-	0.642	1.134	1.488	1.698	1.764	1.698	1.488	1.134	0.642	-	0.510	0.907	1.191	1.361	1.417
	Total	-	1.741	3.178	4.209	4.763	4.815	4.402	3.579	2.463	1.209	-	0.296	0.687	1.067	1.363	1.525

			15	16	17	18	C/L Pier 2	19	20	21	22	23	24	25	26	27	C/L Brg. S. Abut.
1 and 10	D.L. Steel	-	-0.033	-0.028	-0.027	-0.022	-	0.039	0.089	0.139	0.181	0.205	0.206	0.183	0.138	0.074	-
	D.L. Conc.	-	0.111	0.058	-0.018	-0.060	-	0.174	0.419	0.683	0.911	1.052	1.075	0.967	0.732	0.396	-
	S.I.D.L.	-	0.051	0.040	0.022	0.004	-	0.016	0.042	0.068	0.089	0.101	0.101	0.090	0.068	0.036	-
	V.C. Ord.	-	1.361	1.191	0.907	0.510	-	0.358	0.637	0.036	0.955	0.984	0.955	0.036	0.637	0.358	-
	Total	-	1.490	1.261	0.884	0.432	-	0.587	1.181	0.881	2.136	2.342	2.337	1.876	1.575	0.884	-

GIRDER CAMBER (INCHES)

		C/L Brg. N. Abut.	1	2	3	4	5	6	7	8	9	C/L Pier 1	10	11	12	13	14
2 and 9	D.L. Steel	-	0.227	0.423	0.564	0.638	0.638	0.569	0.444	0.287	0.126	-	-0.059	-0.078	-0.077	-0.069	-0.046
	D.L. Conc.	-	0.887	1.649	2.193	2.465	2.448	2.162	1.665	1.051	0.447	-	-0.165	-0.164	-0.079	0.034	0.115
	S.I.D.L.	-	0.089	0.165	0.221	0.251	0.252	0.226	0.177	0.114	0.047	-	-0.009	0.003	0.023	0.041	0.052
	V.C. Ord.	-	0.642	1.134	1.488	1.698	1.764	1.698	1.488	1.134	0.642	-	0.510	0.907	1.191	1.361	1.417
	Total	-	1.845	3.371	4.466	5.052	5.102	4.655	3.774	2.586	1.262	-	0.277	0.668	1.058	1.367	1.538

			15	16	17	18	C/L Pier 2	19	20	21	22	23	24	25	26	27	C/L Brg. S. Abut.
2 and 9	D.L. Steel	-	-0.033	-0.028	-0.027	-0.022	-	0.039	0.089	0.139	0.181	0.205	0.206	0.183	0.138	0.074	-
	D.L. Conc.	-	0.125	0.066	-0.020	-0.068	-	0.197	0.475	0.774	1.032	1.192	1.218	1.095	0.830	0.448	-
	S.I.D.L.	-	0.051	0.040	0.022	0.004	-	0.016	0.042	0.068	0.089	0.101	0.101	0.090	0.068	0.036	-
	V.C. Ord.	-	1.361	1.191	0.907	0.510	-	0.358	0.637	0.036	0.955	0.984	0.955	0.036	0.637	0.358	-
	Total	-	1.504	1.269	0.882	0.424	-	0.610	1.243	1.077	2.257	2.482	2.442	1.404	1.673	0.916	-

REVISIONS

2 REVISED GIRDER CAMBER DUE TO NEW LOC. OF N. ABUT. MAY-5-1987

PREL. TRACING _____ DESIGN _____ CHKD. _____

COUNTY	CONTRACT	P. P. A. REG. NO.	STATE	FED. AID PROJECT NO.	SHEET NO.	TOTAL SHEETS
New Castle	81-071-01	3	DEL	BRM 1231 (2)	16A	35/

EDGEMOOR ROAD OVER AMTRAK-CONRAIL
DECK SLAB PLAN

NO.	REVISIONS	BY	DATE
2	Revised Slab Details	MAA	5/11/87

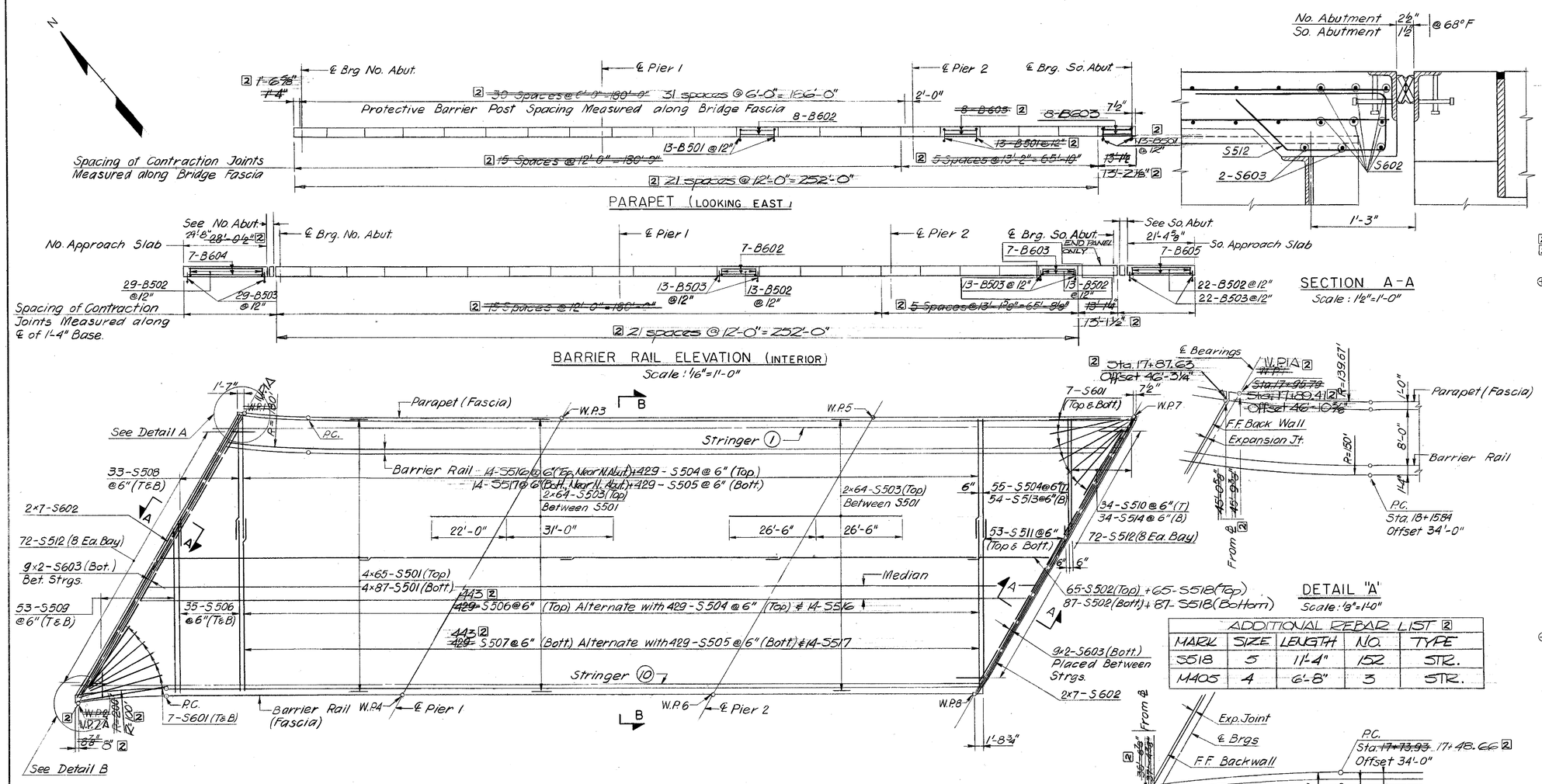

REINFORCING BAR LIST

MARK	SIZE	LENGTH	NUMBER	TYPE	REMARKS
S601	6	20'-0"	28	Straight	
S602	6	48'-8"	28	do	Place along skew
S603	6	9'-2"	36	do	
2 ~~S604~~	~~5~~	~~34'-2"~~	~~14~~	~~do~~	Near N. Abut.
2 ~~S517~~	~~5~~	~~32'-3"~~	~~14~~	~~do~~	~~26~~
M401	4	25'-11"	24	do	
M402	4	24'-0" to 25'-4"	2×3	do	Varies by 8"
S501	5	60'-0"	608	do	
S502	5	27'-0"	152	do	
S503	5	53'-0"	256	do	
S504	5	33'-2"	484	Bent	
S505	5	35'-7"	429	Straight	
S506	5	49'-1" 2	~~499~~ 518	do	
S507	5	46'-11" 2	~~429~~ 443	do	
S508	5	3'-3" to 31'-3"	66	do	Varies by 10½"
S509	5	2'-8" to 48'-2"	106	do	
S510	5	3'-6" to 32'-4"	34	Bent	
S511	5	2'-6" to 48'-8"	106	Straight	
S512	5	5'-0"	144	Bent	
S513	5	32'-7"	55	Straight	
S514	5	3'-0" to 31'-9"	34	do	Varies by 10½"
S515	5	3'-10" 2	~~340~~ 347	Bent	
B601	6	13'-2"	42	Straight	
B602	6	11'-8" 2	~~330~~ 352	do	
B603	6	12'-9"	90	do	
B604	6	27'-10"	7	do	
B605	6	21'-0	7	do	
B501	5	8'-4" 2	~~273~~ 286	Bent	
B502	5	5'-4" 2	~~324~~ 351	do	
B503	5	5'-3" 2	~~324~~ 357	do	
B504	5	5'-4" 2	~~273~~ 286	do	
B505	5	5'-10" 2	~~273~~ 286	do	
M403	4	25'-9" to 27'-1"	2×3	Straight	Varies by 8"
M404	4	17'-1"	3	do	

ADDITIONAL REBAR LIST 2

MARK	SIZE	LENGTH	NO.	TYPE
S518	5	11'-4"	152	STR.
M405	4	6'-8"	3	STR.

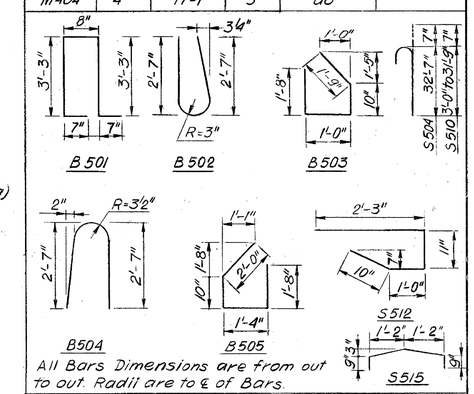

ESTIMATED QUANTITIES

SECTION	ITEM	UNIT	QUANTITY
602 ⊛	P.C.C. Masonry - Superstructure	C.Y.	~~673~~ 693 2
605A ⊛	Bar Reinforcement Epoxy Coated	Lbs.	~~171,341~~ 176,410 2

⊛ Fixed Quantity Items.
Quantity of Interior Barrier Rail and Median on Approach Slab is Included in Item 602 P.C.C. Masonry Superstructure.

Notes:
1. For General Notes See Sheet No. 1.
2. For Section B-B See Sheet No. 17
3. Bridge Deck, Parapet & Barrier Steel shall be Epoxy coated

DELAWARE
DEPARTMENT OF TRANSPORTATION
DIVISION OF HIGHWAYS

D. R. P.	SCALE	APPROVED BY:
T. Z. K.	As Shown	
C. Z. K.		BRIDGE ENGINEER

STEINMAN BOYNTON GRONQUIST & BIRDSALL
CONSULTING ENGINEERS
89 HUDSON STREET
HOBOKEN, N.J. 07030

COUNTY	CONTRACT	P. R. A. REG. NO.	STATE	FED. AID PROJECT NO.	SHEET NO.	TOTAL SHEETS
New Castle	81-071-01	3	DEL.	BRM 1231(2)	17A	35

EDGEMOOR ROAD OVER AMTRAK-CONRAIL
SLAB DETAILS

NO.	REVISIONS	BY	DATE
2	Revised Slab Details & Added Detail A	HAA	5/11/87

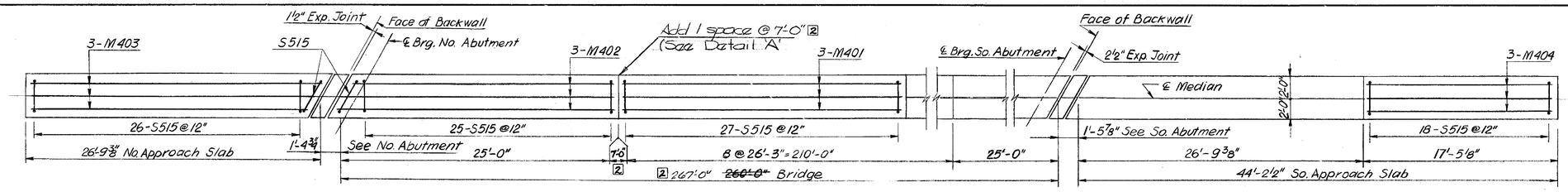

PLAN MEDIAN
Scale: 3/16" = 1'-0"

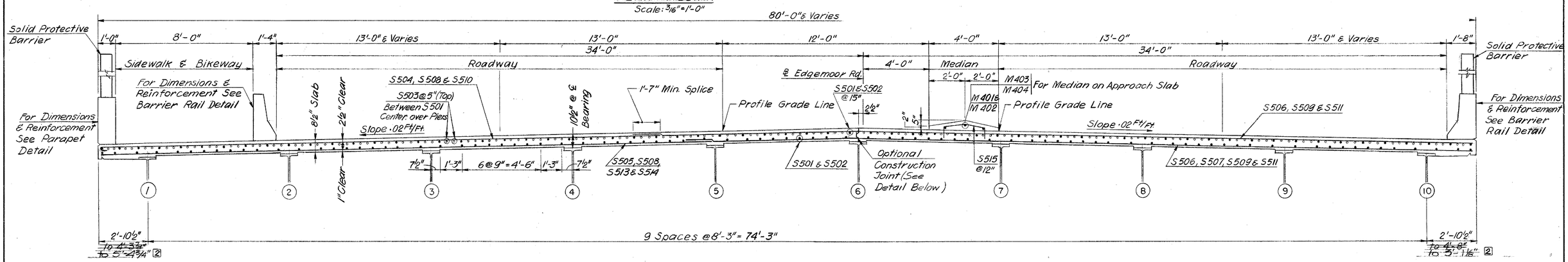

SECTION B-B
Scale: 3/8" = 1'-0"

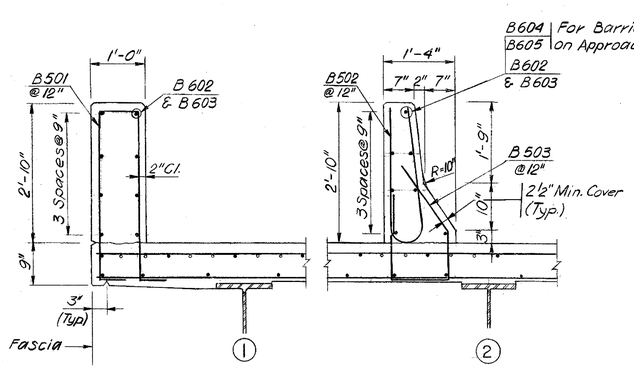

PARAPET DETAIL
Scale: 3/4" = 1'-0"

BARRIER RAIL DETAIL
Scale: 3/4" = 1'-0"

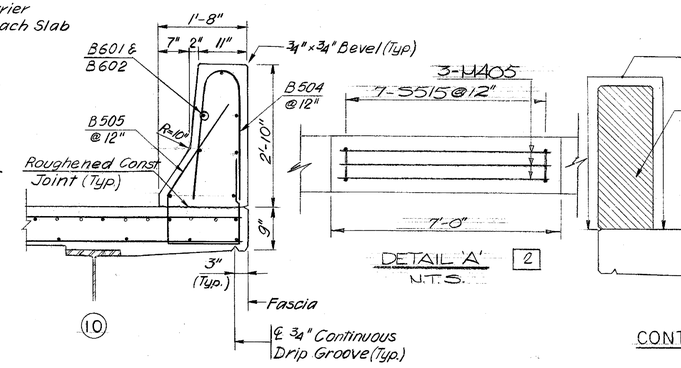

DETAIL 'A' 2
N.T.S.

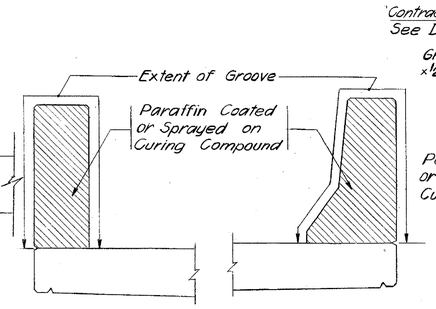

CONTRACTION JOINT DETAIL
Scale: 3/4" = 1'-0"

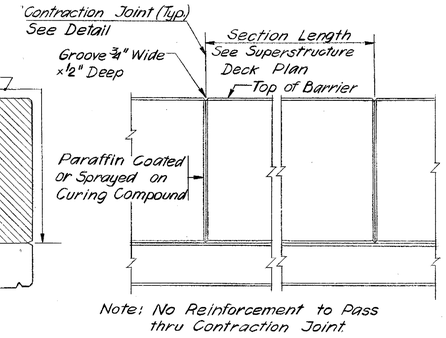

ELEVATION-PARAPET & BARRIER RAIL
Scale: 3/4" = 1'-0"

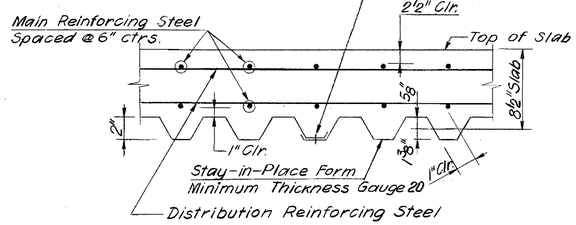

DECK & STEEL FORM SECTION
N.T.S.

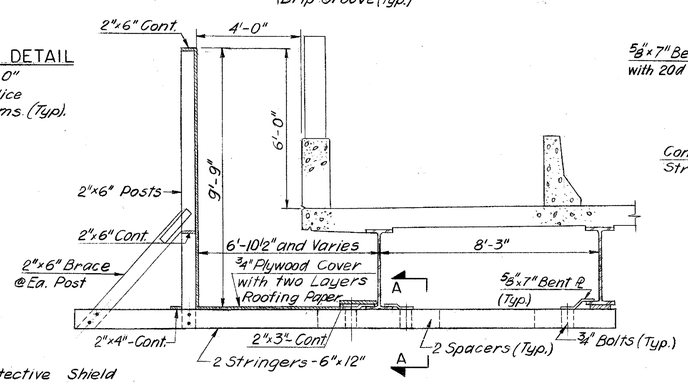

Note: Protective Shield Shall be Bonded and Grounded

SUGGESTED PROTECTIVE SHIELD
Scale: 3/8" = 1'-0"

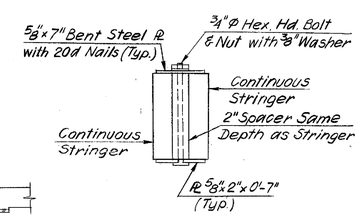

SECTION A-A
N.T.S.

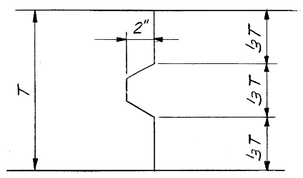

OPTIONAL CONSTRUTION JOINT DETAIL
N.T.S.

Notes:

1. For General Notes See Sheet No. 1
2. For Deck Plan See Sheet No 16
3. Protective Shield Shall be Erected on Both Sides of the Superstructure before Placement of Concrete Deck and Protective Barrier. Length of Protective Shield to be the Same as Length of Protective Barrier.
4. Shield Shall be Designed by a Registered Professional Engineer. Plans and Calculations Bearing the Seal of a Professional Engineer Shall be Submitted to Amtrak for Review and Approval.
5. Protective Shield Shall be Designed for a Minimum Live Load of 100 P.S.F. and 60 MPH Wind Load.
6. All Timber and Plywood Shall be new
7. Timber 2" to 4" Thick Shall be Dense Str. 72 or Better. Timber Greater than 4" Thick Shall be Dense Str. 86 or Better (Southern Pine Inspection Bureau Designation).
8. For Section B-B Location See Sheet No. 16.
9. See Special Provisions for Slip from of parapet, median and barrier.

DELAWARE
DEPARTMENT OF TRANSPORTATION
DIVISION OF HIGHWAYS

D. R. P.	SCALE	APPROVED BY:
T. Z. K.	As Shown	
C. R. P.		BRIDGE ENGINEER

STEINMAN BOYNTON GRONQUIST & BIRDSALL
CONSULTING ENGINEERS
89 HUDSON STREET
HOBOKEN, N.J. 07030

COUNTY	CONTRACT	P. R. A. REG. NO.	STATE	FED. AID PROJECT NO.	SHEET NO.	TOTAL SHEETS
New Castle	81-071-01	3	DEL	BRM 1231(2)	18A	351

EDGEMOOR ROAD OVER AMTRAK-CONRAIL
EXPANSION JOINT DETAILS

NO.	REVISIONS	BY	DATE
2	Revised North Abutment	MAA	5/1/87

Note:
Approach Slab Shall be Poured after the Bridge Deck and Abutment backwall completion

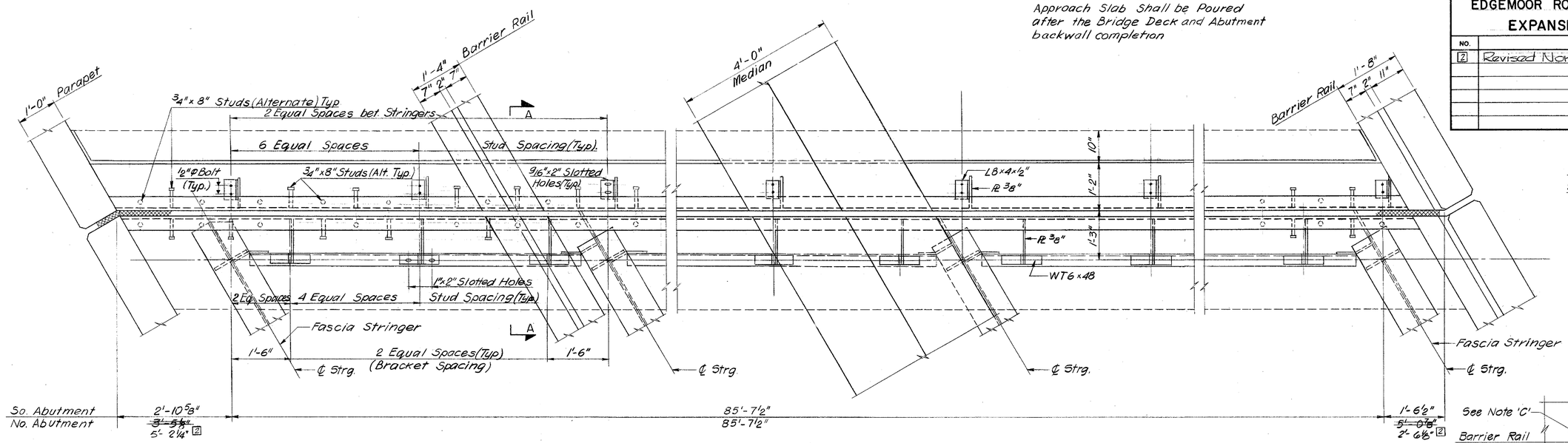

PARTIAL PLAN AT EXPANSION JOINT
(SOUTH ABUTMENT SHOWN, NORTH ABUTMENT SIMILAR)
Scale: 3/4"=1'-0"

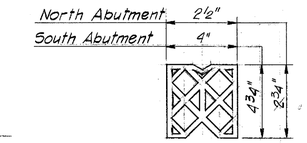

PREFORMED ELASTIC JOINT SEALER
N.T.S.

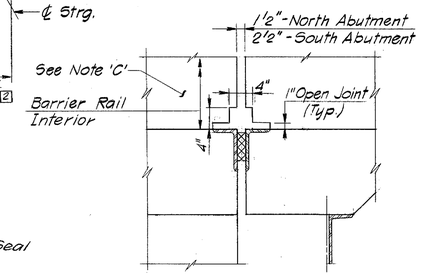

SECTION A-A
Scale: 1"=1'-0"

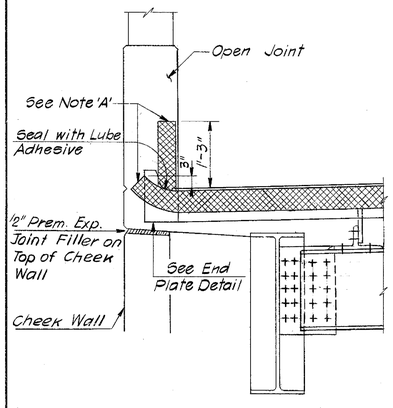

SECTION THRU JOINT AT PARAPET
Scale: 3/4"=1'-0"

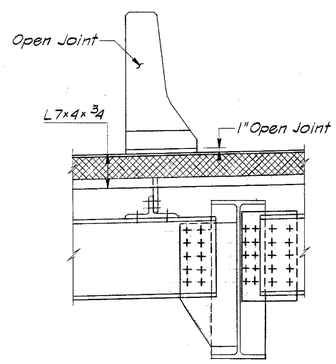

SECTION THRU JOINT AT BARRIER (INTERIOR)
Scale: 3/4"=1'-0"

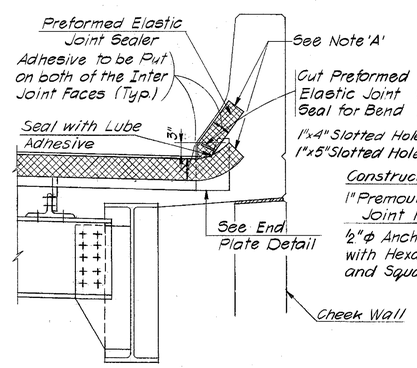

SECTION THRU JOINT AT BARRIER (FASCIA)
Scale: 3/4"=1'-0"

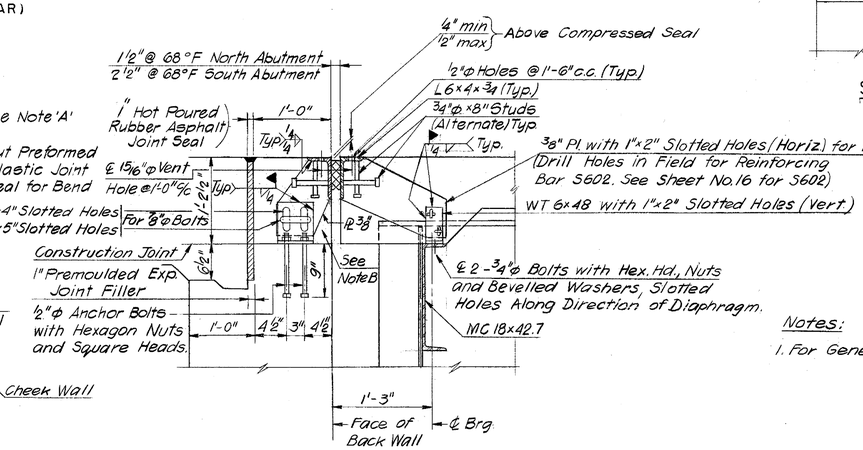

NORMAL SECTION AT ABUTMENT THRU JOINT
Scale: 1"=1'-0"

Notes:
1. For General Notes See Sheet No. 1

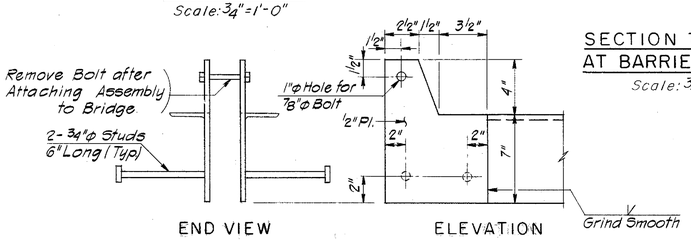

END PLATE DETAILS
N.T.S.

Note 'A': Provide an Extra 5" Length of Seal at Ends of Preformed Elastic Joint Sealer. Cut away All but Top of Shell to Provide End Flap. Bend Down and Seal with Lube Adhesive.

Note 'B': The Final Backwall Concrete Shall be Placed after the Deck Slab has been Poured.

Note 'C': Reinforcement not Shown.

ESTIMATED QUANTITIES

SECTION	ITEM	UNIT	QUANTITY
S.P.	Prefabricated Expansion Joint Systems		
	2 1/2" x 2 3/4"	L.F.	98 2
	4" x 4 3/4"	L.F.	94 2

DELAWARE
DEPARTMENT OF TRANSPORTATION
DIVISION OF HIGHWAYS

D. R. P.
T. N. P.
C. R. P.

SCALE: As Shown

APPROVED BY:

BRIDGE ENGINEER

STEINMAN BOYNTON GRONQUIST & BIRDSALL
CONSULTING ENGINEERS
89 HUDSON STREET
HOBOKEN, N.J. 07030

COUNTY	CONTRACT	P. D. A. REG. NO.	STATE	FED. AID PROJECT NO.	SHEET NO.	TOTAL SHEETS
New Castle	81-071-01	3	DEL	BRM 1231 (2)	19A	351

EDGEMOOR ROAD OVER AMTRAK-CONRAIL
PERMANENT PROTECTIVE BARRIER

NO.	REVISIONS	BY	DATE
2	Revised Perm. Prot. Barrier	MAA	5/1/89

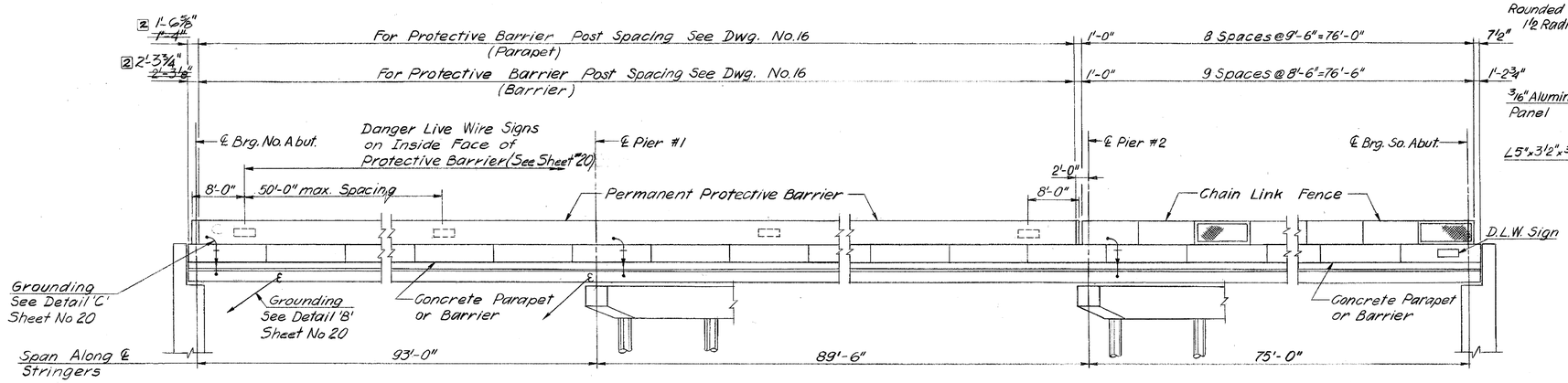

CHAIN LINK FENCE POST SPACING
Scale: 1" = 10'-0"

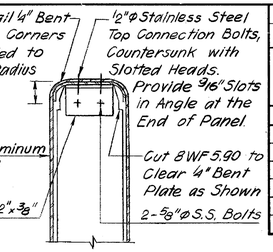

DETAIL "A"
Scale: 1 1/2" = 1'-0"

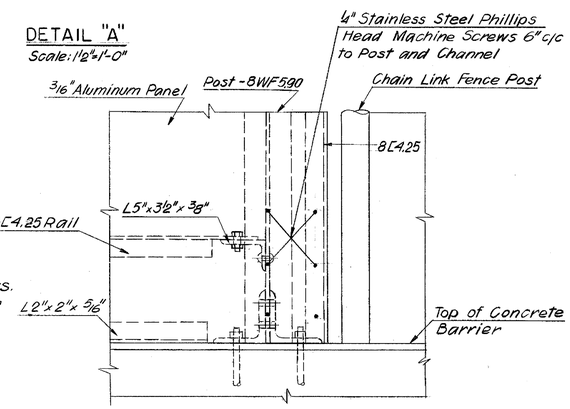

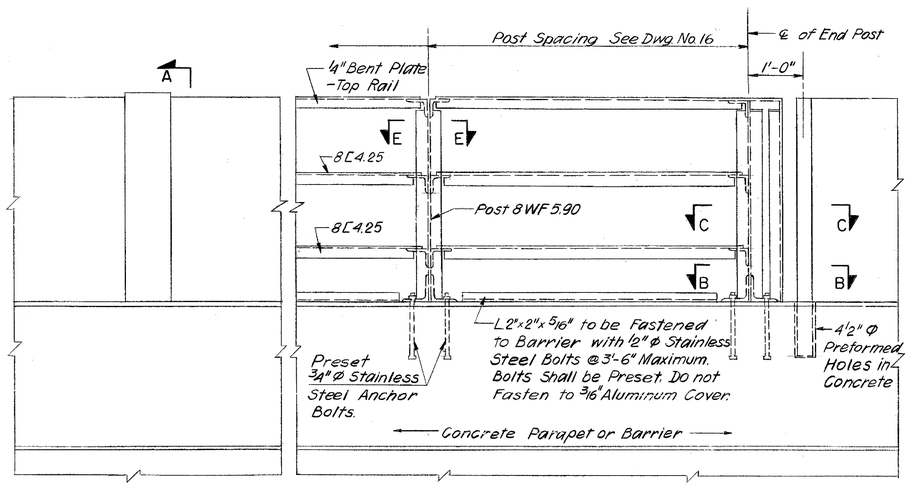

ELEVATION
Scale: 3/4" = 1'-0"

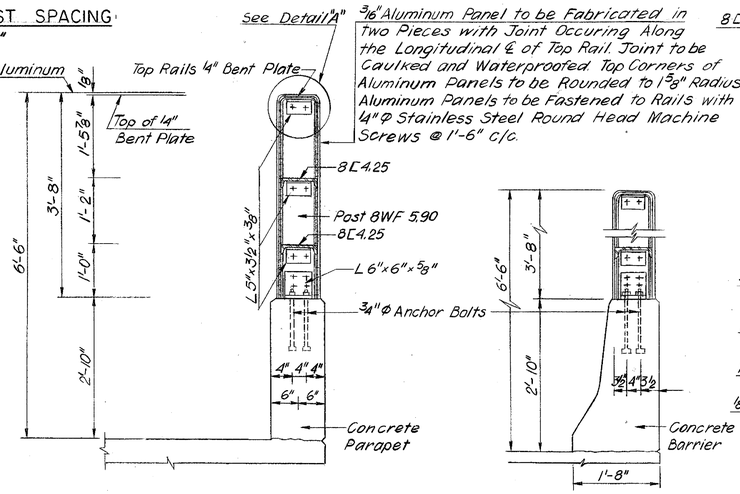

SECTION A-A
Scale: 3/4" = 1'-0"

SECTION A-A
Scale: 3/4" = 1'-0"

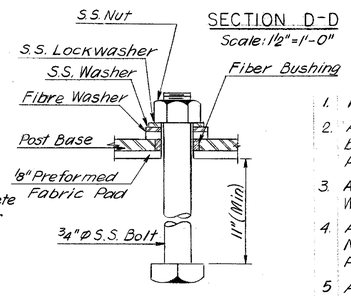

SECTION D-D
Scale: 1 1/2" = 1'-0"

ANCHOR BOLT DETAIL
N.T.S.

Note
All Anchor Bolts shall be preset

Notes:

1. For General Notes See Sheet No 1.
2. All Railing and Protective Panel Shall be Aluminum. Aluminum Alloy 6061-T6, ASTM Designation B 209
3. All Bolts, Nuts, Washers and Lock Washers Shall be ASTM A320, Grade B8.
4. All Post and 1/4" Cover Plates Shall be Normal to Grade. All Rails Shall be Parallel to Grade.
5. Anchor Bolts Shall be ASTM A 276, Type 304
6. At all Points of Contact with Concrete, Shall be Given a Heavy Coat of an Alkali Resistant Bituminous Paint Conforming to Federal Specification, Designation MIL-P-6883 before Being Placed in Contact with Concrete Surfaces.
7. One End of All Protective Panels Shall be Fixed and the Other End Shall be Slotted for Expansion.
8. For Grounding and Bonding Details See Sheet No. 20.
9. There Shall be no Opening between Chain Link Fence and Permanent Protective Barrier.
10. For Grounding Details see sheet #20.

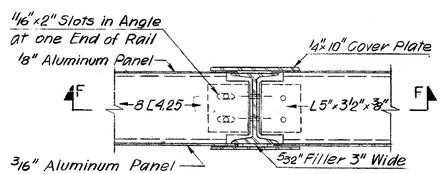

SECTION E-E
Scale: 1 1/2" = 1'-0"

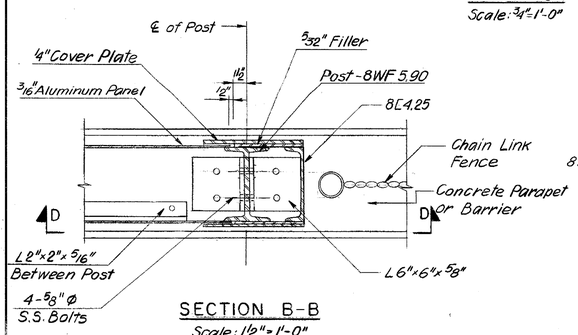

SECTION B-B
Scale: 1 1/2" = 1'-0"

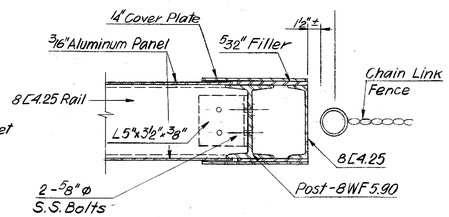

SECTION C-C
Scale: 1 1/2" = 1'-0"

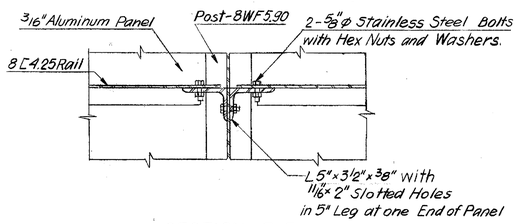

SECTION F-F
Scale: 1 1/2" = 1'-0"

ESTIMATED QUANTITIES

SECTION	ITEM	UNIT	QUANTITY
S.P.	Chain Link Fence Aluminum - 3'-6" High	L.F.	153
S.P.	Permanent Protective Barrier	L.F.	~~364~~ 376 2

DELAWARE
DEPARTMENT OF TRANSPORTATION
DIVISION OF HIGHWAYS

D. R. P.
T. Z. K.
C. R. P.

SCALE: As Shown

APPROVED BY:

BRIDGE ENGINEER

STEINMAN BOYNTON GRONQUIST & BIRDSALL
CONSULTING ENGINEERS
89 HUDSON STREET
HOBOKEN, N.J. 07030

COUNTY	CONTRACT	P.R.A. REG. NO.	STATE	FED. AID PROJECT NO.	SHEET NO.	TOTAL SHEETS
New Castle	81-071-01	3	DEL	BRM 1231 (2)	20A	35

EDGEMOOR ROAD OVER AMTRAK-CONRAIL
DANGER SIGN AND GUARD RAIL DETAILS

NO.	REVISIONS	BY	DATE

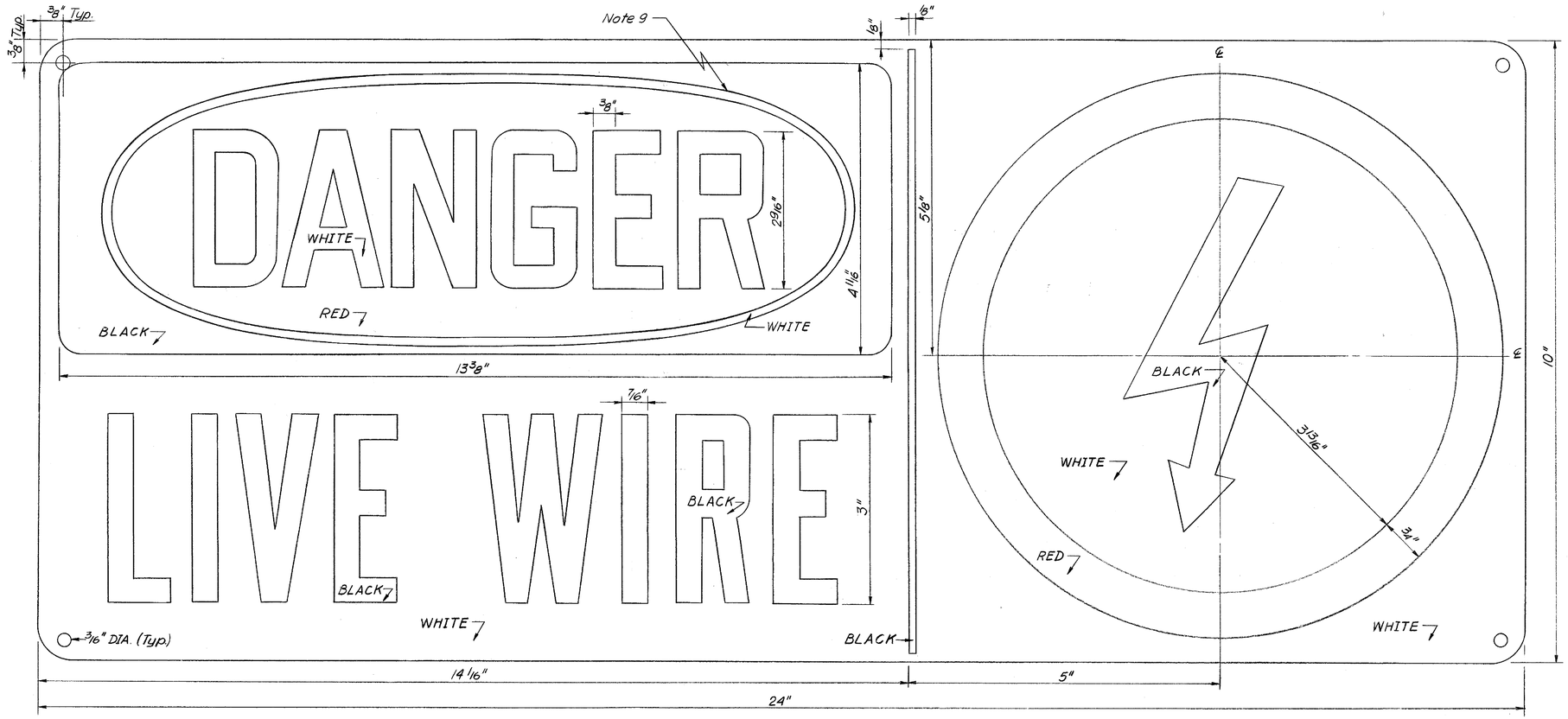

DANGER SIGN DETAILS

Notes:

1. Sign Plates Shall be 0.080"-5052 Alodine Treated Aluminum.
2. The Face of the Plate Shall be Covered with White Engineer Grade Reflective Sheeting, Meeting Federal Specification LS-300c.
3. Graphics Shall be Photo Silk Screen Using Transparent Red & Black Inks, per Reflective Sheeting Manufacturer's Specification for Chemical Adhesion Compatibility. Colors Shall Match Amtrak Standard Colors as Closely as Possible. Manufacturers Shall Supply Samples for Comparision.
4. Sign Shall be Clear-Coated after Screening.
5. A Notarized Certification of Aluminum and Reflective Material Grade Shall be Requested from Manufacturer.
6. Letters to be on Front only, Sizes to be as Noted on Drawing.
7. Colors of Sign to be as Noted on Drawing.
8. Back of Sign to be Mill Finish.
9. Ellipse Around the Lettering "Danger" to be Approximate 4 1/4" x 12" with 1/8" Thickness.
10. For Sign Locations See Sheet No. 19.
11. For Details 'B' and 'C' Locations See Sheet No. 19.
12. For Additional Grounding and Bonding Details See Catenary Modification drawings

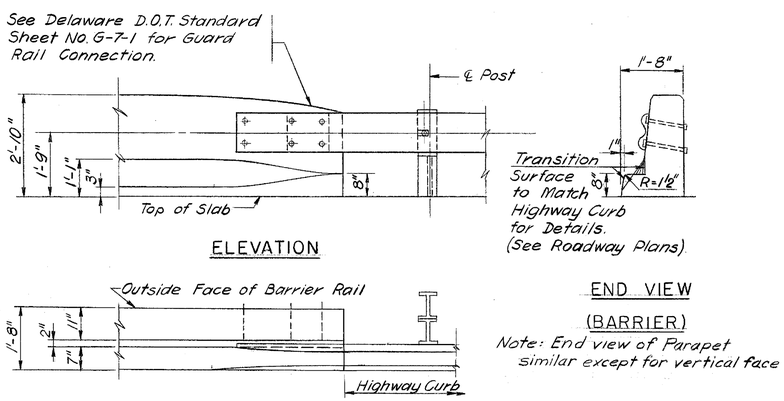

CONNECTION GUARD RAIL TO BARRIER AND PARAPET

Scale: 1/2" = 1'-0"

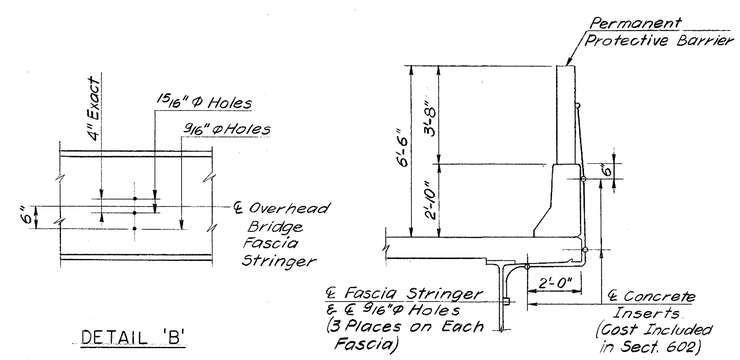

GROUNDING DETAILS

REVISIONS

PREL. TRACING Z.K. DESIGN CHKD. R.P.

GRONQUIST & BIRDSALL
CONSULTING ENGINEERS
89 HUDSON STREET
HOBOKEN, N.J. 07030

COUNTY	CONTRACT	F. A. R. REG. NO.	STATE	FED. AID PROJECT NO.	SHEET NO.	TOTAL SHEETS
New Castle	81-071-01	3	DEL	BRM 1231(2)	21A	35

EDGEMOOR ROAD OVER AMTRAK-CONRAIL
APPROACH SLAB-NORTH ABUTMENT

NO.	REVISIONS	BY	DATE
2	REVISED N. APPROACH SLAB	MAA	5/1/87

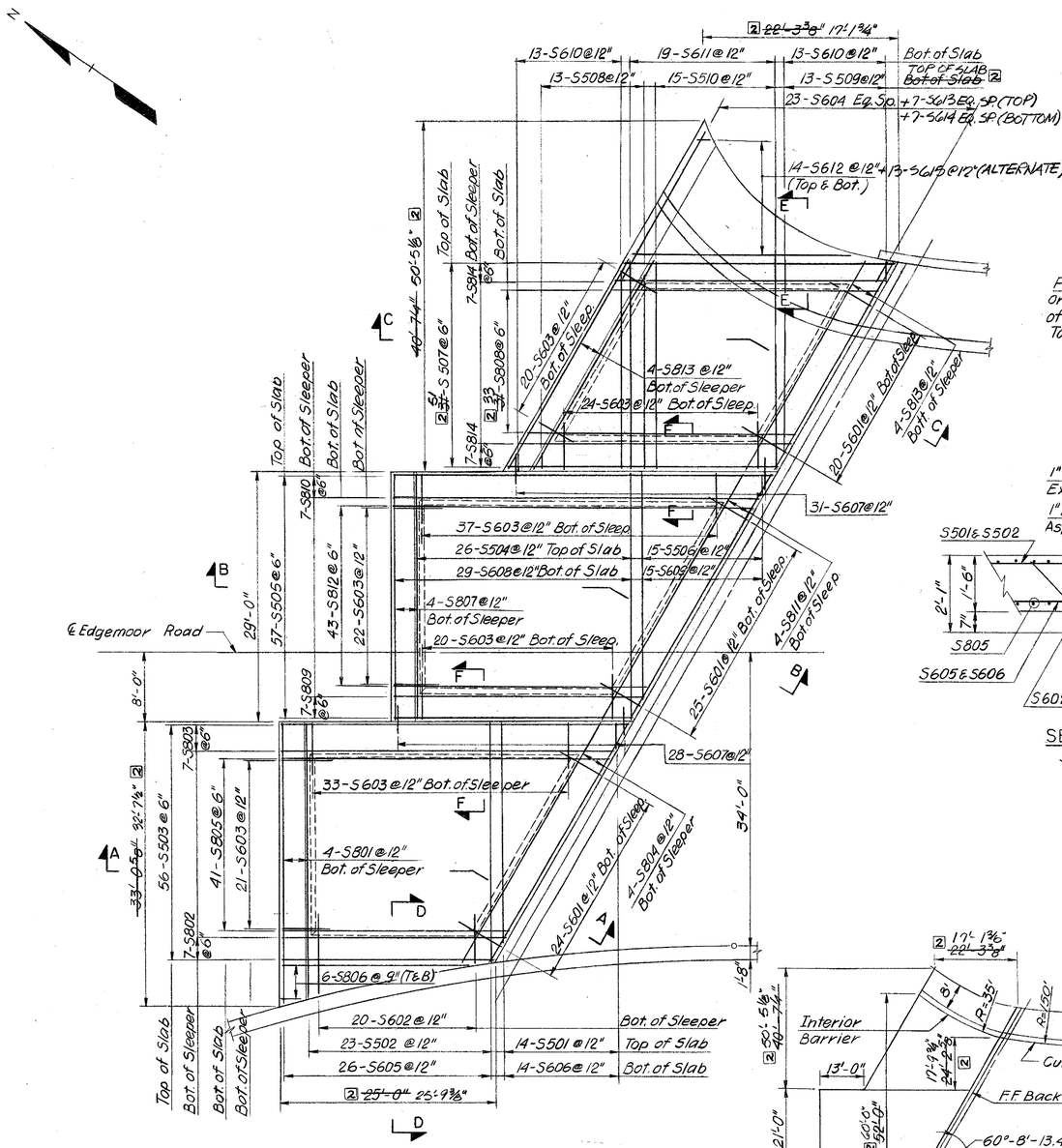

PLAN
Scale: 1/8" = 1'-0"

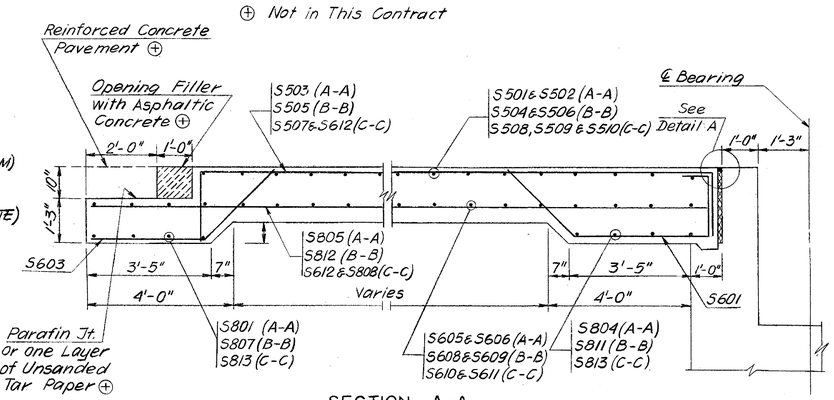

SECTION A-A
(SECTION B-B & SECTION C-C SIMILAR)
Scale: 1/2" = 1'-0"

ADDITIONAL REBAR LIST 2				
MARK	SIZE	LENGTH	NO.	TYPE
S613	6	24'-0" to 31'-0"	7	STRAIGHT
S614	6	25'-4" to 32'-4"	7	BENT
S615	6	3'-6" to 29'-6"	2 X 13	STRAIGHT

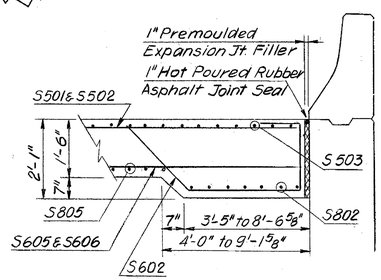

SECTION D-D
Scale: 1/2" = 1'-0"

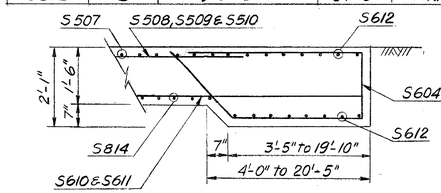

SECTION E-E
Scale: 1/2" = 1'-0"

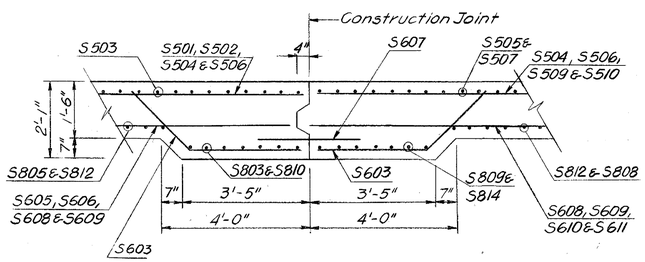

SECTION F-F
Scale: 1/2" = 1'-0"

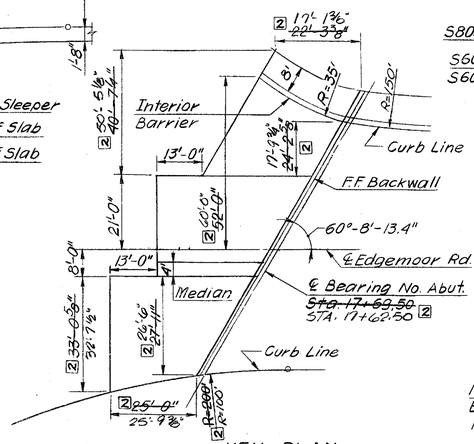

KEY-PLAN
Scale: 1" = 20'-0"

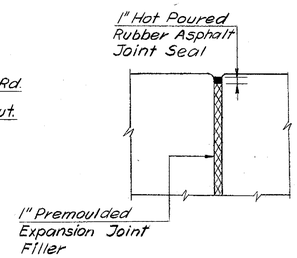

DETAIL "A"
N.T.S.

ESTIMATED QUANTITIES			
SECTION	ITEM	UNIT	QUANTITY
602 ⊛	P.C.C. Masonry - Approach Slab	C.Y.	197
605A ⊛	Bar Reinforcement - - Epoxy Coated	Lbs.	~~33,800~~ 35,282 2

⊛ Fixed Quantity

Notes:
1. For General Notes See Sheet No 1
2. Reinforcement Details for Interior Barrier and Median See Sheet No 16 & 17
3. Quantity of Interior Barrier and Median on Approach Slab is Included in Item 602 P.C.C. Masonry Superstructure
4. All Approach Slab reinforcement shall be Expoxy coated

REINFORCING BAR LIST					
MARK	SIZE	LENGTH	NUMBER	TYPE	REMARKS
S801	8	31'-11"	4	Straight	
S802	8	26'-4" to 28'-1"	7	Bent	Varies by 3½"
S803	8	40'-7" to 42'-4"	7	do	do
S804	8	31'-10"	4	Straight	
S805	8	27'-0" to 38'-5"	41	do	Varies by 3½"
S806	8	2'-6" to 21'-8"	6×2	do	Varies by 3'-10"
S807	8	28'-8"	4	do	
S808	8	31'-0"	~~31~~ 33 2	do	
S809	8	29'-4" to 31'-1"	7	Bent	Varies by 3½"
S810	8	44'-1" to 45'-10"	7	do	Varies by 3½"
S811	8	33'-1"	4	Straight	
S812	8	29'-8" to 42'-0"	43	do	Varies by 2⅜"
S813	8	27'-7"	8	do	
S814	8	33'-0"	14	Bent	
S601	6	9'-0"	69	do	
S602	6	7'-11" to 13'-1"	20	do	
S603	6	5'-3"	177	do	
S604	6	13'-0" to 51'-0"	23	do	
S605	6	27'-7" to 32'-9"	26	Straight	Varies by 2½"
S606	6	14'-9" to 25'-7"	14	do	Varies by 1'-10"
S607	6	3'-0"	59	do	
S608	6	28'-5"	29	do	
S609	6	2'-0" to 26'-8"	15	do	Varies by 1'-9"
S610	6	2'-0" to 23'-0"	26	do	Varies by 1'-9"
S611	6	24'-2"	19	do	
S612	6	2'-6" to 30'-6"	14×2	do	
S501	5	1'-9" to 25'-7"	14	do	Varies by 1'-10"
S502	5	27'-7" to 31'-11"	23	do	Varies by 2½"
S503	5	24'-10" to 40'-10"	56	Bent	Varies by 3½"
S504	5	28'-8"	26	Straight	
S505	5	27'-10" to 43'-6"	57	Bent	Varies by 3⅜"
S506	5	2'-0" to 26'-8"	15	Straight	Varies by 1'-9"
S507	5	34'-0"	~~49~~ 51 2	Bent	
S508	5	2'-0" to 22'-0"	13	Straight	Varies by 1'-8"
S509	5	2'-0" to 23'-0"	13	do	Varies by 1'-9"
S510	5	24'-2"	15	do	

ADDITIONAL BENDS

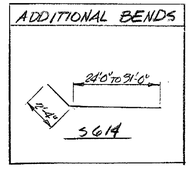

BENDING DIAGRAMS

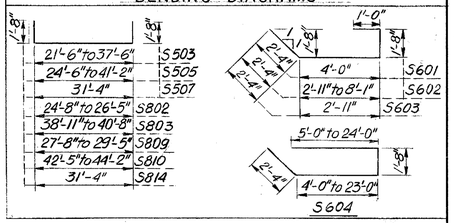

DELAWARE
DEPARTMENT OF TRANSPORTATION
DIVISION OF HIGHWAYS

D. P. K.	SCALE	APPROVED BY:
T. Z. K.	As Shown	
C. P. C.		BRIDGE ENGINEER

STEINMAN BOYNTON GRONQUIST & BIRDSALL
CONSULTING ENGINEERS
89 HUDSON STREET
HOBOKEN, N.J. 07030

COUNTY	CONTRACT	P. R. A. REG. NO.	STATE	FED. AID PROJECT NO.	SHEET NO.	TOTAL SHEETS
New Castle	81-071-01	3	DEL.	BRM 1231(2)	22A	351

EDGEMOOR ROAD OVER AMTRAK-CONRAIL
APPROACH SLAB-SOUTH ABUTMENT

NO.	REVISIONS	BY	DATE

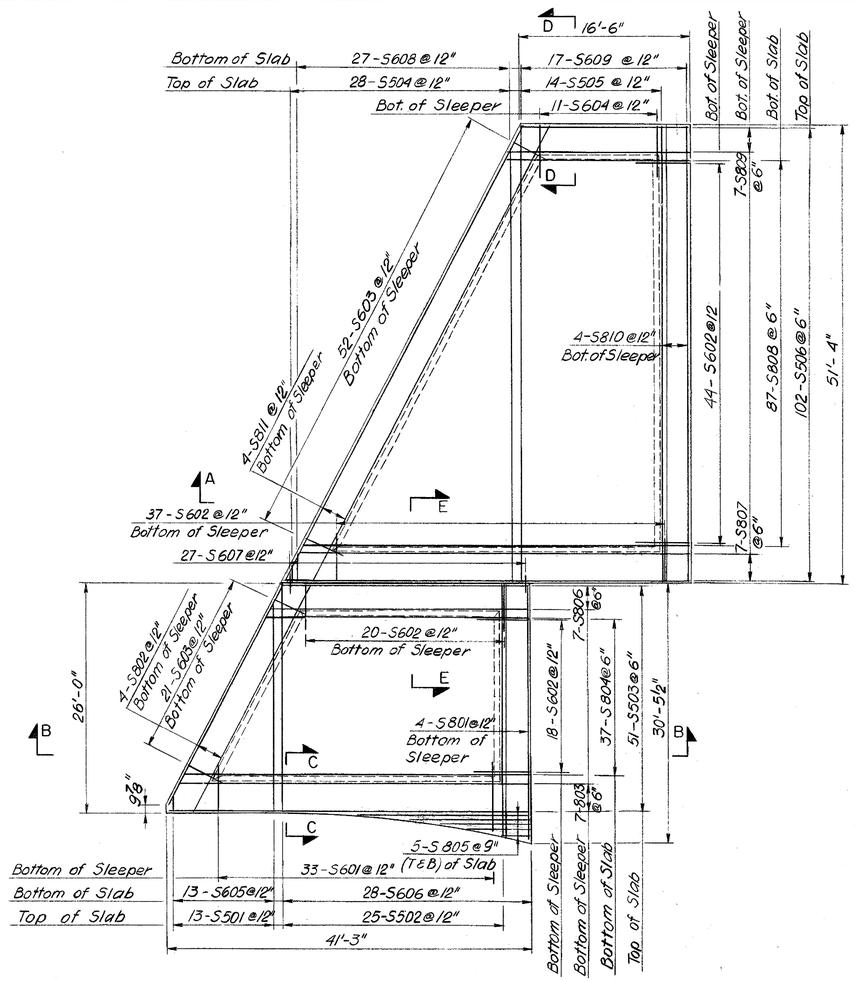

PLAN
Scale: 1/8"=1'-0"

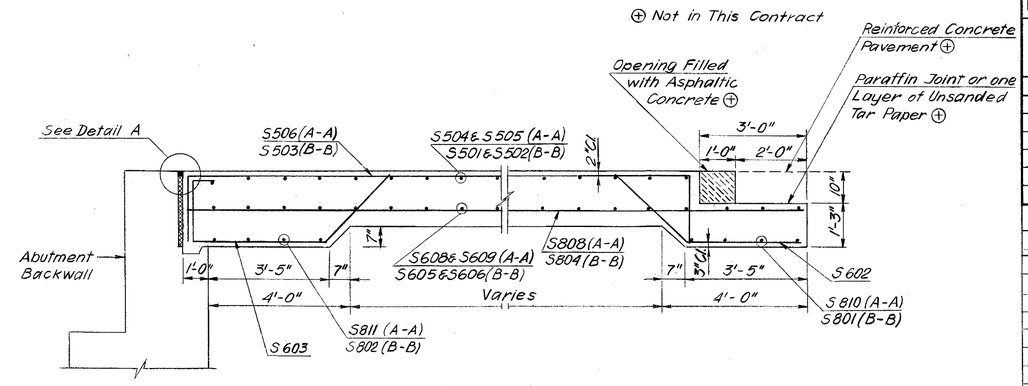

SECTION A-A
(SECTION B-B SIMILAR)
Scale: 1/2"=1'-0"

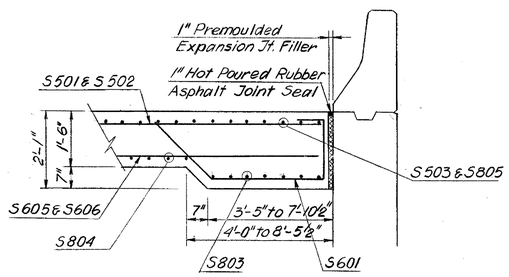

SECTION C-C
Scale: 1/2"=1'-0"

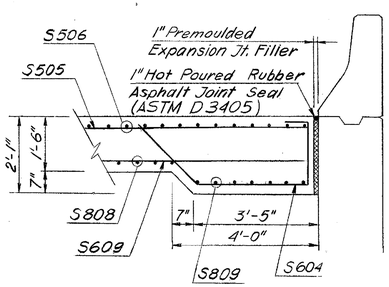

SECTION D-D
Scale: 1/2"=1'-0"

Notes:

1. For General Notes See Sheet No. 1.
2. Reinforcement Details for Interior Barrier and Median See Sheet No. 16 & 17.
3. Quantity of Interior Barrier and Median on Approach Slab is Included in Item 602 P.C.C. Masonry Superstructure.
4. All Approach Slad Steel shall be epoxy coated

REINFORCING BAR LIST

MARK	SIZE	LENGTH	NUMBER	TYPE	REMARKS
S801	8	29'-0" to 30'-0"	4	Straight	Varies by 4"
S802	8	29'-8"	4	do	
S803	8	40'-7" to 42'-7"	7	Bent	Varies by 4"
S804	8	28'-5" to 38'-10"	37	Straight	Varies by 3½"
S805	8	3'-6" to 22'-8"	10	do	Varies by 4'-9"
S806	8	28'-2" to 30'-2"	7	Bent	Varies by 4"
S807	8	45'-5" to 47'-2"	7	do	Varies by 3½"
S808	8	18'-1" to 43'-2"	87	Straight	Varies by 3½"
S809	8	17'-10" to 19'-10"	7	Bent	Varies by 4"
S810	8	51'-0"	4	Straight	
S811	8	58'-10"	4	do	
S601	6	7'-11" to 12'-3"	33	Bent	Varies by 1⅝"
S602	6	5'-3"	119	do	
S603	6	9'-0"	73	do	
S604	6	7'-11"	11	do	
S605	6	2'-0" to 23'-8"	13	Straight	Varies by 1'-9½"
S606	6	25'-4" to 29'-10"	28	do	Varies by 2"
S607	6	3'-0"	27	do	
S608	6	3'-6" to 49'-0"	27	do	Varies by 1'-9"
S609	6	50'-10"	17	do	
S501	5	2'-0" to 24'-0"	13	do	Varies by 1'-10"
S502	5	25'-4" to 28'-9"	25	do	Varies by 1⅝"
S503	5	26'-8" to 41'-3"	51	Bent	Varies by 3½"
S504	5	1'-9" to 49'-0"	28	Straight	Varies by 1'-9"
S505	5	51'-0"	14	do	

BENDING DIAGRAMS

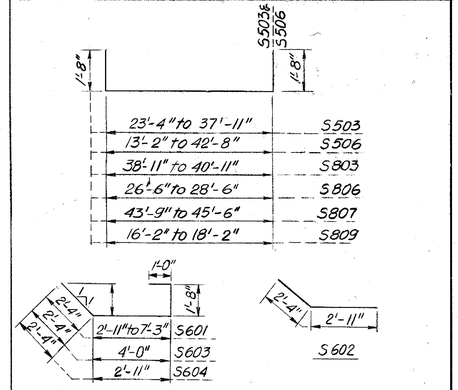

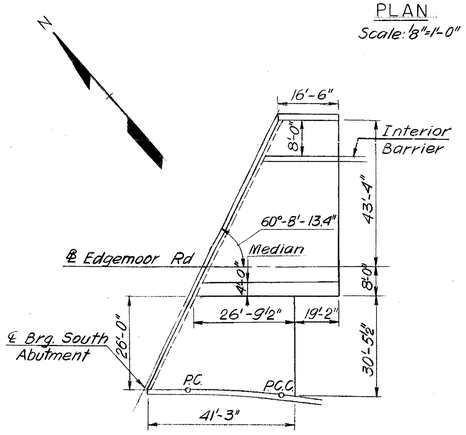

KEY PLAN
Scale: 1"=20'-0"

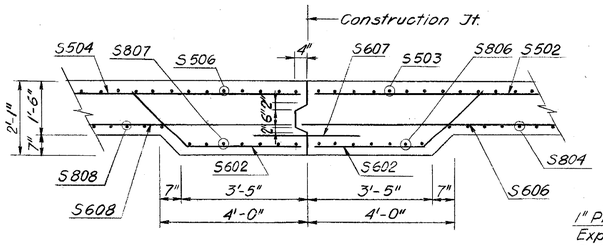

SECTION E-E
Scale: 1/2"=1'-0"

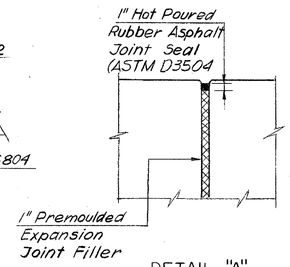

DETAIL "A"
N.T.S.

ESTIMATED QUANTITIES

SECTION	ITEM	UNIT	QUANTITY
602 ⊛	P.C.C. Masonry-Approach Slab	C.Y.	155
605A ⊛	Bar Reinforcement - - Epoxy Coated	Lbs.	25,720

⊛ Fixed Quantity

DELAWARE
DEPARTMENT OF TRANSPORTATION
DIVISION OF HIGHWAYS

	SCALE	APPROVED BY:
D. P.K. T. Z.K. C. P.C.	As Shown	BRIDGE ENGINEER

STEINMAN BOYNTON GRONQUIST & BIRDSALL
CONSULTING ENGINEERS
89 HUDSON STREET
HOBOKEN, N.J. 07030

COUNTY	CONTRACT	P. R. A. REG. NO.	STATE	FED. AID PROJECT NO.	SHEET NO.	TOTAL SHEETS
New Castle	81-071-01	3	DEL	BRM 1231 (2)	23A	35

EDGEMOOR ROAD OVER AMTRAK-CONRAIL
SLOPE PAVING DETAILS

NO.	REVISIONS	BY	DATE

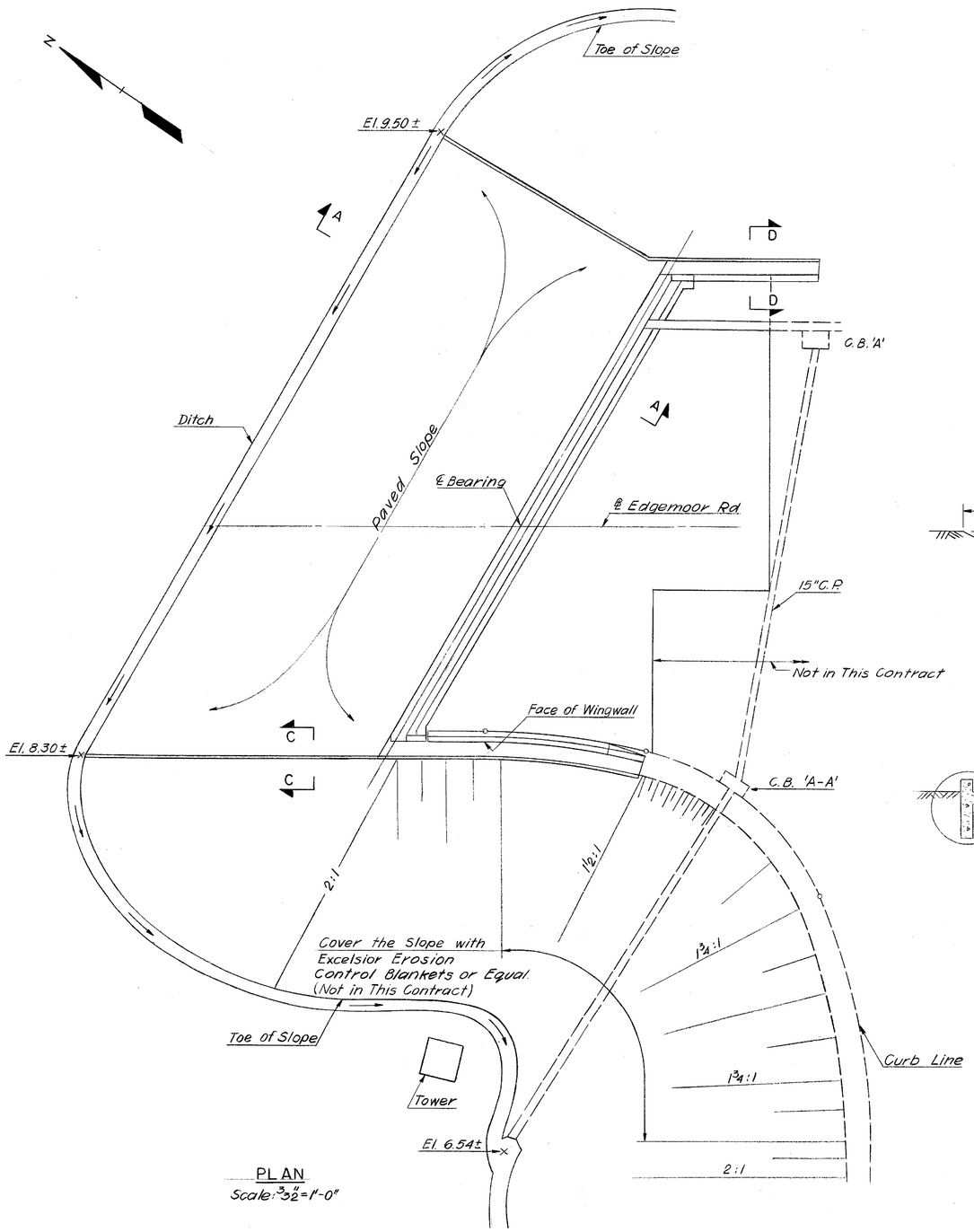

PLAN
Scale: 3/32" = 1'-0"

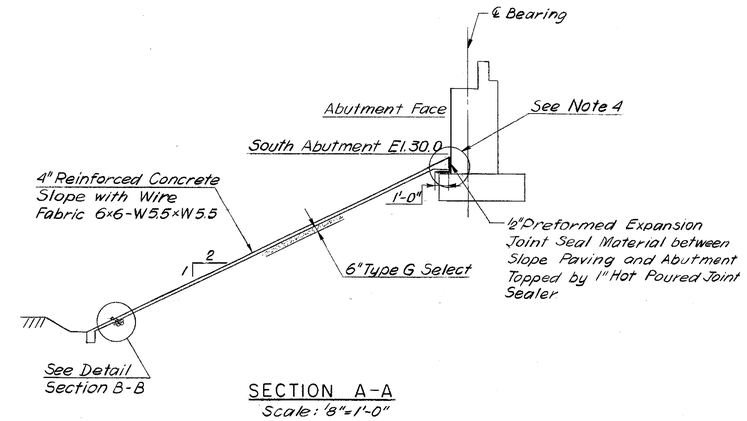

SECTION A-A
Scale: 1/8" = 1'-0"

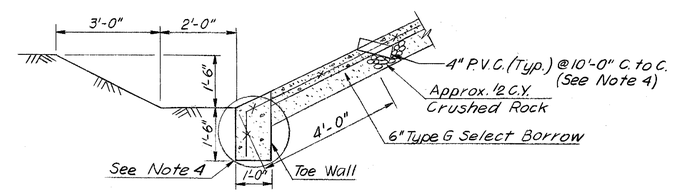

SECTION B-B
N.T.S.

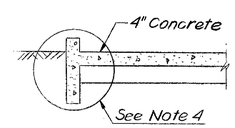

SECTION C-C
Scale: ½" = 1'-0"

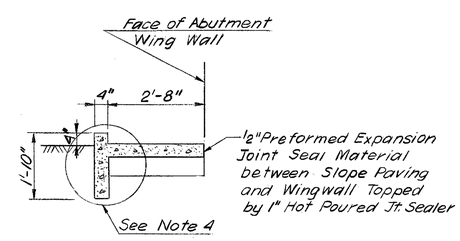

SECTION D-D
Scale: ½" = 1'-0"

Notes:

1. For General Notes See Sheet No. 1.
2. For General Plan See Sheet No. 2
3. For Erosion Control Notes See Roadway Plans.
4. The Cost is Included in Section 628

ESTIMATED QUANTITIES

SECTION	ITEM	UNIT	QUANTITY
628	Concrete Slope Paving	S.Y.	625

DELAWARE
DEPARTMENT OF TRANSPORTATION
DIVISION OF HIGHWAYS

D.	SCALE	APPROVED BY:
T. Z. K.	As Shown	
C. R. P.		BRIDGE ENGINEER

STEINMAN BOYNTON GRONQUIST & BIRDSALL
CONSULTING ENGINEERS
89 HUDSON STREET
HOBOKEN, N.J. 07030

CONTRACT	COUNTY	FEDERAL AID PROJECT Nº	SHEET Nº	TOTAL SHEETS
81-071-01	New Castle	BRM 1231(2)	24A	37

EDGEMOOR ROAD BRIDGE OVER AMTRAK - CONRAIL

GEOLOGIC SECTIONS

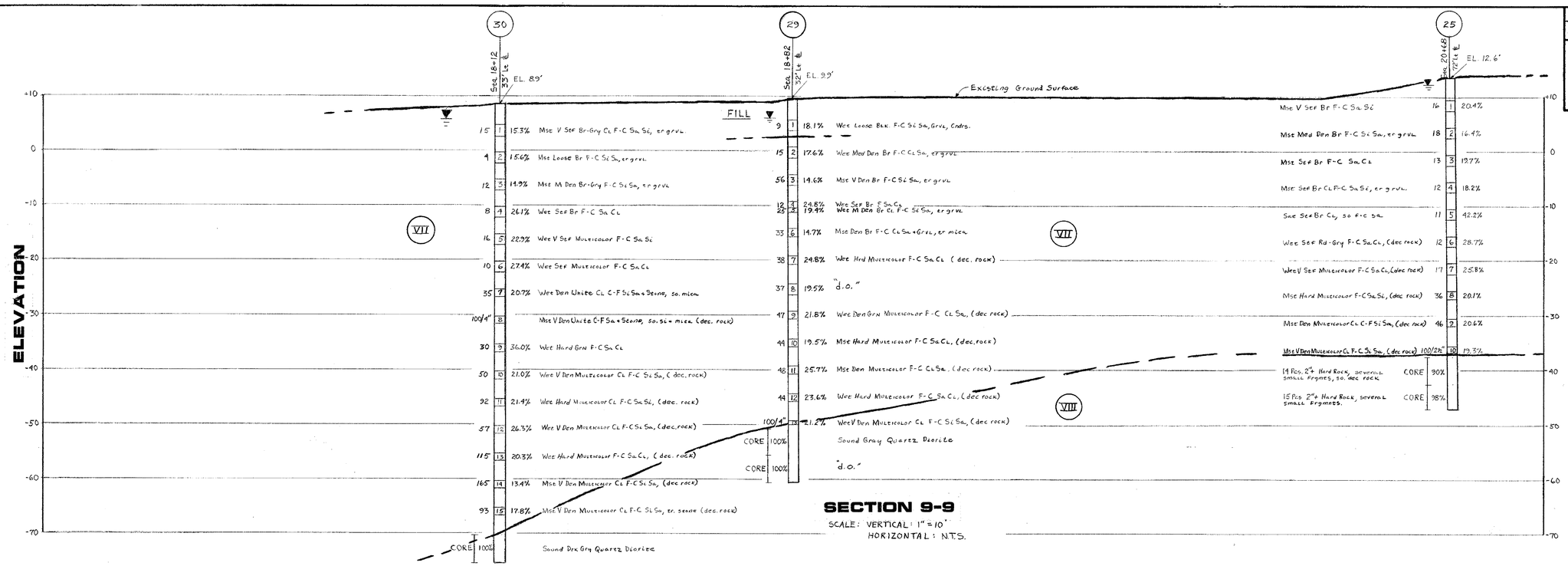

SECTION 9-9

SCALE: VERTICAL: 1" = 10'
HORIZONTAL: N.T.S.

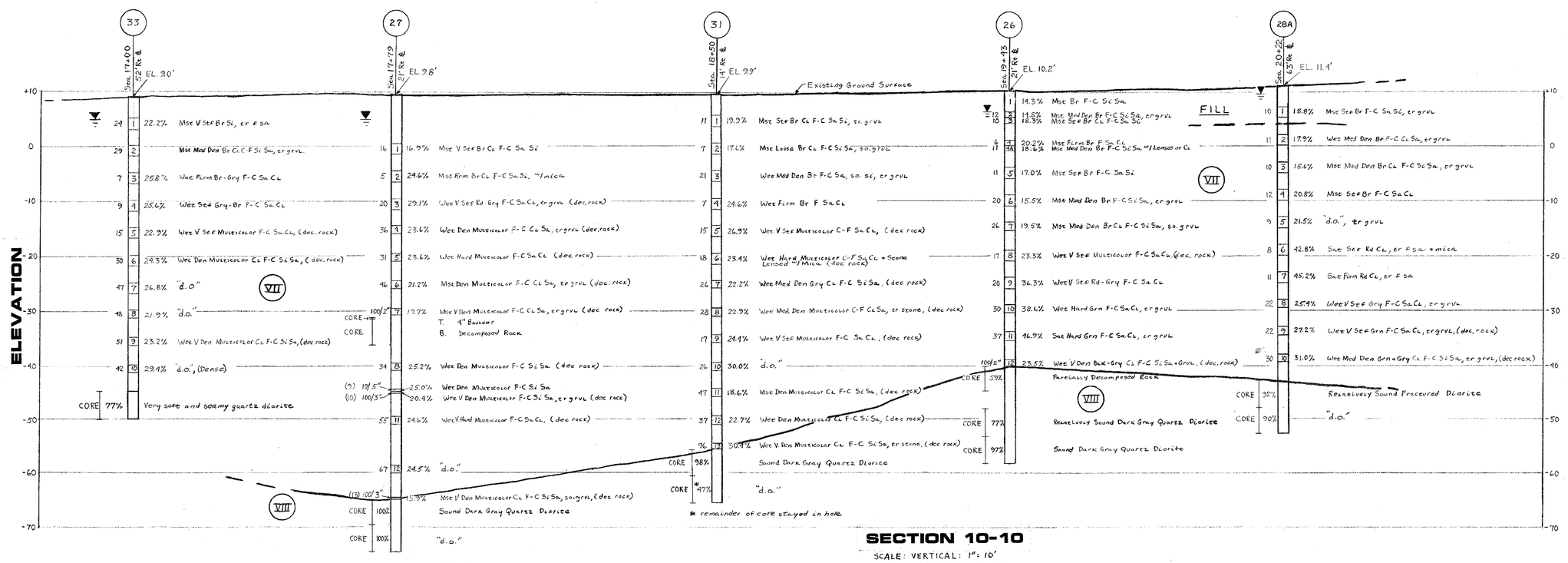

* remainder of core stayed in hole

SECTION 10-10

SCALE: VERTICAL: 1" = 10'
HORIZONTAL: N.T.S.

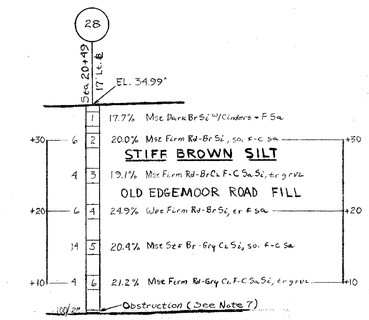

LOG - BORING 28

Legend For Boring Logs

A- Boring location and number designation. All other borings are split spoon sample borings.
B- Elevation of ground surface at boring.
C- Indicates dry samples taken with 2" O.D. split spoon.
D- Penetration resistance during advancing of sampler recorded in number of blows of 140 lb. hammer falling 30" per foot of penetration or as otherwise noted. Blows indicated are for last 12" of 18" drive, or middle 12" of a 24" drive. Core – indicates location and per cent recovery of ~ 2" O.D. rock core.
E- Moisture content of soil sample expressed in per cent of dry weight.
▼ Most reliable ground water as observed in bored holes.

Legend For Stratification

VII STIFF TO HARD VARICOLORED SILTY CLAY TO CLAYEY FINE SAND TO FINE SAND.

VIII BEDROCK - RELATIVELY SOUND FRACTURED DARK GRAY QUARTZ DIORITE.

Notes For Geologic Sections

1. For boring location, see General Plan Dwg. No. A A
2. Approximate Edgemoor Road station numbers are shown on Sections. Distances between borings are not necessarily to scale.
3. Stratifications for Geologic Sections are interpolations from individual borings and may not represent existing conditions. The contractor shall make his own interpretation which may affect his methods and cost of construction.
4. Subsoil stratifications are based on laboratory tests and geologic considerations with each group represented by the encircled numeral.
5. No existing structures or utility lines intersected by the Geologic Sections are shown.
6. All elevations refer to U.S.C. & G. survey datum, mean elevation at Sandy Hook = 0.00'.
7. Hollow stem auger probe information:

*BORING	LOCATION	DEPTH	DESCRIPTION
28-B	Sta. 20+28 17.5' L.B.L.	0-30'	Auger Boring - Moist clayey silt. Obstruction at 30'. Very hard rock like material. Auger could not penetrate. Mise. Fill at bottom (wire, concrete, etc.)
28C	Sta. 20+50 10' R.B.L.	0-49'	Auger Boring - Moist to wet clayey silt
28D	Sta. 20+27 45' L.B.L.	0-49'	No obstruction except some wood and small pieces rock(2")
28E	Sta. 20+29 13' L.B.L.	0-44'	Slight obstruction at 29.6'. Augered to 44', penetrated with very little pressure.
28F	Sta. 20+25 0.5' R.B.L.	0-29'	Augered to 29'.
		29'-30.5'	Cored through 18" of concrete.
28X	Sta. 20+52 19.5' L.B.L.	0-29'	Augered to 29'. Hit obstruction at that depth.

* Ground surface @ Elevation + 35.5' ±

REVISIONS

PREL. TRACING D.V.K. DESIGN CHKD. T.J.S. 9/13/84

CONTRACT	COUNTY	FEDERAL AID PROJECT Nº	SHEET Nº	TOTAL SHEETS
			25A	351

EDGEMOOR ROAD BRIDGE

LIST OF DRAWINGS & DIVISION OF WORK

DRAWING LIST

Sheet No.		
25A	3662-100	LIST OF DRAWINGS & DIVISION OF WORK
26A	3662-101	SEQUENCE OF CONSTRUCTION, LEGEND & ABBREVIATIONS
27A	3662-102	TRANSMISSION PLAN & PROFILE
28A	3662-103	CATENARY PLAN & CATENARY #3 PROFILE
29A	3662-104	PROFILE CATENARY #1
30A	3662-105	PROFILE CATENARY #2
31A	3662-106	PROFILE CATENARY #5
32A	3662-107	PROFILE CATENARY #6
33A	3662-108	PROFILE CATENARY #10
34A	3662-109	TRANSMISSION ERECTION DIAGRAMS FOR W407 & W408
35A	3662-110	TRANSMISSION ERECTION DIAGRAMS FOR W409 & W410
36A	3662-111	STRUCTURAL ERECTION DIAGRAMS FOR W408A & W408B
37A	3662-112	CATENARY ERECTION DIAGRAMS FOR W408 & W409
38A	3662-113	CATENARY ERECTION DIAGRAMS FOR W408A & W408B
39A	3662-114	STRUCTURAL DETAILS SHEET 1
40A	3662-115	STRUCTURAL DETAILS SHEET 2
41A	3662-116	STRUCTURAL DETAILS SHEET 3
42A	3662-117	MISCELLANEOUS DETAILS
43A	3662-118	GROUNDING & BONDING ARRANGEMENT
44A	3662-119	GROUNDING & BONDING DETAILS
45A	3662-120	CROSS HANGER ASSEMBLY
46A	3662-121	CATENARY SUSPENSION ASSEMBLIES
47A	3662-122	STEADY & DROPPER ASSEMBLIES
48A	3662-123	HORIZONTAL STEADY ASSEMBLIES
49A	3662-124	SECTIONALIZING & HANGER ASSEMBLIES
50A	3662-125	RIGID INSULATOR ASSEMBLY
51A	3662-126	CATENARY HANGER ASSEMBLIES
52A	3662-127	TRANSMISSION HARDWARE ASSEMBLIES
53A	3662-128	SUMMARY OF MATERIALS SHEET 1
54A	3662-129	SUMMARY OF MATERIALS SHEET 2

DIVISION OF WORK AND MATERIAL SUPPLY

ITEM NO.	DESCRIPTION	MATERIAL	FABRICATION	ERECTION	LABOR
1.	INSTALL NEW HIGH LEVEL GUYS AND ANCHORS ON EAST SIDE OF NORTH AND SOUTH POLES OF STRUCTURE #W-407. (CONTRACTOR)	C	C	C	C
2.	EXTEND NORTH AND SOUTH POLES OF STRUCTURES #W-408 AND #W-409, AND ATTACH NEW CROSS ARMS AND GROUND WIRE ATTACHMENTS. (CONTRACTOR)	C	C	C	C
3.	RAISE ALL TRANSMISSION CIRCUITS AND AERIAL GROUND WIRES TO NEW ELEVATIONS. (CONTRACTOR)	C	C	C	C
4.	INSTALL NEW BRIDGE FACE STRUCTURES #W-408A AND #W-408B. (CONTRACTOR)	C	C	C	C
5.	CONNECT NEW STRUCTURES #W-408A AND #W408B TO EXISTING RAILROAD GROUNDING SYSTEM. (AMTRAK)	C	C	R	R
6.	REPROFILE AND ADJUST AMTRAK CATENARIES FOR TRACKS 1, 2 AND 3 IN ACCORDANCE WITH TEMPORARY PROFILES, AND TRANSFER SUPPORT FROM EXISTING BRIDGE ATTACHMENTS TO STRUCTURES #W-408A AND #W-408B. AMTRAK)	C	–	R	R
7.	TRANSFER SUPPORT OF CONRAIL CATENARIES #5, #6 AND #10 TO NEW STRUCTURES #W-408A AND #W-408B, AND REMOVE ATTACHMENT TO EXISTING BRIDGE DECK. (AMTRAK)	C	–	R	R
8.	CUT IN NEW INSULATION IN CONRAIL CATENARIES AS INDICATED BY TEMPORARY PROFILES. (AMTRAK)	C	–	R	R
9.	GROUND SECTION OF CONRAIL CATENARIES BETWEEN INSULATORS, INSULATED IN ITEM 8 ABOVE, BY ADDITION OF GROUNDING BONDS. (AMTRAK)	C	–	R	R
10.	GROUND AND BOND DEMOLITION SHIELD (AMTRAK)	C	–	R	R
11.	GROUND AND BOND NEW BRIDGE SUPERSTRUCTURE AND TEMPORARY AND PERMANENT BARRIERS, (AMTRAK)	C	–	R	R
12.	ADJUST THREE AMTRAK CATENARY SYSTEMS TO FINAL ELEVATION. (AMTRAK)	C	–	R	R
13.	CLEAN AND PAINT ALL MODIFIED STRUCTURES.	C	–	–	C

LEGEND R RAILROADS FORCES

C HIGHWAY AGENCY'S CONTRACTOR

DWG. NO. 3662 - 100

9/15/85

Gibbs & Hill, Inc. A Subsidiary of Dresser Industries New York, New York

REVISIONS

PREL. TRACING VC DESIGN CHKD.

40389

CONTRACT	COUNTY	FEDERAL AID PROJECT Nº	SHEET	TOTAL SHEETS
			26A	351

EDGEMOOR ROAD BRIDGE

SEQUENCE OF CONSTRUCTION, LEGEND & ABBREVIATIONS

GENERAL NOTES

1. THE CONSTRUCTION SEQUENCE OUTLINED IS PROVISIONAL. BEFORE COMMENCEMENT OF WORK, THE CONTRACTOR SHALL ESTABLISH WITH AMTRAK AND THE ENGINEER, THE EXACT SEQUENCES AND PROCEDURES TO BE UTILIZED BASED ON MANPOWER, EQUIPMENT, MATERIAL AND TRACK AVAILABILITY.
2. AMTRAK IS RESPONSIBLE FOR COORDINATING AND OBTAINING ALL CATENARY AND FEEDER DE-ENERGIZATIONS AND TRACK OCCUPANCIES REQUIRED FOR CONSTRUCTION.
3. ALL ERECTION DIAGRAMS ARE SHOWN LOOKING TOWARD WILMINGTON EXCEPT AS NOTED. PLANS SHOW ONLY ELECTRIFICATION FACILITIES AFFECTED BY THE OVERHEAD BRIDGE WORK. ALL OTHER FACILITIES ARE UNCHANGED.

EXCAVATION

1. EXCAVATION INCLUDES HAND DIGGING TO CHECK FOR UNDERGROUND UTILITIES.
2. ALL ~~EXCAVATION~~ EXCAVATED AREAS MUST BE ~~COVERED~~ PROTECTED EACH NIGHT. BARRICADES AND WARNING LIGHTS MUST BE PROVIDED AS REQUIRED BY AMTRAK. (2)

STRUCTURES

1. STRUCTURES HAVE BEEN MODIFIED TO RESIST NEW MODIFIED LOADS AS COMPLETE STRUCTURES AS SHOWN IN THE ERECTION DIAGRAMS. THE CONTRACTOR SHALL PROVIDE TEMPORARY GUYS, IF NECESSARY AND TAKE ALL STEPS AND PRECAUTIONS TO ASSURE THAT DURING CONSTRUCTION STRUCTURES ARE NOT OVERLOADED OR DAMAGED IN ANY WAY. THE CONTRACTOR SHALL REVIEW DETAILS OF CONSTRUCTION SEQUENCE, METHODS, WORK PROCEDURES AND TEMPORARY WORK WITH THE ENGINEER AND AMTRAK PRIOR TO INITIATION OF THE WORK.
2. ALL NEW POLES SHALL BE ERECTED PLUMB BEFORE APPLICATION OF ANY LOADS, UNLESS OTHERWISE NOTED. ALL POLES SHALL BE MAINTAINED IN THIS CONDITION DURING CONSTRUCTION.
3. THE FOUNDATION EFFECTIVE DEPTHS SHOWN IN ERECTION DIAGRAMS FOR EACH STRUCTURE SHALL BE MAINTAINED. IF DUE TO ANY REASON THE GROUND PROFILE AT THE FOUNDATION DIFFERS FROM THAT SHOWN IN THE ERECTION DIAGRAM, THE CONTRACTOR SHALL NOTIFY THE ENGINEER.
4. BEFORE FABRICATION OF PARTS TO BE ATTACHED TO EXISTING STRUCTURES, ALL RELEVANT DIMENSIONS, DETAILS AND ELEVATIONS SHALL BE VERIFIED BY THE CONTRACTOR IN THE FIELD.
5. ALL FIELD CONNECTIONS TO BE BOLTED, EXCEPT AS NOTED.
6. SIZE OF BOLT HOLES TO BE 1/16" LARGER THAN BOLT DIAMETER UNLESS SPECIFIED OTHERWISE.
7. ALL BOLTS TO BE 7/8" DIAMETER AND SHALL CONFORM TO A325, TYPE I, GALVANIZED UNLESS OTHERWISE NOTED.
8. ANCHOR BOLTS SECURING POLES TO FOUNDATIONS SHALL USE A DOUBLE-NUT LOCKING METHOD. THE LOWER NUT SHALL BE TORQUED TO 175 FT./LBS. WITH CALIBRATED TORQUE WRENCH. THE APPLICATION OF GROUT BENEATH THE POLE BASE SHALL NOT BE APPLIED UNTIL THE STRUCTURE IS IN THE FINAL LOADING CONDITION.
9. CATENARY SUPPORTING ATTACHMENTS SHALL BE SHIPPED WITH ALL PARTS ASSEMBLED AND BOLTED AS COMPLETE AS PRACTICABLE AFTER GALVANIZING.
10. FOR CATENARY STRUCTURES, STEEL DETAILING FABRICATION AND ERECTION SHALL COMPLY TO AISC MANUAL, LATEST EDITION, ALL WELDS AND WELDING TO CONFORM WITH THE APPLICABLE REQUIREMENTS OF AWS D1.1.
11. MATERIALS AND WORKMANSHIP SHALL CONFORM TO APPLICABLE ASTM AND AISC SPECIFICATIONS AND WITH REQUIREMENTS OF THE PROJECT SPECIFICATIONS.
12. SHIPPING MARKS SHALL BE STAMPED (MIN. INDENTATION 1/32") ON EACH ITEM.
13. MODIFIED STRUCTURES WILL BE SAND BLASTED AND PAINTED IN ACCORDANCE WITH THE AMTRAK STANDARDS.

CATENARY

1. ON ERECTION DIAGRAMS, SOLID-HEAVY LINES INDICATE A NEW OR CHANGED CONDITION, SOLID-LIGHT LINES INDICATE AN EXISTING CONDITION. LIGHT DASHED LINES INDICATE EXISTING TO BE REMOVED.
2. ACROSS TRACK DIMENSIONS ARE SHOWN NORMAL TO EXISTING TRACK ALIGNMENT, UNLESS OTHERWISE NOTED.
3. ON ERECTION DIAGRAMS, THE CONDUCTOR HEIGHTS ARE REFERENCED TO HIGH RAIL LEVEL AT THE STATION.
4. ALL WIRE WORK, INSTALLATION OR REMOVAL, IS TO BE COMPLETED BY AMTRAK FORCES.
5. AMTRAK SHALL ENSURE THAT SECTIONS OF WIRE AND HARDWARE NOT REPLACED ARE SOUND AND SUITABLE FOR CONTINUED SERVICE.

HARDWARE

1. MATERIAL AND PART SUBSTITUTION SHALL NOT BE MADE WITHOUT WRITTEN APPROVAL OF AMTRAK.
2. SPLIT PINS SHALL BE INSTALLED WITH PIN END TURNED DOWN TOWARD GROUND OR INWARDS TO POLE.

CONSTRUCTION SEQUENCE & DIVISION OF WORK

BEFORE CIVIL RECONSTRUCTION OF BRIDGE BEGINS

1. INSTALL NEW HIGH LEVEL GUYS AND ANCHORS ON EAST SIDE OF NORTH AND SOUTH POLES OF STRUCTURE #W-407. (CONTRACTOR)
2. EXTEND NORTH AND SOUTH POLES OF STRUCTURES #W-408 & #W-409 AND ATTACH NEW CROSS ARMS AND GROUND WIRE ATTACHMENTS. (CONTRACTOR)
3. RAISE ALL TRANSMISSION CIRCUITS AND AERIAL GROUND WIRES TO NEW ELEVATIONS. (CONTRACTOR)
4. INSTALL NEW BRIDGE FACE STRUCTURES #W-408A AND #W-408B. (CONTRACTOR)
5. CONNECT NEW STRUCTURES #W-408A AND #W-408B TO EXISTING RAILROAD GROUNDING SYSTEM. (AMTRAK)
6. REPROFILE AND ADJUST AMTRAK CATENARIES FOR TRACKS 1, 2 AND 3 IN ACCORDANCE WITH TEMPORARY PROFILES, AND TRANSFER SUPPORT FROM EXISTING BRIDGE ATTACHMENTS TO STRUCTURES #W-408A AND #W-408B. (AMTRAK)
7. TRANSFER SUPPORT OF CONRAIL CATENARIES #5, #6 AND #10 TO NEW STRUCTURES #W-408A AND #W-408B, AND REMOVE ATTACHMENT TO EXISTING BRIDGE DECK. (AMTRAK)
8. CUT IN NEW INSULATION IN CONRAIL CATENARIES AS INDICATED BY TEMPORARY PROFILES. (AMTRAK)
9. GROUND SECTION OF CONRAIL CATENARIES BETWEEN INSULATORS, INSTALLED IN ITEM 8 ABOVE, BY ADDITION OF GROUNDING BONDS. (AMTRAK)

FOLLOWING INSTALLATION OF DEMOLITION SHIELD

10. GROUND AND BOND DEMOLITION SHIELD (AMTRAK)

FOLLOWING DEMOLITION OF EXISTING BRIDGE AND DURING CONSTRUCTION OF NEW BRIDGE

11. GROUND AND BOND NEW BRIDGE SUPERSTRUCTURE AND TEMPORARY AND PERMANENT BARRIERS. (AMTRAK)

FOLLOWING COMPLETION OF BRIDGE CONSTRUCTION AND REMOVAL OF TEMPORARY BARRIERS

12. ADJUST THREE AMTRAK CATENARY SYSTEMS TO FINAL ELEVATION. (AMTRAK)
13. SAND BLAST AND PAINT ALL MODIFIED STRUCTURES (CONTRACTOR).

ABBREVIATIONS

AMERICAN INSTITUTE OF STEEL CONSTRUCTION	AISC	TRACK(S)	TRK(S).
AMERICAN SOCIETY FOR TESTING AND MATERIALS	ASTM	TYPICAL	TYP.
AMERICAN WIRE GAGE	A.W.G.	YARD(S)	YD(S).
BOTTOM	BOT.	ASSEMBLY	ASS'Y.
CENTERLINE	℄	HIGH RAIL	HR
COPPER	CU.	MESSENGER	MESS.
DROP FORGED STEEL	D.F.S.	AUXILIARY	AUX.
DEAD-END	D.E.	BASE LINE	℄.
DETAIL	DET.	COMPOSITE	COMP.
DIAGRAM	DIAG.	STRAND	STR.
DIAMETER	DIA., ϕ	TRACK	TRK.
DIVISION	DIV.		
DRAWING	DWG.		
EACH	EA.		
ERECTION	EREC.		
EXISTING	EXIST.		
EXTRA HIGH STRENGTH	E.H.S.		
FEET	FT.		
FOUNDATION	FDN.		
GALVANIZED	GALV.		
GROUND WIRE	G.W.		
HEXAGON(AL)	HEX		
INCH	IN.		
LONG	LG.		
MAXIMUM	MAX.		
MINIMUM	MIN.		
NUMBER	NO., #		
PLATE	℔, PL.		
POLYVINYL CHLORIDE	PVC		
PROJECTION	PROJ.		
RADIUS	R		
REQUIRED	REQ'D.		
RIGHT HAND	R.H.		
RIGHT OF WAY	R.O.W.		
SCHEDULE	SCHED.		
SECTION	SECT.		
SPECIFICATION	SPEC.		
SQUARE	SQ.		
STANDARD	STD.		
TOP OF	T/		

DWG. NO. 3662-101

9/9/95

Gibbs & Hill, Inc. Consulting Engineers New York, New York

REVISIONS

Addendum No. 2 Revised Excavation Note 1-16-96 R.C.

PREL. TRACING S.W. DESIGN M.S.S. CHKD. M.S.S. APT.

CONTRACT	COUNTY	FEDERAL AID PROJECT Nº	SHEET Nº	TOTAL SHEETS
			27A	351

EDGEMOOR ROAD BRIDGE

TRANSMISSION PLAN & PROFILE

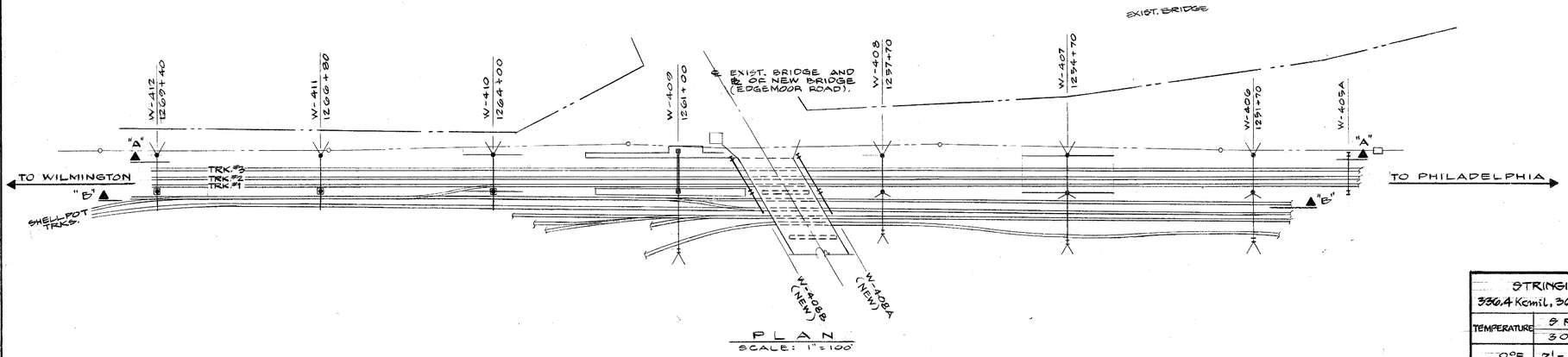

PLAN
SCALE: 1" = 100'

STRINGING DATA FOR 336.4 Kcmil, 30/7 STR. ACSR GROUND WIRE			
TEMPERATURE	SPAN (FT.) 300	SPAN (FT.) 330	TENSION (LBS)
0°F	2'-3"	2'-9"	2,635
30°F	2'-11"	3'-6"	2,045
60°F	3'-8"	4'-6"	1,615
90°F	4'-6"	5'-5"	1,325
120°F	5'-3"	6'-4"	1,130

STRINGING DATA FOR EXISTING 1/0 CU., 4/0 CU. AND 400 Kcmil CU. WIRES					
TEMPERATURE	SPAN (FT.) 300	SPAN (FT.) 330	TENSION (LBS.) 1/0 CU.	TENSION (LBS.) 4/0 CU.	TENSION (LBS.) 400 Kcmil CU.
0°F	3.50	4.34	1022	2048	3872
30°F	4.20	5.10	855	1713	3240
60°F	5.00	6.05	734	1469	2779
90°F	5.90	6.88	645	1291	2441
120°F	6.35	7.68	578	1157	2188

BILL OF MATERIAL

MARK	DWG. Nº	DESCRIPTION	DIVISION OF WORK	UNIT	QUANTITY
WIRE	N/A	336.4 Kcmil 30/7 STR. ACSR GROUND WIRE	C	FT.	2000
G.W. SPLICE	N/A	ALCOA # 33015 AL. JOINT 3020.751 STEEL JOINT 4010.332	C	EA.	4
132 KV FEED. WR. SPLICE	N/A	BURNDY - HYSPLICE TYPE YDS CAT. # YDS 28	C	EA.	4
SIGNAL PWR. WR. SPLICE	N/A	BURNDY - HYSPLICE TYPE YDS CAT. # YDS 25	C	EA.	4
TROLLEY FEED. WR. SPLICE	N/A	BURNDY - HYSPLICE TYPE YDS CAT. # YDS 32	C	EA.	2

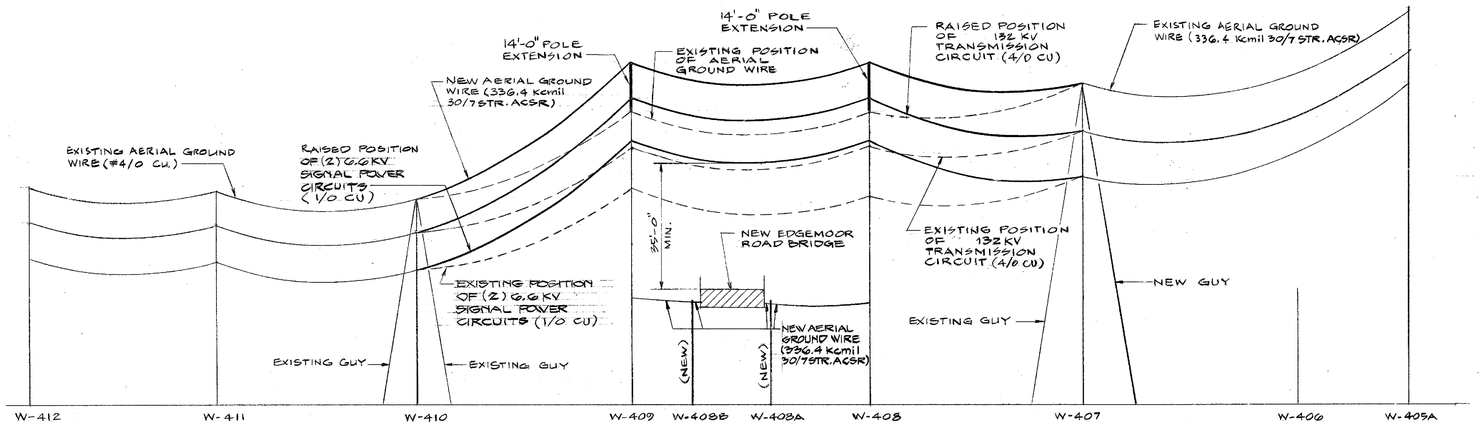

EXISTING AND PROPOSED PROFILES FOR
GROUND WIRE, SIGNAL POWER AND TRANSMISSION CIRCUITS
ELEVATION "A" - "A"
SCALE: HOR. 1" = 100'
VERT. 1" = 20'

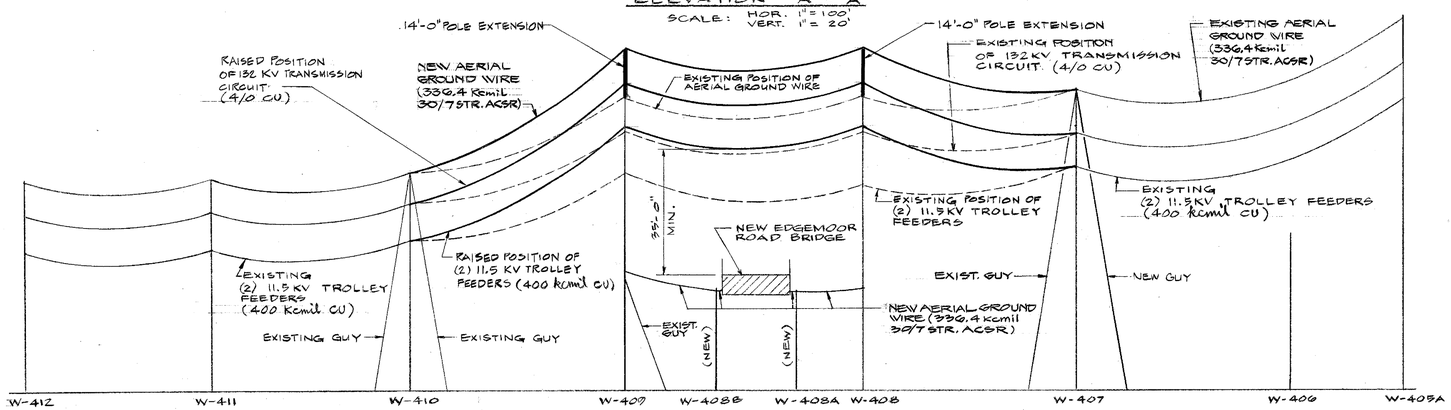

EXISTING AND PROPOSED PROFILES FOR
GROUND WIRE, TROLLEY FEEDERS AND TRANSMISSION CIRCUITS
ELEVATION "B" - "B"
SCALE: HOR. 1" = 100'
VERT. 1" = 20'

NOTES

1. FOR CATENARY PROFILES SEE DWG. Nº 3662-103 thru Nº 3662-108.
2. FOR ERECTION DIAGRAMS SEE DWG. Nº 3662-109 thru Nº 3662-113.
3. FOR GENERAL NOTES SEE DWG. NO. 3662-101.

9/15/95

DWG. NO. 3662-102

Gibbs & Hill, Inc. A Subsidiary of Dresser Corporation New York, New York

REVISIONS

SCALE: AS NOTED

DESIGN KML CHKD. SJ PAT SJ

PREL. TRACING

40399

3

CONTRACT	COUNTY	FEDERAL AID PROJECT Nº	SHEET Nº	TOTAL SHEETS
			28A	351

EDGEMOOR ROAD BRIDGE

CATENARY PLAN & CATENARY #3 PROFILE

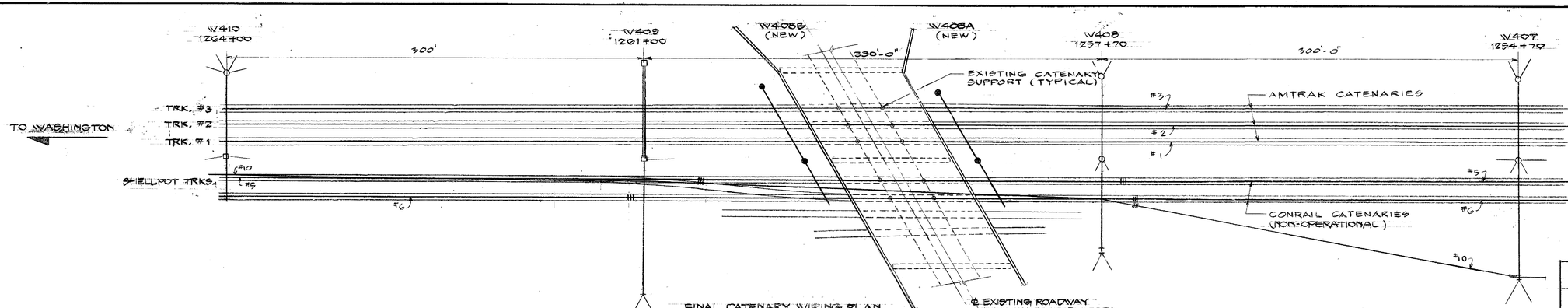

FINAL CATENARY WIRING PLAN

SCALE: 1" = 40'-0"

NOTE: FOR EXISTING CONRAIL WIRING PLAN, SEE DWG. NO. 107

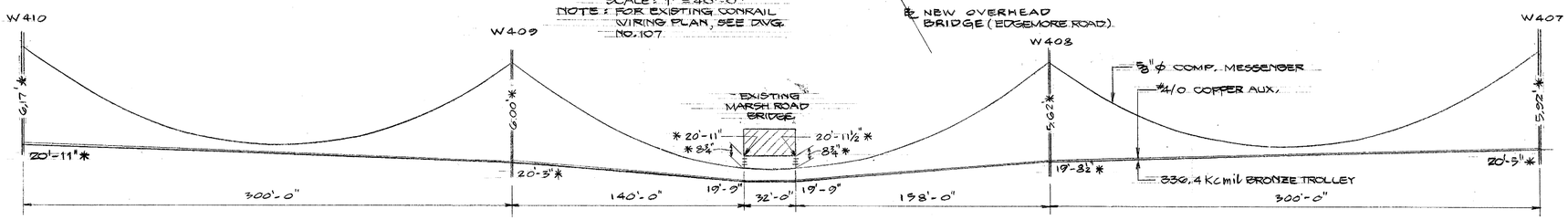

EXISTING PROFILE FOR AMTRAK CATENARY - #3

SCALE: HOR. 1" = 40'-0" VERT. 1" = 4'-0"

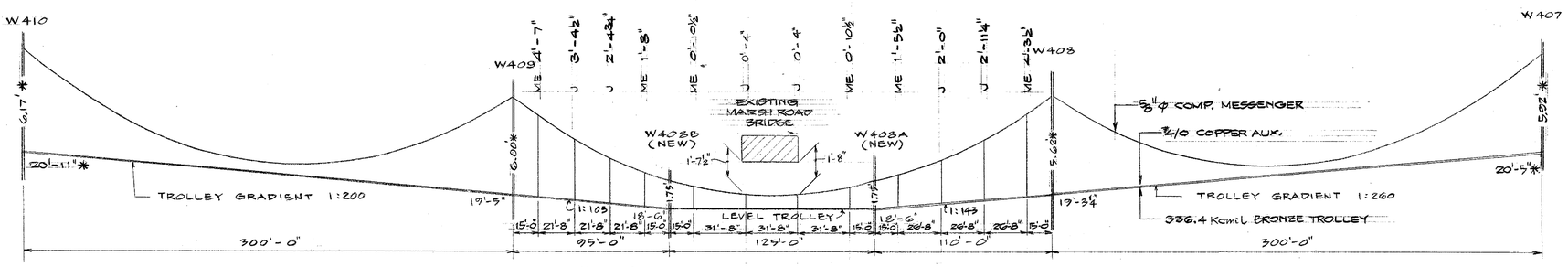

TEMPORARY LOWERED CATENARY PROFILE - #3

SCALE: HOR. 1" = 40'-0" VERT. 1" = 4'-0"

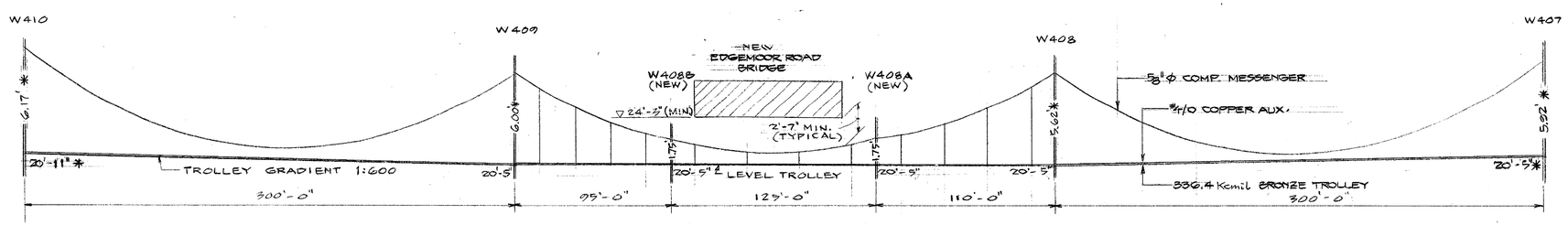

FINAL PROFILE FOR AMTRAK CATENARY - #3

SCALE: HOR. 1" = 40'-0" VERT. 1" = 4'-0"

BILL OF MATERIAL

MARK	DWG. NO.	DESCRIPTION	DIVISION OF WORK	UNIT	QUANTITY
J	3662-126	HANGER	CR	EA	6
ME	3662-126	HANGER	CR	EA	6
H	3662-126	HANGER	CR	EA	24

CR - CONTRACTOR SUPPLIED, RAILROAD INSTALLED.

NOTES:

1. FOR PROFILE OF GROUND WIRES, TROLLEY FEEDERS, SIGNAL POWER & TRANSMISSION CIRCUITS SEE DWG. NO. 3662-102.
2. * DENOTES FIELD MEASUREMENTS.
3. FOR CATENARY ERECTION DIAGRAM, SEE DWG. NO. 3662-112 & 113.
4. FOR GENERAL NOTES, SEE DWG. 3662-101.

DWG. NO. 3662 - 103

Gibbs & Hill, Inc. A Subsidiary of Dawn Corporation New York, New York

REVISIONS

SCALE: AS NOTED

DESIGN KML CHKD. SJ

PREL. TRACING VC

9/5/85

4

CONTRACT	COUNTY	FEDERAL AID PROJECT Nº	SHEET Nº	TOTAL SHEETS
			29A	351

EDGEMOOR ROAD BRIDGE

PROFILE CATENARY #1

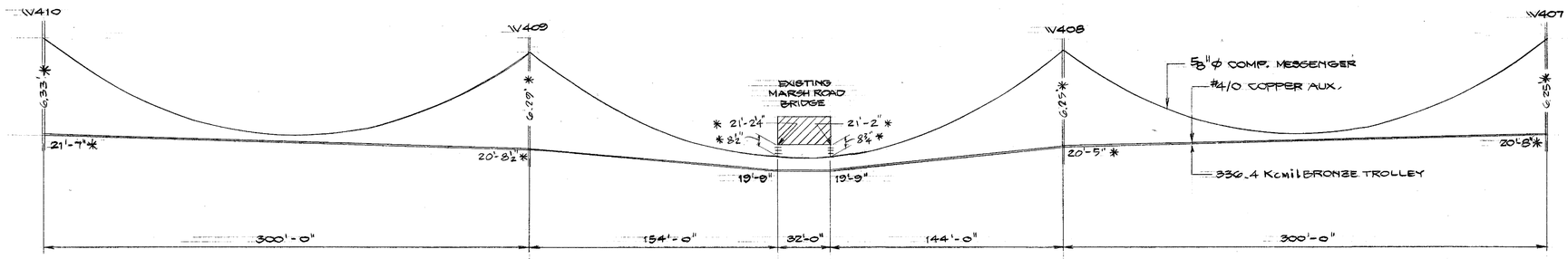

EXISTING PROFILE FOR AMTRAK CATENARY - #1

SCALE: HOR. 1" = 40'-0"
VERT. 1" = 4'-0"

BILL OF MATERIAL					
MARK	DWG. NO.	DESCRIPTION	DIVISION OF WORK	UNIT	QUANTITY
J	3662-126	HANGER	CR	EA	6
ME	3662-126	HANGER	CR	EA	6
H	3662-126	HANGER	CR	EA	24

CR - CONTRACTOR SUPPLIED, RAILROAD INSTALLED.

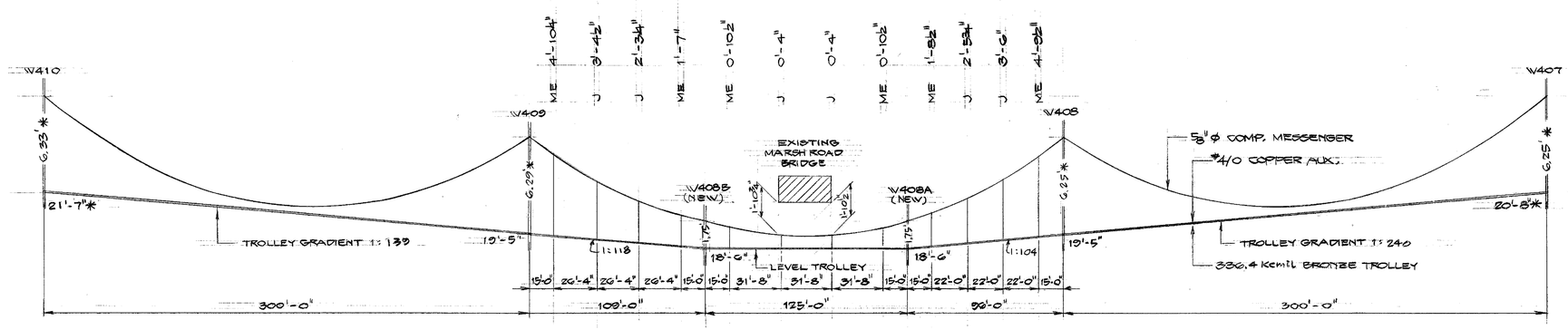

TEMPORARY LOWERED CATENARY PROFILE - #1

SCALE: HOR. 1" = 40'-0"
VERT. 1" = 4'-0"

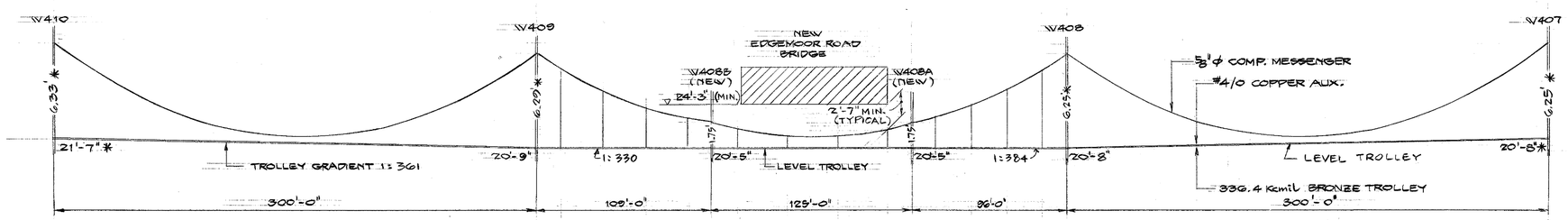

FINAL PROFILE FOR AMTRAK CATENARY - #1

SCALE: HOR. 1" = 40'-0"
VERT. 1" = 4'-0"

NOTES:

1. FOR PROFILE OF GROUND WIRES, TROLLEY FEEDERS, SIGNAL POWER & TRANSMISSION CIRCUITS, SEE DWG. NO. 3662-102.
2. * DENOTES FIELD MEASUREMENTS.
3. FOR CATENARY ERECTION DIAGRAM, SEE DWG. NOS. 3662-112 & 113.
4. FOR GENERAL NOTES, SEE DWG. 3662-101.

9/5/85

DWG. NO. 3662 - 104

Gibbs & Hill, Inc. A Subsidiary of Dravo Corporation New York, New York

REVISIONS

DESIGN KML CHKD SJT

PREL. TRACING VC

40389

CONTRACT	COUNTY	FEDERAL AID PROJECT Nº	SHEET Nº	TOTAL SHEETS
			30A	351

EDGEMOOR ROAD BRIDGE

PROFILE CATENARY #2

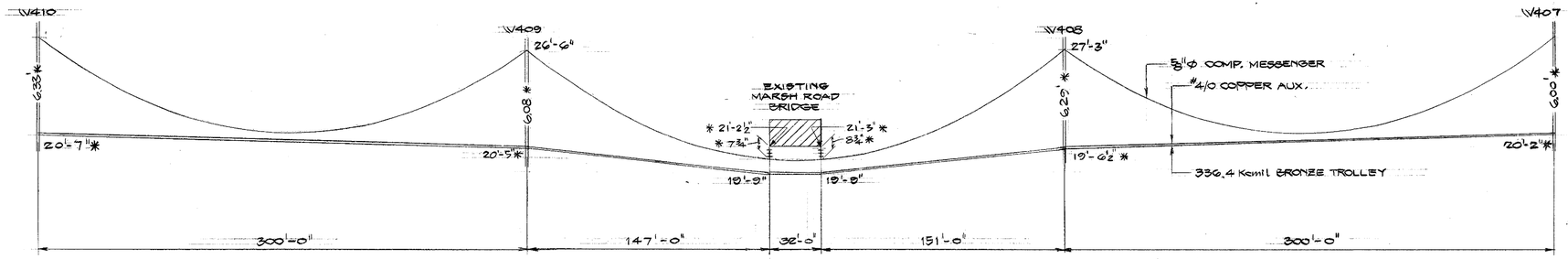

EXISTING PROFILE FOR AMTRAK CATENARY - #2

SCALE: HOR. 1" = 40'-0"
VERT. 1" = 4'-0"

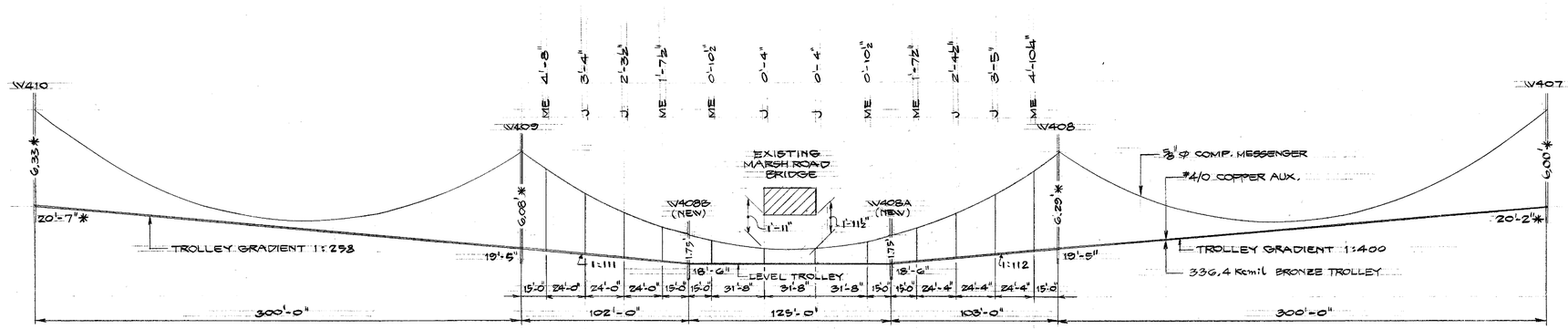

TEMPORARY LOWERED CATENARY PROFILE - #2

SCALE: HOR. 1" = 40'-0"
VERT. 1" = 4'-0"

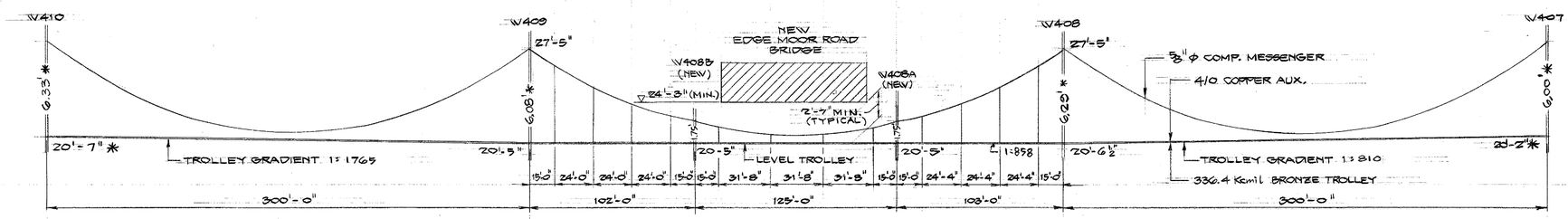

FINAL PROFILE FOR AMTRAK CATENARY - #2

SCALE: HOR. 1" = 40'-0"
VERT. 1" = 4'-0"

BILL OF MATERIAL

MARK	DWG. NO.	DESCRIPTION	DIVISION OF WORK	UNIT	QUANTITY
J	3662-126	HANGER	CR	EA	6
ME	3662-126	HANGER	CR	EA	6
H	3662-126	HANGER	CR	EA	24

CR - CONTRACTOR SUPPLIED, RAILROAD INSTALLED.

NOTES:

1. FOR PROFILE OF GROUND WIRES, TROLLEY FEEDERS, SIGNAL POWER & TRANSMISSION CIRCUITS, SEE DWG. NO. 3662-102.
2. * DENOTES FIELD MEASEMENTS.
3. FOR CATENARY ERECTION DIAGRAM, SEE DWG. NOS. 3662-112 & 113.
4. FOR GENERAL NOTES, SEE DWG. 3662-101.

REVISIONS

Gibbs & Hill, Inc.
A Subsidiary of Grace Corporation
New York, New York

DWG. NO. 3662 - 105

9/5/85

PREL. TRACING VC DESIGN KML CHKD. SJ

9

CONTRACT	COUNTY	FEDERAL AID PROJECT Nº	SHEET Nº	TOTAL SHEETS
			31A	351

EDGEMOOR ROAD BRIDGE

PROFILE CATENARY #5

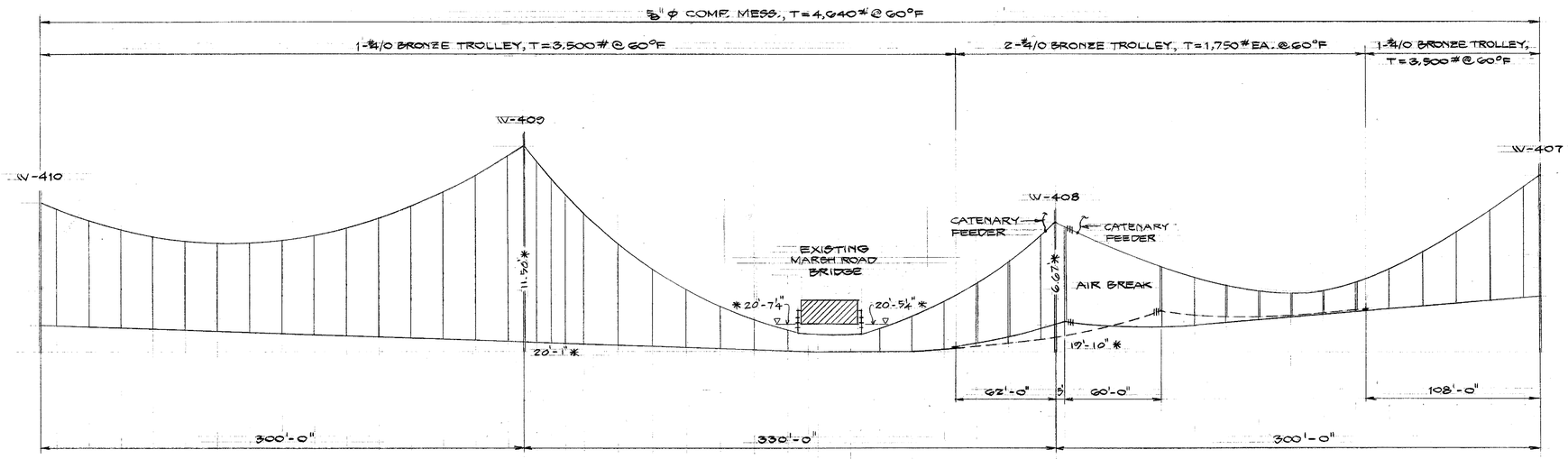

EXISTING PROFILE FOR CONRAIL CATENARY - #5

SHELLPOT BRANCH

SCALE: HOR. 1" = 40'-0"
VERT. 1" = 4'-0"

NOTE: * DENOTES FIELD MEASUREMENTS

BILL OF MATERIALS					
MARK	DWG. NO.	DESCRIPTION	DIVISION OF WORK	UNIT	QUANTITY
	—	SPLICER, #4/0 TO #4/0 BRONZE WIRES, OHIO BRASS CAT. NO. 15880	CR	EA	1
	—	5/8" ϕ WIRE ROPE, CROSBY CLIPS	CR	EA	13
SE1A (MOD.)	3662-124	SECTIONALIZING ASSEMBLY	CR	EA	1
SE5A (MOD.)	3662-124	SECTIONALIZING ASSEMBLY	CR	EA	1

CR – CONTRACTOR SUPPLIED, RAILROAD INSTALLED.

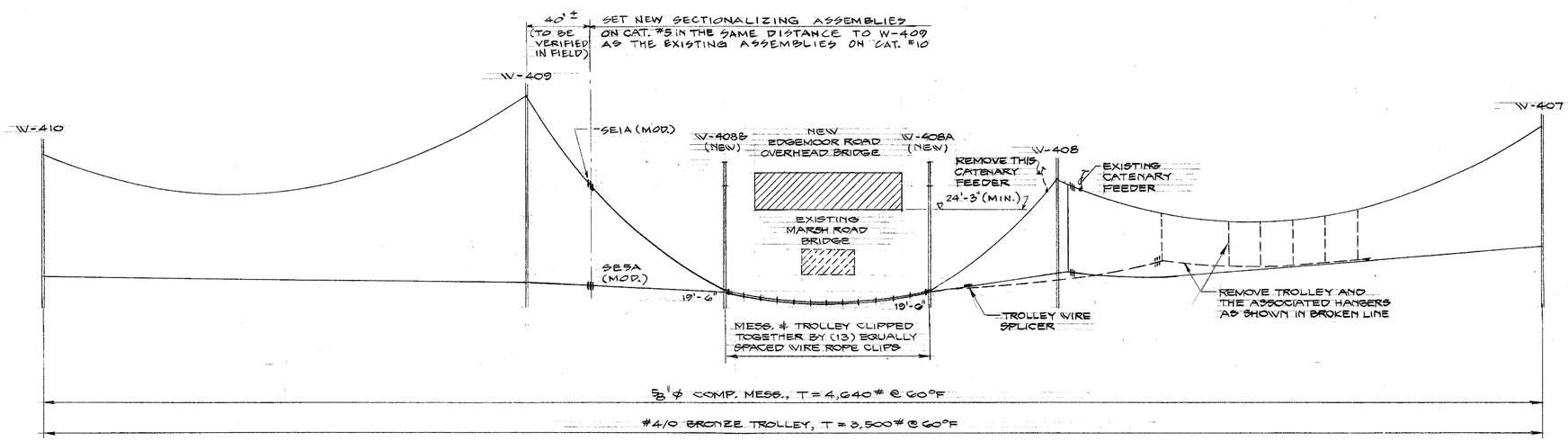

TEMPORARY & FINAL PROFILE FOR CONRAIL CATENARY - #5

SCALE: HOR. 1" = 40'-0"
VERT. 1" = 4'-0"

NOTE: ADJUST EXISTING HANGERS TO SUIT THE MODIFIED CATENARY SYSTEM.

NOTES:

1. THE CONRAIL CATENARIES #5, 6 & 10 ARE NON OPERATIONAL. THE MODIFICATIONS SHOWN ON THIS DRAWING ARE NECESSARY TO HOLD THE CONDUCTORS IN PLACE WHEN THE EXISTING BRIDGE IS REMOVED AND DO NOT ATTEMPT TO RECREATE AN OPERATIONAL SITUATION.
2. FOR GENERAL NOTES, SEE DWG. 3662-101.

DWG. NO. 3662 – 106

Gibbs & Hill, Inc. A Subsidiary of Dravo Corporation New York, New York

REVISIONS

DESIGN K.M.L. CHKD. S.T.

PREL. TRACING Y.C.

9/5/95

42389

CONTRACT	COUNTY	FEDERAL AID PROJECT Nº	SHEET Nº	TOTAL SHEETS
			32A	351

EDGEMOOR ROAD BRIDGE

PROFILE CATENARY #6

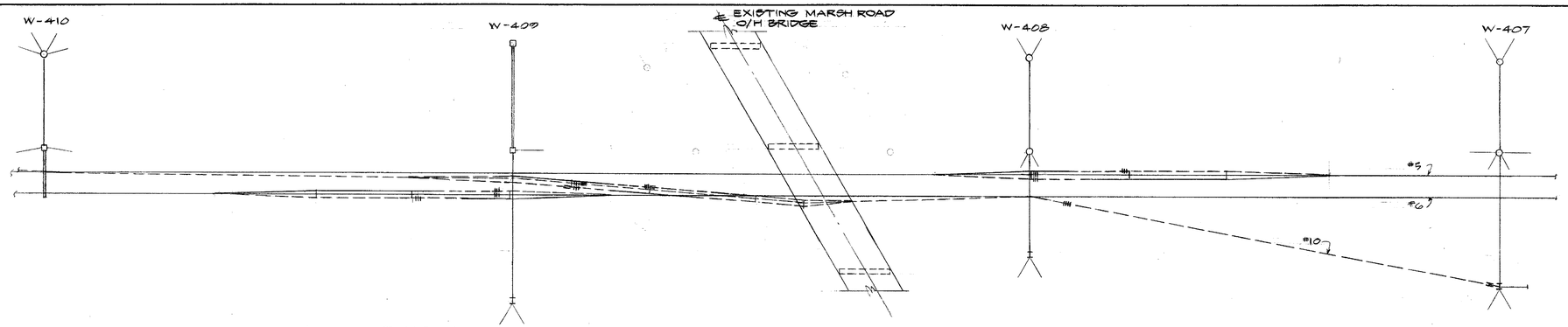

EXISTING WIRING PLAN FOR CONRAIL CATENARIES #5, #6 & #10
SHELLPOT BRANCH
SCALE: 1" = 40'-0"

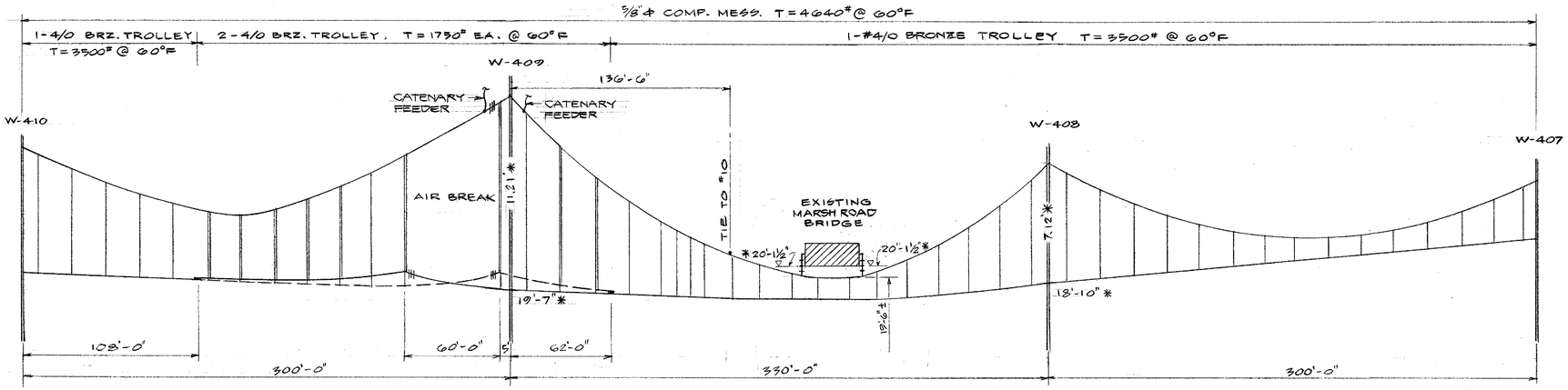

EXISTING PROFILE FOR CONRAIL CATENARY - #6
SHELLPOT BRANCH
SCALE: HOR. 1" = 40'-0"
VERT. 1" = 4'-0"
NOTE: * DENOTES FIELD MEASUREMENTS.

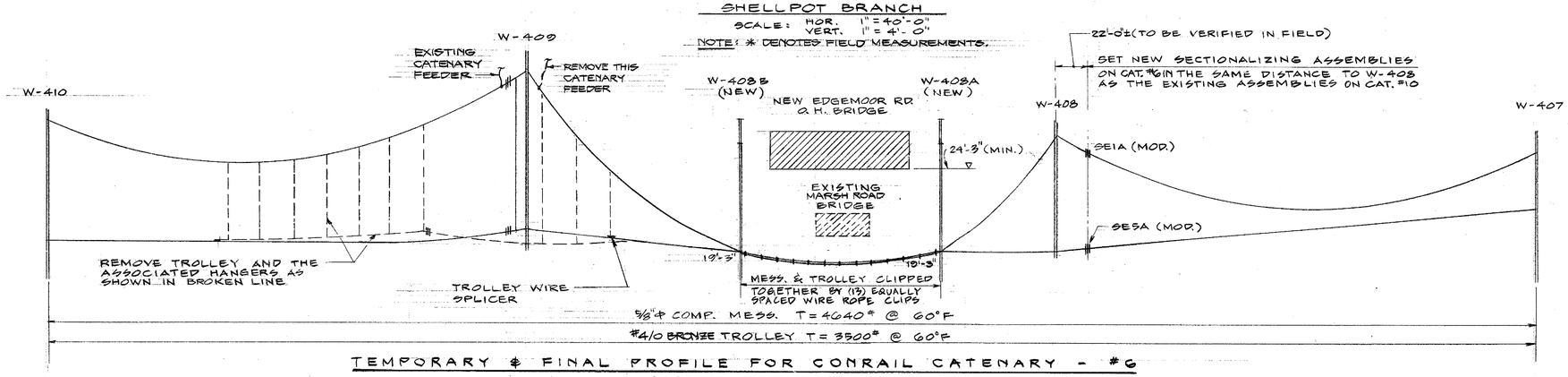

TEMPORARY & FINAL PROFILE FOR CONRAIL CATENARY - #6

NOTES: SCALE: HOR. 1" = 40'-0"
VERT. 1" = 4'-0"

1. ADJUST EXISTING HANGERS TO SUIT THE MODIFIED CATENARY SYSTEM.
2. TIE CONNECTIONS WITH CAT. WIRE #6 TO BE RELEASED.

BILL OF MATERIALS

MARK	DWG. NO.	DESCRIPTION	DIVISION OF WORK	UNIT	QUANTITY
	—	SPLICER, #4/0 TO #4/0 BRONZE WIRES, OHIO BRASS CAT. NO. 15890	CR	EA	1
	—	5/8"φ WIRE ROPE, CROSBY CLIPS	CR	EA	13
SE1A (MOD.)	3662-124	SECTIONALIZING ASSEMBLY	CR	EA	1
SE5A (MOD.)	3662-124	SECTIONALIZING ASSEMBLY	CR	EA	1

CR - CONTRACTOR SUPPLIED, RAILROAD INSTALLED.

NOTES:

1. THE CONRAIL CATENARIES #5, 6 & 10 ARE NON OPERATIONAL. THE MODIFICATIONS SHOWN ON THIS DRAWING ARE NECESSARY TO HOLD THE CONDUCTORS IN PLACE WHEN THE EXISTING BRIDGE IS REMOVED AND DO NOT ATTEMPT TO RECREATE AN OPERATIONAL SITUATION.
2. FOR GENERAL NOTES, SEE DWG. 3662-101.

DWG. NO. 3662 - 107

Gibbs & Hill, Inc.
A Subsidiary of Dawes Corporation
New York, New York

REVISIONS

PREL. TRACING VC DESIGN KML CHKD. SJ

9/5/85

8

CONTRACT	COUNTY	FEDERAL AID PROJECT Nº	SHEET Nº	TOTAL SHEETS
			33A	351

EDGEMOOR ROAD BRIDGE

PROFILE CATENARY #10

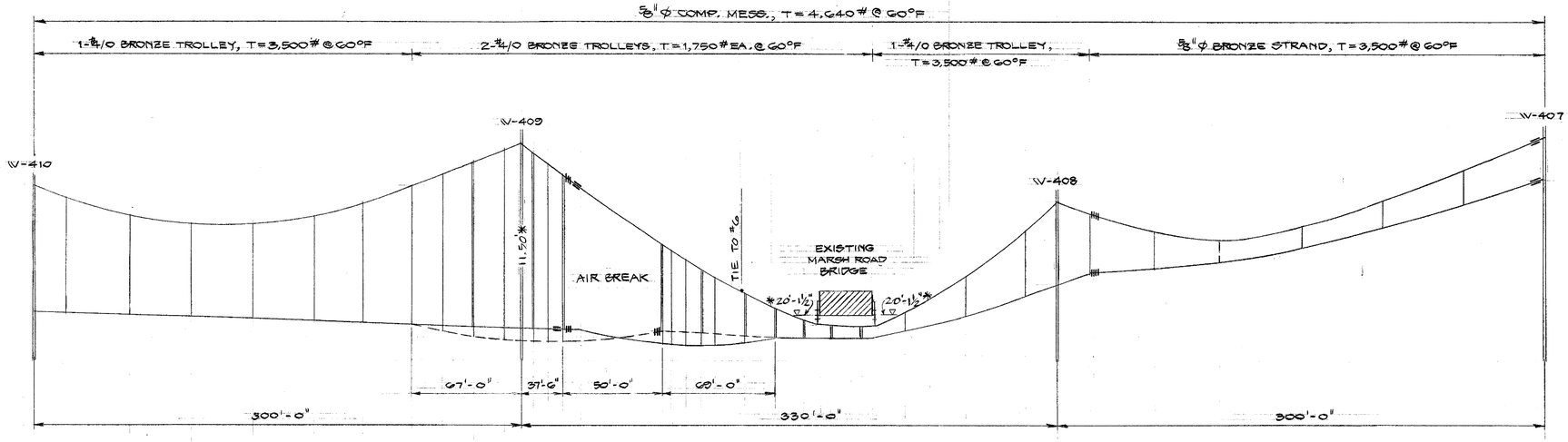

EXISTING PROFILE FOR CONRAIL CATENARY - #10

SHELLPOT BRANCH

SCALE: HOR. 1" = 40'-0"
VERT. 1" = 4'-0"

NOTE: * DENOTES FIELD MEASUREMENTS.

BILL OF MATERIALS

MARK	DWG. NO.	DESCRIPTION	DIVISION OF WORK	UNIT	QUANTITY
	—	SPLICER, #4/0 TO #4/0 BRONZE WIRES, OHIO BRASS CAT. NO. 15890	CR	EA	1
	—	5/8" ϕ WIRE ROPE, CROSBY	CR	EA	13

CR - CONTRACTOR SUPPLIED, RAILROAD INSTALLED.

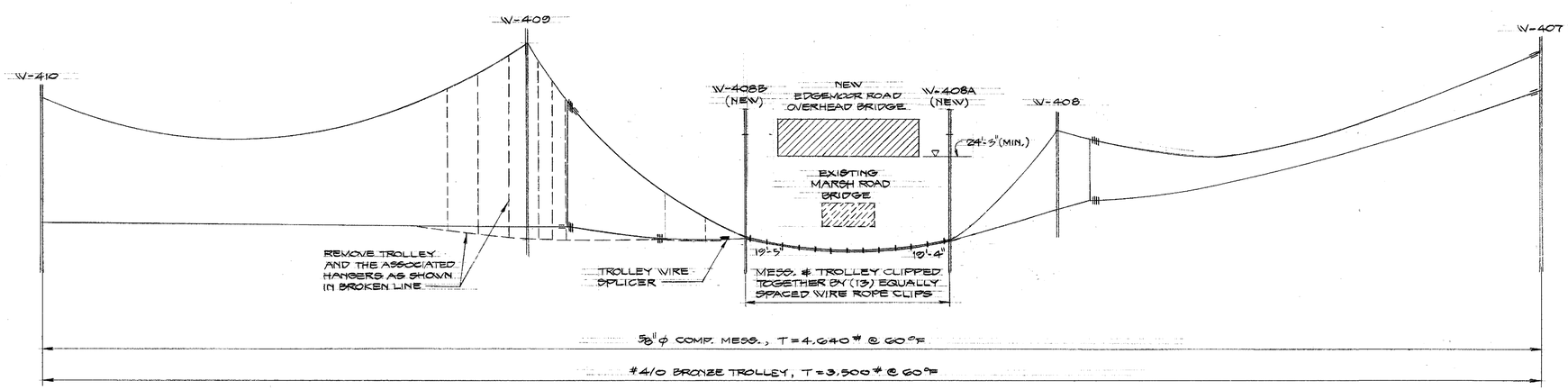

TEMPORARY & FINAL PROFILE FOR CONRAIL CATENARY #10

SCALE: HOR. 1" = 40'-0"
VERT. 1" = 4'-0"

NOTES:

1. ADJUST EXISTING HANGERS TO SUIT THE MODIFIED CATENARY SYSTEM.
2. TIE CONNECTIONS WITH CAT. WIRE #10 TO BE RELEASED.

NOTES:

1. THE CONRAIL CATENARIES #5, 6 & 10 ARE NON OPERATIONAL. THE MODIFICATIONS SHOWN ON THIS DRAWING ARE NECESSARY TO HOLD THE CONDUCTORS IN PLACE WHEN THE EXISTING BRIDGE IS REMOVED AND DO NOT ATTEMPT TO RECREATE AN OPERATIONAL SITUATION.
2. FOR GENERAL NOTES, SEE DWG. 3662-101.

DWG. NO. 3662 - 108

Gibbs & Hill, Inc. A Subsidiary of Dravo Corporation New York, New York

REVISIONS

PREL. TRACING VC DESIGN KML CHKD SJ

9/5/85

6

CONTRACT	COUNTY	FEDERAL AID PROJECT Nº	SHEET Nº	TOTAL SHEETS
			34A	351

EDGEMOOR ROAD BRIDGE

TRANSMISSION ERECTION DIAGRAMS FOR W407 & W408

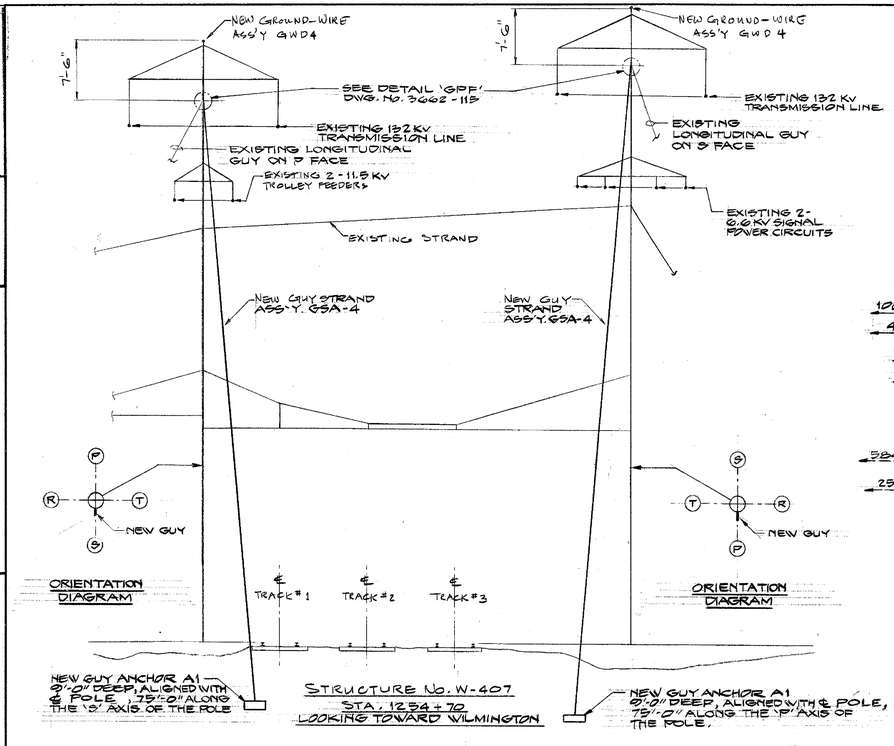

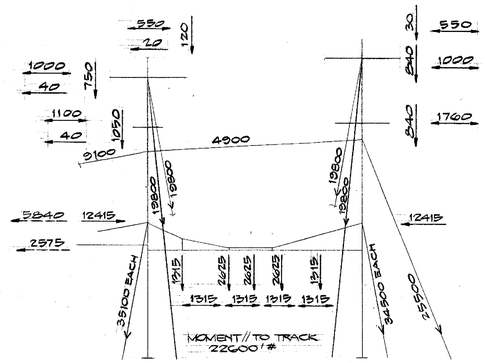

LOADING DIAGRAM
(ULTIMATE LOADS)

WIRE LOAD: 0°F, ½" ICE, 4 PSF WIND-NESC
WIND ON STRUCTURE: 4 PSF
OVERLOAD FACTORS INCL'D.: VERT. 1.5
WIND 2.5
TENS. 1.65

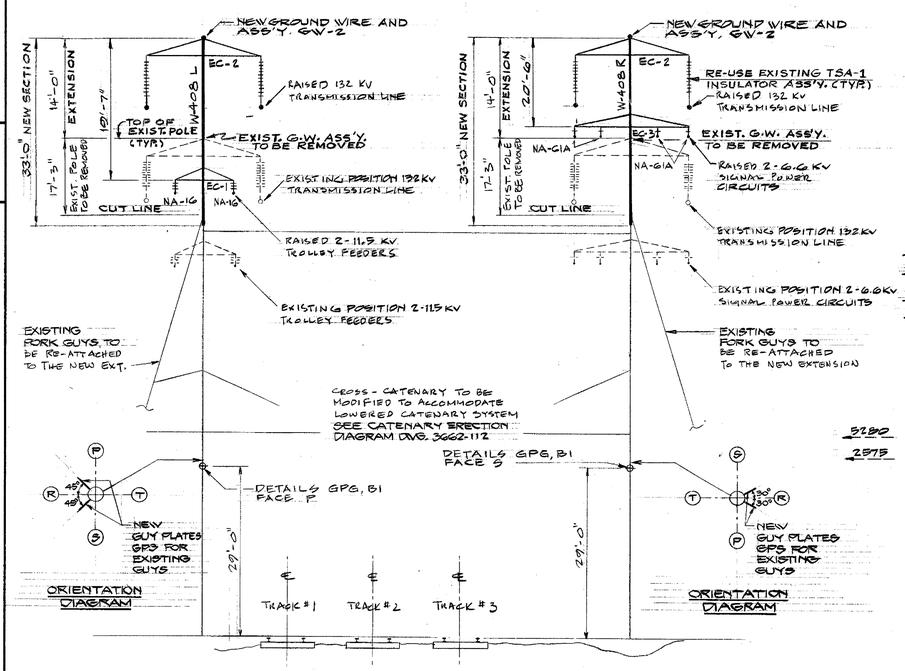

STRUCTURE No. W-408
STA. 1257+70
LOOKING TOWARD WILMINGTON

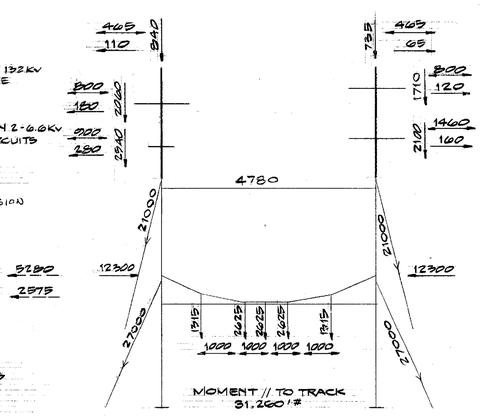

LOADING DIAGRAM
(ULTIMATE LOADS)

WIRE LOAD: 0°F, ½" ICE, 4 PSF WIND-NESC
WIND ON STRUCTURE: 4 PSF
OVERLOAD FACTORS INCL'D.: VERT. 1.5
WIND 2.5
TENS. 1.65

BILL OF MATERIAL

ITEM NO.

MARK	DWG. NO.	DESCRIPTION	DIVISION OF WORK	UNIT	QUANTITY
		STRUCTURE W-407			
GSA-4	3662-127	GUY STRAND ASSEMBLY	C	EA.	2
GWD-4	3662-127	GROUND WIRE DEAD END ASS'Y.	C	EA.	2
'GPF'	3662-115	GUY PLATE DETAIL	C	EA.	2
A1	3662-115	GUY ANCHOR	C	EA.	2
		STRUCTURE W-408			
W-408L	3662-115	POLE EXTENSION	C	EA.	1
W-408R	3662-115	POLE EXTENSION	C	EA.	1
EC-1	3662-116	CROSS ARM	C	EA.	1
EC-2	3662-116	CROSS ARM	C	EA.	2
EC-3	3662-116	CROSS ARM	C	EA.	1
NA-16	3662-127	INSULATOR ASSEMBLY (11.5 KV)	C	EA.	2
NA-61A	3662-127	INSULATOR ASSEMBLY (6.6 KV)	C	EA.	4
GW-2	3662-127	GROUND WIRE ASSEMBLY	C	EA.	2
GPG	3662-115	GUY PLATE DETAIL	C	EA.	2
DET. B1	3662-119	GROUNDING ASSEMBLY	CR	EA.	2

DIVISION OF WORK LEGEND

'C' = WORK TO BE PERFORMED BY CONTRACTOR.
CR - MATERIAL SUPPLIED BY CONTRACTOR FOR INSTALLATION BY RAILROAD FORCES.

NOTES

1. FOR GENERAL NOTES SEE DWG. NO. 3662-101.
2. FOR STRUCTURAL DETAILS, SEE DWG. 3662-115 & 116.
3. FOR NEW GUY FOUNDATION, SEE DWG. 3662-127.

DWG. NO. 3662 - 109

Gibbs & Hill, Inc. — A Subsidiary of Dravo Corporation — New York, New York

REVISIONS

9/5/85

PREL. TRACING PC DESIGN MSC CHKD. MSC

01

A3089

CONTRACT	COUNTY	FEDERAL AID PROJECT Nº	SHEET Nº	TOTAL SHEETS
			35A	351

EDGEMOOR ROAD BRIDGE

TRANSMISSION ERECTION DIAGRAMS FOR W409 & W410

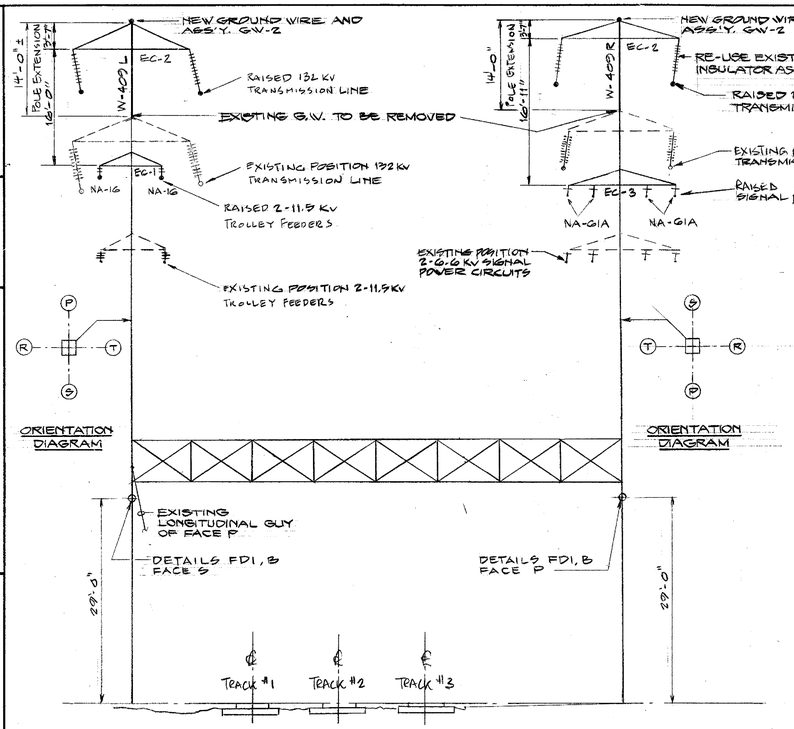

STRUCTURE NO. W-409

STA. 1261+00

LOOKING TOWARD WILMINGTON

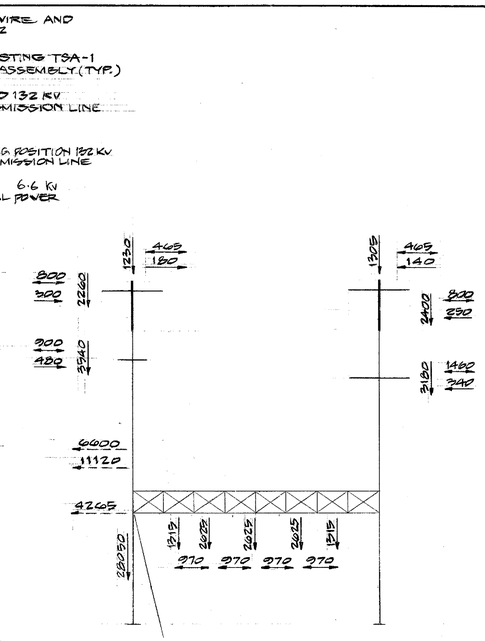

LOADING DIAGRAM

(ULTIMATE LOADS)

WIRE LOAD: 0°F, ½" ICE, 4 PSF WIND-NESC

WIND ON STRUCTURE: 6 PSF (EACH FACE)

OVERLOAD FACTORS INCL'D.: VERT. 1.5
WIND 2.5
TENS. 1.65

STRUCTURE NO. W-410

STA. 1264+00

LOOKING TOWARD WILMINGTON

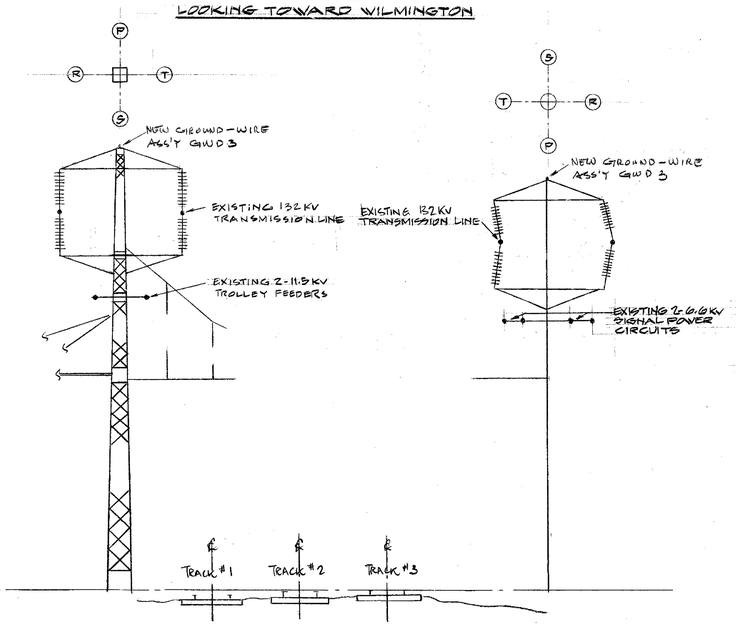

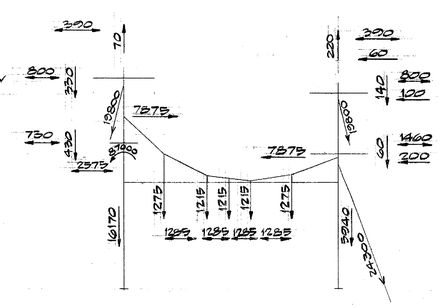

LOADING DIAGRAM

(ULTIMATE LOADS)

WIRE LOAD: 0°F, ½" ICE, 4 PSF WIND-NESC

WIND ON STRUCTURE: 6 PSF (EA. FACE) LEFT POLE
10 PSF RIGHT POLE

OVERLOAD FACTORS INCL'D.: VERT. 1.5
WIND 2.5
TENS. 1.65

BILL OF MATERIAL

ITEM NO.

MARK	DWG. NO.	DESCRIPTION	DIVISION OF WORK	UNIT	QUANTITY
		STRUCTURE W-409			
W-409L	3662-115	POLE EXTENSION	C	EA.	1
W-409R	3662-115	POLE EXTENSION	C	EA.	1
EC-1	3662-116	CROSS ARM	C	EA.	1
EC-2	3662-116	CROSS ARM	C	EA.	2
EC-3	3662-116	CROSS ARM	C	EA.	1
NA-16	3662-127	INSULATOR ASSEMBLY (11.5KV)	C	EA.	2
NA-61A	3662-127	INSULATOR ASSEMBLY (6.6KV)	C	EA.	4
GW-2	3662-127	GROUND WIRE ASSEMBLY	C	EA.	2
FD1	3662-115	FIELD DRILL DETAIL	C	EA.	2
DET. B	3662-115	GROUNDING ASSEMBLY	CR	EA.	2
		STRUCTURE W-410			
GWD-3	3662-127	GROUND WIRE ASSEMBLY	C	EA.	2

DIVISION OF WORK LEGEND

C - WORK TO BE PERFORMED BY CONTRACTOR.

CR - MATERIAL SUPPLIED BY CONTRACTOR FOR RAILROAD INSTALLATION.

NOTES

1. FOR GENERAL NOTES SEE DWG. NO. 3662-101.
2. FOR STRUCTURAL DETAILS, SEE DWG. NO. 3662-115 & 116.

DWG. NO. 3662-110

Gibbs & Hill, Inc. A Subsidiary of Dravo Corporation New York, New York

REVISIONS

SCALE: 1" = 10'-0"

CHKD. MSC

DESIGN MSC

PREL. TRACING PC

9/5/85

CONTRACT	COUNTY	FEDERAL AID PROJECT Nº	SHEET Nº	TOTAL SHEETS
			36A	351

EDGEMOOR ROAD BRIDGE

STRUCTURAL ERECTION DIAGRAMS FOR W408A & W408B

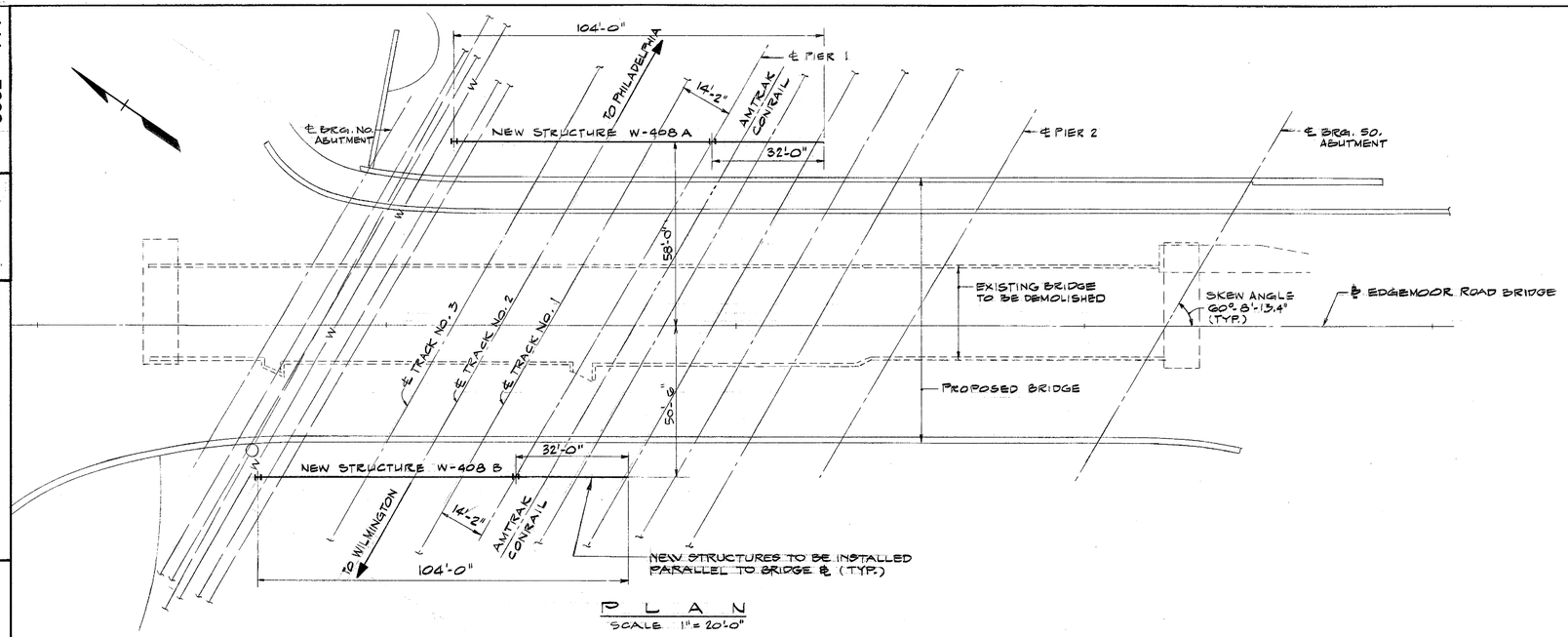

PLAN
SCALE 1" = 20'-0"

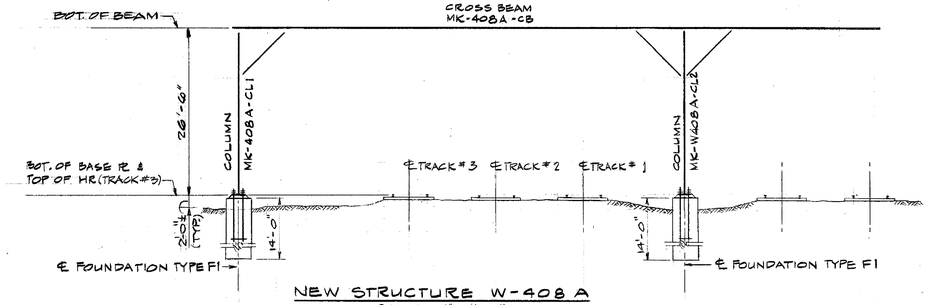

NEW STRUCTURE W-408 A
SCALE 1" = 1'-0"
LOOKING TOWARD PHILADELPHIA

* DIMENSIONS ARE NORMAL TO ℄s TRACKS, CONTRACTOR SHALL CALCULATE ACTUAL LENGTH.

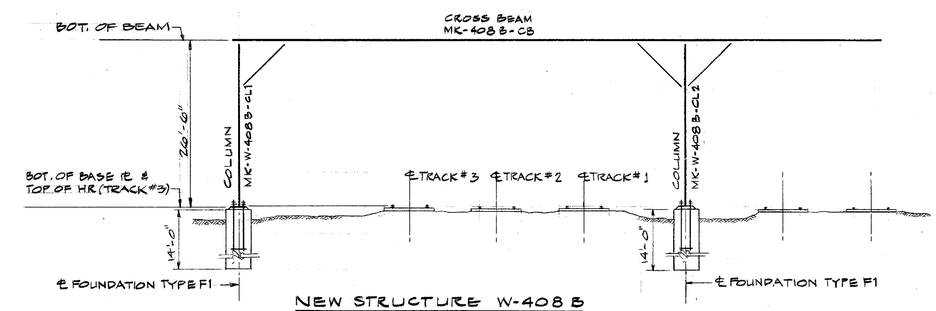

NEW STRUCTURE W-408 B
SCALE 1" = 1'-0"
LOOKING TOWARD PHILADELPHIA

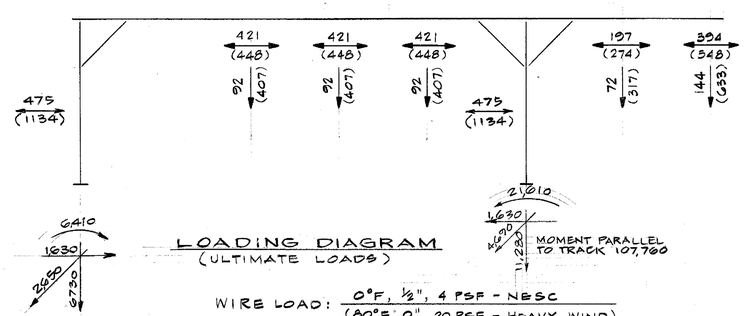

LOADING DIAGRAM
(ULTIMATE LOADS)

WIRE LOAD: 0°F, ½", 4 PSF - NESC / (80°F, 0", 20 PSF - HEAVY WIND)

WIND ON STRUCTURE: 6 PSF / (30 PSF)

OVERLOAD FACTORS INCLUDED: VERTICAL 1.5, WIND 2.5 / (ALL 1.2)

BILL OF MATERIAL

ITEM NO.

MARK	DWG. NO.	DESCRIPTION	DIVISION OF WORK	UNIT	QUANTITY
		STRUCTURE W-408 A			
W-408A-CL1	3662-114	COLUMN	C	EA.	1
W-408A-CL2	3662-114	COLUMN	C	EA.	1
W-408A-CB	3662-114	CROSS BEAM	C	EA.	1
	3662-114	KNEE BRACING	C	EA.	3
TYPE I	3662-116	FOUNDATION	C	EA.	2
DETAIL H	3662-117	GROUNDING ASSEMBLY	CR	EA.	2
		STRUCTURE W-408 B			
W-408B-CL1	3662-114	COLUMN	C	EA.	1
W-408B-CL2	3662-114	COLUMN	C	EA.	1
W-408B-CB	3662-114	CROSS BEAM	C	EA.	1
	3662-114	KNEE BRACING	C	EA.	3
TYPE I	3662-116	FOUNDATION	C	EA.	2
DETAIL H	3662-117	GROUNDING ASSEMBLY	CR	EA.	2

DIVISION OF WORK LEGEND:

C WORK TO BE PERFORMED BY CONTRACTOR.

CR MATERIAL SUPPLIED BY CONTRACTOR FOR RAILROAD INSTALLATION.

NOTES:

1. FOR GENERAL NOTES SEE DWG. NO. 3662-101.
2. FOR DIMENSIONS NOT SHOWN SEE DWG. NO. 3662-114

DWG. NO. 3662 - 111

Gibbs & Hill, Inc. A Subsidiary of Dravo Corporation New York, New York

REVISIONS

PREL. TRACING PC DESIGN MSC CHKD. MSC

9/5/85

12

40389

CONTRACT	COUNTY	FEDERAL AID PROJECT Nº	SHEET Nº	TOTAL SHEETS
			37A	357

EDGEMOOR ROAD BRIDGE

CATENARY ERECTION DIAGRAMS FOR W408 & W409

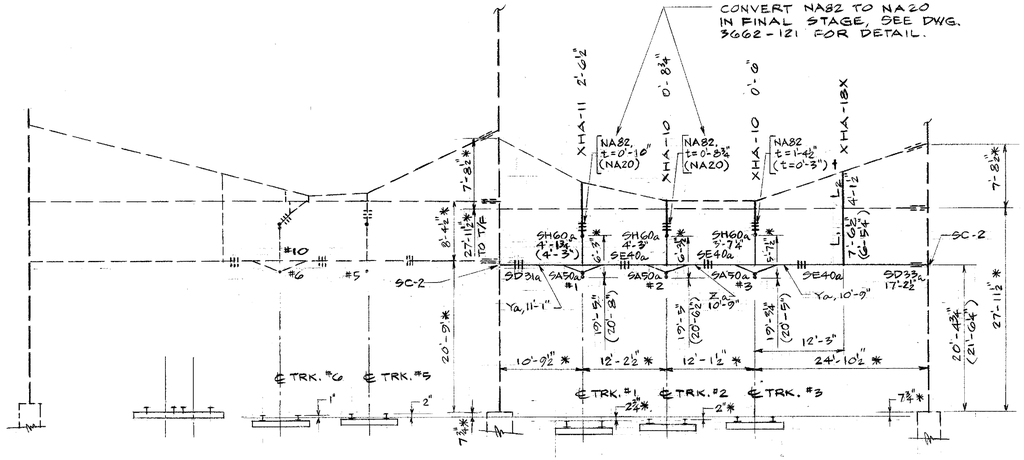

ERECTION DIAGRAM OF
CATENARY BRIDGE W-408 (EXISTING)
TEMPORARY AND FINAL STAGE
LOOKING TOWARD WASHINGTON
SCALE: 1" = 10'-0"

NOTES:

1. * DENOTES FIELD MEASUREMENTS.
2. INFORMATION IN PARENTHESIS IS FOR THE FINAL STAGE AS INDICATED ON THE CATENARY PROFILE SHEETS.
3. FOR GENERAL NOTES, SEE DWG. 3662-101.
4. † DENOTES MODIFICATION REQUIRED ON HANGER ROD LENGTH FROM TEMPORARY ASSEMBLIES NA82 OR NA83 TO SUIT FINAL STAGE.

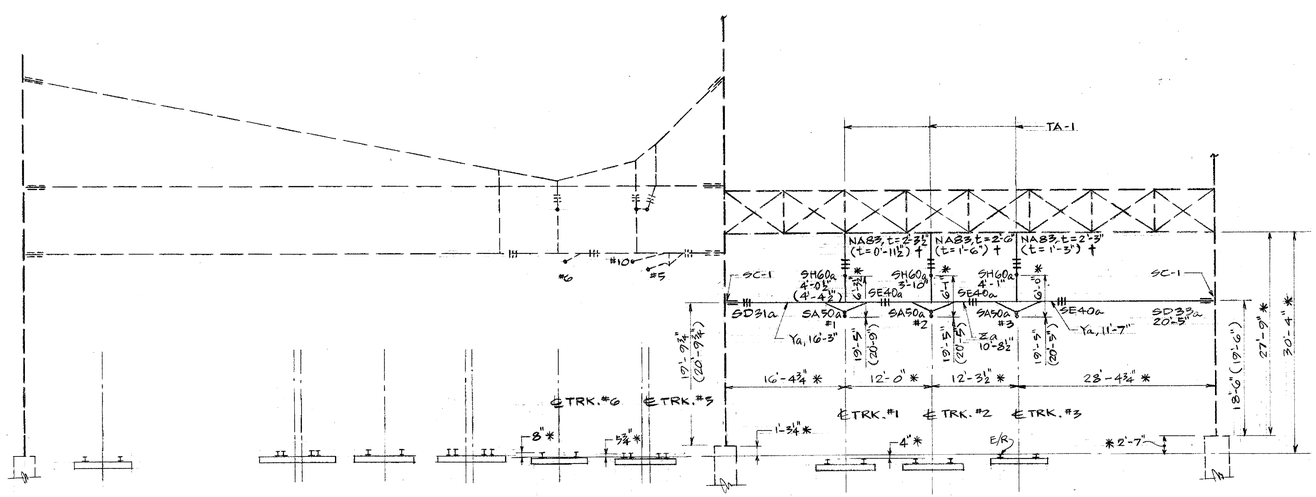

ERECTION DIAGRAM OF
CATENARY BRIDGE W-409 (EXISTING)
TEMPORARY AND FINAL STAGE
LOOKING TOWARD WASHINGTON
SCALE: 1" = 10'-0"

BILL OF MATERIAL

MARK	DWG. No.	DESCRIPTION	DIVISION OF WORK	UNIT	QUANTITY
XHA-10	3662-120	CROSS CATENARY HANGER	CR	EA.	2
XHA-11	3662-120	CROSS CATENARY HANGER	CR	EA.	1
XHA-18X	3662-120	CROSS CATENARY HANGER	CR	EA.	1
NA82	3662-121	CATENARY SUSPENSION ASSEMBLY	CR	EA.	3
NA83	3662-121	CATENARY SUSPENSION ASSEMBLY	CR	EA.	3
SH60a	3662-122	DROPPER ASSEMBLY	CR	EA.	8
SA90a	3662-122	STEADY	CR	EA.	6
Ya (MOD.)	3662-123	STEADY STRAND	CR	EA.	4
Za (MOD.)	3662-123	STEADY STRAND	CR	EA.	2
SD33a (MOD.)	3662-123	STEADY STRAND	CR	EA.	2
SD31a (MOD.)	3662-123	STEADY ASSEMBLY	CR	EA.	2
SE40a (MOD.)	3662-123	STEADY ASSEMBLY	CR	EA.	6
TA-1	3662-117	TRUSS ATTACHMENT	C	EA.	3
SC-1	3662-117	SLIDING CONNECTION	C	EA.	2
SC-2	3662-117	SLIDING CONNECTION	C	EA.	2

CR - CONTRACTOR SUPPLIED, RAILROAD INSTALLED.
C - CONTRACTOR SUPPLIED AND INSTALLED.

Gibbs & Hill, Inc. Consulting Engineers New York, New York

DWG. NO. 3662 - 112

9/13/85

REVISIONS

PREL. TRACING KML DESIGN KML CHKD. SJ

13

40389

CONTRACT	COUNTY	FEDERAL AID PROJECT Nº	SHEET Nº	TOTAL SHEETS
			38A	351

EDGEMOOR - ROAD BRIDGE

CATENARY ERECTION DIAGRAMS FOR W408A & W408B

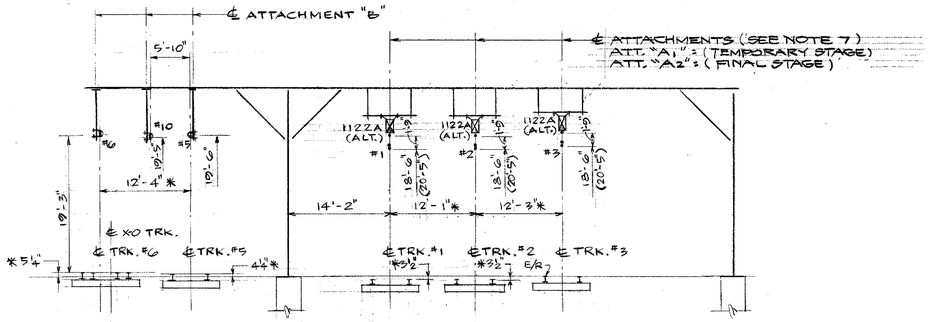

NEW CATENARY STRUCTURE W-408B
TEMPORARY & FINAL STAGE
LOOKING TOWARD WASHINGTON
SCALE: 1" = 10'-0"

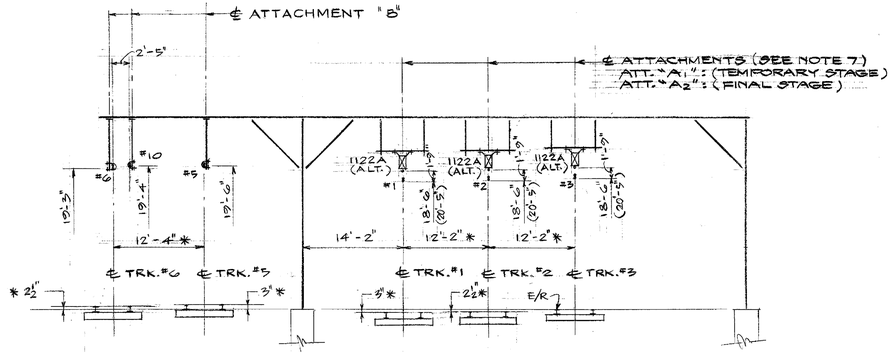

NEW CATENARY STRUCTURE W-408A
TEMPORARY & FINAL STAGE
LOOKING TOWARD WASHINGTON
SCALE: 1" = 10'-0"

NOTES:

1. ALL HORIZONTAL DIMENSIONS ARE SQUARE TO THE TRACKS.
2. * DENOTES FIELD MEASUREMENTS.
3. ALL TROLLEY WIRE HEIGHTS ARE REFERRED TO THE TOP OF NEAREST MEAN RAIL.
4. TROLLEY WIRE HEIGHTS IN THE PARENTHESIS IS FOR THE FINAL STAGE AS INDICATED ON THE CATENARY PROFILE SHEETS.
5. FOR STRUCTURE DETAILS, SEE DWG. NO. 3662-111.
6. FOR GENERAL NOTES, SEE DWG. NO. 3662-101.
7. THE SUBSTITUTION OF ATTACHMENT A1 BY A2 IS REQUIRED WHEN RAISING CATENARY TO THE FINAL ELEVATION INDICATED. THE CHANGE FROM A1 TO A2 IS ACHIEVED BY CHANGING OUT THE VERTICAL DROP BRACKETS MK "Db1" FOR MK "Db2". ALL OTHER PARTS OF ATTACHMENT A1 UNCHANGED.

BILL OF MATERIALS

MARK	DWG. NO.	DESCRIPTION	DIVISION OF WORK	UNIT	QUANTITY
1122A(ALT)	3662-125	RIGID INSULATOR ASSEMBLY	CR	EA.	6
ATT. "A1"	3662-117	CATENARY SUPPORT ATTACHMENT "A1"	C	EA.	6
ATT. "A2"	3662-117	CATENARY SUPPORT ATTACHMENT "A2"	C	EA.	6
ATT. "B"	3662-117	CATENARY SUPPORT ATTACHMENT "B"	C	EA.	6

CR - CONTRACTOR SUPPLIED, RAILROAD INSTALLED.
C - CONTRACTOR SUPPLIED AND INSTALLED.

Gibbs & Hill, Inc. A Subsidiary of Dravo Corporation New York, New York

DWG. NO. 3662 - 113

9/5/85

REVISIONS

PREL. TRACING KML DESIGN KML CHKD. SJT

40389

14

CONTRACT	COUNTY	FEDERAL AID PROJECT Nº	SHEET Nº	TOTAL SHEETS
			394	351

EDGEMOOR ROAD BRIDGE

STRUCTURAL DETAILS SHEET 1

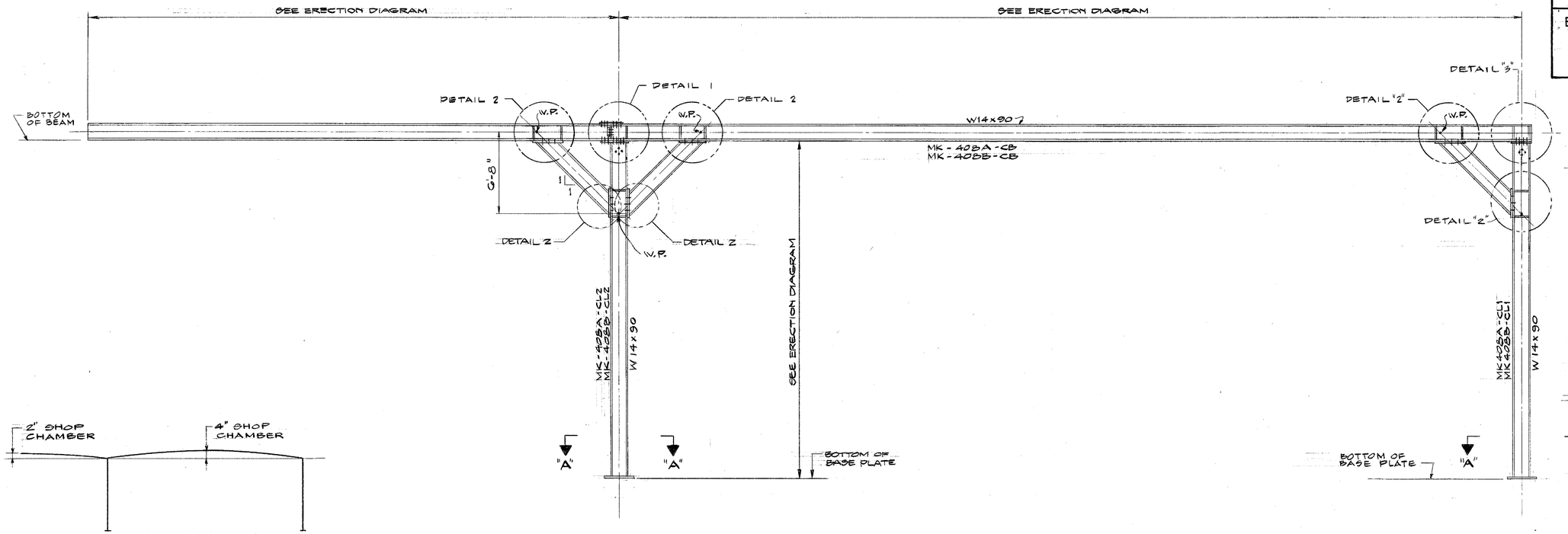

NEW STRUCTURES W-408 A AND W-408 B

SCALE: NONE

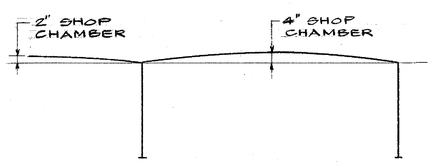

CHAMBER DIAGRAM

SCALE: NONE

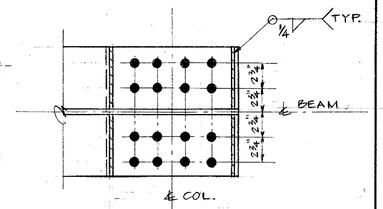

SECTION "E"-"E"

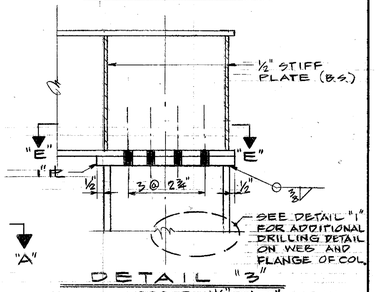

DETAIL "3"

SCALE: 1½" = 1'-0"

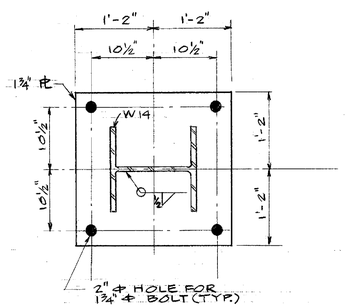

SECTION "A"-"A"

SCALE: 1" = 1'-0"

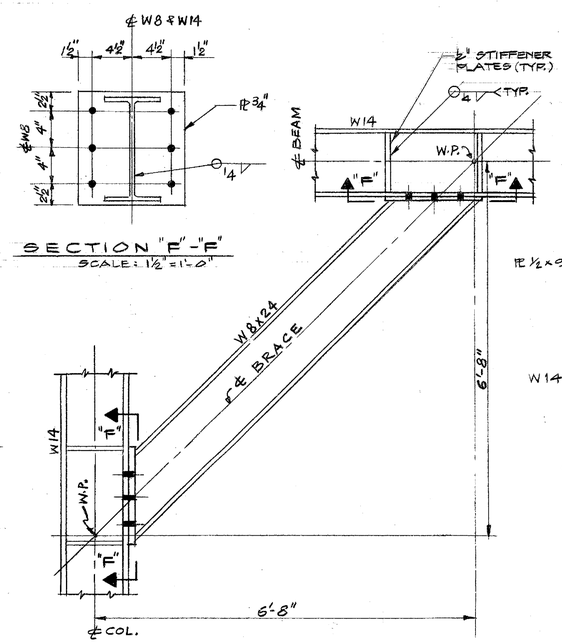

SECTION "F"-"F"

SCALE: 1½" = 1'-0"

DETAIL "2"

SCALE: NONE

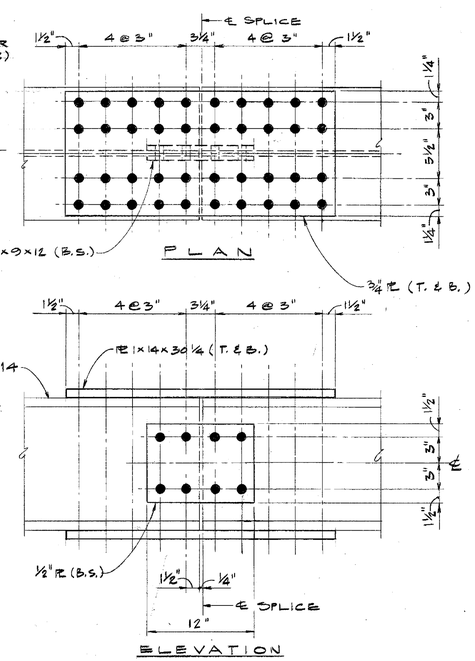

SPLICE DETAIL (AS REQ'D.)

SCALE 1½" = 1'-0"

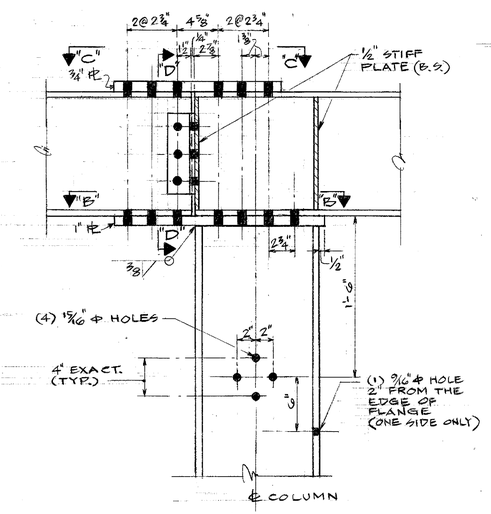

DETAIL "1"

SCALE: 1½" = 1'-0"

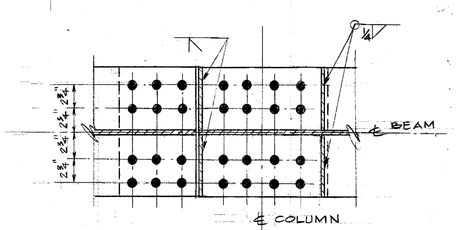

SECTION "B"-"B"

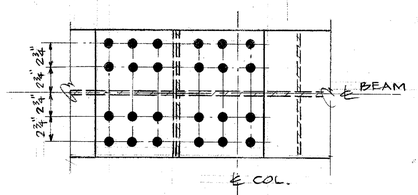

SECTION "C"-"C"

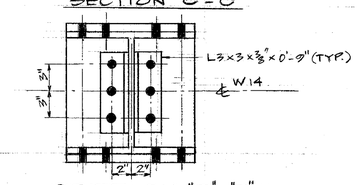

SECTION "D"-"D"

NOTES:

1. FOR GENERAL NOTES, SEE DWG. 3662-101.
2. FOR ERECTION DIAGRAM, SEE DWG. 3662-111.

9/5/95

DWG. NO. 3662 - 114

Gibbs & Hill, Inc. Consulting Engineers New York, New York

REVISIONS

PREL. TRACING P.C. DESIGN MSC CHKD. MSC

40389

CONTRACT	COUNTY	FEDERAL AID PROJECT Nº	SHEET Nº	TOTAL SHEETS
			40A	351

EDGEMOOR ROAD BRIDGE

STRUCTURAL DETAILS SHEET 2

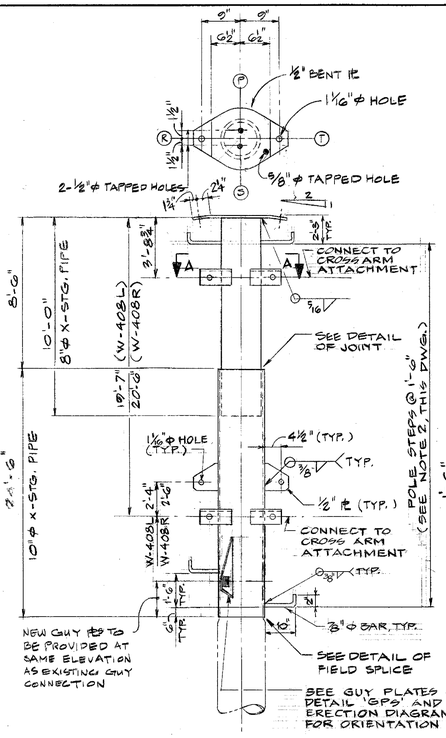

TUBULAR POLE EXTENSION
(EXTENSION W-408 L AS SHOWN)
(EXTENSION W-408 R AS NOTED)
SCALE: NONE

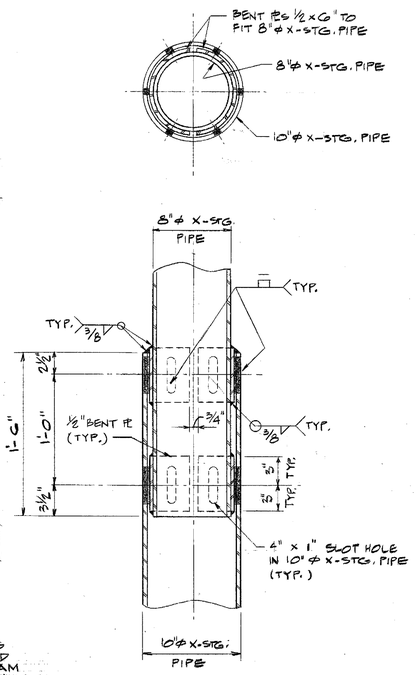

DETAIL OF JOINT
SCALE: 1½" = 1'-0"

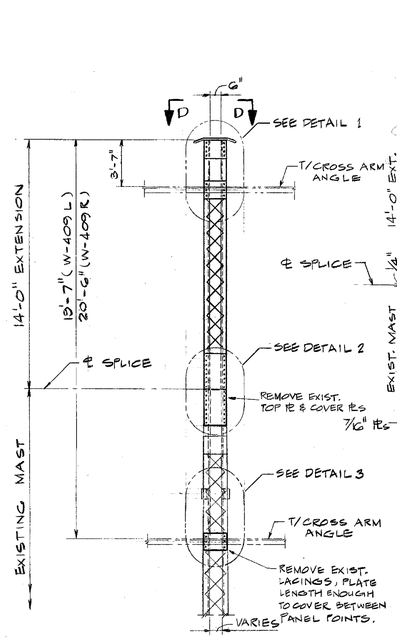

MAST EXTENSION
SCALE: NONE
EXTENSIONS W-409 L AND W-409 R

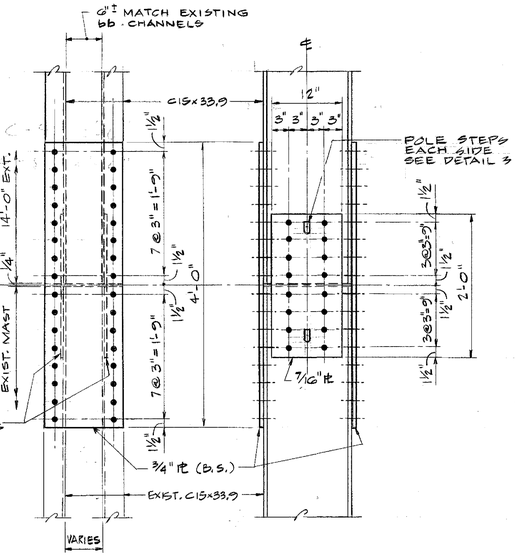

DETAIL 2
SCALE: 1" = 1'-0"

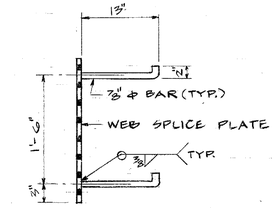

DETAIL 3
SCALE: 1" = 1'-0"

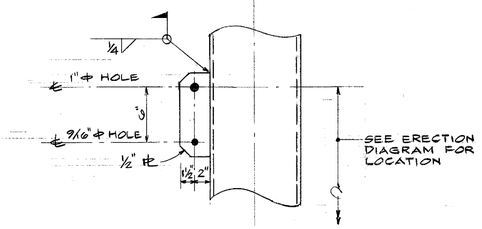

GUY PLATE DETAIL - GPG
SCALE: 1½" = 1'-0"

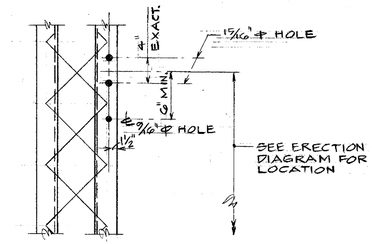

FIELD DRILL DETAIL FD1
SCALE: NONE

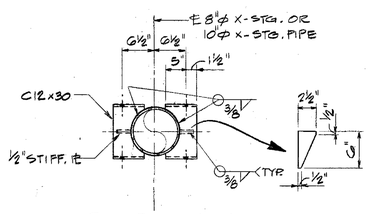

SECTION A-A
SCALE: NONE

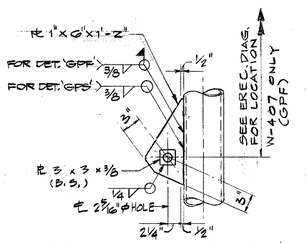

GUY PLATE DETAILS 'GPF' & 'GPS'
SCALE: NONE

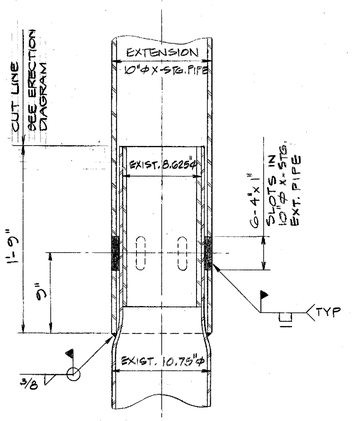

DETAIL OF FIELD SPLICE
SCALE: 1½" = 1'-0"

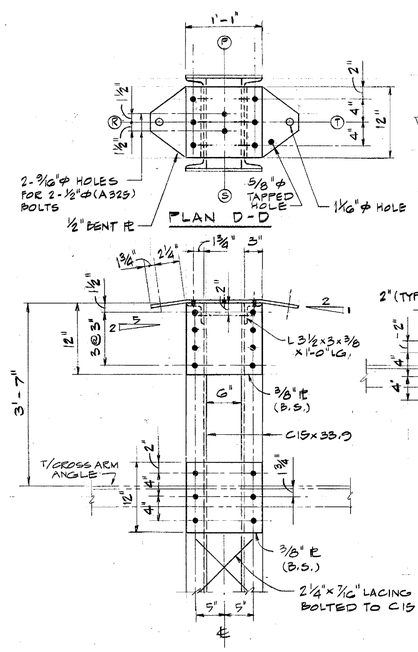

PLAN D-D

DETAIL 1
SCALE: NONE

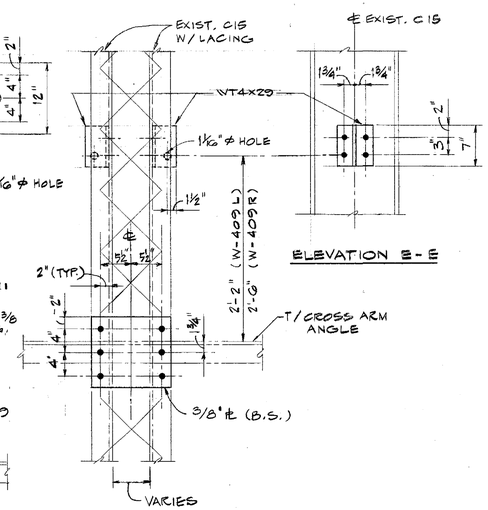

ELEVATION E-E

DETAIL 3
SCALE: NONE

NOTES:

1. FOR GENERAL NOTES SEE DWG. NO. 3662-101.
2. SPACING OF POLE STEPS TO BE ARRANGED TO CLEAR CROSSARMS, GUY PLATES, ETC.

REVISIONS

Gibbs & Hill, Inc. Consulting Engineers New York, New York

DWG. NO. 3662 - 115

9/5/85

DESIGN MSC CHKD. MSC

PREL. TRACING PC

9/

CONTRACT	COUNTY	FEDERAL AID PROJECT Nº	SHEET Nº	TOTAL SHEETS
			41A	351

EDGEMOOR ROAD BRIDGE

STRUCTURAL DETAILS SHEET 3

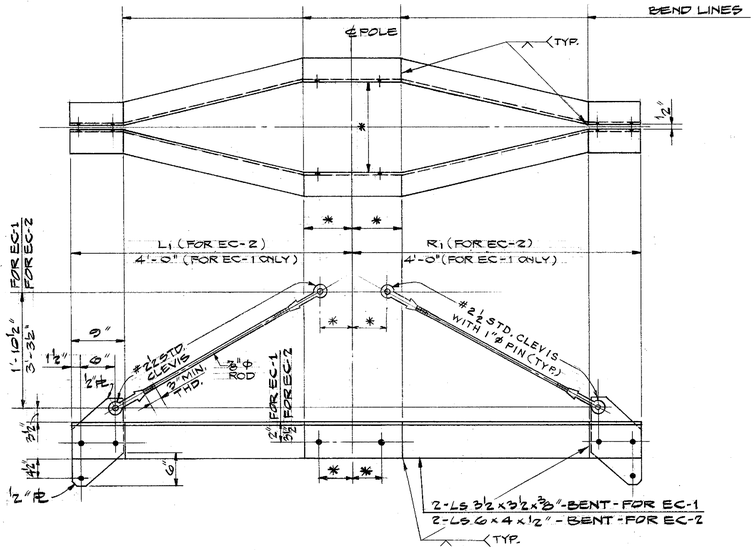

* REFER TO STEEL DETAIL DWG. NO. 3662-115

CROSS ARMS TYPES EC-1 & EC-2

SCALE: NONE

STRUCTURE	LEFT POLE		RIGHT POLE	
	L1	R1	L1	R1
W-408	8'-0"	8'-0"	8'-0"	8'-0"
W-409	9'-6"	8'-6"	8'-6"	9'-6"

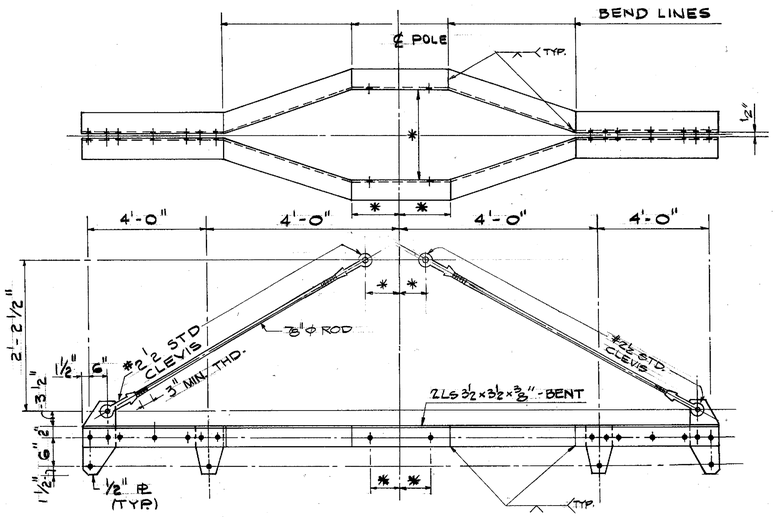

* REFER TO STEEL DETAIL DWG. NO. 3662-115

CROSS ARM TYPE EC-3

SCALE: NONE

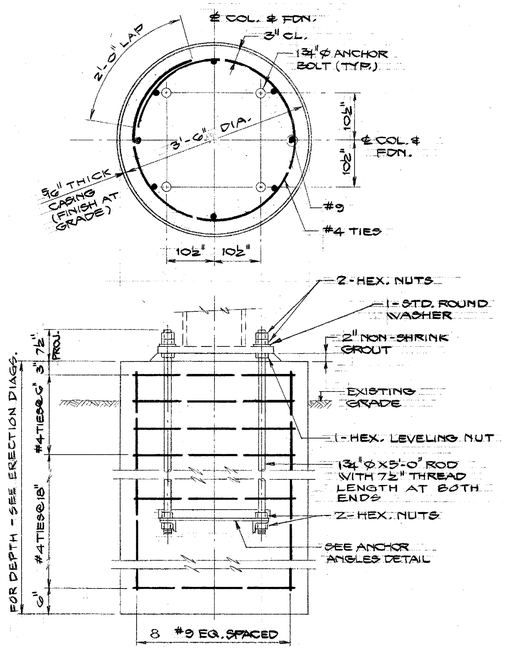

FOUNDATION TYPE F1

SCALE: NONE

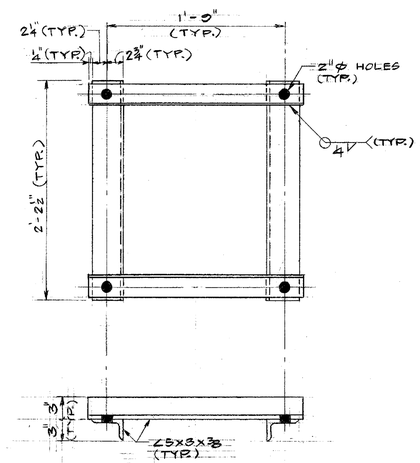

ANCHOR ANGLE DETAIL

SCALE: NONE

REVISIONS

PREL. TRACING VC DESIGN MSC CHKD MSC

Gibbs & Hill, Inc. Consulting Engineers New York, New York

DWG. NO. 3662 - 116

11/15/95

40389

CONTRACT	COUNTY	FEDERAL AID PROJECT Nº	SHEET Nº	TOTAL SHEETS
			42A	351

EDGEMOOR ROAD BRIDGE

MISCELLANEOUS DETAILS

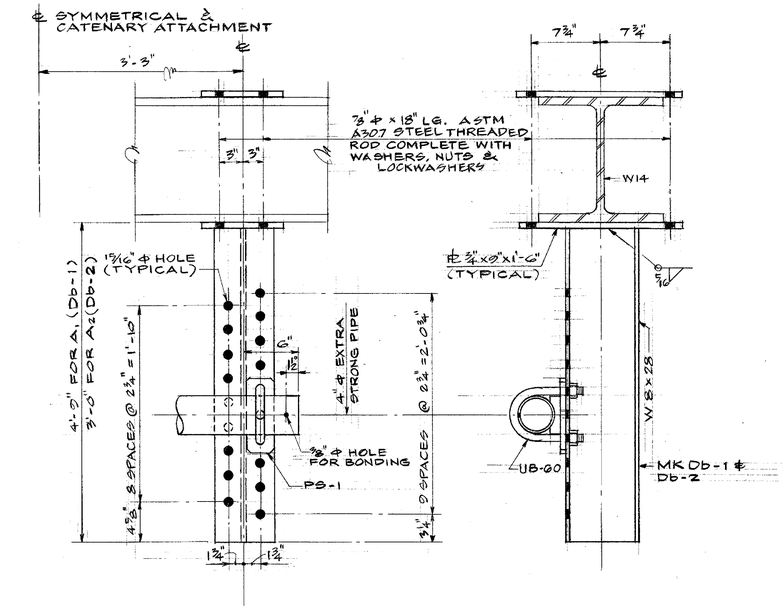

ELEVATION SECTION

BEAM ATTACHMENTS "A1" AND "A2"

SCALE: 1½" = 1'-0"

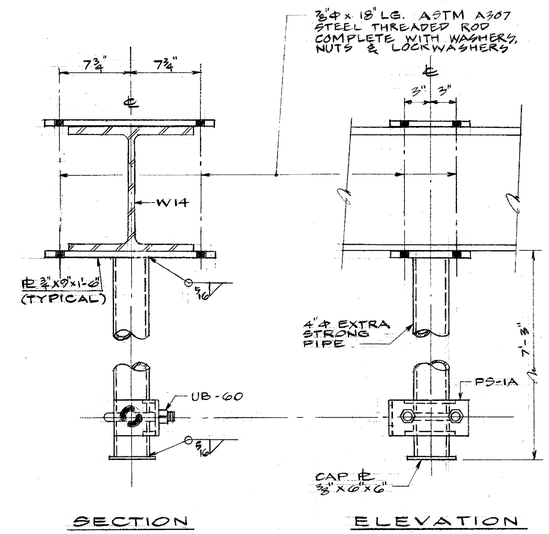

SECTION ELEVATION

BEAM ATTACHMENT "B"

SCALE: 1½" = 1'-0"

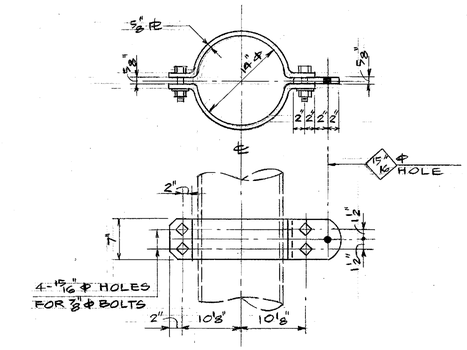

DETAIL SC-2

SCALE: 1" = 1'-0"

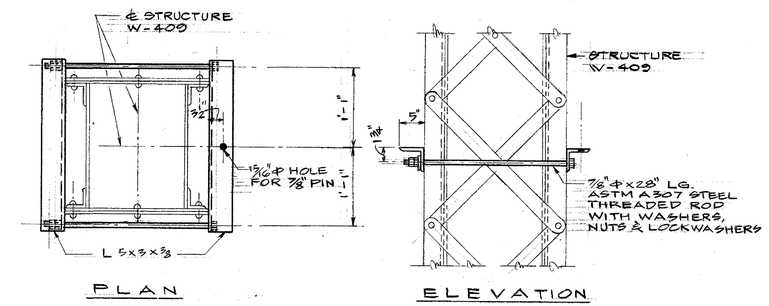

PLAN ELEVATION

DETAIL SC-1

SCALE: NONE

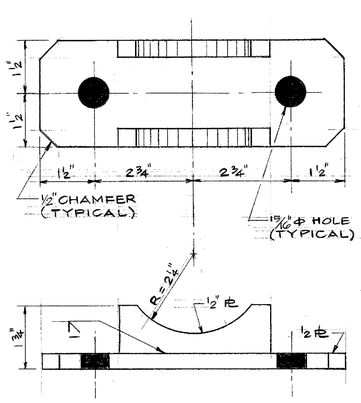

PIPE SADDLE PS-1

SCALE: ½" = 1"

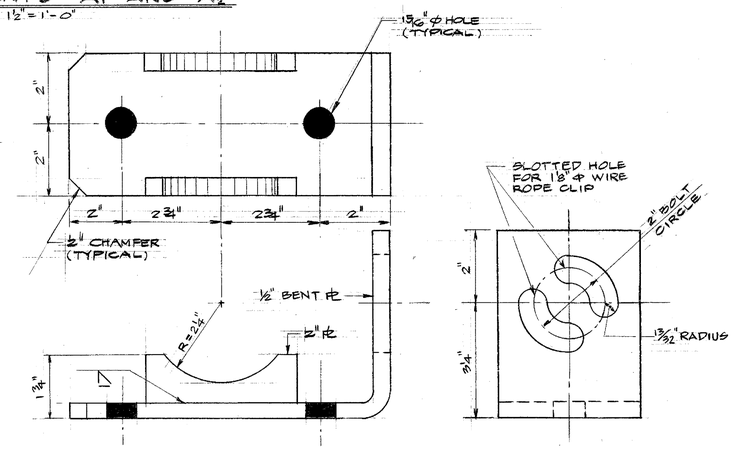

PIPE SADDLE PS-1A

SCALE: ½" = 1"

(COMPLETE WITH 1⅛" WIRE ROPE CLIP, CROSBY LAUGHLIN G-450)

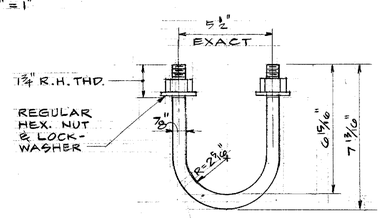

U-BOLT — UB-60

SCALE: 3" = 1'-0"

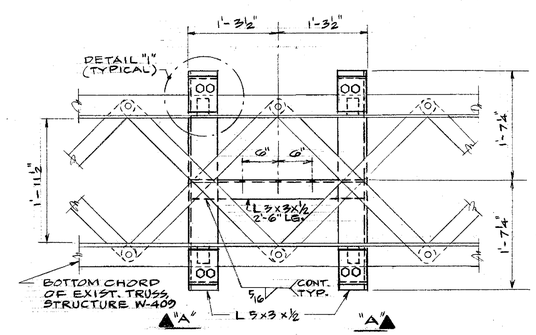

PLAN

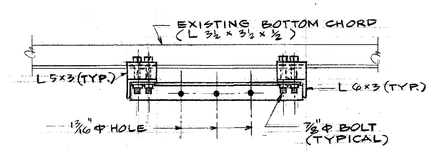

ELEVATION "A"-"A"

TRUSS ATTACHMENT "TA-1"

SCALE: 1" = 1'-0"

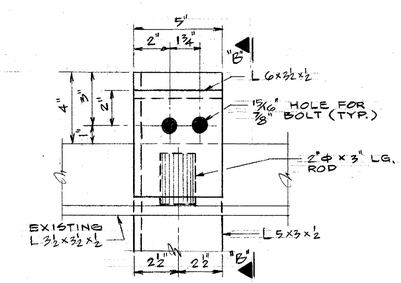

DETAIL "1"

SCALE: 3" = 1'-0"

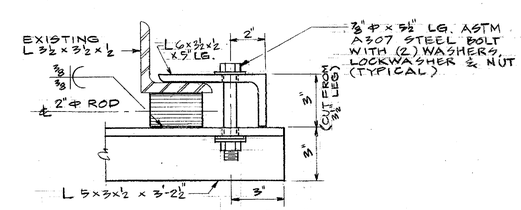

SECTION "B"-"B"

SCALE: 3" = 1'-0"

DWG. NO. 3662 - 117

9/4/85

Gibbs & Hill, Inc. A Subsidiary of Dravo Corporation New York, New York

REVISIONS

PREL. TRACING KML DESIGN MSC CHKD.

40389

CONTRACT	COUNTY	FEDERAL AID PROJECT Nº	SHEET Nº	TOTAL SHEETS
			43A	351

EDGEMOOR ROAD BRIDGE

GROUNDING & BONDING ARRANGEMENT

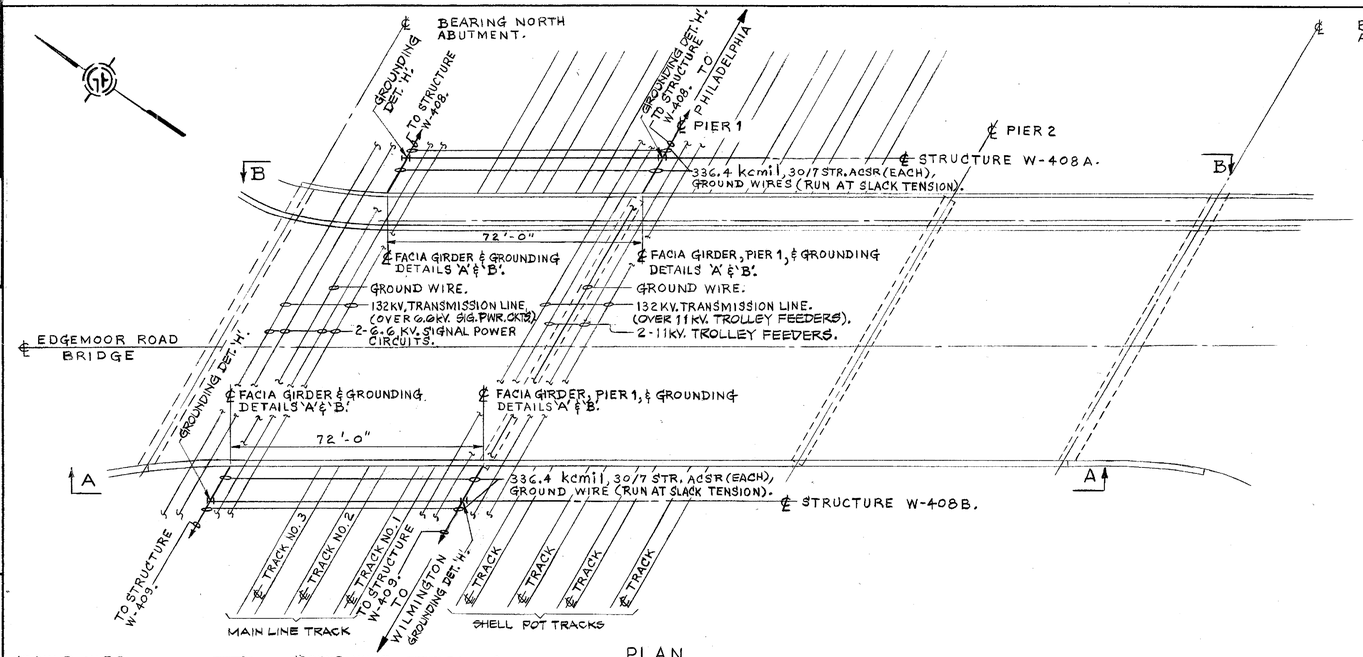

PLAN
SCALE: 1"=20'

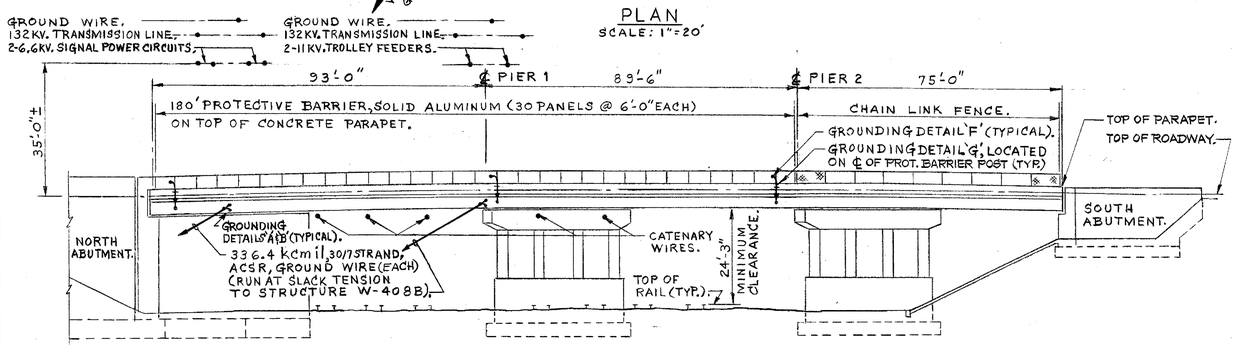

ELEVATION A-A
SCALE: 1"=20'

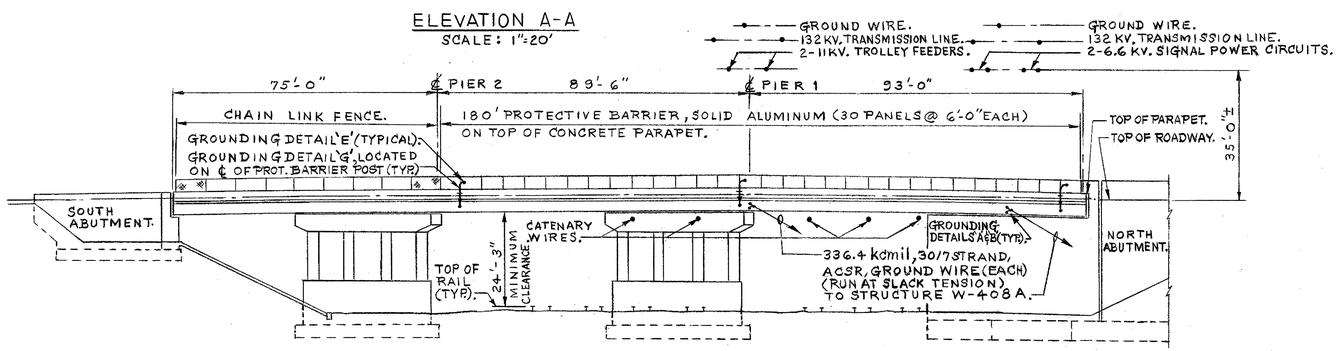

ELEVATION B-B
SCALE: 1"=20'

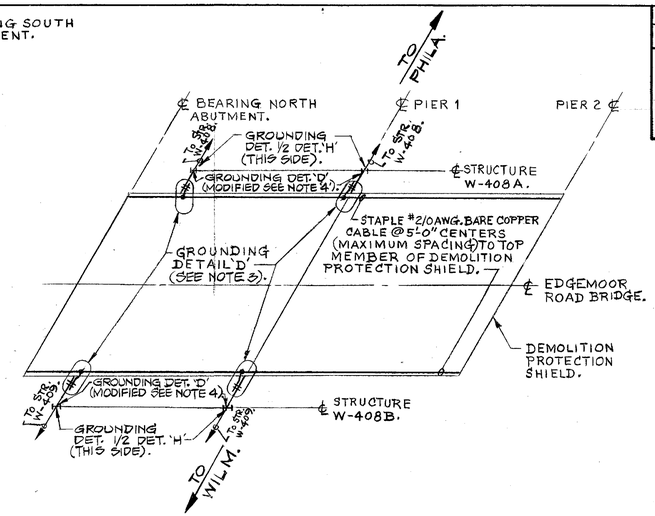

BONDING PLAN FOR DEMOLITION PROTECTIVE SHIELD (AS SHOWN)
BONDING PLAN FOR TEMPORARY PROTECTIVE SHIELD (SIMILAR) (SEE NOTE 3)

SCALE: NONE

NOTES:

1. FOR GROUNDING DETAILS 'A', 'B', 'D', 'E', 'F', 'G' & 'H' SEE DRAWING NO. 3662-119.
2. FOR ALL GROUNDING & BONDING MATERIAL SEE BILL OF MATERIAL ON DRAWING NOS. 3662-128 & 129.
3. REUSE GROUND WIRE USED FOR GROUNDING DEMOLITION PROTECTIVE SHIELD FOR GROUNDING TEMPORARY PROTECTIVE SHIELD.
4. CONNECT SHACKLE TO 'U' BOLT AND CLAMP CABLE TO JUMPER CABLE OF DETAIL 'H'.

9/15/95

DWG. NO. 3662 - 118

Gibbs & Hill, Inc. A Subsidiary of Dravo Corporation New York, New York

REVISIONS

PREL. TRACING ES DESIGN ES CHKD. RPD

40389

CONTRACT	COUNTY	FEDERAL AID PROJECT Nº	SHEET Nº	TOTAL SHEETS
			44A	351

ED-GEMOOR ROAD BRIDGE

GROUNDING & BONDING DETAILS

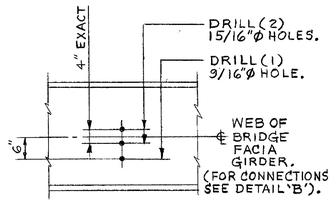

ELEVATION

DETAIL 'A'

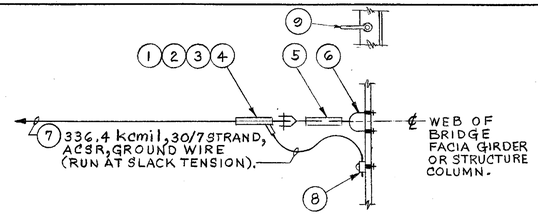

ELEVATION

DETAIL 'B' AND 'BI'		
ITEM	DESCRIPTION	QTY.
1	DEAD END BODY, COMPRESSION TYPE, ALUMINUM (USE DIE 6020AH &	1
	COMPRESSOR TOOL MODEL 60A) ALCOA CAT. NO. 8120-781.	
2	DEAD END EYE, COMPRESSION TYPE, STEEL (USE DIE 6010SH &	1
	COMPRESSOR TOOL MODEL 60A) ALCOA CAT. NO. 9110-332.	
3	JUMPER TERMINAL, COMPRESSION TYPE, ALUMINUM (USE DIE 6020AH &	1
	COMPRESSOR TOOL MODEL 60A) ALCOA CAT. NO. 5120-781.	
4	COMPOUND FOR ALUMINUM TO ALUMINUM & ALUMINUM TO COPPER	1
	CONNECTION, ALCOA (ALNOX), (10 OUNCE TUBE).	
5	TURNBUCKLE, JAW & EYE, 1"x12" THE CROSBY GROUP, INC. CAT. NO.	1
	HG-227.	
6	BOLT, "U", STEEL, GALVANIZED, 7/8" x 4" x 4 5/16", WITH HEX. NUTS &	1
	WASHERS, SKELLY BOLT CO. (OMIT FOR DETAIL BI)	
7	CABLE, 336.4 kcmil, 30/7 STRAND ACSR, BARE, CODE WORD	FT.
	"ORIOLE", ALCOA.	
8	CONNECTOR, GROUND, COPPER ALLOY, TIN PLATED, FOR CABLE TO BAR,	1
	WITH 1/2"Φ x 4" LONG BOLT, BURNDY CORP. CAT. NO. GB34T12-W.	
9	ANCHOR SHACKLE, OHIO BRASS Co. CAT. 86663 FOR DETAIL BI ONLY	1

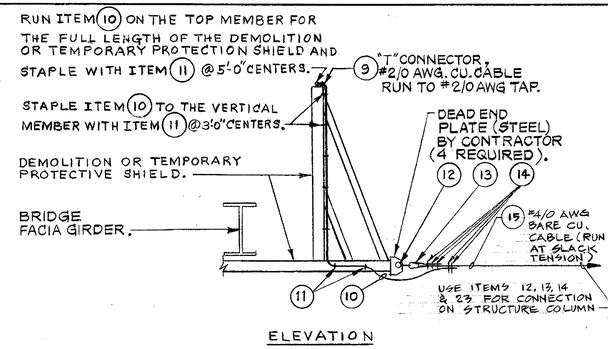

ELEVATION

DETAIL 'D'		
ITEM	DESCRIPTION	QTY.
9	CONNECTOR, "T", BURNDY CORP. CAT. NO. VT2828.	1
10	CABLE, COPPER, BARE, # 2/0 AWG, 37 STRAND, SOFT DRAWN,	FT.
	W.B. SIEGFRIED ASSOCIATES.	
11	STAPLE, COPPERCLAD, 1/2" BETWEEN LEGS, 2" LONG, A.B.CHANCE CO.	50
	CAT. NO. 9169 (10 PER POUND).	
12	SHACKLE, ANCHOR, WITH CLEVIS PIN & COTTER KEY, OHIO BRASS CO.	2
	CAT. NO. 79609.	
13	THIMBLE, COPPER ALLOY, TYPE "BC" BURNDY CORP. CAT. NO. M60.	2
14	CLIP, GROUND WIRE, COPPER ALLOY, BURNDY CORP. CAT. NO. BC30.	10
15	CABLE COPPER, BARE, # 4/0 AWG, 7 STRAND, HARD DRAWN,	FT.
	W.B. SIEGFRIED ASSOCIATES.	
23	CONNECTOR, GROUND, COPPER ALLOY, TIN PLATED FOR #4/0 AWG	1
	COPPER AND 336.4 Kcmil ALUMINUM CABLES TO BAR WITH 1/2"Φ X 4"	
	LONG BOLT, BURNDY CAT. NO. UC32R	

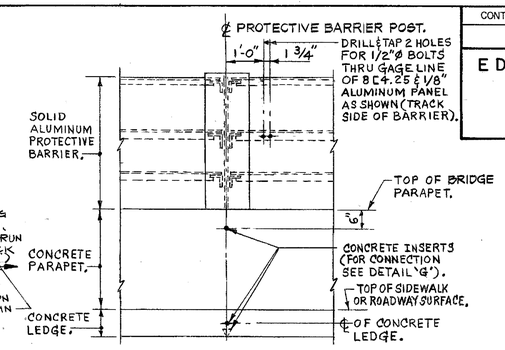

ELEVATION

DETAIL 'E' (AS SHOWN)

DETAIL 'F' (OPPOSITE HAND)

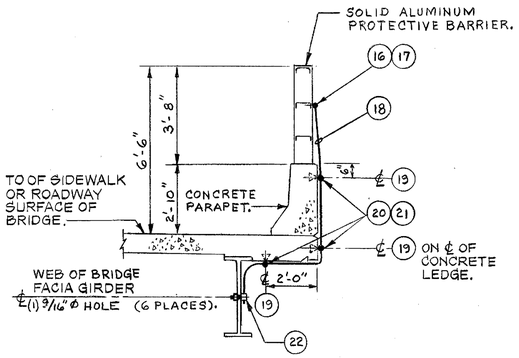

ELEVATION

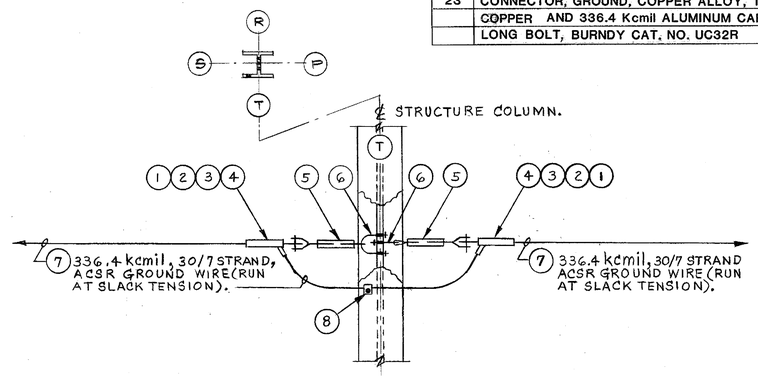

ELEVATION

DETAIL 'G'		
ITEM	DESCRIPTION	QTY.
16	TERMINAL, FOR # 4/0 AWG ALUMINUM CABLE, 7 STRAND, TO FLAT,	1
	BURNDY CORP. CAT. NO. YCA28R-2N.	
17	BOLT, HEX. HEAD, 1/2"Φ x 1 1/2" LONG, THREADED, STAINLESS STEEL,	2
	WITH LOCK WASHER, BURNDY CORP.	
18	CABLE, #4/0 AWG, 7 STRAND, ALUMINUM, WEATHER-RESISTANT,	FT.
	POLYETHYLENE TYPE, CODE WORD "OLIVE", ALCOA.	
19	INSERT, THREADED, GRAY IRON, CAT. NO. HD, FOR 1/2" Φ BOLT,	3
	HOHMANN & BARNARD INC.	
20	STRAP, FOR # 4/0 AWG CABLE, THOMAS & BETTS CORP.	3
	CAT. NO. 1347.	
21	CAP SCREW, HEX. HEAD 1/2-13NC x 2 1/2" LONG, GALVANIZED STEEL	3
	& LOCKWASHER, BURNDY CORP.	
22	CONNECTOR, GROUND, COPPER ALLOY, TIN PLATED, FOR CABLE TO BAR,	1
	WITH 1/2"Φ X 4" LONG BOLT, BURNDY CORP. CAT. NO. GB29T12-W.	

DETAIL 'H'		
ITEM	DESCRIPTION	QTY.
1	DEAD END BODY, COMPRESSION TYPE, ALUMINUM (USE DIE 6020AH &	2
	COMPRESSOR TOOL MODEL 60A) ALCOA CAT. NO. 8120-781.	
2	DEAD END EYE, COMPRESSION TYPE, STEEL (USE DIE 6010SH &	2
	COMPRESSOR TOOL MODEL 60A) ALCOA CAT. NO. 9110-332.	
3	JUMPER TERMINAL, COMPRESSION TYPE, ALUMINUM (USE DIE 6020AH &	2
	COMPRESSOR TOOL MODEL 60A) ALCOA CAT. NO. 5120-781.	
4	COMPOUND FOR ALUMINUM TO ALUMINUM & ALUMINUM TO COPPER	1
	CONNECTION, ALCOA (ALNOX), (10 OUNCE TUBE).	
5	TURNBUCKLE, JAW & EYE 1"x12" THE CROSBY GROUP, INC. CAT. NO.	2
	HG-227.	
6	BOLT, "U", STEEL, GALVANIZED, 7/8" x 4" x 4 5/16", WITH HEX. NUTS &	2
	WASHERS, SKELLY BOLT CO.	
7	CABLE, 336.4 kcmil, 30/7 STRAND ACSR, BARE, CODE WORD	FT.
	"ORIOLE", ALCOA.	
8	CONNECTOR, GROUND, COPPER ALLOY, TIN PLATED, FOR CABLE TO BAR,	1
	WITH 1/2"Φ x 4" LONG BOLT, BURNDY CORP. CAT. NO. GB34T12-W.	

NOTES:

1. FOR GROUNDING & BONDING ARRANGEMENT SEE DWG. NO. 3662-118.
2. FOR LOCATION OF DETAILS 'B' & 'C' SEE DWG. NO'S. 3662-109 & -3662-110.
3. FOR LOCATION OF DETAILS 'H' & 'J' SEE DWG. NO. 3662-111.

DWG. NO. 3662 - 119
9/15/85
Gibbs & Hill, Inc. A Subsidiary of Dravo Corporation New York, New York
REVISIONS
PREL. TRACING EG DESIGN EG CHKD. RPD

CONTRACT	COUNTY	FEDERAL AID PROJECT Nº	SHEET Nº	TOTAL SHEETS
			45A	351

EDGEMOOR ROAD BRIDGE

CROSS CATENARY HANGER ASSEMBLY

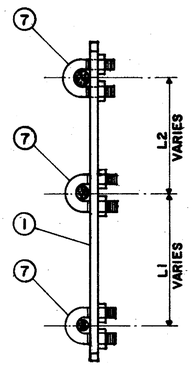

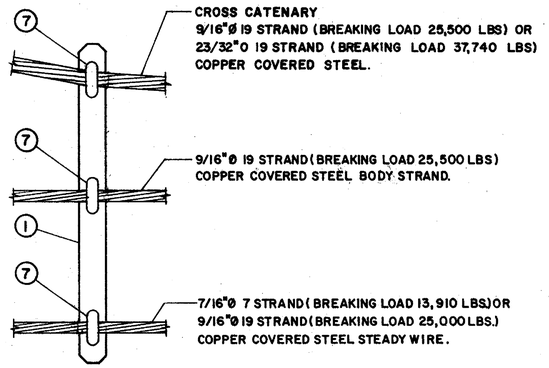

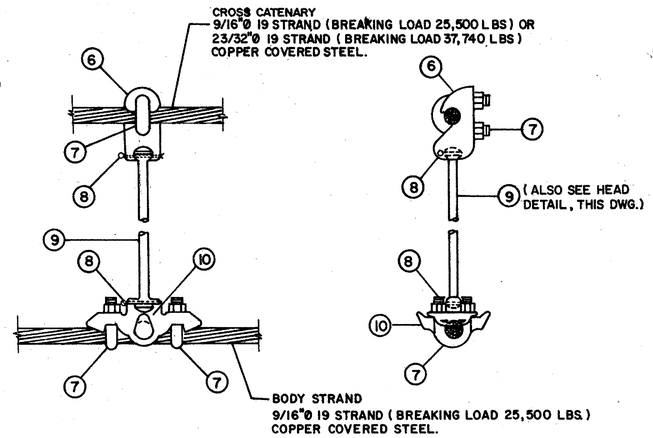

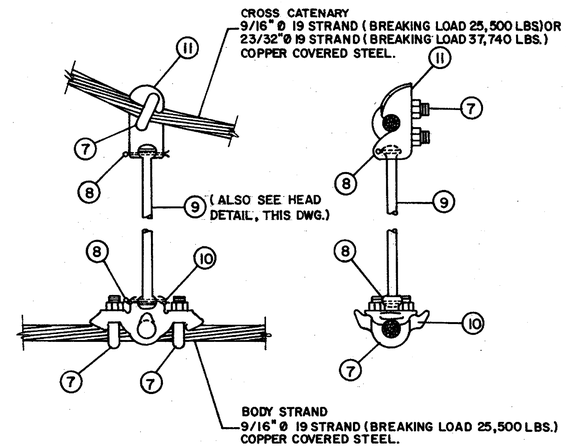

ASSEMBLY No. XHA-18X

ITEM	PC MARK	AMTRAK DWG. No.	COMPUTER No.	DESCRIPTION	QTY.
1	1027D	ET-1027E		1 1/2" x 3/8" HARD DRAWN	FT.
				COPPER STRAP	
7	UB-27	ET-146E		BOLT, "U", BRONZE, WITH HEX	3
				NUTS, SPEC. C.E. 565, CLASS "B"	
				5/8" x 1 1/2" x 2 1/4"	

ASSEMBLY No. XHA-10

ITEM	PC MARK	AMTRAK DWG. No.	COMPUTER No.	DESCRIPTION	QTY.
6	XC-7	14E-66		CLAMP, CROSS CATENARY,	1
				MALLEABLE IRON, GALV. SPEC. P-116	
7	UB-27	ET-146E		BOLT, "U", BRONZE, WITH HEX	3
				NUTS, SPEC. C. E. 565, CLASS "B"	
				5/8" x 1 1/2" x 2 1/4"	
8				PIN, COTTER, BRONZE, 3/16" x 2 1/2"	2
9	XH	11B-1282		ROD, HEADED HANGER, BRONZE	LB
				SPEC. C. E. 565, CLASS "B", 0.48" Ø,	
				0.74 LBS/FT. (FOR LENGTH SEE	
				STRUCTURE ERECTION DIAGRAM)	
10	XC-6	14E-61		CLAMP, BODY STRAND TO 1/2" Ø	1
				ROD, BRONZE, SPEC. P-117	

ASSEMBLY No. XHA-11

ITEM	PC MARK	AMTRAK DWG. No	COMPUTER No.	DESCRIPTION	QTY.
7	UB-27	ET-146E		BOLT, "U", BRONZE, WITH HEX	3
				NUTS, SPEC. C.E. 565, CLASS "B"	
				5/8" x 1 1/2" x 2 1/4"	
8				PIN, COTTER, BRONZE, 3/16" x 2 1/2"	2
9	XH	11B-1282		ROD, HEADED HANGER, BRONZE	LB.
				SPEC. C.E. 565, CLASS "B", 0.48" Ø	
				0.74 LBS./FT. (FOR LENGTH SEE	
				STRUCTURE ERECTION DIAGRAM)	
10	XC-6	14E-61		CLAMP, BODY STRAND TO 1/2" Ø	1
				ROD, BRONZE, SPEC. P-117	
11	XC-8	14E-67		CLAMP, CROSS, CATENARY,	1
				MALLEABLE IRON, GALV., SPEC. P-117	

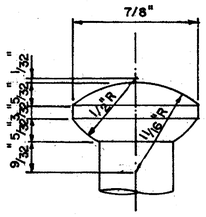

HEAD DETAIL
FOR PC MARK XH
FROM AMTRAK DWG. 11B-1282

DWG. NO. 3662 - 120

Gibbs & Hill, Inc.
A Subsidiary of Dravo Corporation
New York, New York

REVISIONS

DESIGN KML CHKD. SJ

PRELIM. TRACING VC

9/5/85

CONTRACT	COUNTY	FEDERAL AID PROJECT Nº	SHEET Nº	TOTAL SHEETS
			46A	351

EDGEMOOR ROAD BRIDGE

CATENARY SUSPENSION ASSEMBLIES

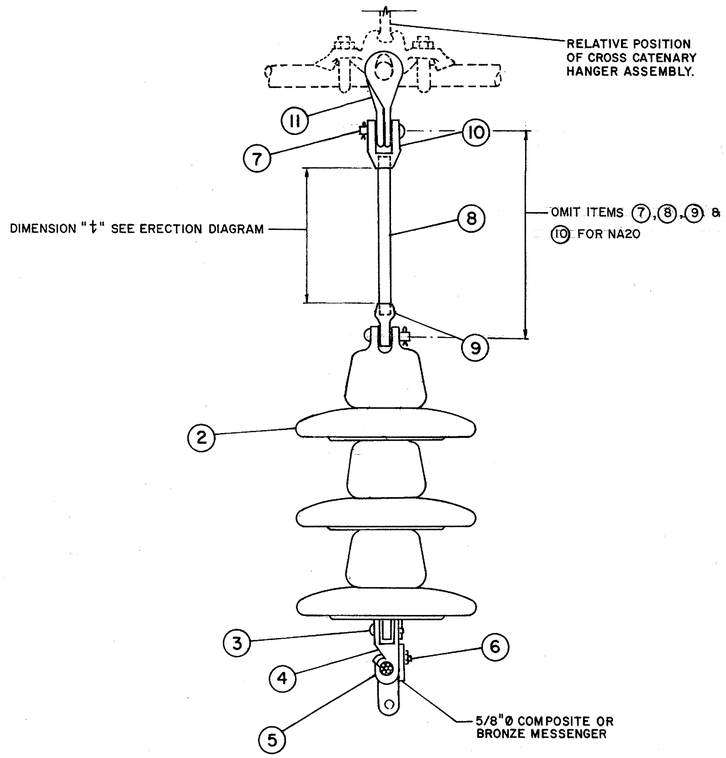

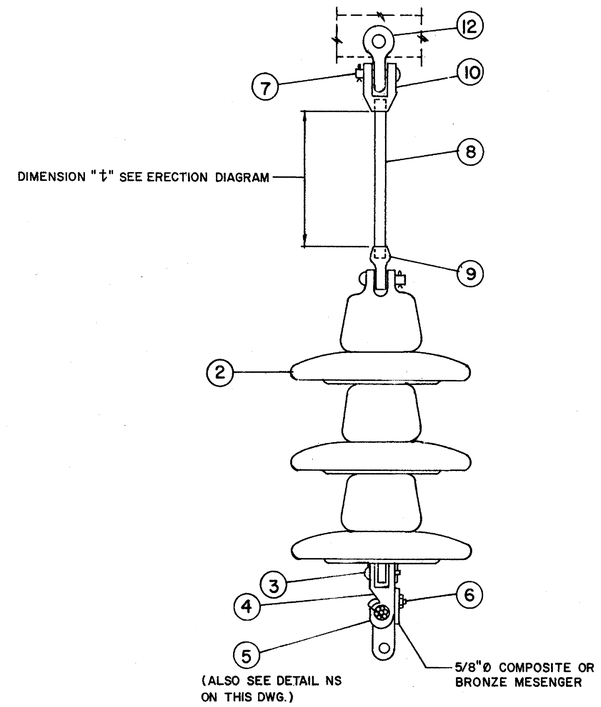

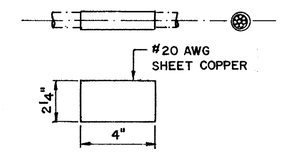

DETAIL OF NS

TANGENT AND CURVED TRACK

ASSEMBLY MARK NA-82 & NA-20

ITEM	PC MARK	AMTRAK DWG. No.	COMPUTER No.	DESCRIPTION	NA-82 QUANTITY	NA-20 QUANTITY
2	B-1	ET-1302-D		INSULATOR, 10" DIA.	3	3
3	NP-1	11B-1206		PIN,(INSULATOR)STEEL,GALV., SPEC. ASTM 123-73	1	1
				5/8"x 1-7/8"		
4	MK-1	ET-1146D		CLAMP, SUSPENSION, MALLEABLE IRON,GALV.	1	1
				SPEC. P-116		
5	NS	11B-1226		#20AWG. SHEET COPPER SLEEVE, 4"x 2-1/4"	1	1
6	JB2	ET-148-E		BOLT,"J", BRONZE,WITH HEX NUT, SPEC CE 565	2	2
				1/2" x 2-9/16"		
7	BG2	ET-145-E		BOLT, STEEL,GALV.,WITH HEX HEAD NUT, 5/8"x2-1/2"	1	—
8	NR2	14E-433		HANGER ROD, BRONZE, 0.72"Ø, THREADED, SPEC. P-118	1	—
9	EE1	11B-1227		EYE END,BRONZE FORGING,SPEC. C.E. 565, CLASS A	1	—
10	CE 1	11B-1227		CLEVIS END, BRONZE FORGING, SPEC. C.E. 565, CLASS A	1	—
11	XT-1	11B-1222		STRAP, CATENARY LINK, MALLEABLE IRON, GALV.,	2	2
				SPEC. P-116		

TANGENT AND CURVED TRACK

ASSEMBLY MARK NA-83

ITEM	PC MARK	AMTRAK DWG. No.	COMPUTER No.	DESCRIPTION	QTY.
2	B-1	ET-1302-D		INSULATOR, 10" DIA.	3
3	NP-1	11B-1206		PIN, (INSULATOR) STEEL, GALV., SPEC. ASTM 123-73	1
				5/8" X 1-7/8"	
4	MK-1	ET-1146D		CLAMP, SUSPENSION, MALLEABLE, IRON, GALV.,	1
				SPEC. P-116	
5	NS	11B-1226		#20AWG. SHEET COOPER SLEEVE, 4" X 2-1/4"	1
6	JB2	ET-148-E		BOLT, "J", BRONZE, WITH HEX NUT, SPEC. CE565	2
				1/2" x 2-9/16"	
7	BG2	ET-145-E		BOLT, STEEL, GALV., WITH HEX HEAD NUT, 5/8" x 2-1/2"	1
8	NR2	14E-433		HANGER ROD, BRONZE, 0.72"Ø, THREADED, SPEC. P-118	1
9	EE1	11B-1227		EYE END, BRONZE FORGING, SPEC. C.E. 565, CLASS A	1
10	CE1	11B-1227		CLEVIS END, BRONZE FORGING, SPEC. C.E.565, CLASS A	1
12	(S-4)	(11B-1204)		SHACKLE, CHAIN, FORGED STEEL, GALV., WITH BOLT, NUT,	1
				AND COTTER KEY, OHIO BRASS CAT. NO. 86674	

NOTE:

SIMILAR MATERIAL IS SUGGESTED IN THE MATERIAL LIST TO SUBSTITUTE THE PC MARK ITEM IN PARENTHESIS.

Gibbs & Hill, Inc. A Subsidiary of Dravo Corporation New York, New York

DWG. NO. 3662 - 121

REVISIONS

DESIGN KML CHKD. SJ

PREL. TRACING VC

9/5/95

CONTRACT	COUNTY	FEDERAL AID PROJECT Nº	SHEET Nº	TOTAL SHEETS
			47A	351

EDGEMOOR ROAD BRIDGE

STEADY & DROPPER ASSEMBLIES

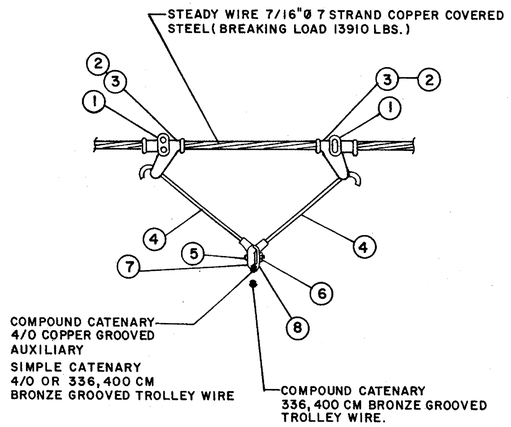

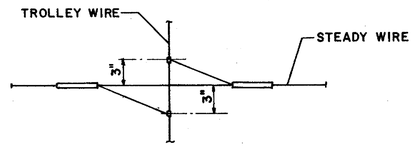

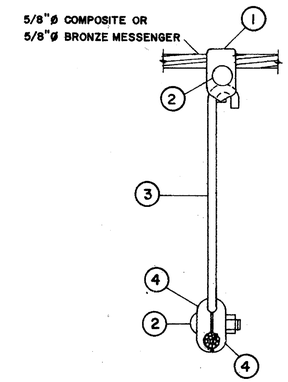

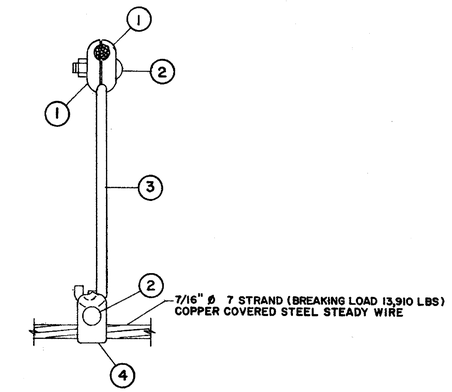

COMPOUND AND SIMPLE CATENARY TANGENT TO 1°00' CURVE TRACK

ASSEMBLY MARK SA50a

ITEM	PC MARK	AMTRAK DWG. No.	COMPUTER No.	DESCRIPTION	QTY.
1	UB-27	ET-146E	10D9000206	BOLT,"U" BRONZE, WITH HEX NUT	2
				SPEC. C.E. 565,5/8"x 1-1/2"x2-1/4"	
2	SWS	ET-170E	10D9000953	SADDLE, STEADY WIRE,	2
				BRONZE, SPEC. P-117	
3	HSC	ET-918E	10D9000321	CLAMP, HORIZONTAL, STEADY	2
				BRONZE, SPEC. P-117	
4	SR	ET-1095E	10E9000584	ROD, STEADY, BRONZE, SPEC.	LB.
				C.E. 565,0.48"Ø	
5	BB-34	ET-148E	10L9000123	CARRIAGE, BRONZE WITHOUT	2
				NUT OR SLOT, SPEC. C.E.	
				565, 1/2"x 1-1/2"	
6			10D9000528	LOCKNUT STOVER TYPE 1/2"Ø	2
7	BC-34	ET-1089E	10K9000387	CLIP, HORIZONTAL, STEADY,	2
				BRONZE, SPEC. P-117	
8	BC-37	ET-1083E	10N9000372	CLIP, FACING CLIP, BRONZE,	2
				SPEC. P-117	

FOR 7/16"Ø STEADY WIRE

ASSEMBLY MARK SH60a

ITEM	PC MARK	AMTRAK DWG. No.	COMPUTER No.	DESCRIPTION	QTY.
1	BC-24B	1087		CLIP, 5/8"Ø MESSENGER TO 0.34Ø	2
				ROD, BRONZE, SPEC. P-117	
2	BB-22	ET-148E		BOLT, CARRIAGE, BRONZE, WITH	2
				HEX NUT, SPEC. C.E. 565,	
				1/2"x1-7/8"	
3				ROD, HANGER, BRONZE, SPEC. C.E.	LB
				565, CLASS "B", 0.34"Ø,	
				0.344 LBS/FT (FOR LENGTH SEE	
				STRUCTURE ERECTION DIAGRAM)	
4	BC-25	ET-1088E		CLIP, 7/16"Ø MESSENGER TO 0.34"Ø	2
				ROD, BRONZE, SPEC. P-117	

DWG. NO. 3662 - 122

9/5/95

Gibbs & Hill, Inc. A Subsidiary of Dravo Corporation New York, New York

REVISIONS

DESIGN K.M.L. CHKD. S.T.

PREL. TRACING V.C.

23

40389

CONTRACT	COUNTY	FEDERAL AID PROJECT Nº	SHEET Nº	TOTAL SHEETS
			48A	351

EDGEMOOR ROAD BRIDGE

HORIZONTAL STEADY ASSEMBLIES

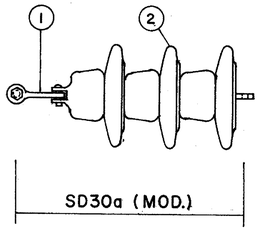

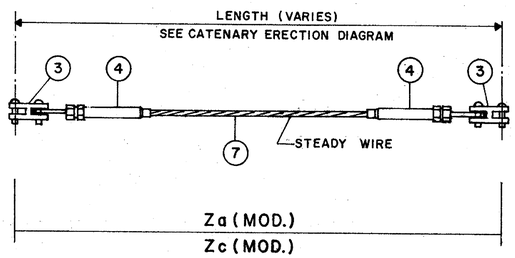

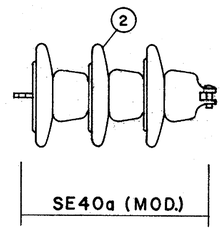

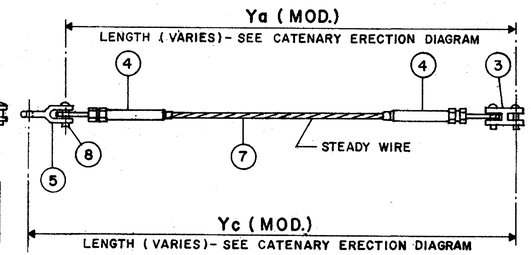

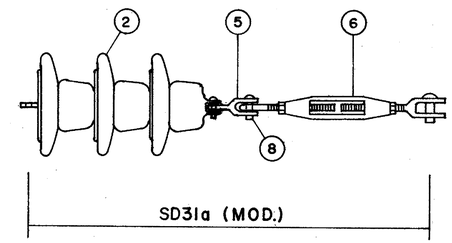

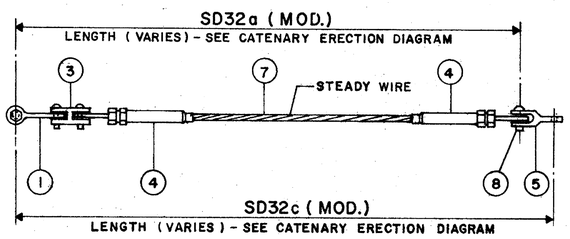

NOTES:

1. SET TURNBUCKLES INITIALLY TO ALLOW FOR 6" ADDITIONAL TAKE-UP.
2. USE MODIFIED ASSEMBLIES SD32a, SD33a, Za AND Ya FOR 7/16"Ø, 7 STRAND STEADY WIRE (BREAKING LOAD 13,910 LBS.)
3. USE MODIFIED ASSEMBLIES SD32c ,SD33c ,Zc AND Yc FOR STEADY WIRE- 9/16" ø ,19 STRAND (BREAKING LOAD 25,500 LBS.)
4. MAXIMUM WORKING LOADS FOR MODIFIED ASSEMBLIES SD30a ,SD31a AND SE40a ARE 10,000 LBS.
5. SIMILAR MATERIAL IS SUGGESTED IN THE MATERIAL LISTS BELOW TO SUBSTITUTE THE PC MARK ITEM IN THE PARENTHESIS SUCH AS (TB-18A) AND (NP-3).

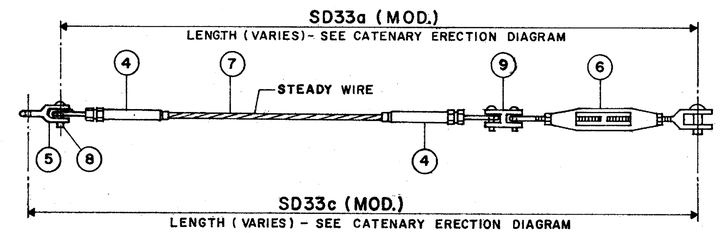

ITEM	PC MARK	AMTRAK DWG. No.	COMPUTER No.	DESCRIPTION	QUANTITY OF MODIFIED ASSEMBLIES						
					SD30a	SD31a	SD32a	SD33a	SE40a	Za	Ya
1	S-4	ET-305-E		CHAIN SHACKLE, FORGED STEEL, GALVANIZED,	1		1				
				WITH HEX HEAD AND BOLT AND NUT WITH							
				COTTER PIN, SPEC. P-119							
2	B1	11B-1201		SUSPENSION INSULATOR, 10" DIA.	3	3			3		
3		AET-2002-2		CLEVIS-CLEVIS CONNECTOR, MALLEABLE IRON,			1			2	1
				GALVANIZED							
4		AET-2002-2		COMPRESSION TYPE, EYE END FITTING, NICOPRESS			2	2		2	2
				#2956-J82, FOR 7/16" DIA. STRAND (USE BURNDY							
				COMPRESSOR TOOL Y35 & DIE U169)							
5	ND-1	ET-449-E		ADAPTER, CLEVIS, MALLEABLE IRON, GALVANIZED		1					
6	(TB-18A)	(ET-308-D)		TURNBUCKLE, FORGED STEEL, GALVANIZED, WITH		1		1			
				EYE AND CLEVIS, GROSBY LAUGHLIN CAT.							
				No. HG-227, 1" x 12", OR APPROVED EQUAL							
7				STEADY WIRE, 7/16" DIA. 7 STRAND, COPPER			FT.	FT.		FT.	FT.
				COVERED STEEL, BREAKING LOAD 13,910 LBS.							
8	(NP-3)	(11B-1206)		PIN, FORGED STEEL, GALVANIZED, 3/4" x 2 3/8"		1					
				WITH 3/16" STAINLESS STEEL COTTER KEY, OHIO							
				BRASS CAT. #83748-4001 & #91752-4003							
				OR APPROVED EQUAL							
9		AET-2002-2		CLEVIS-CLEVIS CONNECTOR, MALLEABLE IRON,				1			
				GALVANIZED							

ITEM	PC MARK	AMTRAK DWG. No.	COMPUTER No.	DESCRIPTION	QUANTITY OF MODIFIED ASSEMBLIES			
					SD32c	SD33c	Zc	Yc
1	S-4	ET-305-E		CHAIN SHACKLE, FORGED STEEL, GALVANIZED, WITH	1			
				HEX HEAD AND BOLT AND NUT WITH COTTER				
				PIN, SPEC P-119				
3		AET-2002-2		CLEVIS-CLEVIS CONNECTOR, MALLEABLE IRON,	1		2	1
				GALVANIZED				
4		AET-2002-2		COMPRESSION TYPE ,EYE END FITTING, NICOPRESS	2	2	2	2
				#2957-M12, FOR 9/16" DIA. STRAND (USE BURNDY				
				COMPRESSOR TOOL Y35 & DIE U209)				
5	ND-1	ET-449		ADAPTER, CLEVIS, MALLEABLE IRON, GALVANIZED	1	1		1
6	(TB-18A)	(ET-308-D)		TURNBUCKLE, FORGED STEEL, GALVANIZED, WITH EYE		1		
				AND CLEVIS, GROSBY LAUGHLIN CAT. No. HG-227				
				1" x 12", OR APPROVED EQUAL				
7				STEADY WIRE, 9/16" DIA. 19 STRAND, COPPER	FT	FT	FT	FT
				COVERED STEEL, BREAKING LOAD 25,500 LBS.				
8	(NP-3)	(11B-1206)		PIN, FORGED STEEL, GALVANIZED, 3/4" x 2 3/8",	1	1		1
				WITH 3/16" STAINLESS STEEL COTTER KEY, OHIO				
				BRASS CAT. 83748-4011 & 91752-4003,				
				OR APPROVED EQUAL				
9		AET-2002-2		CLEVIS-CLEVIS CONNECTOR, MALLEABLE IRON,		1		
				GALVANIZED				

DWG. NO. 3662 - 123

9/5/95

Gibbs & Hill, Inc. A Subsidiary of Dravo Corporation New York, New York

REVISIONS

DESIGN KML CHKD. ST

PREL. TRACING VC

40389

CONTRACT	COUNTY	FEDERAL AID PROJECT Nº	SHEET Nº	TOTAL SHEETS
			49A	351

EDGEMOOR ROAD BRIDGE

SECTIONALIZING & HANGER ASSEMBLIES

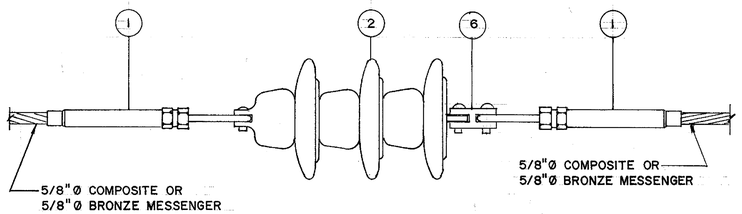

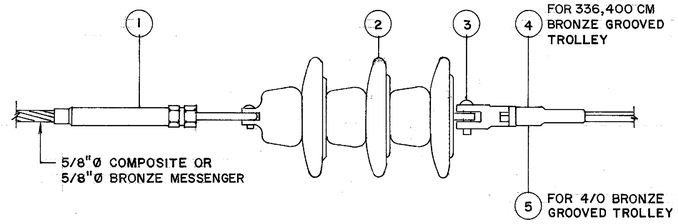

USE SE3A (MOD.) FOR 336,400 CM GROOVED TROLLEY WIRE
USE SE5A (MOD.) FOR 4/0 GROOVED TROLLEY WIRE

ASSEMBLY MARK SE1A (MOD.)

ITEM	PC MARK	AMTRAK DWG. NO.	COMPUTER NO.	DESCRIPTION	QTY.
1		AET-2002-2		COMPRESSION TYPE, EYE FITTING, NICOPRESS	2
				#2959-M12, FOR 5/8" DIA. STRAND (USE BURNDY	
				COMPRESSOR TOOL Y35 & DIE 529)	
2	A-2	ET-1302D		INSULATOR, 12" DIA.	3
6		AET-2002-2		CLEVIS, CLEVIS CONNECTOR, WITH 5/8" PINS,	
				MALLEABLE IRON, GALVANIZED	

ASSEMBLY MARK SE3A(MOD.) / SE5A(MOD.)

ITEM	PC MARK	AMTRAK DWG. NO.	COMPUTER NO.	DESCRIPTION	QUANTITY SE3A (MOD.)	QUANTITY SE5A (MOD.)
1		AET-2002-2		COMPRESSION TYPE, EYE END FITTING,	1	1
				NICOPRESS #2959-M12, FOR 5/8" DIA.		
				STRAND (USE BURNDY COMPRESSOR TOOL		
				Y35 & DIE 529)		
2	A-2	11B-1201		INSULATOR, 12" DIA.	3	3
3	NP-3	11B-1206		PIN (INSULATOR), STEEL, GALV.	1	1
				SPEC. ASTM 123-73, 3/4" x 2-3/8"		
4				DEAD END CLAMP, CLEVIS, 336,400 CM	1	
				OHIO BRASS DWG. NO. 23733		
5				DEAD END CLAMP, CLEVIS, 4/0,		1
				OHIO BRASS DWG. NO. 21782		

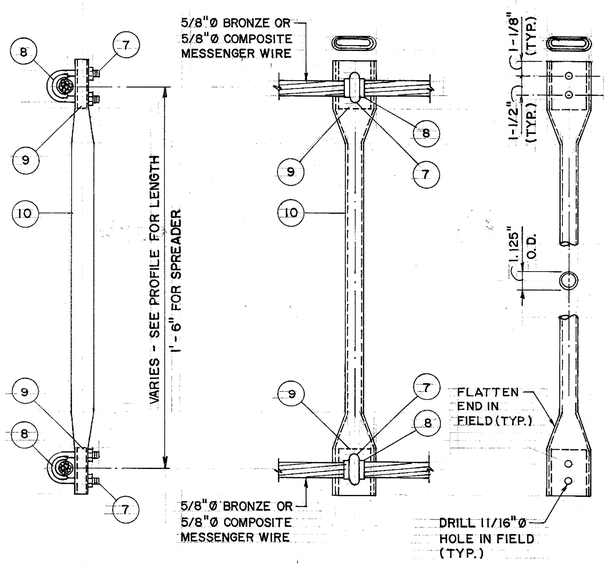

ASSEMBLY MARK XHA8

ITEM	PC MARK	AMTRAK DWG. NO.	COMPUTER NO.	DESCRIPTION	QTY.
7	UB-27	ET-140E		BOLT, "U", BRONZE, WITH HEX NUTS, SPEC. C. E. 565,	2
				CLASS "B", 5/8" x 1-1/2" x 2-1/4"	
8	MWS	ET-170E		SADDLE, MESSENGER WIRE, BRONZE, SPEC. P-117	1
9				FITTED COPPER FILLER CUT FROM 1/4" THICK	2
				PLATE	
10				TUBING, COPPER, HARD DRAWN, 1.125" O.D. x 0.109"	1
				WALL	

Gibbs & Hill, Inc. — A Subsidiary of Dravo Corporation — New York, New York

DWG. NO. 3662 - 124

9/5/85

REVISIONS

PREL. TRACING YC — DESIGN KML — CHKD. SJ

3662 - SK3

CONTRACT	COUNTY	FEDERAL AID PROJECT Nº	SHEET Nº	TOTAL SHEETS
			50A	351

EDGEMOOR ROAD BRIDGE

RIGID INSULATOR ASSEMBLY

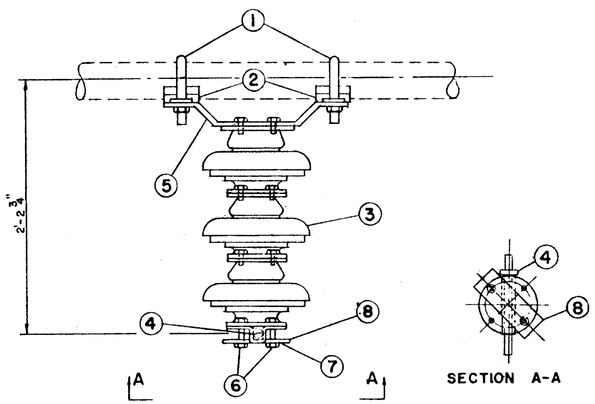

SECTION A-A

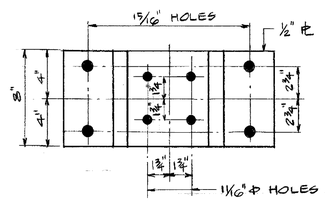

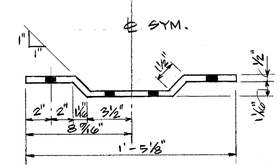

TP1
SCALE: NONE

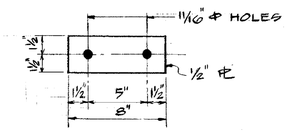

TP2
SCALE: NONE

ASSEMBLY No. 1122A (ALTERNATE)

ITEM	PC MARK	AMTRAK DWG. No.	COMPUTER No.	DESCRIPTION	QTY.
1	UB-60	ET-145-E		U-BOLT, STEEL, GALV., SPEC. P-119, 7/8"x5½"x6 5/16"	2
2	PS1	14E-133		PIPE SADDLE, MALLEABLE IRON, GALV., SPEC. P-116	2
3	TYPE T	ET-1302-D		INSULATOR	3
4	MD	11B-1236		CLAMP SADDLE, MALLEABLE IRON, GALV., SPEC. P-116	2
5	TP1	THIS DWG.		BENT PLATE, INSULATOR SUPPORT, STEEL, GALV.	1
6	BB7	ET-146-E		BOLT, BRONZE HEX HEAD AND NUT, SPEC. C.E. 565, CLASS	2
				B, 5/8"x2½"	
7	—	—		LOCK WASHER, STEEL, GALV., FOR 5/8" BOLT	2
8	TP2	THIS DWG.		PLATE, INSULATOR SUPPORT, STEEL, GALV.	1

Gibbs & Hill, Inc.
A Subsidiary of Dravo Corporation
New York, New York

DWG. NO. 3662 - 125

9/5/85

REVISIONS

PREL. TRACING VC DESIGN KML CHKD. ST

92

4089

CONTRACT	COUNTY	FEDERAL AID PROJECT Nº	SHEET Nº	TOTAL SHEETS
			51A	351

EDGEMOOR ROAD BRIDGE

CATENARY HANGER ASSEMBLIES

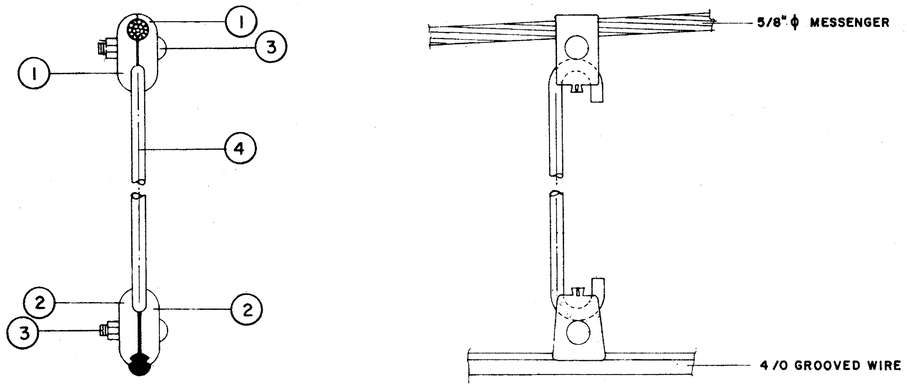

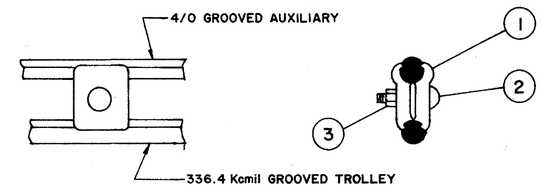

ASSEMBLY MARK J

ITEM	PC MARK	AMTRAK DWG. No.	COMPUTER No.	DESCRIPTION	QTY.
1	BC-24B	ET-1087E		MESSENGER HANGER ROD CLIP	2
2	BC-26B	ET-1078E		GROOVED WIRE HANGER ROD CLIP	2
3	BB-22	ET-148E		1/2" - CARRIAGE BOLT & NUT	2
4	0.34" ϕ HGR.	ET-1906E		HANGER - HOOK TYPE	*

ASSEMBLY MARK H

ITEM	PC MARK	AMTRAK DWG. No.	COMPUTER No.	DESCRIPTION	QTY.
1	HC-29A	ET-1029E		INTERMEDIATE CLIP	2
2	BB-34	ET-148E		1/2" CARRIAGE BOLT	1
3				1/2" STOPOVER TYPE LOCKNUT, 13 UNC 2B, BRONZE,	1
				MANUFACTURED TO SPEC. C.E. 565	

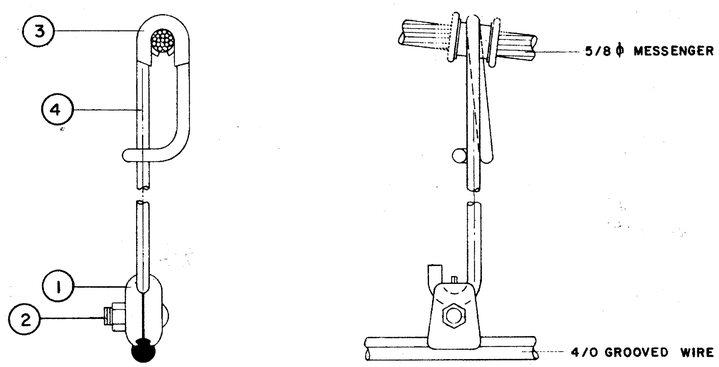

ASSEMBLY MARK ME

ITEM	PC MARK	AMTRAK DWG. No.	COMPUTER No.	DESCRIPTION	QTY.
1	BC-26B	ET-1078E		GROOVE WIRE HANGER ROD CLIP	2
2	BB-22	ET-148E		1/2" CARRIAGE BOLT & NUT	1
3	FHS	ET-652E		FLEXIBLE HANGER ROD SADDLE	1
4	0.34" ϕ LOOP HANGER			FLEXIBLE HANGER ROD	*

DWG. NO. 3662 - 126

Gibbs & Hill, Inc. A Subsidiary of Dravo Corporation New York, New York

REVISIONS

DESIGN K.M.L. CHKD. ST

PREL. TRACING VC

7/5/95

27

CONTRACT	COUNTY	FEDERAL AID PROJECT Nº	SHEET Nº	TOTAL SHEETS
			82A	351

EDGEMOOR ROAD BRIDGE

TRANSMISSION HARDWARE ASSEMBLIES

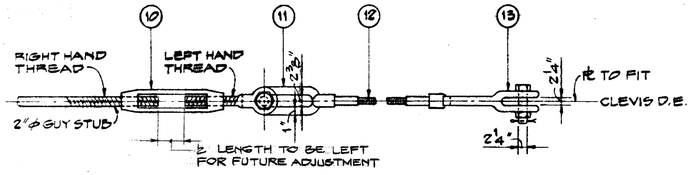

GUY STRAND ASSEMBLY GSA4

GSA4 (MAX. WORKING TENSILE STRENGTH 40,000#)			
ITEM NO	DESCRIPTION	CATALOG NO.	NO. REQ'D.
10	TURNBUCKLE - 2"x24" D.F.S., GALV. (OMIT R.H. JAW)	CROSBY - GROUP G-228	1
11	EYE TYPE DEAD END ASSEMBLY WITH ALUMINUM PROTECTIVE SLEEVE FOR 37 NO. 6 ALUMOWELD STRAND	ALCOA DWG. B-6443-J (PRE-ASSEMBLED)	1
12	37 NO. 6 A.W.G. ALUMOWELD STRAND	——	1
13	CLEVIS TYPE DEAD END ASSEMBLY WITH ALUMINUM PROTECTIVE SLEEVE FOR 37 NO. 6 ALUMOWELD STRAND	ALCOA DWG. B-6443-K (PRE-ASSEMBLED)	1

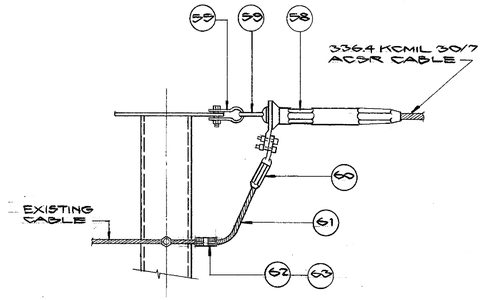

GROUND WIRE ASSEMBLY GWD3 & GWD4

BILL OF MATERIAL				
ITEM NO.	DESCRIPTION	MANUFACTURER & CATALOG NO.	QUANT. GWD3	QUANT. GWD4
55	SHACKLE, CHAIN, GALVANIZED STEEL WITH GALVANIZED NUT & BOLT.	LAPP CO. 33853	1	1
58	DEAD END BODY, COMPRESSION TYPE ALUMINUM FOR 336.4 KCMIL ACSR CABLE	ALCOA 8120,781	1	1
59	DEAD END EYE, COMPRESSION TYPE, STEEL	ALCOA 8110,332	1	1
60	TERMINAL JUMPER COMPRESSION TYPE ALUMINUM FOR 336.4 KCMIL ACSR CABLE	ALCOA 8120,781	1	1
61	CABLE, 336.4 KCMIL, 30/7 STRAND, ACSR	ALCOA (ORIOLE)	4 FT.	
62	LINE TAP - UNIVERSAL CRIMPIT	YPC 33R 28R	1	—
63	LINE TAP - UNIVERSAL CRIMPIT	YPC 33R 33R	—	1

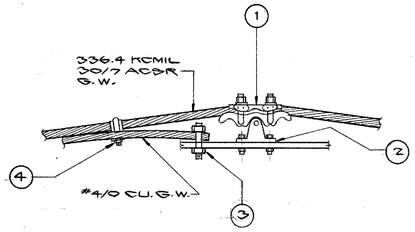

GROUND WIRE ASSEMBLY GW-2

BILL OF MATERIAL			
ITEM NO.	DESCRIPTION	MANUFACTURER & CATALOG NO.	QUANT.
1	G.W. TRUNNION CLAMP	LAPP - #80482	1
2	G.W. BRACKET TRUNNION CLAMP	LAPP - #57111	1
3	CONNECTOR SERVIT POST FOR 4/0 COPPER STUD 5/8"	BURNDY CORP. # KC-28	1
4	PARALLEL CLAMP FOR 336.4 KCMIL ACSR AND 4/0 COPPER	BURNDY CORP. # CP31A31A	1

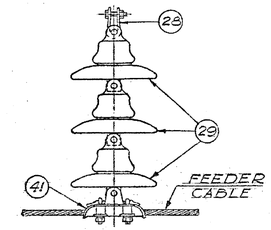

FEEDER ASSEMBLY NA-16

BILL OF MATERIAL			
ITEM NO.	DESCRIPTION	MANUFACTURER & CATALOG NO.	QUANT.
28	SHACKLE; ANCHOR, WITH BOLT, NUT & COTTER KEY.	OHIO BRASS 86663	7
29	INSULATOR, SUSPENSION, CLEVIS TYPE, 5¾"x10", BROWN GLAZE.	LOCKE - 208580	3
41	CLAMP, SUSPENSION, MALLEABLE IRON, GALV, WITH PIN & COPPER LINER.	OHIO BRASS CO. 83104	7

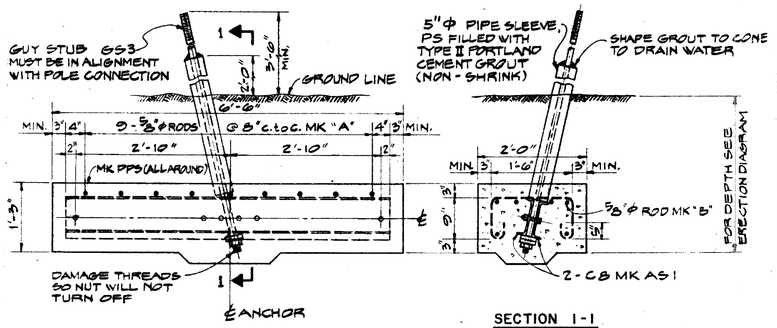

GUY ANCHOR TYPE A1

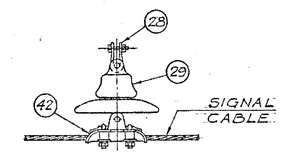

SIGNAL ASSEMBLY NA-61A

BILL OF MATERIAL			
ITEM NO.	DESCRIPTION	MANUFACTURER & CATALOG NO.	QUANT.
28	SHACKLE; ANCHOR, WITH BOLT, NUT & COTTER KEY.	OHIO BRASS 86663	1
29	INSULATOR, SUSPENSION, CLEVIS TYPE, 5¾"x10", BROWN GLAZE.	LOCKE - 208580	1
42	CLAMP, SUSPENSION, MALLEABLE IRON, GALV., WITH PIN & COPPER LINER	OHIO BRASS CO. 83074	1

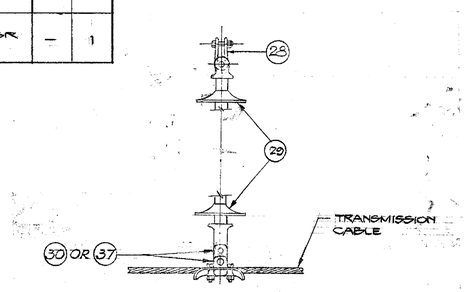

TRANSMISSION ASSEMBLY TSA-1

BILL OF MATERIAL			
ITEM NO.	DESCRIPTION	MANUFACTURER & CATALOG NO.	QUANT.
28	SHACKLE, ANCHOR, WITH BOLT, NUT & COTTER KEY.	OHIO BRASS 86663	1
29	NON-CERAMIC COMPOSITE INSULATOR	RELIANCE COMM/TEC AMTRAK CAT. # E10103.11	1
30	CLAMP, SUSPENSION, ALUMINUM WITH CLEVIS & PINS.	OHIO BRASS CO. 87126	1
37	CLAMP, SUSPENSION, MALLEABLE IRON, GALV., WITH PINS, CLEVIS & COPPER LINER.	OHIO BRASS CO. 83106	1

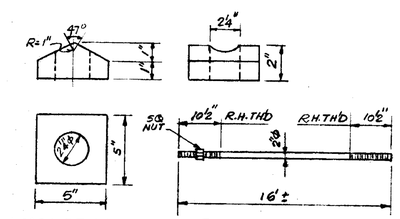

WASHER MK W-3
CAST IRON

GUY STUB GS-3

BILL OF MATERIAL (GUY ANCHOR)				QUANTITY
MARK	ASTM SPEC.	DESCRIPTION	UNIT	A1 WITH GS3
—	—	CONCRETE	CU. YDS.	0.6
A	A615	5/8"φ REINFORCING RODS 3'-10½" LG	EA.	9
B	A615	5/8"φ REINFORCING RODS 6'-0" LG.	EA.	6
A51	A36	C8x11.5 x 6'-0" LG, NO PAINT OR OIL	EA.	2
GS3	A307	GUY STUB, GALV.	EA.	1
PS		PIPE SLEEVE, 5"φ STEEL, 14'± LG	EA.	1
W		WASHER (FOR MARK SEE DETAIL)	EA.	1
—	A325	BOLT 1"φ x 4" LG. (H.H.N. & W)	EA.	4

REVISIONS

PREL. TRACING VC DESIGN MSC CHKD MSC

DWG. NO. 3662 - 127

Gibbs & Hill, Inc. Consulting Engineers New York, New York

9/5/95

28

CONTRACT	COUNTY	FEDERAL AID PROJECT Nº	SHEET Nº	TOTAL SHEETS
			53A	351

EDGEMOOR ROAD BRIDGE

SUMMARY OF MATERIALS SHEET 1

NOTE: THIS DRAWING SUMMARISES HARDWARE COMPONENTS ONLY.

AMTRAK REFERENCE: MASTER MAT. LIST	MARK	DRAWING NUMBER	AMTRAK REF. NO.	DESCRIPTION	MANUFACTURER	UNIT	SUB TOTAL: CATENARY	BONDING	TRANSMISSION	ORDERING TOTAL
				BONDING	**MATERIALS**					
–	–	–	–	Dead End Body, Compression Type, Alum. (Use Die 6020AH & Compressor Tool Model 60A)	Alcoa Cat. No. 8120-781	EA.		20		20
–	–	–	–	Dead End Eye, Compression Type, Steel (Use Die 6010SH & Compressor Tool Model 60A)	Alcoa Cat. No. 9110-332	EA.		20		20
–	–	–	–	Jumper Terminal, Compression Type, Alum. (Use Die 6020AH & Compressor Tool Model 60A)	Alcoa Cat. No. 5120-781	EA.		20		20
–	–	–	–	Compound, for Aluminum to Aluminum & Aluminum to Copper Connection	ALCOA (ALNOX)	10 OZ TUBE		12		12
–	–	–	–	Cable, 336.4 kcmil, 30/7 Str. ACSR Bare, Oriole	ALCOA	FT.		2,750		2,750
–	–	–	–	Connector, Ground Copper Alloy, Tin Plated for Cable to Bar, with 1/2"ø x 4" Long Bolt	Burndy Corp. Cat. No. GB34T12-W	EA.		15		15
–	–	–	–	Thimble, Copper Alloy Type BC	Burndy Corp. Cat. No. M60	EA.		10		10
–	–	–	–	Clip, Ground Wire, Copper Alloy	Burndy Corp Cat. No. BC30	EA.		45		45
–	–	–	–	Cable, Copper, Bare, No. 4/0 AWG, 7 Strand Hard Drawn	W.B. Siegfried Associates	FT.		120		120
–	–	–	–	Connector, Ground Copper Alloy, Tin Plated for Cable to Bar, with 1/2"ø x 4" Long Bolt	Burndy Corp. Cat. No. GB29-W	EA.		10		10
–	–	–	–	Cable, Copper, Bare, No. 2/0 AWG, 37 Strand, Soft Drawn	W.B. Siegfried Associates	FT.		550		550
–	–	–	–	Staple, Copper-clad, 1/2" between legs, 2" Long	A.B. Chance Co. Cat. No. 9169	EA.		220		220
–	–	–	–	Shackle, Anchor, with Clevis Pin & Cotter Key	Ohio Brass Co., Cat. No. 79608	EA.		10		10
–	–	–	–	Connector "T"	Burndy Corp. Cat. No. VT2828	EA.		5		5
–	–	–	–	Terminal, Hylug, for No. 4/0 AWG Aluminum Cable, 7 Strand	Burndy Corp. Cat. No. YCA28R-2N	EA.		10		10
–	–	–	–	Bolt, Hex. Head, 1/2"ø x 1 1/2" Long, Threaded, Stainless Steel, with Hex. Head Nut & Lockwasher	Burndy Corp.	EA.		15		15
–	–	–	–	Strap, for No. 4/0 AWG Cable	Thomas & Betts Corp. Cat. No. 1347	EA.		30		30
–	–	–	–	Cap Screw, Hex. Head, 1/2"ø - 13NC - 2 1/2" Long, Galv. Steel & Lockwasher	Burndy Corp.	EA.		30		30
–	–	–	–	Bolt, "U" Steel Galv. 7/8" x 4" x 4 5/16" w/Hex. Nut & Washer	Skelly Bolt Co.	EA.		20		20
–	–	–	–	Cable 4/0 Awg, 7 Strand Al. Weather Resistant Polythelene	Alcoa Code 'Olive'	FT.		120		120

AMTRAK REFERENCE: MASTER MAT. LIST	MARK	DRAWING NUMBER	AMTRAK REF. NO.	DESCRIPTION	MANUFACTURER	UNIT	SUB TOTAL: CATENARY	BONDING	TRANSMISSION	ORDERING TOTAL
–	–	–	–	Insert, Threaded, Gray Iron for ¾ Dia. Bolt	Hohmann & Barnard	EA.		30		30
–	–	–	–	Turn Buckle, Jaw & Eye 1"x12"	Crosby-Laughlin Cat. #Hg227	EA.		20		20
–	–	–	–	Connector, Ground. Cu Alloy Tin Plated for 4/0 Cu and 336.4 Kcmil AL. Cables to Bar. Complete with ½" dia. Bolt x 4" Long	Burndy Corp. Cat # UC 32R.	EA.		5		5
				TRANSMISSION	**MATERIALS**					
–	–	–	–	Compression Dead End For 336.4 Kcmil, 30/7 Al Cable	ALCOA CAT #8120781	EA.			5	5
–	–	–	–	Compression Eye, Dead End, Steel	ALCOA CAT #910332	EA.			5	5
–	–	–	–	Terminal Jumper Compression Type, for 336.4 Kcmil ACSR Cable	ALCOA CAT #5120781	EA.			5	5
–	–	–	–	Line Tap, Universal Crimpit	Burndy Corp. CAT #YPC33R28R	EA.			5	5
–	–	–	–	Line Tap, Universal Crimpit	Burndy Corp. CAT #YPC33R33R	EA.			5	5
–	–	–	–	Shackle, Anchor, With Bolt, Nut and Cotter	Ohio Brass CAT #86663	EA.			15	15
–	B-1	ET-1302-D	–	Insulator, 10" Dia. Suspension.	Joslyn	EA.			22	22
–	–	–	–	Clamp Suspension Malleable Iron, Galv., with Pin, Cotter and Liner	Ohio Brass CAT #83104	EA.			15	15
–	–	–	–	Splice, 4/0 Cu.	Burndy Corp. Hysplice, Type YDS-28	EA.			5	5
–	–	–	–	Splice 1/0 Cu.	Burndy Corp. Hysplice, Type YDS-25	EA.			5	5
–	–	–	–	Splice, 400 Kcmil Cu.	Burndy Corp. Hysplice, Type YDS-32	EA.			5	5
–	–	–	–	Ground Wire Trunnion Clamp	Lapp, CAT #80482	EA.			5	5
–	–	–	–	Ground Wire Bracket Trunnion Clamp	Lapp, CAT #57111	EA.			5	5
–	–	–	–	Connector, Servit Post	Burndy Corp. CAT #Kc-28	EA.			5	5
–	–	–	–	Parallel Clamp for 336.4 Kcmil ACSR to 4/0 Cu.	Burndy Corp. CAT #CP31A31A	EA.			5	5
–	–	–	–	Shackle, Chain Galvanized, with Nut and Bolt	Lapp CAT #33853	EA.			5	5

9/6/85

DWG. NO. 3662 – 128

Gibbs & Hill, Inc. A Subsidiary of Dresser Industries New York, New York

REVISIONS

PREL. TRACING KML DESIGN SJ CHKD. JCJ

40389

89

CONTRACT	COUNTY	FEDERAL AID PROJECT Nº	SHEET Nº	TOTAL SHEETS
			54A	351

EDGEMOOR ROAD BRIDGE

SUMMARY OF MATERIALS SHEET 2

NOTE: THIS DRAWING SUMMARISES HARDWARE COMPONENTS ONLY.

AMTRAK REFERENCE: MASTER MAT. LIST	MARK	DRAWING NUMBER	AMTRAK REF. NO.	DESCRIPTION	MANUFACTURER	UNIT	SUB TOTAL: CATENARY	BONDING	TRANS-MISSION	ORDERING TOTAL
				CATENARY	**MATERIALS**					
—	ND-1	ET-44-E	—	Adapter, Clevis, Malleable Iron	Vernon Martin Co	EA	5			5
—	PS-1	14E-133	—	Pipe Saddle Malleable Iron, Galv. Spec P-116	Vernon Martin Co.	EA	15			15
—	T	WT-1302-D	—	Insulator, Switch and Bus	Joslyn Co.	EA	20			20
—	MD	11B-1236	—	Clamp, Messenger Saddle Maileable Iron, Galv P-116	Vernon Martin Co.	EA	15			15
—	TP-1	ET-1183E	—	Plate, Insulator Support, Steel, Galvanized	Fabricator	EA	8			8
—	TP-2	ET-1183	—	Plate, Insulator Support Steel, Galv.	Fabricator	EA	8			8
—	BB-7	ET-146-E	—	Bolt, Bronze, Hex Head with Nut, Spec. CE 565 Class B. 5/8"ØX3¼",2" Thread	Bethlehem Steel Co.	EA	15			15
—	NP-1	11B-1206	—	Pin, Clevis, Forced Steel Galvanized. Cat #79055-4205	Ohio Bras Mansfield, Ohio	EA	8			8
—	MK-1	ET-1146D	—	Clamp, Suspension. Malleable Iron, Galvanized Spec. P-116	Vernon Martin	EA	2			2
—	NS	11B-1226	—	Sleeve, Sheet Cu, #20 Gauge 4" Wide, 0.6 lb/fr	Platt Bros Waterbury Conn.	LB	2			2
—	JB-2	ET-148E	—	Bolt, 'J', Bronze, with Hex Nut. Spec CE565, Class B ½"ØX2 3/8"	Hyadon Bolt Philadelphia	EA	15			15
—	BB-34	ET-148E	—	Bolt, Carriage, Bronze. Without nut or Slot Spec CE565 ½"Ø1¼"	Bethlehem Steel Co.	EA	15			15
—	—	—	—	Nut Lock, Bronze ½" UNC. Stover Type Spec CE565	Lamson & Sessions Co.	EA	15			15
—	—	—	—	Washer, Lock, Steel Galv. for 5/8" Bolt	Skellv Bolt	EA	15			15
—	—	—	—	Strap, Copper, 1½"X3/8"	Platt Brothers	LB	30			30
—	FHS	ET-652-E	—	Saddle, Flexible Hanger, Bronze Casting	Bridesburg Foundry	EA	25			25
—	A2	ET-1302-D	—	Insulator, Suspension, 12" Dia.	Joslyn	EA	15			15
—	—	—	—	Rod, Hanger Bronze, Spec CE 565 0.42"Ø, 0.555 lb/fr, Class B	Bridgeport Brass	LB	5			5
—	HSC	ET-918-E	—	Clamp, Horizontal Steady Bronze Spec. P-117	Bridesburg Foundry	EA	15			15
—	BC-34	ET-1089E	—	Clip, Horizontal Steady Bronze, Spec. P117	Bridesburg Foundry	EA	15			15
—	BC-37	ET-1083E	—	Clip, Facing, Bronze Spec.P-117	Bridesburg Foundry	EA	15			15
—	XC-8	14E-67	—	Clamp, X Cat. Malleable Iron, Galv. Spec P-116	Vernon Martin Co.	EA	2			2
—	XT-1	11B-1222	—	Strap, Catenary Link Malleable Iron Spec. P-116	Vernon Martin Co.	EA	8			8
—	BC-25	ET-1088-E	—	Clip, 7/16Ø Messenger to 0.34"Ø Rod Bronze Spec. P-117	Bridesburg Foundry	EA	20			20
—	—	AET-2002-2	—	Eye Fitting, Compression Type for 7/16" Strand NICO Press Cat #2956-J82	National Telephone Co.	EA	20			20
				Steady Wire, 7/16Ø, 7 Strand Copper Covered Steel	Copperweld Co.	FT.	150			150
—	TB-18A	ET-308-D	—	Turnbuckle, Clevis/Eye. Forged Steel Galv. Spec ASTM 123-73 1"X24" Cat #HG-227	Crosby Laughlin Co.	EA	6			6
—	UB-60	ET-145-E	—	Bolt 'U', Steel Galv. 7/8"X5½"X6 15/16"	Skelly Bolt Co. Philadelphia PA.	EA	15			15
—	—	AET-2002-2	—	Eye Fitting, Compression Type for 5/8"Ø Strand Nicopress Cat #2959-M12	National Telephone Cleveland,Ohio	EA	8			8
—	—	AET-2002-2	—	Connector, Clevis, with 5/8"Ø Pins. Malleable Iron, Galv Cat #3075	Brewer & Tichner	EA	15			15
—	NP-3	11B-1206	—	Pin, Insulator, Steel Galv. Spec P209 3/4"X2 3/8" Cat #83748-4001	Ohio Brass Co	EA	5			5

AMTRAK REFERENCE: MASTER MAT. LIST	MARK	DRAWING NUMBER	AMTRAK REF. NO.	DESCRIPTION	MANUFACTURER	UNIT	SUB TOTAL: CATENARY	BONDING	TRANS-MISSION	ORDERING TOTAL
—	—	—	—	Clamp, Trolley Wire Dead End Bronze for 4/0 Grooved Wire Cat #15964	Ohio Brass	EA	3			3
				Splice, Trolley, 4/0 Cu. Grooved Wire. Cat #15890	Ohio Brass	EA	5			5
—	XC-7	14E-66	—	Clamp, X Cat. Malleable Iron Spec P116	Vernon Martin Co.	EA	3			3
—	UB-27	ET-146-E	—	Bolt 'U' Bronze 5/8"ØX1½"X2¼" Spec. CE 565 Class B	Bridesburg Foundry Fullerton, Pa.	EA	30			30
				Pin, Cotter, Bronze 3/16"X2½"	Ohio Brass	EA	10			10
—	XC-6	14E-61	—	Clamp, Body Strand to ½"Ø Rod. Bronze Spec. P-117	Bridesburg Foundry	EA	5			5
				Clip - Wire Rope 5/8" Cat. G-450	Crosby Laughlin Co.	EA	45			45
—	B-1	ET-1302D	—	Insulator, 10" Dia. Suspension.	Joslyn	EA	50			50
—	BG-1	ET-145-E	—	Bolt, Steel, Galv. with 'Hex Head, Nut & Cotter 3/4"ØX23/4"	Bethlehem Steel Co.	EA	10			10
				Rod Hanger Bronze Spec CE 565 Class B 0.72"Ø, 1.62 lb/ft.	Bridge Port Brass	LB	50			50
—	EE-1	11B-1227	—	End, Eye, Bronze. Spec. CE565 Class A	Bridge Port Brass	EA	8			8
—	CE-1	11B-1227	—	End, Clevis, Bronze Spec CE565, Class A	Bridge Port Brass	EA	8			8
—	S-4	ET-305-E	—	Shackle, Chain, Forged Steel, Galv. with Boct Nut & Cotter Cat 86674 Spec. 119	Ohio Brass	EA	5			5
—	SWS	ET-170-E	—	Saddle, Steady Wire Bronze. Spec. P-117 7/16" Cable.	Bridesburg Foundry	EA	15			15
—	BC-24B	ET-1087E	—	Clip, 5/8" Messenger to 0.34"Ø Rod Bronze, Spec. P-117	Bridesburg Foundry	EA	60			60
—	BC-26B	ET-1087 E	—	Clip, Grooved Wire to 0.34"Ø Rod Aluminum Bronze ASTM Spec B-148, Class 90	Bridesburg Foundry	EA	80			80
—	BB-22	ET-148E	—	Bolt, Carriage, Bronze, with Hex Nut Spec. CE565 Class C ½"ØX17/8"Long	Bethlehem Steel Co. Lebanon PA	EA	80			80
—	—	—	—	Rod, Hanger, Bronze, Spec. CE565 0.34"Ø Class 'B', 0.3441b/Ft.	Bridge Port Brass Bridgeport Conn.	LB	44			44

DWG. NO. 3662 - 129

Gibbs & Hill, Inc. A Subsidiary of Dravo Corporation New York, New York

REVISIONS

DESIGN JT CHKD. JGT

PREL. TRACING KM1

9/6/85

30

COUNTY	CONTRACT	FHWA REG. NO.	STATE	FED. AID PROJECT NO.	SHEET NO.	TOTAL SHEETS
NEW CASTLE	~~82-091-04~~	3	DEL	~~IR-495-(3)44~~	55A	351

UTILITY RELOCATION PLANS

PREL. TRACING _____ DESIGN _____ CHKD. _____

REVISIONS

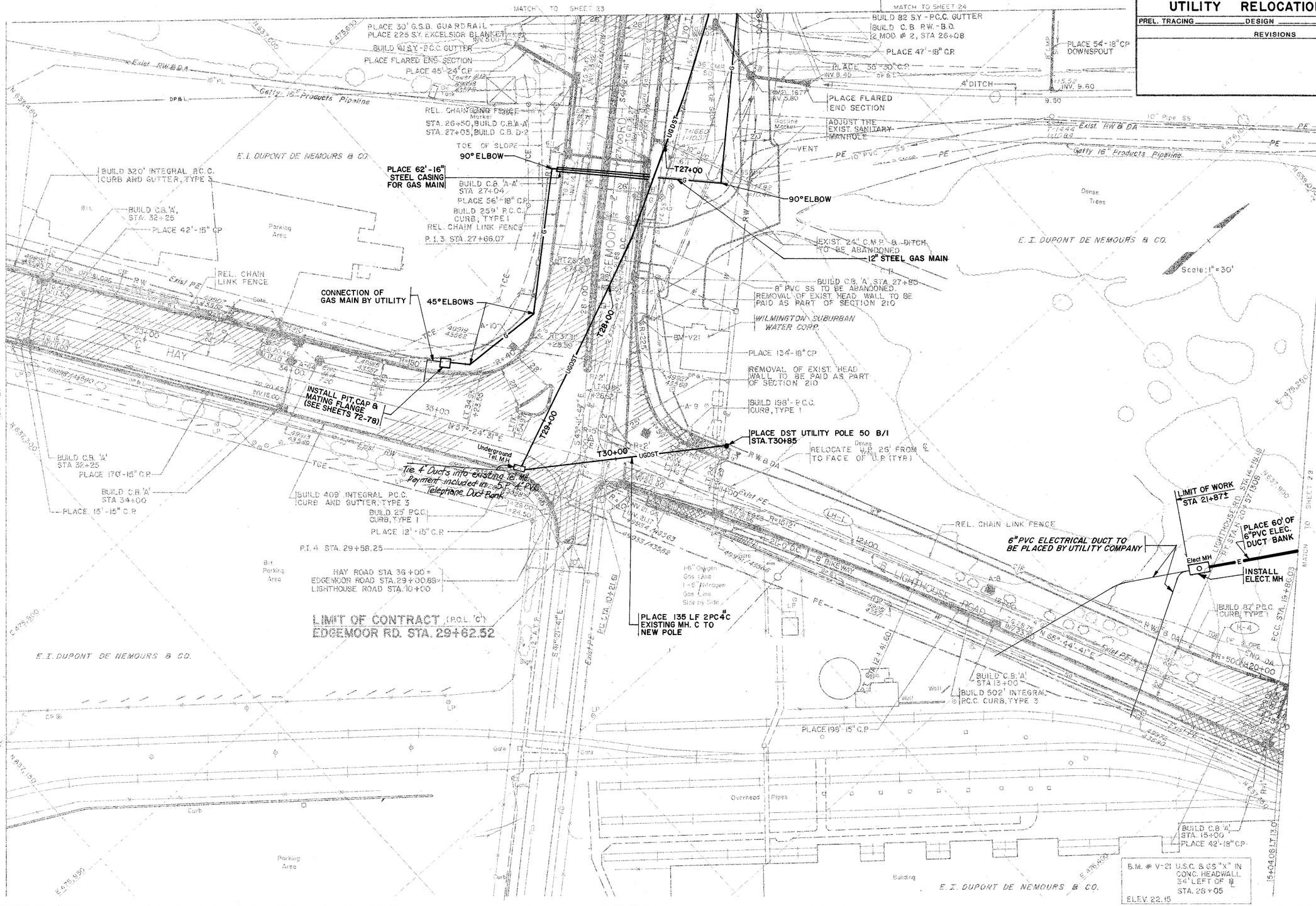

STEINMAN BOYNTON
GRONQUIST & BIRDSALL
CONSULTING ENGINEERS
89 HUDSON STREET
HOBOKEN, N.J. 07030

COUNTY	CONTRACT	FHWA REG. NO.	STATE	FED. AID PROJECT NO.	SHEET NO.	TOTAL SHEETS
NEW CASTLE	~~82-091-04~~	3	DEL	~~IR-495-(3)44~~	56A	351

UTILITY RELOCATION PLANS

PREL. TRACING _____ DESIGN _____ CHKD. _____

REVISIONS

Addendum No. 2 Added Gas Line Data 1-7-86 R.T.C.

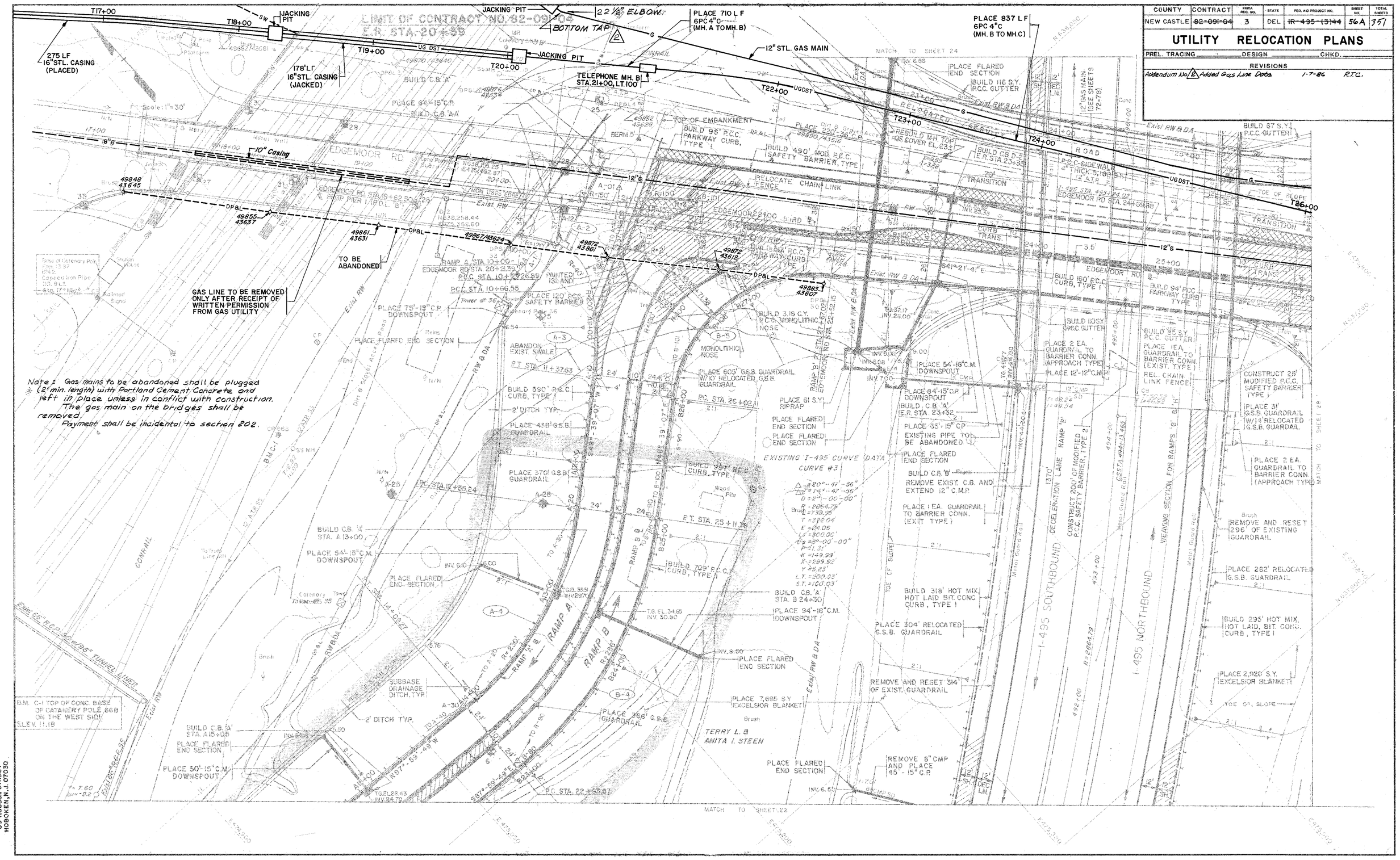

Note: Gas mains to be abandoned shall be plugged (2' min. length) with Portland Cement Concrete and left in place unless in conflict with construction. The gas main on the bridges shall be removed. Payment shall be incidental to section 202.

STEINMAN BOYNTON
GRONQUIST & BIRDSALL
CONSULTING ENGINEERS
89 HUDSON STREET
HOBOKEN, N.J. 07030

COUNTY	CONTRACT	FHWA REG. NO.	STATE	FED. A/D PROJECT NO.	SHEET NO.	TOTAL SHEETS
NEW CASTLE	~~84-021-01~~	3	DEL.	~~M-1137(1)~~	57A	357

UTILITY RELOCATION PLANS

PREL. TRACING _____ DESIGN _____ CHKD. _____

REVISIONS

Addendum No. 12 Added Gas Line Data 1-7-86 R.T.C.

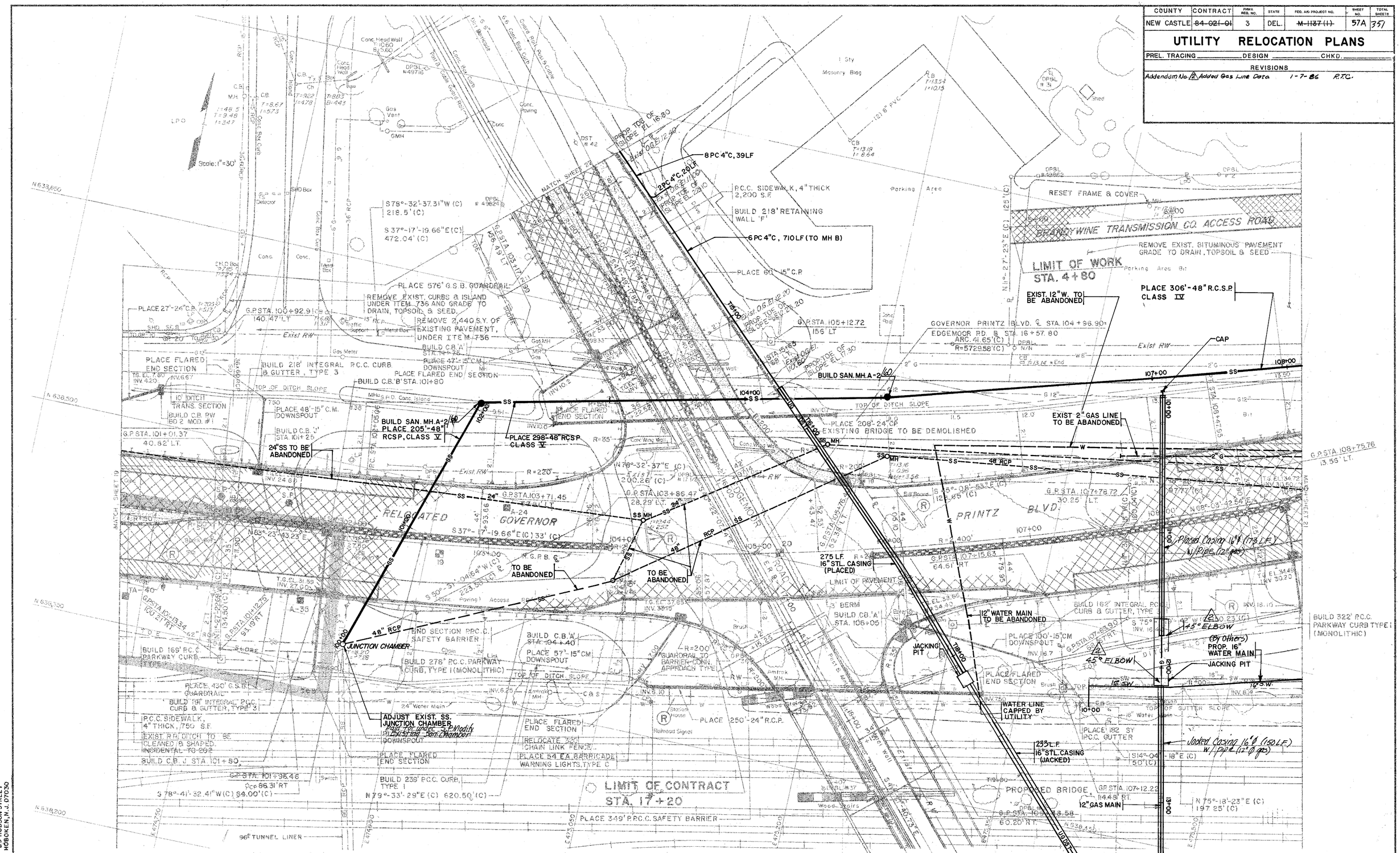

STEINMAN BOYNTON GRONQUIST & BIRDSALL
CONSULTING ENGINEERS
89 HUDSON STREET
HOBOKEN, N.J. 07030

COUNTY	CONTRACT	FHWA REG. NO.	STATE	FED. AID PROJECT NO.	SHEET NO.	TOTAL SHEETS
NEW CASTLE	~~84-021-01~~	3	DEL.	~~M-1137(1)~~	58A	357

UTILITY RELOCATION PLANS

PREL. TRACING _____ DESIGN _____ CHKD. _____

REVISIONS

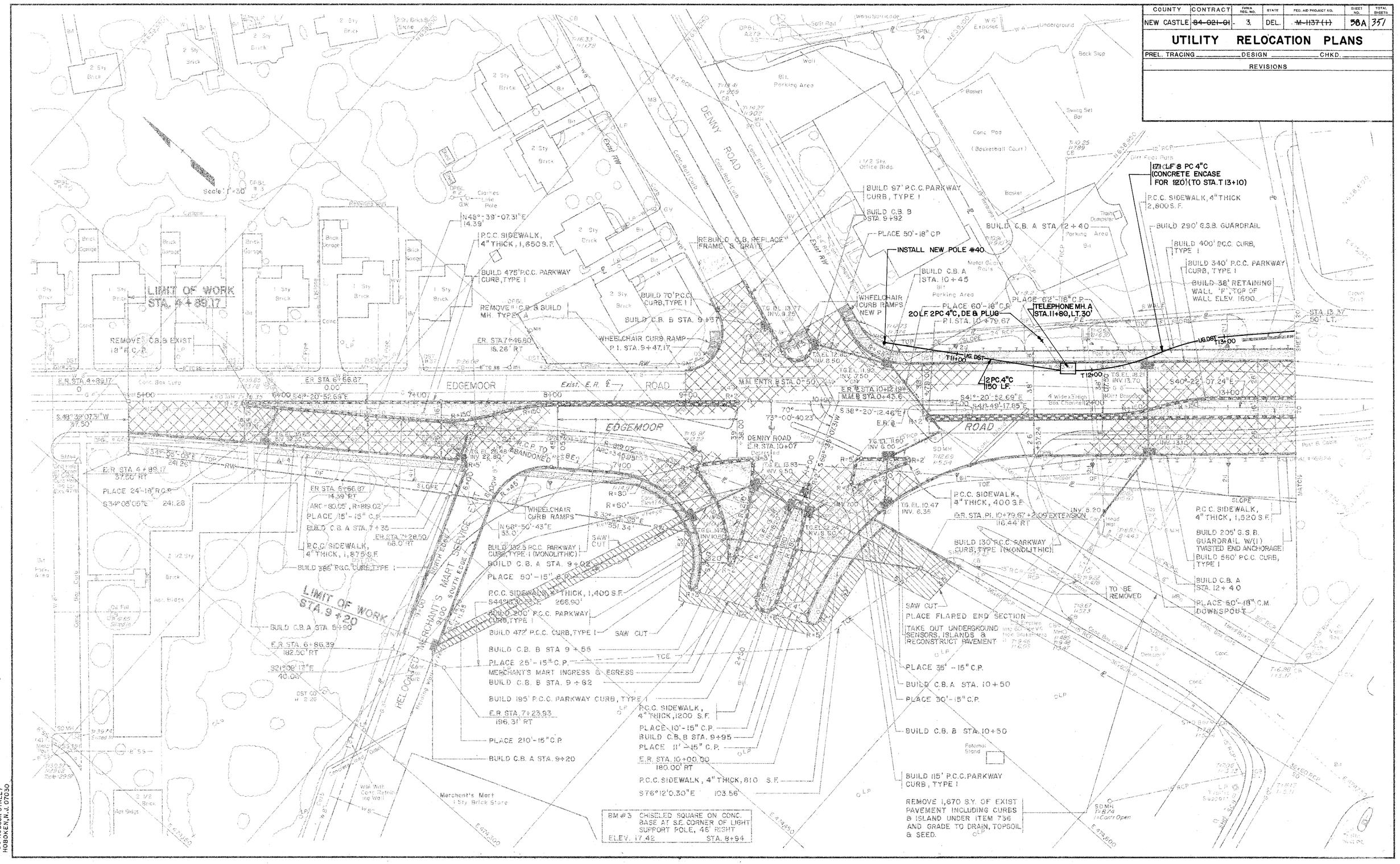

STEINMAN BOYNTON GRONQUIST & BIRDSALL CONSULTING ENGINEERS 89 HUDSON STREET HOBOKEN, N.J. 07030

COUNTY	CONTRACT	FHWA. REG. NO.	STATE	FED. AID PROJECT NO.	SHEET NO.	TOTAL SHEETS
NEW CASTLE	~~82-091-04~~	3	DEL.	~~IR-495-(3)44~~	59A	351

UTILITY RELOCATION PLANS

PREL. TRACING _____ DESIGN _____ CHKD. _____

REVISIONS

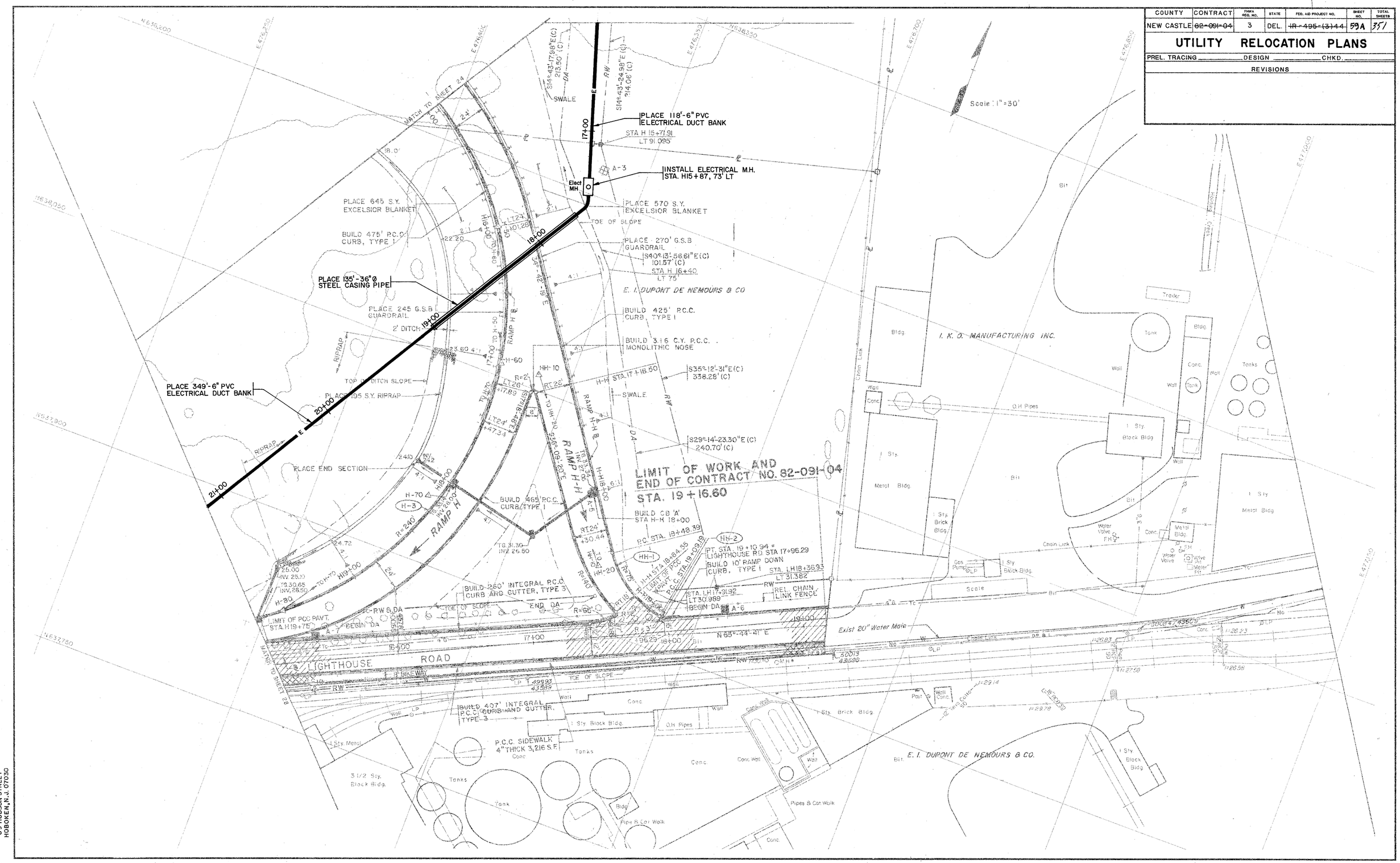

STEINMAN BOYNTON GRONQUIST & BIRDSALL
CONSULTING ENGINEERS
89 HUDSON STREET
HOBOKEN, N.J. 07030

COUNTY	CONTRACT	FHWA REG. NO.	STATE	FED. AID PROJECT NO.	SHEET NO.	TOTAL SHEETS
NEW CASTLE	~~82-091-04~~	3	DEL.	~~IR-495-(3)44~~	60A	351

UTILITY RELOCATION PLANS

PREL. TRACING _____ DESIGN _____ CHKD. _____

REVISIONS

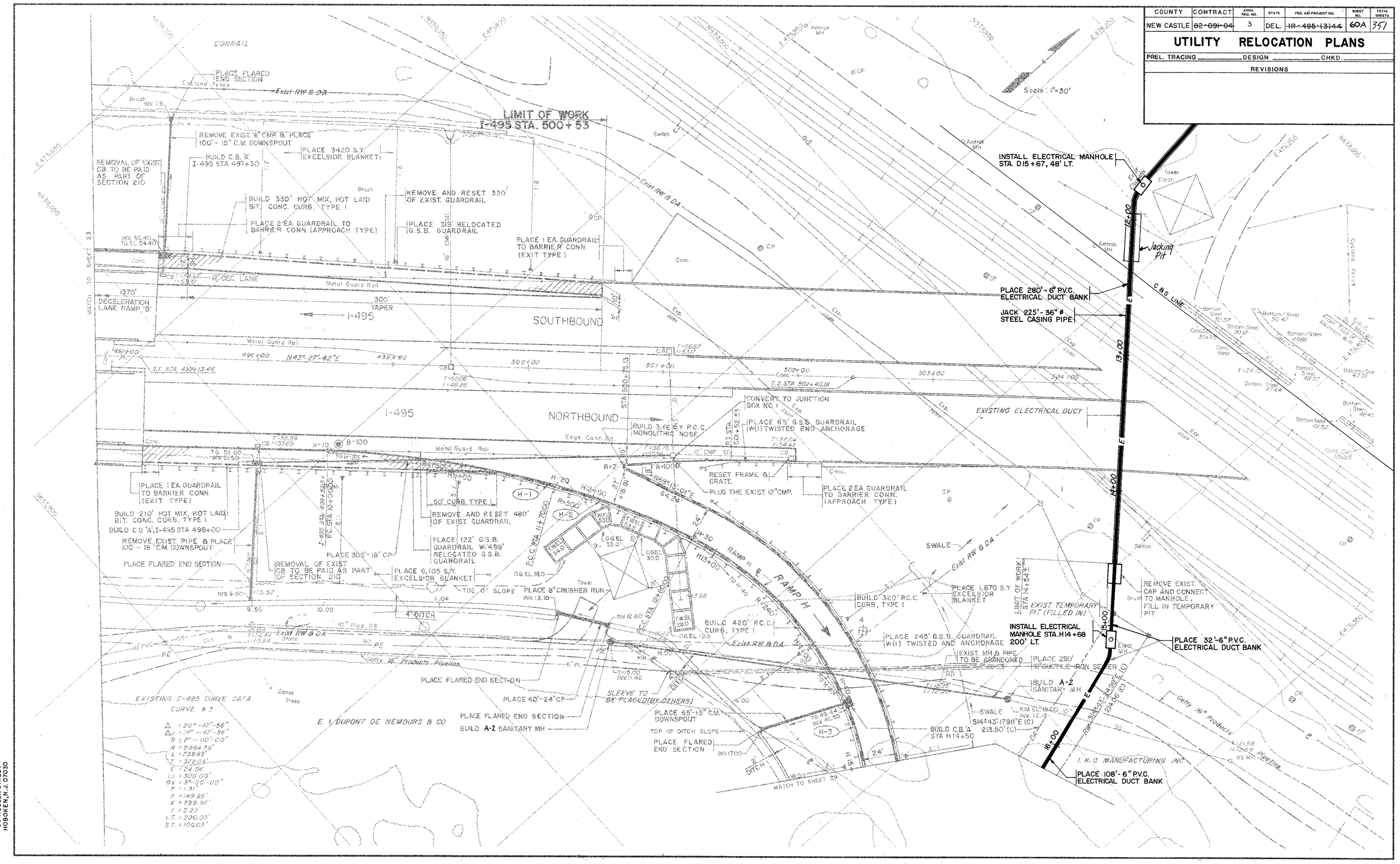

STEINMAN BOYNTON
GRONQUIST & BIRDSALL
CONSULTING ENGINEERS
615 HUDSON STREET
HOBOKEN, N.J. 07030

COUNTY	CONTRACT	FHWA REG. NO.	STATE	FED. AID PROJECT NO.	SHEET NO.	TOTAL SHEETS
NEW CASTLE	~~84-021-04~~	3	DEL.	~~M-1137(1)~~	61A	351

UTILITY RELOCATION PLANS

PREL. TRACING _____ DESIGN _____ CHKD. _____

REVISIONS

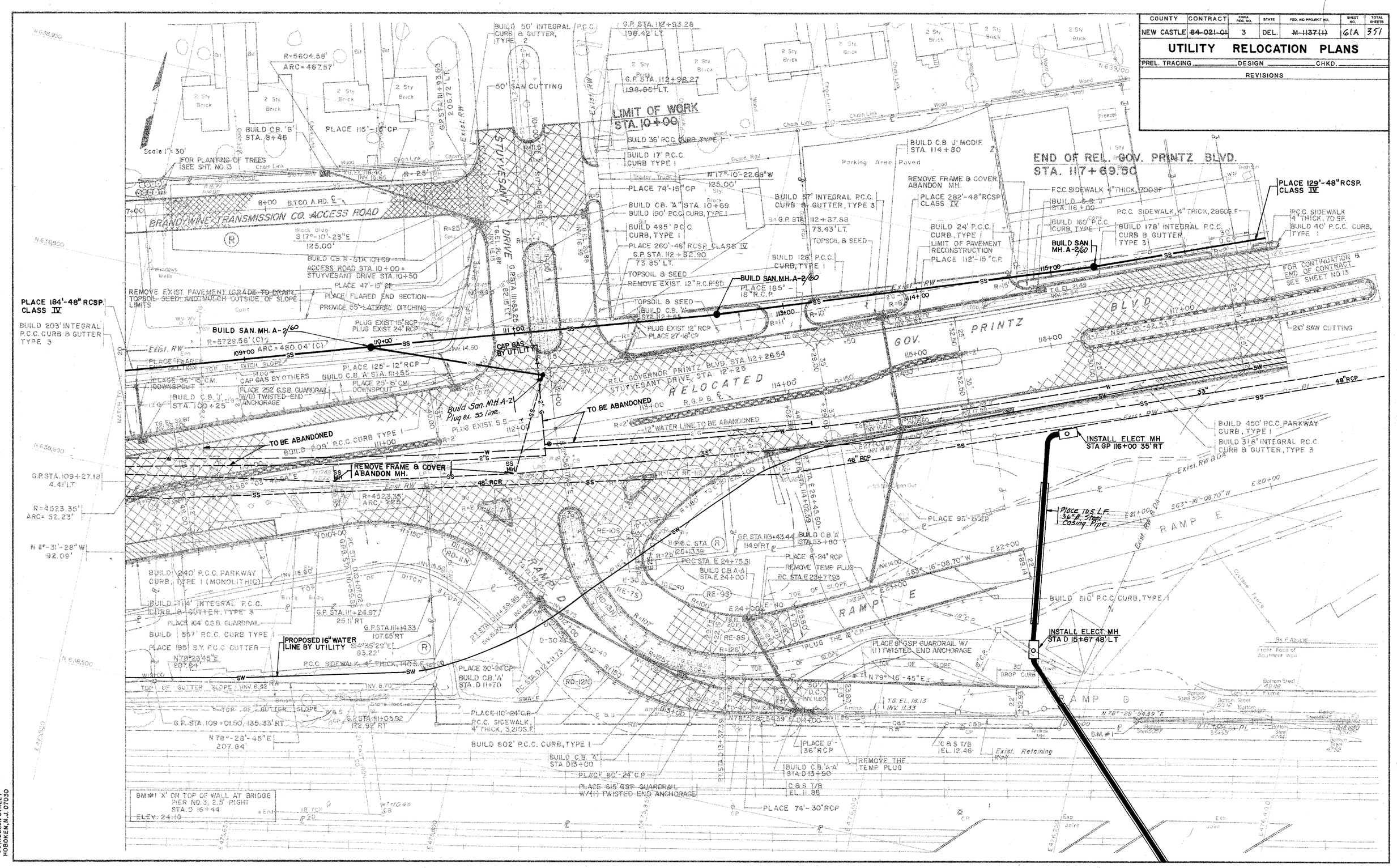

STEINMAN BOYNTON GRONQUIST & BIRDSALL
CONSULTING ENGINEERS
89 HUDSON STREET
HOBOKEN, N.J. 07030

COUNTY	CONTRACT	F. H. A. REG. NO.	STATE	FED. AID PROJECT NO.	SHEET NO.	TOTAL SHEETS
NEW CASTLE	84-021-01	3	DEL	M-1137 (1)	62A	351

UTILITY RELOCATION PLAN

NO.	REVISIONS	BY	DATE

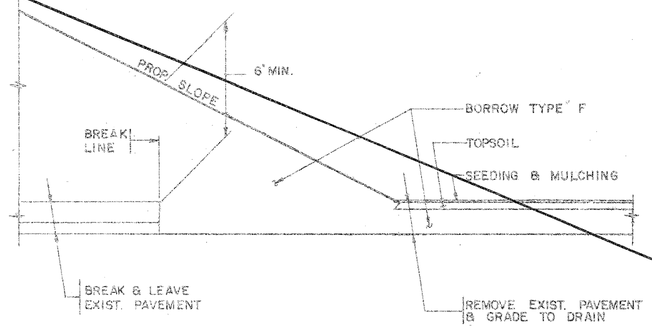

FILL SLOPE AT PAVEMENT REMOVAL AREA

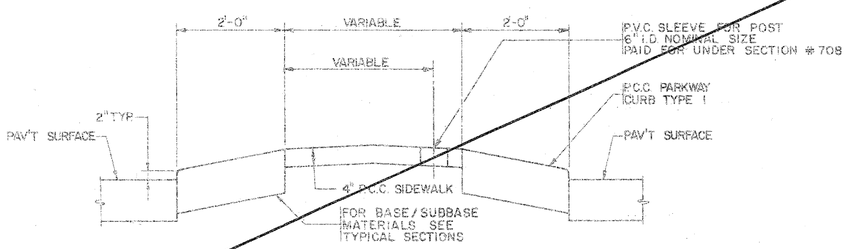

NEW PAVEMENT

ISLAND SEPARATORS AND MEDIANS WITH MOUNTABLE CURBS

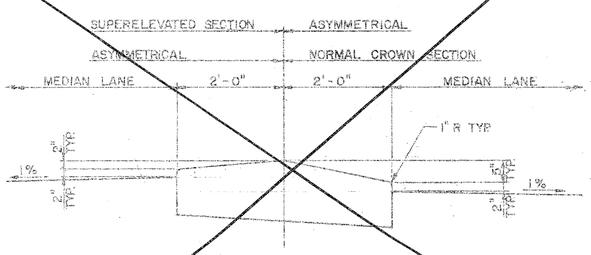

P.C.C. PARKWAY CURB, TYPE I (MONOLITHIC) DETAIL

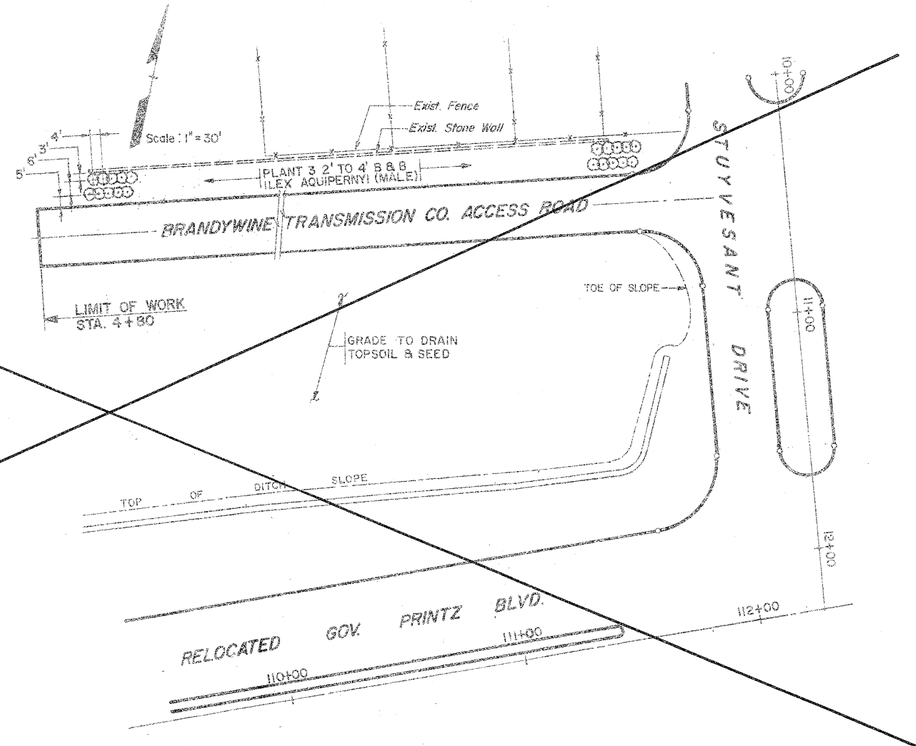

TREE PLANTING

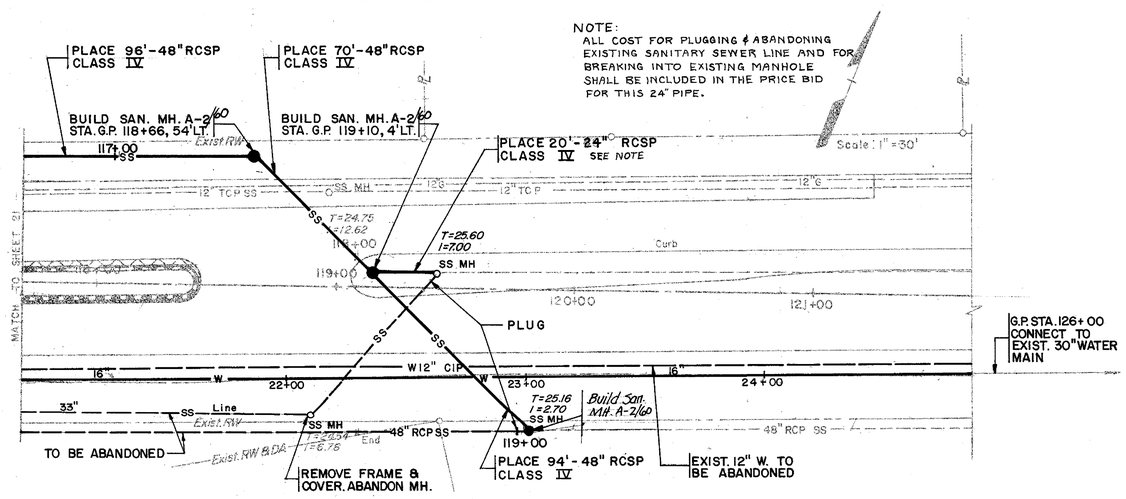

PROPOSED SANITARY SEWER RELOCATION

STEINMAN BOYNTON GRONQUIST & BIRDSALL
CONSULTING ENGINEERS
89 HUDSON STREET
HOBOKEN, N.J. 07030

CONTRACT	COUNTY	FEDERAL AID PROJECT Nº	SHEET Nº	TOTAL SHEETS
~~84-021-01~~	NEW CASTLE	~~M-1137(1)~~	63A	351

DELMARVA POWER
GAS OPERATING DEPARTMENT

RAILROAD PLAN

PIPE DATA

	CARRIER PIPE	CASING PIPE
CONTENTS	NATURAL GAS	CARRIER PIPE
OPERATING PRESSURE	300 PSIG	ATMOSPHERIC
SIZE of PIPE	12"	16"
O. S. DIAMETER	12.750	16.000
I. S. DIAMETER	12.000	15.250
WALL THICKNESS	0.375	0.375
WT. PER LIN. FT.	51.15	62.58
MATERIAL	STEEL	STEEL
SPECIFICATION	A.P.I. - 5L	A.P.I. - 5L
GRADE or CLASS	B	B
TEST PRESSURE	500 PSIG	1230 PSIG *
TYPE of JOINT	WELDED	WELDED
TYPE of COATING	PRITEC	NONE
CATHODIC PROTECTION	~~SEE DETAIL~~ Anodes	~~NONE~~ Anodes △2
METHOD of INSTALLATION	JACKING	BORING
PROCESS of MANUFACTURE	E.R.W.	E.R.W.
SEAL or PROTECTION at END of CASING	SEE DETAIL BELOW	SEE DETAIL BELOW
APPROX WATER LEVEL	0-6 +	

* MILL TESTED ONLY
\+ BELOW EXISTING GRADE

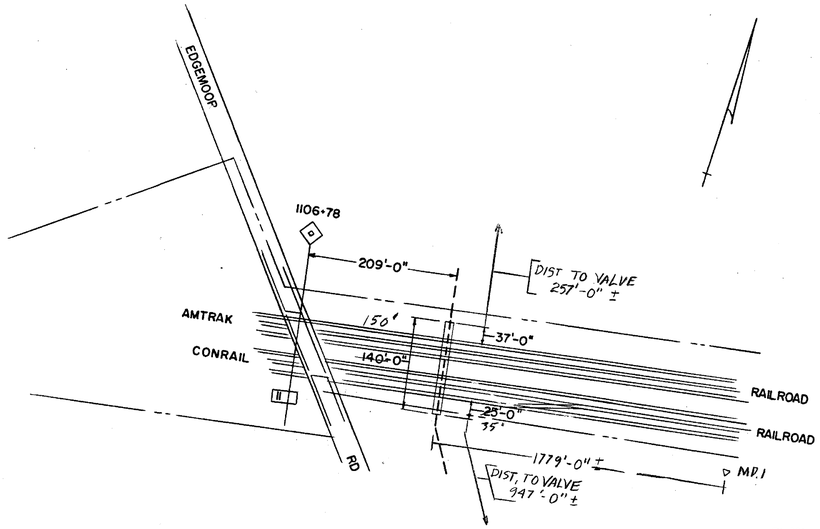

PLAN
SCALE 1" = 100'-0"
PHILA. BALTO. & WASH. R.R. PRINT (V3/6)

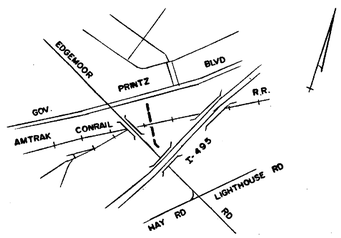

LOCATION MAP SCALE 1" = 800'-0"

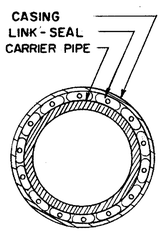

END VIEW OF PIPE & CASING
SCALE: NONE

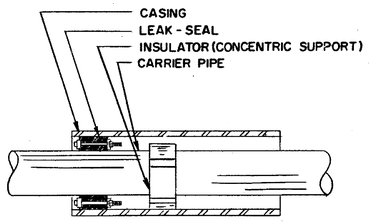

SEAL & INSULATOR DETAIL
SCALE: NONE

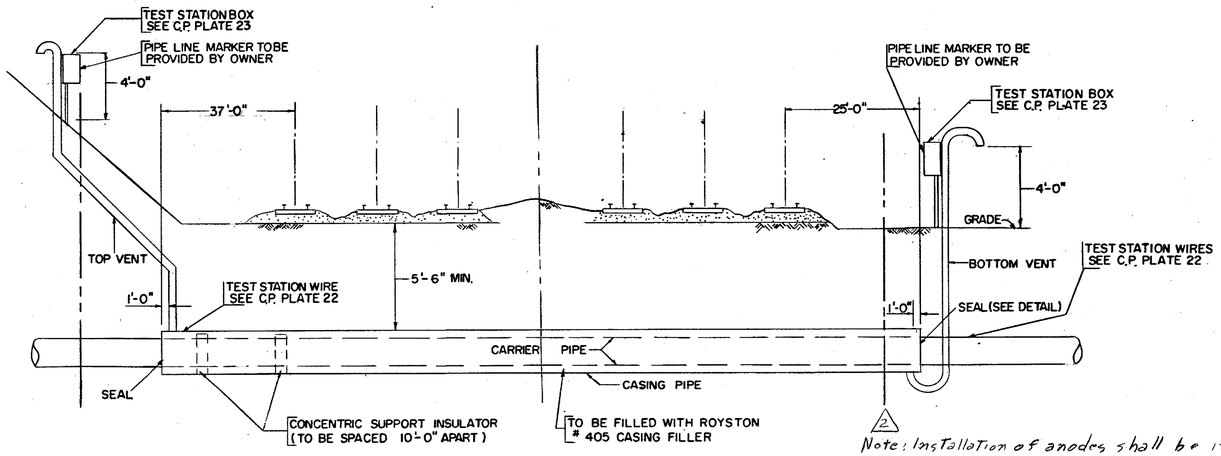

△2 Note: Installation of anodes shall be in Accordance with DP&L-Gas Cathodic Protection - Field Procedure and Installation, Plate 25

ELEVATION
SCALE NONE

REVISIONS
Addendum △2 Added Anodes for Protection Jan 7, 1986 RTC

PREL. TRACING _____ DESIGN L. GENE RECCHIUTI CHKD. GRC [signature]

CONTRACT	COUNTY	FEDERAL AID PROJECT Nº	SHEET Nº	TOTAL SHEETS
~~82-021-01~~	NEW CASTLE	~~M-1137(1)~~	64A	357

PROPOSED GAS MAIN
RELOCATION DETAIL SHEET

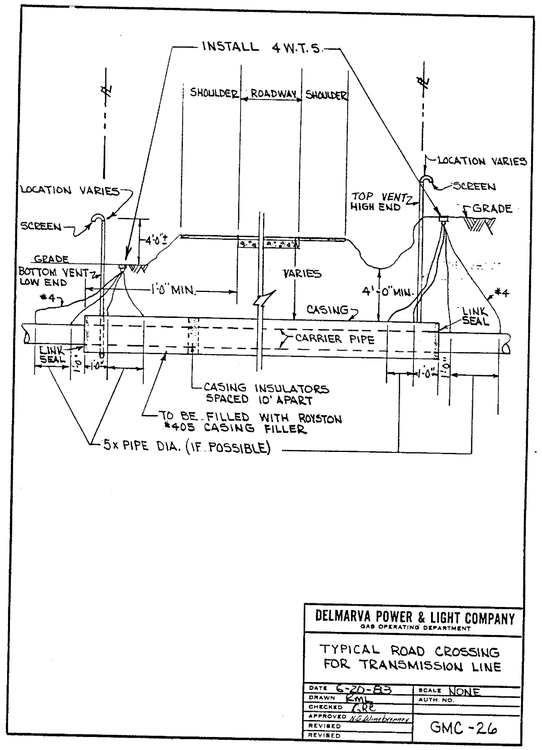

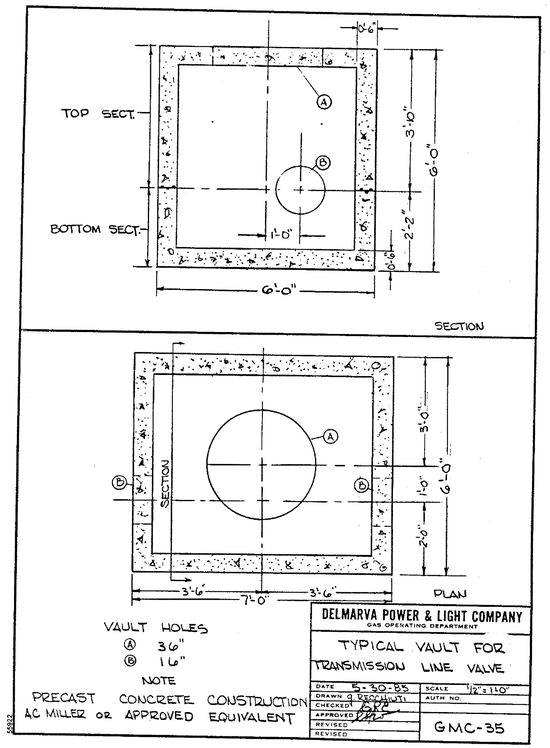

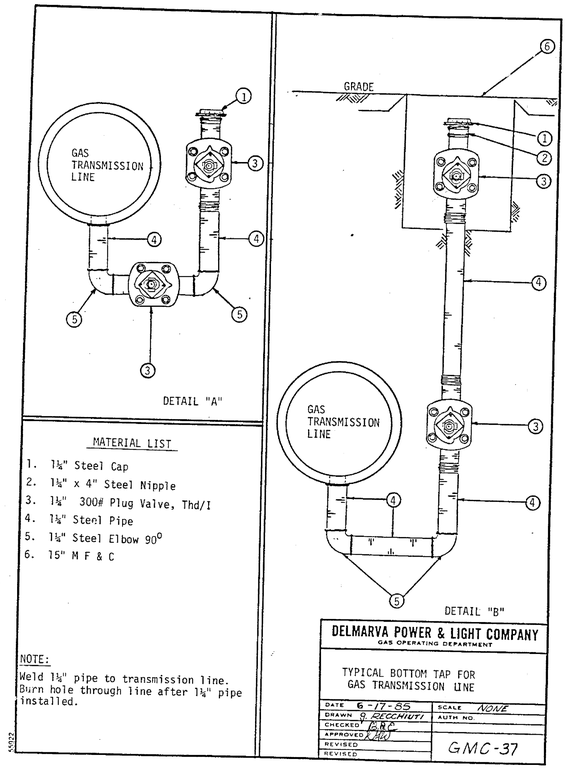

MATERIAL LIST

1. 1¼" Steel Cap
2. 1¼" x 4" Steel Nipple
3. 1¼" 300# Plug Valve, Thd/I
4. 1¼" Steel Pipe
5. 1¼" Steel Elbow 90°
6. 15" M F & C

NOTE:
Weld 1¼" pipe to transmission line. Burn hole through line after 1¼" pipe installed.

REVISIONS

DESIGN L. GENE RECCHIUTI CHKD. GRR 8-2-85

PREL. TRACING

CONTRACT	COUNTY	FEDERAL AID PROJECT NO.	SHEET No.	TOTAL SHEETS
~~82-021-01~~	NEW CASTLE	~~M-1137(1)~~	68A	351

LINE VALVE INSTALLATION

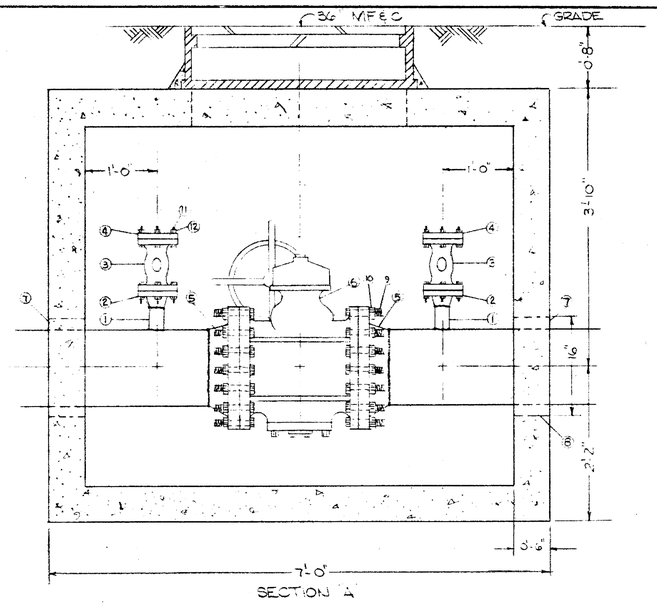

SECTION "A"

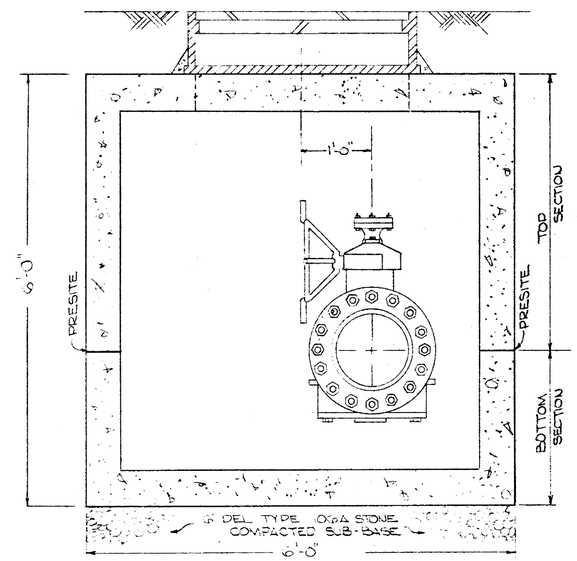

SECTION "B"

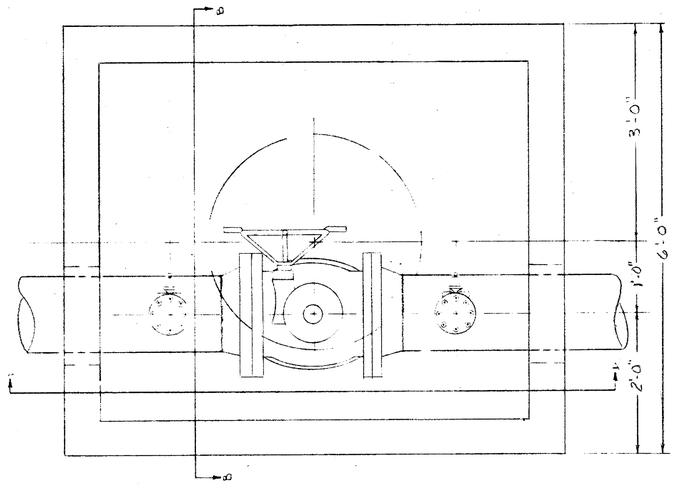

PLAN

MATERIAL LISTING

1. 2" STEEL PIPE 4" LONG
2. 2" 300 LB WELD NECK FLANGE
3. 2" 300 LB CARBON STEEL VALVE
4. 2" 300 LB BLIND FLANGE
5. 12" 300 LB WELD NECK FLANGE
6. 12" 300 LB PLUG VALVE
7. 12" × 16" LINK SEALS
8. 16" × 9" STEEL SLEEVE
9. STUD CONTINUOUS THREAD 1 1/8" × 7" PLAIN
10. NUT 2-N. BLK 1 1/8
11. STUD CONTINUOUS THREAD 5/8" × 3 3/4" PLAIN
12. NUT 2-N BLK 5/8"

SEE GMC-35 FOR NUT DETAIL

DELMARVA POWER & LIGHT COMPANY
GAS OPERATING DEPARTMENT

TYPICAL 12" TRANSMISSION LINE VALVE INSTALLATION

DATE 6-17-85	SCALE 1"=1'-0"
DRAWN G. RECCHIUTI	AUTH. NO.
CHECKED GRP	GMC - 36
APPROVED	
REVISED	
REVISED	

REVISIONS

DESIGN L. GENE RECCHIUTI CHKD. GRP

PREL. TRACING

Brandywine Reproduction

CONTRACT	COUNTY	FEDERAL AID PROJECT Nº	SHEET Nº	TOTAL SHEETS
~~82-021-01~~	NEW CASTLE	~~M-1137(1)~~	66A	351

GAS MAIN PROFILE

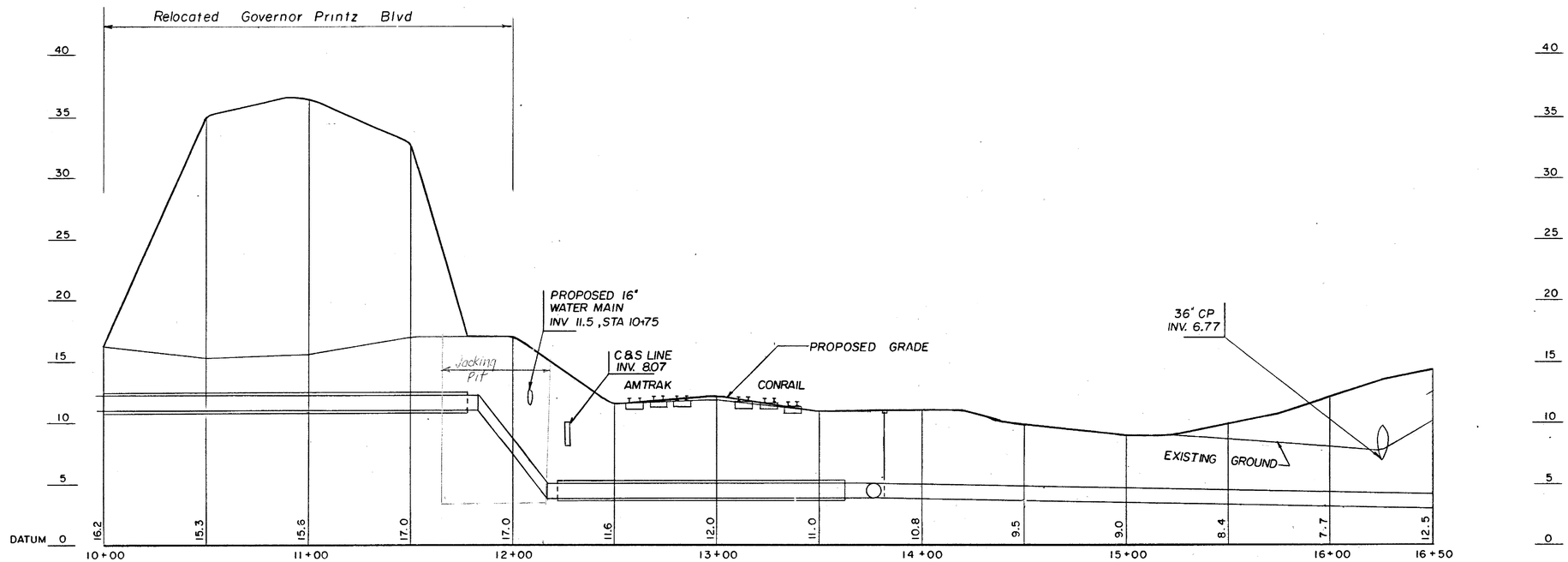

GAS MAIN PROFILE
ALONG EDGEMOOR ROAD

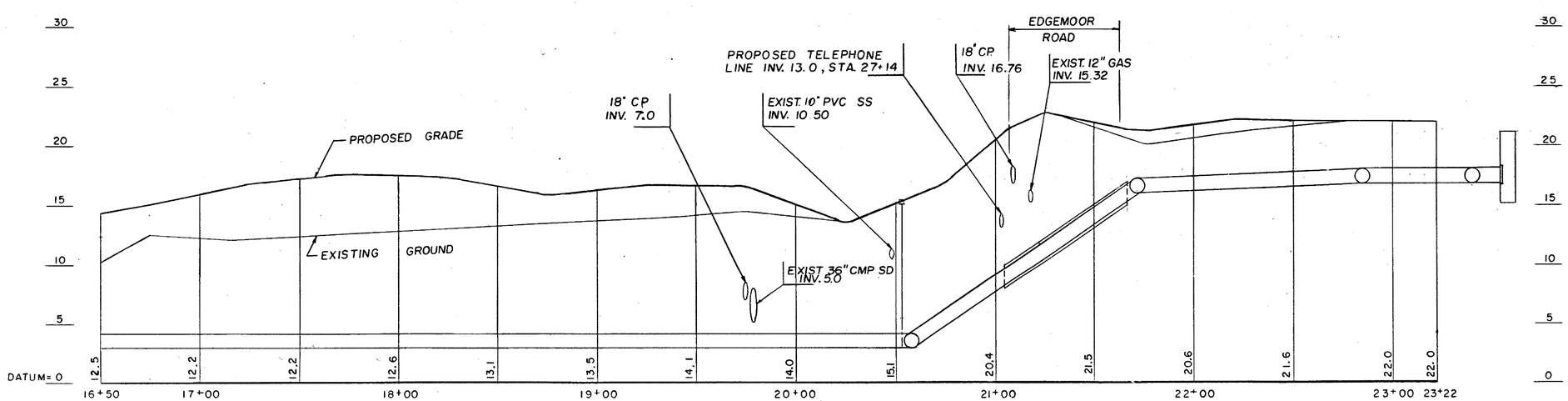

GAS MAIN PROFILE
ALONG EDGEMOOR ROAD

REVISIONS

PREL. TRACING ____ DESIGN L. GENE RECCHIUTI CHKD. GRC 8/25/82

COUNTY	CONTRACT	P. R. A. REG. NO.	STATE	FED. AID PROJECT NO.	SHEET NO.	TOTAL SHEETS
NEW CASTLE	~~84-021-01~~	3	DEL.	~~M-1137(1)~~	67A	351

UTILITY RELOCATION ELECTRIC

NO.	REVISIONS	BY	DATE

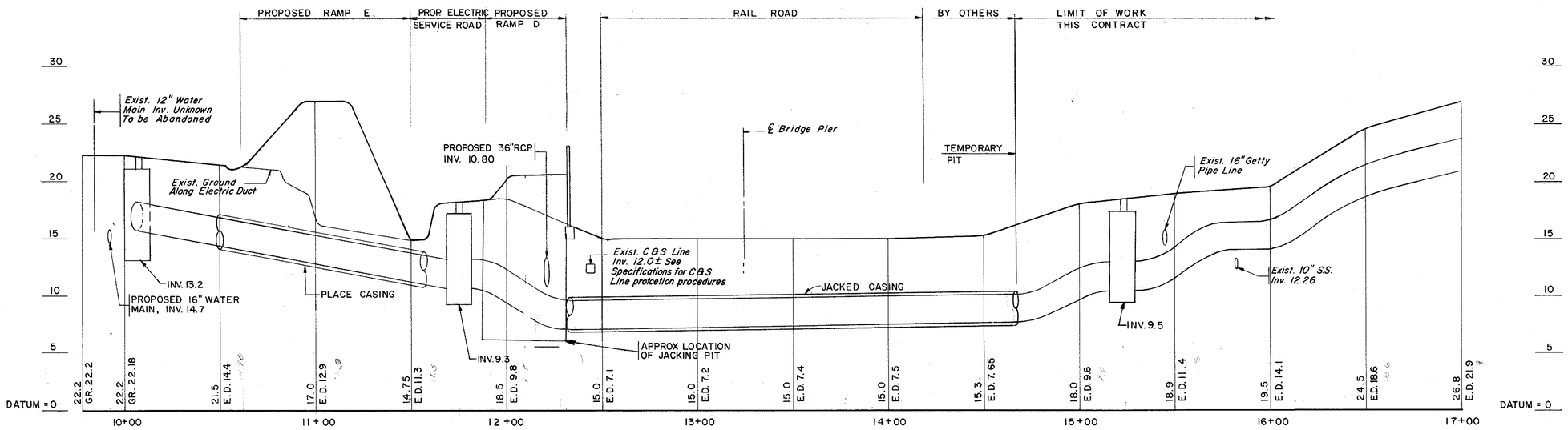

ELECTRIC DUCT PROFILE

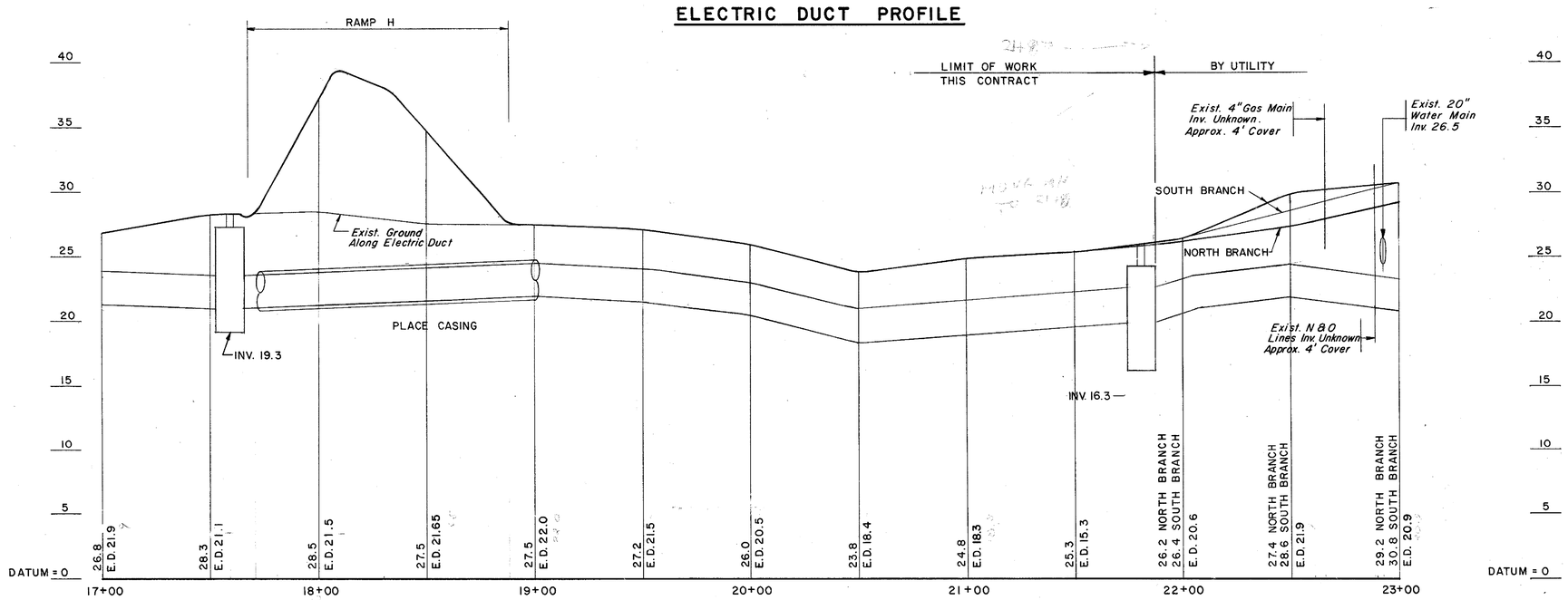

ELECTRIC DUCT PROFILE

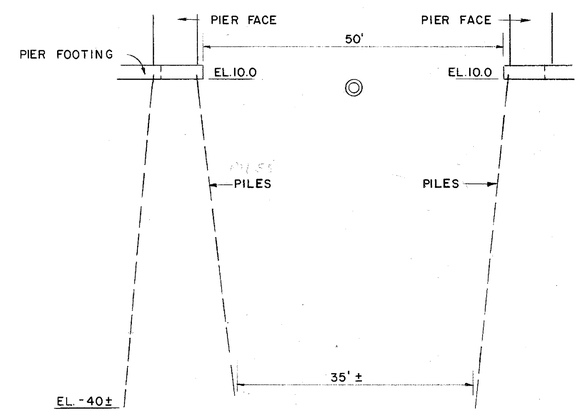

ELEVATION A-A

SCALE 3/32" = 1'-0"

STEINMAN BOYNTON GRONQUIST & BIRDSALL
CONSULTING ENGINEERS
83 HUDSON STREET
HOBOKEN, N.J. 07030

COUNTY	CONTRACT	FHWA REG. NO.	STATE	FED. AID PROJECT NO.	SHEET NO.	TOTAL SHEETS
NEW CASTLE	84-021-01	3	DEL.	M-1137 (1)	68A	357

UTILITY RELOCATION
SEWER

PREL. TRACING _____ DESIGN _____ CHKD. _____

REVISIONS

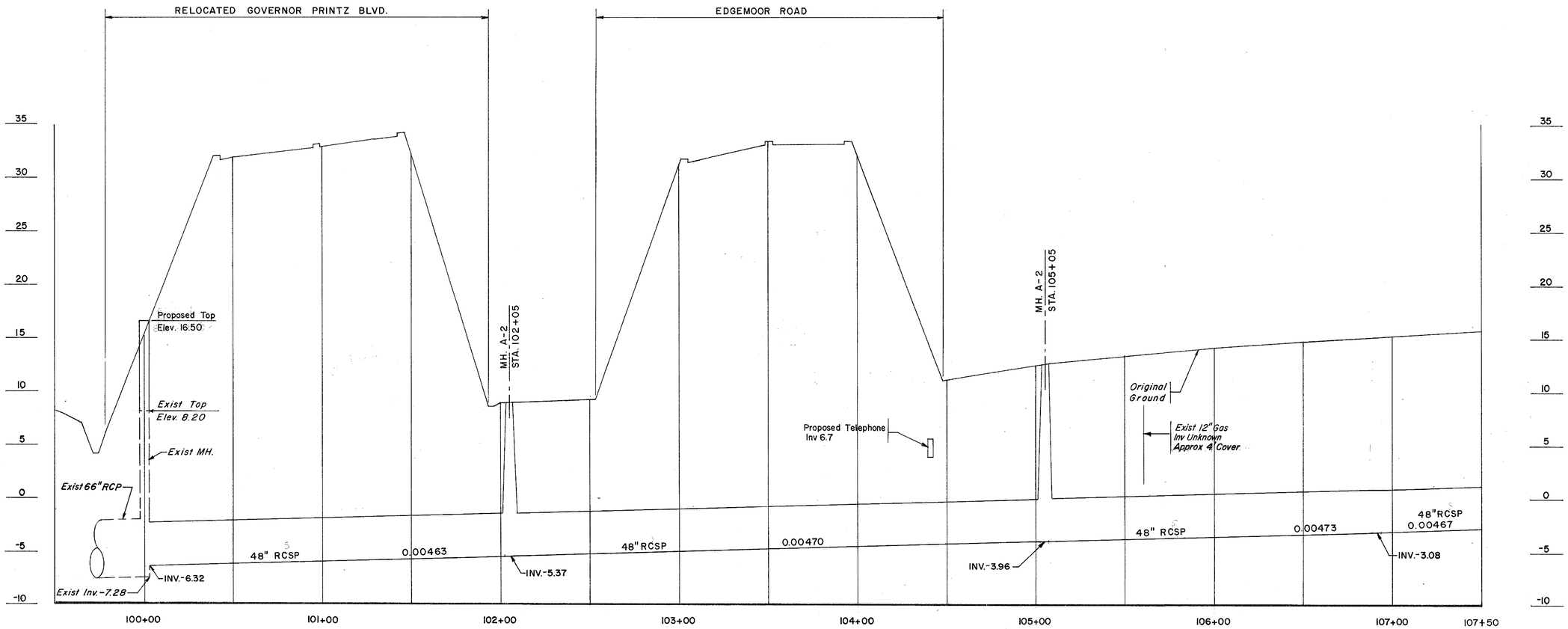

PROPOSED RELOCATION SANITARY SEWER PROFILE

STEINMAN BOYNTON
GRONQUIST & BIRDSALL
CONSULTING ENGINEERS
89 HUDSON STREET
HOBOKEN, N.J. 07030

COUNTY	CONTRACT	FHWA REG. NO.	STATE	FED. AID PROJECT NO.	SHEET NO.	TOTAL SHEETS
NEW CASTLE	~~84-021-01~~	3	DEL.	~~M-1137(1)~~	69A	

UTILITY RELOCATION
SEWER

PREL. TRACING _____ DESIGN _____ CHKD. _____

REVISIONS

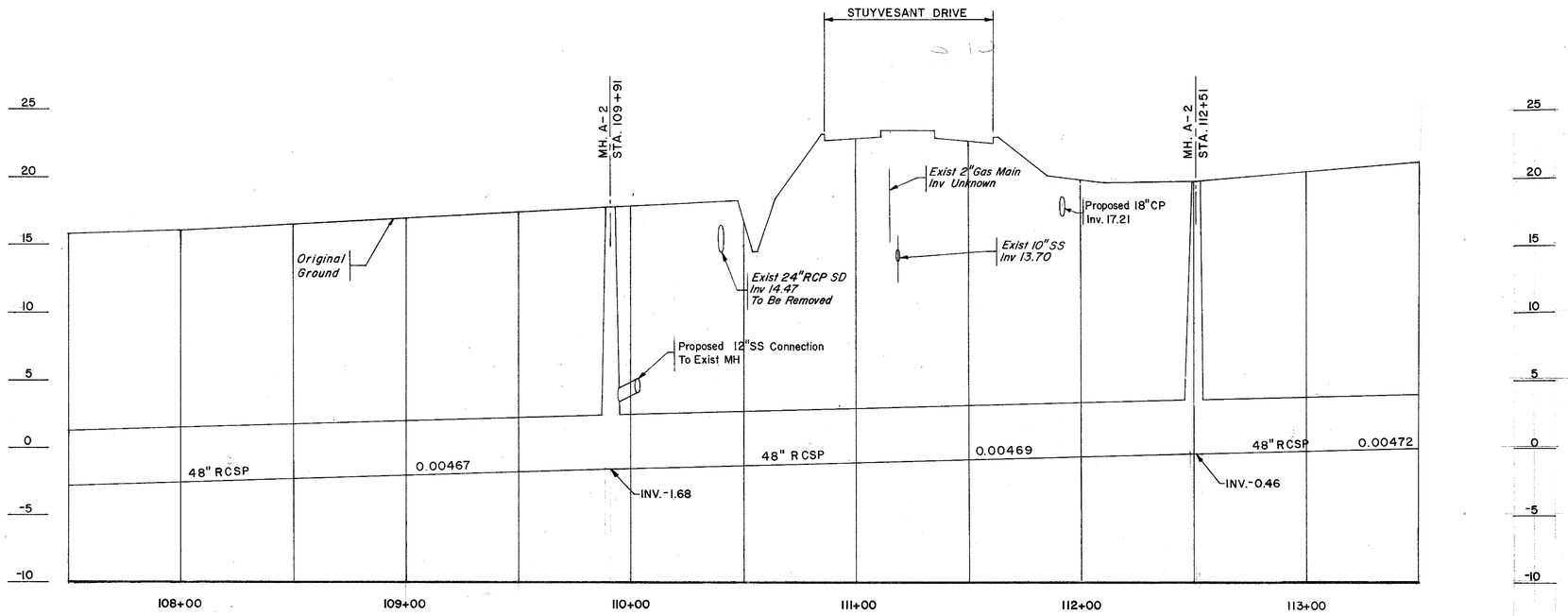

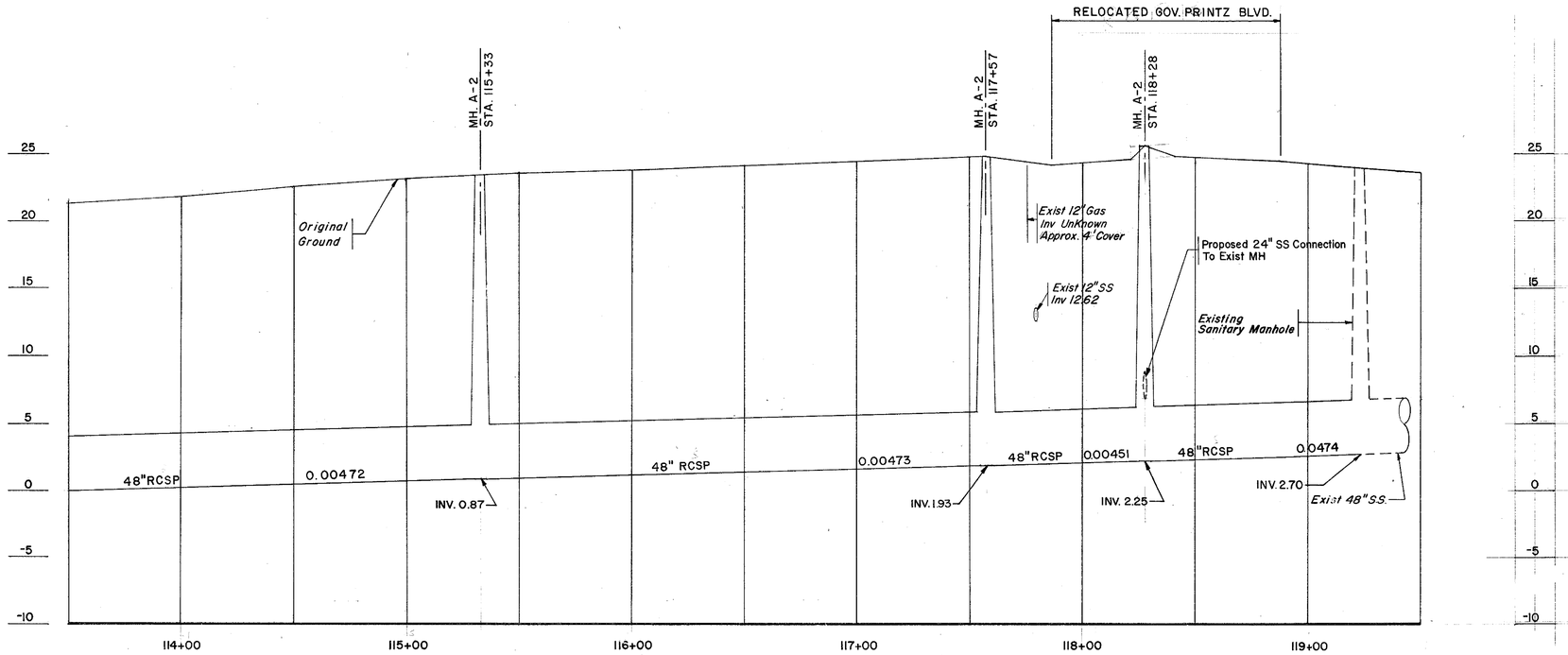

PROPOSED RELOCATION SANITARY SEWER PROFILE

STEINMAN BOYNTON
GRONQUIST & BIRDSALL
CONSULTING ENGINEERS
89 HUDSON STREET
HOBOKEN, N.J. 07030

COUNTY	CONTRACT	P. B. A. REG. NO.	STATE	FED. AID PROJECT NO.	SHEET NO.	TOTAL SHEETS
NEW CASTLE	~~84-021-01~~	3	DEL.	~~M-1137(1)~~	70A	37

UTILITY RELOCATION TELEPHONE

PREL. TRACING _____ DESIGN _____ CHKD. _____

REVISIONS

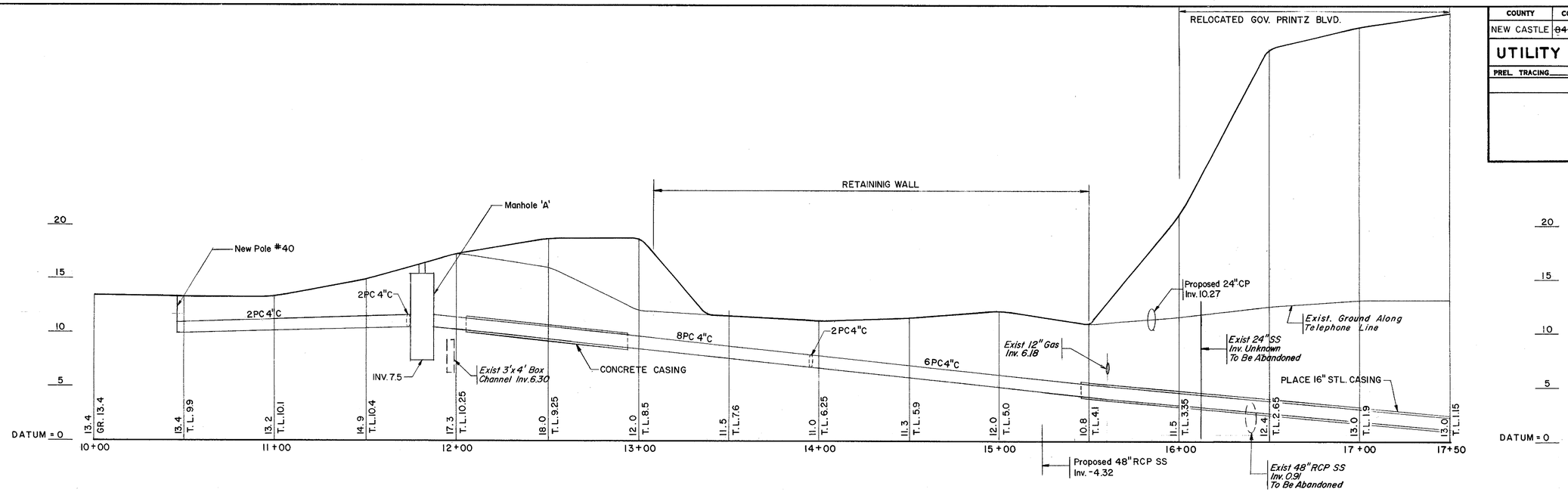

TELEPHONE LINE PROFILE

ALONG EDGEMOOR ROAD

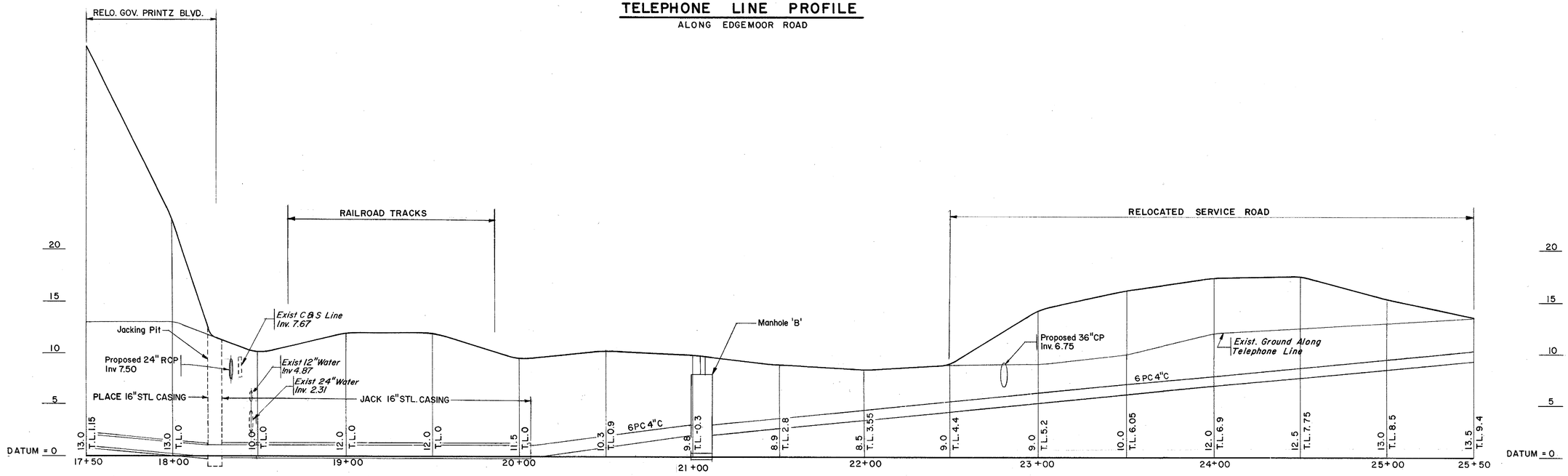

TELEPHONE LINE PROFILE

ALONG EDGEMOOR ROAD

STEINMAN, BOYNTON
GRONQUIST & BIRDSALL
CONSULTING ENGINEERS
89 HUDSON STREET
HOBOKEN, N.J. 07030

COUNTY	CONTRACT	P. R. A. REG. NO.	STATE	FED. AID PROJECT NO.	SHEET NO.	TOTAL SHEETS
NEW CASTLE	~~84-021-01~~	3	DEL	~~M-1137(1)~~	71A	357

UTILITY RELOCATION TELEPHONE

NO.	REVISIONS	BY	DATE

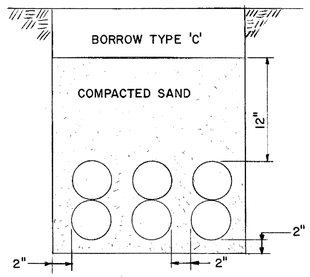

TYPICAL TRENCH INSTALLATION
NTS

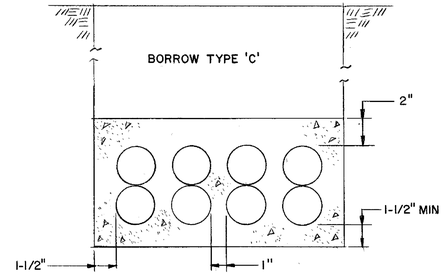

TYPICAL CONCRETE INSTALLATION
NTS

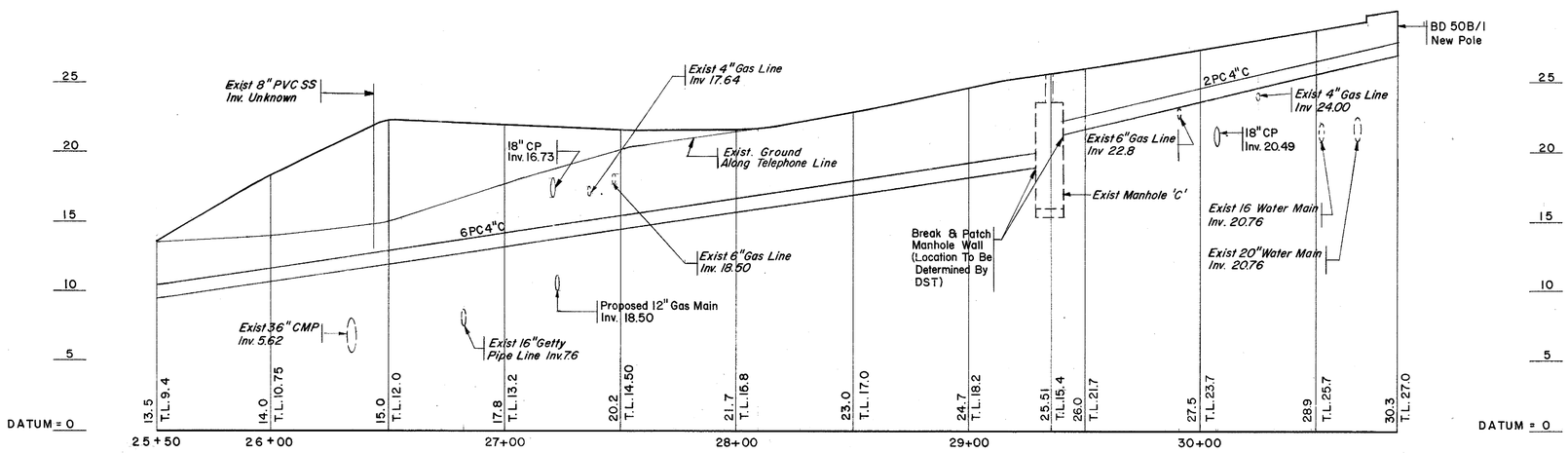

TELEPHONE LINE PROFILE
ALONG EDGEMOOR ROAD

STEINMAN BOYNTON GRONQUIST & BIRDSALL
CONSULTING ENGINEERS
89 HUDSON STREET
HOBOKEN, N.J. 07030

COUNTY	CONTRACT	P. B. A. REG. NO.	STATE	FED. AID PROJECT NO.	SHEET NO.	TOTAL SHEETS
NEW CASTLE	~~84-021-01~~	3	DEL.	~~M-1137(1)~~	72A	357

UTILITY RELOCATION WATER

NO.	REVISIONS	BY	DATE

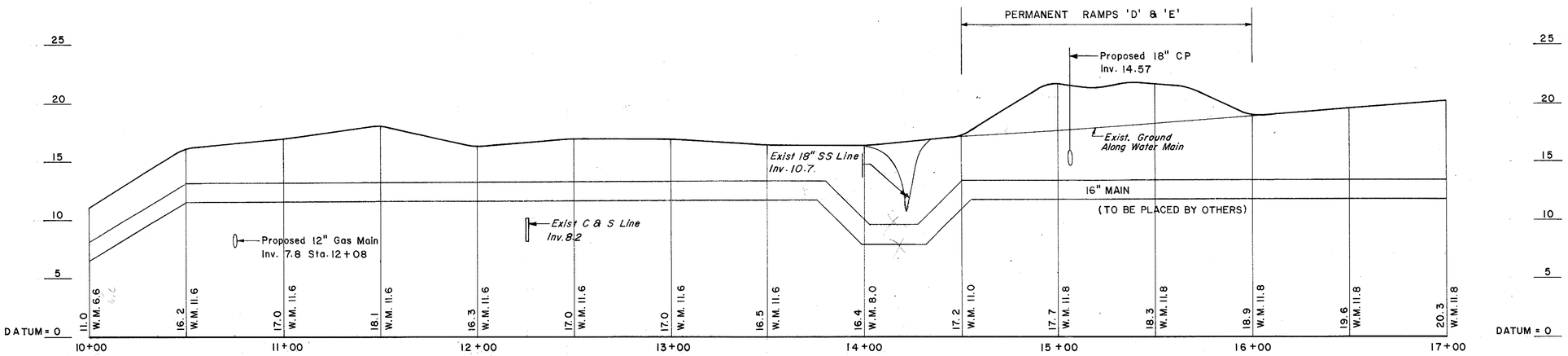

WATER MAIN PROFILE

ALONG RELOCATED GOVERNOR PRINTZ BLVD.

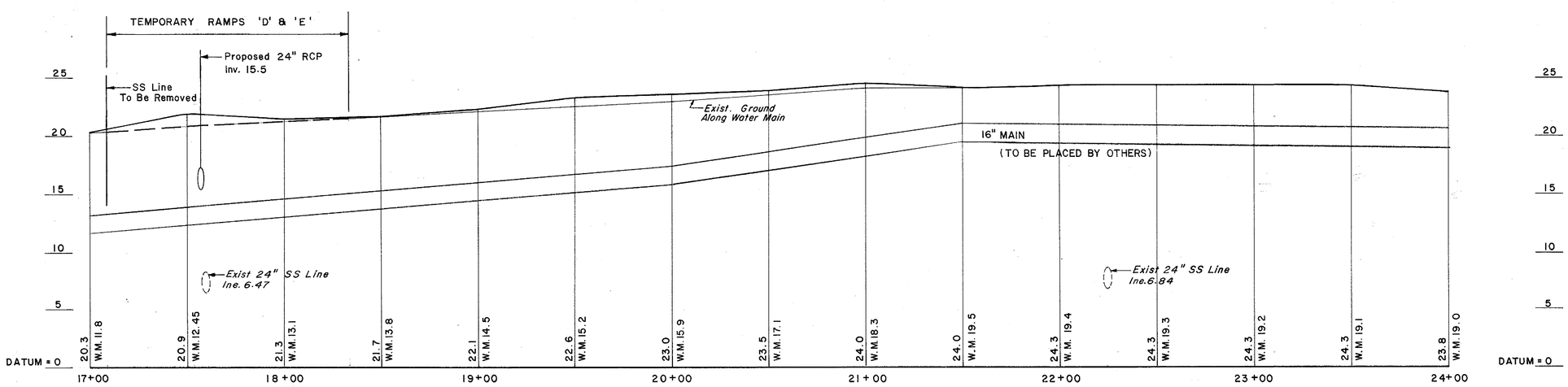

WATER MAIN PROFILE

ALONG RELOCATED GOVERNOR PRINTZ BLVD.

STEINMAN BOYNTON
GRONQUIST & BIRDSALL
CONSULTING ENGINEERS
89 HUDSON STREET
HOBOKEN, N.J. 07030

COUNTY	CONTRACT	P. R. A. REG. NO.	STATE	FED. AID PROJECT NO.	SHEET NO.	TOTAL SHEETS
NEW CASTLE	~~84-021-01~~	3	DEL	~~M-1137(1)~~	73A	351

UTILITY RELOCATION
WATER

NO.	REVISIONS	BY	DATE

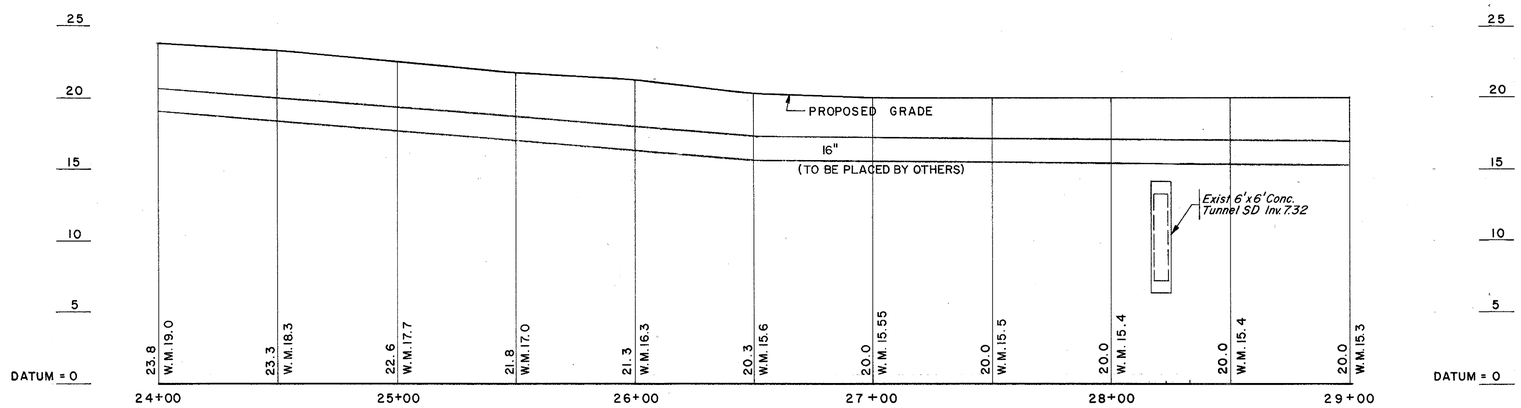

WATER MAIN PROFILE

ALONG RELOCATED GOVERNOR PRINTZ BLVD.

STEINMAN BOYNTON
GRONQUIST & BIRDSALL
CONSULTING ENGINEERS
83 HUDSON STREET
HOBOKEN, N.J. 07030

COUNTY	CONTRACT	F.A.P. REG. NO.	STATE	FED. AID.
New Castle	81-071-01	2	DEL	BRM 123

SIGNING & STRIPING

NO.	REVISIONS

Legend:
- Indicates Sample Borings Performed by Del. DOT, between February 4, 1984 and May 9, 1984
- Indicates Location of 8" o.d. Hollow Stem Auger Probes Performed by Del. DOT during April, 1984

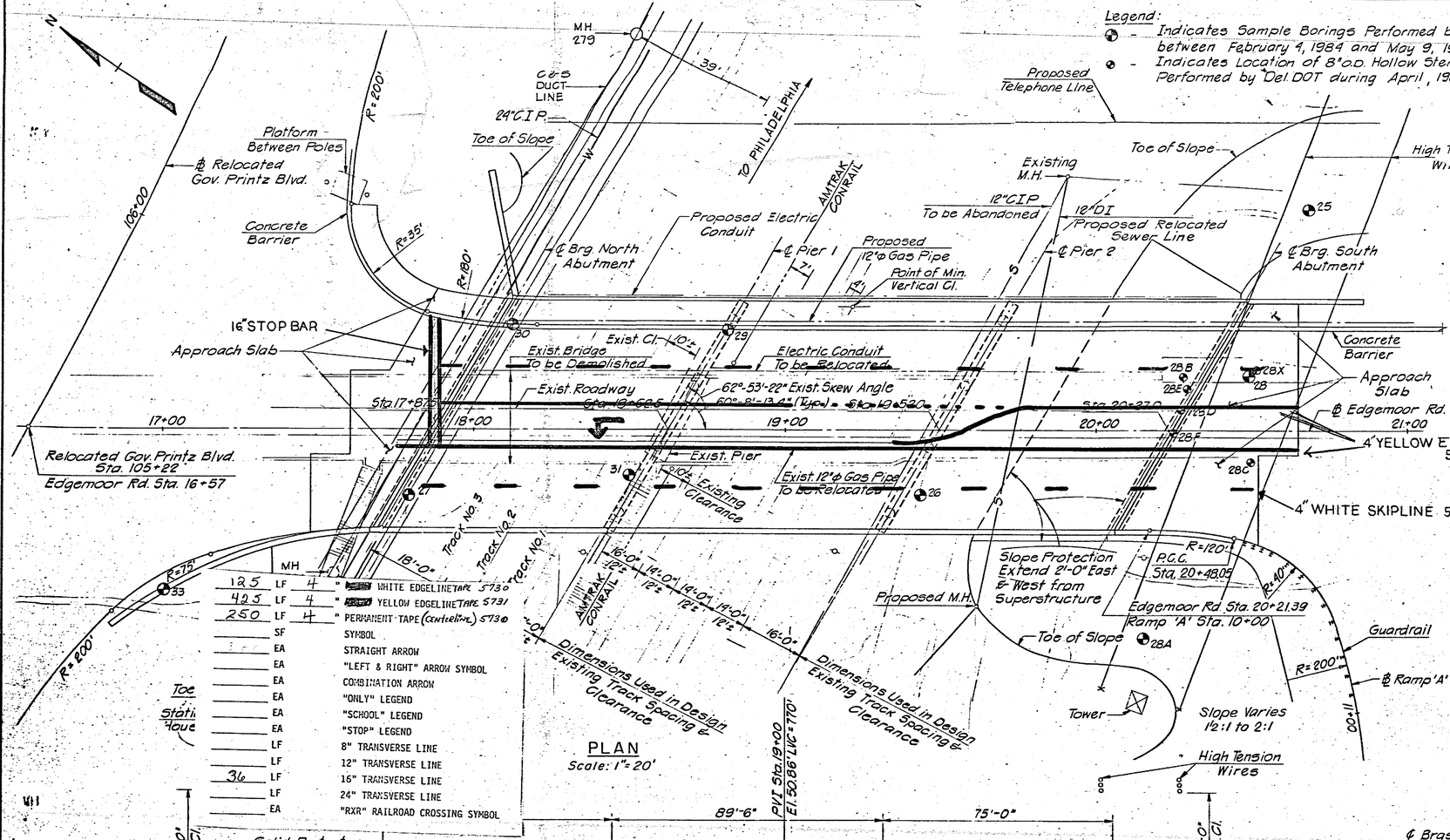

125	LF	4"	WHITE EDGELINE TAPE 5730
425	LF	4"	YELLOW EDGELINE TAPE 5731
250	LF	4"	PERMANENT TAPE (centerline) 5730
	SF		SYMBOL
	EA		STRAIGHT ARROW
	EA		"LEFT & RIGHT" ARROW SYMBOL
	EA		COMBINATION ARROW
	EA		"ONLY" LEGEND
	EA		"SCHOOL" LEGEND
	EA		"STOP" LEGEND
	LF		8" TRANSVERSE LINE
	LF		12" TRANSVERSE LINE
36	LF		16" TRANSVERSE LINE
	LF		24" TRANSVERSE LINE
	EA		"RXR" RAILROAD CROSSING SYMBOL

PLAN
Scale: 1"=20'

ELEVATION
Scale: 1"=20'

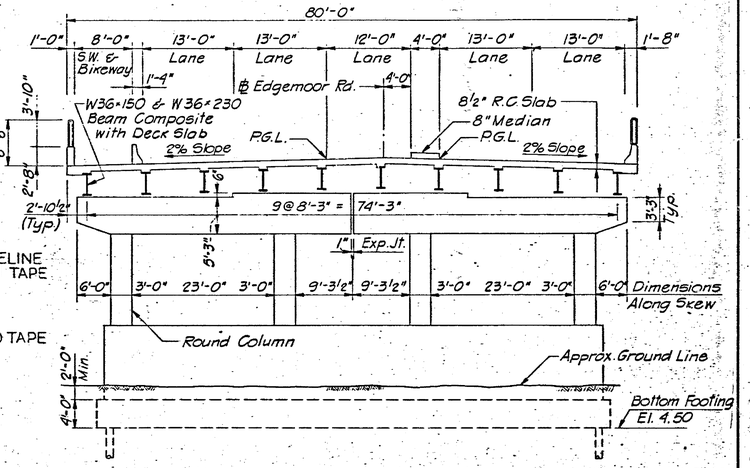

TYPICAL SECTION
Scale: 1"=10'

General Notes:

Design Specifications — AASHTO 1983

Design Loadings —
A - Live Load: HS 20-44, Tandem 24" Axles at 4' or 35 Ton Type 3 Unit Vehicle whichever Governs
B - Dead Load: 25 p.s.f. Provision for 2" Wearing Surface
C - Live Load Deflection: Max 1/1000 of Span Length

Design Stresses —
1. Concrete Design
   A) - Compressive Strength (F'c) = 4500 p.s.i.
   B) - Compressive Stress on Beams Bending (fc) = 1800 p.s.i.
   C) - Compressive Stress on Beams Bending (fc) = 1400 p.s.i. (Deck Slab only)
2. Reinforcement Steel
   A) - ASTM A 615 Grade 60
   B) - Tensile Stress (fs) = 24,000 p.s.i.
3. Structural Steel - A.S.T.M. A 588 (Unpainted)
4. Substructure - Supported by Steel HP 12×53 Piles.
5. Reinforcement Cover - The Minimum Cover for Bar Reinforcement shall be 2" Unless otherwise Noted.

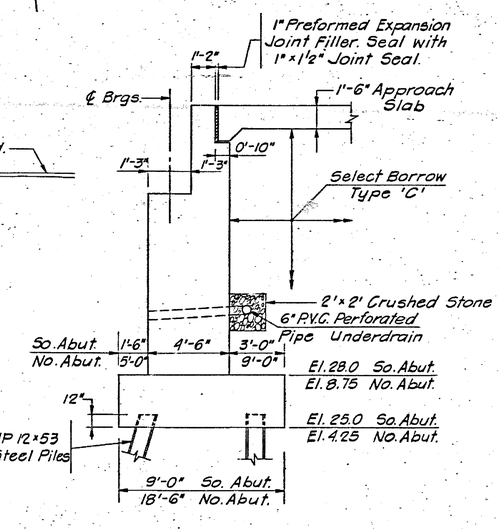

TYPICAL ABUTMENT SECTION
N.T.S.

DELAWARE
DEPARTMENT OF TRANSPORTATION
DIVISION OF HIGHWAYS

EDGEMOOR ROAD BRIDGE OVER AMTRAK - CONRAIL

GENERAL PLAN

D.	SCALE	APPROVED BY
T.		
C.		BRIDGE ENGINEER