BR. 1-577	CONTRACT	COUNTY	FEDERAL AID PROJECT No	SHEET No	TOTAL SHEETS
	90-074-01	NEW CASTLE	BHM-1137(5)	13	24

DECK REINFORCEMENT SPANS 3, 4 AND BASCULE PIER

for info only

NOTES:

1- Work this sheet with sheets 12, 14, 15, 16, & 20.
2- For sections A-A, B-B, C-C, & D-D see sheet 15.
3- For the prefabricated expansion joint system details at pier 3 and at the east end of pier 4, see sheet 9.
4- For the prefabricated expansion joint system details at the west end of pier 4, see sheet 10.
5- For deck placement sequence within each stage, see sheet 16.
6- Temporary shoring as approved by the Department, must be in place before demolition of the deck.
7- Demolition to include removal of the deck in its entirety, a 2' wide portion of curb, and 7"± of the top of concrete beams, where applicable. (Refer to sheets 3 and 7 for cross sections)

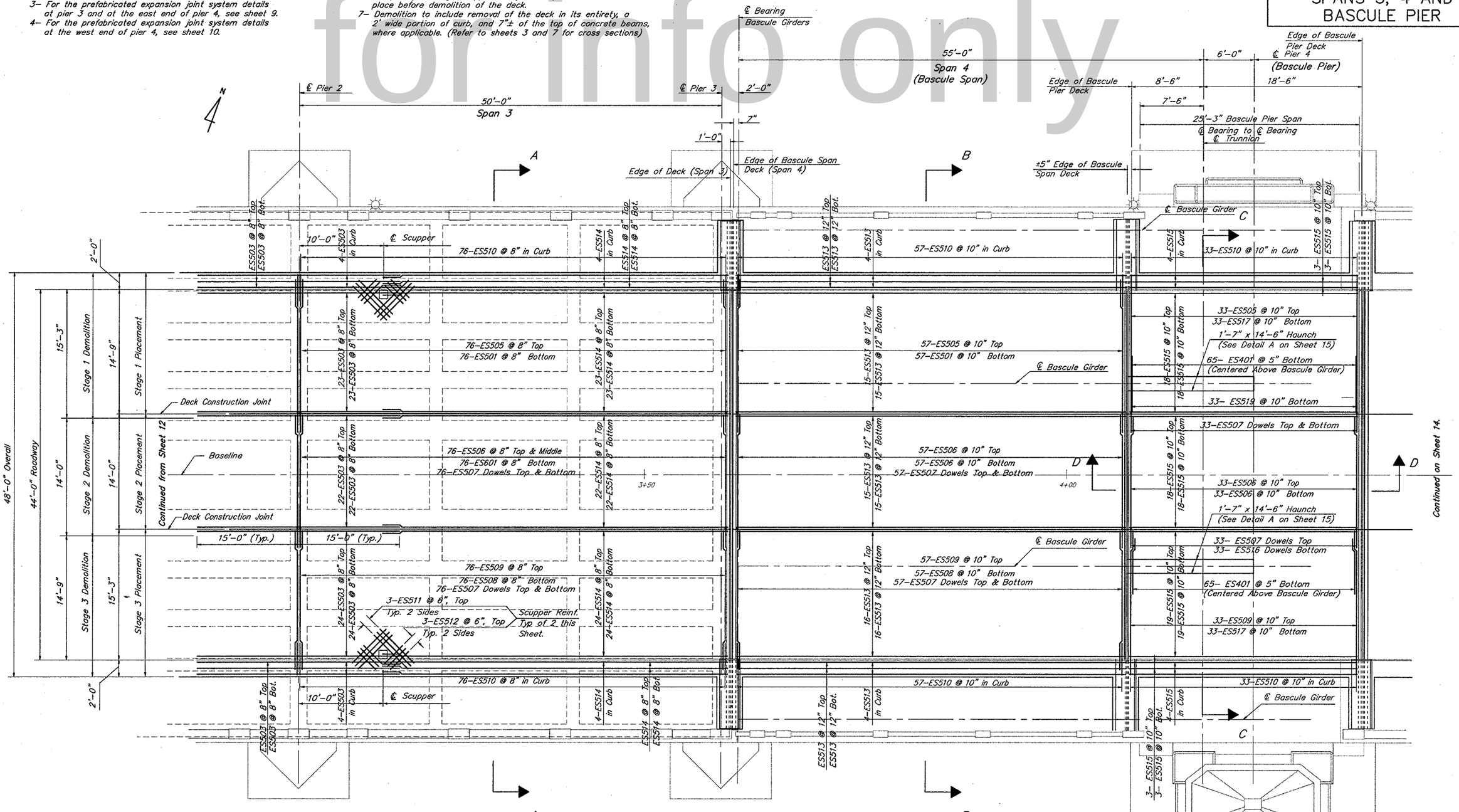

DECK REINFORCEMENT PLAN

Scale: 3/16" = 1'-0"

REVISIONS

PREL. TRACING J.P. Bartholomay DESIGN J. A. Prybella CHKD. J. A. Prybella

BR. 1-577	CONTRACT	COUNTY	FEDERAL AID PROJECT No	SHEET No	TOTAL SHEETS
	90-074-01	NEW CASTLE	BHM-1137(5)	18	24

MISCELLANEOUS DETAILS

for info only

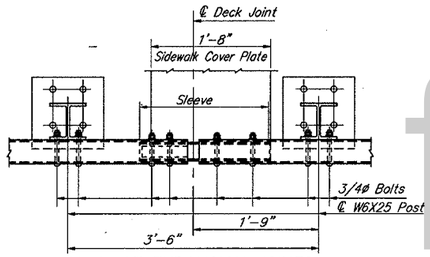

PLAN AT EXPANSION JOINTS

Scale: 1"=1'-0"

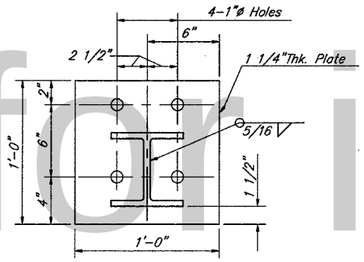

BASE PLATE

Scale: 2"=1'-0"

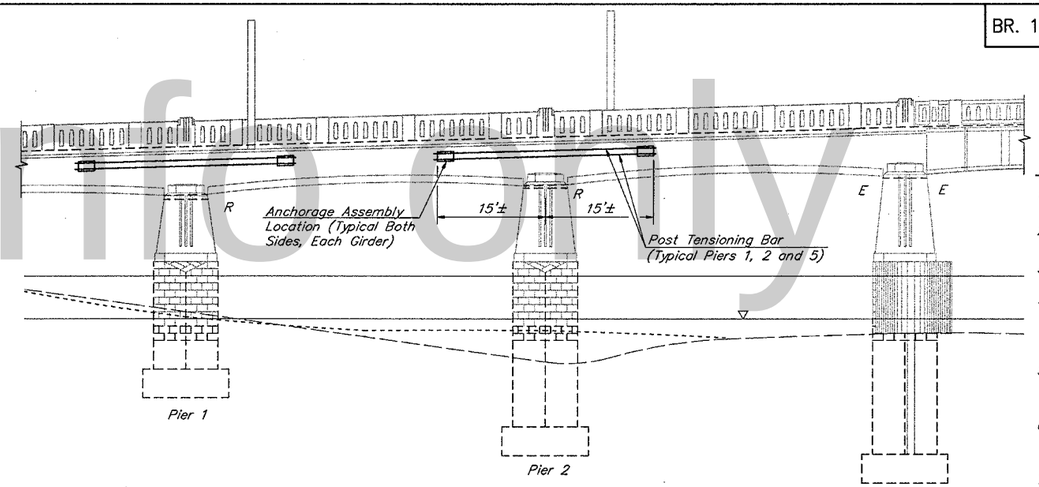

PARTIAL ELEVATION

Scale: 1" = 10'

SUGGESTED CONSTRUCTION SEQUENCE

1.) Install Anchorage Assemblies at the Locations Shown on Both Sides of Each Beam.

2.) Provide Core Holes Thru Diaphragms at Piers and Install Post Tension Bars.

3.) Tension All Bars to the Predetermined Force as Indicated by the Design.

4.) Place Temporary Support Blocks Under the Diaphragms at Piers 1, 2, 3 & 5 and at the East Side of the Bascule Pier in the Locations Below Girders A, B and D on Each Side of the Bridge. Shim as Required for Tight Fit.

5.) Remove the Existing Slab and the Top Portion of the Girders as Specified for Stage 1. (Refer to Sheets 7, 12, 13, and 14 for Limits of Removal).

6.) After Placement of the Reinforcing Steel, Cast New Concrete in the Top of Girders as Described in Steps 1 and 2 of the Placement Sequence on Sheet 16.

7.) Upon Achieving the 28 Day Strength of the Newly Placed Concrete, Re-establish Girder Continuity by Relaxing the Post-Tensioning Bars on All Girders within the Stage 1 Zone. (This Includes the North Fascia Girder during Stage 1 Construction and the South Fascia Girder during Stage 3 Construction.)

8.) Cast the Reinforced Concrete Deck as Described in Steps 3 and 4 on Sheet 16.

9.) Repeat Items 5 thru 8 for Stage 2 Construction.

10.) Repeat Items 5 thru 8 for Stage 3 Construction.

11.) After the New Deck and Curbs have been Placed in All 3 Stages of Construction, Remove All Post-Tensioning Bars, Anchorage Assemblies and the Temporary Support Blocks.

12.) Repair the Core Holes in the Girders and Diaphragms. Fill Holes with an Epoxy Grout, Specified Under Item 602572, and Finish All Surfaces to Match Existing Concrete.

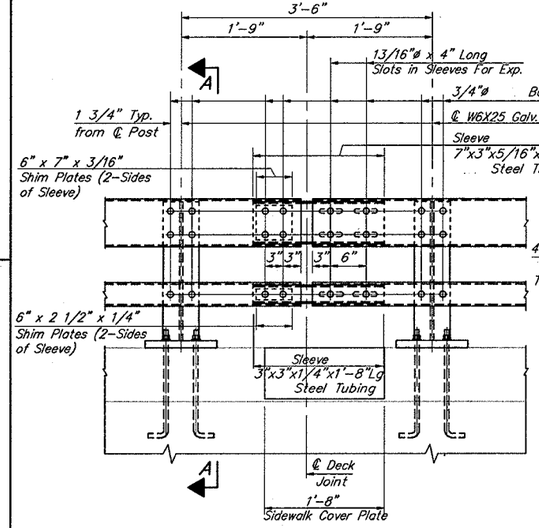

DETAIL "B"

EXPANSION PROVISIONS IN BRIDGE RAILINGS

Scale: 1"=1'-0"

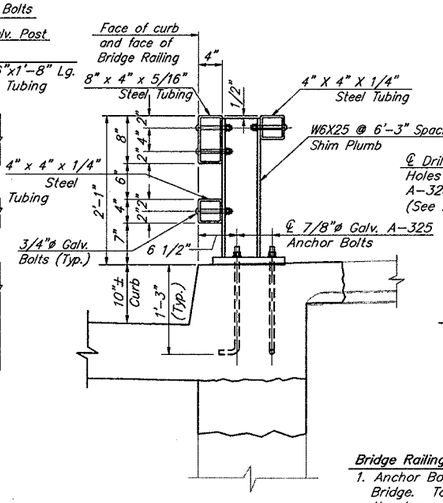

SECTION A-A
BRIDGE CURB

Scale: 1"=1'-0"

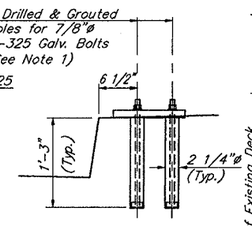

DETAIL "A"
APPROACH CURB

Scale: 1"=1'-0"

Bridge Railing Notes:

1. Anchor Bolts Shall be Cast in the New Curb on the Bridge. To Facilitate Installation of the Railing on the Approaches, Drill and Grout Holes as Shown in Detail "A". Drilling and Grouting to be Paid under Item 602579.
2. All Components of the Bridge/Approach Railing Shall be Painted.
3. Post Spacing Shall not Exceed 6'-3".
4. All Materials, Labor and Equipment Necessary for the Installation of the Bridge Railing Shall be Paid Under Item 606501.

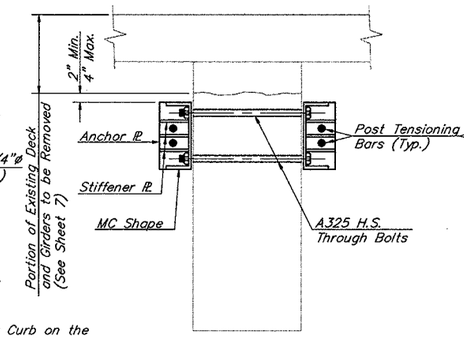

TYPICAL GIRDER SECTION

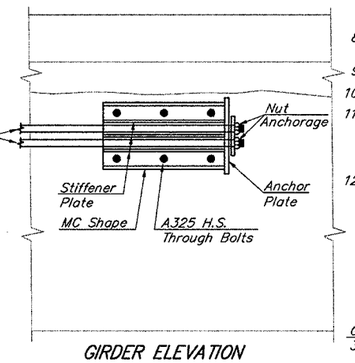

GIRDER ELEVATION

NOTE: All Details and Dimensions Shown are for Conceptual Purposes. Contractor Must Provide Design, Details and Specifications for the Shoring Scheme Based on Actual Structure Loadings and Existing Conditions. The Temporary Shoring Shall be Designed by a Professional Engineer Registered in the State of Delaware, Shall Conform to AASHTO Specifications and Shall be Approved for Usage by the Department Before Implementation. All Materials, Labor and Equipment Necessary to Provide the Temporary Shoring of the Structure Including the Removal of the Shoring and Subsequent Repairs to the Existing Members is Included Under Item 605606.

TEMPORARY SHORING DETAILS

N. T. S.

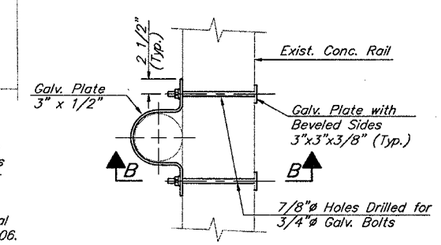

PLAN VIEW

Scale: 1"=1'-0"

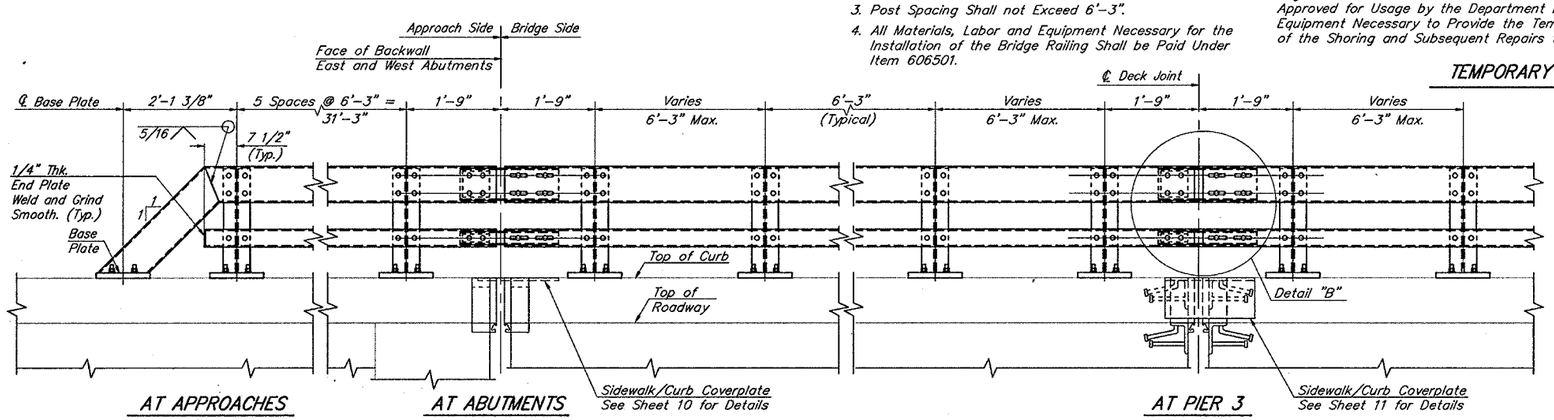

AT APPROACHES

AT ABUTMENTS

AT PIER 3 AND BOTH FACES OF BASCULE PIER

Note:
See Sheet 4 for Length and Location of New Bridge Railing

TYPICAL ELEVATION BRIDGE RAILING

Scale: 3/4"=1'-0"

NOTE: All Materials and Labor Associated with the Installation of the Mounting Bracket Assembly is Incidental to Item 605001.

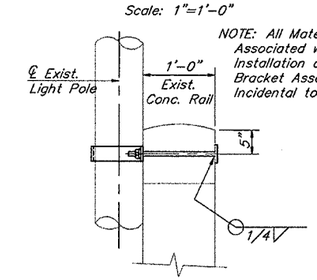

SECTION B-B

Scale: 1"=1'-0"

LIGHT POLE MOUNTING BRACKET ASSEMBLY

(5 REQUIRED)

REVISIONS

PREL. TRACING S. M. McCreesh DESIGN J. A. Prybella CHKD. J. A. Prybella

BR. 1-577	CONTRACT	COUNTY	FEDERAL AID PROJECT No	SHEET No	TOTAL SHEETS
	90-074-01	NEW CASTLE	BHM-1137(5)	3	24

TYPICAL CROSS SECTIONS AND GENERAL NOTES

for info only

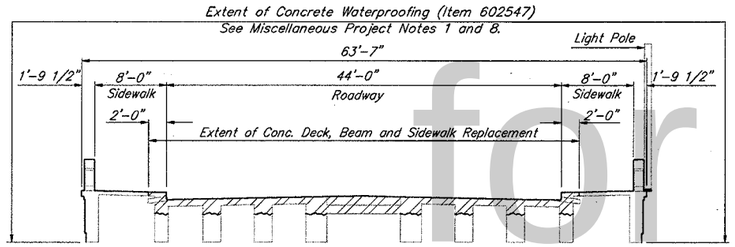

TYPICAL DECK CROSS SECTION

SPANS 1, 2, 3, 5 & 6

Scale: 1/8" = 1'-0"

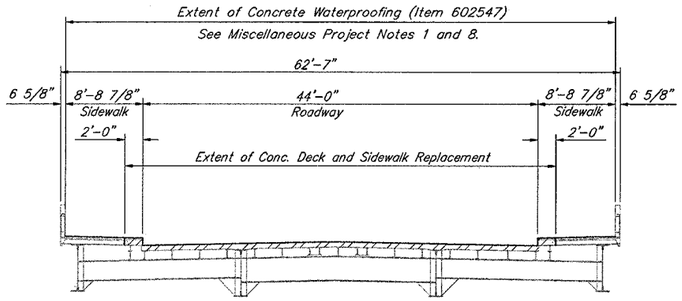

TYPICAL DECK CROSS SECTION

BASCULE SPAN - SPAN 4

Scale: 1/8" = 1'-0"

GENERAL NOTES

GENERAL:

1 MATERIAL AND WORKMANSHIP SHALL BE IN ACCORDANCE WITH DELAWARE STANDARD SPECIFICATIONS, JULY, 1985, INCLUDING ALL REVISIONS AND CORRECTIONS AND THE CONTRACT SPECIAL PROVISIONS.

2 DESIGN SPECIFICATIONS IN ACCORDANCE WITH THE DESIGN DIVISION OF AASHTO "STANDARD SPECIFICATIONS FOR HIGHWAY BRIDGES", 1989, INCLUDING ALL INTERIMS.

3 PERFORM WELDING IN ACCORDANCE WITH 1988 AASHTO/AWS D1.5 AND THE SPECIAL PROVISIONS.

4 CONSTRUCTION SHALL CONFORM WITH THE TRAFFIC CONTROL PLAN AND IS TO BE DONE IN ACCORDANCE WITH THE MAINTENANCE OF TRAFFIC SPECIFICATIONS. ALL WORK SHALL BE PERFORMED IN A MANNER THAT WILL INSURE THE LEAST PRACTICAL OBSTRUCTION TO TRAFFIC CONSISTENT WITH SAFETY AND SHALL COMPLY WITH THE MANUAL TITLED, "DELAWARE TRAFFIC CONTROLS FOR STREET AND HIGHWAY CONSTRUCTION, MAINTENANCE, UTILITY AND EMERGENCY OPERATIONS" (REVISED JUNE, 1992 WITH ALL REVISIONS MADE UP TO THE ADVERTISEMENT DATE OF THIS PROJECT).

5 CONTRACTOR SHALL VERIFY ALL DIMENSIONS AND ELEVATIONS IN THE FIELD PRIOR TO BEGINNING SHOP DRAWINGS. NOTIFY THE ENGINEER OF ANY DISCREPANCIES OR CONFLICTS WITH THE DETAILS.

6 ANY DAMAGE TO THE STRUCTURE, DUE TO THE CONTRACTORS' OPERATIONS, BEYOND THE LIMITS OF THIS WORK WILL BE REPAIRED BY THE CONTRACTOR, TO THE SATISFACTION OF THE ENGINEER, AT NO ADDITIONAL COST TO THE DEPARTMENT.

PROJECT NOTES

GENERAL:

1 AS BUILT PLANS OF THE EXISTING STRUCTURE DATED 1931, AND REPAIR AND REHABILITATION DRAWINGS, DATED 1952, 1963, 196B, 1974 & 1984, ARE AVAILABLE AND SHALL BE OBTAINED THROUGH THE DEPARTMENT AND USED IN CONJUNCTION WITH THESE DRAWINGS. THE STATIONING AND ELEVATIONS SHOWN ON THE DRAWINGS ARE TAKEN FROM THE ORIGINAL DRAWINGS AND SHOULD BE VERIFIED IN THE FIELD.

2 THE PLACEMENT OF ALL RIGGING, WORK PLATFORMS, NETTING, ETC. SHALL BE COORDINATED WITH THE U.S. COAST GUARD AND BE IN ACCORDANCE WITH THE SPECIFIC CONDITIONS OUTLINED IN ITEM 763522.

3 BOLTS USED TO REPLACE EXISTING 7/8" DIAMETER RIVETS TO BE 1" DIAMETER HIGH STRENGTH CARBON STEEL CONFORMING TO ASTM A-325, TYPE 1, MECHANICALLY GALVANIZED, UNLESS NOTED OTHERWISE. ALL OTHER BOLTS SHALL BE 7/8" DIAMETER CONFORMING TO ASTM A-325, TYPE 1, MECHANICALLY GALVANIZED, UNLESS NOTED OTHERWISE.

4 CONTRACTOR SHALL SURVEY THE ELEVATIONS OF THE TOP OF EXISTING DECK AT MAXIMUM INTERVALS OF 10' ALONG THE TOP OF EACH LONGITUDINAL CONCRETE GIRDER, STEEL GIRDER AND STEEL STRINGER. CONTRACTOR SHALL BE RESPONSIBLE FOR DETERMINING DEAD LOAD DEFLECTIONS, MAINTAINING A MINIMUM DECK THICKNESS AS SHOWN ON DRAWINGS, AND ASSURING THAT TOP OF THE NEW DECK MATCHES THE ELEVATIONS OF THE EXISTING DECK. CONTRACTORS PLAN FOR ACCOMPLISHING THE ABOVE REQUIREMENTS SHALL BE SUBMITTED TO THE ENGINEER FOR APPROVAL. PAYMENT SHALL BE MADE UNDER ITEM 763501.

DEMOLITION:

1 VERIFY AND LOCATE ALL EXISTING UTILITIES PRIOR TO STARTING ANY DEMOLITION.

2 DURING DEMOLITION OF CONCRETE, DO NOT SAWCUT OR OTHERWISE REMOVE OR DAMAGE REINFORCEMENT BARS INTENDED FOR RE-USE. BARS CUT OR DAMAGED SHALL BE REPLACED OR REPAIRED TO THE SATISFACTION OF THE ENGINEER AT THE CONTRACTOR'S SOLE EXPENSE.

3 ALL EXISTING REINFORCING EXPOSED DURING CONSTRUCTION OPERATIONS AND INTENDED FOR RE-USE SHALL BE SANDBLASTED CLEAN OF DIRT, RUST AND DEBRIS BEFORE PLACEMENT OF NEW CONCRETE. PAYMENT IS INCIDENTAL TO ITEM 604000.

4 PROVIDE SATISFACTORY SHIELDING TO PREVENT DEBRIS FROM FALLING BELOW THE DECK. THE CONTRACTOR SHALL SUBMIT A TEMPORARY SHIELDING PLAN TO THE ENGINEER FOR APPROVAL. PAYMENT FOR TEMPORARY SHIELDING SHALL BE INCIDENTAL TO ITEM 602580.

5 REMOVAL OF THE EXISTING DECK, INCLUDING THE STAY-IN-PLACE FORMS, THE TOP OF THE CONCRETE BEAMS AS INDICATED, AND PORTIONS OF THE CURBS AND SIDEWALKS, INCLUDING THE APPROACH SIDEWALK, IS INCLUDED UNDER ITEM 602580. FOR LIMITS OF DEMOLITION AND SEQUENCE OF DEMOLITION, REFER TO THE DECK REINFORCEMENT SHEETS.

STRUCTURAL STEEL:

1 ALL EXPOSED EXISTING STEEL SURFACES SHALL BE CLEANED AND PAINTED IN ACCORDANCE WITH ITEMS 605533 AND 605522. THE METHODS OF REMOVING, CONTAINING AND DISPOSING THE LEAD BASED PAINT AS DETAILED IN THE SPECIAL PROVISIONS SHALL BE STRICTLY ADHERED TO.

2 ALL NEW STRUCTURAL STEEL SHALL CONFORM TO AASHTO M183 (ASTM A-36) AND SHALL BE PAINTED. PAINTING OF NEW STEEL IS INCIDENTAL TO ITEM 605001.

3 ALL DETERIORATED RIVETS SHALL BE IDENTIFIED BY THE ENGINEER AND SHALL BE REPLACED WITH HIGH STRENGTH BOLTS IN ACCORDANCE WITH ITEM 605578.

4 ALL DEBRIS SHALL BE REMOVED FROM THE BEARING PITS TO FACILITATE CLEANING AND PAINTING OF THE BEARINGS. PAYMENT IS INCIDENTAL TO ITEM 605533.

5 WELDED STUD SHEAR CONNECTORS ARE INCIDENTAL TO ITEM 605001.

REINFORCEMENT STEEL:

1 ALL NEW REINFORCEMENT BARS SHALL BE EPOXY COATED.

2 REINFORCING STEEL SHALL CONFORM TO AASHTO M31, GRADE 60.

3 PROVIDE 2" CONCRETE COVER ON REINFORCEMENT BARS EXCEPT AS NOTED.

4 MECHANICAL SPLICERS AS SHOWN ON THE DRAWINGS SHALL BE SPLICING DEVICES AS MANUFACTURED BY LENTON REBAR SPLICING, 34600 SOLON ROAD, SOLON, OHIO 44139, (216) 248-0100; DAYTON SUPERIOR CORPORATION, 721 RICHARD STREET, MIAMISBURG, OHIO 45342, (513) 866-0711; WILLIAMS FORM ENGINEERING, P. O. BOX 324A, BLUE BELL, PA 19422, (215) 584-0701, OR AN APPROVED EQUAL. PAYMENT FOR FURNISHING AND PLACING THE MECHANICAL SPLICERS SHALL BE INCIDENTAL TO ITEM 604000.

5 DRILLING AND GROUTING OF DOWEL HOLES FOR ANCHOR BOLTS, DOWEL BARS, OR STIRRUPS IS PAID UNDER ITEM 602579.

PORTLAND CEMENT CONCRETE:

1 STRUCTURAL ELEMENTS OF PORTLAND CEMENT CONCRETE SHALL BE AS NOTED:
CLASS D - DECK SLAB, BRIDGE CURBS AND SIDEWALKS, CONCRETE BEAMS, BRIDGE SEAT, PEDESTALS AND DIAPHRAGMS (f'c = 4500 PSI)
CLASS B - APPROACH SIDEWALK AND CURB (f'c = 3000 PSI)
(f'c = 28 DAY COMPRESSIVE STRENGTH)

2 ALL CONCRETE SURFACES OF THE DECK, CURBS, SIDEWALKS AND BALUSTRADES SHALL BE WATERPROOFED IN ACCORDANCE WITH ITEM 602547 TO THE LIMITS SHOWN ON THE DRAWINGS. THE USE OF A MEMBRANE FORMING CURING COMPOUND ON ANY CONCRETE SURFACE TO BE WATERPROOFED IS PROHIBITED. CONCRETE AT THESE LOCATIONS SHALL BE WATER CURED PER SECTION 602 OF THE STANDARD SPECIFICATIONS.

3 USE AN APPROVED EPOXY BONDING COMPOUND BETWEEN THE OLD AND NEW CONCRETE SURFACES. THE BONDING COMPOUND SHALL CONFORM TO REQUIREMENTS GIVEN IN SECTION 602 OF THE STANDARD SPECIFICATIONS. PAYMENT IS INCIDENTAL TO THE PCC MASONRY CLASS BEING PLACED AND BONDED.

4 STAY-IN-PLACE METAL DECK FORMS MAY BE UTILIZED UNDER THE DECK AT THE APPROVAL OF THE ENGINEER AT NO ADDITIONAL COST TO THE DEPARTMENT.

5 THE PLACEMENT OF THE SCUPPERS IN THE DECK IS INCIDENTAL TO ITEM 602013.

DECK JOINTS:

1 A PREFABRICATED EXPANSION JOINT SYSTEM SHALL BE PROVIDED AT PIER 3 AND AT BOTH JOINTS OVER PIER 4 AND THE JOINT SYSTEMS SHALL BE INSTALLED WITH AN OPENING SET AT 2" AT 68 DEGREES F AND SHALL BE CAPABLE OF EXPANDING TO 3". ALL MATERIALS AND LABOR ASSOCIATED WITH THE INSTALLATION OF THIS JOINT SYSTEM ARE INCLUDED UNDER ITEM 605511.

2 A JOINT SYSTEM WITH ELASTOMERIC CONCRETE SHALL BE PROVIDED AT THE ABUTMENTS AND THE JOINT SYSTEMS SHALL BE INSTALLED WITH AN OPENING SET AT 1.75" AT 68 DEGREES F AND SHALL BE CAPABLE OF EXPANDING TO 2". ALL MATERIALS AND LABOR ASSOCIATED WITH THE INSTALLATION OF THIS JOINT SYSTEM ARE INCLUDED UNDER ITEM 605604.

3 BOTH JOINT SYSTEMS SHALL BE MANUFACTURED BY WATSON BOWMAN & ACME CORPORATION, 95 PINEVIEW DRIVE, AMHERST, NY 14120, (716) 691-7566; THE D.S. BROWN COMPANY, 300 E. CHERRY STREET, NORTH BALTIMORE, OHIO 45872-0158, (419) 257-3561; E-POXY INDUSTRIES, INC., 14 WEST SHORE STREET, RAVENA, NY 12143, (518) 756-6193, OR AN APPROVED EQUAL.

4 CONTRACTOR SHALL VERIFY ALL DIMENSIONS AND ELEVATIONS IN THE FIELD PRIOR TO BEGINNING SHOP DRAWINGS AND FABRICATION OF THE JOINT SYSTEMS. FINISH LINES AND GRADES WILL FOLLOW THE CROSS SLOPES OF THE NEW DECK, EXCEPT AS NOTED.

5 INSTALLATION PROCEDURES FOR THE JOINT SYSTEMS SHALL BE PER MANUFACTURER'S RECOMMENDATIONS. JOINT SYSTEM SHALL BE SHOP ASSEMBLED AS A UNIT AND PRESET PRIOR TO SHIPMENT.

6 THE STRIP SEAL SHALL BE FURNISHED AND PLACED IN ONE CONTINUOUS PIECE FOR THE FULL WIDTH OF THE JOINT. SPLICING THE STRIP SEAL WILL NOT BE PERMITTED.

7 THE FURNISHING AND INSTALLATION OF THE SIDEWALK COVER PLATES OVER THE JOINT SYSTEMS ARE INCIDENTAL TO ITEM 605001.

BEARINGS:

1 RESETTING OR REPLACING BEARINGS SHALL BE DONE PRIOR TO DEMOLITION OF THE EXISTING DECK.

2 JACKING OF THE SUPERSTRUCTURE SHALL BE PERFORMED IN 1/8" LIFTS, AND THE SUPERSTRUCTURE SHALL ONLY BE JACKED TO FACILITATE BEARING REMOVAL, RESETTING OR REPLACEMENT. PAYMENT FOR JACKING WILL BE INCLUDED UNDER ITEM 605603 FOR THE BEARING REPLACEMENTS, AND ITEM 605605 FOR THE RESETTING OF THE BEARINGS.

3 IF THE SPAN LOCKS PREVENT EFFECTIVE JACKING OF THE BEAMS, THEY MAY BE REMOVED AND/OR MODIFIED UPON APPROVAL BY THE ENGINEER.

4 CONSTRUCTION OR RECONSTRUCTION OF THE BRIDGE SEAT OR BEARING PEDESTALS TO FACILITATE THE RESETTING OR REPLACEMENT OF BRIDGE BEARINGS IS INCIDENTAL TO ITEM 602013.

5 THE CLEANING OF THE BRIDGE SEATS AND BEARING PITS TO FACILITATE THE REPLACEMENT OR RESETTING OF THE BEARINGS IS INCIDENTAL TO ITEM 605603 AND 605605, RESPECTIVELY.

METAL BRIDGE RAILING:

1 METAL RAILS, POSTS, SHIMS AND BASE PLATES SHALL CONFORM TO AASHTO M183 (ASTM A-36). MATERIAL AND LABOR TO SUPPLY AND INSTALL RAILING SHALL BE PAID FOR UNDER ITEM 606501, PAINTING OF RAILING SHALL CONFORM WITH PROVISIONS FOR PAINTING IN SECTION 605 OF THE STANDARD SPECIFICATIONS. PAINTING IS INCIDENTAL TO ITEM 606501.

UTILITIES:

1 ALL UTILITIES PLOTTED ON THE PLAN SHEET ARE FROM THE BEST AVAILABLE INFORMATION. VERIFY AND LOCATE ALL EXISTING UTILITIES PRIOR TO STARTING WORK.

2 BEFORE BEGINNING WORK, THE CONTRACTOR SHALL GIVE NOTIFICATION BY TELEPHONE BY CALLING "MISS UTILITY" AT 1-800-282-8555 A MINIMUM OF 48 HOURS PRIOR TO START OF WORK.

3 COORDINATE THE REQUIREMENTS FOR PROTECTION AND/OR RELOCATION OF ANY UTILITY WITH THE UTILITY OWNER PRIOR TO STARTING WORK.

4 CONDUCT OPERATIONS IN A MANNER WHICH ENSURES THAT THE UTILITIES WILL NOT BE DISTURBED OR ENDANGERED, AND ASSUME FULL RESPONSIBILITY FOR ANY DAMAGE TO UTILITIES DURING CONSTRUCTION. THE DEPARTMENT DOES NOT ASSUME RESPONSIBILITY FOR REIMBURSEMENT, PARTICIPATION IN DESIGN AND/OR REVISIONS, OR LIABILITY FOR ACCURACY OR TYPE, SIZE AND LOCATION OF ANY UTILITY.

5 CONTRACTOR SHALL NOT REMOVE LIGHT POLES. LIGHTS ARE TO REMAIN IN SERVICE AND POWER TO LIGHTS SHALL NOT BE INTERRUPTED AS A RESULT OF THE CONTRACTOR'S WORK.

6 PRIOR TO START OF CONCRETE DEMOLITION, CONTRACTOR SHALL DETERMINE THE LOCATION OF POWER LINES SERVICING THE LIGHT POLES.

MAINTENANCE OF TRAFFIC/ CONSTRUCTION STAGING:

1 THE EXTENT OF WORK OUTLINED ON THE GENERAL PLAN AND ELEVATION SHEET SHALL BE PERFORMED DURING THREE DISTINCT STAGES OF CONSTRUCTION. TRAFFIC FLOW IS REDUCED TO ONE LANE IN EACH DIRECTION DURING EACH STAGE OF CONSTRUCTION. THE STAGING LIMITS AND SEQUENCING ARE DEFINED ON THE TRAFFIC CONTROL PLAN (SHEETS 21, 22 AND 23), PLACING SEQUENCE (SHEET 16) AND THE MISCELLANEOUS DETAILS (SHEET 18). 2-WAY TRAFFIC SHALL BE MAINTAINED ON THE SOUTHERNMOST LANES WHILE WORK IS DONE ON THE NORTHERN THIRD OF THE BRIDGE. AFTER COMPLETION OF THE WORK UNDER STAGE 1, THE TRAFFIC WILL BE SHIFTED TO THE OUTERMOST LANES OF THE DECK WHILE WORK IS COMPLETED IN THE CENTER PORTION OF THE BRIDGE DURING STAGE 2. AFTER COMPLETION OF THE WORK UNDER STAGE 2, THE TWO LANES OF TRAFFIC WILL BE SHIFTED TO THE NORTHERNMOST LANES WHILE WORK IS COMPLETED ON THE SOUTHERN THIRD OF THE BRIDGE. THE STAGING IS NECESSARY TO FACILITATE THE REPLACEMENT OF THE DECK AND CURBS, AND THE REHABILITATION OF THE SUPERSTRUCTURE, SIDEWALKS, BALUSTRADES AND OTHER INCIDENTAL WORK, ETC.

2 DURING CONCRETE PLACEMENTS FOR GIRDERS AND DECK, AND FOR A PERIOD OF 24 HOURS AFTER COMPLETION OF PLACEMENTS, VEHICULAR TRAFFIC ON THE BRIDGE SHALL BE RESTRICTED TO A MAXIMUM WEIGHT OF 5 TONS. CONTRACTOR SHALL PROVIDE, LOCATE AND ERECT REQUIRED SIGNS IN CONFORMANCE WITH GENERAL NOTE NO. 4 AND AS APPROVED BY THE ENGINEER. ALL COSTS SHALL BE INCIDENTAL TO ITEM 763500.

MISCELLANEOUS:

1 WATERPROOFING CONCRETE SURFACES SHALL BE PERFORMED AFTER EACH STAGE OF CONSTRUCTION TO THE LIMITS SHOWN ON THE PLANS IN ACCORDANCE WITH ITEM 602547. THE COLOR OF THE SEALER PLACED ON THE CONCRETE BALUSTRADE AND PYLONS SHALL MATCH THE NATURAL COLOR OF THE BALUSTRADE AND PYLON. THE SEALER SHALL ALSO BE CAPABLE OF COVERING NEWLY PATCHED AREAS WITH NO NOTICEABLE DIFFERENCE IN COLOR. THE CONTRACTOR SHALL SUBMIT COLOR CHARTS AND TECHNICAL INFORMATION OBTAINED FROM THE MANUFACTURER FOR DEPARTMENT'S APPROVAL PRIOR TO ORDERING THE SEALING PRODUCT.

2 ALL COMPONENTS OF THE FENDER SYSTEM, AS OUTLINED IN THE PLANS, SHALL BE REPLACED IN ACCORDANCE WITH ITEM 601519.

3 TEMPORARY SHORING OF THE CONCRETE BEAMS IS REQUIRED BEFORE REMOVING ANY PORTION OF THE EXISTING DECK BECAUSE THE CONTINUITY STEEL OVER THE PIERS WILL BE REMOVED WITH THE DECK. THE CONTRACTOR IS RESPONSIBLE FOR THE DESIGN AND IMPLEMENTATION OF A TEMPORARY SUPPORT SYSTEM WHICH MUST BE APPROVED BY THE DEPARTMENT. A SUGGESTED TEMPORARY SUPPORT SYSTEM IS SHOWN ON SHEET 18. ALL LABOR, MATERIAL, AND EQUIPMENT REQUIRED FOR ERECTION AND REMOVAL OF TEMPORARY SHORING SHALL BE PAID UNDER ITEM 605606.

4 THE REPAIR OF SPALLS IN THE SUBSTRUCTURE, SUPERSTRUCTURE AND IN THE BRIDGE RAILING PYLONS IS INCLUDED UNDER ITEM 602572.

5 PRESSURE INJECTING CRACKS WITH EPOXY, AS REQUIRED, IS INCLUDED UNDER ITEM 602514.

6 THE DISPLACEMENT RESTRICTION PADS SHOWN ON SHEET 6 SHALL BE CONSTRUCTED USING A FLOWABLE GROUT SPECIFIED IN ITEM 602581.

7 THE CONSTRUCTION OF THE SOUTHWEST APPROACH SIDEWALK AND CURB SHALL BE PAID UNDER ITEM 602002.

8 THE WATERPROOFING ON THE CONCRETE SURFACES SHALL CONTINUE ON THE BALUSTRADES AND PYLONS BEYOND THE BRIDGE TO THE END OF THE RAILING AND IS PAID UNDER ITEM 602547.

REVISIONS

PREL. TRACING J.P. Bartholomay DESIGN J. A. Prybella CHKD. J. A. Prybella

BR. 1-577	CONTRACT	COUNTY	FEDERAL AID PROJECT No	SHEET No	TOTAL SHEETS
	90-074-01	NEW CASTLE	BHM-1137(5)	4	24

GENERAL PLAN & ELEVATION

for info only

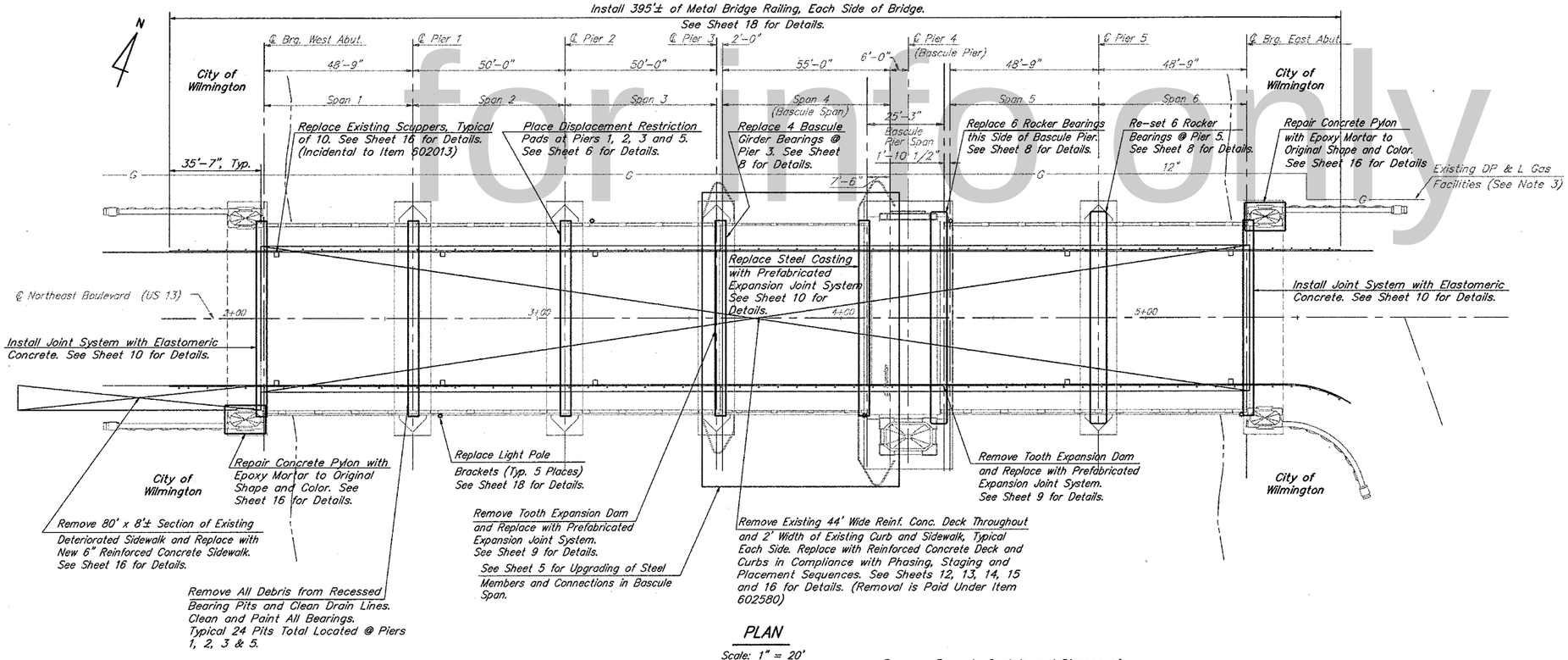

PLAN

Scale: 1" = 20'

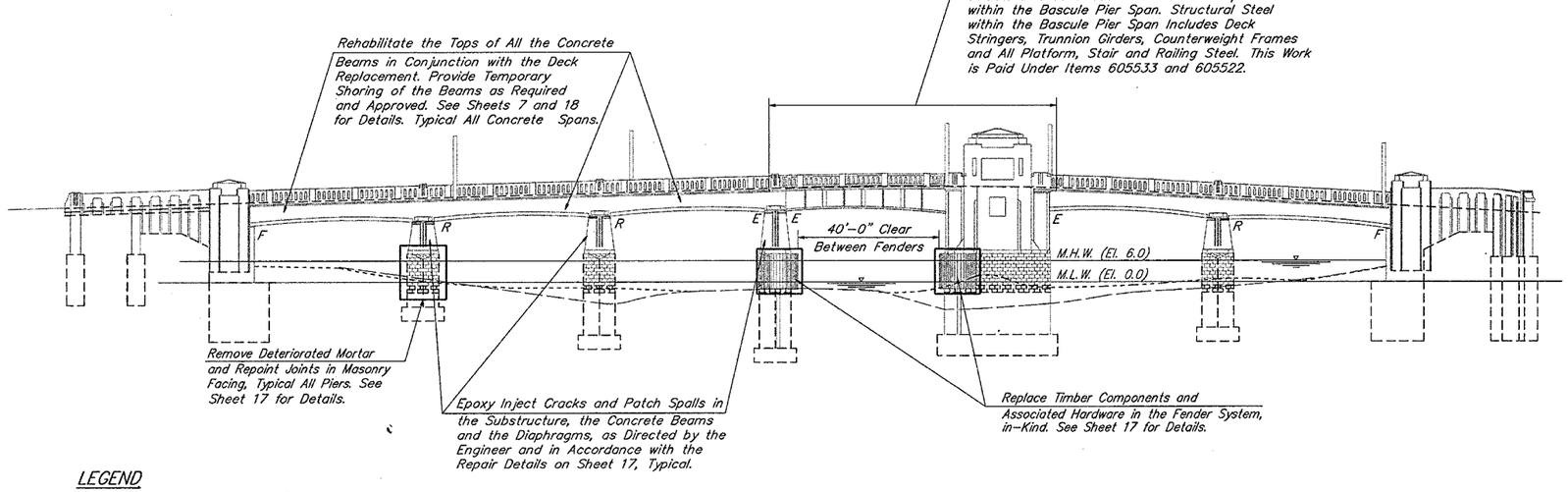

ELEVATION

Scale: 1" = 20'

LEGEND

- — — — — — Streambed Along North Fascia
- - - - - - - - - - Streambed Along South Fascia

Note:
Elevations given refer to City Datum, which is 0.82' below U.S. Government Datum and equal to M.L.W. elevation in Christina River at Market Street Bridge.
M.H.W. elevation is 6.0, M.L.W. elevation is 0.0.

NOTES:

1. The purpose of this sheet is to highlight specific areas of the bridge intended to be rehabilitated. For details about the specific repairs, including the indicated items under which payment will be made, refer to the sheet indicated in the description of the repair.
2. Refer to the General Notes and Project Notes for additional information.
3. All gas mains are approximately 3'-0" deep. All gas services are approximately 3'-0" deep at the main and 1'-6"deep at the building. All measurements shall be verified in the field.
4. All concrete surfaces of the bridge including the full length of the concrete railings shall be waterproofed in accordance with Item 602547. See sheet 3 for limits.
5. Refer to sheet 3, utility notes 5 and 6 for locating and maintaining electric service to light poles.

REVISIONS

PREL. TRACING J.P. Bartholomay DESIGN J. A. Prybella CHKD. J. A. Prybella

BR. 1-577	CONTRACT	COUNTY	FEDERAL AID PROJECT No	SHEET No	TOTAL SHEETS
	90-074-01	NEWCASTLE	BHM-1137(5)	5	24

BASCULE SPAN STEEL MODIFICATIONS

for info only

NOTES:

Material and Installation of All New Structural Steel Shown on this Sheet, Shall be Paid Under Item 605001. Removal of Existing Steel Shall be Incidental to Item 605001.

At Locations Where Existing 7/8"ø Rivets have Deteriorated, But will not be Replaced as a Result of Indicated Structural Steel Repairs, Rivets Shall be Removed and Replaced with New 1"ø High Strength Bolts as Directed by the Engineer. Rivet Replacement at These Locations Shall be Paid Under Item 605578.

For Information Only
Estimated Quantities of Rivets to be Replaced Under Item 605578 100 Each

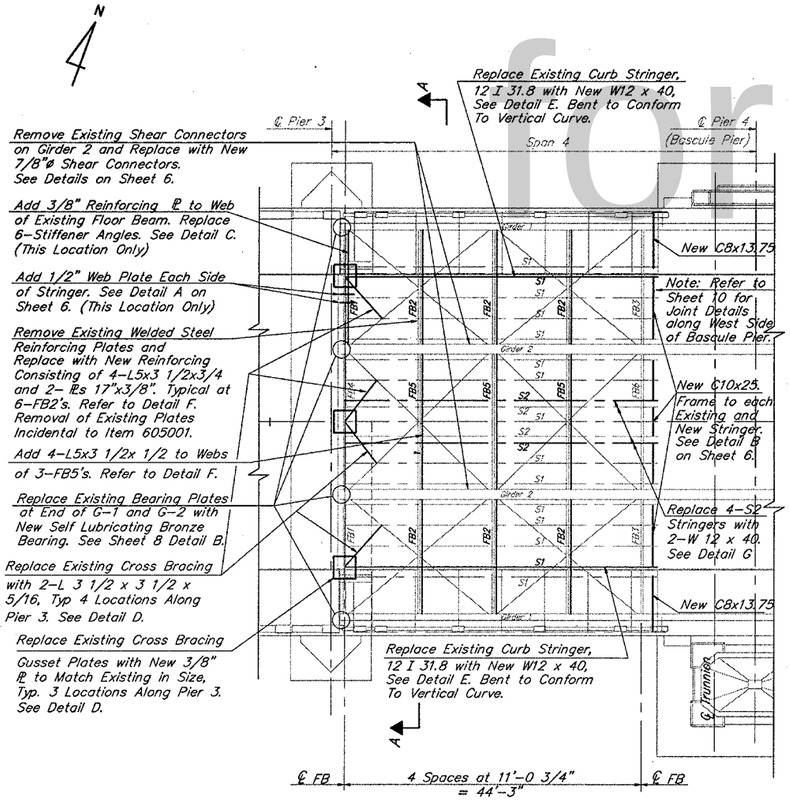

FRAMING PLAN OF EXISTING STEEL BASCULE SPAN

Scale: 3/32" = 1'-0

Existing S1 - 12 I 31.8
Existing S2 - 12 C 25
Existing FB2 - 21 I 62
Existing FB3 - 27 I 97

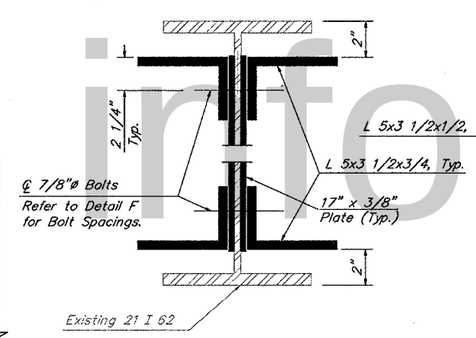

SECTION C-C

FB2 UPGRADING

Scale: 3" = 1'-0"

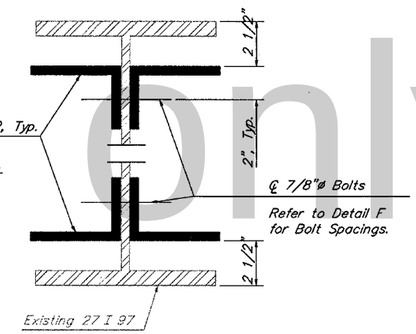

SECTION B-B

FB5 UPGRADING

Scale: 3" = 1'-0"

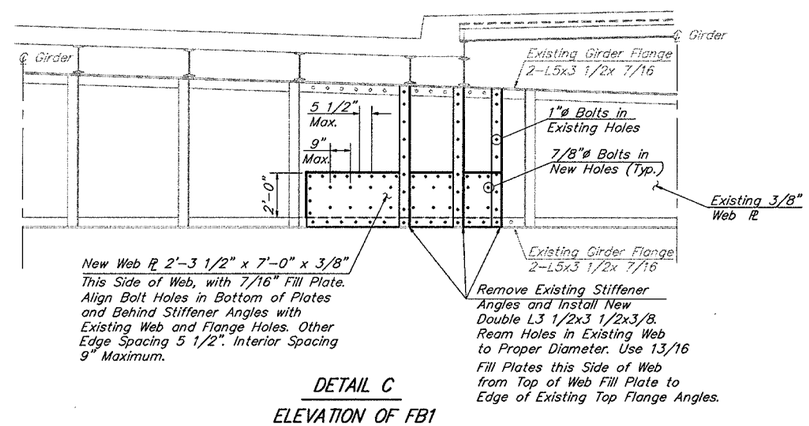

DETAIL C

ELEVATION OF FB1

Scale: 3/8" = 1'-0"

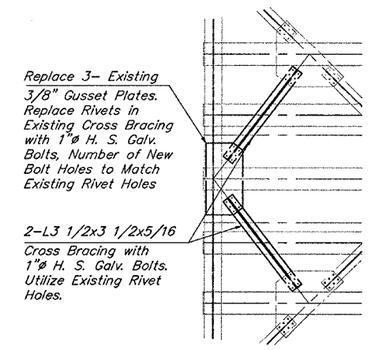

DETAIL D

CROSS BRACING REPLACEMENT

Scale: 3/8" = 1'-0"

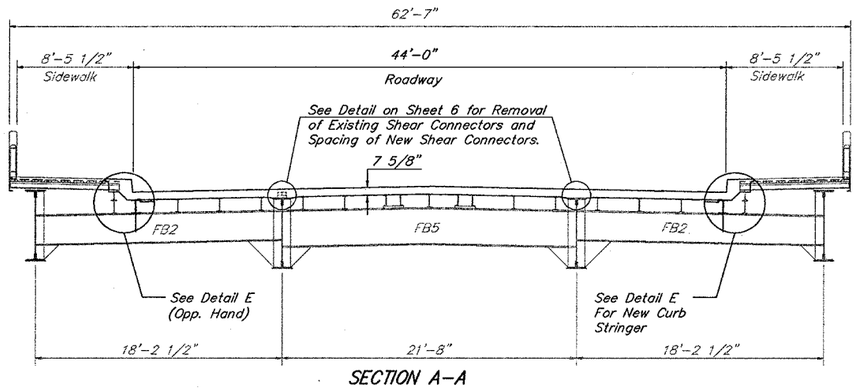

SECTION A-A

TYPICAL EXISTING DECK CROSS SECTION

(EXCEPT AS NOTED)

Scale: 3/16" = 1'-0"

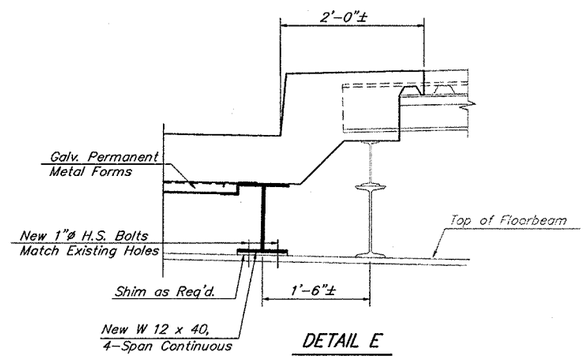

DETAIL E

STRINGER S1 REPLACEMENT

Scale: 1" = 1'-0"

NOTE: See Details A and B on Sheet 6 For Dimensions at End of Stringer.

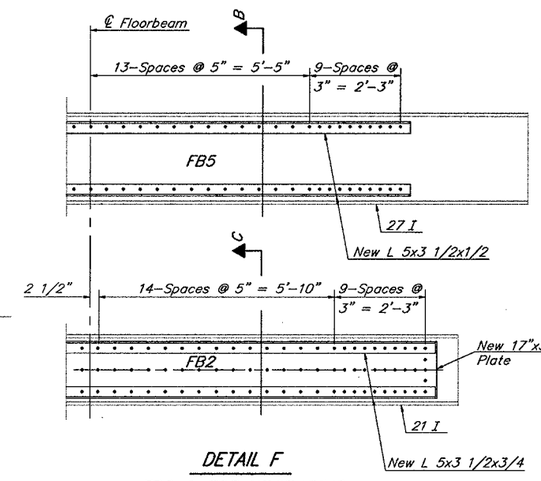

DETAIL F

FB2 & FB5 UPGRADING

N.T.S.

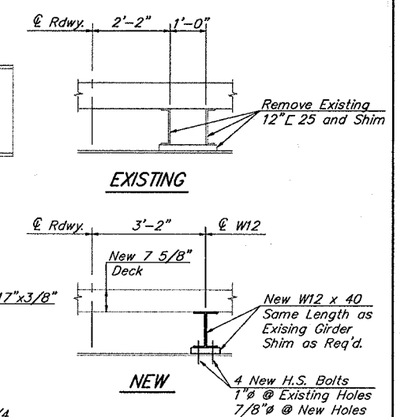

DETAIL G

NEW S2 STRINGERS

Scale: 1/2" = 1'-0"

REVISIONS

PREL. TRACING J.P. Bartholomay DESIGN W. M. Ahola CHKD. W. M. Ahola

BR. 1-577	CONTRACT	COUNTY	FEDERAL AID PROJECT No	SHEET No	TOTAL SHEETS
	90-074-01	NEW CASTLE	BHM-1137(5)	6	24

BASCULE SPAN STEEL MODIFICATION AND REPAIR DETAILS

for info only

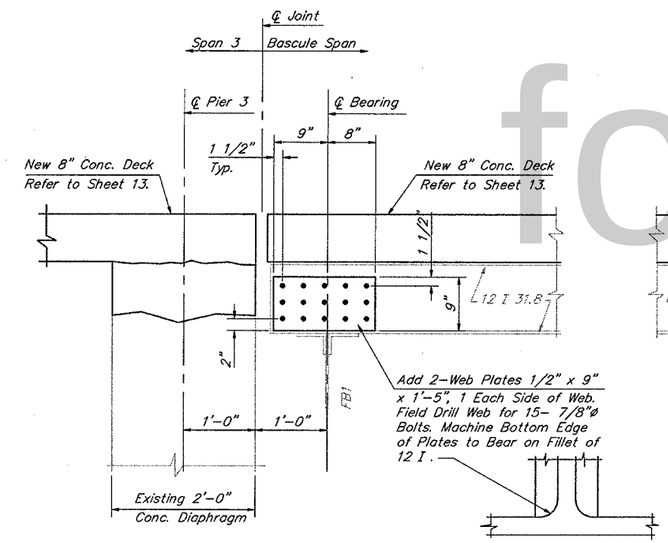

Note: Refer to Sheet 9 for Deck Joint Detail between the Bascule Span and Span 3.

DETAIL A
WEB STRENGTHENING OF BASCULE STRINGER (1 REQUIRED)
Scale: 1"=1'-0"

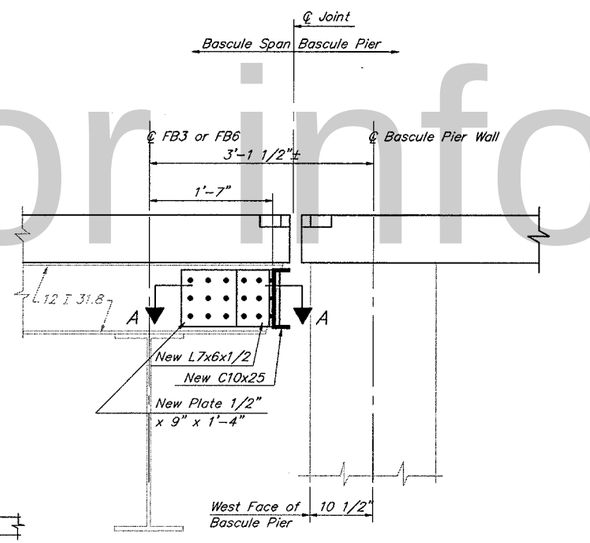

Note: Refer to Sheet 10 for Deck Joint Detail between the Bascule Pier and the Bascule Span.

DETAIL B
DECK SUPPORT CHANNEL AT BASCULE PIER WEST FACE TYPICAL @ 15 STRINGERS
Scale: 1"=1'-0"

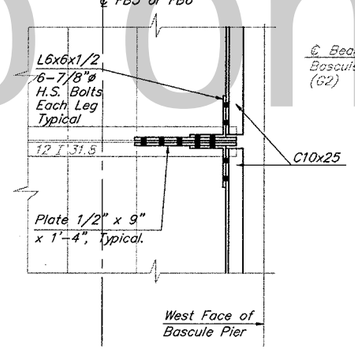

SECTION A-A
Scale: 1"=1'-0"

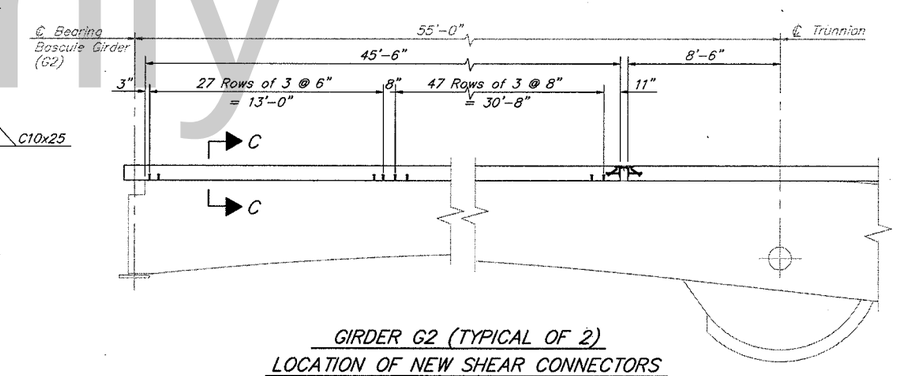

GIRDER G2 (TYPICAL OF 2)
LOCATION OF NEW SHEAR CONNECTORS
Scale : 1/4" = 1'-0"

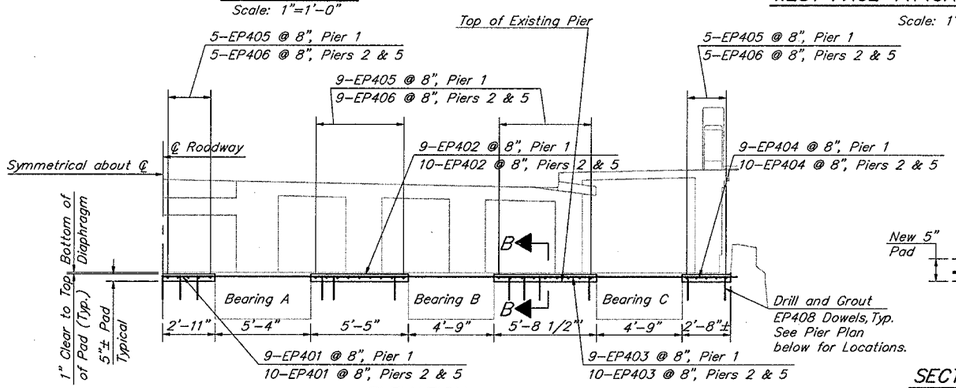

ELEVATION

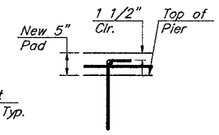

SECTION B-B
N. T. S.

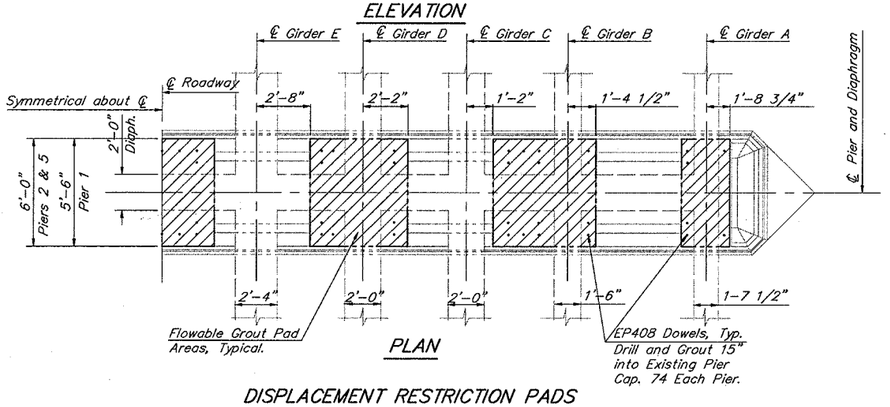

PLAN

DISPLACEMENT RESTRICTION PADS
PIERS 1, 2 AND 5
Scale : 1/4" = 1'-0"

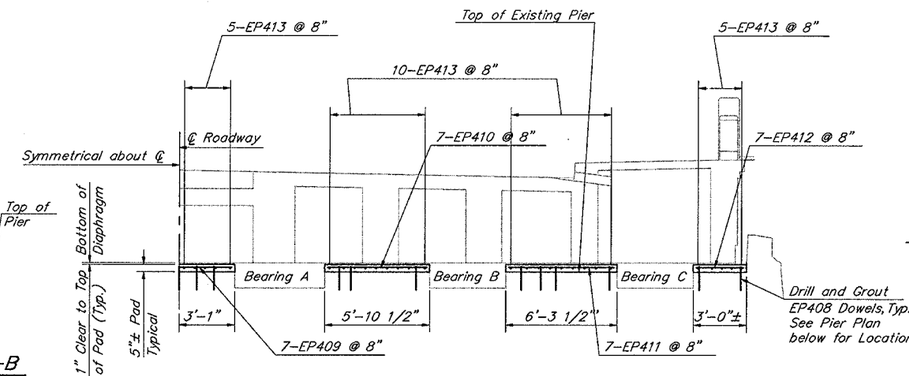

ELEVATION

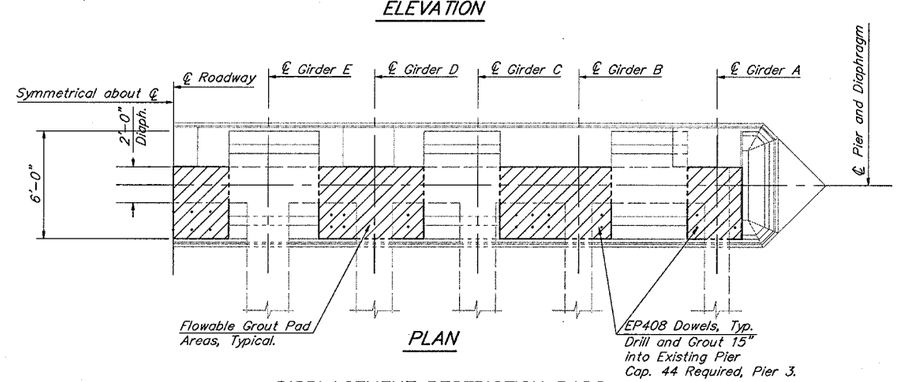

PLAN

DISPLACEMENT RESTRICTION PADS
PIER 3
Scale : 1/4" = 1'-0"

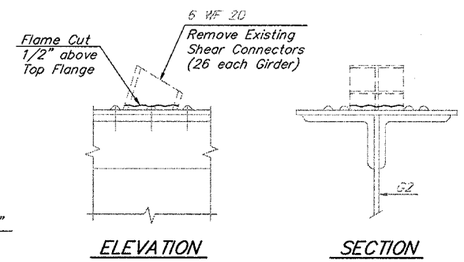

ELEVATION
SECTION

GIRDER G2 (TYPICAL OF 2)
REMOVAL OF EXISTING SHEAR CONNECTORS
Scale : 1 1/2" = 1'-0"

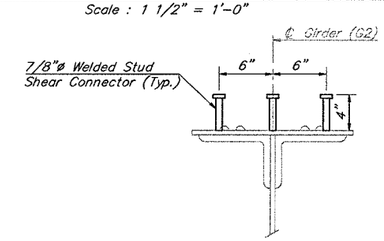

SECTION C-C
Scale : 1 1/2" = 1'-0"

NOTE:
At Locations Indicated, Sandblast Clean Concrete Surfaces in Cross Hatched Areas. Drill and Grout Dowels, Place Horizontal Reinforcement, Pour Flowable, Self Leveling Grout to Within 1" of Bottom of Diaphragm. Cure Grout Per Manufacturers Recommendations.

All Materials and Installation of Grout Shall be Paid Under Item 602581. Sandblasting of Top of Pier Shall be Incidental to Item 602581. Drilling and Grouting Dowel Holes Shall be Paid Under Item 602579. All Material and Installation of Dowels and Reinforcing Shall be Paid Under Item 604000.

REVISIONS

PREL. TRACING J.P. Bartholomay DESIGN J. A. Prybella CHKD. W. M. Ahola

BR. 1-577	CONTRACT	COUNTY	FEDERAL AID PROJECT No	SHEET No	TOTAL SHEETS
	90-074-01	NEW CASTLE	BHM-1137(5)	8	24

BEARING MODIFICATION DETAILS

for info only

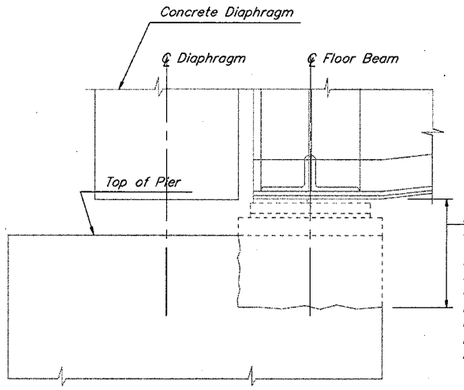

DEMOLITION

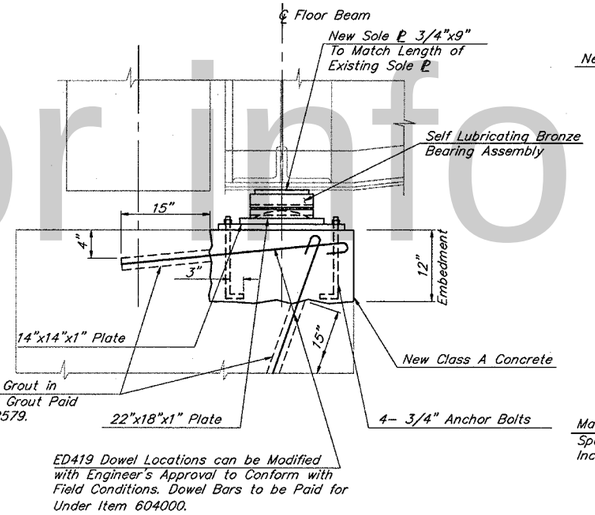

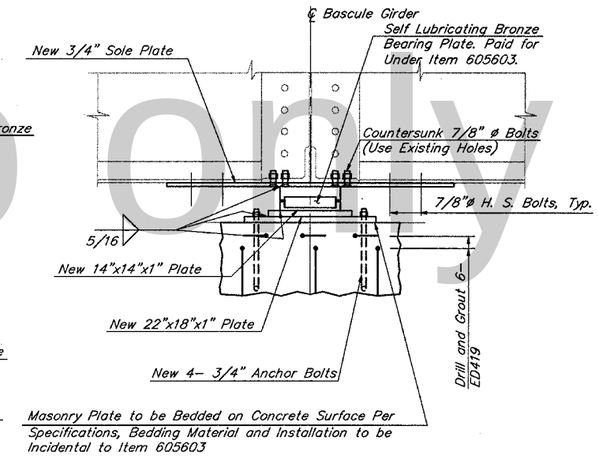

BEARING RESET NOTES

All New Material and Work (Including Jacking and Shoring) Related to Resetting of Bearings shall be Paid for Under Item 605605.

1. Jack and Shore Existing Beams.
2. Remove Anchor Bolt Nuts. Remove Rollers, Tooth Bars and Bottom Bearing Plate.
3. Burn off 2-Anchor Bolts Flush with Top/Pier.
4. Drill 4-New 1"ø Holes in Bottom Bearing Plate.
5. Drill 1 1/2"ø Holes for New Anchor Bolts.
6. Reset Bottom Bearing Plate and Roller.
7. Grout in New 4-3/4"ø Swedged Anchor Bolts and Tighten after Grout has Cured.
8. Remove Shoring and Jacks.

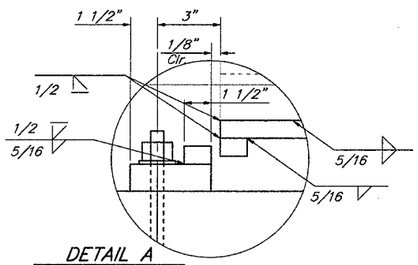

DETAIL A

Scale : 3" = 1'-0"

DETAIL B
BASCULE GIRDER BEARING REPLACEMENT
(4 LOCATIONS)

Scale: 1" = 1'-0"

NEW BASCULE GIRDER BEARINGS @ G1 & G2

All Plates and Anchor Bolts, Except Bronze Pearing Plates, shall Conform to AASHTO M183. All Anchor Bolts, Jacking and Shoring, Steel Plates, and Self Lubricating Bronze Plates shall be Paid for Under Item 605603.

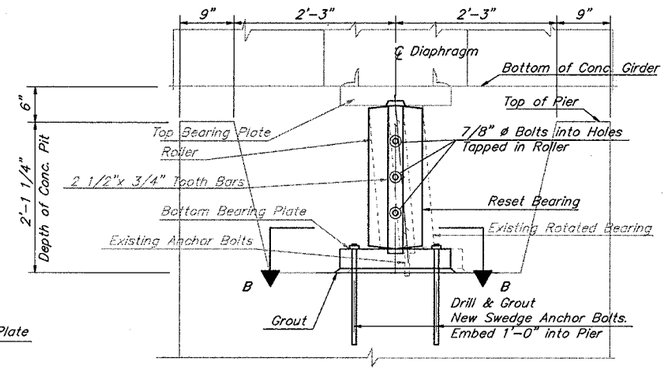

BEARING RESET DETAIL
PIER 5 (6 REQUIRED)

Scale : 1" = 1'-0"

Note: Existing Bearings are Set in Pits at the Top of Pier 5. For Additional Information on Pit Locations and Orientation to Concrete Girder, See Sheet 6, PLAN AND ELEVATION OF DISPLACEMENT RESTRICTION PADS, PIERS 1,2 & 5

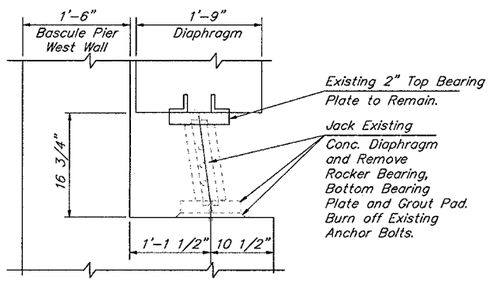

REMOVAL OF EXISTING BEARING
(6 LOCATIONS)

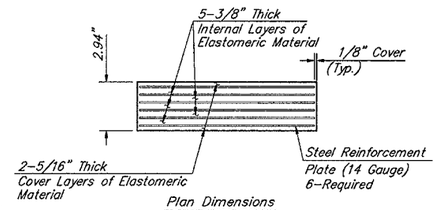

Plan Dimensions

for Bearing A: 9" x 24" (2 Required)
for Bearings B & C: 9" x 22" (4 Total Required)
Refer to Elevations for Bearing Locations.

TYPICAL SECTION THROUGH
ELASTOMERIC BEARING PAD

N.T.S.

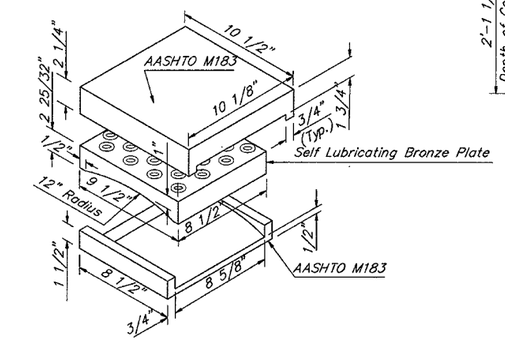

SELF LUBRICATING BRONZE BEARING ASSEMBLY

N.T.S.

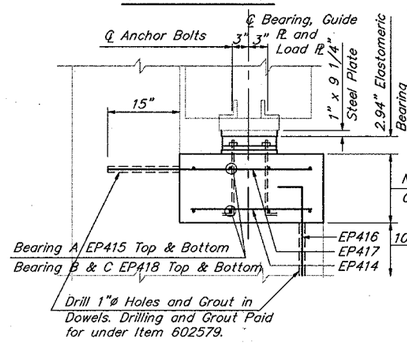

REPLACEMENT
BEARING A & B REPLACEMENT- EAST SIDE OF BASCULE PIER (SPAN 5) (6 LOCATIONS)

Scale : 1" = 1'-0"

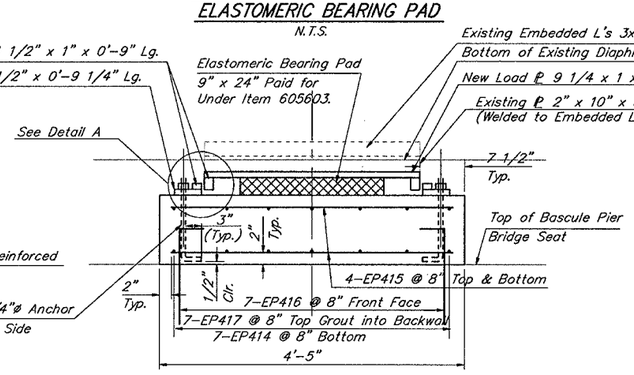

BEARING A REPLACEMENT- EAST SIDE BASCULE PIER
(2 LOCATIONS)

Scale : 1" = 1'-0"

NOTE: Jack and Shore Existing Concrete Girders.
Remove Existing Roller Bearing, Masonry Plate and Anchor Bolts. Weld New 1" Plate to Existing Embedded Plate, Drill and Grout in New Pedestal Reinforcing, Install New Elastomeric Bearing and Guide Plates.

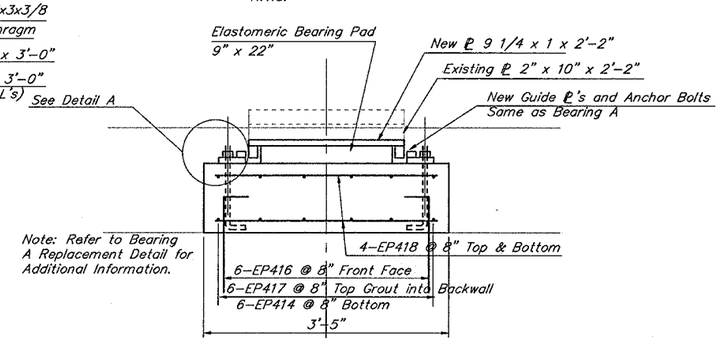

BEARING B & C REPLACEMENT- EAST SIDE BASCULE PIER
(4 LOCATIONS)

Scale : 1" = 1'-0"

All Material, Labor and Equipment to Install Elastomeric Pads Shall be Paid for Under Item 605603.
Jacking, Shoring, Removal of Existing Bearings and Furnishing and Installing Anchor Bolts, Guide Plates and Load Plates is Incidental to Item 605603.
Dowel Bars and Reinforcing Steel to be Paid for Under Item 604000.
Pedestals to be Class D Concrete, Paid Under Item 602013.

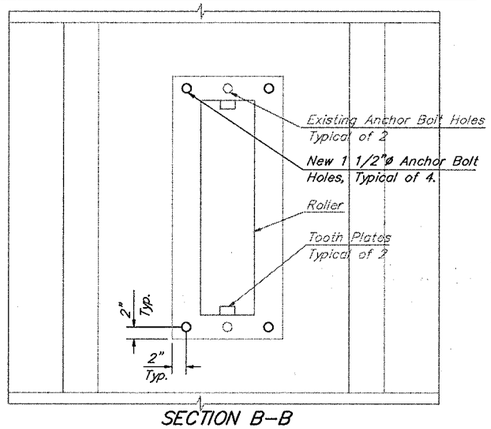

SECTION B-B

Scale : 1" = 1'-0"

Item	Pier 5	
	Bearing A	Bearings B & C
Top Bearing Plate (in)	18 1/2x 40x 3 1/4	18x 33x 3 1/4
Rollers (in)	9x 24" øx 36	9x 24" øx 29
Bottom Bearing Plate (in)	18 1/2x 44x 3 1/4	18x 37x 3 1/4
c-c Anchor Bolts	3'-4"	2'-9"

REVISIONS

PREL. TRACING J.P. Bartholomay DESIGN W. M. Ahola CHKD. W. M. Ahola

for info only

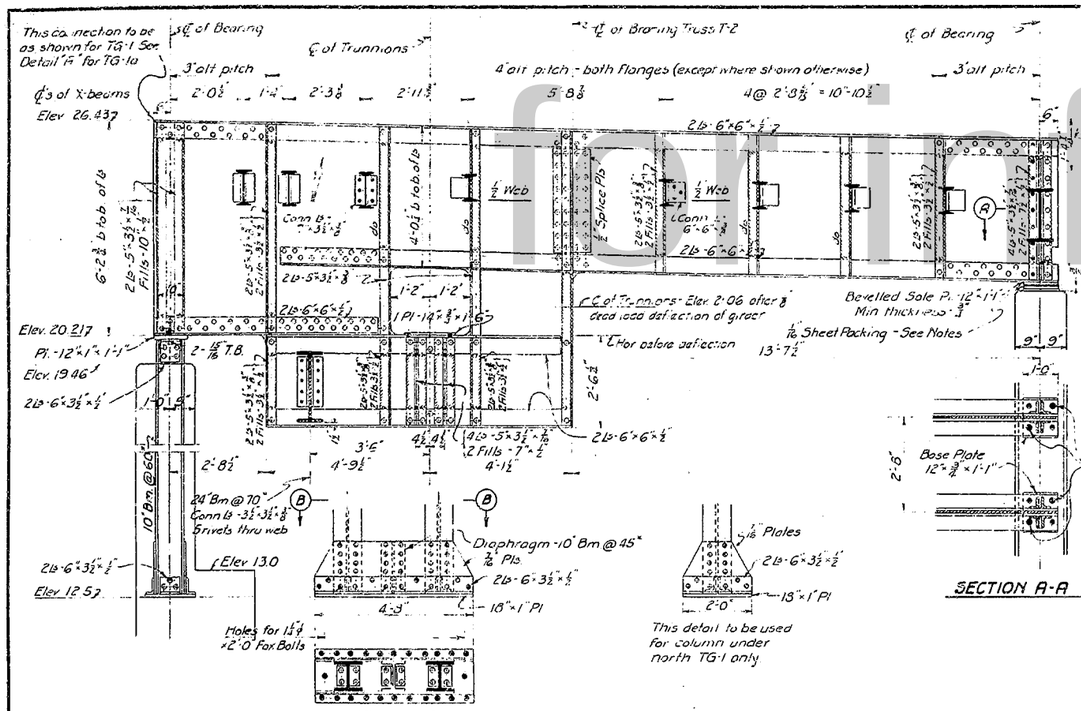

TRUNNION GIRDERS TG-1 & TG-1a

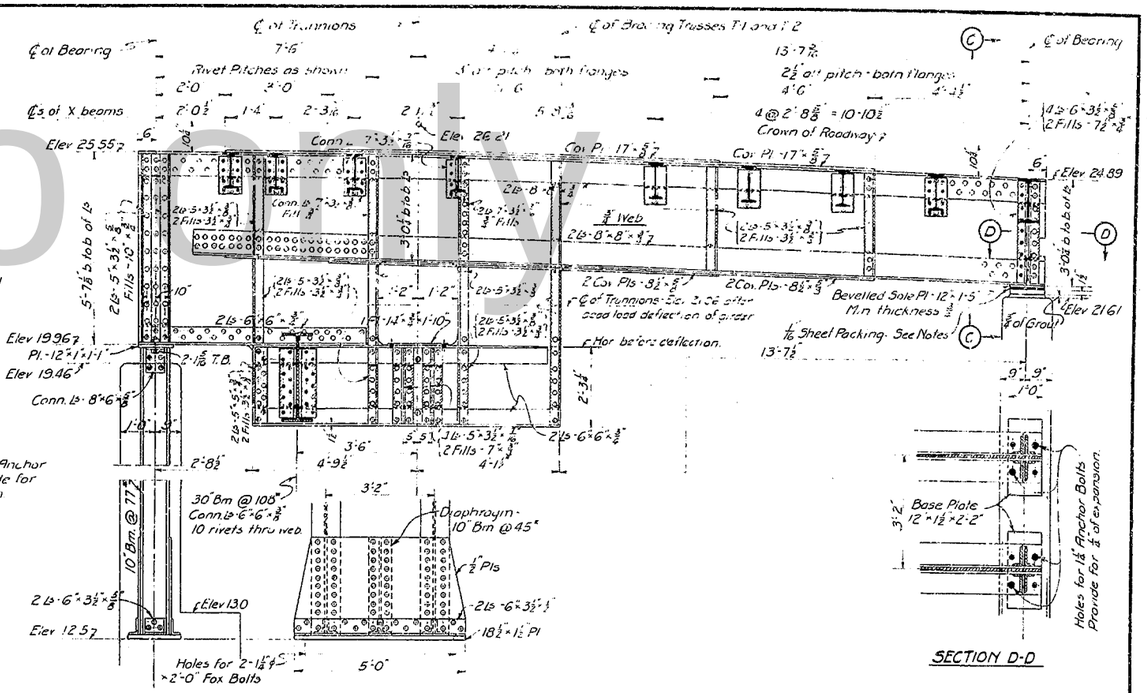

TRUNNION GIRDERS TG-2

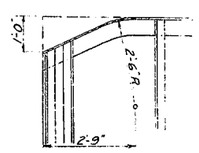

DETAIL "A"
(To be used for TG-1a only)

Notes on Trunnion Girders:-

Girder TG-1 -
Girder flanges (back of ℄ of trunnions) are to be parallel.
Top flanges of all crossbeams shown are to be set 1-1½" below crown of roadway.
Stiffeners under trunnion bearings are to be ground to bear at top.

Girder TG-2 -
Top girder flange is to be parallel to crown of roadway. Bottom flange may be made straight. Rivet pitch in cover plates to be 3" for a distance of 2'-0" from each end, and 6" over remainder of length.
Top flanges of crossbeams are to be set flush with backs of top flange angles.
Stiffeners under trunnion bearings to be ground to bear at top.

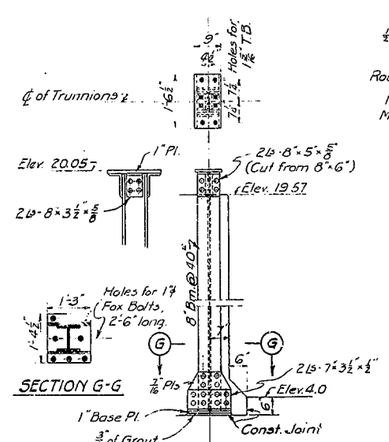

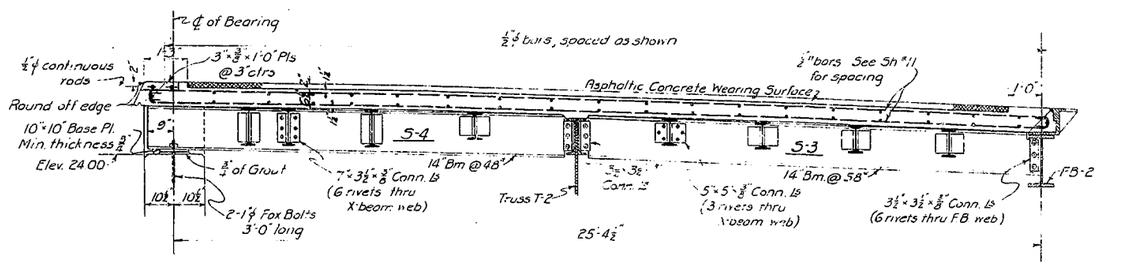

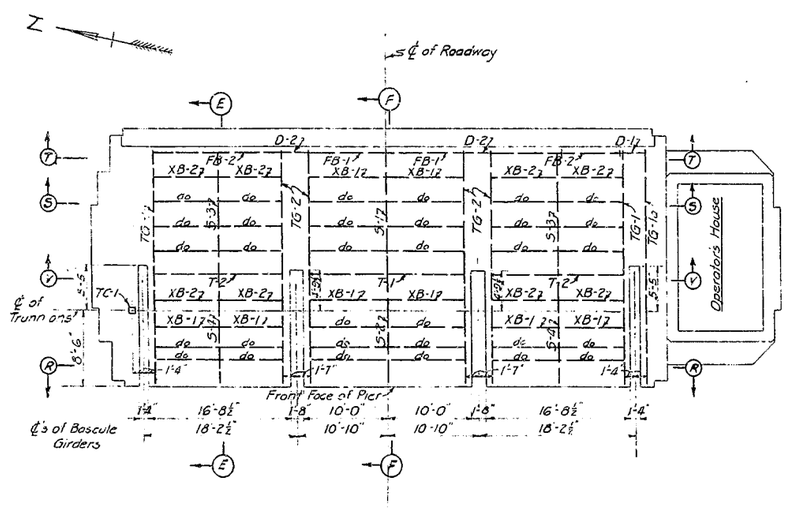

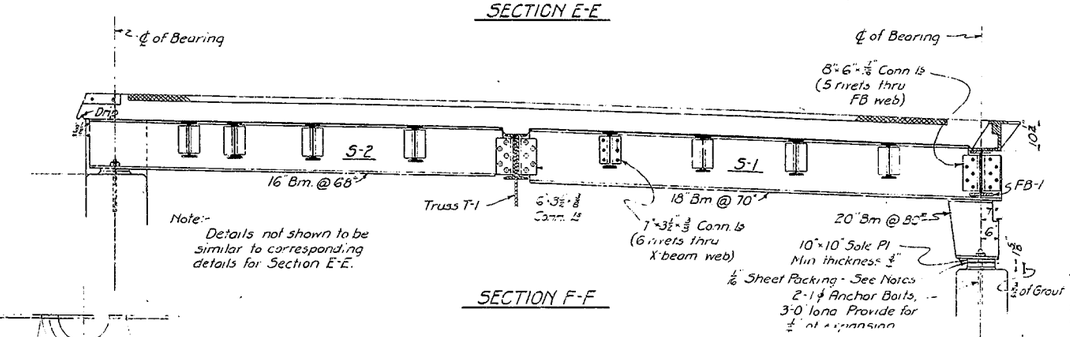

Note:-
Details not shown to be similar to corresponding details for Section E-E.

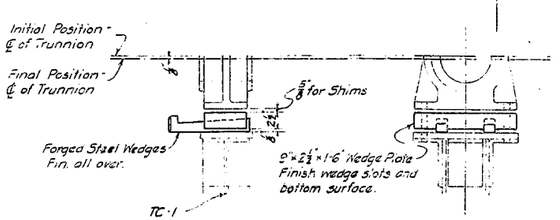

Before starting erection of bascule, wedges are to be set so that there is ⅛" clear between wedge plate and sole plate on column. As erection progresses, the wedge plate is to be lowered, by driving wedges, until wedge plate rest upon sole plate, after which bearing is to be bolted to column.

METHOD OF RAISING TRUNNION BEARING ON TC-1 DURING ERECTION

NOTES:-

See Sheet No. 4 for General Notes.
See Sheet No. 11 for Sections R-R, S-S, and T-T.
See Sheet No. 11a for Section V-V.
Concrete fills are to be provided as may be required over stringers, crossbeams, and trunnions on girders.
Wherever sheet packing is called for on this sheet, use one layer of ⅛" Johns-Manville asbestos sheet packing No. 60.
All concrete hereon to be Class B. See Specifications

ELEVENTH STREET BRIDGE
OVER BRANDYWINE CREEK
WILMINGTON, DELAWARE
FOR NEWCASTLE COUNTY, DELAWARE

44 FOOT ROADWAY

STEEL FRAMING - BASCULE PIER

SCALE ⅛"=1'-0" Unless Noted
MADE BY P.A.U. DATE 8-2-31
TRACED BY P.A.U. DATE 3-27-31

JOHN HOWARD NEEDLES & TAMLIN
CONSULTING ENGINEERS
WILMINGTON NEW YORK

for info only

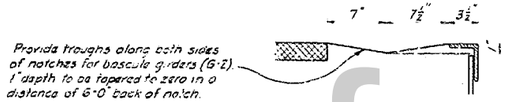

DETAIL "D"
Scale - 1½" = 1'-0"

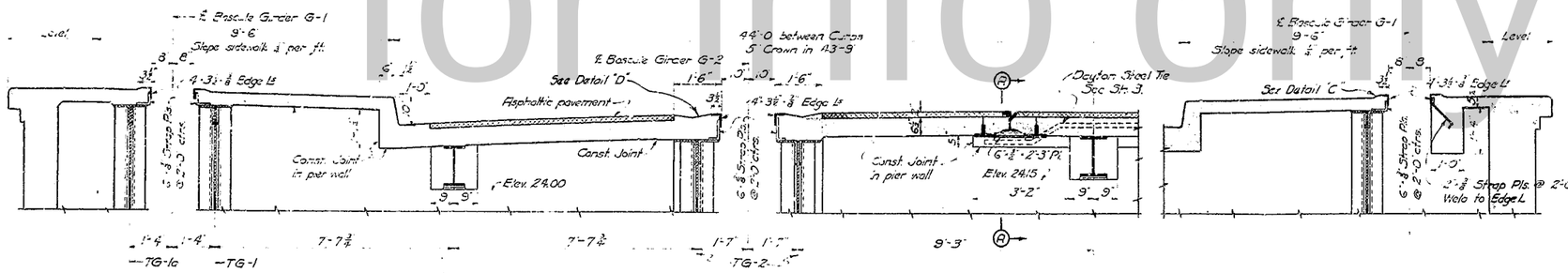

SECTION R-R

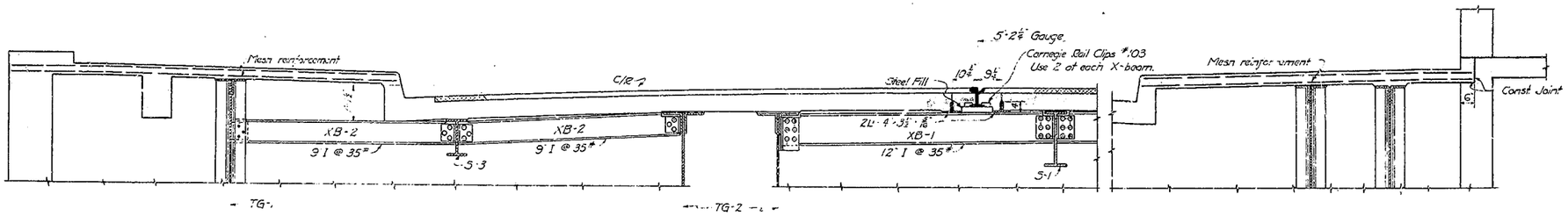

SECTION S-S

SECTION T-T

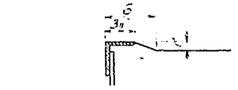

DETAIL "C"
Scale - 1½" = 1'-0"

Sidewalk to be raised as shown around edges of bascule girder notches. Raise to be tapered to zero in a distance of 9'-2" front of bascule pier.

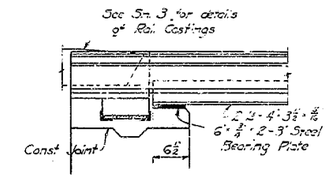

SECTION A-A

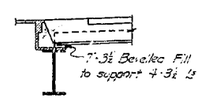

SECTION B-B

NOTES:

See General Notes on Sheet 4.

See Sheet 10 for location of Sections R-R, S-S, and T-T.

Sidewalk slabs are not to be poured until trunnion girders are carrying a "full dead" load including roadway slab.

All edge L's are to be welded to supporting strap plates.

Concrete fills are to be provided, where required, over crossbeams, stringers, and trunnion girders.

All concrete hereon to be Class B. See Specifications.

ELEVENTH STREET BRIDGE
OVER BRANDYWINE CREEK
WILMINGTON, DELAWARE
FOR NEWCASTLE COUNTY, DELAWARE

44 FOOT ROADWAY

STEEL FRAMING AND
FLOOR-BASCULE PIER

SCALE 1" = 1'-0" Unless Noted
DESIGNED P.A.U. DATE 8-31-31
DRAWN M.E.M. DATE 9-10-3.

for info only

Slab Reinforcement -
Roadway (Longitudinal) - ⅝" ⌀ bars, spaced as shown below
(Transverse) - ½" ⌀ " " or Sh. #10.
Sidewalk - Wire Mesh, #4 wires @ 4" centers, in both directions

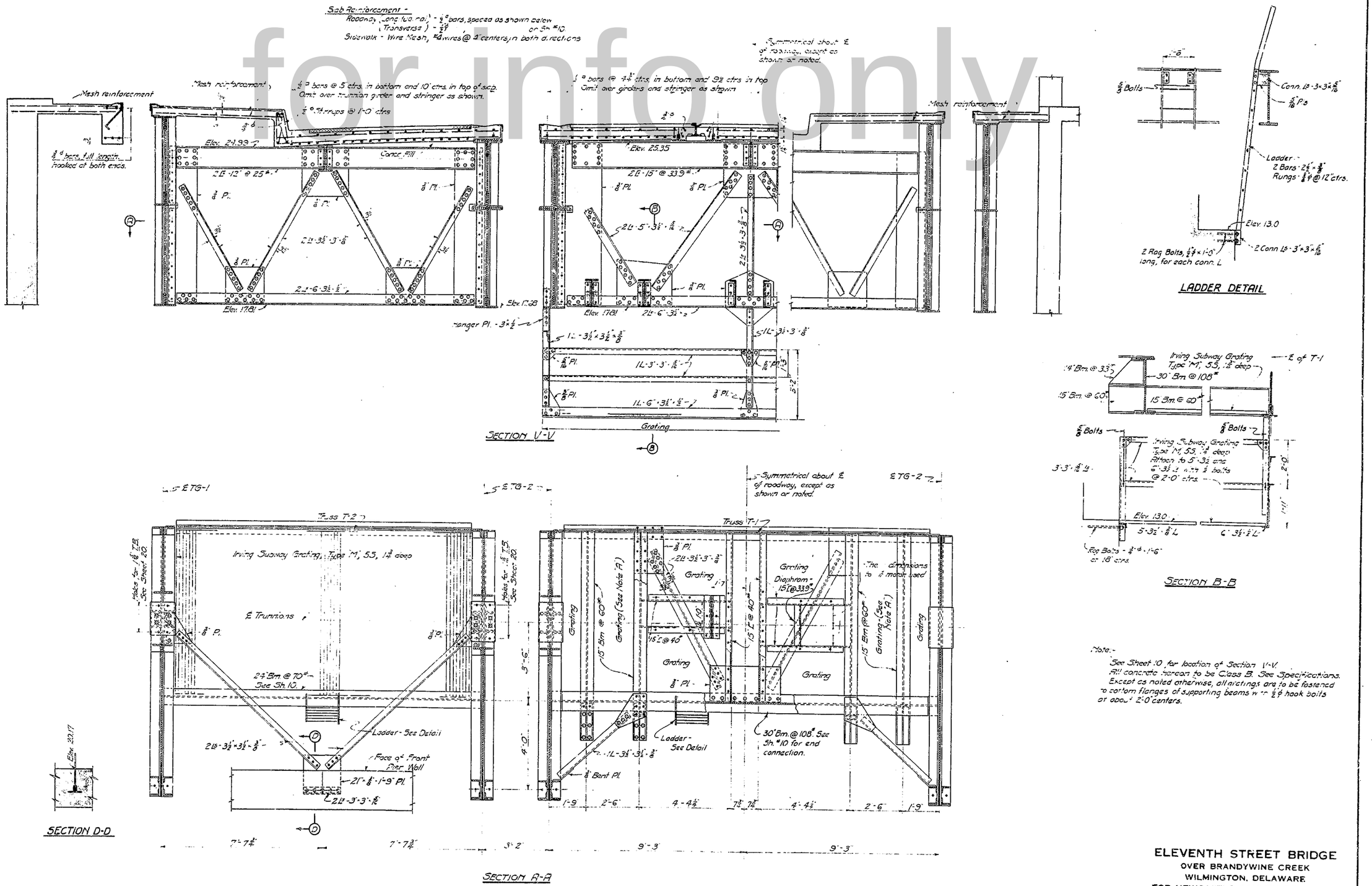

Note "A":
This grating to be made up in three approximately equal sections to facilitate removal.

Note:-
See Sheet 10 for location of Section V-V.
All concrete thereon to be Class B. See Specifications.
Except as noted otherwise, all fastenings are to be fastened to bottom flanges of supporting beams with ½" ⌀ hook bolts at about 2'-0" centers.

ELEVENTH STREET BRIDGE
OVER BRANDYWINE CREEK
WILMINGTON, DELAWARE
FOR NEWCASTLE COUNTY, DELAWARE

44 FOOT ROADWAY

STEEL FRAMING AND FLOOR-BASCULE PIER

SCALE ½"=1'-0"
MADE BY RAU DATE 9-12-31
TRACED BY MEM DATE 9-16-31

ASH-HOWARD, NEEDLES & TAMMEN
CONSULTING ENGINEERS
KANSAS CITY NEW YORK

for info only

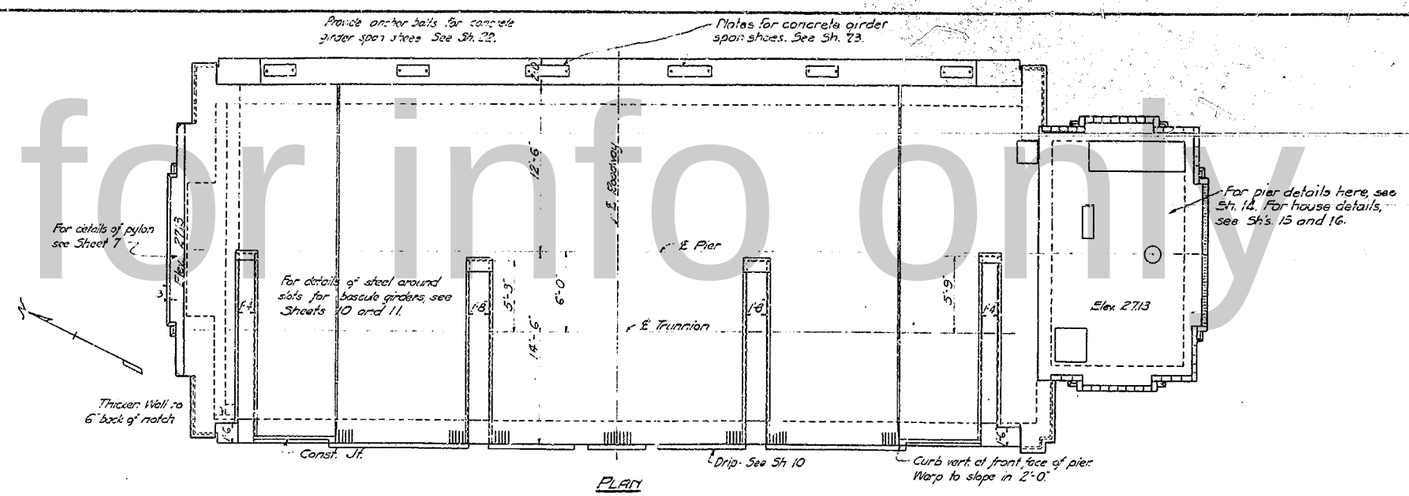

PLAN

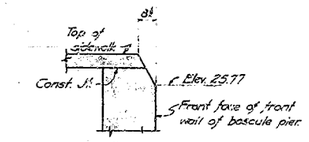

SECTION B-B
1/4" = 1'-0"

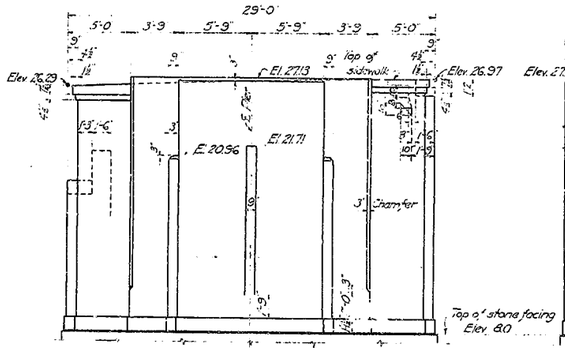

NORTH ELEVATION

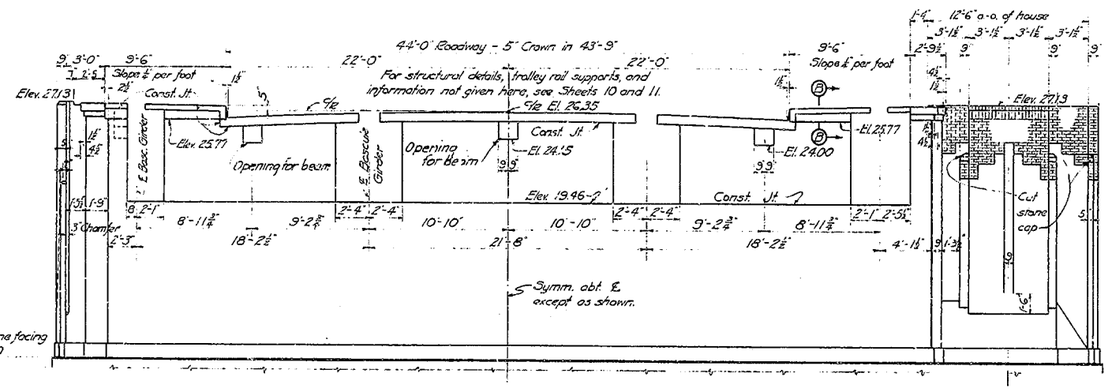

WEST ELEVATION

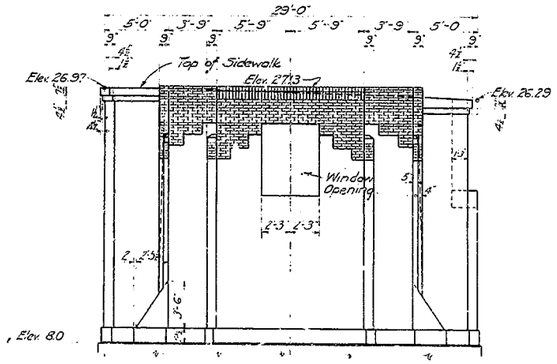

SOUTH ELEVATION

Note:
East Elevation of House opp. hand of West Elevation of House, except as shown.

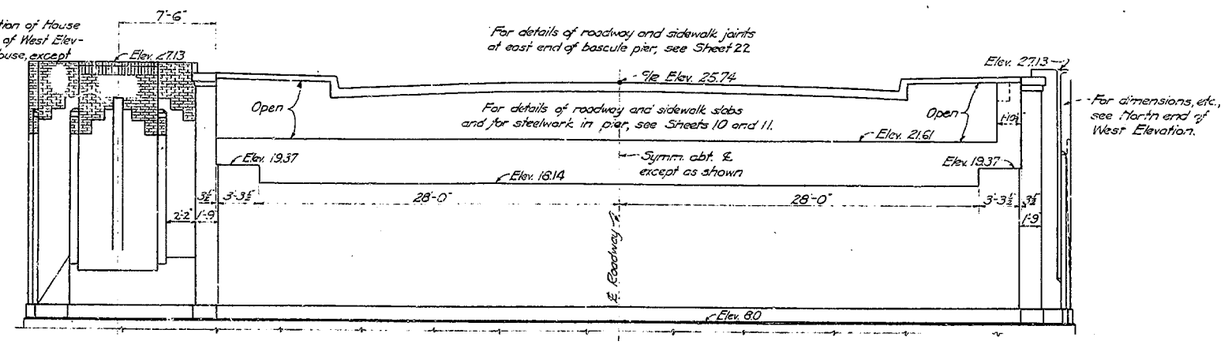

EAST ELEVATION

NOTES:
For details of pier see Sheets 13 and 14.
For General Notes see Sheet 13.
Portion of pier below elev 8.0 not shown hereon, see Sh. 13
Except as otherwise shown or noted, all exterior corners to have 1/2"-45° bevel.

ELEVENTH STREET BRIDGE
OVER BRANDYWINE CREEK
WILMINGTON, DELAWARE
FOR NEWCASTLE COUNTY, DELAWARE

44 FOOT ROADWAY

BASCULE PIER

SCALE 1/4" = 1'-0" Unless Noted
MADE BY G.E.W. DATE 2-21-31
TRACED BY M.E.H. DATE 8-14-31

ASH-HOWARD-NEEDLES & TAMMEN
CONSULTING ENGINEERS
KANSAS CITY NEW YORK

for info only

4-10-2

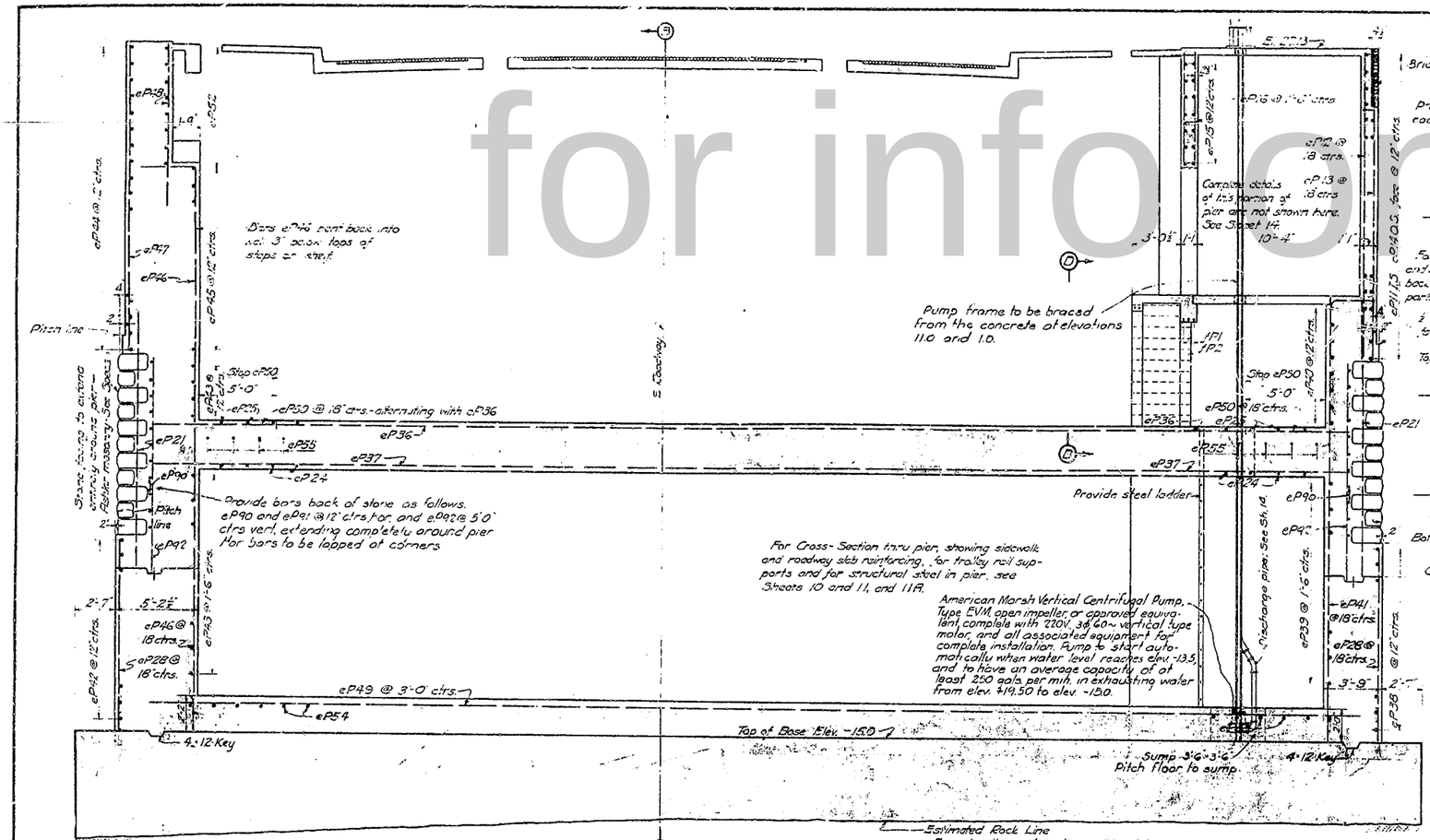

SECTION A-A

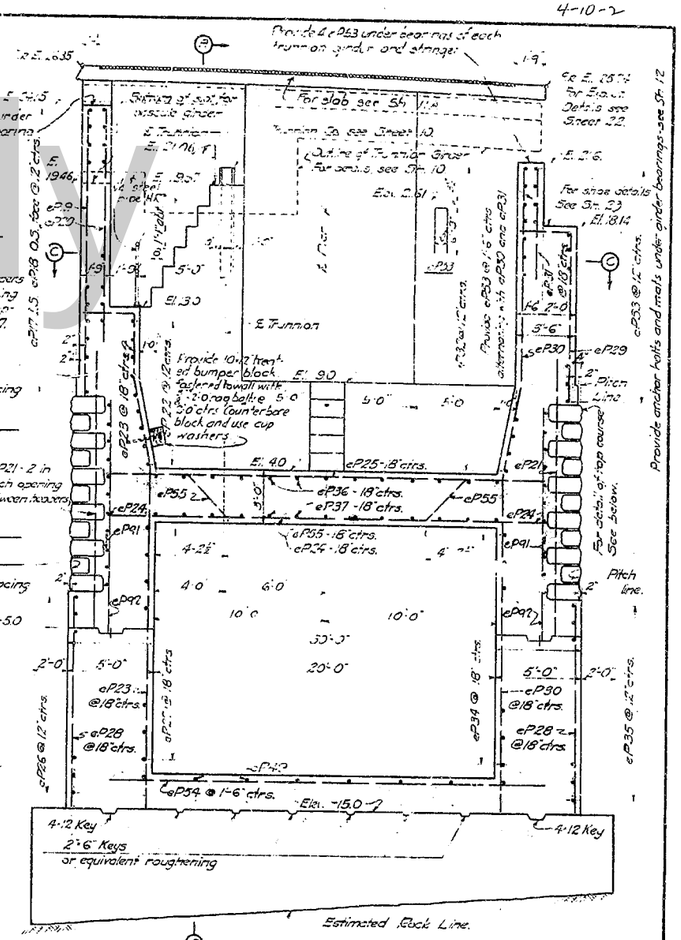

SECTION B-B
On ℄ Roadway

BAR MARKING TABLE			
Mark	Size	Mark	Location
e	¾"	P	Pier

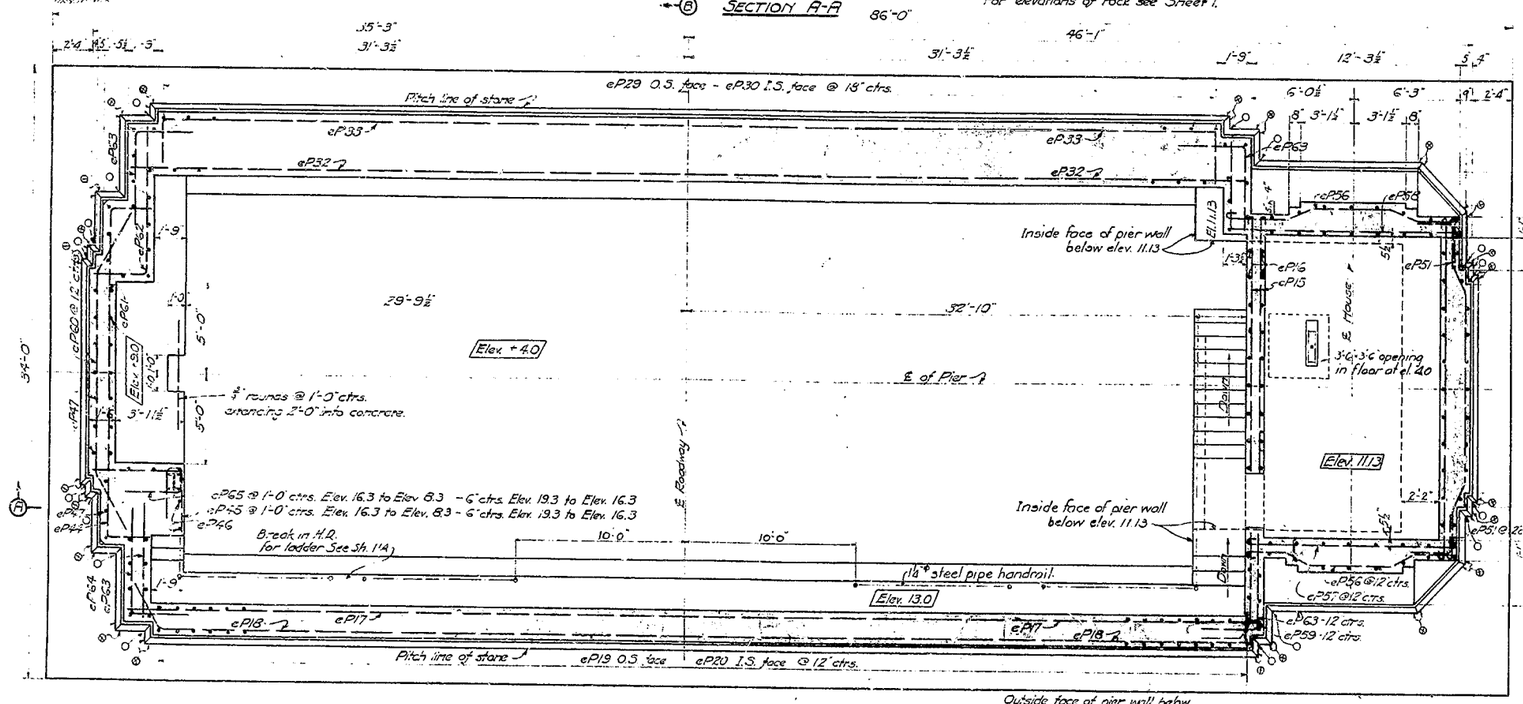

SECTION C-C

Outside face of pier wall below Elev. -3.0 not shown here.

GENERAL NOTES:

Provide vertical bars in both faces of all walls ¾" ϕ @ 18" ctrs. except as shown.

Provide horizontal bars in both faces of all walls ¾" ϕ @ 12" ctrs. except as shown.

Bars eP21 back of stone to be located two in each opening between header.

Openings about 3" centers.

Minimum clear distance from face of concrete to reinforcing to be 3" except as noted.

All concrete in bascule pier to be Class B - See Specifications.

Provide suitable construction joints as may be approved by the Engineer.

Adequate keys shall be provided at all construction joints. Continuous 6 copper strips shall be provided at all construction joints in outside walls.

All reinforcing steel to be deformed bars of intermediate grade accurately spaced and securely wired in place before concrete is poured.

Minimum distance center to center of bars shall be 3 diameters, with a preferable minimum clear distance of 3".

Bars shall be lapped 44 diameters unless otherwise noted, at all splices.

Minimum radius of bends shall be 4 diameters of the bar except for stirrups, hoops and similar pieces requiring smaller bends.

Hooks shall be made in accordance with the section shown.

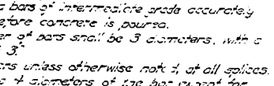

Splices in bars shall be made only with the approval of the Engineer.

O - Finish corner to pitch line of stone, when indicated thus.

⊗ - Indicates ¼" chisel draft.

Extensions of bars beyond concrete surfaces to be 2'-9" unless shown otherwise.

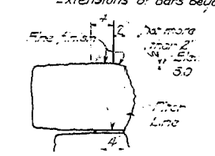

DETAIL OF TOP COURSE
Scale 1" = 1'-0"

ELEVENTH STREET BRIDGE
OVER BRANDYWINE CREEK
WILMINGTON, DELAWARE
FOR NEWCASTLE COUNTY, DELAWARE

44 FOOT ROADWAY

BASCULE PIER

SCALE 1/8"=1'-0" Unless Noted
DATE 2-19-31
DRAWN G.E.W.
CHECKED M.C.V.
ASH HOWARD NEEDLES & TAMMEN
CONSULTING ENGINEERS
BARGER & HILL

for info only

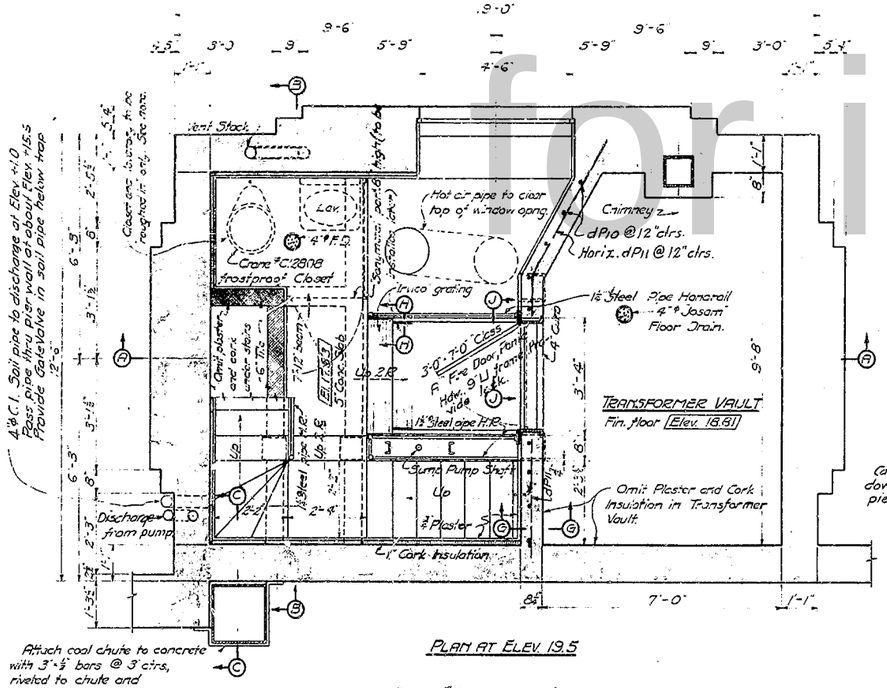

PLAN AT ELEV. 19.5

Attach coal chute to concrete with 3"×½" bars @ 3" ctrs, riveted to chute and bolted to concrete with ¾"ϕ lag bolts, 6" long, in expansion shields.

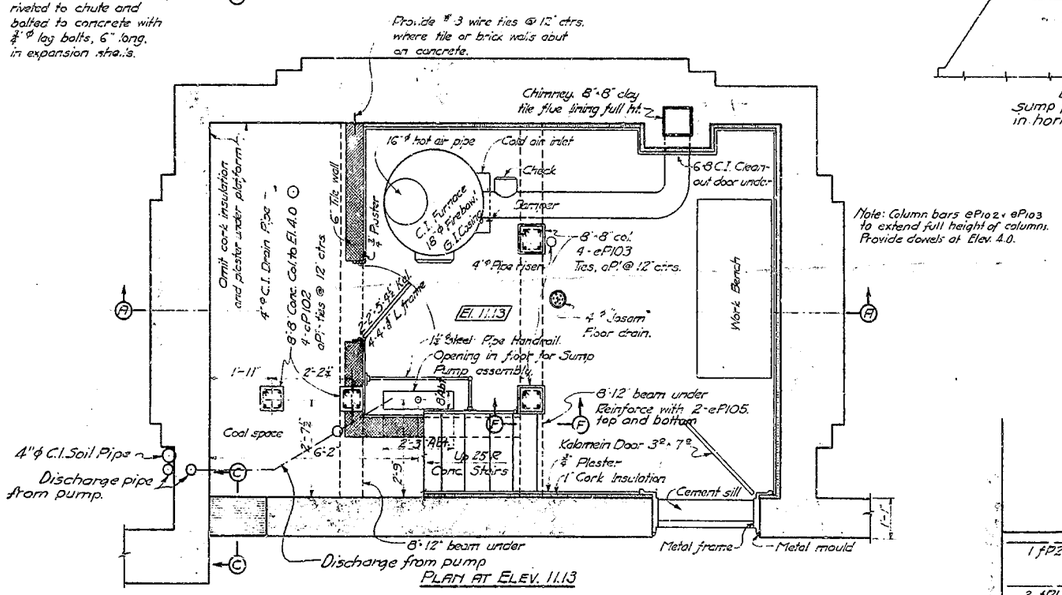

PLAN AT ELEV. 11.13

Note: Column bars ePI02 & ePI03 to extend full height of columns. Provide dowels at Elev. 4.0.

BAR MARKING TABLE

Mark	Size	Mark	Location
a	⅜"ϕ	P	Pier
b	½"ϕ		
d	⅝"ϕ		
e	¾"ϕ		
f	⅞"ϕ		

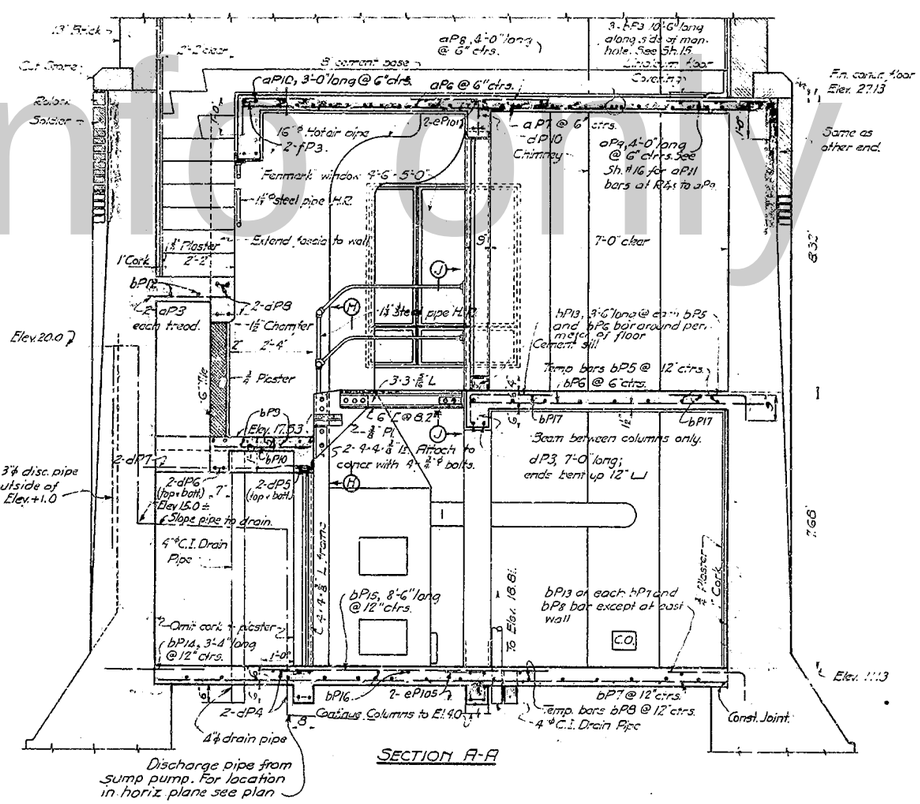

SECTION A-A

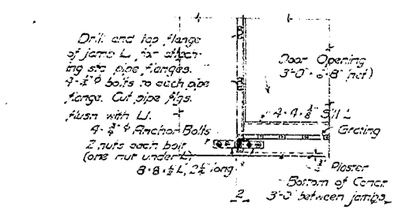

SECTION J-J

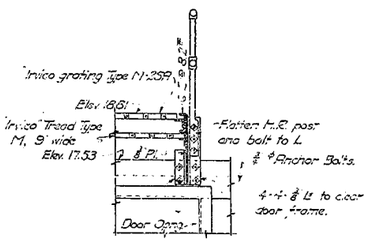

SECTION H-H

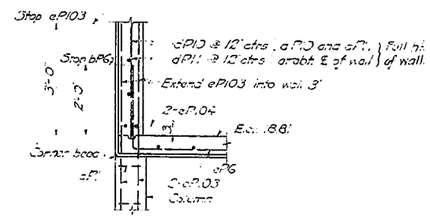

SECTION G-G

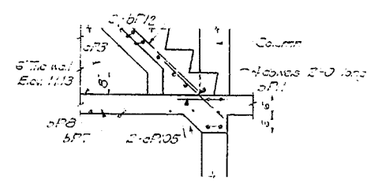

SECTION F-F

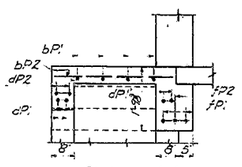

SECTION X-X

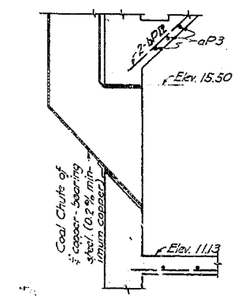

SECTION C-C

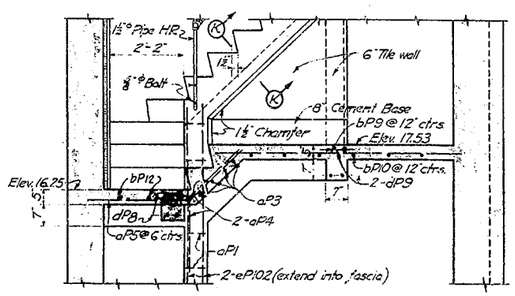

SECTION B-B

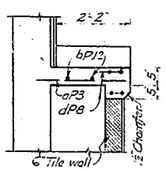

SECTION K-K

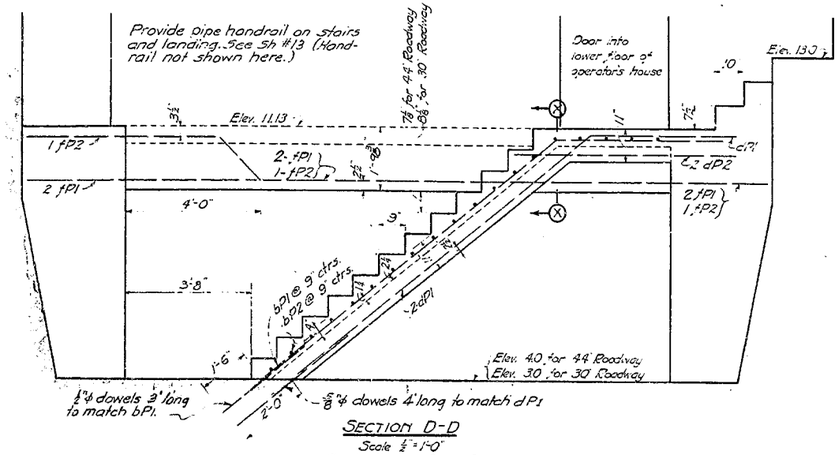

SECTION D-D

Scale ½" = 1'-0"

For location, see Sheet 13

NOTES:

For other details of Bascule Pier see Sheets 12 and 13.

For details of Operators House see Sheets 15 and 16.

Plumbing fixtures and toilet partitions are not to be installed at this time. Install all floor drains complete and properly in all necessary water pipe, soil pipe, vent stack, etc so that fixtures may be set later without disturbing masonry. Open ends of all pipes to be capped or plugged until fixtures are attached.

Steel pipe handrail, grating and structural steel supports to be painted one shop coat of red lead and oil and two field coats of aluminum.

Provide sleeve thru pier wall to pass future insulated water pipe above Elev 20.

For General Notes on Pier see Sh #13. Clear distance bars to face of conc. 2" except 1" in slabs unless noted.

Cork insulation applied to concrete shall be laid in hot asphalt unless noted otherwise.

ELEVENTH STREET BRIDGE
OVER BRANDYWINE CREEK
WILMINGTON, DELAWARE
FOR NEWCASTLE COUNTY, DELAWARE

30 AND 44 FOOT ROADWAYS

BASCULE PIER

SCALE ½"=1'-0" DATE 9 22 31
DRAWN AR. CHK. MEM. DATE 9-3-31
AGH HOWARD NEEDLES & TAMMEN

for info only

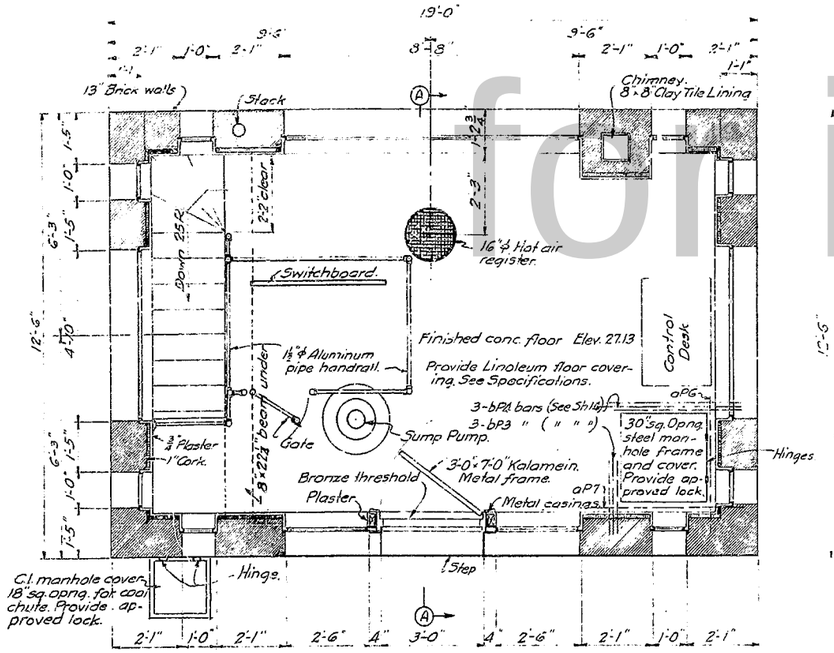

PLAN.

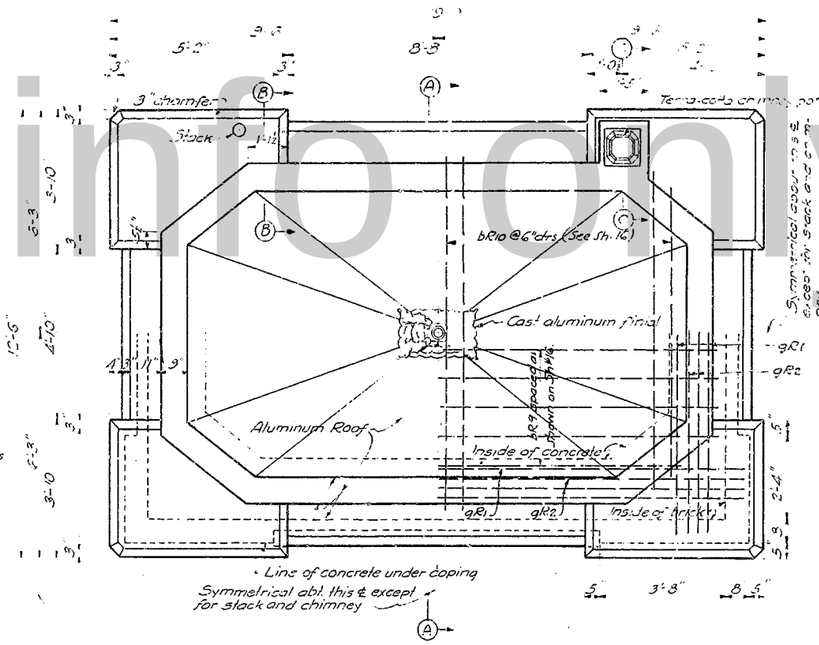

PLAN OF ROOF

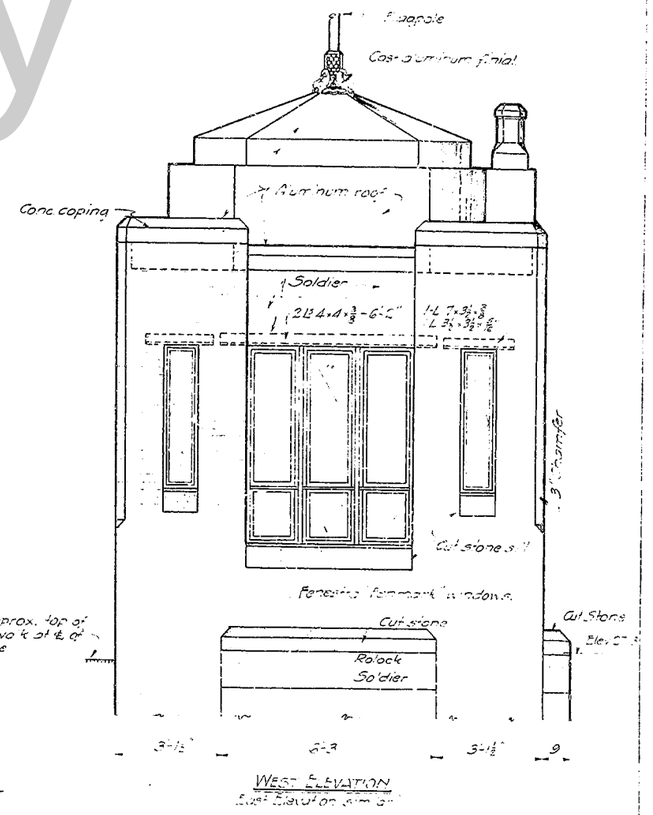

WEST ELEVATION

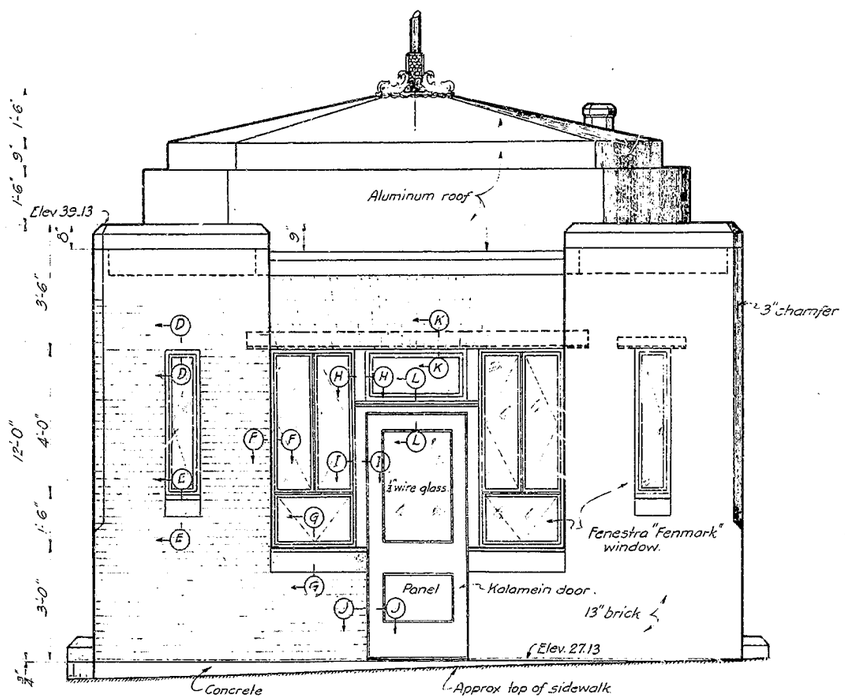

Note: Handrail posts not shown

NORTH ELEVATION.

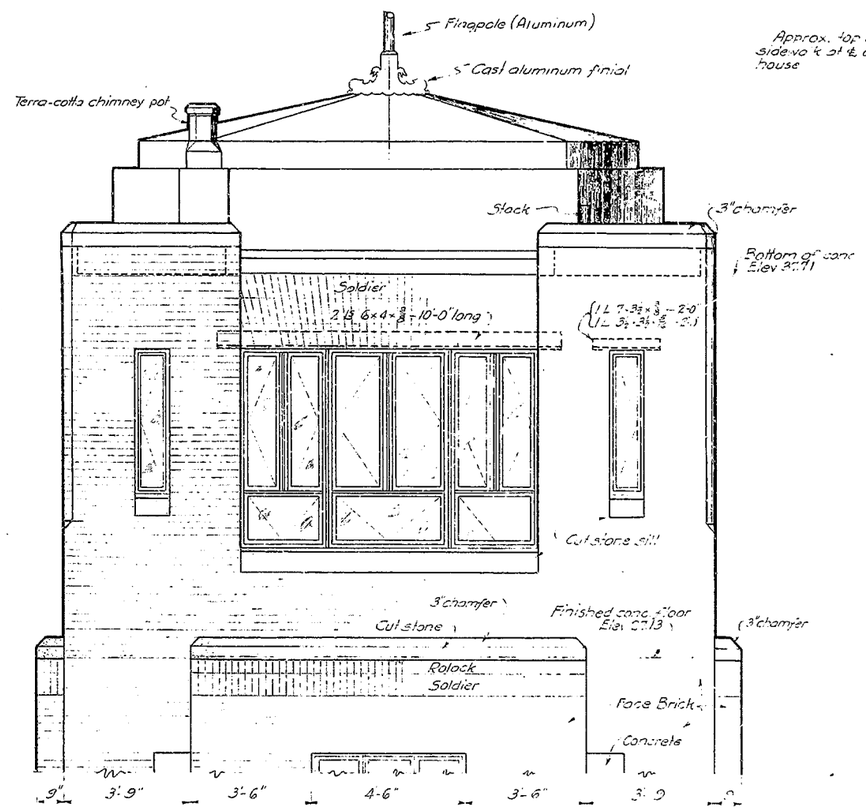

SOUTH ELEVATION.

For notes on house, and for Sections A to K inclusive, see Sh #16.

For details of Pier below Elev. 27.13 see Sheets 12, 3 & 14.

See Specifications.

All exterior corners of concrete to be sharp except where noted otherwise.

Wherever specific products or products of a particular manufacturer are called for, it is understood that approved equivalent products of other manufacturers will be permitted.

ELEVENTH STREET BRIDGE
OVER BRANDYWINE CREEK
WILMINGTON, DELAWARE
FOR NEWCASTLE COUNTY, DELAWARE

30 AND 44 FOOT ROADWAYS

OPERATOR'S HOUSE

SHEET NO. 15

for info only

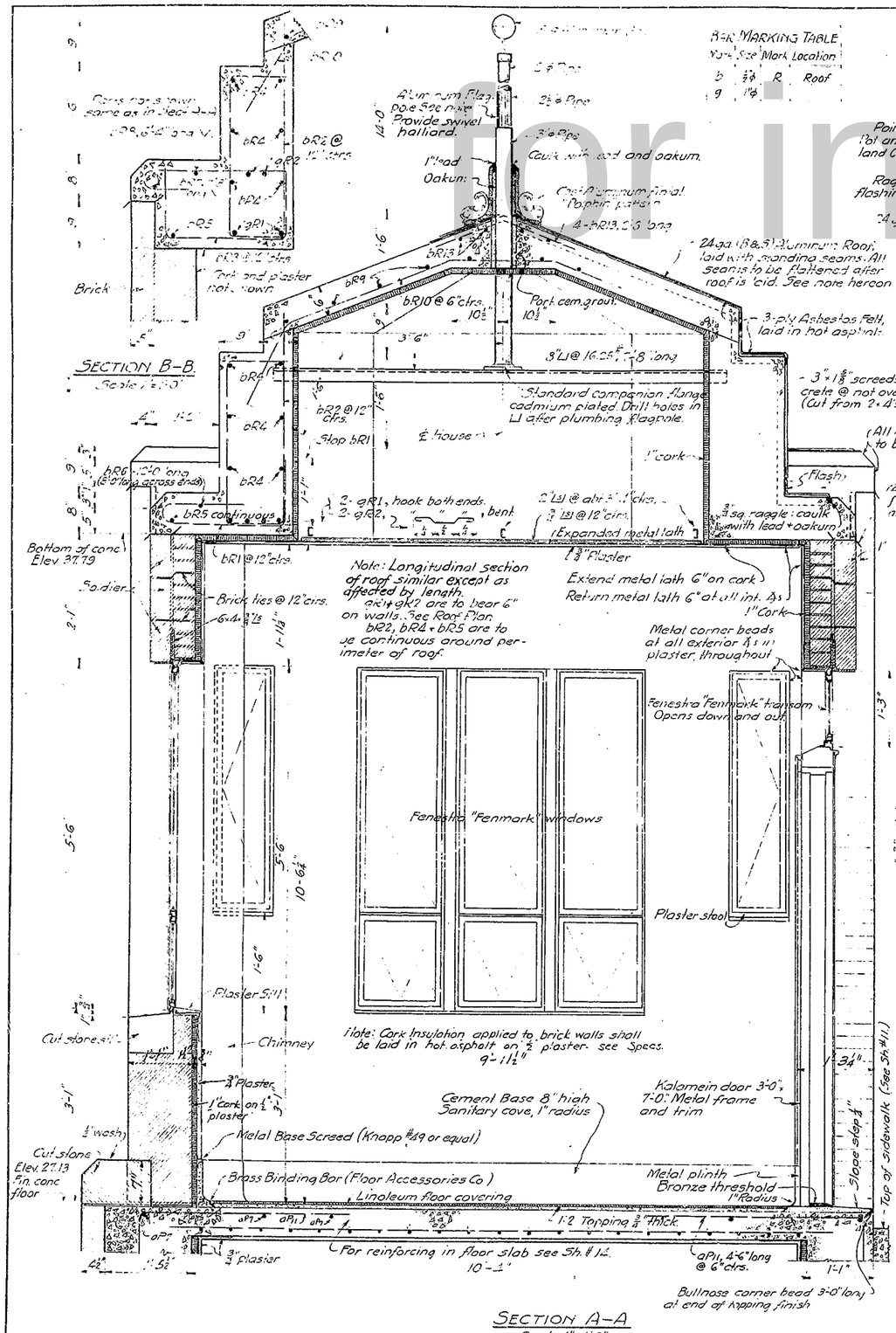

SECTION A-A
Scale 1"=1'-0"

Note:
See Sh #15 for Plan and Elev. of house.

B-R MARKING TABLE

Mark	Size	Mark	Location
b	½ø	R	Roof
g	1"ø		

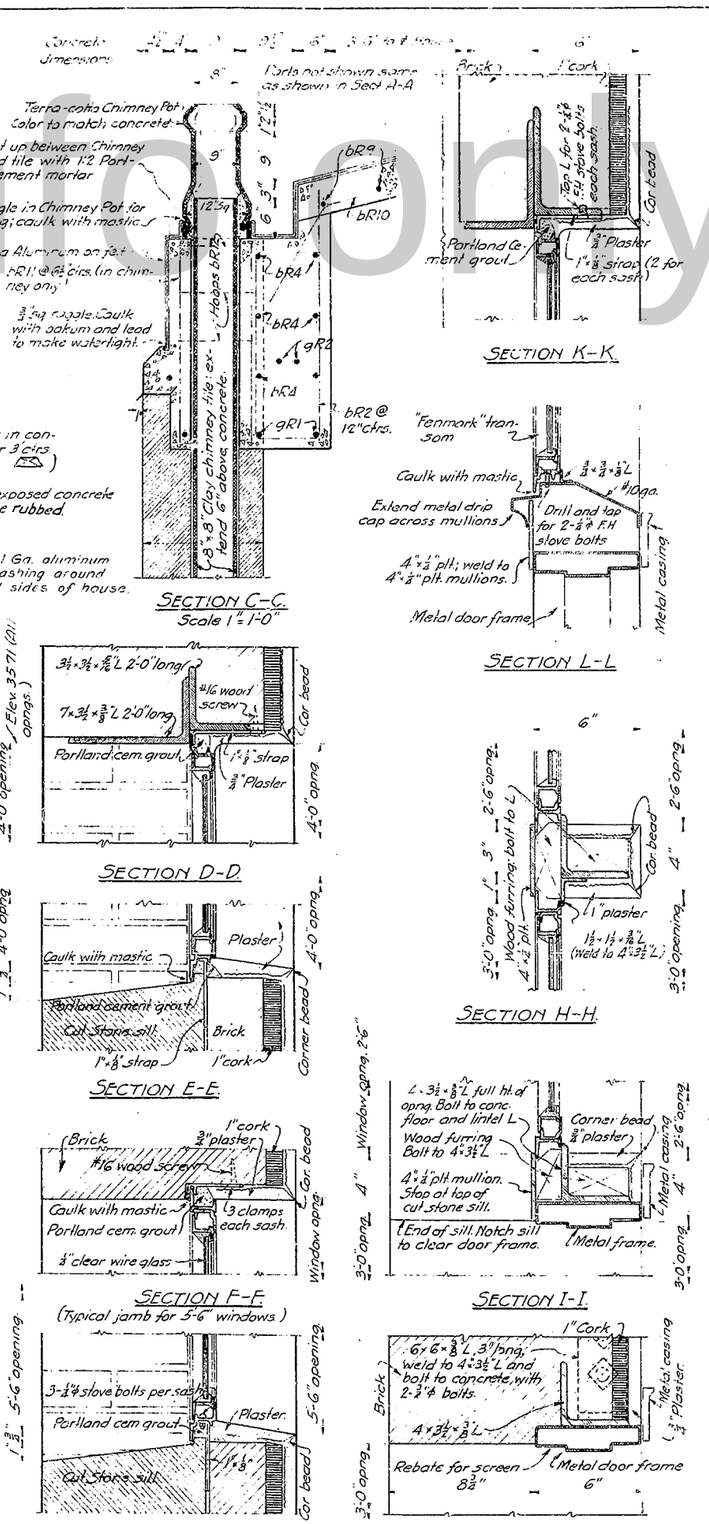

DETAILS OF OPENINGS.
Scale 3"=1'-0"

NOTES ON HOUSE

CONCRETE.

Concrete in house shall be Class B and shall conform to the General Specifications.

All exposed exterior concrete surfaces shall be given a rubbed finish. See Specifications.

For general notes on concrete see Sh #23, except that minimum clear distance from bar to edge of conc. shall be 1" in slabs.

BRICKWORK

Brick shall be laid in English bond with ¼" struck joints. Not more than five stretcher courses shall be laid between header courses.

Face brick shall be smooth pressed brick of best quality, having a light gray color similar to concrete in pier. Samples of face brick shall be submitted to the Engineers for approval.

Mortar for brickwork shall be 1:3 Corney Cement mortar gaged with hydrated lime. Mortar for face brick shall be colored to match the face brick.

"Backing up" brick shall be #2 common.

CORK INSULATION.

Insulate all walls (except transformer and coal room walls) and the roof with Corkboard 1" thick. Cork insulation shall be applied in accordance with the Specifications by mechanics skilled in that work.

Corkboard on concrete of roof shall be laid in forms before pouring concrete. Galvanized nails shall be driven into the corkboard at an angle of 45° to assist in bonding cork to concrete. Nails shall be equally spaced at the rate of 3 nails per sq. ft.

PLASTER.

Plaster on cork insulation and suspended ceiling shall be three-coat work; on ceiling of lower floor, two-coat, applied directly to the concrete. Sand finish throughout. See Specifications.

ROOF (See note on "Aluminum" below.)

Roof shall be standing seam 24 ga (B&S) Aluminum laid over 30# saturated asbestos felt as shown in drawings. Felt shall be laid in hot asphalt and thoroughly mopped in.

Seams in aluminum shall be continuous and shall be flattened down to present a neat appearance after roof is laid.

FLOORS.

Upper floor shall be finished to a plane surface with a Portland Cement topping ¾" thick, and shall be covered with a Battleship Linoleum laid on felt and properly fastened down.

Lower floors may be finished monolithic. Provide a uniform pitch to floor drains.

DOORS.

All doors shall be two-panel Kalamein metal doors with metal frames, conforming to the requirements of Fire Underwriters' Laboratories Specifications, or approved equivalent, except as noted.

Door in upper story of house shall be glazed with ¼" clear wire glass in the upper panel, and shall be weather-stripped.

Door to Transformer Vault to be a Class A Fire Door, provided with panic hardware. See Specifications.

WINDOWS.

All windows are to be Fenestra "Fenmark" metal windows as manufactured by Detroit Steel Products Co. or approved equivalent. Windows are to be provided with bronze hardware and with metal-mounted copper screens that permit the operation of ventilators without disturbing screens.

Windows shall be glazed with ¼" clear wire glass set in Steel Casement Sash Putty and held in place by copper-plated steel wire glazing clips.

Setting and glazing of windows and doors to be done in the most approved manner to make them weather-right.

HEATING.

Provide cast iron furnace with 13" ø firebowl and galvanized iron casing as shown in the drawings. Furnace to have one 16" ø hot air pipe with floor register, also a cold air intake at the lower floor. Provide a damper and a chain-operated check in smoke pipe, and a cast iron cleanout door in the chimney.

All work in connection with making up and installing furnace to be done in the most approved manner.

PLUMBING.

See specifications and notes on Sh #15.

WIRING

House to be wired for lighting as shown on Sh #21 and as provided in the specifications.

ALUMINUM.

Aluminum used in house shall be Alcoa as manufactured by Aluminum Co. of America as follows:

For roofing, Alloy No 3S½H
For cast finial, Alloy No 43
For flagpole and pipe handrail, Alloy No 3SH.

Flagpole, handrail and roofing to have polished finish; cast finial to have sand-blasted finish.

All bolts passing thru aluminum, together with nuts, shall be cadmium-plated, thickness of plating to be .0005.

Submit photographs of model of cast finial to the Engineers for approval.

ELEVENTH STREET BRIDGE
OVER BRANDYWINE CREEK
WILMINGTON, DELAWARE
FOR NEWCASTLE COUNTY, DELAWARE

30 AND 44 FOOT ROADWAYS

OPERATOR'S HOUSE

SCALE 1"&3"=1'-0" — DESIGN HOWARD NEEDLES TAMMEN & BERGENDOFF
DRAWN A.R. DATE 9-23-31 — TRACED — CHECKED
TRACED A.R. DATE 9-3-31 — KANSAS CITY NEW YORK

for info only

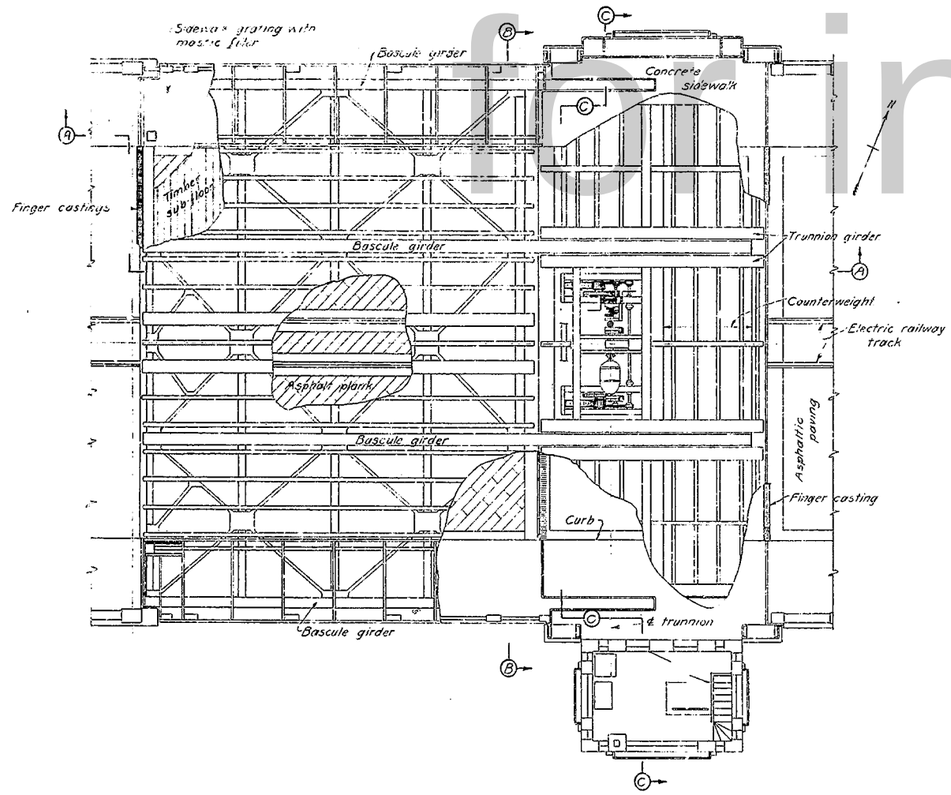

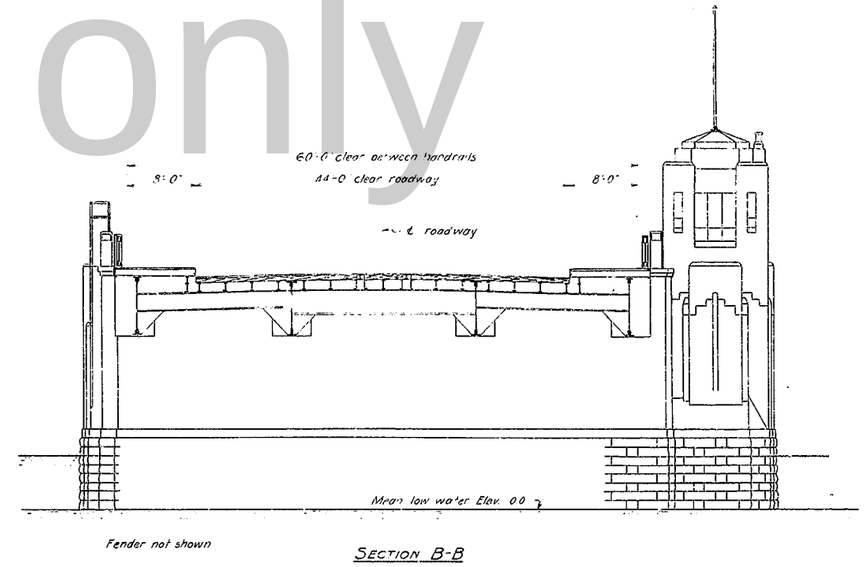

SECTION B-B

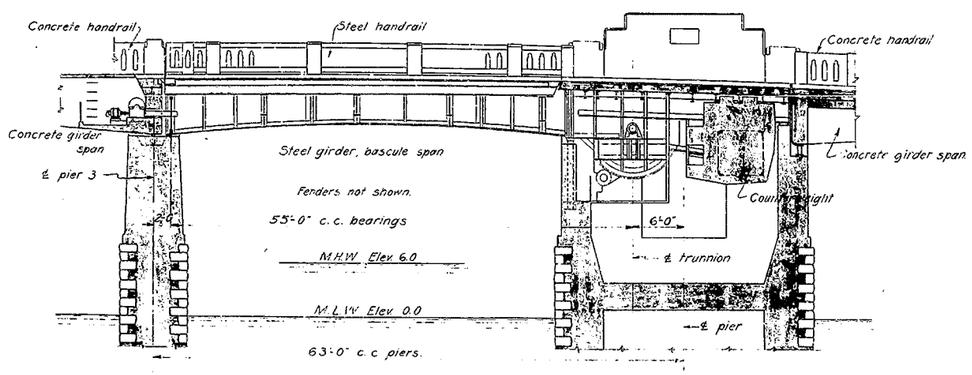

SECTION A-A

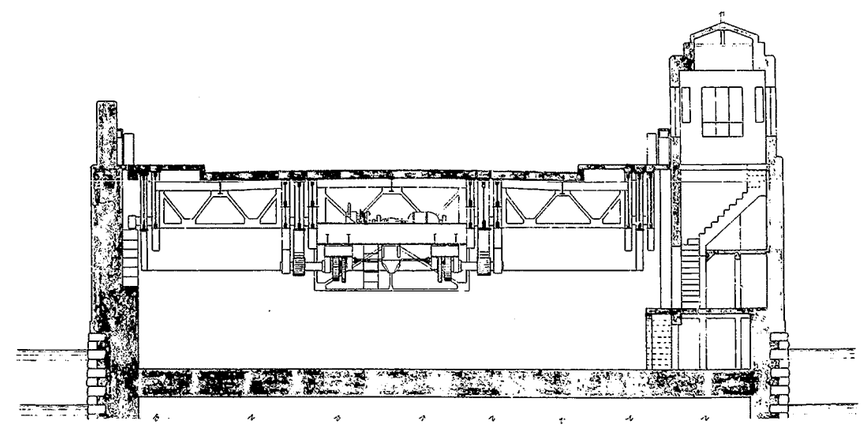

SECTION C-C

ELEVENTH STREET BRIDGE
OVER BRANDYWINE CREEK
WILMINGTON, DELAWARE
FOR NEWCASTLE COUNTY, DELAWARE

44 FOOT ROADWAY

GENERAL ARRANGEMENT OF
BASCULE SPAN AND PIER

SCALE 1/8"=1'-0"
G.A. 8 25 31
G.A. 8 31 31

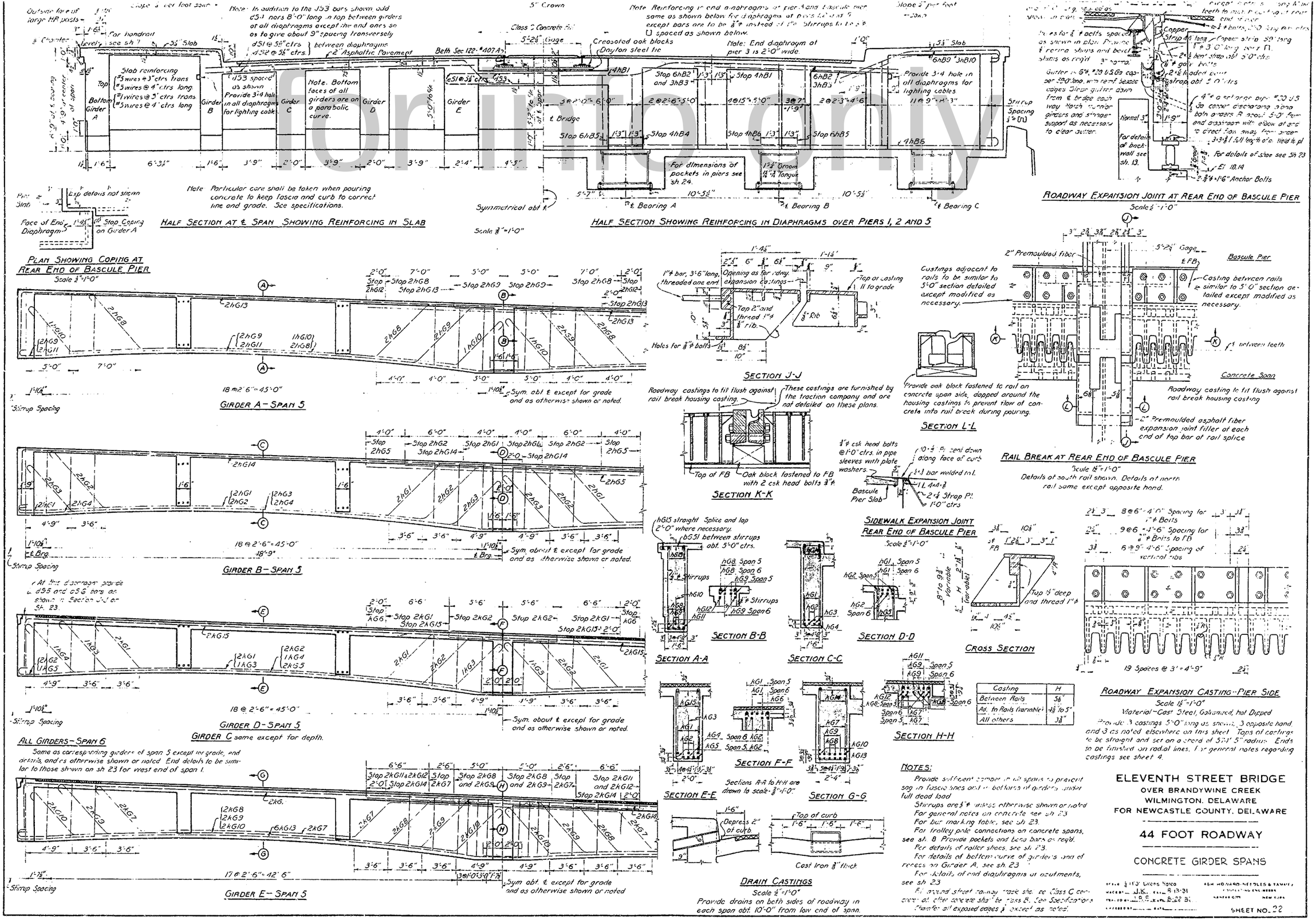

for info only

for info only

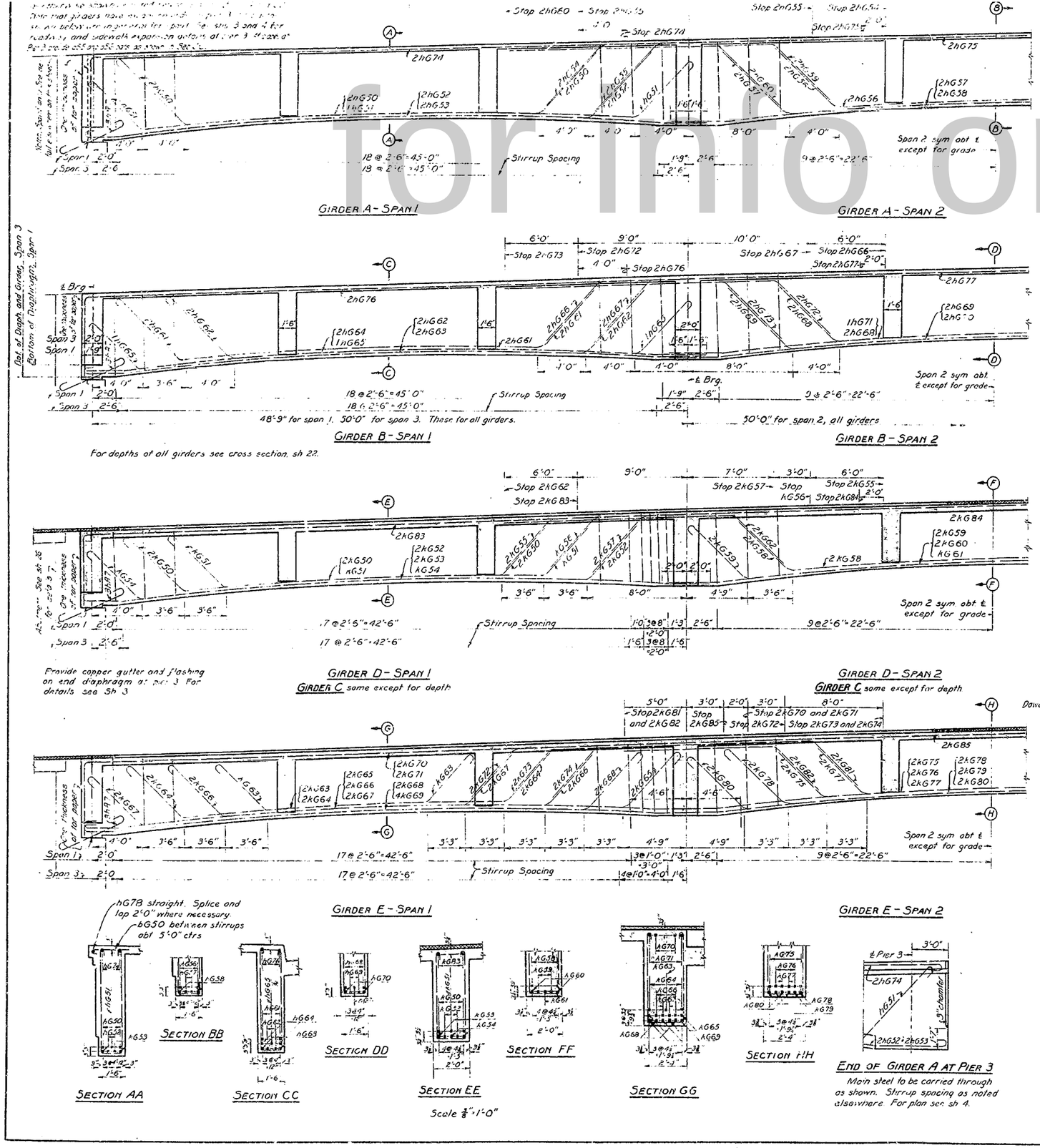

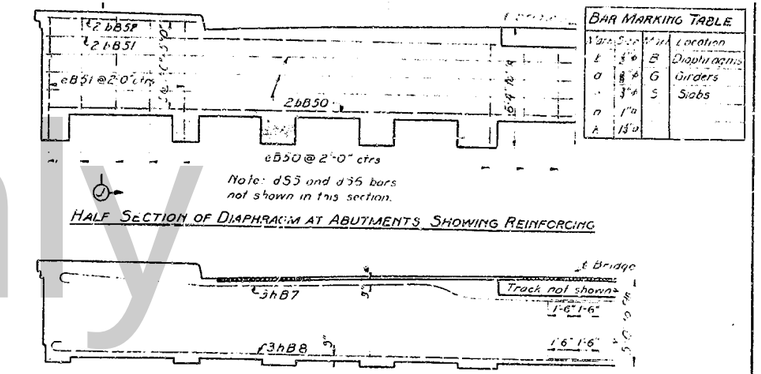

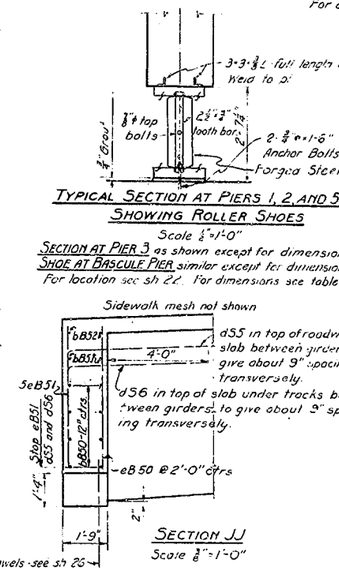

Note: Rollers and bearing plates to be copper-bearing steel with minimum copper content of 0.30%.

Item	Piers 1, 2 and 5		Pier 3 and Bascule Pier	
	Bearing A	Band C	Bearing A	B and C
Top Brg. Pls.	18½"×40"×3¾"	18"×33"×3¾"	10"×36"×2"	10"×26"×2"
Rollers	9"×24"×36"	9"×24"×29"	5"×12"×36"	5"×12"×22"
Bolt. Brg. Pls	18½"×44"×3¾"	18"×37"×3¾"	10"×40"×2"	10"×30"×2"
Notch in Brg. Pl for Tooth Bar	1½"	1½"	1"	1"
c-c Anchor Bolts	3'-4"	2'-9"	3'-2"	2'-2"

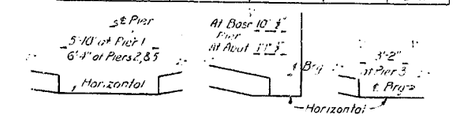

NOTES:

Provide sufficient camber in all spans to prevent sag in fascia lines and in bottoms of girders under full dead load.

Stirrups are 3/8" ø unless otherwise shown or noted.

For trolley pole connections on concrete spans see sh 8.

Chamfer all exposed edges 3/4" except as otherwise noted.

Provide anchor bolts for traffic gate supports, and reinforcing steel for gate protection posts. For details, see sh 9.

Provide drains as shown on sh 22.

Provide pipe chambers and manholes in spans as for access to chambers. See sh 20.

GENERAL NOTES ON CONCRETE:

For classification of concrete see individual sheets, and Specifications.

Construction joints other than those shown on the plans shall be made only with the approval of the Engineer. Adequate keys shall be provided as shown on the plans and as directed by the Engineer.

Unless otherwise shown or noted, the minimum clear distance of reinforcing steel from edge of concrete shall be 2".

Bars shall be lapped 44 diameters at all splices unless otherwise shown or noted.

Bends in bars used as bent down for diagonal tension reinforcement shall make an angle of 45° with the direction of the bar. Steel shall be accurately placed and securely wired in place before concrete is poured.

Minimum radius of bends shall be 4 diameters of bar except for stirrups, hooks, and similar pieces requiring sharper bends.

Hooks shall be made by bending the end of the bar through 180 degrees to a diameter not less than 6 diameters of the bar, the total length of hook being not less than 16 diameters of the bar.

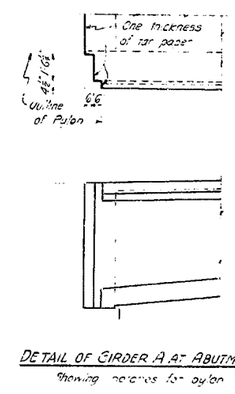

ELEVENTH STREET BRIDGE

OVER BRANDYWINE CREEK

WILMINGTON, DELAWARE

FOR NEWCASTLE COUNTY, DELAWARE

44 FOOT ROADWAY

CONCRETE GIRDER SPANS

SCALE 3/8"=1'-0" Unless Noted

DRAWN K DATE 8-18-31

TRACED LBS DATE 8-25-31

JOHN HOWARD HEDGES & TAMMEN

CONSULTING ENGINEERS

NEWCASTLE, NEW YORK

SHEET NO. 23

for info only

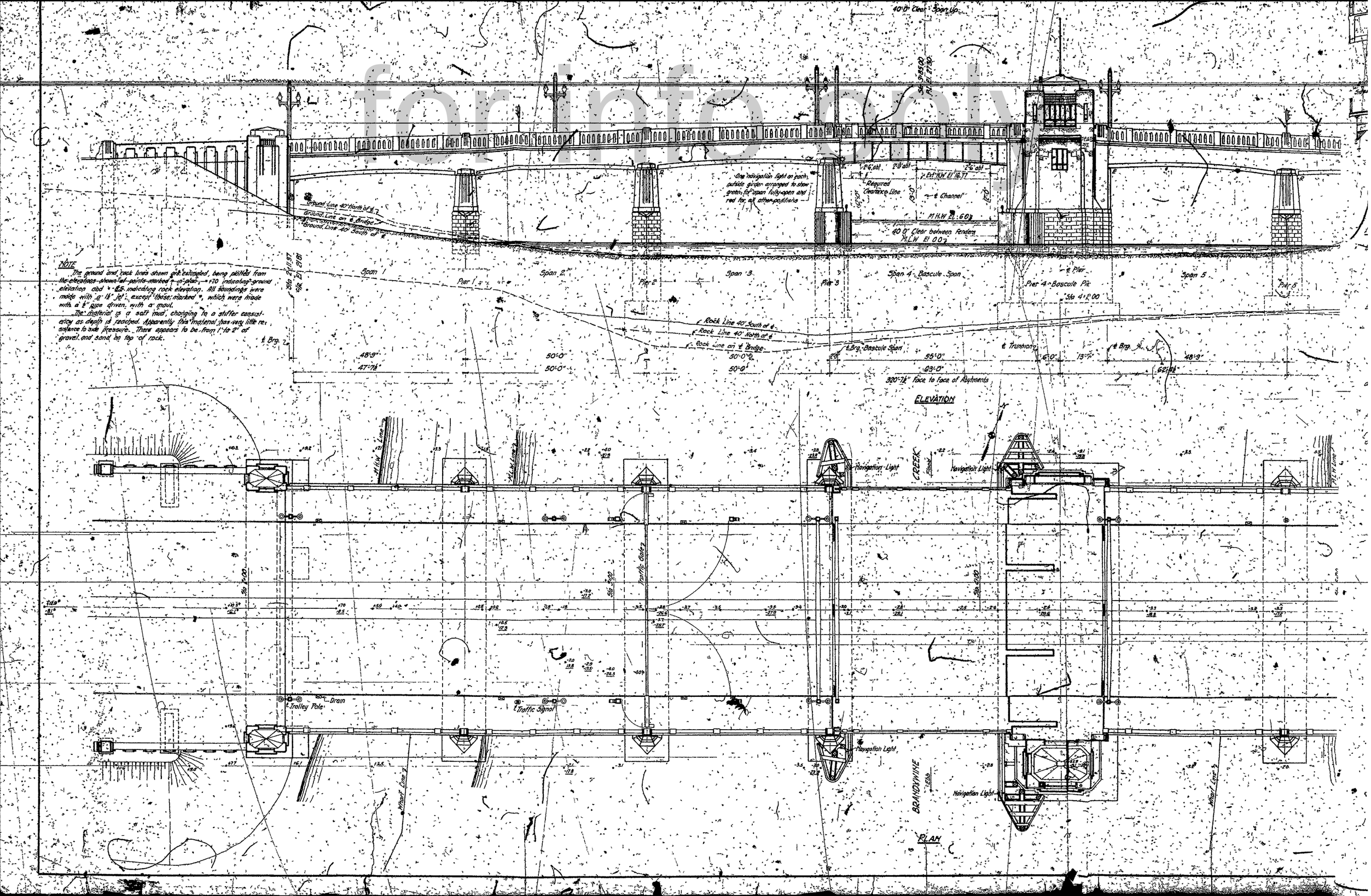

NOTE

The ground and rock lines shown are estimated, being plotted from the elevations shown at points marked + on plan, +70 indicating ground elevation and ×-65 indicating rock elevation. All soundings were made with a 1½" jet except those marked *, which were made with a 1½" pipe driven with a maul.

The material is a soft mud, changing to a stiffer consistency as depth is reached. Apparently this material has very little resistance to side pressure. There appears to be from 1' to 2' of gravel and sand on top of rock.

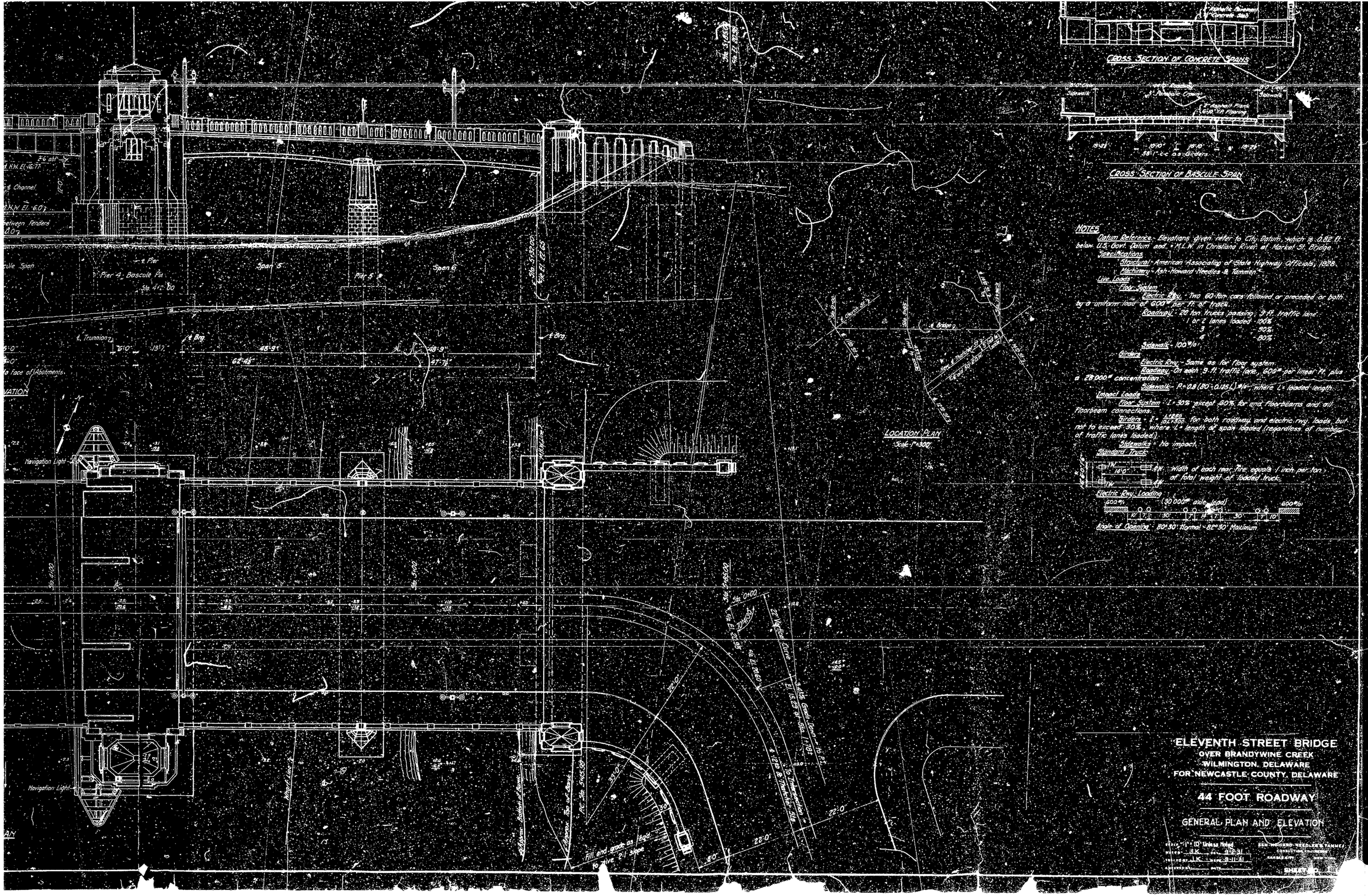
CROSS SECTION OF CONCRETE SPANS
CROSS SECTION OF BASCULE SPAN
NOTES
Datum Reference - Elevations given refer to City Datum, which is 0.82 ft. below U.S. Govt. Datum and "M.L.W." in Christiana River at Market St. Bridge.
Specifications
Structural - American Association of State Highway Officials, 1928.
Machinery - Ash-Howard-Needles & Tammen.
Live Loads
Floor System
Electric Ry. - Two 60-ton cars followed or preceded or both by a uniform load of 600# per ft. of track.
Roadway - 20 ton trucks passing 9 ft. traffic lane:
1 or 2 lanes loaded - 100%
3 " - 90%
4 " - 80%
Sidewalk - 100#/□'
Girders
Electric Ry. - Same as for floor system.
Roadway - On each 9 ft. traffic lane, 600# per linear ft. plus a 28,000# concentration.
Sidewalk - P = 0.8 (80 + 0.125 L) #/□' where L = loaded length.
Impact Loads
Floor System - I = 30% except 60% for end floorbeams and all floorbeam connections.
Girders - I = 125000 / (L+500) for both roadway and electric ry. loads, but not to exceed 30%, where L = length of span loaded (regardless of number of traffic lanes loaded).
Sidewalks - No impact.
Standard Truck
Width of each rear tire equals 1 inch per ton of total weight of loaded truck.
Electric Ry. Loading
(30,000# axle load)
Angle of Opening: 80°30' Normal - 82°30' Maximum
LOCATION PLAN
Scale: 1" = 300'
Navigation Light
Pier 4 - Bascule Pier
Span 5
Pier 5
Span 6
Fill and grade as shown to give 2:1 slope
ELEVENTH STREET BRIDGE
OVER BRANDYWINE CREEK
WILMINGTON, DELAWARE
FOR NEWCASTLE COUNTY, DELAWARE
44 FOOT ROADWAY
GENERAL PLAN AND ELEVATION

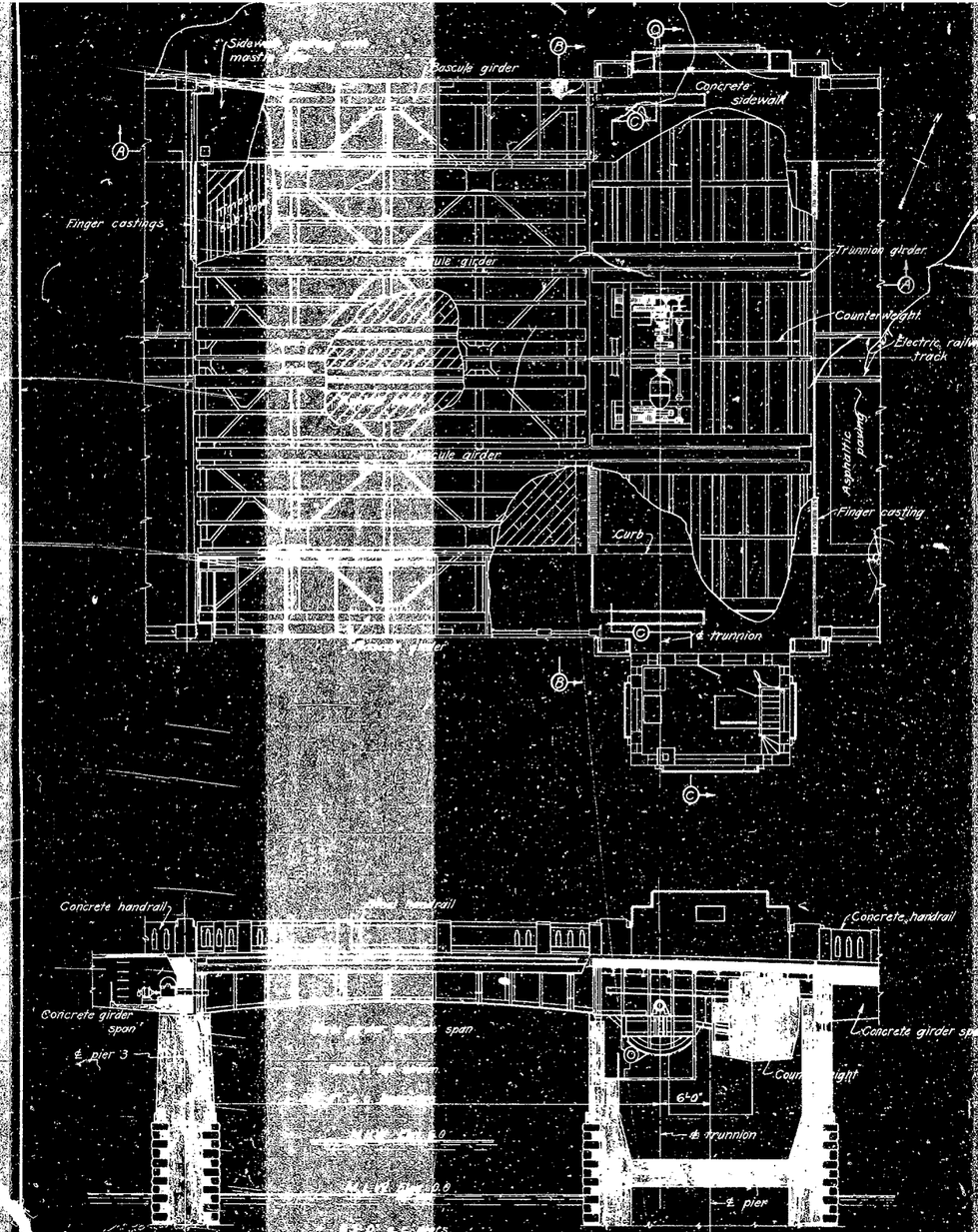

SECTION A-A

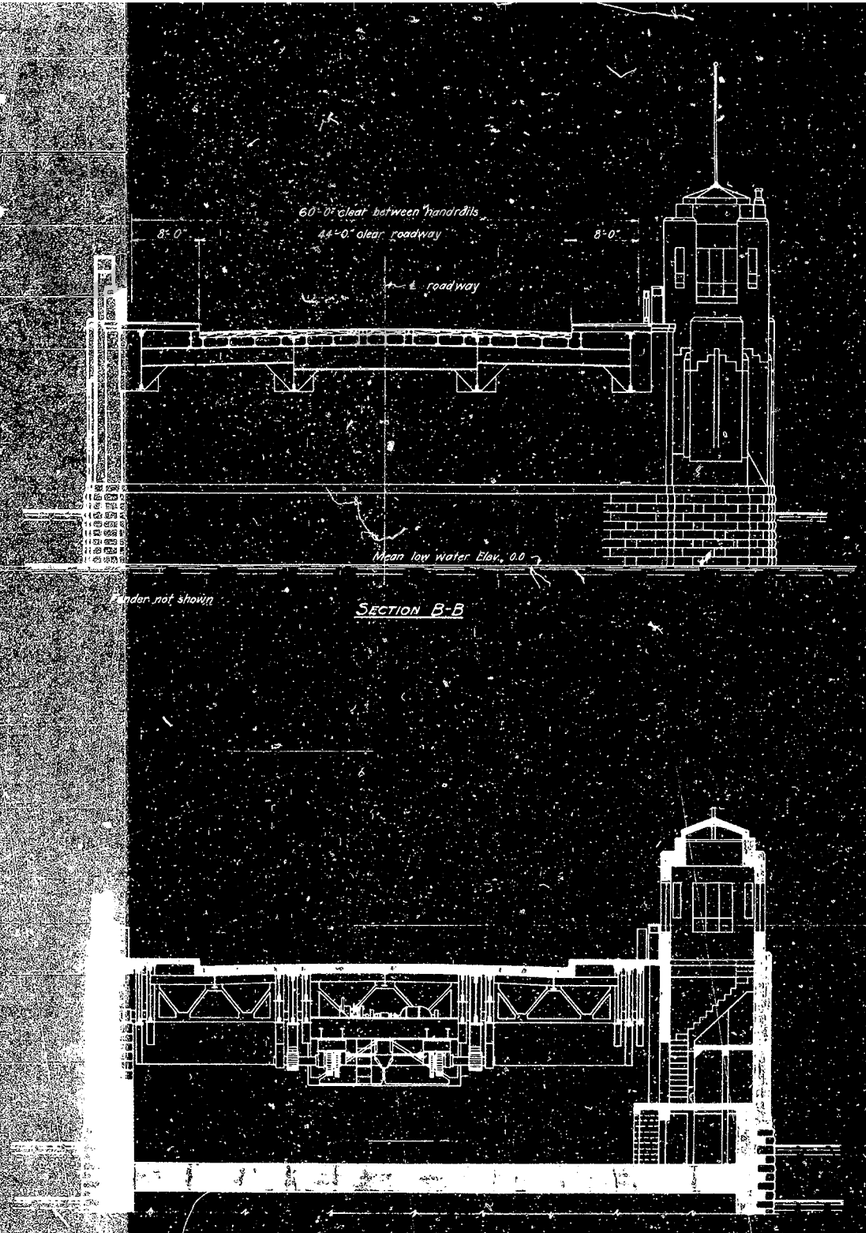

SECTION B-B

SECTION C-C

ELEVENTH STREET BRIDGE
OVER BRANDYWINE CREEK
WILMINGTON, DELAWARE
FOR NEWCASTLE COUNTY, DELAWARE

44 FOOT ROADWAY

GENERAL ARRANGEMENT OF
BASCULE SPAN AND PIER

SCALE 1/8"=1'-0"
MADE BY G.A. DATE 8-25-31
TRACED BY G.A. DATE 8-31-31
LAYERED BY ____ DATE ____

AGH-HOWARD-NEBOLES & TAMMEN
CONSULTING ENGINEERS
KANSAS CITY NEW YORK

SHEET NO. 2

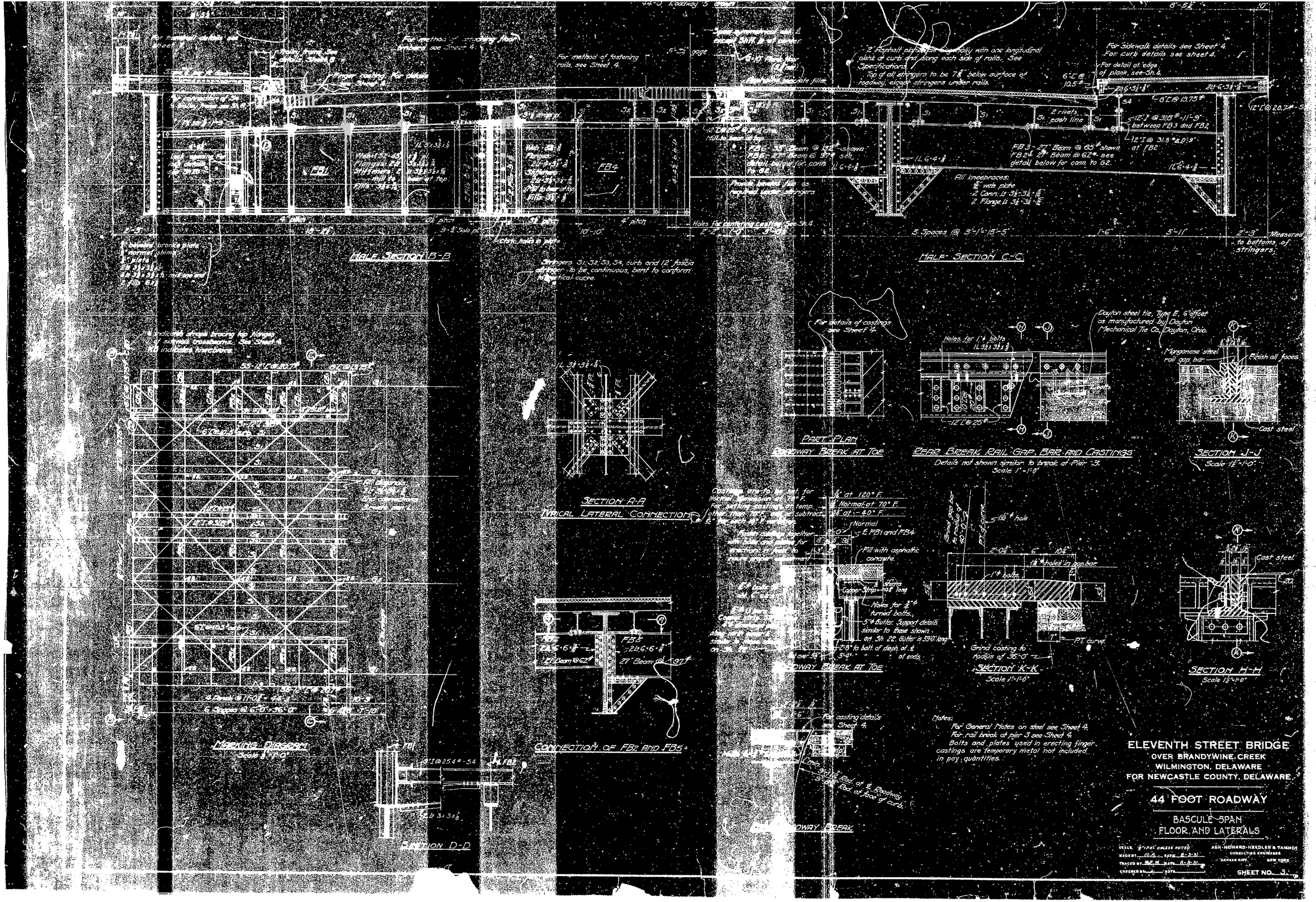
HALF SECTION B-B
HALF SECTION C-C
PART PLAN
ROADWAY BREAK AT TOE
REAR BREAK RAIL GAP BAR AND CASTINGS
Details not shown similar to break at Pier 3.
Scale 1" = 1'-0"
SECTION J-J
Scale 1½" = 1'-0"
SECTION A-A
TYPICAL LATERAL CONNECTION
SECTION K-K
Scale 1½" = 1'-0"
SECTION H-H
Scale 1½" = 1'-0"
CONNECTION OF FB2 AND FB5
MASONRY BLOCKING
Scale 1" = 1'-0"
SECTION D-D
Notes:
For General Notes on steel see Sheet 4.
For rail break at pier 3 see Sheet 4.
Bolts and plates used in erecting finger castings are temporary metal not included in pay quantities.
ELEVENTH STREET BRIDGE
OVER BRANDYWINE CREEK
WILMINGTON, DELAWARE
FOR NEWCASTLE COUNTY, DELAWARE
44 FOOT ROADWAY
BASCULE SPAN
FLOOR AND LATERALS
ASH-HOWARD-NEEDLES & TAMMEN
CONSULTING ENGINEERS
KANSAS CITY
NEW YORK
SHEET NO. 3.

HALF SECTION AT ℄ SPAN. SHOWING REINFORCING IN SLAB

Scale ½"=1'-0"

HALF SECTION SHOWING REINFORCING IN DIAPHRAGMS OVER PIERS 1, 2 AND 5

Scale ½"=1'-0"

ROADWAY EXPANSION JOINT AT REAR END OF BASCULE PIER

Scale ½"=1'-0"

SHOWING COPING AT REAR END OF BASCULE PIER

Scale ½"=1'-0"

GIRDER A-SPAN 3

GIRDER B-SPAN 5

GIRDER D-SPAN 5

GIRDER C same except for depth.

GIRDERS-SPAN 6

GIRDER E-SPAN 5

SECTION J-J

SECTION K-K

SECTION L-L

SECTION A-A

SECTION B-B

SECTION C-C

SECTION D-D

SECTION E-E

SECTION F-F

SECTION G-G

SECTION H-H

CROSS SECTION

RAIL BREAK AT REAR END OF BASCULE PIER

Scale ½"=1'-0"

Details of south rail shown. Details at north rail same except opposite hand.

SIDEWALK EXPANSION JOINT

Scale ½"=1'-0"

ROADWAY EXPANSION CASTING-PLAN VIEW

Scale 1½"=1'-0"

Material-Cast Steel, Galvanized. Hot Dipped.

Provide 3 castings 5'-0" long as shown, 3 opposite hand, and 3 as noted elsewhere on this sheet. Top of castings to be straight and set on a chord of 174'-5" radius. Ends to be finished on radial lines. For general notes regarding castings see sheet 4.

Casting	H
Between Rails	5¾"
Adj. to Rails (variable)	4¾" to 5"
All others	3¾"

DRAIN CASTINGS

Scale 1½"=1'-0"

Provide drains on both sides of roadway in each span abt. 10'-0" from low end of span.

NOTES:

Provide sufficient camber in all spans to prevent sag in fascia lines and in bottoms of girders under full dead load.

Stirrups are ½" ⌀ unless otherwise shown or noted.

For general notes on concrete see sh. 23.

For bar marking table, see sh. 23.

For trolley pole connections on concrete spans, see sh. 8. Provide pockets and bend bars as req'd.

For details of roller shoes, see sh. 23.

For details at bottom curve of girders and of recess on Girder A, see sh. 23.

For details of end diaphragms at abutments, see sh. 23.

Fill around street railway track shall be Class G concrete; all other concrete shall be class B. See specifications.

Chamfer all exposed edges ¾" except as noted.

ELEVENTH STREET BRIDGE

OVER BRANDYWINE CREEK

WILMINGTON, DELAWARE

FOR NEWCASTLE COUNTY, DELAWARE

44 FOOT ROADWAY

CONCRETE GIRDER SPANS

SCALE 1"=10' Unless Noted

DESIGNED J.K. DATE 8-13-31

TRACED W.H.S. DATE 8-22-31

CHECKED DATE

HOWARD-NEEDLES-TAMMEN & BERGENDOFF

CONSULTING ENGINEERS

KANSAS CITY NEW YORK

SHEET 20

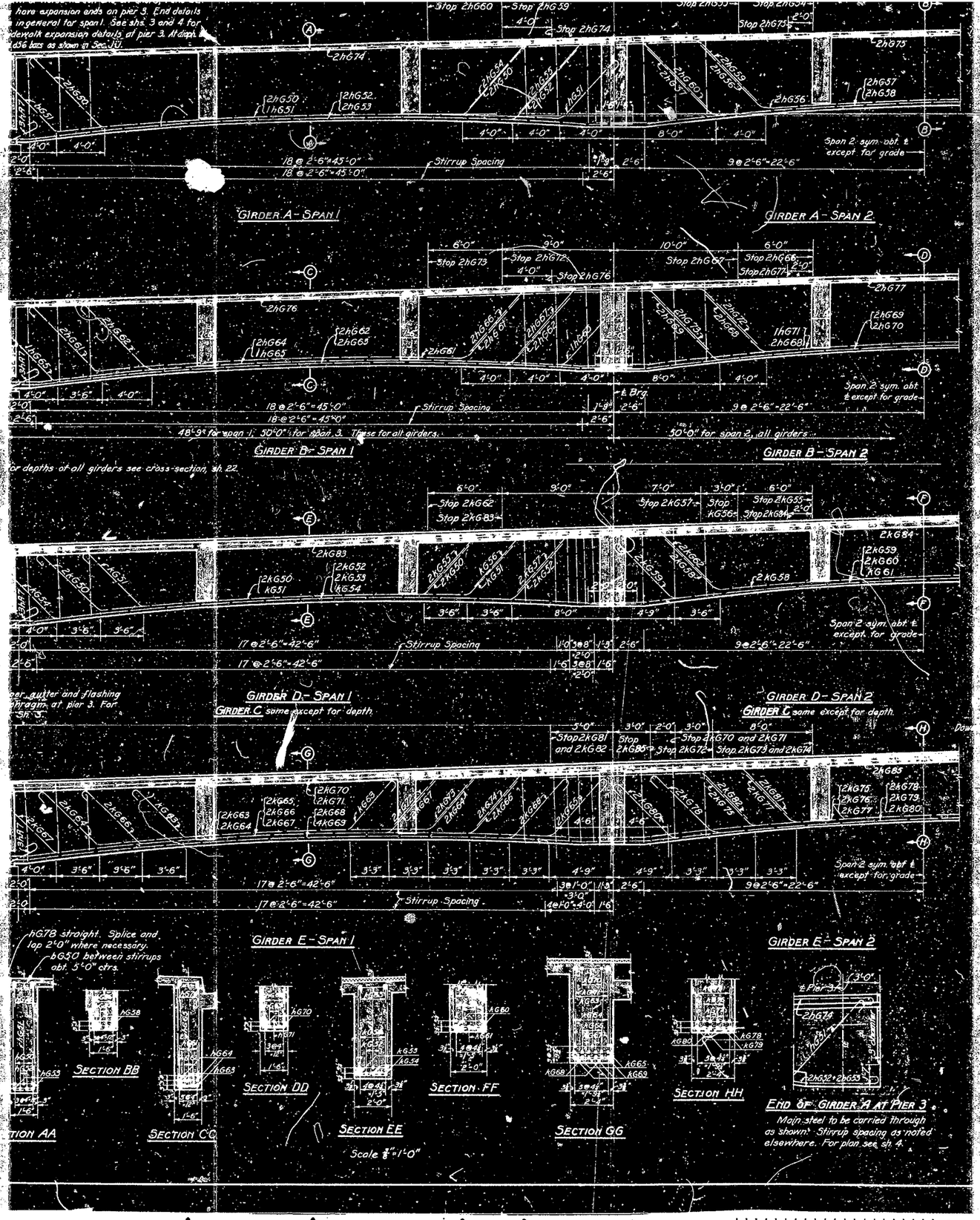
GIRDER A - SPAN 1
GIRDER A - SPAN 2
GIRDER B - SPAN 1
GIRDER B - SPAN 2
GIRDER D - SPAN 1
GIRDER D - SPAN 2
GIRDER C same except for depth.
GIRDER E - SPAN 1
GIRDER E - SPAN 2
Stirrup Spacing
Span 2 sym. abt. ℄ except for grade
48'-9" for span 1, 50'-0" for span 3. These for all girders.
50'-0" for span 2, all girders
SECTION AA
SECTION BB
SECTION CC
SECTION DD
SECTION EE
SECTION FF
SECTION GG
SECTION HH
END OF GIRDER A AT PIER 3
Main steel to be carried through as shown. Stirrup spacing as noted elsewhere. For plan see sh. 4.
Scale ⅜"=1'-0"

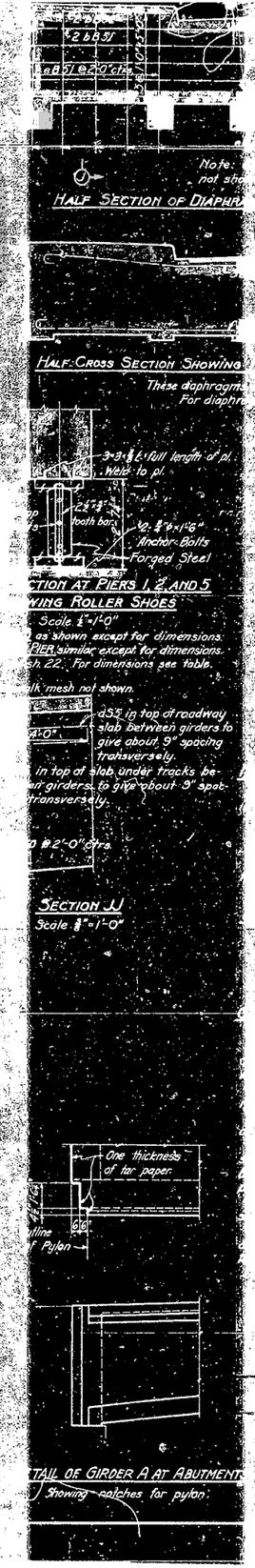
HALF SECTION OF DIAPHRAGM
HALF-CROSS SECTION SHOWING ROLLER SHOES
SECTION AT PIERS 1, 2 AND 5
SECTION JJ
Scale ⅜"=1'-0"
Anchor Bolts
Forged Steel
One thickness of tar paper
DETAIL OF GIRDER A AT ABUTMENT
Showing notches for pylon

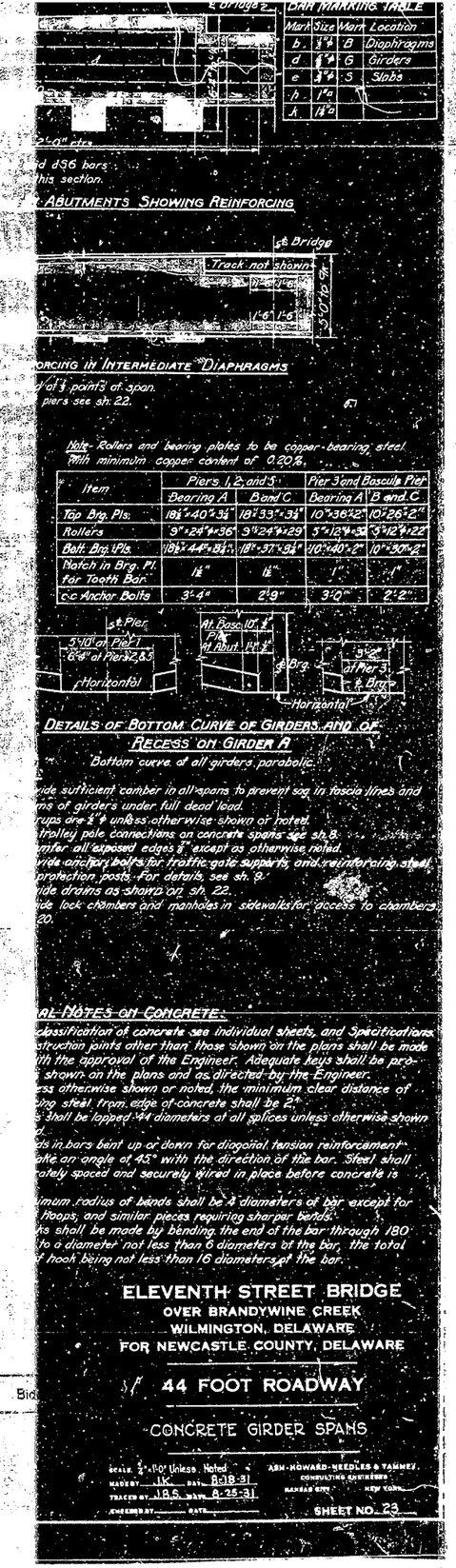
BAR MARKING TABLE
ABUTMENTS SHOWING REINFORCING
Track not shown
REINFORCING IN INTERMEDIATE DIAPHRAGMS
DETAILS OF BOTTOM CURVE OF GIRDERS AND OF RECESS ON GIRDER A
Bottom curve of all girders parabolic.
GENERAL NOTES ON CONCRETE:
ELEVENTH STREET BRIDGE
OVER BRANDYWINE CREEK
WILMINGTON, DELAWARE
FOR NEWCASTLE COUNTY, DELAWARE
44 FOOT ROADWAY
CONCRETE GIRDER SPANS
SHEET NO. 23

for info only

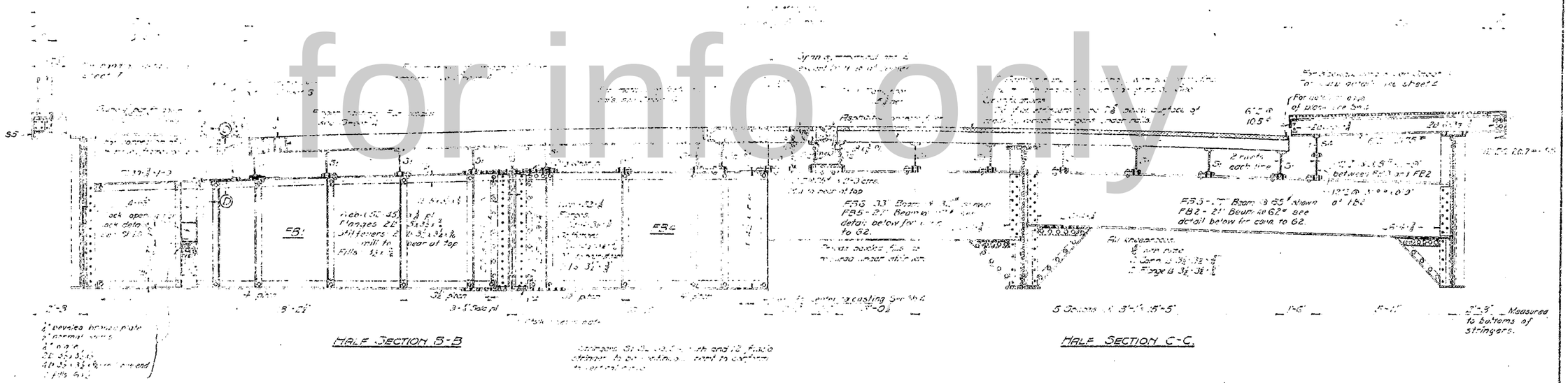

HALF SECTION B-B

HALF SECTION C-C.

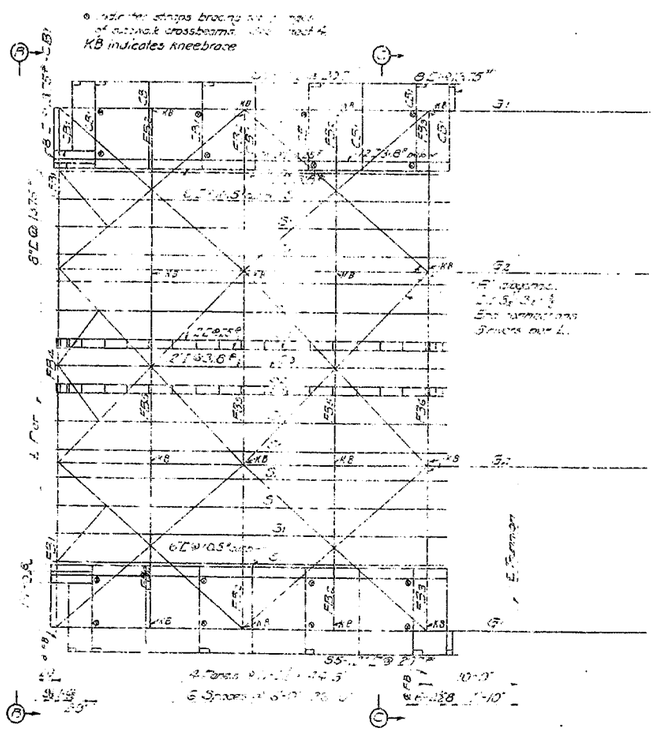

MARKING DIAGRAM

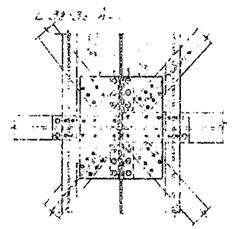

SECTION A-A

TYPICAL LATERAL CONNECTION

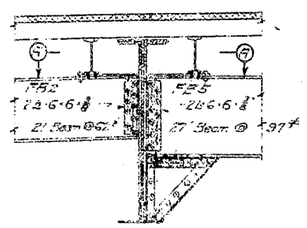

CONNECTION OF FB1 AND FB5

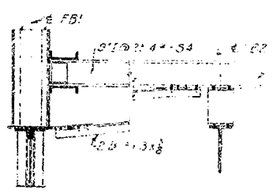

SECTION D-D

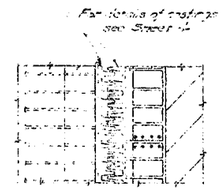

PART PLAN

ROADWAY BREAK AT TOE

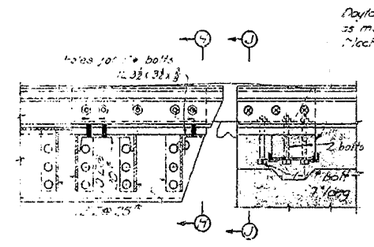

GEAR BREAK RAIL GAP BAR AND CASTINGS

Data is not shown similar to Sheet 4 at Pier 3.

Scale 1" = 1'-0"

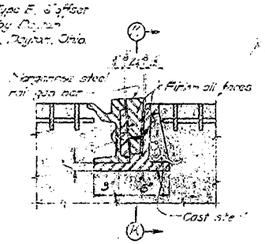

SECTION J-J

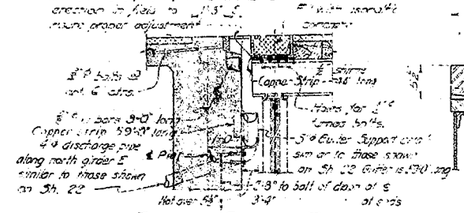

ROADWAY BREAK AT TOE

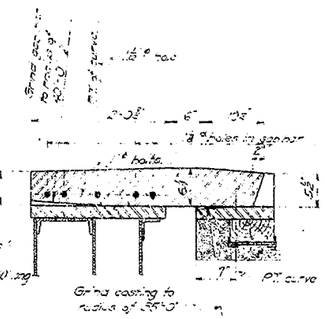

SECTION K-K

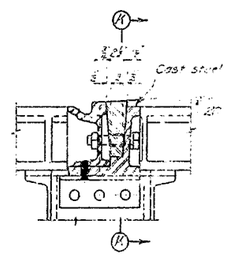

SECTION H-H

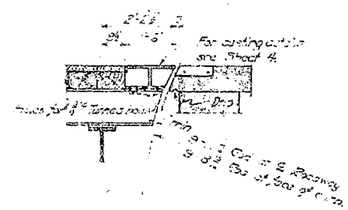

REAR ROADWAY BREAK

FOR INFORMATION ONLY

ELEVENTH STREET BRIDGE
OVER BRANDYWINE CREEK
WILMINGTON, DELAWARE
FOR NEWCASTLE COUNTY, DELAWARE

44 FOOT ROADWAY

BASCULE SPAN
FLOOR AND LATERALS

for infoonly

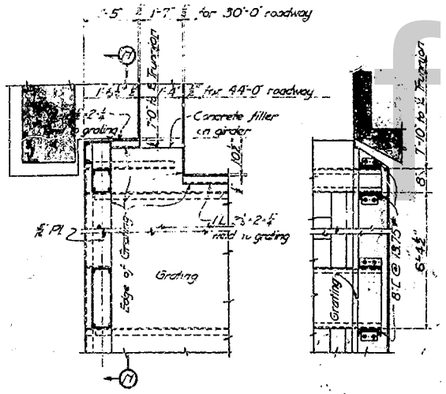

REAR SIDEWALK BREAK

SECTION N-N

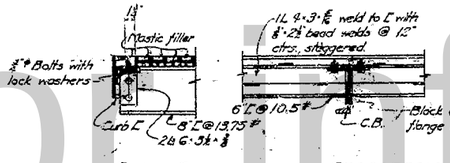

CURB CONNECTION TO CROSSBEAM
1"=1'-0"

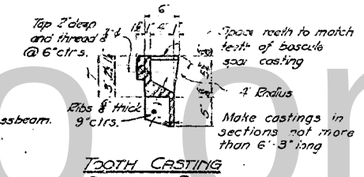

TOOTH CASTING
APPROACH SPAN
1"=1'-0"
(Cast Steel)

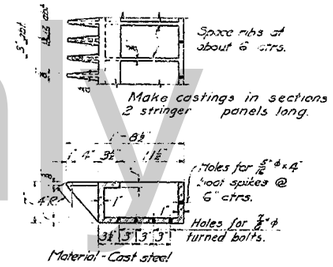

TOOTH CASTING
BASCULE SPAN
1"=1'-0"

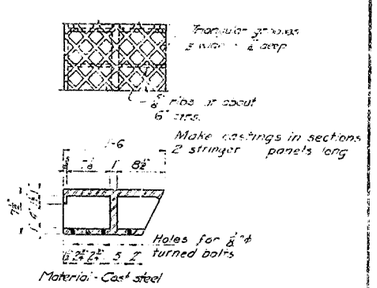

REAR BREAK CASTING
1"=1'-0"

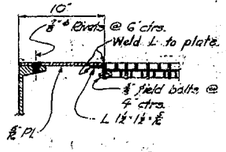

SECTION M-M

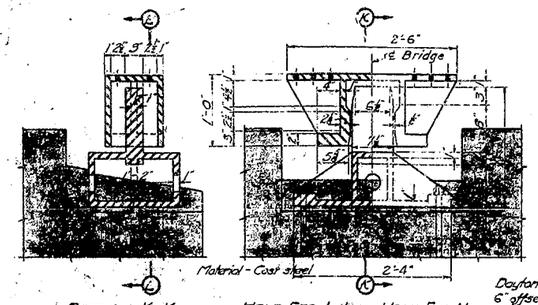

SECTION K-K

HALF SEC. L-L

HALF END VIEW

CENTERING CASTINGS
Scale 1"=1'-0"

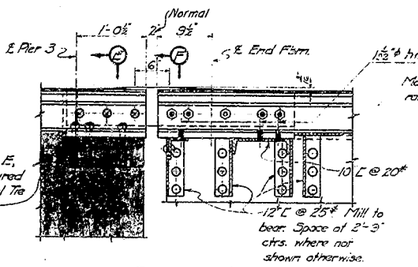

SECTION G-G

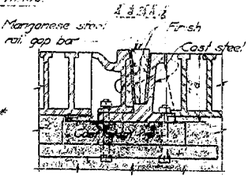

SECTION E-E

SIDEWALK GRATING

Vertical straight bars 1¾"·⅜" @ 2½" ctrs. Use 2½"·⅜" horizontal bars between upper ⅝"·⅜" type M reticuline bars and lower ⅝"·⅜" type T reticuline bars. Fill with M cement mortar above horizontal bars. Attach grating to all crossbeams with standard clips C2 of 2.5" centers. Above types and numbers refer to grating manufactured by Irving Iron Works Company, Long Island City, N.Y. Use Irving grating or approved equivalent. Gratings with the lower reticuline bars omitted will be accepted if the 2½"·⅜" horizontal bars are adequately welded to the vertical bars.

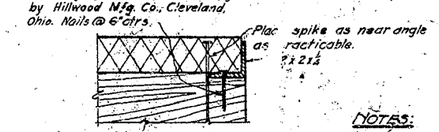

DETAIL AT EDGE OF ROADWAY

NOTES:

All floor timbers to be Southern Long Leaf Yellow Pine, surfaced four sides, (treated - see Specifications) bent over tops of stringers to conform to crown of roadway. Top of timber deck shall present a smooth surface. Fill all depressions flush with asphalt filler. Fasten floor planks to stringers as follows:

Use 1-⅝"φ bolt thru each end of all timbers. Also fasten each timber to alternate stringers with one ⅝"φ bolt. Bolts to be staggered about ℄ of stringers, with beveled washers under heads below flanges and O.G. malleable iron washers at top under nuts in counterbored holes in planks filled with asphalt. Attach each timber to each adjacent timber with ½"φ headless drift bolts about 15" long at about 12" centers driven into ⅞"φ holes bored in field. Place bolts on vertical ℄ of timber and stagger in alternate timbers.

All bolts, nuts, washers, nails, drift bolts for attachment of floor plank and all edge angles are to be galvanized or cadmium plated. See Specifications.

Castings both sides of joint at toe end of bascule span are to be assembled in shop in proper relative position to insure correct clearances and true top surfaces, and matchmarked. Adjust to give ⅜" minimum lateral clearance in extreme closed position. Finish sides of teeth and top surfaces of casting if necessary. Top surface of castings shall not vary more than ⅛" measured from a straight edge representing the chord to which the top of casting is to conform. Any greater variation than ⅛" is to be remedied by grinding or finishing. Roadway expansion castings are to be galvanized, hot dipped. All bolts and nuts for attachment of castings on bascule span are to be galvanized.

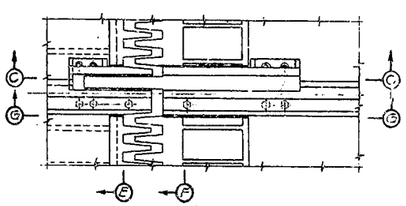

PLAN OF BREAK AT PIER 3
1"=1'-0"

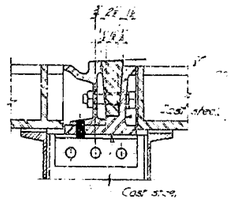

SECTION E-E

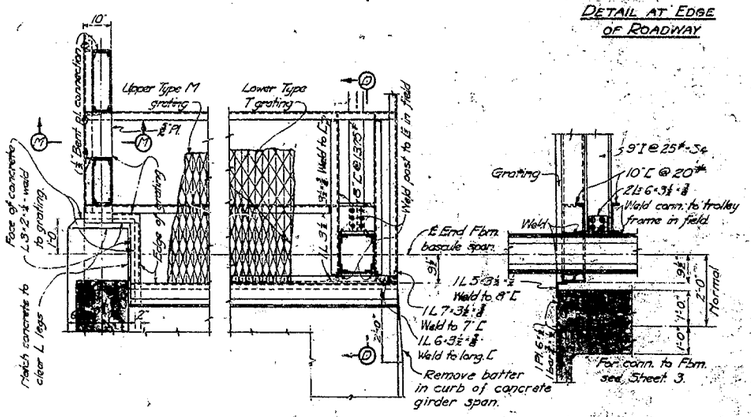

PLAN, SHOWING HANDRAIL POST AND TROLLEY FRAME CONNECTIONS

SECTION D-D

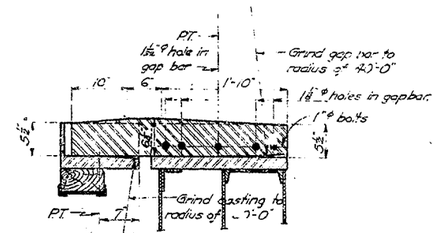

SECTION C-C
1"=1'-0"

Note
Rails, fastenings and rail break castings are to be furnished and installed by the street railway company. Ties also furnished and installed by street railway company. See Specifications.

RAIL BREAK AT PIER 3

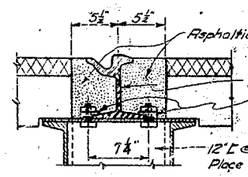

RAIL FASTENING
1½"=1'-0"

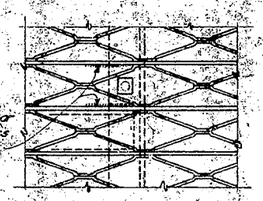

Fit bolts only, weld 2½"·⅜" bar to two adjacent vertical bars using ¼" fillet welds 2" long.

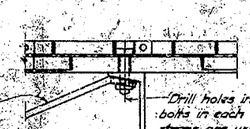

Drill holes in field for 2-½"φ bolts in each crossbeam where straps are used.

2-⅜" strap - 2'-4" long. Weld in field to ∠ and to top flanges of 34" and girders. For location see Marking Diagram, Sh. No. 3.

METHOD OF FASTENING GRATING
3"=1'-0"

GENERAL NOTES:

All rivets ¾"φ unless noted otherwise.
Open holes 13/16"φ unless noted otherwise.
For general requirements regarding punching, reaming, painting, and shop practice, see Specifications. In order to avoid oversight these requirements shall be clearly noted on the shop drawings.
Rivet pitch not to exceed 6" or 16 times the thickness of the thinnest outside plate or angle connected except in angles having two gauge lines with rivets staggered, where the pitch in each line may be twice the above, with a maximum of 10 inches.
Members composed of two angles in contact shall be stitch-riveted, using a pitch not greater than 12".
Normal dimensions are at 70°F.
Provide suitable washers under nuts of all anchor bolts.
Sections marked "I" are American standard I-beams. Sections marked "Beam" are Carnegie or Bethlehem beam sections.

ELEVENTH STREET BRIDGE
OVER BRANDYWINE CREEK
WILMINGTON, DELAWARE
FOR NEWCASTLE COUNTY, DELAWARE

30 AND 44 FOOT ROADWAYS

BASCULE SPAN FLOOR

SCALE ½"=1'-0" Unless Noted
MADE BY G.A. DATE 2-8-31
TRACED BY M.E.M. DATE 8-6-31
ASH-HOWARD-NEEDLES & TAMMEN
CONSULTING ENGINEERS
BRIDGE DEPT.

for info only

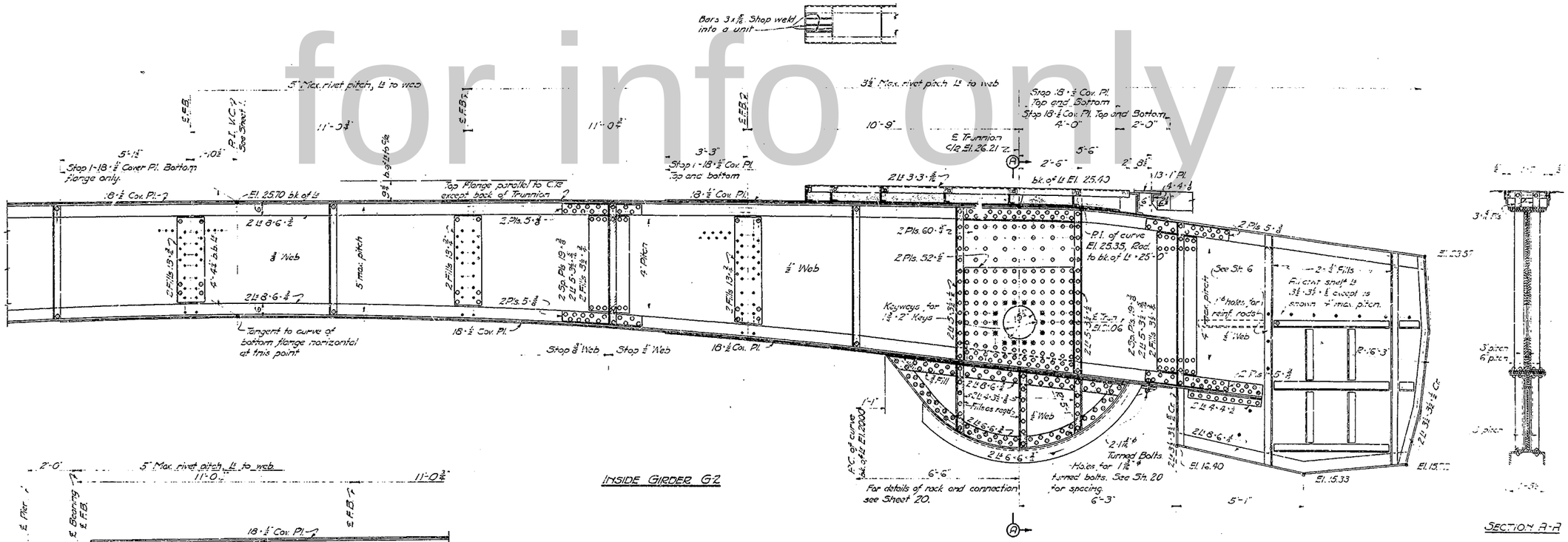

Notes:

Rivet pitch in vertical legs of flange Ls to be same in top and bottom flanges unless otherwise shown or noted. Cover plates to be riveted with 5" alternate spacing except as shown or noted and at ends of cover plates where 3" spacing shall be used for a distance of 2'-6".

All floorbeams and stiffeners Ls vertical.

Dimensions given are horizontal or vertical measurements unless otherwise shown or noted.

Trunnion shaft to be turned for shrinkage fit in girder. See Sheet 20.

Do not paint portions of girders in contact with concrete.

For General Notes on steel see Sheet No. 4.

ELEVENTH STREET BRIDGE
OVER BRANDYWINE CREEK
WILMINGTON, DELAWARE
FOR NEWCASTLE COUNTY, DELAWARE

44 FOOT ROADWAY

BASCULE SPAN-GIRDERS

SCALE ½" = 1'-0" Unless Noted
MATERIAL J.P.E. DATE 8.2.31
TRACED BY M.E.M. DATE 8-28-31.

HEW HOWARD SEIBERT & TANNER
CONSULTING ENGINEERS
WILMINGTON NEW YORK

for info only

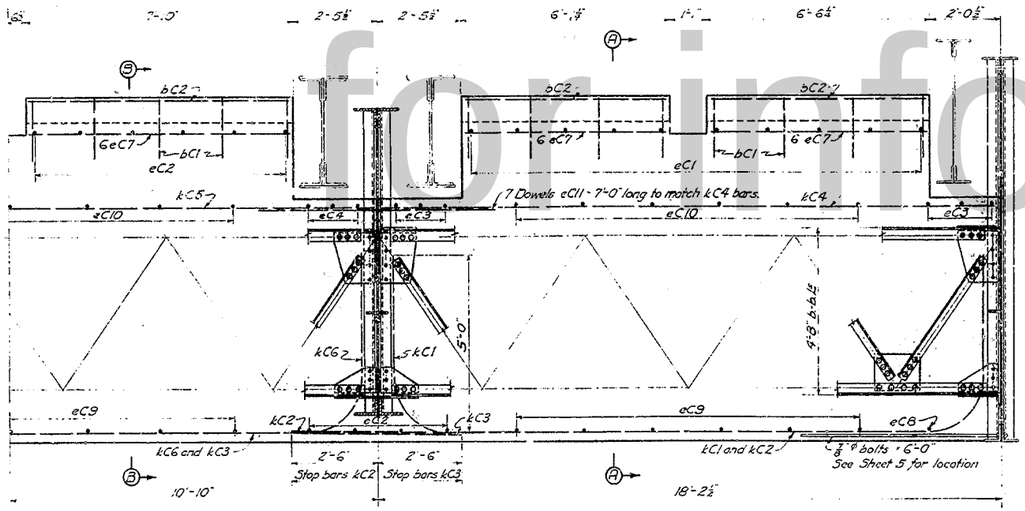

HALF SECTION C-C

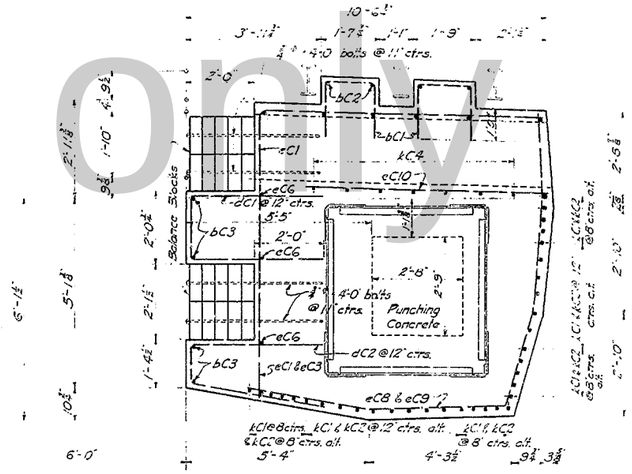

SECTION A-A

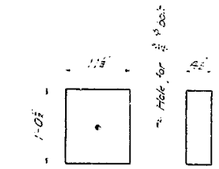

CAST IRON BALANCE BLOCKS
Scale 1" = 1'-0"

BAR MARKING TABLE

Mark	Size	Mark	Location
b	3" ϕ	C	Counterweight
d	8" ϕ		
c	5" ϕ		
k	5½" ϕ		

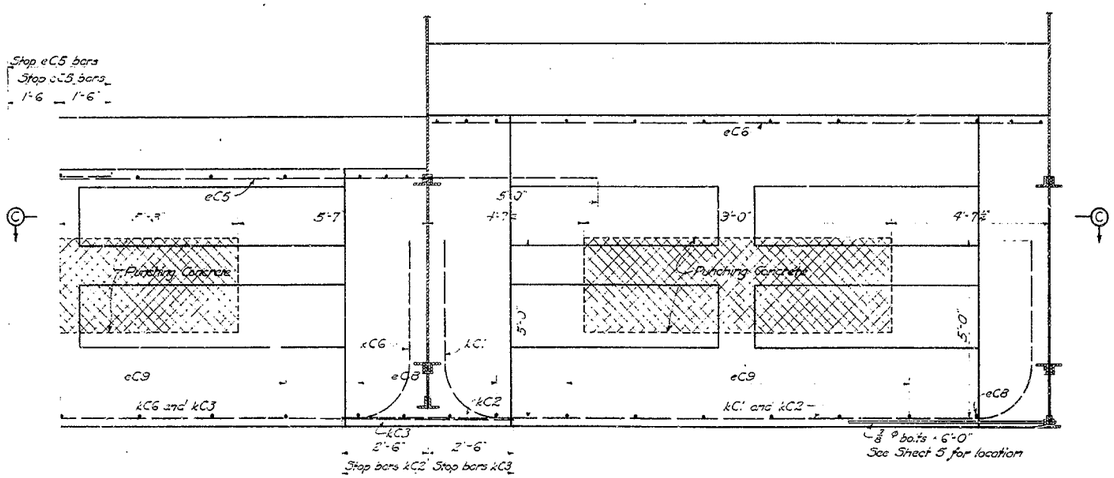

HALF PLAN

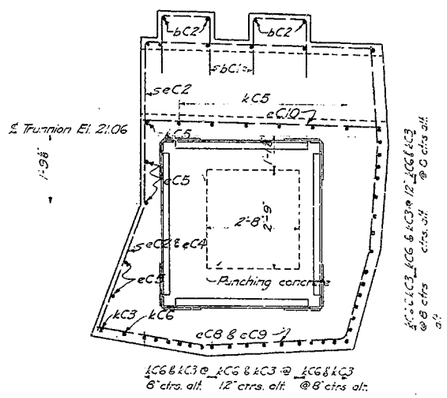

SECTION B-B
Dimensions not shown same as for Section A-A

GENERAL NOTES ON COUNTERWEIGHT:

Counterweight shall be made of Class B concrete weighing about 155 # per cu. ft. with the exception of the volume occupied by cross hatching which shall consist of layers of rock punchings consisting with a mixture of one part of cement and five parts of sand. This mixture shall weigh about 300 # per cu. ft.

The monolithic portion of concrete counterweight with the reinforcing steel shall be made to balance, as closely as possible, 96½ % of the moving leaf when from the counterweight and its reinforcing so that moments about ℄ Trunnion will be zero.

The remainder of the moving leaf shall be balanced by movable cast iron balance blocks. Sufficient space is provided for adjustment from 94 % back to 51 % of the balance moment. Blocks shall be furnished and installed for adjustment. After an accurate balance is reached, blocks shall be secured in place by grouting and bolting the upper portion.

Balance blocks should be for 75 % of calculated maximum.

The contractor shall furnish calculations showing the resulting weight, dimensions and center of gravity of the moving weight, with moments about horizontal and vertical axes as provided in the Specifications.

For General Notes on Concrete see Sheet 13.
For General Notes on Steel see Sheet 4.

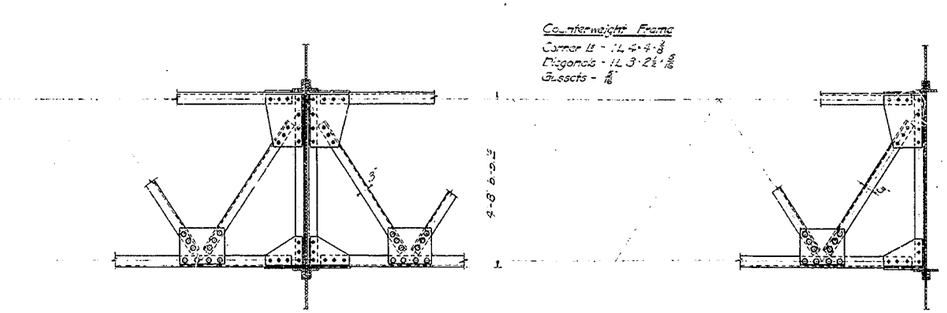

HALF PLAN OF COUNTERWEIGHT FRAME

COUNTERWEIGHT BALANCE TABLE

	Item	Weight	Horizontal Moment about ℄ Trunnion: Arm	Horizontal Moment about ℄ Trunnion: Moment	Vertical Moment about ℄ Trunnion: Arm	Vertical Moment about ℄ Trunnion: Moment
Moving Leaf except Chwt. and balance blocks	Structural Metal and Castings	234 300	+21.8	+5 107 100	+ 2.76	+649 900
	Rails, rail joints and Fastenings	5 000	+31.6	+ 158 400	+ 5.01	+ 25 100
	Timber floor @ 220 # per sq. ft.	41 600	+32.8	+1 363 000	+ 4.98	+207 100
	Asphalt plank @ 16.2 # per sq. ft.	30 800	+32.5	+1 000 000	+ 5.15	+158 400
	Sidewalk Mastic and Grating	21 300	+34.6	+ 737 300	+ 5.09	+108 500
	Mastic fill along rails & exp. jts. @ 150 #/cu. ft.	4 300	+32.5	+ 139 800	+ 5.05	+ 21 700
	Concrete over girders @ 150 #/cu. ft.	7 300	+ 1.46	+ 10 700	+ 5.04	+ 36 800
	TOTAL	344 600	+24.75	+8 524 300	+ 3.50	+1 207 000
Chwt. and Balance Blocks	Stone Concrete 3877 cu. ft. (Net) @ 155 #/cu. ft.	600 900	- 12.0	-7 219 400	- 1.58	- 952 300
	Punching Concrete 183 cu. ft. @ 300 #/cu. ft.	54 900	- 12.75	- 700 000	- 2.52	- 138 500
	Reinforcing steel in Chwt.	23 800	- 12.9	- 307 000	- 3.15	- 75 000
	Cast Iron Balance Blocks @ 490 #/cu. ft.	42 200	- 7.06	- 297 900	- .97	- 41 200
		721 600	- 11.82	-8 524 300	- 1.67	-1 207 000

ELEVENTH STREET BRIDGE
OVER BRANDYWINE CREEK
WILMINGTON, DELAWARE
FOR NEWCASTLE COUNTY, DELAWARE

44 FOOT ROADWAY

COUNTERWEIGHT AND COUNTERWEIGHT FRAME

Scale 1/8" = 1'-0" Unless Noted
Date Apr. 1929 Revised Aug. 31, 1931
Drawn M.E.M. Traced B.W.S.
New Castle County Bridge Commission
Wilmington, Delaware
Andrew Riggs
New York

for info only

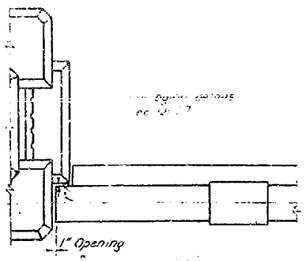

PLAN OF RAILING AT ABUTMENT

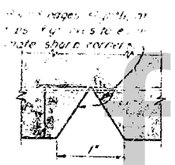

GROOVE IN POSTS
Scale Full Size

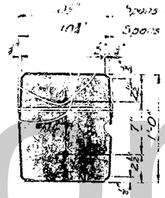

SECTION A-A
Scale 1½" = 1'-0"

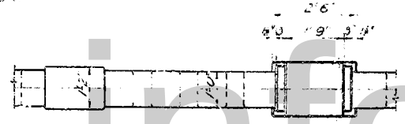

PART PLAN OF CONCRETE RAIL

SECTION B-B

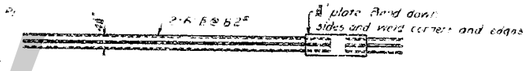

PART PLAN OF STEEL RAIL

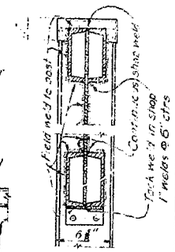

RAIL CONNECTION TO POST
Scale 1½" = 1'-0"

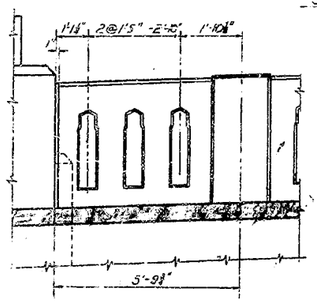

RAILING ADJACENT TO ABUTMENTS

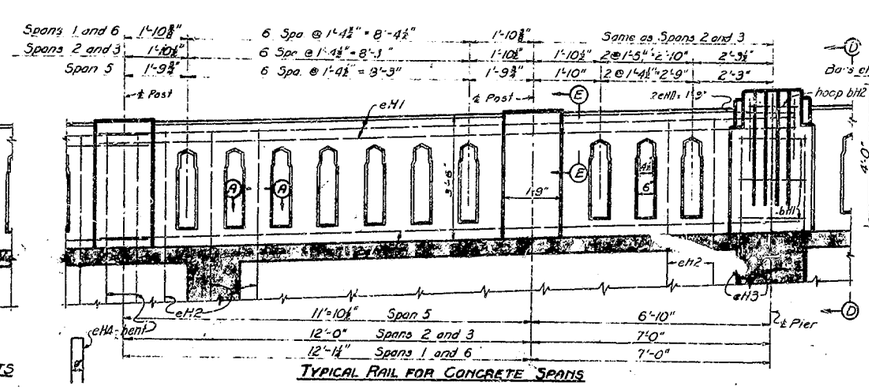

TYPICAL RAIL FOR CONCRETE SPANS

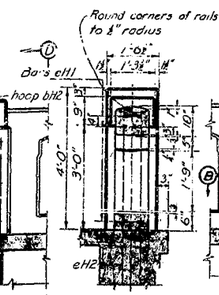

SECTION D-D

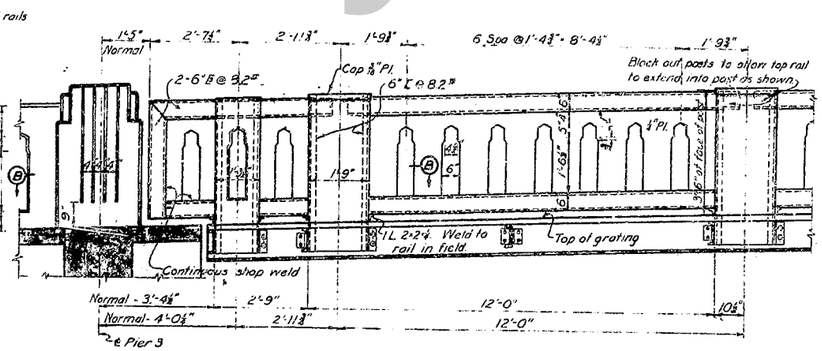

TYPICAL RAIL FOR BASCULE SPAN

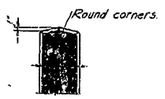

SECTION E-E

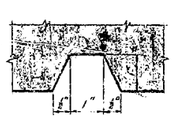

GROOVE DETAIL FOR PYLON AT BASCULE PIER
Scale ½ Size

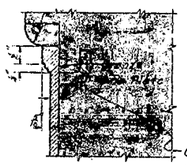

Provide one bronze name plate, located as shown. Letters to be flat top, "Classic Style". Tops of letters and border to be smooth finish. Background of hard matted surface (stippled effect) oxidized dark. Plate to be cast in one piece of statuary bronze. Exact size and inscription will be furnished later. Contractor to submit full size tubbing for approval. Payment will be made by pound price; weight of plate included with structural metal.

Cast 4 lugs on plate, one near each corner.

NAME PLATE
Scale ½ Size

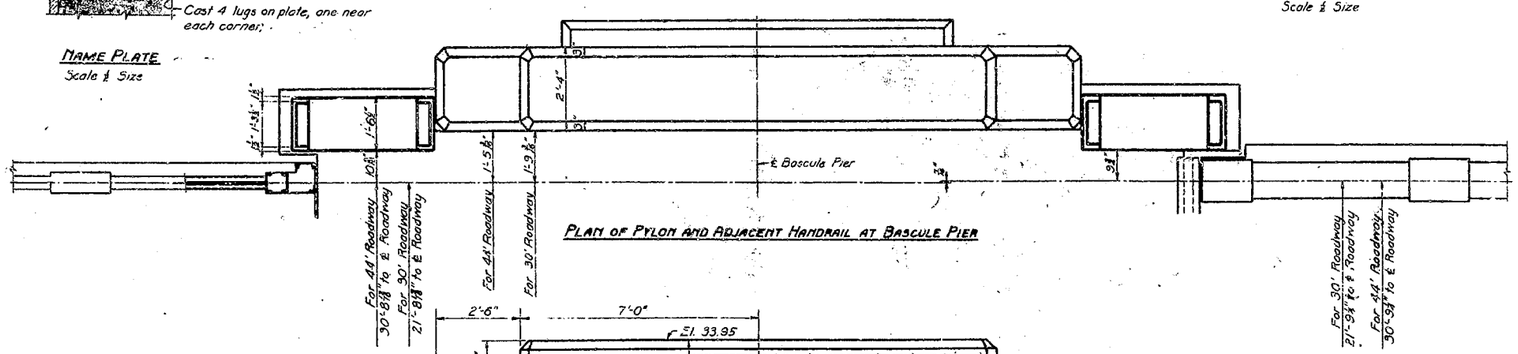

PLAN OF PYLON AND ADJACENT HANDRAIL AT BASCULE PIER

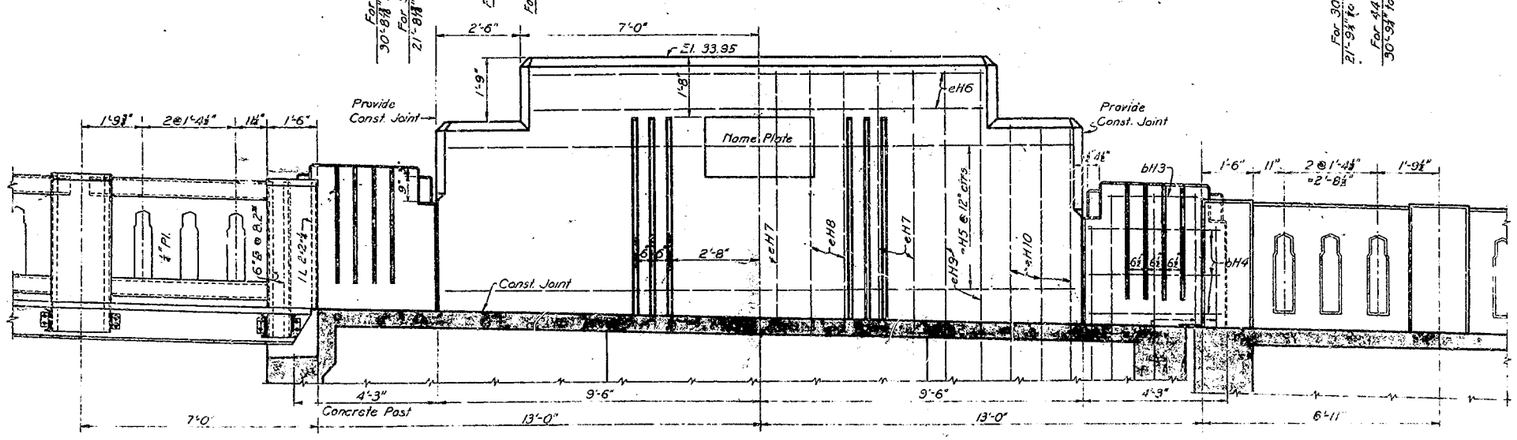

ELEVATION OF PYLON AND ADJACENT HANDRAIL AT BASCULE PIER

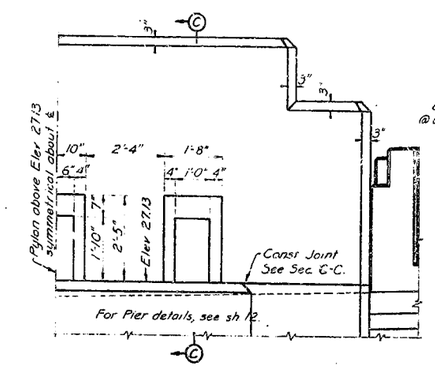

HALF OUTSIDE ELEVATION OF PYLON AT BASCULE PIER

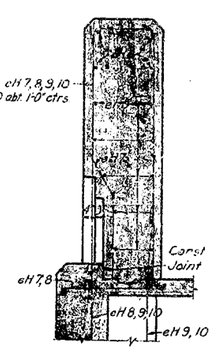

SECTION C-C

NOTES:

For general notes on steel, see sh 4
For general notes on concrete, see sh 23
Concrete in handrail and pylon to be Class A. See Specifications
Distance from face of concrete to ℄ of reinforcing bars to be not less than 2½" for all bars in handrail and pylon. Particular care shall be taken in placing reinforcing to insure that this minimum distance is maintained.
Posts and openings in rail to be vertical. Rail on bascule span is to be straight between posts; rail on concrete spans is to follow crown of roadway.
All exposed corners of handrail and pylon to be chamfered ⅜"-45° unless otherwise shown or noted.
For finish of handrail and pylon see Specifications. Finish of tops of posts and pylon to be such as to provide drainage.
Vertical bars in handrail and pylon to extend 2'-9" below construction joint at top of sidewalk except as otherwise shown or noted.

BAR MARKING TABLE			
Mark	Size	Mark	Location
b	⅜"ϕ	H	Handrail
e	⅜"ϕ		

ELEVENTH STREET BRIDGE
OVER BRANDYWINE CREEK
WILMINGTON, DELAWARE
FOR NEWCASTLE COUNTY, DELAWARE

30 AND 44 FOOT ROADWAYS

HANDRAILS ON SPANS

SCALE ½"=1'-0" Unless Noted
DRAWN G.A.
TRACED J.B.S.