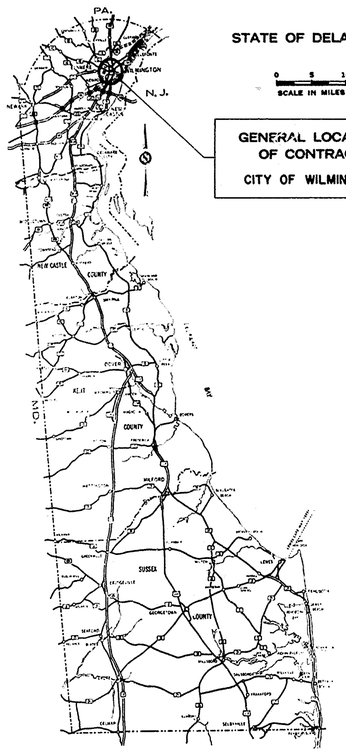


**DESIGN DESIGNATION**

| | | |
|---|---|---|
| FEDERAL CLASS | URBAN | |
| A.D.T. | 16,632 | |
| D.H.V. | 1,663 | |
| DESIGN SPEED | 35 | M.P.H. |
| MIN. STOPPING SIGHT DISTANCE | 235 | FT. |
| MAX. S.E. | NORMAL-0.0156 | FT./FT. |
| MAX. DEGREE CURVE | 9°-32'-57.5" | |
| MAX. % GRADE | 3.32 % | |

# THE STATE OF DELAWARE

## DEPARTMENT OF HIGHWAYS AND TRANSPORTATION

### DIVISION OF HIGHWAYS

CONSTRUCTION PLAN FOR:

## CONTRACT NUMBER 79-071-02

## FEDERAL AID PROJECT NUMBER M-1191 (1)

BEGIN PROJECT: STATION NO. 10+17 END: STATION NO. 26+50

LENGTH: 1633 FEET = 0.309 MILES

# AUGUSTINE BRIDGE RECONSTRUCTION

| CONTRACT | COUNTY | STATE | B.P.R. REG. NO. | FEDERAL AID PROJECT NUMBER | FISCAL YEAR | SHEET NUMBER | TOTAL SHEETS |
|---|---|---|---|---|---|---|---|
| 79-071-02 | NEW CASTLE | DEL. | 2 | M-1191 (1) | | 1 | 112 |

AUGUSTINE BRIDGE RECONSTRUCTION

**SURVEY BOOKS**

5020

**INDEX OF SHEETS**


| | |
|---|---|
| 1 | TITLE SHEET |
| 7 - 8 | TYPICAL SECTION SHEETS |
| 2 - 5 | QUANTITY SHEETS |
| 6 & 9-11 | PLANS & PROFILE SHEETS |
| 12 - 100 | BRIDGE SHEETS |
| 101 - 112 | STANDARD SHEETS C-1, C-2, C-5, D-9, D-16, D-19, G-2-8, G-3-5, G-4-6, G-5, G-7-1, T-1-1 |


**UTILITIES**

DELMARVA POWER & LIGHT COMPANY (GAS & ELECTRICITY)
DIAMOND STATE TELEPHONE COMPANY (TELEPHONE)
CITY OF WILMINGTON DEPARTMENT OF PUBLIC WORKS (WATER & SEWER)
NEW CASTLE COUNTY DEPARTMENT OF PUBLIC WORKS (SEWER)

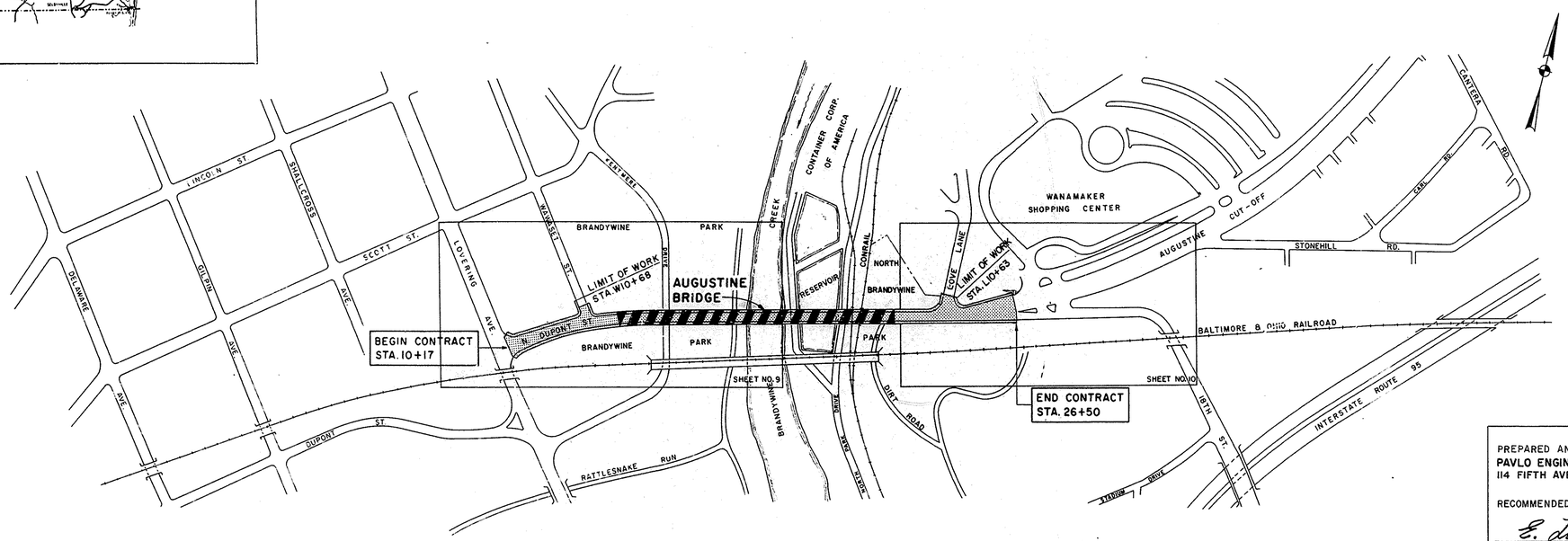


PREPARED AND SUBMITTED BY:
PAVLO ENGINEERING COMPANY, P.C.
114 FIFTH AVENUE, NEW YORK, N.Y.

RECOMMENDED BY:

E. Lionel Pavlo — PRESIDENT

E. LIONEL PAVLO REGISTERED No. 2832 DELAWARE PROFESSIONAL ENGINEER — DELAWARE P.E. NO.

5/30/79 — DATE

**CONVENTIONAL SIGNS**

| | | | |
|---|---|---|---|
| PROPOSED CENTER LINE | | WOODED AREA | |
| NEW RIGHT OF WAY LINE | | TELEPHONE OR UTILITY POLE | |
| PROPERTY LINE | | EXISTING CULVERT OR PIPE | |
| CONCRETE ROAD | | RAILROAD | |
| MACADAM OR ASPHALT ROAD | | GUARD RAIL | |

**SCALES**

| | | |
|---|---|---|
| TITLE SHEET | 1" = 200 | FEET |
| CONSTRUCTION PLAN | 1" = 30 | FEET |
| VERTICAL PROFILE | 1" = 5 | FEET |
| HORIZONTAL PROFILE | 1" = 30 | FEET |

**DIVISION OF HIGHWAYS**

RECOMMENDED

RECOMMENDED June 6 1979 — REGION ENGINEER

RECOMMENDED 6/6 1979 — CHIEF OF DESIGN

RECOMMENDED 6/6 1979 — DEPUTY DIRECTOR OF HIGHWAYS (ACTING)

APPROVED

APPROVED 6/6 1979 — DIRECTOR OF HIGHWAYS

DEPARTMENT OF TRANSPORTATION
FEDERAL HIGHWAY ADMINISTRATION

APPROVED _____ 19 ___

DIVISION ENGINEER

| COUNTY | CONTRACT | P.R.A. REG. NO. | STATE | FED. AID PROJECT NO. | SHEET NO. | TOTAL SHEETS |
|---|---|---|---|---|---|---|
| NEW CASTLE | 79-071-02 | 2 | DEL | M-1191 (1) | 2 | 112 |

# AUGUSTINE BRIDGE RECONSTRUCTION

PREL. TRACING _____ DESIGN _____ CHKD. _____

REVISIONS

1 ADDENDUM 1 — 7/3/79 C.H.

2 UTILITY INSTALLATION AND LOCATION — SMT 9/20/79

## LIST OF DRAWINGS

1 TITLE SHEET
2. LIST OF DRAWINGS AND SUMMARY OF ESTIMATED QUANTITIES
3. GENERAL NOTES AND TABLE OF ROADWAY OFFSETS AND ELEVATIONS
4. QUANTITIES - SHEET 1
5. QUANTITIES - SHEET 2
6. SITE PLAN AND MAINTENANCE OF TRAFFIC
7. TYPICAL ROADWAY SECTIONS
8. TYPICAL ROADWAY SECTIONS
9. PLAN - WEST APPROACH ROAD
10. PLAN - EAST APPROACH ROAD
11. PROFILE
12. PLAN AND ELEVATION OF EXISTING BRIDGE (LIMITS OF REMOVAL OF STRUCTURES AND OBSTRUCTIONS)
13. TYPICAL CROSS SECTIONS OF EXISTING BRIDGE
14. DISMANTLING AND REMOVAL OF EXISTING SUPERSTRUCTURE
15. PLAN AND ELEVATION OF RECONSTRUCTED BRIDGE
16. TYPICAL CROSS SECTION OF RECONSTRUCTED BRIDGE
17. PIER GROUTING AND REPAIRS - SHEET 1
18. PIER GROUTING AND REPAIRS - SHEET 2
19. STEEL GRILLAGES ON TOP OF PIERS - SHEET 1
20. STEEL GRILLAGES ON TOP OF PIERS - SHEET 2
21. ANCHOR BOLT LOCATION PLAN AT PIER TOPS
22. WEST ABUTMENT AND WINGWALLS - PLAN
23. WEST ABUTMENT - ELEVATION AND SECTIONS
24. SOUTHWEST WINGWALL ELEVATION, FOOTING PLAN AND SECTIONS
25. NORTHWEST WINGWALL ELEVATION, FOOTING PLAN AND SECTIONS
26. WEST ABUTMENT & WINGWALLS - ARCHITECTURAL ELEVATIONS AND DETAILS
27. WEST ABUTMENT & WINGWALLS - SECTIONS & STONE MASONRY DETAILS
28. WEST ABUTMENT REINFORCING BAR SCHEDULE
29. EAST ABUTMENT AND WINGWALLS - PLAN
30. EAST ABUTMENT - ELEVATION AND SECTIONS
31. SOUTHEAST WINGWALL ELEVATION, FOOTING PLAN AND SECTIONS
32. NORTHEAST WINGWALL ELEVATION, FOOTING PLAN AND DETAILS
33. EAST ABUTMENT & WINGWALLS - ARCHITECTURAL ELEVATIONS AND DETAILS
34. EAST ABUTMENT REINFORCING BAR SCHEDULE
35. APPROACH SLABS
36. TRUSS LAYOUT AND STRESSES - PANEL POINTS 0 TO 10
37. TRUSS LAYOUT AND STRESSES - PANEL POINTS 10 TO 20
38. TRUSS LAYOUT AND STRESSES - PANEL POINTS 20 TO 30
39. TRUSS LAYOUT AND STRESSES - PANEL POINTS 30 TO 40
40. TRUSS LAYOUT AND STRESSES - PANEL POINTS 40 TO 50
41. TRUSS CAMBER DIAGRAM
42. TRUSS DETAILS - PANEL POINTS U0, L0, U1 & L1
43. PANEL POINTS U2, L2, U3, L3, U4 & L4
44. PANEL POINTS U5, L5, U6, L6, U7 & L7
45. PANEL POINTS U8, L8, U9, L9, U10 & L10
46. PANEL POINTS U11, L11, U12, L12, U13, L13, U14 & L14
47. PANEL POINTS U15, L15, U16, L16, U17, L17, U18 & L18
48. PANEL POINTS U19, L19, U20, L20, U21, L21, U22 & L22
49. PANEL POINTS U23, L23, U24, L24, U25 & L25
50. PANEL POINTS U26 & L26
51. PANEL POINTS U27, L27, U28, L28, U29, L29, U30 & L30
52. PANEL POINTS U31, L31, U32, L32, U33, L33, U34 & L34
53. PANEL POINTS U35, L35, U36, L36, U37, L37, U38 & L38
54. PANEL POINTS U39, L39, U40, L40, U41, L41, U42 & L42
55. PANEL POINTS U43, L43, U44, L44, U45, L45, U46 & L46
56. PANEL POINTS U47, L47, U48, L48, U49, L49, U50 & L50
57. SWAY FRAMES
58. TOP & BOTTOM LATERAL BRACING
59. BOTTOM LATERAL BRACING - WIND LINK DETAILS
60. INSPECTION WALK
61. TRANSVERSE INSPECTION WALK AT PANEL POINT U26
62. FIXED BEARINGS AT ABUTMENTS
63. EXPANSION BEARINGS AT PIERS
64. FLOORBEAMS 1, 2 & 3 AND STRINGER DETAILS
65. FLOORBEAM 4 AND STRINGER DETAILS
66. DECK EXPANSION JOINT AT PANEL POINT 26
67. DECK EXPANSION JOINT - SECTIONS AND DETAILS
68. DECK EXPANSION JOINT - DETAILS
69. INTERMEDIATE JOINTS IN BRIDGE DECK
70. DECK JOINT AT WEST ABUTMENT
71. DECK JOINT AT EAST ABUTMENT
72. BRIDGE DECK CROSS SECTION AND DETAILS
73. DECK REINFORCING STEEL PLACEMENT PLANS - SPANS 1, 2 & 3
74. DECK REINFORCING STEEL PLACEMENT PLANS - SPANS 3, 4 & 5
75. DECK REINFORCING STEEL PLACEMENT PLANS - SPANS 5 & 6
76. NORTH SIDEWALK AND PARAPET - REINFORCING STEEL PLACEMENT PLANS
77. NORTH SIDEWALK AND PARAPET - REINFORCING STEEL PLACEMENT PLANS AND DETAILS
78. SOUTH SIDEWALK AND PARAPET - REINFORCING STEEL PLACEMENT PLANS
79. SOUTH SIDEWALK AND PARAPET - REINFORCING STEEL PLACEMENT PLANS
80. DECK REINFORCING STEEL BAR SCHEDULE
81. BRIDGE FENCE
82. LIGHTING PLAN
83. TYPICAL BRIDGE LIGHTING CROSS SECTION
84. LIGHTING STANDARD DETAILS
85. MISCELLANEOUS LIGHTING DETAILS
86. SINGLE LINE DIAGRAM AND BILL OF MATERIALS
87. MASONRY CORE LOGS - HORIZONTAL CORES
88. MASONRY CORE LOGS - PIER 1, VERTICAL CORES V1N AND V1S
89. MASONRY CORE LOGS - PIER 2, VERTICAL CORE V2N
90. MASONRY CORE LOGS - PIER 2, VERTICAL CORE V2S
91. MASONRY CORE LOGS - PIER 3, VERTICAL CORE V3N
92. MASONRY CORE LOGS - PIER 3, VERTICAL CORE V3S
93. MASONRY CORE LOGS - PIER 4, VERTICAL CORE V4N
94. MASONRY CORE LOGS - PIER 4, VERTICAL CORE V4S
95. MASONRY CORE LOGS - PIER 5, VERTICAL CORES V5N & V5S
96. MASONRY CORE LOGS - EAST ABUTMENT, VERTICAL CORES V6N AND V6S
97. SOIL BORING LOGS - SHEET 1
98. SOIL BORING LOGS - SHEET 2
99. SOIL BORING LOGS - SHEET 3
100. SOIL BORING LOGS - SHEET 4

2 81A UTILITY LIMITS ON BRIDGE AND APPROACHES

2 81B SLEEVES IN ABUTMENT BACKWALLS FOR 6" DIA. ELECTRICAL CONDUITS & 12" DIA. GAS MAIN

2 81C SUPPORT DETAILS FOR 6" DIA. ELECTRICAL CONDUITS & 12" DIA. GAS MAIN

### EARTHWORK CROSS SECTIONS

EARTHWORK CROSS SECTION DRAWINGS ARE AVAILABLE FOR CONTRACTOR'S INSPECTION AT THE DEPARTMENT OF TRANSPORTATION.

## SUMMARY OF ESTIMATED QUANTITIES

| SECTION | DESCRIPTION | UNIT | QUANTITY |
|---|---|---|---|
| 201 | CLEARING AND GRUBBING | L.S. | L.S. |
| 202 | EXCAVATION AND EMBANKMENT | C.Y. | 3200 |
| 206 | ROCK EXCAVATION FOR STRUCTURES & TRENCHES | C.Y. | 420 |
| 207 | EXCAVATION AND BACKFILL FOR STRUCTURES | C.Y. | 3200 |
| 208 | EXCAVATION AND BACKFILL FOR PIPE TRENCHES | C.Y. | 90 |
| 209 | BORROW TYPE C | C.Y. | 2750 |
| 209 | BORROW TYPE F | C.Y. | 850 |
| 210 | REMOVAL OF STRUCTURES AND OBSTRUCTIONS | L.S. | L.S. |
| SP | REMOVAL OF GAS MAIN ON EXISTING BRIDGE | L.S. | L.S. |
| SP | REMOVAL OF EXISTING WEARING SURFACE AND SCARIFYING EXISTING CONCRETE PAVEMENT | S.Y. | 300 |
| 302 | SELECT BORROW BASE COURSE | C.Y. | 150 |
| 303 | CRUSHER RUN BASE COURSE (8" DEPTH) | S.Y. | 4400 |
| SP | BAGGED SCREENED GRAVEL | C.Y. | 245 |
| 401 | HOT MIX, HOT LAID BITUMINOUS CONCRETE PAVEMENT - TYPE B | TONS | 1150 |
| 401 | HOT MIX, HOT LAID BITUMINOUS CONCRETE PAVEMENT - TYPE C | TONS | 420 |
| 602 | PORTLAND CEMENT CONCRETE MASONRY - FOOTINGS | C.Y.* | 700 |
| 602 | PORTLAND CEMENT CONCRETE MASONRY - ABUTMENT AND WINGWALL STEMS | C.Y.* | 1110 |
| 602 | PORTLAND CEMENT CONCRETE MASONRY - PIER TOPS | C.Y.* | 50 |
| 602 | PORTLAND CEMENT CONCRETE MASONRY - SUPER-STRUCTURE | C.Y.* | 1490 |
| 602 | PORTLAND CEMENT CONCRETE MASONRY - SUBFOOTING | C.Y. | 25 |
| 602 | PORTLAND CEMENT CONCRETE MASONRY - SUPER-STRUCTURE AND WINGWALL PARAPETS | C.Y.* | 275 |
| 602 | PORTLAND CEMENT CONCRETE MASONRY - APPROACH SLABS | C.Y.* | 62 |
| | | | |
| SP | PORTLAND CEMENT CONCRETE MASONRY AND BAR REINFORCEMENT FOR DRILLED-IN CAISSONS | L.F. | 375 |
| SP | LATEX MODIFIED CONCRETE SURFACE COURSE | S.Y.* | 4830 |
| SP | STONE FACING | S.F.* | 6800 |
| SP | STONE COPING | L.F.* | 330 |
| 605 | BAR REINFORCEMENT (UNCOATED) | LBS.* | 395,000 |
| 605 | BAR REINFORCEMENT (EPOXY COATED) | LBS.* | 280,000 |
| 606 | STEEL STRUCTURES (2,705,000 Lbs.) | L.S. | L.S. |
| SP | STEEL POT BEARINGS - TYPE I | EA. | 6 |
| SP | STEEL POT BEARINGS - TYPE II | EA. | 4 |
| SP | STEEL POT BEARINGS - TYPE III | A. | 7 |
| SP | COMPRESSION SEAL DECK JOINT | L.F.* | 395 |
| SP | NEOPRENE TROUGH | L.F.* | 57 |
| 612 | PORTLAND CEMENT RUBBLE MASONRY | C.Y. | 40 |
| 615 | 15" DIA. REINFORCED CONCRETE PIPE - CLASS III | L.F. | 120 |
| 617 | 6" DIA. GALVANIZED CORRUGATED STEEL PIPE, 16 GA. | L.F. | 60 |
| SP | 24" DIA. VERTICAL DRILLED-IN CAISSONS | L.F. | 145 |
| SP | 24" DIA. BATTERED DRILLED-IN CAISSONS | L.F. | 200 |
| SP | EXCAVATION FOR ROCK SOCKETS | L.F.* | 35 |
| 707 | INTEGRAL PORTLAND CEMENT CONCRETE CURB AND GUTTER (TYPE I) | L.F. | 1580 |
| 708 | PORTLAND CEMENT CONCRETE SIDEWALK - 4" DEPTH | S.F. | 8100 |
| 708 | PORTLAND CEMENT CONCRETE SIDEWALK - 6" DEPTH | S.F. | 2200 |
| 711 | CATCH BASIN TYPE "J" | EA. | 1 |
| 711 | CATCH BASIN TYPE DOUBLE "J" | EA. | 1 |
| 713 | ADJUSTING AND REPAIRING EXISTING CATCH BASINS AND MANHOLES | EA. | 7 |
| 715 | GALVANIZED STEEL BEAM GUARD RAIL (STEEL POSTS) | L.F. | 125 |
| 716 | TWISTED END ANCHORAGES | EA. | 4 |

| SECTION | DESCRIPTION | UNIT | QUANTITY |
|---|---|---|---|
| | | | |
| 720 | CHAIN LINK FENCE | L.F. | 1886 |
| 723 | TOPSOILING, 4" | S.Y. | 2100 |
| S.P. | PERMANENT SEEDING-SUBURBAN DEVELOPMENTS | S.Y. | 2100 |
| 726 | MULCHING | S.Y. | 2100 |
| 736 | REMOVAL OF EXISTING P.C.C. PAVEMENT, CURB, SIDEWALK, ETC. | S.Y. | 1000 |
| 737 | PERFORATED PIPE UNDERDRAINS | L.F. | 310 |
| SP | DRILLING 3-7/8" DIA. HOLES FROM PIER TOPS | L.F. | 250 |
| SP | PREPARATION OF RECESS IN COPING STONES AT PIER TOPS | S.F. | 1,050 |
| SP | REPAIR CRACKS IN PIER FACE STONES | L.F. | 200 |
| SP | REPOINTING MORTAR JOINTS IN PIER FACE STONES | L.F. | 20,000 |
| SP | GROUTING INTERIOR OF PIERS AND PIER FOUNDATIONS THROUGH EXISTING 3" DIA. VERTICAL HOLES IN PIERS | BAGS CEMENT | 1,600 |
| SP | BORING 3" DIA. HOLES FROM GROUND LEVEL | L.F. | 610 |
| SP | SOIL BORING WITHOUT SAMPLING | L.F. | 120 |
| SP | SOIL BORING WITH SAMPLING | L.F. | 176 |
| SP | GROUTING UNDERGROUND FOUNDATION MATERIALS THROUGH NEW 3" DIA. HOLES | BAGS CEMENT | 600 |
| SP | CLEANING EXISTING PIER FACE STONES | S.Y. | 2,800 |
| SP | STRUCTURE GROUNDING SYSTEM | L.S. | L.S. |
| SP | BRIDGE LIGHTING | L.S. | L.S. |
| 732 | FLAGMAN | HOURS | 2000 |
| 739 | FIELD OFFICE | L.S. | L.S. |
| SP | CONSTRUCTION ENGINEERING | L.S. | L.S. |
| SP | MAINTENANCE OF TRAFFIC | L.S. | L.S. |
| SP | RAILROAD PROTECTION | L.S. | L.S. |
| SP | TRAINEE (2) | HOURS | 2,000 |
| SP | SAWING OF JOINTS (CONCRETE) | L.F. | 80 |
| SP | SAWING OF JOINTS (HOT MIX) | L.F. | 300 |
| SP | INITIAL EXPENSE | L.S. | L.S. |
| 1 205 | ROCK EXCAVATION FOR ROADWAY | C.Y. | 20 |
| | | | |

*FIXED QUANTITY ITEM - *Compensation for these items will be made in accordance with the provisions of Section 109.06, "Basis of Payment for Fixed Quantity Items" of the Standard Specifications.*

### CONSTRUCTION DETAILS SHOWN ON STANDARD SHEETS

| CONSTRUCTION DETAILS | SHEET NO. |
|---|---|
| URBAN ENTRANCE DETAILS | C-1 |
| CURBS | C-2 |
| WHEELCHAIR CURB RAMPS | C-5 |
| CATCH BASINS "J" | D-9 |
| PIPE BEDDING | D-16 |
| DOUBLE "J" CATCH BASIN | D-19 |
| STEEL BEAM GUARD RAIL | G-2 |
| GUARD RAIL PLACING & ANCHORING | G-3 |
| POSTS & FASTENERS | G-4 |
| RAIL ELEMENTS | G-5 |
| CONNECTION OF GUARD RAIL TO BRIDGE | G-7 |
| JUNCTION WELLS | T-1 |

| COUNTY | CONTRACT | P.B.A. REG. NO. | STATE | FED. AID PROJECT NO. | SHEET NO. | TOTAL SHEETS |
|---|---|---|---|---|---|---|
| NEW CASTLE | 79-071-02 | 2 | DEL | M-1191 (1) | 3 | 112 |

AUGUSTINE BRIDGE RECONSTRUCTION

PREL. TRACING _____ DESIGN _____ CHKD. _____

REVISIONS

⚠ UTILITY INSTALLATION AND LOCATION SMT 9/20/79

# TABLE OF OFFSETS AND ELEVATIONS

| ℄ STATION | ℄ OFFSET FROM ℄ | P.G.L. ELEV. | CURB OFFSET FROM ℄ LEFT | CURB OFFSET FROM ℄ RIGHT | ELEV. TOP OF CURB LEFT | ELEV. TOP OF CURB RIGHT | DESCRIPTION |
|---|---|---|---|---|---|---|---|
| | | | | | | | * DENOTES PAVEMENT ELEV. |
| WEST APPROACH ROAD | | | | | | | |
| 10+17 | 2.0'RT. | 121.21 | 34.5± | 33.0± | — | — | MEET EXISTING PAVEMENT |
| 10+25 | | 121.32 | 26.60 | 28.02 | 122.27 | 120.06 | CURB RETURN, 25' R. - LT. |
| 10+35 | | 121.50 | 26.00 | 27.20 | 122.31 | 120.87 | P.T., LT. |
| 10+50 | | 121.87 | | 20.61 | 122.37 | 122.10 | 0.10% X-SLOPE, LT. |
| 10+54 | | 122.00 | | 20.26 | — | 122.24 | P.T., RT. |
| 10+75 | | 122.70 | | 19.00 | 122.85 | 122.95 | |
| 11+00 | | 123.53 | | 17.50 | 123.67 | 123.81 | |
| 11+03.14 | | 123.63 | | 17.31 | — | 123.91 | P.C., RT. |
| 11+25 | | 124.36 | | 16.19 | 124.50 | 124.66 | |
| 11+50 | | 125.19 | | 15.35 | 125.33 | 125.50 | |
| 11+75 | | 126.02 | | 15.00 | 126.16 | 126.33 | |
| 12+00 | 2.0' RT. | 126.84 | | 15.14 | 126.99 | 127.16 | |
| 12+25 | 1.94'RT. | 127.67 | | 15.76 | 127.82 | 127.98 | |
| 12+33 | 1.67'RT. | 127.93 | 26.00 | — | 128.08 | — | P.C., LT. |
| 12+50 | 1.40'RT. | 128.46 | — | 16.84 | — | 128.75 | WAWASET ST. INTERSECTION, LT. |
| 12+75 | 0.76'RT. | 129.16 | — | 17.90 | — | 129.43 | " |
| 13+00 | 0.24'RT. | 129.76 | 26.27 | 18.75 | 129.91 | 130.02 | CURB RETURN, 25' R. - LT. |
| 13+09.51 | — | 129.97 | 23.29 | — | 130.16 | — | P.T., LT. |
| 13+25 | 0.17'LT. | 130.29 | 22.08 | 19.38 | 130.49 | 130.54 | |
| 13+50 | 0.46'LT. | 130.72 | 20.72 | 19.79 | 130.95 | 130.96 | |
| 13+75 | 0.64'LT. | 131.06 | 20.06 | 19.98 | 131.30 | 131.30 | |
| 13+85.05 | — | 131.18 | 20.00 | 20.00 | 131.42 | 131.42 | P.C.C., RT. |
| 13+85.52 | — | 131.18 | | | 131.42 | 131.42 | P.C., LT. |
| 14+00 | 0.70'LT. | 131.32 | | | 131.56 | 131.56 | |
| 14+25 | 0.64'LT. | 131.49 | | 131.88 | 131.73 | 131.73 | |
| 14+32 | — | 131.52 | 20.00 | 20.00 | 131.76 | 131.76 | BEGIN APPROACH SLAB |
| 14+50 | 0.47'LT. | 131.61 | 20.00 | 20.00 | 131.85 | 131.85 | BACK OF ABUTMENT ± |
| 14+79.77 | 0.0 | 131.76 | 20.00 | — | 132.00 | 131.97 | P.T., LT. |
| 14+79.80 | 0.0 | 131.76 | — | 20.00 | | 132.00 | P.T., RT. |
| WAWASET STREET | | | | | | | |
| 10+40.85 | 0.00 | — | — | 15.35 | — | 128.8± | P.C MEET EXISTING CURB ELEV. |
| 10+56.59 | 0.00 | — | 15.35 | — | 127.7± | — | P.T. " " " " |
| 10+45 | 0.00 | — | — | 15.35 | — | 128.84 | MEET EXISTING PAV'T. |
| 10+60 | 0.00 | — | 15.35 | — | 127.70 | — | " " " |
| EAST APPROACH ROAD | | | | | 132.62 | | |
| 22+75 | 0.00 | 132.26 | 20.00 | 20.00 | 132.50 | 132.50 | BACK OF ABUTMENT ± |
| 22+96.78 — 22+95.74 | 132.15 | 132.16 | 20.00 | 20.00 | 132.40 | 132.40 | END APPROACH SLAB |
| 23+00 | | 132.14 | | 132.51 | 132.38 | 132.38 | |
| 23+25 | | 132.01 | | | 132.25 | 132.25 | |
| 23+50 | | 131.89 | | | 132.13 | 132.13 | |
| 23+75 | | 131.76 | | | 132.00 | 132.00 | |
| 23+94.17 | | 131.67 | 20.00 | | 131.91 | — | P.C., LT. |
| 24+00 | | 131.64 | — | | — | 131.88 | |
| 24+25 | | 131.51 | 18.00 | 20.00 | *131.23 | 131.75 | LOVE LA. INTERSECTION, LT. |
| 24+50 | | 131.63 | 18.00 | — | *131.35 | — | " " " " |
| 24+75 | | 131.74 | 32.85 | — | 131.78 | — | CURB RETURN, 20' R. - LT. |
| 24+84.08 | | 131.78 | 30.46 | — | 131.86 | — | P.C.C., LT. |
| 25+00 | OFFSET FROM ℄ | 131.86 | 29.65 | — | 131.95 | — | |
| 25+25 | | 131.98 | 28.37 | — | 132.09 | — | |
| 25+50 | | 132.09 | 27.08 | — | 132.22 | — | |
| 25+75 | | 132.21 | 26.10 | — | 132.35 | — | |
| 25+85.65 | | 132.26 | 26.00 | — | 132.41 | — | P.T., LT. |
| 26+00 | | 132.33 | 26.00 | — | 132.48 | — | |
| 26+25 | | 132.44 | 26.00 | — | 132.59 | — | |
| 26+50 | 0.00 | 132.56 | 26.00 | — | 132.71 | — | LIMIT OF WORK |
| ℄ STATION | | | | | | | |
| 24+50 | 0.13'RT. | 131.63 | — | 20.00 | — | 131.87 | 8" CURB |
| 24+75 | 1.16'RT. | 131.74 | — | 20.00 | — | 131.40 | DROP CURB |
| 25+00.22 | 3.25'RT. | 131.86 | — | 20.00 | — | 131.52 | " " |
| 25+25.62 | 6.41'RT. | 132.10 | — | 18.87 | — | 131.77 | " " |
| 25+51.33 | 10.65'RT. | 132.25 | — | 17.74 | — | 131.94 | DROP CURB |
| 25+76.90 | 16.60'RT. | 132.40 | — | 16.62 | — | 132.69 | 8" CURB |
| 26+02.38 | 20.54'RT. | 132.55 | — | 15.50 | — | 132.86 | |
| 26+27.86 | 25.48'RT. | 132.70 | — | 14.37 | — | 133.03 | |
| 26+53.35 | 30.41'RT. | 132.82 | — | 13.40 | — | 133.16 | MEET EXISTING PAVEMENT |
| LOVE LANE | | | | | | | |
| 10+28.89 | 0.00 | — | 22.42 | — | 131.50 | — | 8" CURB P.T., LT. |
| 10+63.17 | 0.00 | — | — | 12.09 | — | 131.66 | 8" CURB P.C., RT. |

# GENERAL NOTES

SPECIFICATIONS:

DESIGN CRITERIA ARE BASED ON 1977 STANDARD SPECIFICATIONS FOR HIGHWAY BRIDGES, AMERICAN ASSOCIATION OF STATE HIGHWAY AND TRANSPORTATION OFFICIALS, INCLUDING 1978 A.A.S.H.T.O. INTERIM SPECIFICATIONS.

MATERIAL AND WORKMANSHIP ARE TO CONFORM WITH THE STATE OF DELAWARE STATE HIGHWAY DEPARTMENT STANDARD SPECIFICATIONS DATED JUNE 1, 1974, AS AMENDED BY SPECIAL PROVISIONS.

ALL WELDING SHALL CONFORM TO THE CURRENT SPECIFICATIONS FOR WELDING HIGHWAY AND RAILWAY BRIDGES BY THE AMERICAN WELDING SOCIETY AS MODIFIED BY 1977 STANDARD SPECIFICATIONS FOR WELDING OF STRUCTURAL STEEL, HIGHWAY BRIDGES, AMERICAN ASSOCIATION OF STATE HIGHWAY AND TRANSPORTATION OFFICIALS. ELECTROSLAG, FLUX CORED ARC, GAS METAL ARC, VERTICAL SUBMERGED ARC AND ELECTROGAS ARC WELDING PROCESSES SHALL NOT BE PERMITTED.

LOADING:

HS 20-44 LIVE LOAD. 500,000 OF STRESS CYCLES. DEAD LOAD INCLUDES ALLOWANCE FOR A POSSIBLE FUTURE ADDITIONAL WEARING COURSE WEIGHING 30 POUNDS PER SQUARE FOOT.

ELEVATIONS:

ELEVATIONS ARE BASED ON U.S.C. AND G.S. DATUM.

FOUNDATION DATA:

FOUNDATION DESIGN AND FOUNDATION QUANTITIES ARE BASED ON A STUDY OF THE BORINGS MADE AT THE SITE. THIS BORING INFORMATION, THE ACCURACY OF WHICH THE STATE DOES NOT GUARANTEE, IS PRESENTED WITH THESE PLANS TO THE CONTRACTOR FOR HIS INFORMATION ONLY. THE CONTRACTOR MUST MAKE HIS OWN DEDUCTIONS OF SUBSOIL CONDITIONS, WHICH MAY AFFECT HIS METHOD OR COST OF CONSTRUCTION.

PORTLAND CEMENT CONCRETE MASONRY:

DECK SLAB CONCRETE, CONCRETE FOR SIDEWALKS AND PARAPETS AND CONCRETE FOR DRILLED-IN CAISSONS SHALL BE CLASS A CONCRETE (28 DAY STRENGTH = 4,000 P.S.I.). ALL OTHER CONCRETE SHALL BE CLASS B CONCRETE (28 DAY STRENGTH = 3000 P.S.I.). MINIMUM COVER OVER THE BAR REINFORCEMENT SHALL BE 2 INCHES EXCEPT AS OTHERWISE NOTED ON THE DRAWINGS. CONCRETE BEARING AREAS FOR FIXED SHOES AT THE ABUTMENTS SHALL BE FINISHED AT LEAST 1/8 INCH HIGH, AND AFTER CURING, GROUND TO A TRUE PLANE AND ELEVATION OVER AN AREA EXTENDING 1 INCH BEYOND THE CONTACT SURFACES. ALL EXPOSED EDGES OF CONCRETE SHALL BE CHAMFERED 3/4" X 3/4" UNLESS OTHERWISE SHOWN.

BAR REINFORCEMENT:

BAR REINFORCEMENT SHALL CONFORM WITH ASTM DESIGNATION A 615 GRADE 60. LAPPED SPLICES, UNLESS OTHERWISE NOTED, SHALL BE IN ACCORDANCE WITH SECTION 1.5.22 OF A.A.S.H.T.O. SPECIFICATIONS.

STRUCTURAL STEEL:

THE STRUCTURAL STEEL SHALL CONFORM TO THE REQUIREMENTS OF A.A.S.H.T.O. M-270 (ASTM A 588). UNLESS OTHERWISE SHOWN ALL BOLTED CONNECTIONS SHALL BE MADE WITH 7/8 INCH HIGH STRENGTH BOLTS, ASTM A325, TYPE 3.

ANCHOR BOLTS, IMMEDIATELY AFTER THE CONCRETE HAS ATTAINED ITS INITIAL SET, SHALL BE THOROUGHLY COATED WITH AN APPROVED HEAVY GREASE AND SECURELY WRAPPED IN BURLAP. PAYMENT FOR THESE RUST PREVENTIVE AND PROTECTIVE MEASURES SHALL BE INCLUDED IN THE PRICE BID FOR SECTION 606.

WELDED FIELD SPLICES WILL NOT BE PERMITTED.

FABRICATION AND ERECTION:

PRIOR TO THE PREPARATION OF THE SHOP DRAWINGS THE CONTRACTOR SHALL VERIFY THE ELEVATIONS OF THE TOPS OF THE PIERS AND THE DISTANCES BETWEEN THE CENTERLINES OF THE PIERS. IF THE INFORMATION SO OBTAINED BY THE CONTRACTOR IS DIFFERENT FROM THAT SHOWN ON THE PLANS THE CONTRACTOR SHALL MAKE NECESSARY ADJUSTMENTS TO THE AFFECTED STEEL MEMBERS ACCORDINGLY.

THE CONTRACTOR SHALL SUBMIT FOR EXAMINATION HIS METHOD AND PROCEDURE OF ERECTION AND STRENGTHENING OF THE RESPECTIVE MEMBERS DUE TO ERECTION STRESSES AS REQUIRED FOR:

E - DEAD LOAD OF ALL ERECTED MATERIAL PLUS ALL MATERIAL FOR TEMPORARY PLANT AND EQUIPMENT REQUIRED BY THE CONTRACTOR'S ERECTION PROCEDURES:

EW - ERECTION WIND LOAD OF 45 P.S.F. ON THE VERTICAL PROJECTION OF THE STRUCTURE AND EQUIPMENT.

THE BASIC DESIGN UNIT STRESSES MAY BE INCREASED FOR STRESSES DURING ERECTION AS FOLLOWS:

E - AT 125% OF BASIC DESIGN UNIT STRESSES.

E+EW AT 140% OF BASIC DESIGN UNIT STRESSES.

THE ERECTION PROCEDURE SHALL BE SUCH THAT UNDER NO CIRCUMSTANCES CAN THE EXISTING STONE MASONRY PIERS BE ALLOWED TO BE SUBJECTED TO ANY TENSILE STRESSES.

THE CONTRACTOR SHALL INCLUDE IN HIS BID PRICE THE COST OF ANY ADDITIONAL MATERIAL AND STRENGTHENING OF MEMBERS REQUIRED BY HIS METHOD OF ERECTION.

TRUSSES, FLOOR BEAMS AND LONGITUDINAL BEAMS SHALL BE CAMBERED FOR FULL DEAD LOAD OF THE COMPLETE SUPERSTRUCTURE WITHOUT TAKING INTO ACCOUNT THE 30 P.S.F. LOAD FOR POSSIBLE FUTURE WEARING SURFACE.

ALL VERTICAL TRUSS MEMBERS, FLOOR BEAMS, GIRDER ENDS AND BEARING STIFFENERS SHALL BE TRULY VERTICAL UNDER FULL DEAD LOAD, AND NORMAL TEMPERATURE.

BEARING SHOES SHALL BE SO SET THAT AT NORMAL TEMPERATURE (68° F) THEY ARE IN NEUTRAL POSITION UNDER FULL DEAD LOAD.

SOLE PLATES FOR EXPANSION BEARINGS ON PIERS SHALL BE BEVELLED TO FIT ROADWAY GRADE.

FOOTINGS:

THE FOOTINGS MAY BE ORDERED BY THE ENGINEER TO BE AT ANY ELEVATION OR OF ANY DIMENSIONS NECESSARY TO PROVIDE A PROPER FOUNDATION. FOR THE DESIGN SHOWN THE MAXIMUM FOUNDATION PRESSURE AT WEST ABUTMENT AND WINGWALLS IS 5 TONS/SQ. FT.

THE MAXIMUM LOAD ON DRILLED-IN CAISSONS AT EAST ABUTMENT IS 540 TONS/CAISSON. THE MAXIMUM FOUNDATION PRESSURE AT THE EAST WINGWALLS IS 1 1/2 TONS/S.F.

MAXIMUM FOUNDATION PRESSURES AT EXISTING PIERS ARE SHOWN ON "ELEVATION OF RECONSTRUCTED BRIDGE."

⚠ UTILITIES:

DETAILS AND LOCATION OF 4-6" DIA. ELECTRICAL STEEL CONDUITS AND 12" DIA. STEEL GAS MAIN AND THEIR SUPPORTS ARE SHOWN ON SHEETS 81A, 81B & 81C.

EXPANSION DEVICES FOR 6" DIA. ELECTRICAL STEEL CONDUITS SHALL BE LOCATED BETWEEN THE TWO END DIAPHRAGMS (W12 x 31) AT PANEL POINT 26.

EXPANSION DEVICE FOR 12" DIA. STEEL GAS MAIN SHALL BE LOCATED BETWEEN BOTTOM STRUT AT PANEL POINT 26 AND WIND LINK.

EXPANSION DEVICES FOR 6" DIA. ELECTRICAL STEEL CONDUITS AND 12" DIA. STEEL GAS MAIN SHALL PROVIDE FOR A TOTAL OF 8" MOVEMENT; 2¾" FOR TEMPERATURE RISE AND 5¼" FOR TEMERATURE FALL FROM REFERENCE TEMPERATURE OF 68° F.

BREAKDOWN OF QUANTITY OF "STEEL STRUCTURES" SECT. 606

| DESCRIPTION | UNIT | QUANTITY |
|---|---|---|
| Trusses | Lbs. | 1,048,000 |
| Sway Frames & Top and Bottom Lateral Bracing | Lbs. | 331,000 |
| Floorbeams & Longitudinal Beams and Diaphragms | Lbs. | 1,020,000 |
| Fixed Bearings at Abutments including Anchor Bolts & Steel @ Exp. Brgs. | Lbs. | 52,800 |
| Longitudinal Inspection walk, Inspection walk at PP 26 & Ladder | Lbs. | 67,000 |
| Finger type Deck Expansion Joint at PP 26 including trough supports, hoppers and 6" Φ Drain Pipe | Lbs. | 50,000 |
| Steel Grillage on pier tops including Anchor Bolts and Wind Shear Devices | Lbs. | 113,000 |
| ¼" Sheet Lead | Lbs. | 4,200 |
| Shear Connectors (Longitudinal Beams) | Lbs. | 19,000 |
| Total | Lbs. | 2,705,000 |
| ⅛" Fabric Pad | S.F. | 36 |
| Elastomeric Bearing Pads (at Intermediate Deck Joints) | C.IN. | 5,150 |

AS BUILT

GENERAL NOTES AND TABLE OF ROADWAY OFFSETS AND ELEVATIONS

DIETZGEN CO. 883C5

| COUNTY | CONTRACT | P.R.A. REG. NO. | STATE | FED. AID PROJECT NO. | SHEET NO. | TOTAL SHEETS |
|---|---|---|---|---|---|---|
| NEW CASTLE | 79-071-02 | 2 | DEL. | M-1191-(1) | 4 | 112 |

AUGUSTINE BRIDGE RECONSTRUCTION

PREL. TRACING _____ DESIGN _____ CHKD. _____

REVISIONS

△1 ADDENDUM 1 — 7/3/79 C.H.

# QUANTITIES

△1

| SECTION NO. | 201 | 202 | 206 | 207 | 208 | 209 | | 210 | 205 | | SP | SP | | | 302 | 303 | | | SP | | 401 | | | |
|---|---|---|---|---|---|---|---|---|---|---|---|---|---|---|---|---|---|---|---|---|---|---|---|---|
| DESCRIPTION | CLEARING AND GRUBBING | EXCAVATION AND EMBANKMENT | ROCK EXCAVATION FOR STRUCTURES & TRENCHES | EXCAVATION AND BACKFILL FOR STRUCTURES | EXCAVATION AND BACKFILL FOR PIPE TRENCHES | BORROW TYPE C | BORROW TYPE F | REMOVAL OF STRUCTURES AND OBSTRUCTIONS | ROCK EXCAVATION FOR ROADWAY | | REMOVAL OF GAS MAIN ON EXISTING BRIDGE | REMOVAL OF EXIST. WEARING SURFACE AND SCARIFYING EXIST. CONCRETE PAVEMENT | | | SELECT BORROW BASE COURSE | CRUSHER RUN BASE COURSE (8" DEPTH) | | | BAGGED SCREENED GRAVEL | | HOT MIX, HOT LAID BITUMINOUS CONC. PAVT. TYPE B | HOT MIX, HOT LAID BITUMINOUS CONC. PAVT. TYPE C | | |
| UNIT | L.S. | C.Y.* | C.Y. | C.Y. | C.Y. | C.Y. | C.Y. | L.S | C.Y. | | L.S. | S.Y. | | | C.Y. | S.Y. | | | C.Y. | | TONS | TONS | | |
| AUGUSTINE CUTOFF (NO. DUPONT ST.) WEST APPROACH | | | | | | | | | | | | | | | | | | | | | | | | |
| 10+17 TO 14+54 | | 1100 | | | — | | 660 | | | | | — | | | 80 | 2300 | | | | | 610 | 205 | | |
| AUGUSTINE CUTOFF EAST APPROACH | | | | | | | | | | | | | | | | | | | | | | | | |
| 22+72 TO 26+50 | | 1100 | | | 90 | | | | | | | 300 | | | 70 | 2100 | | | | | 540 | 215 | | |
| BRIDGE | | 1000 | 420 | 3200 | | 2750 | 190 | 100% | | | 100% | | | | | | | | 245 | | | | | |
| CONTINGENCIES | | | | | | | | | | | | | | | | | | | | | | | | |
| ROADWAY | 50% | 2200 | | | 90 | | 660 | — | 20 | | | 300 | | | 150 | 4400 | | | | | 1150 | 420 | | |
| BRIDGE | 50% | 1000 | 420 | 3200 | | 2750 | 190 | 100% | | | 100% | | | | | | | | 245 | | | | | |
| TOTAL PROJECT | L.S. | 3200 | 420 | 3200 | 90 | 2750 | 850 | L.S. | 20 | | L.S. | 300 | | | 150 | 4400 | | | 245 | | 1150 | 420 | | |

| SECTION NO. | 602 | | | | | | | | SP | | SP | | | | 605 | | 605 | | 606 | | SP | | | SP | SP | | |
|---|---|---|---|---|---|---|---|---|---|---|---|---|---|---|---|---|---|---|---|---|---|---|---|---|---|---|---|
| DESCRIPTION | PORTLAND CEMENT CONCRETE MASONRY | | | | | | | | PORTLAND CEMENT CONCRETE MASONRY AND BAR REINFORCEMENT FOR DRILLED-IN CAISSONS | | LATEX MODIFIED CONCRETE SURFACE COURSE | STONE FACING | STONE COPING | | BAR REINFORCEMENT (UNCOATED) | | BAR REINFORCEMENT (EPOXY COATED) | | STEELS STRUCTURES (2,705,000 Lbs.) | | STEEL POT BEARINGS | | | COMPRESSION SEAL DECK JOINT | NEOPRENE TROUGH | | |
| | FOOTINGS | ABUTMENT AND WING WALL STEMS | PIER TOPS | SUPERSTRUCTURE | SUBFOOTING | SUPERSTRUCTURE AND WING WALL PARAPETS | APPROACH SLABS | | | | | | | | | | | | | | TYPE I | TYPE II | TYPE III | | | | |
| UNIT | C.Y.* | C.Y.* | C.Y.* | C.Y.* | C.Y. | C.Y.* | C.Y.* | | L.F. | | S.Y.* | S.F.* | L.F.* | | LBS.* | | LBS.* | | L.S. | | EA. | EA. | EA. | L.F.* | L.F.* | | |
| AUGUSTINE CUTOFF (NO. DUPONT ST.) WEST APPROACH | | | | | | | | | | | | | | | | | | | | | | | | | | | |
| 10+17 TO 14+54 | | | | | | | | | | | | | | | | | | | | | | | | | | | |
| AUGUSTINE CUTOFF EAST APPROACH | | | | | | | | | | | | | | | | | | | | | | | | | | | |
| 22+72 TO 26+50 | | | | | | | | | | | | | | | | | | | | | | | | | | | |
| BRIDGE | 700 | 1100 | 50 | 1490 | 25 | 275 | | | 375 | | 4830 | 6800 | 330 | | 383,000 | | 280,000 | | 100% | | 6 | 4 | 7 | 395 | 57 | | |
| CONTINGENCIES | | | | | | | | | | | | | | | | | | | | | | | | | | | |
| ROADWAY | | | | | | | 62 | | | | | | | | 12,000 | | | | | | | | | | | | |
| BRIDGE | 700 | 1110 | 50 | 1490 | 25 | 275 | | | 375 | | 4830 | 6800 | 330 | | 383,000 | | 280,000 | | 100% | | 6 | 4 | 7 | 395 | 57 | | |
| TOTAL PROJECT | 700 | 1110 | 50 | 1490 | 25 | 275 | 62 | | 375 | | 4830 | 6800 | 330 | | 395,000 | | 280,000 | | L.S. | | 6 | 4 | 7 | 395 | 57 | | |

* FIXED QUANTITY ITEM - *Compensation for these items will be made in accordance with the provisions of Section 109.06, "Basis of Payment for Fixed Quantity Items" of the Standard Specifications.*

QUANTITIES
SHEET 1

D C B A 1 5 10 A B C D

| COUNTY | CONTRACT | P.R.A. REG. NO. | STATE | FED. AID PROJECT NO. | SHEET NO. | TOTAL SHEETS |
|---|---|---|---|---|---|---|
| NEW CASTLE | 79-071-02 | 2 | DEL. | M-1191-(1) | 5 | 112 |

AUGUSTINE BRIDGE RECONSTRUCTION

PREL. TRACING | DESIGN | CHKD.

REVISIONS

# QUANTITIES

| SECTION NO. | 612 | 615 | 617 | | | SP. | | SP. | | | 707 | 708 | | | | 711 | | 713 | 715 | 716 | | 720 | 723 | S.P. | 726 | 736 | 737 | SP. | SP. | SP. | SP. | SP. | SP. | SP. | SP. | SP. | SP. | SP. | SP. | SP. | SP. | SP. | SP. | SP. | SP. | SP. | SP. | SP. | SP. | SP. | SP. | SP. |
|---|---|---|---|---|---|---|---|---|---|---|---|---|---|---|---|---|---|---|---|---|---|---|---|---|---|---|---|---|---|---|---|---|---|---|---|---|---|---|---|---|---|---|---|---|---|---|---|---|---|
| DESCRIPTION | PORTLAND CEMENT RUBBLE MASONRY | 15" DIA. REINFORCED CONCRETE PIPE - CLASS III | 6" DIA. GALV. CORRUGATED STEEL PIPE, 16 GA. | | | 24" DIA. VERTICAL DRILLED-IN CAISSONS | 24" DIA. BATTERED DRILLED-IN CAISSONS | EXCAVATION FOR ROCK SOCKETS | | | INTEGRAL PORTLAND CEMENT CONCRETE CURB AND GUTTER TYPE I | PORTLAND CEMENT CONCRETE SIDEWALK 4" DEPTH | PORTLAND CEMENT CONCRETE SIDEWALK 6" DEPTH | | | CATCH BASIN TYPE "J" | CATCH BASIN TYPE DOUBLE "J" | ADJUSTING AND REPAIRING EXISTING CATCH BASINS AND MANHOLES | GALVANIZED STEEL BEAM GUARD RAIL (STEEL POSTS) | TWISTED END ANCHORAGES | | CHAIN LINK FENCE | TOPSOILING, 4" | PERMANENT SEEDING - SUBURBAN DEVELOPMENTS | MULCHING | REMOVAL OF EXISTING P.C.C. PAVEMENT, CURB, SIDEWALK, ETC. | PERFORATED PIPE UNDERDRAINS | DRILLING 3 7/8" DIA. HOLES FROM PIER TOPS | PREPARATION OF RECESS IN COPING STONES AT PIER TOPS | REPAIR CRACKS IN PIER FACE STONES | REPOINTING MORTAR JOINTS IN PIER FACE STONES | GROUTING INTERIOR OF PIERS AND PIER FOUNDATIONS THROUGH EXISTING 3" DIA. VERTICAL HOLES IN PIERS | BORING 3" DIA. HOLES FROM GROUND LEVEL | SOIL BORING WITHOUT SAMPLING | SOIL BORING WITH SAMPLING | GROUTING UNDERGROUND FOUNDATION MATERIALS THROUGH NEW 3" DIA. HOLES | CLEANING EXISTING PIER FACE STONES | STRUCTURE GROUNDING SYSTEM | BRIDGE LIGHTING | FLAGMAN | FIELD OFFICE | CONSTRUCTION ENGINEERING | MAINTENANCE OF TRAFFIC | RAILROAD PROTECTION | TRAINEE (2) | SAWING OF JOINTS (CONCRETE) | SAWING OF JOINTS (HOT MIX) | INITIAL EXPENSE |
| UNIT | C.Y. | L.F. | L.F. | | | L.F. | L.F. | L.F.* | | | L.F. | S.F. | S.F. | | | EA. | EA. | EA. | L.F. | EA. | | L.F. | S.Y. | S.Y. | S.Y. | S.Y. | L.F. | L.F. | S.F. | L.F. | L.F. | BAGS CEMENT | L.F. | L.F. | L.F. | BAGS CEMENT | S.Y. | L.S. | L.S. | Hours | L.S. | L.S. | L.S. | L.S. | Hours | L.F. | L.F. | L.S. |
| AUGUSTINE CUTOFF (NO. DUPONT ST.) WEST APPROACH | | | | | | | | | | | | | | | | | | | 50 | | | | | | | | | | | | | | | | | | | | | | | | | | | | | | | |
| 10+17 TO 14+54 | 40 | — | 60 | | | | | | | | 850 | 4500 | 1000 | | | — | — | 1 | ~~75~~ | 2 | | | 400 | 400 | 400 | 500 | | | | | | | | | | | | | 20% | | | | | | 30 | 130 | | | | |
| AUGUSTINE CUTOFF EAST APPROACH | | | | | | | | | | | | | | | | | | | 25 | | | | | | | | | | | | | | | | | | | | | | | | | | | | | | | |
| 22+72 TO 26+50 | — | 120 | — | | | | | | | | 730 | 3600 | 1200 | | | 1 | 1 | 6 | ~~50~~ | 2 | | | 450 | 450 | 450 | 500 | | | | | | | | | | | | | 10% | | | | | | 50 | 170 | | | | |
| BRIDGE | | | | | | 145 | 200 | 35 | | | | | | | | | | | | | | 1886 | 1250 | 1250 | 1250 | | 310 | 250 | 1050 | 200 | 20000 | 1600 | 610 | 120 | 176 | 600 | 2800 | 100% | 70% | 1000 | 90% | 90% | | 100% | 1000 | | | 90% | | | | |
| CONTINGENCIES | | | | | | | | | | | | | | | | | | | 75 | | | | | | | | | | | | | | | | | | | | | | | | | | | | | | | |
| ROADWAY | 40 | 120 | 60 | | | | | | | | 1580 | 8100 | 2200 | | | 1 | 1 | 7 | ~~125~~ | 4 | | | 850 | 850 | 850 | 1000 | | | | | | | | | | | | | 30% | 1000 | 10% | 10% | 100% | | 1000 | 80 | 300 | 10% | | | | |
| BRIDGE | | | | | | 145 | 200 | 35 | | | | | | | | | | | 75 | | | 1886 | 1250 | 1250 | 1250 | | 310 | 250 | 1050 | 200 | 20000 | 1600 | 610 | 120 | 176 | 600 | 2800 | 100% | 70% | 1000 | 90% | 90% | | 100% | 1000 | | | 90% | | | | |
| TOTAL PROJECT | 40 | 120 | 60 | | | 145 | 200 | 35 | | | 1580 | 8100 | 2200 | | | 1 | 1 | 7 | ~~125~~ | 4 | | 1886 | 2100 | 2100 | 2100 | 1000 | 310 | 250 | 1050 | 200 | 20000 | 1600 | 610 | 120 | 176 | 600 | 2800 | L.S. | L.S. | 2000 | L.S. | L.S. | L.S. | L.S. | 2000 | 80 | 300 | L.S. | | | | |

*FIXED QUANTITY ITEM - *Compensation for these items will be made in accordance with the provisions of Section 109.06, "Basis of Payment for Fixed Quantity Items" of the Standard Specifications.*

QUANTITIES
SHEET 2

AS BUILT

| COUNTY | CONTRACT | P. R. A. REG. NO. | STATE | FED. AID PROJECT NO. | SHEET NO. | TOTAL SHEETS |
|---|---|---|---|---|---|---|
| NEW CASTLE | 79-071-02 | 2 | DEL. | M-1191(1) | 6 | 112 |

# AUGUSTINE BRIDGE RECONSTRUCTION

| NO. | REVISIONS | BY | DATE |
|---|---|---|---|
| | | | |

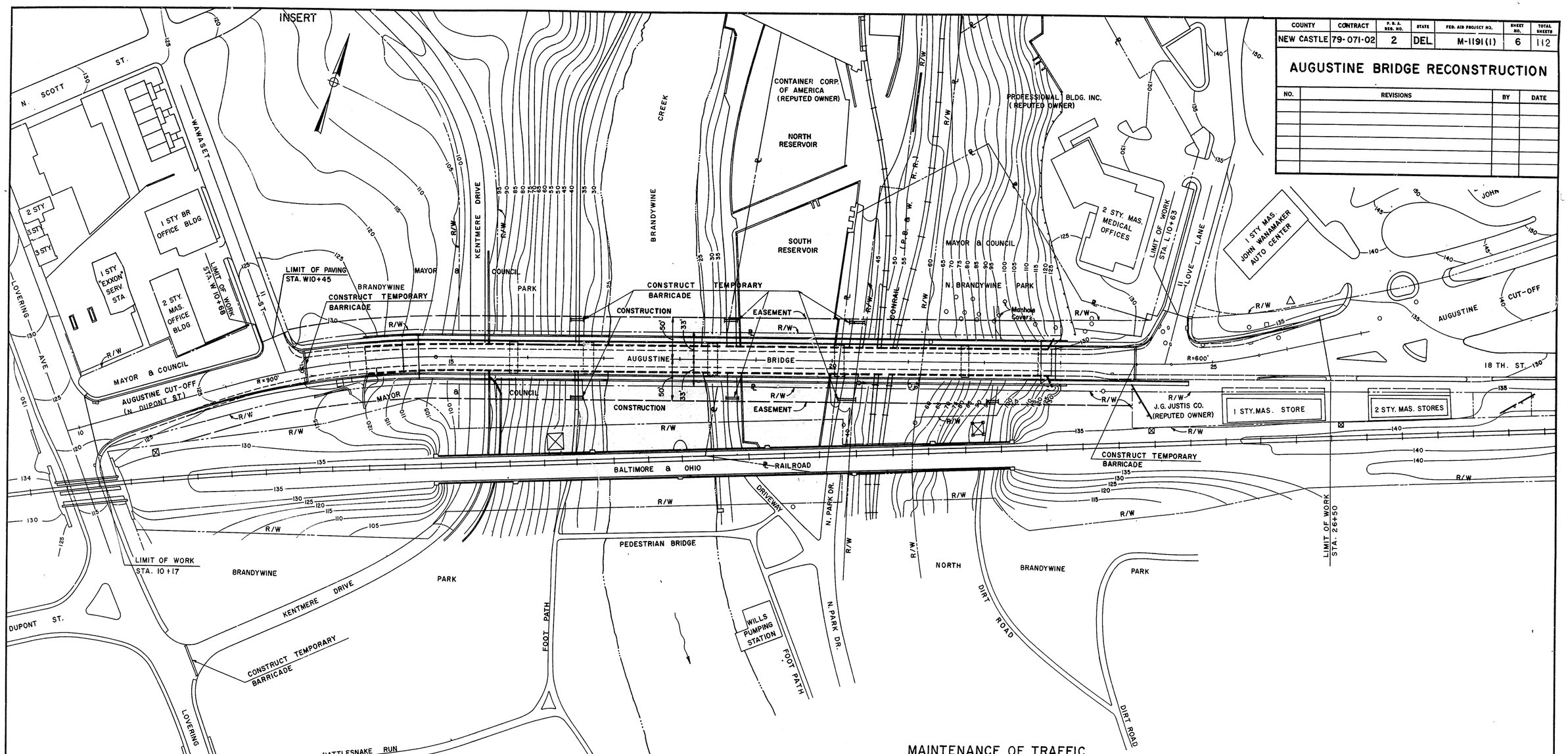


## MAINTENANCE OF TRAFFIC

1. To facilitate the Contractor's work the following roads will be closed for the entire duration of the project:

   (a) Augustine Cut-Off between Wawaset Street and Love Lane.

   (b) Kentmere Drive between Lovering Avenue and Riddle Avenue.

2. To facilitate the Contractor's work the following roads may be closed temporarily or intermittently, all subject to the conditions and prior written approvals of the indicated respective owners and/or users.

   (a) Foot Path on the west bank of Brandywine Creek (New Castle County Department of Parks and Recreation).

   (b) Driveway between Brandywine Creek and south reservoir (Container Corporation of America).

   (c) N. Park Drive (New Castle County Department of Parks and Recreation and Container Corporation of America).

   (d) Railroad tracks (Conrail).

3. All closed (temporary or otherwise) bridge approaches, streets, roads, driveway or foot path shall be protected with temporary barricades complete with lights and signs at the locations indicated on the plan and/or as may be required subject to the approval of the Engineer.

4. During the reconstruction of the west and east approach roads the affected roads or streets may be totally or partially closed to traffic subject to the requirements of and subject to prior written approvals of Wilmington City Department of Public Works.

5. Before the start of any work which would require temporary closing or affect the movements and/or the safety of the users of the foot path, driveway, N. Park Drive, railroad tracks, and or bridge approach roads and streets indicated in (2) and (4) above, it shall be the Contractor's responsibility to inform in advance the affected owners and users and obtain from the latter the required written approvals of his proposed method of traffic closing and methods of protection for public life and properties.

6. For additional requirements for maintenance of traffic see Special Provisions.

DELAWARE
DEPARTMENT OF HIGHWAYS & TRANSPORTATION
DIVISION OF HIGHWAYS

SITE PLAN
&
MAINTENANCE OF TRAFFIC

| D. T. C. | SCALE | APPROVED BY |
|---|---|---|
| | 1" = 60' | BRIDGE ENGINEER |

JOHN E. McDONNELL REGISTERED PROFESSIONAL ENGINEER No. 3069

| COUNTY | CONTRACT | P.R.A. REG. NO. | STATE | FED. AID PROJECT NO. | SHEET NO. | TOTAL SHEETS |
|---|---|---|---|---|---|---|
| NEW CASTLE | 79-071-02 | 2 | DEL. | M-1191 (1) | 7 | 112 |

# AUGUSTINE BRIDGE RECONSTRUCTION

PREL. TRACING _____ DESIGN _____ CHKD. _____

REVISIONS

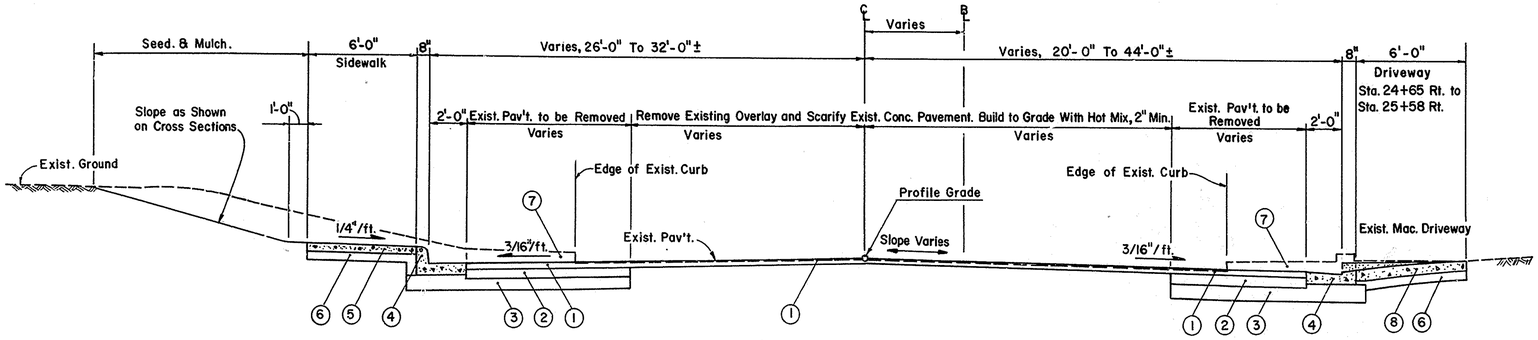


STA. 23+50± TO STA. 26+50

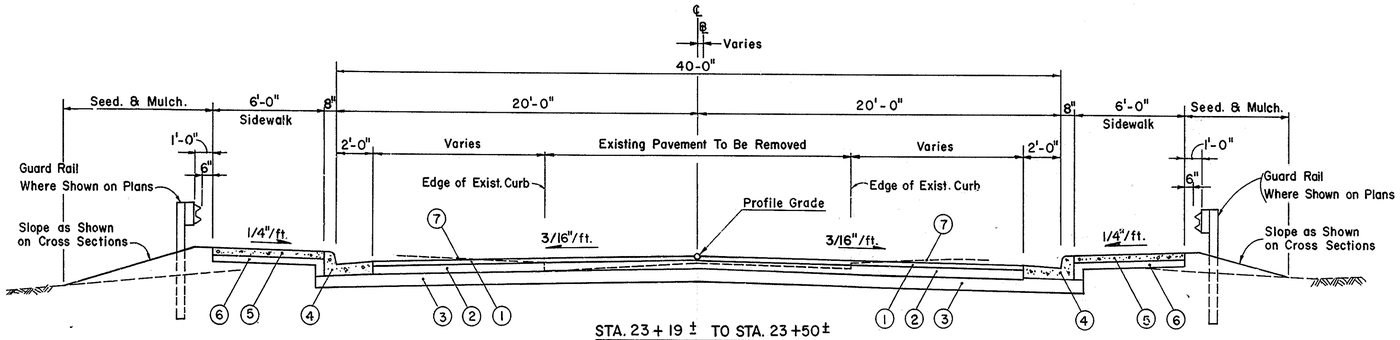


STA. 23+19 ± TO STA. 23+50±

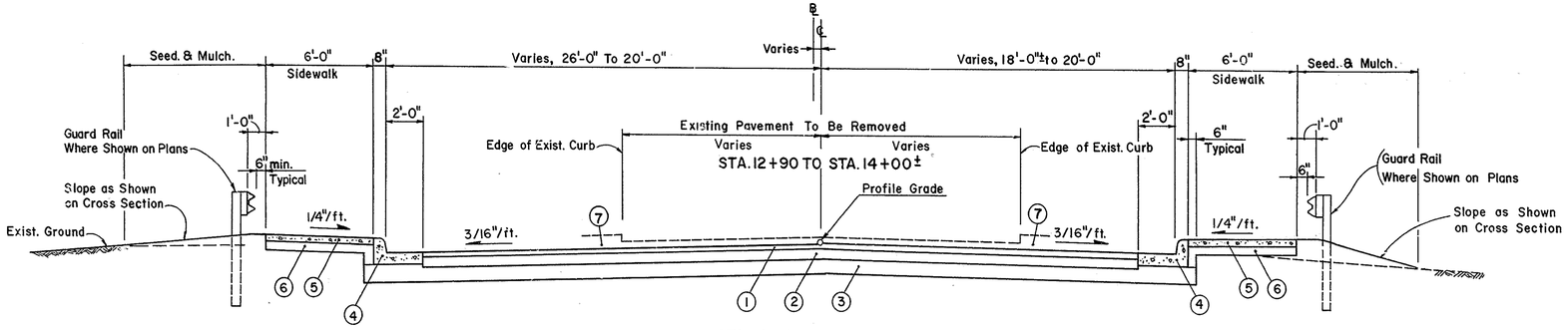


STA. 12+90 TO STA. 13+85

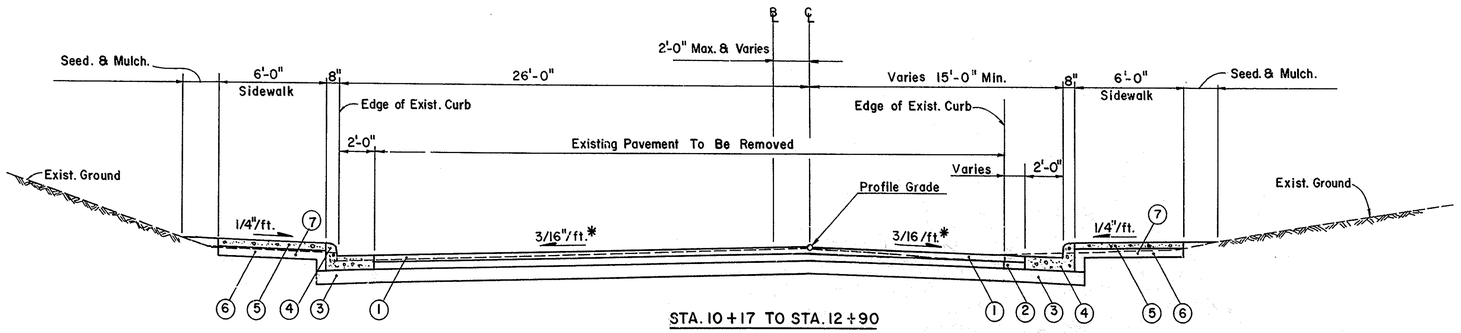


STA. 10+17 TO STA. 12+90

(*Slope varies between Sta. 10+17 and Sta. 10+75±. See Cross Sections.)

| SECTION NO. | UNIT | DESCRIPTION |
|---|---|---|
| 1 401-C | TON | 2" Type C Hot Mix, Hot Laid Bituminous Conc. Pavement |
| 2 401-B | TON | 6" Type B Hot Mix, Hot Laid Bituminous Conc. Pavement |
| 3 303 | S.Y. | 8" Crusher Run Base Course |
| 4 707 | L.F. | Integral Port. Cement Conc. Curb & Gutter - Type 1 |
| 5 708 | S.F. | 4" Portland Cement Concrete Sidewalk |
| 6 302 | C.Y. | 4" Select Borrow Base Course |
| 7 736 | S.Y. | Removal of Exist. P.C.C. Pav't, Curb, Sidewalk, etc. |
| 8 708 | S.F. | 6" Portland Cement Concrete Driveway |

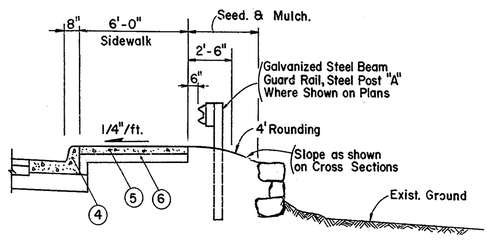


SECTION WITH EARTH EMBANKMENT

STA. 13+10 ± TO STA. 13+50±, RIGHT

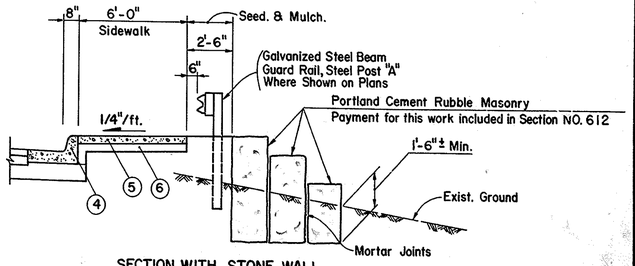


SECTION WITH STONE WALL

STA. 13+50± TO STA. 13+87±, RIGHT

SHOULDER WITH GUARDRAIL

## TYPICAL ROADWAY SECTIONS

SCALE: 1" = 40'

| COUNTY | CONTRACT | P.R.A. REG. NO. | STATE | FED. AID PROJECT NO. | SHEET NO. | TOTAL SHEETS |
|---|---|---|---|---|---|---|
| NEW CASTLE | 79-071-02 | 2 | DEL | M-1191(1) | 8 | 12 |

AUGUSTINE BRIDGE RECONSTRUCTION

PREL. TRACING _____ DESIGN _____ CHKD. _____

REVISIONS

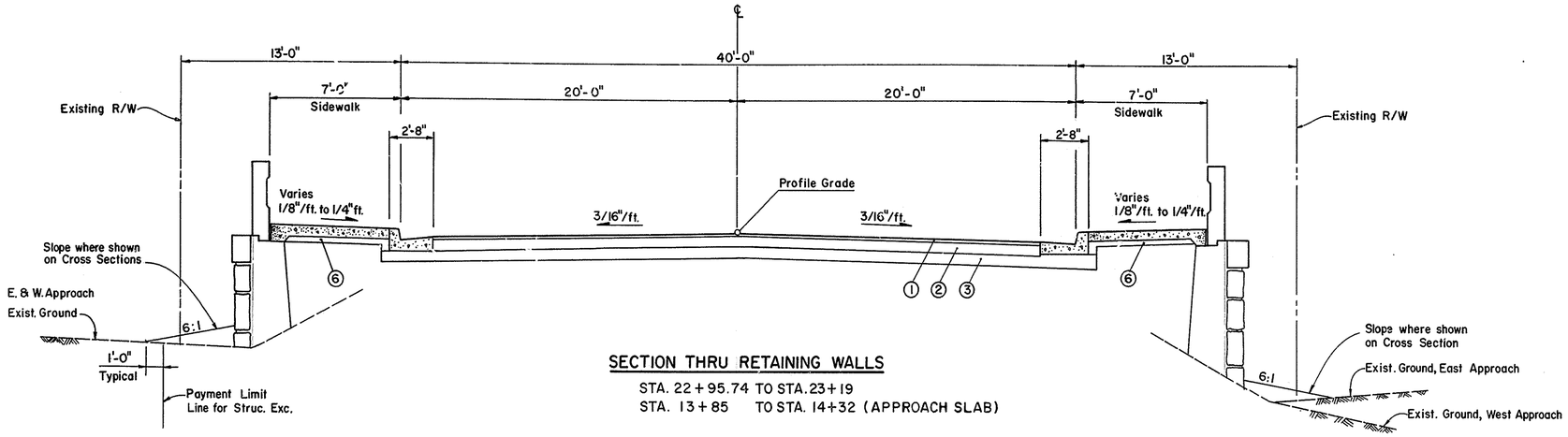


SECTION THRU RETAINING WALLS

STA. 22+95.74 TO STA. 23+19
STA. 13+85 TO STA. 14+32 (APPROACH SLAB)

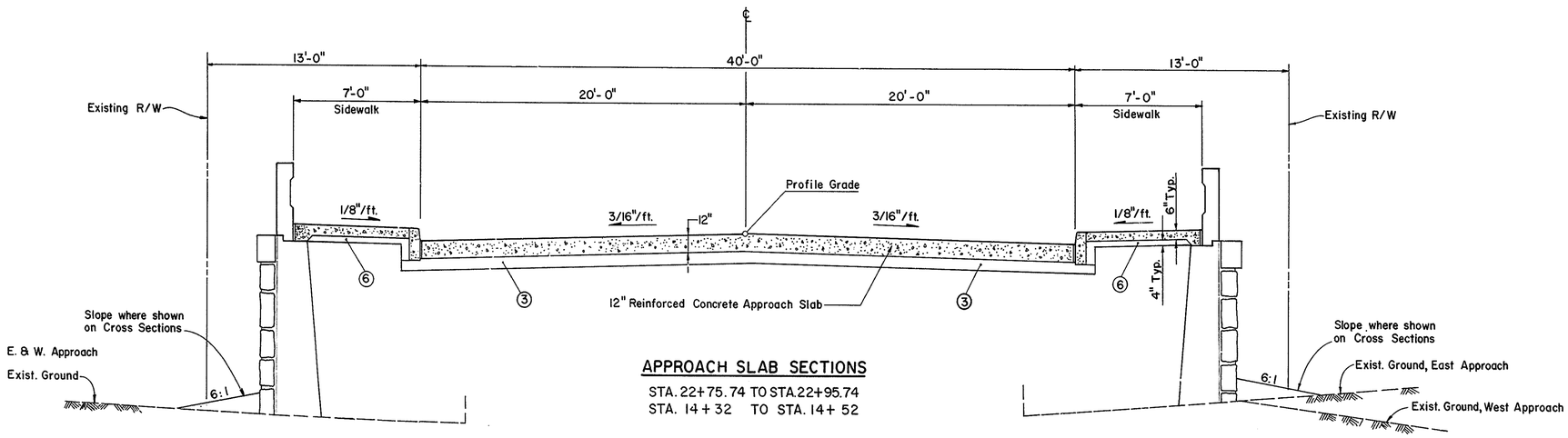


APPROACH SLAB SECTIONS

STA. 22+75.74 TO STA. 22+95.74
STA. 14+32 TO STA. 14+52

TYPICAL ROADWAY SECTIONS

SCALE: 1" = 40'

AS BUILT

DIETZGEN CO. 58206

| COUNTY | CONTRACT | P.R.A. REG. NO. | STATE | FED. AID PROJECT NO. | SHEET NO. | TOTAL SHEETS |
|---|---|---|---|---|---|---|
| NEW CASTLE | 79-071-02 | 2 | DEL. | M-1191(1) | 9 | 112 |

# AUGUSTINE BRIDGE RECONSTRUCTION

PREL. TRACING _____ DESIGN _____ CHKD. _____

REVISIONS

1. UTILITY INSTALLATION AND LOCATION — SHT 9/20/79
2. Added Chain Link Fence and Gate — C.H. 2/17/81

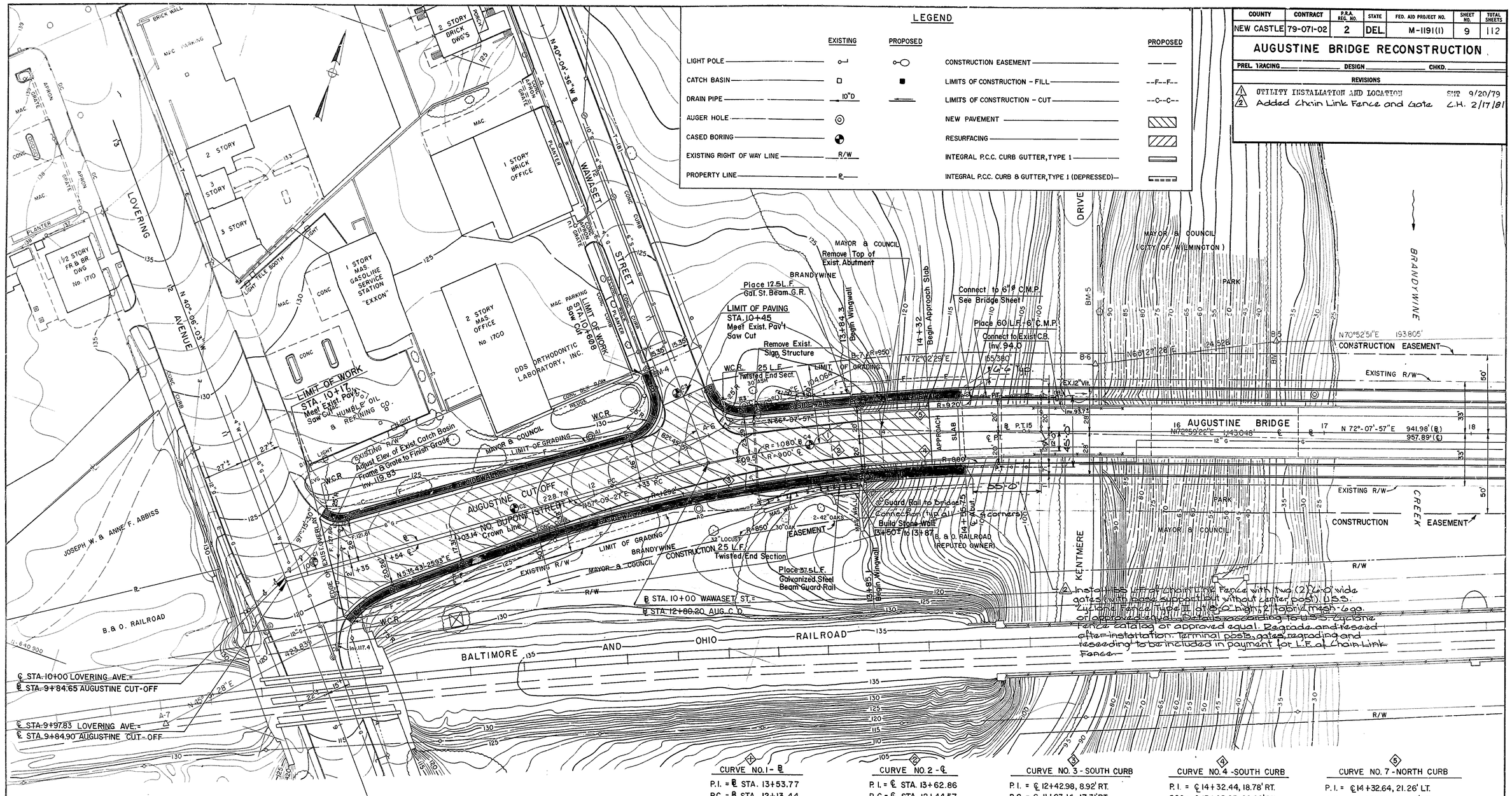


## NOTES

1. For Table of offsets and Elevations see Sheet No. 3
2. For Street Lighting see Sheet No. 82
3. All disturbed areas not to be paved shall be graded, topsoiled, seeded and mulched as shown on the typical sections.
4. Rock will not be permitted in the top 12" of embankments.
5. All stationing and offset distances are to the centerline of pipes or drainage structures.

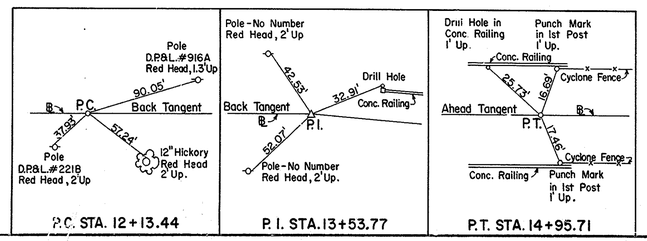


| CURVE NO. 1 - ℄ | CURVE NO. 2 - ℄ | CURVE NO. 3 - SOUTH CURB | CURVE NO. 4 - SOUTH CURB | CURVE NO. 5 - NORTH CURB |
|---|---|---|---|---|
| P.I. = ℄ STA. 13+53.77 | P.I. = ℄ STA. 13+62.86 | P.I. = ℄ 12+42.98, 8.92' RT. | P.I. = ℄ 14+32.44, 18.78' RT. | P.I. = ℄ 14+32.64, 21.26' LT. |
| P.C. = ℄ STA. 12+13.44 | P.C. = ℄ STA. 12+44.57 | P.C. = ℄ 11+03.14, 17.31' RT. | P.C.C. = ℄ 13+85.05, 20.00' RT. | P.C.C. = ℄ 13+85.52, 20.00' LT. |
| P.T. = ℄ STA. 14+95.71 | P.T. = ℄ STA. 14+79.80 | P.C.C. = ℄ 13+85.05, 20.00' RT. | P.T. = ℄ 14+79.80, 20.00' RT. | P.T. = ℄ 14+79.77, 20.00' LT |
| Δ = 14°-58'-30" RT. | Δ = 14°-58'-30" RT. | Δ = 12°-22'-37.3" RT. | Δ = 6°-01'-53.8" RT. | Δ = 6°-00'-00" RT. |
| R = 1080.00 | R = 900.00' | R = 1292.00' | R = 880.00' | R = 920.00 |
| Dc = 5°-18'-18.6" | Dc = 6°-21'-58.3" | Dc = 4°-26'-04.8' | Dc = 6°-30'-39.2" | Dc = 6°-13'-40.1" |
| T = 141.94' | T = 118.29' | T = 140.09' | T = 46.36' | T = 48.21' |
| L = 282.27' | L = 235.23' | L = 279.10' | L = 92.64' | L = 96.34' |
| E = 9.29' | E = 7.74' | E = 7.57' | E = 1.22' | E = 1.26' |

1. UTILITIES NOT SHOWN. DETAILS AND LOCATION OF 4 - 6 in. DIA. ELECTRICAL STEEL CONDUITS AND 12 in. DIA. GAS MAIN AND THEIR SUPPORTS ARE SHOWN ON SHEETS 81A, 81B AND 81C.

## PLAN - WEST APPROACH ROAD

SCALE: 1" = 30'

AS BUILT

| COUNTY | CONTRACT | P.B.A. REG. NO. | STATE | FED. AID PROJECT NO. | SHEET NO. | TOTAL SHEETS |
|---|---|---|---|---|---|---|
| NEW CASTLE | 79-071-02 | 2 | DEL. | M-1191(1) | 10 | 112 |

# AUGUSTINE BRIDGE RECONSTRUCTION

PREL. TRACING _____ DESIGN _____ CHKD. _____

REVISIONS

1 UTILITY INSTALLATION AND LOCATION SWT 9/20/79
2 SHOWING PLAQUE LOCATION PARAPET WALL T.F.F. 7/14/80
3 Added Chain Link Fence, Gate and Access Rd.-C.H. 2/17/81

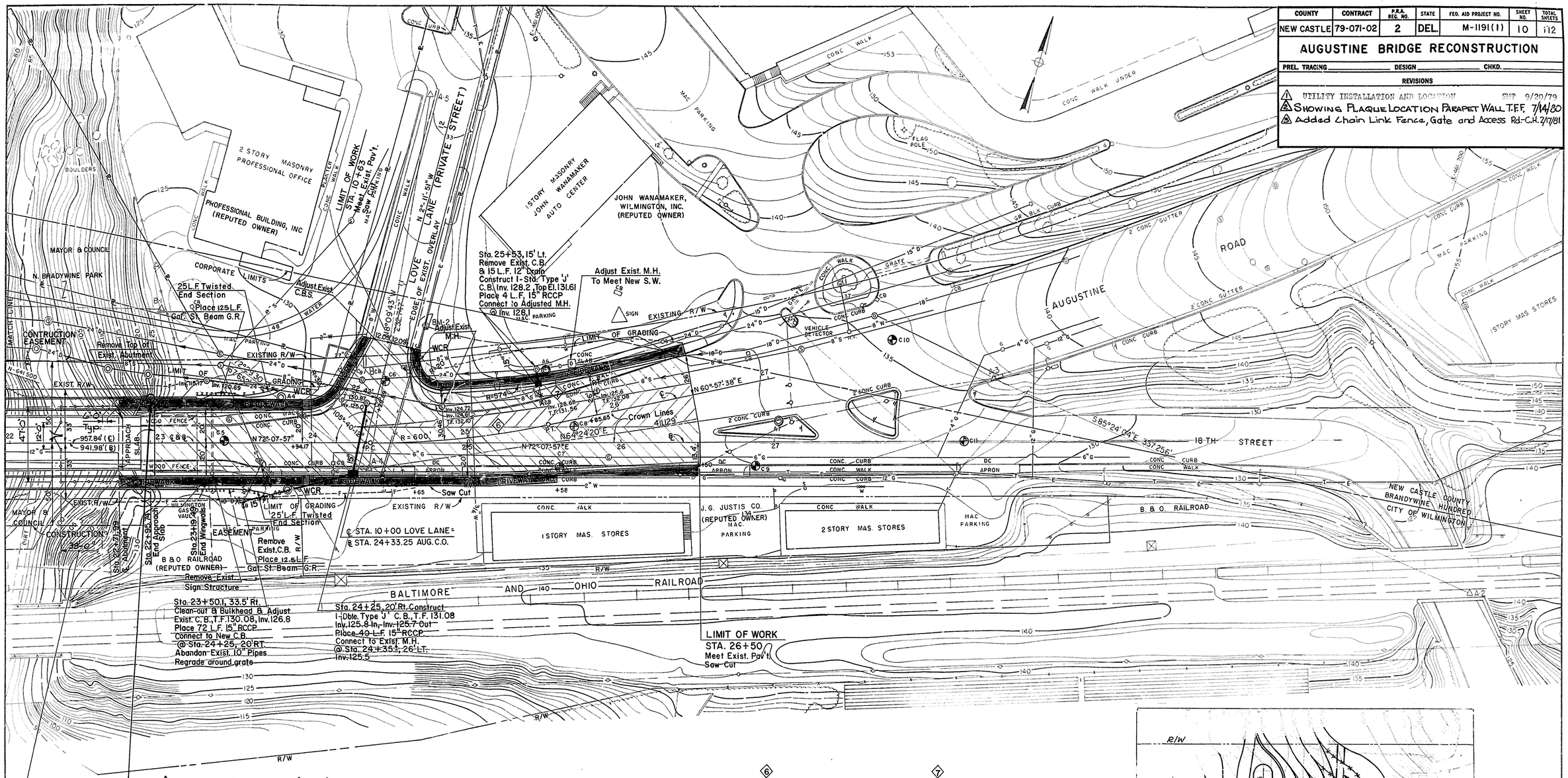


2 STA. 22+92 LEFT SIDE (NORTH) PARAPET WALL
PLACE 2 PLAQUES ON WALL.
SEE SHEETS Nº 26, 29, & 32 OF 112 SHEETS.

3 Install 123 L.F. of Chain Link Fence with two (2) 6'-0" wide Gates (with base support but without center post). U.S.S. Cyclone Fence Type II at 8'-0" high, 2" fabric mesh - 6 ga. or approved equal. Details according to U.S.S. Cyclone Fence catalog or approved equal. Regrade and reseed after installation. Terminal posts, gates, regrading and reseeding to be included in payment for L.F. of Chain Link Fence. Install an intermediate terminal post where slope changes.

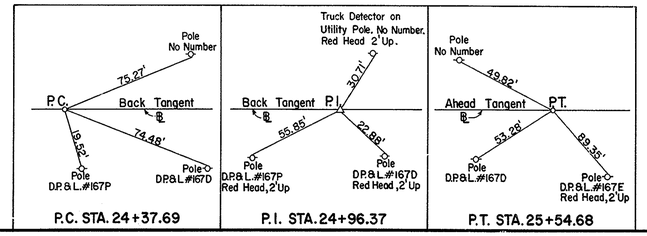


6

CURVE NO. 5 - ℄

P.I. = ℄ STA. 24+96.37
P.C. = ℄ STA. 24+37.69
P.T. = ℄ STA. 25+54.68
Δ = 11°-10'-19" LT.
R = 600.00'
Dc = 9°-32'-57.5"
T = 58.68'
L = 116.99'
E = 2.86'

7

CURVE NO. 6 NORTH CURB

P.C.C. = ℄ STA. 24+84.08, 30.46' LT.
P.C. = ℄ STA. 24+69.75, 31.19' LT.
P.T. = ℄ STA. 25+85.65, 26.00' LT.
Δ = 11°-10'-19" LT.
R = 574.00'
Dc = 9°-58'-54.6"
T = 56.14'
L = 111.92'
E = 2.74'

1 UTILITIES NOT SHOWN.
DETAILS AND LOCATION OF 4 - 6 in. DIA. ELECTRICAL STEEL CONDUITS AND 12 in. DIA. GAS MAIN AND THEIR SUPPORTS ARE SHOWN ON SHEETS 81A, 81B AND 81C.

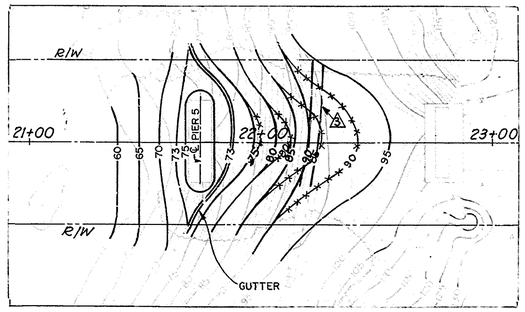


PROPOSED REGRADING AT PIER NO. 5

## PLAN - EAST APPROACH ROAD

SCALE: 1" = 30'

| COUNTY | CONTRACT | P.R.A. REG. NO. | STATE | FED. AID PROJECT NO. | SHEET NO. | TOTAL SHEETS |
|---|---|---|---|---|---|---|
| NEW CASTLE | 79-071-02 | 2 | DEL. | M 1191 (1) | 11 | 112 |

AUGUSTINE BRIDGE RECONSTRUCTION

PREL. TRACING _____ DESIGN _____ CHKD. _____

REVISIONS

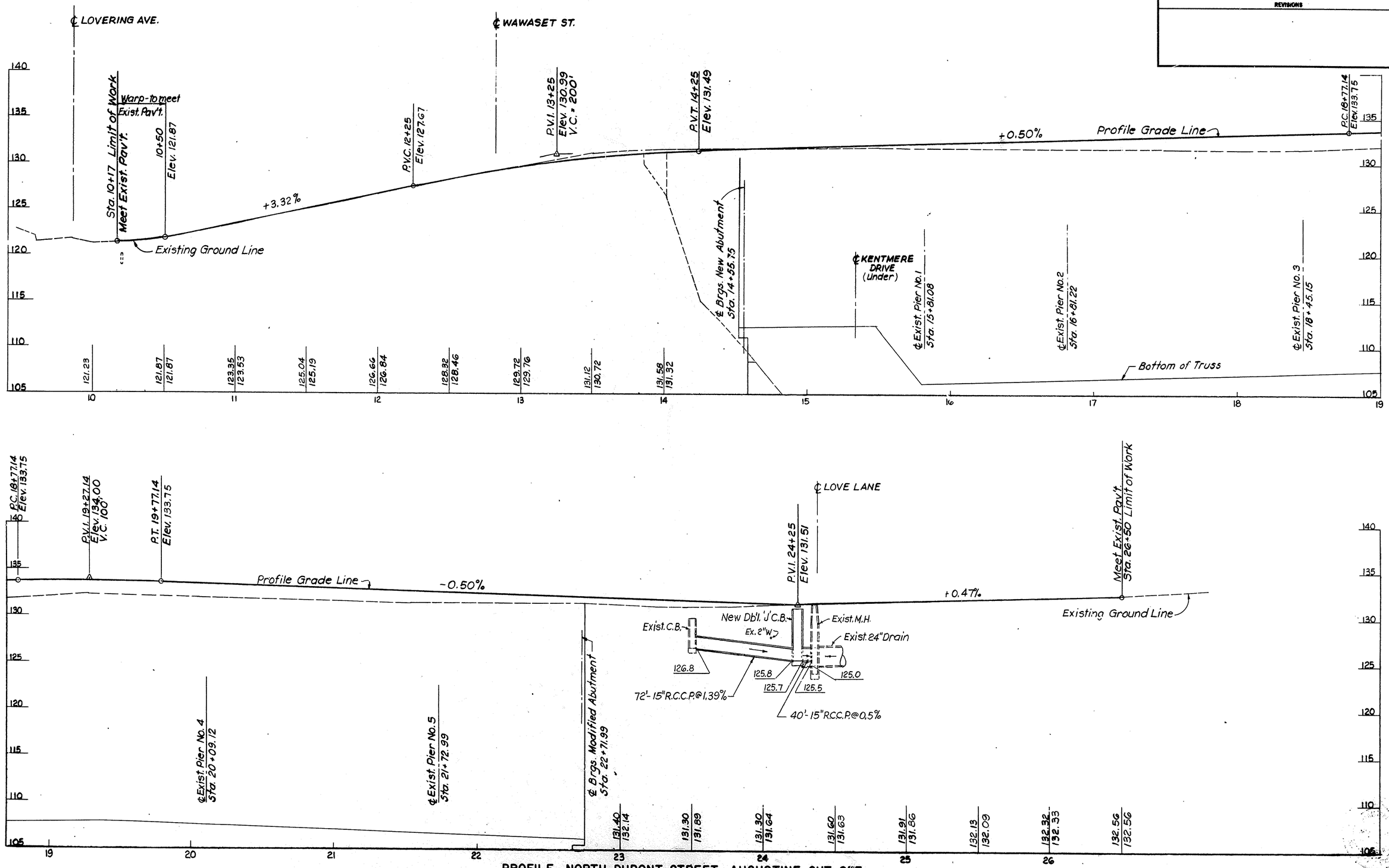


PROFILE - NORTH DUPONT STREET - AUGUSTINE CUT OFF

SCALE: 1" = 30' HOR.
1" = 5' VERT.

| COUNTY | CONTRACT | P. R. A. REG. NO. | STATE | FED. AID PROJECT NO. | SHEET NO. | TOTAL SHEETS |
|---|---|---|---|---|---|---|
| NEW CASTLE | 79-071-02 | 2 | DEL. | M-1191(1) | 12 | 112 |

# AUGUSTINE BRIDGE RECONSTRUCTION

| NO. | REVISIONS | BY | DATE |
|---|---|---|---|
| | | | |

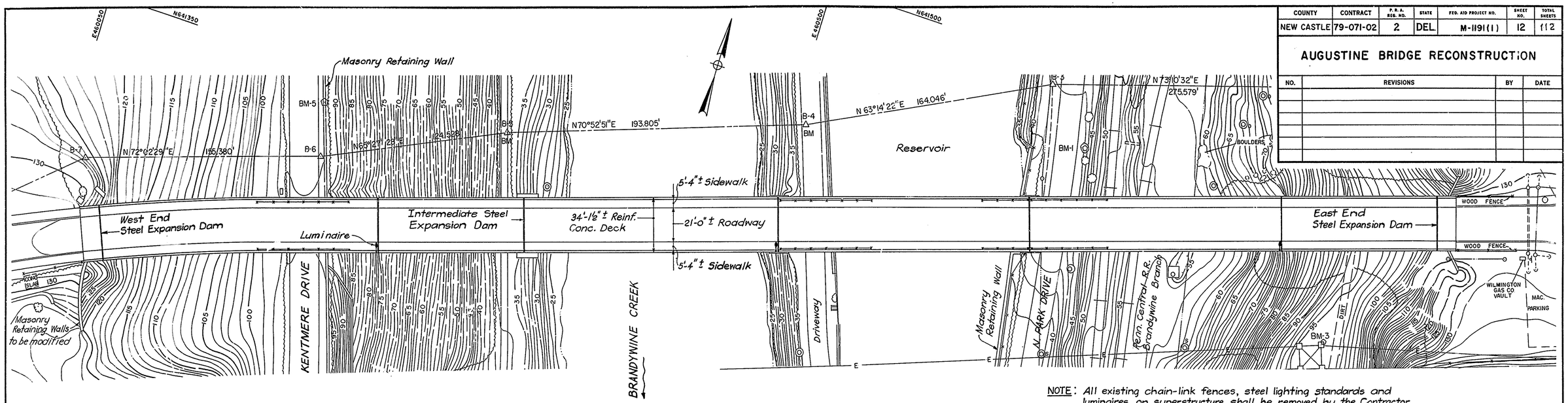


NOTE: All existing chain-link fences, steel lighting standards and luminaires on superstructure shall be removed by the Contractor, delivered and placed at the Department's North District Yard at Bear, Delaware. See Special Provisions for details.

## PLAN

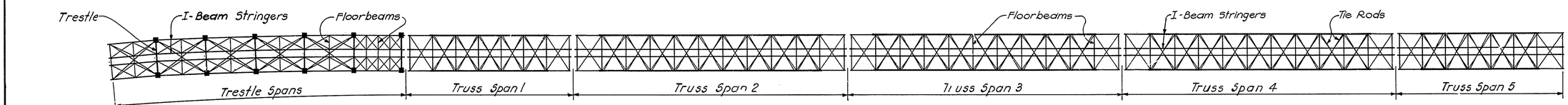


## TOP BRACING

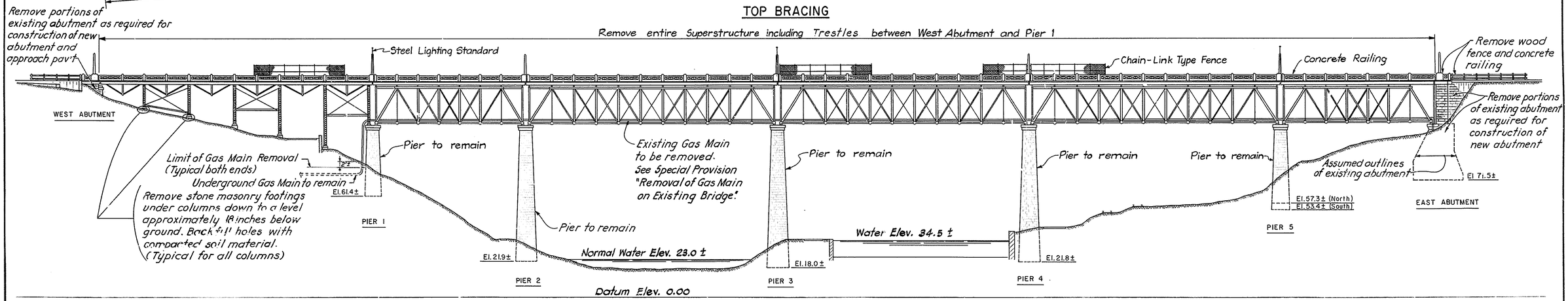


## ELEVATION

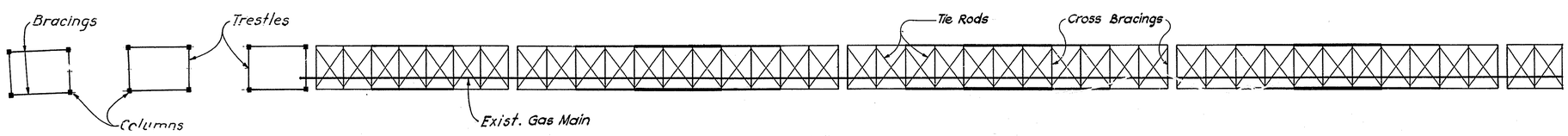


## BOTTOM BRACING

DELAWARE
DEPARTMENT OF HIGHWAYS & TRANSPORTATION
DIVISION OF HIGHWAYS

PLAN AND ELEVATION
OF EXISTING BRIDGE
(LIMITS OF REMOVAL OF STRUCTURES AND OBSTRUCTIONS)

| D. | SCALE | APPROVED BY |
|---|---|---|
| T. | 1"=30" | |
| C. | | |

J. C. McDONELL — No. 2069 — BRIDGE ENGINEER

| COUNTY | CONTRACT | P. R. A. REG. NO. | STATE | FED. AID PROJECT NO. | SHEET NO. | TOTAL SHEETS |
|---|---|---|---|---|---|---|
| NEW CASTLE | 79-071-02 | 2 | DEL. | M-1191(1) | 13 | 112 |

# AUGUSTINE BRIDGE RECONSTRUCTION

| NO. | REVISIONS | BY | DATE |
|---|---|---|---|
| | | | |
| | | | |
| | | | |
| | | | |
| | | | |
| | | | |

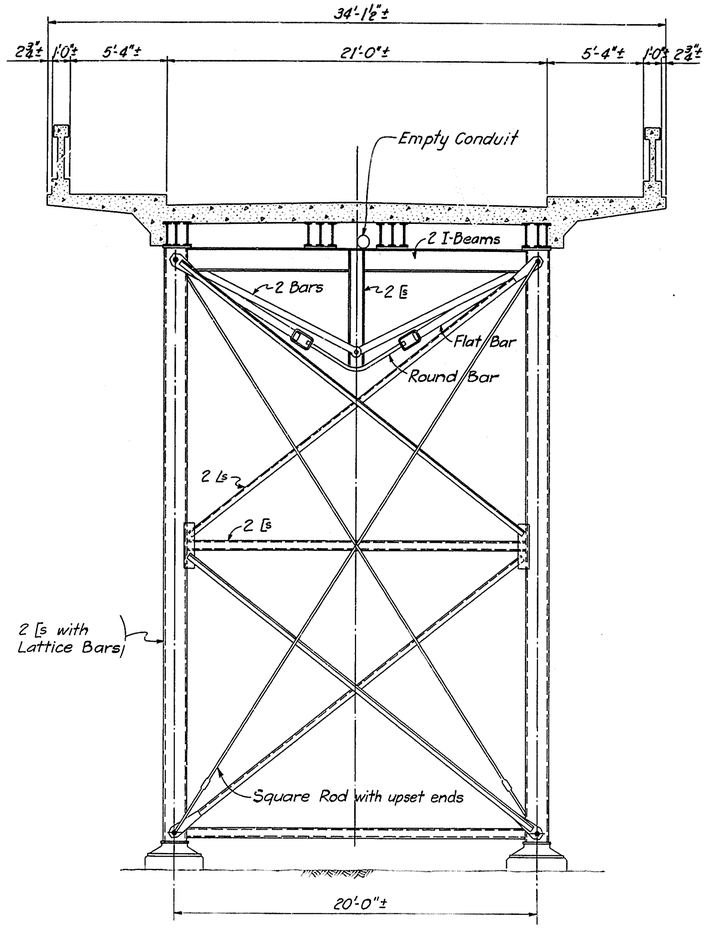


TRESTLE SPANS

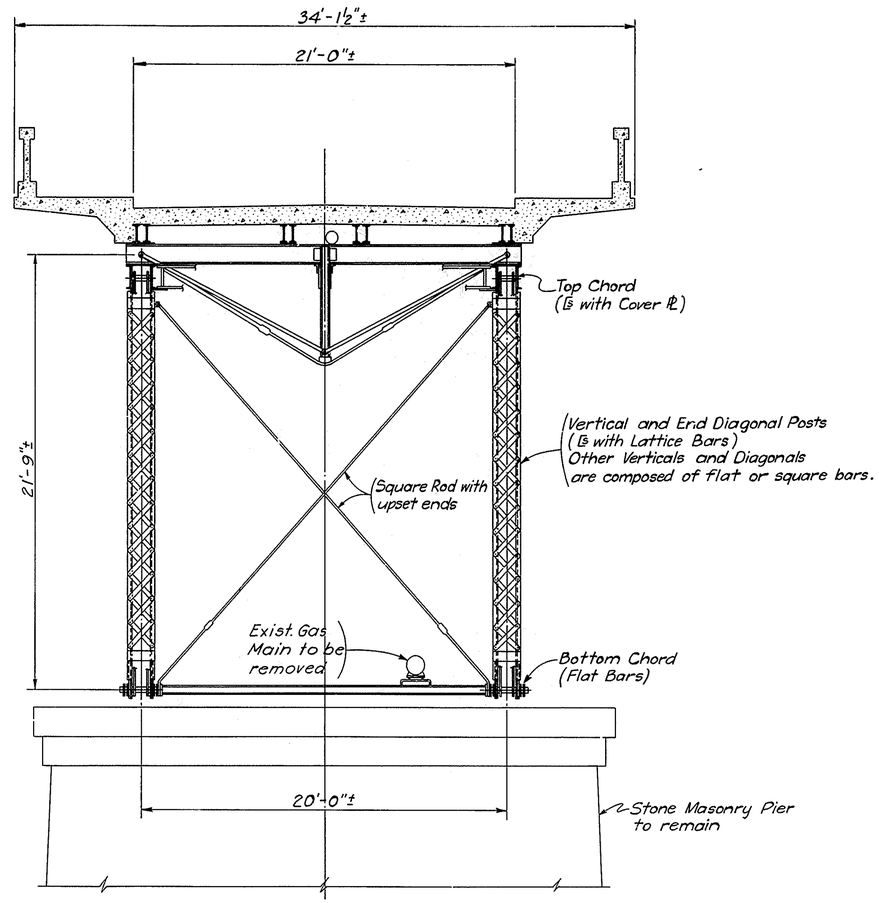


TRUSS SPANS

## ESTIMATED APPROXIMATE WEIGHT OF EXISTING SUPERSTRUCTURE METALWORK

| | |
|---|---|
| TRESTLE SPANS | 117 TONS |
| TRUSS SPAN NO. 1 | 71 TONS |
| TRUSS SPAN NO. 2 | 196 TONS |
| TRUSS SPAN NO. 3 | 196 TONS |
| TRUSS SPAN NO. 4 | 196 TONS |
| TRUSS SPAN NO. 5 | 71 TONS |
| TOTAL | 847 TONS |

THE WEIGHTS OF METALWORK ARE INDICATED ONLY TO ASSIST THE CONTRACTOR IN A GENERAL WAY IN THE PREPARATION OF HIS PROPOSED PROCEDURE FOR DISMANTLING AND REMOVAL OF THE EXISTING SUPERSTRUCTURE METALWORK. THESE WEIGHTS ARE NOT GUARANTEED AND THE CONTRACTOR MUST PREPARE HIS OWN ESTIMATE OF THE EXACT WEIGHTS OF METALWORK EXISTING IN THE STRUCTURE FOR HIS USE AND/OR DISPOSAL, INCLUDING HIS PREPARATION FOR THE DESIGN AND DETAILS FOR ACTUAL DISMANTLING AND REMOVAL OF THE EXISTING SUPERSTRUCTURE METALWORK. THE STATE WILL NOT BE RESPONSIBLE FOR ANY COSTS INCURRED BECAUSE OF ANY DIFFERENCE BETWEEN THE ABOVE INDICATED WEIGHTS AND THOSE ACTUALLY DETERMINED BY THE CONTRACTOR.

DELAWARE
DEPARTMENT OF HIGHWAYS & TRANSPORTATION
DIVISION OF HIGHWAYS

TYPICAL CROSS SECTIONS
OF EXISTING BRID

| D. T. C. | SCALE | APPROVED BY: |
|---|---|---|
| | 1/4" = 1'-0" | ROBERT C. McDOWELL REGISTERED NO. 3069 STATE OF DELAWARE PROFESSIONAL ENGINEER BRIDGE ENGINEER |

| COUNTY | CONTRACT | P. B. A. REG. NO. | STATE | FED. AID PROJECT NO. | SHEET NO. | TOTAL SHEETS |
|---|---|---|---|---|---|---|
| NEW CASTLE | 79-071-02 | 2 | DEL. | M-1191(1) | 14 | 112 |

# AUGUSTINE BRIDGE RECONSTRUCTION

| NO. | REVISIONS | BY | DATE |
|---|---|---|---|
| | | | |
| | | | |

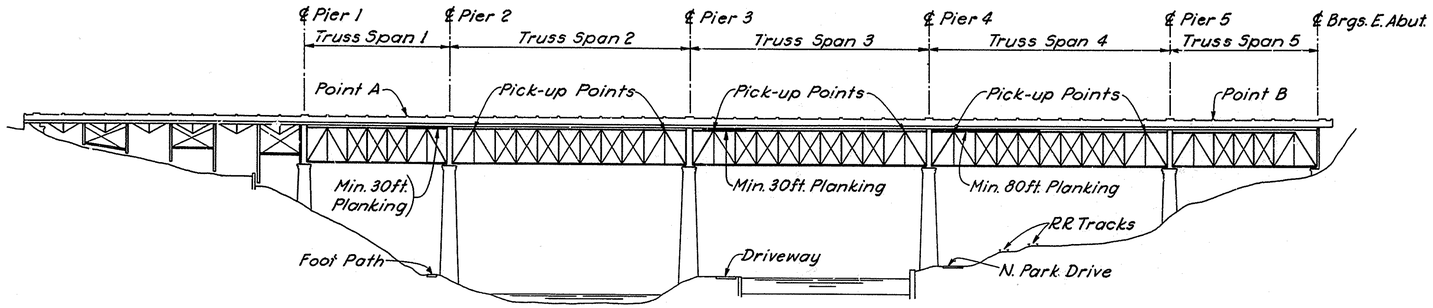


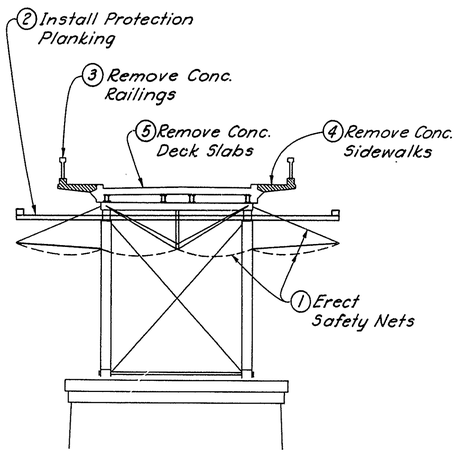


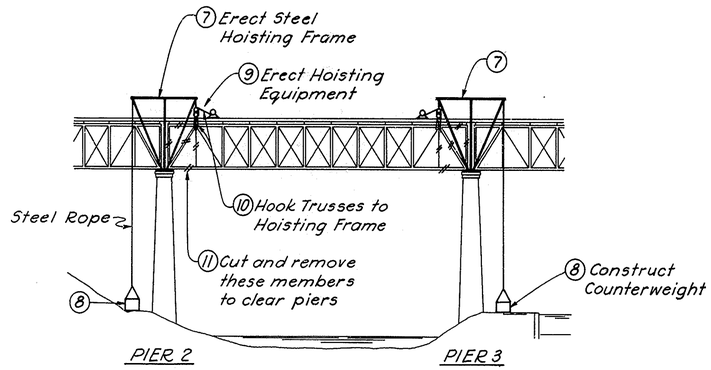


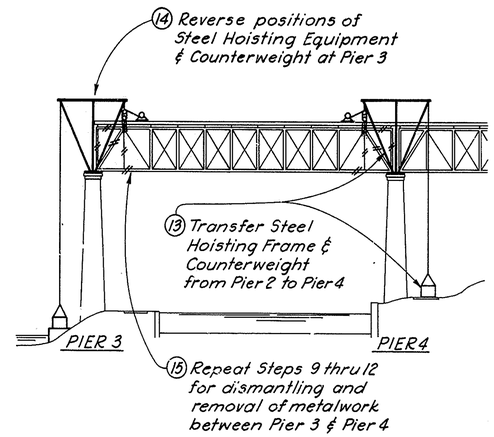


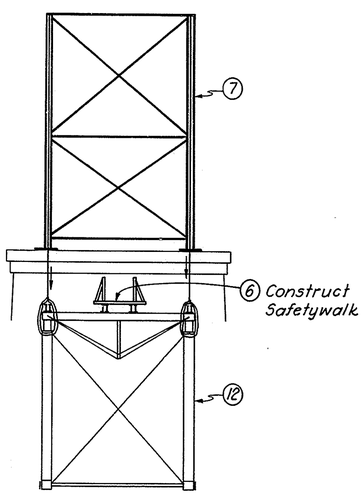


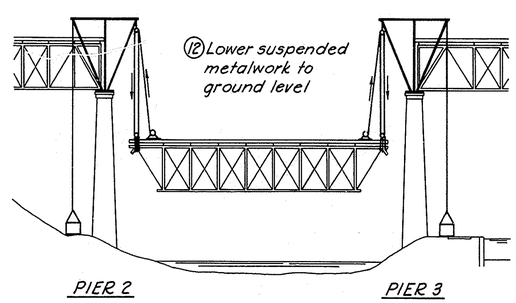


## SAMPLE PROCEDURE FOR DISMANTLING AND REMOVAL OF EXISTING SUPERSTRUCTURE

Step 1. Erect safety nets in truss spans for protection of personnel working on structure and to retain falling debris.

Step 2. Install protection planking under concrete deck in the following areas:

(a) Above the foot path on the west bank of Brandywine Creek.

(b) Above North Park Drive and the private driveway leading to the plant and offices of the Container Corporation of America.

(c) Above Conrail railroad tracks.

Step 3. Remove concrete railings between Point A and Point B. The removal of the railings is to be carried out in approximately 15 ft. long panel sections and in such sequence that the decrease in load on each long truss span is distributed as uniformly and as symmetrically as possible with respect to the span's centerline. The decrease in deck load on all three long truss spans is to be carried out in a similar manner simultaneously. The vehicles or carriers to be used for transporting the demolished concrete shall be such that the gross weight can be safely supported by the existing structure as determined by the Contractor.

Step 4. Remove concrete sidewalks between Point A and Point B. The method and sequence for the removal of existing concrete sidewalks is to be the same as for the removal of concrete railings.

Step 5. Remove concrete deck slabs between Point A and Point B. The removal is to start at the midpoint between Pier 3 and Pier 4 and proceed in east and west directions simultaneously. Weight limitations for vehicles or carriers used for transporting the demolished concrete shall be the same as stated in Step 3.

Step 6. Construct safety walk of wood planks and hand rails supported on existing longitudinal stringers for use by steelworkers between Point A and Point B.

Step 7. Erect steel hoisting frames on Pier 2 and Pier 3.

Step 8. Construct counterweights on the ground next to Pier 2 and Pier 3. Attach steel ropes to connect the counterweights to the rear ends of the steel hoisting frames.

Step 9. Install hoisting equipment, sheaves, ropes, etc. at the front ends of the steel hoisting frames.

Step 10. Hook trusses in Span 2 at 4 truss pick-up points as shown on elevation and install pulleys with ropes attached to the hoisting motors to be used for lowering the trusses.

Step 11. Free the trusses from the piers by cutting and removing sufficient metalwork at the ends of the truss span to clear pier faces for the purpose of lowering the suspended span.

Step 12. Lower the suspended metalwork to ground level. Dismantle the metalwork and remove the scrap and all debris from the project site.

Step 13. Dismantle the steel hoisting frame on Pier 2 and replace it on Pier 4. Relocate counterweight from Pier 2 to Pier 4.

Step 14. Reverse the positions of the counterweight and hoisting equipment at Pier 3.

Step 15. Remove trusses in Span 3 by following the procedures described under Steps 9, 10, 11 and 12.

Step 16. Relocate hoisting frame and counterweight from Pier 3 to Pier 5.

Step 17. Reverse the positions of the counterweight and hoisting equipment at Pier 4.

Step 18. Remove trusses in Span 4 by following the procedures described under Steps 9, 10, 11 and 12.

Step 19. Dismantle and remove all of the remaining portion of the superstructure west of Pier 2 and east of Pier 5.

## SPECIAL NOTE

Structure demolition and removal steps outlined and illustrated on this sheet are to be considered as a sample only and are intended to show a possible method the Contractor may utilize to carry out said demolition and removal. If the Contractor decides to adopt the method indicated the steps shown are to be considered minimal, it being understood that the Contractor must make his own investigations, prepare his own designs and carry out his work accordingly, subject to the review of the Engineer. The safe and efficient demolition and removal of the structure shall at all times remain the responsibility of the Contractor.

DELAWARE
DEPARTMENT OF TRANSPORTATION
DIVISION OF HIGHWAYS

DISMANTLING AND REMOVAL OF EXISTING SUPERSTRUCTURE

| D. | SCALE | APPROVED BY: |
|---|---|---|
| T. | NONE | |
| C. | | BRIDGE ENGINEER |

B 10-3

| COUNTY | CONTRACT | F.A.A. REG. NO. | STATE | FED. AID PROJECT NO. | SHEET NO. | TOTAL SHEETS |
|---|---|---|---|---|---|---|
| NEW CASTLE | 79-071-02 | 2 | DEL. | BRM-1191 (1) | 15 | 112 |

# AUGUSTINE BRIDGE RECONSTRUCTION

PREL. TRACING _____ DESIGN _____ CHKD. _____

REVISIONS

1 UTILITY INSTALLATION AND LOCATION SMT 9/20/79

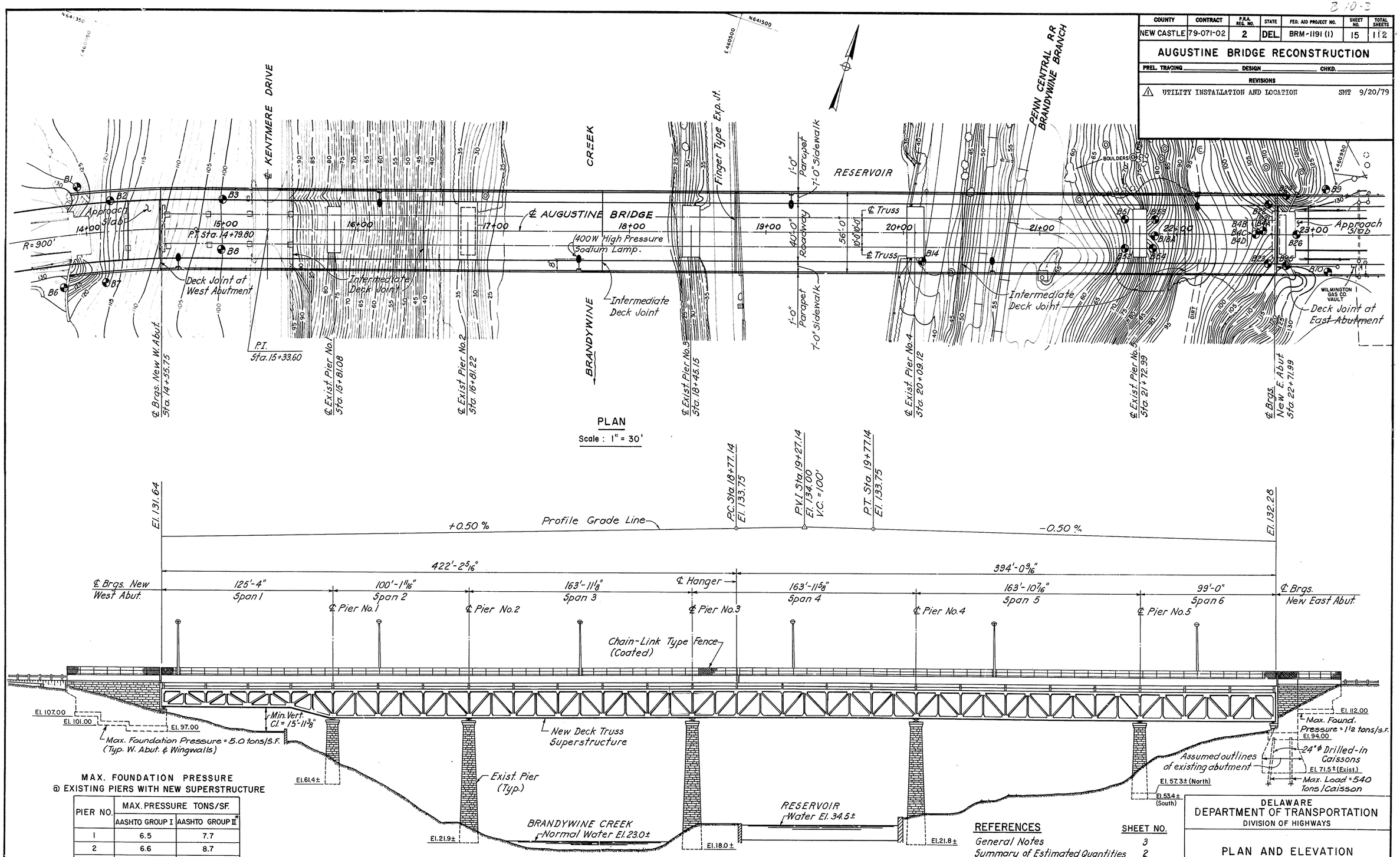


MAX. FOUNDATION PRESSURE @ EXISTING PIERS WITH NEW SUPERSTRUCTURE

| PIER NO. | MAX. PRESSURE TONS/SF. | |
|---|---|---|
| | AASHTO GROUP I | AASHTO GROUP II* |
| 1 | 6.5 | 7.7 |
| 2 | 6.6 | 8.7 |
| 3 | 8.0 | 10.9 |
| 4 | 7.8 | 11.2 |
| 5 | 8.2 | 9.7 |

*GROUP II PRESSURES ARE REDUCED FROM 125% TO 100%

1 UTILITIES NOT SHOWN. DETAILS AND LOCATION OF 4 - 6 in. DIA. ELECTRICAL STEEL CONDUITS AND 12 in. DIA. GAS MAIN AND THEIR SUPPORTS ARE SHOWN ON SHEETS 81A, 81B AND 81C.

REFERENCES


| | SHEET NO. |
|---|---|
| General Notes | 3 |
| Summary of Estimated Quantities | 2 |
| West Abutment and Wingwalls | 22-27 |
| East Abutment and Wingwalls | 29-33 |
| Pier Grouting and Repairs | 17 & 18 |
| Exact Location of Deck Joints | 36-40 |


DELAWARE DEPARTMENT OF TRANSPORTATION
DIVISION OF HIGHWAYS

PLAN AND ELEVATION OF RECONSTRUCTED BRIDGE

D. T. C.

SCALE 1" = 30'

APPROVED BY: 3069

BRIDGE ENGINEER

| COUNTY | CONTRACT | P.R.A. REG. NO. | STATE | FED. AID PROJECT NO. | SHEET NO. | TOTAL SHEETS |
|---|---|---|---|---|---|---|
| NEW CASTLE | 79-071-02 | 2 | DEL. | M-1191(1) | 16 | 112 |

# AUGUSTINE BRIDGE RECONSTRUCTION

| NO. | REVISIONS | BY | DATE |
|---|---|---|---|
| 1 | UTILITY INSTALLATION AND LOCATION | SMT | 9/20/79 |

1 DETAILS AND LOCATION OF 4-6" DIA. ELECTRICAL STEEL CONDUITS AND 12" DIA. GAS MAIN AND THEIR SUPPORTS ARE SHOWN ON SHEETS 81A, 81B AND 81C.

* Top of Floorbeam at P.P. 26 follows the cross slope of the roadway 1'-6" below top of slab. Bottom of Floorbeam horizontal end to end.

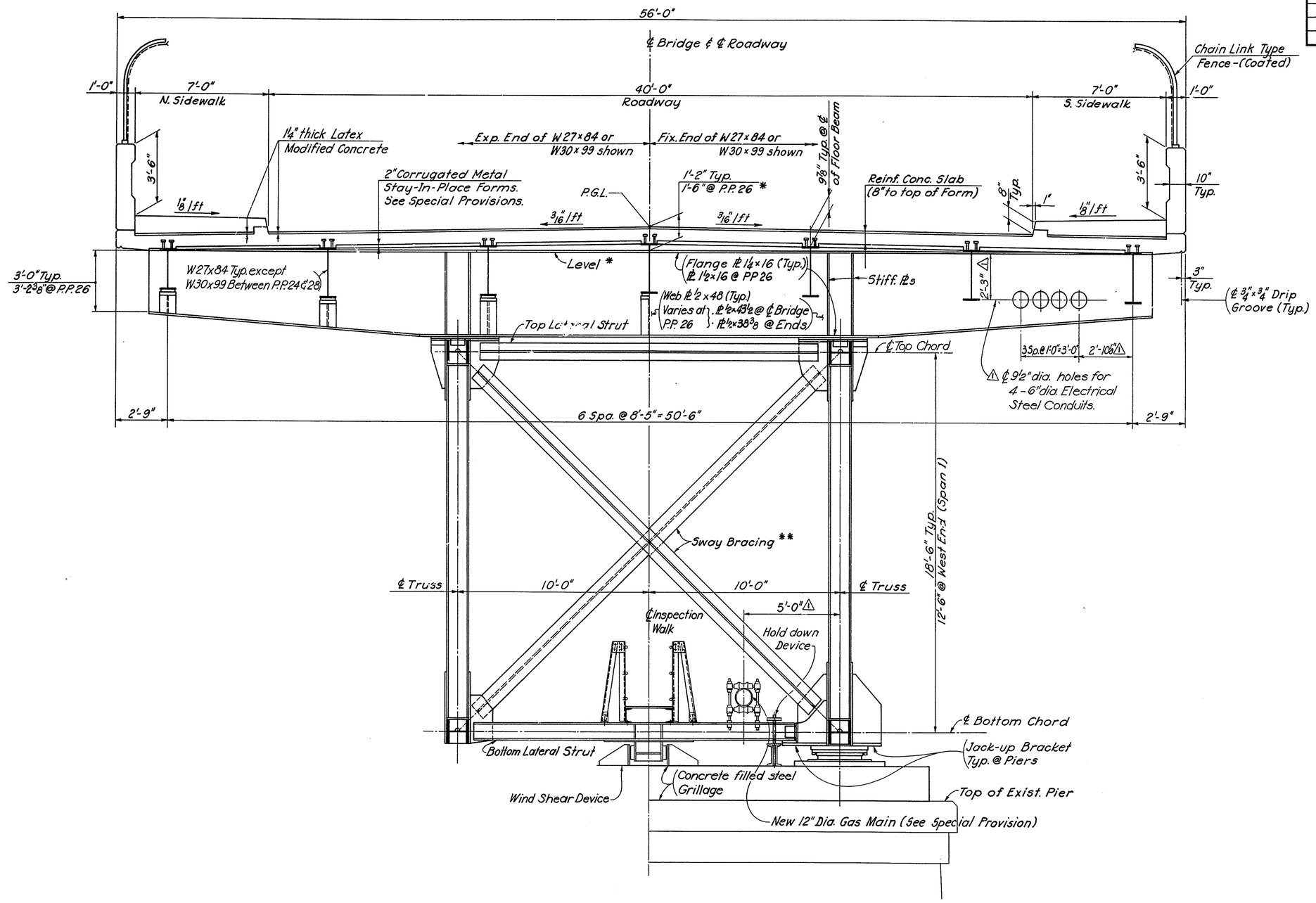


## TYPICAL BRIDGE CROSS SECTION AT FLOORBEAM

(Looking East)

** Sway Bracing as shown is typical in spans 2 thru 6
In span 1 K-Frame type bracing used.
See Details.

## REFERENCES:

| | SH. NO. |
|---|---|
| General Plan and Elevation | 15 |
| General Notes | 3 |
| Deck Reinforcement | 73-79 |
| Floorbeam and Long. Beam Details | 64 & 65 |
| Sway Frame Details | 57 |
| Steel Grillages on Top of Piers | 19-21 |
| Fence Details | 81 |

DELAWARE
DEPARTMENT OF TRANSPORTATION
DIVISION OF HIGHWAYS

## TYPICAL CROSS SECTION OF RECONSTRUCTED BRIDGE

| D. | SCALE | APPROVED BY |
|---|---|---|
| T. | 3/8" = 1'-0" | BRIDGE ENGINEER |
| C. | | |

| COUNTY | CONTRACT | P. R. A. REG. NO. | STATE | FED. AID PROJECT NO. | SHEET NO. | TOTAL SHEETS |
|---|---|---|---|---|---|---|
| NEW CASTLE | 79-071-02 | 2 | DEL. | M-1191-(1) | 17 | 112 |

# AUGUSTINE BRIDGE RECONSTRUCTION

| NO. | REVISIONS | BY | DATE |
|---|---|---|---|
| | | | |

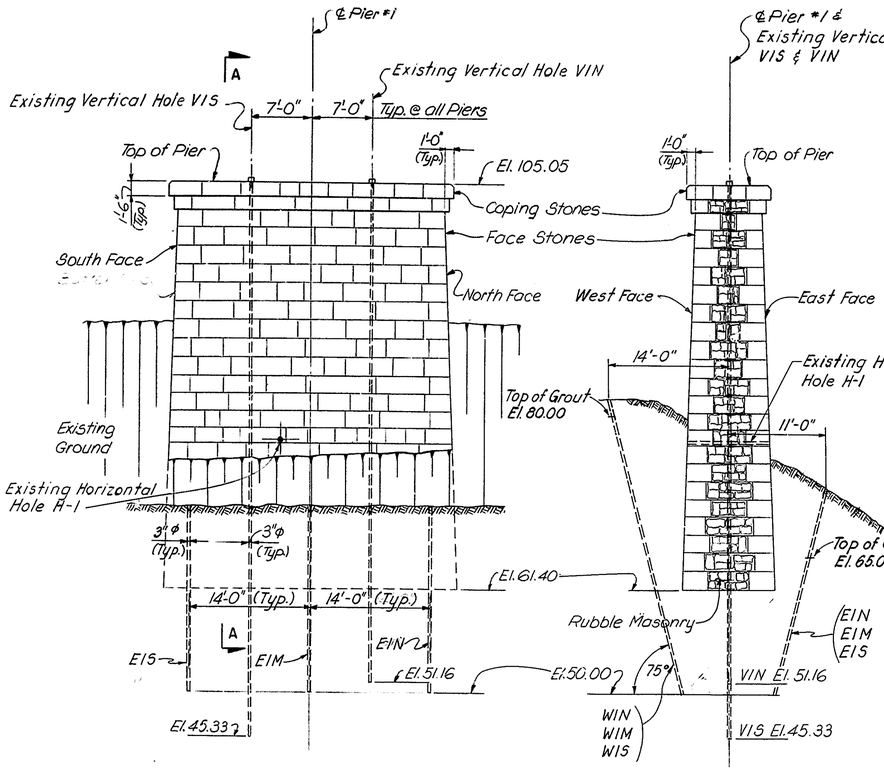


ELEVATION

SECTION A-A

PIER NO. 1

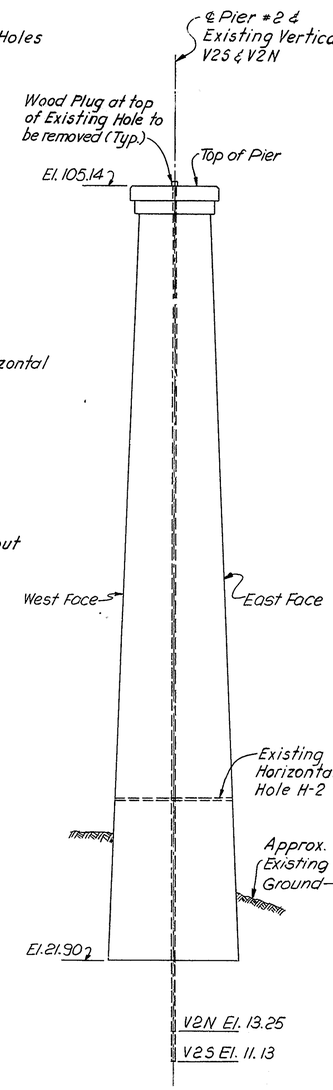


PIER NO. 2

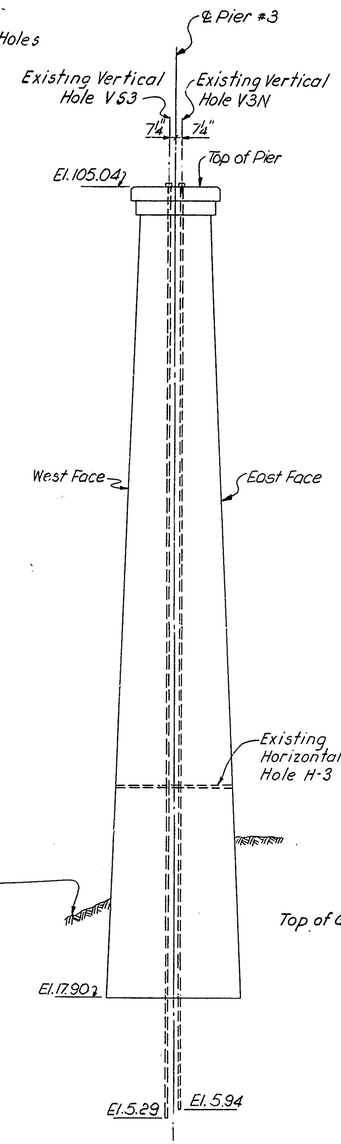


PIER NO. 3

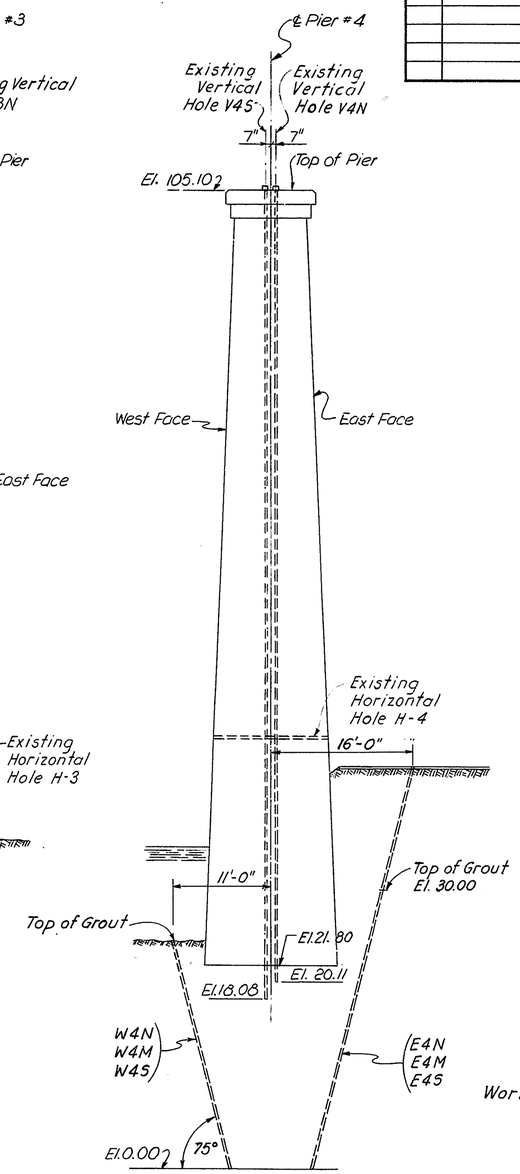


PIER NO. 4

Work this Sheet with Sheet No. 18

ESTIMATED LENGTHS OF BORING HOLES

| PIER NO. | SIDE OF PIER | HOLE DESIGNATION | | | ESTIMATED LENGTH (FT.) |
|---|---|---|---|---|---|
| | | NORTH | MIDDLE | SOUTH | |
| 1 | WEST | W1N | W1M | W1S | 3 × 33 |
| 1 | EAST | E1N | E1M | E1S | 3 × 23 |
| 4 | WEST | W4N | W4M | W4S | 3 × 25 |
| 4 | EAST | E4N | E4M | E4S | 3 × 45 |
| 5 | WEST | W5N | W5M | W5S | 3 × 28 |
| 5 | EAST | E5N | E5M | E5S | 3 × 47 |

DELAWARE
DEPARTMENT OF TRANSPORTATION
DIVISION OF HIGHWAYS

PIER GROUTING AND REPAIRS
SHEET 1

D.
T.
C.

SCALE 1/8" = 1'-0"

APPROVED

ROBERT C. McDOWELL REGISTERED NO. 3069 DELAWARE PROFESSIONAL ENGINEER

BRIDGE ENGINEER

| COUNTY | CONTRACT | F.A.P. REG. NO. | STATE | FED. AID PROJECT NO. | SHEET NO. | TOTAL SHEETS |
|---|---|---|---|---|---|---|
| NEW CASTLE | 79-071-02 | 2 | DEL | M-1191-(1) | 18 | 112 |

AUGUSTINE BRIDGE RECONSTRUCTION

| NO. | REVISIONS | BY | DATE |
|---|---|---|---|
| 1 | Added Chain Link Fence, Gate and Access Rd. | C.H. | 2-17-81 |

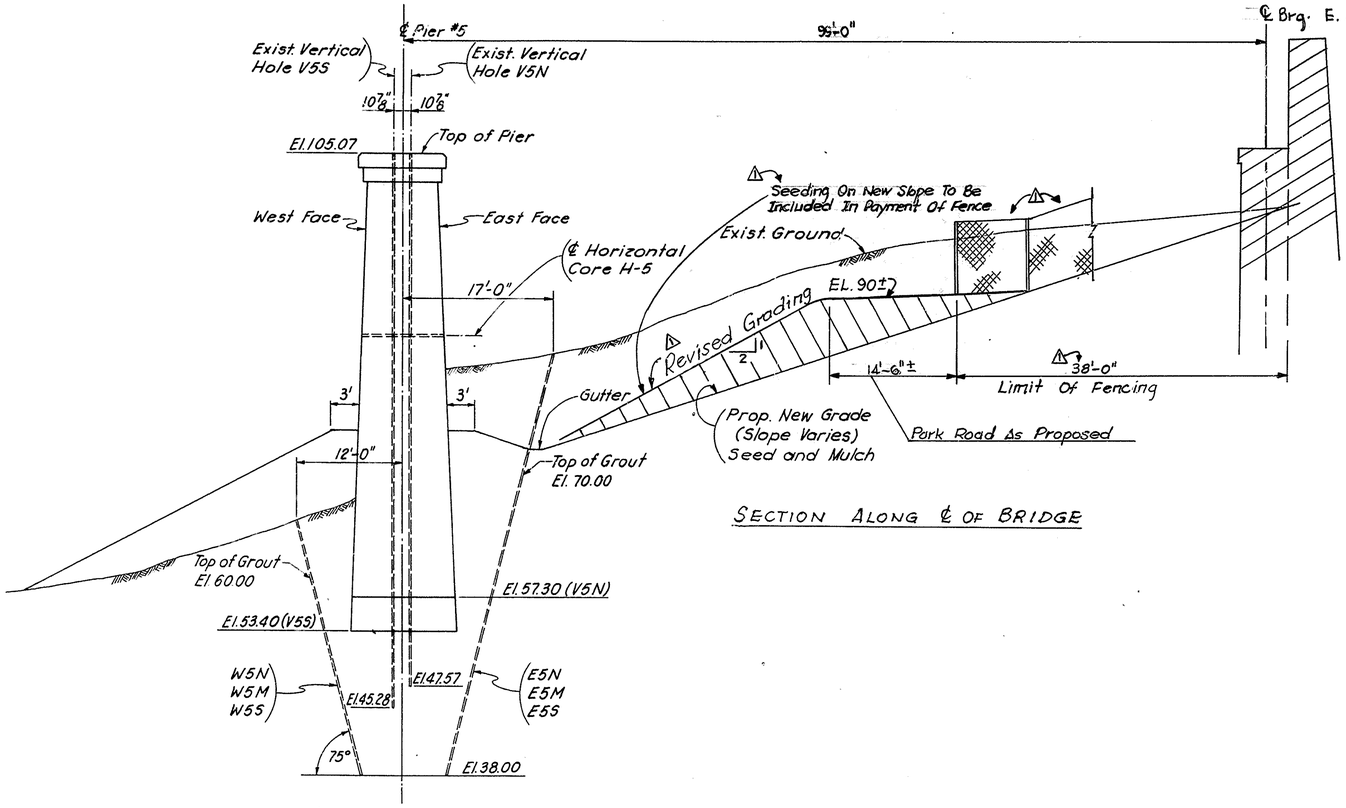


SECTION ALONG ℄ OF BRIDGE

ELEVATION

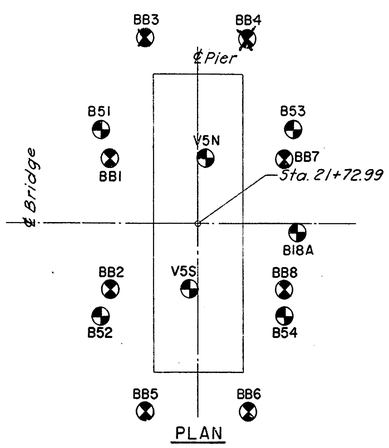


PLAN

PIER NO. 5

| LOCATION OF PROPOSED SOIL BORINGS MEASURED ALONG BASE LINE | | | | | |
|---|---|---|---|---|---|
| NUMBER | ℄ STATION | OFFSET | APPROX. GROUND ELEV. | ESTIMATED LENGTH (FT.) | |
| BB1 | 21+63 | 7' Left | 67.0 | 29.0 | |
| BB2 | 21+63 | 7' Right | 66.0 | 28.0 | |
| ~~BB3~~ | ~~21+67~~ | ~~20' Left~~ | ~~69.0~~ | ~~31.0~~ | NOT TAKEN ELIMINATED |
| ~~BB4~~ | ~~21+79~~ | ~~20' Left~~ | ~~76.0~~ | ~~38.0~~ | |
| BB5 | 21+67 | 20' Right | 69.5 | 31.5 | |
| BB6 | 21+79 | 20' Right | 78.0 | 40.0 | |
| BB7 | 21+83 | 7' Left | 81.0 | 43.0 | |
| BB8 | 21+83 | 7' Right | 81.0 | 43.0 | |

LEGEND:

- Existing Boring Hole
- Proposed Soil Boring (Take Continuous Undisturbed Samples below Elev. 60.00 See Special Provision "Soil Borings.")

## WORK SEQUENCE FOR GROUTING PIERS AND PIER FOUNDATIONS AND REPAIRING OF CRACKS AND MORTAR JOINTS IN FACE STONES

1. REMOVE WOOD PLUGS AT TOPS OF EXISTING 3" DIA. VERTICAL HOLES IN PIERS. INSPECT THE CONDITION OF THE INTERIORS OF THE VERTICAL HOLES BY PROBING WITH A 2" DIA. PVC CONDUIT. ANY OBSTRUCTIONS IN THE HOLES SUCH AS LOOSE STONES AND MORTAR ARE TO BE DISLODGED BY THE CONDUIT OR BY OTHER APPROVED MEANS AND FORCED TO DROP TO THE BOTTOM OF EACH HOLE.

2. PRESSURE GROUT INTERIORS OF PIERS FROM PIER TOPS. A PRESSURE GROUT PIPE WITH PACKER ATTACHED IS TO BE INSERTED INTO EACH ONE OF THE TWO (2) EXISTING 3" DIA. VERTICAL HOLES IN THE PIER. THE GROUT SHALL BE FORCED INTO THE INTERIOR OF THE PIER IN APPROXIMATELY 10 FOOT LIFTS THROUGH BOTH HOLES SIMULTANEOUSLY. GROUTING OF PIER INTERIOR IS TO BE HALTED WHEN FRESH GROUT APPEARS IN THE MORTAR JOINTS OR STONE CRACKS IN THE PIER FACES AT THE TOP OF THE 10 FOOT LIFT, IF MOVEMENT OF ANY FACE STONES IN THIS AREA IS OBSERVED OR DETECTED OR AN INCREASE OF PRESSURE INDICATES THAT VOIDS HAVE BEEN FILLED. ADDITIONAL GROUT SHALL NOT BE PLACED UNTIL ORDERED BY THE ENGINEER AND NOT UNTIL THE PREVIOUSLY PLACED GROUT HAS REACHED A STRENGTH SUFFICIENT TO RECEIVE PRESSURE FROM THE NEW GROUT APPLIED FROM THE NEXT LEVEL ABOVE. THIS PROCEDURE SHALL BE REPEATED FOR EACH LIFT. FRESH GROUT LEAKED ONTO THE SURFACES OF THE FACE STONE SHALL BE REMOVED AS SOON AS POSSIBLE.

3. AFTER THE GROUTING HAS BEEN COMPLETED IN EACH PIER, REPAIR MORTAR JOINTS AND CRACKS IN PIER FACE STONES IN ACCORDANCE WITH THE SPECIAL PROVISION "REPOINTING MORTAR JOINTS IN THE PIER FACE STONES" AND "REPAIR CRACKS IN PIER FACE STONES" RESPECTIVELY.

4. DRIVE NEW BORING HOLES INTO THE SOIL AT LOCATIONS AND TO THE ELEVATIONS INDICATED ON THE PLANS AND AS DIRECTED BY THE ENGINEER.

5. PRESSURE GROUT, THROUGH THE NEW BORING HOLES, THE AREAS UNDER THE PIER FOUNDATIONS AND THE INDICATED UNDERGROUND AREAS ALL AS INDICATED ON THE PLANS AND AS DIRECTED BY THE ENGINEER.

6. AFTER THE CONSTRUCTION OF THE NEW SUPERSTRUCTURE HAS BEEN COMPLETED, CLEAN EXISTING PIER FACE STONES IN ACCORDANCE WITH THE SPECIAL PROVISION "CLEANING EXISTING PIER FACE STONES".

7. WORK DESCRIBED IN STEPS 1 THROUGH 5 SHALL BE COMPLETED PRIOR TO COMMENCEMENT OF ERECTION OF NEW SUPERSTRUCTURE ON EXISTING PIERS.

8. PROPOSED SOIL BORINGS BB1 THROUGH BB8 ARE TO BE MADE AFTER GROUTING AT PIER 5 HAS BEEN COMPLETED.

AS BUILT

DELAWARE
DEPARTMENT OF TRANSPORTATION
DIVISION OF HIGHWAYS

PIER GROUTING AND REPAIRS
SHEET 2

| D T C | SCALE | APPROVED BY |
|---|---|---|
| | 1/8" = 1'-0" | BRIDGE ENGINEER |

ROBERT C. McDOWELL REGISTERED NO. 3069 DELAWARE PROFESSIONAL ENGINEER

| COUNTY | CONTRACT | P. R. A. REG. NO. | STATE | FED. AID PROJECT NO. | SHEET NO. | TOTAL SHEETS |
|---|---|---|---|---|---|---|
| NEW CASTLE | 79-071-02 | 2 | DEL. | M-1191 (1) | 19 | 112 |

# AUGUSTINE BRIDGE RECONSTRUCTION

| NO. | REVISIONS | BY | DATE |
|---|---|---|---|
| 1 | UTILITY INSTALLATION AND LOCATION | SMT | 9/20/79 |

1 DETAILS AND LOCATION OF 4-6" DIA. ELECTRICAL STEEL CONDUITS AND 12" DIA. GAS MAIN AND THEIR SUPPORTS ARE SHOWN ON SHEETS 81A, 81B AND 81C.

Note "A":
Payment for setting and grouting Anchor Bolts on pier tops shall be included in price bid for Item "Steel Superstructures" Sect. 606

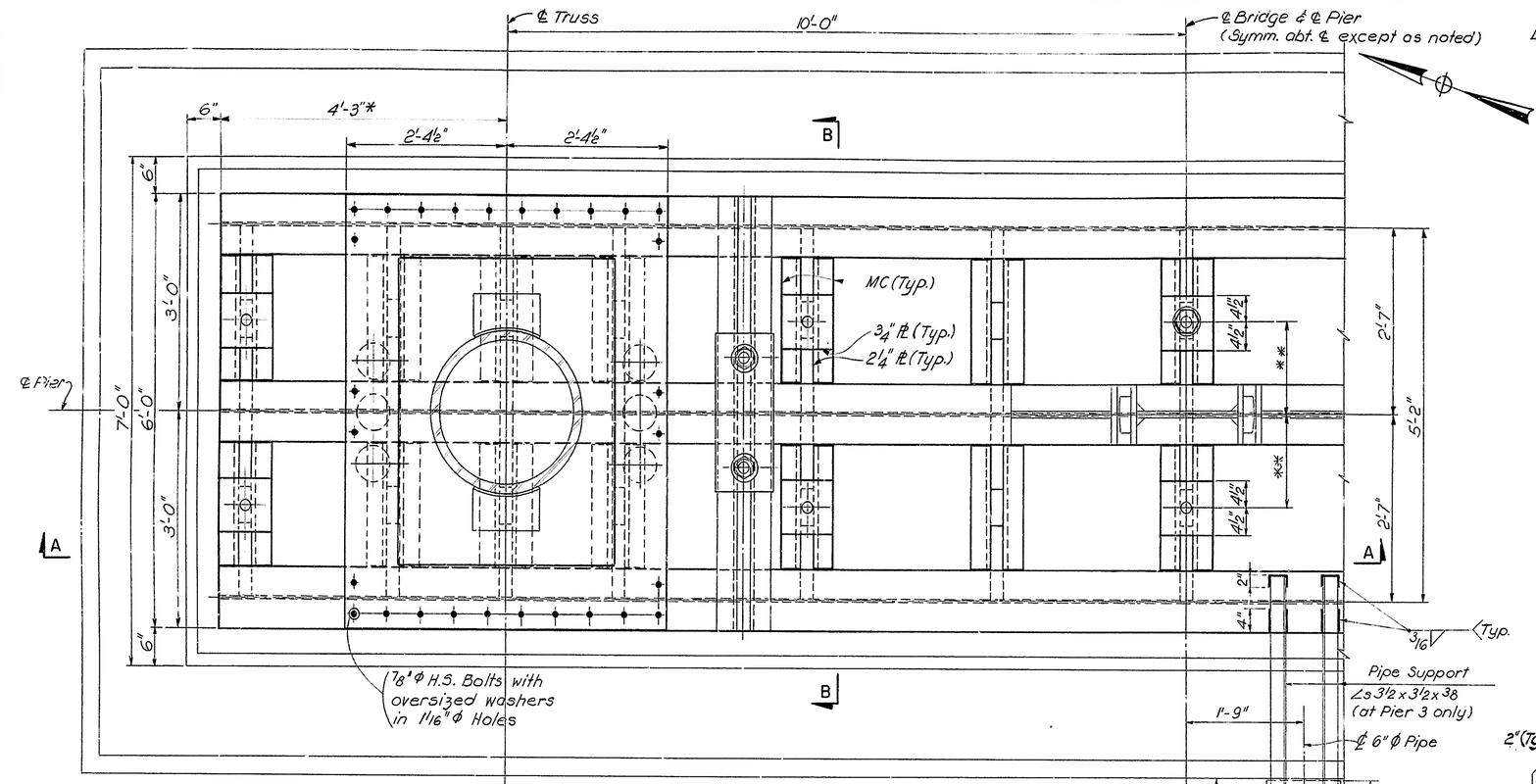


PLAN

* Typical except:
4'-8" @ Pier #2 N. End
4'-11" @ Pier #5 N. End
4'-6" @ Pier #5 S. End

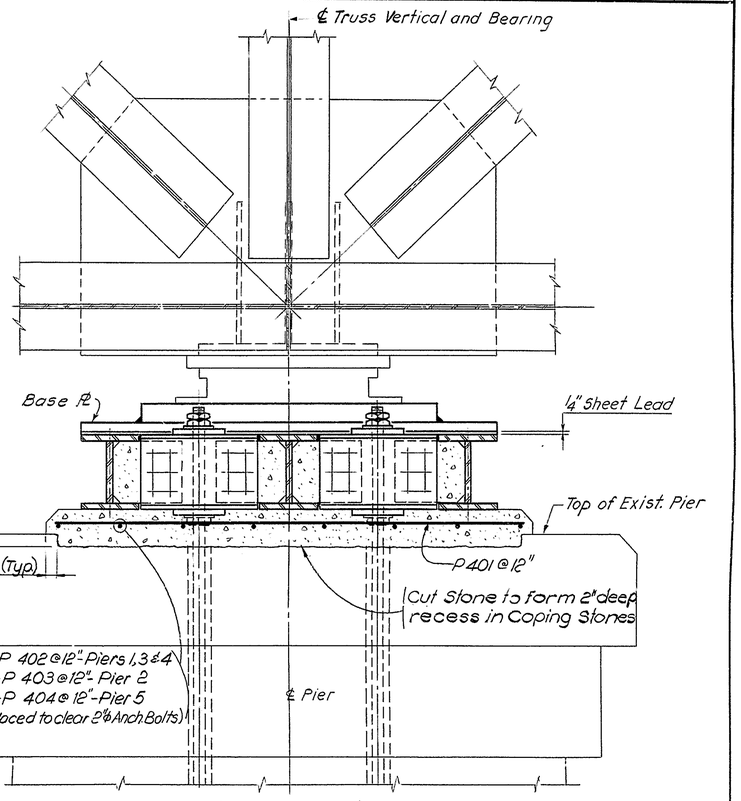


SECTION B-B

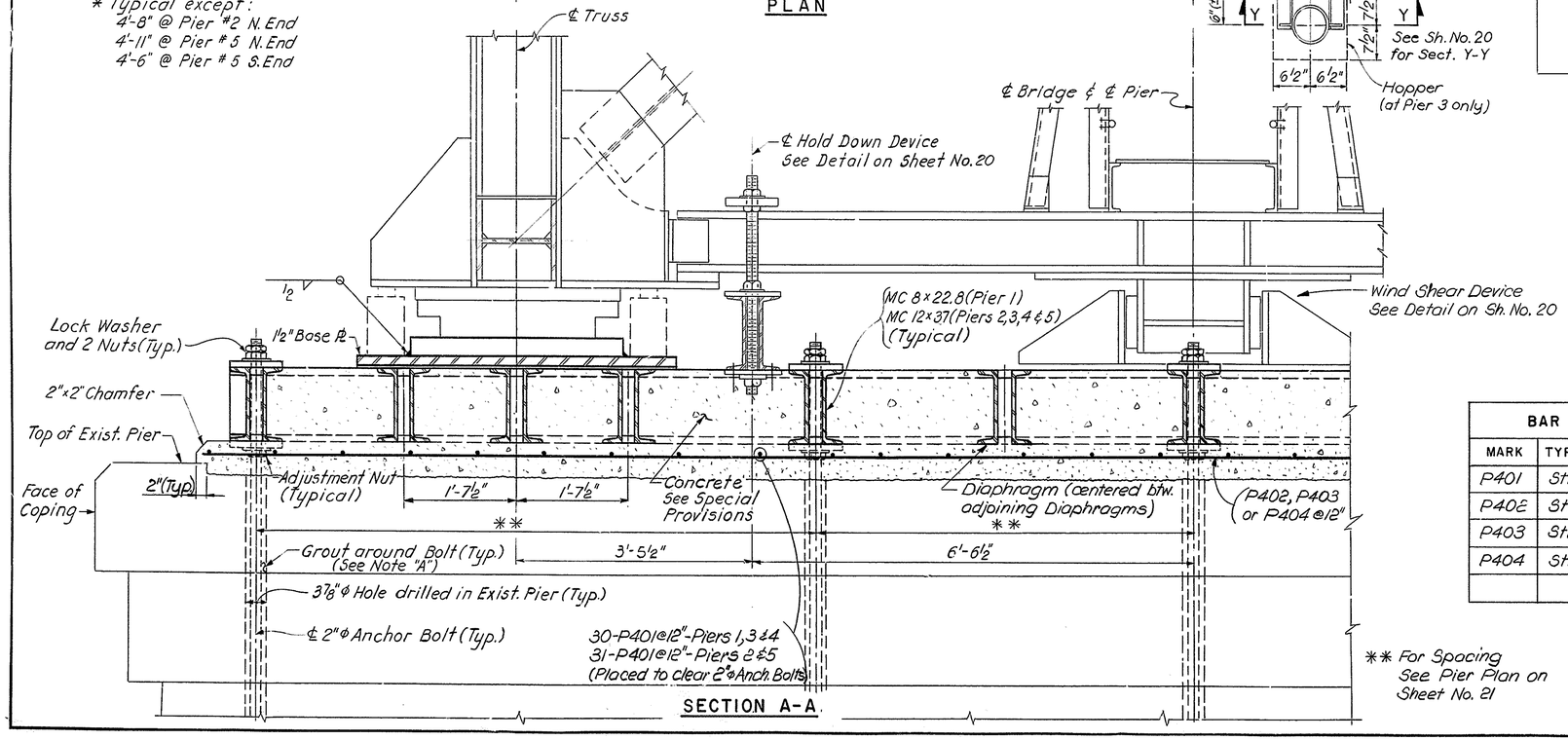


SECTION A-A

** For Spacing See Pier Plan on Sheet No. 21

| BAR SCHEDULE - PIERS - | | | | |
|---|---|---|---|---|
| MARK | TYPE | NO. REQ'D | LENGTH | WEIGHT |
| P401 | Str. | 152 | 6-8 | 677 |
| P402 | Str. | 24 | 29-2 | 468 |
| P403 | Str. | 8 | 29-7 | 158 |
| P404 | Str. | 8 | 30-1 | 161 |
| | | Total Piers : | | 1464 |

## REFERENCES:

| | SHEET NO. |
|---|---|
| General Plan & Elevation | 15 |
| General Notes | 3 |
| Typical Bridge Cross Section | 16 |
| Pier Grouting & Repairs | 17 & 18 |
| Wind Shear & Hold Down Devices | 20 |
| Anchor Bolt Location Plan | 21 |
| Truss Layout | 36 - 40 |
| Truss Details | 42 - 56 |
| Expansion Bearings at Piers | 63 |
| Masonry Core Logs | 88 - 95 |
| Pipe Support & Hopper Location | 58 |

AS BUILT

DELAWARE
DEPARTMENT OF TRANSPORTATION
DIVISION OF HIGHWAYS

STEEL GRILLAGES ON TOP OF PIERS
SHEET 1

D.
T.
C.

SCALE 1" = 1'-0"

APPROVED BY:

ROBERT C. McDONALD REGISTERED NO. 3059 DELAWARE CIVIL ENGINEER

| COUNTY | CONTRACT | P. B. A. REG. NO. | STATE | FED. AID PROJECT NO. | SHEET NO. | TOTAL SHEETS |
|---|---|---|---|---|---|---|
| NEW CASTLE | 79-071-02 | 2 | DEL. | M-1191(1) | 20 | 112 |

# AUGUSTINE BRIDGE RECONSTRUCTION

| NO. | REVISIONS | BY | DATE |
|---|---|---|---|
| | | | |

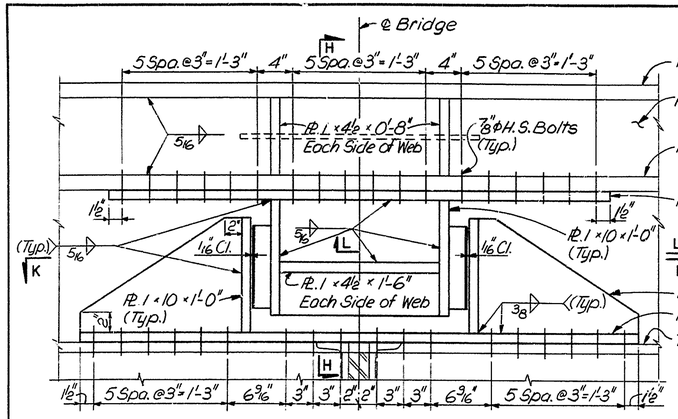


ELEVATION

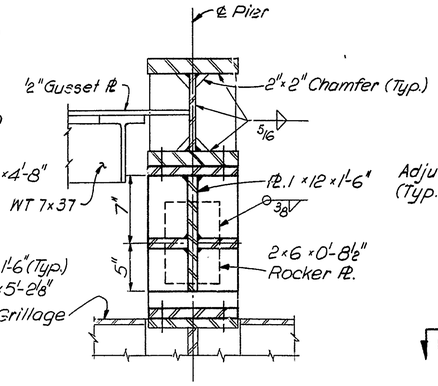


SECTION H-H

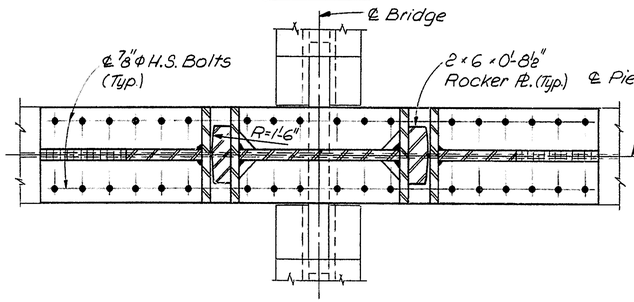


SECTION K-K

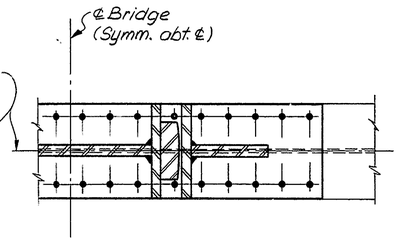


SECTION L-L

WIND SHEAR DEVICE

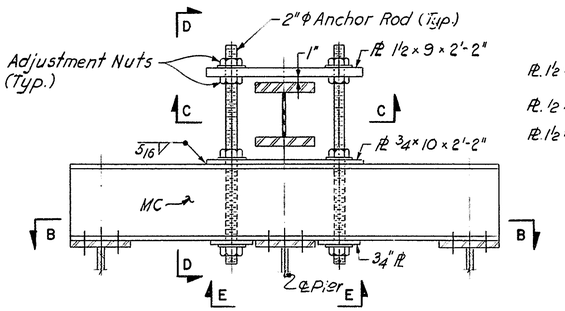


SECTION A-A

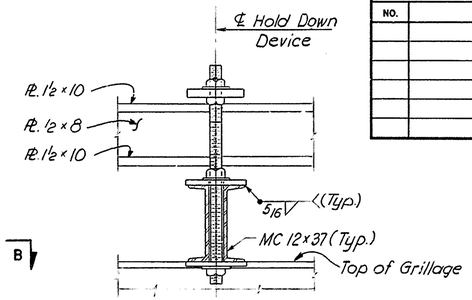


SECTION D-D

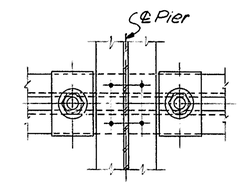


SECTION E-E

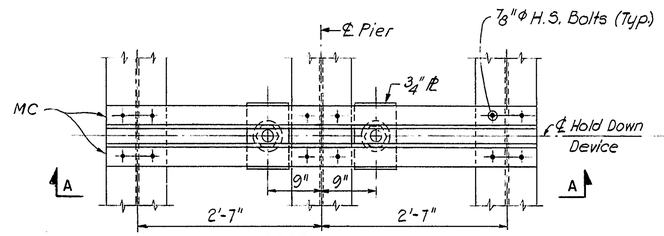


SECTION B-B

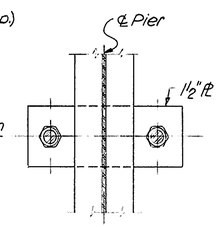


SECTION C-C

HOLD DOWN DEVICE

Scale: 1" = 1'-0"

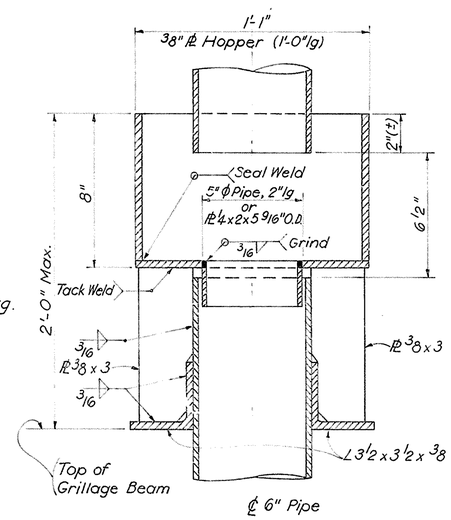


SECTION Y-Y

DETAILS OF HOPPER AT PIER 3

Scale: 3" = 1'-0"

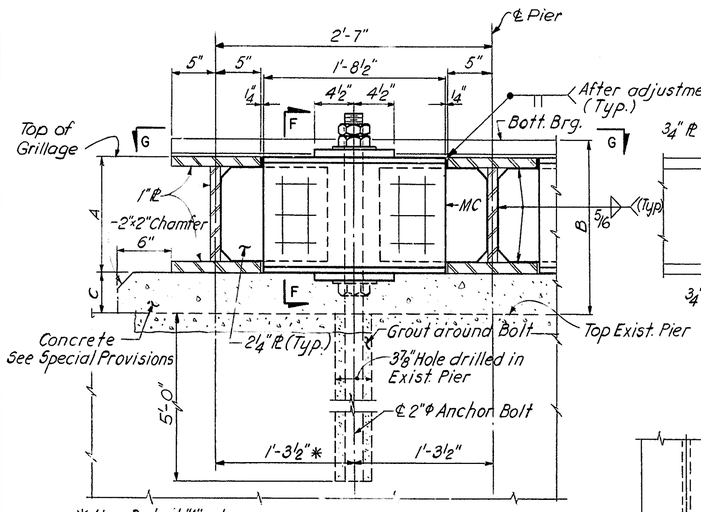


* Use Detail "A" when this dimension is 1'-0½" or less.

SECTION M-M
(Piers 1, 2 & 5)

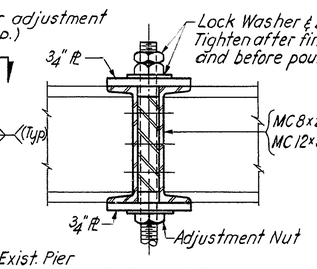


SECTION F-F

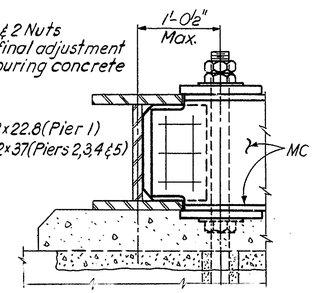


DETAIL "A"

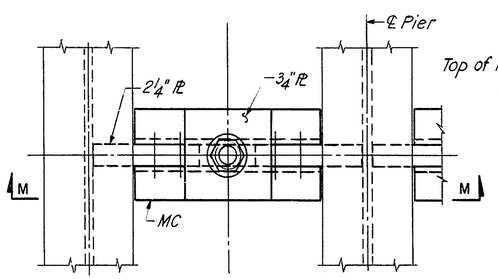


SECTION G-G

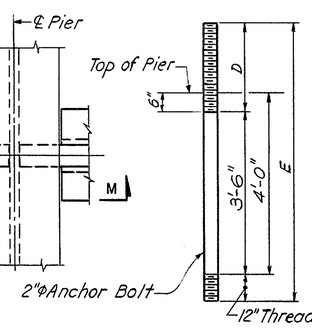


BOLT DETAIL
Not to Scale

GRILLAGE ANCHORAGE DETAILS

| DIM S. | PIER 1 | PIER 2 | PIER 3 | PIER 4 | PIER 5 |
|---|---|---|---|---|---|
| A | 0'-8" | 1'-0" | 1'-9" | 1'-9" | 1'-0" |
| B | 1'-0 5/8" | 1'-5 5/8" | 2'-4¼" | 2'-3½" | 1'-6⅜" |
| C | 0'-2⅞" | 0'-3⅞" | 0'-5½" | 0'-4¾" | 0'-4⅜" |

| PIER No. | D | E |
|---|---|---|
| 1 | 2'-0" | 6'-6" |
| 2 | 2'-5" | 6'-11" |
| 3 | 3'-4" | 7'-10" |
| 4 | 3'-4" | 7'-10" |
| 5 | 2'-6" | 7'-0" |

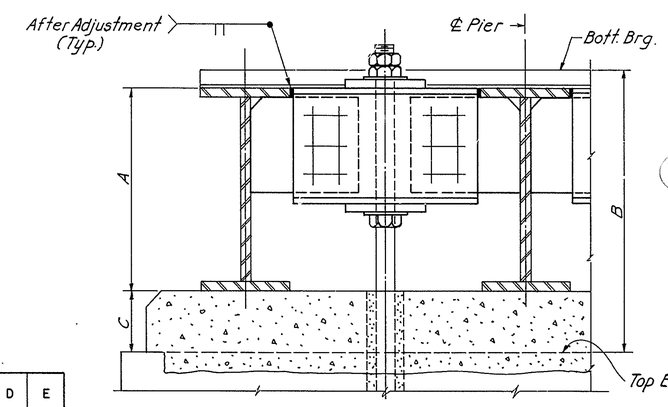


SECTION M-M
(Piers 3 & 4)

Note: For dimensions and descriptions see Section M-M @ Piers 1, 2 & 5

Note:
Work this Dwg. with sheet No. 19

AS BUILT

DELAWARE
DEPARTMENT OF TRANSPORTATION
DIVISION OF HIGHWAYS

STEEL GRILLAGES ON TOP OF PIERS
SHEET 2

D.
T.
C.

SCALE
½" = 1'-0"
& As shown

APPROVED BY
H. F. Wolf
BRIDGE ENGINEER

ROBERT C. McDONNELL
REGISTERED
NO. 3068
DELAWARE
PROFESSIONAL ENGINEER

| COUNTY | CONTRACT | P. R. A. REG. NO. | STATE | FED. AID PROJECT NO. | SHEET NO. | TOTAL SHEETS |
|---|---|---|---|---|---|---|
| NEW CASTLE | 79-071-02 | 2 | DEL. | M-1191 (1) | 21 | 112 |

# AUGUSTINE BRIDGE RECONSTRUCTION

| NO. | REVISIONS | BY | DATE |
|---|---|---|---|
| | | | |

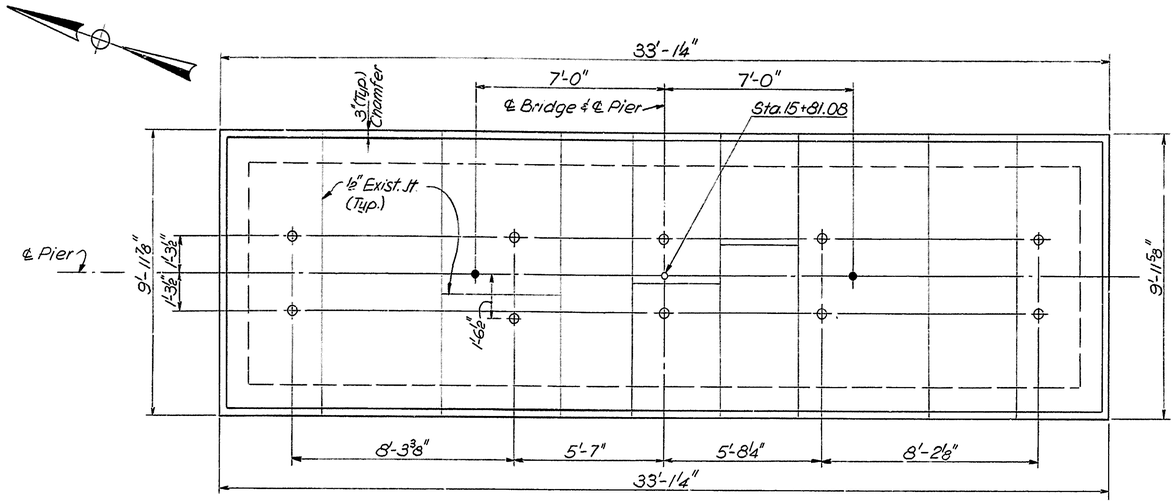


PIER No. 1

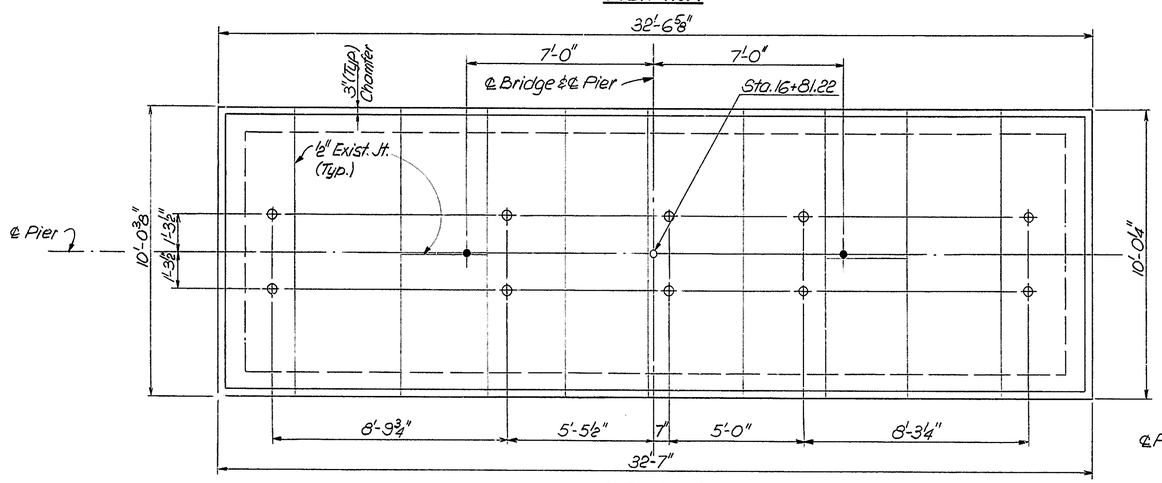


PIER No. 2

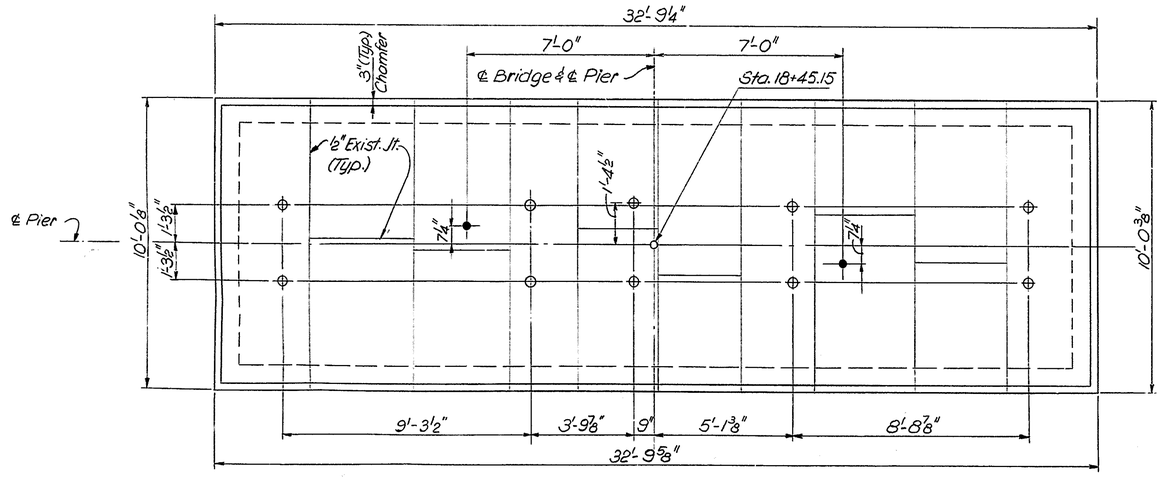


PIER No. 3

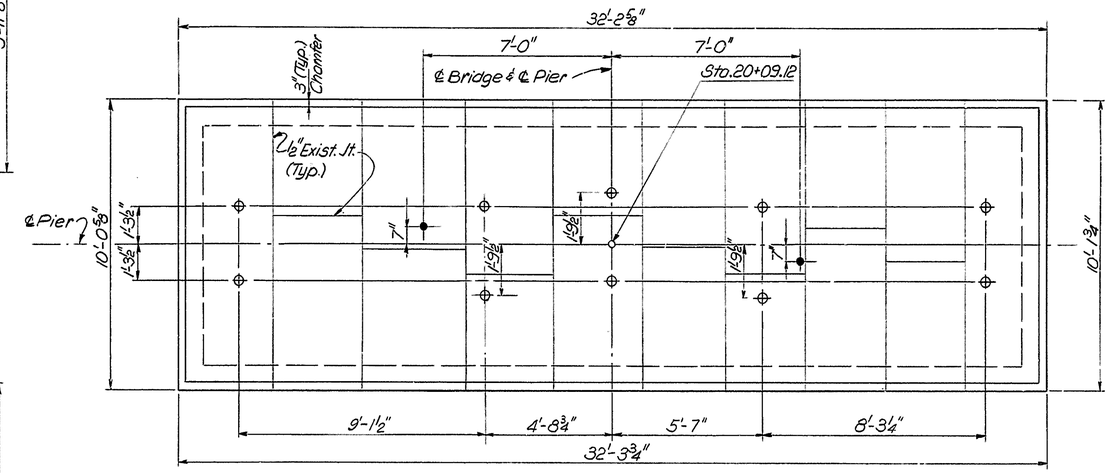


PIER No. 4

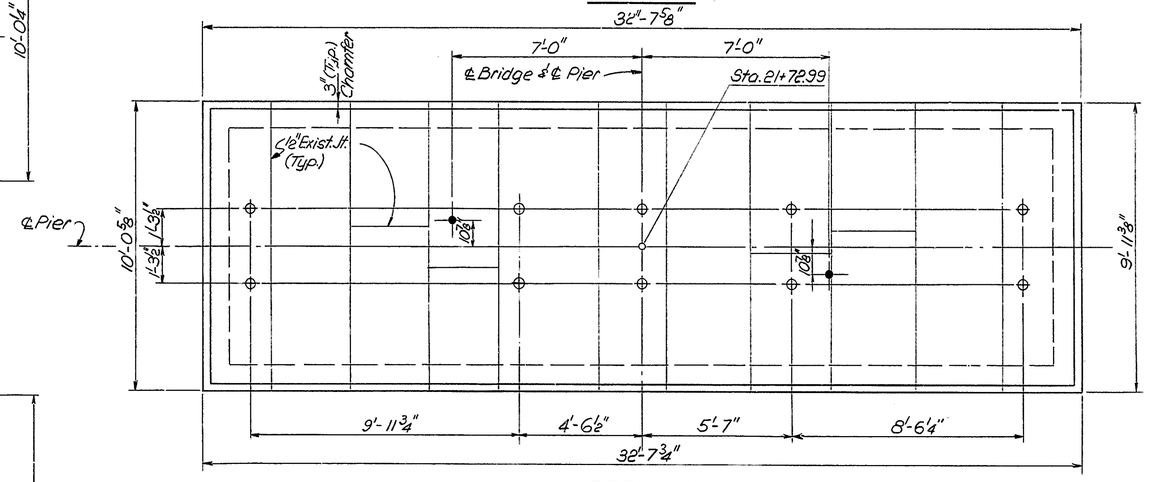


PIER No. 5

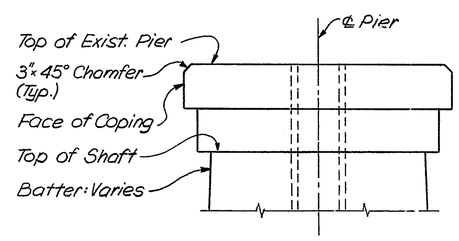


TYPICAL ELEVATION

**NOTE**

All existing pier dimensions are based on survey and shall be verified by the contractor prior to commencement of any work.

**REFERENCES:**

| | SHEET NO. |
|---|---|
| General Plan & Elevation | 15 |
| General Notes | 3 |
| Pier Grouting & Repairs | 17 & 18 |
| Steel Grillage on top of Piers | 19 & 20 |
| Masonry Core Logs | 88 - 95 |

*Legend:*

- ● *Existing vertical 3" ϕ Core holes - See Masonry Core Logs*
- ⊕ *3⅞" ϕ, 5'-0" deep holes for steel Grillage Anchor Bolts.*

DELAWARE
DEPARTMENT OF TRANSPORTATION
DIVISION OF HIGHWAYS

## ANCHOR BOLT LOCATION PLAN AT PIER TOPS

D.
T.
C.

SCALE 3/8" = 1'-0"

APPROVED BY H. C. McDowell
BRIDGE ENGINEER

ROBERT C. McDOWELL REGISTERED NO. 3069 DELAWARE

| COUNTY | CONTRACT | P.R.A. REG. NO. | STATE | FED. AID PROJECT NO. | SHEET NO. | TOTAL SHEETS |
|---|---|---|---|---|---|---|
| NEW CASTLE | 79-071-02 | 2 | DEL. | M-1191(1) | 22 | 42 |

# AUGUSTINE BRIDGE RECONSTRUCTION

| NO. | REVISIONS | BY | DATE |
|---|---|---|---|
| 1 | UTILITY INSTALLATION AND LOCATION | SMT | 9/20/79 |

⚠1 UTILITIES NOT SHOWN.
DETAILS AND LOCATION OF 4 - 6 in. DIA. ELECTRICAL STEEL CONDUITS AND 12 in. DIA. GAS MAIN AND THEIR SUPPORTS ARE SHOWN ON SHEETS 81A, 81B AND 81C.

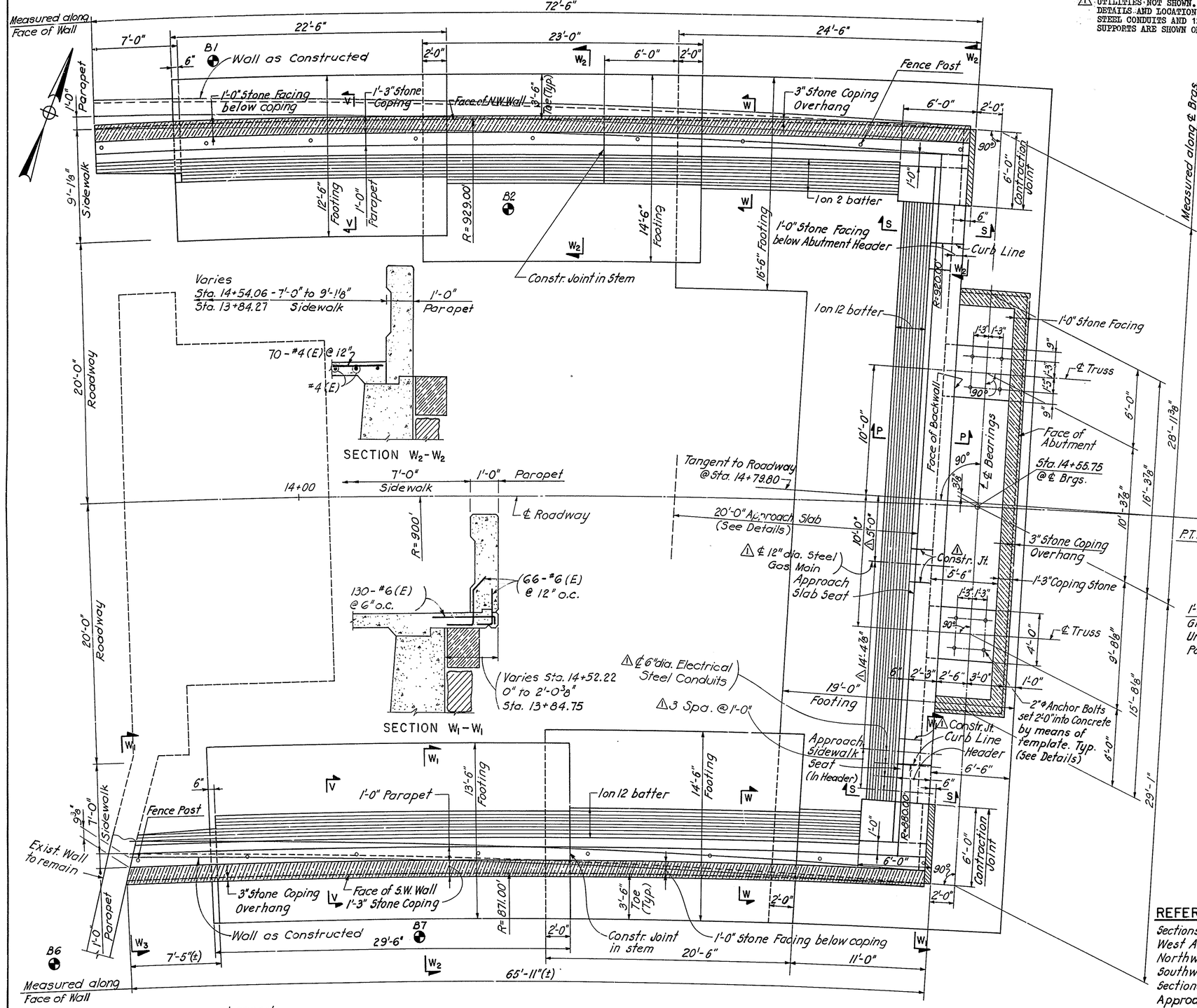


## EXCAVATION AND BACKFILL PAY LINES

**REFERENCES:**

| | SHEET NO |
|---|---|
| Sections P-P, S-S, V-V & W-W | 26 |
| West Abutment Elevation | 23 |
| Northwest Wingwall Elevation | 25 |
| Southwest Wingwall Elevation | 24 |
| Sections & Stone Masonry Details | 27 |
| Approach Slab Details | 35 |

AS BUILT

DELAWARE
DEPARTMENT OF TRANSPORTATION
DIVISION OF HIGHWAYS

WEST ABUTMENT & WINGWALLS
PLAN

| D. | SCALE | APPROVED BRIDGE ENGINEER |
|---|---|---|
| T. | AS SHOWN | |
| C. | | |

ROBERT C. McDOWELL REGISTERED No. 3069 DELAWARE

| COUNTY | CONTRACT | F.B.A. REG. NO. | STATE | FED. AID PROJECT NO. | SHEET NO. | TOTAL SHEETS |
|---|---|---|---|---|---|---|
| NEW CASTLE | 79-071-02 | 2 | DEL | M-1191(1) | 23 | 1 of 2 |

# AUGUSTINE BRIDGE RECONSTRUCTION

| NO. | REVISIONS | BY | DATE |
|---|---|---|---|
| 1 | UTILITY INSTALLATION AND LOCATION | SMT | 9/20/79 |

1 DETAILS AND LOCATION OF 4-6" DIA. ELECTRICAL STEEL CONDUITS AND 12" DIA. GAS MAIN AND THEIR SUPPORTS ARE SHOWN ON SHEETS 81A, 81B AND 81C.

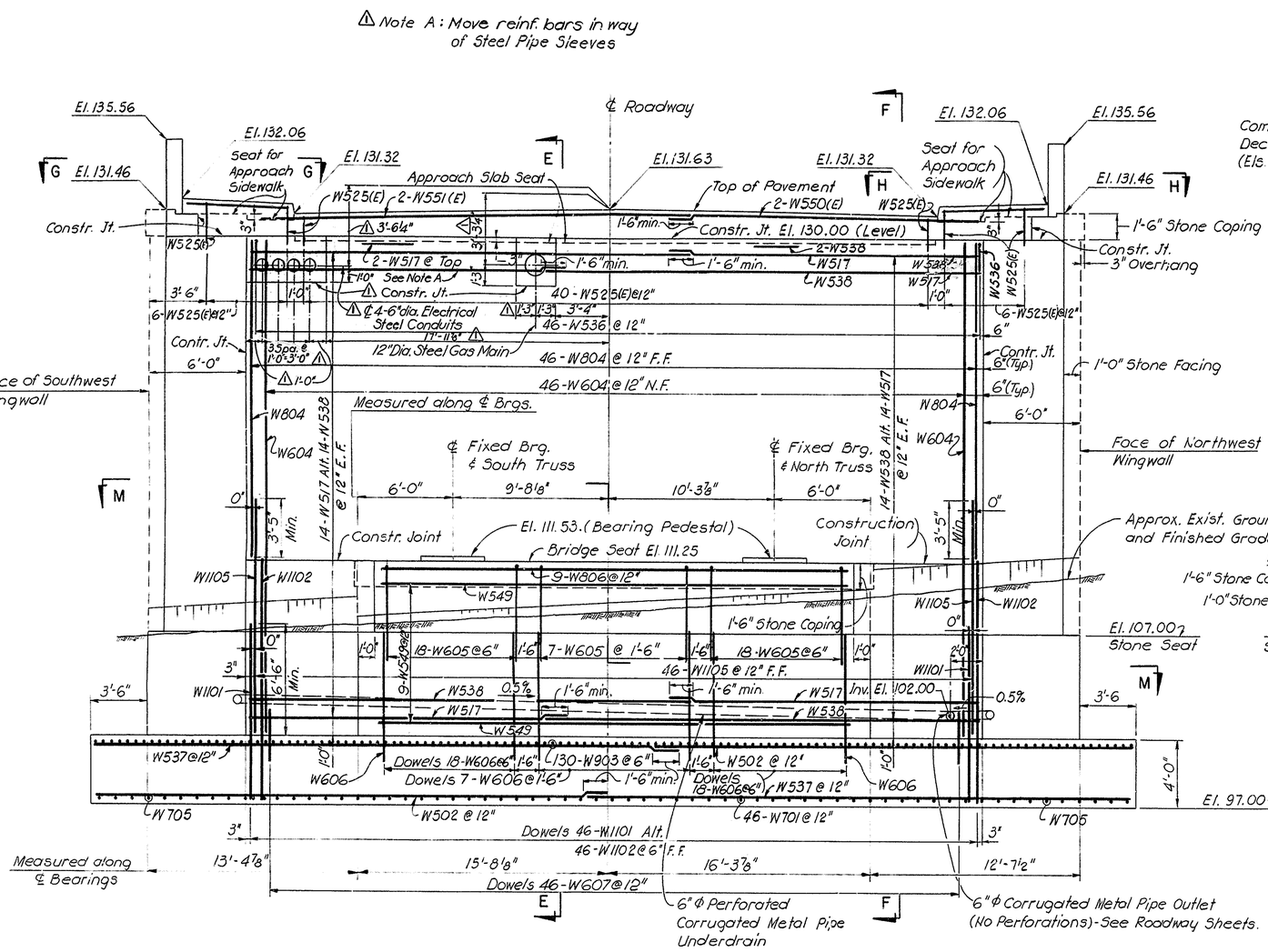


ELEVATION

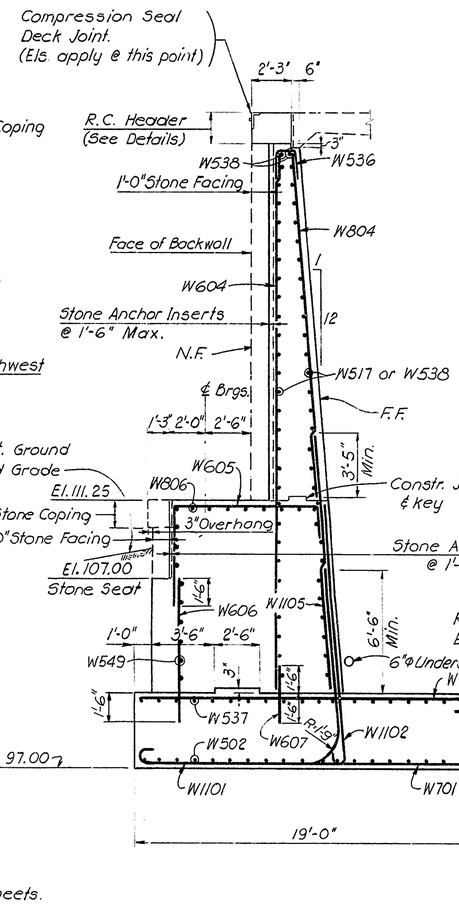


SECTION E-E

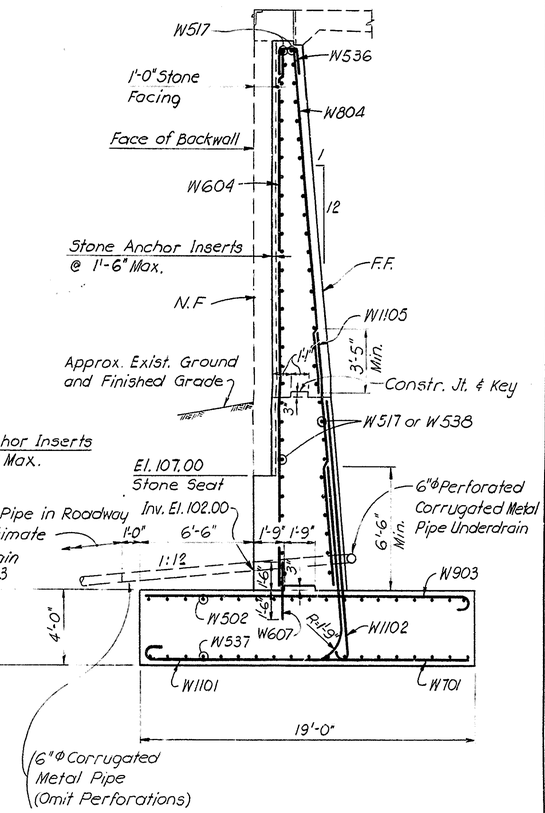


SECTION F-F

## FOUNDATION NOTES

West Abutment and Northwest & Southwest wingwalls shall be founded on rock with a minimum penetration into rock of 1'-0". The maximum design pressure is 5.0 tons per sq. ft.
Where rock is found below the bottom of footing elevation shown, a plain concrete Class A (f'c = 3000 psi) subfooting shall be placed on top of the rock to the elevation of the bottom of footing. The payment for the subfooting shall be under item "Portland Cement Conc. Masonry Subfooting"
The lateral payment limits for the subfooting and for required additional structure excavation shall be vertical planes parallel to the footing and 1'-6" outside the neat lines of footing.

## NOTE:

All Footing Reinforcement shall have 3" min. cover. All Stem Reinforcement shall have 2" min. Cover. All Parapet Reinforcement shall have 1½" min. Cover.

## REFERENCES

| | SHEET NO. |
|---|---|
| Sections G-G, H-H & M-M | 27 |
| Abutment Header Details | 26 |
| Anchor Bolt Details | 62 |
| Architectural Elevations | 26 |
| Reinforcing Steel Bar Schedule | 28 |
| Abutment Plan & Excavation and Backfill Pay Lines | 22 |

DELAWARE
DEPARTMENT OF TRANSPORTATION
DIVISION OF HIGHWAYS

WEST ABUTMENT
ELEVATION AND SECTIONS

ROBERT C. McDONELL REGISTERED PROFESSIONAL ENGINEER NO. 3000 DELAWARE

D.
T.
C.

SCALE 1/4" = 1'-0"

APPROVED BRIDGE ENGINEER

| COUNTY | CONTRACT | F.B.A. SEQ. NO. | STATE | FED. AID PROJECT NO. | SHEET NO. | TOTAL SHEETS |
|---|---|---|---|---|---|---|
| NEW CASTLE | 79-071-02 | 2 | DEL | M-1191 (1) | 24 | 112 |

# AUGUSTINE BRIDGE RECONSTRUCTION

| NO. | REVISIONS | BY | DATE |
|---|---|---|---|
| | | | |

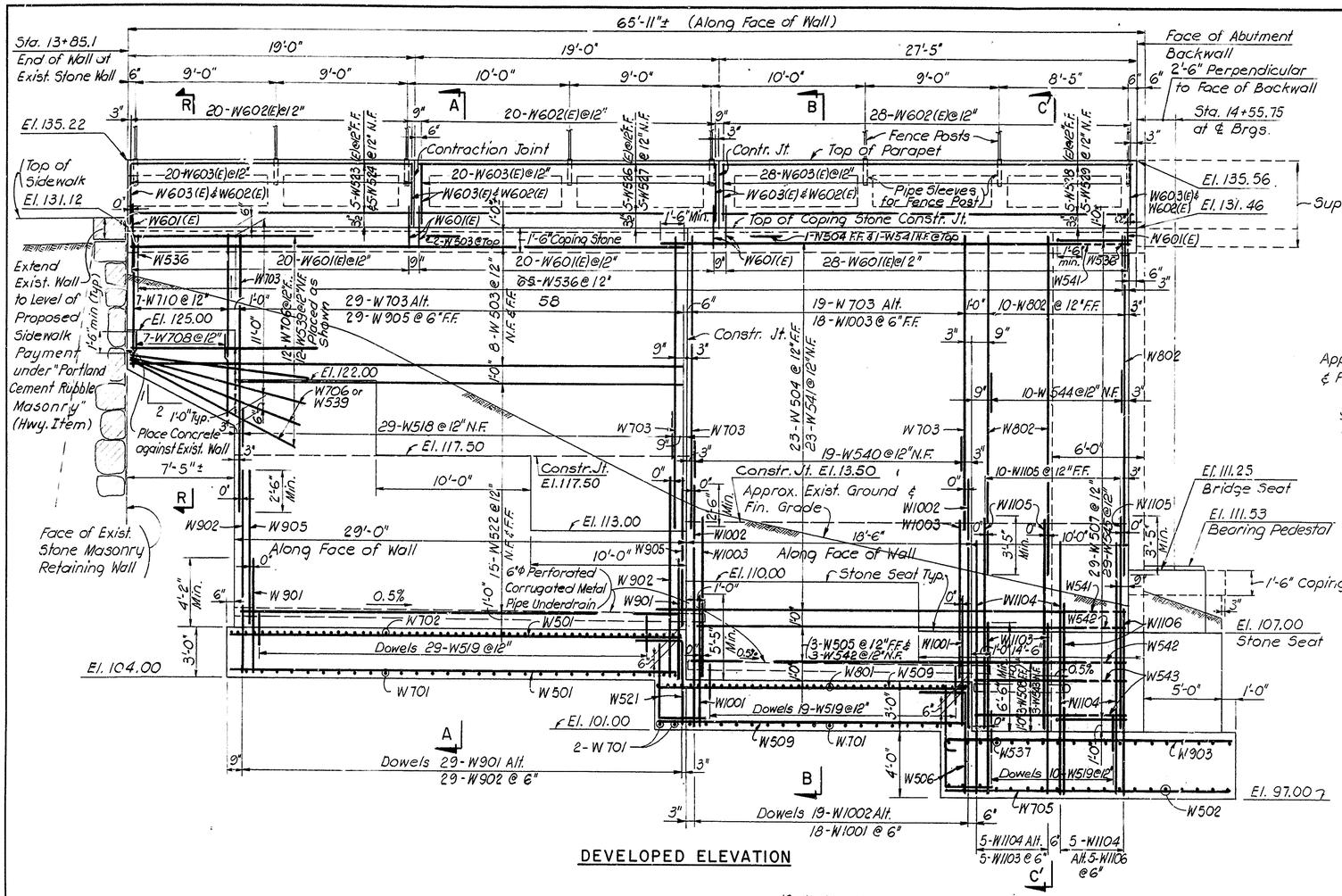


DEVELOPED ELEVATION

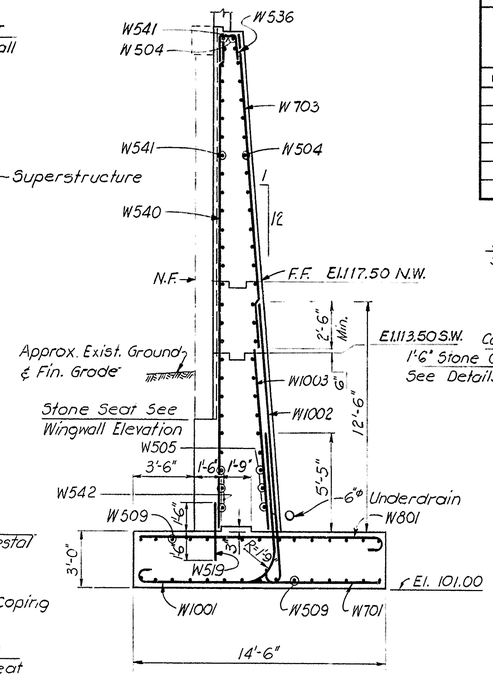


SECTION B-B

SECTION B'-B' Similar except as otherwise shown on Elevation and Footing Plan for North West Wing Wall.

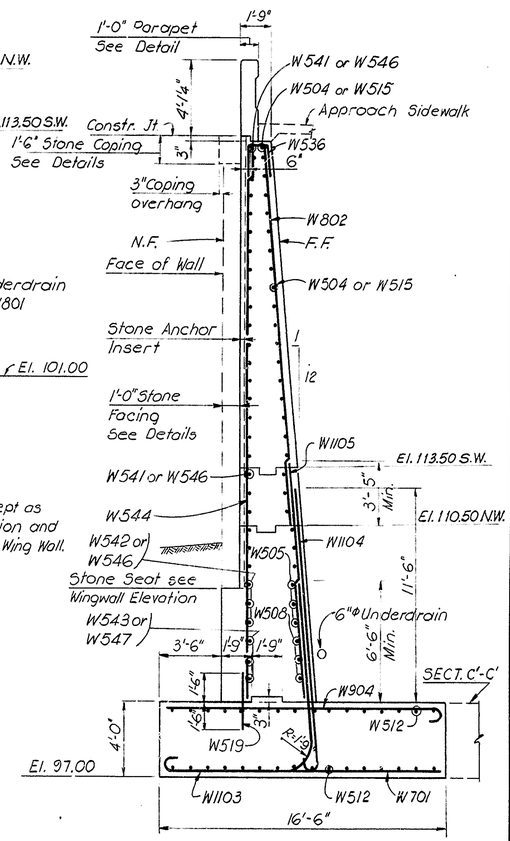


SECTION C-C

SECTION C'-C' Similar except Footing Reinforcement (See Footing Reinf. Plan & Developed Elev.)

NOTES:
Dimensions and Details shown on Section C-C apply to Sections A-A, B-B & D-D unless otherwise shown.
Work this drawing with sheets No. 22, 23, 25, 26, 27 & 28

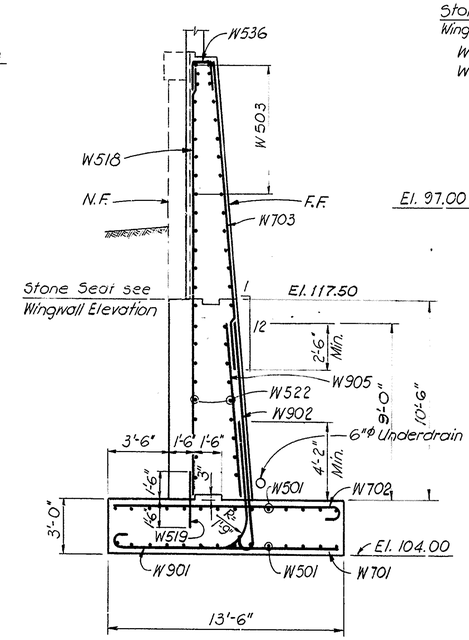


SECTION A-A

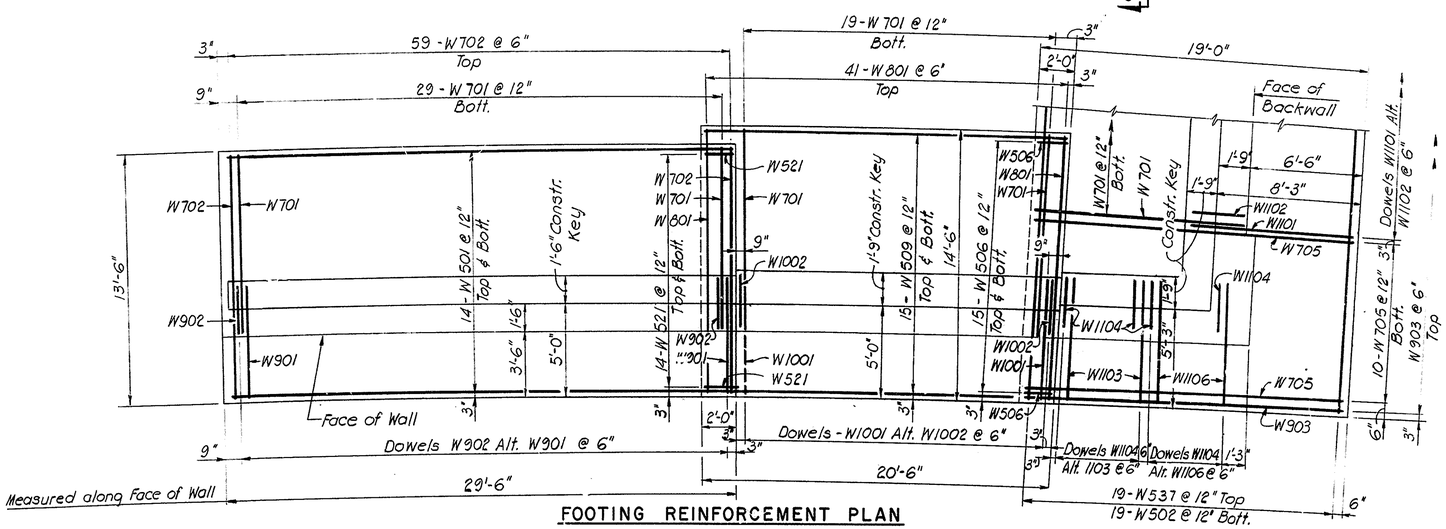


FOOTING REINFORCEMENT PLAN

AS BUILT

DELAWARE
DEPARTMENT OF TRANSPORTATION
DIVISION OF HIGHWAYS

SOUTHWEST WINGWALL ELEVATION, FOOTING AND SECTIONS

D.
T.
C.

SCALE 14" = 1'-0"

APPROVED

BRIDGE ENGINEER

JOHN BOOT C. MOODWELL REGISTERED PROFESSIONAL ENGINEER NO. 3069 DELAWARE

| COUNTY | CONTRACT | P.B.A. REG. NO. | STATE | FED. AID PROJECT NO. | SHEET NO. | TOTAL SHEETS |
|---|---|---|---|---|---|---|
| NEW CASTLE | 79-071-(1) | 2 | DEL. | M-1191 (1) | 25 | 192 |

# AUGUSTINE BRIDGE RECONSTRUCTION

| NO. | REVISIONS | BY | DATE |
|---|---|---|---|
| | | | |

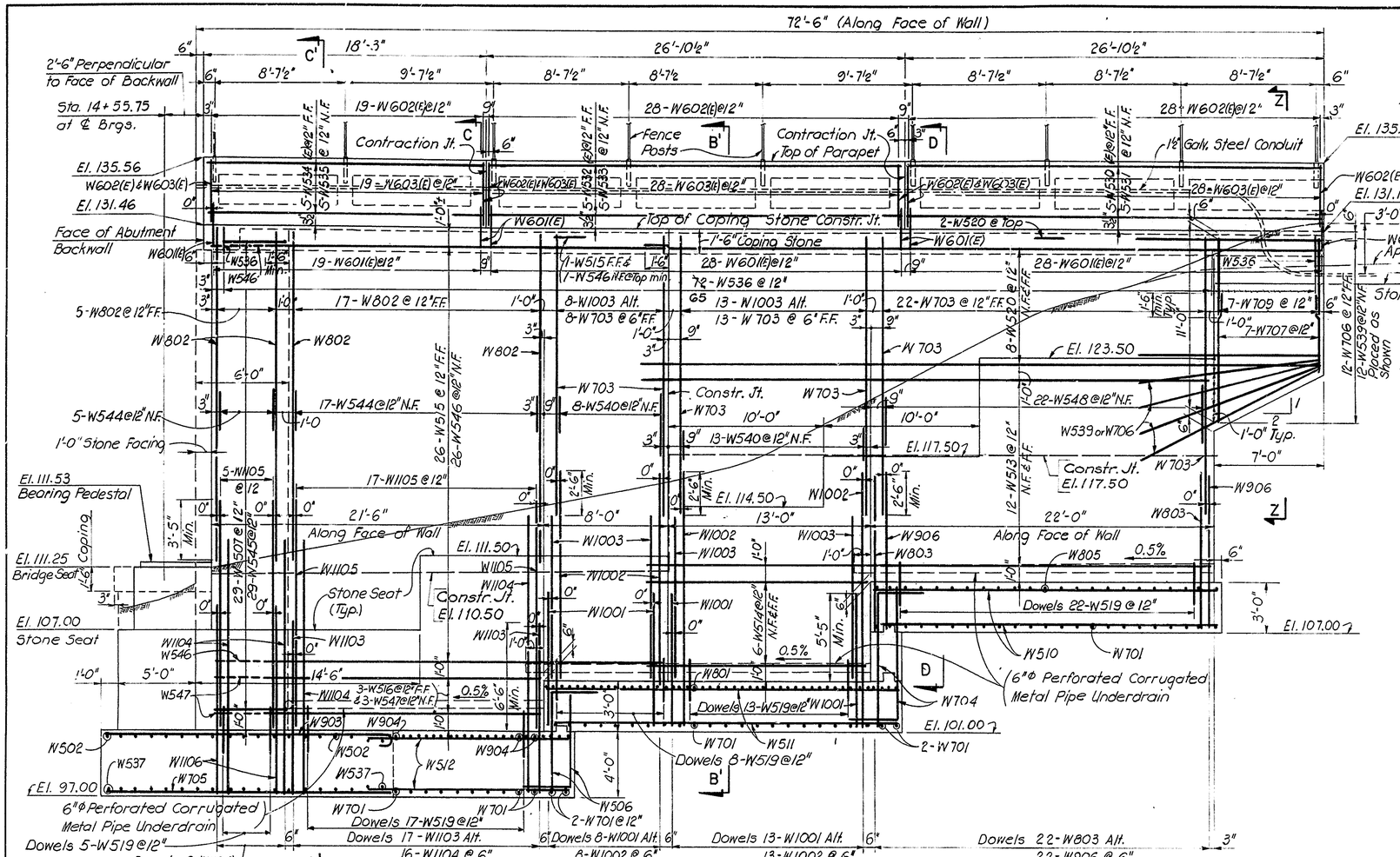


DEVELOPED ELEVATION

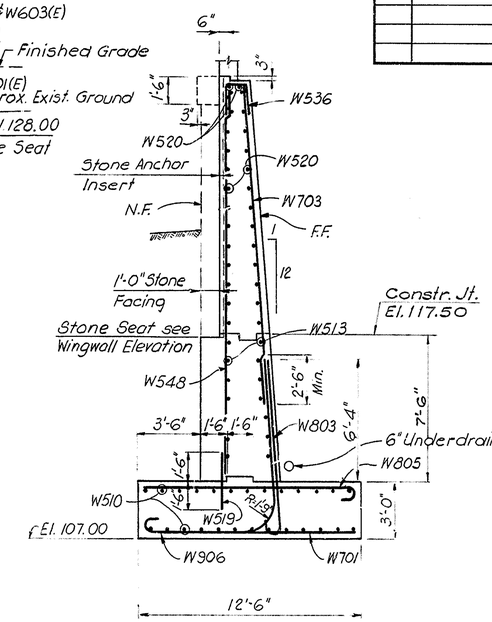


SECTION D-D

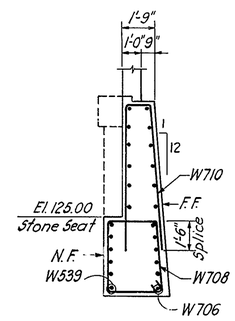


SECTION R-R

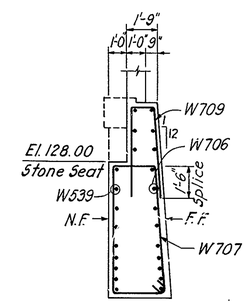


SECTION Z-Z

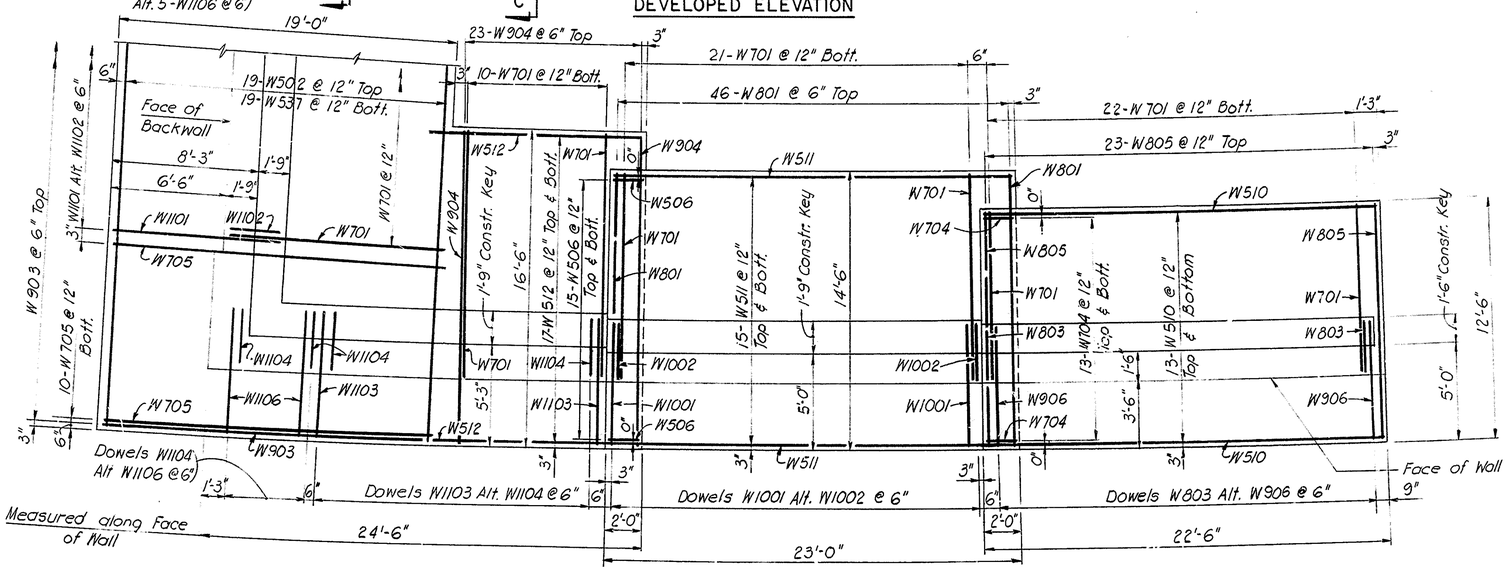


FOOTING REINFORCEMENT PLAN

Note: Work this dwg. with Sheets No. 22, 23, 24, 26, 27 & 28

DELAWARE
DEPARTMENT OF TRANSPORTATION
DIVISION OF HIGHWAYS

NORTHWEST WINGWALL ELEVATION, FOOTING AND SECTION

| D. | SCALE | APPROVED |
|---|---|---|
| T. | 1/4" = 1'-0" | |
| C. | | BRIDGE ENGINEER |

REGISTERED NO. 3069 DELAWARE

AS BUILT

| COUNTY | CONTRACT | F.B.A. REG. NO. | STATE | FED. AID PROJECT NO. | SHEET NO. | TOTAL SHEETS |
|---|---|---|---|---|---|---|
| NEW CASTLE | 79-071-02 | 2 | DEL. | M-1191 (1) | 26 | 112 |

# AUGUSTINE BRIDGE RECONSTRUCTION

| NO. | REVISIONS | BY | DATE |
|---|---|---|---|
| 1 | UTILITY INSTALLATION AND LOCATION | SMT | 9/20/79 |
| 2 | HOT-POURED JOINT SEALER | C.H. | 12/12/79 |
| 3 | SECTION V-V ~ SHOWING PLAQUE LOCATION | T.F.F. | 7/14/80 |

1 DETAILS AND LOCATION OF 4-6" DIA. ELECTRICAL STEEL CONDUITS AND 12" DIA. GAS MAIN AND THEIR SUPPORTS ARE SHOWN ON SHEETS 81A, 81B AND 81C.

2 NOTE: Hot-Poured Joint Sealer (3/4" Deep x 1/2" Wide) Shall Be Poured In The Joint Over Preformed Expansion Joint Filler (Typ.).

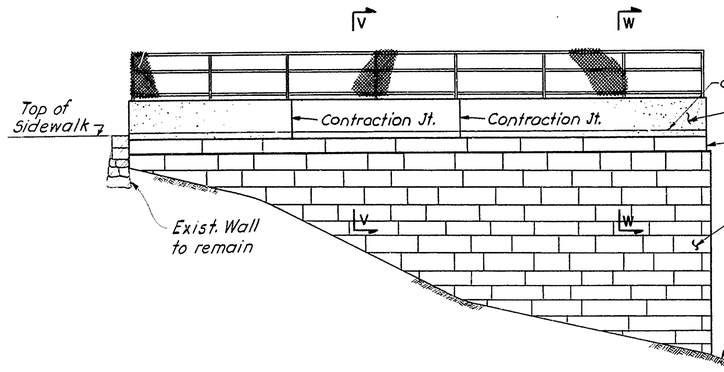


SOUTHWEST WINGWALL ELEVATION
Scale: 1/8" = 1'-0"

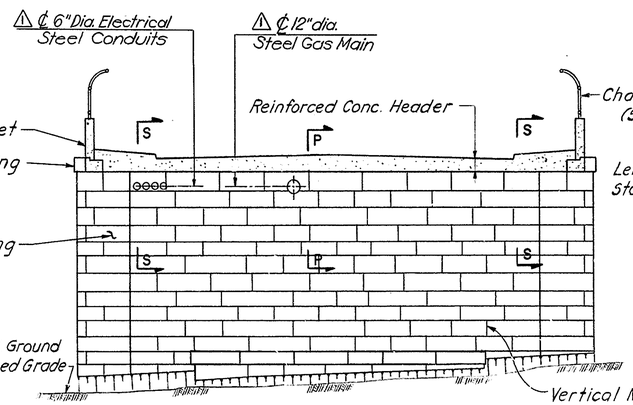


ABUTMENT ELEVATION
Scale: 1/8" = 1'-0"

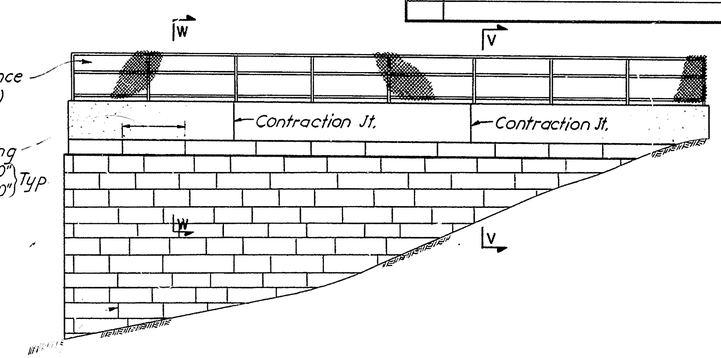


NORTHWEST WINGWALL ELEVATION
Scale: 1/8" = 1'-0"

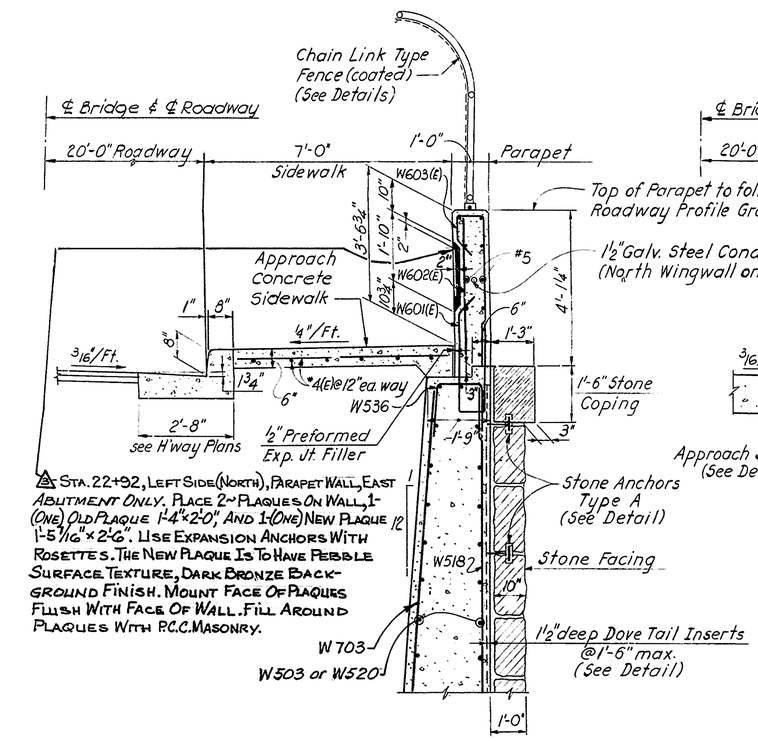


3 STA. 22+92, LEFT SIDE (NORTH), PARAPET WALL, EAST ABUTMENT ONLY. PLACE 2~PLAQUES ON WALL, 1-(ONE) OLD PLAQUE 1'-4"x2'-0", AND 1-(ONE) NEW PLAQUE 1'-5 7/16"x2'-6". USE EXPANSION ANCHORS WITH ROSETTES. THE NEW PLAQUE IS TO HAVE PEBBLE SURFACE TEXTURE, DARK BRONZE BACKGROUND FINISH. MOUNT FACE OF PLAQUES FLUSH WITH FACE OF WALL. FILL AROUND PLAQUES WITH P.C.C. MASONRY.

SECTION V-V

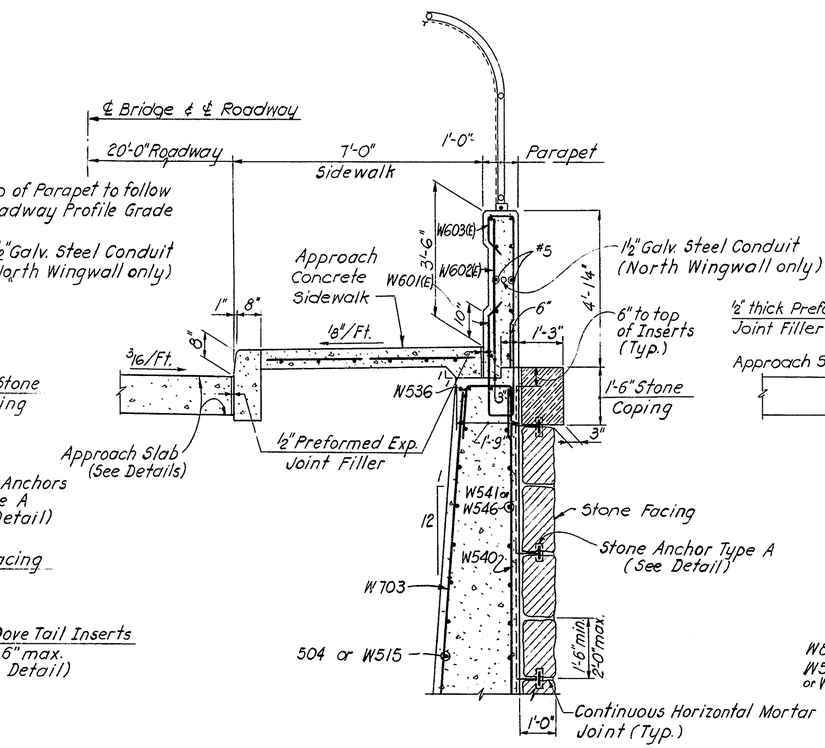


SECTION W-W

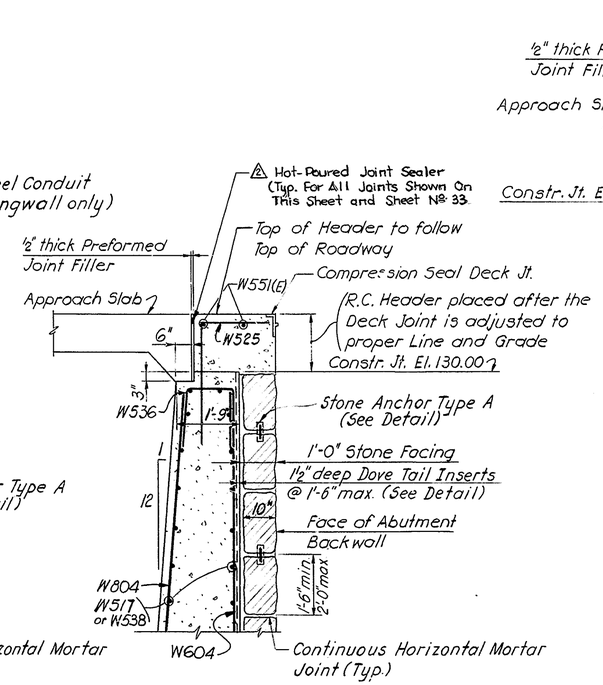


SECTION P-P

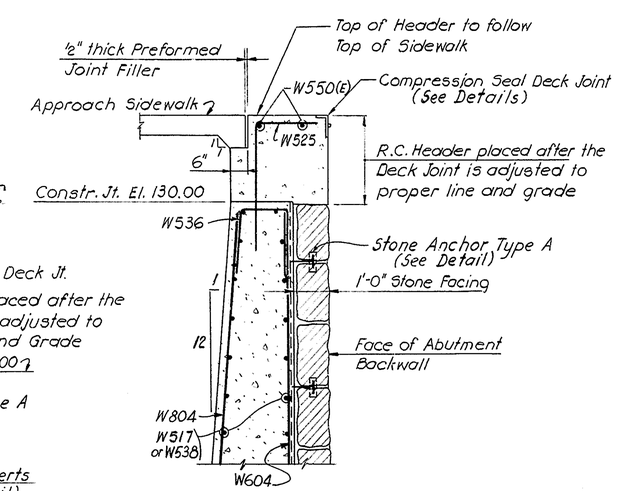


SECTION S-S

Note: Work this drawing with Sheets No. 22, 23, 24, 25, 27 & 28

## TOP OF WINGWALL DETAILS

Scale: 1/2" = 1'-0"

Details shown on either section apply to both unless otherwise shown.

Note:
Sections P-P, S-S, V-V & W-W apply to East Abutment and Wingwalls except for Bar Reinforcement Marks.

## TOP OF ABUTMENT DETAILS

Scale: 1/2" = 1'-0"

Details shown on either section apply to both unless otherwise shown.

AS BUILT

DELAWARE
DEPARTMENT OF TRANSPORTATION
DIVISION OF HIGHWAYS

WEST ABUTMENT & WINGWALLS
ARCHITECTURAL ELEVATIONS
AND DETAILS

D.
T.
C.

SCALE
AS SHOWN

APPROVED BY
BRIDGE ENGINEER

ROBERT C. McDOWELL
REGISTERED
NO. 3060
PROFESSIONAL ENGINEER
DELAWARE

| COUNTY | CONTRACT | P. B. & REG. NO. | STATE | FED. AID PROJECT NO. | SHEET NO. | TOTAL SHEETS |
|---|---|---|---|---|---|---|
| NEW CASTLE | 79-071-02 | 2 | DEL | M-1191 (1) | 27 | 112 |

# AUGUSTINE BRIDGE RECONSTRUCTION

| NO. | REVISIONS | BY | DATE |
|---|---|---|---|
| 1 | UTILITY INSTALLATION AND LOCATION | SMT | 9/20/79 |

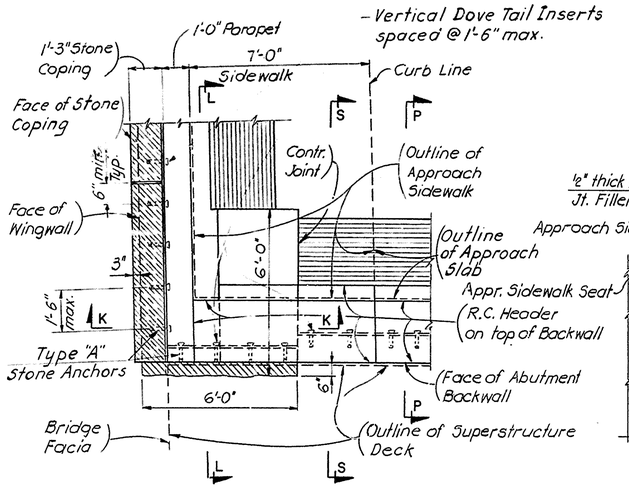


PLAN VIEW G-G

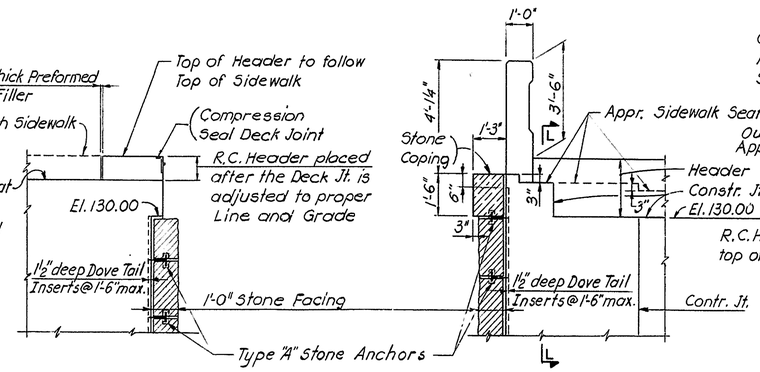


SECTION L-L

SECTION K-K

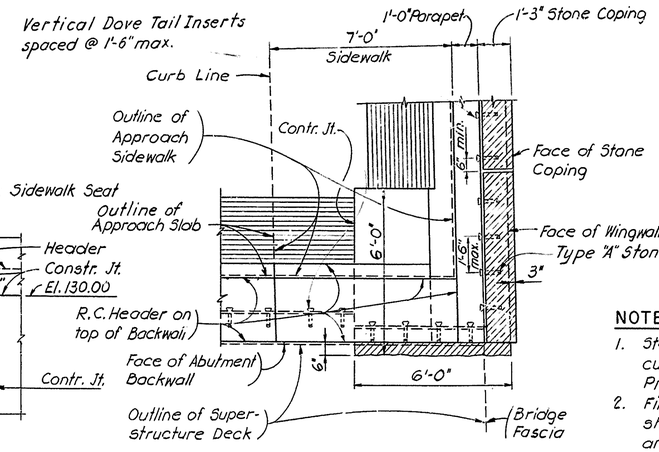


PLAN VIEW H-H

## NOTES:

1. Stone Coping and Stone facing shall be Granite Stone cut to the dimensions shown and as per Special Provisions.
2. Finish and Color of Coping and Facing Stones shall resemble the facing of the Existing Piers and shall be in accordance with Special Provisions.
3. All horizontal mortar joints shall be continuous, all vertical joints shall be placed at random. Joint between top Facing Stones and Coping Stones of Wingwalls shall follow the grade.
4. Stone Coping and Facing shall be anchored with Type "A" Stone Anchors, except that at the bottom mortar joint Type "B" Stone Anchors shall be used. Each Facing Stone shall be anchored by not less than 4 Anchors, 2 top & 2 bottom each Stone. Each Coping Stone shall be anchored by not less than 4 Type "A" Stone Anchors at bottom of Stone
5. Inserts and Dove Tail Stone Anchors shown are as manufactured by Hohmann & Bernard, Inc. 30 Rasons Court, Hauppauge, N.Y. 11787, or approved equal.
6. Cost of Inserts and Stone Anchors shall be included in Pay Item for Stone Masonry.

⚠1 UTILITIES NOT SHOWN.
DETAILS AND LOCATION OF 4 - 6 in. DIA. ELECTRICAL STEEL CONDUITS AND 12 in. DIA. GAS MAIN AND THEIR SUPPORTS ARE SHOWN ON SHEETS 81A, 81B AND 81C.

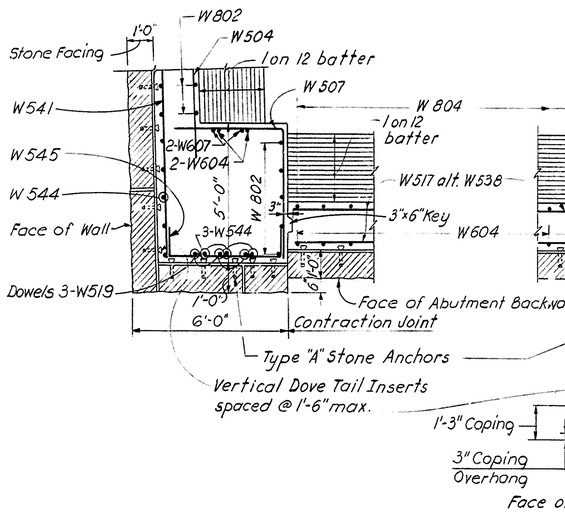


SECTION M-M

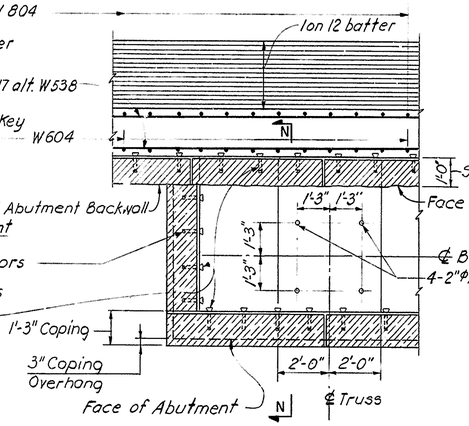


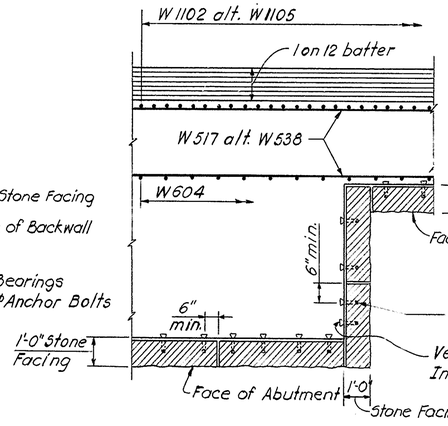


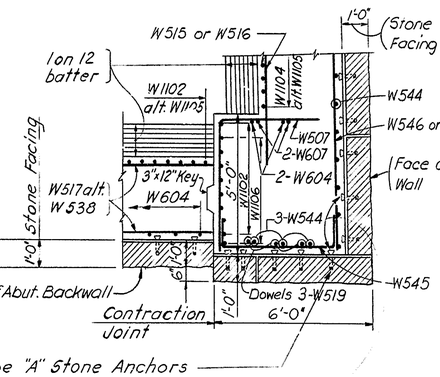


## REFFERENCES:

| | SHEET NO. |
|---|---|
| West Abutment & Wingwalls | 22 |
| Architectural Elevations & Details | 26 |
| Fence Details | 81 |
| Approach Slab Details | 35 |
| Approach Sidewalk Details | 26 |
| Deck Joint Details | 60 |
| Bearing and Anchor Bolt Detail | 62 |

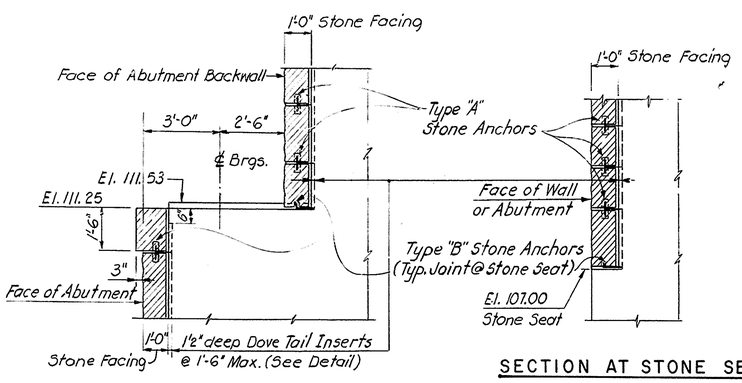


SECTION N-N

SECTION AT STONE SEAT

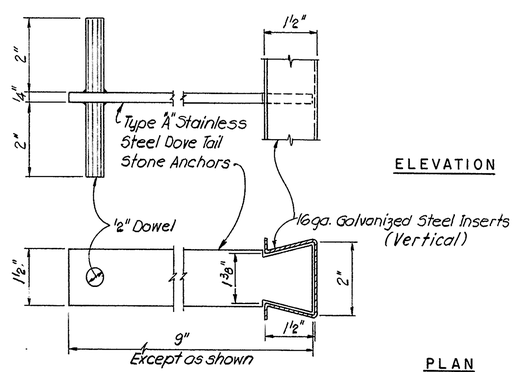


TYPE "A" STONE ANCHOR

ELEVATION

PLAN

Half Scale

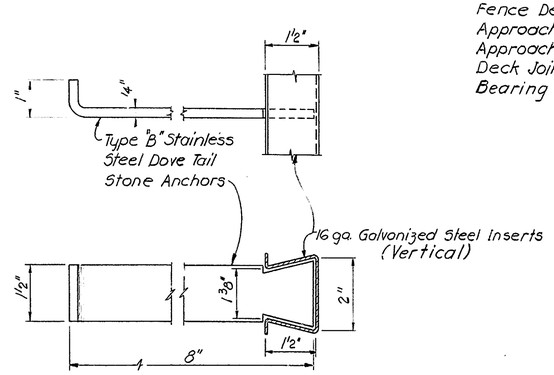


TYPE "B" STONE ANCHOR

STONE ANCHOR & INSERT DETAILS

DELAWARE
DEPARTMENT OF TRANSPORTATION
DIVISION OF HIGHWAYS

WEST ABUTMENT & WINGWALLS
SECTIONS & STONE MASONRY
DETAILS

| D. T. C. | SCALE 3/8" = 1'-0" AND AS SHOWN | APPROVED BY W. E. Wolf BRIDGE ENGINEER |
|---|---|---|

ROBERT C. McDONALD REGISTERED NO. 3069 STATE OF DELAWARE PROFESSIONAL ENGINEER

| COUNTY | CONTRACT | P.B.A. REG. NO. | STATE | FED. AID PROJECT NO. | SHEET NO. | TOTAL SHEETS |
|---|---|---|---|---|---|---|
| NEW CASTLE | 79-071-02 | 2 | DEL. | M-1191 (1) | 28 | 112 |

# AUGUSTINE BRIDGE RECONSTRUCTION

| NO. | REVISIONS | BY | DATE |
|---|---|---|---|
| | | | |

## BAR SCHEDULE

| MARK | TYPE | NO. REQ'D | LENGTH | DIMENSIONS A | B | C | D | | WEIGHT EPOXY COATED | UNCOATED |
|---|---|---|---|---|---|---|---|---|---|---|
| WEST ABUTMENT & WINGWALLS | | | | | | | | | | |
| W501 | Str. | 28 | 29-0 | | | | | | | 847 |
| W502 | Str. | 38 | 30-0 | | | | | | | 1189 |
| W503 | Str. | 18 | 35-11 | | | | | | | 674 |
| W504 | Str. | 24 | 27-6 | | | | | | | 688 |
| W505 | Str. | 3 | 26-0 | | | | | | | 81 |
| W506 | 4 | 60 | 9-6 | 3-0 | 6-6 | | | | | 595 |
| W507 | 4 | 58 | 8-11 | 4-3 | 4-8 | | | | | 539 |
| W508 | Str. | 3 | 7-3 | | | | | | | 23 |
| W509 | Str. | 30 | 20-0 | | | | | | | 626 |
| W510 | Str. | 26 | 22-0 | | | | | | | 597 |
| W511 | Str. | 30 | 22-6 | | | | | | | 704 |
| W512 | Str. | 34 | 13-0 | | | | | | | 461 |
| W513 | Str. | 24 | 36-6 | | | | | | | 914 |
| W514 | Str. | 12 | 14-6 | | | | | | | 181 |
| W515 | Str. | 27 | 26-0 | | | | | | | 732 |
| W516 | Str. | 3 | 18-0 | | | | | | | 56 |
| W517 | Str. | 58 | 19-10 | | | | | | | 1200 |
| W518 | Str. | 29 | 23-9 | | | | | | | 718 |
| W519 | Str. | 129 | 3-0 | | | | | | | 404 |
| W520 | Str. | 18 | 43-6 | | | | | | | 817 |
| W521 | 4 | 28 | 8-6 | 3-0 | 5-6 | | | | | 248 |
| W522 | Str. | 30 | 28-6 | | | | | | | 892 |
| W523(E) | Str. | 5 | 18-8 | | | | | | 97 | |
| W524 | Str. | 5 | 18-8 | | | | | | | 97 |
| W525(E) | 4 | 52 | 5-0 | 1-9 | 3-3 | | | | | 271 |
| W526(E) | Str. | 5 | 18-9 | | | | | | 98 | |
| W527 | Str. | 5 | 18-9 | | | | | | | 98 |
| W528(E) | Str. | 5 | 27-1 | | | | | | 141 | |
| W529 | Str. | 5 | 27-1 | | | | | | | 141 |
| W530(E) | Str. | 5 | 26-7 | | | | | | 139 | |
| W531 | Str. | 5 | 26-7 | | | | | | | 139 |
| W532(E) | Str. | 5 | 26-8 | | | | | | 139 | |
| W533 | Str. | 5 | 26-8 | | | | | | | 139 |
| W534(E) | Str. | 5 | 17-11 | | | | | | 93 | |
| W535 | Str. | 5 | 17-11 | | | | | | | 93 |
| W536 | 5 | 183 (G5) | 4-5 | 1-6 | 1-5 | 1-6 | | | | 843 |
| W537 | Str. | 38 | 36-0 | | | | | | | 1427 |
| W538 | Str. | 58 | 27-6 | | | | | | | 1664 |
| W539 | Str. | 24 | 12-0 | | | | | | | 300 |
| W540 | Str. | 40 | 26-9 | | | | | | | 1116 |
| W541 | Str. | 24 | 30-6 | | | | | | | 763 |
| W542 | Str. | 3 | 28-3 | | | | | | | 88 |
| W543 | Str. | 3 | 9-9 | | | | | | | 31 |
| W544 | Str. | 38 | 29-9 | | | | | | | 1179 |
| W545 | 9 | 58 | 6-8 | 1-0 | 4-8 | 1-6 | | | | 403 |
| W546 | Str. | 27 | 28-3 | | | | | | | 796 |
| W547 | Str. | 3 | 20-3 | | | | | | | 63 |
| W548 | Str. | 22 | 20-9 | | | | | | | 476 |
| W549 | Str. | 9 | 29-6 | | | | | | | 277 |
| W550(E) | Str. | 2 | 19-10 | | | | | | 41 | |
| W551(E) | Str. | 2 | 27-6 | | | | | | 57 | |
| | | | | | | Sub | Total | #5 | 805 | 23590 |
| W701 | Str. | 153 | 10-0 | | | | | | | 3127 |
| W702 | 1 | 59 | 13-10 | 0-10 | 13-0 | | | | | 1668 |
| W703 | Str. | 91 | 17-6 | | | | | | | 3255 |
| W704 | 4 | 26 | 12-6 | 4-3=0 | 8-6 9-6 | | | | | 664 |
| W705 | Str. | 20 | 18-6 | | | | | | | 756 |

| MARK | TYPE | NO. REQ'D | LENGTH | DIMENSIONS A | B | C | D | | WEIGHT EPOXY COATED | UNCOATED |
|---|---|---|---|---|---|---|---|---|---|---|
| W706 | Str. | 24 | 12-0 | | | | | | | 589 |
| W707 | 8 | 7 | 17-6 to 23-9 | 0-7½ | 5-3 to 8-3 | 2-8 | 3-1 to 3-4 | | | 295 |
| W708 | 8 | 7 | 11-7 to 17-10 | 0-7½ | 2-2 to 5-2 | 2-11 | 3-1 to 3-4 | | | 210 |
| W709 | 5 | 7 | 10-5 | 4-6 | 1-5 | 4-6 | | | | 149 |
| W710 | 5 | 7 | 16-5 | 7-6 | 1-5 | 7-6 | | | | 235 |
| | | | | | | Sub | Total | #7 | | 10948 |
| W801 | 1 | 87 | 14-11 | 0-11 | 14-0 | | | | | 3465 |
| W802 | Str. | 32 | 20-6 | | | | | | | 1752 |
| W803 | 1 | 22 | 10-0 | 0-11 | 9-1 | | | | | 587 |
| W804 | Str. | 46 | 18-3 | | | | | | | 2241 |
| W805 | 1 | 23 | 12-11 | 0-11 | 12-0 | | | | | 793 |
| W806 | Str. | 9 | 29-6 | | | | | | | 709 |
| | | | | | | Sub | Total | #8 | | 9547 |
| W901 | 2 | 29 | 15-6 | 1-3 | 6-2 | 2-11 | 5-2 | | | 1528 |
| W902 | 1 | 29 | 13-6 | 1-3 | 12-3 | | | | | 1331 |
| W903 | 1 | 130 | 19-9 | 1-3 | 18-6 | | | | | 8730 |
| W904 | 1 | 23 | 17-3 | 1-3 | 16-0 | | | | | 1349 |
| W905 | Str. | 29 | 9-0 | | | | | | | 887 |
| W906 | 2 | 22 | 17-0 | 1-3 | 5-10 | 2-11 | 7-0 | | | 1272 |
| | | | | | | Sub | Total | #9 | | 15097 |
| W1001 | 2 | 39 | 17-1 | 1-5 | 6-4 | 2-11 | 6-5 | | | 2867 |
| W1002 | 1 | 40 | 16-8 | 1-5 | 15-3 | | | | | 2869 |
| W1003 | Str. | 39 | 9-9 | | | | | | | 1636 |
| | | | | | | Sub | Total | #10 | | 7372 |
| W1101 | 2 | 46 | 22-7 | 1-7 | 9-7 | 2-11 | 8-6 | | | 5519 |
| W1102 | 1 | 46 | 15-10 | 1-7 | 14-3 | | | | | 3870 |
| W1103 | 2 | 22 | 19-7 | 1-7 | 6-7 | 2-11 | 8-6 | | | 2289 |
| W1104 | 1 | 31 | 16-10 | 1-7 | 15-3 | | | | | 2772 |
| W1105 | Str. | 78 | 13-9 | | | | | | | 5698 |
| W1106 | 3 | 10 | 20-1 | 1-7 | 8-3 | 10-3 | | | | 1067 |
| | | | | | | Sub | Total | #11 | | 21215 |
| W601(E) | 6 | 143 | 6-7 | 0-9 | 2-8 | 0-9 | 2-5 | | 1414 | |
| W602(E) | Str. | 143 | 3-6 | | | | | | 752 | |
| W603(E) | 7 | 143 | 6-0 | 0-9 | 0-7 | 0-9 | 3-11 | | 1289 | |
| W604 | Str. | 50 | 28-6 | | | | | | | 2140 |
| W605 | 5 | 43 | 14-4 | 5-6 | 8-0 | 0-10 | | | | 926 |
| W606 | Str. | 43 | 7-6 | | | | | | | 484 |
| W607 | Str. | 50 | 3-0 | | | | | | | 225 |
| | | | | | | Sub | Total | #6 | 3455 | 3775 |
| | | Total | West | Abutment | & | Wingwalls | | | 4260 | 91544 |

| MARK | TYPE | NO. REQ'D | LENGTH | DIMENSIONS A | B | C | D | | WEIGHT EPOXY COATED | UNCOATED |
|---|---|---|---|---|---|---|---|---|---|---|

## BAR BENDING DIAGRAM

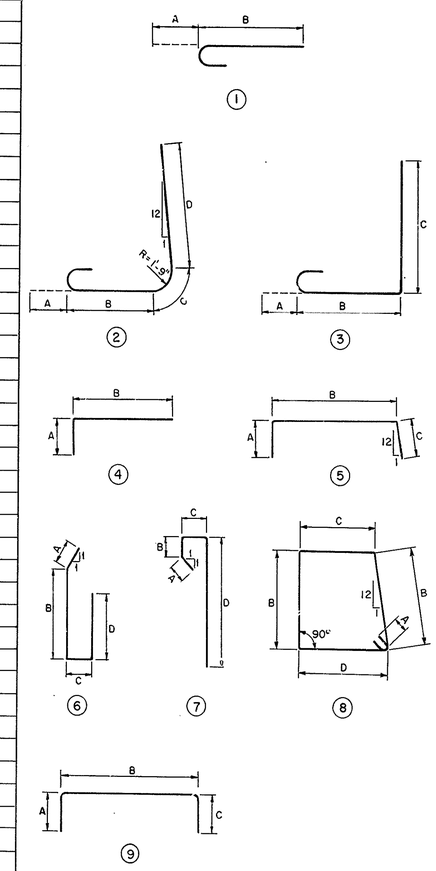


DELAWARE
DEPARTMENT OF TRANSPORTATION
DIVISION OF HIGHWAYS

WEST ABUTMENT REINFORCING
BAR SCHEDULE

| D. T. C. | SCALE | APPROVED BY |
|---|---|---|
| | NONE | |

ROBERT C. McDOWELL REGISTERED PROFESSIONAL ENGINEER NO. 9069 STATE OF DELAWARE

AS BUILT

| COUNTY | CONTRACT | P.P.A. REG. NO. | STATE | FED. AID PROJECT NO. | SHEET NO. | TOTAL SHEETS |
|---|---|---|---|---|---|---|
| NEW CASTLE | 79-071-02 | 2 | DEL. | M-1191(1) | 29 | 112 |

# AUGUSTINE BRIDGE RECONSTRUCTION

| NO. | REVISIONS | BY | DATE |
|---|---|---|---|
| 1 | UTILITY INSTALLATION AND LOCATION | SWP | 9/20/79 |
| 2 | PLAN VIEW ~ SHOWING PLAQUE LOCATION | T.E.E. | 7/14/80 |

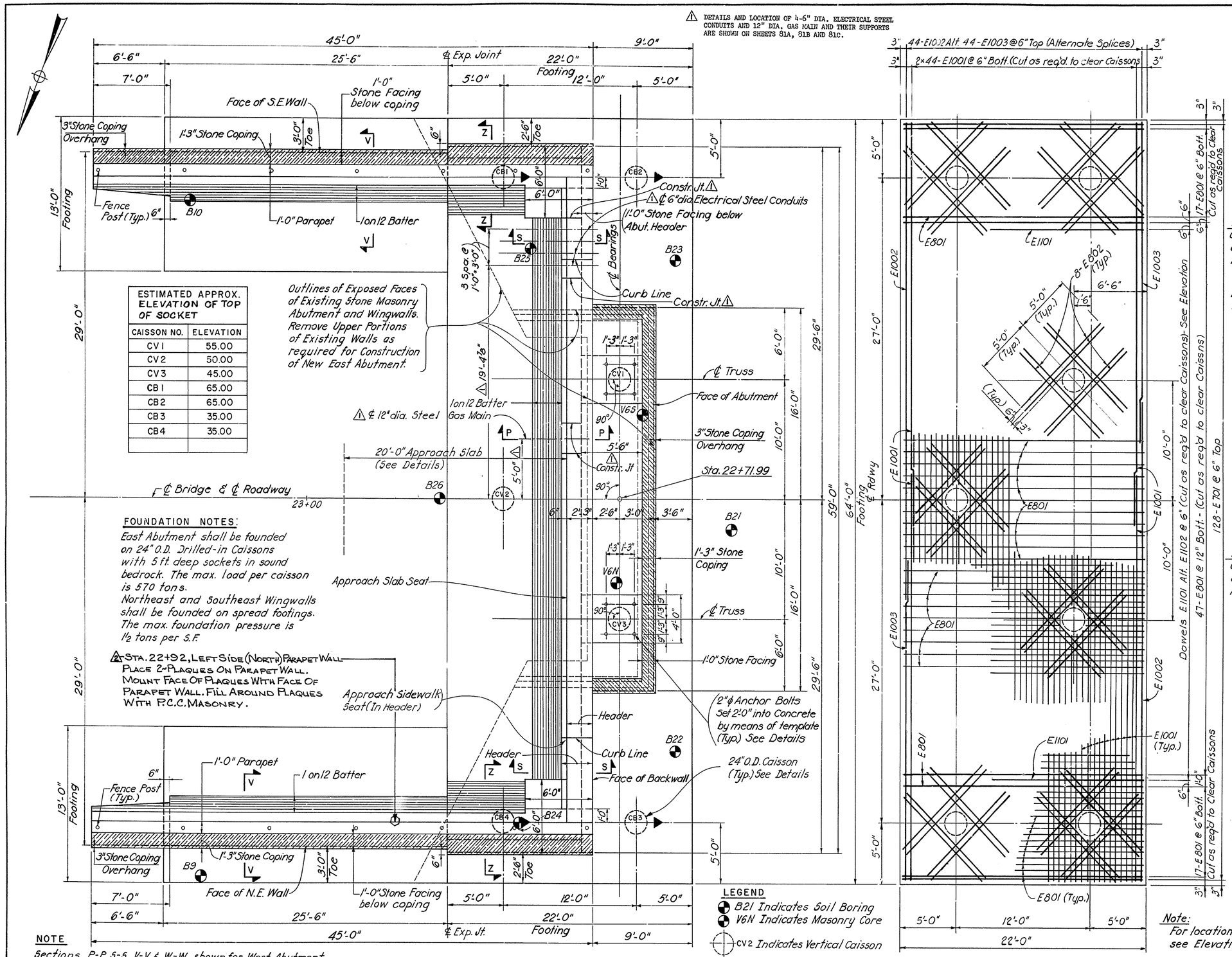


| ESTIMATED APPROX. ELEVATION OF TOP OF SOCKET | |
|---|---|
| CAISSON NO. | ELEVATION |
| CV1 | 55.00 |
| CV2 | 50.00 |
| CV3 | 45.00 |
| CB1 | 65.00 |
| CB2 | 65.00 |
| CB3 | 35.00 |
| CB4 | 35.00 |
| | |

**FOUNDATION NOTES:**

East Abutment shall be founded on 24" O.D. Drilled-in Caissons with 5 ft. deep sockets in sound bedrock. The max. load per caisson is 570 tons.
Northeast and Southeast Wingwalls shall be founded on spread footings. The max. foundation pressure is 1½ tons per S.F.

STA. 22+92, LEFT SIDE (NORTH) PARAPET WALL
PLACE 2-PLAQUES ON PARAPET WALL. MOUNT FACE OF PLAQUES WITH FACE OF PARAPET WALL. FILL AROUND PLAQUES WITH F.C.C. MASONRY.

**NOTE**

Sections P-P, S-S, V-V & W-W shown for West Abutment apply to East Abutment except for Bar Reinforcement Marks. For Bar Reinforcement Marks for East Abutment and SE & NE Wingwalls see Sheet Nos. 30, 31 & 32.

**PLAN**

**LEGEND**

- B21 Indicates Soil Boring
- V6N Indicates Masonry Core
- CV2 Indicates Vertical Caisson
- CB1 Indicates Caisson battered 1 to 6 in direction of arrow. Total Number of Caissons : 7

**ABUTMENT FOOTING REINFORCEMENT PLAN**

Note: For location of Dowels see Elevation

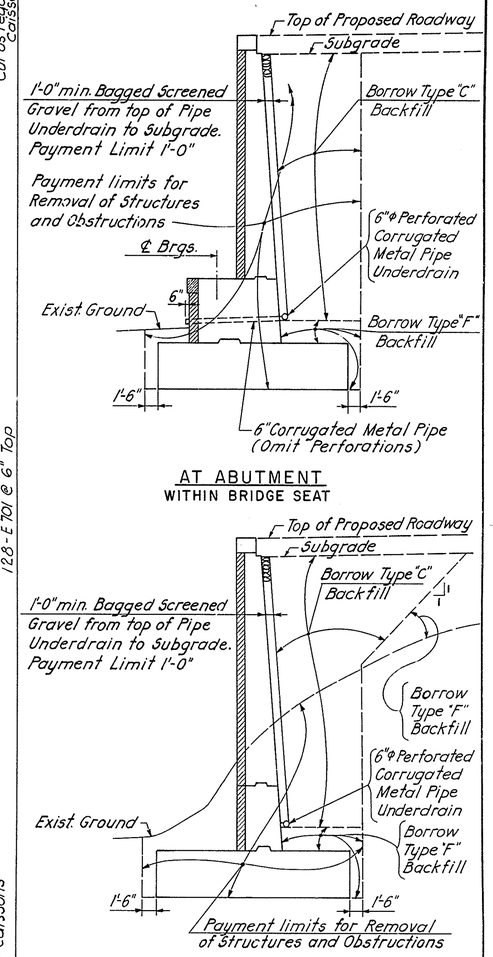


**AT ABUTMENT**
WITHIN BRIDGE SEAT

**AT ABUTMENT**
OUTSIDE BRIDGE SEAT

**PAYMENT LIMITS FOR REMOVAL OF STRUCTURES & OBSTRUCTIONS & BACKFILL AT EAST ABUTMENT**

Work this Dwg. with Sheet No. 30

DELAWARE
DEPARTMENT OF TRANSPORTATION
DIVISION OF HIGHWAYS

EAST ABUTMENT & WINGWALLS
PLAN

| D. | SCALE | APPROVED BY: |
|---|---|---|
| T. | 1/4" = 1'-0" | H. C. McDonald |
| C. | | BRIDGE ENGINEER |

HERBERT C. McDONALD REGISTERED ENGINEER NO. 3059

| COUNTY | CONTRACT | F.B.A. REG. NO | STATE | FED. AID PROJECT NO. | SHEET NO | TOTAL SHEETS |
|---|---|---|---|---|---|---|
| NEW CASTLE | 79-071-02 | 2 | DEL | M-1191(1) | 30 | 112 |

# AUGUSTINE BRIDGE RECONSTRUCTION

| NO. | REVISIONS | BY | DATE |
|---|---|---|---|
| 1 | UTILITY INSTALLATION AND LOCATION | SMT | 9/20/79 |

⚠Note A: Move Reinf. Bars in way of Steel Pipe Sleeves

NOTE: All Footing Reinforcement shall have 3" min. Cover.
All Stem Reinforcement shall have 2" min. Cover.
All Parapet Reinforcement shall have 1½" min. Cover.

⚠ DETAILS AND LOCATION OF 4-6" DIA. ELECTRICAL STEEL CONDUITS AND 12" DIA. GAS MAIN AND THEIR SUPPORTS ARE SHOWN ON SHEETS 81A, 81B AND 81C.

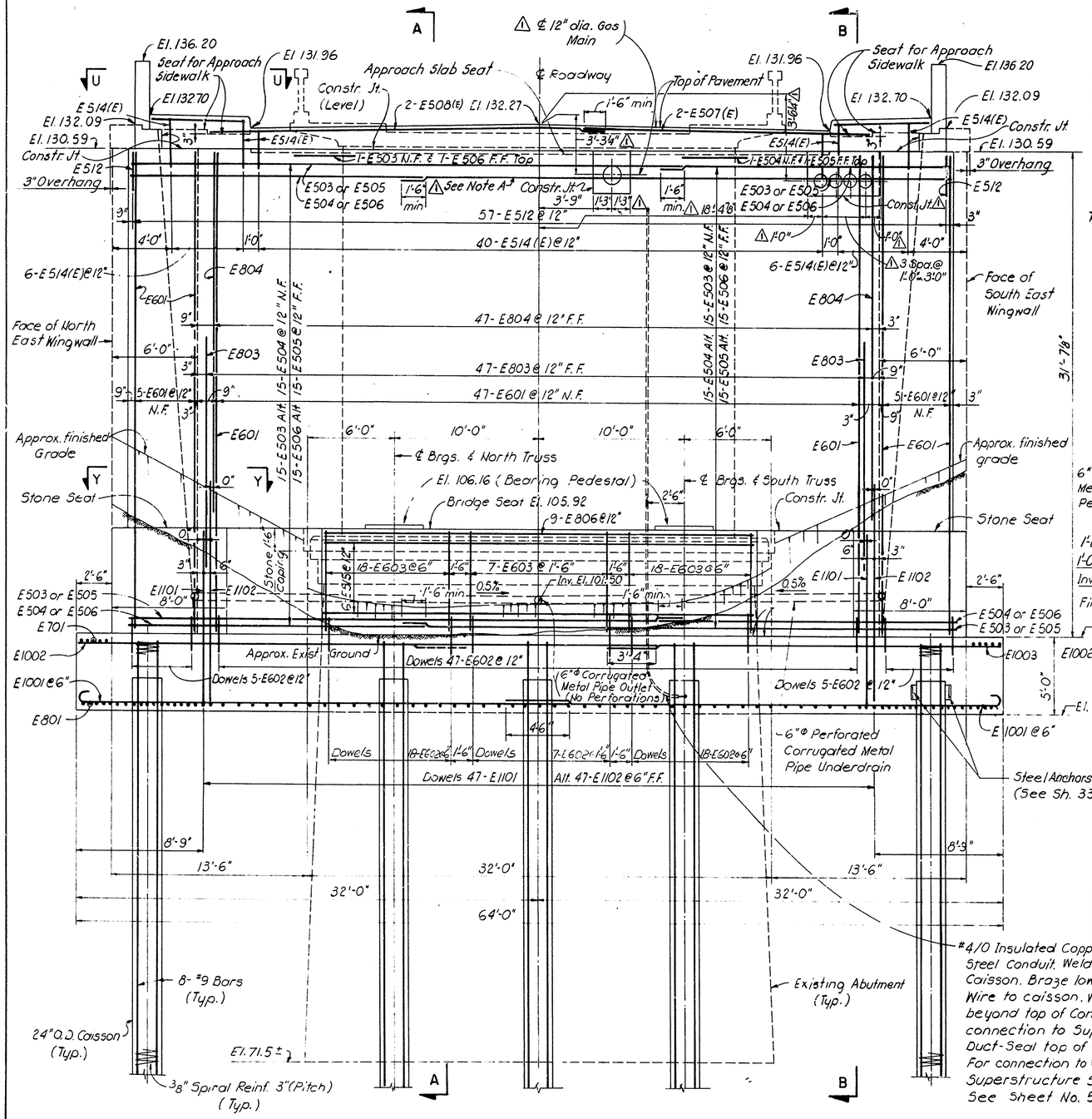


ELEVATION

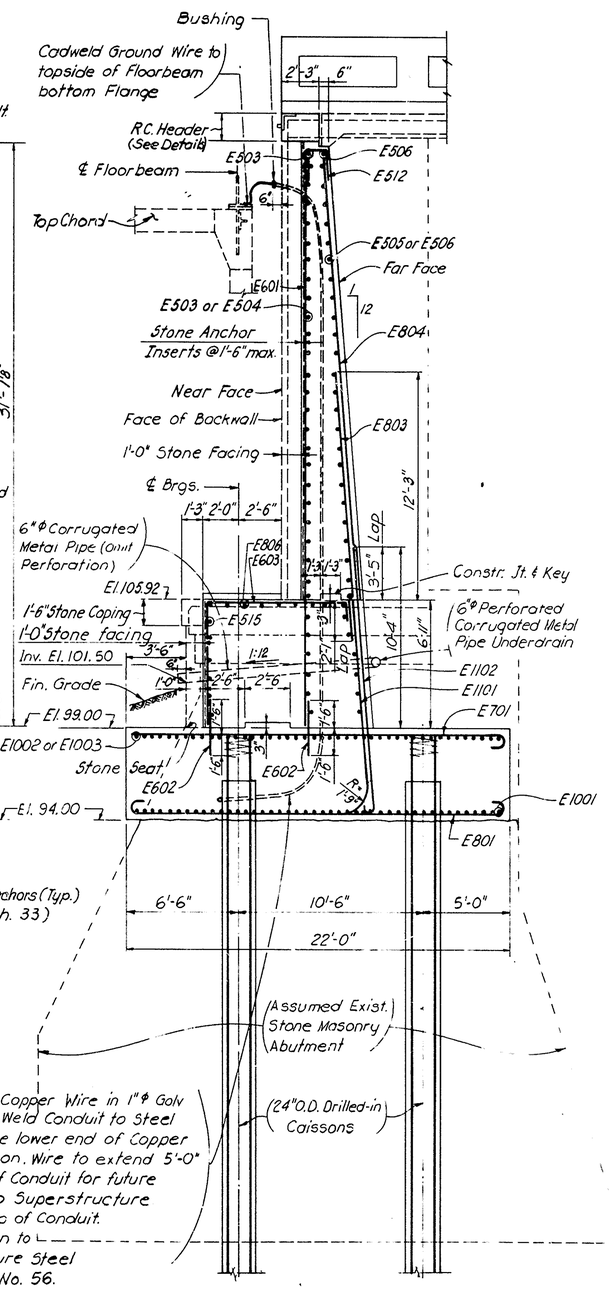


SECTION A-A

## CONSTRUCTION PROCEDURE FOR EAST ABUTMENT & WINGWALLS

1. EXCAVATE TO THE LEVEL OF THE BOTTOM OF NEW ABUTMENT FOOTING AND REMOVE UPPER PARTS OF THE EXISTING STONE MASONRY ABUTMENT AND WINGWALLS SO THAT NO EXISTING STONE MASONRY PROJECTS ABOVE THE BOTTOM OF NEW FOOTING AT EL. 94.00
2. FULLY INSTALL ALL 24" DIA. CAISSONS.
3. THOROUGHLY CLEAN EXPOSED EXISTING STONE MASONRY UNDER NEW FOOTING AND INSTALL REINFORCEMENT FOR THE NEW FOOTING.
4. PLACE CONCRETE FOR THE NEW ABUTMENT FOOTING DIRECTLY ON TOP OF EXISTING STONE MASONRY. NO SEPARATE PAYMENT SHALL BE MADE FOR FOOTING CONCRETE BELOW EL. 94.00.
5. CONSTRUCT ABUTMENT STEM WITHIN LIMITS OF ABUTMENT FOOTING. INSTALL UNDERDRAIN & BAGGED SCREENED GRAVEL AND BACKFILL TO THE BOTTOM OF WINGWALL FOOTINGS AT EL. 112.00.
6. THOROUGHLY FILL AND COMPACT TO 95% OR MORE OF THE LABORATORY MAX. DENSITY OF THE BACKFILL MATERIAL ALL DISTURBED AREAS UNDER THE WINGWALL FOOTINGS AS ORDERED BY THE ENGINEER TO EL. 112.00.
7. CONSTRUCT WINGWALLS, INSTALL UNDERDRAINS & BAGGED SCREENED GRAVEL AND BACKFILL TO THE LEVEL OF SUBGRADE OF ROADWAY & SIDEWALKS. ALL LOST MATERIAL OUTSIDE THE VERTICAL PAY LIMITS FOR SECT. 210 SHALL BE REPLACED AND COMPACTED BY THE CONTRACTOR AT HIS OWN EXPENSE.

## REFERENCES

| | SHEET NO. |
|---|---|
| Sections U-U, Y-Y & Northeast Wingwall | 32 |
| Abutment Header Details & Sections P-P, S-S, V-V & W-W | 20 |
| Anchor Bolt Details | 62 |
| Architectural Elevations, Section Z-Z & Caisson Details | 33 |
| Reinforcing Steel Bar Schedule | 34 |
| Approach Slab Details | 35 |
| Southeast Wingwall | 31 |

DELAWARE
DEPARTMENT OF TRANSPORTATION
DIVISION OF HIGHWAYS

EAST ABUTMENT
ELEVATION AND SECTION

D
T
C.

SCALE ¼" = 1'-0"

APPROVED H. C. McDowell
BRIDGE ENGINEER

ROBERT C. McDOWELL REGISTERED PROFESSIONAL ENGINEER NO. 3069 DELAWARE

| COUNTY | CONTRACT | P & A REG NO | STATE | FED AID PROJECT NO. | SHEET NO | TOTAL SHEETS |
|---|---|---|---|---|---|---|
| NEW CASTLE | 79-071-02 | 2 | DEL | M-1191 (1) | 31 | 112 |

# AUGUSTINE BRIDGE RECONSTRUCTION

| NO. | REVISIONS | BY | DATE |
|---|---|---|---|
| | | | |

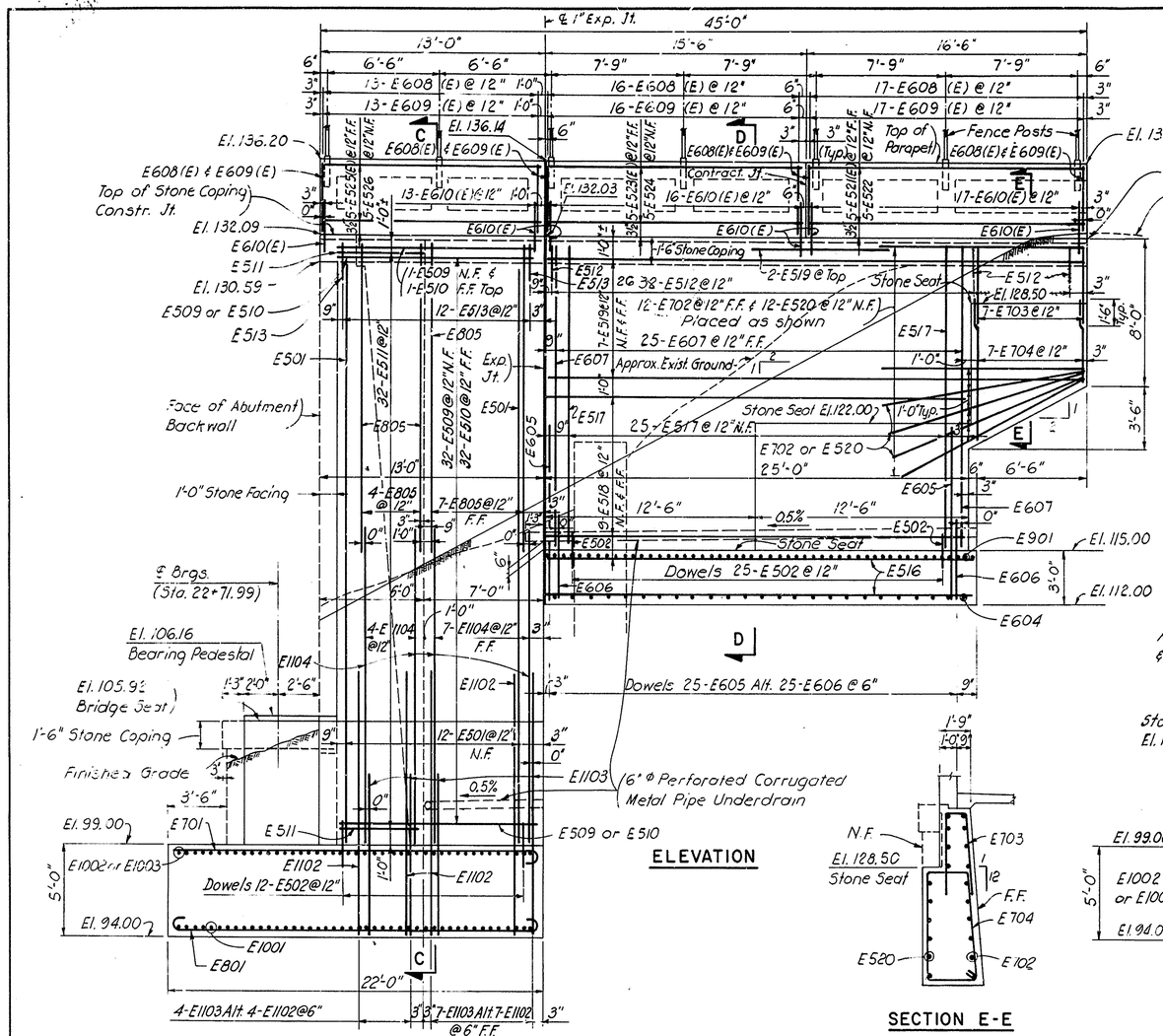


ELEVATION

SECTION E-E

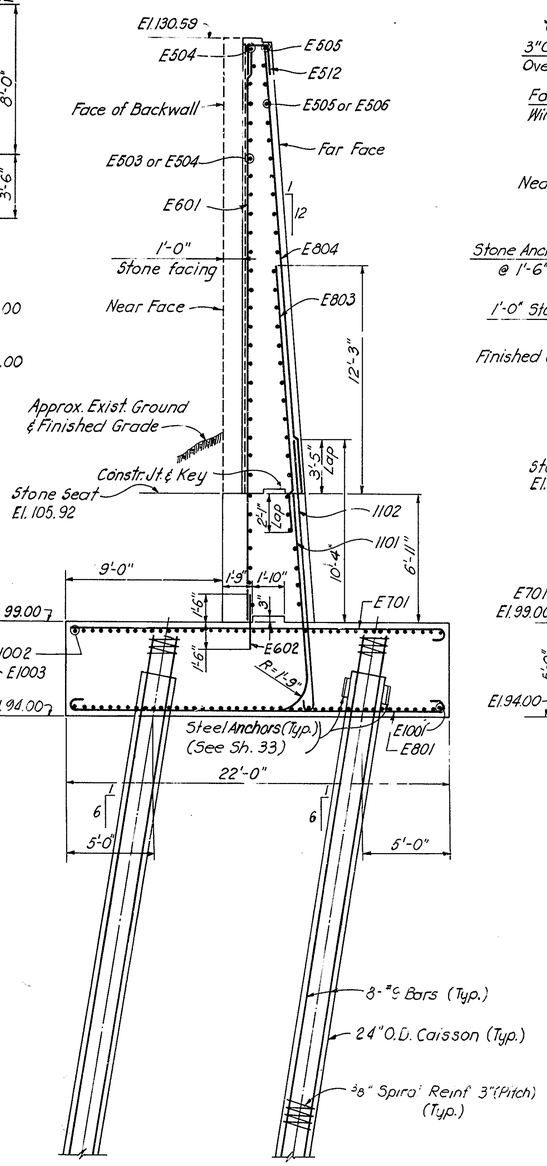


SECTION B-B

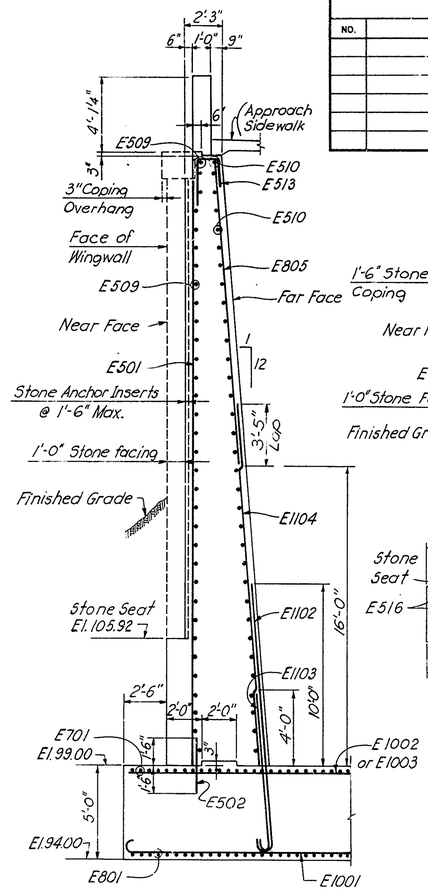


SECTION C-C

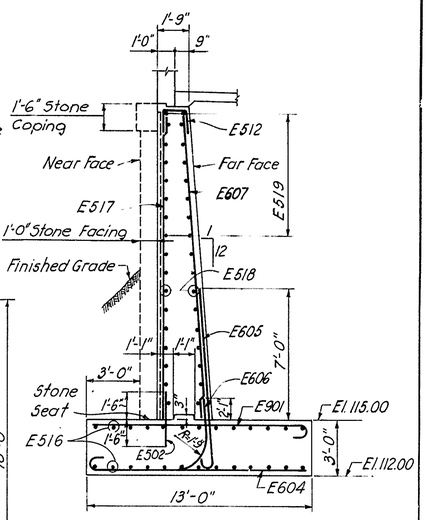


SECTION D-D

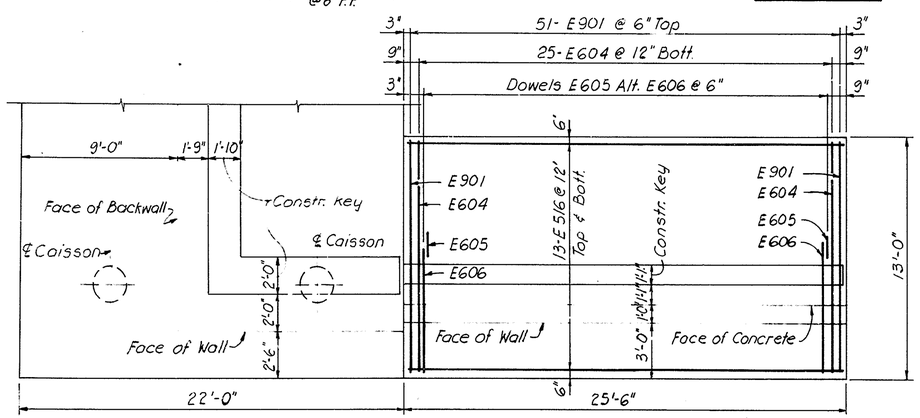


Note: For Abutment Footing Reinf. Plan See Sht. # 29

FOOTING REINFORCEMENT PLAN

Work this Dwg. with Sheets No. 29, 30 & 32

DELAWARE
DEPARTMENT OF TRANSPORTATION
DIVISION OF HIGHWAYS

SOUTHEAST WINGWALL ELEVATION, FOOTING PLAN AND SECTIONS

D
T
C.

SCALE 1/4" = 1'-0"

APPROVED

ROBERT C. McDOWELL REGISTERED NO. 3069 BRIDGE ENGINEER

AS BUILT

| COUNTY | CONTRACT | P.B.A. REG. NO. | STATE | FED. AID PROJECT NO. | SHEET NO. | TOTAL SHEETS |
|---|---|---|---|---|---|---|
| NEW CASTLE | 79-071-02 | 2 | DEL | M-1191 (1) | 32 | 112 |

# AUGUSTINE BRIDGE RECONSTRUCTION

| NO. | REVISIONS | BY | DATE |
|---|---|---|---|
| 1 | UTILITY INSTALLATION AND LOCATION | SMT | 9/20/79 |
| 2 | ELEVATION VIEW-SHOWING PLAQUE LOCATION | T.F.F. | 7/14/80 |

1 UTILITIES NOT SHOWN. DETAILS AND LOCATION OF 4 - 6 in. DIA. ELECTRICAL STEEL CONDUITS AND 12 in. DIA. GAS MAIN AND THEIR SUPPORTS ARE SHOWN ON SHEETS 81A, 81B AND 81C.

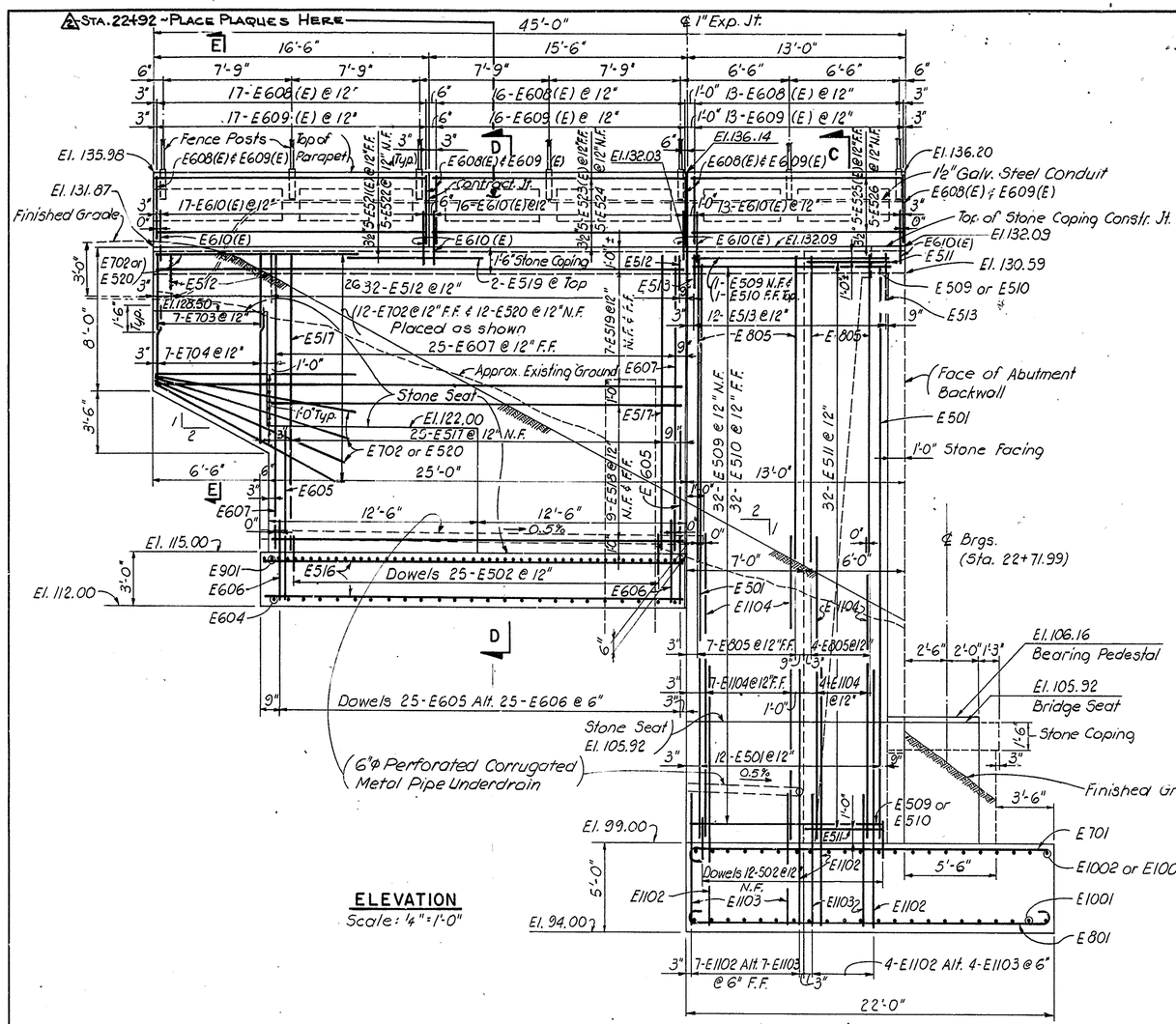


## ELEVATION
Scale: 1/4" = 1'-0"

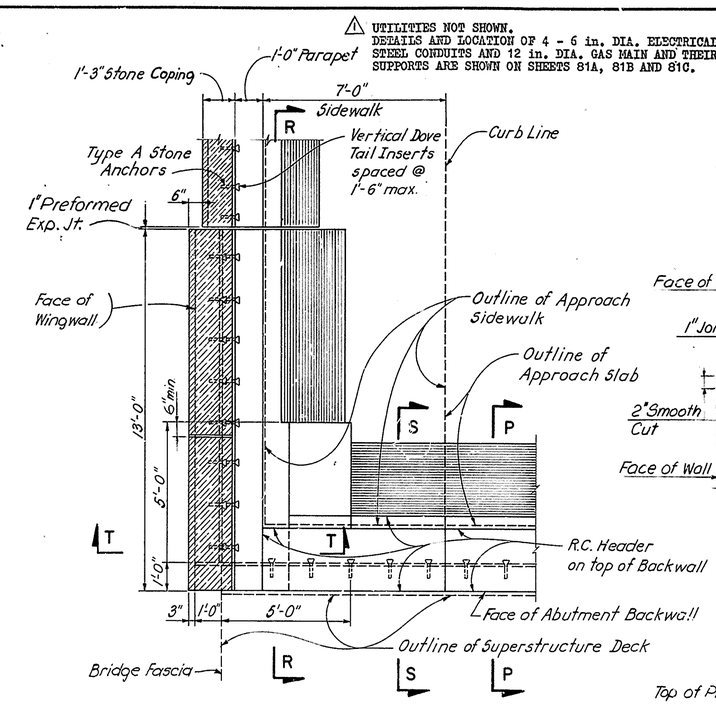


## PLAN VIEW U-U
Scale: 3/8" = 1'-0"

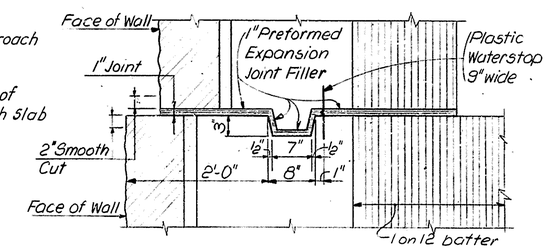


## STEM EXPANSION JOINT DETAIL
Scale: 1" = 1'-0"

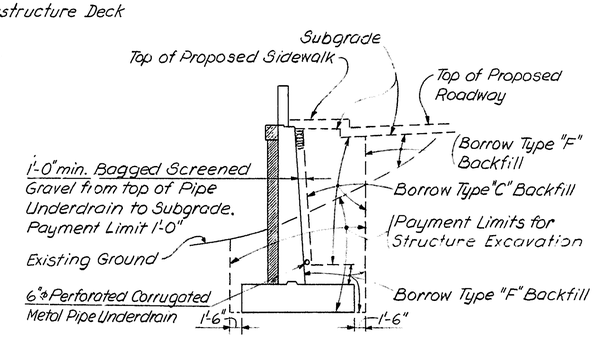


## PAYMENT LIMITS FOR EXCAVATION AND BACKFILL AT EAST ABUTMENT WINGWALLS

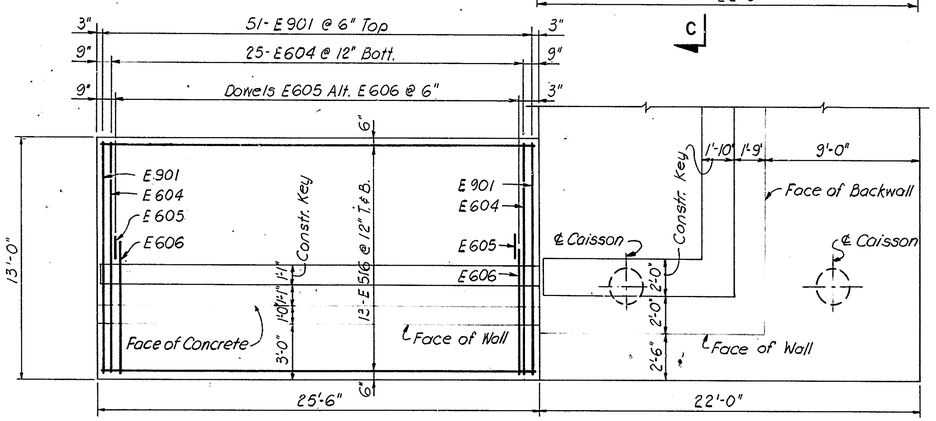


Note: For Abutment Footing Reinforcing Plan See Sht. No. 29

## FOOTING REINFORCEMENT PLAN
Scale: 1/4" = 1'-0"

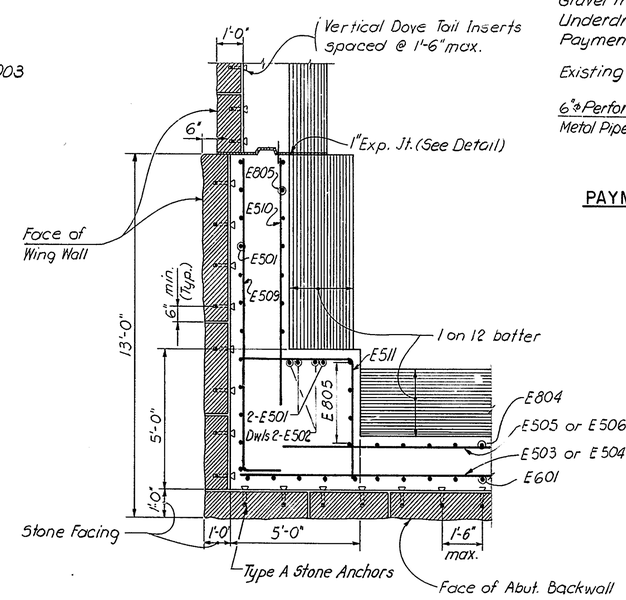


## SECTION Y-Y
Scale: 3/8" = 1'-0"

Work this Dwg. with Sheets No.s 27, 29, 30 & 31

DELAWARE
DEPARTMENT OF TRANSPORTATION
DIVISION OF HIGHWAYS

NORTHEAST WINGWALL ELEVATION, FOOTING AND DETAILS

| D. | SCALE | APPROVED |
|---|---|---|
| T. | AS NOTED | H.I.W. |
| C. | | BRIDGE ENGINEER |

RICHARD C. MCDOWELL REGISTERED PROFESSIONAL ENGINEER No. 3069 DELAWARE

AS BUILT

| COUNTY | CONTRACT | P. R. A. REG. NO. | STATE | FED. AID PROJECT NO. | SHEET NO. | TOTAL SHEETS |
|---|---|---|---|---|---|---|
| NEW CASTLE | 79-071-02 | 2 | DEL | M-1191(1) | 33 | 112 |

# AUGUSTINE BRIDGE RECONSTRUCTION

| NO. | REVISIONS | BY | DATE |
|---|---|---|---|
| 1 | UTILITY INSTALLATION AND LOCATION | SMT | 9/20/79 |
| 2 | HOT-POURED JOINT SEALER | C.H. | 12/12/79 |

1 DETAILS AND LOCATION OF 4-6" DIA. ELECTRICAL STEEL CONDUITS AND 12" DIA. GAS MAIN AND THEIR SUPPORTS ARE SHOWN ON SHEETS 81A, 81B AND 81C.

2 NOTE: Hot Poured Joint Sealer (3/4" Deep x 1/2" Wide) Shall Be Poured In The Joint Over Preformed Expansion Joint Filler (Typ.).

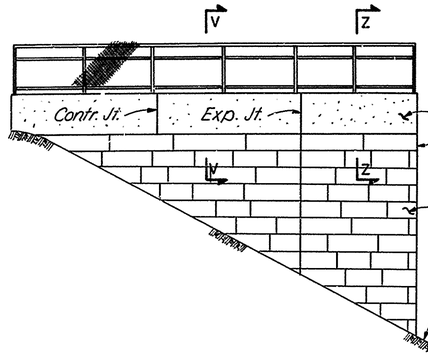


NORTHEAST WINGWALL ELEVATION
Scale: 1/8" = 1'-0"

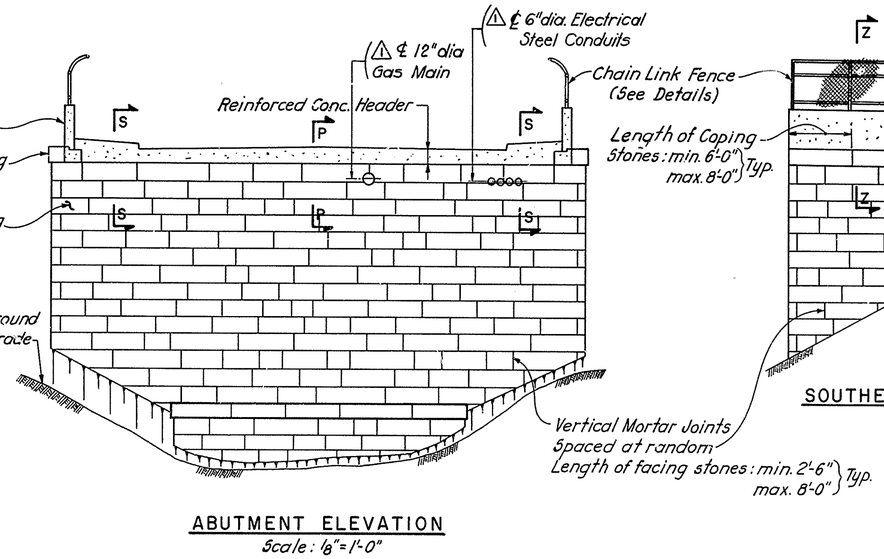


ABUTMENT ELEVATION
Scale: 1/8" = 1'-0"

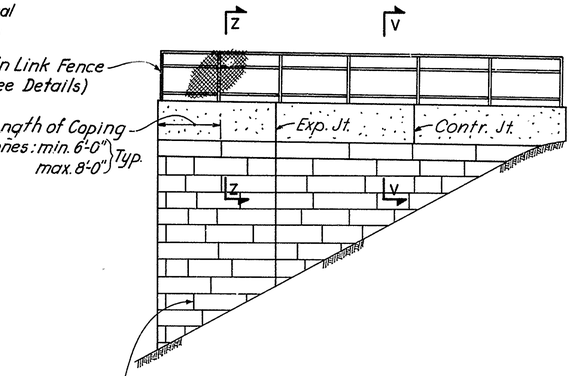


SOUTHEAST WINGWALL ELEVATION
Scale: 1/8" = 1'-0"

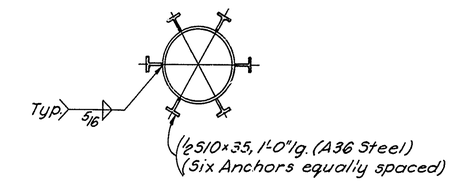


CAISSON ANCHOR DETAIL
Scale: 1/2" = 1'-0"

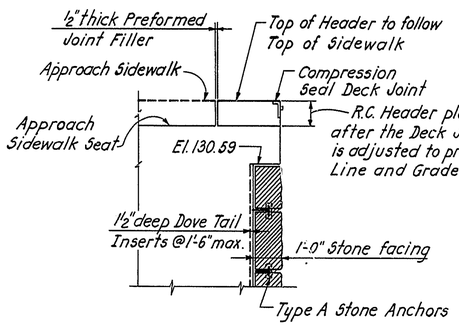


SECTION R-R
Scale: 3/8" = 1'-0"

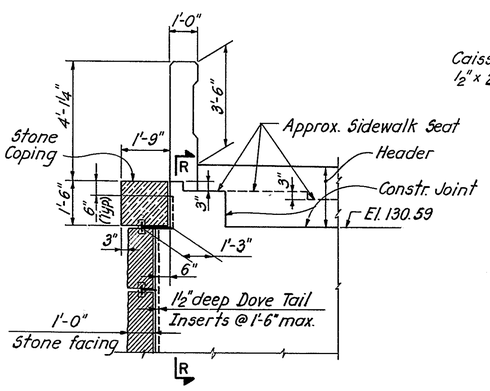


SECTION T-T
Scale: 3/8" = 1'-0"

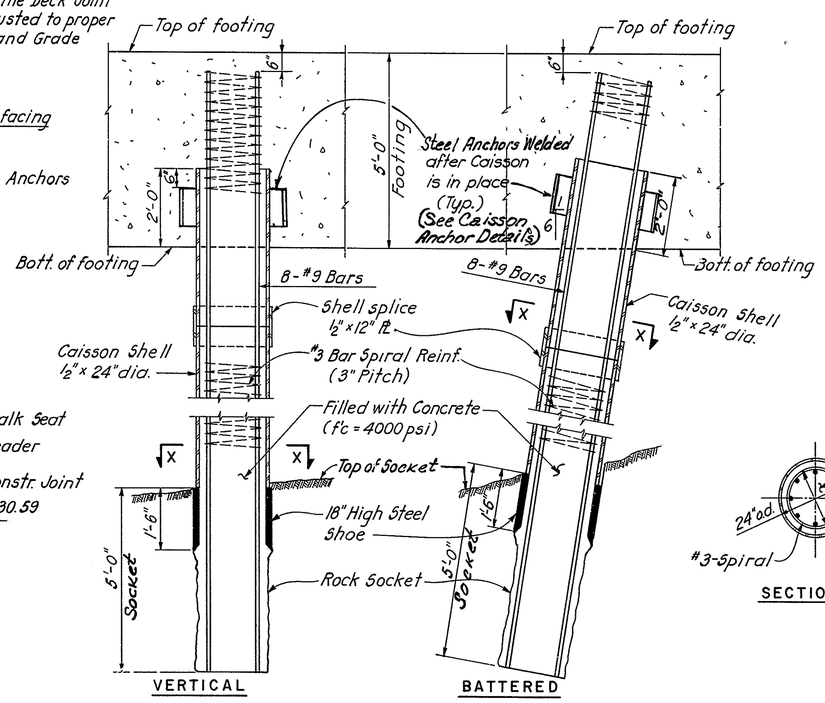


24" DIA. DRILLED-IN CAISSONS
Scale: 1/2" = 1'-0"

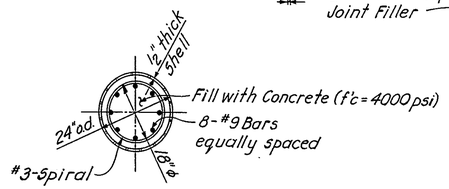


SECTION X-X

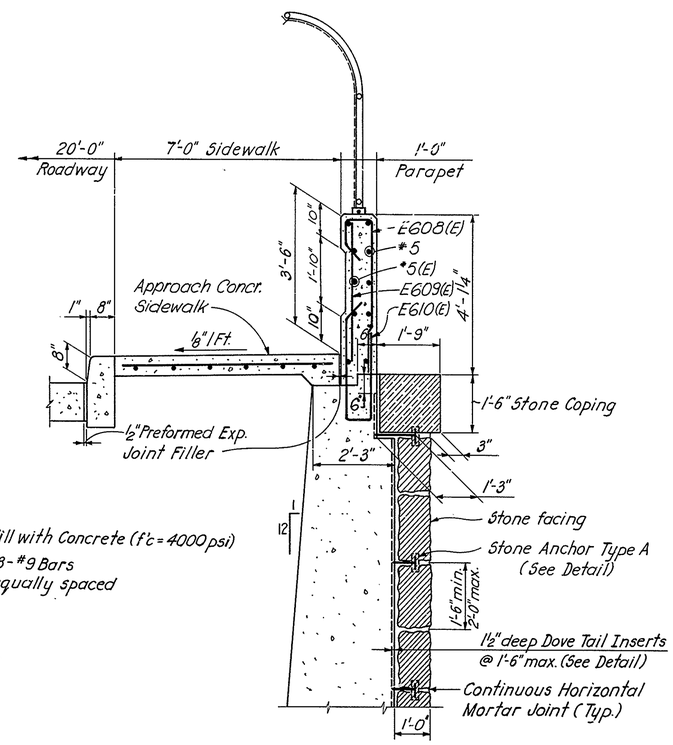


SECTION Z-Z
Scale: 1/2" = 1'-0"

Work this Dwg. with Sheets 29 thru 32

DELAWARE
DEPARTMENT OF TRANSPORTATION
DIVISION OF HIGHWAYS

EAST ABUTMENT & WINGWALLS
ARCHITECTURAL ELEVATIONS
AND DETAILS

| D. T. C. | SCALE As shown | APPROVED BY: NO. 3069 BRIDGE ENGINEER |
|---|---|---|

| COUNTY | CONTRACT | P.P.A. REG. NO. | STATE | FED. AID PROJECT NO. | SHEET NO. | TOTAL SHEETS |
|---|---|---|---|---|---|---|
| NEW CASTLE | 79-071-02 | 2 | DEL. | M-1191 (1) | 34 | 112 |

# AUGUSTINE BRIDGE RECONSTRUCTION

| NO. | REVISIONS | BY | DATE |
|---|---|---|---|
| | | | |

## BAR SCHEDULE

| MARK | TYPE | NO. REQ'D | LENGTH | DIMENSIONS A | B | C | D | | WEIGHT EPOXY COATED | UNCOATED |
|---|---|---|---|---|---|---|---|---|---|---|
| EAST ABUTMENT & WINGWALLS | | | | | | | | | | |
| E501 | Str. | 28 | 32-4 | | | | | | | 944 |
| E502 | Str. | 78 | 3-0 | | | | | | | 244 |
| E503 | Str. | 31 | 38-0 | | | | | | | 1229 |
| E504 | Str. | 31 | 20-0 | | | | | | | 647 |
| E505 | Str. | 31 | 36-0 | | | | | | | 1132 |
| E506 | Str. | 31 | 17-0 | | | | | | | 550 |
| E507(E) | Str. | 2 | 20-0 | | | | | | 42 | |
| E508(E) | Str. | 2 | 27-6 | | | | | | 57 | |
| E509 | 4 | 66 | 13-0 | 11-6 | 1-6 | | | | | 895 |
| E510 | Str. | 66 | 8-6 | | | | | | | 585 |
| E511 | 4 | 64 | 9-0 | 4-6 | 4-6 | | | | | 601 |
| E512 | 5 | 121 | 4-5 | 1-6 | 1-5 | 1-6 | | | | 557 |
| E513 | 5 | 24 | 6-11 | 3-0 | 1-5 | 1-6 | | | | 148 |
| E514(E) | 4 | 52 | 5-0 | 3-3 | 1-9 | | | | | 271 |
| E515 | Str. | 6 | 29-6 | | | | | | | 185 |
| E516 | Str. | 52 | 25-0 | | | | | | | 1356 |
| E517 | Str. | 50 | 16-6 | | | | | | | 860 |
| E518 | Str. | 36 | 24-6 | | | | | | | 920 |
| E519 | Str. | 32 | 31-6 | | | | | | | 1051 |
| E520 | Str. | 24 | 12-0 | | | | | | | 300 |
| E521(E) | Str. | 10 | 16-2 | | | | | | 169 | |
| E522 | Str. | 10 | 16-2 | | | | | | | 169 |
| E523(E) | Str. | 10 | 15-2 | | | | | | 158 | |
| E524 | Str. | 10 | 15-2 | | | | | | | 158 |
| E525(E) | Str. | 10 | 12-8 | | | | | | 132 | |
| E526 | Str. | 10 | 12-8 | | | | | | | 132 |
| | | | | | | Subtotal | | #5 | 558 | 12934 |
| E601 | Str. | 57 | 31-1 | | | | | | | 2661 |
| E602 | Str. | 100 | 3-0 | | | | | | | 451 |
| E603 | 5 | 43 | 16-6 | 6-8 | 8-10 | 1-0 | | | | 1066 |
| E604 | 1 | 50 | 13-2 | 0-8 | 12-6 | | | | | 989 |
| E605 | 1 | 50 | 10-5 | 0-8 | 9-9 | | | | | 782 |
| E606 | 3 | 50 | 12-0 | 0-8 | 5-4 | 2-11 | 3-1 | | | 901 |
| E607 | Str. | 50 | 16-6 | | | | | | | 1239 |
| E608(E) | 7 | 92 | 6-0 | 0-9 | 0-7 | 0-9 | 3-11 | | 829 | |
| E609(E) | Str. | 92 | 3-6 | | | | | | 484 | |
| E610(E) | 7 | 92 | 6-7 | 0-9 | 2-8 | 0-9 | 2-5 | | 910 | |
| | | | | | | Subtotal | | #6 | 2223 | 8089 |

| MARK | TYPE | NO. REQ'D | LENGTH | DIMENSIONS A | B | C | D | | WEIGHT EPOXY COATED | UNCOATED |
|---|---|---|---|---|---|---|---|---|---|---|
| E701 | 1 | 128 | 22-4 | 0-10 | 21-6 | | | | | 5843 |
| E702 | Str. | 24 | 12-0 | | | | | | | 589 |
| E703 | 5 | 14 | 10-5 | 4-6 | 1-5 | 4-6 | | | | 298 |
| E704 | 8 | 2sets of 7 | 15-9 to 23-0 | 0-7½ | 2-8 | 3-4 to 3-7 | 4-3 to 7-9 | | | 554 |
| | | | | | | Subtotal | | #7 | | 7284 |
| E801 | 2 | 81 | 23-4 | 0-11 | 21-6 | | | | | 5046 |
| E802 | Str. | 56 | 10-0 | | | | | | | 1495 |
| E803 | Str. | 47 | 14-4 | | | | | | | 1799 |
| E804 | Str. | 47 | 24-6 | | | | | | | 3075 |
| E805 | Str. | 22 | 16-4 | | | | | | | 959 |
| E806 | Str. | 9 | 29-6 | | | | | | | 709 |
| | | | | | | Subtotal | | #8 | | 13083 |
| E901 | 1 | 102 | 13-9 | 1-3 | 12-6 | Subtotal | | #9 | | 4769 |
| E1001 | 1 | 88 | 35-5 | 1-5 | 34-0 | | | | | 13411 |
| E1002 | Str. | 44 | 40-0 | | | | | | | 7573 |
| E1003 | Str. | 44 | 26-10 | | | | | | | 5080 |
| | | | | | | Subtotal | | #10 | | 26064 |
| E1101 | 3 | 47 | 26-11 | 1-7 | 12-6 | 2-11 | 9-11 | | | 6721 |
| E1102 | 1 | 69 | 16-8 | 1-7 | 15-1 | | | | | 6110 |
| E1103 | 1 | 22 | 10-4 | 1-7 | 8-9 | | | | | 1208 |
| E1104 | Str. | 22 | 19-5 | | | | | | | 2270 |
| | | | | | | Subtotal | | #11 | | 16309 |
| | | | | | | | Total | | 2781 | 88532 |

| MARK | TYPE | NO. REQ'D | LENGTH | DIMENSIONS A | B | C | D | | WEIGHT |
|---|---|---|---|---|---|---|---|---|---|

## BAR BENDING DIAGRAM

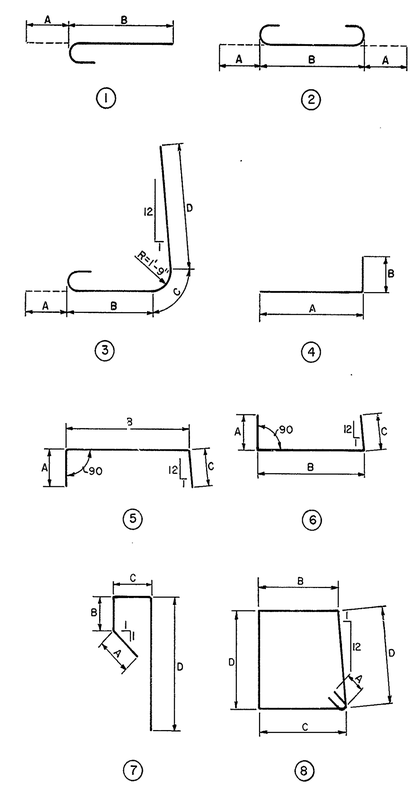


DELAWARE
DEPARTMENT OF TRANSPORTATION
DIVISION OF HIGHWAYS

EAST ABUTMENT REINFORCING
BAR SCHEDULE

| D. T. C. | SCALE NONE | APPROVED BY ROBERT C. McDOWELL REGISTERED — NO. 3069 BRIDGE ENGINEER |
|---|---|---|

| COUNTY | CONTRACT | P. R. A. REG. NO | STATE | FED. AID PROJECT NO. | SHEET NO. | TOTAL SHEETS |
|---|---|---|---|---|---|---|
| NEW CASTLE | 79-071-02 | 2 | DEL | M-1191(1) | 35 | 112 |

# AUGUSTINE BRIDGE RECONSTRUCTION

| NO. | REVISIONS | BY | DATE |
|---|---|---|---|
| | | | |

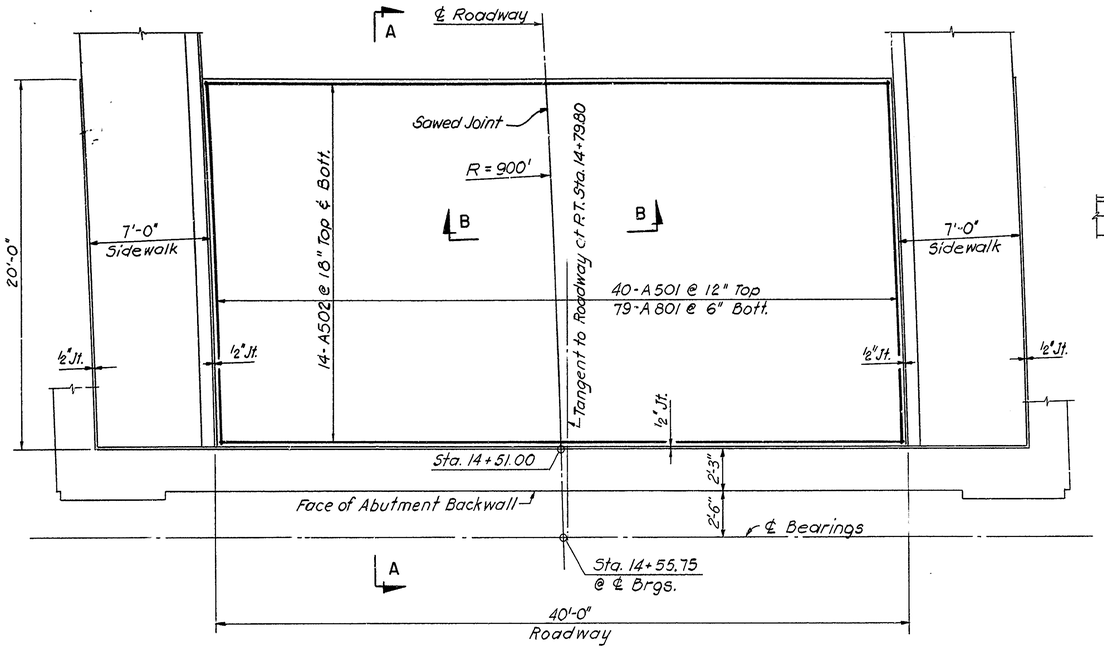


APPROACH SLAB AT WEST ABUTMENT
Scale: ¼"=1'-0"

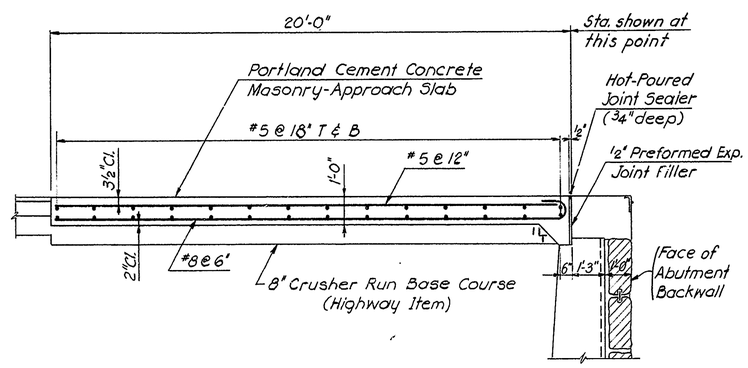


SECTION A-A
Scale: ⅜"=1'-0"

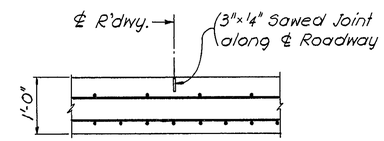


SECTION B-B
Scale: ¾"=1'-0"

Notes:
Reinforcing steel shall conform to ASTM 615 Grade 60. Only shop bending will be permitted. Reinforcing steel shall be paid for as "Bar Reinforcement (Uncoated)" -Section 605.
The Cost of Hot-Poured Joint Sealer and ½" Preformed Exp. Joint Filler shall be included in the Unit Price Bid for "Portland Cement Concrete Masonry-Approach Slabs" -Section 602.

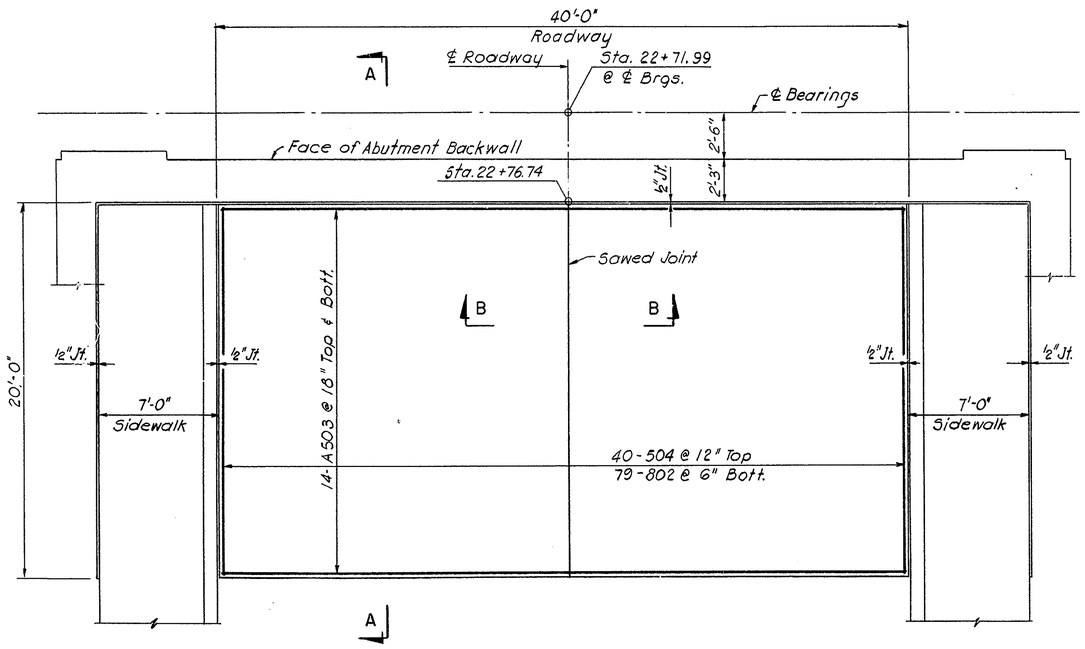


APPROACH SLAB AT EAST ABUTMENT
Scale: ¼"=1'-0"

| BAR SCHEDULE | | | | | | |
|---|---|---|---|---|---|---|
| MARK | TYPE | NO. RQ'D. | LENGTH | A | | WEIGHT |
| AT WEST ABUTMENT | | | | | | |
| A 501 | Str. | 40 | 19'-6" | | | 814 |
| A 502 | Str. | 14 | 39'-5" | | | 576 |
| | | | | | | |
| A 801 | 1 | 79 | 20'-5" | 19'-6" | | 4,306 |
| AT EAST ABUTMENT | | | | | | |
| A 503 | Str. | 14 | 39'-5 | | | 576 |
| A 504 | Str. | 40 | 19'-6" | | | 814 |
| | | | | | | |
| A 802 | 1 | 79 | 20'-5" | 19'-6" | | 4,306 |
| Total Approach Slabs | | | | | | 11,392# |

BAR TYPES

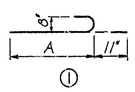


REFERENCES:

| | SHEET NO. |
|---|---|
| General Plan & Elevation | 15 |
| General Notes | 3 |
| West Abutment | 22 & 26 |
| East Abutment | 29 & 33 |

DELAWARE
DEPARTMENT OF TRANSPORTATION
DIVISION OF HIGHWAYS

APPROACH SLABS

D.
T.
C.

SCALE: AS SHOWN

APPROVED BY:
BRIDGE ENGINEER

ROBERT C. McDOWELL REGISTERED NO. 3088 DELAWARE PROFESSIONAL ENGINEER