COUNTY	CONTRACT	P.R.A. REG. NO.	STATE	FED. AID PROJECT NO.	SHEET NO.	TOTAL SHEETS
NEW CASTLE	79-071-02	2	DEL.	M-1191(1)	36	112

AUGUSTINE BRIDGE RECONSTRUCTION

NO.	REVISIONS	BY	DATE
1	UTILITY INSTALLATION AND LOCATION	SMT	9/20/79

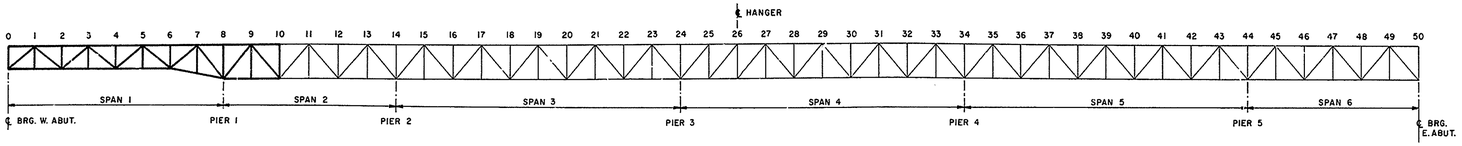

KEY DIAGRAM

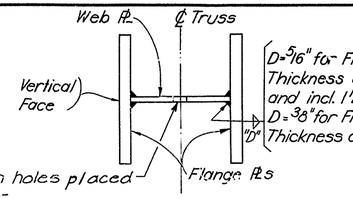

TYPICAL SECTION THROUGH TRUSS MEMBER

No Scale

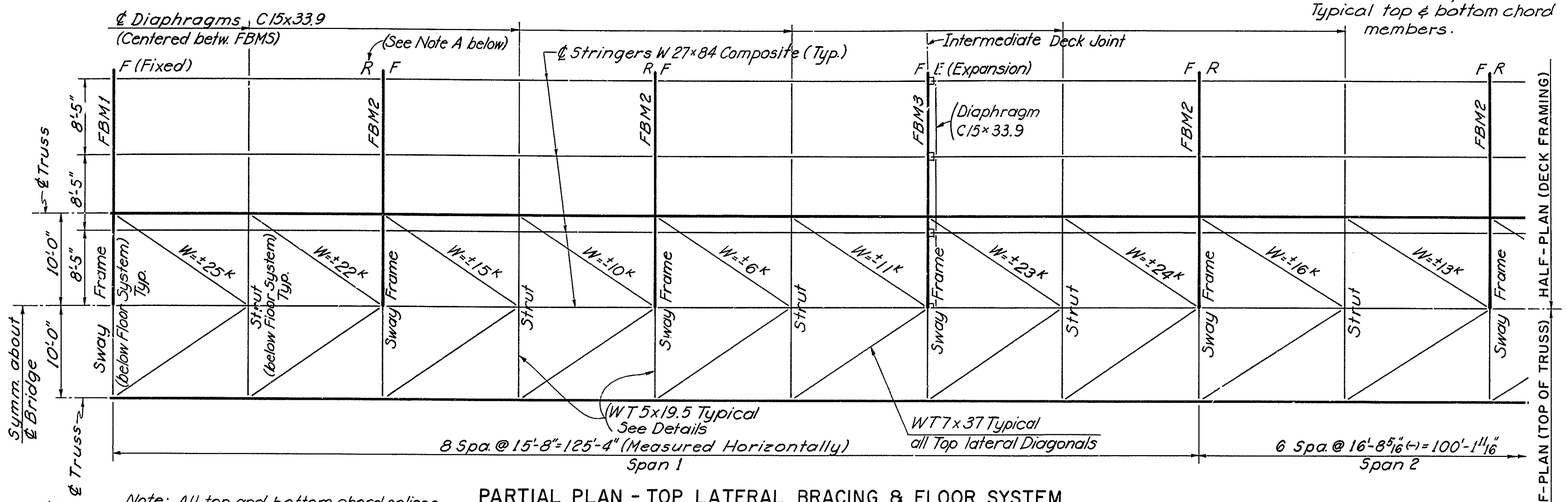

PARTIAL PLAN - TOP LATERAL BRACING & FLOOR SYSTEM

Note: All top and bottom chord splices are inside the Gusset Plates. All chord compression Members shall have milled ends in full contact bearing at the splices.

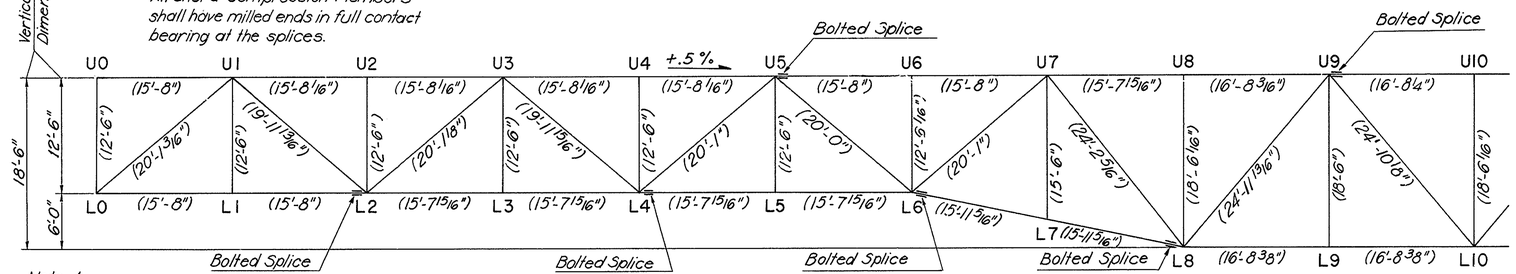

Note A

"R" indicates HS Bolt Stringer to Floorbeam connections with nuts installed "finger tight" initially and retightened to full torque required after deck Concrete is in place. A note about this method of installation shall appear on shop Drawings.

Note: Lengths shown in parentheses are theoretical distances between panel points with allowances to provide required camber in vertical trusses for compensating the dead Load deflections (See sheet No. 41) and achieving longitudinal grade of bridge profile.

ELEVATION

Splice Note

Splices shown in chord members are primarily provided for change of steel sections. The Contractor may revise splice locations to suit his erection procedure subject to prior approval of the Engineer

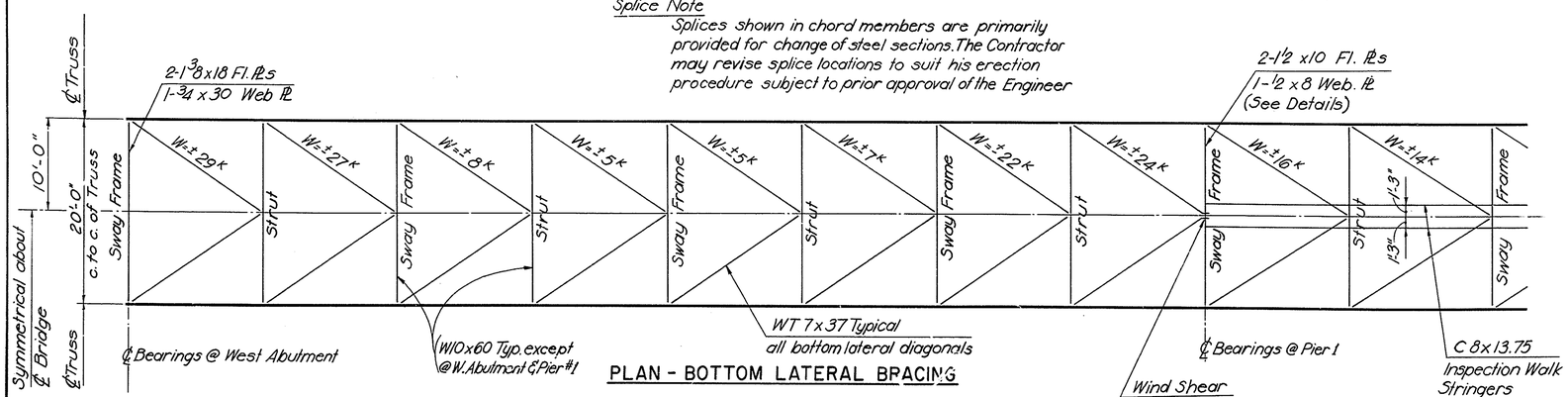

PLAN - BOTTOM LATERAL BRACING

Note: Tension taken as positive

* Wind Loading

⚠ UTILITIES NOT SHOWN. DETAILS AND LOCATION OF 4 - 6 in. DIA. ELECTRICAL STEEL CONDUITS AND 12 in. DIA. GAS MAIN AND THEIR SUPPORTS ARE SHOWN ON SHEETS 81A, 81B AND 81C.

TRUSS MEMBERS

MEMBER	TOTAL AXIAL LOADS GROUP I (KIPS) DL	LL + I	TOTAL	MOMENT DL + LL + I (FT - K) (1)	SECTION FLANGE PLS	SECTION WEB PL	FURNISHED AREA (SQ. IN.) GROSS	FURNISHED AREA (SQ. IN.) NET (2)	KL/r	ALLOWABLE STRESSES (K/IN²) TENSION OR BENDING	ALLOWABLE STRESSES (K/IN²) COMPRESSION	ACTUAL STRESSES (K/IN²) TENSION	ACTUAL STRESSES (K/IN²) COMPRESSION	ACTUAL STRESSES (K/IN²) BENDING (3)	ACTUAL STRESSES (K/IN²) TOTAL PRIMARY	COMBINED STRESS RATIO
U0 - U1	-2	-21*	-23	+13	1½x14	¾x11	50.25	—	50.9	27.0	20.9	—	0.5	—	0.5	—
U1 - U3	-559	-319	-878	+52	1½x14	¾x11	50.25	—	50.9	↑	23.6	—	17.5	3.4	20.9	.87
U3 - U5	-610	-339	-949	-53	1½x14	¾x11	50.25	—	50.9		23.6	—	18.9	3.5	22.4	.93
U5 - U7	-156	-155	-311	-43	1x14	½x12	34.00	—	51.3		23.6	—	9.2	4.8	14.0	.57
U7 - U9	+547	+253	+800	-21	1x14	½x12	—	31.10	55.5		—	25.7	—	0.4	26.1	.97
U9 - U10	+146	+195	+341	+36	1x14	½x12	—	31.10	55.5		—	11.0	—	3.5	14.5	.53
L0 - L2	+285	+159	+444	+25	¾x14	½x12½	—	25.34	53.9		—	17.6	—	2.8	20.4	.75
L2 - L4	+592	+290	+882	+17	1⅛x14	¾x11¾	—	37.36	53.5		—	23.6	—	0	23.6	.87
L4 - L6	+389	+199	+588	-22	¾x14	½x12½	—	25.34	53.9		—	23.2	—	2.0	25.2	.93
L6 - L8	-262	-141	-403	-21	¾x14	½x12½	27.25	—	53.9		20.6	—	14.8	—	14.8	—
L8 - L10	-339	-199	-538	+22	¾x14	½x12½	27.25	—	56.4		20.3	—	19.7	—	19.7	—
L0 - U1	-365	-204	-569	+2	⅞x14	½x12¼	30.63	—	66.7		19.0	—	18.6	—	18.6	—
U1 - L2	+345	+204	+549	-11	¾x14	½x12½	—	25.34	68.6		—	21.7	—	0	21.7	.80
L2 - U3	-45	+86 -101	+41 -146	+5 -16	¾x14	½x12½	— 27.25	25.34 —	69.1 67.9		— 18.8	1.6 —	— 5.4	0 —	1.6 5.4	.06 —
U3 - L4	+22	+101 -86	+123 -64	+18 -8	¾x14	½x12½	— 27.25	25.34 —	68.8 67.6		— 18.9	4.9 —	— 2.4	0.9 —	5.8 2.4	.21 .10
L4 - U5	+281	+201	+482	+12	¾x14	½x12½	—	25.34	69.1		—	19.0	—	0	19.0	.70
U5 - L6	-298	-201	-499	+6	¾x14	½x12½	27.25	—	67.6		18.9	—	18.3	—	18.3	—
L6 - U7	+528	+278	+806	-9	1x14	½x12	—	31.10	66.8		—	25.9	—	0	25.9	.96
U7 - L8	-446	-227	-673	+12	1⅛x14	¾x11¾	40.31	—	81.2		16.8	—	16.7	—	16.7	—
L8 - U9	-309	-225	-534	-11	1x14	½x12	34.00	—	81.7		16.7	—	15.7	—	15.7	—
U9 - L10	+290	+225	+515	—	¾x14	½x12½	—	25.34	85.5		—	20.3	—	0	20.3	.75
U0 - L0	-98	-155	-253	-28	¾x14	½x12½	27.25	—	42.3		23.6	—	9.3	3.9	13.2	.56
U1 - L1	+4	—	+4	-6	½x9	½x13	—	15.50	75.8		—	0.3	—	1.3	1.6	.06
U2 - L2	-181	-169	-350	-19	¾x14	½x12½	27.25	—	42.3		23.6	—	12.8	1.7	14.5	.61
U3 - L3	+5	—	+5	-1	½x9	½x13	—	15.50	75.8		—	0.3	—	0	0.3	.01
U4 - L4	-181	-169	-350	+11	¾x14	½x12½	27.25	—	42.3		21.7	—	12.8	—	12.8	—
U5 - L5	+4	—	+4	+5	½x9	½x13	—	15.50	75.8		—	0.3	—	0.4	0.7	.03
U6 - L6	-184	-169	-353	+32	¾x14	½x12½	27.25	—	42.3		23.6	—	13.0	4.8	17.8	.75
U7 - L7	+4	—	+4	+5	½x9	½x13	—	15.50	93.9		—	0.3	—	0.4	0.7	.03
U8 - L8	-168	-173	-341	+1	¾x14	½x12½	27.25	—	62.6		19.6	—	12.5	—	12.5	—
U9 - L9	+6	—	+6	-3	½x9	½x13	—	15.50	112.1	↓	—	0.4	—	0	0.4	.01
U10 - L10	-169	-176	-345	-10	¾x14	½x12½	27.25	—	62.6	27.0	19.6	—	12.7	—	12.7	—

(1) Moments at end of member (at panel point) due to frame action.

(2) Net area in accordance with Article 1.7.15. AASHTO-1977 Edition.

(3) Stress due to moment reduced by 4.0 ksi for tension members and 3.0 ksi for compression members. No entry indicates that interaction of compression and bending did not govern the design. (Article 1.7.44. AASHTO-1977 Edition.)

For References see Sh. 37

DELAWARE
DEPARTMENT OF TRANSPORTATION
DIVISION OF HIGHWAYS

TRUSS LAYOUT AND STRESSES
PANEL POINT O

D.
T.
C.

SCALE 1/8"=1'-0"

APPROVED BY: —

ROBERT C. MOWELL REGISTERED No. 3069 STATE OF DELAWARE

BRIDGE ENGINEER

COUNTY	CONTRACT	P.B.A. REG. NO.	STATE	FED. AID PROJECT NO.	SHEET NO.	TOTAL SHEETS
NEW CASTLE	79-071-02	2	DEL	M-1191(1)	37	112

AUGUSTINE BRIDGE RECONSTRUCTION

NO.	REVISIONS	BY	DATE
1	UTILITY INSTALLATION AND LOCATION	SMT	9/20/79

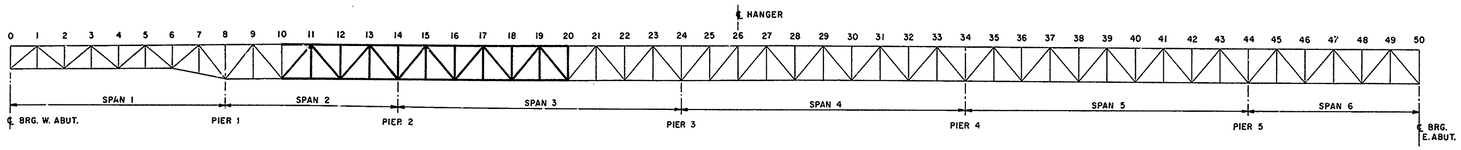

KEY DIAGRAM

REFERENCES

	SH. NO.
Deck Joint Details	68
Sway Frame Details	57
Lateral Bracing Connections	58
Truss Details	42-56
Inspection Walk Details	60
Wind Shear Device	20
Wind Link Details	59
Transverse Inspection Walk	61
Floor Beam & Stringer Details } Diaphragm Details }	64 & 65

1 UTILITIES NOT SHOWN. DETAILS AND LOCATION OF 4 - 6 in. DIA. ELECTRICAL STEEL CONDUITS AND 12 in. DIA. GAS MAIN AND THEIR SUPPORTS ARE SHOWN ON SHEETS 81A, 81B AND 81C.

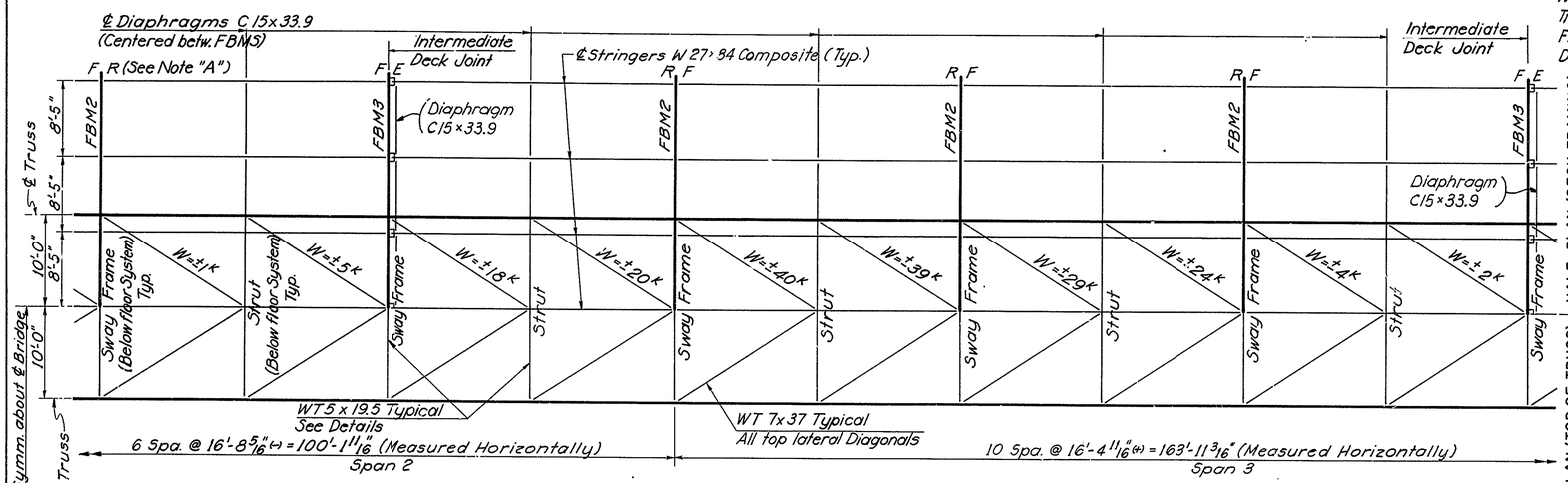

PARTIAL PLAN - TOP LATERAL BRACING & FLOOR SYSTEM

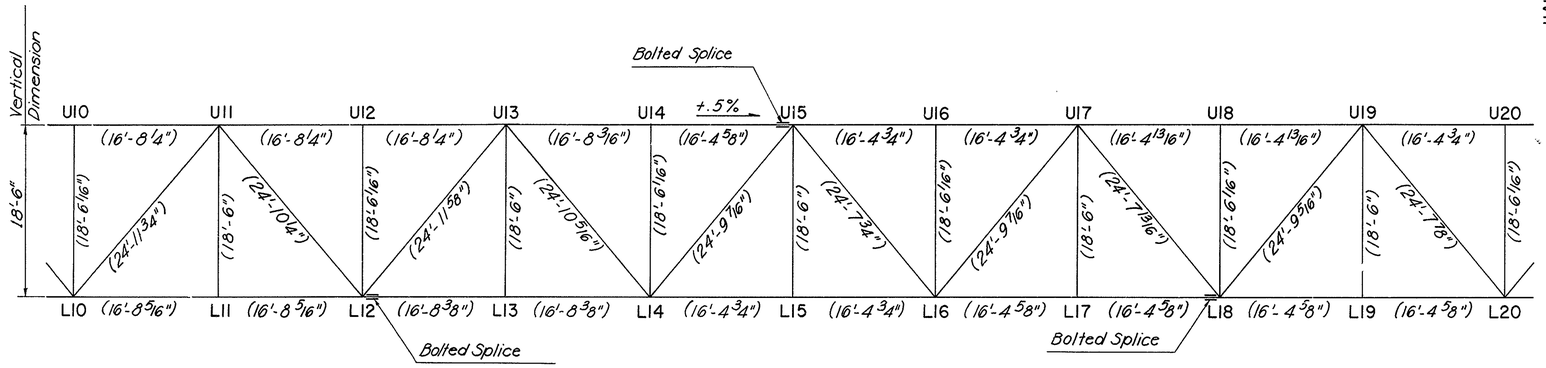

ELEVATION

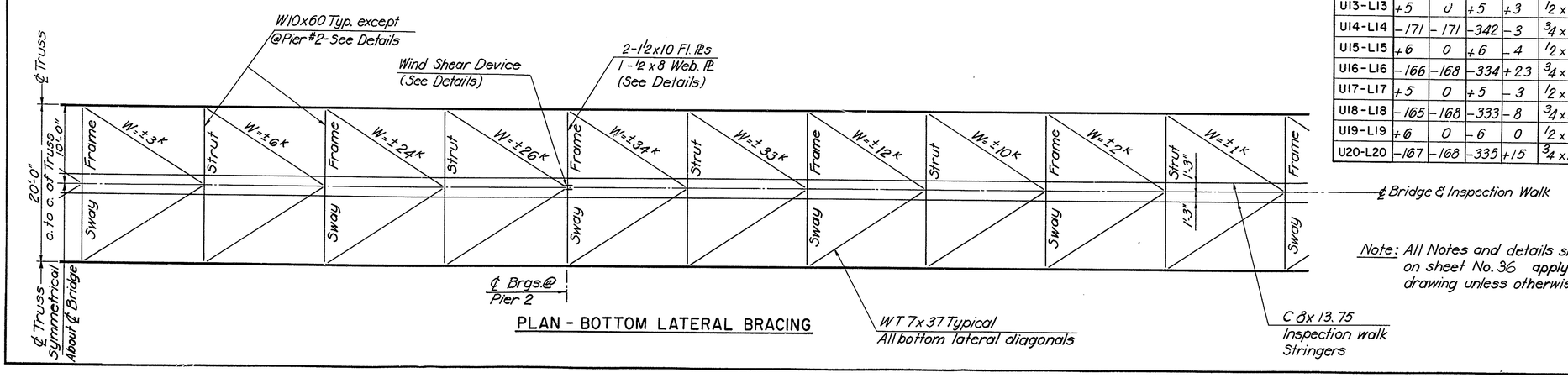

PLAN - BOTTOM LATERAL BRACING

TRUSS MEMBERS

MEMBER	TOTAL AXIAL LOADS GROUP I (KIPS) DL	LL + I	TOTAL	MOMENT DL + LL + I (=(FT - K))	SECTION FLANGE PL S	SECTION WEB PL	FURNISHED AREA (SQ. IN.) GROSS	FURNISHED AREA (SQ. IN.) NET (2)	KL/r	ALLOWABLE STRESSES (K/IN²) TENSION OR BENDING	ALLOWABLE STRESSES (K/IN²) COMPRESSION	ACTUAL STRESSES (K/IN²) TENSION	ACTUAL STRESSES (K/IN²) COMPRESSION	ACTUAL STRESSES (K/IN²) BENDING (3)	ACTUAL STRESSES (K/IN²) TOTAL PRIMARY	COMBINED STRESS RATIO
U10-U11	+146	+195	+341	+36	1 x 14	1/2 x 12	—	31.10	55.5	27.0	—	11.0	—	3.5	14.5	.53
U11-U13	+134	+208 -179	+342 -45	-37 5	1 x 14	1/2 x 12	— 34.00	31.10 —	55.5 53.6	↑	— 20.6	11.0 —	— 1.3	3.7 —	14.7 1.3	.54 —
U13-U15	+515	+290	+805	+23	1 x 14	1/2 x 12	—	31.10	55.5		—	25.9	—	0.8	26.7	.99
U15-U17	-201	-155	-356	+34	1 3/8 x 14	3/4 x 11 1/4	46.94	—	53.7		23.6	—	7.6	1.5	9.1	.38
U17-U19	-537	-326	-863	+45	1 3/8 x 14	3/4 x 11 1/4	46.94	—	53.7		23.6	—	18.4	3.0	21.4	.89
U19-U20	-492	-380	-872	-54	1 3/8 x 14	3/4 x 11 1/4	46.94	—	53.7		23.6	—	18.6	4.2	22.8	.94
L10-L12	-133	-192	-325	+5	3/4 x 14	1/2 x 12 1/2	27.25	—	56.4		20.3	—	11.9	—	11.9	—
L12-L14	-318	-227	-545	-27	3/4 x 14	1/2 x 12 1/2	27.25	—	56.4		23.6	—	20.0	3.6	23.6	.98
L14-L16	-151	-118	-269	+27	3/4 x 14	1/2 x 12 1/2	27.25	—	55.4		23.6	—	9.9	3.6	13.5	.55
L16-L18	+373	+216	+589	+16	3/4 x 14	1/2 x 12 1/2	—	25.34	56.4		—	23.3	—	0.4	23.7	.87
L18-L20	+520	+336	+856	+10	1 1/8 x 14	3/4 x 11 3/4	—	37.36	56.0		—	22.9	—	0	22.9	.85
L10-U11	-18	+115 -116	+97 -134	+3 -6	3/4 x 14	1/2 x 12 1/2	— 27.25	25.34 —	85.9 84.5		— 16.2	3.8 —	— 4.9	0 —	3.8 4.9	.14 —
U11-L12	0	+116 -115	+116 -115	-2 +5	3/4 x 14	1/2 x 12 1/2	— 27.25	25.34 —	85.5 84.0		— 16.3	4.6 —	— 4.2	0 —	4.6 4.2	.17 —
L12-U13	+277	+225	+502	1	3/4 x 14	1/2 x 12 1/2	—	25.34	85.9		—	19.8	—	0	19.8	.73
U13-L14	-293	-225	-518	-1	1 x 14	1/2 x 12	34.00	—	81.3		16.8	—	15.2	—	15.2	—
L14-U15	-550	-303	-853	-13	1 5/8 x 14	3/4 x 10 3/4	53.56	—	79.8		17.0	—	15.9	—	15.9	—
U15-L16	+528	+303	+831	-4	1 x 14	1/2 x 12	—	31.1	82.0		—	26.7	—	0	26.7	.99
L16-U17	-263	-204	-467	-8	7/8 x 14	1/2 x 12 1/4	30.63	—	82.2		16.6	—	15.3	—	15.3	—
U17-L18	+243	+204	+447	-10	3/4 x 14	1/2 x 12 1/2	—	25.34	84.8		—	17.6	—	0	17.6	.65
L18-U19	+23	+107 -123	-130 -100	-4 +10	3/4 x 14	1/2 x 12 1/2	— 27.25	25.34 —	85.3 83.8		— 16.4	5.1 —	— 3.7	0 —	5.1 3.7	.19 —
U19-L20	-44	+123 -107	+79 -151	-5 +12	3/4 x 14	1/2 x 12 1/2	— 27.25	25.34 —	84.8 83.4		— 16.4	3.1 —	— 5.5	0 —	3.1 5.5	.12 —
U11-L11	+6	0	+6	0	1/2 x 9	1/2 x 13	—	15.50	112.0		—	0.4	—	0	0.4	.01
U12-L12	-171	-176	-347	+10	3/4 x 14	1/2 x 12 1/2	27.25	—	62.6		19.6	—	12.7	—	12.7	—
U13-L13	+5	0	+5	+3	1/2 x 9	1/2 x 13	—	15.50	112.0		—	0.3	—	0	0.4	.01
U14-L14	-171	-171	-342	-3	3/4 x 14	1/2 x 12 1/2	27.25	—	62.6		19.6	—	12.6	—	12.6	—
U15-L15	+6	0	+6	-4	1/2 x 9	1/2 x 13	—	15.50	112.0		—	0.4	—	0	0.4	.01
U16-L16	-166	-168	-334	+23	3/4 x 14	1/2 x 12 1/2	27.25	—	62.6		19.6	—	12.3	—	12.3	—
U17-L17	+5	0	+5	-3	1/2 x 9	1/2 x 13	—	15.50	112.0		—	0.3	—	0	0.3	.01
U18-L18	-165	-168	-333	-8	3/4 x 14	1/2 x 12 1/2	27.25	—	62.6		19.6	—	12.2	—	12.2	—
U19-L19	+6	0	-6	0	1/2 x 9	1/2 x 13	—	15.50	112.0	↓	—	0.4	—	0	0.4	.01
U20-L20	-167	-168	-335	+15	3/4 x 14	1/2 x 12 1/2	27.25	—	62.6	27.0	19.6	—	12.3	—	12.3	—

HALF-PLAN (DECK FRAMING)

HALF-PLAN (TOP OF TRUSS)

Note: All Notes and details shown on sheet No. 36 apply to this drawing unless otherwise shown.

DELAWARE
DEPARTMENT OF TRANSPORTATION
DIVISION OF HIGHWAYS

TRUSS LAYOUT AND STRESSES
PANEL POINT 10

D.
T.
C.

SCALE 1/8" = 1'-0"

APPROVED: ROBERT C. DOWELL REGISTERED PROFESSIONAL ENGINEER NO. 3069 — STATE OF DELAWARE — BRIDGE ENGINEER

COUNTY	CONTRACT	P.B.A. REG. NO.	STATE	FED. AID PROJECT NO.	SHEET NO.	TOTAL SHEETS
NEW CASTLE	79-071-02	2	DEL	M-1191(1)	38	112

AUGUSTINE BRIDGE RECONSTRUCTION

NO.	REVISIONS	BY	DATE
1	UTILITY INSTALLATION AND LOCATION	SMT	9/20/79

1 UTILITIES NOT SHOWN.
DETAILS AND LOCATION OF 4 - 6 in. DIA. ELECTRICAL STEEL CONDUITS AND 12 in. DIA. GAS MAIN AND THEIR SUPPORTS ARE SHOWN ON SHEETS 81A, 81B AND 81C.

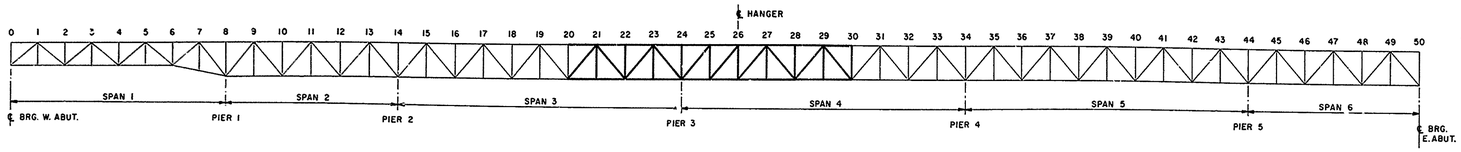

KEY DIAGRAM

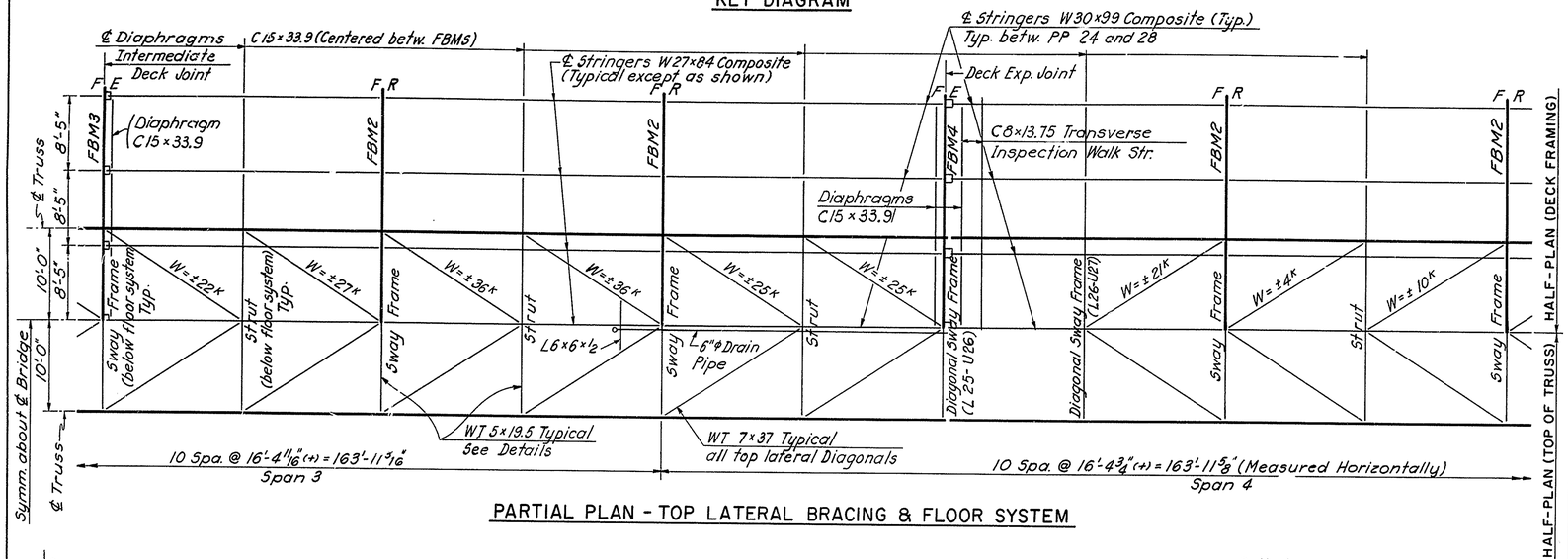

PARTIAL PLAN - TOP LATERAL BRACING & FLOOR SYSTEM

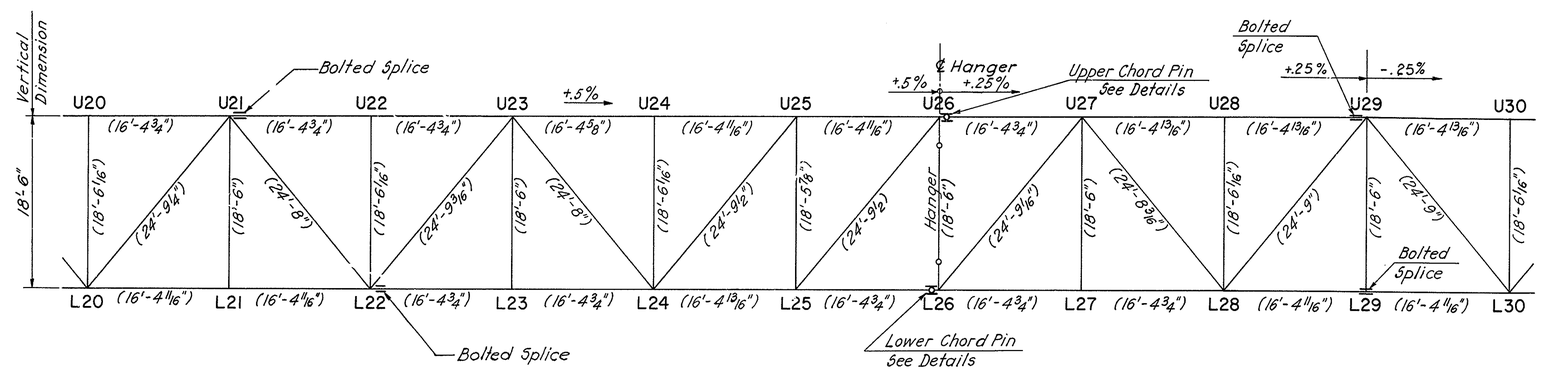

ELEVATION

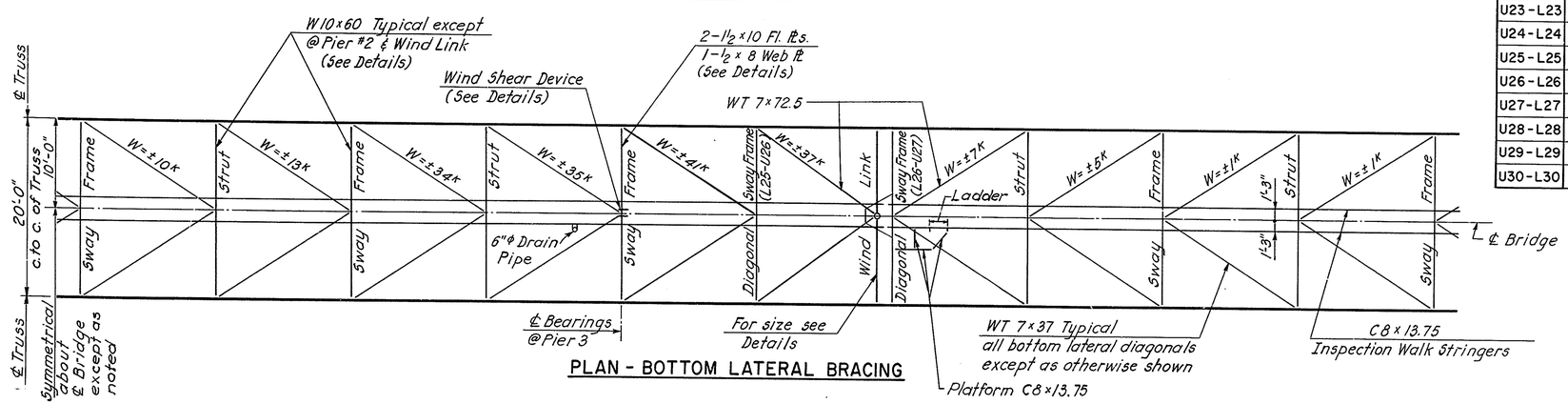

PLAN - BOTTOM LATERAL BRACING

TRUSS MEMBERS

MEMBER	TOTAL AXIAL LOADS GROUP I (KIPS) DL	LL + I	TOTAL	MOMENT DL + LL + I (FT - K) (1)	SECTION FLANGE PL S	SECTION WEB PL	FURNISHED AREA (SQ. IN.) GROSS	FURNISHED AREA (SQ. IN.) NET (2)	KL/r	ALLOWABLE STRESSES (K/IN²) TENSION OR BENDING	ALLOWABLE STRESSES (K/IN²) COMPRESSION	ACTUAL STRESSES (K/IN²) TENSION	ACTUAL STRESSES (K/IN²) COMPRESSION	ACTUAL STRESSES (K/IN²) BENDING (3)	ACTUAL STRESSES (K/IN²) TOTAL PRIMARY	COMBINED STRESS RATIO
U20 - U21	-492	-380	-872	-54	1⅜×14	¾×11¼	46.94	—	53.7	27.0	23.6	—	18.6	4.2	22.8	.94
U21 - U23	-62	+264	+202	+26	1⅜×14	¾×11¼	—	42.98	54.6		—	4.7	—	0	4.7	.17
		-282	-344	-61			46.94	—	53.7		23.6	—	7.3	5.1	12.4	.50
U23 - U25	+751	+350	+1,101	+33	1⅜×14	¾×11¼	—	42.98	54.7		—	25.6	—	1.0	26.6	.98
U25 - U26	+369	+175	+544	+43	1⅜×14	¾×11¼	—	42.98	54.7		—	12.7	—	2.5	15.2	.56
U26 - U27	0	0	0	0	⅞×14	½×12¼	30.63	—	—		—	—	—	—	—	—
U27 - U29	-357	-228	-585	+35	⅞×14	½×12¼	30.63	—	54.4		23.6	—	19.1	4.3	23.4	.97
U29 - U30	-337	-266	-603	-41	1⅜×14	¾×11¼	46.94	—	53.7		23.6	—	12.9	2.5	15.3	.64
L20 - L22	+282	+319	+601	-32	1⅛×14	¾×11¾	—	37.36	56.0		—	16.1	—	1.8	17.9	.66
L22 - L24	-338	-302	-640	-45	1×14	½×12	34.00	—	53.6		23.6	—	18.8	5.3	24.1	.99
L24 - L25	-319	-175	-494	+61	1×14	½×12	34.00	—	53.6		23.6	—	14.5	8.2	22.7	.92
L25 - L26	0	0	0	0	1×14	½×12	34.00	—	—		—	—	—	—	—	—
L26 - L28	+184	+114	+298	+17	¾×14	½×12½	—	25.34	56.4		—	11.8	—	0.6	12.4	.46
L28 - L30	+352	+222	+574	-7	¾×14	½×12½	—	25.34	56.4		—	22.7	—	0	22.7	.84
L20 - U21	+314	+176	+490	+8	¾×14	½×12½	—	25.34	85.3		—	19.3	—	0	19.3	.72
U21 - L22	-333	-176	-509	+7	⅞×14	½×12¼	30.63	—	81.8		16.7	—	16.6	—	16.6	—
L22 - U23	+604	+272	+876	+2	1⅛×14	¾×11¾	—	37.36	84.6		—	23.5	—	0	23.5	.87
U23 - L24	-620	-272	-892	-23	1⅝×14	¾×10¾	53.56	—	79.4		17.1	—	16.7	—	16.7	—
L24 - U25	-574	-294	-868	-17	1⅝×14	¾×10¾	53.56	—	79.8		17.0	—	16.2	—	16.2	—
L25 - U26	-494	-294	-788	-30	1½×14	¾×11	50.25	—	80.5		16.9	—	15.7	—	15.7	—
L26 - U27	-225	-181	-406	+4	¾×14	½×12½	27.25	—	83.7		16.4	—	14.9	—	14.9	—
U27 - L28	+259	+181	+440	-8	¾×14	½×12½	—	25.34	84.9		—	17.4	—	0	17.4	.64
L28 - U29	+6	+87	+93	-11	¾×14	½×12½	—	25.34	85.2		—	3.7	—	0	3.7	.14
		-97	-91	+5			27.25	—	83.7		16.4	—	3.3	—	3.3	—
U29 - L30	-25	+97	+72	-5	¾×14	½×12½	—	25.34	85.2		—	2.8	—	0	2.8	.11
		-87	-112	+11			27.25	—	83.7		16.4	—	4.1	—	4.1	—
U21 - L21	+6	0	+6	+4	½×9	½×13	—	15.50	112.0		—	0.4	—	0	0.4	.01
U22 - L22	-166	-168	-334	+24	¾×14	½×12½	27.25	—	62.6		23.6	—	12.3	2.9	15.2	.63
U23 - L23	+5	0	+5	+5	½×9	½×13	—	15.50	112.0		—	0.3	—	0.4	0.7	.03
U24 - L24	-172	-168	-339	-6	¾×14	½×12½	27.25	—	62.6		19.6	—	12.4	—	12.4	—
U25 - L25	+419	+220	+639	+24	⅞×14	½×12	—	28.21	62.5		—	22.7	—	1.7	24.4	.90
U26 - L26	+218	+135	+353	0	1¾×14	¾×6½	—	53.88	—		—	6.6	—	0	6.6	.24
U27 - L27	+5	0	+5	-3	½×9	½×13	—	15.50	112.0		—	0.3	—	0	0.3	.01
U28 - L28	-166	-168	-334	+12	¾×14	½×12½	27.25	—	62.6		19.6	—	12.3	—	12.3	—
U29 - L29	+7	0	+7	0	½×9	½×13	—	15.50	112.0		—	0.5	—	0	0.5	.02
U30 - L30	-165	-168	-333	+12	¾×14	½×12½	27.25	—	62.6	27.0	19.6	—	12.2	—	12.2	—

Note:
All notes and details shown on sheet No. 36 apply to this drawing unless otherwise shown.

DELAWARE
DEPARTMENT OF TRANSPORTATION
DIVISION OF HIGHWAYS

TRUSS LAYOUT AND STRESSES
PANEL POINT 20 TO 30

ROBERT C. MEDDEWELL REGISTERED PROFESSIONAL ENGINEER NO. 3069

D.
T.
C.

SCALE 1/8"=1'-0"

APPROVED BY: —
DIRECTOR OF DESIGN
BRIDGE ENGINEER

COUNTY	CONTRACT	P.B.A. REG. NO.	STATE	FED. AID PROJECT NO.	SHEET NO.	TOTAL SHEETS
NEW CASTLE	79-071-02	2	DEL	M-1191(1)	39	112

AUGUSTINE BRIDGE RECONSTRUCTION

NO.	REVISIONS	BY	DATE
1	UTILITY INSTALLATION AND LOCATION	SMT	9/20/79

1 UTILITIES NOT SHOWN.
DETAILS AND LOCATION OF 4 - 6 in. DIA. ELECTRICAL STEEL CONDUITS AND 12 in. DIA. GAS MAIN AND THEIR SUPPORTS ARE SHOWN ON SHEETS 81A, 81B AND 81C.

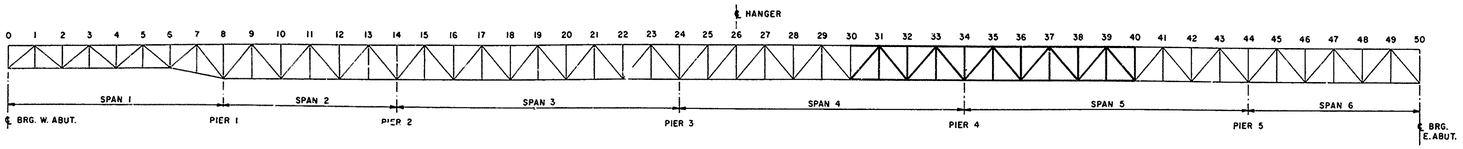

KEY DIAGRAM

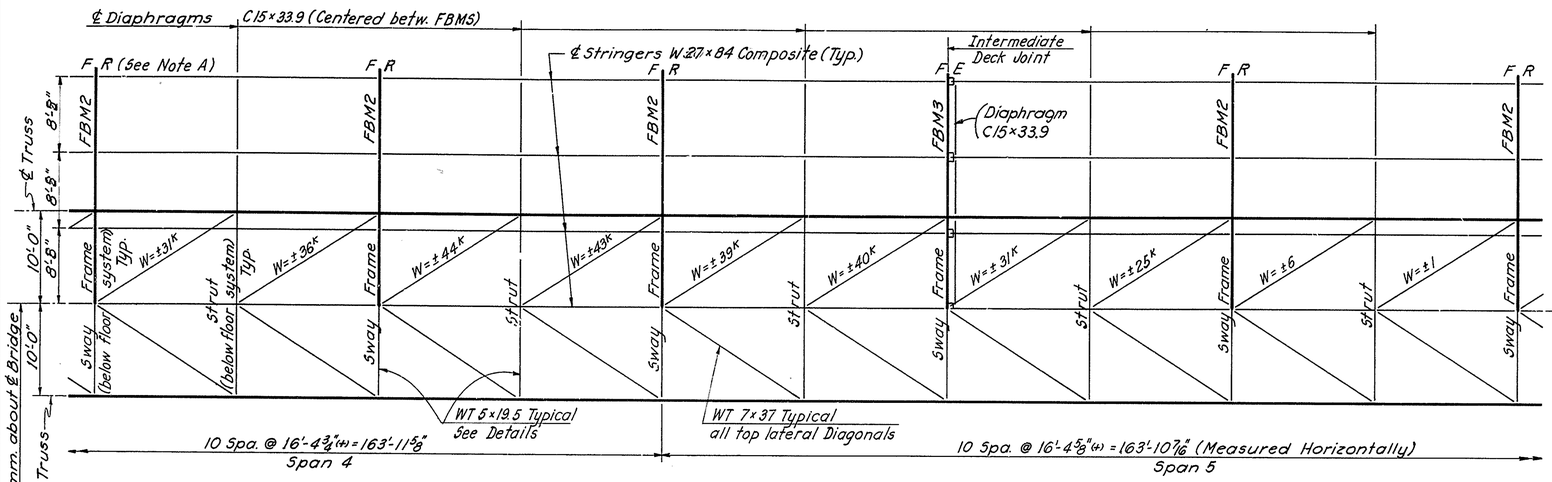

PARTIAL PLAN - TOP LATERAL BRACING & FLOOR SYSTEM

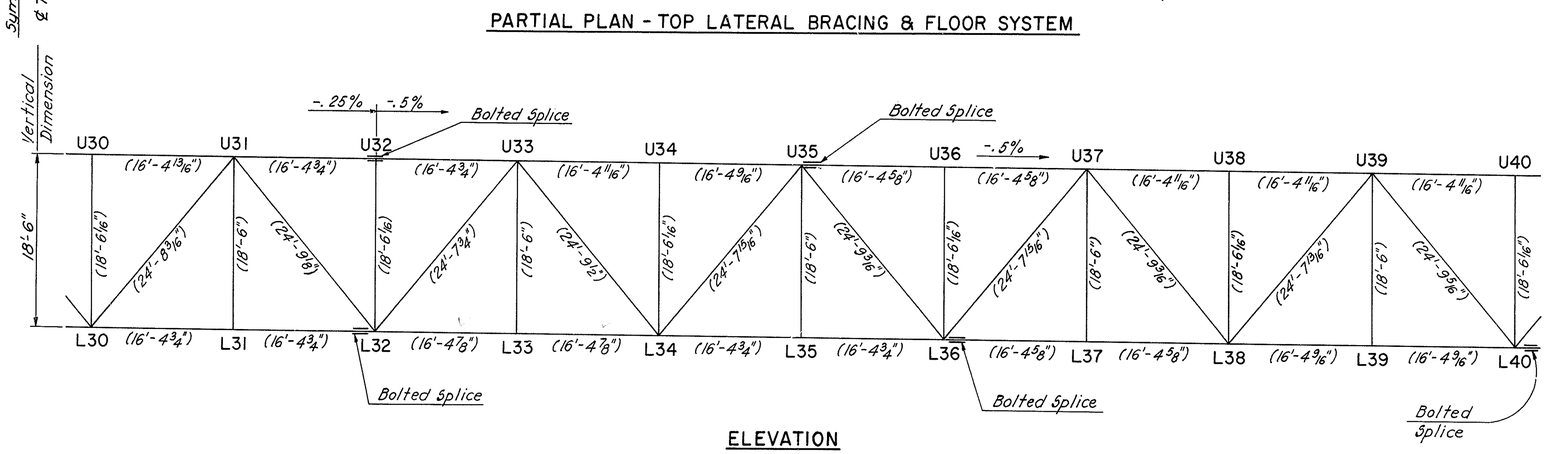

ELEVATION

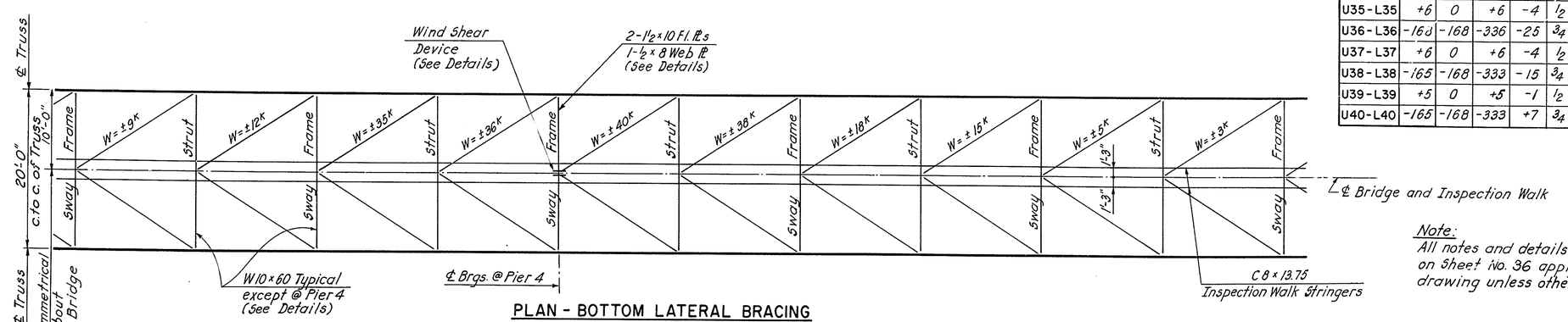

PLAN - BOTTOM LATERAL BRACING

HALF-PLAN (TOP OF TRUSS)

HALF-PLAN (DECK FRAMING)

TRUSS MEMBERS

MEMBER	TOTAL AXIAL LOADS GROUP I (KIPS) DL	LL + I	TOTAL	MOMENT DL + LL + I (FT - K) (1)	SECTION FLANGE PLS	SECTION WEB PL	FURNISHED AREA (SQ. IN.) GROSS	NET (2)	KL/r	ALLOWABLE STRESSES (K/IN²) TENSION OR BENDING	COMPRESSION	ACTUAL STRESSES (K/IN²) TENSION	COMPRESSION	BENDING (3)	TOTAL PRIMARY	COMBINED STRESS RATIO
U30-U31	-337	-266	-603	-41	1 3/8 × 14	3/4 × 11 1/4	46.94	—	53.7	27.0	23.6	—	12.9	2.5	15.3	.64
U31-U32	+63	+147	+210	-85	1 3/8 × 14	3/4 × 11 1/4	—	42.98	54.7		—	4.9	—	8.8	13.7	.51
		-164	-101	+38			46.94	—	53.7		23.6	—	2.2	2.1	4.3	.17
U32-U33	+63	+147	+210	-85	1 1/2 × 14	3/4 × 11	—	45.79	54.1		—	4.6	—	7.8	12.4	.46
		-164	-101	+38			50.25	—	53.2		23.6	—	2.0	1.7	3.7	.15
U33-U35	+842	+321	+1,163	+33	1 1/2 × 14	3/4 × 11	—	45.79	54.1		—	25.4	—	0.6	26.0	.96
U35-U37	+24	+144	+168	+67	1 1/8 × 14	3/4 × 11 3/4	—	37.36	56.0		—	4.5	—	8.2	12.7	.47
		-169	-145	-29			40.31	—	55.0		23.6	—	3.6	1.7	5.3	.22
U37-U39	-411	-294	-705	+47	1 1/8 × 14	3/4 × 11 3/4	40.31	—	55.0		23.6	—	17.5	4.7	22.2	.91
U39-U40	-465	-279	-744	-41	1 1/8 × 14	3/4 × 11 3/4	40.31	—	55.0		23.6	—	18.5	3.7	22.2	.92
L30-L32	+143	+191	+334	-26	3/4 × 14	1/2 × 12 1/2	—	25.34	56.4		—	13.2	—	3.1	16.3	.60
L32-L34	-444	-202	-646	-26	1 × 14	1/2 × 12	34.00	—	53.6		20.6	—	19.0	—	19.0	—
L34-L36	-425	-197	-622	+28	1 × 14	1/2 × 12	34.00	—	53.6		20.6	—	18.3	—	18.3	—
L36-L38	+200	+216	+416	+24	7/8 × 14	1/2 × 12 1/4	—	28.22	55.3		—	14.7	—	1.7	16.4	.61
L38-L40	+443	+265	+708	+9	7/8 × 14	1/2 × 12 1/4	—	28.22	55.3		—	25.1	—	0	25.1	.93
L30-U31	+290	+169	+459	+6	3/4 × 14	1/2 × 12 1/2	—	25.34	84.9		—	18.1	—	0	18.1	.67
U31-L32	-310	-169	-479	+6	7/8 × 14	1/2 × 12 1/4	30.63	—	82.1		16.6	—	15.6	—	15.6	—
L32-U33	+575	+269	+844	+2	1 1/8 × 14	3/4 × 11 3/4	—	37.36	84.2		—	22.6	—	0	22.6	.84
U33-L34	-600	-269	-869	+19	1 5/8 × 14	3/4 × 10 3/4	53.56	—	79.8		17.0	—	16.2	—	16.2	—
L34-U35	-626	-282	-908	-15	1 5/8 × 14	3/4 × 10 3/4	53.56	—	79.4		17.1	—	17.0	—	17.0	—
U35-L36	+608	+282	+890	+1	1 1/8 × 14	3/4 × 11 3/4	—	37.36	84.6		—	23.8	—	0	23.8	.88
L36-U37	-336	-183	-519	-7	1 × 14	1/2 × 12	34.00	—	80.6		16.9	—	15.3	—	15.3	—
U37-L38	+317	+183	+500	-7	3/4 × 14	1/2 × 12 1/2	—	25.34	85.2		—	19.7	—	0	19.7	.73
L38-U39	-51	+99	+48	+3	3/4 × 14	1/2 × 12 1/2	—	25.34	84.8		—	1.9	—	0	1.9	.07
		-104	-155	-9			27.25	—	83.4		16.4	—	5.7	—	5.7	—
U39-L40	+31	+104	+135	-9	3/4 × 14	1/2 × 12 1/2	—	25.34	85.2		—	5.3	—	0	5.3	.20
		-98	-67	+4			27.25	—	83.8		16.4	—	2.5	—	2.5	—
U31-L31	+5	0	+5	+3	1/2 × 9	1/2 × 13	—	15.50	112.0		—	0.3	—	0	0.3	.01
U32-L32	-166	-168	-334	+29	3/4 × 14	1/2 × 12 1/2	27.25	—	62.6		23.6	—	12.3	4.1	16.4	.67
U33-L33	+6	0	+6	+4	1/2 × 9	1/2 × 13	—	15.50	112.0		—	0.4	—	0	0.4	.01
U34-L34	-172	-168	-340	-1	3/4 × 14	1/2 × 12 1/2	27.25	—	62.6		19.6	—	12.5	—	12.5	—
U35-L35	+6	0	+6	-4	1/2 × 9	1/2 × 13	—	15.50	112.0		—	0.4	—	0	0.4	.01
U36-L36	-168	-168	-336	-25	3/4 × 14	1/2 × 12 1/2	27.25	—	62.6		23.6	—	12.3	3.1	15.4	.64
U37-L37	+6	0	+6	-4	1/2 × 9	1/2 × 13	—	15.50	112.0		—	0.4	—	0	0.4	.01
U38-L38	-165	-168	-333	-15	3/4 × 14	1/2 × 12 1/2	27.25	—	62.6		19.6	—	12.2	—	12.2	—
U39-L39	+5	0	+5	-1	1/2 × 9	1/2 × 13	—	15.50	112.0		—	0.3	—	0	0.4	.01
U40-L40	-165	-168	-333	+7	3/4 × 14	1/2 × 12 1/2	27.25	—	62.6	27.0	19.6	—	12.2	—	12.2	—

Note:
All notes and details shown on Sheet No. 36 apply to this drawing unless otherwise shown.

DELAWARE
DEPARTMENT OF TRANSPORTATION
DIVISION OF HIGHWAYS

TRUSS LAYOUT AND STRESSES
PANEL POINT 30 TO 40

D
T
C.

SCALE 1/8" = 1'-0"

APPROVED BY

ROBERT C. McDOWELL REGISTERED PROFESSIONAL ENGINEER NO. 3069 STATE OF DELAWARE

STRUCTURE ENGINEER

COUNTY	CONTRACT	P.R.A. REG. NO.	STATE	FED. AID PROJECT NO.	SHEET NO.	TOTAL SHEETS
NEW CASTLE	79-071-02	2	DEL.	M-1191 (1)	40	112

AUGUSTINE BRIDGE RECONSTRUCTION

NO.	REVISIONS	BY	DATE
1	UTILITY INSTALLATION AND LOCATION	SMT	9/20/79

1 UTILITIES NOT SHOWN.
DETAILS AND LOCATION OF 4 - 6 in. DIA. ELECTRICAL STEEL CONDUITS AND 12 in. DIA. GAS MAIN AND THEIR SUPPORTS ARE SHOWN ON SHEETS 81A, 81B AND 81C.

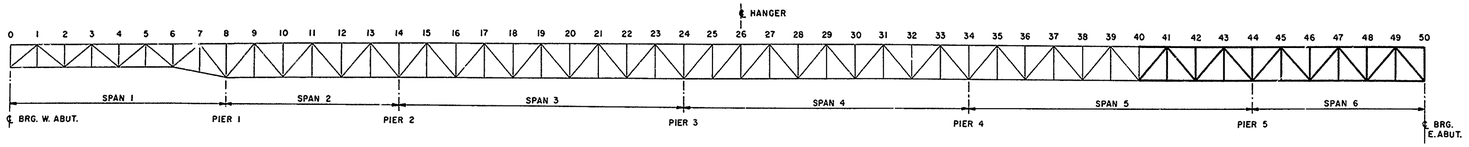

KEY DIAGRAM

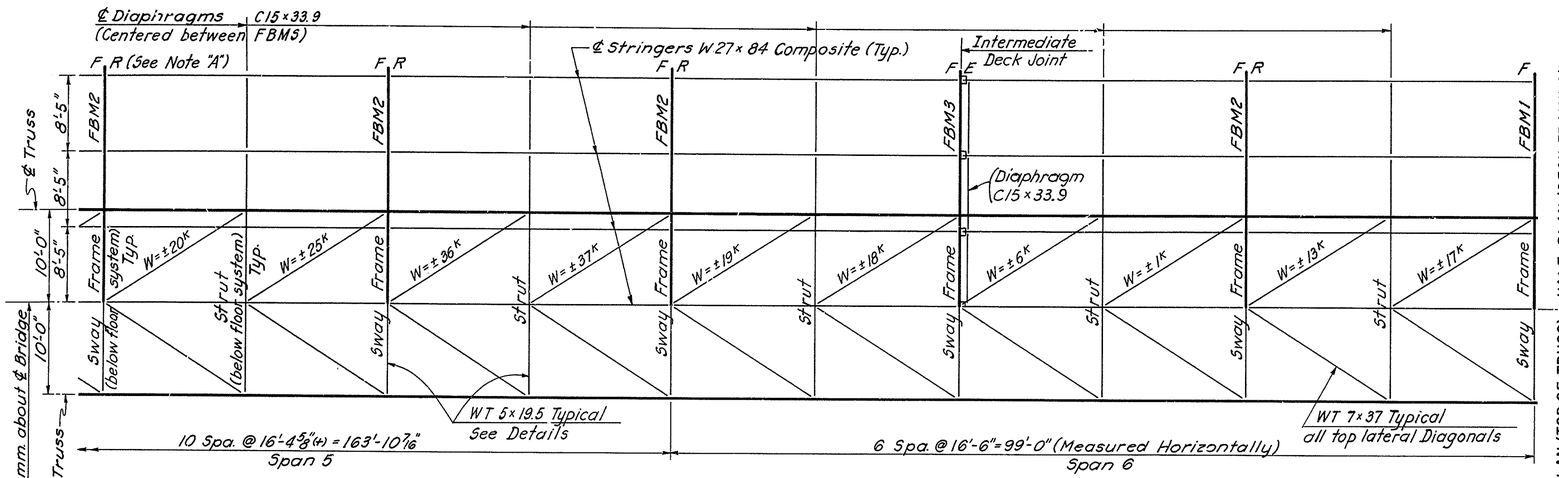

PARTIAL PLAN - TOP LATERAL BRACING & FLOOR SYSTEM

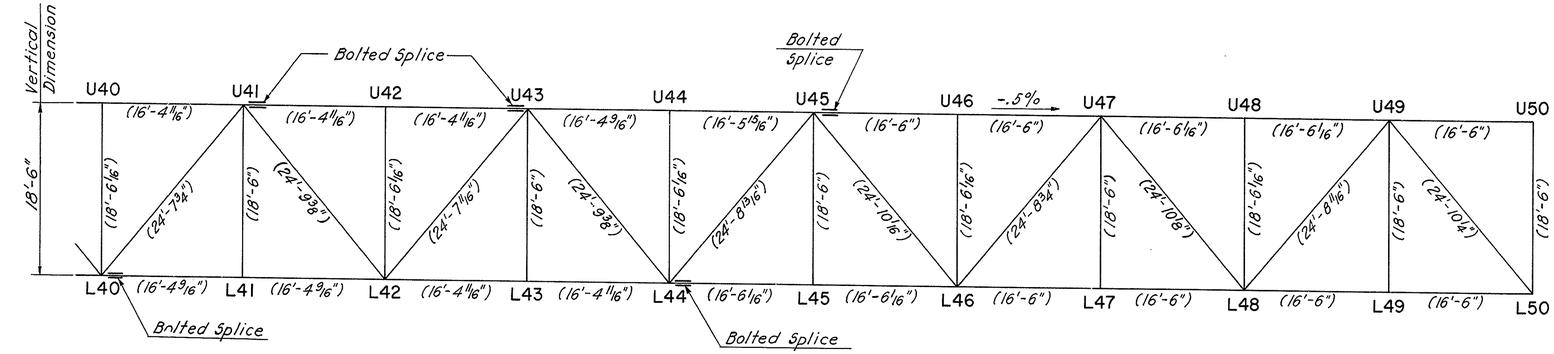

ELEVATION

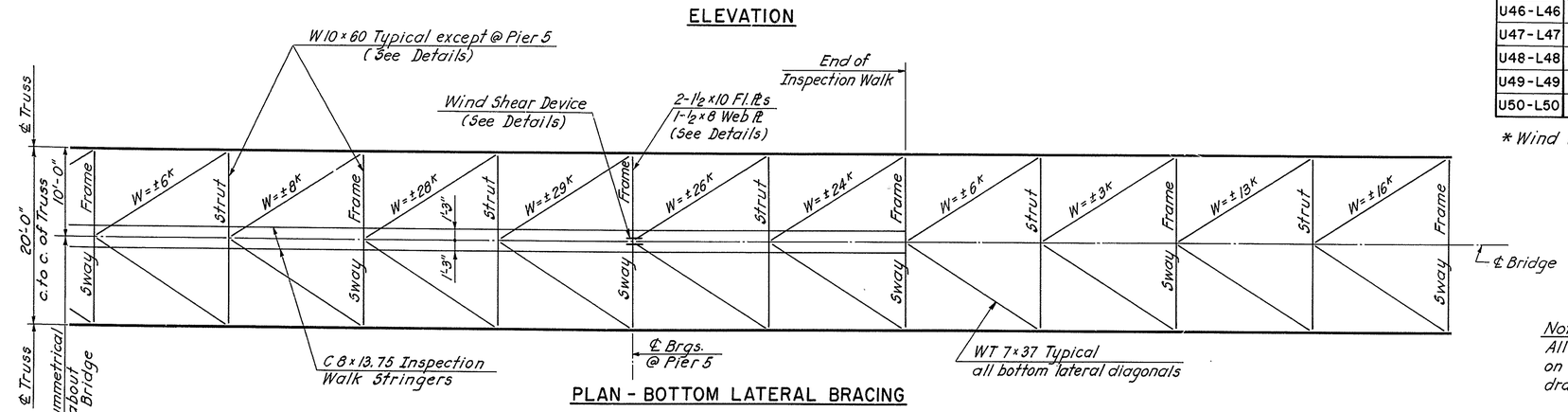

PLAN - BOTTOM LATERAL BRACING

TRUSS MEMBERS

MEMBER	TOTAL AXIAL LOADS GROUP I (KIPS) DL	LL + I	TOTAL	MOMENT DL + LL + I (FT - K) (1)	SECTION FLANGE PL S	SECTION WEB PL	FURNISHED AREA (SQ. IN.) GROSS	NET (2)	KL/r	ALLOWABLE STRESSES (K/IN²) TENSION OR BENDING	COMPRESSION	ACTUAL STRESSES (K/IN²) TENSION	COMPRESSION	BENDING (3)	TOTAL PRIMARY	COMBINED STRESS RATIO
U40-U41	-465	-279	-744	-41	1 1/8 × 14	3/4 × 11 3/4	40.31	—	56.0	27.0	23.6	—	18.5	3.7	22.2	.92
U41-U43	-140	-154	-294	-38	3/4 × 14	1/2 × 12 1/2	27.25	—	55.4		23.6	—	10.8	6.3	17.1	.69
U43-U45	+564	+257	+821	-26	1 1/8 × 14	3/4 × 11 3/4	—	37.36	56.4		—	22.0	—	0.7	22.7	.84
U45-U47	-5	+147	+142	-30	3/4 × 14	1/2 × 12 1/2	—	25.34	56.8		—	5.6	—	4.2	9.8	.36
		-185	-190	+69			27.25	—	55.8		23.6	—	7.0	13.8	20.8	.61
U47-U49	-191	-213	-404	-30	3/4 × 14	1/2 × 12 1/2	27.25	—	55.8		23.6	—	14.8	4.3	19.1	.79
U49-U50	0	-14*	-14	-3	3/4 × 14	1/2 × 12 1/2	27.25	—	55.8		20.4	—	0.5	—	0.5	—
L40-L42	+307	+183	+490	-16	3/4 × 14	1/2 × 12 1/2	—	25.34	56.4		—	19.3	—	0.4	19.7	.73
L42-L44	-207	-112	-319	-25	3/4 × 14	1/2 × 12 1/2	27.25	—	55.4		23.6	—	11.7	3.1	14.8	.61
L44-L46	-273	-183	-456	+23	3/4 × 14	1/2 × 12 1/2	27.25	—	55.8		20.4	—	16.7	—	16.7	—
L46-L48	+103	+170	+273	+18	3/4 × 14	1/2 × 12 1/2	—	25.34	56.8		—	10.8	—	0.9	11.7	.43
L48-L50	+100	+106	+206	-15	3/4 × 14	1/2 × 12 1/2	—	25.34	56.8		—	8.1	—	0.1	8.2	.30
L40-U41	+235	+178	+413	+8	3/4 × 14	1/2 × 12 1/2	—	25.34	84.8		—	16.3	—	0	16.3	.60
U41-L42	-255	-178	-433	+6	3/4 × 14	1/2 × 12 1/2	27.25	—	83.8		16.4	—	15.9	—	15.9	—
L42-U43	+521	+278	+799	+5	1 × 14	1/2 × 12	—	31.10	82.0		—	25.7	—	0	25.7	.95
U43-L44	-541	-278	-819	+11	1 1/2 × 14	3/4 × 11	50.25	—	80.4		16.9	—	16.3	—	16.3	—
L44-U45	-436	-225	-661	-13	1 1/8 × 14	3/4 × 11 3/4	40.31	—	83.0		16.5	—	16.4	—	16.4	—
U45-L46	+419	+225	+644	+1	3/4 × 14	1/2 × 12 1/2	—	25.34	85.5		—	25.4	—	0	25.4	.94
L46-U47	-148	-114	-262	-5	3/4 × 14	1/2 × 12 1/2	27.25	—	83.6		16.4	—	9.6	—	9.6	—
U47-L48	+132	+114	+246	+4	3/4 × 14	1/2 × 12 1/2	—	25.34	85.5		—	9.7	—	0	9.7	.36
L48-U49	+136	+159	+295	+6	3/4 × 14	1/2 × 12 1/2	—	25.34	85.1		—	11.6	—	0	11.6	.43
U49-L50	-151	-159	-310	+4	3/4 × 14	1/2 × 12 1/2	27.25	—	84.0		16.3	—	11.4	—	11.4	—
U41-L41	+5	0	+5	+3	1/2 × 9	1/2 × 13	—	15.50	112.0		—	0.3	—	0	0.3	.01
U42-L42	-166	-168	-334	+22	3/4 × 14	1/2 × 12 1/2	27.25	—	62.6		19.6	—	12.3	—	12.3	—
U43-L43	+5	0	+5	+5	1/2 × 9	1/2 × 13	—	15.50	112.0		—	0.3	—	0.4	0.7	.03
U44-L44	-171	-171	-342	+4	3/4 × 14	1/2 × 12 1/2	27.25	—	62.6		19.6	—	12.6	—	12.6	—
U45-L45	+6	0	+6	-4	1/2 × 9	1/2 × 13	—	15.50	112.0		—	0.4	—	0	0.4	.01
U46-L46	-168	-175	-343	-22	3/4 × 14	1/2 × 12 1/2	27.25	—	62.6		19.6	—	12.6	—	12.6	—
U47-L47	+5	0	+5	-2	1/2 × 9	1/2 × 13	—	15.50	112.0		—	0.3	—	0	0.3	.01
U48-L48	-167	-175	-342	-1	3/4 × 14	1/2 × 12 1/2	27.25	—	62.6		19.6	—	12.6	—	12.6	—
U49-L49	+4	0	+4	+2	1/2 × 9	1/2 × 13	—	15.50	112.0		—	0.3	—	0	0.3	.01
U50-L50	-86	-163	-249	-18	3/4 × 14	1/2 × 12 1/2	27.25	—	62.6	27.0	19.6	—	9.1	—	9.1	—

* Wind Loading

Note:
All Notes and details shown on sheet No. 36 apply to this drawing unless otherwise shown.

DELAWARE
DEPARTMENT OF TRANSPORTATION
DIVISION OF HIGHWAYS

TRUSS LAYOUT AND STRESSES
PANEL POINT 40 TO 50

D.
T.
C.

SCALE 1/8" = 1'-0"

APPROVED

ROBERT C. McDOWELL REGISTERED PROFESSIONAL ENGINEER NO. 3066
BRIDGE ENGINEER

⚠1 UTILITIES NOT SHOWN.
DETAILS AND LOCATION OF 4 - 6 in. DIA. ELECTRICAL STEEL CONDUITS AND 12 in. DIA. GAS MAIN AND THEIR SUPPORTS ARE SHOWN ON SHEETS 81A, 81B AND 81C.

COUNTY	CONTRACT	F. R. A. REG. NO.	STATE	FED. AID PROJECT NO.	SHEET NO.	TOTAL SHEETS
NEW CASTLE	79-071-02	2	DEL.	M-1191 (1)	41	112

AUGUSTINE BRIDGE RECONSTRUCTION

NO.	REVISIONS	BY	DATE
⚠1	UTILITY INSTALLATION AND LOCATION	SMT	9/20/79

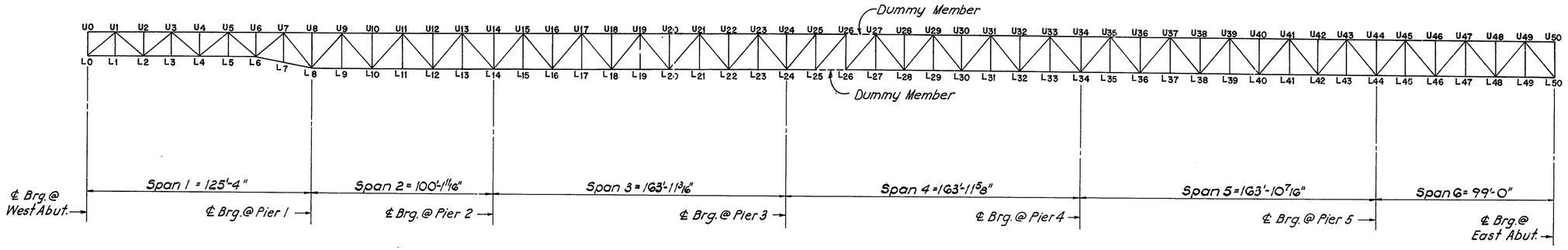

TRUSS ELEVATION
Scale: 1" = 30'

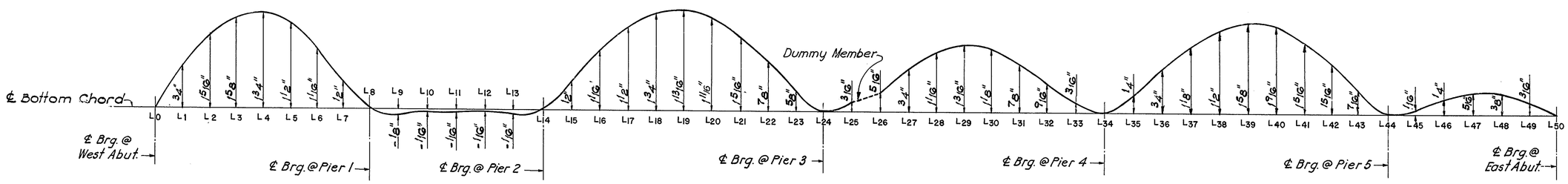

CAMBER ORDINATES
Scale: Horiz. 1" = 30'
Vert. Full Size

NOTES:

1. Camber Ordinates shown are due to full Dead Load and do not include allowance for Future Wearing Surface.
2. All Camber Ordinates shown are measured vertically at panel points along ℄ of truss Bottom Chord.

REFERENCES:	SH. NO.
General Plan & Elevation	15
General Notes	3
Lengths of Truss Members	36-40

DELAWARE
DEPARTMENT OF TRANSPORTATION
DIVISION OF HIGHWAYS

TRUSS CAMBER DIAGRAM

D. T. C.	SCALE As Shown	APPROVED BY: ROBERT C. McDONNELL REGISTERED PROFESSIONAL ENGINEER No. 3000 — BRIDGE ENGINEER

COUNTY	CONTRACT	P.R.A. REG. NO.	STATE	FED. AID PROJECT NO.	SHEET NO.	TOTAL SHEETS
NEW CASTLE	79-071-02	2	DEL	M-1191(1)	42	112

AUGUSTINE BRIDGE RECONSTRUCTION

NO.	REVISIONS	BY	DATE
1	UTILITY INSTALLATION AND LOCATION	SMT	9/20/79

1 UTILITIES NOT SHOWN.
DETAILS AND LOCATION OF 4 - 6 in. DIA. ELECTRICAL STEEL CONDUITS AND 12 in. DIA. GAS MAIN AND THEIR SUPPORTS ARE SHOWN ON SHEETS 81A, 81B AND 81C.

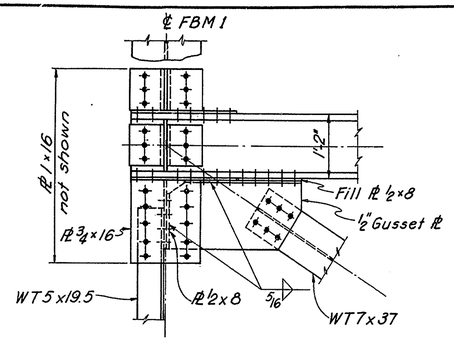

SECTION 1-1

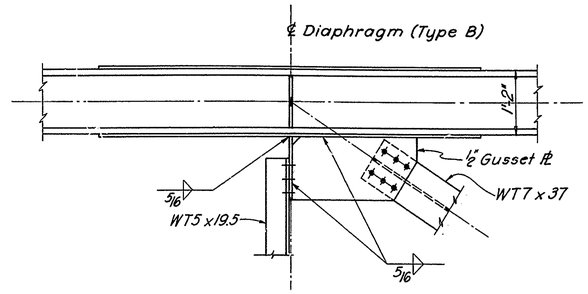

SECTION 5-5

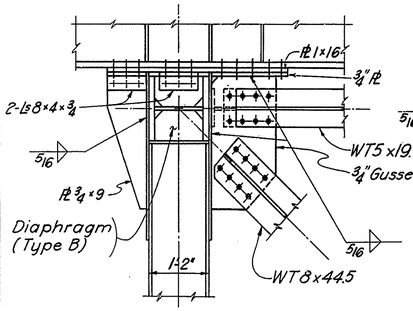

SECTION 3-3

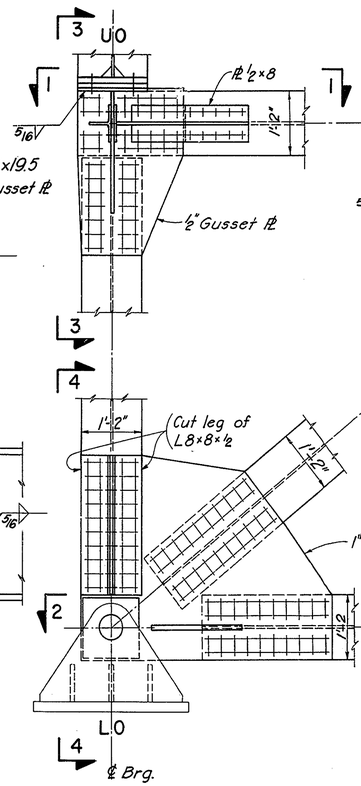

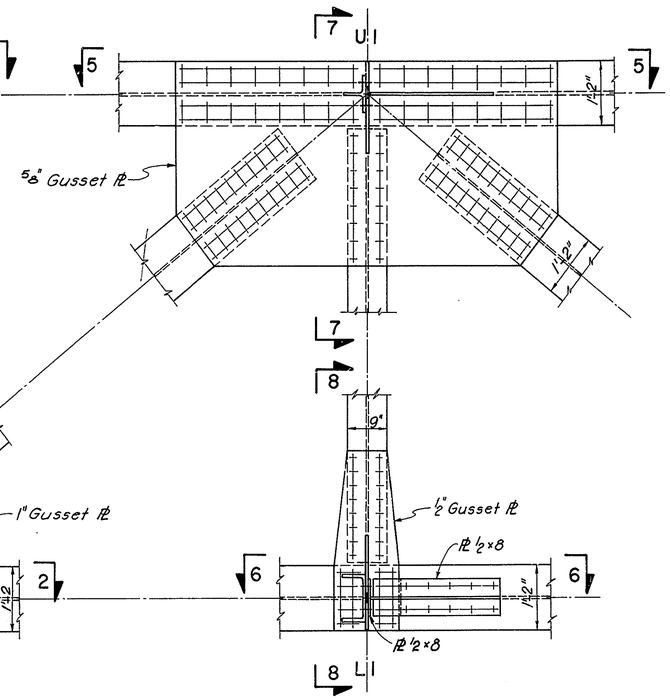

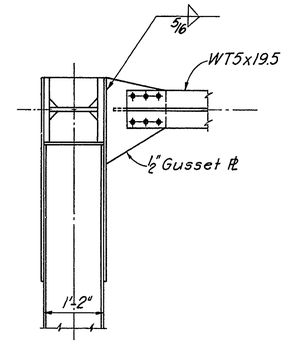

SECTION 7-7

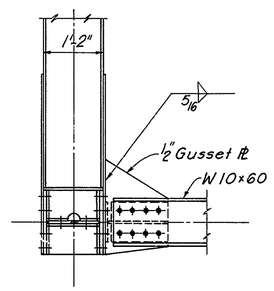

SECTION 8-8

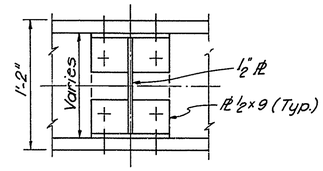

PLAN

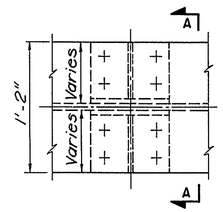

ELEVATION

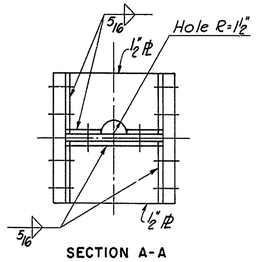

SECTION A-A

DIAPHRAGM TYPE A

Scale: 1½"=1'-0"

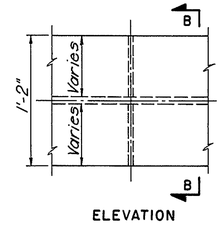

ELEVATION

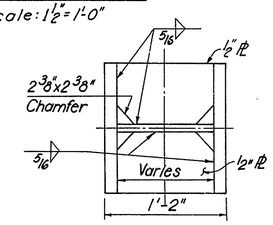

SECTION B-B

DIAPHRAGM TYPE B

Scale: 1½"=1'-0"

Note:
Unless otherwise shown all bolts are ⅞" dia.
High Strength Bolts, ASTM A325, Type 3.
Bolt Heads shall be placed on the outer faces of the members and faces exposed to view.

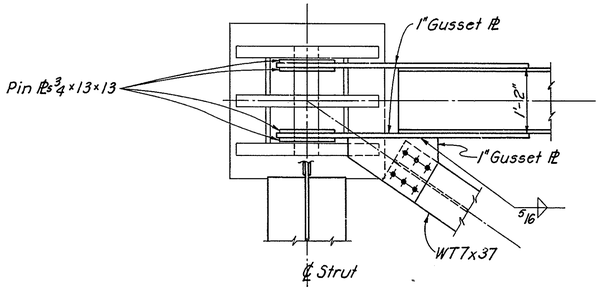

SECTION 2-2

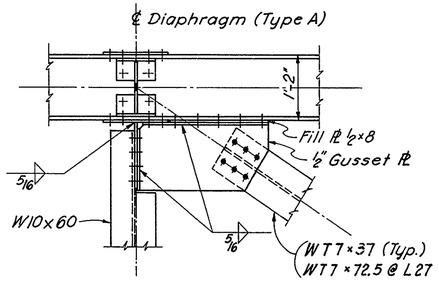

SECTION 6-6

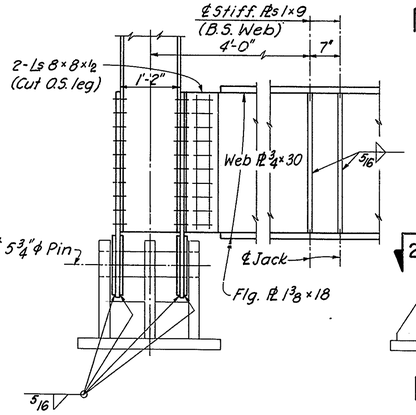

SECTION 4-4

REFERENCES:

	SH. NO.
General Plan & Elevation	15
General Notes	3
Truss Layout & Member Sizes	36
Sway Frame Member Sizes	57
Bearing Details	62
Lateral Bracing	58

DELAWARE
DEPARTMENT OF TRANSPORTATION
DIVISION OF HIGHWAYS

TRUSS DETAILS
PANEL POINTS UO, LO, UI & LI

D.
T.
C.

SCALE ¾"=1'-0" & as noted

APPROVED BY

COUNTY	CONTRACT	P.R.A. REG. NO.	STATE	FED. AID PROJECT NO.	SHEET NO.	TOTAL SHEETS
NEW CASTLE	79-071-02	2	DEL.	M-1191(1)	43	112

AUGUSTINE BRIDGE RECONSTRUCTION

NO.	REVISIONS	BY	DATE
1	UTILITY INSTALLATION AND LOCATION	SMT	9/20/79

1 UTILITIES NOT SHOWN.
DETAILS AND LOCATION OF 4 - 6 in. DIA. ELECTRICAL STEEL CONDUITS AND 12 in. DIA. GAS MAIN AND THEIR SUPPORTS ARE SHOWN ON SHEETS 81A, 81B AND 81C.

REFERENCES:

	SHEET NO.
General Plan & Elevation	15
General Notes	3
Truss Layout & Member Sizes	36
Sway Frame Member Sizes	57
Diaphragm Details	42
Sections 3-3 & 7-7	42
Panel Point L1	42
Lateral Bracing	58

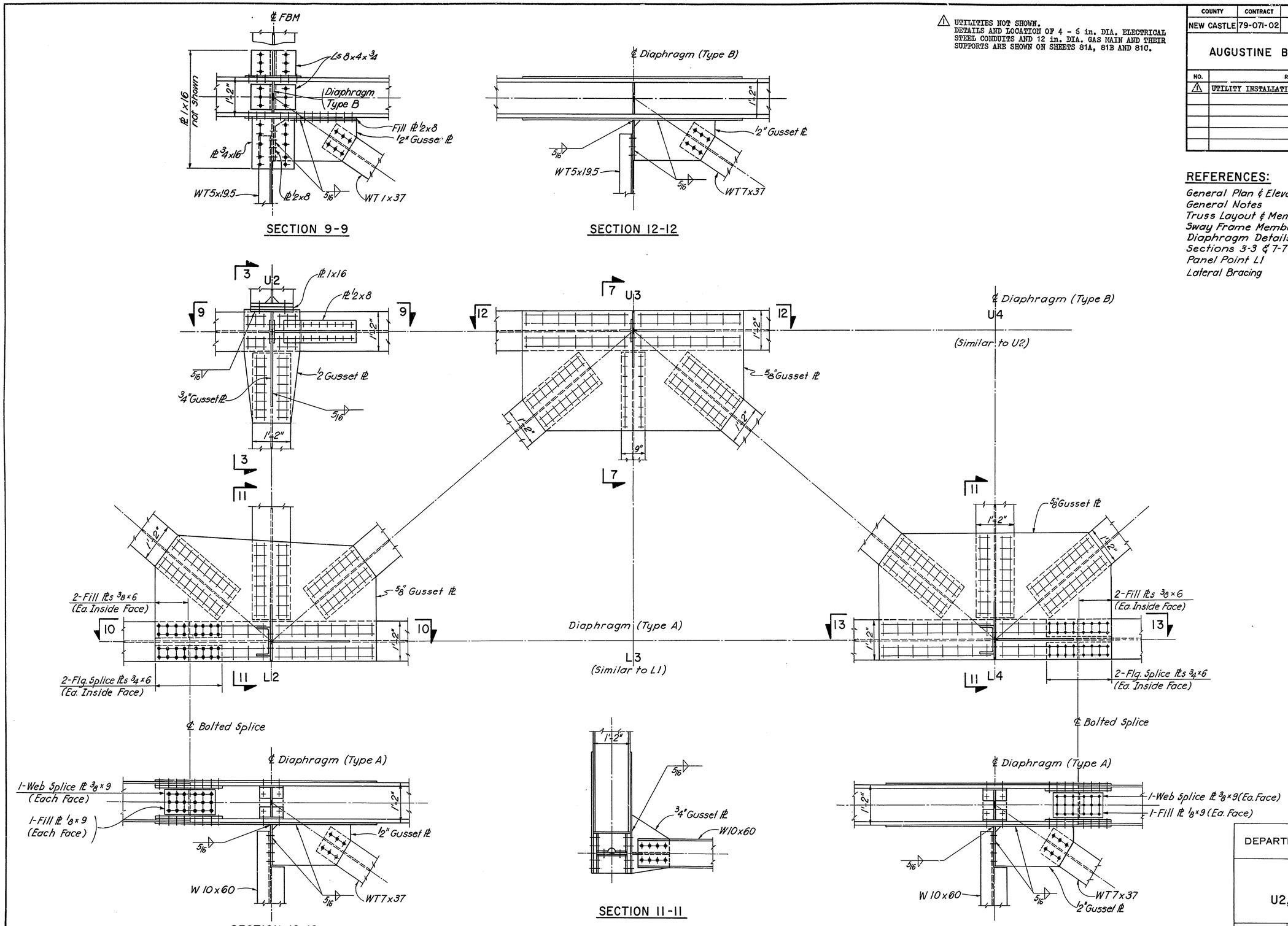

DELAWARE
DEPARTMENT OF TRANSPORTATION
DIVISION OF HIGHWAYS

PANEL POINTS
U2, L2, U3, L3, U4 & L4

D. T. C.	SCALE	APPROVED
	3/4"=1'-0"	H. I. Weitzel, BRIDGE ENGINEER

ROBERT C. McDOWELL REGISTERED PROFESSIONAL ENGINEER NO. 5

COUNTY	CONTRACT	P. R. A. CEG. NO.	STATE	FED. AID PROJECT NO.	SHEET NO.	TOTAL SHEETS
NEW CASTLE	79-071-02	2	DEL.	M-1191 (1)	44	112

AUGUSTINE BRIDGE RECONSTRUCTION

NO.	REVISIONS	BY	DATE
1	UTILITY INSTALLATION AND LOCATION	SMT	9/20/79

1 UTILITIES NOT SHOWN.
DETAILS AND LOCATION OF 4 - 6 in. DIA. ELECTRICAL STEEL CONDUITS AND 12 in. DIA. GAS MAIN AND THEIR SUPPORTS ARE SHOWN ON SHEETS 81A, 81B AND 81C.

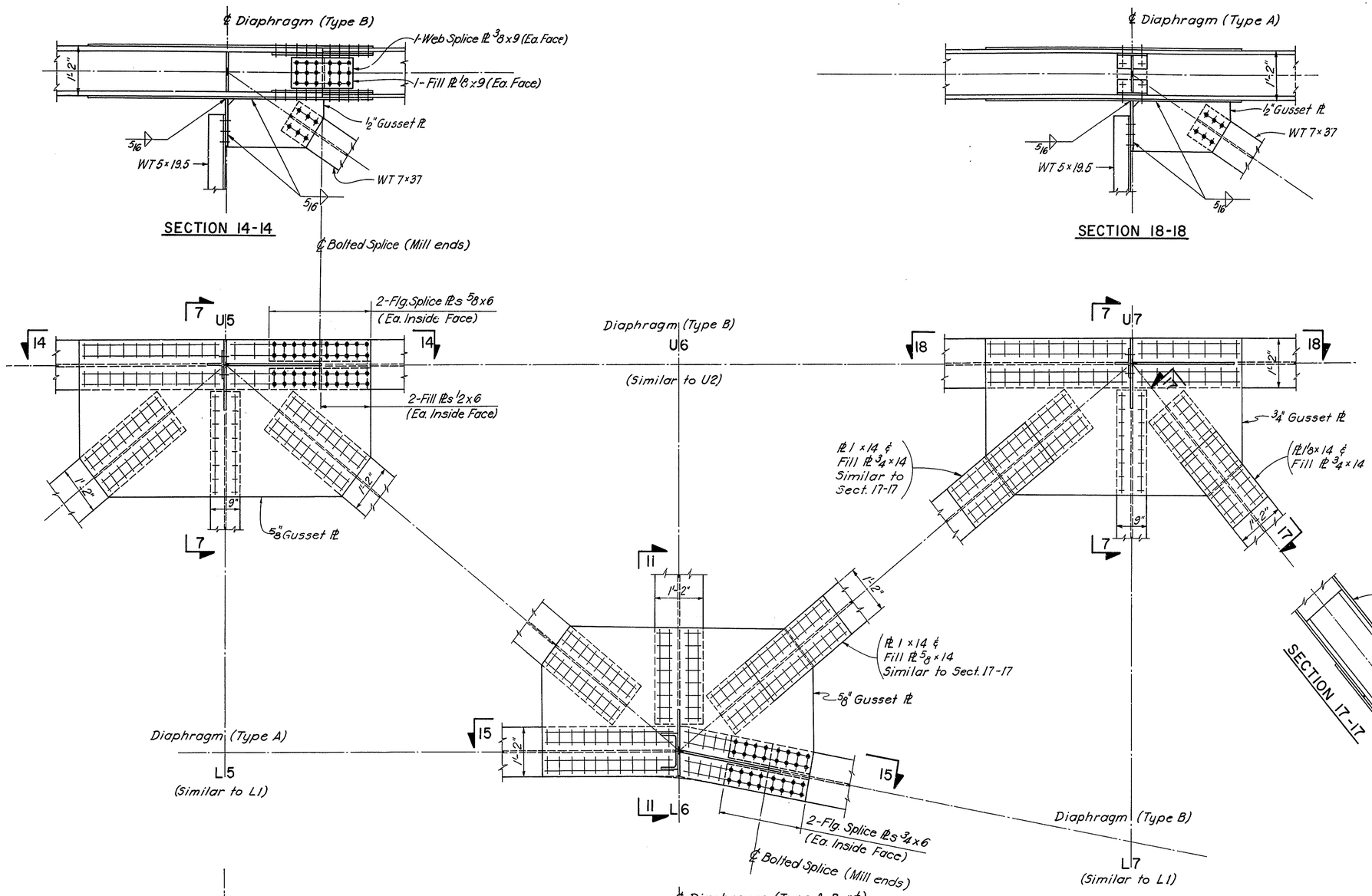

REFERENCES:

	SHEET NO.
General Plan & Elevation	15
General Notes	3
Truss Layout & Member Sizes	36
Sway Frame Member Sizes	57
Diaphragm Details	42
Section 7-7 & Panel Point L1	42
Section 11-11 & Panel Point U2	43
Lateral Bracing	58

DELAWARE
DEPARTMENT OF TRANSPORTATION
DIVISION OF HIGHWAYS

PANEL POINTS
U5, L5, U6, L6, U7 & L7

D.
T.
C.

SCALE 3/4" = 1'-0" & as noted

APPROVED BY ROBERT C. McDONELL REGISTERED PROFESSIONAL ENGINEER NO. 3270 BRIDGE ENGINEER

COUNTY	CONTRACT	F.B.A. REG. NO.	STATE	FED. AID PROJECT NO.	SHEET NO.	TOTAL SHEETS
NEW CASTLE	79-071-02	2	DEL.	M-1191(11)	45	112

AUGUSTINE BRIDGE RECONSTRUCTION

NO.	REVISIONS	BY	DATE
1	UTILITY INSTALLATION AND LOCATION	SMT	9/20/79

1 UTILITIES NOT SHOWN. DETAILS AND LOCATION OF 4 - 6 in. DIA. ELECTRICAL STEEL CONDUITS AND 12 in. DIA. GAS MAIN AND THEIR SUPPORTS ARE SHOWN ON SHEETS 81A, 81B AND 81C.

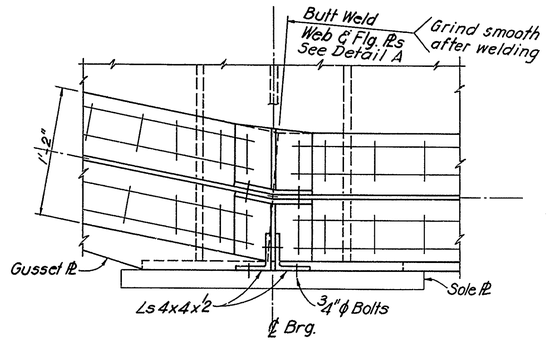

SECTION 22-22
Scale: 1½" = 1'-0"

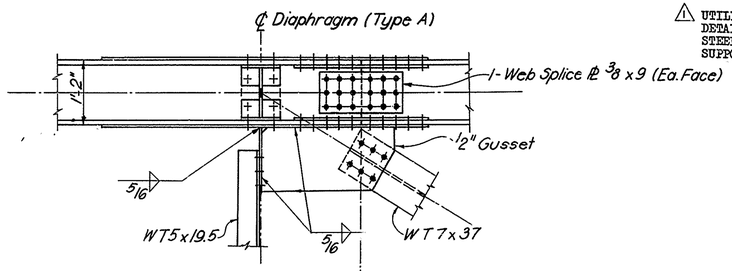

SECTION 23-23

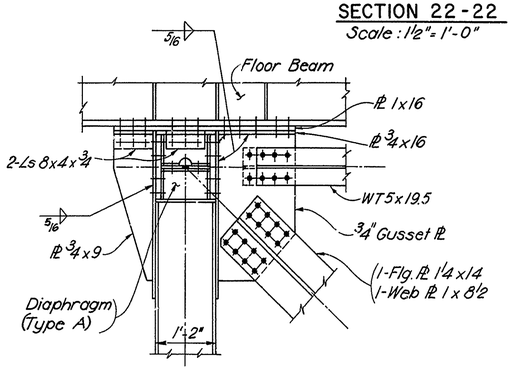

SECTION 19-19

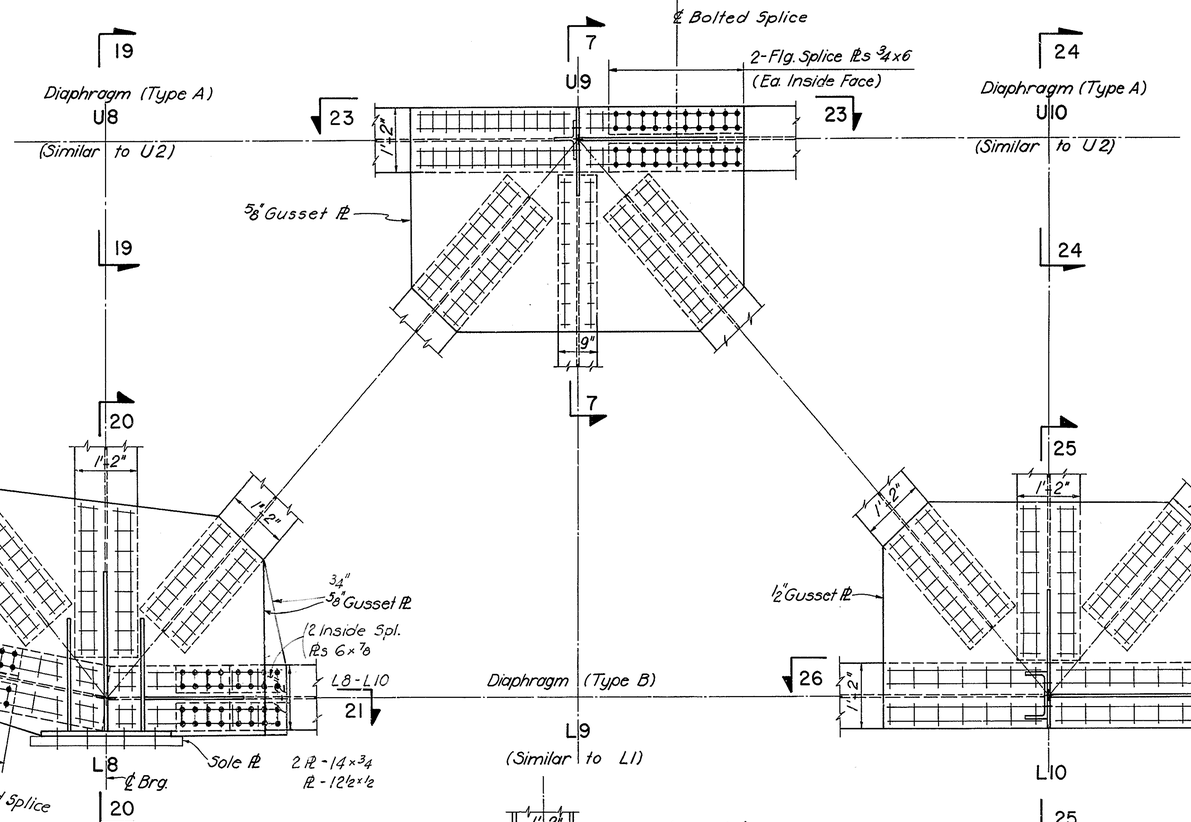

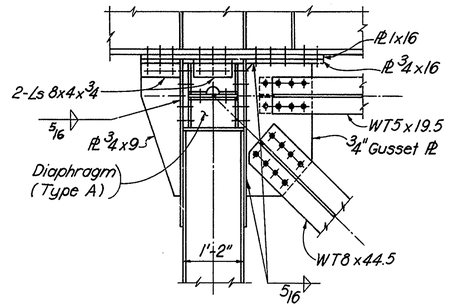

SECTION 24-24

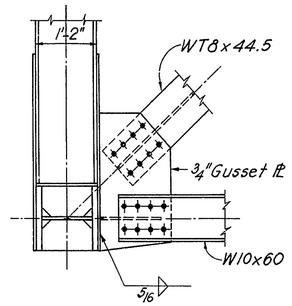

SECTION 25-25

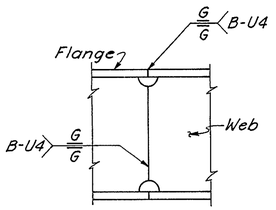

DETAIL A

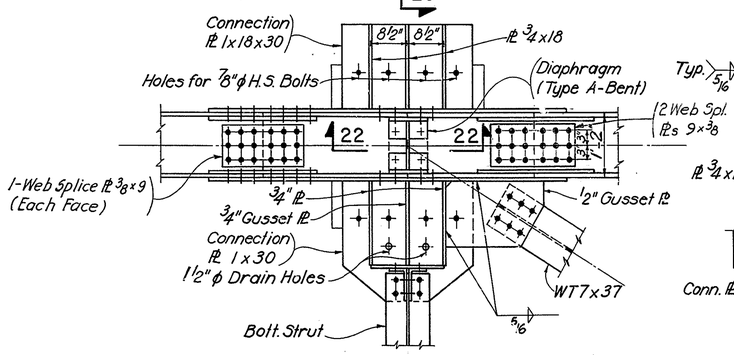

SECTION 21-21

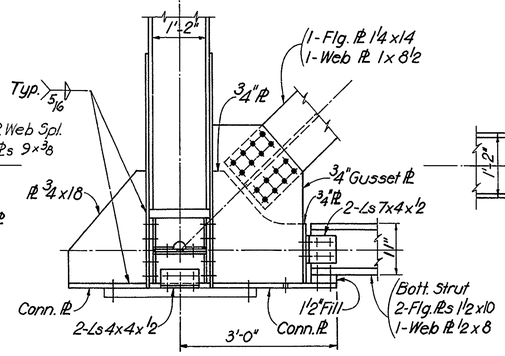

SECTION 20-20

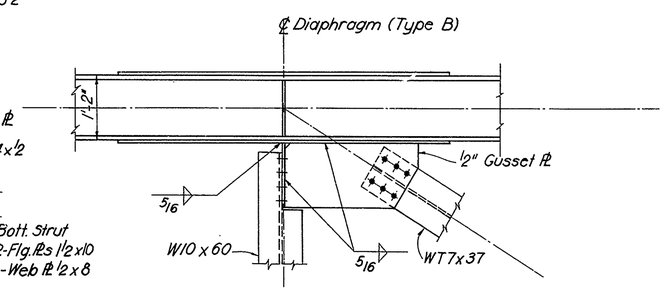

SECTION 26-26

AS BUILT

REFERENCES:

	SHEET NO.
General Plan & Elevation	15
General Notes	3
Truss Layout & Member Sizes	36
Sway Frame Member Sizes	57
Lateral Bracing	58
Diaphragm Details	42
Section 7-7 & Panel Point L1	42
Panel Point U2 "	43
Bearing Details	63
Hold Down Device	20

DELAWARE
DEPARTMENT OF TRANSPORTATION
DIVISION OF HIGHWAYS

PANEL POINTS
U8, L8, U9, L9, U10 & L10

D.
T.
C.

SCALE 3/4" = 1'-0" & as noted

APPROVED BY: NO. 3069 ROBERT W. CODOREY REGISTERED PROFESSIONAL ENGINEER
BRIDGE ENGINEER

COUNTY	CONTRACT	P. B. A. REG. NO.	STATE	FED. AID PROJECT NO.	SHEET NO.	TOTAL SHEETS
NEW CASTLE	79-071-02	2	DEL	M-1191(1)	46	112

AUGUSTINE BRIDGE RECONSTRUCTION

NO.	REVISIONS	BY	DATE
1	UTILITY INSTALLATION AND LOCATION	SMT	9/20/79

1 UTILITIES NOT SHOWN.
DETAILS AND LOCATION OF 4 - 6 in. DIA. ELECTRICAL STEEL CONDUITS AND 12 in. DIA. GAS MAIN AND THEIR SUPPORTS ARE SHOWN ON SHEETS 81A, 81B AND 81C.

REFERENCES:

	SH. NO.
General Plan & Elevation	15
General Notes	3
Truss Layout & Member Sizes	37
Sway Frame Member Sizes	57
Lateral Bracing	58
Diaphragm Details	42
Section 7-7 & Panel Point L1	42
Section 17-17	44
Panel Points U8 & U10	45
Sections 20-20, 21-21 & 25-25	45
Bearing Details	63

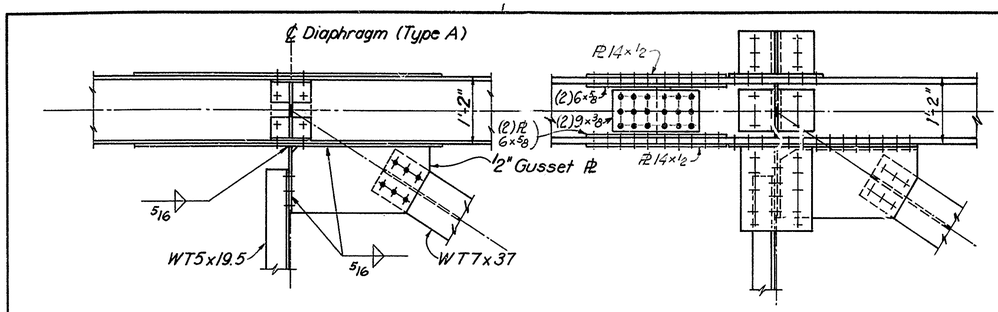

SECTION 27-27

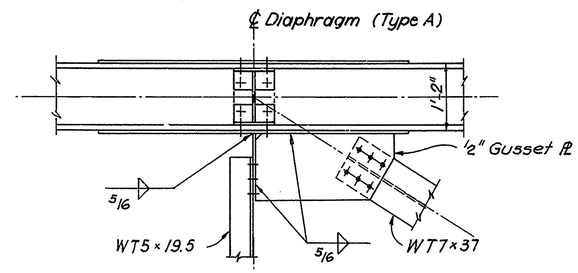

SECTION 29-29

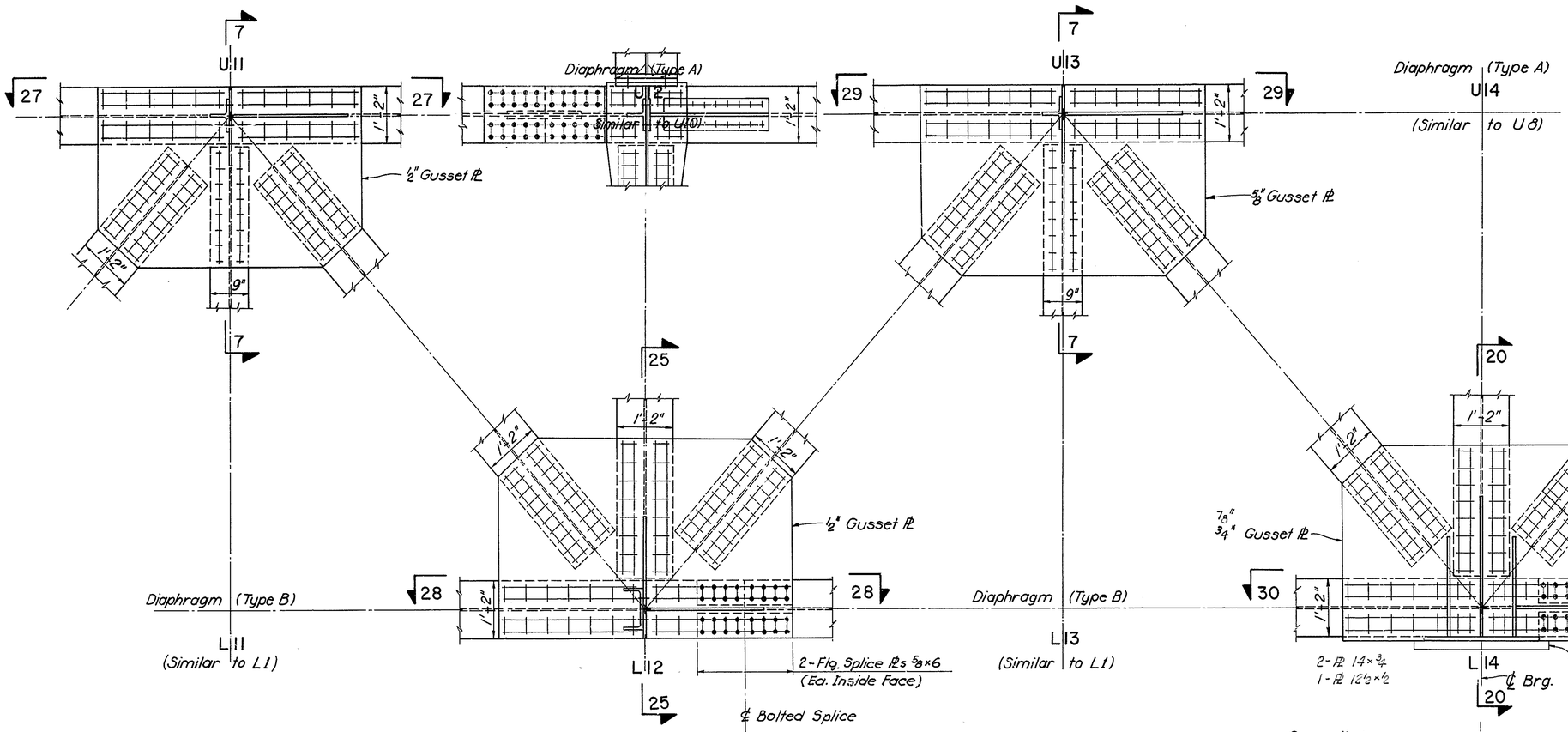

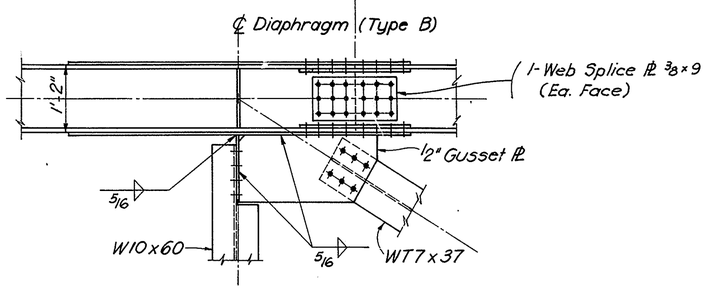

SECTION 28-28

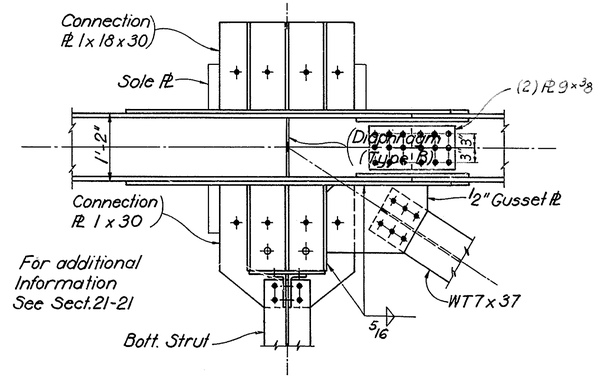

SECTION 30-30

AS BUILT

DELAWARE
DEPARTMENT OF TRANSPORTATION
DIVISION OF HIGHWAYS

PANEL POINTS
U11, L11, U12, L12,
U13, L13, U14 & L14

D. T. C.	SCALE 3/4" = 1'-0"	APPROVED H. I. McDowell BRIDGE ENGINEER

HOWARD I. McDOWELL REGISTERED PROFESSIONAL ENGINEER

COUNTY	CONTRACT	P.R.A. REG. NO.	STATE	FED. AID PROJECT NO.	SHEET NO.	TOTAL SHEETS
NEW CASTLE	79-071-02	2	DEL	M-1191 (1)	47	112

AUGUSTINE BRIDGE RECONSTRUCTION

NO.	REVISIONS	BY	DATE
1	UTILITY INSTALLATION AND LOCATION	SMT	9/20/79

1 UTILITIES NOT SHOWN.
DETAILS AND LOCATION OF 4 - 6 in. DIA. ELECTRICAL STEEL CONDUITS AND 12 in. DIA. GAS MAIN AND THEIR SUPPORTS ARE SHOWN ON SHEETS 81A, 81B AND 81C.

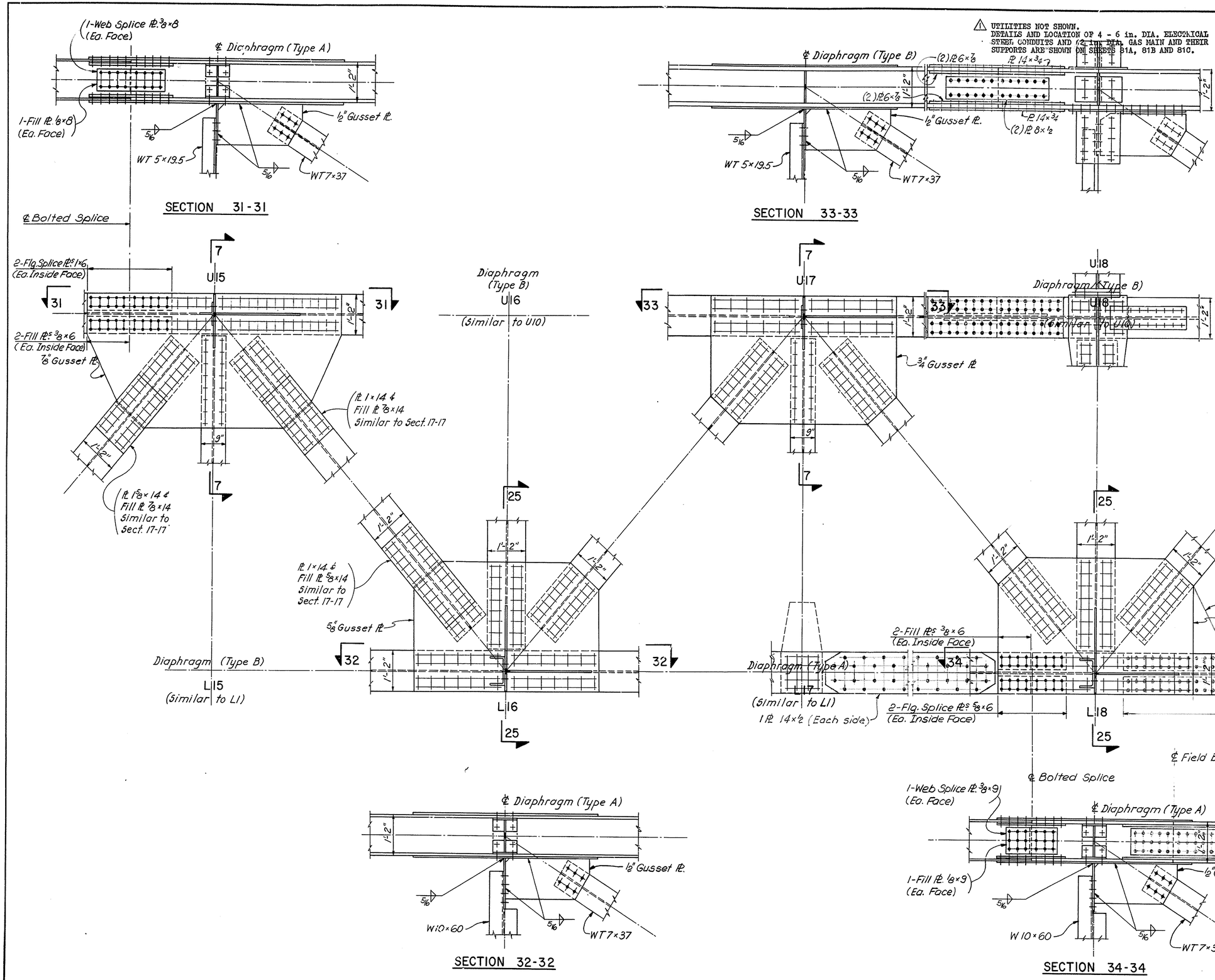

REFERENCES:

	SH. NO.
General Plan and Elevation	15
General Notes	3
Truss Layout and Member Sizes	37
Sway Frame Member Sizes	57
Lateral Bracing	58
Diaphragm Details	42
Section 7-7 and Panel Point L1	42
Section 17-17	44
Panel Point U10	45
Section 25-25	45

AS BUILT

DELAWARE
DEPARTMENT OF TRANSPORTATION
DIVISION OF HIGHWAYS

PANEL POINTS
U15, L15, U16, L16,
U17, L17, U18 & L18

D.
T.
C.

SCALE 3/4"=1'-0"

APPROVED

ROBERT C. McDOWELL REGISTERED PROFESSIONAL ENGINEER NO. 3069 STATE OF DELAWARE

COUNTY	CONTRACT	F.B.A. REG. NO.	STATE	FED. AID PROJECT NO.	SHEET NO.	TOTAL SHEETS
NEW CASTLE	79-071-02	2	DEL	M-1191(1)	48	112

AUGUSTINE BRIDGE RECONSTRUCTION

NO.	REVISIONS	BY	DATE
1	UTILITY INSTALLATION AND LOCATION	SMT	9/20/79

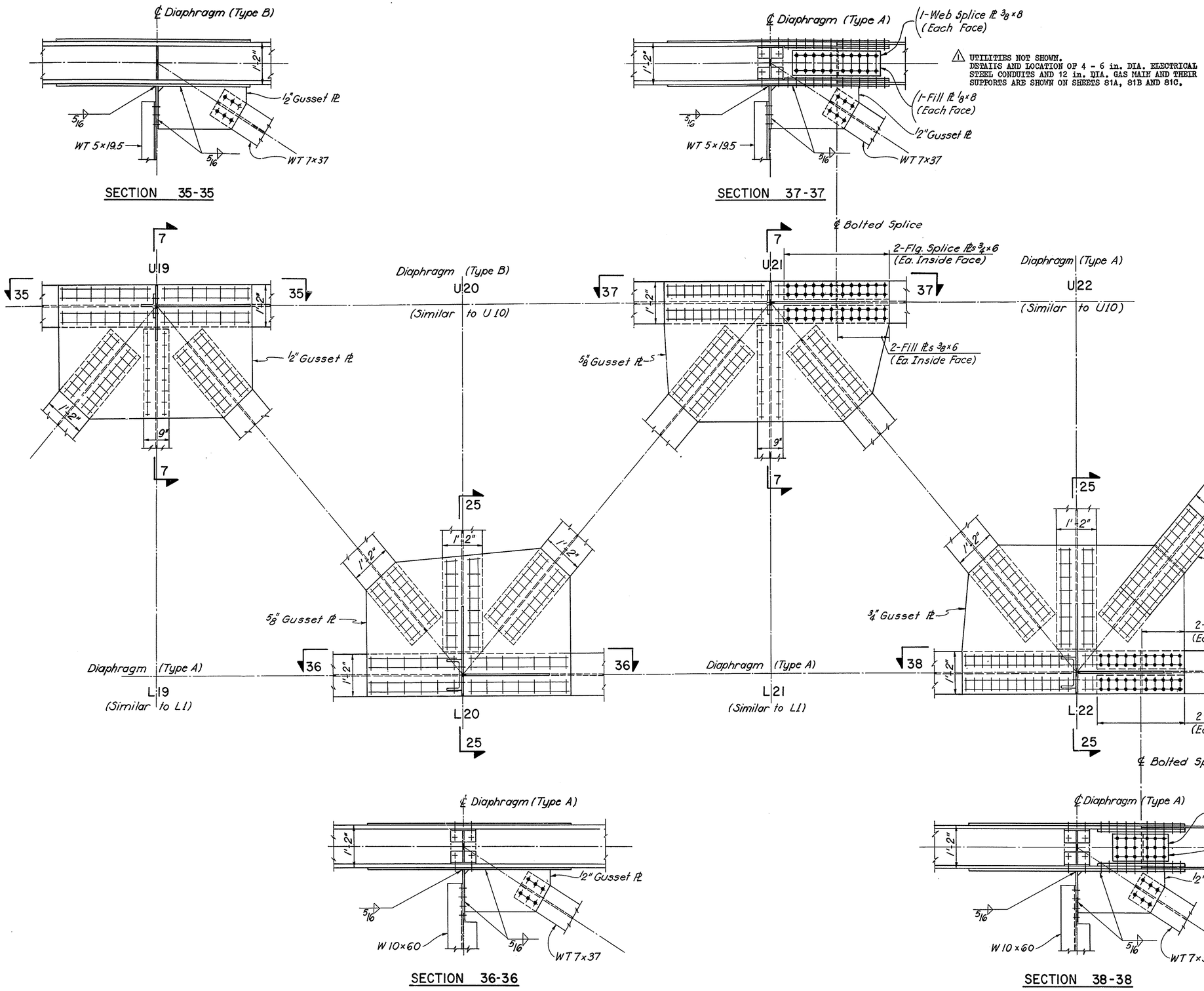

REFERENCES:

	SHEET NO.
General Plan & Elevation	15
General Notes	3
Truss Layout & Member Sizes	37 & 38
Sway Frame Member Sizes	57
Lateral Bracing	58
Diaphragm Details	42
Section 7-7 & Panel Point L1	42
Section 17-17	44
Panel Point U10	45
Section 25-25	45

⚠ UTILITIES NOT SHOWN. DETAILS AND LOCATION OF 4 - 6 in. DIA. ELECTRICAL STEEL CONDUITS AND 12 in. DIA. GAS MAIN AND THEIR SUPPORTS ARE SHOWN ON SHEETS 81A, 81B AND 81C.

DELAWARE
DEPARTMENT OF TRANSPORTATION
DIVISION OF HIGHWAYS

PANEL POINTS
U19, L19, U20, L20, U21, L21, U22 & L22

D.
T.
C.

SCALE 3/4" = 1'-0"

APPROVED BY: [illegible]
BRIDGE ENGINEER

ROBERT C. McDONNELL REGISTERED PROFESSIONAL ENGINEER NO. 3063

⚠ UTILITIES NOT SHOWN.
DETAILS AND LOCATION OF 4 - 6 in. DIA. ELECTRICAL STEEL CONDUITS AND 12 in. DIA. GAS MAIN AND THEIR SUPPORTS ARE SHOWN ON SHEETS 81A, 81B AND 81C.

COUNT.	CONTRACT	P.R.A. REG. NO.	STATE	FED. AID PROJECT NO.	SHEET NO.	TOTAL SHEETS
NEW CASTLE	79-071-02	2	DEL.	M-1191(1)	49	112

AUGUSTINE BRIDGE RECONSTRUCTION

NO.	REVISIONS	BY	DATE
⚠	UTILITY INSTALLATION AND LOCATION	SMT	9/20/79

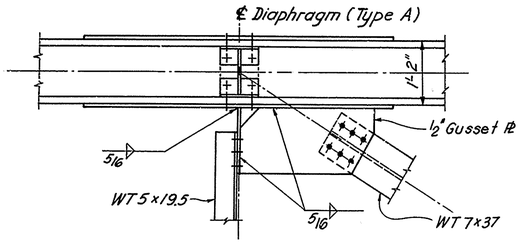

SECTION 39-39

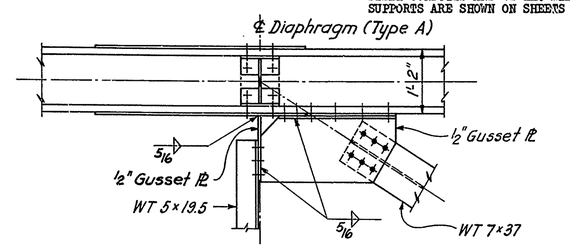

SECTION 41-41

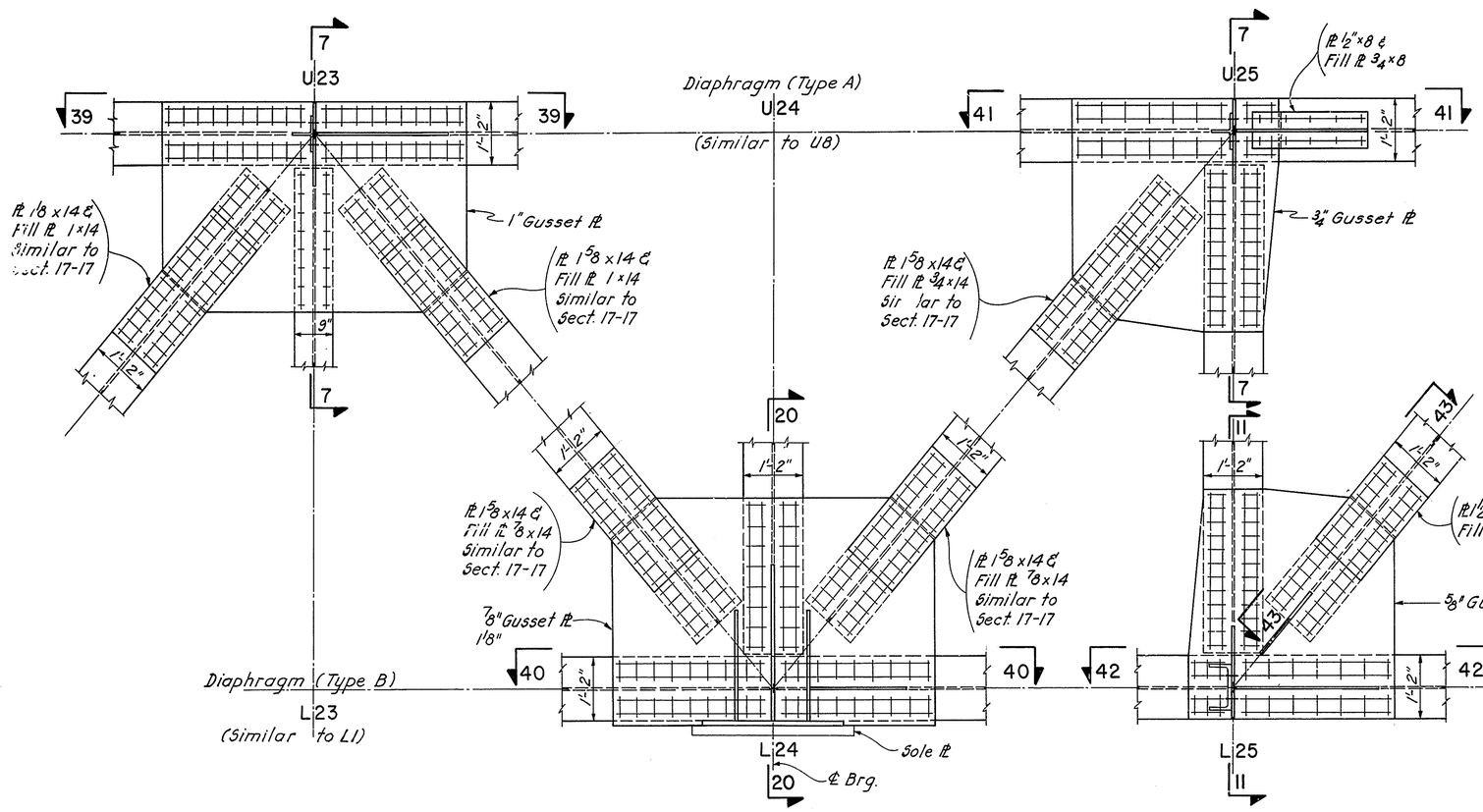

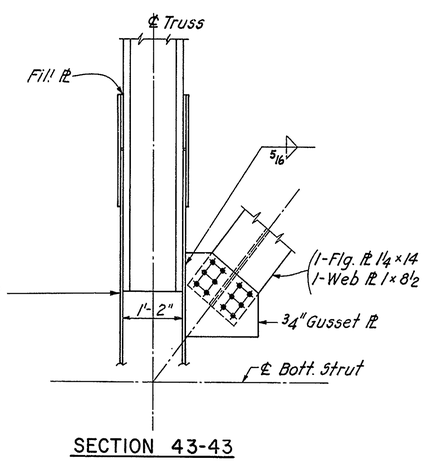

SECTION 43-43

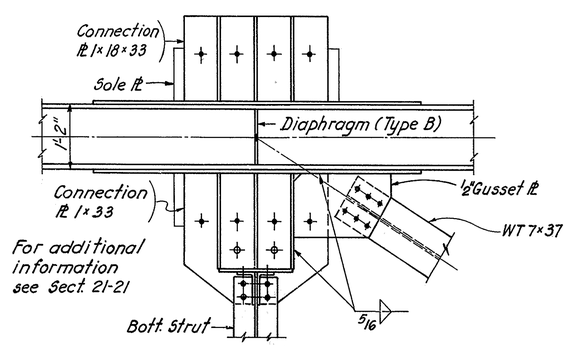

SECTION 40-40

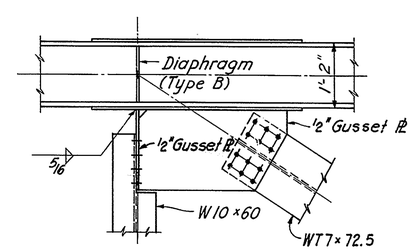

SECTION 42-42

REFERENCES:

	SH. NO.
General Plan and Elevation	15
General Notes	3
Truss Layout and Member Sizes	38
Sway Frame Member Sizes	57
Lateral Bracing	58
Diaphragm Details	42
Section 7-7 ℄ Panel Point L1	42
Section 11-11	43
Section 17-17	44
Panel Point U8, Sections 20-20 and 21-21.	45

AS BUILT

DELAWARE
DEPARTMENT OF TRANSPORTATION
DIVISION OF HIGHWAYS

PANEL POINTS
U23, L23, U24, L24, U25 & L25

D.
T.
C.

SCALE
3/4" = 1'-0"

APPROVED CHIEF ENGINEER

ROBERT C. McDOWELL REGISTERED PROFESSIONAL ENGINEER No. 3027 STATE OF DELAWARE

COUNTY	CONTRACT	P. R. A. REG. NO.	STATE	FED. AID PROJECT NO.	SHEET NO.	TOTAL SHEETS
NEW CASTLE	79-071-02	2	DEL.	M-1191(1)	50	112

AUGUSTINE BRIDGE RECONSTRUCTION

NO.	REVISIONS	BY	DATE
1	UTILITY INSTALLATION AND LOCATION	SMT	9/20/79

1 UTILITIES NOT SHOWN. DETAILS AND LOCATION OF 4 - 6 in. DIA. ELECTRICAL STEEL CONDUITS AND 12 in. DIA. GAS MAIN AND THEIR SUPPORTS ARE SHOWN ON SHEETS 61A, 61B AND 61C.

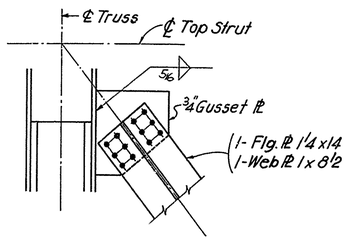

SECTION 44-44

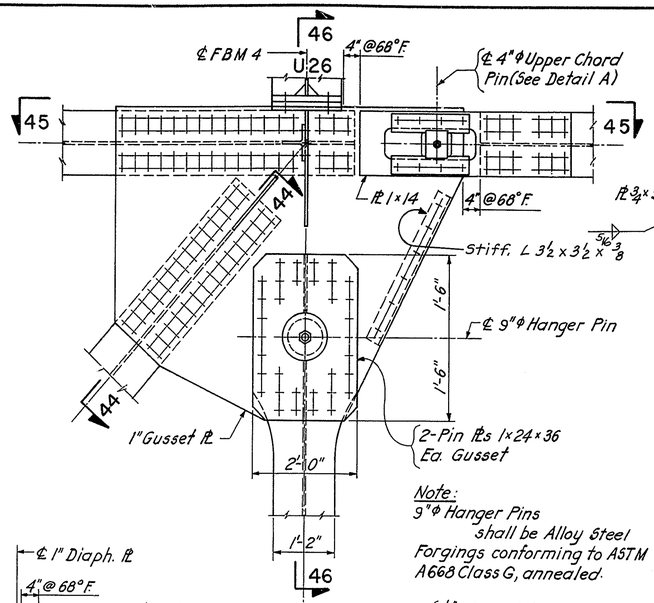

Note:
9" ϕ Hanger Pins shall be Alloy Steel Forgings conforming to ASTM A668 Class G, annealed.

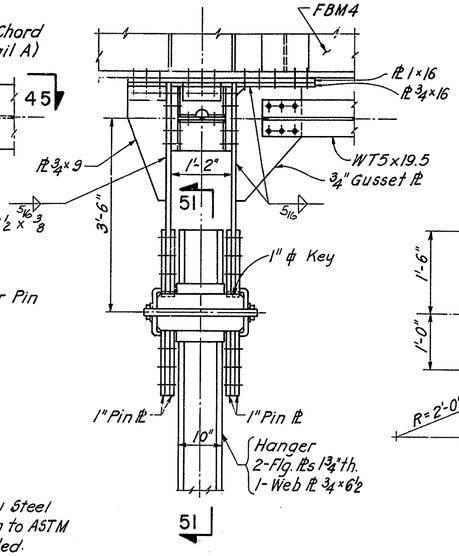

SECTION 46-46

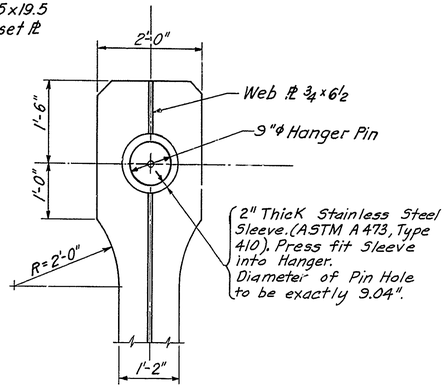

SECTION 51-51

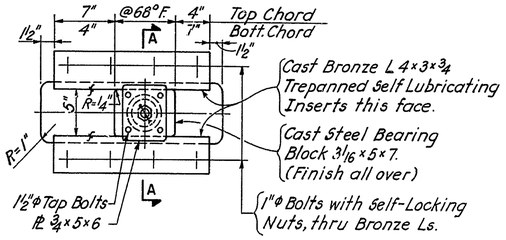

DETAIL "A"
Scale: 1 1/2" = 1'-0"

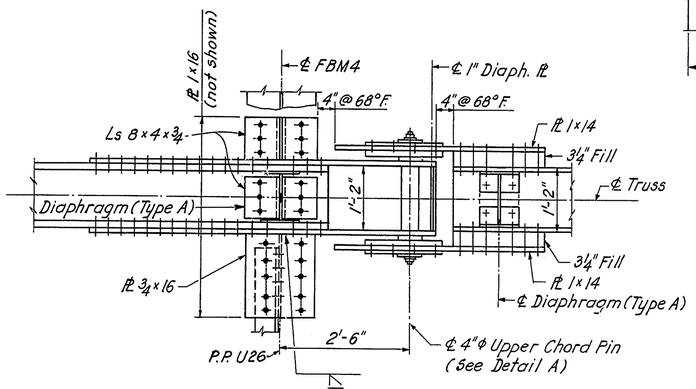

SECTION 45-45

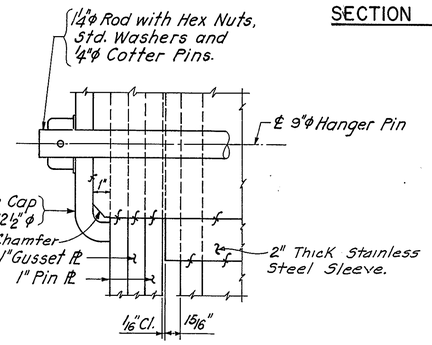

DETAIL OF 10" DIA. HANGER PIN
Scale: 3" = 1'-0"

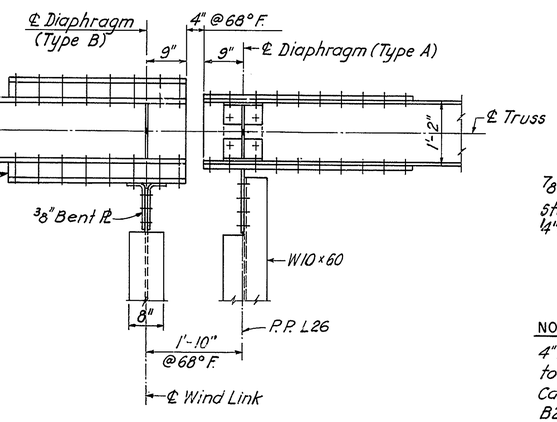

SECTION 49-49

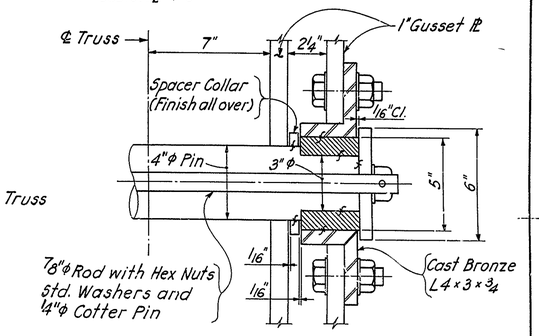

SECTION A-A
Scale: 3" = 1'-0"

NOTES:
4" Dia. Chord Pins shall be steel forgings, conforming to ASTM A668 Class D, annealed.
Cast Bronze Ls 4 x 3 x 3/4 shall conform to ASTM B22 Copper Alloy No. 863. Cast Steel Bearing Block shall conform to AASHTO designation M192, Class 90.

DETAIL OF 4" DIA. CHORD PIN

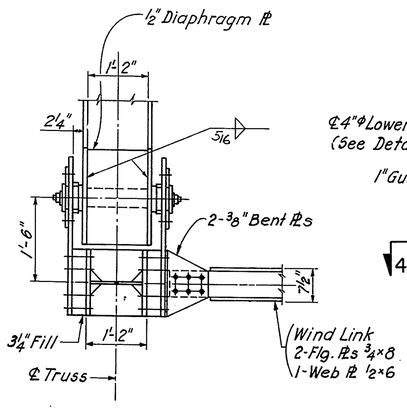

SECTION 48-48

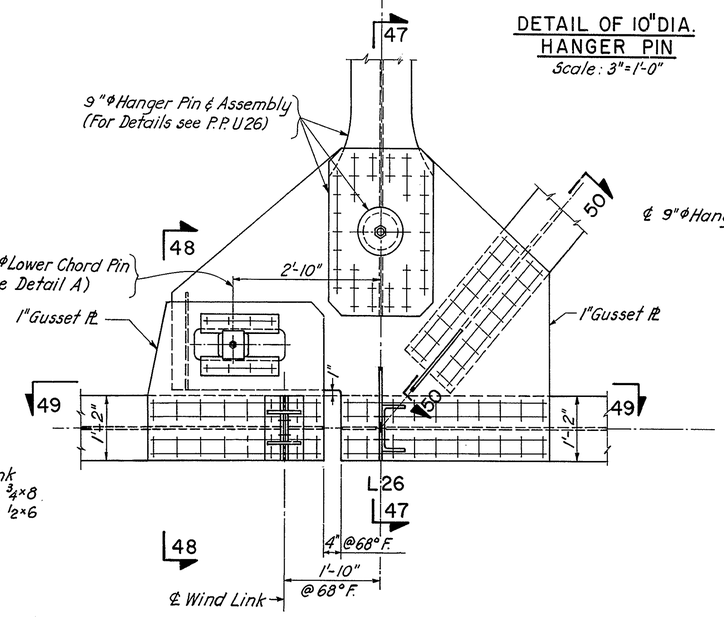

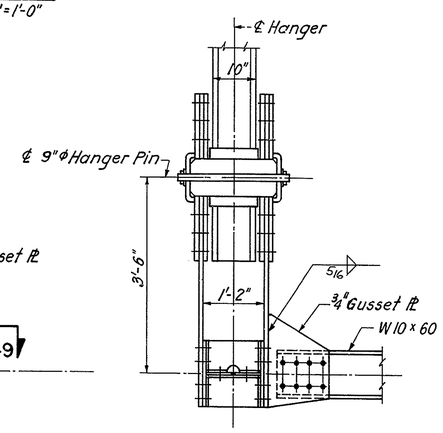

SECTION 47-47

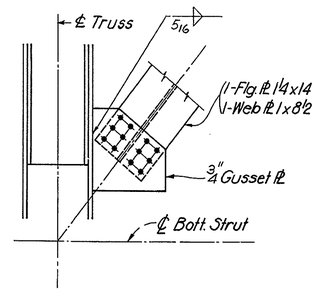

SECTION 50-50

REFERENCES:

	SH. NO.
General Plan & Elevation	15
General Notes	3
Truss Layout & Member Sizes	38
Wind Link Details	59
End Sway Frame	57
Floor Beam 4	65
Diaphragms Type A & B	42

DELAWARE
DEPARTMENT OF TRANSPORTATION
DIVISION OF HIGHWAYS

PANEL POINTS
U26 & L26

D.
T.
C.

SCALE
3/4" = 1'-0"
& As noted

APPROVED BY: W. L. Wanna
BRIDGE ENGINEER

ROBERT C. McDOWELL REGISTERED NO. 3069

COUNTY	CONTRACT	P.R.S. REG. NO.	STATE	FED. AID PROJECT NO.	SHEET NO.	TOTAL SHEETS
NEW CASTLE	79-071-02	2	DEL	M-1191 (1)	51	112

AUGUSTINE BRIDGE RECONSTRUCTION

NO.	REVISIONS	BY	DATE
1	UTILITY INSTALLATION AND LOCATION	SMT	9/20/79

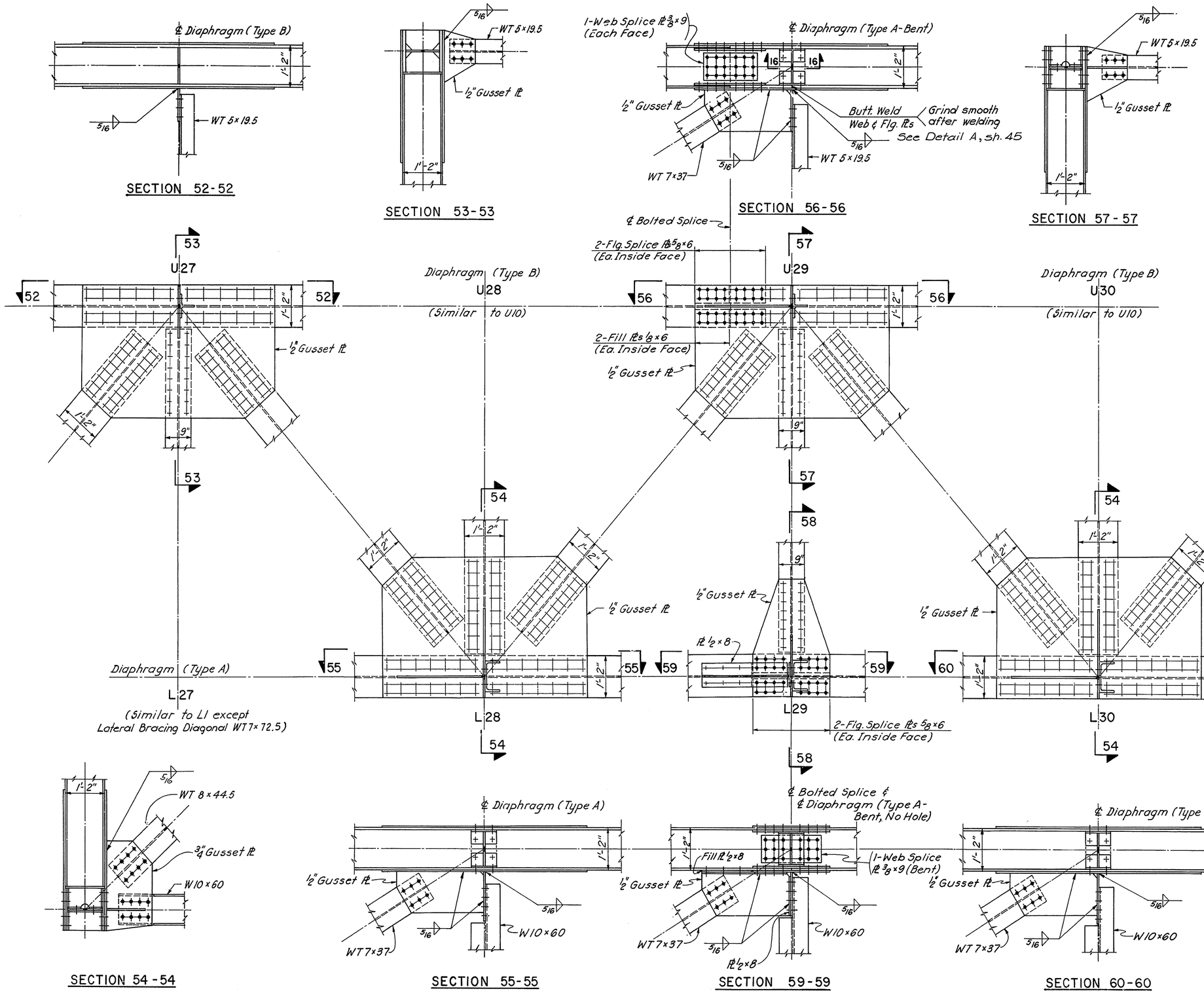

REFERENCES:

	SHEET NO.
General Plan and Elevation	15
General Notes	3
Truss Layout and Member Sizes	38
Sway Frame Member Sizes	57
Lateral Bracing	58
Diaphragm Details	42
Panel Point L1	42
Section 16-16	44
Panel Point U10	45

1 UTILITIES NOT SHOWN. DETAILS AND LOCATION OF 4 - 6 in. DIA. ELECTRICAL STEEL CONDUITS AND 12 in. DIA. GAS MAIN AND THEIR SUPPORTS ARE SHOWN ON SHEETS 81A, 81B AND 81C.

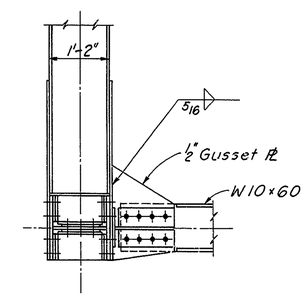

SECTION 58-58

DELAWARE
DEPARTMENT OF TRANSPORTATION
DIVISION OF HIGHWAYS

PANEL POINTS
U27, L27, U28, L28,
U29, L29, U30 & L30

D.
T.
C.

SCALE 3/4" = 1'-0"

APPROVED BY 6903 ON
BRIDGE ENGINEER

COUNTY	CONTRACT	P. R. A. REG. NO.	STATE	FED. AID PROJECT NO.	SHEET NO.	TOTAL SHEETS
NEW CASTLE	79-071-02	2	DEL.	M-1191 (1)	52	112

AUGUSTINE BRIDGE RECONSTRUCTION

NO.	REVISIONS	BY	DATE
1	UTILITY INSTALLATION AND LOCATION	SMT	9/20/79

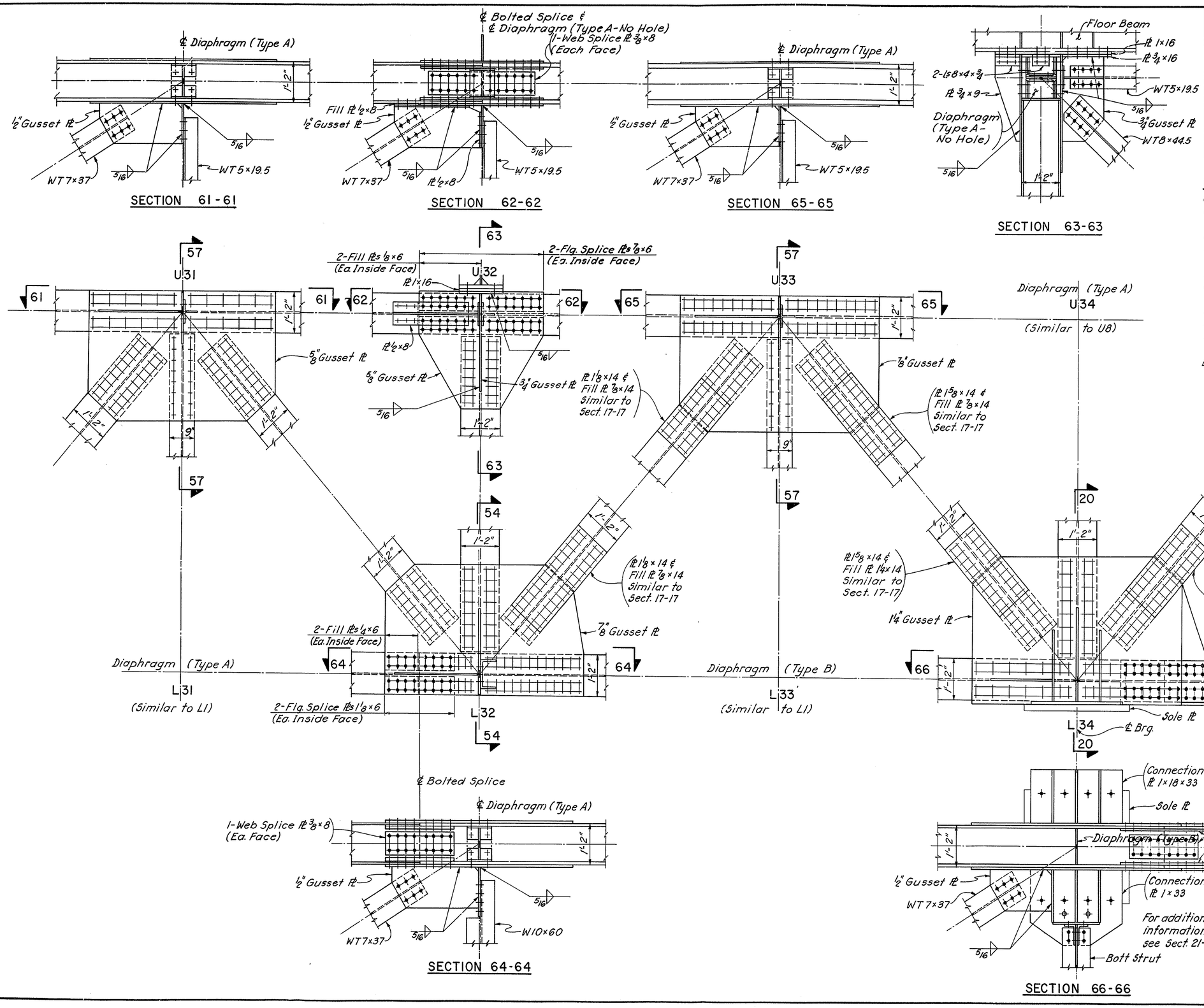

REFERENCES:

	SHEET NO.
General Plan and Elevation	15
General Notes	3
Truss Layout and Member Sizes	39
Sway Frame Member Sizes	57
Lateral Bracing	58
Diaphragm Details	42
Panel Point L1	42
Section 17-17	44
Panel Points U8 & U10	45
Sections 20-20 & 21-21	45
Sections 54-54 & 57-57	51
Bearing Details	63

1 UTILITIES NOT SHOWN.
DETAILS AND LOCATION OF 4 - 6 in. DIA. ELECTRICAL STEEL CONDUITS AND 12 in. DIA. GAS MAIN AND THEIR SUPPORTS ARE SHOWN ON SHEETS 81A, 81B AND 81C.

AS BUILT

DELAWARE
DEPARTMENT OF TRANSPORTATION
DIVISION OF HIGHWAYS

PANEL POINTS
U31, L31, U32, L32,
U33, L33, U34 & L34

D.
T.
C.

SCALE 3/4" = 1'-0"

APPROVED BY: H. I. McDowell
BRIDGE ENGINEER

COUNTY	CONTRACT	P. R. A. REG. NO.	STATE	FED. AID PROJECT NO.	SHEET NO.	TOTAL SHEETS
NEW CASTLE	79-071-02	2	DEL.	M-1191(1)	53	112

AUGUSTINE BRIDGE RECONSTRUCTION

NO.	REVISIONS	BY	DATE
1	UTILITY INSTALLATION AND LOCATION	SMT	9/20/79

1 UTILITIES NOT SHOWN.
DETAILS AND LOCATION OF 4 - 6 in. DIA. ELECTRICAL STEEL CONDUITS AND 12 in. DIA. GAS MAIN AND THEIR SUPPORTS ARE SHOWN ON SHEETS 81A, 81B AND 81C.

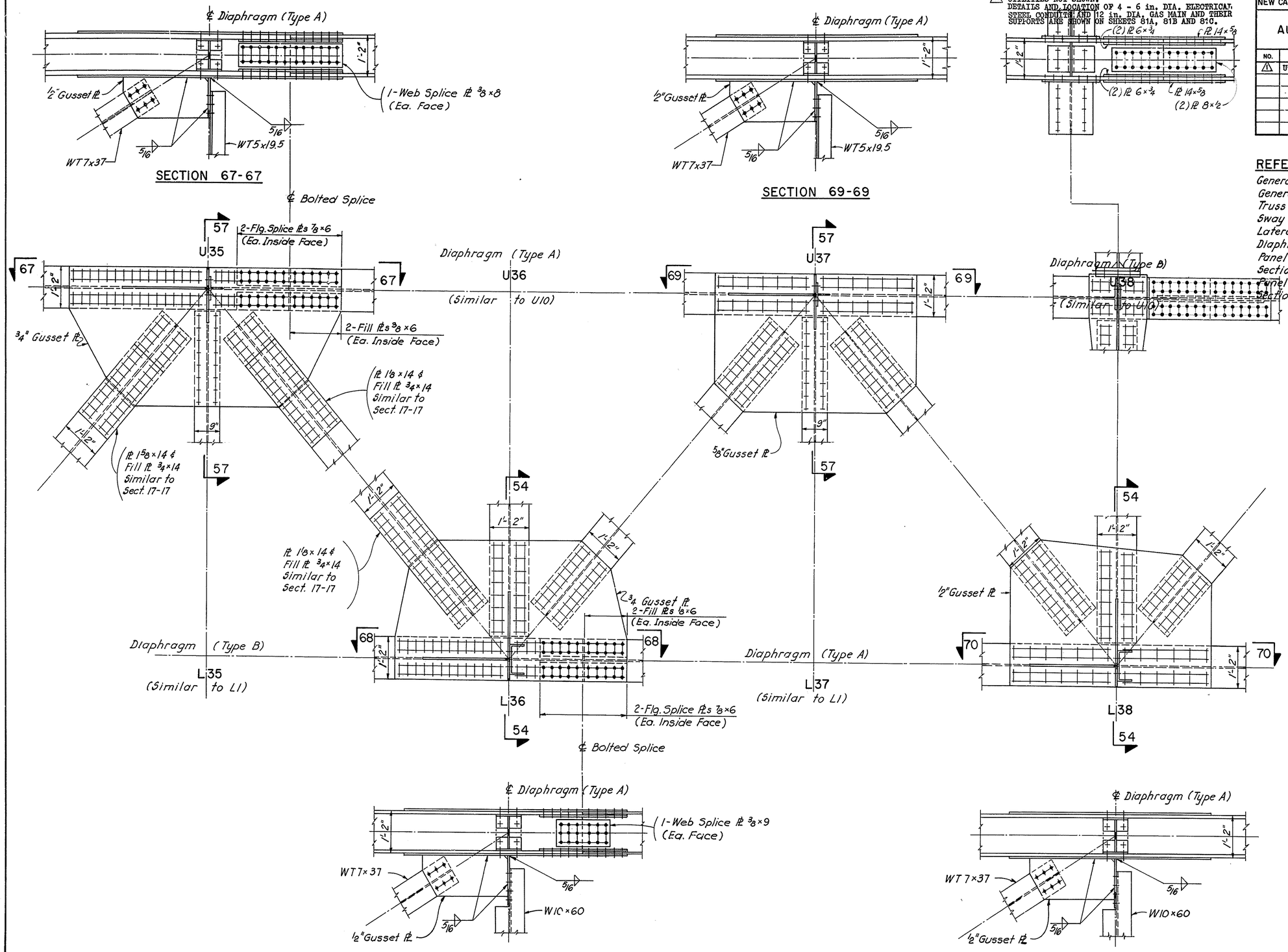

REFERENCES:

	SH. NO.
General Plan and Elevation	15
General Notes	3
Truss Layout and Member Sizes	39
Sway Frame Member Sizes	57
Lateral Bracing	58
Diaphragm Details	42
Panel Point L1	42
Section 17-17	44
Panel Point U10	45
Sections 54-54 & 57-57	51

AS BUILT

DELAWARE
DEPARTMENT OF TRANSPORTATION
DIVISION OF HIGHWAYS

PANEL POINTS
U35, L35, U36, L36,
U37, L37, U38 & L38

D.
T.
C.

SCALE 3/4" = 1'-0"

APPROVED BY H. I. W. Stuart
BRIDGE ENGINEER

REGISTERED PROFESSIONAL ENGINEER

COUNTY	CONTRACT	P. R. A. REG. NO.	STATE	FED. AID PROJECT NO.	SHEET NO.	TOTAL SHEETS
NEW CASTLE	79-071-02	2	DEL.	M-1191(1)	54	112

AUGUSTINE BRIDGE RECONSTRUCTION

NO.	REVISIONS	BY	DATE
1	UTILITY INSTALLATION AND LOCATION	SMT	9/20/79

1 UTILITIES NOT SHOWN.
DETAILS AND LOCATION OF 4 - 6 in. DIA. ELECTRICAL STEEL CONDUITS AND 12 in. DIA. GAS MAIN AND THEIR SUPPORTS ARE SHOWN ON SHEETS 81A, 81B AND 81C.

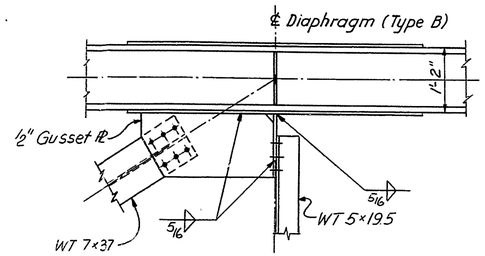

SECTION 71-71

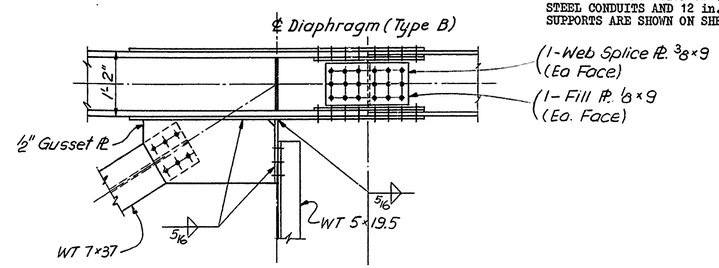

SECTION 73-73

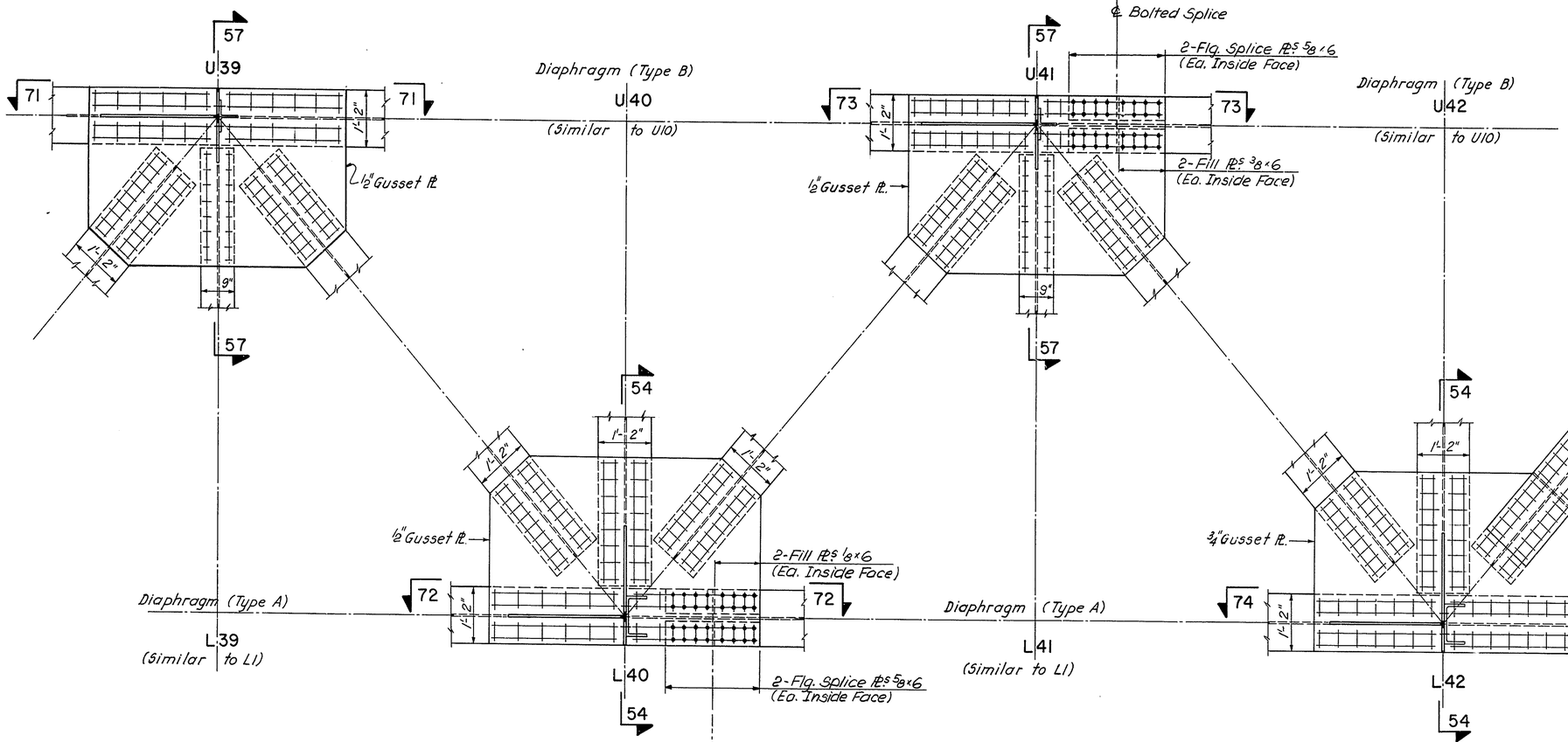

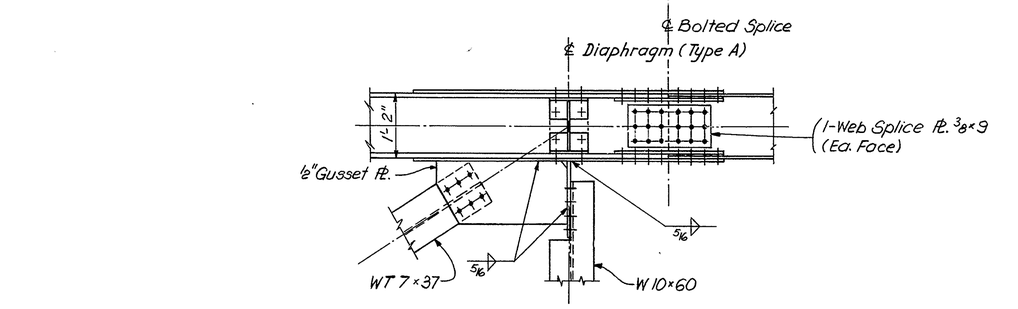

SECTION 72-72

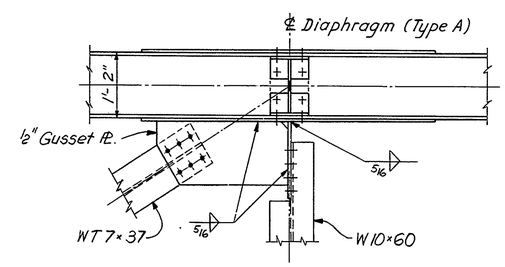

SECTION 74-74

REFERENCES:

	SH. NO.
General Plan and Elevation	15
General Notes	3
Truss Layout and Member Sizes	39 & 40
Sway Frame Member Sizes	57
Lateral Bracing	58
Diaphragm Details	42
Panel Point U10	45
Sections 54-54 & 57-57	51
Panel Point L1	42
Section 17-17	44

DELAWARE
DEPARTMENT OF TRANSPORTATION
DIVISION OF HIGHWAYS

PANEL POINTS
U39, L39, U40, L40,
U41, L41, U42 & L42

D.
T.
C.

SCALE 3/4" = 1'-0"

APPROVED

REGISTERED PROFESSIONAL ENGINEER NO. 3069 DELAWARE

COUNTY	CONTRACT	F. B. A. REG. NO.	STATE	FED. AID PROJECT NO.	SHEET NO.	TOTAL SHEETS
NEW CASTLE	79-071-02	2	DEL.	M 1191 (1)	55	112

AUGUSTINE BRIDGE RECONSTRUCTION

NO.	REVISIONS	BY	DATE
1	UTILITY INSTALLATION AND LOCATION	SMT	9/20/79

REFERENCES:

	SH. NO.
General Plan and Elevation	15
General Notes	3
Truss Layout and Member Sizes	40
Sway Frame Member Sizes	57
Lateral Bracing	58
Diaphragm Details	42
Panel Point L1	42
Section 17-17	44
Panel Point U8 and U10	45
Sections 20-20 and 21-21	45
Sections 54-54 and 57-57	51
Bearing Details	63

1 UTILITIES NOT SHOWN.
DETAILS AND LOCATION OF 4 - 6 in. DIA. ELECTRICAL STEEL CONDUITS AND 12 in. DIA. GAS MAIN AND THEIR SUPPORTS ARE SHOWN ON SHEETS 81A, 81B AND 81C.

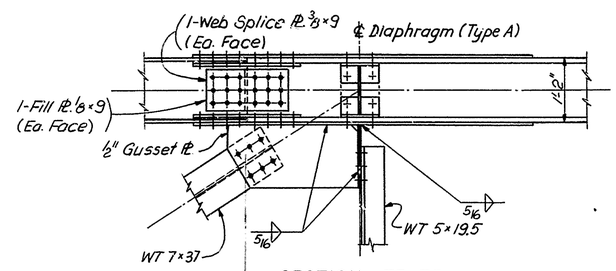

SECTION 75-75

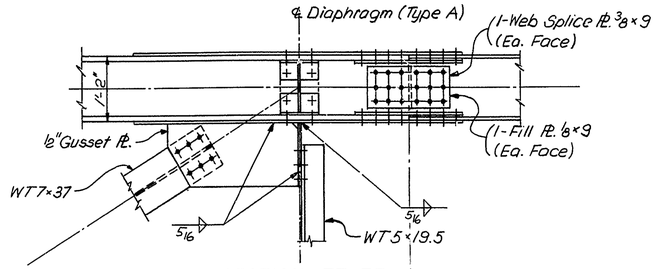

SECTION 77-77

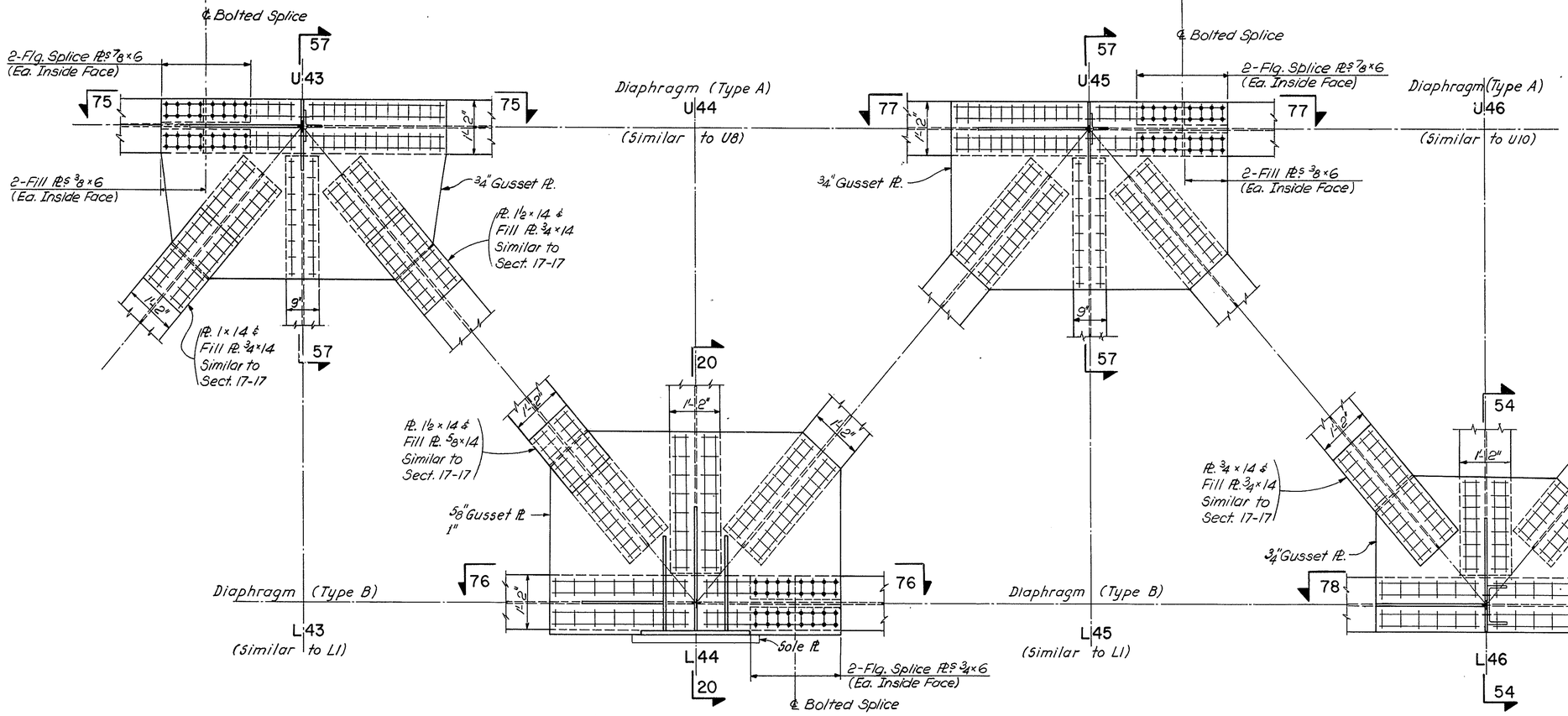

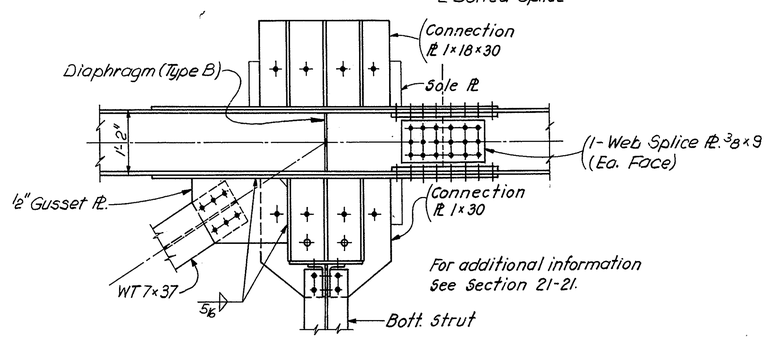

SECTION 76-76

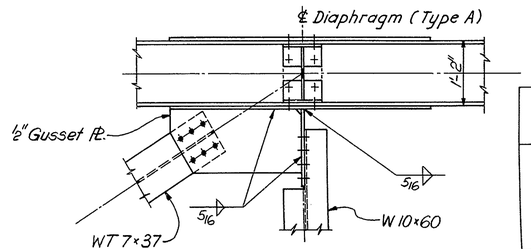

SECTION 78-78

AS BUILT

DELAWARE
DEPARTMENT OF TRANSPORTATION
DIVISION OF HIGHWAYS

PANEL POINTS
U43, L43, U44, L44,
U45, L45, U46 & L46

D.
T.
C.

SCALE 3/4" = 1'-0"

APPROVED

ROBERT C. McDOWELL REGISTERED NO. 8069 PROFESSIONAL ENGINEER

COUNTY	CONTRACT	P.R.A. REG. NO.	STATE	FED. AID PROJECT NO.	SHEET NO.	TOTAL SHEETS
NEW CASTLE	79-071-02	2	DEL.	M 1191 (1)	56	1/2

AUGUSTINE BRIDGE RECONSTRUCTION

NO.	REVISIONS	BY	DATE
1	UTILITY INSTALLATION AND LOCATION	SMT	9/20/79

1 UTILITIES NOT SHOWN.
DETAILS AND LOCATION OF 4 - 6 in. DIA. ELECTRICAL STEEL CONDUITS AND 12 in. DIA. GAS MAIN AND THEIR SUPPORTS ARE SHOWN ON SHEETS 81A, 81B AND 81C.

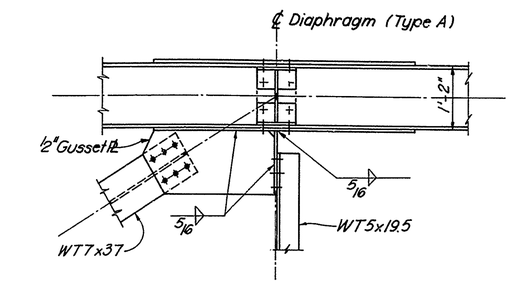

SECTION 79-79

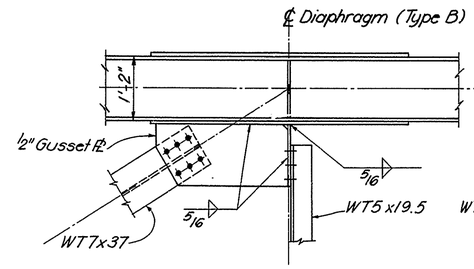

SECTION 81-81

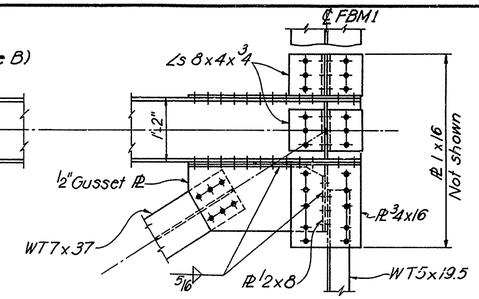

SECTION 82-82

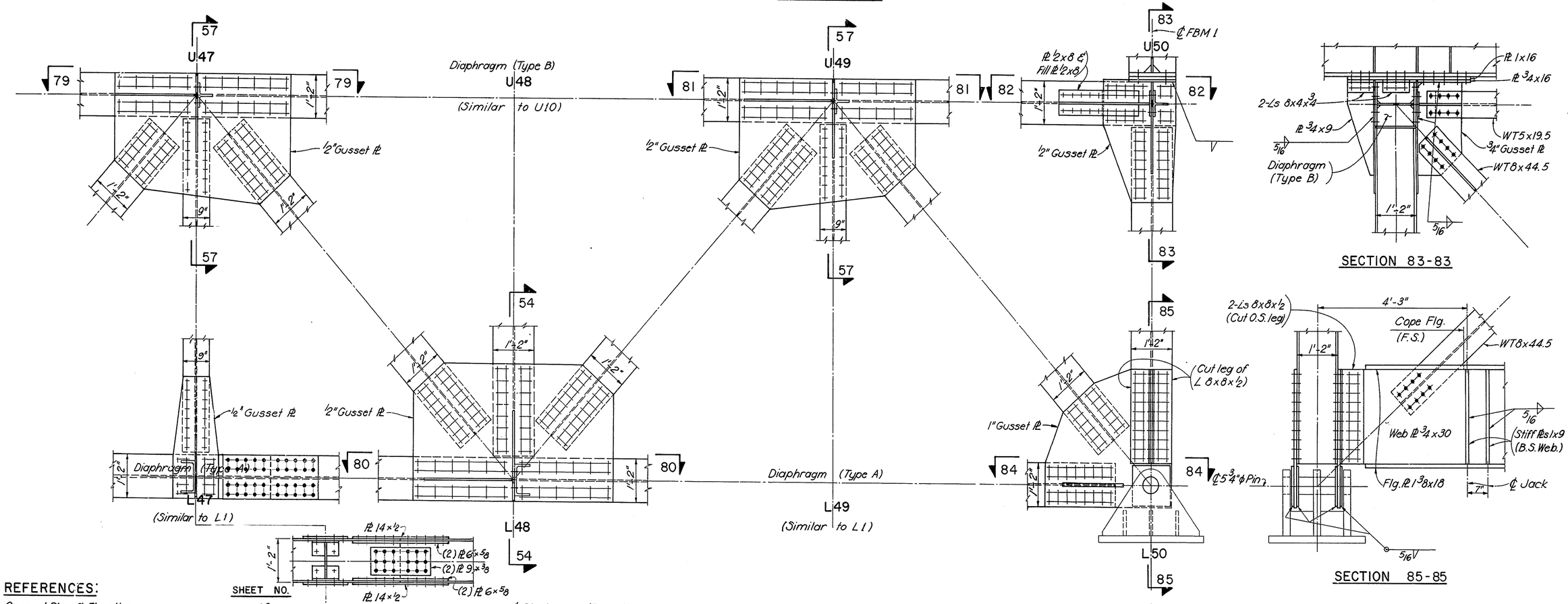

SECTION 83-83

SECTION 85-85

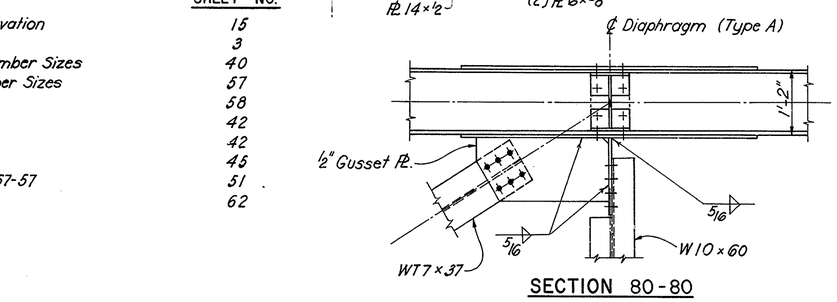

SECTION 80-80

REFERENCES:

	SHEET NO.
General Plan & Elevation	15
General Notes	3
Truss Layout & Member Sizes	40
Sway Frame Member Sizes	57
Lateral Bracing	58
Diaphragm Details	42
Panel Point L1	42
Panel Point U10	45
Sections 54-54 & 57-57	51
Bearing Details	62

AS BUILT

DELAWARE
DEPARTMENT OF TRANSPORTATION
DIVISION OF HIGHWAYS

PANEL POINTS
U47, L47, U48, L48,
U49, L49, U50 & L50

D. T. C.	SCALE	APPROVED BY
	3/4" = 1'-0"	Sept. 1979 BRIDGE ENGINEER

COUNTY	CONTRACT	P. R. A. REG. NO.	STATE	FED. AID PROJECT NO.	SHEET NO.	TOTAL SHEETS
NEW CASTLE	79-071-02	2	DEL.	M-1191(1)	57	112

AUGUSTINE BRIDGE RECONSTRUCTION

NO.	REVISIONS	BY	DATE
1	UTILITY INSTALLATION AND LOCATION	SMT	9/20/79

1 UTILITIES NOT SHOWN, DETAILS AND LOCATION OF 4 - 6 in. DIA. ELECTRICAL STEEL CONDUITS AND 12 in. DIA. GAS MAIN AND THEIR SUPPORTS ARE SHOWN ON SHEETS 81A, 81B AND 81C.

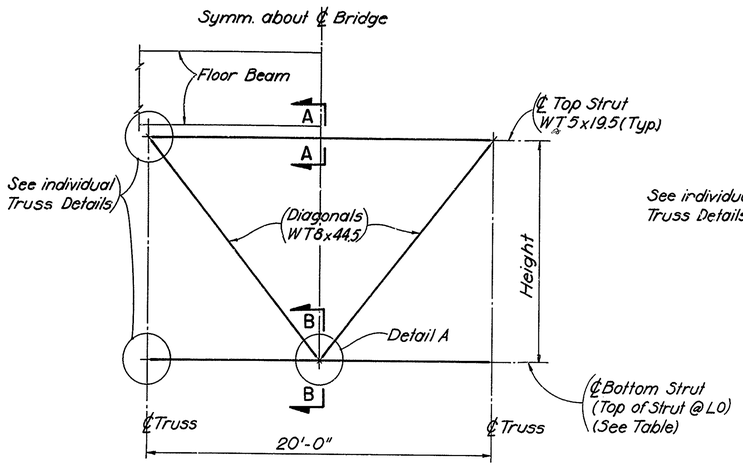

SWAY FRAMES

U0-L0, U2-L2, U4-L4 & U6-L6

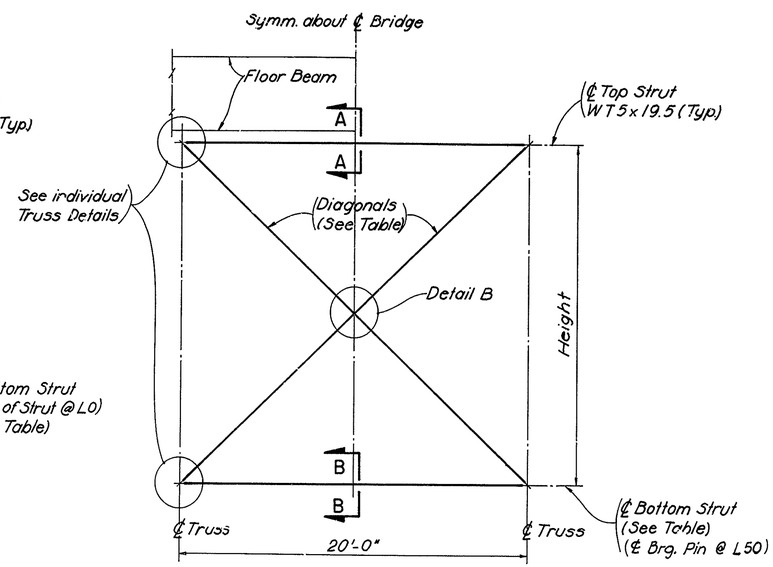

TYPICAL SWAY FRAMES

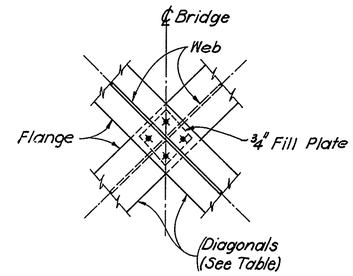

DETAIL B

KEY DIAGRAMS

SWAY FRAMES		HEIGHT	DIAGONALS FLG. PL.	DIAGONALS WEB PL.	BOTT. STRUT FLG. PL.S	BOTT. STRUT WEB PL.
END	U0 - L0	9-5 5/8	WT8x44.5		1 3/8x18	3/4x30
	U8 - L8	18-6 1/16	1/4x14	1x8 1/2	1 1/2x10	1/2x8
	U14 - L14	18-6 1/16	1/4x14	1x8 1/2	1 1/2x10	1/2x8
	U24 - L24	18-6 1/16	1/4x14	1x8 1/2	1 1/2x10	1/2x8
	L25 - U26	24-9 1/2	1/4x14	1x8 1/2	W10 x60	
	L26 - U27	24-9 1/16	1/4x14	1x8 1/2	W10 x60	
	U34 - L34	18-6 1/16	1/4x14	1x8 1/2	1 1/2x10	1/2x8
	U44 - L44	18-6 1/16	1/4x14	1x8 1/2	1 1/2x10	1/2x8
	U50 - L50	18-6	WT8x44.5		1 3/8x18	3/4x30
INTERMEDIATE	U2 - L2	12-6	WT8x44.5		W10 x60	
	U4 - L4	12-6	↑		↑	
	U6 - L6	12-6 1/16				
	U10 - L10	18-6 1/16				
	U12 - L12	↑				
	U16 - L16					
	U18 - L18					
	U20 - L20					
	U22 - L22					
	U28 - L28					
	U30 - L30					
	U32 - L32					
	U36 - L36					
	U38 - L38					
	U40 - L40					
	U42 - L42					
	U46 - L46	↓	↓		↓	
	U48 - L48	18-6 1/16	WT8x44.5		W10 x60	

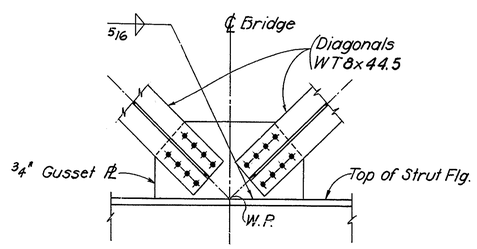

DETAIL A

P.P. L0

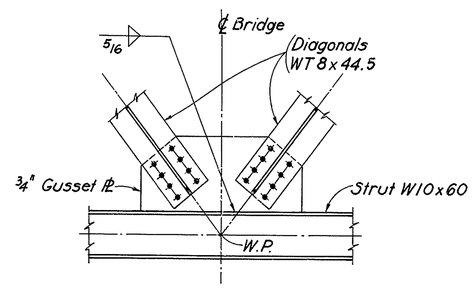

DETAIL A

P.P.s L2, L4 & L6

REFERENCES:

	SHEET NO.
General Plan & Elevation	15
General Notes	3
Truss Layout	36 - 40
Truss Details	42 - 56
Typ. Bridge Cross Section	16
Sections A-A & B-B	58

DELAWARE
DEPARTMENT OF TRANSPORTATION
DIVISION OF HIGHWAYS

SWAY FRAMES

D.
T.
C.

SCALE 3/4" = 1'-0"

APPROVED BY: N.I.M. McDonald
BRIDGE ENGINEER

⚠ UTILITIES NOT SHOWN.
DETAILS AND LOCATION OF 4 - 6 in. DIA. ELECTRICAL STEEL CONDUITS AND 12 in. DIA. GAS MAIN AND THEIR SUPPORTS ARE SHOWN ON SHEETS 81A, 81B AND 81C.

COUNTY	CONTRACT	P. & A. REG. NO.	STATE	FED. AID PROJECT NO.	SHEET NO.	TOTAL SHEETS
NEW CASTLE	79-071-02	2	DEL.	M-1191(1)	58	112

AUGUSTINE BRIDGE RECONSTRUCTION

NO.	REVISIONS	BY	DATE
⚠	UTILITY INSTALLATION AND LOCATION	SMT	9/20/79

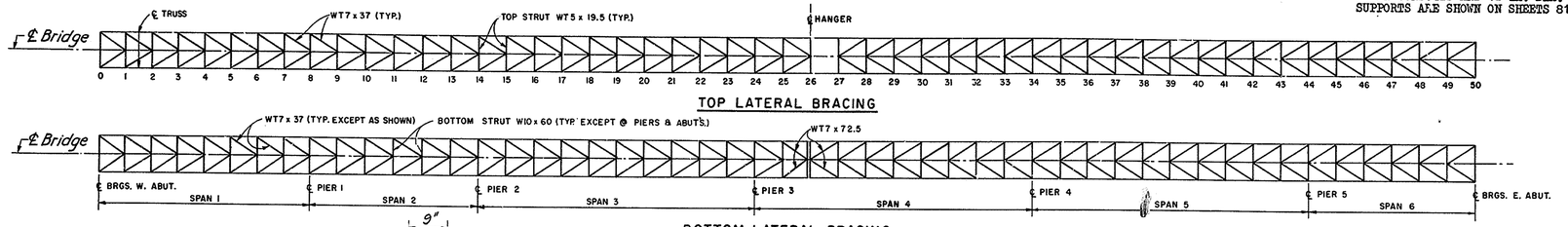

TOP LATERAL BRACING

BOTTOM LATERAL BRACING

KEY PLAN

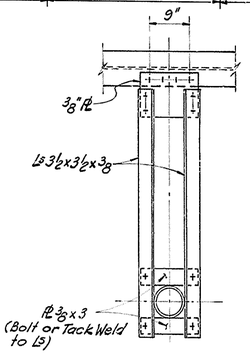

ELEVATION X-X

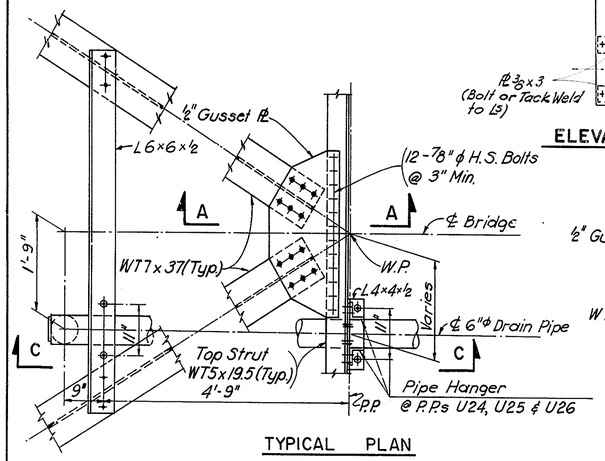

TYPICAL PLAN

PLAN @ PIPE HANGER NEAR P.P. U24

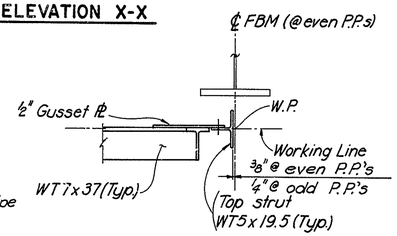

SECTION A-A

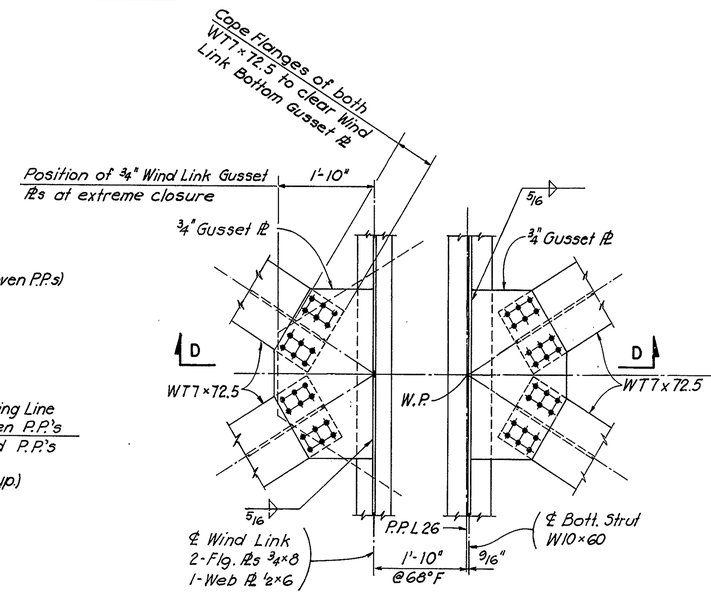

PLAN @ P.P. L26

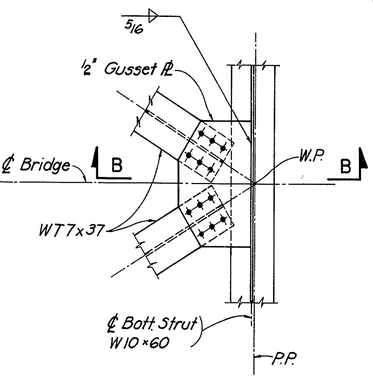

TYPICAL PLAN

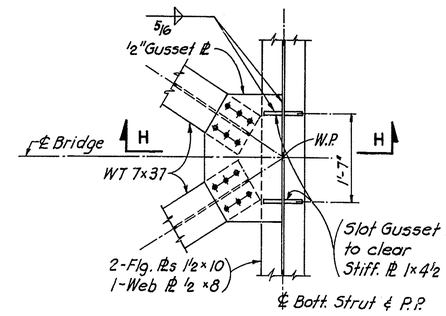

PLAN AT PIERS

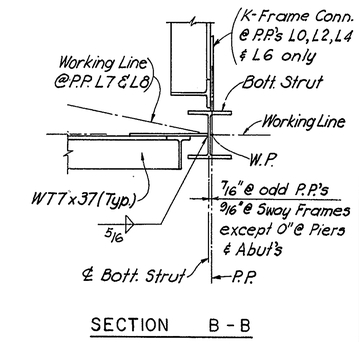

SECTION B-B

TOP LATERAL BRACING

U1 to U26 (As Shown)
U27 to U49 (Opp. Hand)

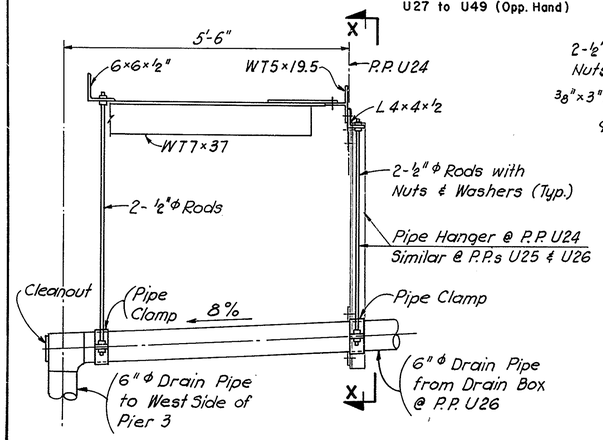

SECTION C-C

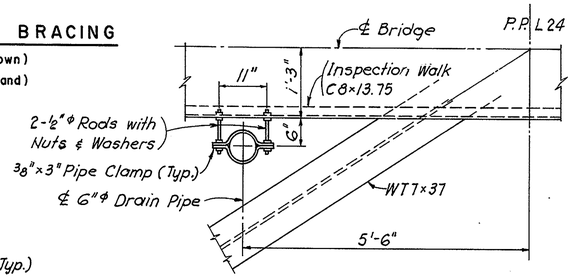

CONNECTION @ INSP. WALK

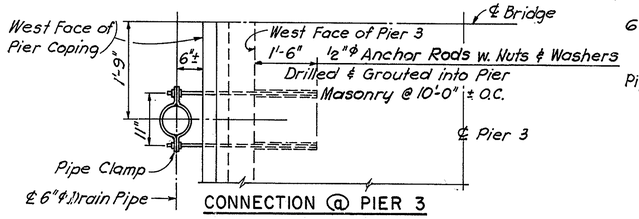

CONNECTION @ PIER 3

DRAIN PIPE CONNECTIONS-PLANS

BOTTOM LATERAL BRACING

L1 to L25 (As Shown)
L27 to L49 (Opp. Hand)

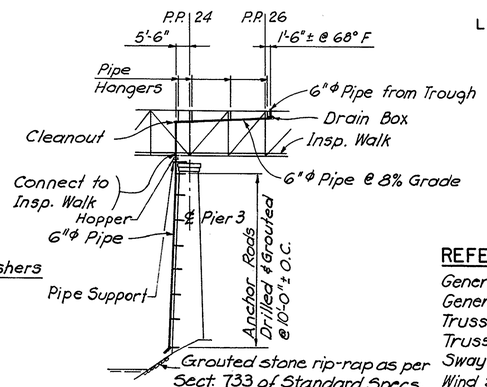

6"φ DRAIN PIPE KEY ELEVATION

Payment included in Item "Steel Structures"

NOTE

For details of top and bottom lateral bracing not shown see truss details

REFERENCES:

	SHEET NO.
General Plan & Elevation	15
General Notes	3
Truss Layout	36 - 40
Truss Details	42 - 56
Sway Frames	57
Wind Shear Device & Section H-H	20
Drain Box @ P.P. U26	61
Wind Link Details & Section D-D	59
Pipe Support Details	19
Hopper Details	20

AS BUILT

DELAWARE
DEPARTMENT OF TRANSPORTATION
DIVISION OF HIGHWAYS

TOP & BOTTOM LATERAL BRACING

D.
T.
C.

SCALE 3/4" = 1'-0"

APPROVED [signature] BRIDGE ENGINEER

COUNTY	CONTRACT	P. B. A. REG. NO.	STATE	FED. AID PROJECT NO.	SHEET NO.	TOTAL SHEETS
NEW CASTLE	79-071-02	2	DEL.	M-1191 (1)	59	112

AUGUSTINE BRIDGE RECONSTRUCTION

NO.	REVISIONS	BY	DATE
1	UTILITY INSTALLATION AND LOCATION	SMT	9/20/79

NOTES

1. Holes for 7/8"φ H.S. Bolts @ Wind Link Bearing shall be 1 1/16"φ
2. Bolts shall be initially installed finger tight and all parts of Wind Link Bearing aligned to the satisfaction of the Engineer prior to tightening the nuts to the required torque.
3. Positioning of Wind Link Bearing as shown applies to reference temperature of 68°F. For every 10°F variation of temperature the distance between ℄ of Bearing Block and ℄ P.P. 26 will increase 5/8" for temperature fall and will decrease 5/8" for temperature rise.

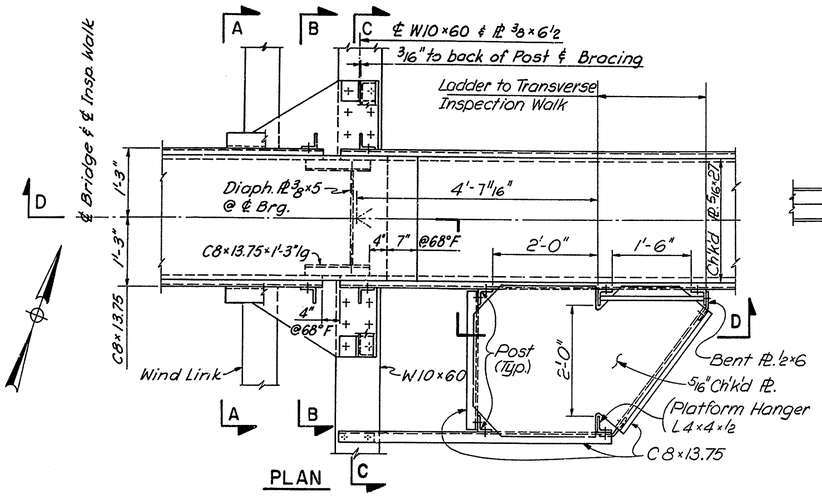

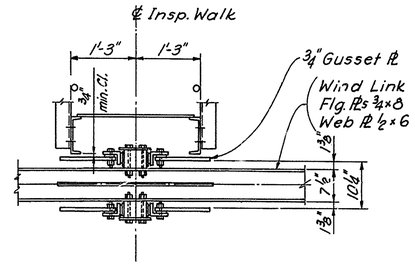

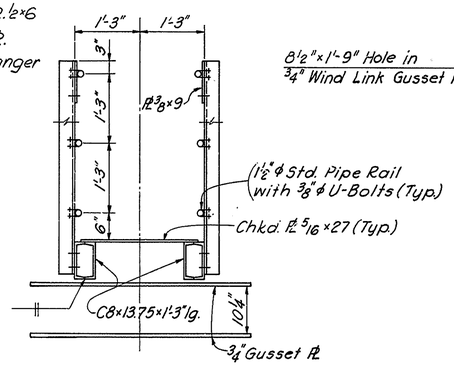

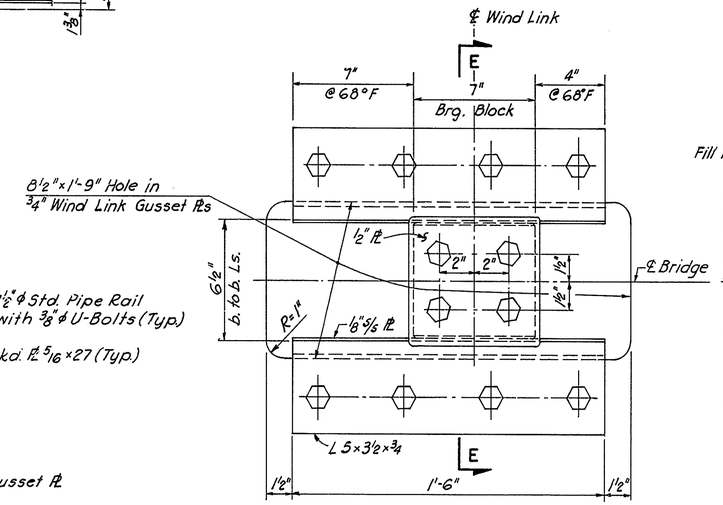

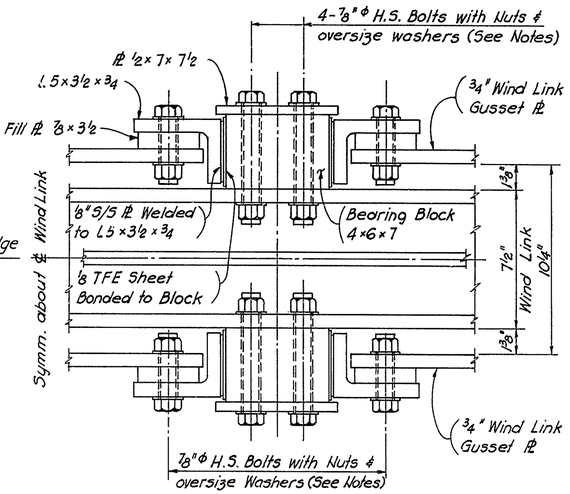

WIND LINK BEARING DETAILS

Scale: 3" = 1'-0"

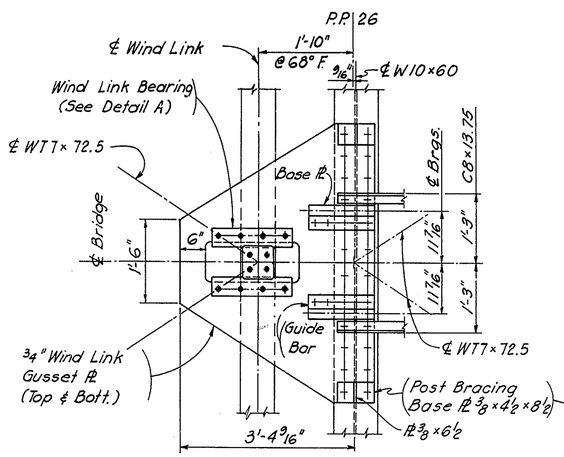

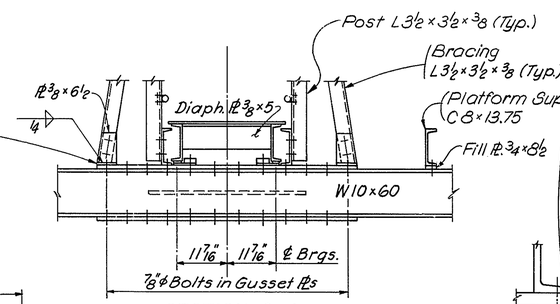

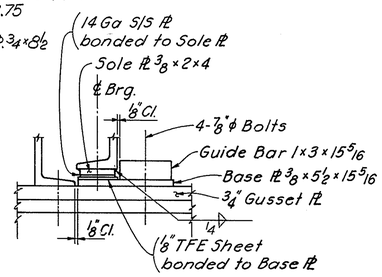

NOTE:

All fasteners shown on this drawing shall be 3/4"φ A325 Bolts Type 3 unless otherwise noted. S/S indicates Stainless Steel.

REFERENCES

	SHEET NO.
General Plan & Elevation	15
General Notes	3
Truss Layout	38
Panel Point 26	50
Inspection Walk	60
Transverse Inspection Walk	61
Typical Bridge Cross Section	16
Bottom Lateral Bracing	58

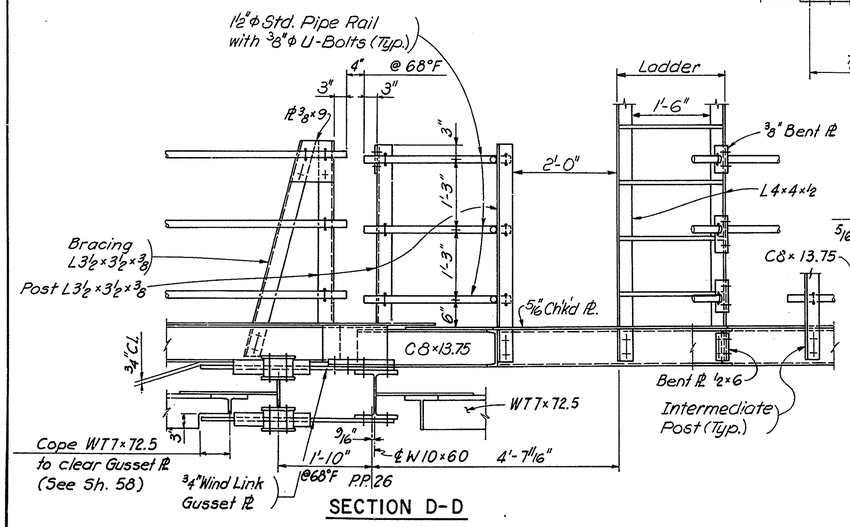

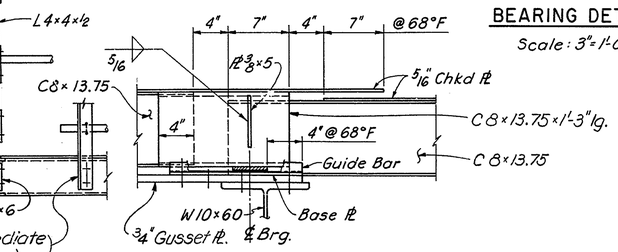

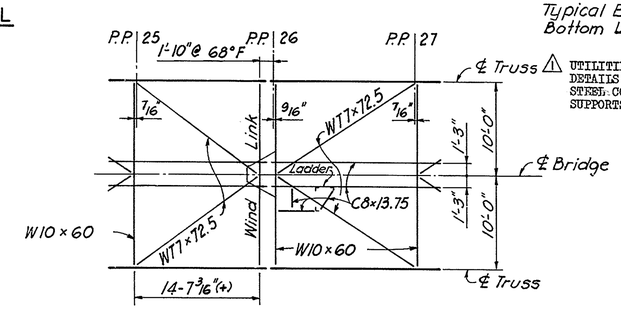

⚠ UTILITIES NOT SHOWN.
DETAILS AND LOCATION OF 4 - 6 in. DIA. ELECTRICAL STEEL CONDUITS AND 12 in. DIA. GAS MAIN AND THEIR SUPPORTS ARE SHOWN ON SHEETS 81A, 81B AND 81C.

DELAWARE
DEPARTMENT OF TRANSPORTATION
DIVISION OF HIGHWAYS

BOTTOM LATERAL BRACING WIND LINK DETAILS

D.	SCALE	APPROVED
T.	3/4" = 1'-0"	
C.	& as noted	BRIDGE ENGINEER

⚠ UTILITIES NOT SHOWN.
DETAILS AND LOCATION OF 4 - 6 in. DIA. ELECTRICAL STEEL CONDUITS AND 12 in. DIA. GAS MAIN AND THEIR SUPPORTS ARE SHOWN ON SHEETS 81A, 81B AND 81C.

COUNTY	CONTRACT	P.R.A. REG. NO.	STATE	FED. AID PROJECT NO.	SHEET NO.	TOTAL SHEETS
NEW CASTLE	79-071-02	2	DEL	M-1191(1)	60	112

AUGUSTINE BRIDGE RECONSTRUCTION

NO.	REVISIONS	BY	DATE
⚠	UTILITY INSTALLATION AND LOCATION	SMT	9/20/79

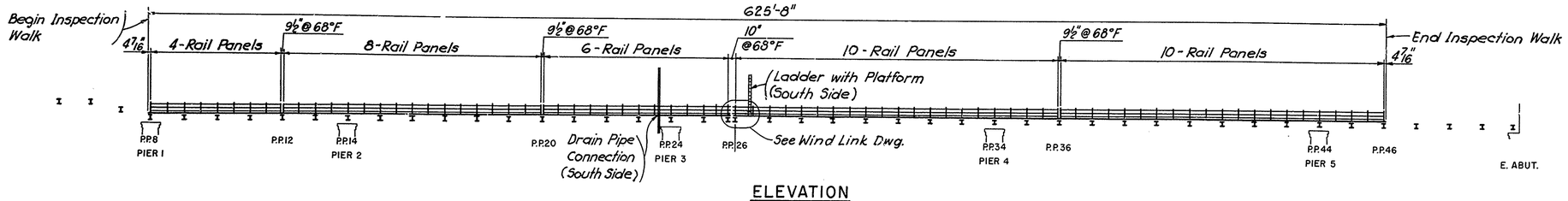

ELEVATION
N.T.S.

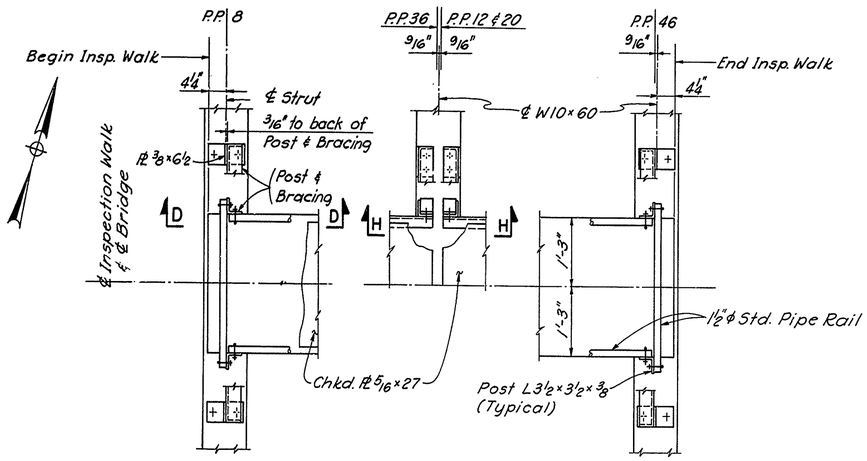

PLAN

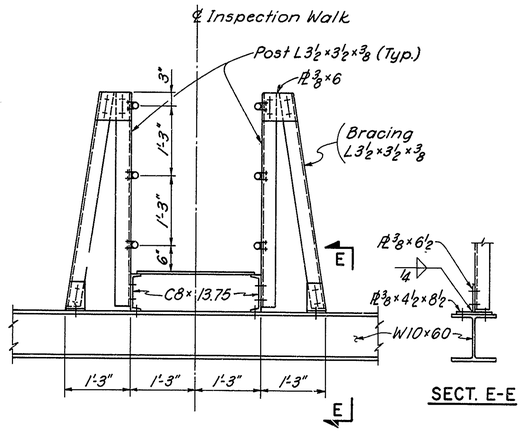

SECTION A-A

SECT. E-E

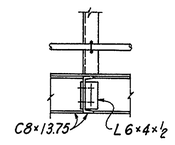

SECT. F-F

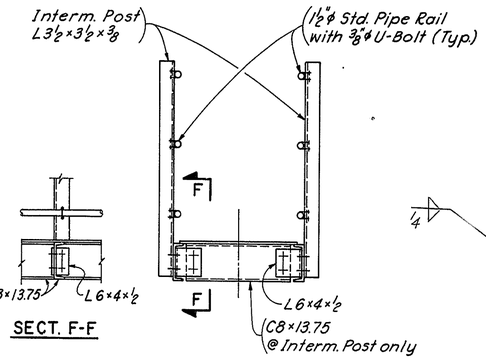

SECTION B-B

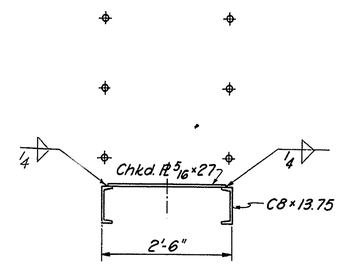

SECTION C-C

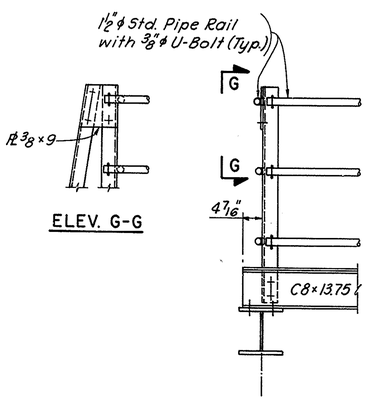

ELEV. G-G

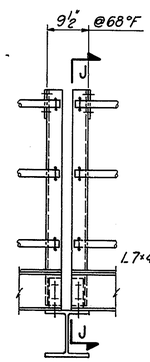

SECTION H-H

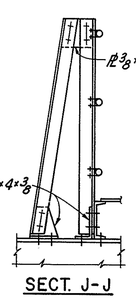

SECT. J-J

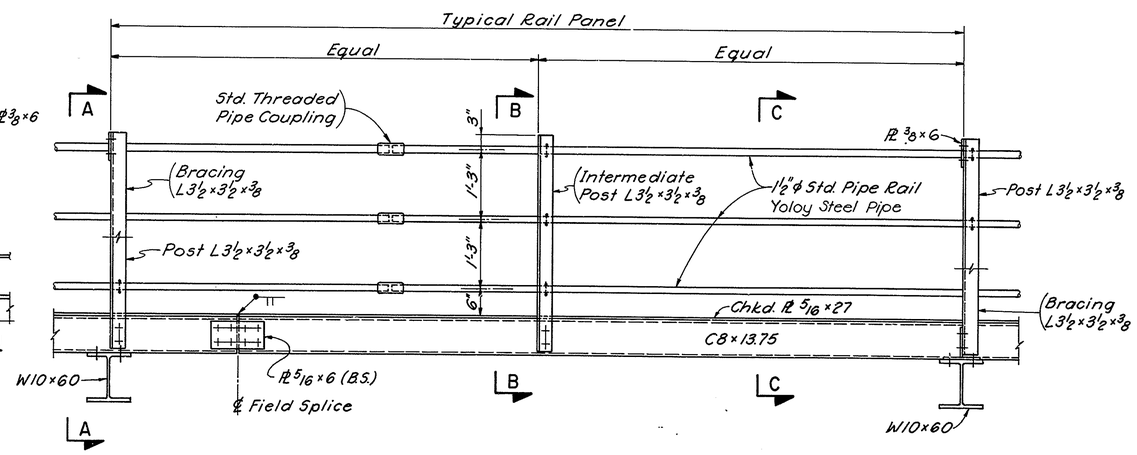

ELEVATION - TYPICAL RAIL PANEL

SECTION D-D

P.P.8 (as shown)
P.P.46 (opp. hand)

NOTES:

1. All fasteners shown on this drawing shall be ¾"φ A325 Bolts Type 3 unless otherwise noted.
2. Location for Field Splices for inspection walk and pipe rails are to be determined by the Contractor subject to the approval of the Engineer. Field Splices for C8×13.75, when required shall be located at approx. ¼ point between struts.

REFERENCES:

	SHEET NO.
General Plan & Elevation	15
General Notes	3
Truss Layout	36-40
Typical Bridge Cross Section	16
Wind Link, Platform & Ladder Details	59
Transverse Inspection Walk @ PP 26	61
Top & Bottom Lateral Bracing	58
Drain Pipe Connections	58

AS BUILT

DELAWARE
DEPARTMENT OF TRANSPORTATION
DIVISION OF HIGHWAYS

INSPECTION WALK

D.	SCALE	APPROVED BY:
T.	¾"=1'-0"	ROBERT C. McDOWELL REGISTERED PROFESSIONAL ENGINEER NO. 3[illegible] STATE OF DELAWARE — BRIDGE ENGINEER
C.		

COUNTY	CONTRACT	P.R.A. REG. NO	STATE	FED. AID PROJECT NO.	SHEET NO	TOTAL SHEETS
NEW CASTLE	79-071-02	2	DEL	M 1191 (1)	61	112

AUGUSTINE BRIDGE RECONSTRUCTION

NO.	REVISIONS	BY	DATE
1	UTILITY INSTALLATION AND LOCATION	SMT	9/20/79

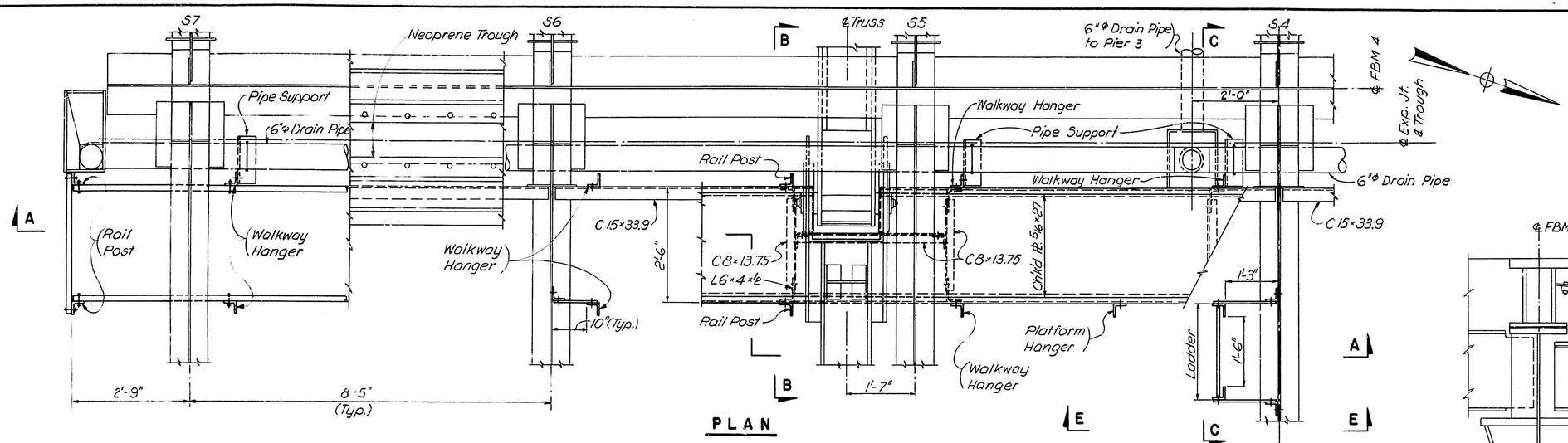

PLAN

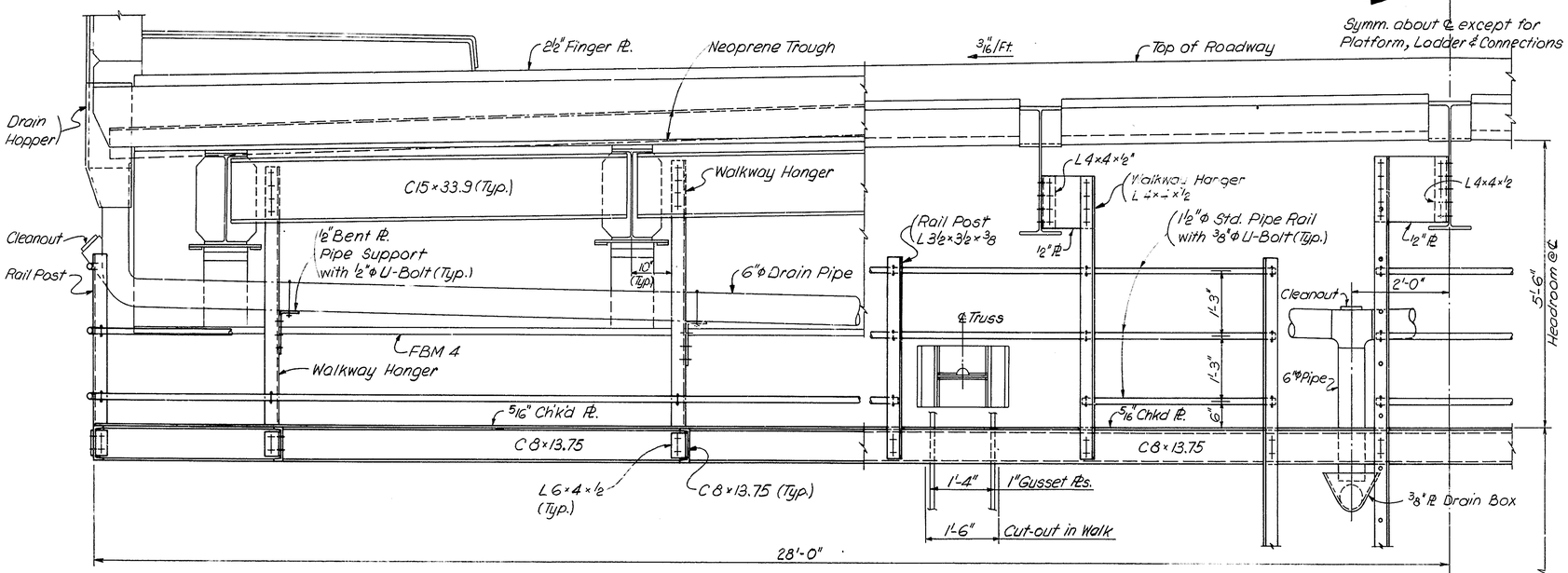

SECTION A-A
(Looking West)

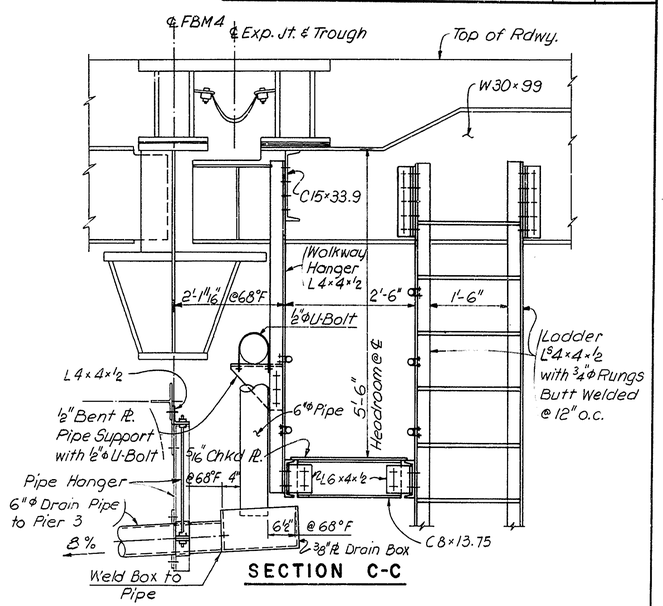

SECTION C-C

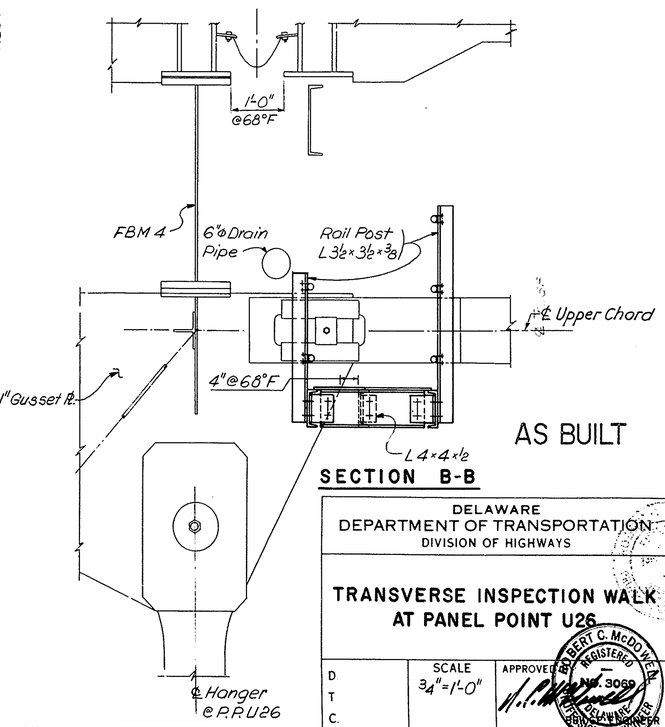

SECTION B-B

AS BUILT

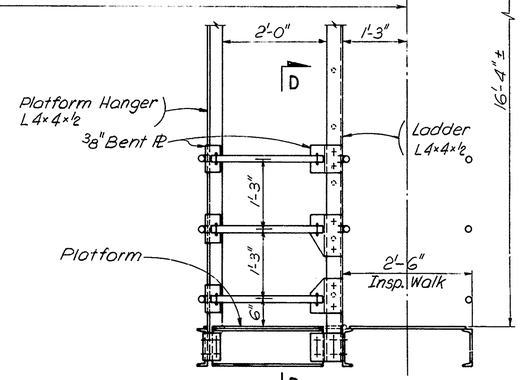

SECTION E-E

REFERENCES:

	SH. NO.
General Plan & Elevation	15
General Notes	3
Truss Layout & Member Sizes	38
Panel Point U26	50
Section D-D & Wind Link Details	59
Inspection Walk	60
Floor Beam 4	65
Deck Expansion Jt. @ P.P. 26	66
Deck Exp. Jt. Sections & Details	67 & 68
Drain Pipe Continuation & Details	58

NOTE: All fasteners shown on this drawing shall be ¾"φ A 325 Bolts Type 3 unless otherwise noted.

△A UTILITIES NOT SHOWN.
DETAILS AND LOCATION OF 4 - 6 in. DIA. ELECTRICAL STEEL CONDUITS AND 12 in. DIA. GAS MAIN AND THEIR SUPPORTS ARE SHOWN ON SHEETS 81A, 81B AND 81C.

DELAWARE
DEPARTMENT OF TRANSPORTATION
DIVISION OF HIGHWAYS

TRANSVERSE INSPECTION WALK AT PANEL POINT U26

D
T
C.

SCALE ¾"=1'-0"

APPROVED

ROBERT C. McDOWELL
REGISTERED
No. 3059
DELAWARE
PROFESSIONAL ENGINEER

COUNTY	CONTRACT	P. R. A. REG. NO.	STATE	FED. AID PROJECT NO.	SHEET NO.	TOTAL SHEETS
NEW CASTLE	79-071-02	2	DEL.	M-1191 (1)	62	112

AUGUSTINE BRIDGE RECONSTRUCTION

NO.	REVISIONS	BY	DATE

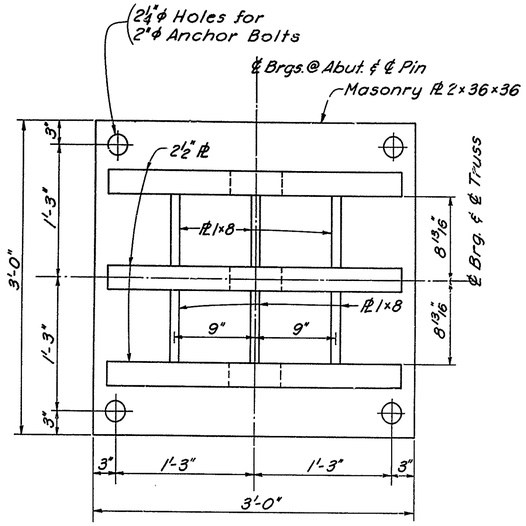

PLAN

(Pin & Gusset Pls not shown)

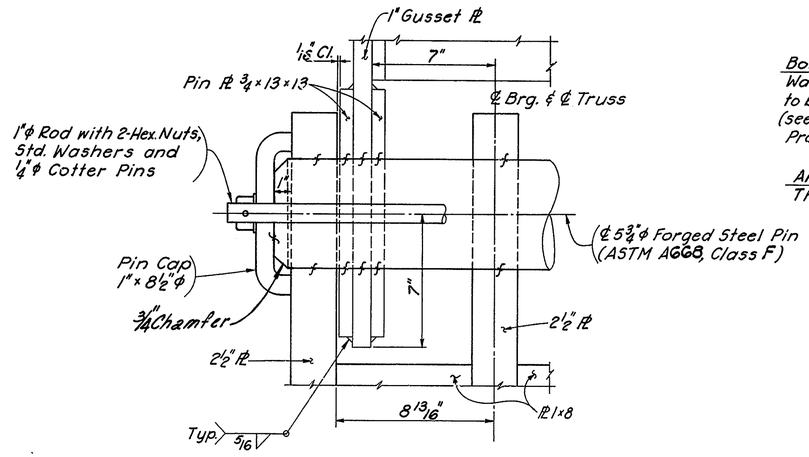

PIN DETAIL

Scale: 3" = 1'-0"

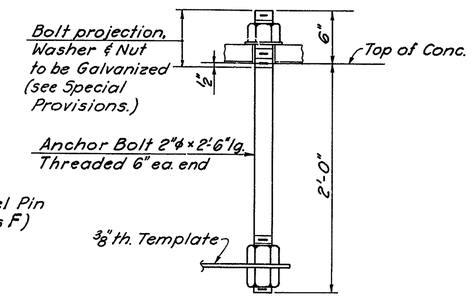

ANCHOR BOLT DETAIL

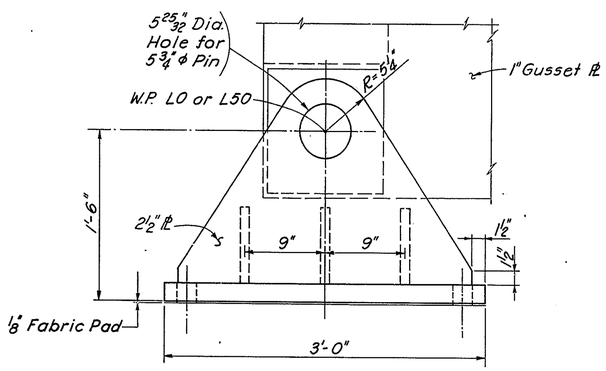

SIDE ELEVATION

(Pin, Pin Cap & Rod with Washer and Nut not shown.)

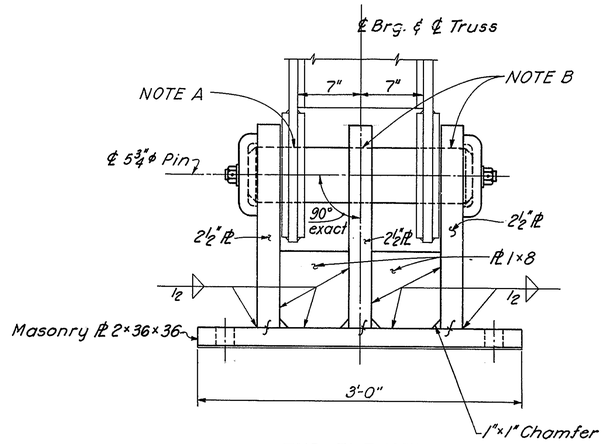

END ELEVATION

NOTE A: Boring 5 25/32"φ Holes in all gusset and pin plates shall be done in one operation with both gusset plates pre-assembled to the truss members.

NOTE B: Boring 5 25/32"φ Holes in all three 2½" plates shall be done in one operation after the welding of the bearing assembly is completed.

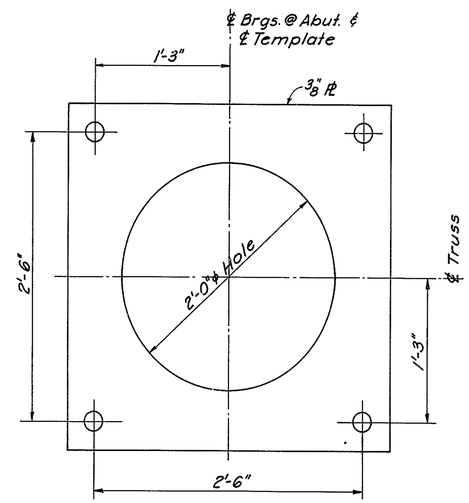

TEMPLATE DETAIL

NOTES:

1. All Bearings shall be assembled in the shop, checked for fit and bearing of individual parts and match marked for assembly in the field.
2. All material for Bearings shall be ASTM A588 Steel except as noted (See Special Provisions.)
3. Anchor Bolts shall be ASTM A307, set 2'-0" into concrete by means of a template, Galvanized as shown.

REFERENCES:

	SHEET NO.
General Plan & Elevation	15
General Notes	3
Details of Panel Point L0	42
Details of Panel Point L50	56
Details of West Abutment	22 & 23
Details of East Abutment	29 & 30

DELAWARE
DEPARTMENT OF TRANSPORTATION
DIVISION OF HIGHWAYS

FIXED BEARINGS AT ABUTMENTS

D. T. C.	SCALE 1½" = 1'-0" & as noted	APPROVED: BRIDGE ENGINEER

COUNTY	CONTRACT	P.R.A. REG. NO.	STATE	FED. AID PROJECT NO.	SHEET NO.	TOTAL SHEETS
NEW CASTLE	79-071-02	2	DEL.	M-1191(1)	63	112

AUGUSTINE BRIDGE RECONSTRUCTION

NO.	REVISIONS	BY	DATE

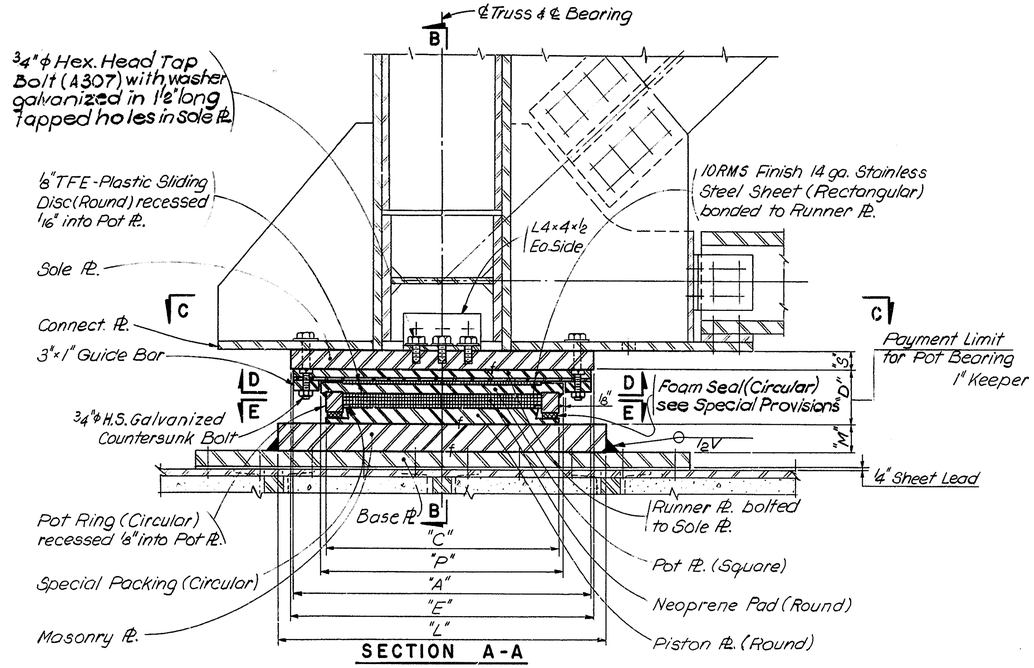

SECTION A-A

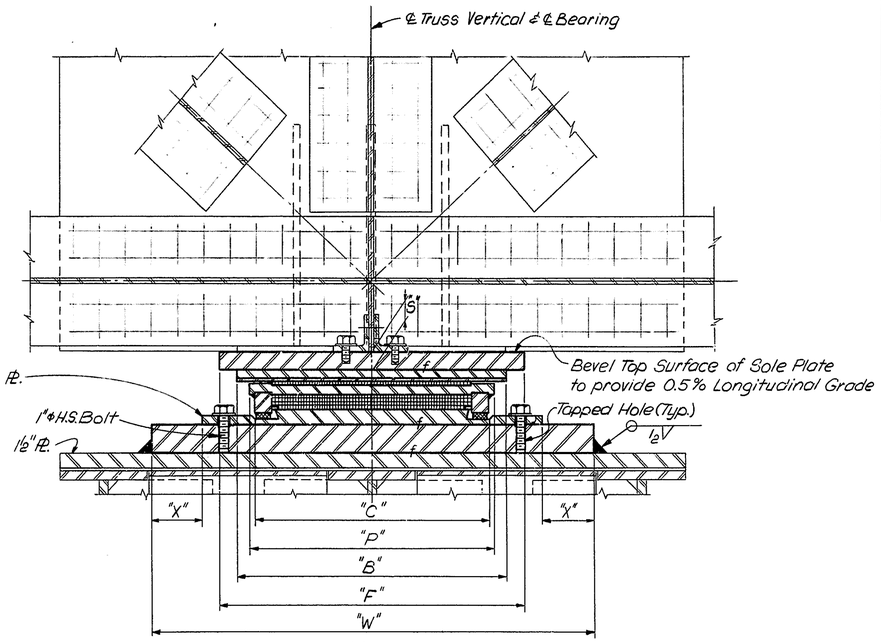

SECTION B-B

DIMENSIONS	TYPE I AT PIERS 1, 2 & 5 700K Min. 1400K Max.	TYPE II AT PIERS 3 & 4 1000K Min. 1700K Max.
"A"	2'-10 1/4"	3'-1 3/8"
"B"	2'-7"	3'-0"
"C"	2'-3"	2'-6 1/8"
"D"	0'-5 3/4"	0'-6 1/8"
"E"	2'-11"	3'-2"
"F"	2'-11"	3'-2"
"S"	0'-2"	0'-2"
"L"	3'-2"	3'-5"
"W"	4'-3"	4'-3"
"M"	0'-3"	0'-3"
"P"	2'-4"	2'-7 1/8"
"X"	0'-6"	0'-4 7/16"

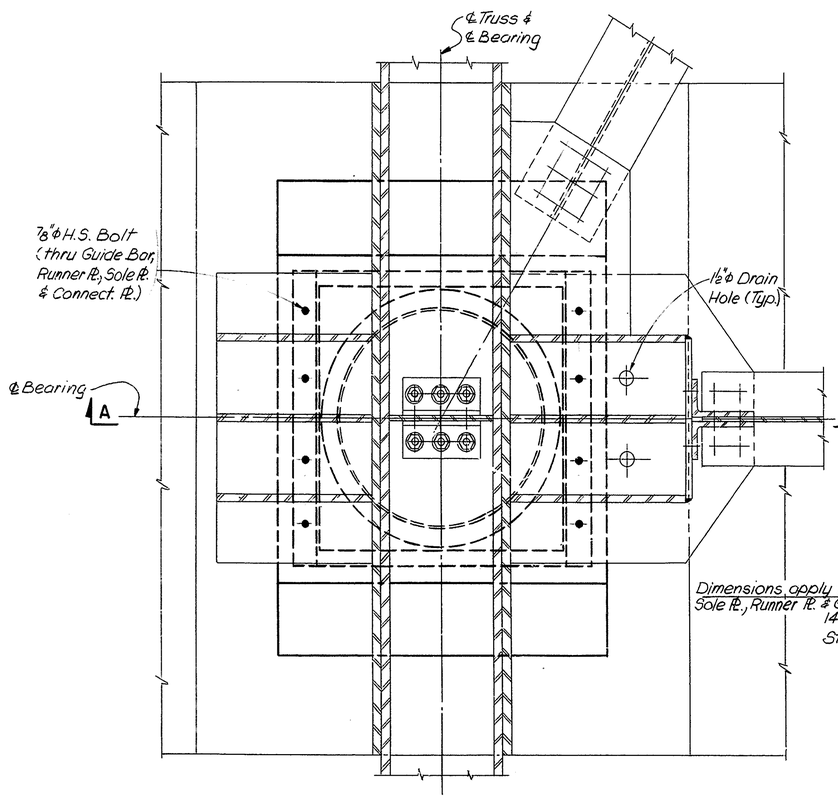

SECTION C-C

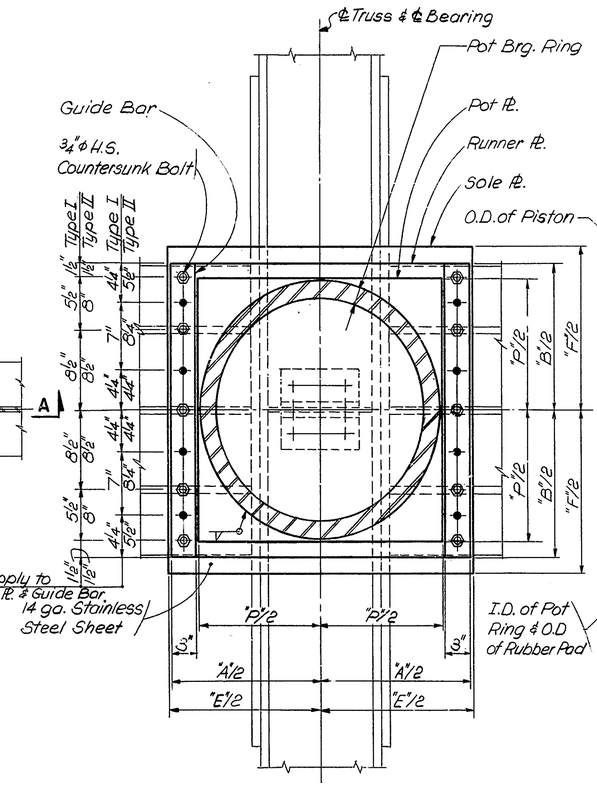

SECTION D-D

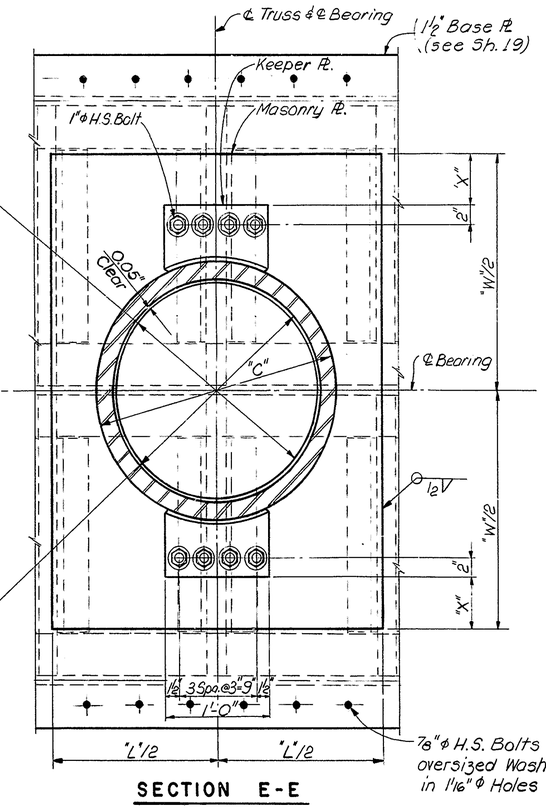

SECTION E-E

NOTES:

1. Pot Bearing details shown are as manufactured by Goodco Ltd. of 328 Consumers Road, Willowdale, Ontario, Canada. Approved equal details may be used by Contractor. See Special Provisions for other manufacturers.
2. Min. rotation capacity of the Pot Bearing shall be 1:100.
3. Unless otherwise noted, all Structural Steel for bearings shall be A588 and shall be painted as per Special Provisions.
4. Detailed Shop Drawings for Bearings shall be submitted to the Engineer for his approval.
5. For additional requirements on Pot Bearings see Special Provisions.

REFERENCES:

	SHEET NO.
General Plan	15
Grillage Details	19 & 20
Anchor Bolt Locations at Piers	21

SUPERSEDED BY SHEET 63 A

DELAWARE
DEPARTMENT OF TRANSPORTATION
DIVISION OF HIGHWAYS

EXPANSION BEARINGS AT PIERS

D.
T.
C.

SCALE 1 1/2" = 1'-0"

APPROVED [illegible]

ROBERT C. McDOWELL REGISTERED No. 3069 DELAWARE BRIDGE ENGINEER

COUNTY	CONTRACT	P.R.A. REG. NO.	STATE	FED. AID PROJECT NO.	SHEET NO.	TOTAL SHEETS
NEW CASTLE	79-071-02	2	DEL	BRS-244( )	63 A	

RECONSTRUCTION OF THE AUGUSTINE BRIDGE

NO.	REVISIONS	BY	DATE

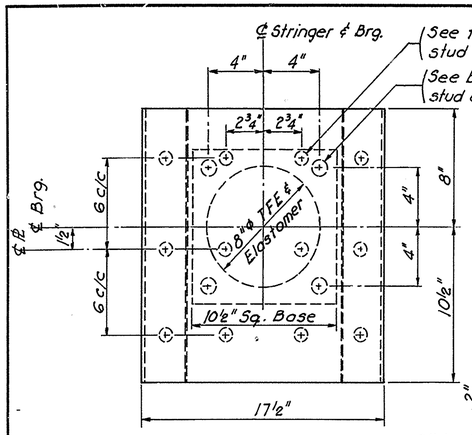

PLAN
Scale: 1" = 5"

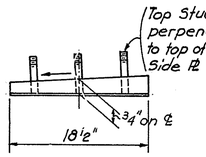

SLIDE ℙ BEVEL DETAIL
N.T.S.

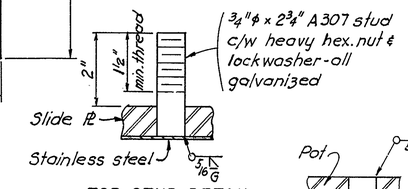

TOP STUD DETAIL
Scale: 1" = 2"

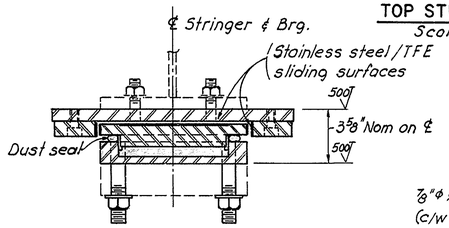

TRANSVERSE X-SECTION
Scale: 1" = 5"

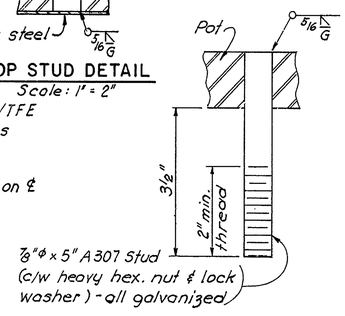

BOTTOM STUD DETAIL
N.T.S.

BEARING DESIGN CAPACITIES (SPF 78)

Vertical Load - 176 k
Transverse Load - 18 k
Rotation - ±.02 rad.
Movement - Longitudinal +2¾, -5¼ working
+4, -6½ max.
- Transverse ± 1/16

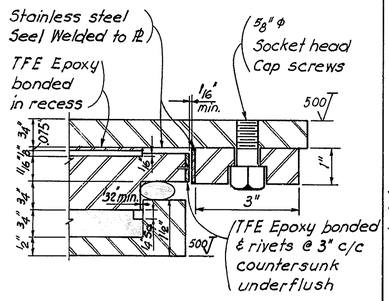

DETAIL X-SECTION
Scale: 1" = 2"

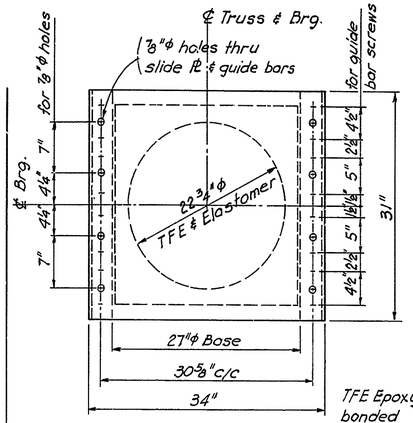

PLAN
Scale: 1" = 10"

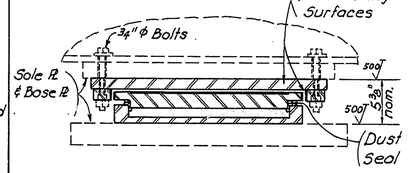

TRANSVERSE X-SECTION
Scale: 1" = 10"

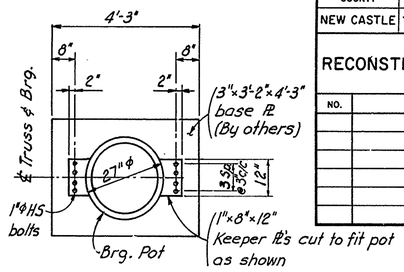

BASE ℙ DETAIL
Scale: 1" = 2'-0"

BEARING DESIGN CAPACITIES (SPF 625)

Vertical Load - 1400 k
Transverse Load - 140 k
Rotation - .01 radians
Movement - Longitudinal ± 2" working
± 4⅛" max.
- Transverse ± 1/16"

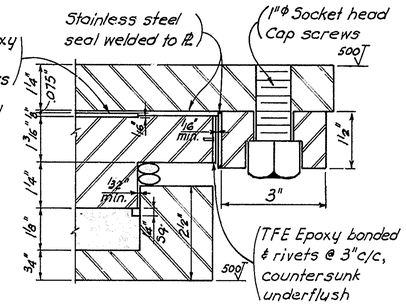

DETAIL X-SECTION
Scale: 1" = 2"

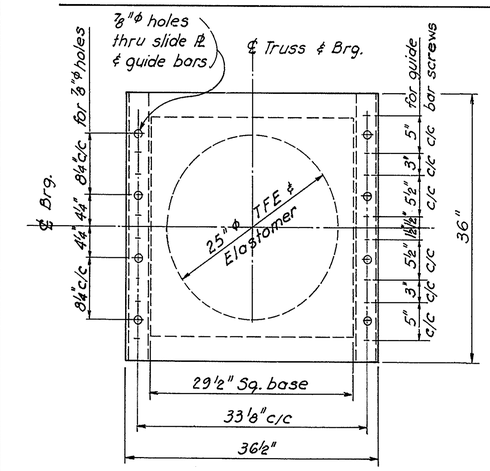

PLAN
Scale: 1" = 10"

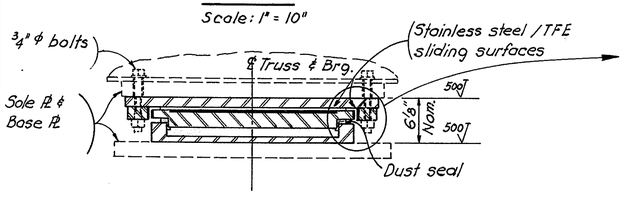

TRANSVERSE X-SECTION
Scale: 1" = 10"

BEARING DESIGN CAPACITIES (SPF 759)

Vertical Load - 1700 k
Transverse Load - 170 k
Rotation - .01 radians
Movement - Longitudinal ± 3¼" working
± 5½" max.
- Transverse ± 1/16"

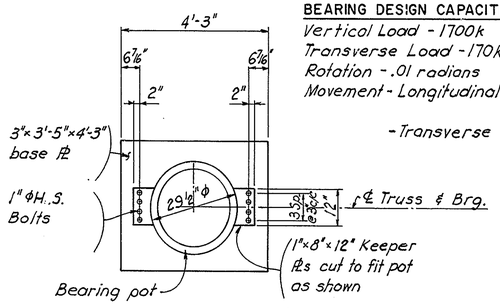

BASE ℙ DETAIL
Scale: 1" = 2'-0"

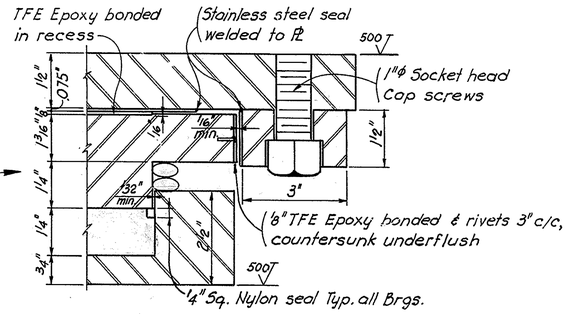

DETAIL X-SECTION
Scale: 1" = 2"

MATERIAL SPECIFICATIONS

PLATE & BAR - ASTM A588 or equal (Coated with coal tar epoxy after fabrication)
STAINLESS STEEL - ASTM A240 - T304 - 2B Finish - .075" Thick
TFE - 100% Virgin - ⅛" Thick - ASTM D1457
ELASTOMER - 50 Duro ± 5 - Virgin Chloroprene (Neoprene) - to AASHTO 1977
GUIDE BAR SCREWS - "Unbrako" or equal
DUST SEAL - Closed cell Neoprene Foam
ELASTOMER SEAL - Nylon Bar

GENERAL NOTES:

1. Read this Drawing with contract Drawing Sheets 63, 65 and Contractor's shop drawings.

AS BUILT

DELAWARE
DEPARTMENT OF HIGHWAYS & TRANSPORTATION
DIVISION OF HIGHWAYS

EXPANSION BEARINGS
AT PIER

D.	SCALE	APPROVED BY:
T.	AS SHOWN	
C.		BRIDGE ENGINEER

COUNTY	CONTRACT	F. B. A. REG. NO.	STATE	FED. AID PROJECT NO.	SHEET NO.	TOTAL SHEETS
NEW CASTLE	79-071-02	2	DEL.	M-1191(1)	64	112

AUGUSTINE BRIDGE RECONSTRUCTION

NO.	REVISIONS	BY	DATE
1	Addendum No. 1	C.H.H.	7/3/79
2	UTILITY INSTALLATION AND LOCATION	SMT	9/20/79

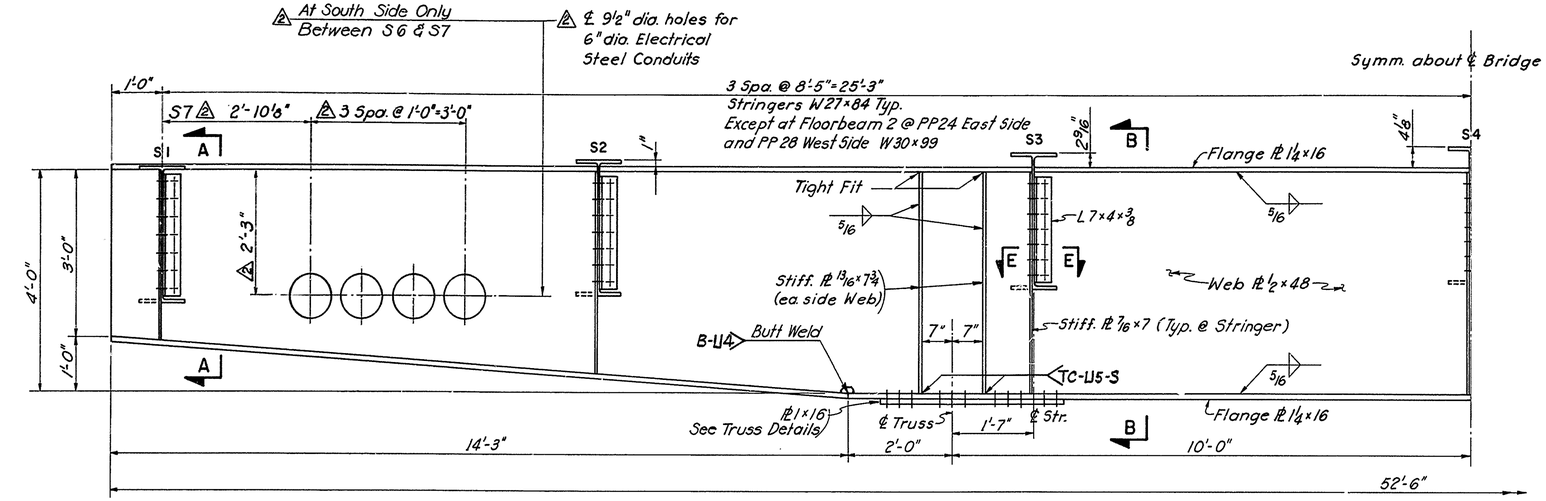

FLOORBEAM 2 As Shown
FLOORBEAM 1 Similar
(Looking East)

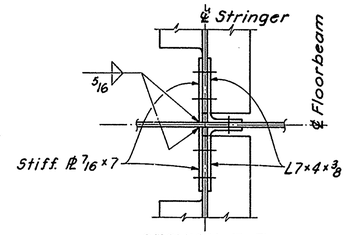

SECTION E-E
Scale: 1½"=1'-0"

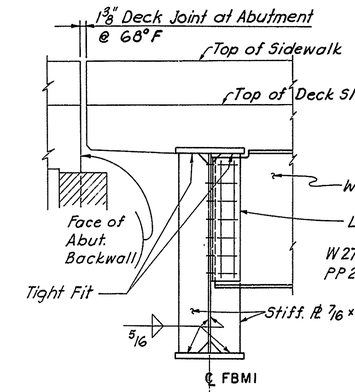

SECTION A-A
West End As Shown
East End Opp. Hand

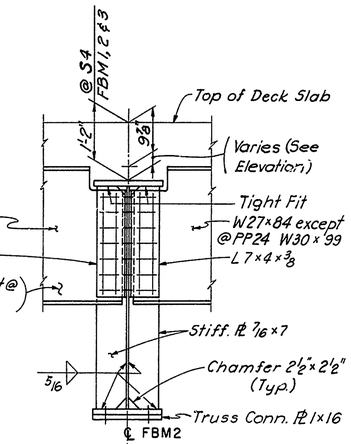

SECTION B-B

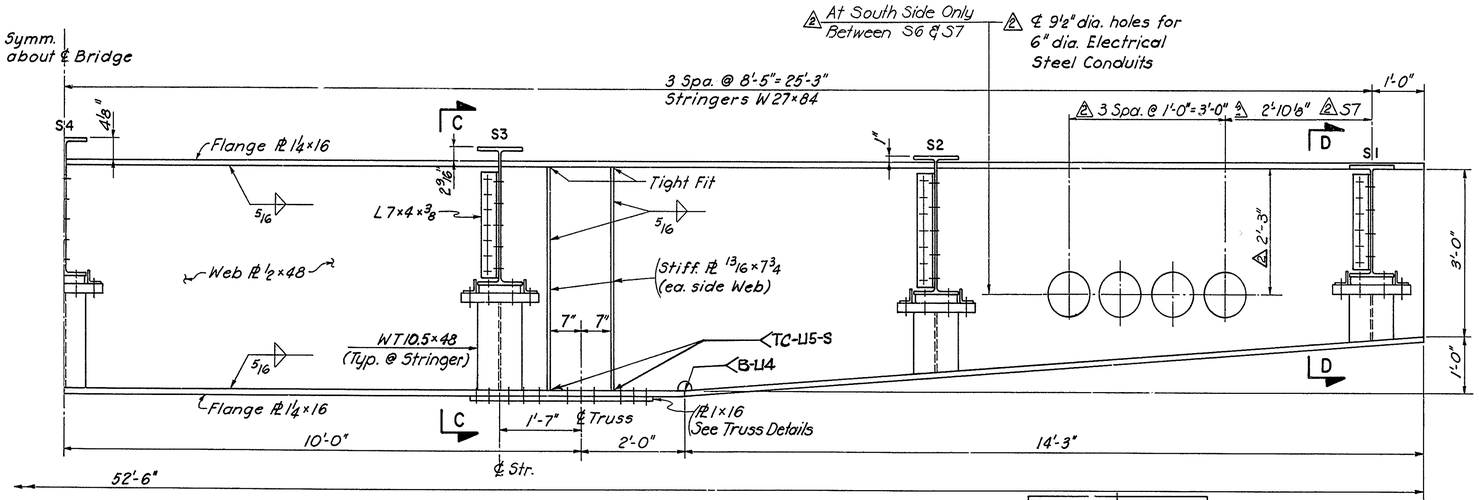

FLOORBEAM 3
(Looking West)

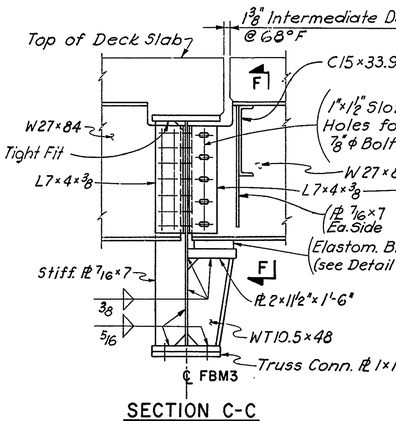

SECTION C-C
S2 TO S6

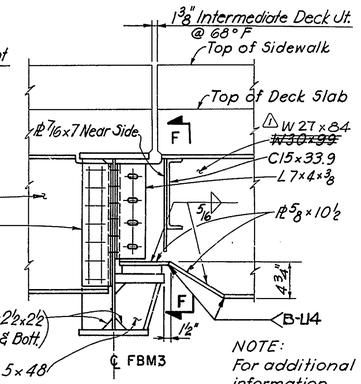

SECTION D-D
S1 & S7

NOTE: For additional information see Section C-C

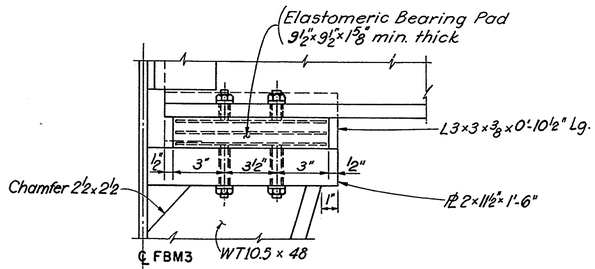

DETAIL A
Scale: 3"=1'-0"

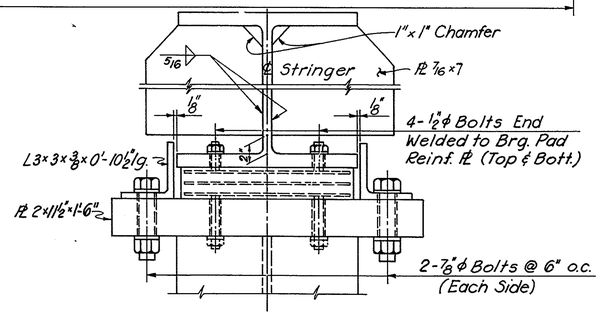

ELEVATION F-F
Scale: 3"=1'-0"

2 DETAILS AND LOCATION OF 4-6" DIA. ELECTRICAL STEEL CONDUITS AND 12" DIA. GAS MAIN AND THEIR SUPPORTS ARE SHOWN ON SHEETS 81A, 81B AND 81C.

REFERENCES:

	SH. NO.
General Plan & Elevation	15
General Notes	3
Truss Layout & Member Sizes	36-40
Typical Bridge Cross Section	16
Intermediate Joints	69
Deck Joint at West Abutment	70
Deck Joint at East Abutment	71
Bridge Deck Cross Sect. & Details	72
Truss Connection Details	42-56
Camber Diagram	65

DELAWARE
DEPARTMENT OF TRANSPORTATION
DIVISION OF HIGHWAYS

FLOORBEAMS 1, 2 & 3 & STRINGER DETAILS

D.
T.
C.

SCALE: 3/4"=1'-0" & As Shown

APPROVED BY: [illegible] BRIDGE ENGINEER

ROBERT E. McCOME REGISTERED PROFESSIONAL ENGINEER

COUNTY	CONTRACT	P.R.A. REG. NO.	STATE	FED. AID PROJECT NO.	SHEET NO.	TOTAL SHEETS
NEW CASTLE	79-071-02	2	DEL.	M-1191(1)	65	112

AUGUSTINE BRIDGE RECONSTRUCTION

NO.	REVISIONS	BY	DATE
1	UTILITY INSTALLATION AND LOCATION	SMT	9/20/79
2	Corrected position of channels	C.H.	12/20/79

1 DETAILS AND LOCATION OF 4-6" DIA. ELECTRICAL STEEL CONDUITS AND 12" DIA. GAS MAIN AND THEIR SUPPORTS ARE SHOWN ON SHEETS 81A, 81B AND 81C.

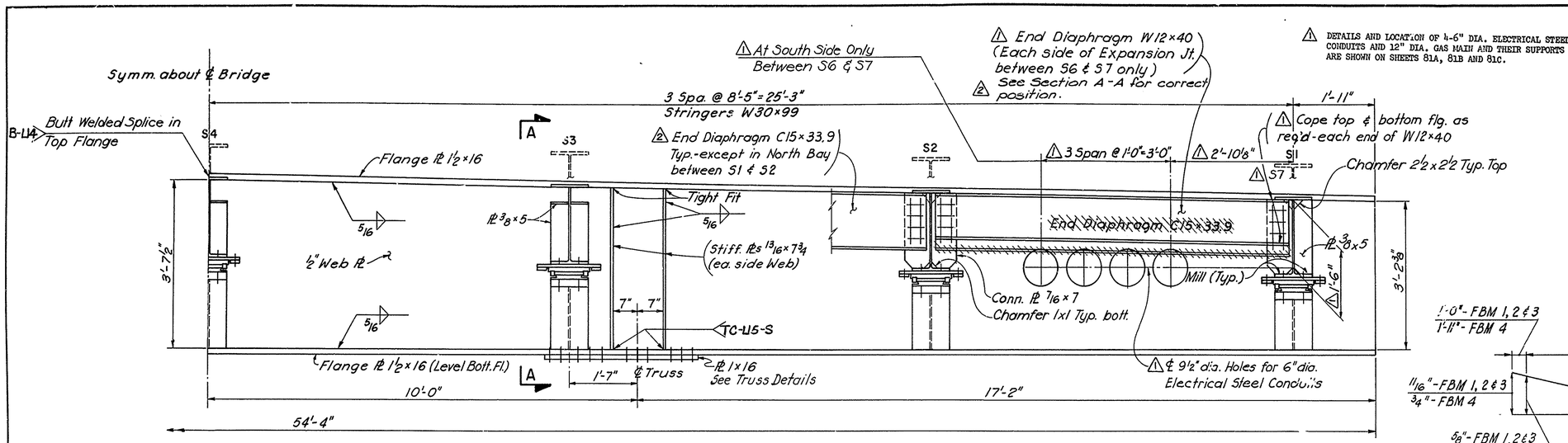

FLOORBEAM 4

Scale: ¾" = 1'-0"
(Looking West)

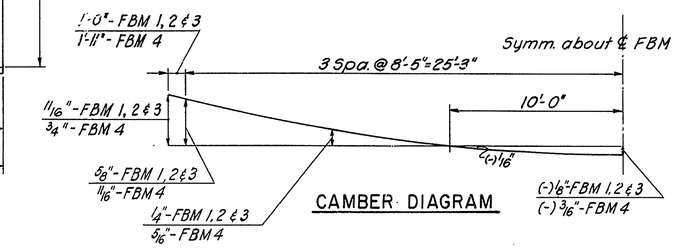

CAMBER DIAGRAM

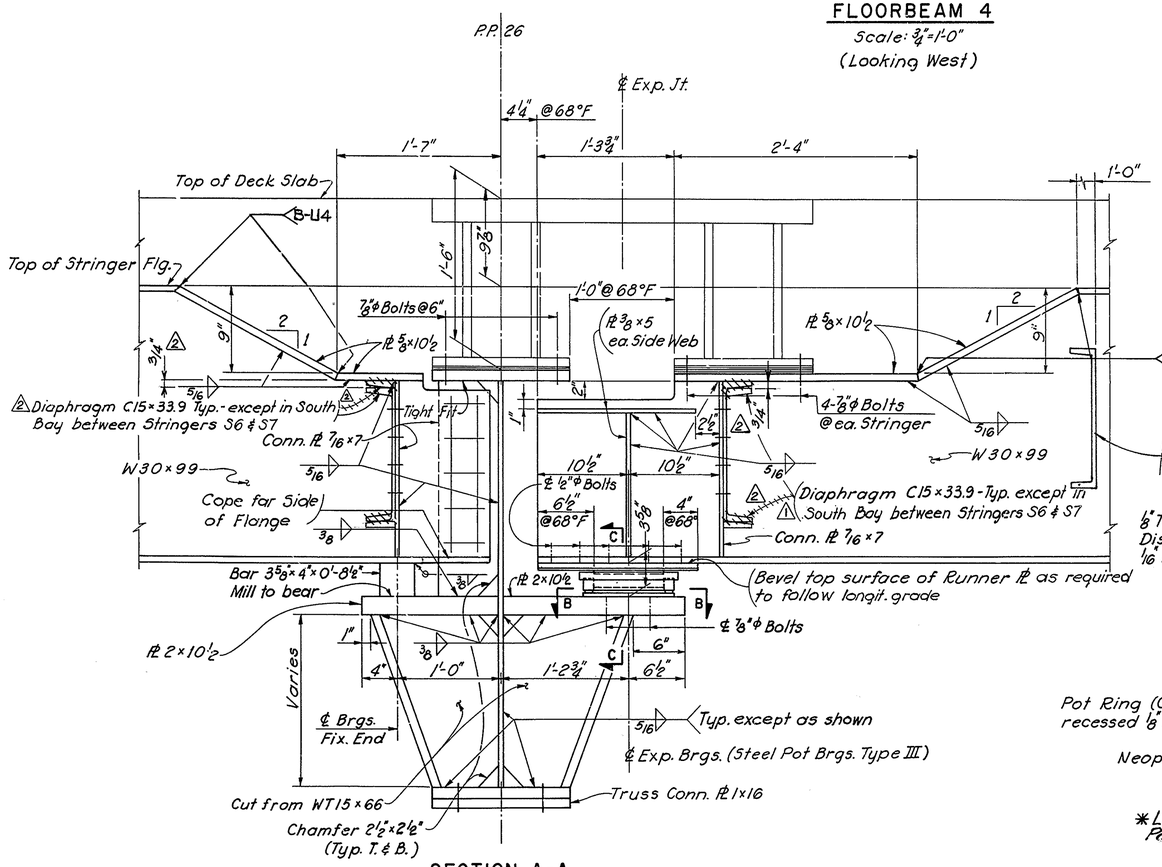

SECTION A-A

Scale: 1½" = 1'-0"

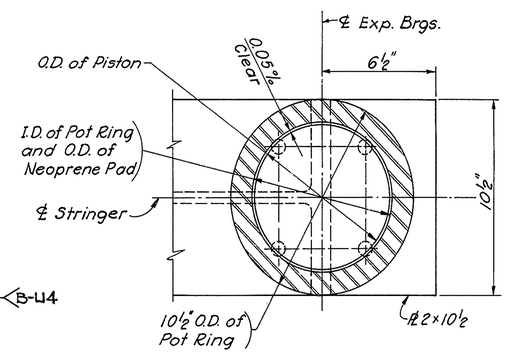

SECTION B-B

Scale: 3" = 1'-0"

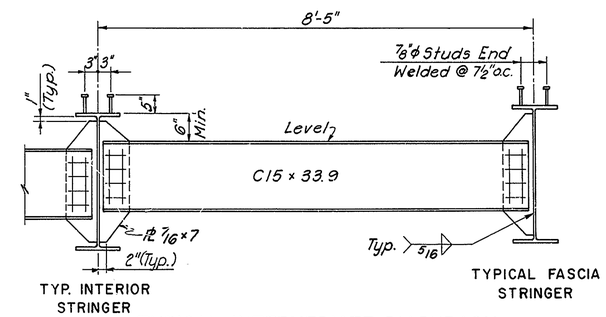

TYPICAL INTERMEDIATE DIAPHRAGM

Scale: ¾" = 1'-0"

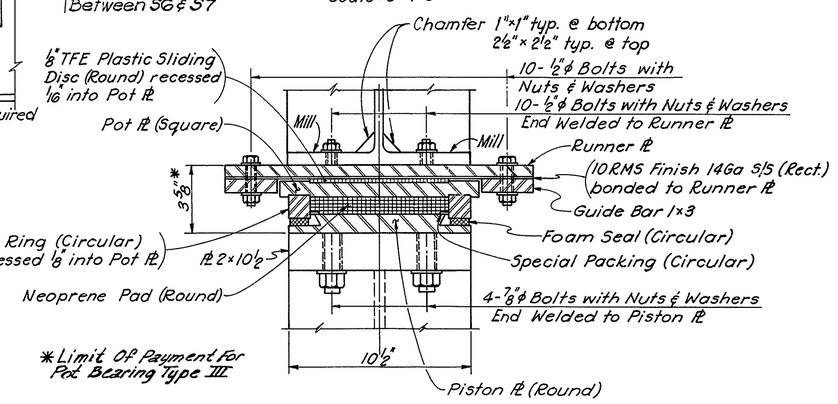

SECTION C-C

Scale: 3" = 1'-0"

* Limit O.P. Payment For Pot Bearing Type III

REFERENCES:

	SH. NO.
Exp. Joint at PP26	66
Notes & additional Brg. Details	63
Additional References	64

AS BUILT

DELAWARE
DEPARTMENT OF TRANSPORTATION
DIVISION OF HIGHWAYS

FLOORBEAM 4
& STRINGER DETAILS

D. T. C.	SCALE	APPROVED BY
	As Shown	BRIDGE ENGINEER

COUNTY	CONTRACT	P.R.A. REG. NO.	STATE	FED. AID PROJECT NO.	SHEET NO.	TOTAL SHEETS
NEW CASTLE	79-071-02	2	DEL.	M-1191 (1)	66	112.

AUGUSTINE BRIDGE RECONSTRUCTION

NO.	REVISIONS	BY	DATE
1	UTILITY INSTALLATION AND LOCATION	SMT	9/20/79

1 DETAILS AND LOCATION OF 4-6" DIA. ELECTRICAL STEEL CONDUITS AND 12" DIA. GAS MAIN AND THEIR SUPPORTS ARE SHOWN ON SHEETS 81A, 81B AND 81C.

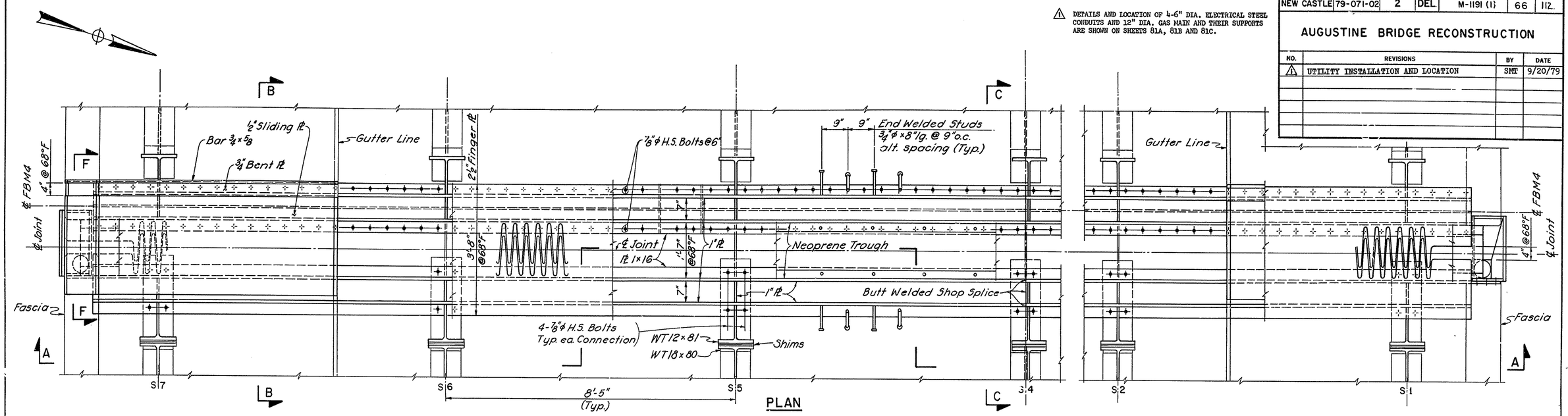

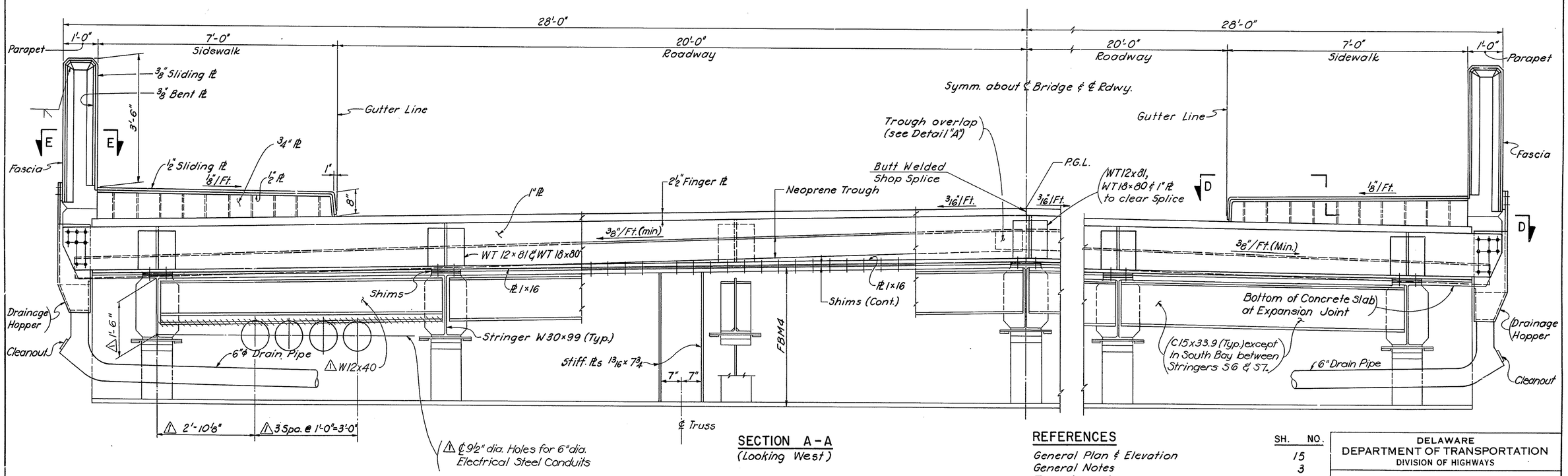

SECTION A-A
(Looking West)

REFERENCES

	SH. NO.
General Plan & Elevation	15
General Notes	3
Truss Layout	38
Floor Beam 4	65
Sections B-B thru F-F	67
Neoprene Trough & Detail A	68
Drainage Hopper	68
Drainage Details	58 & 61
Transverse Inspection Walk @ P.P. U26	61
Notes	68

DELAWARE
DEPARTMENT OF TRANSPORTATION
DIVISION OF HIGHWAYS

DECK EXPANSION JOINT
AT PANEL POINT 26

D.
T.
C.

SCALE
¾" = 1'-0"

APPROVED BY
BRIDGE ENGINEER

COUNTY	CONTRACT	P.B.A. REG. NO.	STATE	FED. AID PROJECT NO.	SHEET NO.	TOTAL SHEETS
NEW CASTLE	79-071-02	2	DEL.	M-1191(1)	67	112

AUGUSTINE BRIDGE RECONSTRUCTION

NO.	REVISIONS	BY	DATE
1	UTILITY INSTALLATION AND LOCATION	SMT	9/20/79

1 UTILITIES NOT SHOWN. DETAILS AND LOCATION OF 4 - 6 in. DIA. ELECTRICAL STEEL CONDUITS AND 12 in. DIA. GAS MAIN AND THEIR SUPPORTS ARE SHOWN ON SHEETS 81A, 81B AND 81C.

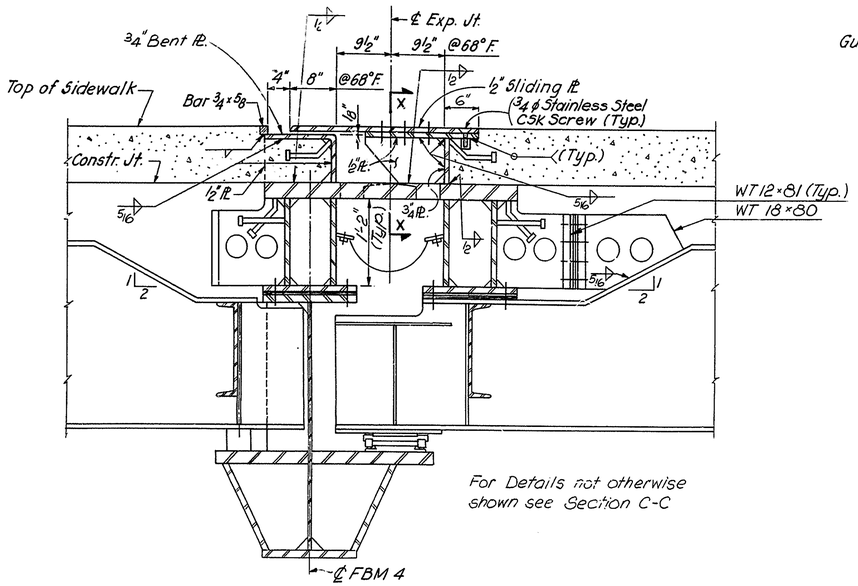

SECTION B-B
Scale: 1" = 1'-0"

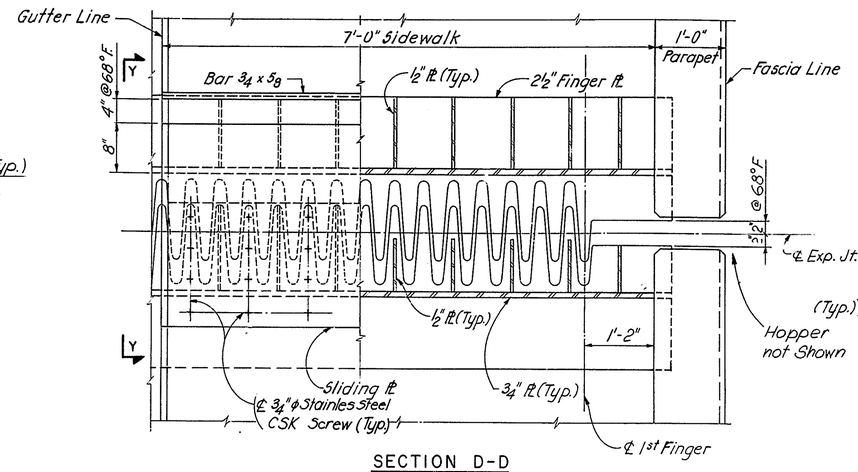

SECTION D-D
Scale: 1" = 1'-0"

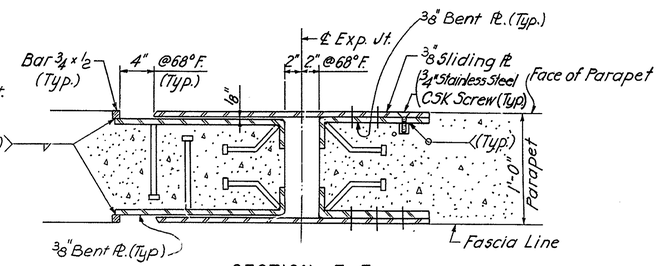

SECTION E-E
Scale: 1½" = 1'-0"

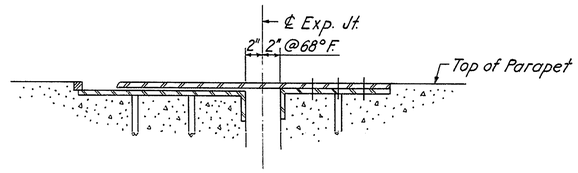

SECTION F-F
Scale: 1½" = 1'-0"

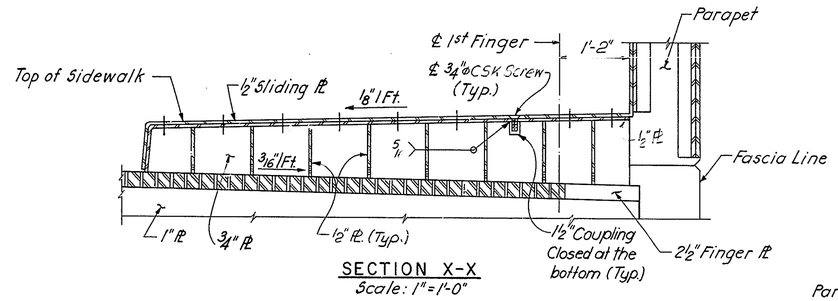

SECTION X-X
Scale: 1" = 1'-0"

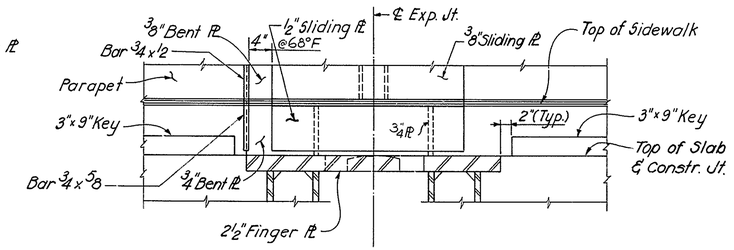

SECTION Y-Y
Scale: 1" = 1'-0"

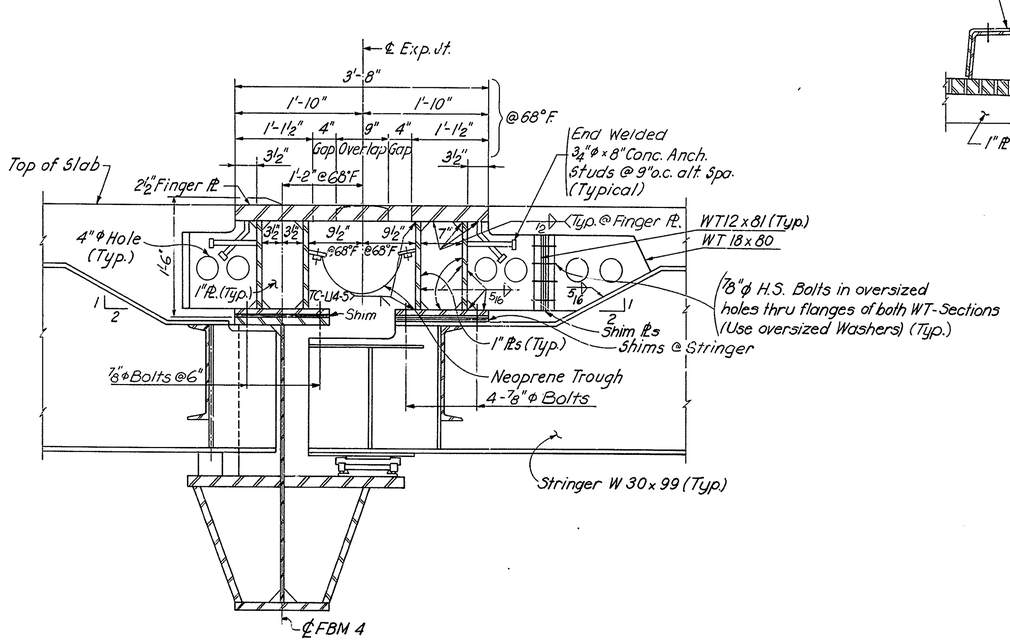

SECTION C-C
Scale: 1" = 1'-0"

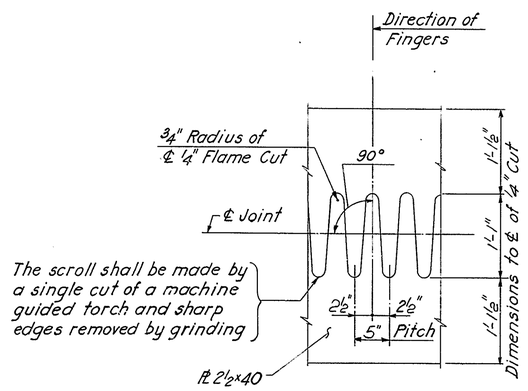

PLATE CUTTING DETAIL
Scale: 1" = 1'-0"

Work this Dwg. with Sheets Nos. 66 & 68

DELAWARE
DEPARTMENT OF TRANSPORTATION
DIVISION OF HIGHWAYS

DECK EXPANSION JOINT
SECTIONS & DETAILS

D. T. C.	SCALE	APPROVED BY
	As Shown	H. C. McDowell, Jr. Bridge Engineer

ROBERT C. McDOWELL REGISTERED PROFESSIONAL ENGINEER NO. 3069 STATE OF DELAWARE

COUNTY	CONTRACT	P. R. A. REG. NO.	STATE	FED. AID PROJECT NO.	SHEET NO.	TOTAL SHEETS
NEW CASTLE	79-071-02	2	DEL.	M-1191 (1)	68	112

AUGUSTINE BRIDGE RECONSTRUCTION

NO.	REVISIONS	BY	DATE
1	UTILITY INSTALLATION AND LOCATION	SMT	9/20/79

1 UTILITIES NOT SHOWN.
DETAILS AND LOCATION OF 4 - 6 in. DIA. ELECTRICAL STEEL CONDUITS AND 12 in. DIA. GAS MAIN AND THEIR SUPPORTS ARE SHOWN ON SHEETS 81A, 81B AND 81C.

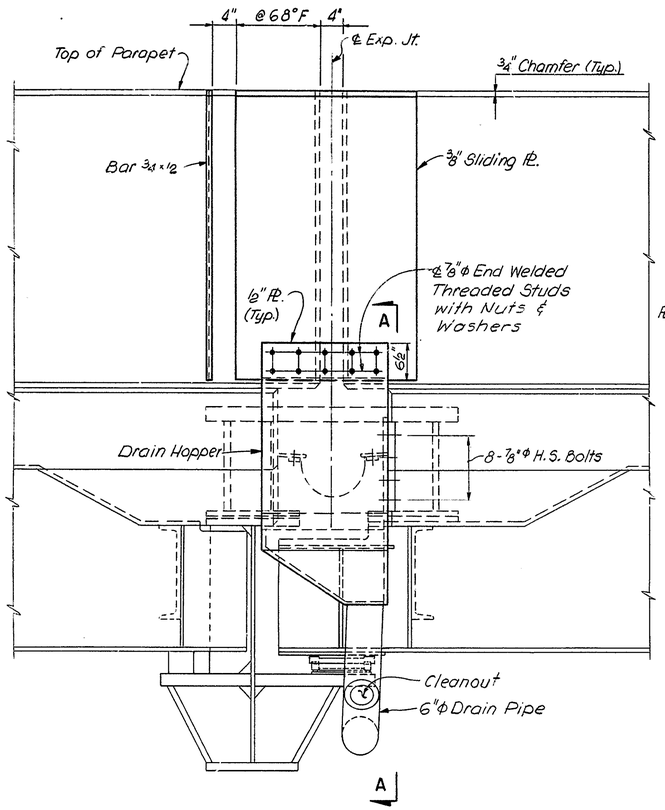

FASCIA ELEVATION AT DECK EXP. JT.
(AT PANEL PT. 26)
Scale: 1" = 1'-0"

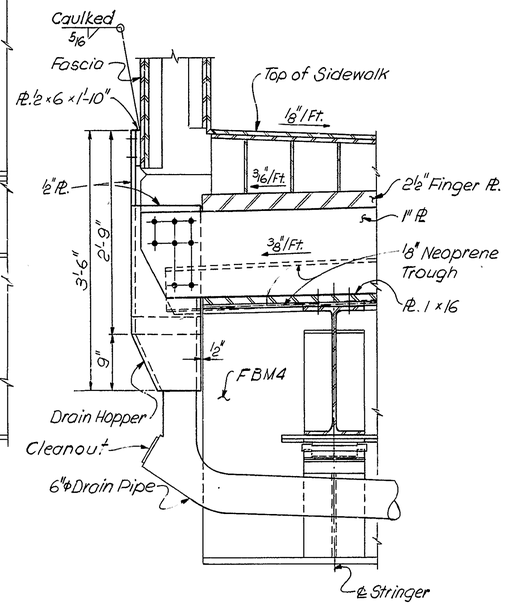

SECTION A-A
Scale: 1" = 1'-0"

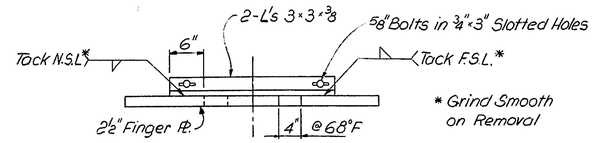

SHIPPING SPACING TIES
Scale: 1" = 1'-0"

NOTES

1. Expansion Joint shall be fabricated to follow crown and grade of roadway.
2. All steel for the joint shall be ASTM A588 Steel with exposed surfaces painted in sidewalk and parapet areas as per Special Provisions.
3. Splices for expansion joint structural steel shall develop full strength.
4. Joint shall be preset in shop to the temperature anticipated at the time of installation and shall be equipped with shipping ties to maintain the proper spacing and fit.
5. All required adjustment in setting shall be made in field after removal of the shipping ties and prior to tightening bolts at floorbeam and long. stringer connections and placing deck concrete. The joint opening shall vary 5/8" per every 10°F.
6. The material for neoprene trough shall conform to Article 2.25.2 of AASHTO Specifications (60 durometer hardness) see Special Provisions
7. Steel frames of trough and Hopper shall be fabricated from ASTM A588 Steel. Hopper drain pipe shall be 6"Φ Standard Black Steel Pipe conforming to ASTM A53- Type E or S Grade B.

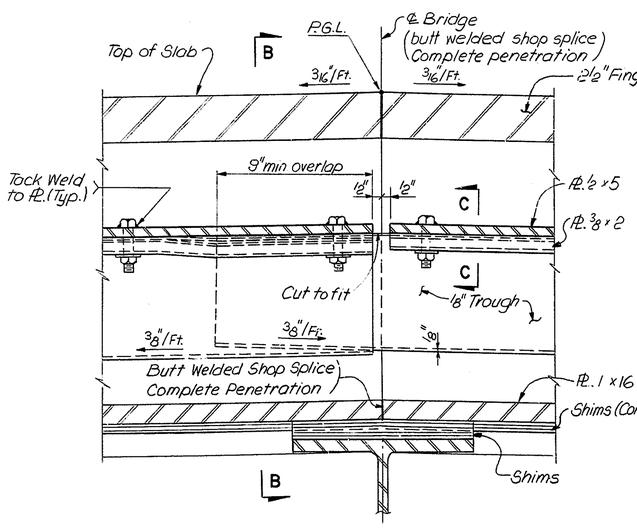

DETAIL "A"
Scale: 3" = 1'-0"

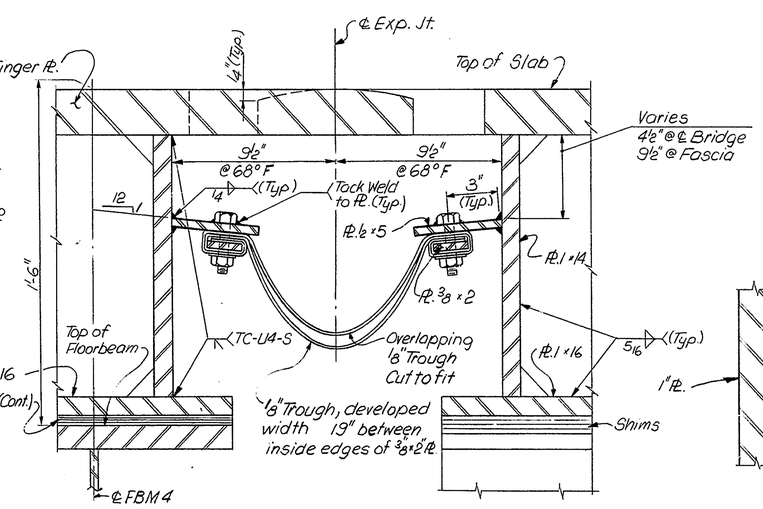

SECTION B-B
Scale: 3" = 1'-0"

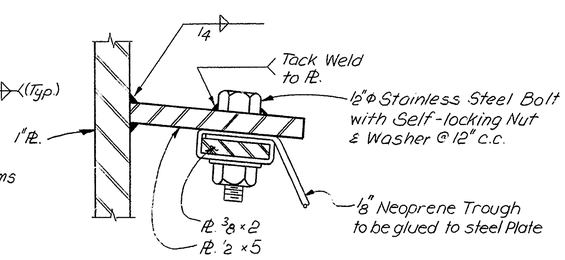

SECTION C-C
Half Size

Work this dwg. with Sheets Nos. 66 & 67

AS BUILT

DELAWARE
DEPARTMENT OF TRANSPORTATION
DIVISION OF HIGHWAYS

DECK EXPANSION JOINT DETAILS

D. T. C.	SCALE	APPROVED BY:
	AS SHOWN	

GERT C. MEDOWELL REGISTERED PROFESSIONAL ENGINEER No. 3069

COUNTY	CONTRACT	P.R.S. REG. NO.	STATE	FED. AID PROJECT NO.	SHEET NO.	TOTAL SHEETS
NEW CASTLE	79-071-02	2	DEL.	M-1191(1)	69	112

AUGUSTINE BRIDGE RECONSTRUCTION

NO.	REVISIONS	BY	DATE
1	UTILITY INSTALLATION AND LOCATION	SMT	9/20/79
2	Compression Seal Recess	N.T.	10/10/79

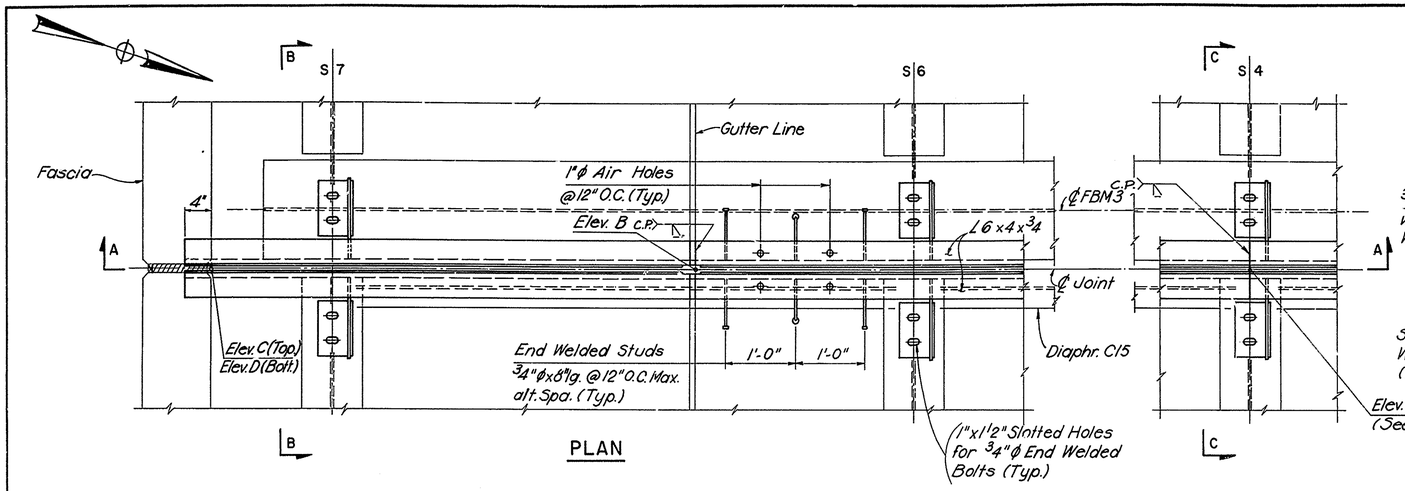

PLAN

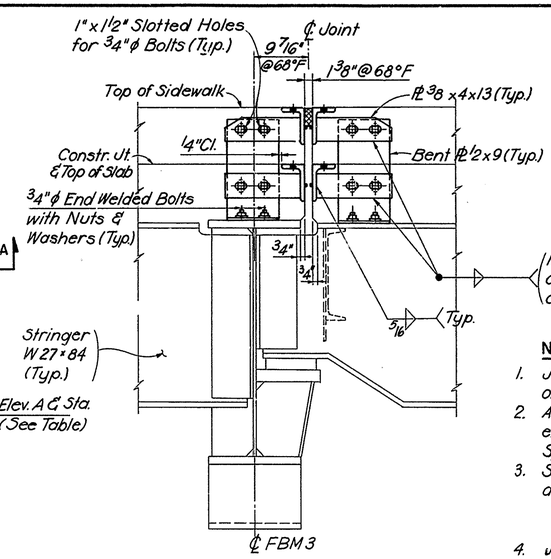

SECTION B-B

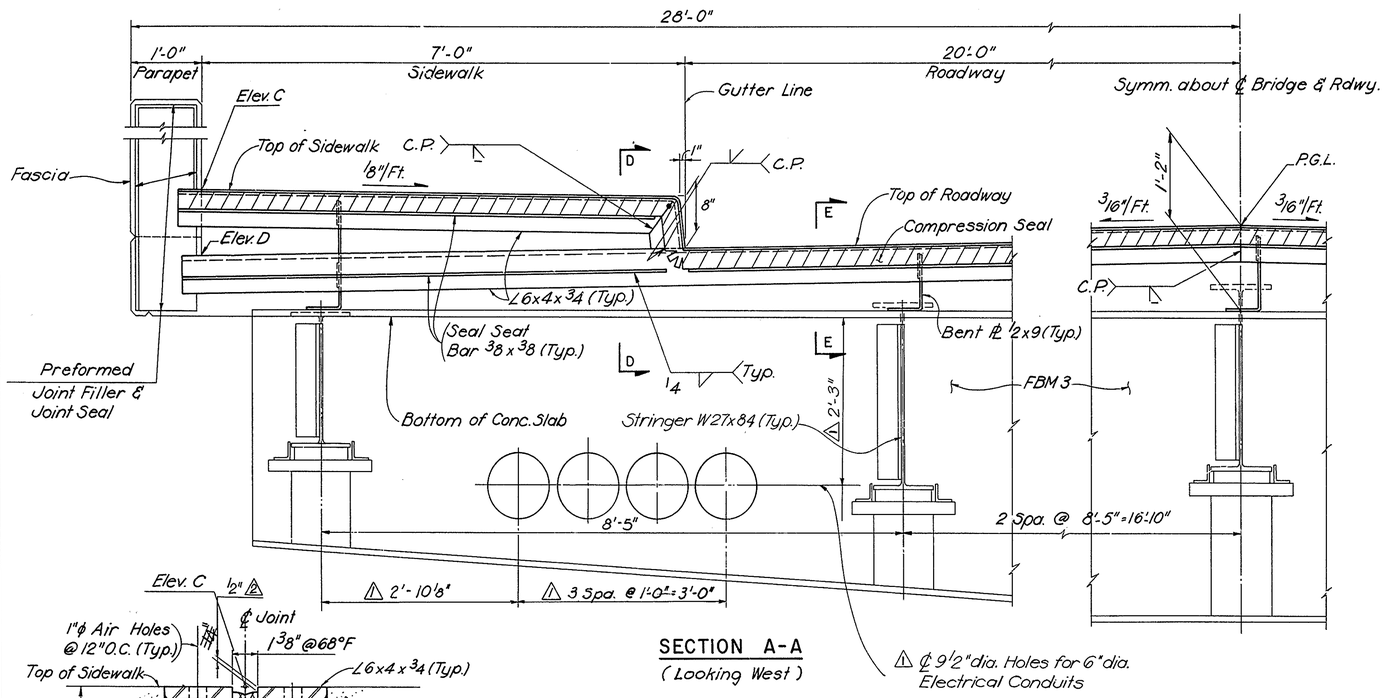

SECTION A-A
(Looking West)

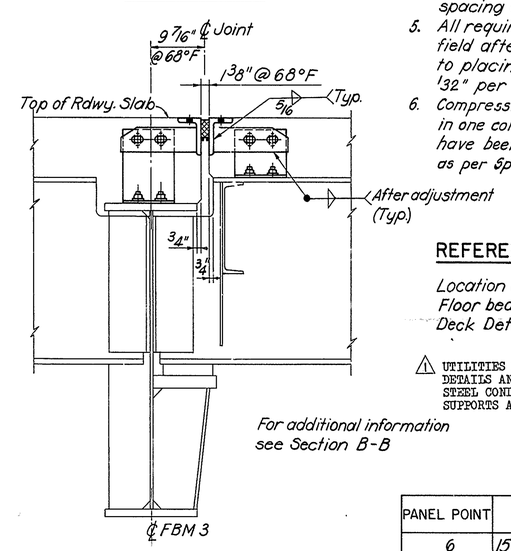

SECTION C-C

For additional information see Section B-B

NOTES

1. Joints shall be fabricated to follow crown and grade of roadway.
2. All steel for the joint shall be ASTM A588 steel with exposed surfaces painted in the sidewalk area as per Special Provisions.
3. Splices for expansion joint structural steel shall develop full strength.
4. Joint Metal Parts shall be preset in shop to the temperature anticipated at the time of installation and shall be equipped with shipping ties to maintain the proper spacing and fit.
5. All required adjustment in setting shall be made in field after removal of the shipping ties and prior to placing concrete. The joint width shall vary 1/32" per every 10°F.
6. Compression Seal material shall be installed in joint in one continuous piece after adjacent steel surfaces have been cleaned and lubricant-adhesive applied as per Special Provisions.

REFERENCES:

	SHEET NO.
Location of Intermediate Joints	36 - 40
Floor beam & Stringer Details	64
Deck Details	72

1 UTILITIES NOT SHOWN. DETAILS AND LOCATION OF 4 - 6 in. DIA. ELECTRICAL STEEL CONDUITS AND 12 in. DIA. GAS MAIN AND THEIR SUPPORTS ARE SHOWN ON SHEETS 81A, 81B AND 81C.

PANEL POINT	STA.	ELEV. A	ELEV. B	ELEV. C	ELEV. D
6	15+49.75	132.11	131.80	132.54	131.69
12	16+47.84	132.60	132.29	133.03	132.18
20	17+79.58	133.26	132.95	133.69	132.84
36	20+41.89	133.43	133.12	133.86	133.01
46	22+05.99	132.61	132.30	133.04	132.19

Elevations & Stations given at ℄ Joint

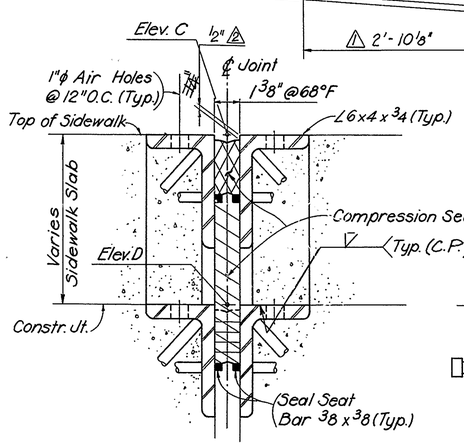

SECTION D-D
Scale: 3" = 1'-0"

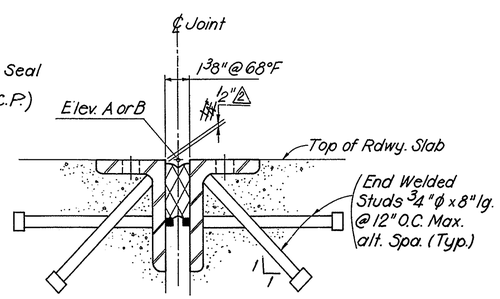

SECTION E-E
Scale: 3" = 1'-0"

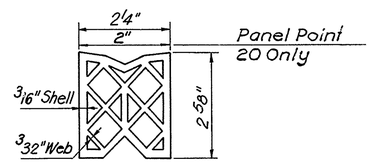

COMPRESSION SEAL DETAIL
N.T.S.

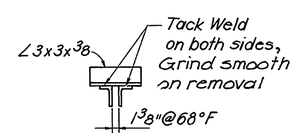

SHIPPING TIE
Scale: ½" = 1'-0"

AS BUILT

DELAWARE
DEPARTMENT OF TRANSPORTATION
DIVISION OF HIGHWAYS

INTERMEDIATE JOINTS IN BRIDGE DECK

D. T. C.	SCALE 1" = 1'-0" & as shown	APPROVED