COUNTY	CONTRACT	P. R. A. REG. NO.	STATE	FED. AID PROJECT NO.	SHEET NO.	TOTAL SHEETS
NEW CASTLE	79-071-02	2	DEL.	M-1191(1)	70	112

AUGUSTINE BRIDGE RECONSTRUCTION

NO.	REVISIONS	BY	DATE
⚠	UTILITY INSTALLATION AND LOCATION	SMT	9/20/79

⚠ UTILITIES NOT SHOWN.
DETAILS AND LOCATION OF 4 - 6 in. DIA. ELECTRICAL STEEL CONDUITS AND 12 in. DIA. GAS MAIN AND THEIR SUPPORTS ARE SHOWN ON SHEETS 81A, 81B AND 81C.

*Elevations Given at Face of Backwall

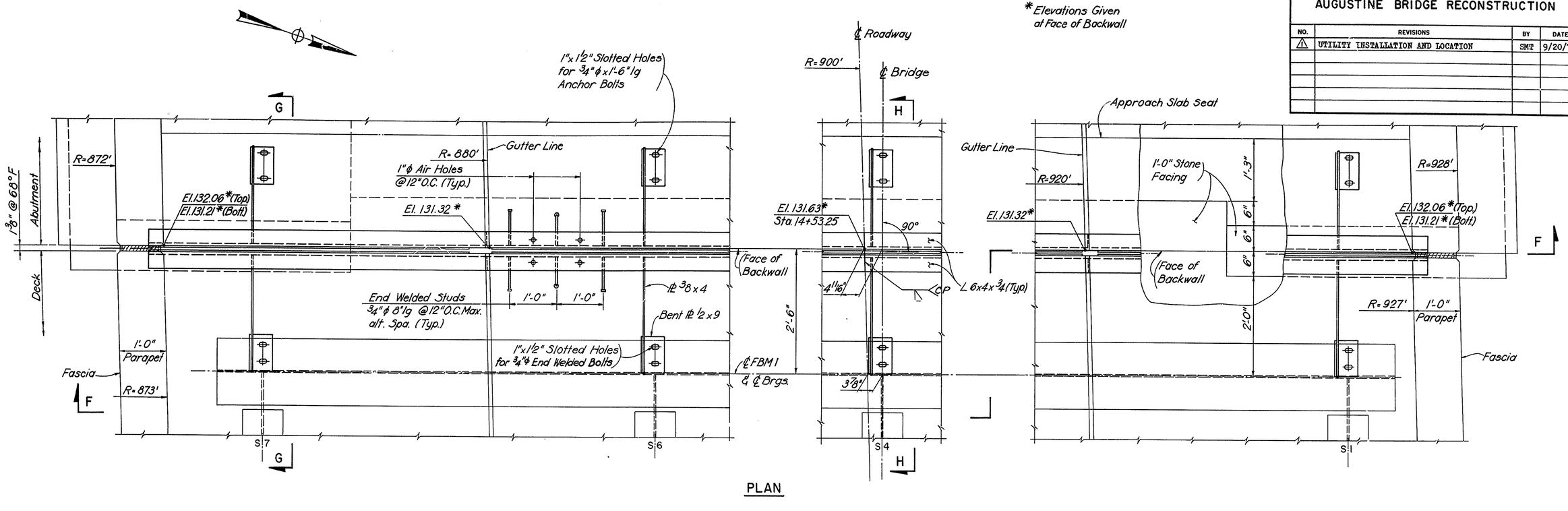

PLAN

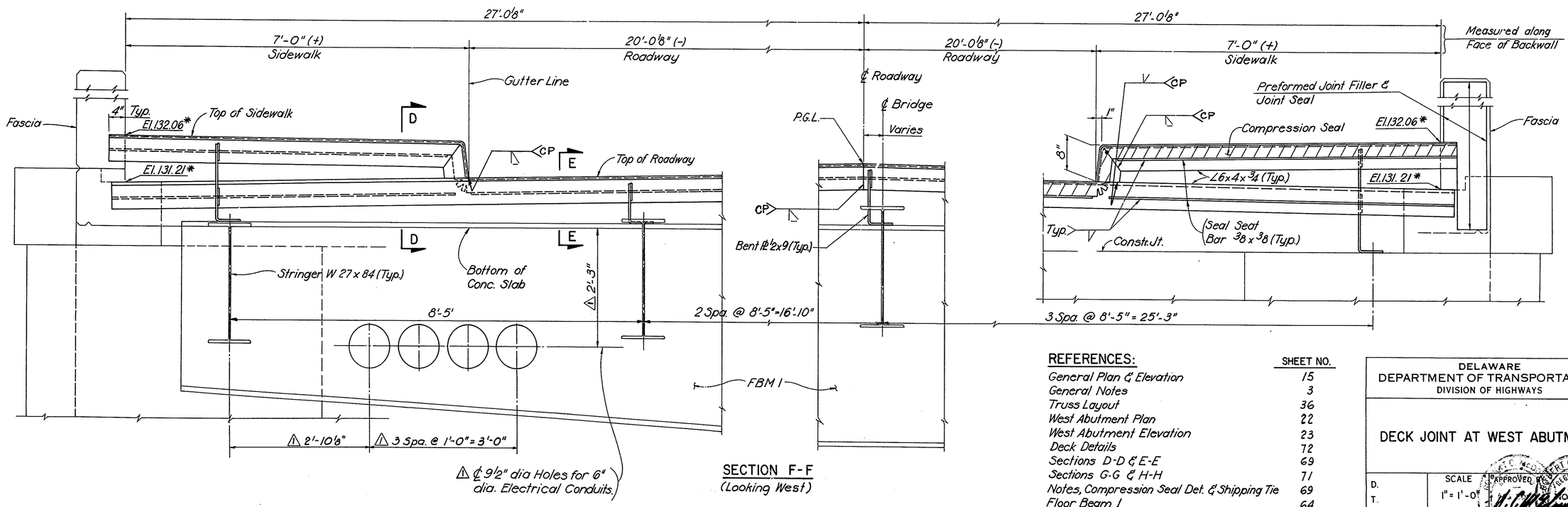

SECTION F-F
(Looking West)

REFERENCES:

	SHEET NO.
General Plan & Elevation	15
General Notes	3
Truss Layout	36
West Abutment Plan	22
West Abutment Elevation	23
Deck Details	72
Sections D-D & E-E	69
Sections G-G & H-H	71
Notes, Compression Seal Det. & Shipping Tie	69
Floor Beam 1	64

DELAWARE
DEPARTMENT OF TRANSPORTATION
DIVISION OF HIGHWAYS

DECK JOINT AT WEST ABUTMENT

D.
T.
C.

SCALE 1" = 1'-0"

APPROVED

ROBERT C. McCOWEN
REGISTERED
No. 3324
BRIDGE ENGINEER
PROFESSIONAL ENGINEER

COUNTY	CONTRACT	P. R. & REG. NO.	STATE	FED. AID PROJECT NO.	SHEET NO.	TOTAL SHEETS
NEW CASTLE	79-071-02	2	DEL.	M-1191(1)	71	112

AUGUSTINE BRIDGE RECONSTRUCTION

NO.	REVISIONS	BY	DATE
1	UTILITY INSTALLATION AND LOCATION	SMT	9/20/79

1 UTILITIES NOT SHOWN.
DETAILS AND LOCATION OF 4 - 6 in. DIA. ELECTRICAL STEEL CONDUITS AND 12 in. DIA. GAS MAIN AND THEIR SUPPORTS ARE SHOWN ON SHEETS 81A, 81B AND 81C.

*Elevations given at Face of Backwall

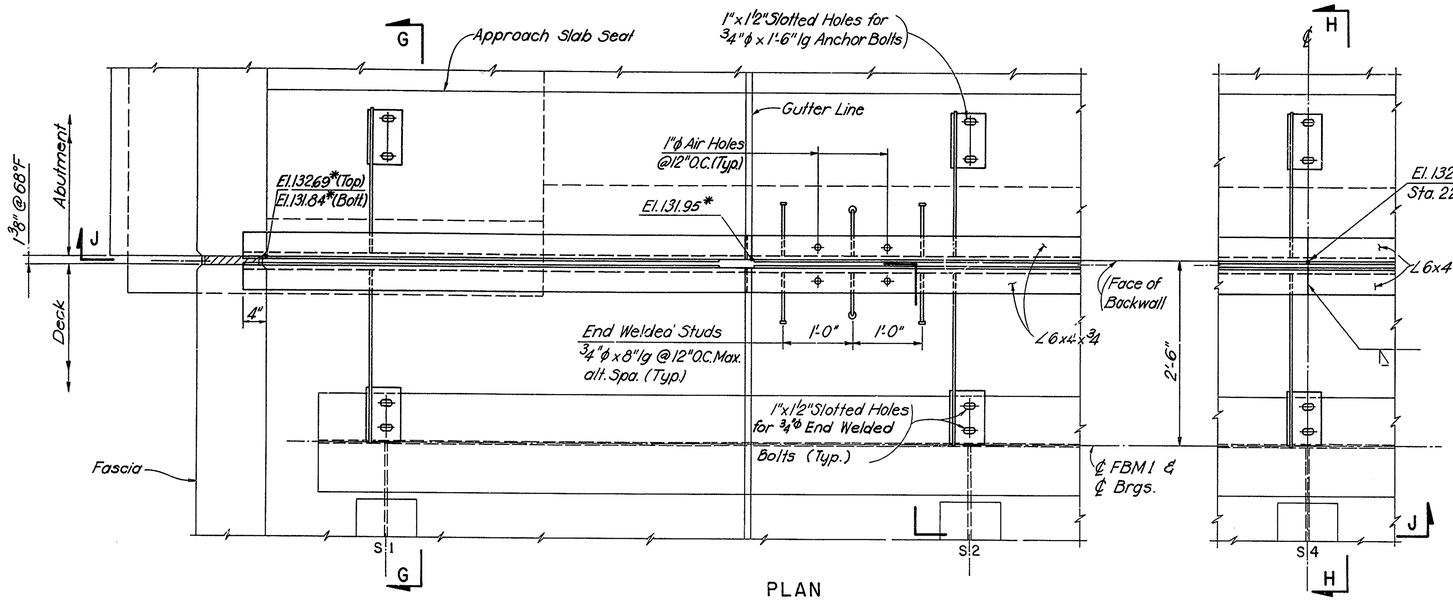

PLAN

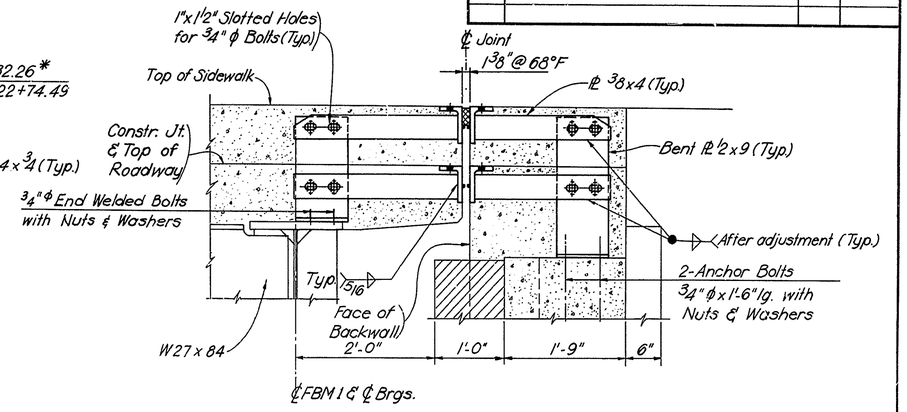

SECTION G-G

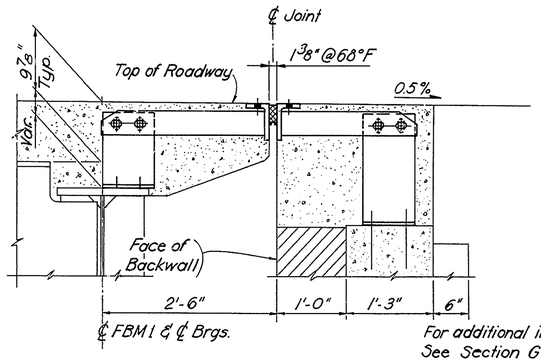

SECTION H-H

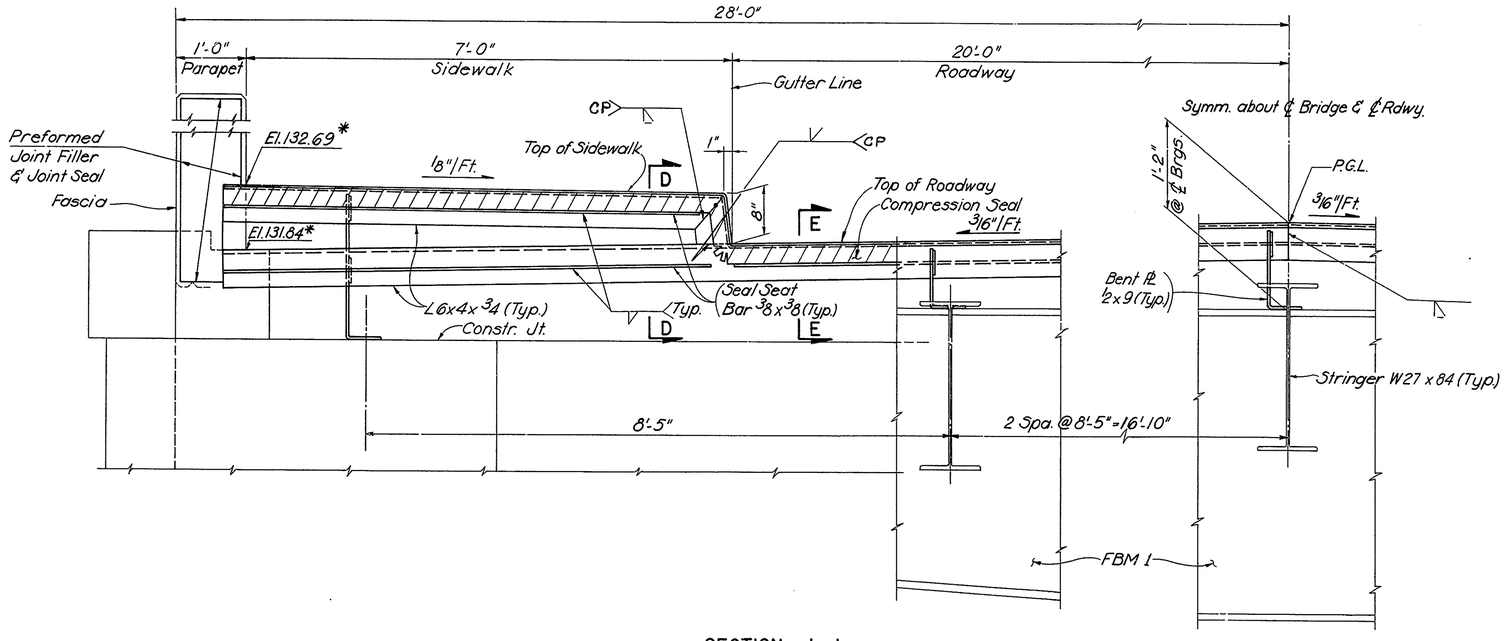

SECTION J-J
(Looking East)

REFERENCES:

	SHEET NO.
General Plan & Elevation	15
General Notes	3
Truss Layout	40
East Abutment	29 & 30
Deck Details	72
Sections D-D & E-E	69
Notes, Compression Seal Det. & Shipping Tie	69
Floor Beam 1	64

DELAWARE
DEPARTMENT OF TRANSPORTATION
DIVISION OF HIGHWAYS

DECK JOINT AT EAST ABUTMENT

D.
T.
C.

SCALE 1" = 1'-0"

APPROVED BY: ROBERT C. McDOWELL REGISTERED PROFESSIONAL ENGINEER
BRIDGE ENGINEER

COUNTY	CONTRACT	P. R. A. REG. NO.	STATE	FED. AID PROJECT NO.	SHEET NO.	TOTAL SHEETS
NEW CASTLE	79-071-02	2	DEL.	M 1191 (1)	72	112

AUGUSTINE BRIDGE RECONSTRUCTION

NO.	REVISIONS	BY	DATE
1	UTILITY INSTALLATION AND LOCATION	SMT	9/20/79
2	Latex Modified Concrete and 15# Asphalt Roofing Felt.	N.T.	9/11/80

1 UTILITIES NOT SHOWN. DETAILS AND LOCATION OF 4 - 6 in. DIA. ELECTRICAL STEEL CONDUITS AND 12 in. DIA. GAS MAIN AND THEIR SUPPORTS ARE SHOWN ON SHEETS 81A, 81B AND 81C.

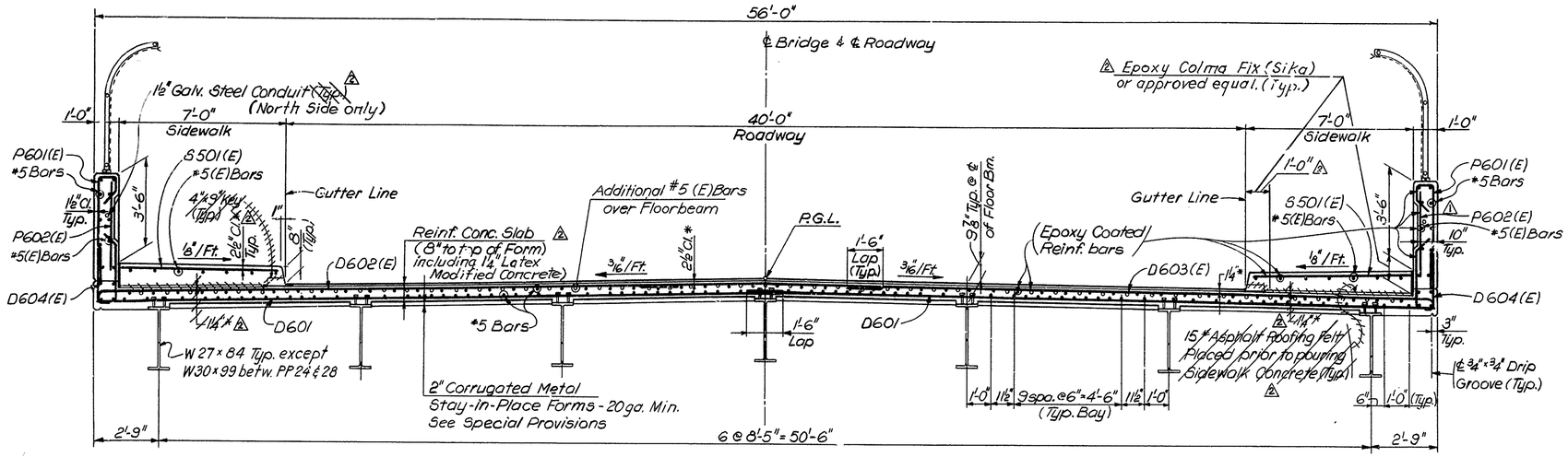

TYPICAL DECK SECTION

Scale : 3/8" = 1'-0"

* Top 1¼" to be Latex Modified Concrete (See Special Provisions)

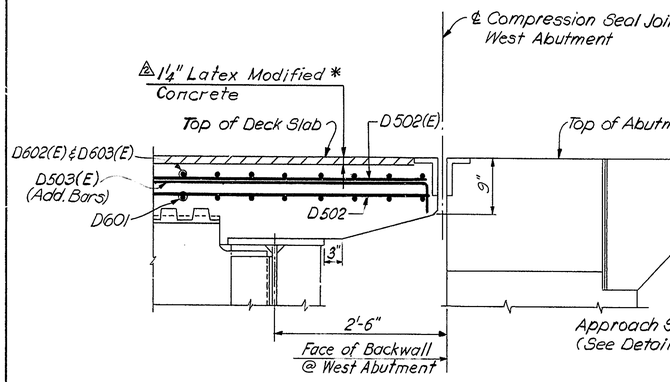

SECTION A-A

Scale : 1" = 1'-0"

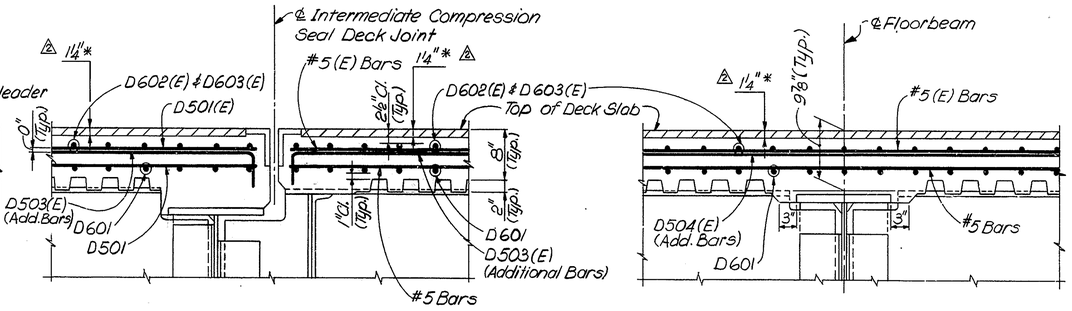

SECTION B-B

Scale : 1" = 1'-0"

SECTION C-C

Scale : 1" = 1'-0"

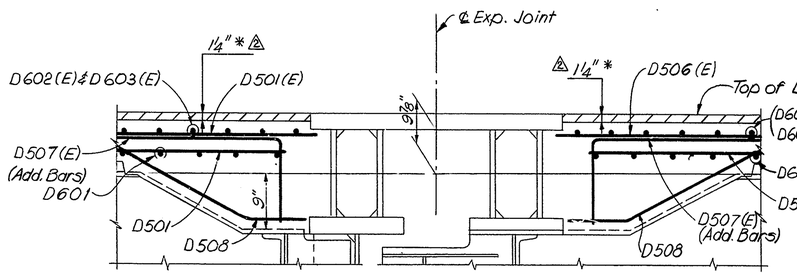

SECTION D-D

Scale : 1" = 1'-0"

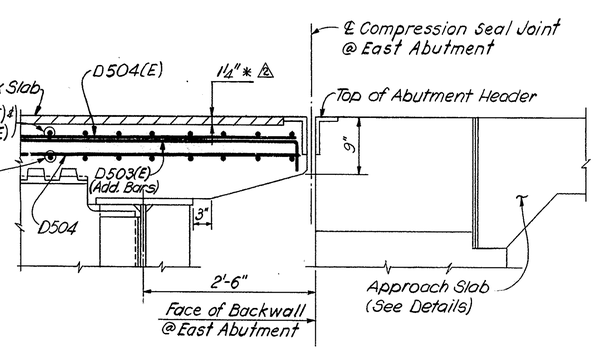

SECTION E-E

Scale : 1" = 1'-0"

NOTES:

1. The compressive strength of the deck concrete shall be f'c = 4000 p.s.i.,
2. The allowable tensile strength of Bar Reinforcing Steel fs = 24,000 p.s.i
3. Reinforcing bars for the top of concrete deck slabs, sidewalks and the vertical and horizontal steel for the sidewalk side faces of the concrete parapets shall be epoxy coated (See Reinforcing Steel Bar Schedule).

REFERENCES:

	SHEET NO.
Deck Exp. Jt. @ p.p. 26	66
Deck Jts. @ Abutments	70 & 71
Intermediate Deck Joints	69
Fence Details	81
Lamp post Location & Details	82-85
Deck Reinf. Steel Placement Plans	73-75
Sidewalk Reinf. Steel Placement Plans	76-79
Parapet Reinf. Steel Placement Plans	76-79
Deck Reinforcing Bar Schedule	80
Approach Slab	35
Diaphragm & Intermediate Diaphragm	65

DELAWARE
DEPARTMENT OF TRANSPORTATION
DIVISION OF HIGHWAYS

BRIDGE DECK CROSS SECTION AND DETAILS

D.	SCALE	APPROVED NO. 3069
T.	As shown	ROBERT C. McDOWELL REGISTERED PROFESSIONAL ENGINEER — BRIDGE ENGINEER
C.		

D C B A 1 5 10 A B C D

COUNTY	CONTRACT	F.R.A. REG. NO.	STATE	FED. AID PROJECT NO.	SHEET NO.	TOTAL SHEETS
NEW CASTLE	79-071-02	2	DEL.	M 1191(1)	73	112

AUGUSTINE BRIDGE RECONSTRUCTION

NO.	REVISIONS	BY	DATE

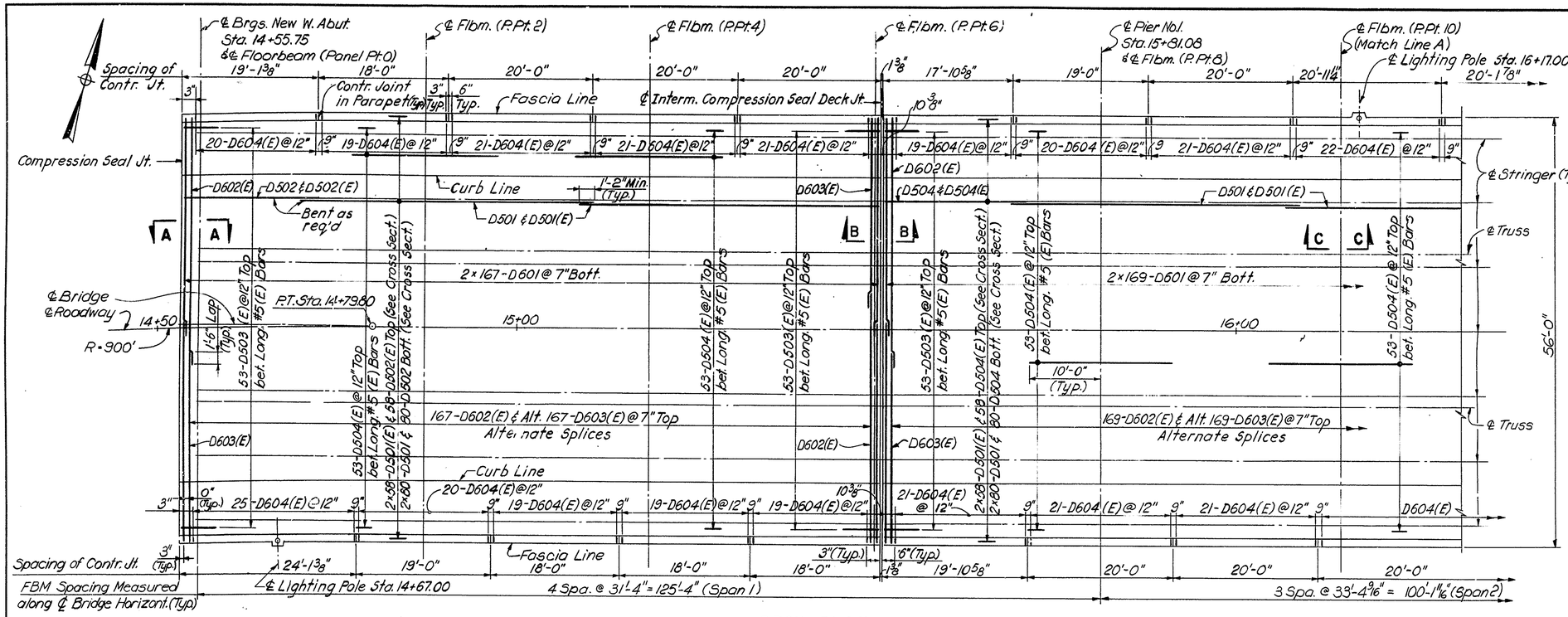

DECK PLAN

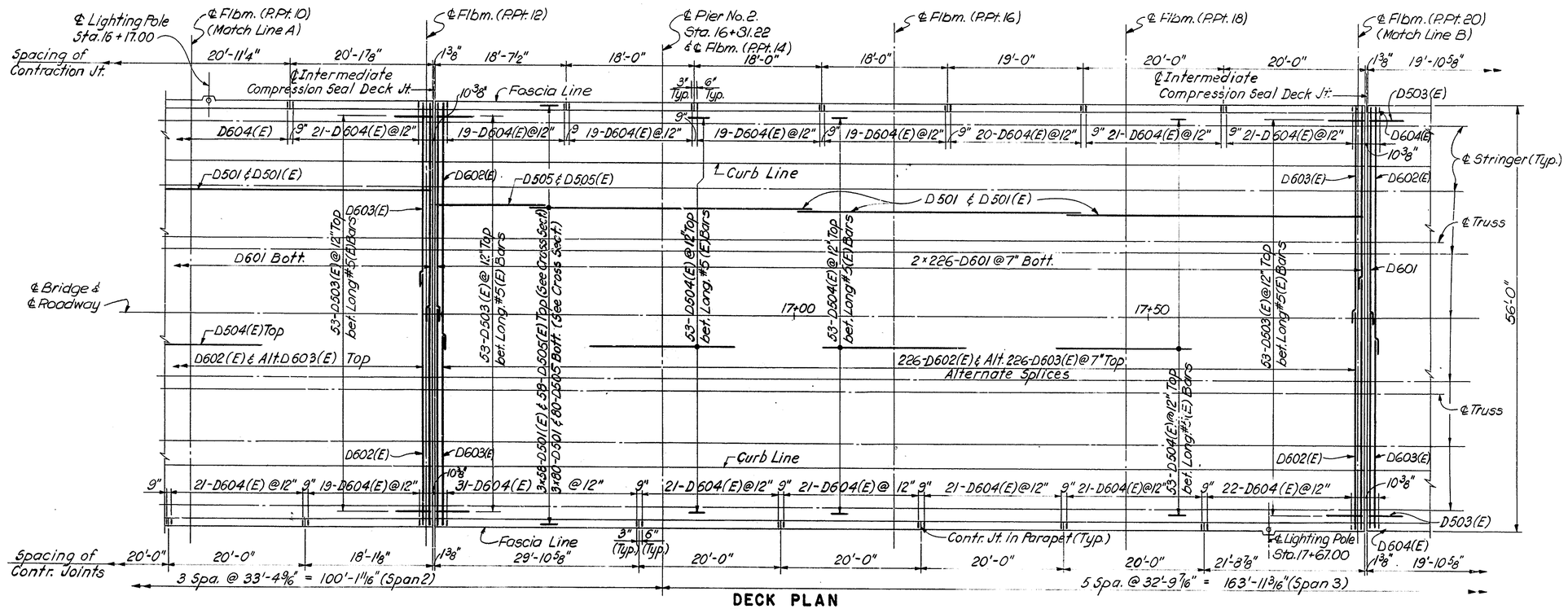

DECK PLAN

Work this Dwg with sheet No. 72

DELAWARE
DEPARTMENT OF TRANSPORTATION
DIVISION OF HIGHWAYS

DECK REINFORCING STEEL PLACEMENT PLANS SPANS 1,2 & 3

D. T. C.	SCALE 1/8" = 1'-0"	APPROVED BY

ROBERT G. McDOWELL REGISTERED NO. 3069 PROFESSIONAL ENGINEER

COUNTY	CONTRACT	P.R.A. REG. NO.	STATE	FED. AID PROJECT NO.	SHEET NO.	TOTAL SHEETS
NEW CASTLE	79-071-02	2	DEL.	M 1191 (1)	74	112.

AUGUSTINE BRIDGE RECONSTRUCTION

NO.	REVISIONS	BY	DATE

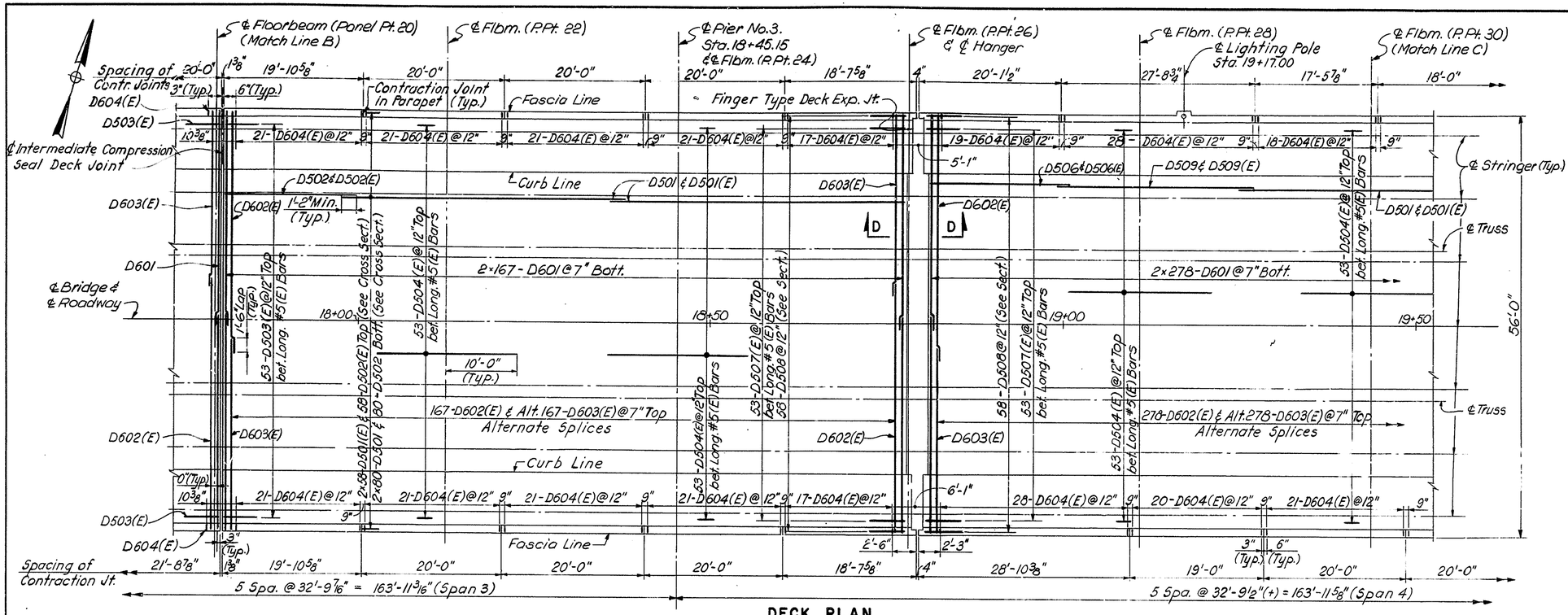

DECK PLAN

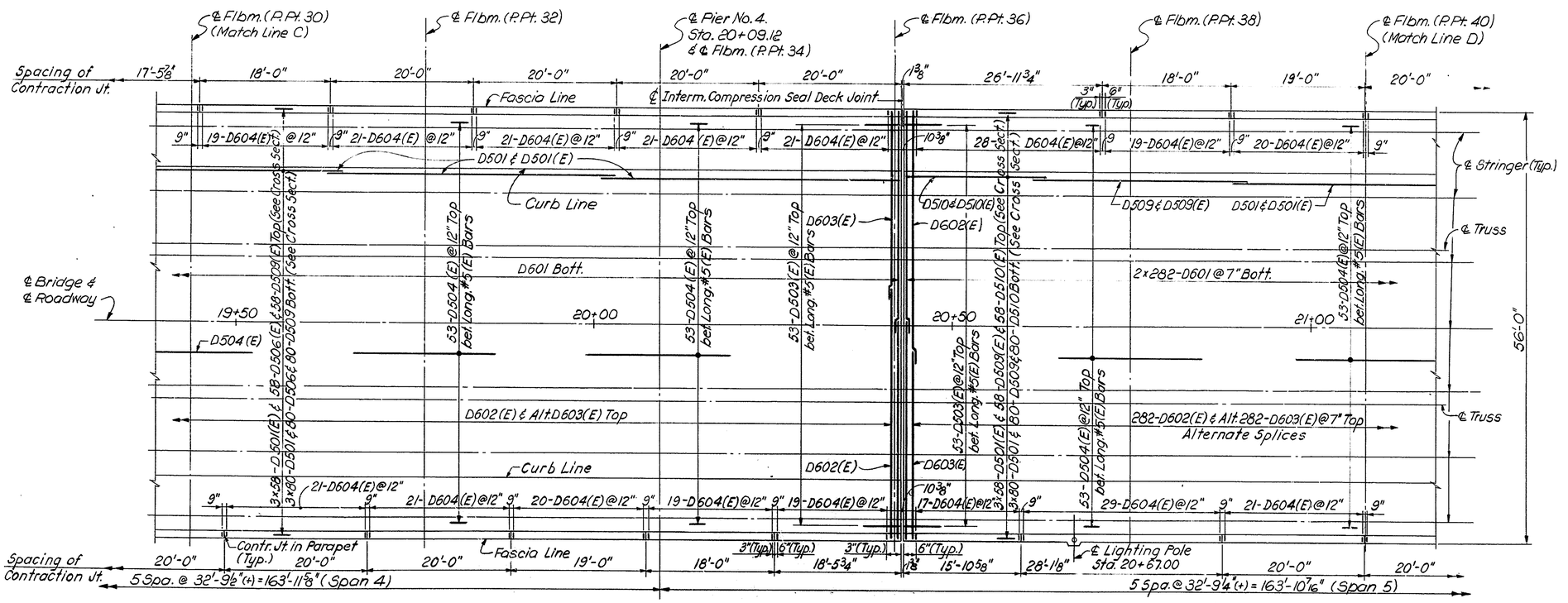

DECK PLAN

Work this Dwg. with sheet No. 72

DELAWARE
DEPARTMENT OF TRANSPORTATION
DIVISION OF HIGHWAYS

DECK REINFORCING STEEL PLACEMENT PLANS SPANS 3,4 & 5

D. T. C.	SCALE 1/8" = 1'-0"	APPROVED BY:

ROBERT C. McDONNELL REGISTERED NO. 3069 DELAWARE PROFESSIONAL ENGINEER

COUNTY	CONTRACT	F.A.P. REG. NO.	STATE	FED. AID PROJECT NO.	SHEET NO.	TOTAL SHEETS
NEW CASTLE	79-071-02	2	DEL.	M 1191 (1)	75	112

AUGUSTINE BRIDGE RECONSTRUCTION

NO.	REVISIONS	BY	DATE

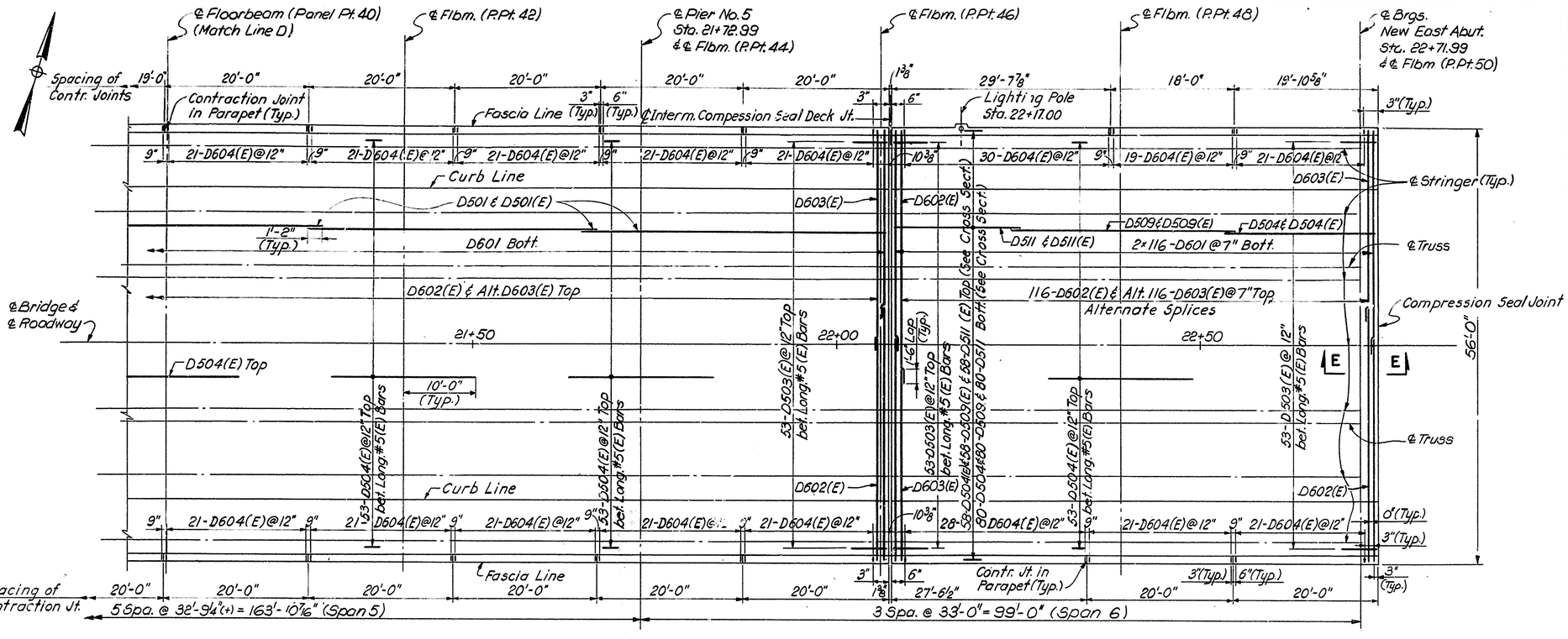

DECK PLAN

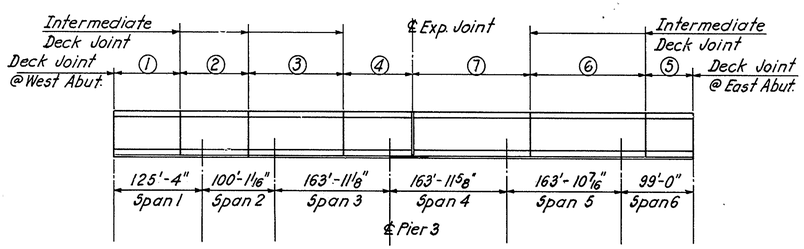

DECK POURING SEQUENCE

Scale: 1"=100'

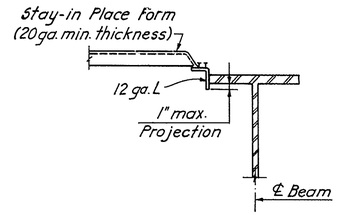

STAY-IN PLACE FORM CONNECTION DETAIL

No Scale

Work this Dwg with sheet No. 72

DELAWARE
DEPARTMENT OF TRANSPORTATION
DIVISION OF HIGHWAYS

DECK REINFORCING STEEL PLACEMENT PLANS SPANS 5&6

D. T. C.	SCALE 1/8"=1'-0"	APPROVED BY: —

ROBERT C. McDOWELL REGISTERED NO. 3069 DELAWARE STRUCTURAL ENGINEER

COUNTY	CONTRACT	P.R.A. REG. NO.	STATE	FED. AID PROJECT NO.	SHEET NO.	TOTAL SHEETS
NEW CASTLE	79-071-02	2	DEL	M-1191(1)	76	112

AUGUSTINE BRIDGE RECONSTRUCTION

NO.	REVISIONS	BY	DATE
1	CONTRACTION JOINT	C.H.	12/12/79
2	Type "B" Junction Box	N.T.	8/11/80

1 All Contraction Joints Shall Be Chamfered 3/4" x 3/4".

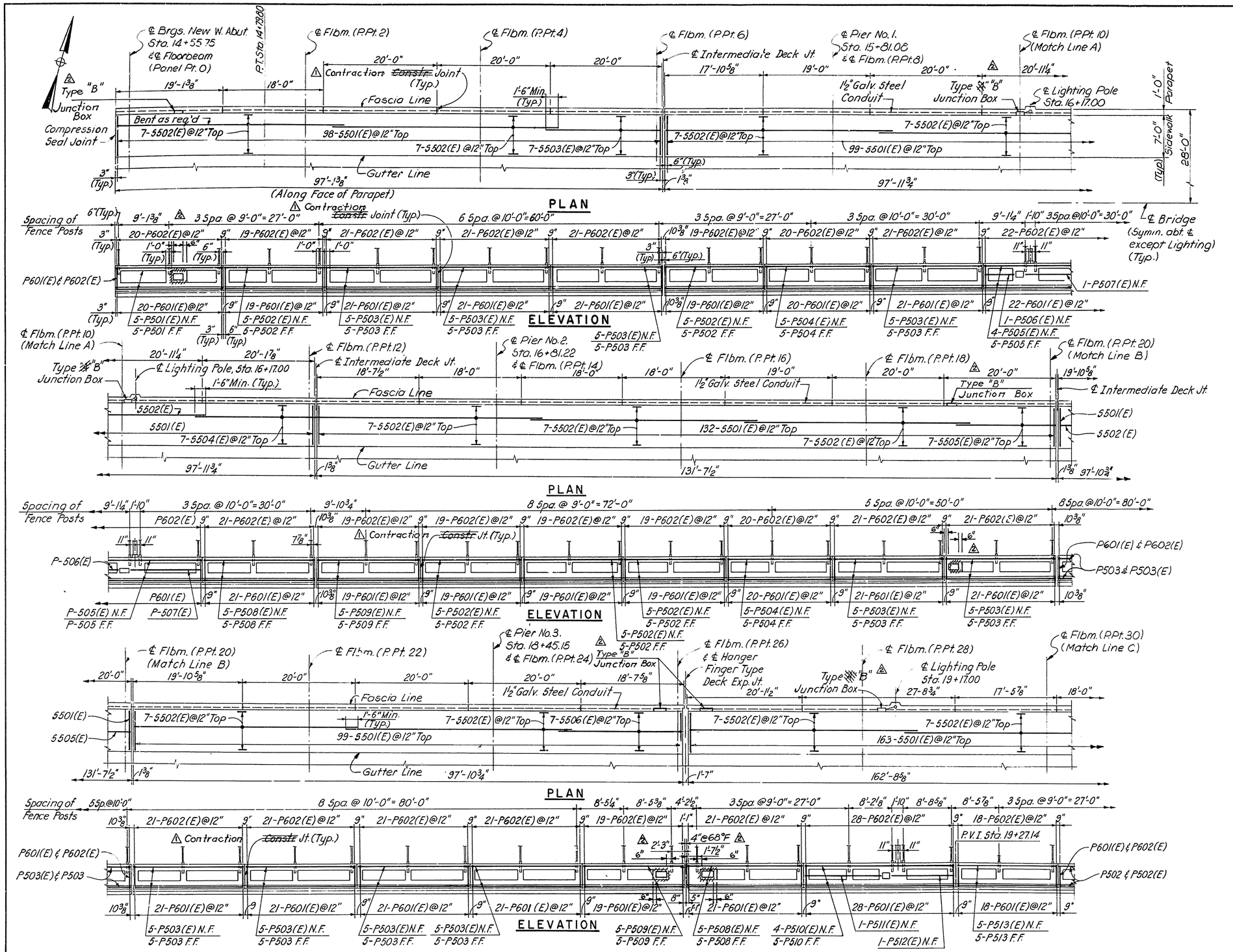

Work this Dwg. with sheet No. 72

DELAWARE
DEPARTMENT OF TRANSPORTATION
DIVISION OF HIGHWAYS

NORTH SIDEWALK AND PARAPET REINFORCING STEEL PLACEMENT PLANS

D.T.C.	SCALE 1/8" = 1'-0"	APPROVED BY: [signature] PROFESSIONAL ENGINEER

COUNTY	CONTRACT	P & A REG. NO	STATE	FED. AID PROJECT NO.	SHEET NO.	TOTAL SHEETS
NEW CASTLE	79-071-02	2	DEL.	M-1191(1)	77	112

AUGUSTINE BRIDGE RECONSTRUCTION

NO.	REVISIONS	BY	DATE
1	CONTRACTION JOINT	C.H.	12/12/79
2	Type "B" Junction Box	N.T.	8/11/80
3	1½" Galvz. Steel Cond. (N. Side only)	N.T	8/21/80

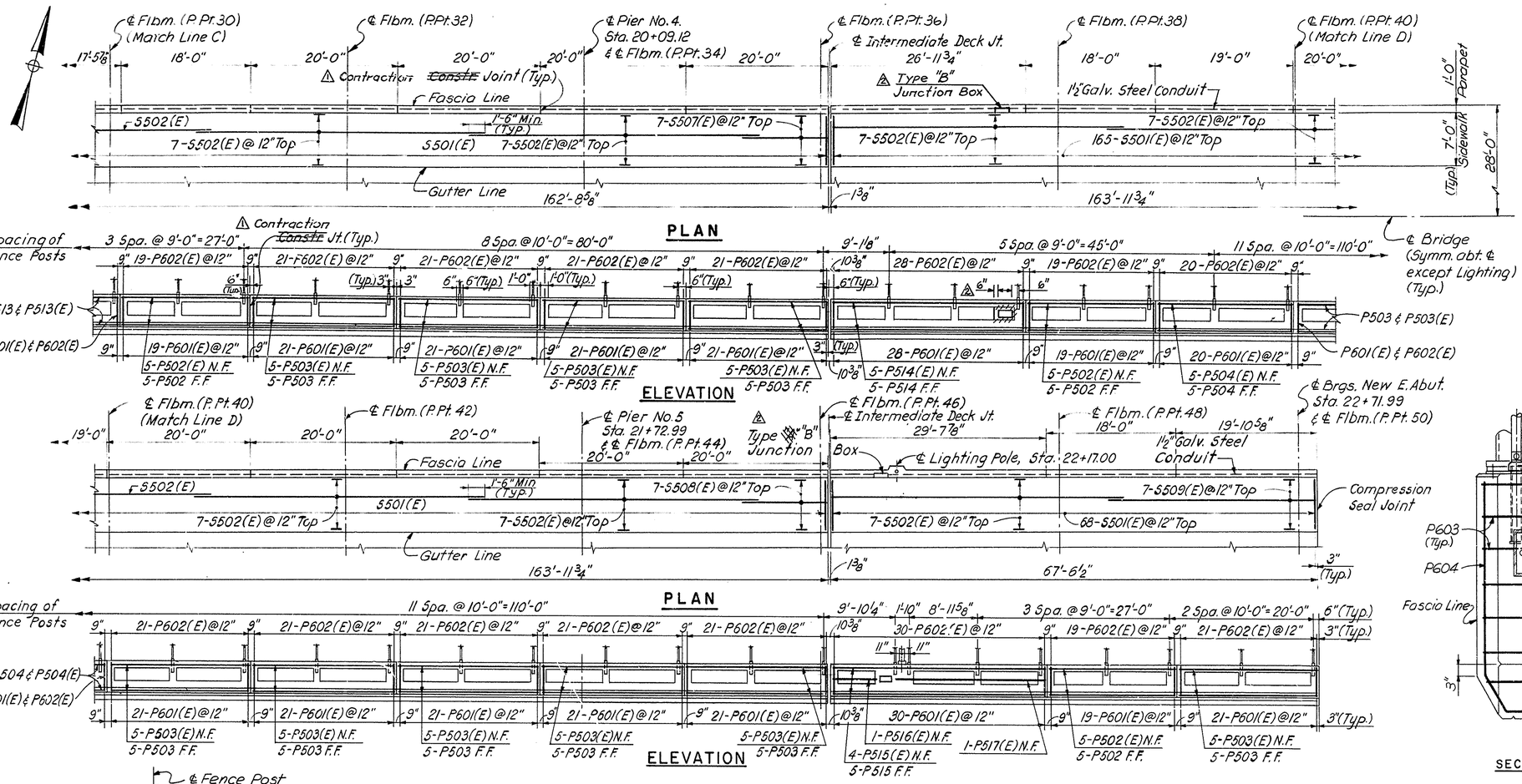

⚠ All Contraction Joints Shall Be Chamfered ¾" x ¾".

Work this Dwg. with sheet No. 72

DELAWARE
DEPARTMENT OF TRANSPORTATION
DIVISION OF HIGHWAYS

NORTH SIDEWALK AND PARAPET REINFORCING STEEL PLACEMENT PLANS AND DETAILS

D.	SCALE	APPROVED & REGISTERED
T.	1/8" = 1'-0" & As shown	ROBERT C. McDONALD No. 3069 STATE OF DELAWARE PROFESSIONAL ENGINEER
C.		BRIDGE ENGINEER

D C B A 1 5 10 A B C D

COUNTY	CONTRACT	P. & A. REG. NO.	STATE	FED. AID PROJECT	SHEET NO.	TOTAL SHEETS
NEW CASTLE	79-071-02	2	DEL.	M-1191(1)	78	112

AUGUSTINE BRIDGE RECONSTRUCTION

NO.	REVISIONS	BY	DATE
1	CONTRACTION JOINT	C.H.	12/12/79
2	Type "B" Junction Box	N.T.	8/11/80
3	1½" Galv. Steel Conduit	N.T.	8/21/80

1 All Contraction Joints Shall Be Chamfered ¾" x ¾".

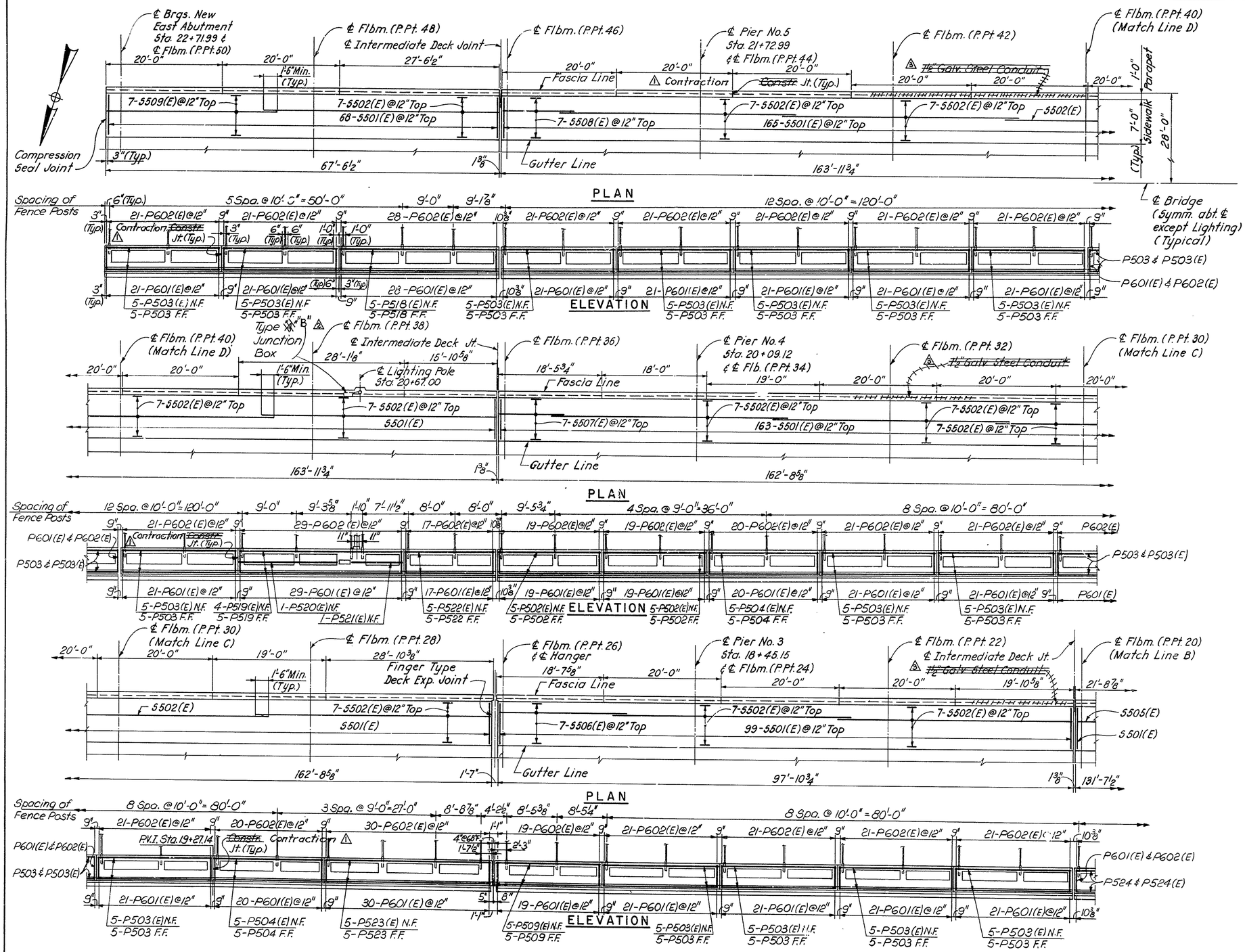

Work this Dwg. with sheet No. 72

DELAWARE
DEPARTMENT OF TRANSPORTATION
DIVISION OF HIGHWAYS

SOUTH SIDEWALK AND PARAPET REINFORCING STEEL PLACEMENT PLANS

D. T. C.	SCALE 1/8" = 1'-0"	APPROVED

ROBERT C. McDOWELL REGISTERED No. 3069 DELAWARE BRIDGE ENGINEER

COUNTY	CONTRACT	P. R. A. REG. NO.	STATE	FED. AID PROJECT NO.	SHEET NO.	TOTAL SHEETS
NEW CASTLE	79-071-02	2	DEL.	M-1191(1)	79	112

AUGUSTINE BRIDGE RECONSTRUCTION

NO.	REVISIONS	BY	DATE
1	CONTRACTION JOINT	C.H.	12/12/79
2	DIMENSION CORRECTED	C.H.	3/6/80
3	Type "B" Junction Box	N.T.	8/11/80
4	1½" Galv. Steel Conduit	N.T.	8/21/80

1 All Contraction Joints Shall Be Chamfered ¾" x ¾".

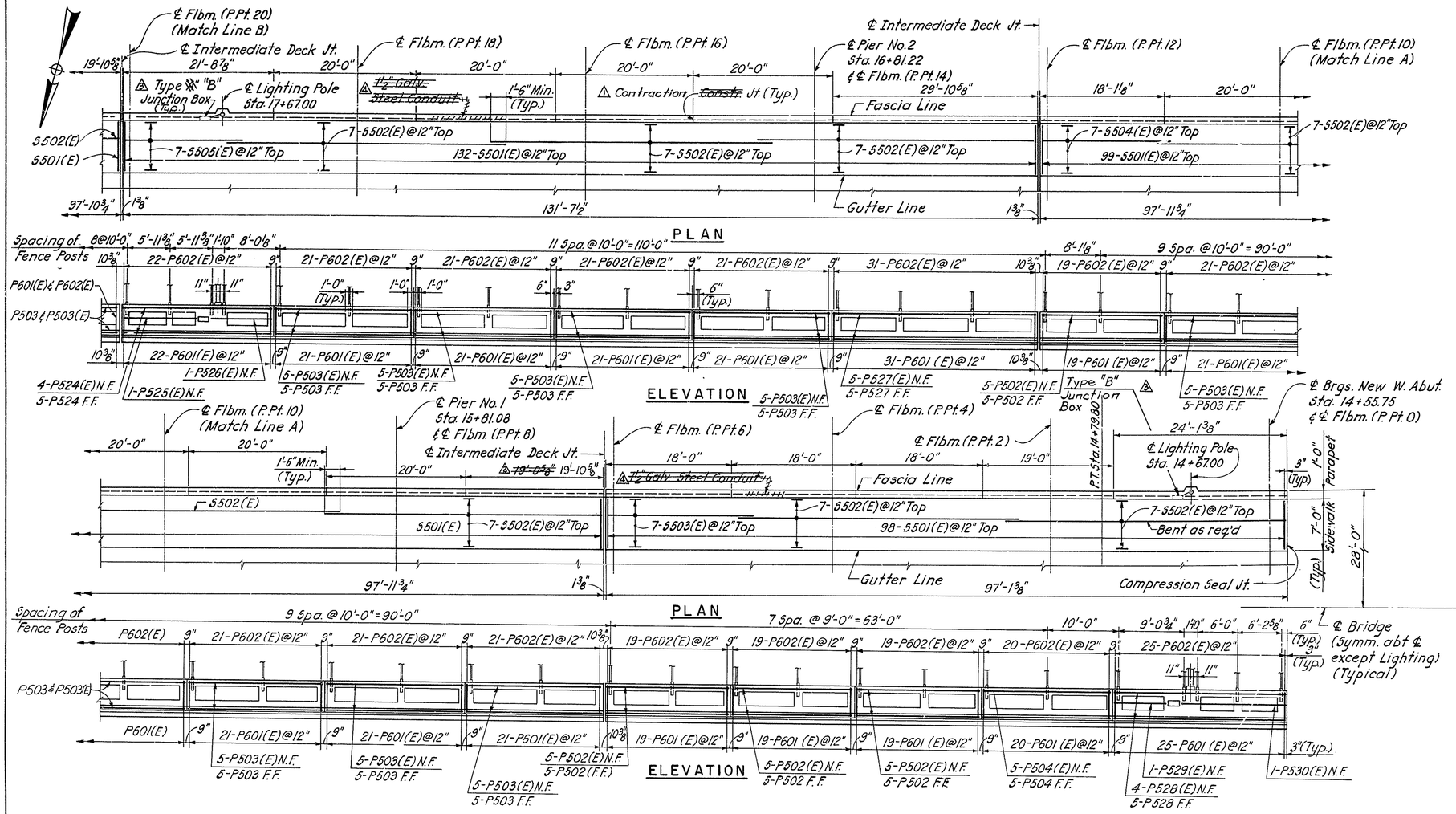

Work this Dwg. with sheet No. 72

DELAWARE
DEPARTMENT OF TRANSPORTATION
DIVISION OF HIGHWAYS

SOUTH SIDEWALK AND PARAPET REINFORCING STEEL PLACEMENT PLANS

D. T. C.	SCALE 1⅛" = 1'-0"	APPROVED BY H. L. Mitchell BRIDGE ENGINEER

COUNTY	CONTRACT	P.R.J. REG. NO	STATE	FED. AID PROJECT NO.	SHEET NO.	TOTAL SHEETS
NEW CASTLE	79-071-02	2	DEL.	M-1191(1)	80	112

AUGUSTINE BRIDGE RECONSTRUCTION

NO.	REVISIONS	BY	DATE

BAR SCHEDULE

DECK SLAB

MARK	TYPE	NO. REQ'D	LENGTH	DIMENSIONS A	B	C	D		WEIGHT EPOXY COATED	WEIGHT UNCOATED
D601	Str.	2810	28-8							120,991
D602(E)	4	1405	33-6	32-10	0-8	0-6			70,695	
D603(E)	4	1405	25-1	24-5	0-8	0-6			52,934	
D604(E)	1	1708	5-11	2-1	0-9	2-4	0-9		15,179	
						Sub	Total	#6	138,808	120,991
D501	Str.	1280	40-0							53,402
D501(E)	Str.	328	40-0						38,716	
D502	Str.	160	19-2							3,199
D502(E)	Str.	116	19-2						2,319	
D503(E)	2	636	5-5	5-0	0-5				3,593	
D504	Str.	80	20-0							1,669
D504(E)	Str.	1012	20-0						21,110	
D505	Str.	80	14-10							1,238
D505(E)	Str.	58	14-10						897	
D506	Str.	80	16-4							1,363
D506(E)	Str.	58	16-4						988	
D507(E)	2	106	6-1	5-0	1-1				673	
D508	3	106	3-0	0-10	2-2					332
D509	Str.	240	30-0							7,510
D509(E)	Str.	174	30-0						5,444	
D510	Str.	80	18-4							1,530
D510(E)	Str.	58	18-4						1,109	
D511	Str.	80	19-7							1,634
D511(E)	Str.	58	19-7						1,185	
						Sub	Total	#5	76,034	71,877
					Deck	Slab	Grand	Total	214,842	192,868

DECK PARAPETS

MARK	TYPE	NO. REQ'D	LENGTH	DIMENSIONS A	B	C	D		WEIGHT EPOXY COATED	WEIGHT UNCOATED
P601(E)	1	1716	6-2	4-0	0-9	0-8	0-9		15,894	
P602(E)	Str.	1716	3-6						9,021	
P603	5	42	3-7	1-3	1-2					226
P604	6	12	7-0	4-1½	1-0	1-10½				126
						Sub	Total	#6	24,915	352
P501	Str.	5	18-11							99
P501(E)	Str.	5	18-11						99	
P502	Str.	70	17-9							1,296
P502(E)	Str.	70	17-9						1,296	
P503	Str.	215	19-9							4,429
P503(E)	Str.	215	19-9						4,429	
P504	Str.	30	18-9							587
P504(E)	Str.	30	18-9						587	
P505	Str.	5	20-9							108
P505(E)	Str.	4	20-9						89	
P506(E)	Str.	1	6-6						7	
P507(E)	Str.	1	12-6						13	
P508	Str.	10	19-11							208
P508(E)	Str.	10	19-11						208	
P509	Str.	15	18-5							288
P509(E)	Str.	15	18-5						288	
P510	Str.	5	27-6							143
P510(E)	Str.	4	27-6						115	
P511(E)	Str.	1	14-7						15	
P512(E)	Str.	1	11-2						12	
P513	Str.	5	16-10							88
P513(E)	Str.	5	16-10						88	
P514	Str.	5	26-9							140
P514(E)	Str.	5	26-9						140	
P515	Str.	5	29-5							153
P515(E)	Str.	4	29-5						123	
P516(E)	Str.	1	7-2						7	
P517(E)	Str.	1	20-5						21	
P518	Str.	5	27-3							142
P518(E)	Str.	5	27-3						142	
P519	Str.	5	27-10							145
P519(E)	Str.	4	27-10						116	
P520(E)	Str.	1	16-9						17	
P521(E)	Str.	1	9-4						10	
P522	Str.	5	15-7							81
P522(E)	Str.	5	15-7						81	
P523	Str.	5	28-8							149
P523(E)	Str.	5	28-8						149	
P524	Str.	5	21-6							112
P524(E)	Str.	4	21-6						90	
P525(E)	Str.	1	10-3						11	
P526(E)	Str.	1	9-5						10	
P527	Str.	5	29-7							154
P527(E)	Str.	5	29-7						154	
P528	Str.	5	23-11							125
P528(E)	Str.	4	23-11						100	
P529(E)	Str.	1	7-6						8	
P530(E)	Str.	1	14-8						15	
						Sub	Total	#5	8,440	8,447
					Deck	Parapet	Grand	Total	33,355	8,799

DECK SIDEWALKS

MARK	TYPE	NO. REQ'D	LENGTH	DIMENSIONS A	B	C	D		WEIGHT EPOXY COATED	WEIGHT UNCOATED
S501(E)	Str.	1648	6-8						11,459	
S502(E)	Str.	252	40-0						10,513	
S503(E)	Str.	14	20-0						292	
S504(E)	Str.	14	20-10						304	
S505(E)	Str.	14	16-0						234	
S506(E)	Str.	14	20-9						303	
S507(E)	Str.	14	8-9						128	
S508(E)	Str.	14	10-0						146	
S509(E)	Str.	14	29-0						423	
				Deck	Sidewalks	Grand	Total		23,802	

BAR BENDING DIAGRAM

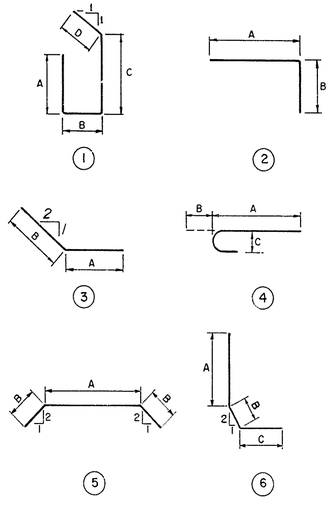

DELAWARE
DEPARTMENT OF TRANSPORTATION
DIVISION OF HIGHWAYS

DECK REINFORCING STEEL
BAR SCHEDULE

D T C.	SCALE None	APPROVED BY BRIDGE ENGINEER

ROBERT C. McDONALL — REGISTERED — PROFESSIONAL ENGINEER

COUNTY	CONTRACT	P. & A. REG. NO.	STATE	FED. AID PROJECT NO.	SHEET NO.	TOTAL SHEETS
NEW CASTLE	79-071-02	2	DEL.	M-1191(1)	81	112

AUGUSTINE BRIDGE RECONSTRUCTION

NO.	REVISIONS	BY	DATE

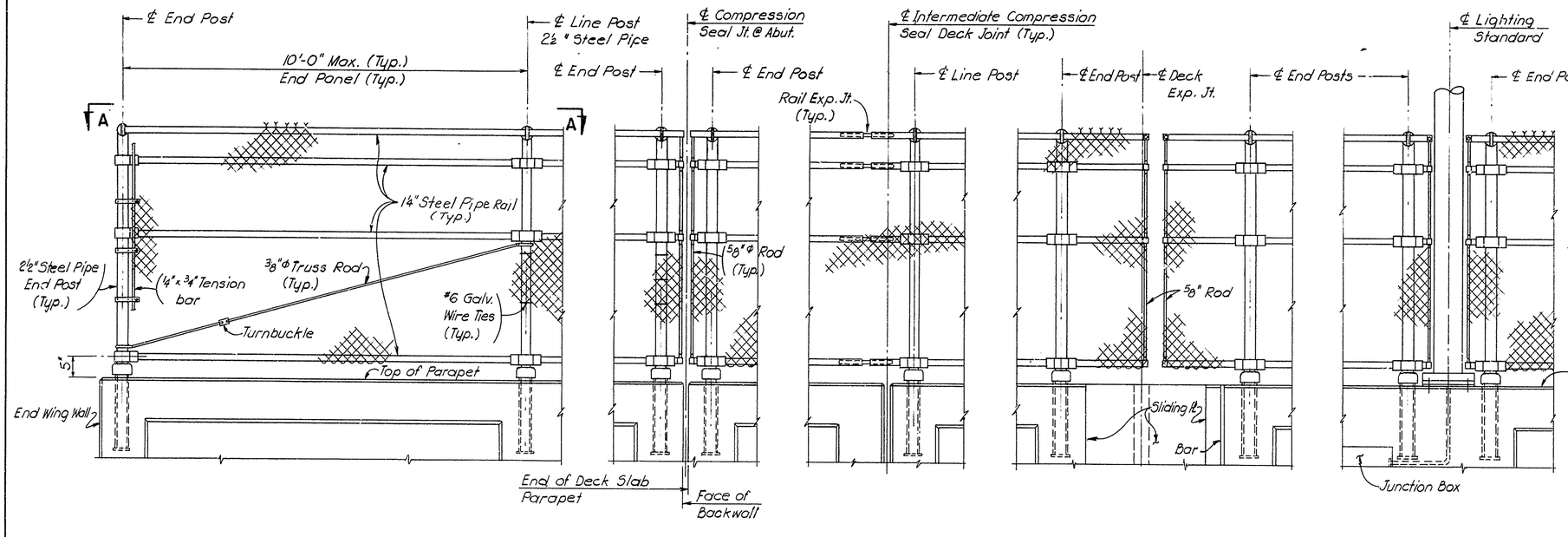

FENCE ELEVATION

Scale: ¾" = 1'-0"

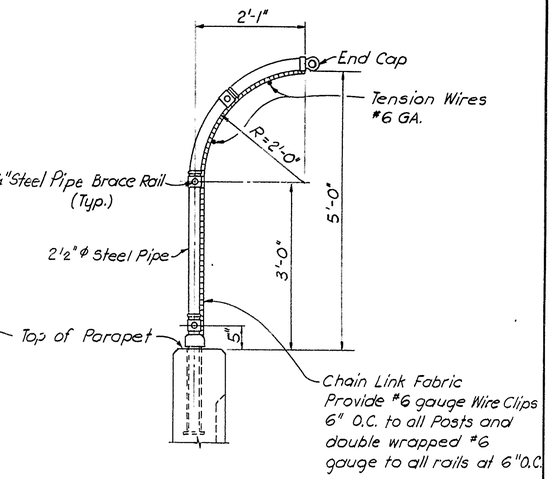

END VIEW

Scale: ¾" = 1'-0"

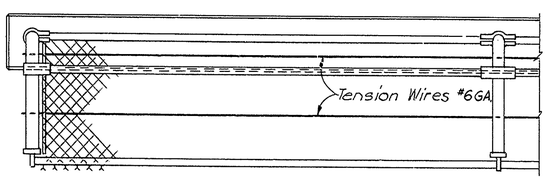

VIEW A-A

Scale: ¾" = 1'-0"

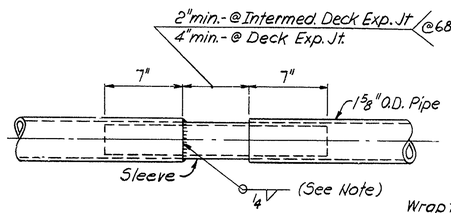

RAIL EXPANSION JOINT DETAIL

Not to Scale

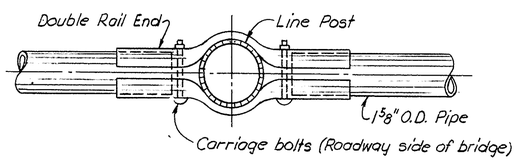

POST CONNECTION DETAIL

Not to Scale

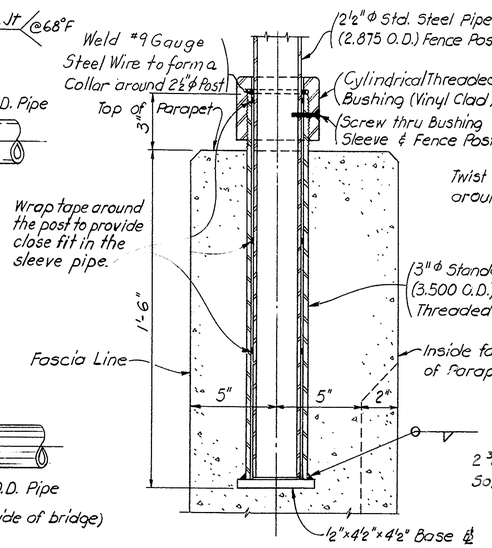

ANCHOR DETAIL

Scale: 3" = 1'-0"

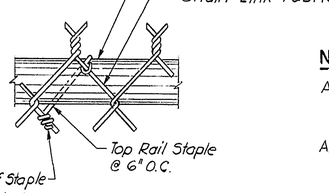

ATTACHMENT OF FABRIC TO TOP RAIL

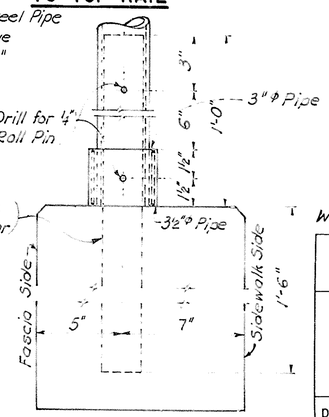

ANCHOR DETAIL

Scale: 3" = 1'-0"

NOTES

All materials shall be galvanized steel and vinyl clad in accordance with Special Provisions.
Area of Expansion Joint to be welded shall be galvanized and vinyl clad after welding.
Color of vinyl cladding shall be "Earth Brown" as specified.
All Posts at end of fence run shall be End Posts, all intermediate posts shall be Line Posts.

AS BUILT

Work this Dwg. with Sheets No. 72-79

DELAWARE
DEPARTMENT OF TRANSPORTATION
DIVISION OF HIGHWAYS

BRIDGE FENCE

D. T. C.	SCALE	APPROVED BY
	As shown	

ROBERT C. McDOWELL REGISTERED No. 3069 PROFESSIONAL ENGINEER

COUNTY	CONTRACT	P. B. A. REG. NO.	STATE	FED. AID PROJECT NO.	SHEET NO.	TOTAL SHEETS
NEW CASTLE	79-071-02	2	DEL.	M-1191(1)	81A	

AUGUSTINE BRIDGE RECONSTRUCTION

NO.	REVISIONS	BY	DATE

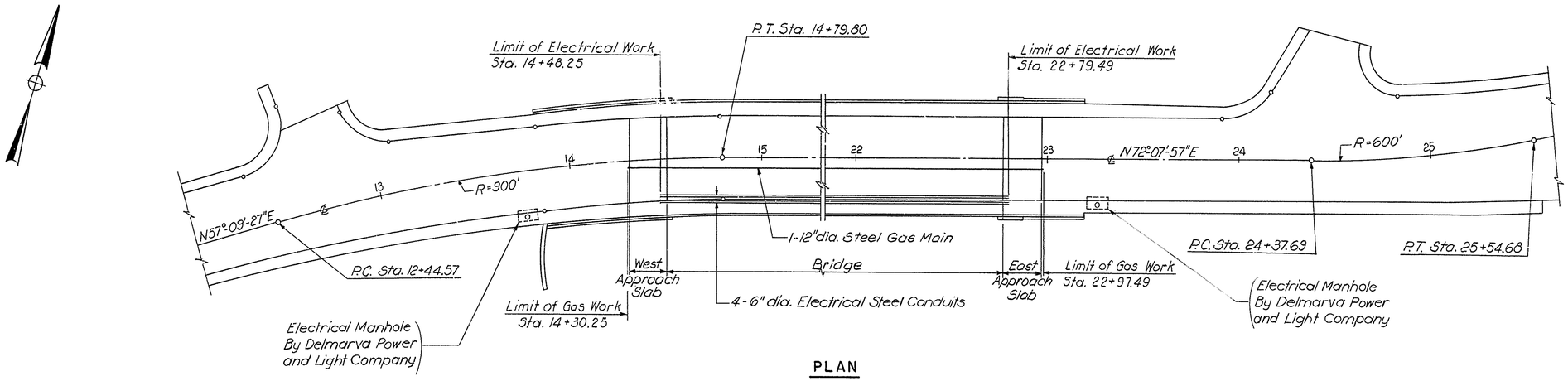

PLAN

ESTIMATE OF QUANTITIES

ITEMS FURNISHED BY DELMARVA POWER AND LIGHT COMPANY

ITEMS PERTAINING TO ELECTRICAL CONDUITS	UNIT	QUANTITY
6"dia. Electrical Steel Conduit	L.F.	3,325
Expansion Device for 6"dia. Elec. Conduit	Ea.	4
U-Bolt Assembly for 6"dia. Elec. Conduit	Ea.	208
10"dia. Std. Steel Pipe Sleeves x 5'-0"lg. w/flg. Ft. & Struts including Casing Bushings	Ea.	8
Pipe Spacers	Ea.	16

ITEMS PERTAINING TO GAS MAIN	UNIT	QUANTITY
12"dia. Steel Gas Main including elbows	L.F.	905
Expansion Device for 12"dia. Gas Main	Ea.	1
Roller Assembly for 12" Gas Main	Ea	50
U-Bolt Assembly for 12" Gas Main @ End Flbms.	Ea	2
U-Bolt Assembly for 12" Gas Main @ Jack. Bms.	Ea.	2
16"dia. Std. Steel Pipe Sleeves x 23'-0"lg. w/flg. Ft. & Studs including Casing Bushings	Ea.	2
Pipe Spacers	Ea.	6

NOTES:

Except as otherwise noted, the Delmarva Power and Light Company will supply all materials necessary for the installation of 4-6"dia. electrical steel conduits and the 12" dia. steel gas main.

The installation of 4-6"dia. electrical steel conduits and the 12"dia. steel gas main will be performed by the Contractor in accordance with the Plans & Special Provisions.

Work this sheet with sheets 81B & 81C

DELAWARE
DEPARTMENT OF TRANSPORTATION
DIVISION OF HIGHWAYS

UTILITY LIMITS ON
BRIDGE AND APPROACHES

D. T. C.	SCALE 1"=30'	APPROVED BY: BRIDGE ENGINEER

COUNTY	CONTRACT	P. R. A. REG. NO.	STATE	FED. AID PROJECT NO.	SHEET NO.	TOTAL SHEETS
NEW CASTLE	79-071-02	2	DEL.	M-1191(1)	81B	

AUGUSTINE BRIDGE RECONSTRUCTION

NO.	REVISIONS	BY	DATE

Note A: Opening in backwall to be closed after installation and alignment of Steel Sleeves for Electrical Conduits. Move reinforcement in way of Sleeves.

Note B: Opening in backwall to be closed after installation and alignment of Steel Sleeve for Gas Main. Move reinforcement in way of Sleeve

Note C: To be supplied by the Contractor.

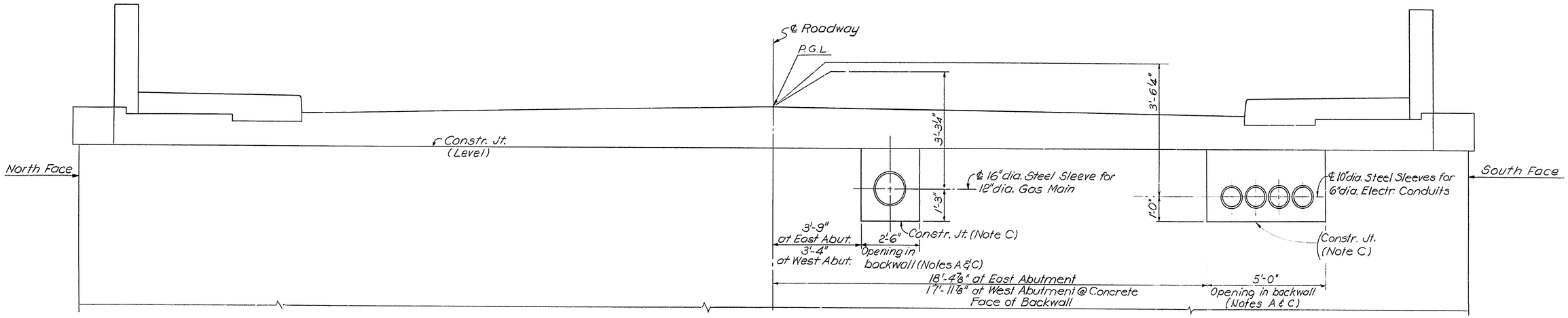

UTILITY SLEEVES IN EAST ABUTMENT
(WEST ABUTMENT OPPOSITE HAND)
Scale: 1/2"=1'-0"

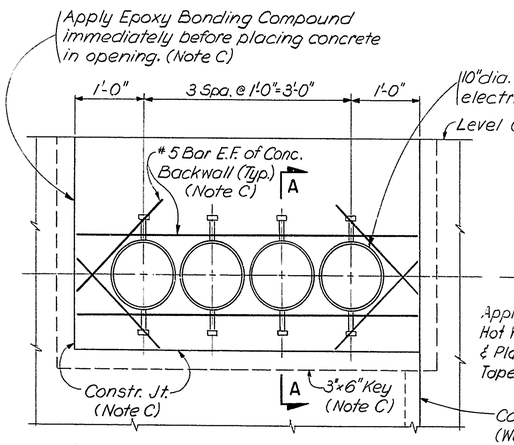

PIPE SLEEVES FOR 6"DIA. ELECTRICAL CONDUITS
Scale: 1"=1'-0"

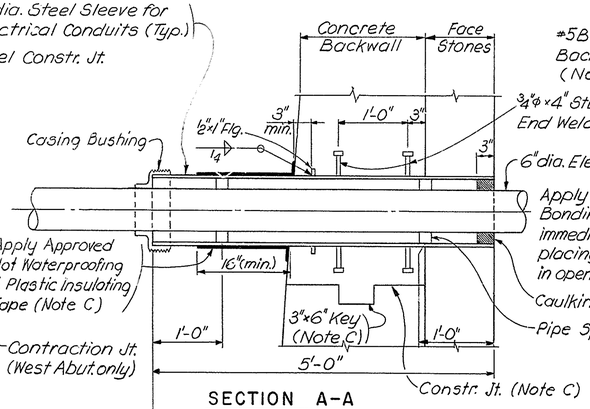

SECTION A-A
Scale: 1"=1'-0"

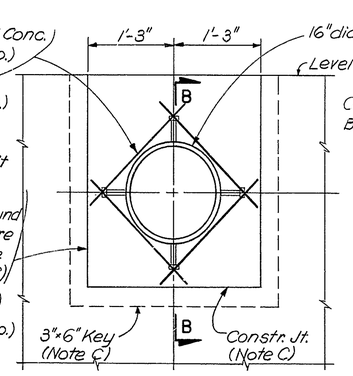

PIPE SLEEVE FOR 12"DIA. GAS MAIN
Scale: 1"=1'-0"

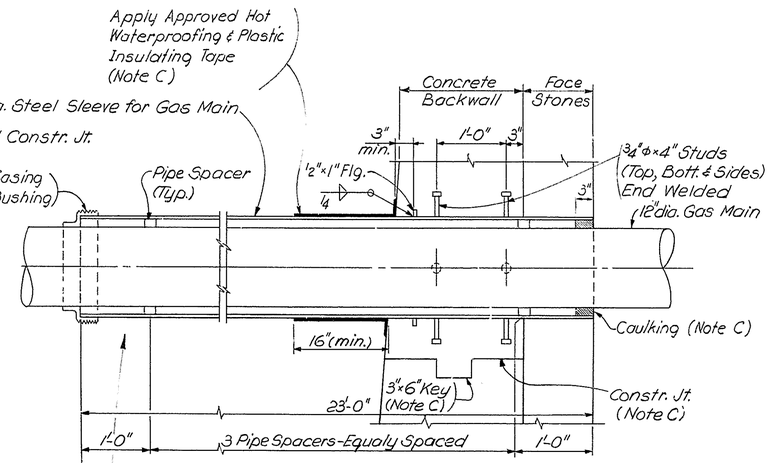

SECTION B-B
Scale: 1"=1'-0"

Electrical Conduits to be extended by Delmarva Power and Light Co. prior to placement of Approach Slab

Gas Main to be extended by Delmarva Power and Light Co.

Normal Trench Installation (Class C Bedding) Note C- See Special Provisions

Work this sheet with sheets 81A, 81C and Abutment drawings.

DELAWARE
DEPARTMENT OF TRANSPORTATION
DIVISION OF HIGHWAYS

SLEEVES IN ABUTMENT BACKWALLS FOR 6"DIA. ELECTRICAL CONDUITS & 12" DIA. GAS MAIN

D.	SCALE	APPROVED BY:
T.	As Noted	
C.		BRIDGE ENGINEER

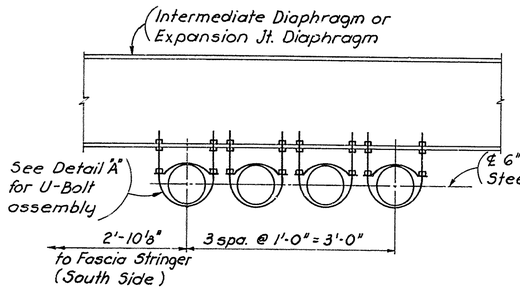

SUPPORTS FOR 6" DIA. CONDUITS AT DIAPHRAGMS

Scale: 1" = 1'-0"

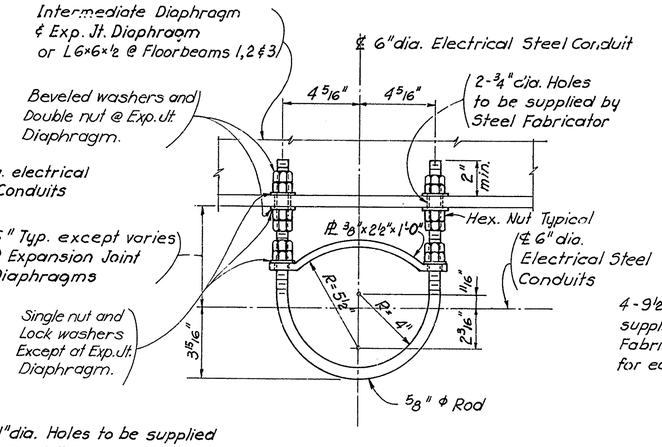

DETAIL "A"

Scale: 3" = 1'-0"

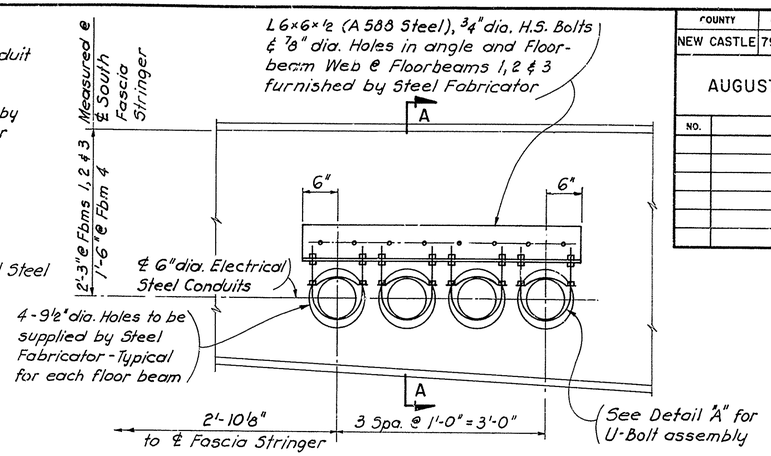

SUPPORTS FOR 6" DIA. CONDUITS AT FLOORBEAMS

Scale: 1" = 1'-0"

COUNTY	CONTRACT	P.R.A. REG. NO.	STATE	FED. AID PROJECT NO.	SHEET NO.	TOTAL SHEETS
NEW CASTLE	79-071-02	2	DEL.	M-1191(1)	81C	

AUGUSTINE BRIDGE RECONSTRUCTION

NO.	REVISIONS	BY	DATE

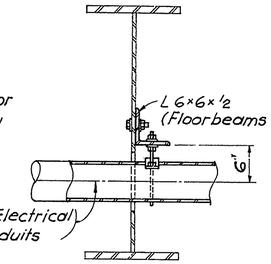

SECTION A-A

Scale: 1" = 1'-0"

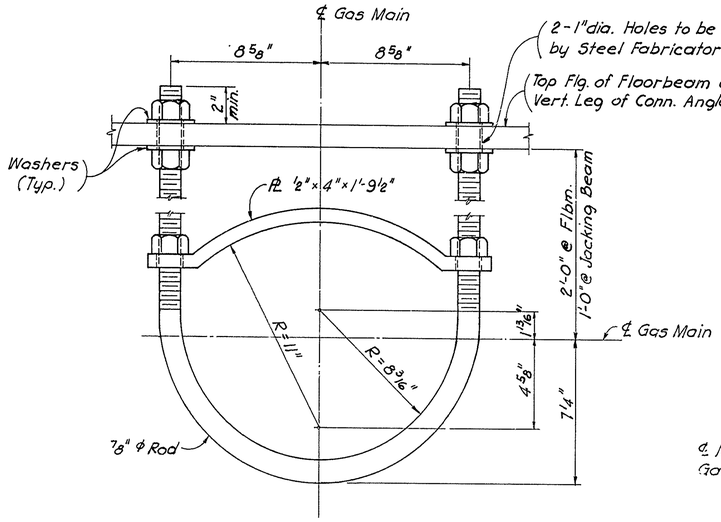

DETAIL "B"

Scale: 3" = 1'-0"

ELEVATION OF GAS MAIN @ ABUTMENTS

Scale: 1" = 1'-0"

DETAIL OF OPENING FOR GAS MAIN IN FLOORBEAM AT ABUTMENTS

Scale: 1" = 1'-0"

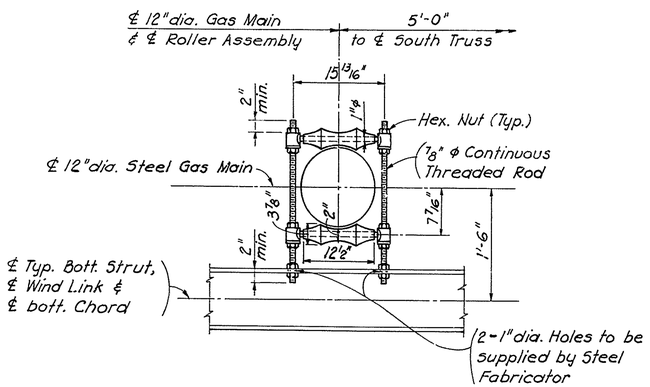

SUPPORT FOR 12" DIA. GAS MAIN AT BOTTOM STRUTS & WIND LINK

Scale 1" = 1'-0"

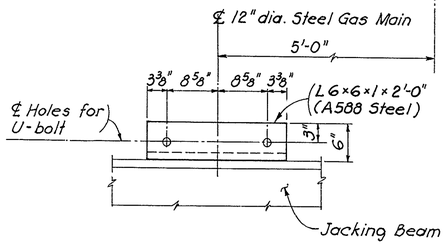

CONNECTION ANGLE AT JACKING BEAMS

Scale: 1" = 1'-0"

Work this sheet with sheets 81A & 81B.

DELAWARE
DEPARTMENT OF TRANSPORTATION
DIVISION OF HIGHWAYS

SUPPORT DETAILS FOR 6" DIA. ELECTRICAL CONDUITS & 12" DIA. GAS MAIN

D. T. C.	SCALE AS SHOWN	APPROVED BY: BRIDGE ENGINEER

COUNTY	CONTRACT	P.R.A. REG. NO.	STATE	FED. AID PROJECT NO.	SHEET NO.	TOTAL SHEETS
NEW CASTLE	79-071-02	2	DEL.	M-1191(1)	82	112

AUGUSTINE BRIDGE RECONSTRUCTION

PREL. TRACING _____ DESIGN _____ CHKD. _____

REVISIONS

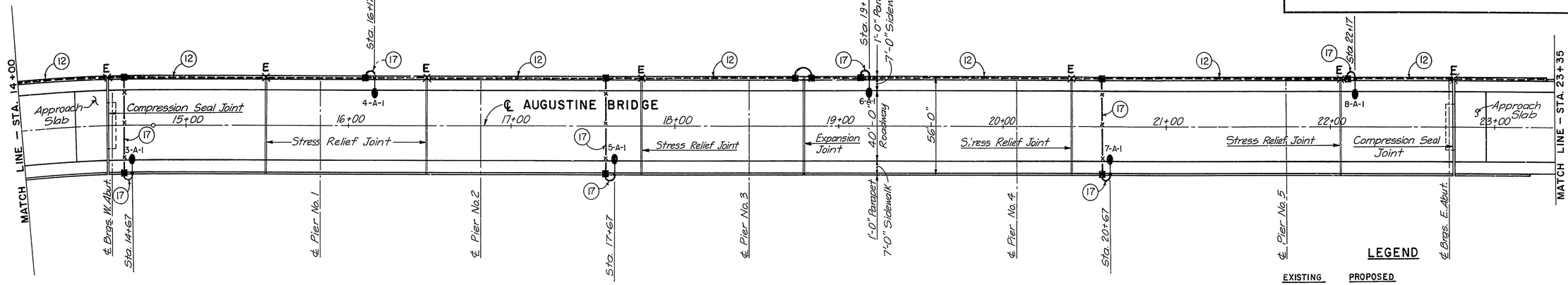

BRIDGE DECK

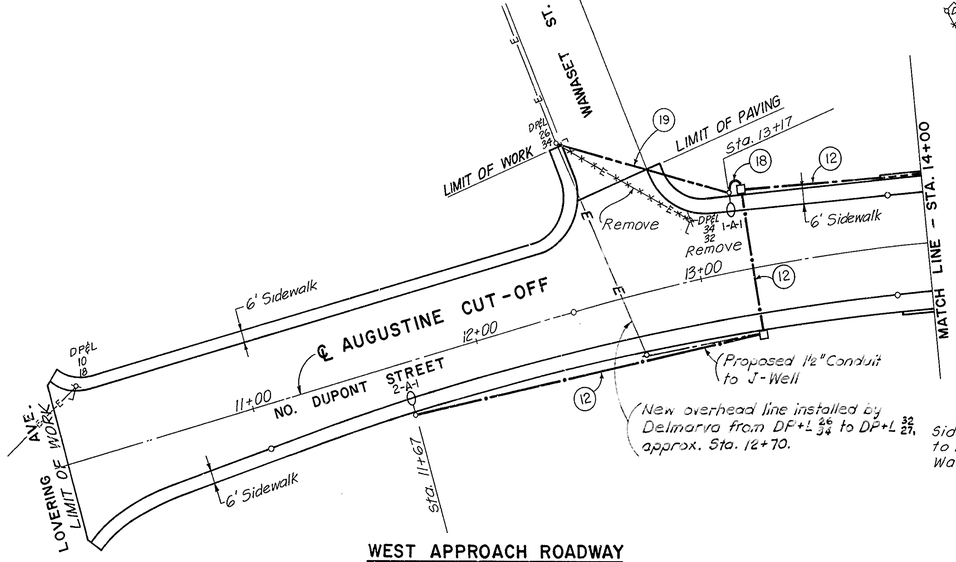

WEST APPROACH ROADWAY

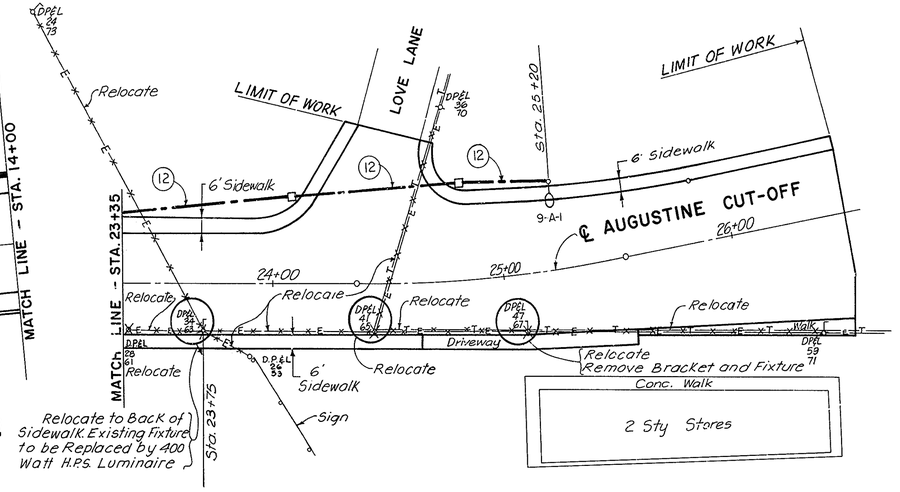

EAST APPROACH ROADWAY

NOTE

For Size & No. of Conduit & Cable (Indicated within circle ○) See Bill of Materials Sheet No. 86.

LEGEND

EXISTING	PROPOSED	
		Timber Light Pole
		Power Pole
		Light Pole To Be Removed/ Relocated By Others.
		Power Pole To Be Removed/ Relocated By Others.
	○	Type A Lighting Standard 35'-0" High with 400 Watt High Pressure Sodium Vapor Luminaire (Nominal 7'-6" Bracket Arm)
	●	Type B Lighting Standard 35'-0" High with 400 Watt High Pressure Sodium Vapor Luminaire (Nominal 7'-6" Bracket Arm)
	□	Junction Box in Earth (Type A)
	■	Junction Box in Parapet (Type B)
	—•—	Conduit in Earth
	- - - -	Conduit in Parapet
	—×—	Conduit in Bridge Roadway
—E—	- - E - -	Overhead Electric Cable
-×-E-×-		Overhead Electric Cable to Be Removed/Relocated by Others
	∩	Flexible Conduit Between Junction Boxes in Parapet
	--E--	Type DX Expansion Fitting
—T—		Overhead Telephone Cable
-×-T-×-		Overhead Telephone Cable To Be Removed/Relocated by Others.
4-A-1		First Digit Indicates Pole No., Upper Case Letter Indicates Control Center, Last Digit Indicates Circuit No.

LIGHTING PLAN

SCALE: 1" = 30'

AS BUILT

COUNTY	CONTRACT	P. E. A. REG. NO.	STATE	FED. AID PROJECT NO.	SHEET NO.	TOTAL SHEETS
NEW CASTLE	79-071-02	2	DEL.	M-1191 (1)	83	112

AUGUSTINE BRIDGE RECONSTRUCTION

PREL. TRACING _____ DESIGN _____ CHKD. _____

REVISIONS

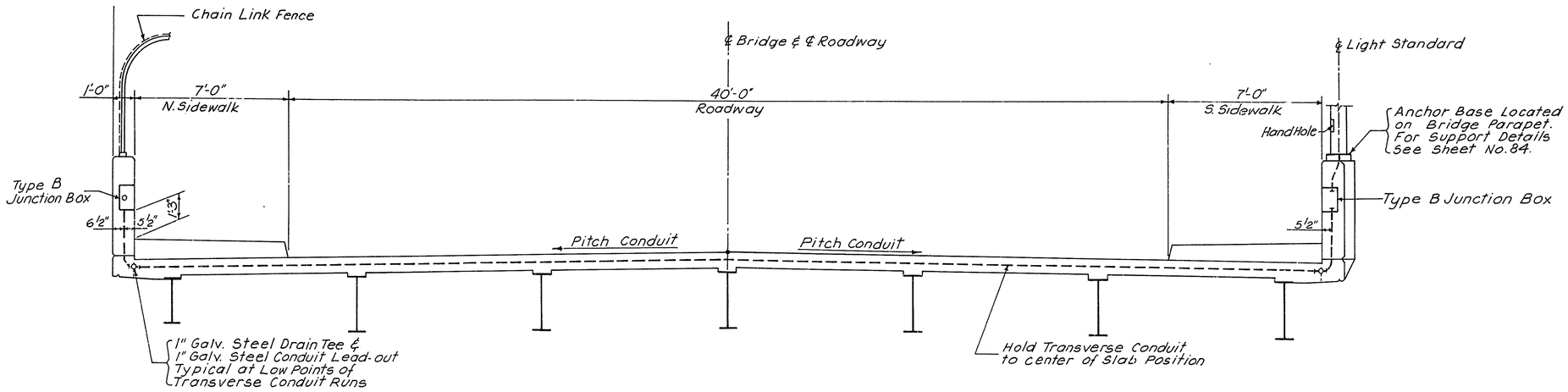

TYPICAL BRIDGE LIGHTING CROSS SECTION

Scale: 3/8" = 1'-0"

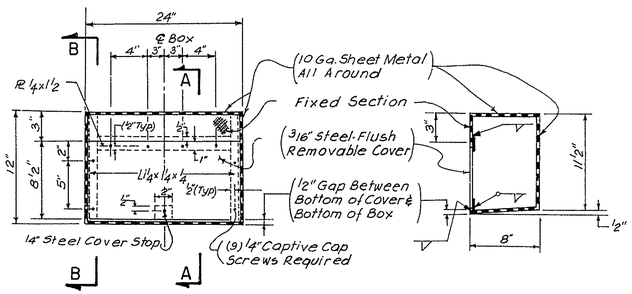

SECTION A-A

TYPE "B" JUNCTION BOX

FRONT ELEVATION

No Scale

NOTE: Provide Continuous Neoprene Gasket around Top and Sides.

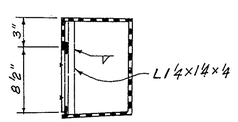

SECTION B-B

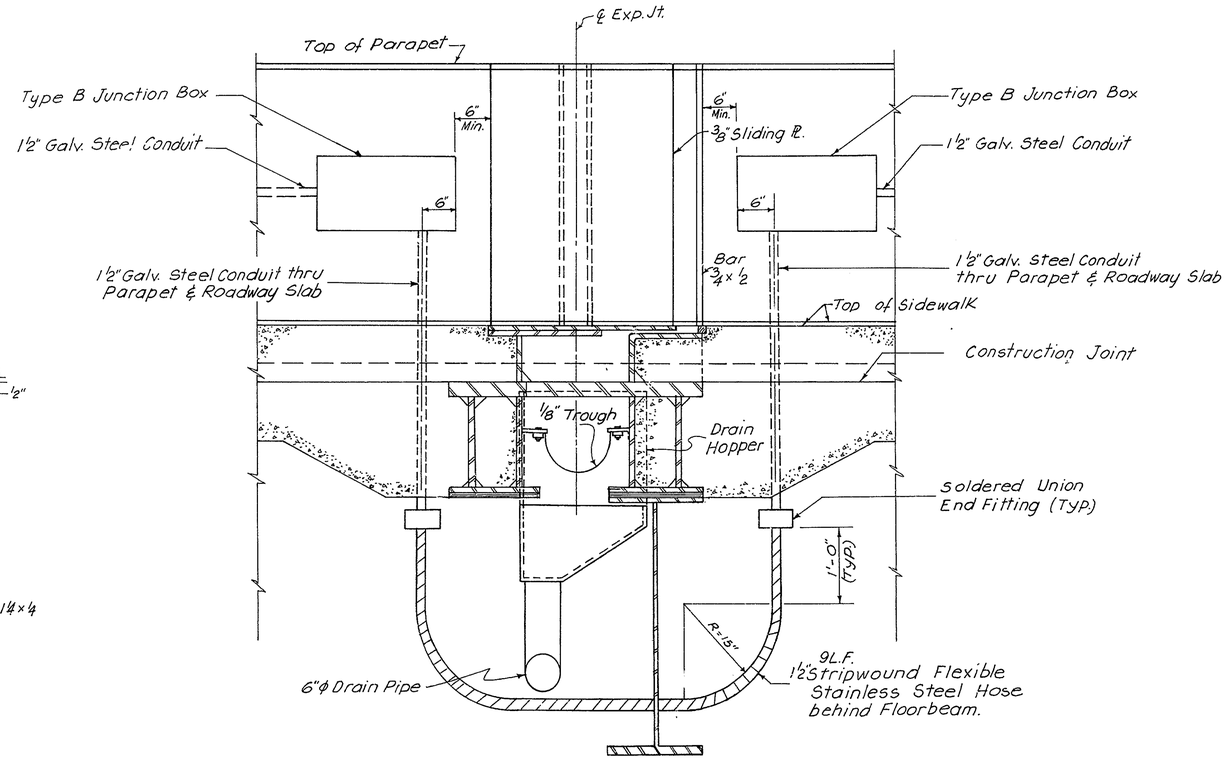

ELEVATION AT FACE OF PARAPET

EXP. JT. AT PANEL PT. 26

Scale: 1"=1'-0"

TYPICAL BRIDGE LIGHTING CROSS SECTION

DIETZGEN CO. 66208

COUNTY	CONTRACT	P.R.A. REG. No.	STATE	FED AID PROJECT NO.	SHEET NO.	TOTAL SHEETS
NEW CASTLE	79-071-02	2	DEL.	M-1191 (1)	84	112

AUGUSTINE BRIDGE RECONSTRUCTION

PREL. TRACING _____ DESIGN _____ CHKD. _____

REVISIONS

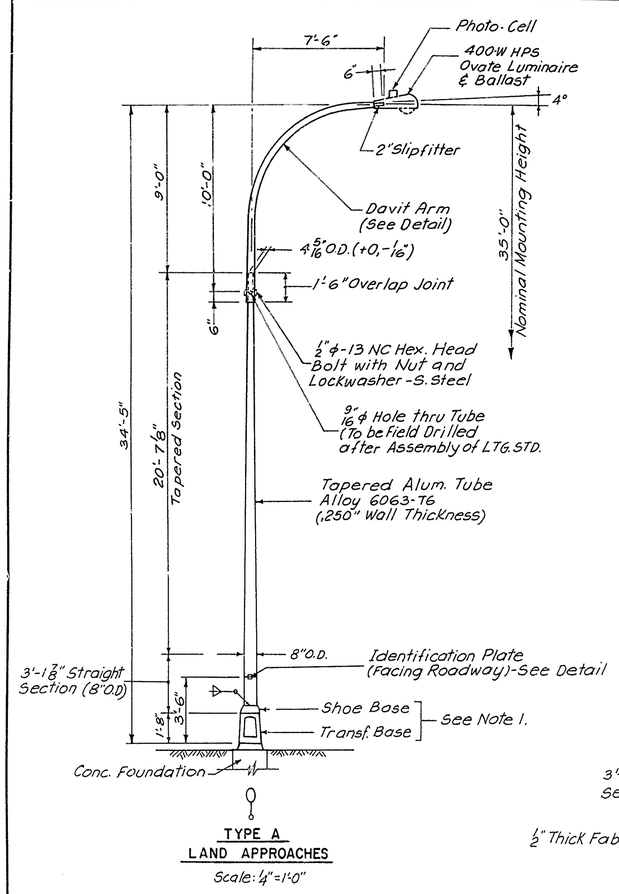

TYPE A
LAND APPROACHES
Scale: 1/4" = 1'-0"

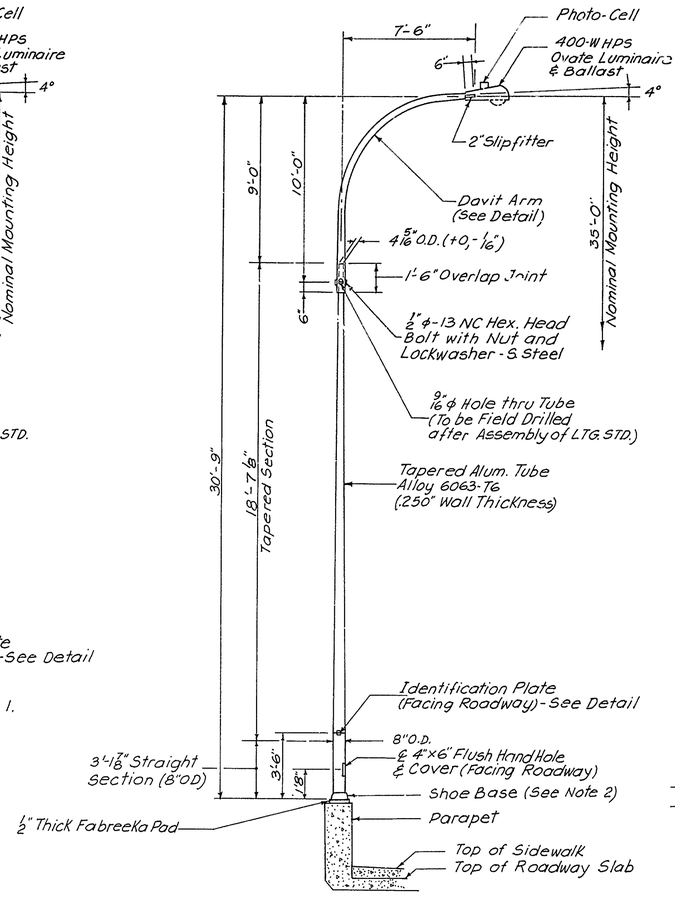

TYPE B
BRIDGE
Scale: 1/4" = 1'-0"

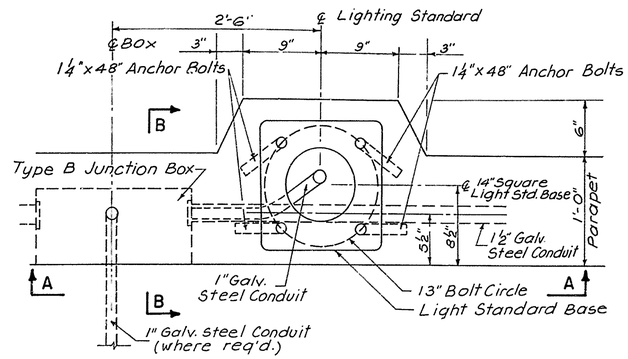

PLAN
Scale: 1 1/2" = 1'-0"

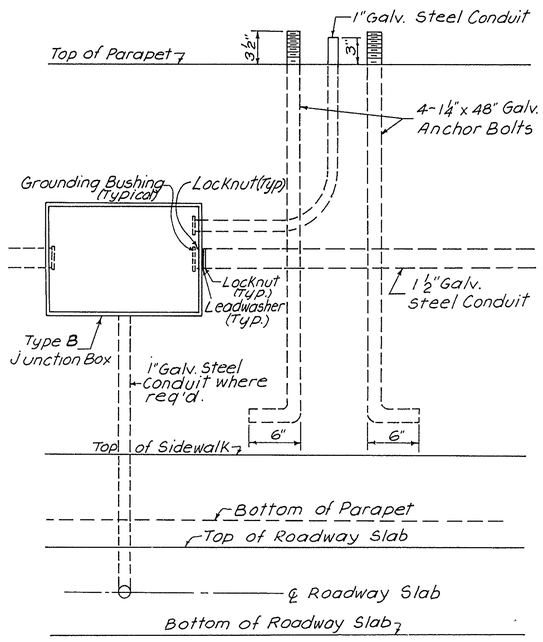

ELEVATION A-A
Scale: 1 1/2" = 1'-0"

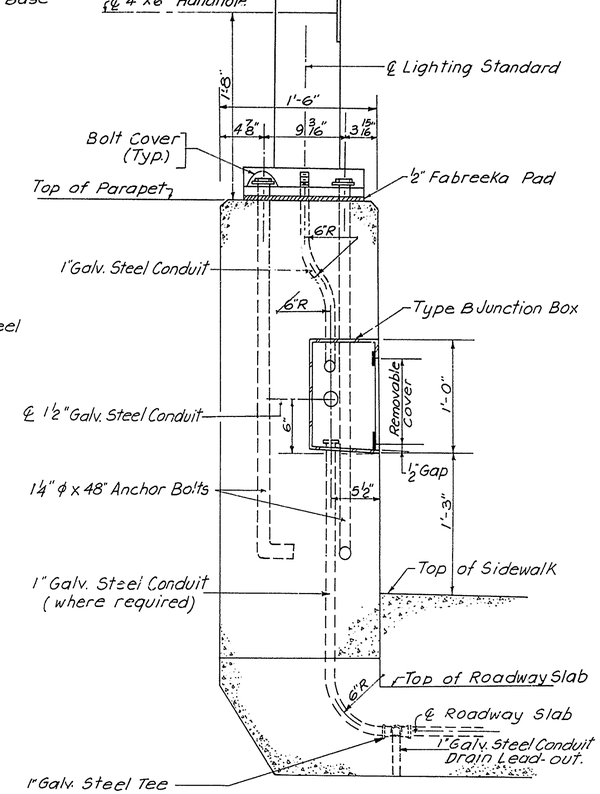

SECTION B-B
Scale: 1 1/2" = 1'-0"

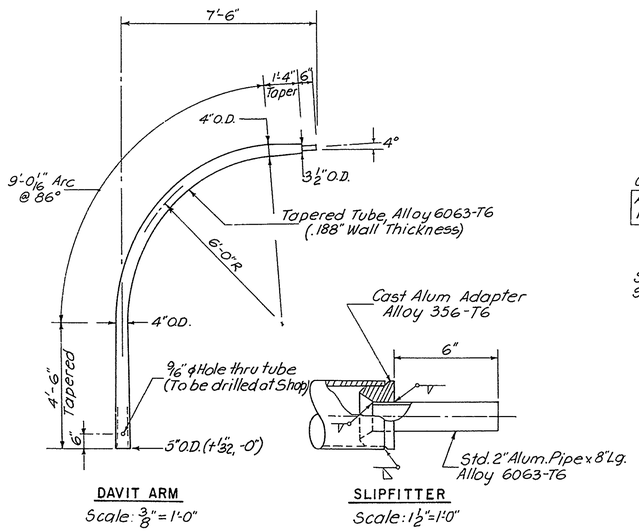

DAVIT ARM
Scale: 3/8" = 1'-0"

SLIPFITTER
Scale: 1 1/2" = 1'-0"

DAVIT ARM DETAILS

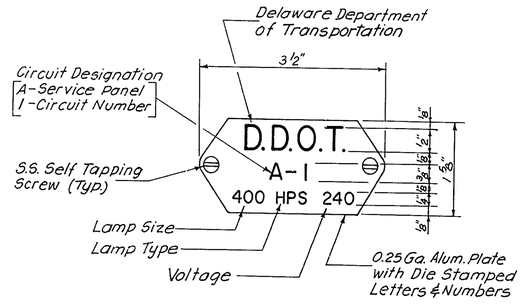

LIGHTING STANDARD IDENTIFICATION PLATE
No Scale

NOTES

The following descriptions shall apply to the Lighting Standard Components:

1. Type A Lighting Standard
   Shoe Base: Cast Alum Alloy, 356-T6 (Approx 11 5/16" Square, with 1" ϕ connection bolts on 11"-12" ϕ bolt circle.)
   Transformer Base: Cast Alum. Alloy, 356-T6 (Approx 11 3/4" Square on top and 15 1/2" Square on bottom with 15" ϕ bolt circle utilizing anchorage adapters for 1 1/4" ϕ anchor bolts on 13" ϕ bolt circle.)
2. Type B Lighting Standard
   Cast Alum. Alloy 356-T6 (Approx. 14" Square, with 1 1/4" ϕ anchor bolts on 13" bolt circle.)

LIGHTING STANDARD DETAILS

COUNTY	CONTRACT	P.R.A. REG. NO.	STATE	FED. AID PROJECT NO.	SHEET NO.	TOTAL SHEETS
NEW CASTLE	79-071-02	2	DEL.	M-1191(1)	85	112

AUGUSTINE BRIDGE RECONSTRUCTION

PREL. TRACING _____ DESIGN _____ CHKD. _____

REVISIONS

R1 Wiring details corrections AB 7/11/80

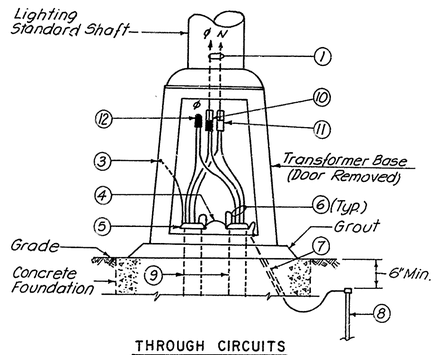

THROUGH CIRCUITS

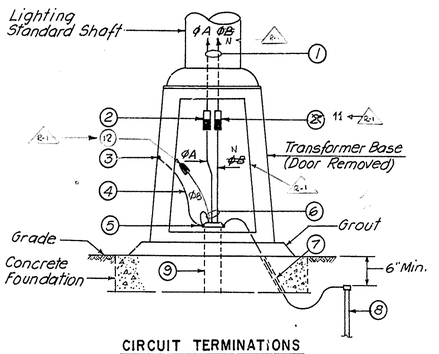

CIRCUIT TERMINATIONS

GROUND MOUNTED LIGHTING STANDARD WIRING DETAILS

No Scale.

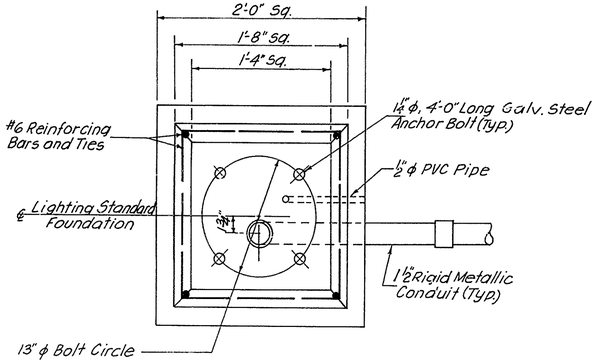

PLAN

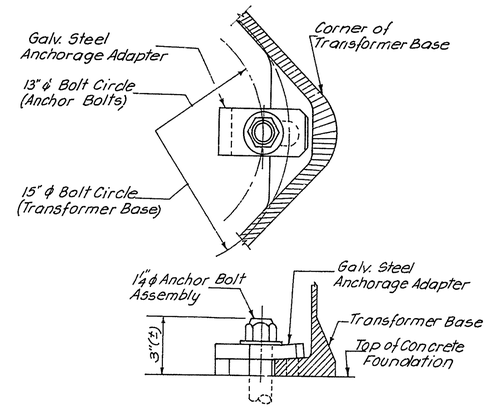

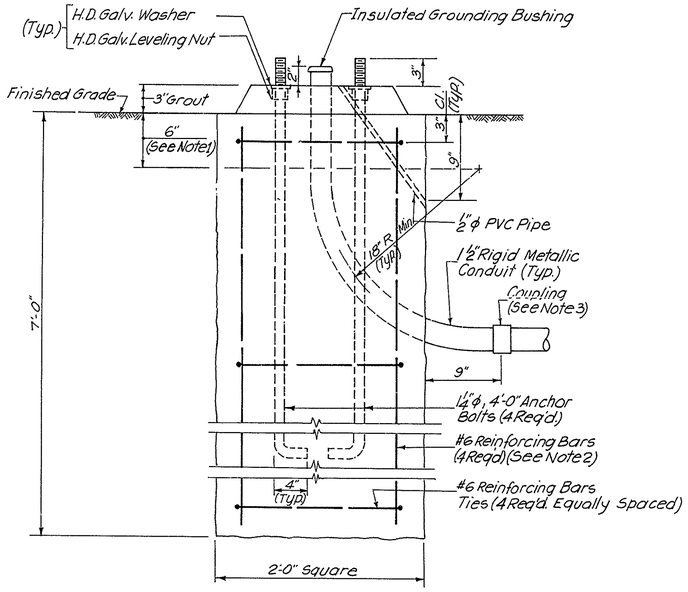

ELEVATION

LIGHTING STANDARD FOUNDATION DETAILS

Scale: 1½"=1'-0"

ANCHORAGE DETAILS FOR GROUND MOUNTED LTG. STDS.

Scale: 3"=1'-0"

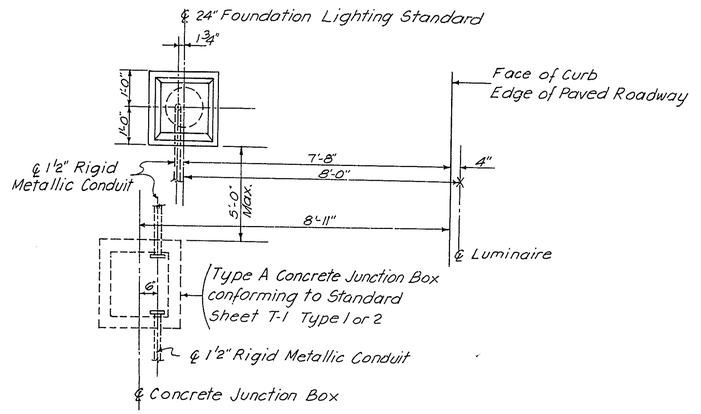

LIGHTING STANDARD SETBACK AND TRENCH ALIGNMENT

Scale: ½"=1'-0"

LEGEND

1. New 2 #10 Tap Conductors to Luminaire
2. New Fused Cable Connector Kit with 5A. Fuse, ESNA Style 64 or approved equal
3. Transformer Base Grounding Stud
4. #10 Bare Copper Bonding Wire
5. Insulated Grounding Bushing
6. Distribution Cables and Ground Wire (2 #4 ϕ A Plus 1 #6 Ground)
7. #6 Bare Copper Bonding Wire in ½" PVC pipe
8. ¾" ϕ, 10' Long Ground Rod
9. 1½" Rigid Metallic Conduit
10. New Fused Cable Connector Kit with 5A. Fuse, ESNA Style 82 or approved equal
11. New Non-fused Cable Connector Kit, ESNA Style 83 or approved equal.
12. Cable Splice

NOTES

1. Forms shall be extended minimum of 6" below finished grade and all formed surfaces shall be steel trowelled.
2. Reinforcing bars shall be placed at corners with 3" clearance from all surfaces.
3. Conduit elbows shall be capped during the foundation construction.

MISCELLANEOUS LIGHTING DETAILS

COUNTY	CONTRACT	P.R.A. REG. NO.	STATE	FED. AID PROJECT NO.	SHEET NO.	TOTAL SHEETS
NEW CASTLE	79-071-02	2	DEL.	M-1191(1)	86	112

AUGUSTINE BRIDGE RECONSTRUCTION

PREL. TRACING _____ DESIGN _____ CHKD. _____

REVISIONS

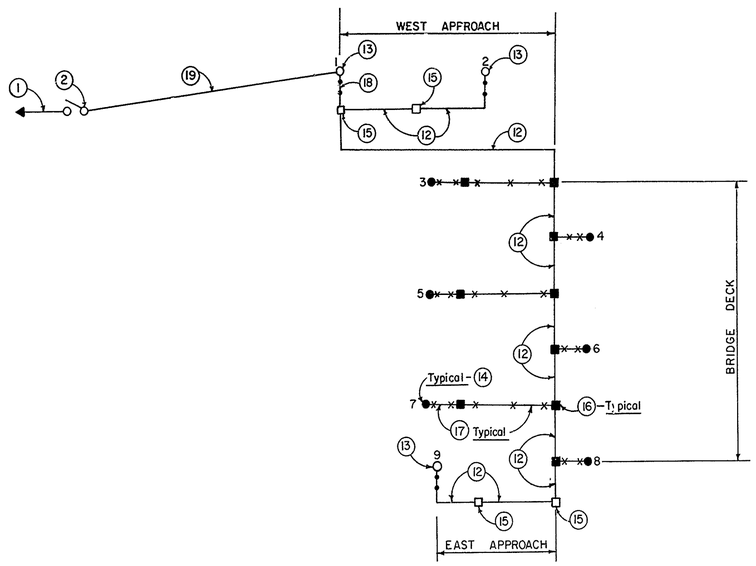

SINGLE LINE DIAGRAM

BILL OF MATERIALS

①	3 #4 - 1½" Galv. Steel Conduit to D.P.&L. (Power Co.) Supply Source - 120/240 Volts, 1Φ - 3W (ΦA, ΦB & Neutral).
②	2 Pole - 60 Amp. - 250 Volt Fused Switch with Two 60 Amp. Fuses-NEMA IV Located on DP&L Pole No. 26/34
③	DELETED
④	DELETED
⑤	DELETED
⑥	DELETED
⑦	DELETED
⑧	DELETED
⑨	DELETED
⑩	DELETED
⑪	DELETED
⑫	Roadway Lighting Circuit No 1 - 240 Volts - 1Φ - 2W - 3 #4 - 1½" Galv. Steel Conduit (ΦA, ΦB Plus Insulated Ground).
⑬	Type "A" Light Standard
⑭	Type "B" Light Standard
⑮	Type "A" Junction Box (In Earth)
⑯	Type "B" Junction Box (In Parapet)
⑰	240 Volt Tap Conductors to Roadway Luminaire 2 #10 (ΦA & ΦB) Plus 1 #10 Insulated Ground - 1" Galv. Steel Conduit.
⑱	240 Volt. Feed Conductors to Roadway Luminaire 2 #4 (ΦA & ΦB) Plus 1 #6 Insulated Ground - 1½" Galv. Steel Conduit.
⑲	3 # 4 Overhead To D.P.&L. Pole

BREAKDOWN OF LIGHTING QUANTITIES

ITEM NO.	DESCRIPTION	UNIT	QUANTITY
RL-1	Alum. Light Pole with 8' Mast Arm, Transformer Base Mounted	EACH	3
RL-2	Alum. Light Pole with 8' Mast Arm, with Anchor Base Parapet Mounted	EACH	6
RL-3	400 Watt High Pressure Sodium Luminaire	EACH	10
RL-4	400 Watt High Pressure Sodium Lamp	EACH	10
RL-5	Light Pole Foundation	EACH	3
RL-6	Conduit Junction Well	EACH	4
RL-7	Trench Excavation for Electric Conduit	L.F.	470
RL-8	DELETED		
RL-9	1½" Galvanized Rigid Steel Conduit Encased on Structure	L.F.	990
RL-10	1" Galvanized Rigid Steel Conduit Encased on Structure	L.F.	190
RL-11	DELETED		
RL-12	1½" Galvanized Rigid Steel Conduit in Trench	L.F.	470
RL-13	Type B Junction Box	EACH	11
RL-14	No. 4 AWG. Standard Copper Wire	L.F.	4750
RL-15	No. 6 AWG. Standard Copper Wire	L.F.	110
RL-16	No. 10 AWG. Standard Copper Wire	L.F.	470
RL-17	DELETED		
RL-18	Connector Kit	EACH	18
RL-19	Ground Rod	EACH	3
RL-20	Complete Testing of Entire Lighting System and Connections		
RL-21	½" Stripwound Flexible Stainless Steel Hose	L.F.	10

SINGLE LINE DIAGRAM AND BILL OF MATERIALS

No Scale

REGISTERED PROFESSIONAL ENGINEER NO. 3065 STATE OF DELAWARE

COUNTY	CONTRACT	P & R REG. NO	STATE	FED AID PROJECT NO	SHEET NO	TOTAL SHEETS
NEW CASTLE	79-071-02	2	DEL.	M-1191(1)	87	112

AUGUSTINE BRIDGE RECONSTRUCTION

NO.	REVISIONS	BY	DATE

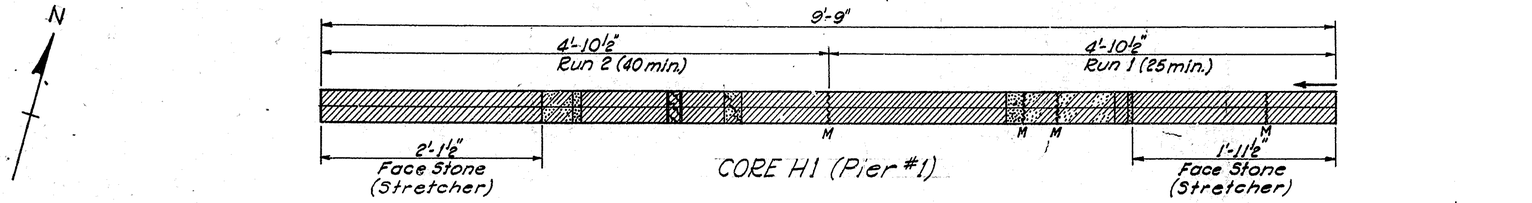

CORE DATA

CORE No.	DRILLING DATE	ELEVATION	DISTANCE FROM TOP OF PIER	DISTANCE FROM ℄ OF PIER	PAYMENT LENGTH
H-1	8-30-77	77.4'	27.7'	3.4' South	9'-9"
H-2	8-27-77	39.1'	66.0'	10.7' South	13'-4½"
H-3	8-25-77	40.5'	64.6'	5.0' North	13'-1"
H-4	8-29-77	46.2'	58.9'	0.8' South	13'-6"
H-5	8-31-77	85.6'	19.5'	4.4' South	9'-11"
H-6	9-1-77	105.6'	0.3'*	7.9' North	8'-1½"

Total 67'-9"

*Above Bridge Seat

LEGEND

- ← Direction of Drilling
- (min) Accumulated drilling time for each run
- Solid Granite
- Broken Granite
- Solid Mortar
- Broken Mortar
- Mortar & Stone Chips
- Broken Mortar & Stone Chips
- Solid Granite & Mortar
- Broken Granite & Mortar
- V Void
- Attached Joint
- Open Joint
- M Mechanical Break caused by drilling
- Break not identified as caused by drilling

DRILLING EQUIPMENT DATA

Core Drill Machine: Sprague & Henwood Model 40-C Skid-Mounted Core Drill
Core Barrel: Longyear NV-3 Triple Tube Core Barrel
Core Bit: Christensen NV3 Diamond Bit
Diameter of Core: 1¾"
Diameter of Hole: 3"

1 6 0 1 2 3 Ft

DELAWARE
DEPARTMENT OF HIGHWAYS & TRANSPORTATION
DIVISION OF HIGHWAYS

MASONRY CORE LOGS
HORIZONTAL CORES

D. V.H.	SCALE	APPROVED BY: —
T.	1½"=1'-0"	BRIDGE ENGINEER
C. Y.P.H.		

ROBERT C. McDOWELL REGISTERED NO. 3069 DELAWARE ENGINEER

COUNTY	CONTRACT	P. B. A. REG. NO.	STATE	FED. AID PROJECT NO.	SHEET NO.	TOTAL SHEETS
NEW CASTLE	79-071-02	2	DEL	M-1191(1)	88	112

AUGUSTINE BRIDGE RECONSTRUCTION

NO.	REVISIONS	BY	DATE

CORE No. V1N

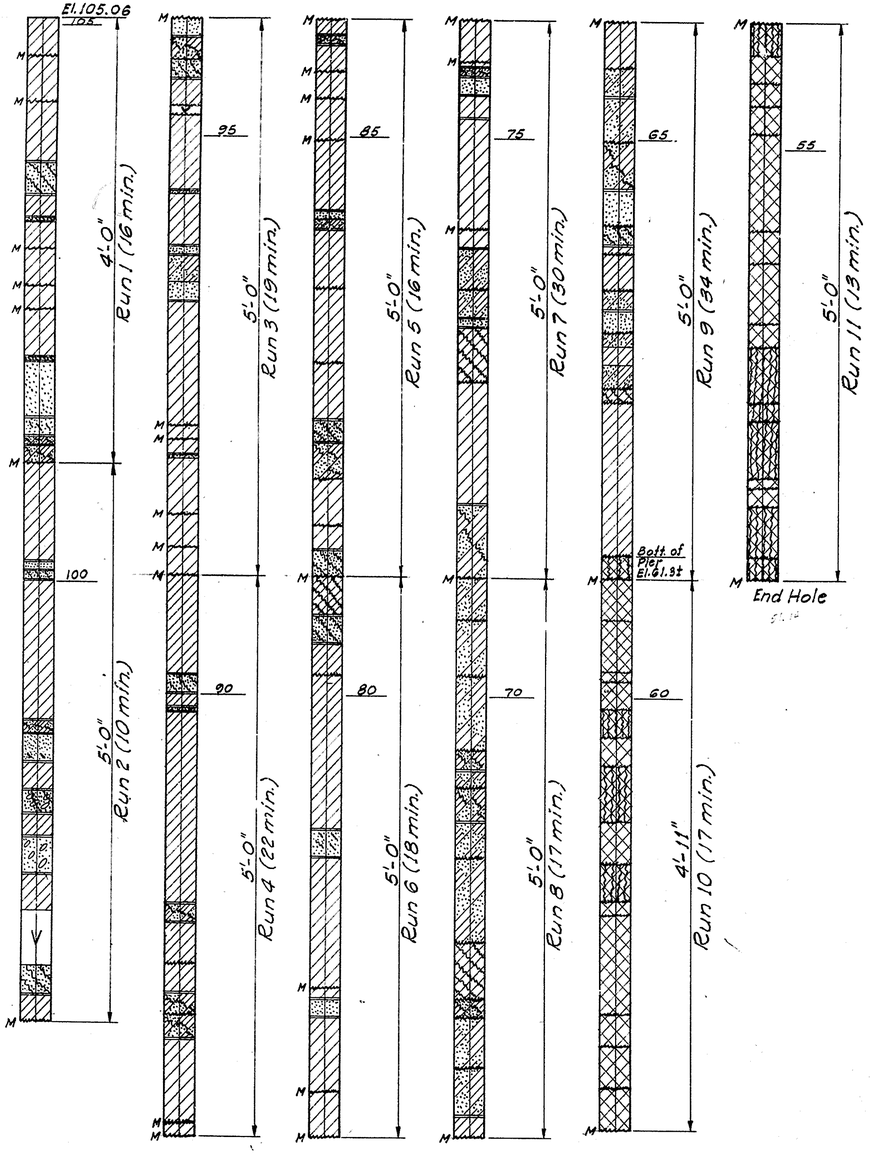

CORE No. V1S

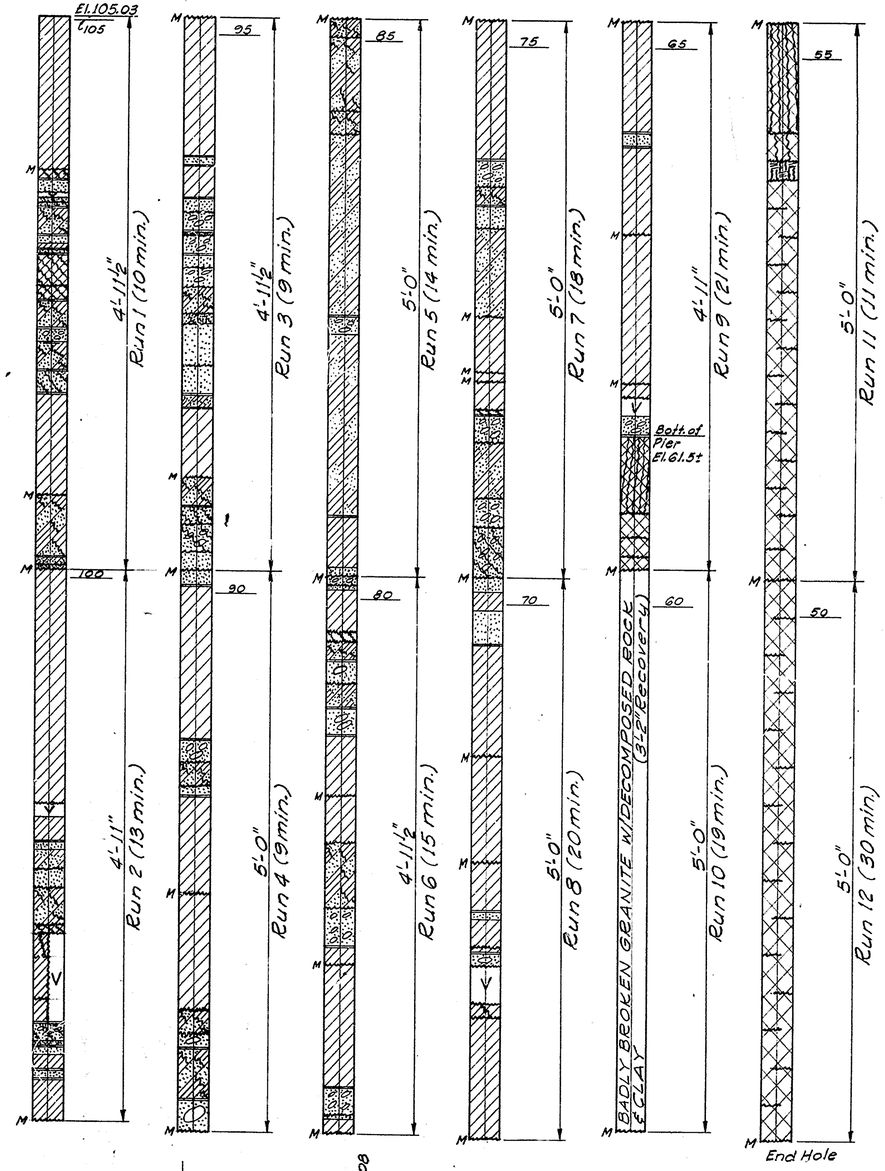

LEGEND

- Solid Granite
- Broken Granite
- Solid Mortar
- Broken Mortar
- Solid Granite & Mortar
- Broken Granite & Mortar
- Mortar & Stone Chips
- Broken Mortar & Stone Chips
- V — Void
- Attached Joint
- Open Joint
- Break not identified as caused by drilling
- M — Mechanical Break caused by Drilling
- Sound Bedrock
- Weathered Bedrock
- (min) Accumulated drilling time for each run
- Decomposed Rock and Clay

CORE No.	DRILLING DATE	PAYMENT LENGTH
V1N	9/12 & 9/13/77	53.9'
V1S	9/15/77	59.7'

DRILLING EQUIPMENT DATA

Core Drill Machine:
"Mobile" Truck-Mounted
Model B-50
Core Barrel: Longyear NV-3
Triple Tube Core Barrel
Core Bit:
Christensen NV3 Diamond Bit
Diameter of Core: 1⅞"
Diameter of Hole: 3"

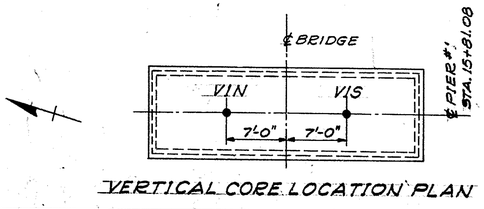

VERTICAL CORE LOCATION PLAN

1 6 0 1 2 3 FT

DELAWARE
DEPARTMENT OF HIGHWAYS & TRANSPORTATION
DIVISION OF HIGHWAYS

MASONRY CORE LOGS
PIER I, VERTICAL CORES V1N AND V1S

D. V.H.	SCALE	APPROVED BY:
T.	1½"=1'-0"	NO. 3068 ROBERT C. McDOWELL REGISTERED PROFESSIONAL ENGINEER
C. Y.P.H.		BRIDGE ENGINEER

D C B A 1 5 10 A B C D

COUNTY	CONTRACT	P.R.A. REG. NO.	STATE	FED. AID PROJECT NO.	SHEET NO.	TOTAL SHEETS
NEW CASTLE	79-071-02	2	DEL	M-1191 (1)	89	112

AUGUSTINE BRIDGE RECONSTRUCTION

NO.	REVISIONS	BY	DATE

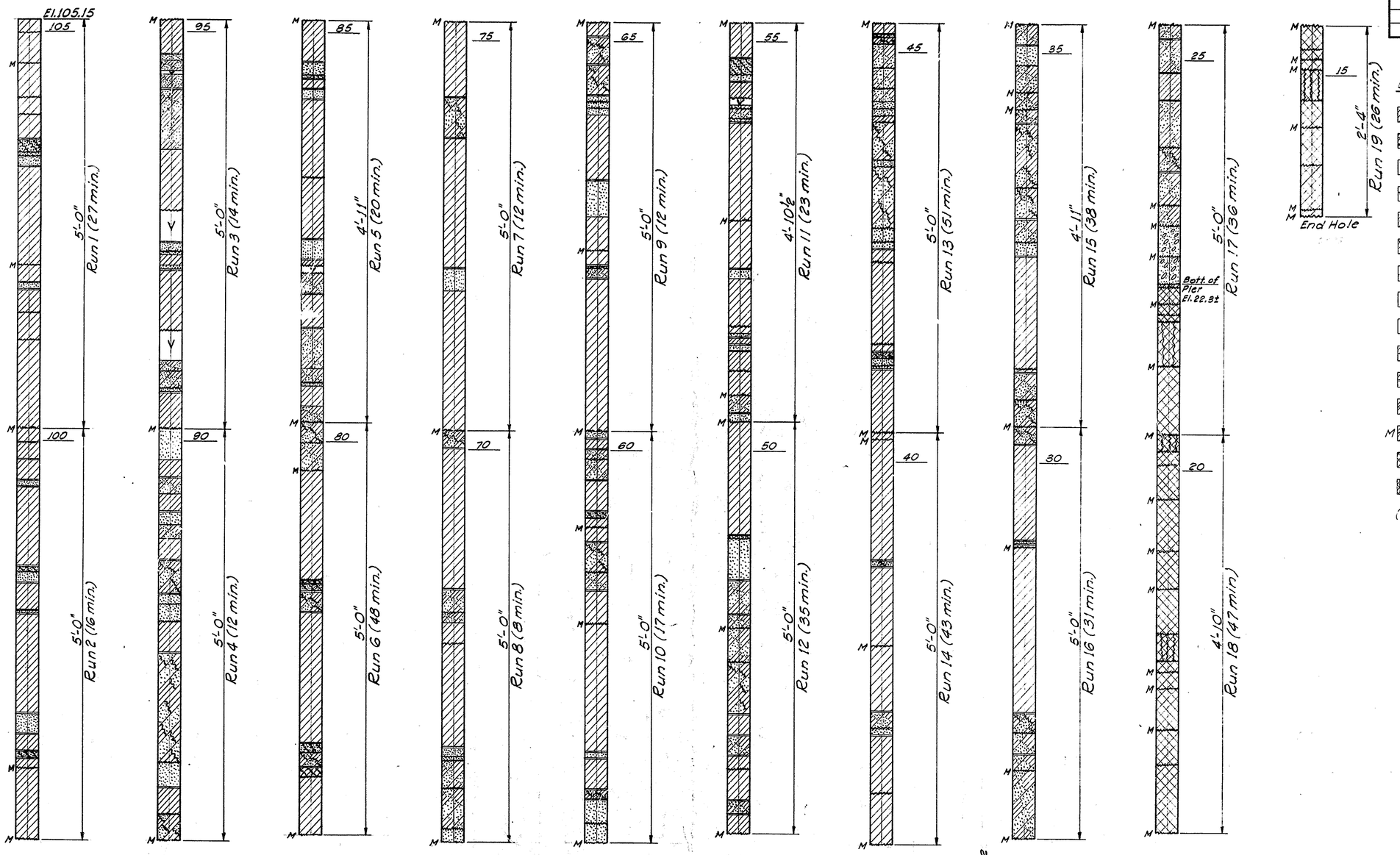

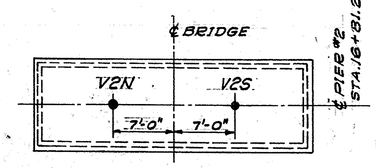

VERTICAL CORE LOCATION PLAN

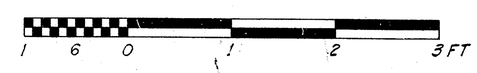

LEGEND

- Solid Granite
- Broken Granite
- Solid Mortar
- Broken Mortar
- Solid Granite & Mortar
- Broken Granite & Mortar
- Mortar & Stone Chips
- Broken Mortar & Stone Chips
- V Void
- Attached Joint
- Open Joint
- Break not identified as caused by drilling
- M Mechanical Break caused by Drilling
- Sound Bedrock
- Weathered Bedrock
- (min) Accumulated drilling time for each run

CORE No.	DRILLING DATE	PAYMENT LENGTH
V2N	9/13/77 9/14/77	91.9'

DRILLING EQUIPMENT DATA

Core Drill Machine:
"Mobile" Truck-Mounted
Model B-50
Core Barrel: Longyear NV-3
Triple Tube Core Barrel
Core Bit:
Christensen NV3 Diamond Bit
Diameter of Core: 1¾"
Diameter of Hole: 3"

DELAWARE
DEPARTMENT OF HIGHWAYS & TRANSPORTATION
DIVISION OF HIGHWAYS

MASONRY CORE LOGS
PIER 2, VERTICAL CORE V2N

D. V.H. T. C. Y.P.H.	SCALE 1½"=1'-0"	APPROVED BY: ROBERT C. McDOWELL REGISTERED NO. 3069 BRIDGE ENGINEER

COUNTY	CONTRACT	P & R REG. NO	STATE	FED. AID PROJECT NO	SHEET NO	TOTAL SHEETS
NEW CASTLE	79-071-02	2	DEL	BRM-1191(1)	90	142

AUGUSTINE BRIDGE RECONSTRUCTION

NO.	REVISIONS	BY	DATE

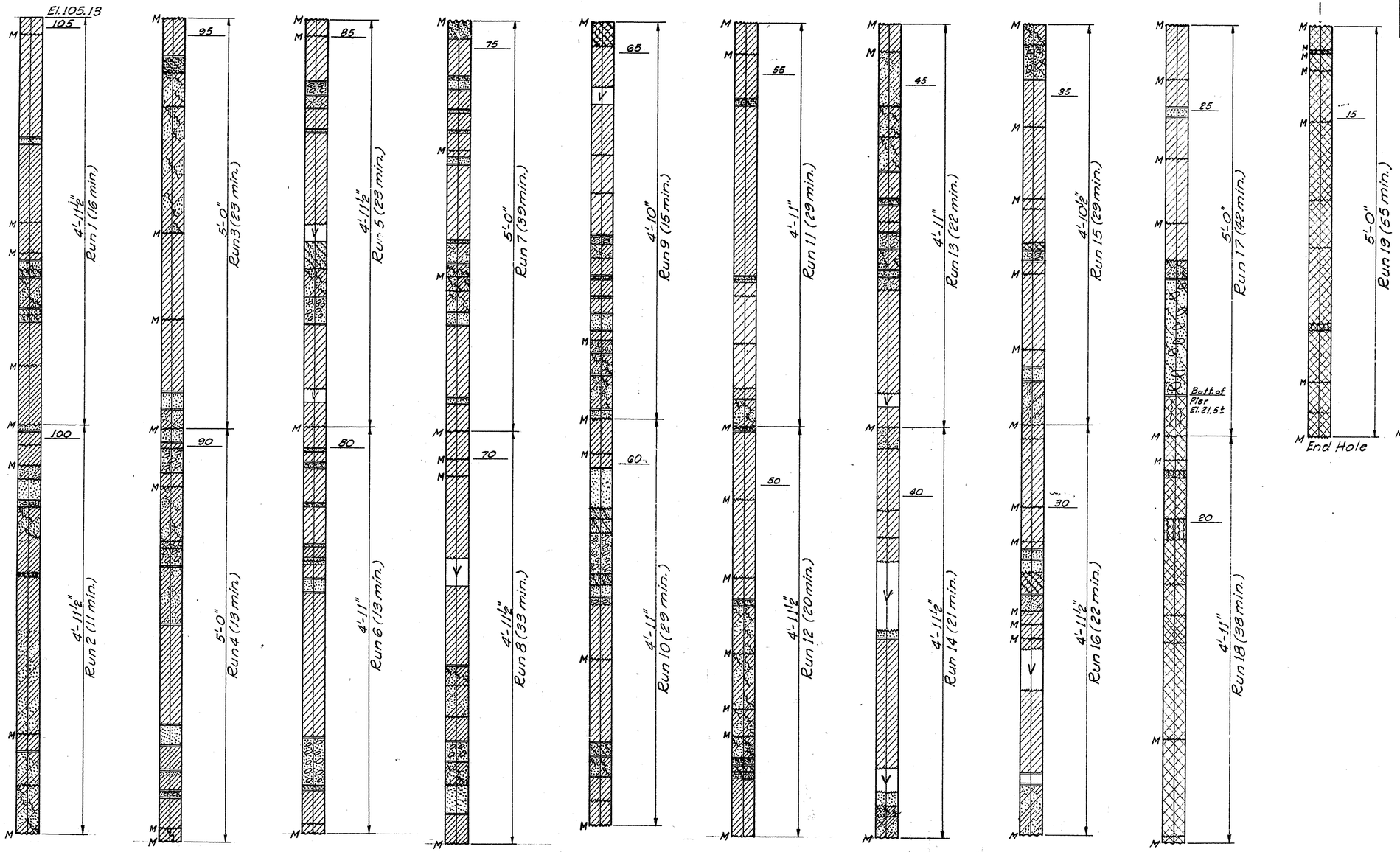

LEGEND

- Solid Granite
- Broken Granite
- Solid Mortar
- Broken Mortar
- Solid Granite & Mortar
- Broken Granite & Mortar
- Mortar & Stone Chips
- Broken Mortar & Stone Chips
- V Void
- Attached Joint
- Open Joint
- Break not identified as caused by drilling
- M Mechanical Break caused by Drilling
- Sound Bedrock
- Weathered Bedrock
- (min) Accumulated drilling time for each run

CORE No.	DRILLING DATE	PAYMENT LENGTH
V25	9/14/77 9/15/77	94.0'

DRILLING EQUIPMENT DATA

Core Drill Machine:
"Mobile" Truck-Mounted
Model B-50
Core Barrel: Longyear NV-3
Triple Tube Core Barrel
Core Bit:
Christensen NV3 Diamond Bit
Diameter of Core: 1⅞"
Diameter of Hole: 3"

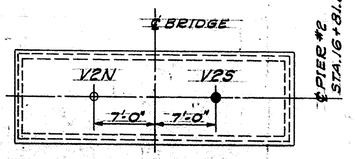

VERTICAL CORE LOCATION PLAN

1 0 0 1 2 3 FT

DELAWARE
DEPARTMENT OF HIGHWAYS & TRANSPORTATION
DIVISION OF HIGHWAYS

MASONRY CORE LOGS
PIER 2, VERTICAL CORE V2S

D. V.H.	SCALE	APPROVED BY:
T.	1½"=1'-0"	ROBERT C. McCORKELL, REGISTERED PROFESSIONAL ENGINEER NO. 3069
C. Y.P.H.		BRIDGE ENGINEER

D C B A 1 5 10 A B C D

COUNTY	CONTRACT	P. R. & REG. NO.	STATE	FED. AID PROJECT NO.	SHEET NO.	TOTAL SHEETS
NEW CASTLE	79-071-02	2	DEL.	M-1191 (1)	91	112

AUGUSTINE BRIDGE RECONSTRUCTION

NO.	REVISIONS	BY	DATE

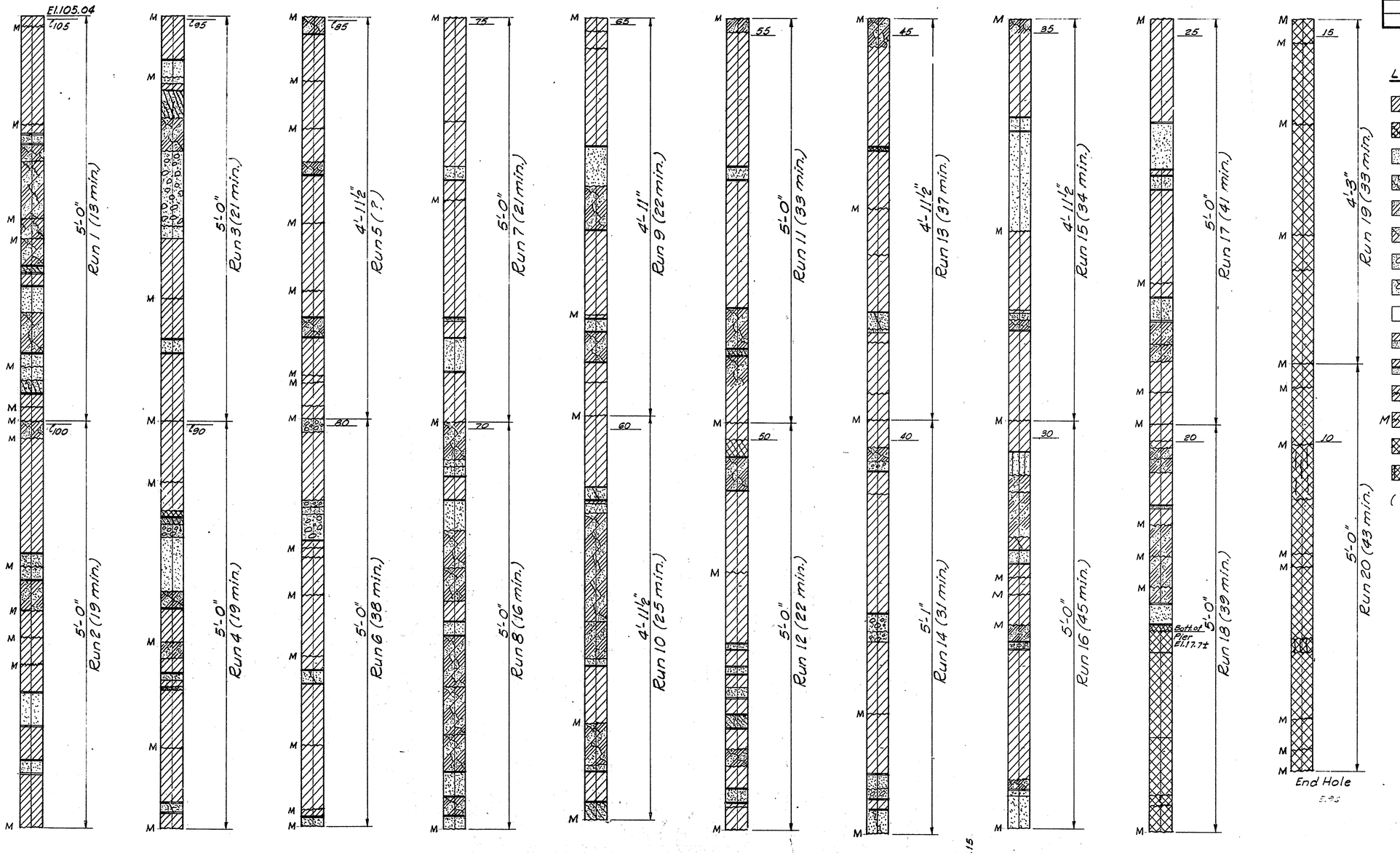

LEGEND

- Solid Granite
- Broken Granite
- Solid Mortar
- Broken Mortar
- Solid Granite & Mortar
- Broken Granite & Mortar
- Mortar & Stone Chips
- Broken Mortar & Stone Chips
- V — Void
- Attached Joint
- Open Joint
- Break not identified as caused by drilling
- M — Mechanical Break caused by Drilling
- Sound Bedrock
- Weathered Bedrock
- (min) Accumulated drilling time for each run

CORE No.	DRILLING DATE	PAYMENT LENGTH
V3N	9/16/77 to 9/21/77	99.1

DRILLING EQUIPMENT DATA

Core Drill Machine:
"Mobile" Truck-Mounted
Model B-50
Core Barrel: Longyear NV-3
Triple Tube Core Barrel
Core Bit:
Christensen NV3 Diamond Bit
Diameter of Core: 1⅞"
Diameter of Hole: 3"

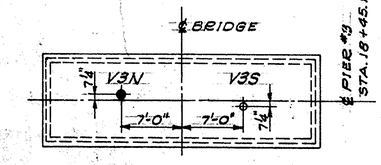

VERTICAL CORE LOCATION PLAN

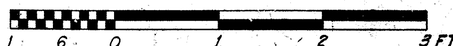

DELAWARE
DEPARTMENT OF HIGHWAYS & TRANSPORTATION
DIVISION OF HIGHWAYS

MASONRY CORE LOGS
PIER 3, VERTICAL CORE V3N

D. V.H. & E.M.
T.
C. Y.P.H.

SCALE 1½"=1'-0"

APPROVED BY: ROBERT C. McDOWELL No. 3068 REGISTERED PROFESSIONAL ENGINEER
BRIDGE ENGINEER

COUNTY	CONTRACT	F. B. A. REG. NO.	STATE	FED. AID PROJECT NO.	SHEET NO.	TOTAL SHEETS
NEW CASTLE	79-071-02	2	DEL.	M-1191(1)	92	112

AUGUSTINE BRIDGE RECONSTRUCTION

NO.	REVISIONS	BY	DATE

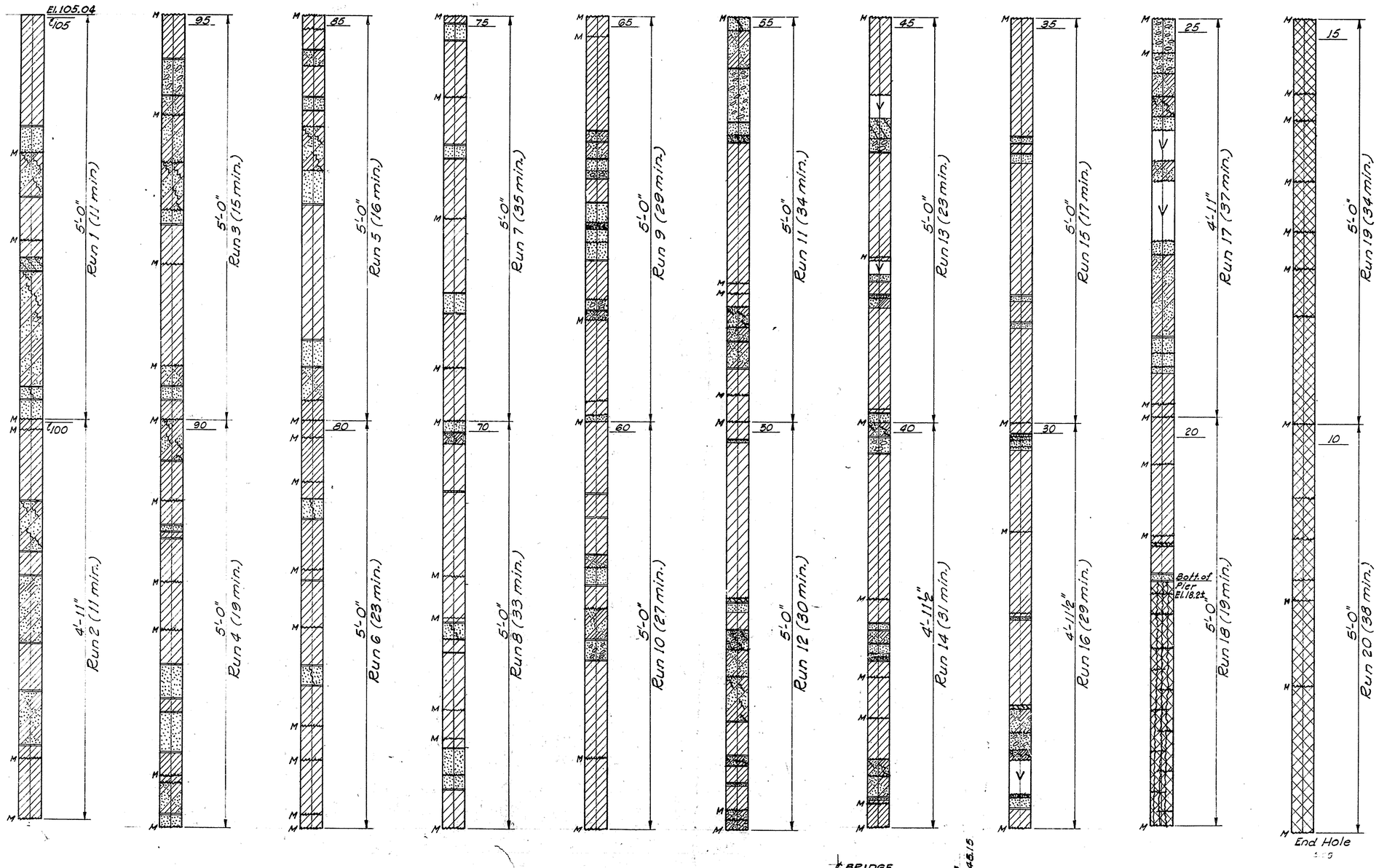

VERTICAL CORE LOCATION PLAN

LEGEND

- Solid Granite
- Broken Granite
- Solid Mortar
- Broken Mortar
- Solid Granite & Mortar
- Broken Granite & Mortar
- Mortar & Stone Chips
- Broken Mortar & Stone Chips
- V — Void
- Attached Joint
- Open Joint
- Break not identified as caused by drilling
- M — Mechanical Break caused by Drilling
- Sound Bedrock
- Weathered Bedrock
- (min) Accumulated drilling time for each run

CORE No.	DRILLING DATE	PAYMENT LENGTH
V3S	9/16/77	99.75'

DRILLING EQUIPMENT DATA

Core Drill Machine:
"Mobile" Truck-Mounted
Model B-50
Core Barrel: Longyear NV-3
Triple Tube Core Barrel
Core Bit:
Christensen N°3 Diamond Bit
Diameter of Core: 1¾"
Diameter of Hole: 3"

DELAWARE
DEPARTMENT OF HIGHWAYS & TRANSPORTATION
DIVISION OF HIGHWAYS

MASONRY CORE LOGS
PIER 3, VERTICAL CORE V3S

D. V.H.	SCALE	APPROVED BY:
T.	1½"=1'-0"	ROBERT C. McDOWELL REGISTERED PROFESSIONAL ENGINEER NO. 3069
C. Y.P.H.		BRIDGE ENGINEER

D C B A 1 5 10 A B C D

COUNTY	CONTRACT	P. R. A. REG. NO.	STATE	FED. AID PROJECT NO.	SHEET NO.	TOTAL SHEETS
NEW CASTLE	79-071-02	2	DEL.	M-1191(1)	93	112

AUGUSTINE BRIDGE RECONSTRUCTION

NO.	REVISIONS	BY	DATE

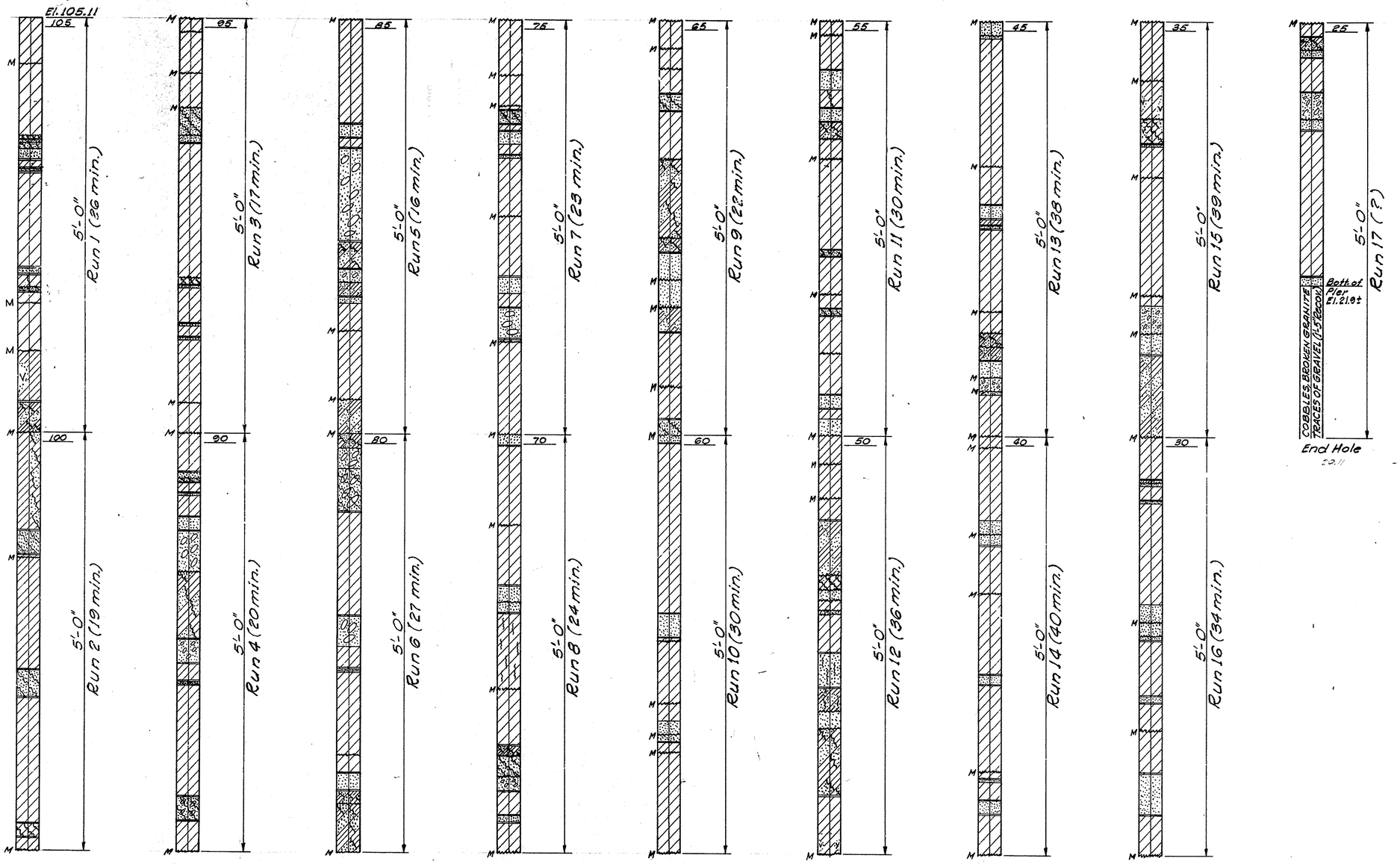

LEGEND

- Solid Granite
- Broken Granite
- Solid Mortar
- Broken Mortar
- Solid Granite & Mortar
- Broken Granite & Mortar
- Mortar & Stone Chips
- Broken Mortar & Stone Chips
- V — Void
- Attached Joint
- Open Joint
- Break not identified as caused by drilling
- M — Mechanical Break caused by Drilling
- Sound Bedrock
- Weathered Bedrock
- (min) Accumulated drilling time for each run

CORE No.	DRILLING DATE	PAYMENT LENGTH
V4N	9/28/77 & 9/29/77	85.0'

DRILLING EQUIPMENT DATA

Core Drill Machine:
"Mobile" Truck-Mounted
Model B-50
Core Barrel: Longyear NV-3
Triple Tube Core Barrel
Core Bit:
Christensen NV3 Diamond Bit
Diameter of Core: 1-3/4"
Diameter of Hole: 3"

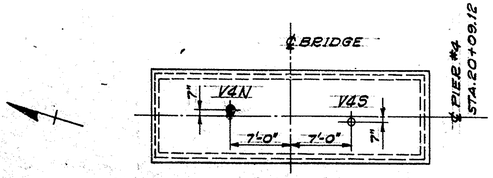

VERTICAL CORE LOCATION PLAN

DELAWARE
DEPARTMENT OF HIGHWAYS & TRANSPORTATION
DIVISION OF HIGHWAYS

MASONRY CORE LOGS
PIER 4, VERTICAL CORE V4N

D. V.H.	SCALE	APPROVED BY:
T.	1½"=1'-0"	ROBERT C. McDOWELL REGISTERED NO. 3069 PROFESSIONAL ENGINEER
C. Y.P.H.		BRIDGE ENGINEER

D C B A 1 5 10 A B C D

COUNTY	CONTRACT	P. B. A. DEG. NO.	STATE	FED. AID PROJECT NO.	SHEET NO.	TOTAL SHEETS
NEW CASTLE	79-071-02	2	DEL.	M-1191(1)	94	112

AUGUSTINE BRIDGE RECONSTRUCTION

NO.	REVISIONS	BY	DATE

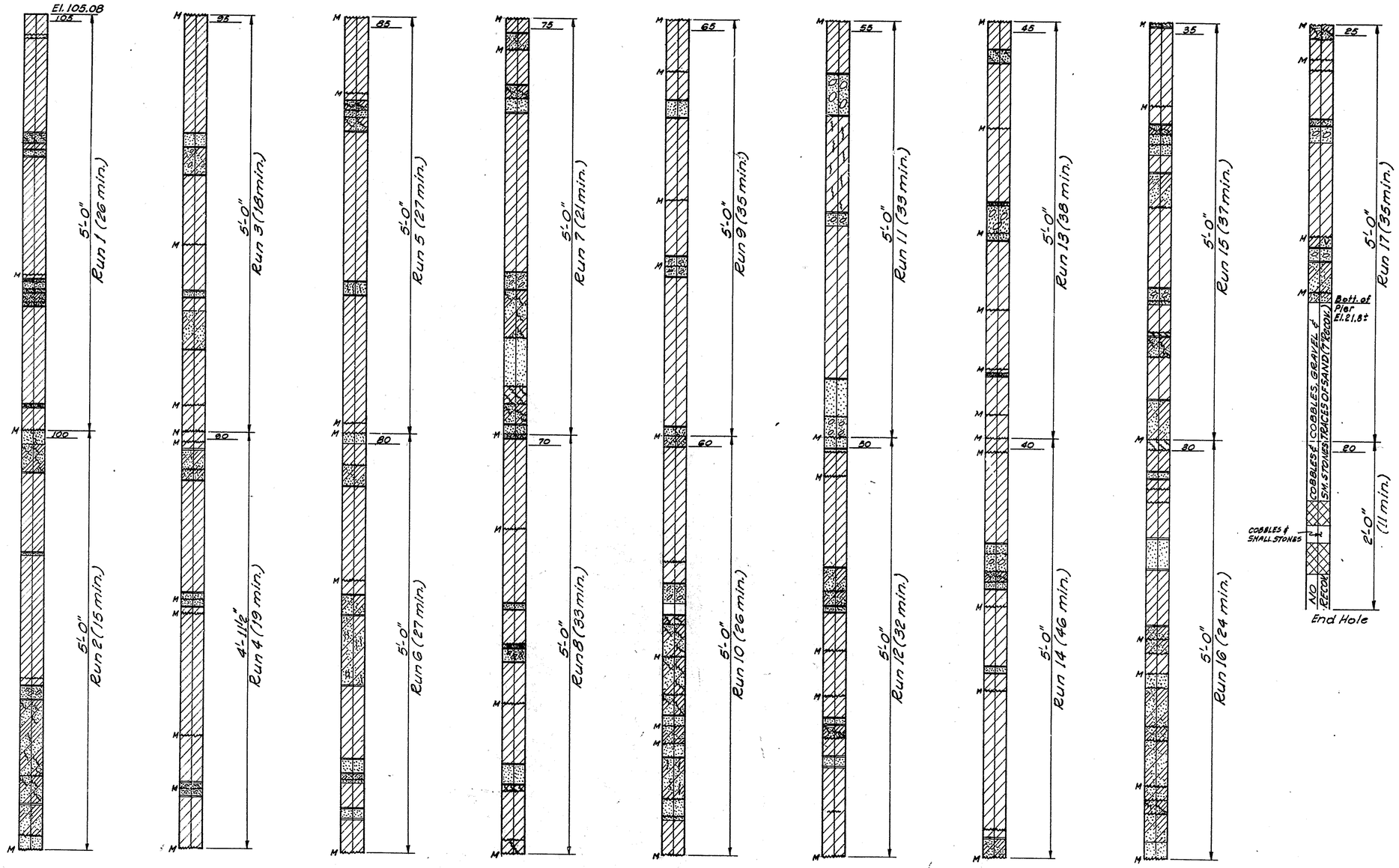

LEGEND

- Solid Granite
- Broken Granite
- Solid Mortar
- Broken Mortar
- Solid Granite & Mortar
- Broken Granite & Mortar
- Mortar & Stone Chips
- Broken Mortar & Stone Chips
- V — Void
- Attached Joint
- Open Joint
- Break not identified as caused by drilling
- M — Mechanical Break caused by Drilling
- Sound Bedrock
- Weathered Bedrock
- (min) Accumulated drilling time for each run

CORE No.	DRILLING DATE	PAYMENT LENGTH
V4S	9/26/77 & 9/27/77	87.0'

DRILLING EQUIPMENT DATA

Core Drill Machine:
"Mobile" Truck-Mounted
Model B-50
Core Barrel: Longyear NV-3
Triple Tube Core Barrel
Core Bit:
Christensen NV3 Diamond Bit
Diameter of Core: 1⅞"
Diameter of Hole: 3"

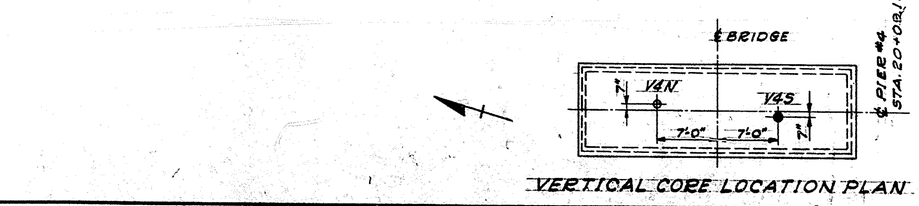

VERTICAL CORE LOCATION PLAN

1 6 0 1 2 3 FT

DELAWARE
DEPARTMENT OF HIGHWAYS & TRANSPORTATION
DIVISION OF HIGHWAYS

MASONRY CORE LOGS
PIER 4, VERTICAL CORE V4S

D. V.H.	SCALE	APPROVED BY:
T.	1½"=1'-0"	ROBERT A. McDOWELL REGISTERED ENGINEER NO. 3069
C. Y.P.H.		BRIDGE ENGINEER

COUNTY	CONTRACT	P. B. A. REG. NO.	STATE	FED. AID PROJECT NO.	SHEET NO.	TOTAL SHEETS
NEW CASTLE	79-071-02	2	DEL.	M-1191(1)	95	112

AUGUSTINE BRIDGE RECONSTRUCTION

NO.	REVISIONS	BY	DATE

CORE No. V5N

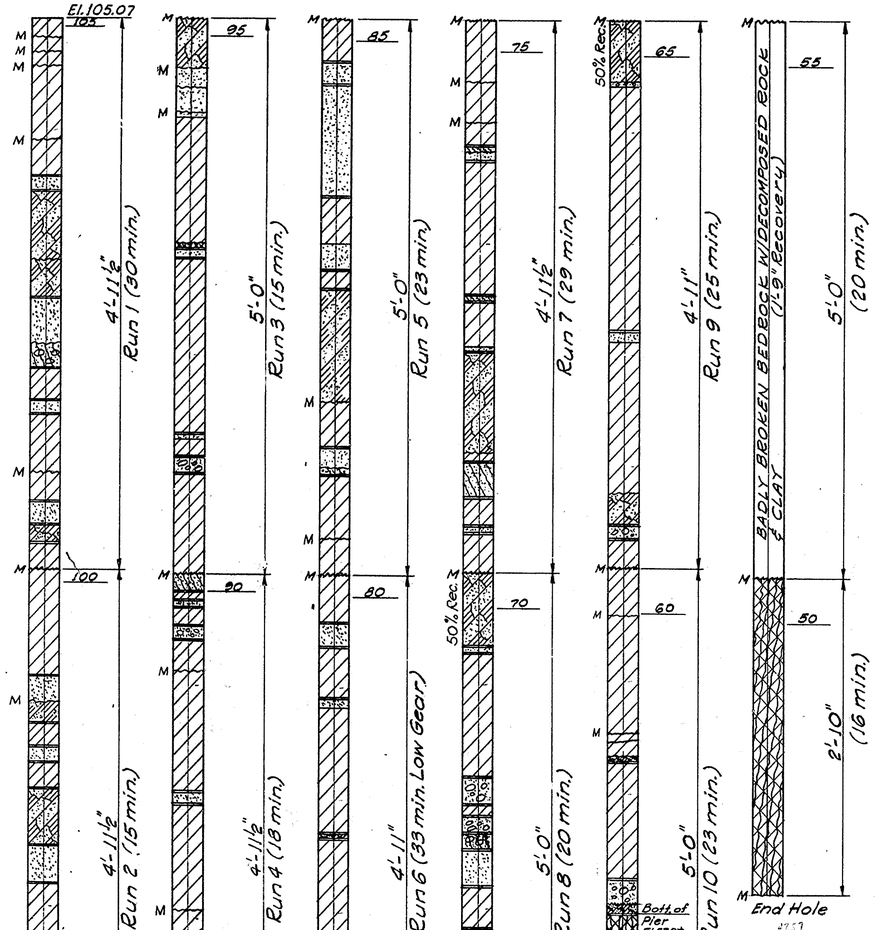

CORE No. V5S

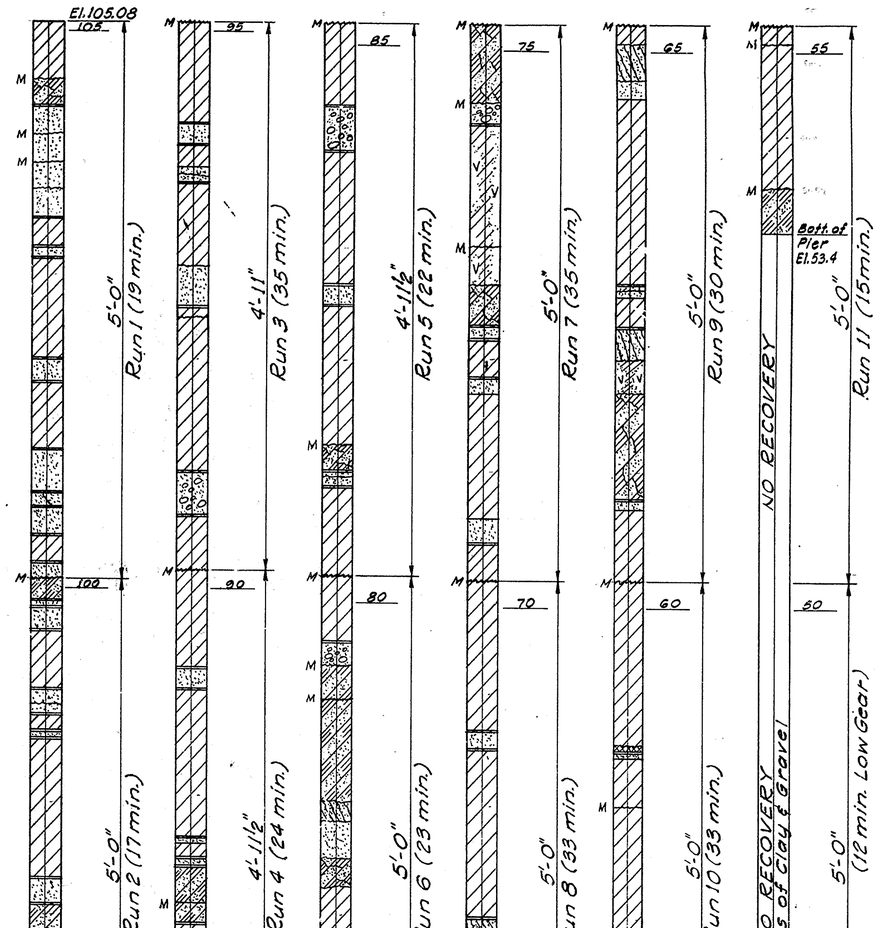

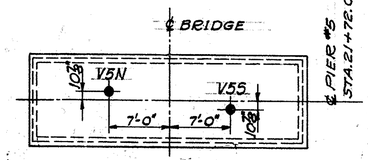

VERTICAL CORE LOCATION PLAN

1 6 0 1 2 3 FT

LEGEND

- Solid Granite
- Broken Granite
- Solid Mortar
- Broken Mortar
- Solid Granite & Mortar
- Broken Granite & Mortar
- Mortar & Stone Chips
- Broken Mortar & Stone Chips
- V — Void
- Attached Joint
- Open Joint
- Break not identified as caused by drilling
- M — Mechanical Break caused by Drilling
- Sound Bedrock
- Weathered Bedrock
- (min) Accumulated drilling time for each run

CORE No.	DRILLING DATE	PAYMENT. LENGTH
V5N	9/23 & 9/24/77	57.5'
V5S	9/24 & 9/26/77	59.8'

DRILLING EQUIPMENT DATA

Core Drill Machine:
"Mobile" Truck-Mounted
Model B-50
Core Barrel: Longyear NV-3
Triple Tube Core Barrel
Core Bit:
Christensen NW3 Diamond Bit
Diameter of Core: 1¾"
Diameter of Hole: 3"

DELAWARE
DEPARTMENT OF HIGHWAYS & TRANSPORTATION
DIVISION OF HIGHWAYS

MASONRY CORE LOGS
PIER 5, VERT. CORES V5N AND V5S

D. V.H. & E.M.	SCALE	APPROVED BY:
T.	1½"=1'-0"	—
C. Y.P.H.		BRIDGE ENGINEER

BERT C. McDONALD REGISTERED ENGINEER NO. 3069

D C B A 1 5 10 A B C D

COUNTY	CONTRACT	P & A REG. NO.	STATE	FED. AID PROJECT NO.	SHEET NO.	TOTAL SHEETS
NEW CASTLE	79-071-02	2	DEL.	M-1191 (1)	96	112

AUGUSTINE BRIDGE RECONSTRUCTION

NO.	REVISIONS	BY	DATE

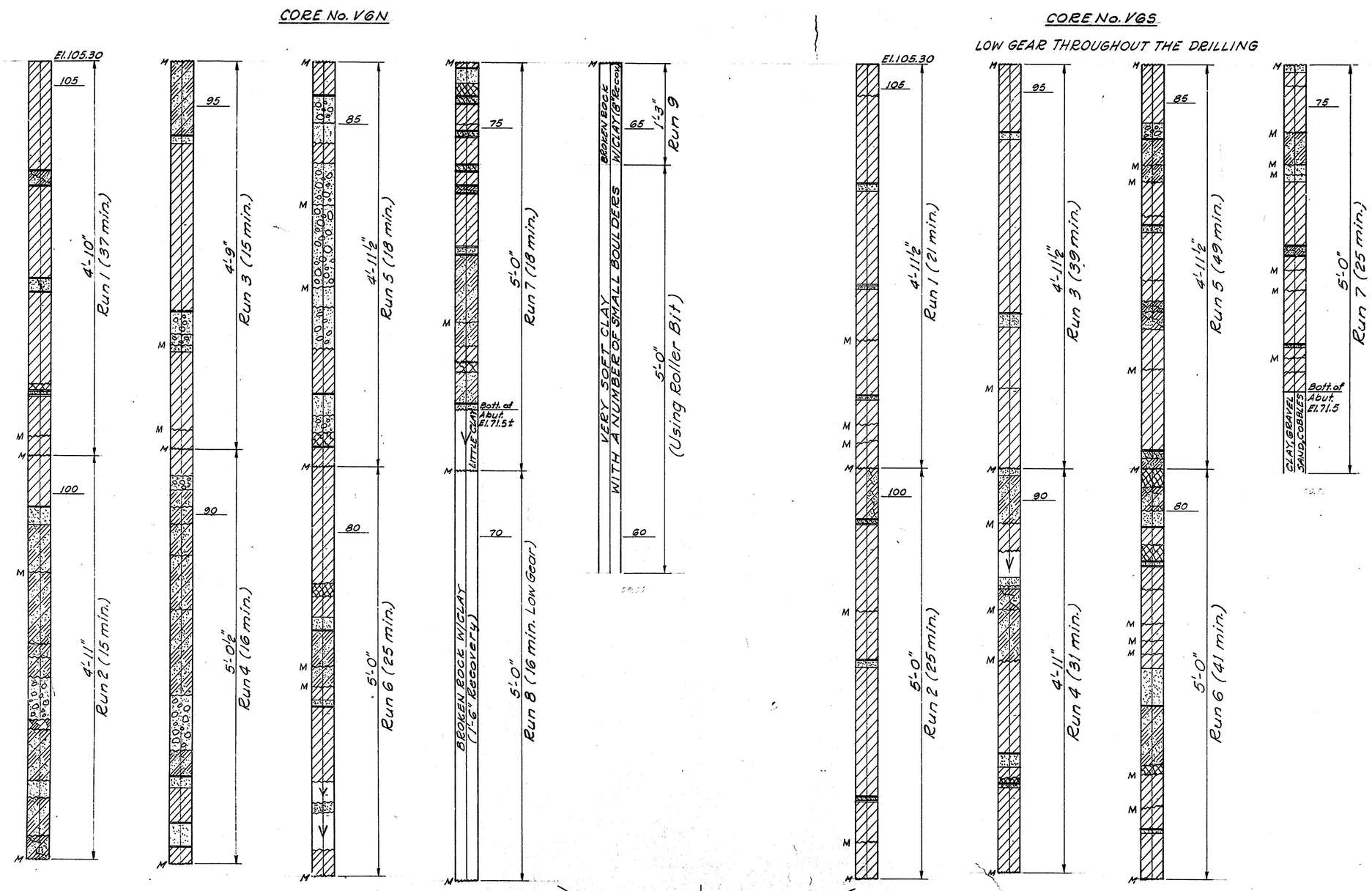

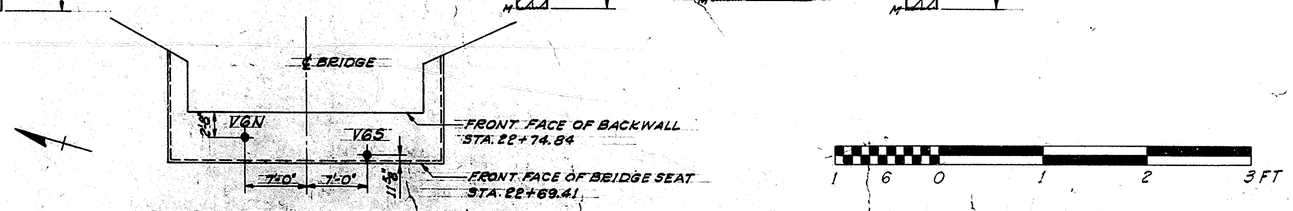

VERTICAL CORE LOCATION PLAN

LEGEND

- Solid Granite
- Broken Granite
- Solid Mortar
- Broken Mortar
- Solid Granite & Mortar
- Broken Granite & Mortar
- Mortar & Stone Chips
- Broken Mortar & Stone Chips
- V Void
- Attached Joint
- Open Joint
- Break not identified as caused by drilling
- M Mechanical Break caused by Drilling
- Sound Bedrock
- Weathered Bedrock
- (min) Accumulated drilling time for each run

CORE No.	DRILLING DATE	PAYMENT LENGTH
V6N	9/21 & 9/22/77	45.8'
V6S	9/22/77	34.8'

DRILLING EQUIPMENT DATA

Core Drill Machine:
"Mobile" Truck-Mounted
Model B-50
Core Barrel: Longyear NV-3
Triple Tube Core Barrel
Core Bit:
Christensen NV3 Diamond Bit
Diameter of Core: 2¾"
Diameter of Hole: 3⅞"

DELAWARE
DEPARTMENT OF HIGHWAYS & TRANSPORTATION
DIVISION OF HIGHWAYS

MASONRY CORE LOGS
EAST ABUTMENT
VERTICAL CORES V6N AND V6S

D. V.H. & E.M. T. C. Y.P.H.	SCALE 1½"=1'-0"	APPROVED BY: [signature] BRIDGE ENGINEER

ROBERT C. McDOWELL REGISTERED NO. 3069 PROFESSIONAL ENGINEER

COUNTY	CONTRACT	P. B. A. REG. NO.	STATE	FED. AID PROJECT NO.	SHEET NO.	TOTAL SHEETS
NEW CASTLE	79-071-02	2	DEL.	M-1191-(1)	97	112

AUGUSTINE BRIDGE RECONSTRUCTION

NO.	REVISIONS	BY	DATE

B1

STA. 13+91, 30' LT. tan.

Ground El. 128.8

17	1'- 2'6"	Med-Dense,Dry,Brn & Blk F/C Sand,some F/C Gravel, trace Cinders,some Silt (Fill)	S-1	14/13 / 14/	6/6 / 6/	A
22						
45						
42						
40						
40	5'- 6'6"	Dense, Dry	S-2	26/25 / 16/	6/6 / 6/	121.8
78						
150		Moist,Brn F/C Sand & F/C Gravel,some Silt, some Rock Fragments				A
260						118.8
52	10'- 10'6"		S-3	150/	6/	C
						114.8
RUN-1	14'- 19'	Broken & Seamy Gray Granite	D-1	100%		D
RUN-2	19'- 24'		D-2	98%		104.8

B2

STA. 14+16, 20' LT.

Ground El. 118.9

4	1' - 2' 6"	Med-Dense,Damp,Brn F/C Sand and F/C Gravel,trace Silt, trace Clay	S-1	7/12 / 16/	6/6 / 6/	A
9						113.9
35						
42						
140						
	5' - 6' 6"	Very Dense,Damp	S-2	40/46 / 150/	6/6 / 6/	C
						109.9
RUN-1	9' - 14'	Gray Granite, Seamy	D-1	98%		D
RUN-2	14' - 19'		D-2	93%		99.9

B3

STA. 14+99, 22' LT.

Ground El. (a) 100.5

(a)	(b)	(c)	(d)	(e)	(f)	(g)
7	1' - 2'6"	Dry, Gray F/C Sand & F/C Gravel Fill	S-1	5/5 / 5/	6/6 / 6/	A 99.0
17						
42		Dense,Dry,Brn Silt,trace F/M Sand				A 95.5
73						
55						
42	5' - 6'6"	Med-Dense,Dry,Brn C/F Sand and C/F Gravel, some Silt	S-2	8/13 / 11/	6/6 / 6/	A 90.4
212						
133						
130	10' - 10'1"	No Recovery		50/	1/	
175						
40	10'1"- 13'8"	Brn F/C Sand and F/C Gravel,some small Cobbles, some Silt	D-1*	23%		D 85.5
33						
30						
250						
RUN-2	15' - 20'	Broken and Seamy Gray Granite	D-2	92%		D
RUN-3	20' - 24'		D-3	100%		76.5

(h) (j) (k) (l) (m)

* 4.5" O.D. casing driven after drilling

SOIL BORING DATA

(a) Number blows to drive casing one (1) foot
(b) Sample depth
(c) Description
(d) Sample number
(e) Blows on sample spoon
(f) Penetration of sample spoon (inches)
(g) elevation (feet) and method of advancing boring: A-4.5" O.D., 4.0" I.D. casing
B-3.5" O.D., 3.0" I.D. casing
C-3.75" O.D. roller bit
D-NMX core barrel

ROCK CORING DATA

(h) Run number
(j) Sample depth
(k) Description
(l) Sample number
(m) % Recovery

B6

STA. 13+82, 40' RT. tan.

Ground El. 128.6

2	1' - 2'6"	Loose,Dry,Blk Cinders some F/C Sand and F/C Gravel	S-1	1/2 / 2/	6/6 / 6/	A
3						
7						
27						
50	5' - 6'6"	Dense,Dry	S-2	20/20 / 16/	6/6 / 6/	122.6
40						
51		Moist,Brn F/C Sand and F/C Gravel,some Silt				A
52						
140						
250						
30						
92						116.1
105	12'6" - 14'	Very Dense,Moist,Brn & Gray Dec. Rock & Rock Fragments	S-3	30/38 / 70/	6/6 / 6/	A
125						
115						
45						
75	16'6" - 18'	Very Dense,Wet	S-4	25/40 / 75/	6/6 / 6/	
126						
175						
200						
65	21' - 21'7"	Very Dense,Wet	S-5	26/135 /	6/1 /	
160						
						104.9
RUN-1	23'8"- 25'4"	Broken & Seamy Granite	D-1	100%		D
RUN-2	25'4"- 30'4"		D-2	100%		
RUN-3	30'4"- 34'2"		D-3	100%		94.4

B7

STA. 14+12, 36' RT. tan.

Ground El. 117.8

6	1' - 2'6"	Med-Dense,Brn C/F Sand and Gravel Fill	S-1	7/5 / 6/	6/6 / 6/	A
18						114.8
62						
75						
52						
30	5' - 6'6"	Very Dense,Damp,Brn Decomposed Granite	S-2	52/60 / 81/	6/6 / 6/	A
50						
175						
250	10' - 10'3"		S-3	150/	3/	107.3
325						
RUN-1	10'6" - 15'	Soft & Seamy Gray Granite	D-1	94%		D
RUN-2	15' - 20'		D-2	100%		97.8

B8

STA. 14+98, 13.5' RT.

Ground El. 100.9

6	1' 2'6"	Gray C/F Sand & Gravel Fill	S-1	3/3 / 6/	6/6 / 6/	A 99.4
9						
28		Dense,Dry,Brn Silt,trace F/C Sand				A 96.9
24						
85	5' - 6'6"	Very Dense,Dry,Brn & Gray C/F Sand & C/F Gravel,some Rock Fragments,trace Silt	S-2	33/72 / 103/	6/6 / 6/	A
130						
132						92.1
140						
250						
RUN-1	8'9"- 13'9"	Broken & Seamy Gray Granite	D-1	63%		D
RUN-2	13'9"- 17'9"		D-2	90%		
RUN-3	17'9"- 22'9"		D-3	100%		78.1

BORING DATA

Casing: Type "A" - 4.5" O.D., 4.0" I.D.
Type "B" - 3.5" O.D., 3.0" I.D.
Weight of hammer: 300 lbs.
Average fall of hammer: 24 in.

Split-Spoon Sampler: 2.0" O.D.
Weight of hammer: 140 lbs.
Average fall of hammer: 30 in.

Core Drilling: NXM Type Core Barrel

DELAWARE
DEPARTMENT OF HIGHWAYS & TRANSPORTATION
DIVISION OF HIGHWAYS

SOIL BORING LOGS
SHEET 1

D.
T.
C.

SCALE

APPROVED BY: [signature] 1988
BRIDGE ENGINEER

ROBERT C. McDOWELL — 10 — PROFESSIONAL ENGINEER — STATE OF DELAWARE

D C B A 1 5 10 A B C D

COUNTY	CONTRACT	P. B. A. REG. NO.	STATE	FED. AID PROJECT NO.	SHEET NO.	TOTAL SHEETS
NEW CASTLE	79-071-02	2	DEL	M-1191 (1)	98	112

AUGUSTINE BRIDGE RECONSTRUCTION

NO.	REVISIONS	BY	DATE

B14

STA. 20+12.12, 19.3' RT.

Ground El. 41.8

2	1' - 2'6"	Loose,Damp,Blk & Brn Cinders, F/C Sand	S-1	2/2 4/	6/6 6/	A 38.8
2						
3						
4						
4						
5	5' - 6'6"	Stiff,Moist,Brn Silt,some F/C Sand, trace Clay	S-2	2/2 2/	6/6 6/	A 31.8
5						
6						
10						
9						
8	10' - 11'6"	Loose,Wet,Gray F/M Sand,some Silt,trace Mica Flakes	S-3	5/2 3/	6/6 6/	A 26.8
12						
10						
11						
11						
16	15' - 17'	Loose,Wet,F/C Sand,some F/M Gravel,tr Silt, tr Cinders	S-4	1/3 3/1	6/6 6/6	A 24.1
43	17' - 17'7"		S-5	69/55	6/1	
RUN-1	17'8" - 20'8"	Granite Footing 1'11" with Broken Granite & Quartz Below	D-1	50%		D 21.1
20'8"-22'6"		Dec. Rock and Rock Fragments	S-6	30/42	6/6	B 18.3
22'6"-23'3"				88/150	6/4	
23'3"-23'6"			S-7	112/150	6/3	
			S-8	100/	6/	
RUN-2	23'6" - 28'6"	Gray Granite	D-2	92%		D 8.6
RUN-3	28'6" - 33'3"		D-3	98%		

B18A

STA. 21+84.5, 1' RT.

Ground El. 81.4

4	1' - 2'6"	Loose,Damp,Brn F/C Sand and F/C Gravel,some Silt	S-1	4/4 4/	6/6 6/	A 70.4
9						
11						
13						
14						
10	5' - 6'6"	Dense,Moist	S-2	4/32 10/	6/6 6/	
35						
72						
60						
73						
25	10' - 11'6"	Med-Dense,Moist	S-3	15/10 13/	6/6 6/	A 64.4
81		Very Dense,Moist,Gray Dec. Rock and Rock Fragments				
90						
51						
35						
85						
103						
55	17'- 19'	Very Dense,Moist	S-4	50/35	6/6	B 59.5
79				44/52	6/6	
48	19'- 21'		S-5	60/65	6/6	
12				136/45	6/6	
95	21'- 21'11"		S-6	82/200	6/5	
RUN-1	22'- 26'	Broken & Seamy Granite	D-1	90%		D 44.2
RUN-2	26'- 29'9"		D-2	100%		
RUN-3	29'9" - 33'9"		D-3	75%		
RUN-4	33'9" - 37'3"		D-4	52%		

B4A

STA. 22+63.91, 3.5' LT.

Ground El. 99.2

5	1' - 2'6"	Loose,Damp,Brn F/C Sand and Gravel,trace Silt (Fill)	S-1	2/4 4/	6/6 6/	A 94.2
5						
9						
5						
20						
15	5' - 6'2"	Very Dense,Damp	S-2	4/35 150/	6/6 2/	B 85.5
25		8" Cobble at 6'2"				
30						
18						
16						
4	10' - 11'6"	Dense,Damp	S-3	8/4 31/	6/6 6/	
5						
8						
30(8")						
RUN-1	13'8" - 18'8"	Granite Block with Mortar Seams	D-1	83%		D 80.5

B4B

STA. 22+61.41 ℄

Ground El. 99.0

6	0' - 13'5"	Probe to locate footing by driving 3 1/2" Casing with 300 lb. Hammer				B 85.6
4						
4						
4						
3						
4						
5						
22						
28						
35						
20						
12						
14						
50/5"		Refusal at 13'5"				

B4C

STA. 22+59.41 ℄

Ground El. 98.8

5	0' - 14'5"	Probe to locate footing by driving 3 1/2" casing with 300 lb. hammer				B 85.4
5						
6						
5						
5						
10						
15						
30						
35						
35						
34						
30						
35		Test Boring Completed at 14'5"				
90						

B4D

STA. 22+60.01 ℄

Ground El. 99.2

5	0' - 13'8"	Probe to locate footing by driving 3 1/2" casing with 300 lb. hammer				B 85.5
7						
8						
5						
6						
10						
14						
30						
35						
30						
40						
30						
16						
50/8"		Refusal at 13'8"				

B9

STA. 23+09.5, 31.5' LT.

Ground El. 127.9

2	1' - 2'6"	Med-Dense,Moist,Brn F/C Sand and F/C Gravel,some Silt,tr Clay,some Cobbles & Boulders (Fill)	S-1	2/6 11/	6/6 6/	A 123.9	
19							
31							
200						C	122.9
150							
60	5' - 6'6"	Med-Dense,Damp,Brown Fine to Coarse Sand,some Silt, trace Clay	S-2	17/20 15/	6/6 6/	A	121.9
35							
35							
36							
30							
30	10' - 11'6"		S-3	9/9 8/	6/6 6/	A 107.9	
25							
40							
58							
70							
46	15' - 16'6"	Med-Dense,Damp	S-4	11/8 12/	6/6 6/		
63							
75							
75							
70							
67	20' - 21'6"	Med-Dense,Damp,Brown some Gray Dec. Rock, trace Rock Fragments	S-5	13/9 12/	6/6 6/	A 94.4	
49							
65							
79							
107							
53	25' - 26'6"	Dense,Damp	S-6	15/21 28/	6/6 6/	C	92.9
128							
110							
180							
350							
145	30' - 31'6"	Dense,Damp	S-7	58/27 30/	6/6 6/	A	92.2
116							
153							
300							
30						C 87.9	
70	35' - 35'9"	Very Dense,Damp	S-8	125/150	6/3		
	40' - 41'2"	Very Dense,Damp	S-9	23/45 150/	6/6 2/	A 81.9	
	45' - 45'3"	Very Dense,Damp	S-10	150/	3/		
RUN-1	46' - 51'	Brn & Gray Granite Void at 47'6"-47'9" and 48'6"-48'9"	D-1	85%		D 71.9	
RUN-2	51' - 56'		D-2	98%			

B10

STA. 23+10.5, 25' RT.

Ground El. 131.7

8	1' - 2'6"	Med-Dense,Damp,Brn F/C Sand, tr to some Silt,tr Clay, tr Fine to Coarse Gravel (Fill)	S-1	5/4 4/	6/6 6/	A 124.7
13						
23						
30						
45						
34	5' - 6'6"	Med-Dense,Damp	S-2	13/10 10/	6/6 6/	
25						
45	10' - 11'6"	Very Dense,Damp,Brn F/C Sand and F/C Gravel, tr Silt, tr Clay	S-3	97/55 15/	6/6 6/	A 120.7
70						
55						
16						
35		Damp,Brn F/C Sand,some Silt, tr Clay,tr F/M Gravel				
63	15' - 16'6"	Dense,Moist	S-4	65/18 16/	6/6 6/	A 107.9
70						
83						
56						
44						
53	20' - 21'6"	Med-Dense,Moist	S-5	8/8 13/	6/6 6/	
73						
80						
85						
95						
102	25' - 26'6"	Med-Dense,Moist	S-6	9/7 6/	6/6 6/	
98						
86						
60						
64						
72	30' - 31'6"	Med-Dense,Moist	S-7	15/12 8/	6/6 6/	
73						
73						
58						
60						
61	35' - 36'6"	Very Dense,Wet	S-8	53/72 23/	6/6 6/	94.4
132						
120						
80						
20/3"						
RUN-1	37'4" - 41'4"	Broken and Seamy Gray Granite	D-1	69%		D 86.2
RUN-2	41'4" - 45'4"		D-2	58%		
	45'6" - 46'	Very Dense,Moist	S-9	250/	6/	C 81.7	85.7
RUN-3	50' - 55'	Gray Granite Broken & Seamy Void 54.5' - 55'	D-3	88%		D 71.7	
RUN-4	55' - 60'	Gray Granite	D-4	100%			

DELAWARE
DEPARTMENT OF HIGHWAYS & TRANSPORTATION
DIVISION OF HIGHWAYS

SOIL BORING LOGS
SHEET 2

D.	SCALE	APPROVED BY:
T.		
C.		BRIDGE ENGINEER

HERBERT C. McDONALD ELSTER — REGISTERED — NO. 3068 — STATE OF DELAWARE

COUNTY	CONTRACT	F. R. A. REG. NO	STATE	FED. AID PROJECT NO	SHEET NO	TOTAL SHEETS
NEW CASTLE	79-071-02	2	DEL	M-1191(1)	99	112

AUGUSTINE BRIDGE RECONSTRUCTION

NO.	REVISIONS	BY	DATE

B21

STA. 22+62, 2.5' LT.

Ground El. 98.96

	1'-			S-1	6/3 2/	6/6 6/	
	2'6"						
	1						
	2						
	3						
	5	5'-	Brown Fine to Coarse Sand & Gravel with Silt & Clay	S-2	1/3 4/	6/6 6/	
	12	6'6"					
	18						
	18						
	15	10'-		S-3	1/3 4/	6/6 6/	
	5	11'6"					
	8						
	15						85.46
Run-1	58	13'6"-		D-1	9%		
		16'6"					
Run-2		16'6"-		D-2	89%		
		19'6"					
Run-3		19'6"-	Granite & Mortar Stone Masonry	D-3	73%		
		24'6"					
Run-4		24'6"-		D-4	61%		
		27'6"					
Run-5		27'6"-		D-5	50%		70.46
		28'6"					
	3	30'-		S-4	6/12 19/	6/6 6/	
	11	31'5"					
	27						
	40						
	130						
		35'-		S-5	16/31 46/	6/6 6/	
		36'6"	Decomposed Rock				
		40'-		S-6	25/59 43/	6/6 6/	
		41'3"					
Run-6		41'3"-		D-6	16%		
		45'					
		45'-		S-7	25/36 60/	6/6 6/	
		46'3"					
Run-7		46'3"-		D-7	57%		51.96
		48'					
Run-8		48'-		D-8	100%		
		49'					
Run-9		49'-		D-9	100%		
		54'					
Run-10		54'-	Gray Granite	D-10	97%		
		59'					39.96

B22

STA. 22+67, 21' LT.

Ground El. 103.0

	1'			S-1	2/2 2/	6/6 6/	
	2'6"						
	4						
	5						
	21						
	19	5'-		S-2	11/12 8/	6/6 6/	
	11	6'6"					
	18						
	21						
	31						
	21	10'-		S-3	18/3 2/	6/6 6/	
	12	11'6"					
	15						
	14						
	14						
	12	15'-		S-4	3/8 26/	6/6 6/	
	42	16'6"					
	23						
	32						84.0
	53						
	48	20'-		S-5	27/33 41/	6/6 6/	
	81	21'6"					
Run-1		22'-	Brown Decomposed Rock	D-1	0%		
		25'					
		25'-	Ground Water	S-6	6/11 18/	6/6 6/	77.0
		26'6"					
Run-2		26'6"-		D-2	0%		73.75
		29'3"					
Run-3		29'3"-	Granite	D-3	96%		
		34'					69.0
Run-4		34'-		D-4	0%		
		39'					
Run-5		39'-		D-5	20%		
		44'					
Run-6		44'-		D-6	10%		
		49'	Badly Weathered Broken Granite and Decomposed Rock				
Run-7		49'-		D-7	20%		
		54'					
Run-8		54'-		D-8	77%		
		59'					
Run-9		59'-		D-9	33%		
		64'					
Run-10		64'-		D-10	8%		34.5
		68'6"					
Run-11		68'6"-		D-11	100%		
		69'6"					
Run-12		69'6"-		D-12	98%		
		74'6"	Hard Granite, Broken				
Run-13		74'6"-		D-13	90%		
		79'6"					23.5

B23

STA. 22+67, 20' RT.

Ground El. 105.3

	5	1'-		S-1	3/3 4/	6/6 6/	
	10	2'6"	Clay, Fine Gravel				102.8
	50						
Run-1		2'6"-		D-1	100%		
		4'6"					
Run-2		4'6"-	Concrete	D-2	100%		98.8
		6'6"					
	4	6'6"-		S-2	4/6 9/	6/6 6/	
	17	8'					
	26						
	19						
	7	10'-		S-3	5/3 3/	6/6 6/	
	6	11'6"					
	9						
	13						
	16						
	21	15'-	Clay, Fine Gravel Trace Sand	S-4	7/4 11/	6/6 6/	
	30	16'6"					
	37						
	36						
	42						
	31	20'-		S-5	13/17 16/	6/6 6/	
	33	21'6"					
	39						
	37						
	38						
	21	25'-		S-6	7/5 12/	6/6 6/	78.8
	39	26'6"	Ground Water				
	46						77.3
	57						
	59						
	41	30'-		S-7	12/27 27/	6/6 6/	
	57	31'6"	Decomposed Rock				
	63	32'6"-		S-8	10/14 22/	6/6 6/	71.3
	110	34'					
Run-3		34'-		D-3	62%		
		37'6"					
Run-4		37'6"-		D-4	64%		
		41'	Granite				
Run-5		41'-		D-5	100%		
		46'					
Run-6		46'-		D-6	95%		54.3
		51'					

B24

STA. 22+81, 27' LT.

Ground El. 110.5

	7	1'-		S-1	4/6 6/	6/6 6/	
	13	2'6"					
	19						
	33						
	22						
	21	5'-		S-2	7/15 8/	6/6 6/	
	23	6'6"					
	31						
	47						
	32						
	7	10'-	Clay, Fine Sand, Medium Gravel	S-3	2/3 3/	6/6 6/	
	11	11'6"					
	14						
	24						
	20						
	17	15'-		S-4	5/5 5/	6/6 6/	
	27	16'6"					
	36						
	35						
	44						
	21	20'-		S-5	7/10 20/	6/6 6/	
	27	21'6"					
	36						
	80						87.0
Run-1		23'6"-		D-1			
		24'6"	Granite Weathered & Broken				
Run-2		24'6"-		D-2			84.5
		26'					
Run-3		26'-		D-3	80%		
		31'	Granite & Mortar Stone Masonry				
Run-4		31'-	Ground Water	D-4	80%		77.5
		36'					74.5
Run-5		36'-		D-5	78%		
		41'					
Run-6		41'-		D-6	42%		
		46'					
Run-7		46'-		D-7	55%		
		51'					
Run-8		51'-	Granite Weathered, Broken & Fractured	D-8	70%		
		56'					
Run-9		56'-		D-9	88%		
		61'					
Run-10		61'-		D-10	77%		
		66'					
Run-11		66'-		D-11	45%		
		71'					
Run-12		71'-		D-12	37%		34.5
		76'					
Run-13		76'-		D-13	100%		
		79'					
Run-14		79'-	Granite	D-14	75%		
		83'					
Run-15		83'-		D-15	93%		22.5
		88'					

B25

STA. 22+80, 21' RT.

Ground El. 109.0

	2	1'-		S-1	1/2 3/	6/6 6/	
	16	2'6"	Cement Fragments Ash Fill				
	17						
	48						
	63						104.0
	59	5'-		S-2	4/4 5/	6/6 6/	
	135	6'6"	Brown Sand, Clay & Gravel				
	200						101.0
Run-1		8'-	Granite	D-1	88%		
		10'					99.0
Run-2		10'-	Small Pieces of Stone & Gravel	D-2	0%		
		15'					94.0
	13	15'-		S-3	8/6 9/	6/6 6/	
	12	16'6"					
	15	16'6"-		S-4	8/7 8/	6/6 6/	
	23	18'	Silty Clay Trace of Sand				
	18	18'-		S-5	4/6 9/	6/6 6/	
	30	19'6"					
	31						87.0
Run-3		22'-		D-3	38%		
		24'					
Run-4		24'-25'		D-4	77%		
Run-5		25'-		D-5	100%		
		27'					
Run-6		27'-	Granite & Mortar Stone Masonry	D-6	69%		
Run-7		31'-		D-7	89%		
		34'					
Run-8		34'-		D-8	65%		70.5
		38'					
Run-9		38'-		D-9	60%		
		43'					
Run-10		43'-	Granite	D-10	77%		
		48'					
Run-11		48'-		D-11	85%		
		53'					
Run-12		53'-		D-12	88%		51.0
		58'					

BORING DATA FOR B21-B25 & B51-B54

Casing:
Size: NX, BX
Weight of hammer: 300 lbs.
Average fall of hammer: 24 in.

Split-Spoon Sampler:
Size: 2.0" O.D.
Weight of hammer: 140 lbs.
Average fall of hammer: 30 in.

Core Drilling:
Size of core bit: NX, BX

DELAWARE
DEPARTMENT OF TRANSPORTATION
DIVISION OF HIGHWAYS

SOIL BORING LOGS
SHEET 3

D T C	SCALE	APPROVED BY —
		ROBERT C. McDOWELL REGISTERED NO. 3069 PROFESSIONAL ENGINEER — BRIDGE ENGINEER

COUNTY	CONTRACT	A. R. A. REG. NO.	STATE	FED. AID PROJECT NO.	SHEET NO.	TOTAL SHEETS
NEW CASTLE	79-071-02	2	DEL.	M-1191(1)	100	112

AUGUSTINE BRIDGE RECONSTRUCTION

NO.	REVISIONS	BY	DATE

B26
STA. 22+88, ℄

Ground El. 131.0

	0-1'1"	3" Hot Mix on 8" Concrete Pavement					129.9
	1'1"-10'	Moist Multicolor Clay with Indication of Boulders					121.0
	16'6"-18'	Moist, Stiff, Multicolor Silty Clay (Decomposed Rock)	S-1	3/4	6/6		
				6/	6/		
	24'-25'6"	Moist, Firm, Multicolor Silty Clay (Decomposed Rock)	S-2	3/3	6/6		
				4/	6/		
	29'-31'	Moist, Stiff, Brown Silty Clay, Some Fine to Coarse Sand	S-3	4/5	6/6		
				6/8	6/6		
	34'-36'	Moist, Very Stiff Brown Silty Clay, Some Fine Sand, Trace of Gravel	S-4	6/8	6/6		
				14/18	6/6		
	39'-41'	Moist, Stiff, Brown Silty Clay, Trace Fine Gravel	S-5	6/4	6/6		
				5/30	6/5		90.0
Run-1	41'-46'	Mortared Granite Stone Masonry	D-1	100%			
Run-2	46'-51'		D-2	90%			
Run-3	51'-56'		D-3	51%			
Run-4	56'-61'		D-4	60%			65.0
Run-5	61'-66'	Granite Boulders	D-5	33%			70.0
Run-6	66'-74'	Granite	D-6	65%			
Run-7	74'-80'		D-7	78%			51.0

B51
STA. 21+ 62, 10'LT.

Ground El. 66.3

1	1'-	Silty Gray Sand & Decayed Vegetation	S-1	2/3	6/6		
2	2'6"			3/	6/		
5							
12							62.3
19		Ground Water					61.3
28	5'-	Silt, Sand,	S-2	6/17	6/6		
41	6'6"	Rock Fragments		8/	6/		59.3
Run-1	7'-10'	Granite	D-1	92%			
Run-2	10'-11'		D-2	83%			55.3
Run-3	11'-16'	Badly broken and weathered granite	D-3	30%			50.3
Run-4	16'-20'	Granite	D-4	75%			46.3
Run-5	20'-22'	Badly broken granite	D-5	96%			44.3
Run-6	22'-25'	Granite	D-6	94%			41.3

B52
STA. 21+62, 10'RT.

Ground El. 67.5

0	1'-	Gravel & Clay, Trace Sand Fill	S-1	1/3	6/6		
1	2'6"			5/	6/		65.0
8							
42							
28							
18	5'-	Clay, Gravel & Decomposed Rock	S-2	9/13	6/6		
23	6'6"			12/	6/		
25							
29							
43							57.5
18	10'-	Ground Water					56.08
20	11'6"		S-3	32/26	6/6		
20				31/	6/		
25		Decomposed Rock					
33	15'-		S-4	75/	3/		
67	15'9"						51.75
Run-1	15'9"-18'6"		D-1	39%			
Run-2	18'6"-22'7"		D-2	71%			
Run-3	22'7"-27'		D-3	75%			
Run-4	27'-29'		D-4	54%			
Run-5	29'-34'	Badly Broken, Weathered Seamy Granite	D-5	23%			
Run-6	34'-38'		D-6	25%			
Run-7	38'-43'		D-7	33%			
Run-8	43'-48'		D-8	37%			19.5
Run-9	48'-50'		D-9	100%			
Run-10	50'-54'6"	Granite	D-10	100%			
Run-11	54'6"-58'		D-11	81%			9.5

B53
STA. 21+84, 10'LT.

Ground El. 77.3

0	1'-	Miscellaneous Fill Silt, Clay & Rock Fragments	S-1	1/1	6/6		
1	2'6"			2/	6/		74.3
1							
2							
4							
12	5'-	Silty Clay & Rock Fragments	S-2	7/8	6/6		
21	6'6"			28/	6/		70.8
Run-1	6'6"-8'		D-1	100%			
Run-2	8'-13'	Ground Water	D-2	27%			67.3
Run-3	13'-16'		D-3	78%			
Run-4	16'-18'		D-4	83%			
Run-5	18'-20'6"	Granite	D-5	93%			
Run-6	20'6"-25'6"		D-6	95%			
Ru -7	25'6"-26'6"		D-7	100%			
Run-8	26'6"-30'		D-8	90%			47.3

B54
STA. 21+83, 10'RT.

Ground El. 81.0

4	1'-	Top Soil & Miscellaneous Fill	S-1	2/4	6/6		
7	2'6"			3/	6/		
7							78.0
9							
10							
9	5'-	Decomposed Granite Sandy Silt, Trace of Clay	S-2	10/6	6/6		
42	6'6"			6/	6/		
32							
37							
12			S-3	6/9	6/6		
18	10'-	Ground Water		6/	6/		
26	11'6"						68.5
52							
62							
78	15'-						66.0
	15'6"	Weathered Granite	S-4	112/	6/		65.5
Run-1	16'-19'		D-1	33%			
Run-2	19'-21'		D-2	58%			
Run-3	21'-25'		D-3	50%			
Run-4	25'-26'		D-4	42%			
Run-5	26'-28'		D-5	88%			
Run-6	28'-33'		D-6	12%			
Run-7	33'-38'	Granite	D-7	13%			
Run-8	38'-41'		D-8	81%			
Run-9	41'-42'		D-9	83%			
Run-10	42'-43'6"		D-10	94%			
Run-11	43'6"-48'		D-11	56%			
Run-12	48'-53'		D-12	95%			28.0

BORING DATA FOR B26:

Casing:
Size: 3 1/4" I.D. H.S. Auger

Split-Spoon Sampler:
Size: 2.0" O.D.
Weight of hammer: 140 lbs.
Average fall of hammer: 30 in.

Core Drilling:
Size of core bit: NX, AX

DELAWARE
DEPARTMENT OF TRANSPORTATION
DIVISION OF HIGHWAYS

SOIL BORING LOGS
SHEET 4

D.
T.
C.

SCALE

APPROVED BY —

BERT C. McDOWELL REGISTERED ENGINEER NO. 7059 STATE OF DELAWARE

BRIDGE ENGINEER

COUNTY	CONTRACT	P.R.A. REG. NO.	STATE	FED. AID PROJECT NO.	SHEET NO.	TOTAL SHEETS
NEW CASTLE	79-071-02	2	DEL.	M-1191(1)	112A	112

AUGUSTINE BRIDGE RECONSTRUCTION

NO.	REVISIONS	BY	DATE

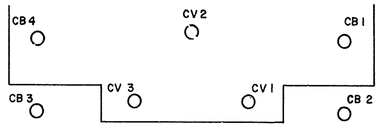

PLAN
Scale: N.T.S.
New East Abutment

NOTE:
All driven distances are measured from existing ground to the tip of shoe along the axis of the caisson.

CB 1

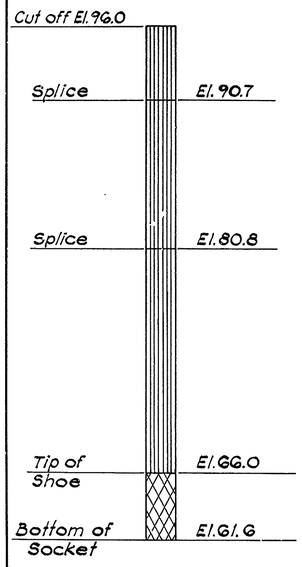

CB 2

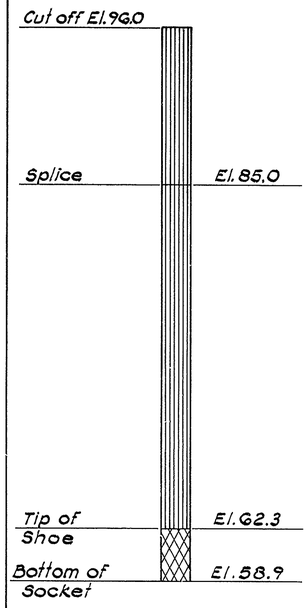

CB 3

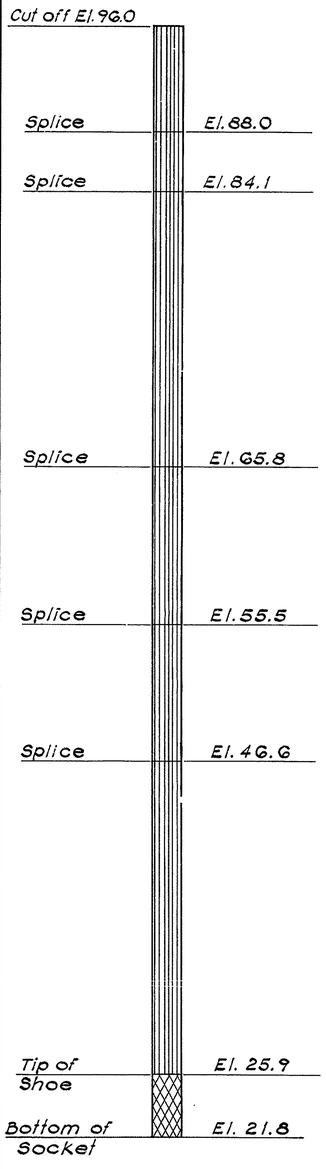

CB 4

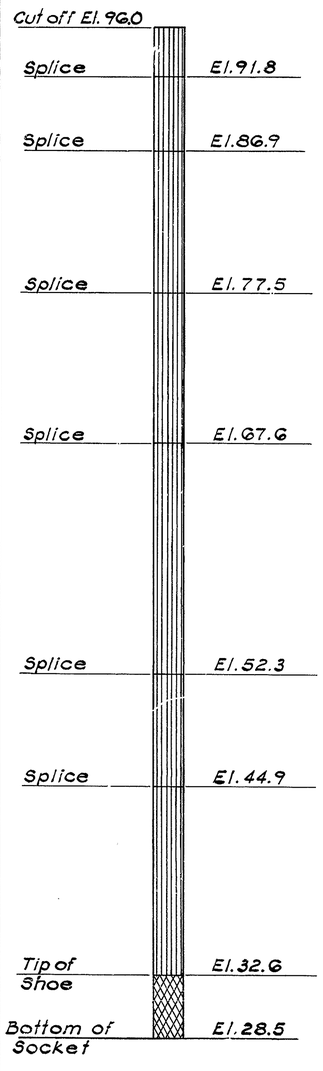

CV 1

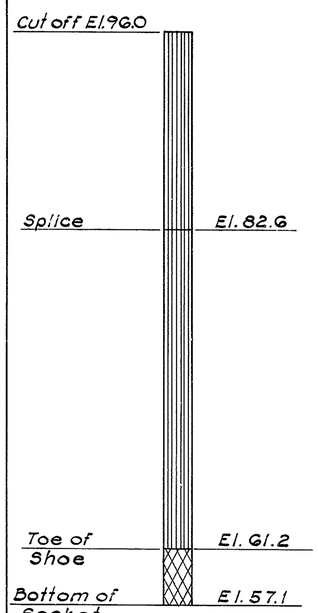

CV 2

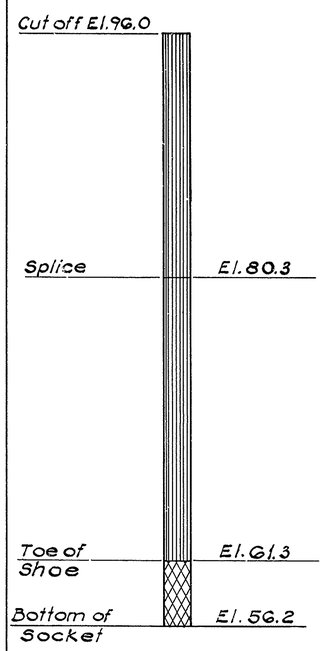

CV 3

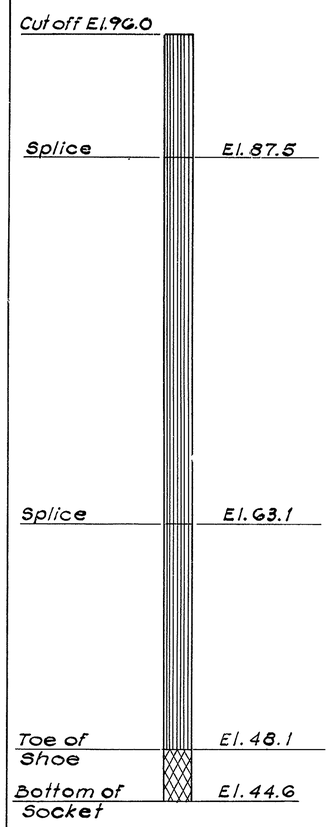

AS BUILT

DELAWARE
DEPARTMENT OF TRANSPORTATION
DIVISION OF HIGHWAYS

DRILLED - IN - CAISSONS
24" DIAMETER

D. T. C.	SCALE	APPROVED BY
	'	BRIDGE ENGINEER