ITEM	QTY.	MATERIAL	DESCRIPTION
A	16	CARBON STEEL ASTM A-675 GR.80	COUPLING RETAINER
B	96	STEEL - ASTM A307 ⚠1	3/8" REGULAR LOCK WASHER
C	96	BOLT STEEL ASTM A-307 GR. A	3/8"-11NC HEX HEAD CAP SCREW X 2 1/2"

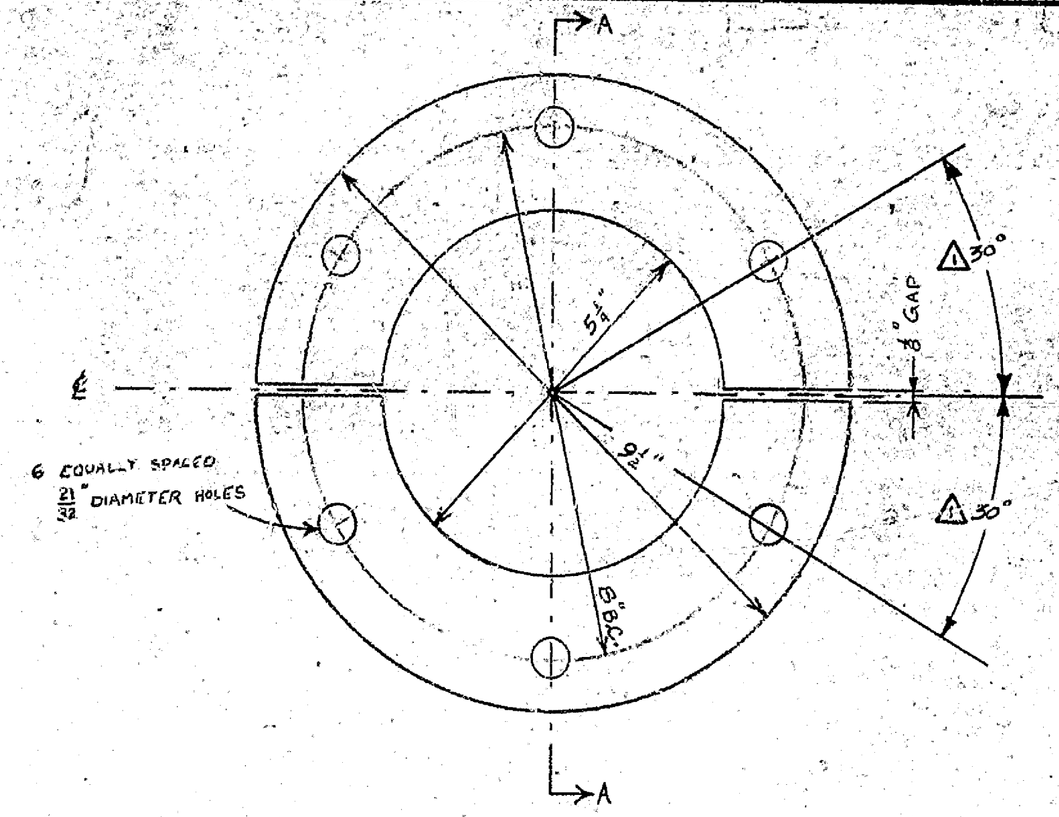

PART A-RETAINER- CARBON STEEL ASTM A-675 GRADE 80

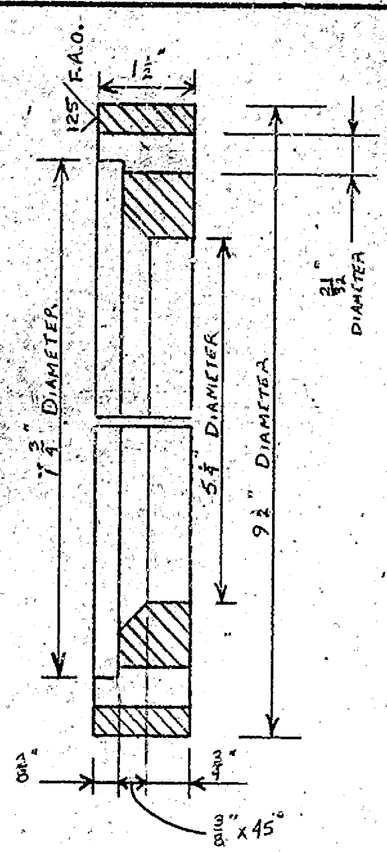

PART A: SECTION A-A

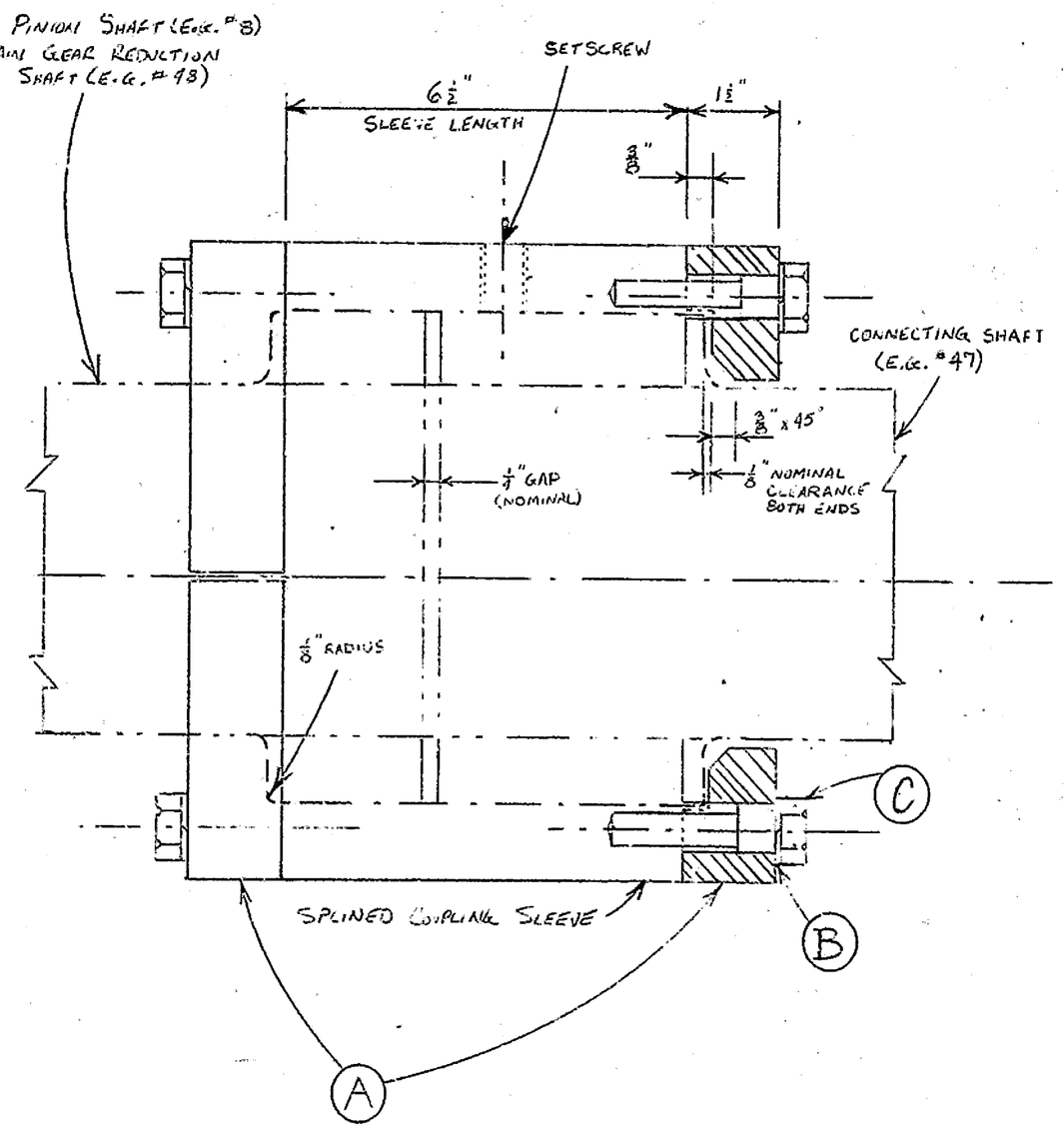

ASSEMBLY DRAWING

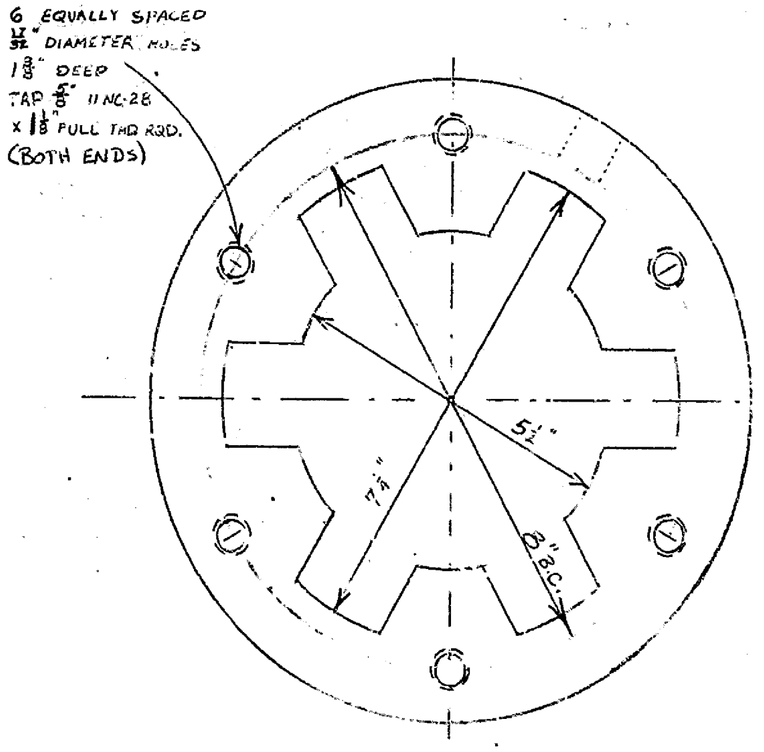

COUPLING SLEEVE - E.G. #43

TOLERANCES (EXCEPT AS NOTED)	REVISIONS			F.F. SLOCOMB CORP.		
DECIMAL ±	NO.	DATE	BY	COUPLING RETAINER ASSEMBLY		
FRACTIONAL ±	⚠1			DRAWN BY J.S.	SCALE 3/8" = 1'-0"	MATERIAL
ANGULAR ±	2			CHK'D J.F.K.	DATE 6/3/32	DRAWING NO. SRB-1
	3			TRACED	APP'D	
	4					
	5					

TELEDYNE POST 18AE-15E-18X24

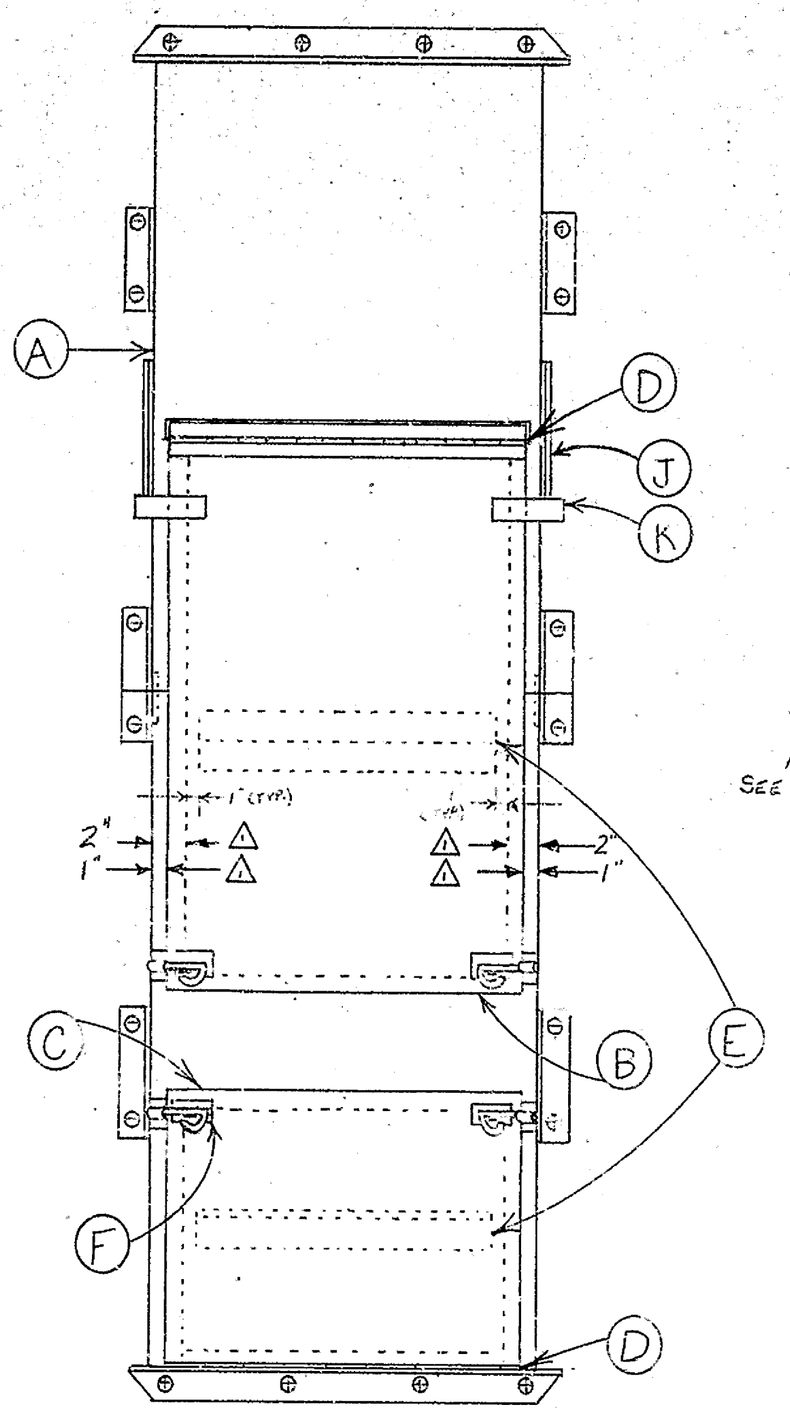

ASSEMBLY VIEW

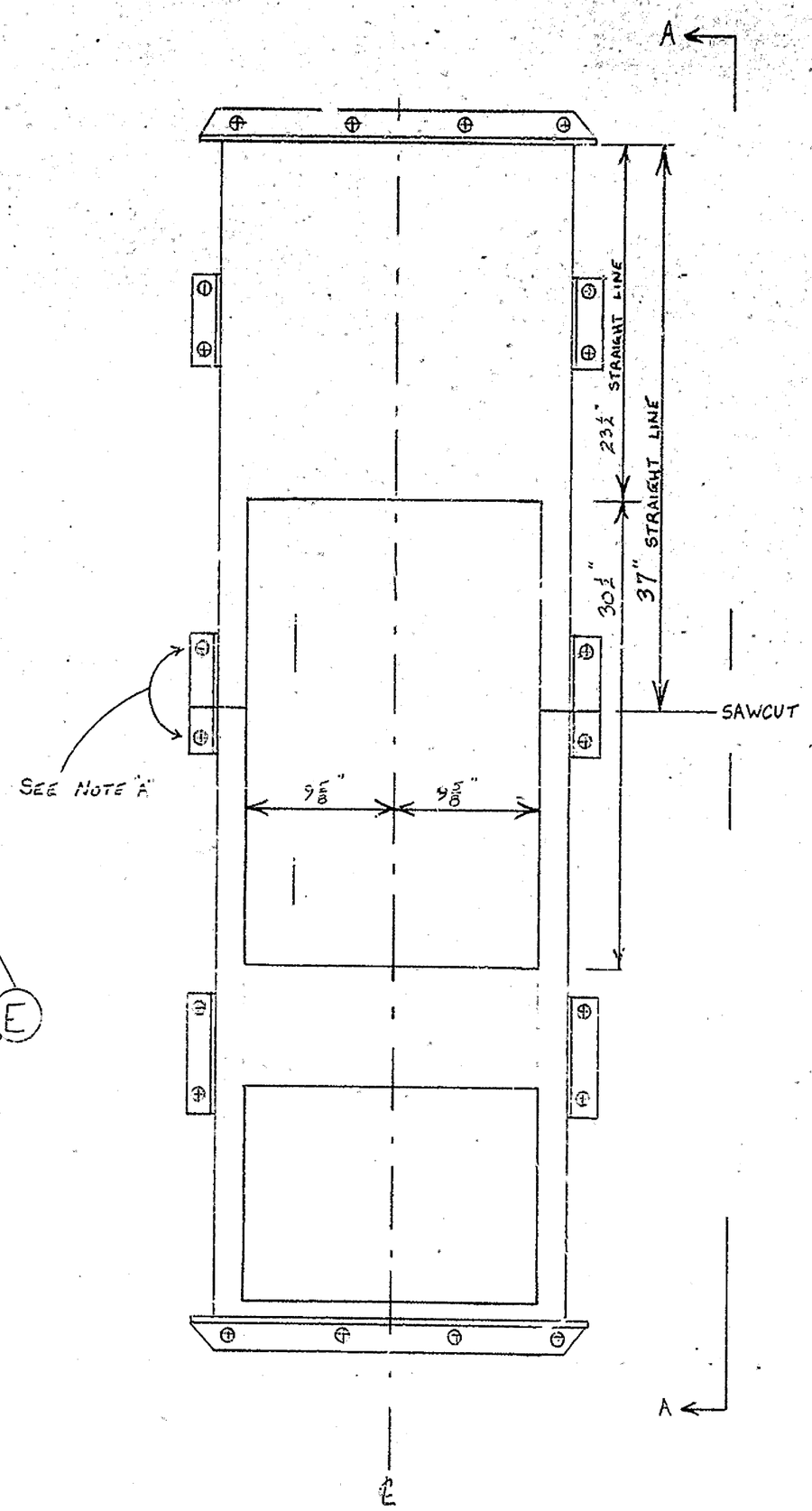

PART A

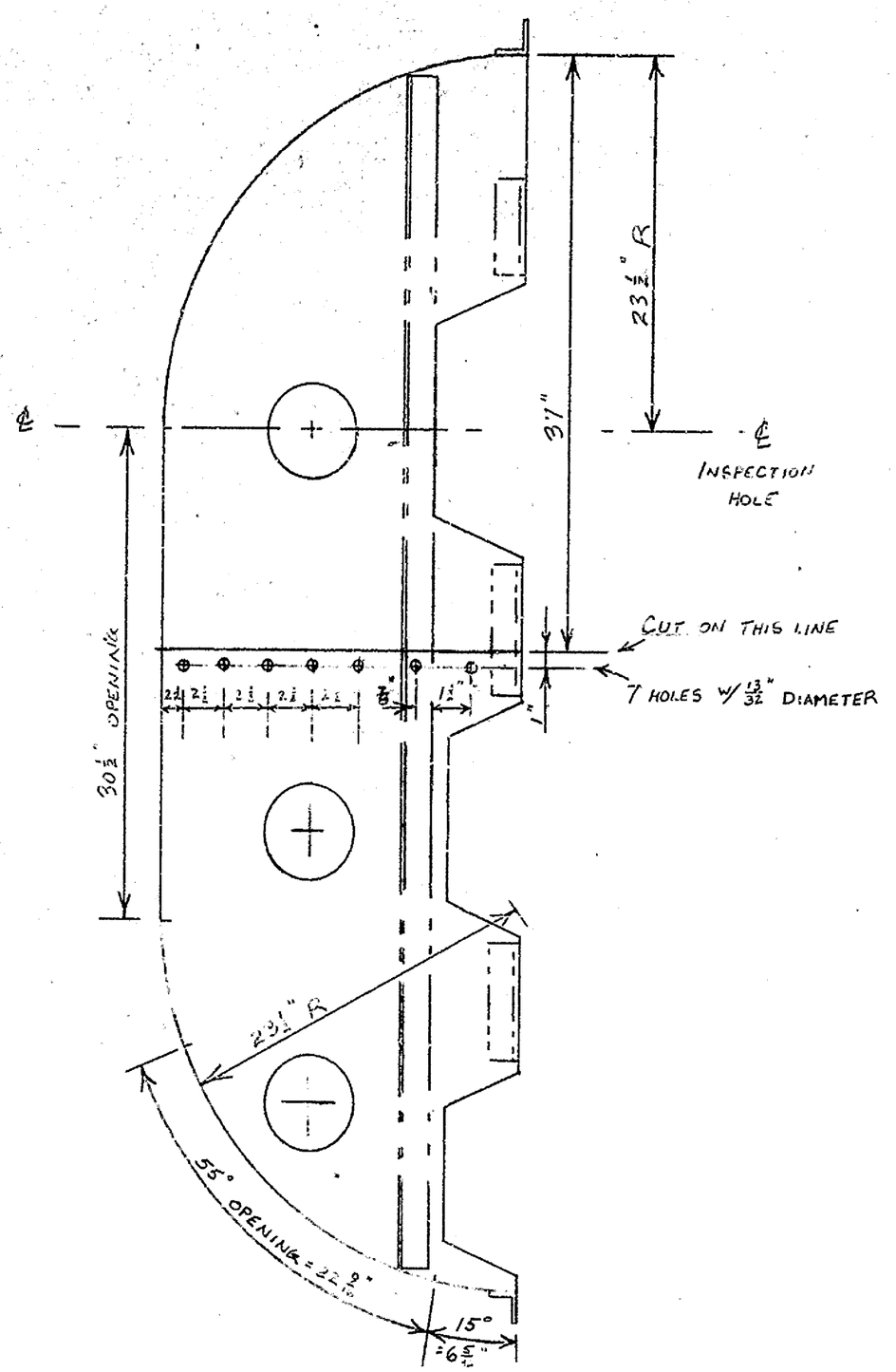

PART A : SECTION A-A

NOTE:
A) AFTER CUT, BRACKET HOLES TO REMAIN AS ORIGINALLY SPACED
B △2

C) [illegible] SUPPORTS, [illegible] SUPPORT TABS, HANDLES [illegible], AND MOUNTING PLATE SHIMS TO BE FILET WELDED ON WITH SIZE EQUAL TO THE MINIMUM METAL THICKNESS TO BE WELDED.

TOLERANCES (EXCEPT AS NOTED)	REVISIONS			F.F. SLOCOMB CORP.		
	NO.	DATE	BY			
DECIMAL ±	△1	8-6-82	JAS	MAIN REDUCTION UNIT COVER ASSEMBLY		
	△2	11-22-82	JFL			
FRACTIONAL ±	3			DRAWN BY J.S.	SCALE 1/8" = 1'-0"	MATERIAL
ANGULAR ±	4			CHK'D [illegible]	DATE 6/4/82	DRAWING NO. SRB-2½
	5			TRACED	APP'D	

TELEDYNE POST 18AE-15E-18X24

NOTE: 7 HOLES w/ 5/16" D DRILLED TAP 3/8 16NC-2B THRU PART K

ITEM	QTY.	MATERIAL	DESCRIPTION
A	4	STEEL	MAIN REDUCTION UNIT COVER
B	4	STAINLESS STEEL ASTM A 240 TYPE 304L 14 Ga.	MAIN REDUCTION UNIT COVER DOOR
C	4	STAINLESS STEEL ASTM A 240 TYPE 304L 14 Ga.	MAIN REDUCTION UNIT COVER DOOR
D	8	STAINLESS STEEL	PLANK CONT. HINGE - McMASTER-CARR # 1582A17 x 21 1/2" LONG
E	8	CARBON STEEL ASTM A 36 GRADE 70	STIFFENER 2 x 2 x 3/16 x 1 9/16 LONG
F	16	STEEL - ZINC PLATED	HEAVY DUTY LATCH McMASTER CARR # 1754A24
G	8	CARBON STEEL ASTM A 36 GRADE 70	PLATE 3 x 3/8 x 2 3/4 LONG
H	56	STAINLESS STEEL ASTM A 320 GRADE B8	3/8"-16 NC HEX HEAD CAP SCREW x 3/4" LONG
I	56	STEEL ASTM A307	REGULAR LOCK WASHER - 3/8"
J	8	STEEL - ZINC PLATED	HEAVY DUTY FOLDING BRAKE McMASTER-CARR # 1570A11
K	8	CARBON STEEL ASTM A 36 GRADE 70	DOOR ERASE TAB 3/8" BAR x 4 x 2"
L	8	STAINLESS STEEL ASTM A 240 TYPE 304L 14 Ga.	SHIM FOR HINGE 1 1/2 x 22"
M	16	STAINLESS STEEL ASTM A 240 TYPE 304L 14 Ga.	SHIM FOR LARGE PLATE 1" x 2 1/4"

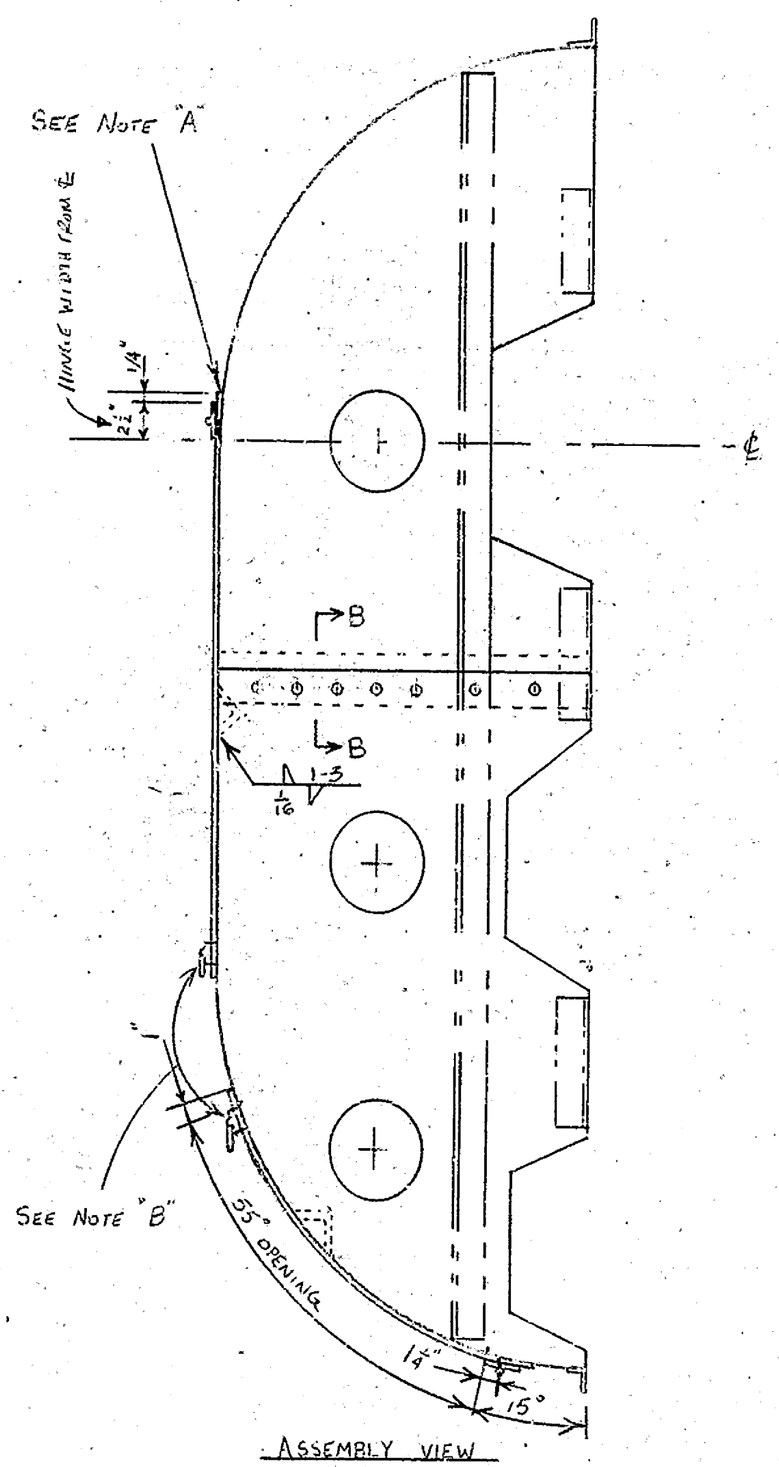

ASSEMBLY VIEW
SCALE: 1 1/2" = 1'-0"

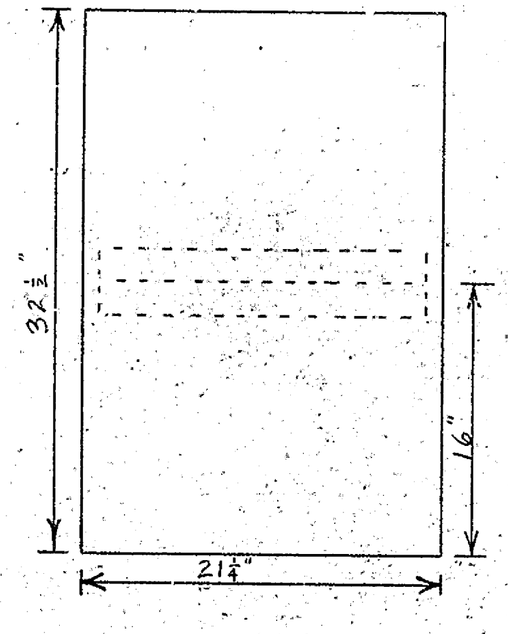

PART B - STAINLESS STEEL ASTM A 240 TYPE 304L 14 Ga.
SCALE: 1 1/2" = 1'-0"

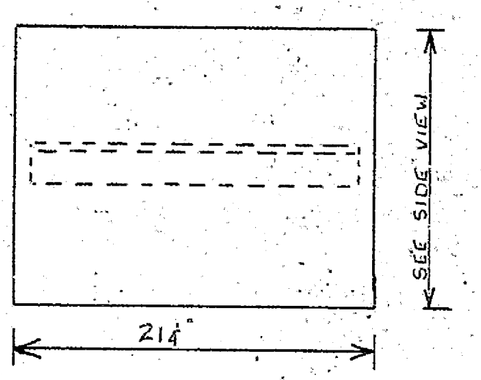

PART C - STAINLESS STEEL ASTM A 240 TYPE 304L 14 Ga.
SCALE: 1 1/2" = 1'-0"

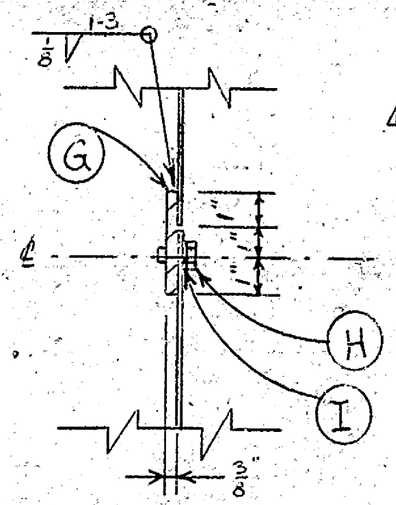

SECTION B-B
SCALE: 3" = 1'-0"

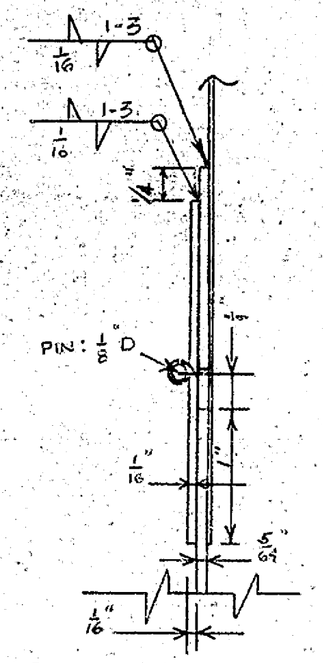

TYPICAL HINGE DETAIL
SCALE: FULL

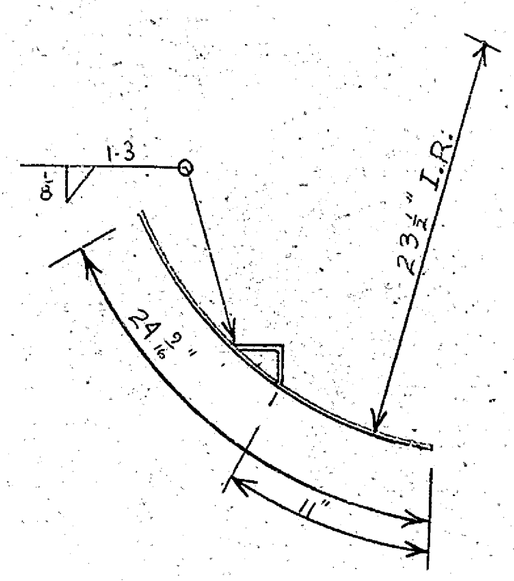

PART C: SIDE VIEW
SCALE: 1 1/2" = 1'-0"

NOTE:
A) 1 1/2" x 22" x 14 Ga. CONTINUOUS STAINLESS STEEL PLATE (ITEM L) TO BE WELDED UNDER HINGES TO LEVEL WITH DOORS
B) 1" x 2 1/4" x 14 Ga. STAINLESS STEEL PLATE (ITEM M) TO BE WELDED UNDER ALL LATCH HANDLE MOUNTING PLATES
C. (A)

TOLERANCES (EXCEPT AS NOTED)	REVISIONS NO.	DATE	BY	F.F. SLOCOMB CORP.
DECIMAL ±	(A)	9-27-82	JFL	MAIN REDUCTION UNIT COVER ASSEMBLY
FRACTIONAL ±	(B)	11-22-82	JFL	
ANGULAR ±	3			DRAWN BY: J.S. SCALE: AS NOTED MATERIAL
	4			CHK'D DATE 11/22/82 DRAWING NO. SRB-2 2/2
	5			TRACED APP'D

TELEDYNE POST - 18AE-15E-18X24

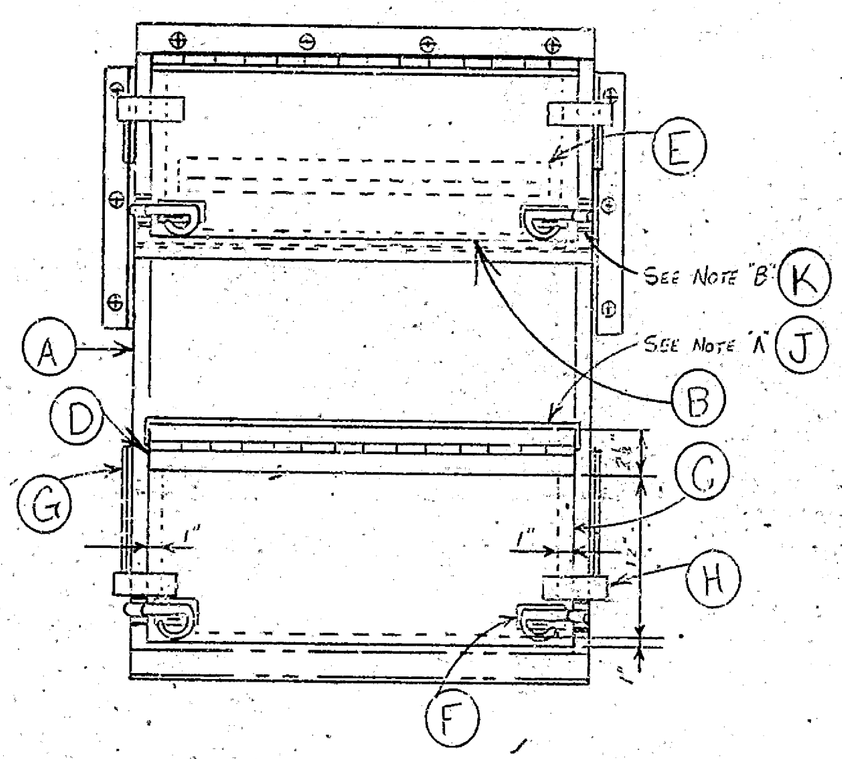

ASSEMBLY VIEW
SCALE: 1½"=1'-0"

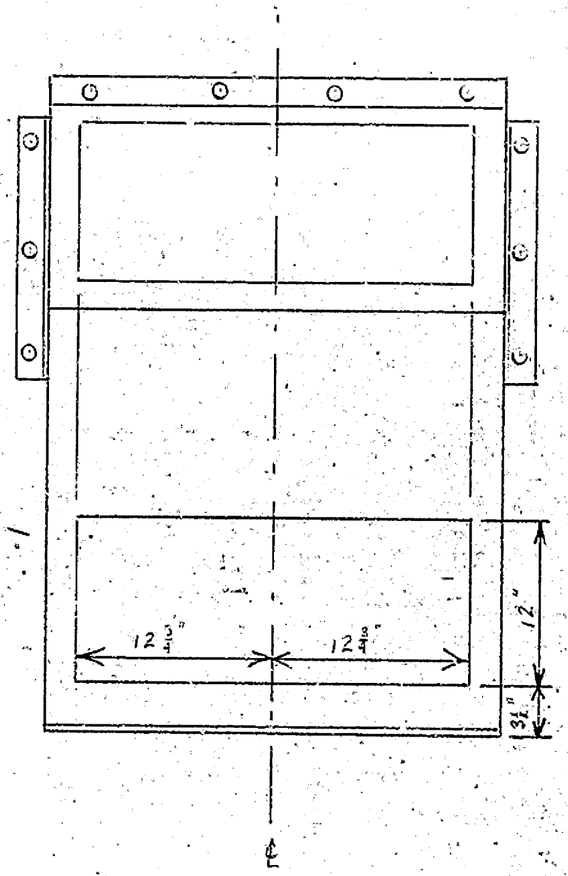

PART A
SCALE: 1½"=1'-0"

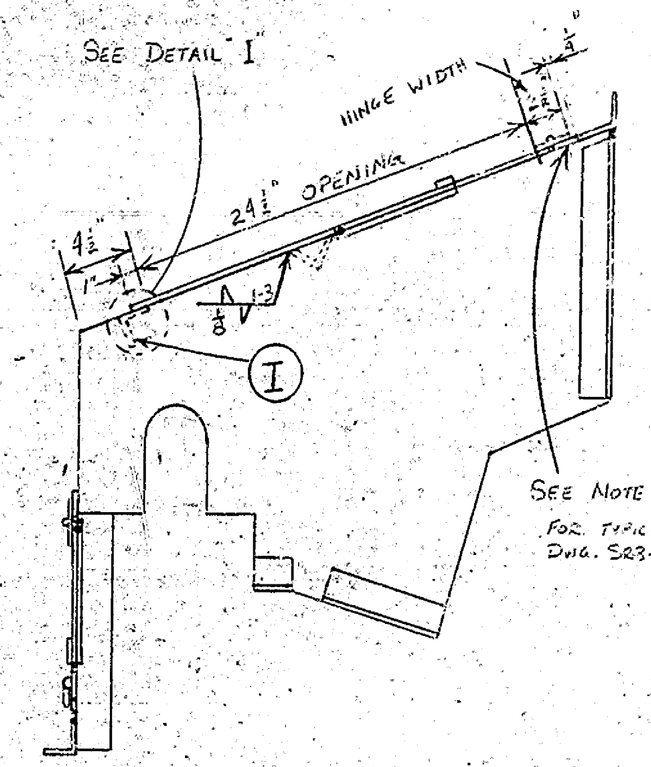

ASSEMBLY SIDE VIEW
SCALE: 1½"=1'-0"

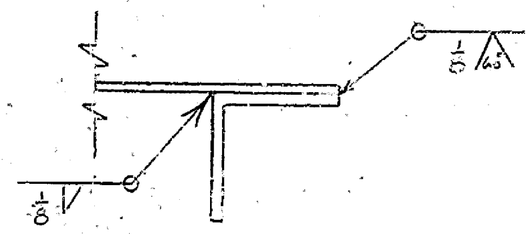

DETAIL I
SCALE: 6"=1'-0"

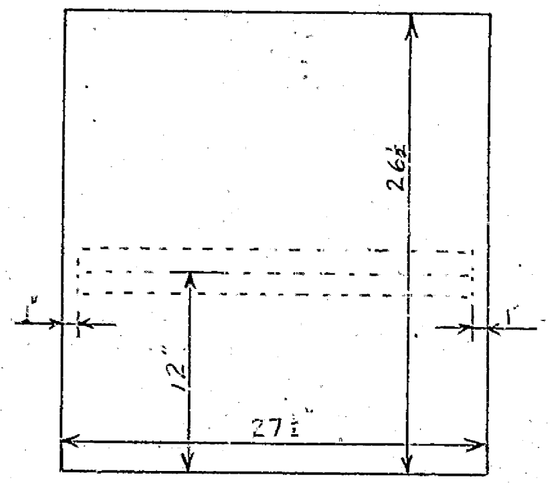

PART B - STAINLESS STEEL ASTM A-240
SCALE: 1½"=1'-0" TYPE 304L 14 Ga.

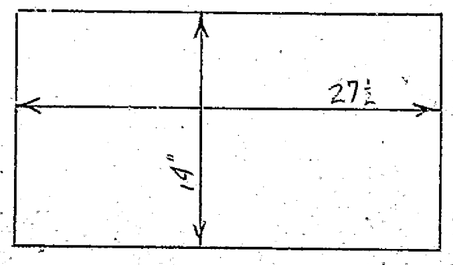

PART C - STAINLESS STEEL ASTM A-240
SCALE: 1½"=1'-0" TYPE 304L 14 Ga.

NOTE:

A) 1½" X 28" X 14 Ga. STEEL PLATE (ITEM J) TO BE WELDED UNDER HINGES TO LEVEL WITH DOORS. (ASTM A-240 TYPE 304L)

B) 1" X 2¾" X 14 Ga. STEEL PLATE (ITEM K) TO BE WELDED UNDER ALL LATCH HANDLE MOUNTING PLATES. (ASTM A-240 TYPE 304L)

C △

D) DOOR SUPPORTS, DOOR SUPPORT TABS, HANDLES, MOUNTING PLATES, AND MOUNTING PLATE SHIMS TO BE FILET WELDED ON WITH SIZE EQUAL TO THE MINIMUM MATERIAL THICKNESS TO BE WELDED.

ITEM	QTY.	MATERIAL	DESCRIPTION
A	2	STEEL	DIFFERENTIAL REDUCTION UNIT COVER
B	2	STAINLESS STEEL ASTM A-240 TYPE 304L 14 Ga.	DIFFERENTIAL REDUCTION UNIT COVER DOOR
C	2	STAINLESS STEEL ASTM A 240 TYPE 304L 14 Ga.	DIFFERENTIAL REDUCTION UNIT COVER DOOR
D	4	STAINLESS STEEL TYPE 304 2B	BUTT CONT. HINGE - McMASTER CARR #1582A47 (27½")
E	2	CARBON STEEL ASTM A-36 3/16 PLATE	STIFFENER 2 1/2 x 3/16 x 25½" LONG
F	8	STEEL - ZINC PLATED	HEAVY DUTY LATCH - McMASTER CARR #1754A24
G	8	STEEL - ZINC PLATED	HEAVY DUTY FOLDING BRACE - McMASTER CARR #1570A11
H	8	CARBON STEEL ASTM A-36 3/8 BAR	TAB FOR DOOR SUPPORT 4 x 2"
I	2	CARBON STEEL ASTM A-36	ANGLE 2"x2"x3/16" x 29¾" LONG - CUT TO FIT
J	4	STAINLESS STEEL ASTM A 240 TYPE 304L 14 Ga.	SHIM FOR HINGE - 1½ x 28"
K	8	STAINLESS STEEL ASTM A 240 TYPE 304L 14 Ga.	SHIM FOR LATCH PLATE - 1" x 2¾"

TOLERANCES (EXCEPT AS NOTED)	REVISIONS NO.	DATE	BY
DECIMAL ±	△	9-27-82	JFL
FRACTIONAL ±	△	11-22-82	JFL
ANGULAR ±	3		
	4		
	5		

F.F. SLOCOMB CORP.
DIFFERENTIAL REDUCTION UNIT COVER ASSEMBLY

DRAWN BY	SCALE	MATERIAL
J.S.	AS NOTED	
CHK'D	DATE	DRAWING NO.
TRACED	APP'D	SRD-3

6/9/82

TELEDYNE POST 18AE-15E-18X24

ITEM	QTY.	MATERIAL	DESCRIPTION
A	6	STEEL ASTM A-449	5/8"-11 NC HEX HEAD CAP SCREW x 2 1/2"
B	6	STEEL - ASTM A307 - ⚠	5/8" MEDIUM LOCK WASHER
C	2	CARBON STEEL ASTM A675 GRADE 80	AIR MOTOR ADAPTER
D	2	STEEL	E.G. #187 GEAR G7
E	6	STAINLESS STEEL	5/8-11 NC SLOTTED FLAT PT. SET SCREW x 1" LG.
F	8	STAINLESS STEEL	3/4-10 NC SET SCREW x 1 1/4 LONG

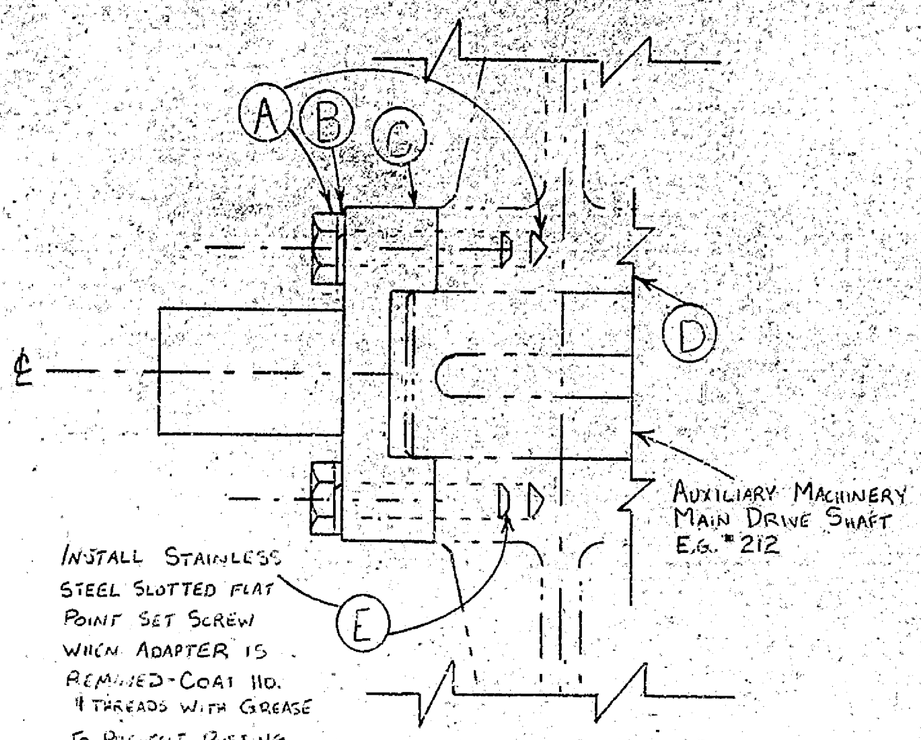

ASSEMBLY VIEW

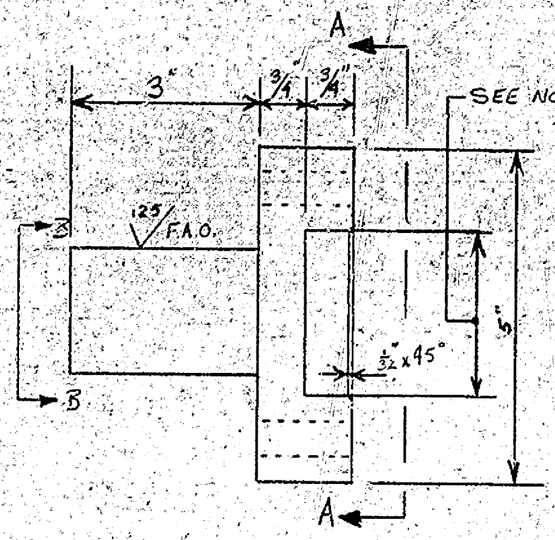

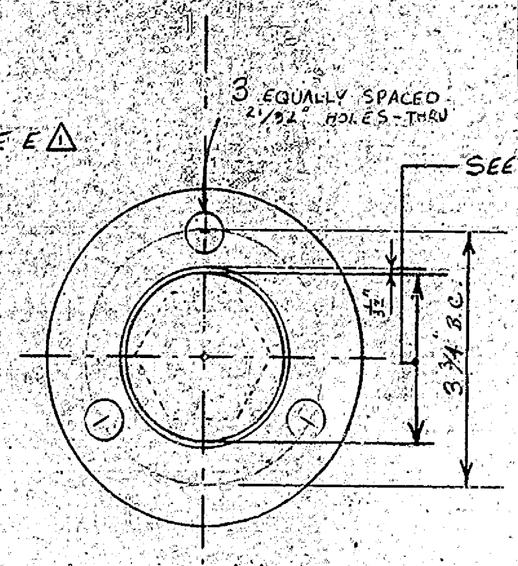

VIEW A-A

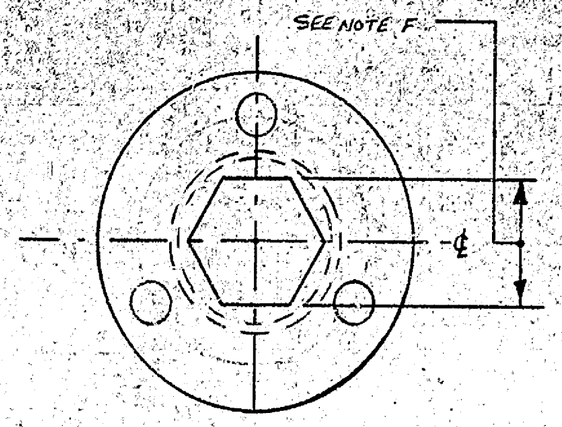

VIEW B-B ⚠

PART C - AIR MOTOR ADAPTER - CARBON STEEL ASTM A-675 GRADE 80

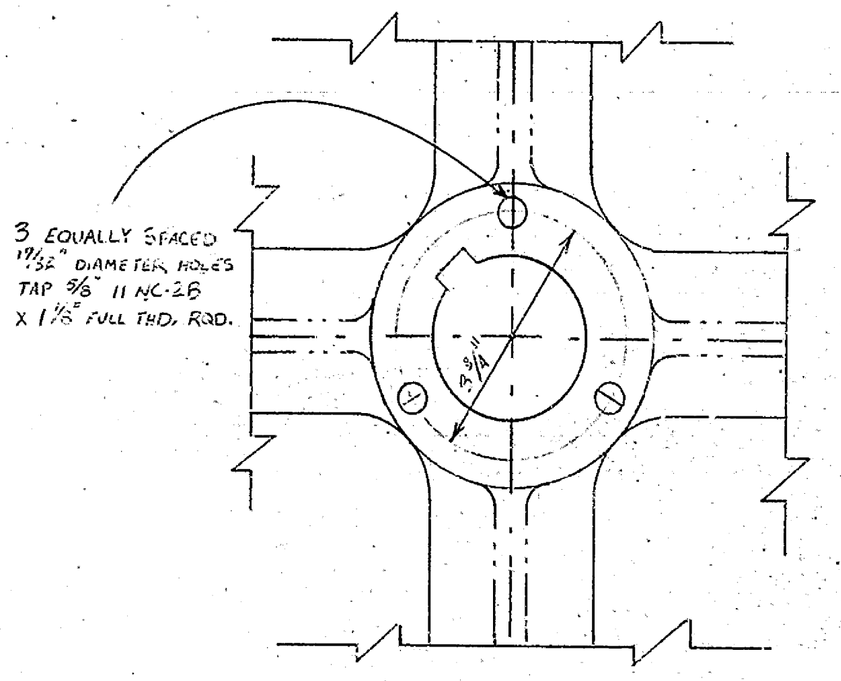

PART D - GEAR G7 - E.G. #187

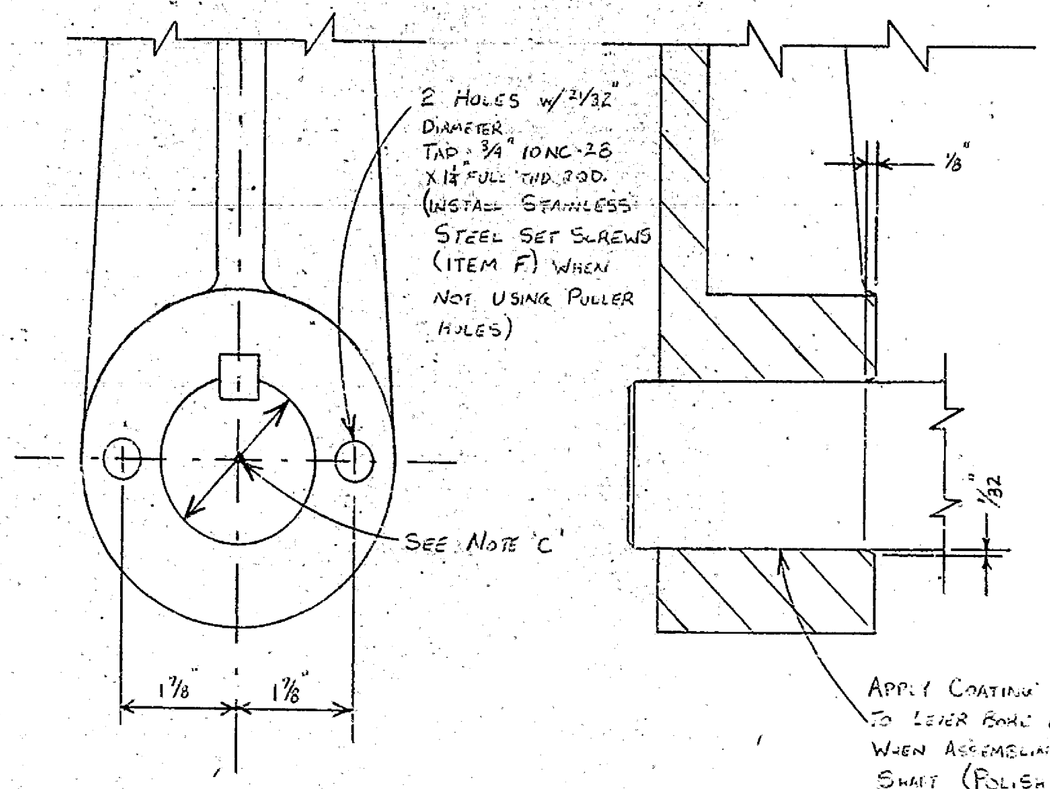

CRANK LEVER - ADD PULLER HOLES
ADD CHAMFER

NOTE:

A) HAND CRANK LEVERS TO BE REMOVED WHEN AIR MOTOR ADAPTER IS ATTACHED TO HUB OF GEAR G7

B) ADAPTER TO BE STORED AWAY WHILE NOT IN USE AND SET SCREWS INSTALLED AS INDICATED

⚠ C) BORE IN CRANK LEVERS TO BE MACHINED TO RC1 FIT TO SHAFT - .0004 / .0012 - CLEARANCE SLIP FIT

⚠ D) DRILL HOLES IN HUB OF GEAR G7 FOR ADAPTER IN FIELD.

⚠ E) BORE IN AIR MOTOR ADAPTER TO BE RC5 FIT TO SHAFT E.G. # 212 - .0025 / .0055 - CLEARANCE SLIP FIT.

⚠ F) CUT HEXAGON ACCORDING TO AMERICAN NATIONAL STANDARD FOR HEX BOLTS 1 1/8" ACROSS FLATS WITH GIVEN TOLERANCES AS SHOWN IN MACHINERY'S HANDBOOK - PAGE 1153 20TH EDITION (COPIES ENCLOSED)

TOLERANCES (EXCEPT AS NOTED)	REVISIONS NO.	DATE	BY
DECIMAL ±	⚠	8-6-82	JAS
FRACTIONAL ±	2		
ANGULAR ±	3		
	4		
	5		

F.F. SLOCOMB CORP.

AUXILIARY DRIVE ASSEMBLY

DRAWN BY	SCALE	MATERIAL
T.S.	6" = 1'-0"	
CHK'D	DATE 6/9/82	DRAWING NO. SK-4
TRACED	APP'D	

TELEDYNE POST 18AE-15E-18X24

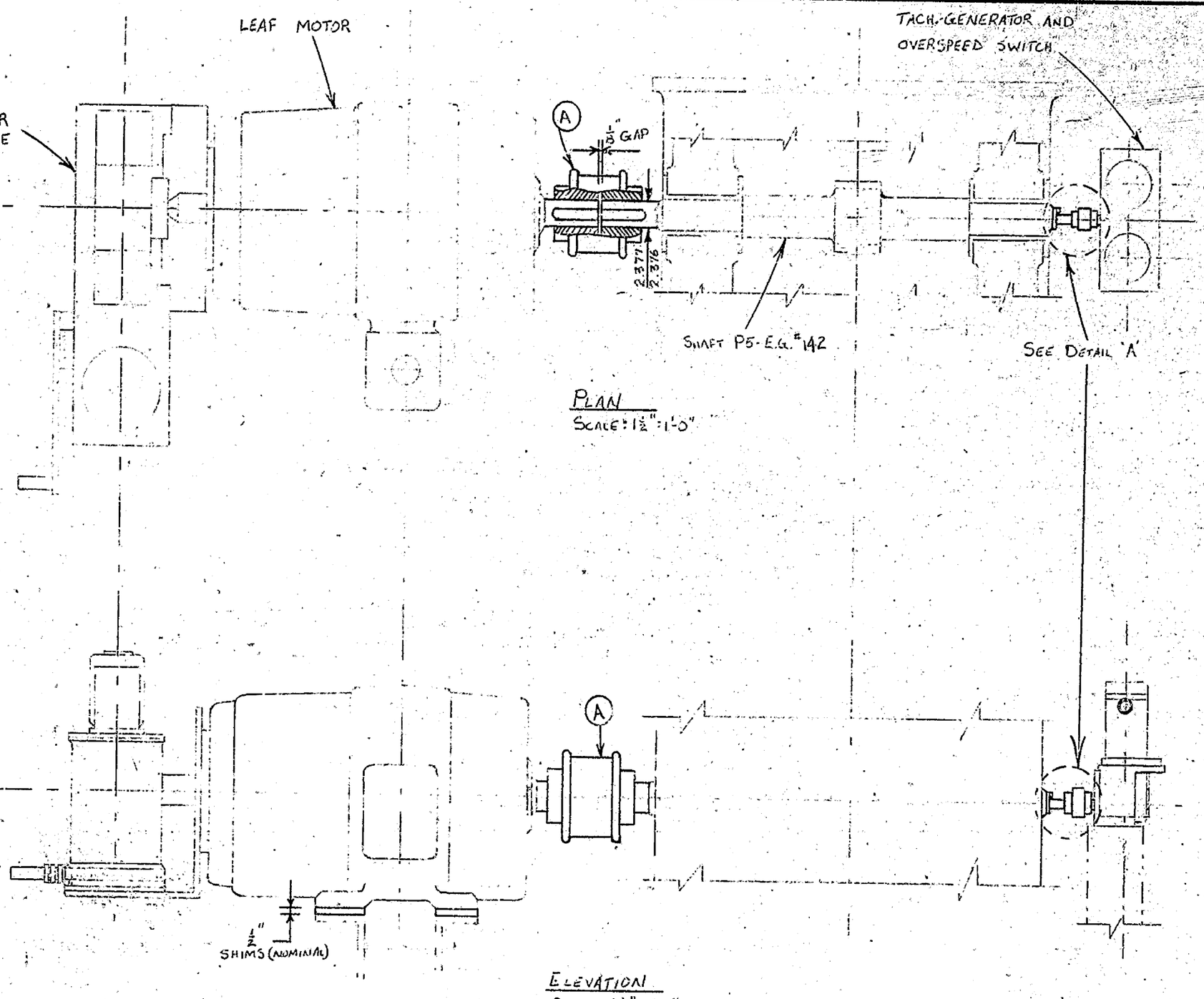

ITEM	QTY.	MATERIAL	DESCRIPTION
A	2	STEELFLEX	COUPLING C-1-FALK CORP. FITS TO SIZE 80-FN2 FIT
B	6	STEEL ASTM A307 △1	3/8" MEDIUM LOCK WASHER
C	6	STAINLESS STEEL A-320 GRB8	3/8"-16 NC HEX HEAD CAP SCREW x 1" LONG
D	2	CARBON STEEL ASTM A-675 GRADE 80	TACH.-GENERATOR ADAPTER
E	2	STEEL W/BOST-BRONZ INSERT	COUPLING C3-BOSTON GEAR# FCBB15-FN2 FIT
F	2	STEEL	SHAFT P5-E.G.#142

NOTE: A) UPON ARRIVAL OF TACH.-GENERATOR, CUT IN KEYWAY 3/16 ⌀ x 1 1/16" LONG TO ACCEPT COUPLING, ITEM E.

△1 B) BORE IN COUPLING-ITEM A TO BE FN2 FIT WITH ITEM D AND TACH-GEN. SHAFT.

△1 C) BORE IN COUPLING-ITEM E TO BE FN2 FIT WITH EXISTING SHAFT P5-E.G.#142 AND SHAFT FROM NEW MOTOR.

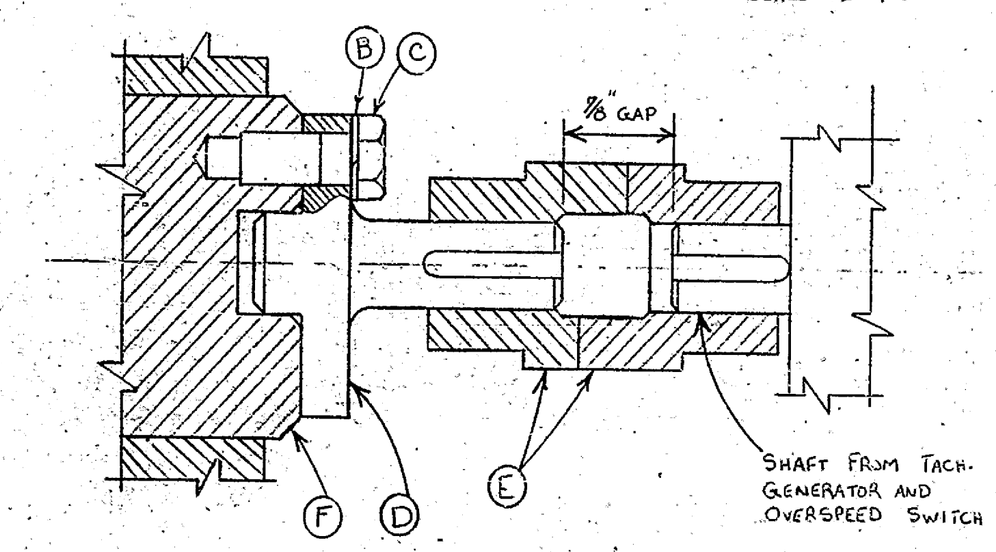

DETAIL 'A'
ASSEMBLY DRAWING-PINION SHAFT ADAPTER
SCALE: FULL

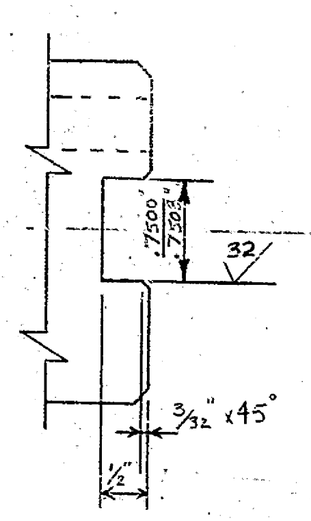

PART 'F'
SHAFT P5-E.G.#142
SCALE: FULL

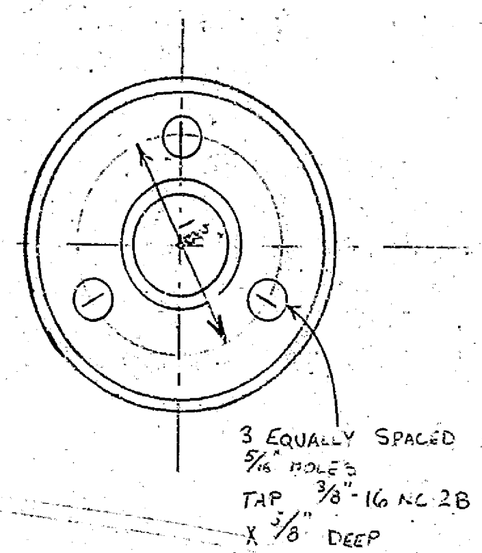

PART F-FRONT VIEW
SCALE: FULL

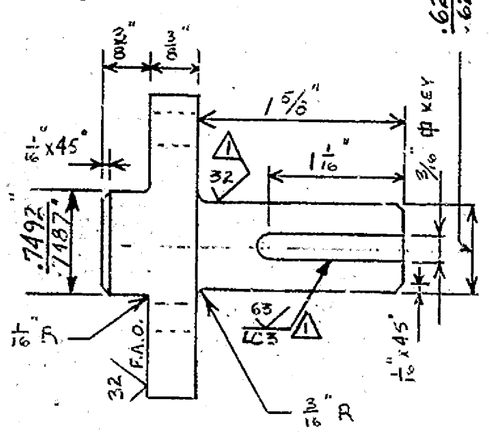

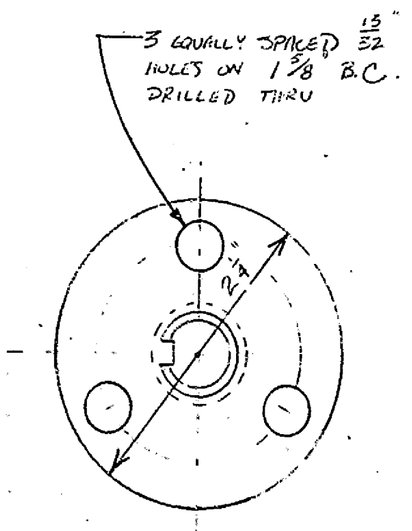

PART 'D'-PINION SHAFT ADAPTER FOR DRIVING TACH. GENERATOR
SCALE: FULL

TOLERANCES (EXCEPT AS NOTED)	REVISIONS NO.	DATE	BY	F.F. SLOCOMB CORP.
DECIMAL ±	△1	8-6-82	JAS	SHAFT P5 MODIFICATION
FRACTIONAL ±	△2	8-19-82	JAS	DRAWN BY J.S. / SCALE AS NOTED / MATERIAL
ANGULAR ±	3			CHK'D J.F.L. / DATE 6/14/82 / DRAWING NO. SRB-5
	4			TRACED / APP'D
	5			

TELEDYNE FOST 18AE-15E-18X24

3/8 Ø HEX HEAD BOLT SNUT AND L.W. - (4) REQUIRED AT ASSEMBLY

(F) (G) (H)

LIMIT SWITCH

SPUD COUPLING

REDUCER

ASSEMBLY PLAN

NOTE:
(A) LIMIT SWITCH COVER CONSTRUCTED OF 10 Ga. STAINLESS STEEL ASTM A240 TYPE 304L EXCEPT WHERE INDICATED.

B) EXPANDED METAL TO BE TACK WELDED TO FRAME, AND PLATES AROUND GEAR OPENINGS

C) STAINLESS STEEL TO BE PASSIVATED AFTER FABRICATION

△ D) BREAK ALL SHARP CORNERS

ITEM	QTY.	MATERIAL	DESCRIPTION
A	1	STAINLESS STEEL	LIMIT SWITCH COVER
B	1 PR	STAINLESS STEEL TYPE 302	HINGE McMASTER-CARR® 1586A21
C	1 PR	STAINLESS STEEL ASTM A240 TYPE 304L 16 Ga.	SUPPORT BRACKET
D	AR	STEEL ZINC PLATED	HEAVY DUTY LATCH McMASTER-CARR® 1754A24
E	1	STAINLESS STEEL ASTM A240 TYPE 304L 10 Ga.	LID FOR LIMIT SWITCH COVER
F	4	STEEL - ASTM A 307 GRADE A	HEX HEAD BOLT 3/8-16 NC x 1" LONG
G	4	STEEL	REGULAR LOCK WASHER 3/8 Ø
H	4	STEEL	NUT - 3/8

ASSEMBLY ELEVATION

△ FLATTENED STAINLESS STEEL TY 316 EXPANDED METAL 3/4" x 15F

14" R-F.S.

3/4" R-F.S.

2" R-N.S.

1" x 10 Ga. PL

PART 'A' - ELEVATION

PART 'A' ELEVATION

BRAKE SPECIAL CHANNEL - 10 Ga 2"x4"

10 Ga. PL

EXPANDED S.S.

PART 'A' - PLAN

ASSEMBLY ELEVATION

SECTION C-C

VIEW B-B

10 Ga.

PART E

OPPOSITE HAND - SAME DIMENSIONS AS DIMENSIONED BRACKET

7/16 Ø AT ASSEMBLY (4) HOLES

EXPANDED S.S.

1" x 10 Ga. PL (TYP)

SECTION A-A

TOLERANCES (EXCEPT AS NOTED)	REVISIONS NO.	DATE	BY	F. F. SLOCOMB CORP.
DECIMAL ±	△	8-26-82	JFL	COVER ASSEMBLY FOR LIMIT SWITCH GEARS
FRACTIONAL ±	△	9-22-82	JFL	
ANGULAR ±	△	10-20-82	JFL	DRAWN BY T.S. · SCALE 3"=1'-0" · MATERIAL
	4			CHK'D · DATE · DRAWING NO. SRB-6
	5			TRACED · APP'D

ITEM	Qty.	MATERIAL	DESCRIPTION
A	3	STEEL, PLATED	OIL RITE CORP. OIL LEVEL GAUGE TYPE A-3441 10" O.A.L.
B	3	BRASS ⚠1	½" NPT. NIPPLE X 3" LONG
C	3	BRASS ⚠1	PIPE TEE - ¼" NPT
D	3	BRASS ⚠1	½" NPT PLUG
E	3	STEELFLEX	COUPLING C2 - FALK CORP TYPE TID SIZE 50-FNZ FIT ⚠1
F	2	STEEL	CENTER LOCK FRONT GUIDE
G	2	STEEL	CENTER LOCK REAR GUIDE

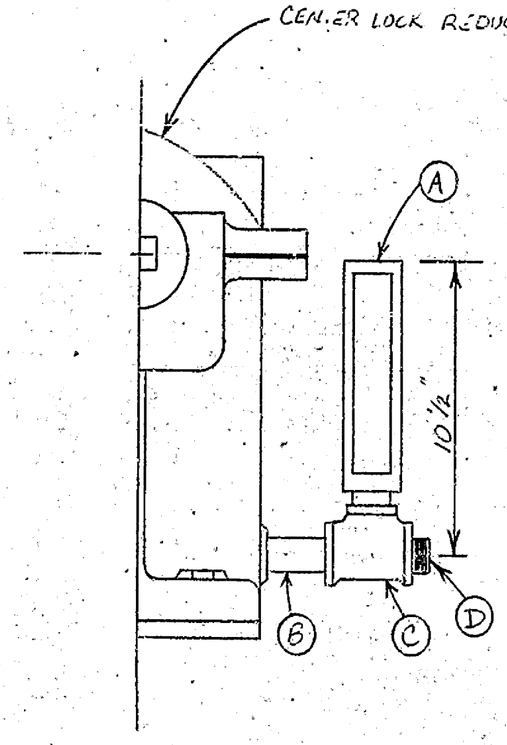

INSTALLATION OF OIL LEVEL GAUGE
NO SCALE

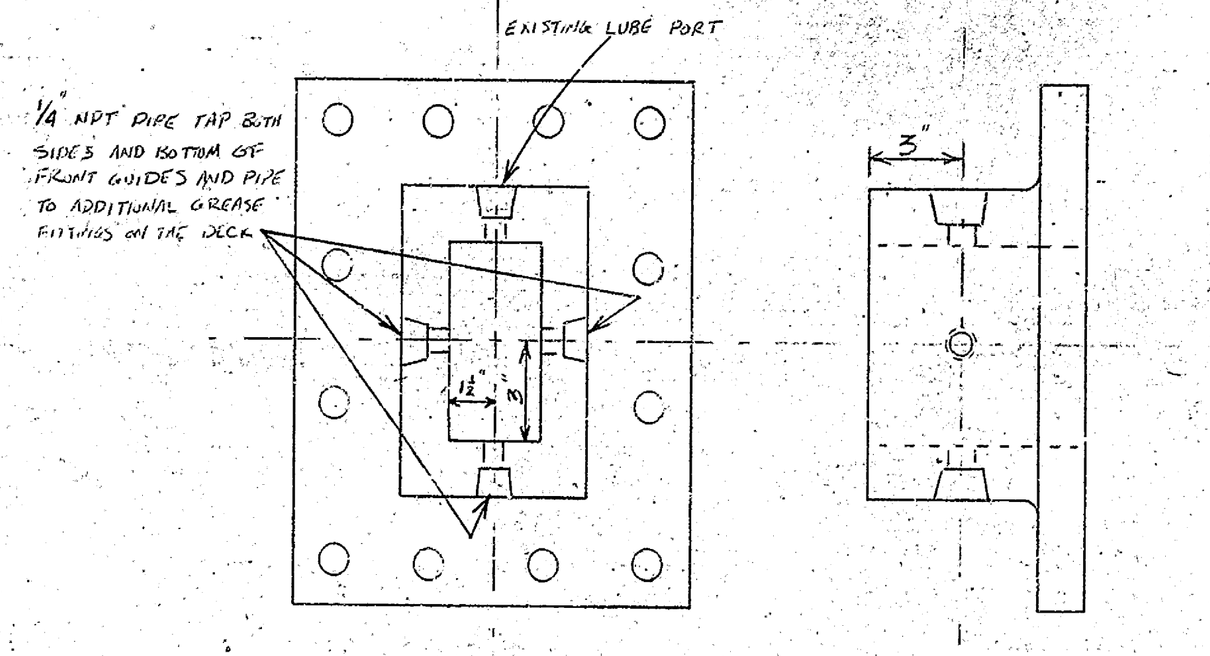

PART 'F' - MODIFICATION OF EXISTING FRONT GUIDES SCALE: 3"=1'-0"

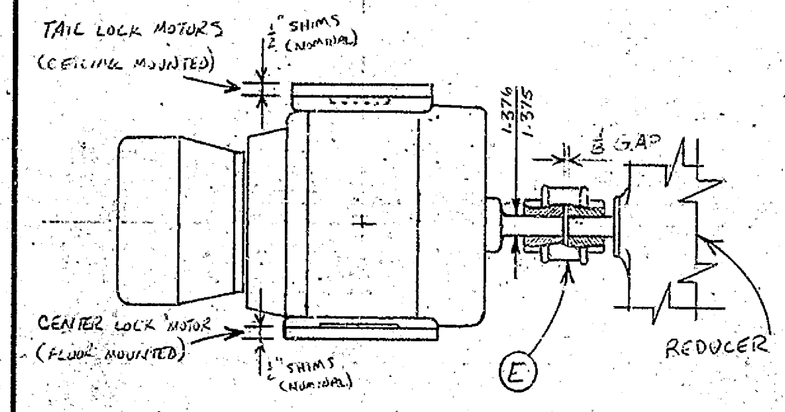

CONNECTION OF MOTOR TO REDUCER
FOR TAIL LOCK AND CENTER LOCK
SCALE: 1½"=1'-0"

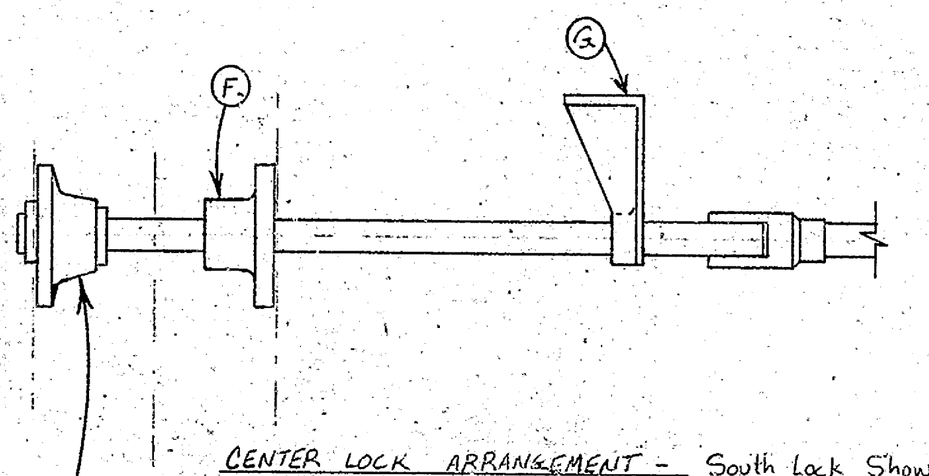

CENTER LOCK ARRANGEMENT - South Lock Shown
Not To Scale (North Lock Opposite Hand)

CENTER LOCK RECEIVING SOCKET AND SHOES - SEE DRAWING SRB-8

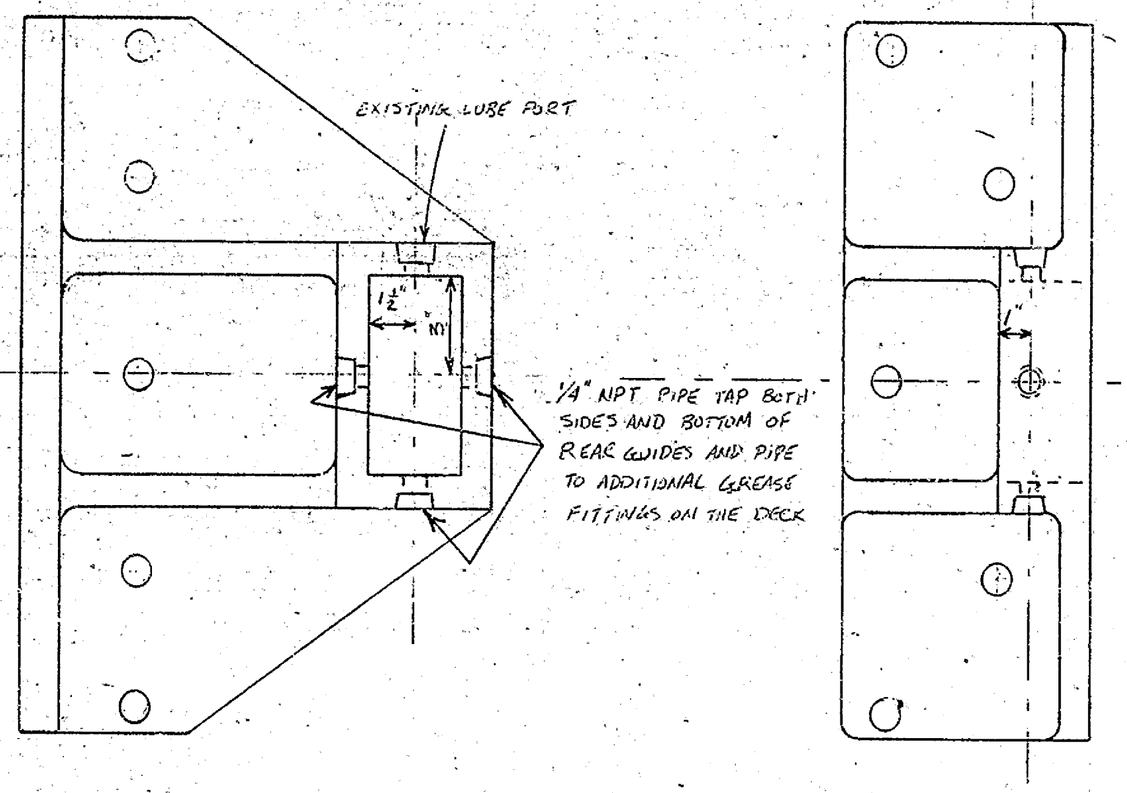

PART 'G' - MODIFICATION OF EXISTING REAR GUIDES SCALE: 3"=1'-0"

TOLERANCES (EXCEPT AS NOTED)	REVISIONS NO.	DATE	BY
DECIMAL ±	⚠1	8-6-82	JAS
FRACTIONAL ±	2		
ANGULAR ±	3		
	4		
	5		

F.F. SLOCOMB CORP.

LOCKING MACHINERY DETAILS 1

DRAWN BY	SCALE	MATERIAL
J.S.	AS NOTED	
CHK'D	DATE	DRAWING NO.
TRACED	APP'D	SRB-7
	6-17-82	

TELEDYNE POST 18AE-15E-18X24

ITEM	QTY.	MATERIAL	DESCRIPTION
A	2	CAST CARBON STEEL ASTM A-27 GRADE 70/36	CENTER LOCK SOCKET
B	4	MANGANESE BRONZE ASTM B22 ALLOY C86300	SHOE
C	24	BOLT STEEL ASTM A 449	1"-8NC HEX. HEAD, 1 BOLT x 5" LONG
D	24	STEEL - ASTM A307	1" MEDIUM LOCK WASHER
E	24	STEEL - ASTM A307	1" NUT
F	4	BOLT STEEL ASTM A 449 ⚠	5/8"-11 NC HEX HEAD CAP SCREW x 2 1/4" LONG
G	4	BOLT STEEL ASTM A 449 ⚠	5/8"-11 NC HEX HEAD CAP SCREW x 5 1/4" LONG
H	4	BRASS ⚠	PIPING 6" ℄ NPT NIPPLE
I	4	CARBON STEEL ASTM A-36 x 3/8	SHIM
J	16	HARD BRASS 1/64"	SHIM

NOTE: DRILL SCREW HEADS ON PARTS F & G FOR 1/16" Ø STAINLESS STEEL LOCK WIRING.

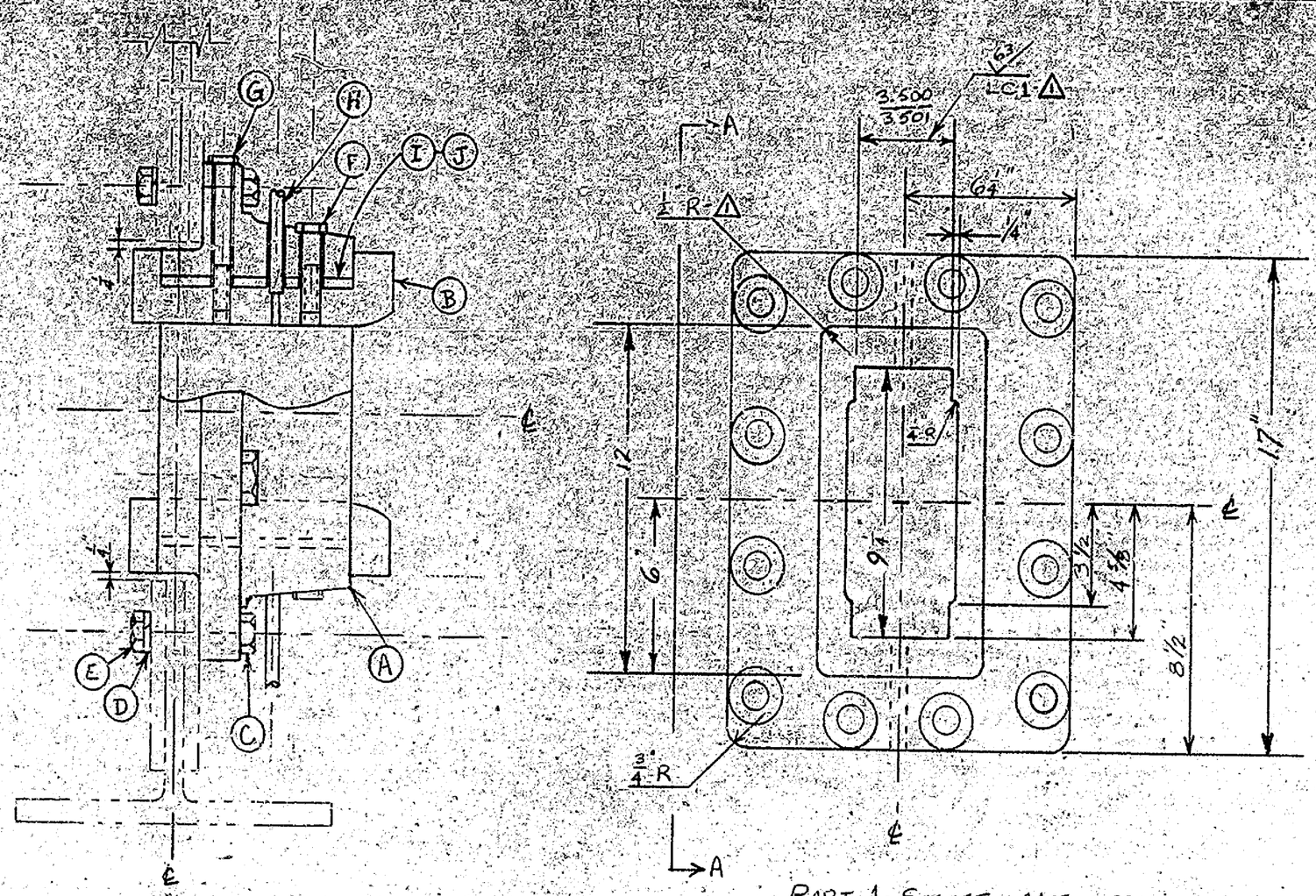

ASSEMBLY DRAWING

PART A - SOCKET - CAST CARBON STEEL ASTM A-27 GRADE 70/36
125 ✓ - ALL SURFACES EXCEPT AS NOTED

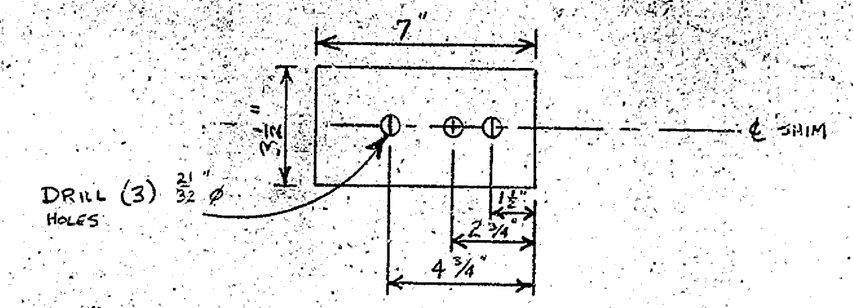

PARTS I & J - TYPICAL SHIM DETAIL

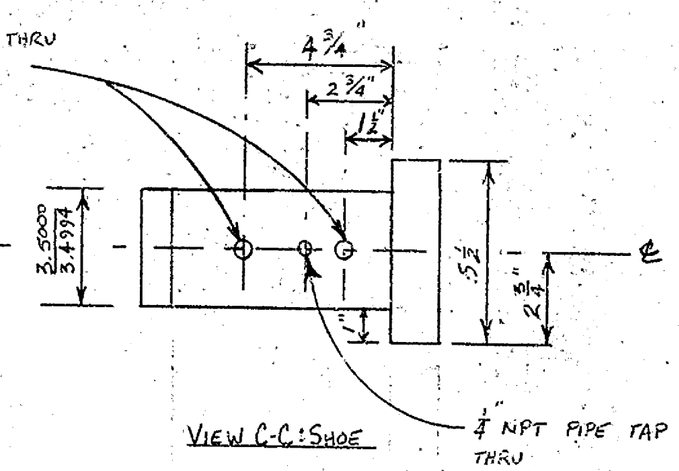

VIEW C-C: SHOE

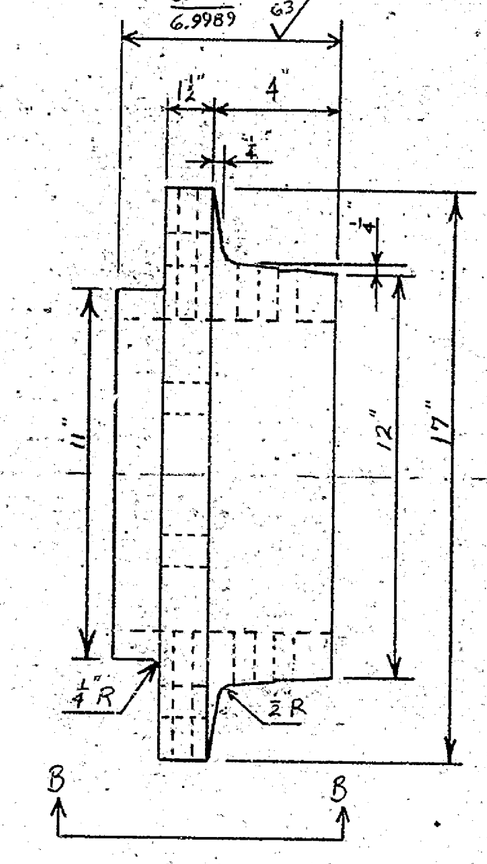

VIEW A-A: SOCKET

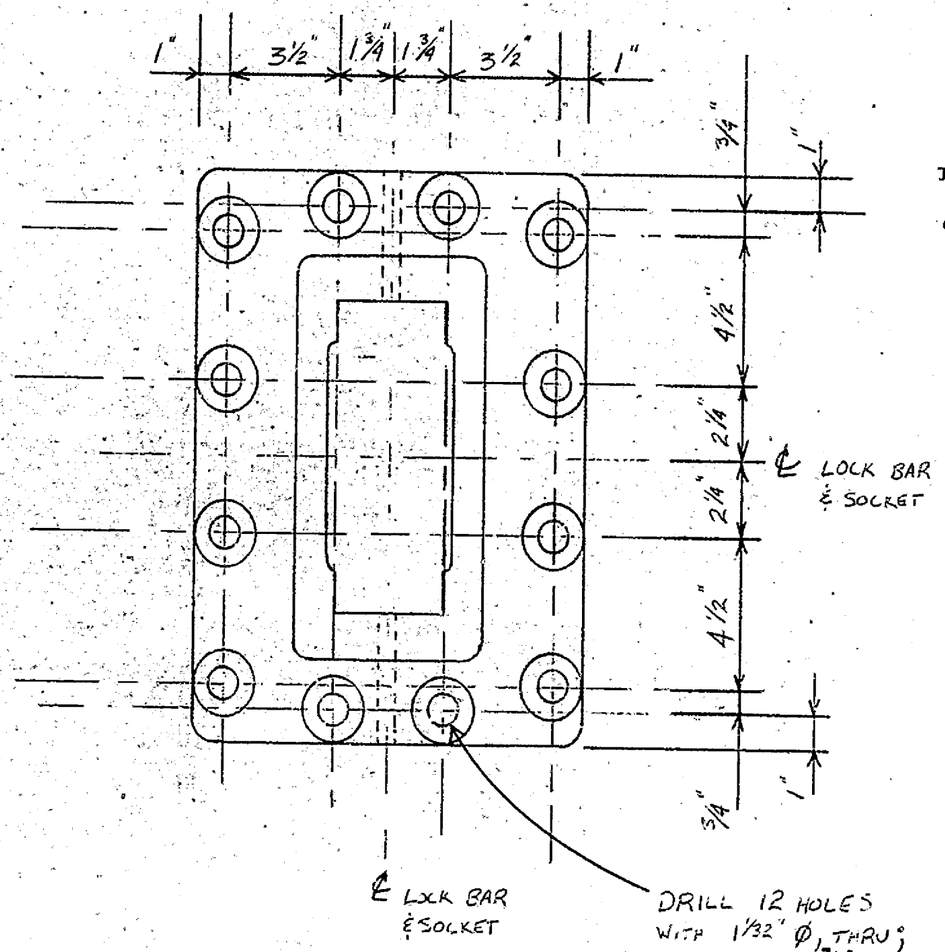

SOCKET-HOLE LAYOUT

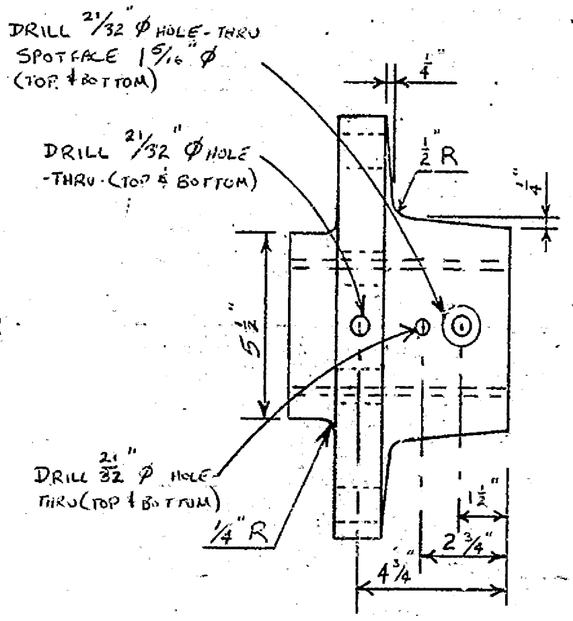

VIEW B-B: SOCKET

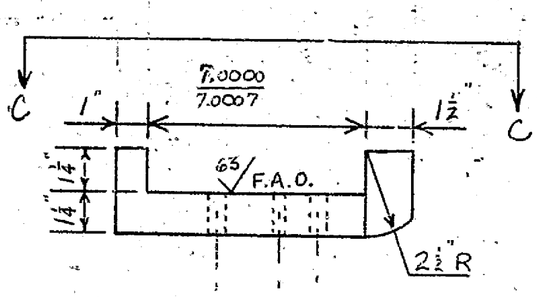

PART B - SHOE - MANGANESE BRONZE ASTM B-22 ALLOY C86300; WEAR SURFACES TO BE BHN 180-200

TOLERANCES (EXCEPT AS NOTED)	REVISIONS NO.	DATE	BY	F.F. SLOCOMB CORP.
DECIMAL ±	⚠	8-6-82	JAS	CENTER LOCK SOCKET ASSEMBLY
FRACTIONAL ±	1			DRAWN BY J.S. — SCALE 3"=1'-0" — MATERIAL
ANGULAR ±	3			CHK'D d.f. — DATE 6/22/82 — DRAWING NO. SRB-8
	4			TRACED — APP'D ✓
	5			

TELEDYNE POST 18AE-15E-18X24

SYM	QTY	MATERIAL	DESCRIPTION
A	20	GRAPHITE-BRONZE SEE NOTE 1	BUSHING CENTER LOCK
B	4	GRAPHITE-BRONZE SEE NOTE 1	BUSHING TAIL LOCK

NOTE 1 BUSHING MATERIAL; CAST BRONZE PER ASTM B-22, ALLOY 905; PLUGS OF DRY FILM LUBRICANT, TYPE G-4 TO BE FORCED INTO HOLES PROVIDED IN BUSHING WALL; 3/16 DIA HOLES ON 1/2" CENTERS; TO MATCH ORIGIONAL HOLE PATTERN

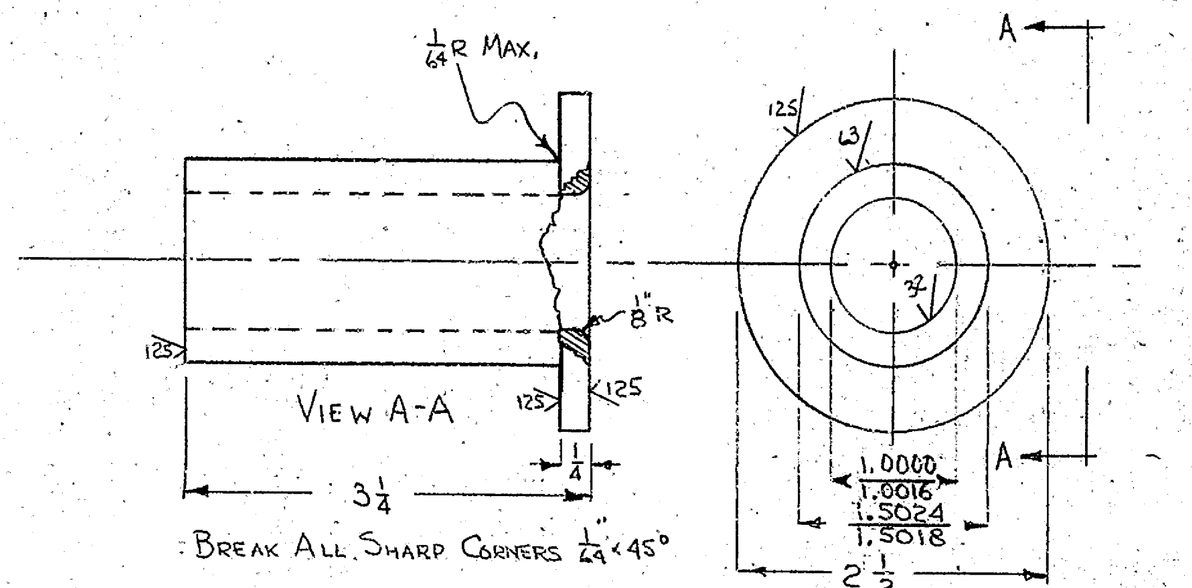

BREAK ALL SHARP CORNERS 1/64 x 45°

PART A BUSHING CENTER LOCK SCALE 1:1

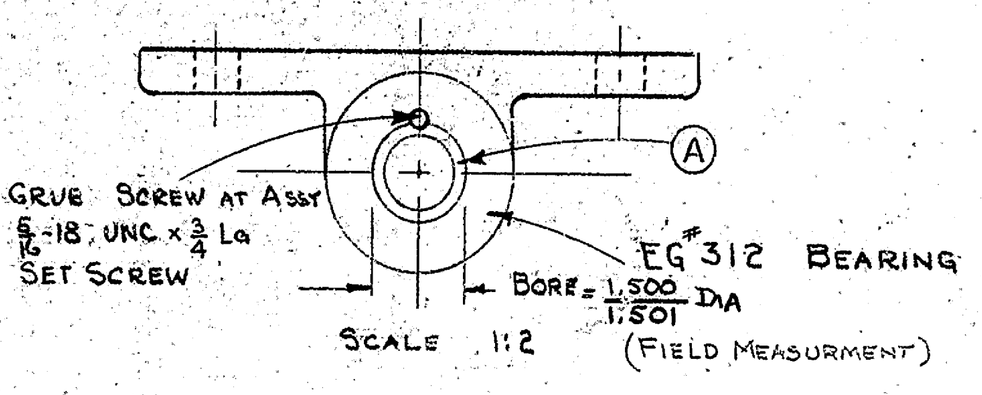

SCALE 1:2

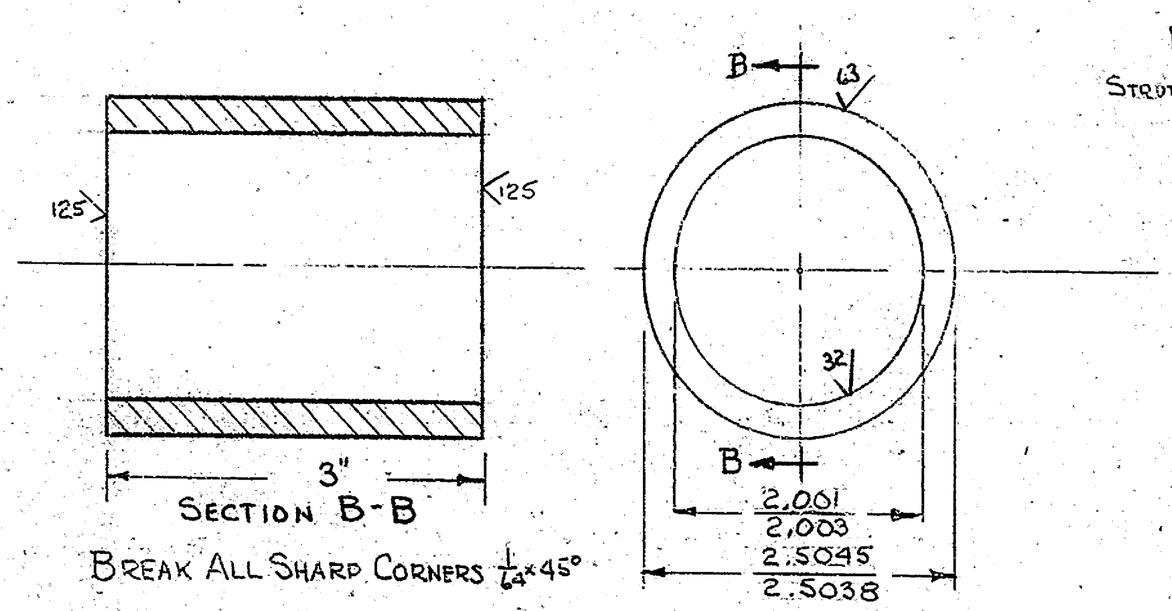

BREAK ALL SHARP CORNERS 1/64 x 45°

PART B BUSHING TAIL LOCK SCALE 1:1

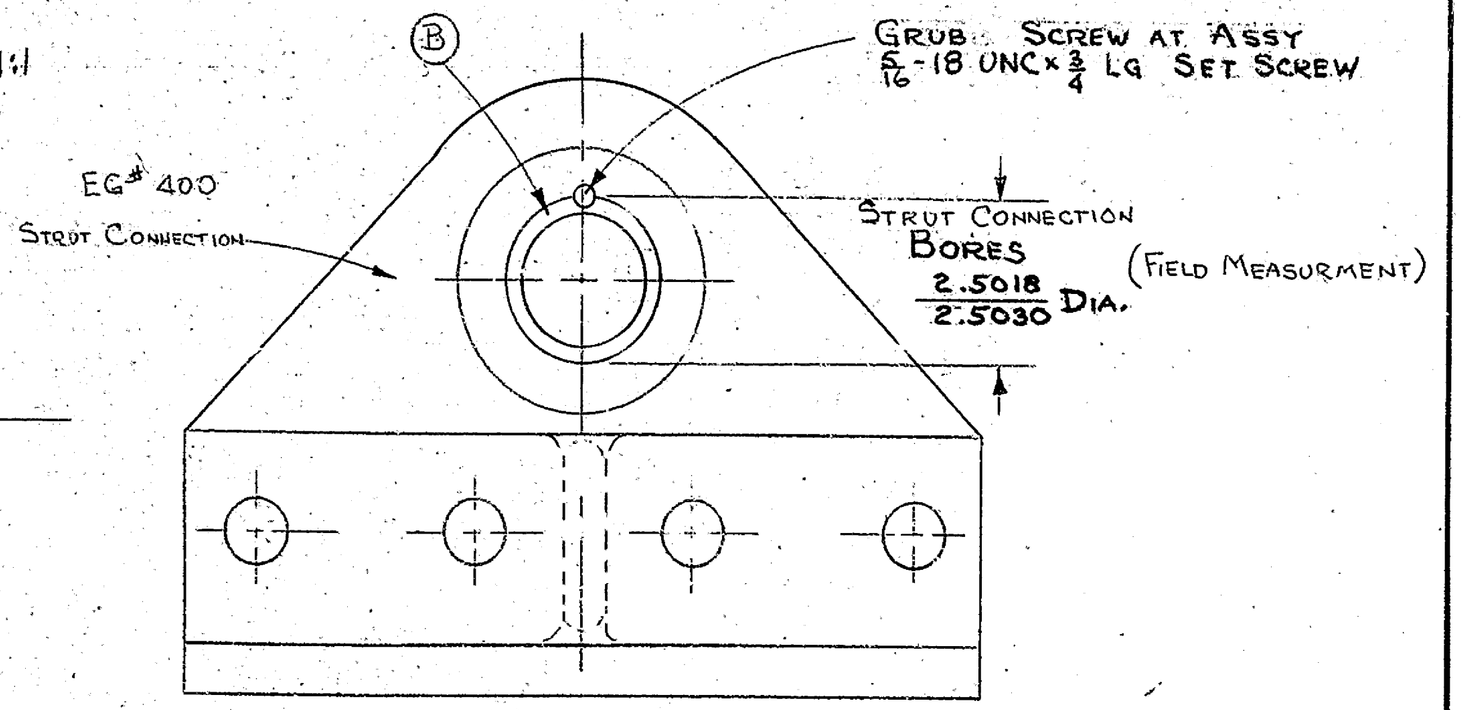

SCALE 1:2

NOTE 2:- PRESS FITS FN-2

NOTE 3:- RUNNING FITS RC-6

REDRAWN FROM ORIGIONAL & RESUBMITTED.

TOLERANCES (EXCEPT AS NOTED)	REVISIONS NO.	DATE	BY
DECIMAL ±	1		
	2		
FRACTIONAL ±	3		
	4		
ANGULAR ±	5		

FF SLOCOMB CORP.

REPLACEMENT BUSHING DETAILS; TAIL & CENTER LOCKS

DRAWN BY REDRAWN J.F.L. | SCALE AS NOTED | MATERIAL

CHK'D | DATE 8-30-82 | DRAWING NO. SRB-9

TRACED | APP'D

TELEDYNE POST 18AE-15E-18X24

C B A 1 5 10 A B C

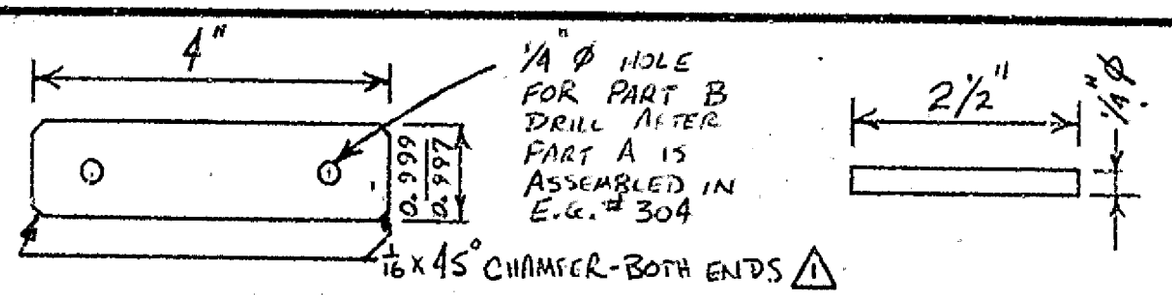

PART A-PIN FOR E.G. #301
(REPLACES E.G. # 306)
SCALE: 6"=1'-0"

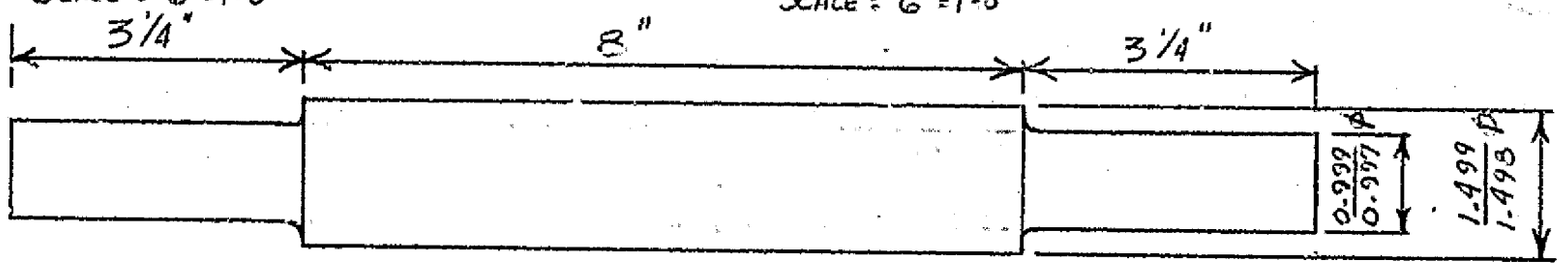

PART B-PIN FOR PART A
(REPLACES E.G. # 311)
SCALE: 6"=1'-0"

PART C - SHAFT FOR E.G. #312
(REPLACES E.G. # 315)
SCALE: 6"=1'-0"

ITEM	QTY.	MATERIAL	DESCRIPTION
A	10	COLD FINISHED STEEL AISI 1045 TG&P	PIN FOR E.G. # 301
B	20	COLD FINISHED STEEL AISI 1018	PIN FOR ITEM A
C	10	COLD FINISHED STEEL AISI 1045 TG&P	SHAFT FOR E.G. # 312
D	4	COLD FINISHED STEEL AISI 1045 TG&P	PIN FOR E.G. # 296
E	8	COLD FINISHED STEEL AISI 1018	PIN FOR ITEM D

NOTE: A) PEEN BOTH ENDS OF ITEMS B & E AFTER ASSEMBLY

⚠1 B) DO NOT FABRICATE ITEMS A, C & D UNTIL FIELD MEASUREMENTS ARE TAKEN IN MATING HOLES TO INSURE PROPER F.T.

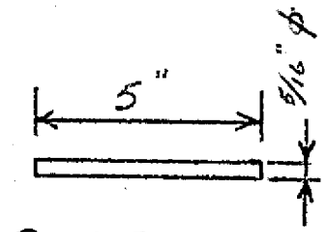

PART E: PIN FOR PART D
SCALE: 3"=1'-0"

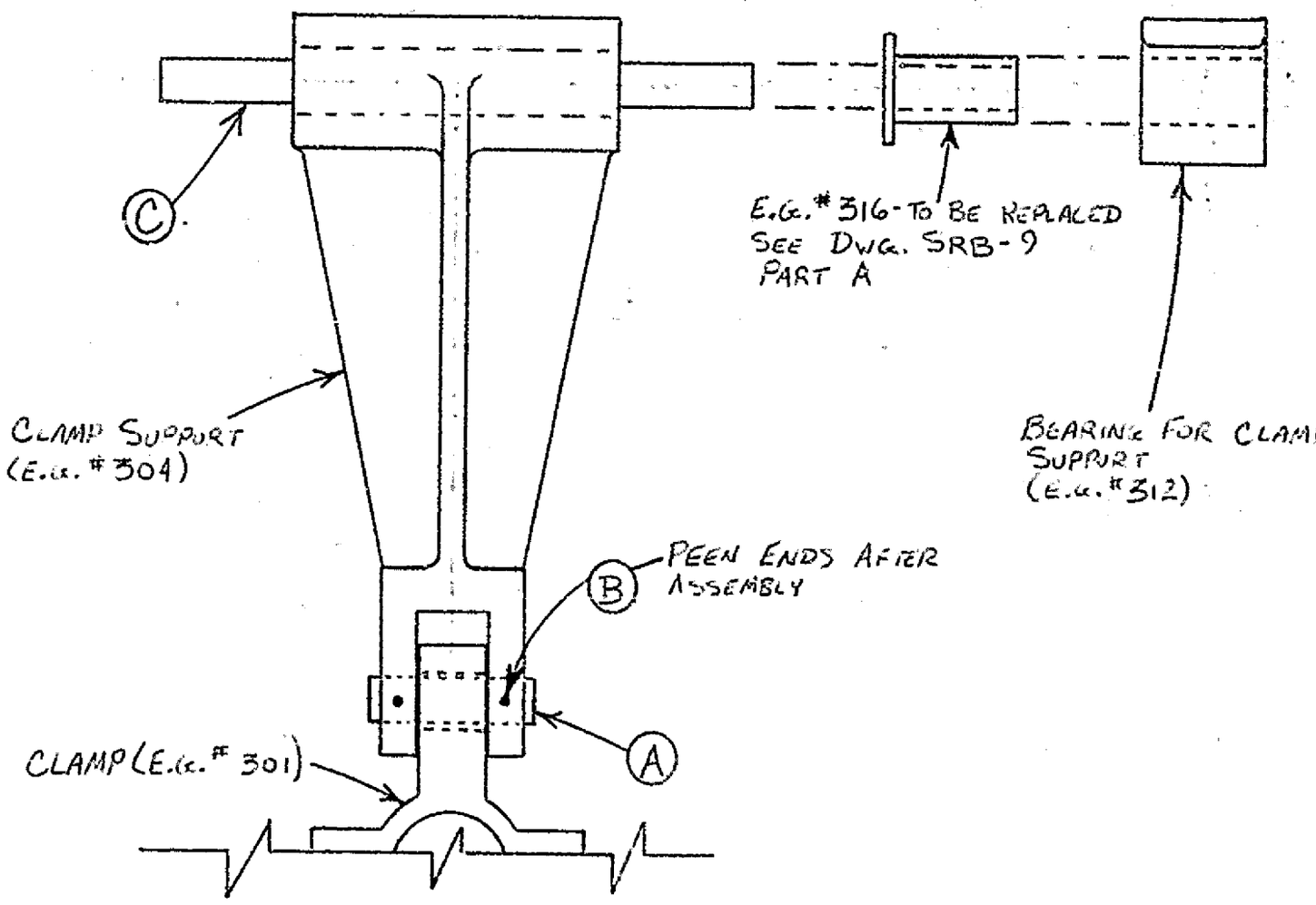

ASSEMBLY DRAWING @ CENTER LOCK CLAMP SUPPORT
SCALE: 3"=1'-0"

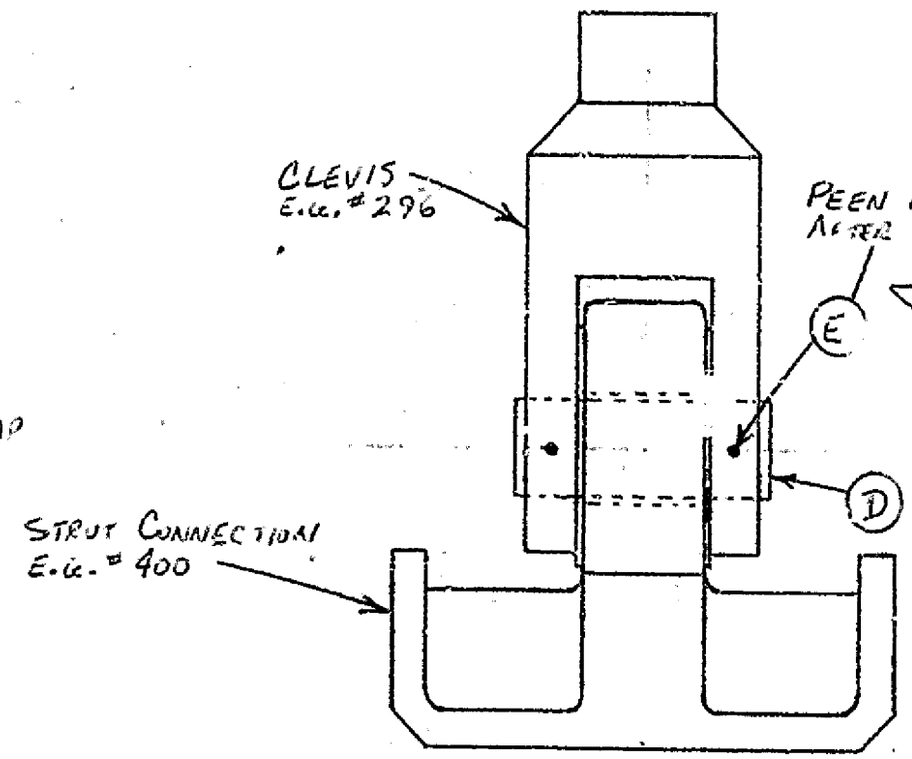

ASSEMBLY DRAWING @ TAIL LOCK STRUT CONNECTION
SCALE: 3"=1'-0"

3/16" Ø HOLE FOR PART E DRILL AFTER PART D IS ASSEMBLED IN E.G. # 296

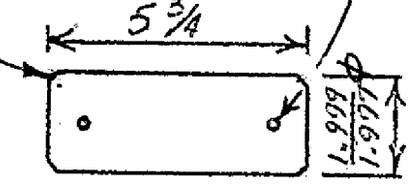

PART D-PIN FOR E.G. #296
SCALE: 3"=1'-0"

TOLERANCES (EXCEPT AS NOTED)	REVISIONS NO.	DATE	BY
DECIMAL ±	⚠1	8-6-82	JAS
FRACTIONAL ±	2		
ANGULAR ±	3		
	4		
	5		

F.F. SLOCOMB CORP.

PIN REPLACEMENT DETAILS @ TAIL & CENTER LOCKS

DRAWN BY	SCALE	MATERIAL
J.S.	AS NOTED	
CHK'D	DATE 6/24/82	DRAWING NO. SRB-10
TRACED	APP'D	

TELEDYNE POST 18AE-10E-12X18

ITEM	QTY	MATERIAL		DESCRIPTION
A	4	CAST STEEL ASTM A486 CLASS 90		TRACK PLATE
B	4	STEEL-ASTM A709 GR. 50W NOTE B		TRACK SEGMENT
C	144	ASTM A320 GR. B8M		TURNED BOLT - FOR ITEM A
D	288	STEEL TYPE 316		1 5/16" MEDIUM LOCK WASHER
E	144	ASTM A194 GR. 8M		1 5/16" NUT FOR PART C
F	144	ASTM A449	NOTE A	HIGH STRENGTH BOLT FOR PART B
6 G	288	STEEL	NOTE A	1 3/8" HDND. FLAT. WASHER .177/.156 THK
5 H	144	ASTM A325	NOTE A	1 7/8" NUT FOR PART F

NOTE:

(A) PARTS F, G, AND H TO BE MECHANICALLY GALVANIZED AFTER FABRICATION.

▽ (B) ULTRASONIC EXAMINATION IN ACCORDANCE WITH ASTM A709 SUPPLEMENTARY REQUIREMENT S5 REQUIRED FOR TRACK SEGMENT - ITEM (B)

▽ (C) TRACK SEGMENTS TO BE SECURED TO SEGMENTAL GIRDER, HOLES ALREADY REAMED, REAMED AND BOLTED IN THE FIELD.

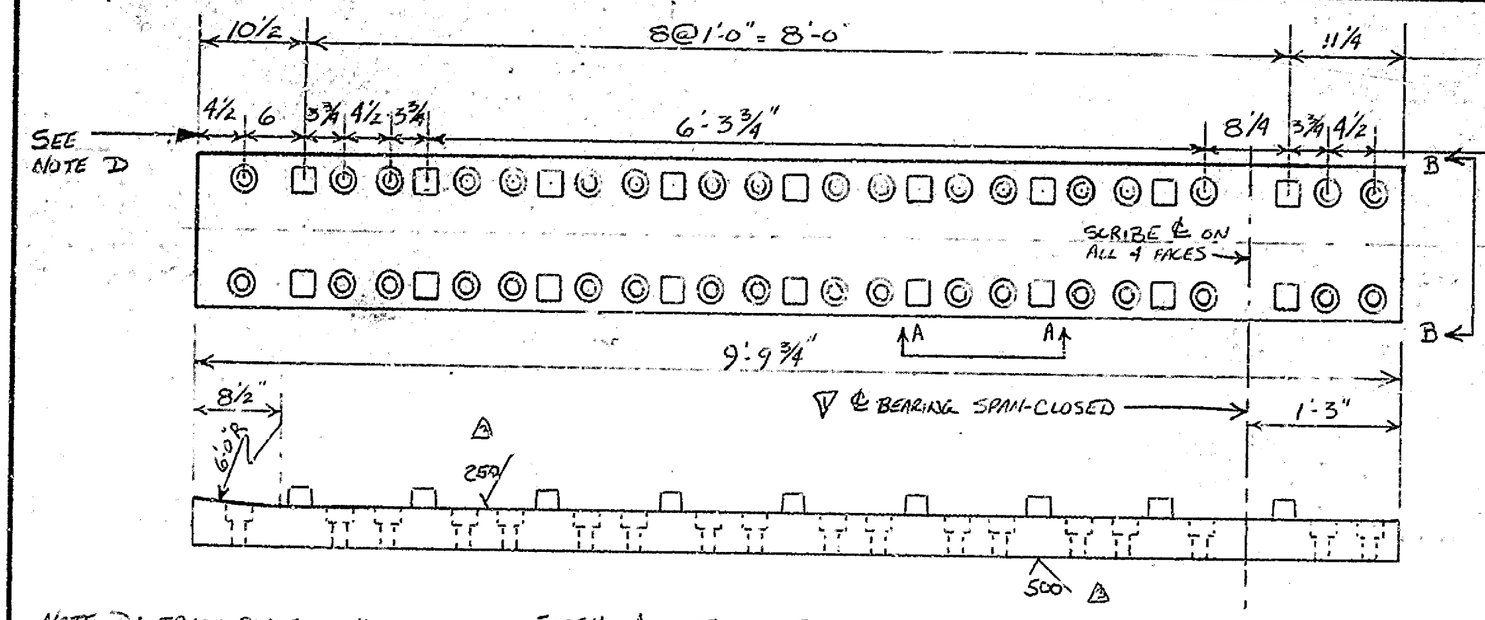

NOTE D: TRACK PLATE ONLY
REAMER DRILL 1 9/32" DIA AT MACHINING.
AT ASSEMBLY WITH BEAM LINE DRILL BEAM 1 9/32" DIA.
LINE REAM TRACK PLATE & BEAM 1.3150 / 1.3125 FOR PART C, 63 FIN. RQD.

ITEM A - TRACK PLATE
REPLACES ENG.# A-1
SCALE: 1"=1'-0"

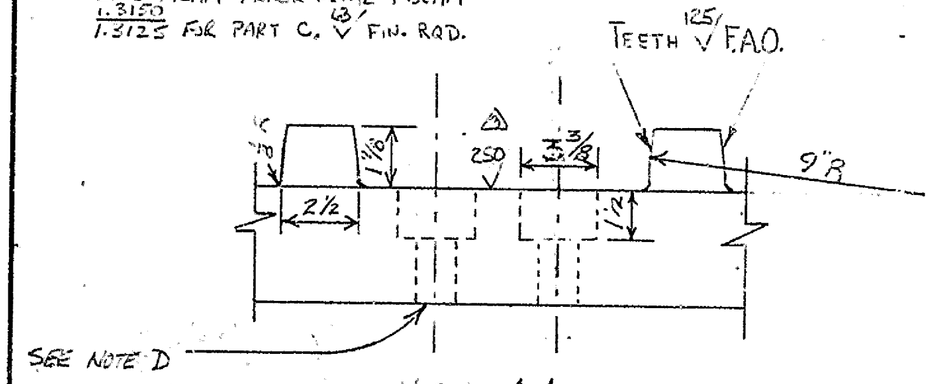

VIEW A-A
SCALE: 3"=1'-0"

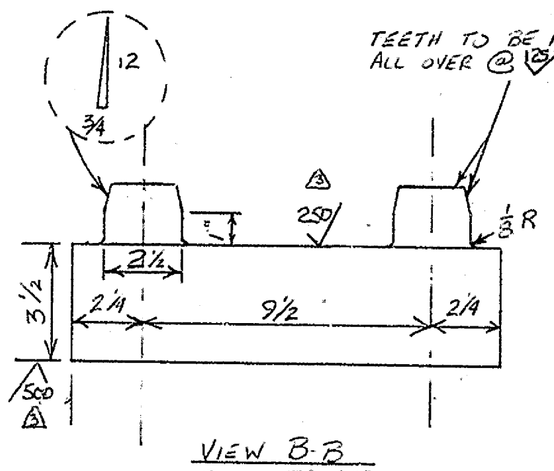

VIEW B-B
SCALE: 3"=1'-0"

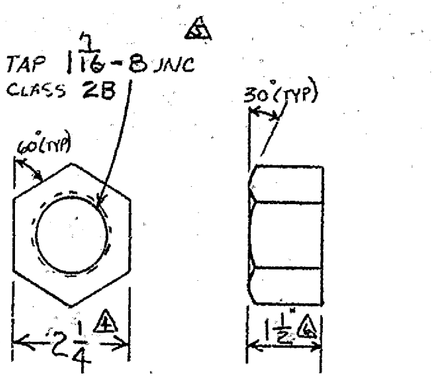

PART H - NUT FOR PART 'F'
NO SCALE

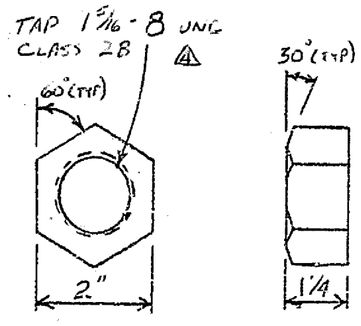

PART E - NUT FOR PART 'C'
NO SCALE

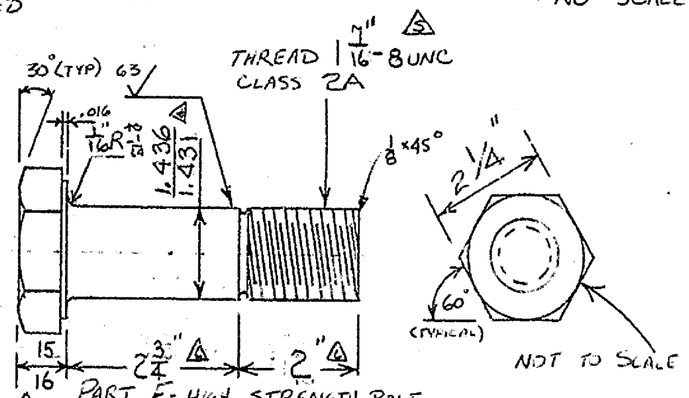

PART F - HIGH STRENGTH BOLT
SCALE: 6"=1'-0"

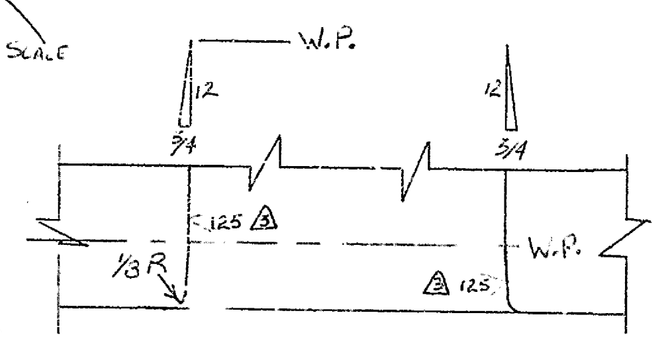

DETAIL F - FULL SCALE

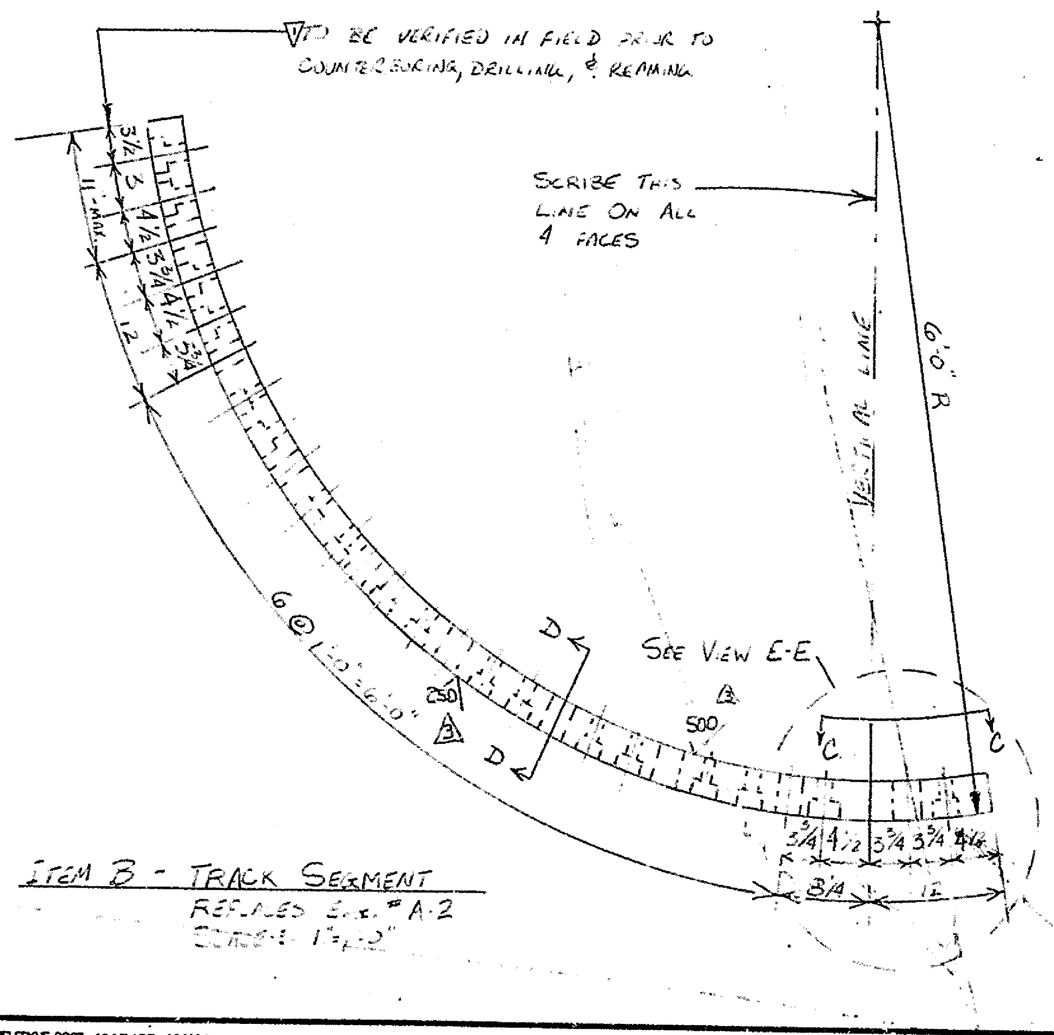

ITEM B - TRACK SEGMENT
REPLACES ENG.# A-2
SCALE: 1"=1'-0"

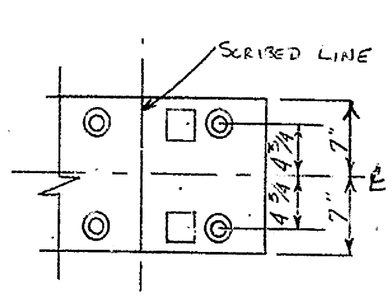

VIEW C-C
SCALE: 1"=1'-0"

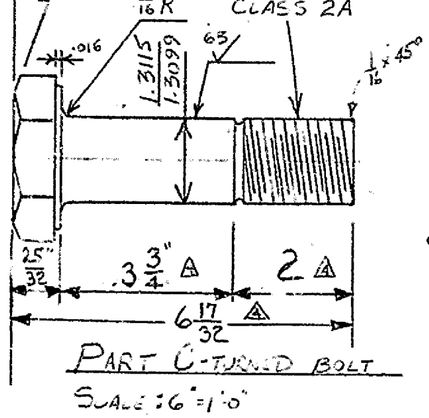

PART C - TURNED BOLT
SCALE: 6"=1'-0"

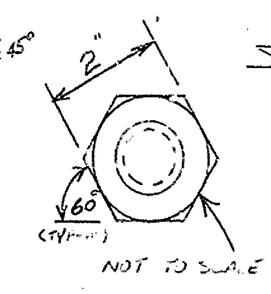

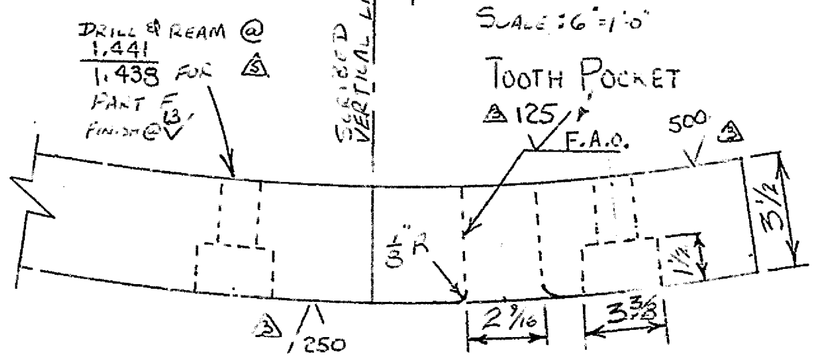

VIEW E-E
SCALE: 3"=1'-0"

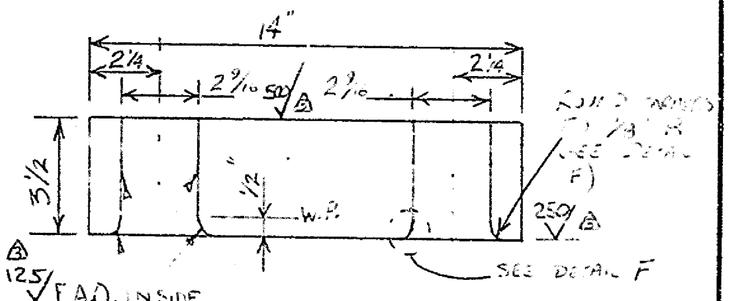

VIEW D-D
SCALE: 3"=1'-0"

TOLERANCES (EXCEPT AS NOTED)	REVISIONS NO.	DATE	BY
DECIMAL ±	1	7-20-82	JAS
FRACTIONAL ±	4	8-3-82	JFL
ANGULAR ±	5	8-6-82	JFL
	4	8-31-82	JFL
	6	10-19-82	JFL
	4	11-15-82	JFL

F.F. SLOCOMB CORP.

TRACK & BOLT DETAILS

DRAWN BY	SCALE	MATERIAL
J.S.	AS NOTED	
CHK'D	DATE	DRAWING NO
TRACED	APP'D	SRB-11

TELEDYNE POST 18AE-15E-18X24

SURFACES x & y // WITHIN .001"
& ⊥ TO z & BORE WITHIN .001"

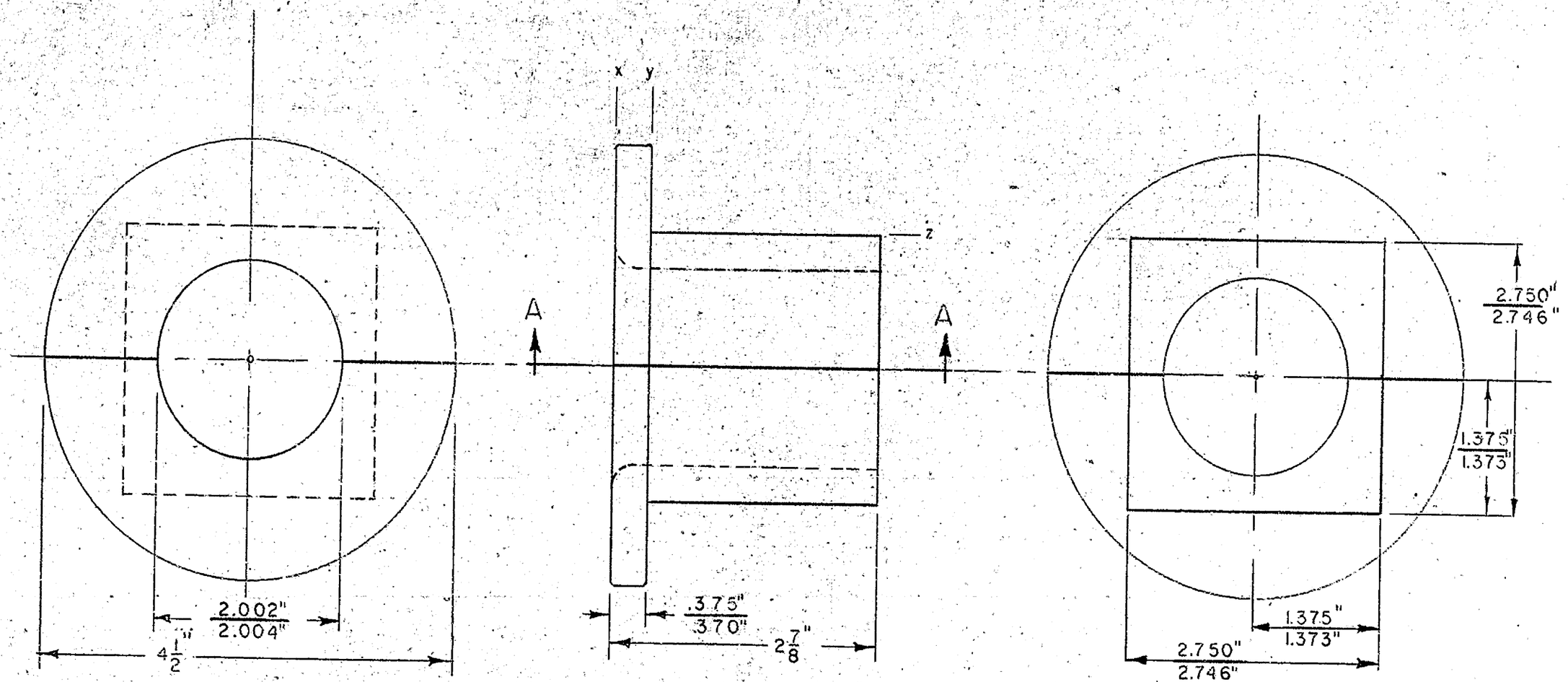

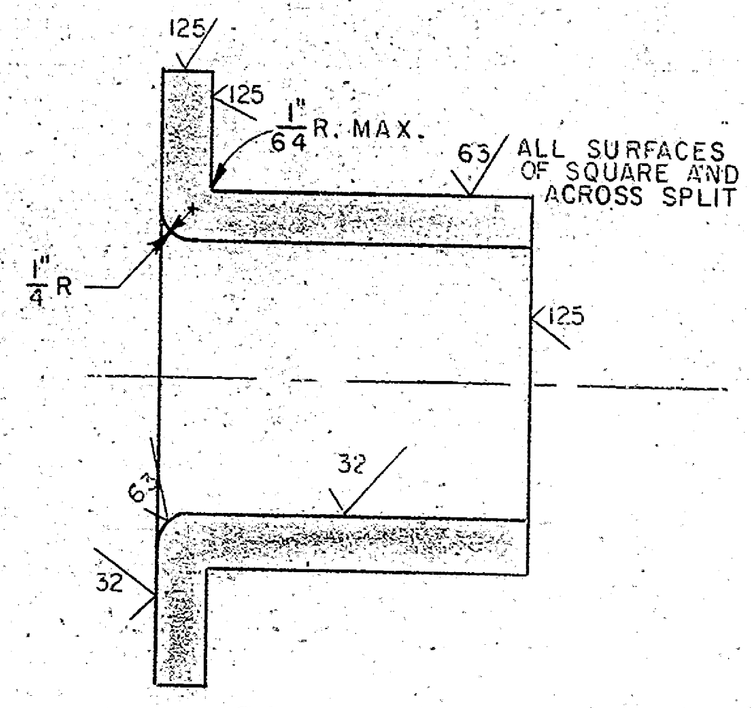

SECTION A-A ALONG SPLIT ℄

MATERIALS OF CONSTRUCTION:

CAST BRONZE PER ASTM B-22 ALLOY 905. PLUGS OF DRY LUBRICANT TYPE G-4 TO BE PROVIDED IN BORE AND OUTSIDE FLANGE FACE SURFACE x. APPROXIMATELY 3/16" DIA HOLES ON 1/2" CENTERS TO MATCH ORIGINAL PATTERN.

TOLERANCES (EXCEPT AS NOTED)	REVISIONS			FF SLOCOMB CORP WILL DE.	
DECIMAL ±	NO.	DATE	BY	SPLIT BUSHING, ORBITING BEVEL GEARS REF. EG134 DWG [illegible] SIM	
FRACTIONAL ±	1			DRAWN BY JFL	SCALE 1:1
ANGULAR ±	2			CHK'D	DATE 1-11-63
	3			TRACED	APP'D.
	4			MATERIAL	
	5			DRAWING NO. SRB-12	

TELEDYNE POST 18AE-15E-18X24

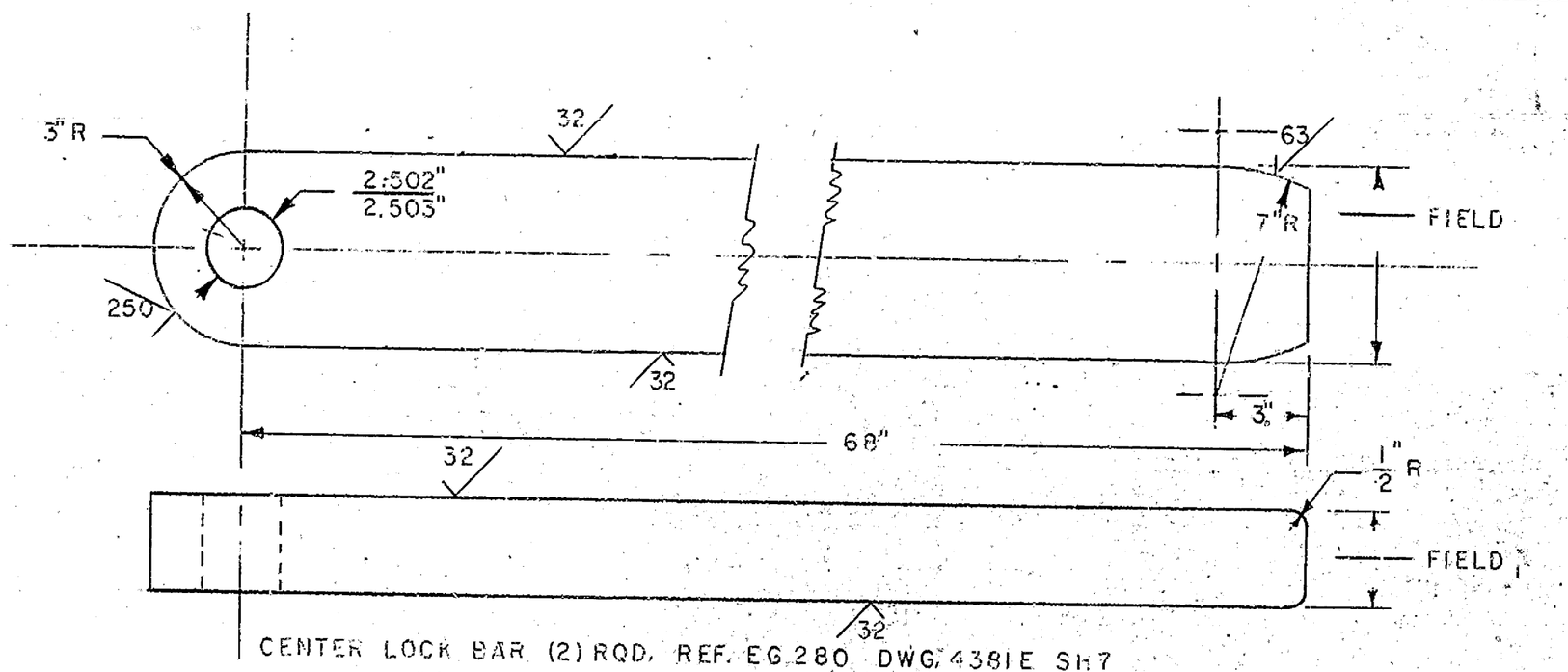

CENTER LOCK BAR (2) RQD. REF. EG 280 DWG. 4381E SH 7
REPAIR PER INSTRUCTIONS

REPAIR INSTRUCTIONS

CENTER LOCK BARS (2)

SURFACE GRIND 3" & 6" FLAT SURFACES REMOVING ALL SCORING AND GALLING. SURFACE FINISH 32, SURFACES TO BE FLAT AND PARALLEL, MATCH GRIND BARS TO HOLD SAME SIZE, HAND FINISH RADII TO 63 FINISH, RECORD FINAL SIZES ON THIS DRAWING.

CENTER GUIDES (2) EG 281 & (2) EG 283

HAVE ANALYSIS MADE TO DETERMINE METAL, WRITE WELDING PROCEDURE USING ANALYSIS DATA & HAVE APPROVED, WELD PER APPROVED PROCEDURE BY OVERLAYING WELD DEPOSIT ON ALL SURFACES OF 3"X6" HOLES, ROUGH MACHINE TO ASSURE FINISH, STRESS RELIEVE, FINISH MACHINE ALLOWING .010" CLEARANCE ON BOTH. DIMENSIONS OF GROUND CENTER LOCK BARS, RECORD FINAL SIZES ON THIS DRAWING

NOTE:

IF MOUNTING SURFACES REQUIRE MACHINING 15/16" DIA. MOUNTING HOLES REQUIRE ELONGATION.

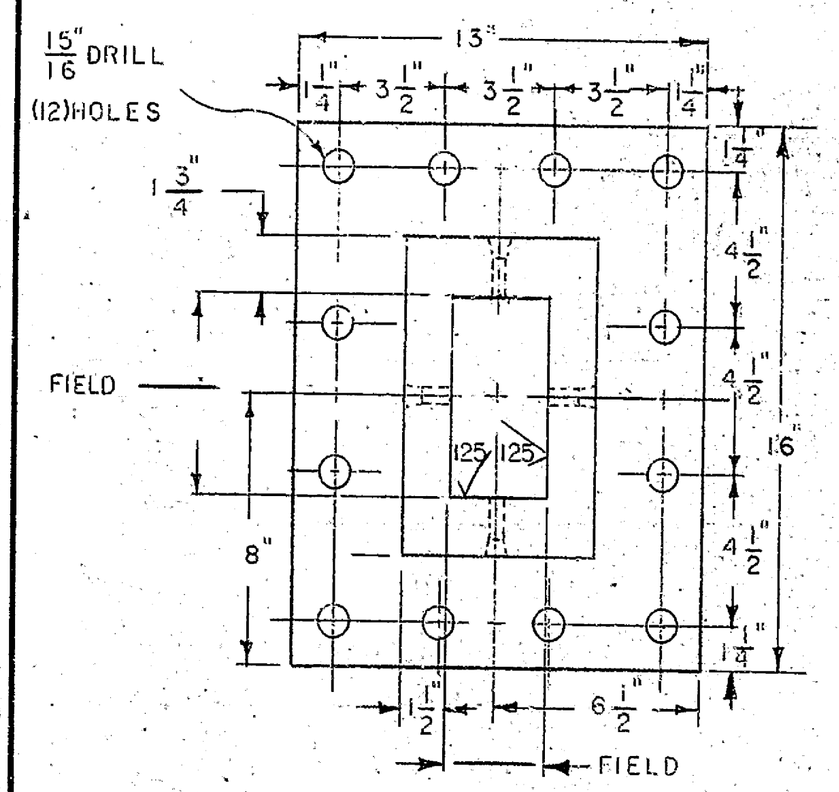

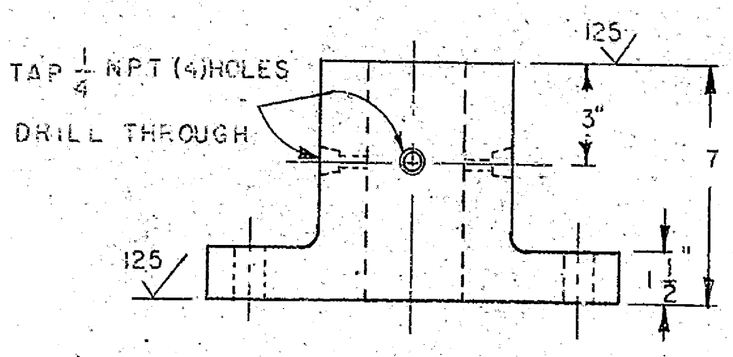

CENTER GUIDE (2) RQD REF EG 281 DWG 4381E SH 7
REPAIR PER INSTRUCTIONS

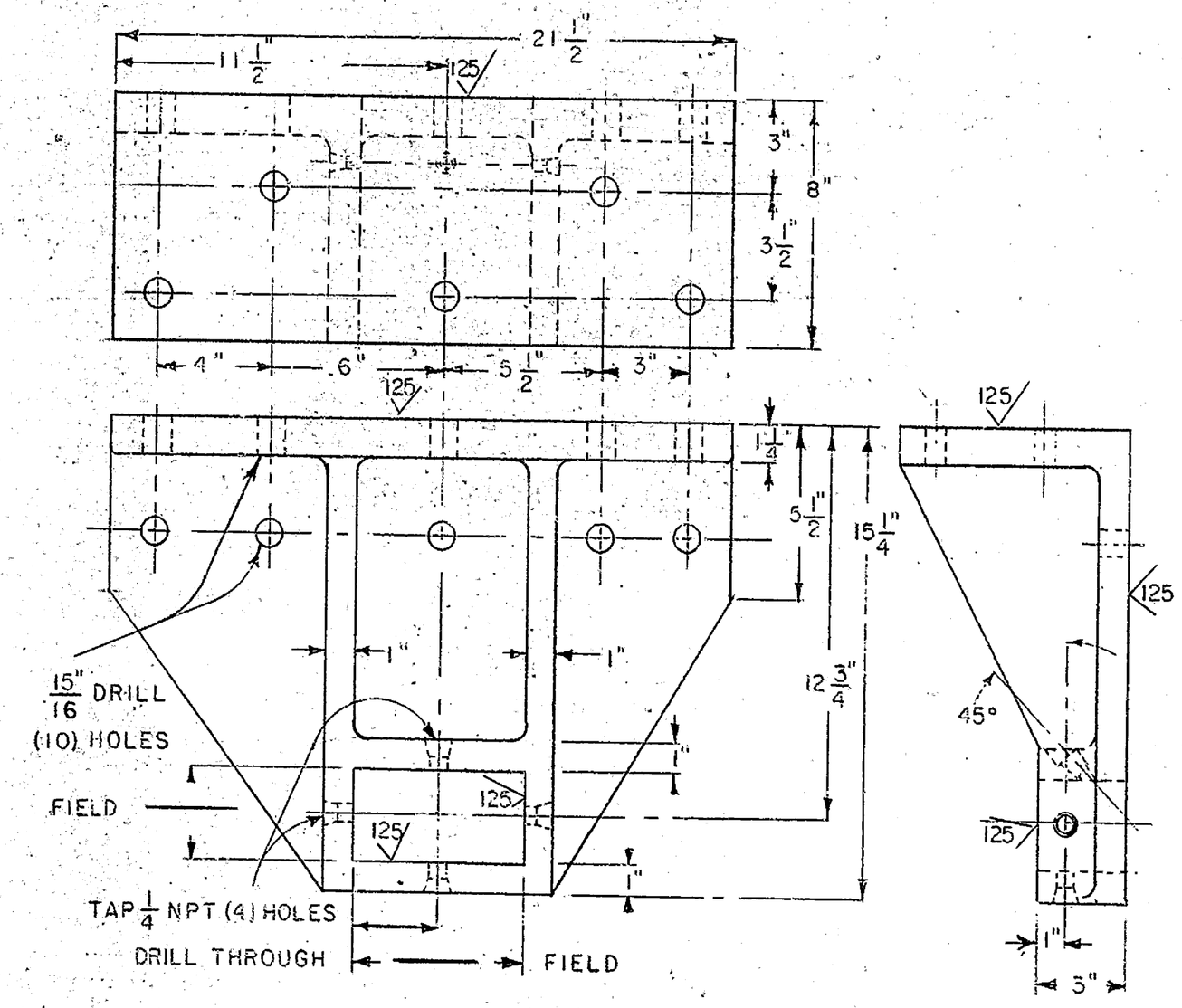

CENTER GUIDE (2) RQD REF EG 283 DWG 4381E
REPAIR PER INSTRUCTIONS

TOLERANCES (EXCEPT AS NOTED)	REVISIONS			F. F. SLOCOMB CORP WILM. DE.		
DECIMAL ±	NO.	DATE	BY	REPAIRS CENTER LOCK BARS & GUIDES		
FRACTIONAL ±	1			DRAWN BY JFL	SCALE 1&4	MATERIAL
ANGULAR ±	2			CHK'D	DATE 1-11-83	DRAWING NO. SRB-13
	3			TRACED	APP'D	
	4					
	5					

TELEDYNE POST 18AE-15E-18X24

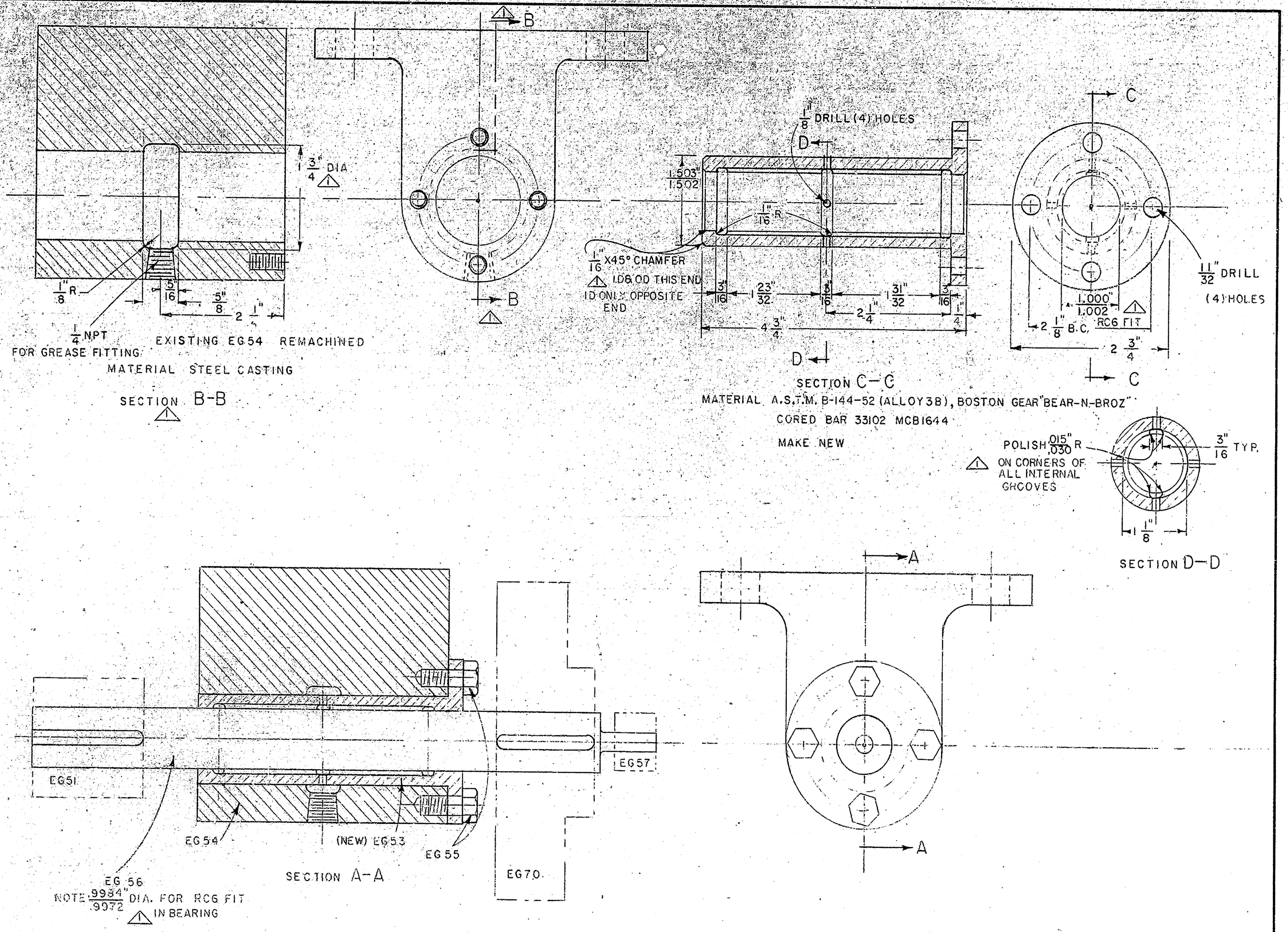

TOLERANCES (EXCEPT AS NOTED)	REVISIONS			F F SLOCOMB CORP WILM DE
DECIMAL ±	NO.	DATE	BY	REWORK LIMIT SWITCH DRIVER
FRACTIONAL ±	1	2-9-83	JFL	
ANGULAR ±	2			
	3			DRAWN BY JFL / SCALE 1 & 1 / MATERIAL
	4			CHK'D / DATE 1-17-83 / DRAWING NO. SRB-14
	5			TRACED / APP'D

TELEDYNE POST 18AE-15E-18X24

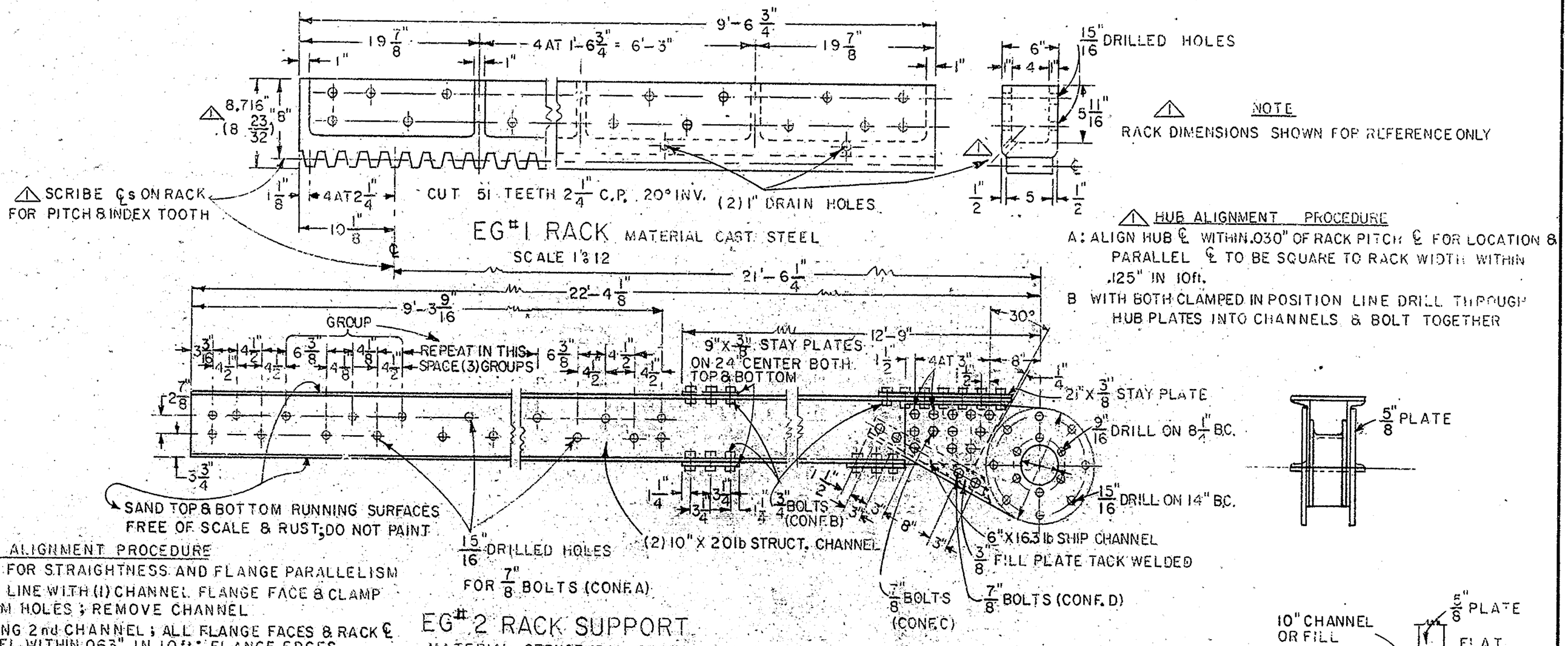

⚠ CHANNEL ALIGNMENT PROCEDURE

A: CHECK CHANNELS FOR STRAIGHTNESS AND FLANGE PARALLELISM

B: ALIGN RACK PITCH LINE WITH (1) CHANNEL FLANGE FACE & CLAMP

C: LINE DRILL & REAM HOLES; REMOVE CHANNEL

D: REPEAT B & C USING 2nd CHANNEL; ALL FLANGE FACES & RACK ℄ TO BE PARARALLEL WITHIN .063" IN 10ft.; FLANGE EDGES TO BE PARALLEL TO RACK WIDTH FACES WITHIN .063 IN 10ft.

E DRILL & BOLT STAY PLATES IN PLACE, HOLD STAIGHT TO RACK .063" IN 10ft.

NOTES

1 ALL PLATE & STRUCTURAL STEEL TO BE ASTM A-36.

2 ALL BOLTED STRUCTURAL JOINTS TO BE MADE USING,
BOLTS PER ASTM A-325, GALVANIZED,
NUTS PER ASTM A-563, GALVANIZED,
WASHERS, HARDENED FLAT CIRCULAR & RECTANGULAR BEVELED, TO BE PER A S T M F-436, GALVANIZED.
ALL HOLES FOR STRUCTURAL BOLTS TO BE REAMED .010" LARGER THAN BOLT DIAMETER

⚠ NOTE

RACK DIMENSIONS SHOWN FOR REFERENCE ONLY

⚠ HUB ALIGNMENT PROCEDURE

A: ALIGN HUB ℄ WITHIN .030" OF RACK PITCH ℄ FOR LOCATION & PARALLEL ℄ TO BE SQUARE TO RACK WIDTH WITHIN .125" IN 10ft.

B WITH BOTH CLAMPED IN POSITION LINE DRILL THROUGH HUB PLATES INTO CHANNELS & BOLT TOGETHER

TOLERANCES (EXCEPT AS NOTED)	REVISIONS NO.	DATE	BY	FF SLOCOMB CORP WILM. DE.
DECIMAL ±	⚠ 1	2-9-83	JFL	RACK & RACK SUPPORT REPAIRS
FRACTIONAL ±	2			
ANGULAR ±	3			DRAWN BY JFL · SCALE AS NOTED · MATERIAL
	4			CHK'D · DATE 1-16-83 · DRAWING NO.
	5			TRACED · APP'D · SRB-15

TELEDYNE POST 18AE-15E-18X24

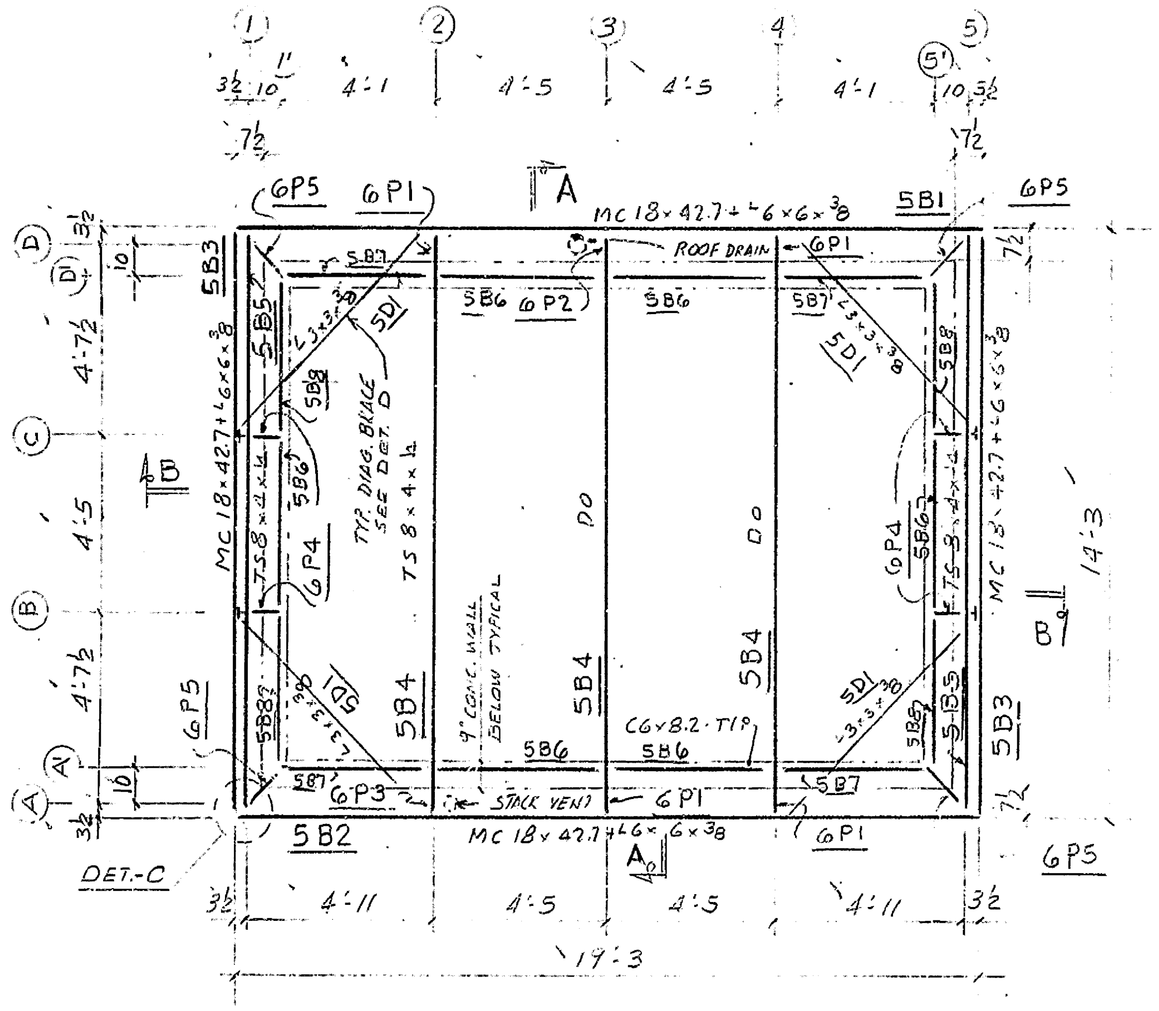

ROOF FRAMING PLAN

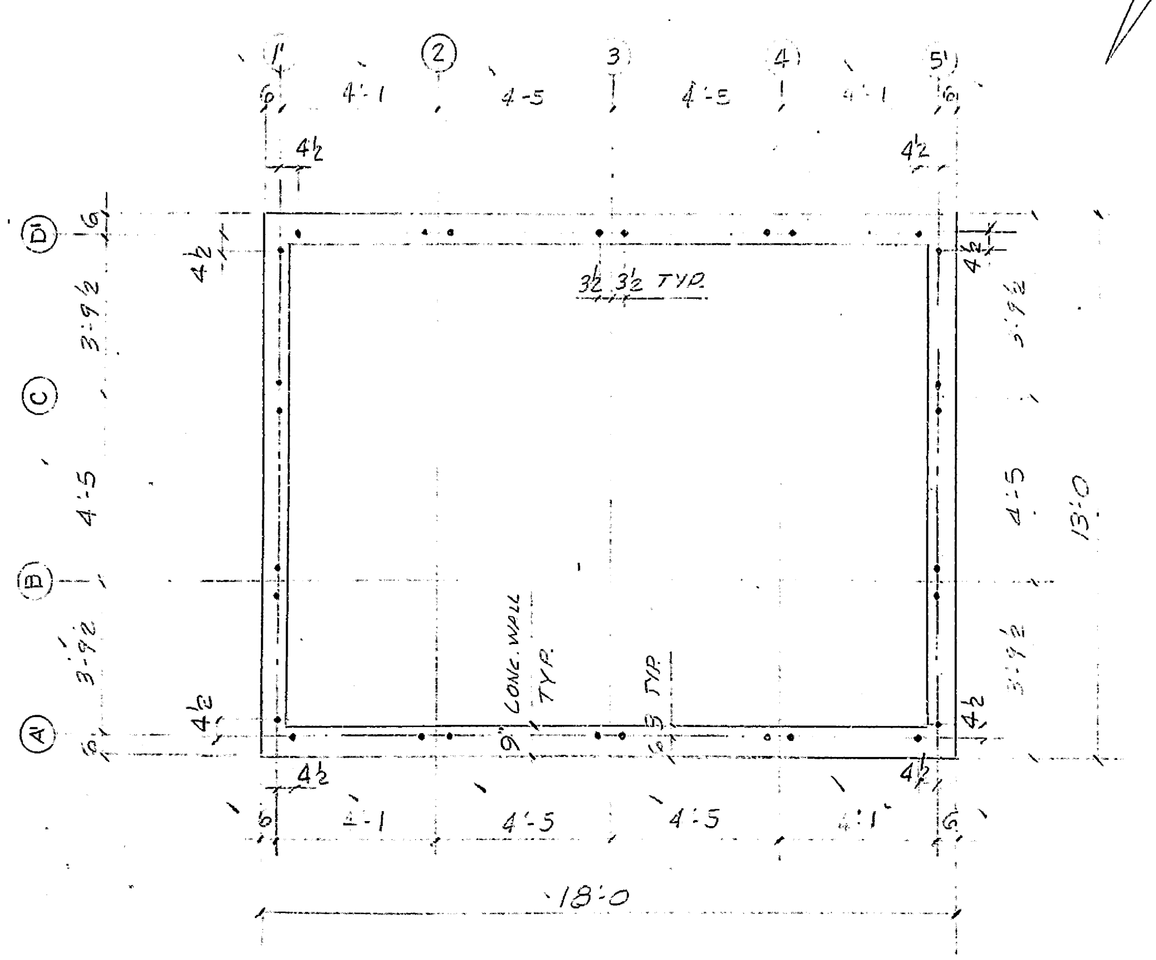

ANCHOR BOLT PLAN

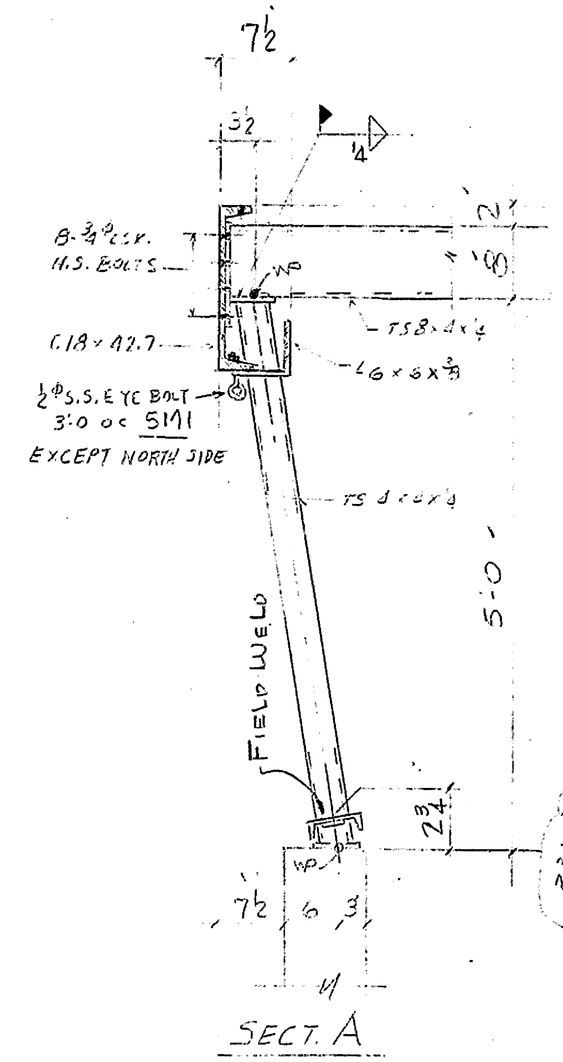

SECT. A

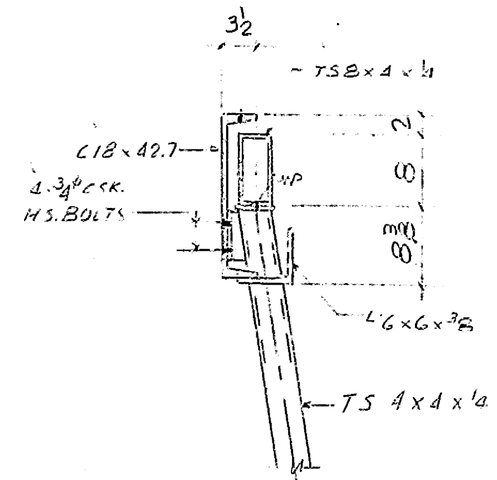

SECT @ B

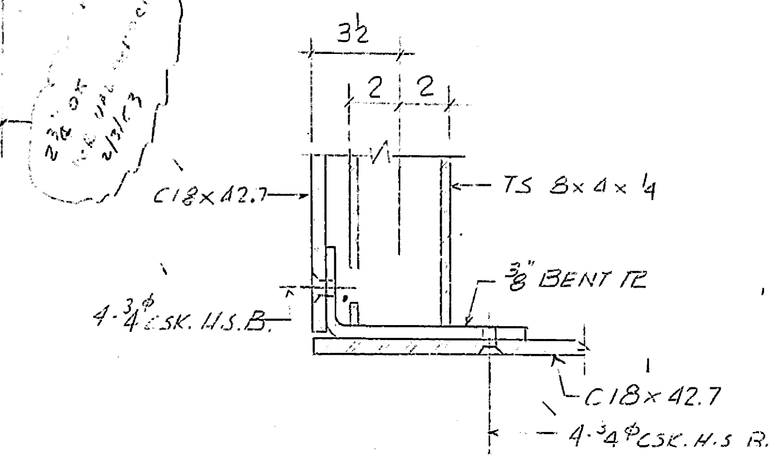

DETAIL-C
TYPICAL @ CORNER

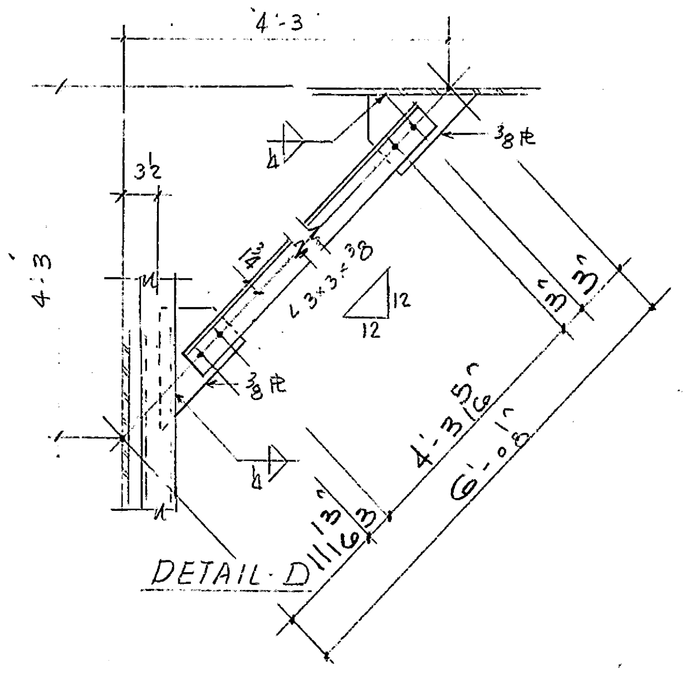

DETAIL-D

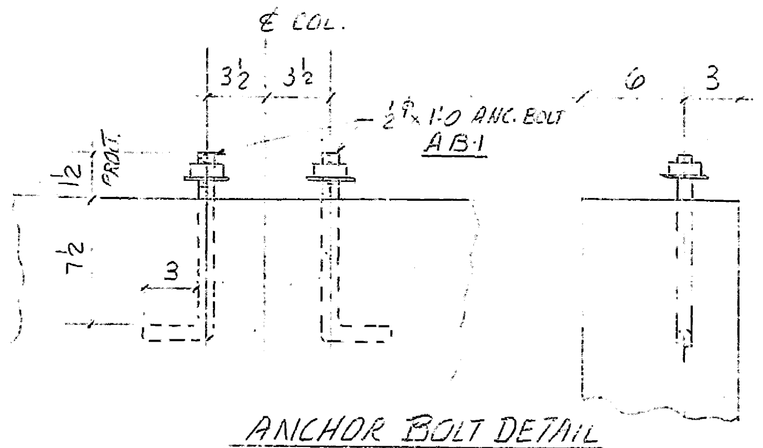

ANCHOR BOLT DETAIL

NOTES:
1. STRUCTURAL STEEL = ASTM A588
2. STEEL TUBING = ASTM A500 OR A501
3. FIELD BOLTS = ASTM A325
4. FINISH HOT DIP GALVANIZE AFTER FABRICATION

BILL OF MATERIAL

REQ'D	ITEM:	LENGTH	MARK
28	ANCHOR BOLTS		AB1
28	BAR ½ φ	1'-0	
28	NUT ½		
28	WSHR ½		
	FIELD BOLTS		
100	¾φ×1¾" FLAT HEAD HIGH STRENGTH MACH. BOLTS - A325 - GALV.		
16	¾φ×1½ H.S. BOLT - A325		GALV.

ATTN GEN'L. CONT'R.:
IMPORTANT
☐ COORDINATION DWGS REQ'D
☐ DIMENSIONS ARE FIELD CHECKED
☐ DIMENSIONS ARE GUARANTEED

ITEM'S
ARE WE TO PROCEED WITH FABRICATION? ☐YES ☐NO
DATE MATERIAL REQ'D .....
HOLDING FABRICATION UNTIL ALL ABOVE INFO. IS COMPLETE
AUTHORIZED SIGNATURE .....

948-7115
301-829-2366
MISCELLANEOUS METALS, INC.
1001 E. RIDGEVILLE BLVD.
P.O. BOX 387
MOUNT AIRY, MD. 21771

ROOF FRAMING PLAN

DATE	F.A.	F.C.	SHOP	SHIP	CONT'R	ERECT	PURCH	SEPIA
2/22/83			1			1		
8-9-82	10							

DISTRIBUTION

DRAWN BY: GJ | CHECKED BY: | RACK #
SHOP COAT:
PROJECT: SAVANNAH ROAD BRIDGE
JOB LOCATION: LEWES, DELAWARE
CONTRACT ITEM: W.O. # 4163E, 4168E
CONTRACTOR: GEORGE & LYNCH
ARCHITECT: DELAWARE DEPT. OF TRANSPORTATION
ERECTED BY: M.M.I. | FIELD CHECKED BY:
PERMIT # | REF. DWG:
CONTRACT # 516 | JOB # | SHEET E1 OF

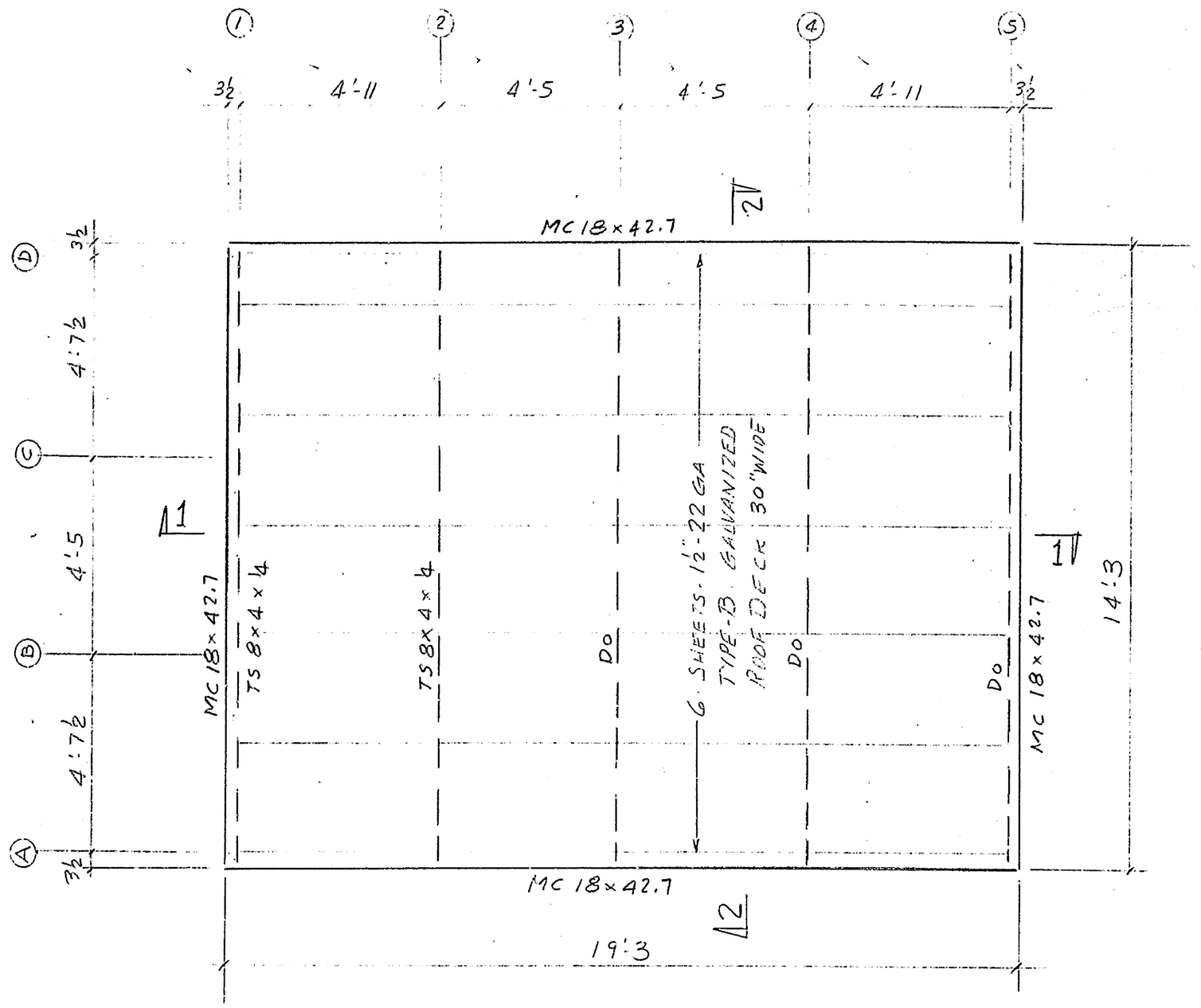

ERECTION PLAN. ROOF DECK

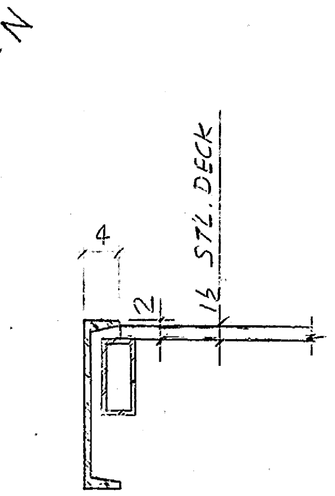

SECT @ 1

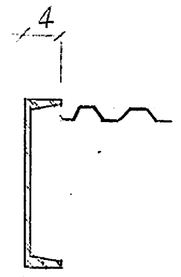

SECT. @2

NOTE:
FIELD WIELD DECK UNITS TO STRUCTURAL STEEL FRAMING. PER MFGRS. SPECIFICATIONS.

BILL OF MATERIAL

REQ'D	ITEM:	LENGTH	MARK
6	1½-22.B GALV.		
	30" × 18'-6		

ATTN GEN'L. CONT'R.:
IMPORTANT
- ☐ COORDINATION DWGS REQ'D
- ☐ DIMENSIONS ARE FIELD CHECKED
- ☐ DIMENSIONS ARE GUARANTEED

ITEM'S
ARE WE TO PROCEED WITH FABRICATION? ☐ YES ☐ NO
DATE MATERIAL REQ'D .....
HOLDING FABRICATION UNTIL ALL ABOVE INFO. IS COMPLETE
AUTHORIZED SIGNATURE .....

948-7115
201-829-2366
MISCELLANEOUS METALS, INC.
1001 E. RIDGEVILLE BLVD.
P.O. BOX 387
MOUNT AIRY, MD. 21771

ROOF DECK

DATE	F.A.	F.C.	SHOP	SHIP	CONT'R	ERECT	PURCH	SEPIA
2-23-83				1		1		
8-9-82	10							

DISTRIBUTION

DRAWN BY: G J | CHECKED BY: | RACK =
SHOP COAT: GALVANIZED
PROJECT: SAVANNAH ROAD BRIDGE
JOB LOCATION: LEWES, DELAWARE
CONTRACT ITEM:
CONTRACTOR: GEORGE & LYNCH
ARCHITECT: DEL. DEPT. OF TRANSP.
ERECTED BY: M.M.I | FIELD CHECKED BY:
PERMIT = | REF. DWG.
CONTRACT = 516 | JOB = | SHEET #2 OF

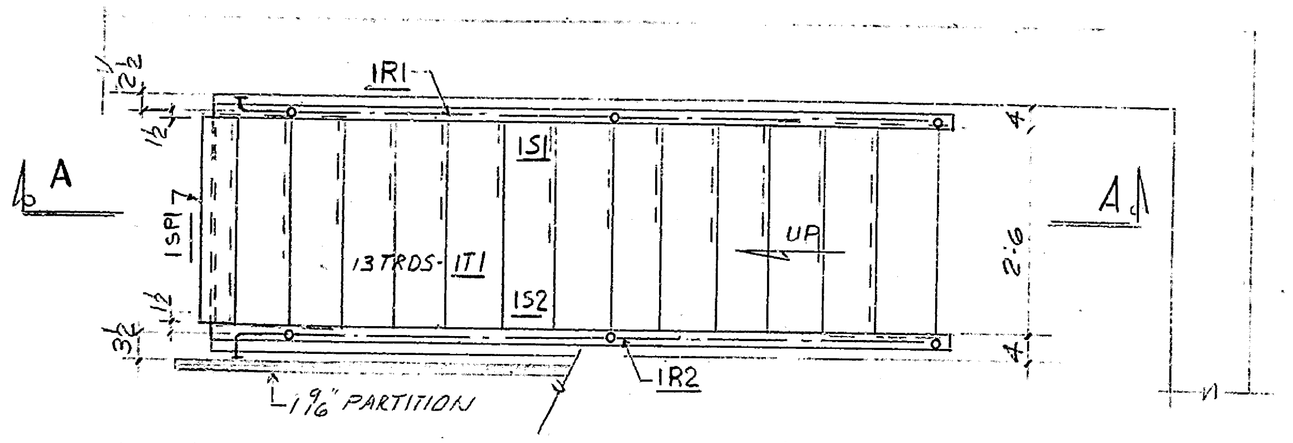

PLAN - STEEL STAIR @ UTILITY RM. TO SWITCHBOARD RM.

REF: DRWG. 44 W.O. # 4166E

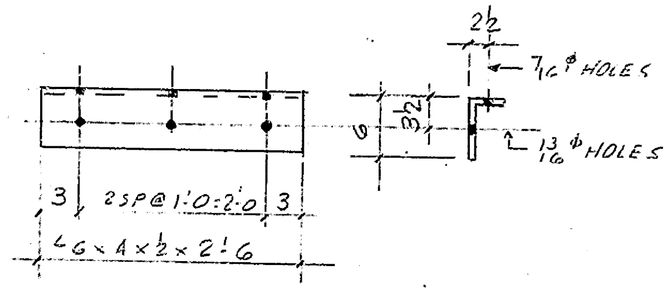

ONE - SUPPORT ANGLE MK. 1A1

ASTM - A588

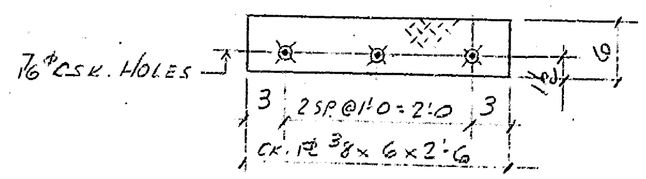

ONE - SILL PLATE MK. 1SP1

ASTM A588

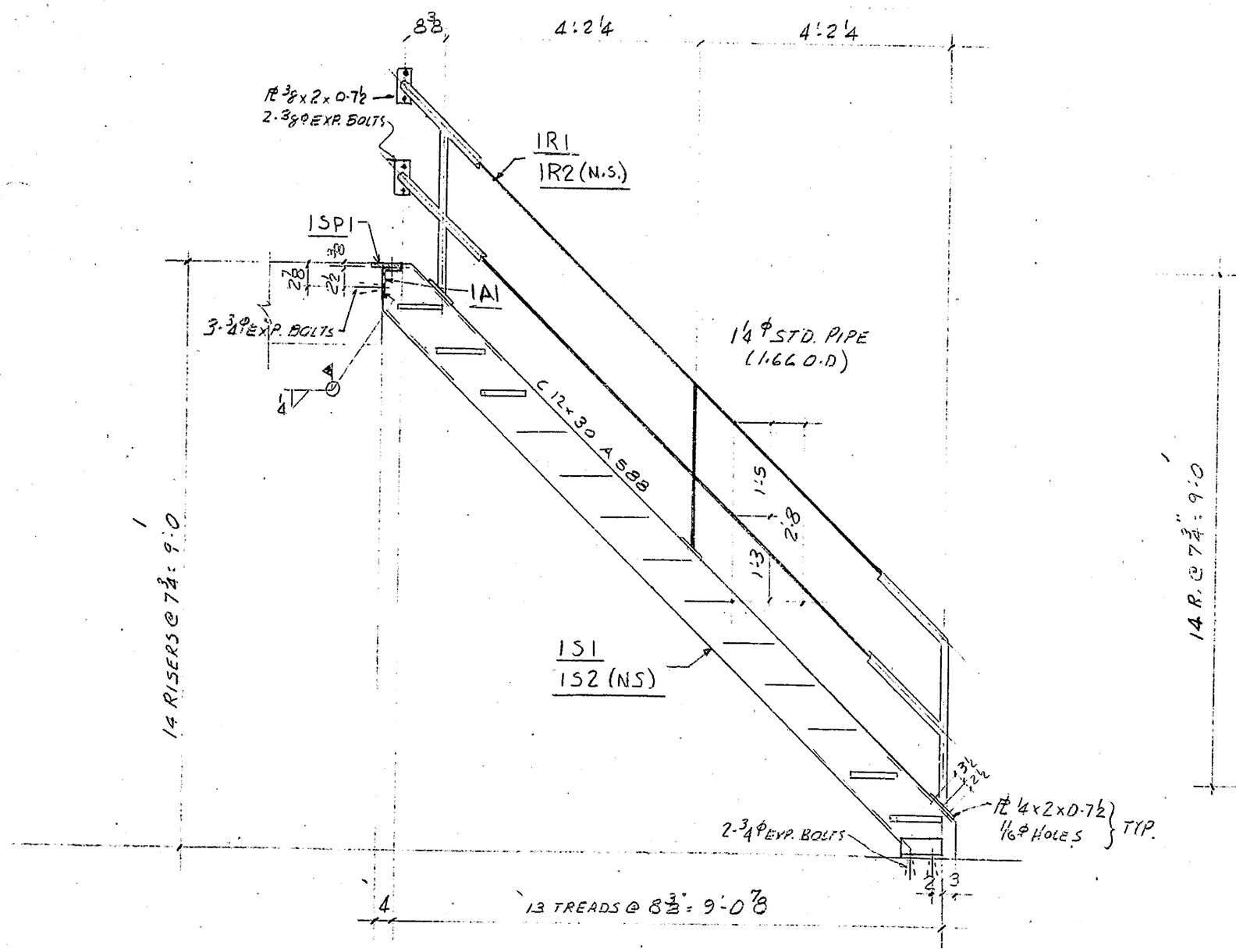

SECTION A-A

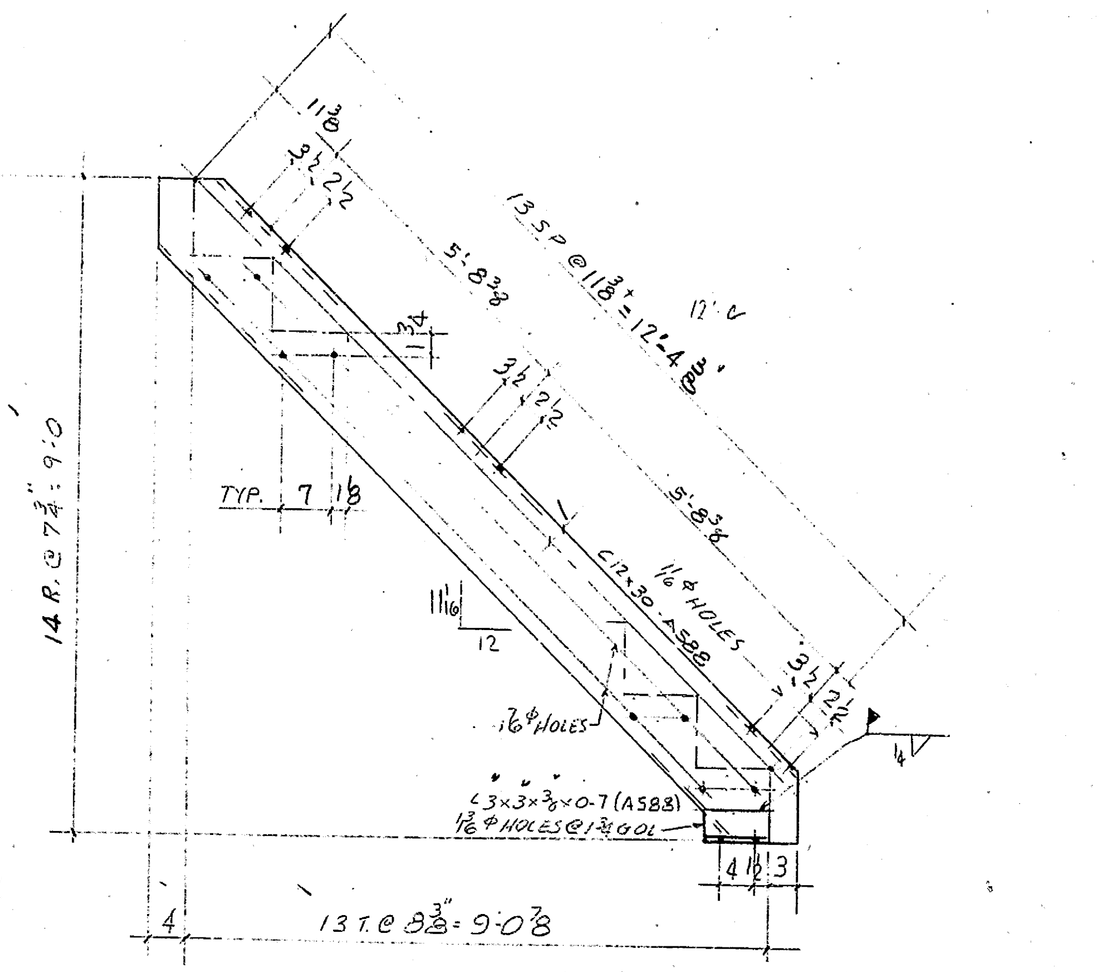

ONE - STRINGER AS SHOWN. MK. 1S1

ONE - DO - OPP HAND MK. 1S2

} ASTM - A588

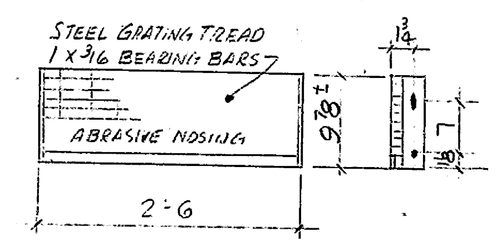

13 - TREADS MK. 1T1

SHOP NOTE:
DRILL VENT HOLES FOR GALVANIZING AS REQ'D.

BILL OF MATERIAL

REQ'D	ITEM:	LENGTH	MARK
ONE	STRINGER		1S1
ONE	STRINGER		1S2
2	C 12 x 30	14'-0	
2	L 3 x 3 x ⅜	0'-7	
ONE	SUPPORT ANGLE		1A1
1	L 6 x 4 x ½	2'-6	
ONE	SILL PLATE		1SP1
1	CK. PL ⅜ x 6	2'-6	
13	TREADS		1T1
	GRATING TREADS 9 3/8" x 2'-6		
	W/ABRASIVE NOSING		
	GALVANIZED		
1	PIPE RAILING		1R1
1	PIPE RAILING		1R2
1	1¼ STD. PIPE	70'±	
4	PL ⅜ x 2	0'-7½	
6	PL ¼ x 2	0'-7½	
	FIELD BOLTS		
7	¾ ϕ KWIK BOLTS	GALV.	
8	⅜ ϕ DO		
12	⅝ ϕ x 2 MACH. BOLTS		
12	⅝ BEV. WSHR		
52	⅜ ϕ x 1 MACH. BOLTS		

ATTN GEN'L. CONT'R.:

IMPORTANT

- ☐ COORDINATION DWGS REQ'D
- ☐ DIMENSIONS ARE FIELD CHECKED
- ☐ DIMENSIONS ARE GUARANTEED

ITEM'S

ARE WE TO PROCEED WITH FABRICATION? ☐ YES ☐ NO

DATE MATERIAL REQ'D .....

HOLDING FABRICATION UNTIL ALL ABOVE INFO. IS COMPLETE

AUTHORIZED SIGNATURE .....

948-7115
301-829-2366

MISCELLANEOUS METALS, INC.

1001 E. RIDGEVILLE BLVD.
P.O. BOX 387
MOUNT AIRY, MD. 21771

STEEL STAIR @ CONTROL HOUSE

DATE	F.A.	F.C.	SHOP	SHIP	CONT'R	ERECT	PURCH	SEPIA
2/7&3 8-9-82	10		1		1			

DISTRIBUTION

DRAWN BY: GJ	CHECKED BY:	RACK #
SHOP COAT: H. D. GALV		
PROJECT: SAVANNAH ROAD BRIDGE		
JOB LOCATION: LEWES, DELAWARE		
CONTRACT ITEM:		
CONTRACTOR: GEORGE & LYNCH		
ARCHITECT: DEL-DEPT. OF TRANSP.		
ERECTED BY: M.M.I.	FIELD CHECKED BY:	
PERMIT #	REF. DWG:	
CONTRACT # 516	JOB # 4164	SHEET 1 OF

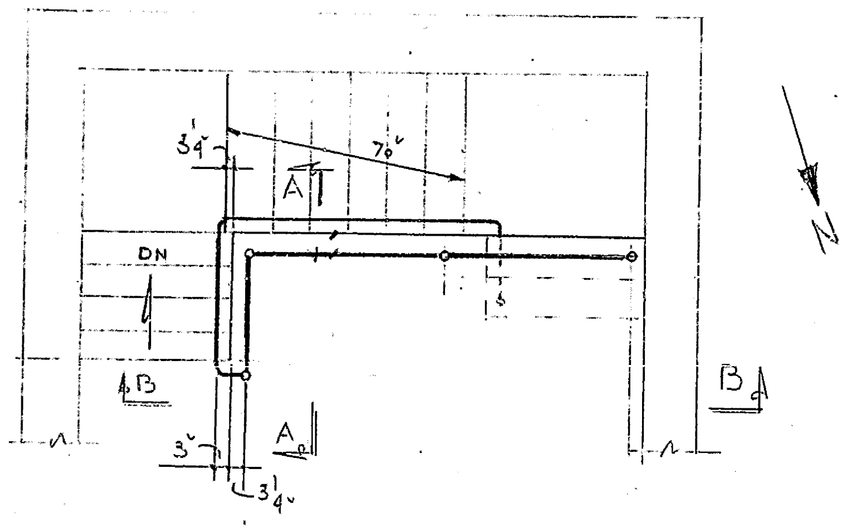

PLAN OF STAIR @ OPERATORS ROOM

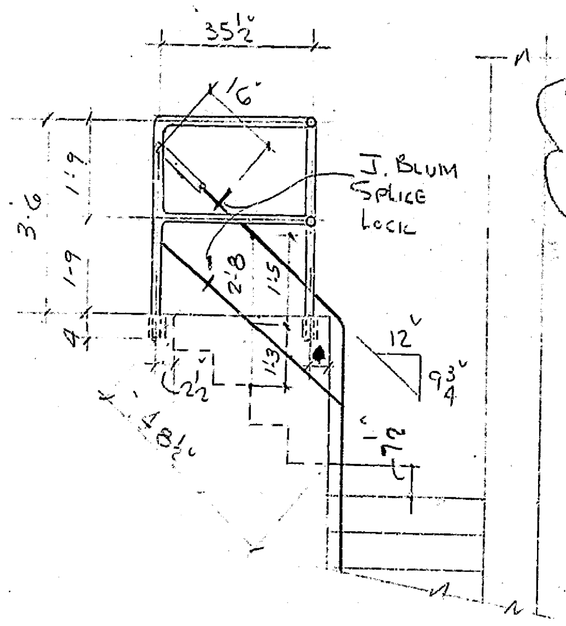

SECT. A-A

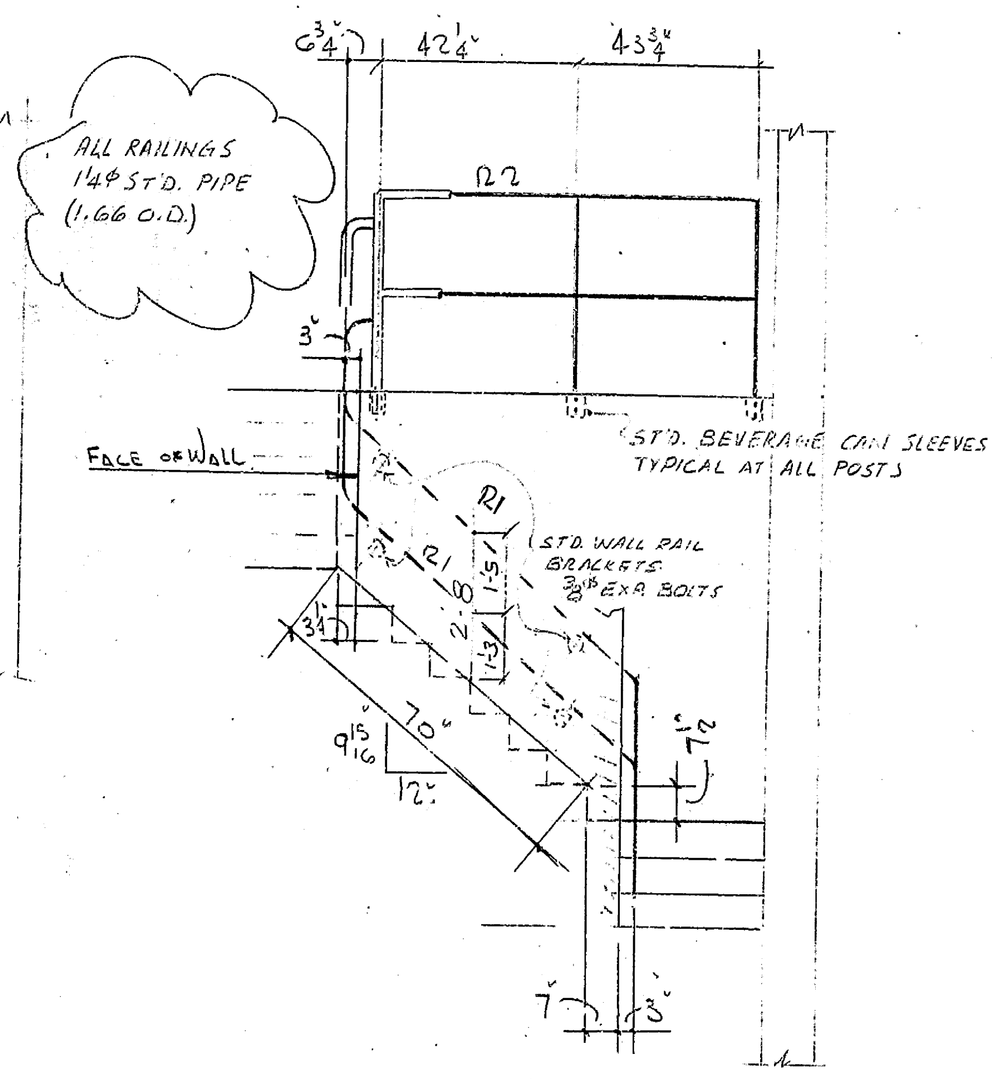

SECT. B-B

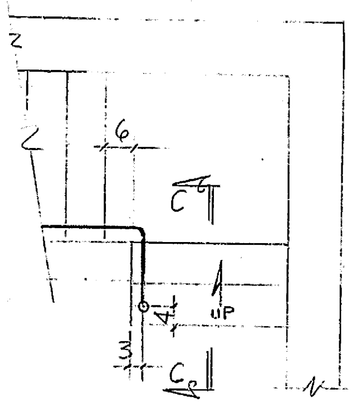

PLAN OF STAIR @ UTILITY ROOM

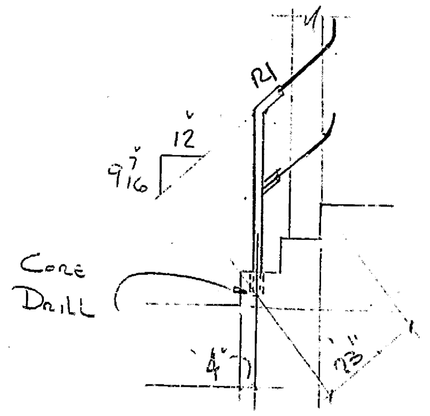

SECT. C-C

SHOP NOTE:
DRILL VENT HOLES FOR GALVANIZING AS REQ'D

FIELD DIMENSIONS REQ'D
PROCEED W/FAB. PER
V.O.L.
8/11/83

STEEL PIPE RAILINGS @ STAIRS FROM UTILITY ROOM TO OPERATORS ROOM

REF. DRWG 27

W.O. # 4166E

BILL OF MATERIAL

REQ'D	ITEM:	LENGTH	MARK
1	1 1/4" STD. PIPE	50' ±	
2	SPLICE LOCKS		
4	3" PRESSED STL BOLTS		
4	3/8" ⌀ EXP. BOLTS		

ATTN GEN'L. CONT'R.:

IMPORTANT

- ☐ COORDINATION DWGS REQ'D
- ☐ DIMENSIONS ARE FIELD CHECKED
- ☐ DIMENSIONS ARE GUARANTEED

ITEM'S

ARE WE TO PROCEED WITH FABRICATION? ☐ YES ☐ NO

DATE MATERIAL REQ'D .....

HOLDING FABRICATION UNTIL ALL ABOVE INFO. IS COMPLETE

AUTHORIZED SIGNATURE .....

948-7115
301-829-2366

MISCELLANEOUS METALS, INC.

1001 E. RIDGEVILLE BLVD.
P.O. BOX 387
MOUNT AIRY, MD. 21771

STEEL PIPE RAILINGS OPERATORS ROOM

DATE	F.A.	F.C.	SHOP	SHIP	CONT'R	ERECT	PURCH	SEPIA
5/4/83			1			1		
8-9-82	10							

DISTRIBUTION

DRAWN BY: GJ | CHECKED BY: | RACK =

SHOP COAT: H. D. G.A.V.

PROJECT: SAVAGE ROAD BRIDGE

JOB LOCATION: LEWES, DELAWARE

CONTRACT ITEM:

CONTRACTOR: GEORGE B. LYNCH

ARCHITECT: DEL. DEPT. OF TRANSP

ERECTED BY: M.M.I. | FIELD CHECKED BY:

PERMIT # | REF. DWG :

CONTRACT # 516 | JOB # | SHEET 2 OF

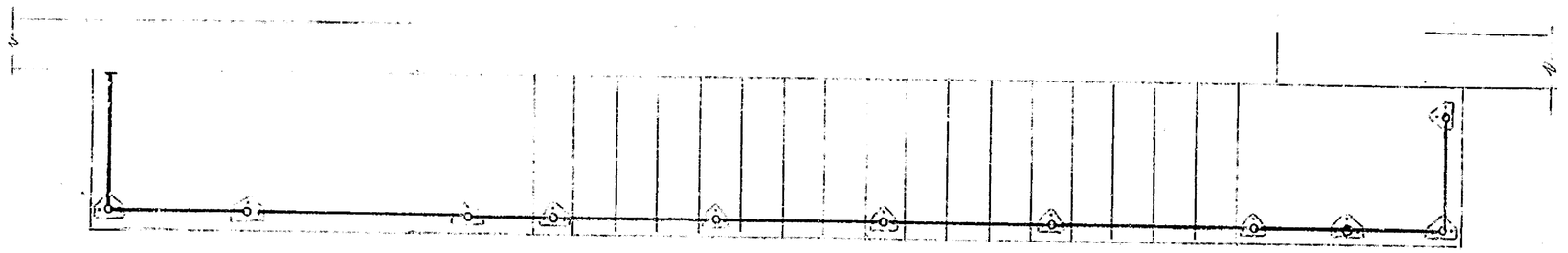

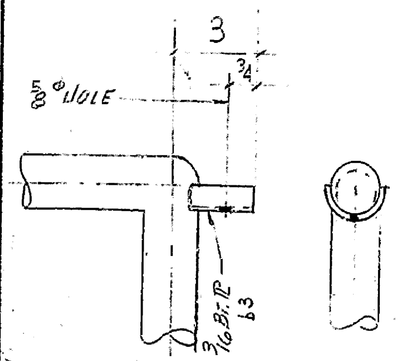

DETAIL · 1

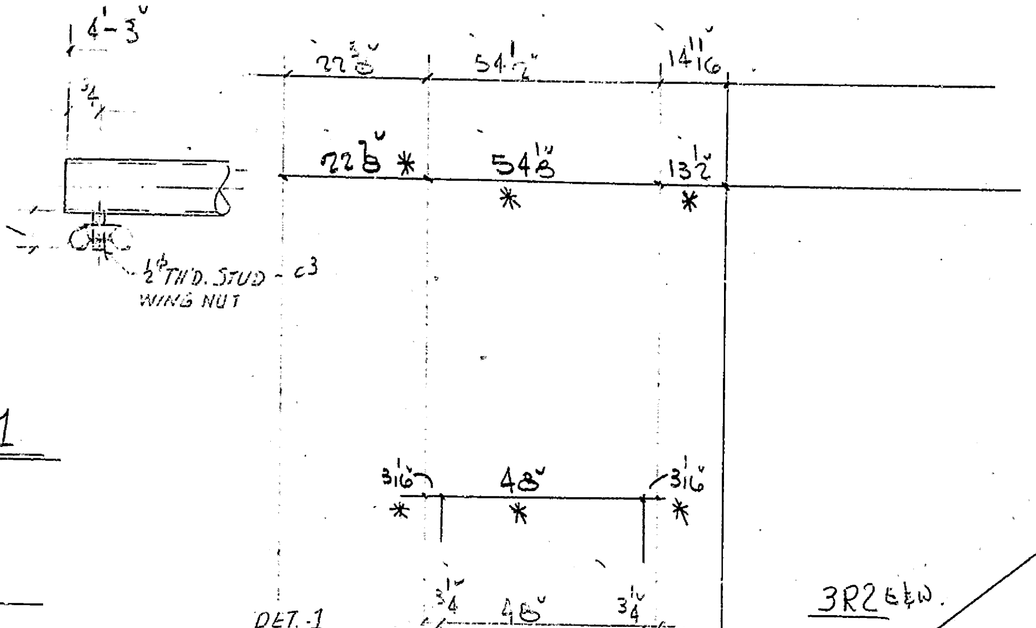

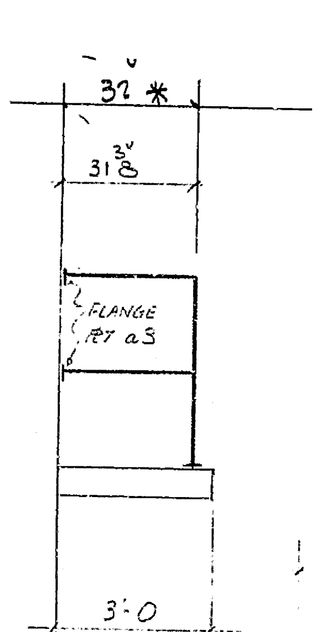

DET. 1

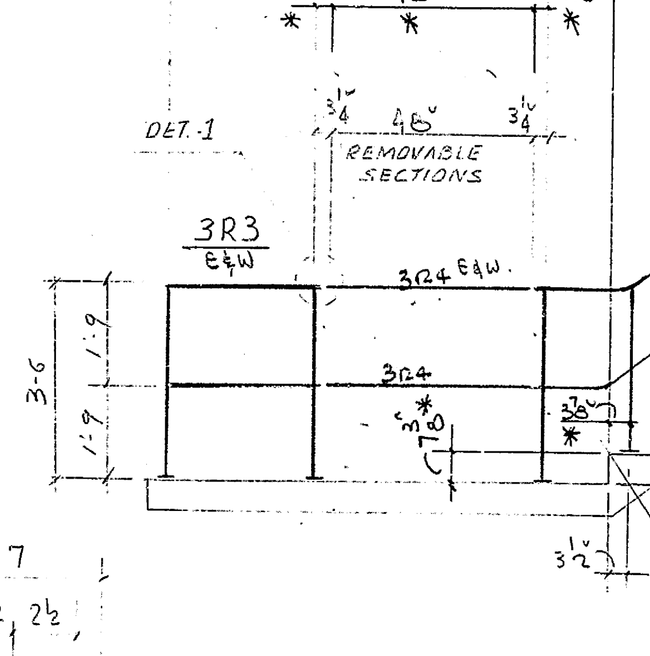

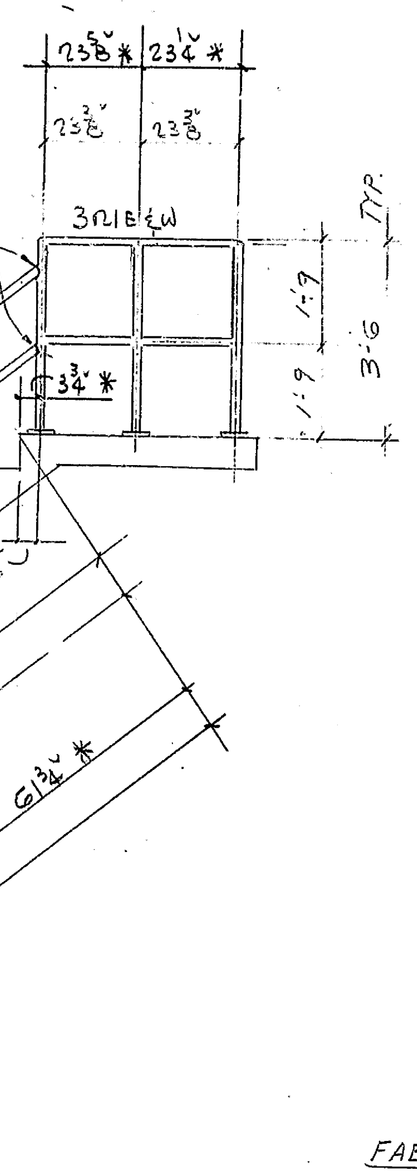

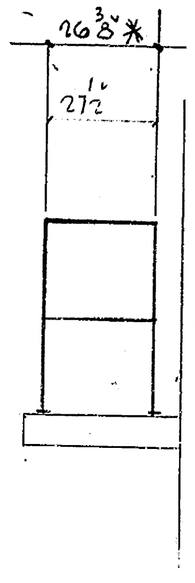

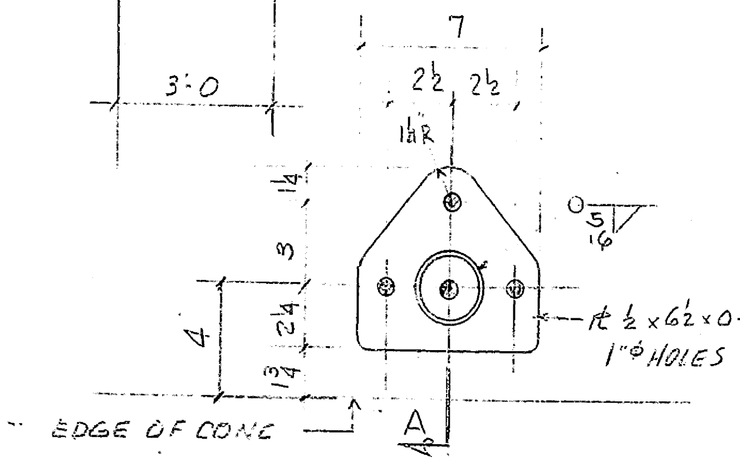

DETAIL OF POST FLANGE

West Pier Dim Mk'd. *

To Shop 5/4/83 — PIPE RAILING @ STEPS · NORTH WALL WEST PIER · AS SHOWN.

To Shop 5/12/83 — —DO— @ STEPS · SOUTH WALL · EAST PIER. - As Shown

REF: DRWG. 25

W. O. 4165E

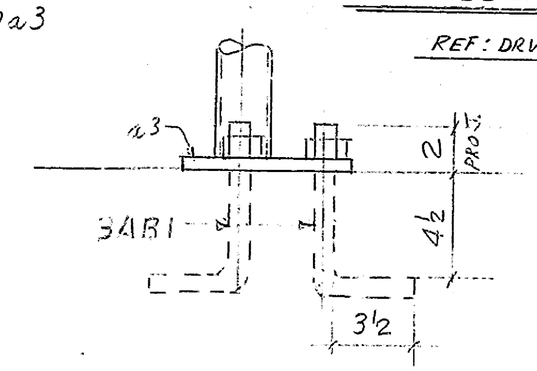

SECT. C-A

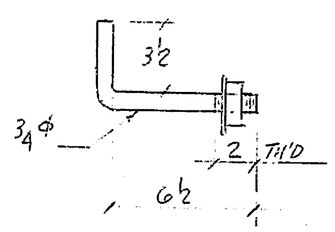

72- ANCHOR BOLTS MK. 3AB1
GALVANIZED

FABRICATION NOTES:

1. RAILINGS TO BE FABRICATED OF 2" ϕ EXTRA STRONG. PIPE. (ASTM-A500, GR-B COPPER BEARING)
2. ALL CONNECTIONS TO BE FLUSH WELDED GROUND SMOOTH.
3. FIELD SPLICES TO BE WELDED AND GROUND SMOOTH.
4. RAILINGS TO BE HOT-DIP GALVANIZED AFTER FABRICATION
5. FIELD WELDS TO BE TOUCHED-UP WITH GALV. REPAIR PAINT.
6. PRIME & FINISH PAINT, IN FIELD BY GEN'L. CONTRACTOR.
7. SHOP DRILL VENT HOLES FOR GALVANIZING. AS REQ'D.

BILL OF MATERIAL

REQ'D	ITEM:	LENGTH	MARK
1	2" ϕ x STR. PIPE	220' ±	SEE NOTE-1
26	PL 2 x 6 1/2	0-7	a3
~~72~~	~~ANCHOR BOLT~~		~~3ABI~~
~~72~~	~~BAR 3/4 ϕ~~	~~0-10 BENT~~	~~GALV~~
~~72~~	~~NUT 3/4~~		
~~72~~	~~WASH 3/4~~		
8	PL 3/16 x 3	0-3 ±	b3
8	BAR 1/2 ϕ	0-1	c3
8	WINGNUT 1/2"		

ATTN GEN'L. CONT'R.:

IMPORTANT

- ☐ COORDINATION DWGS REQ'D
- ☐ DIMENSIONS ARE FIELD CHECKED
- ☐ DIMENSIONS ARE GUARANTEED

ITEM'S

ARE WE TO PROCEED WITH FABRICATION? ☐ YES ☐ NO

DATE MATERIAL REQ'D .....

HOLDING FABRICATION UNTIL ALL ABOVE INFO. IS COMPLETE

AUTHORIZED SIGNATURE .....

948-7115
MISCELLANEOUS METALS, INC.
301-829-2366
1001 E. RIDGEVILLE BLVD.
P.O. BOX 387
MOUNT AIRY, MD. 21771

STEEL PIPE RAILING @ EXTERIOR STEPS

DATE	F.A.	F.C.	SHOP	SHIP	CONT'R	ERECT	PURCH	SEPIA
5/4/83			1			1		
5/12/83			1			1		
8-9-82	10							

DISTRIBUTION

DRAWN BY: GJ | CHECKED BY: | RACK #

SHOP COAT: HOT DIP GALV.

PROJECT: SAVAGE NEW ROAD BRIDGE

JOB LOCATION: LEWES, DELAWARE

CONTRACT ITEM:

CONTRACTOR: GEORGE & LYNCH

ARCHITECT: DEL. DEPT. OF TRANSPORTATION

ERECTED BY: M.M.I. | FIELD CHECKED BY:

PERMIT # | REF. DWG.:

CONTRACT # 516 | JOB # | SHEET 3 OF

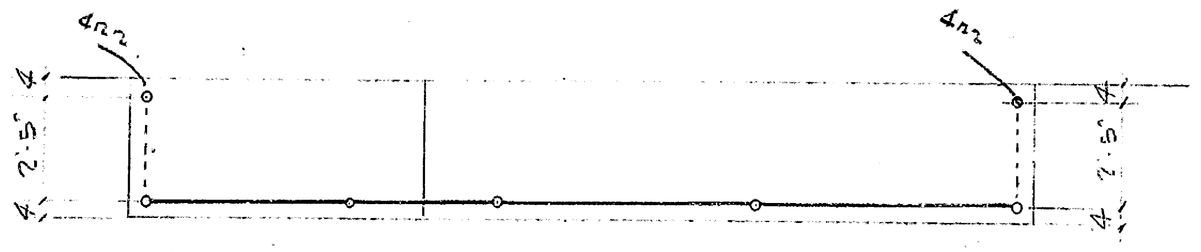

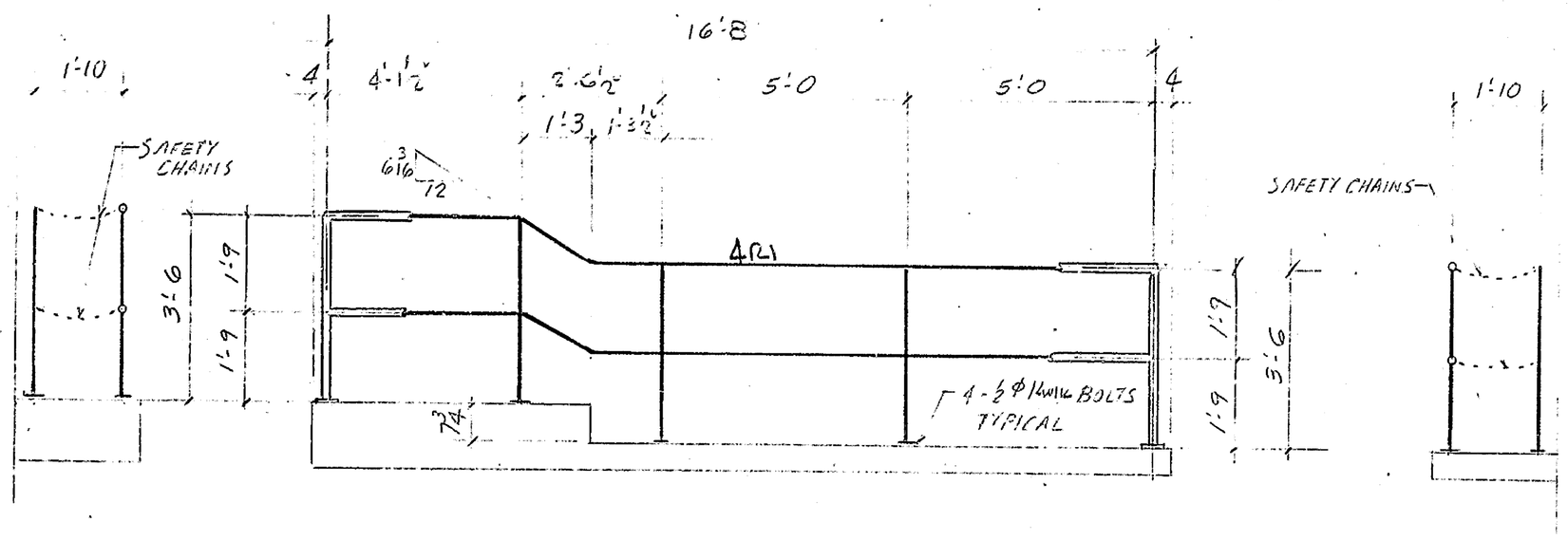

PIPE RAILING @ CONTROL HOUSE WALKWAY TO SWITCHBOARD ROOM

REF: DRWG. 26.43 W.O.# 4167E

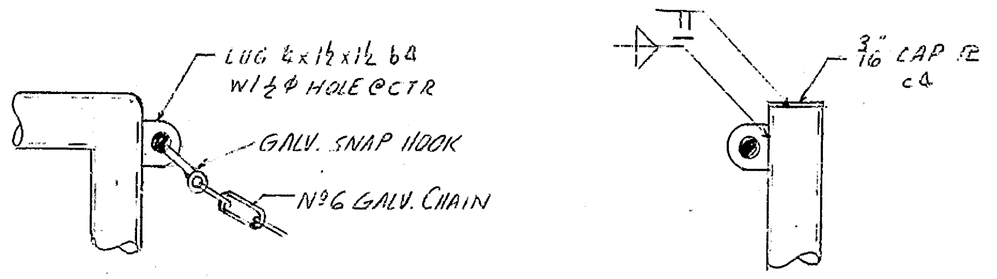

DETAIL OF SAFETY CHAINS

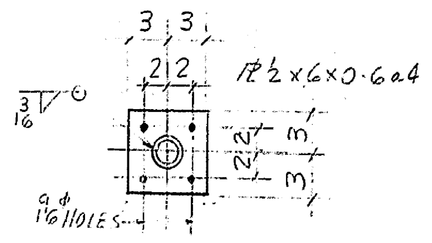

DETAIL OF POST BASE PLS

RAIL CONSTRUCTION:

1. RAILING TO FABRICATED OF 2" Ø. I.P.S. PIPE.
2. CONNECTIONS TO BE FLUSH WELDED. GROUND SMOOTH.
3. RAILING TO BE HOT-DIP GALV. AFTER FABRICATION.
4. PRIME & FINISH PAINT, IN FIELD BY GEN'L. CONT'R.
5. SHOP DRILL VENT HOLES FOR GALVANIZING AS REQ'D

BILL OF MATERIAL			
REQ'D	ITEM:	LENGTH	MARK
1	2" Ø I.P.S. PIPE	60'± (SEE NOTE 1)	
7	PL ½ x 6	0'-6	a4
8	PL ¼ x 1½	0'-1½	b4
2	PL ⅜ x 1⅝ Ø		c4
4	CHAIN. №6 GALV.	2'-0	
8	GALV. SNAP HOOKS		
28	½" Ø KWIK BOLTS SS.		
3	WIN. SUB-FRAMES		W4
6	C6 x 8.2	3'-7½	
6	DO	4'-0¼	
ONE	WIN. SUB-FRAME		W5
2	C6 x 8.2	2'-3	
2	DO	2'-0¼	
ONE	DOOR SUB-FRAME		D1
11	C6 x 8.2	3'-4	
2	DO	7'-1⅛	
24	FB ⅜ x 2	0'-6 BENT	
	FIELD BOLTS		
28	½" Ø KWIK BOLTS	GALV.	

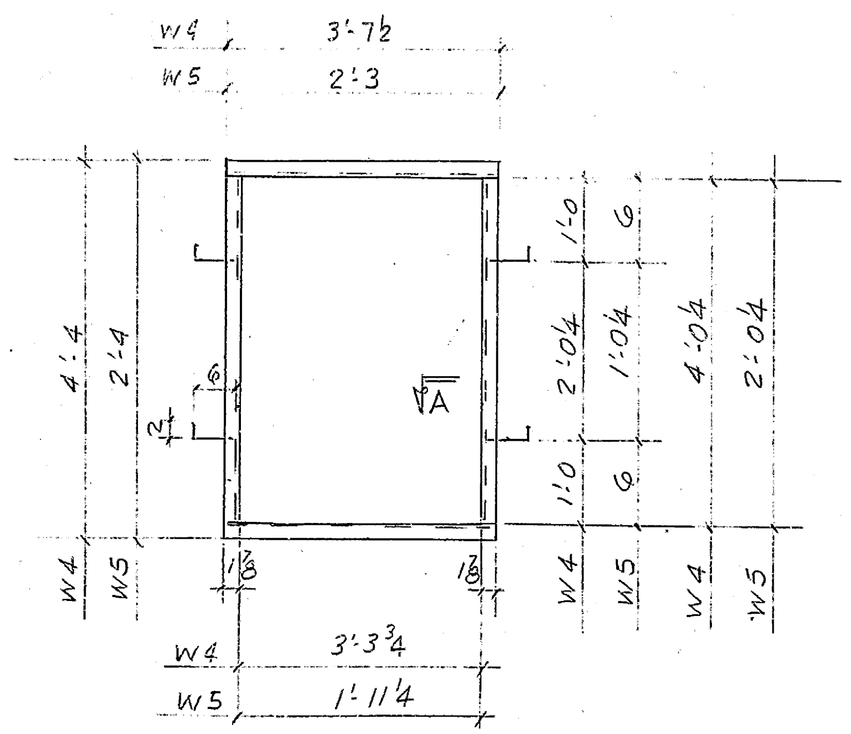

3 - WINDOW FRAMES NOTED MK. W4
1 - WINDOW FRAME NOTED MK. W5
} ASTM-A588

REF: DRWG. 43 & 44 W.O.# 4172D

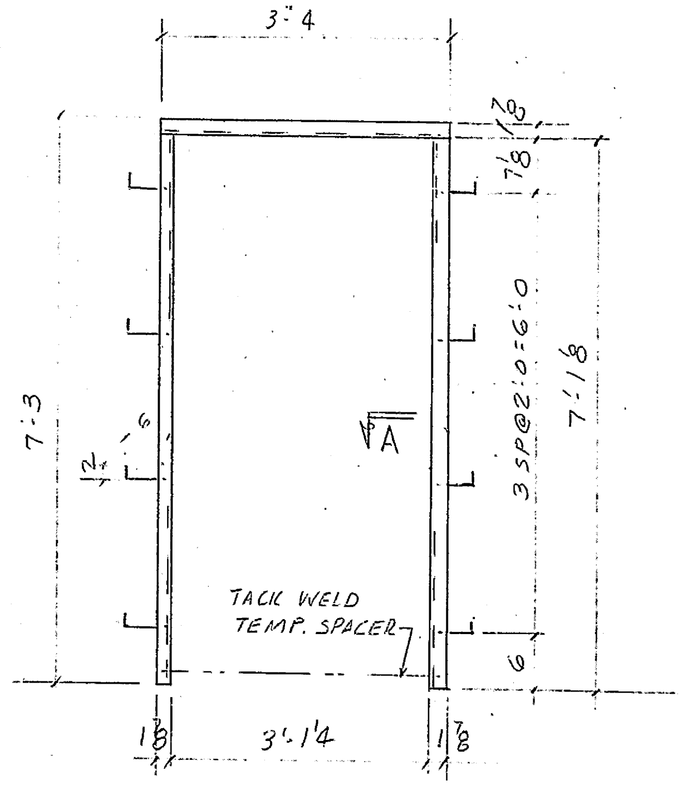

ONE - DOOR FRAME MK D1 - ASTM-A588

REF: DWG. 43 & 44 W.O.# 4177D

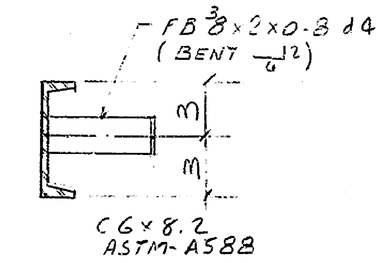

SECT. @ A

ATTN GEN'L. CONT'R.:

IMPORTANT

- ☐ COORDINATION DWGS REQ'D
- ☐ DIMENSIONS ARE FIELD CHECKED
- ☐ DIMENSIONS ARE GUARANTEED

ITEM'S

ARE WE TO PROCEED WITH FABRICATION? ☐ YES ☐ NO

DATE MATERIAL REQ'D .....

HOLDING FABRICATION UNTIL ALL ABOVE INFO. IS COMPLETE

AUTHORIZED SIGNATURE .....

948-7115
301-829-2366
MISCELLANEOUS METALS, INC.
1001 E. RIDGEVILLE BLVD.
P.O. BOX 387
MOUNT AIRY, MD. 21771

STEEL PIPE RAIL @ CONTROL HOUSE WALK WAY
STEEL CHANNEL FRAMES FOR WINDOWS & DOOR

DATE	F.A.	F.C.	SHOP	SHIP	CONT'R	ERECT	PURCH	SEPIA
5/13/83								
8-9-82	10				1		1	

DISTRIBUTION

DRAWN BY: G J	CHECKED BY:	RACK #
SHOP COAT: H.D. GALV.		
PROJECT: SAVANNAH ROAD BRIDGE		
JOB LOCATION: LEWES, DELAWARE		
CONTRACT ITEM:		
CONTRACTOR: GEORGE & LYNCH		
ARCHITECT: DEL. DEPT OF TRANSP		
ERECTED BY: M.M.I.	FIELD CHECKED BY:	
PERMIT # N/R	REF. DWG:	
CONTRACT # 516	JOB #	SHEET 4 OF

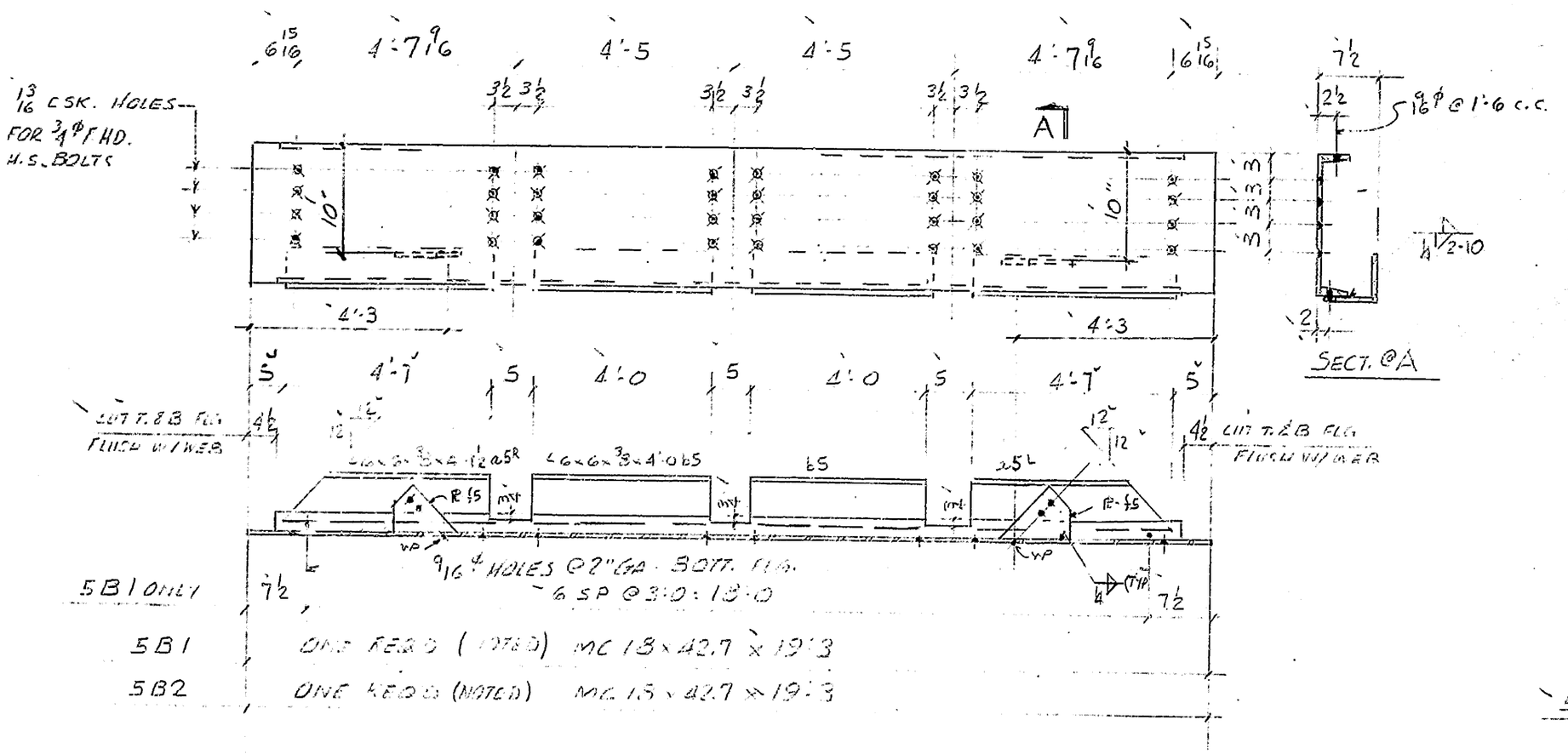

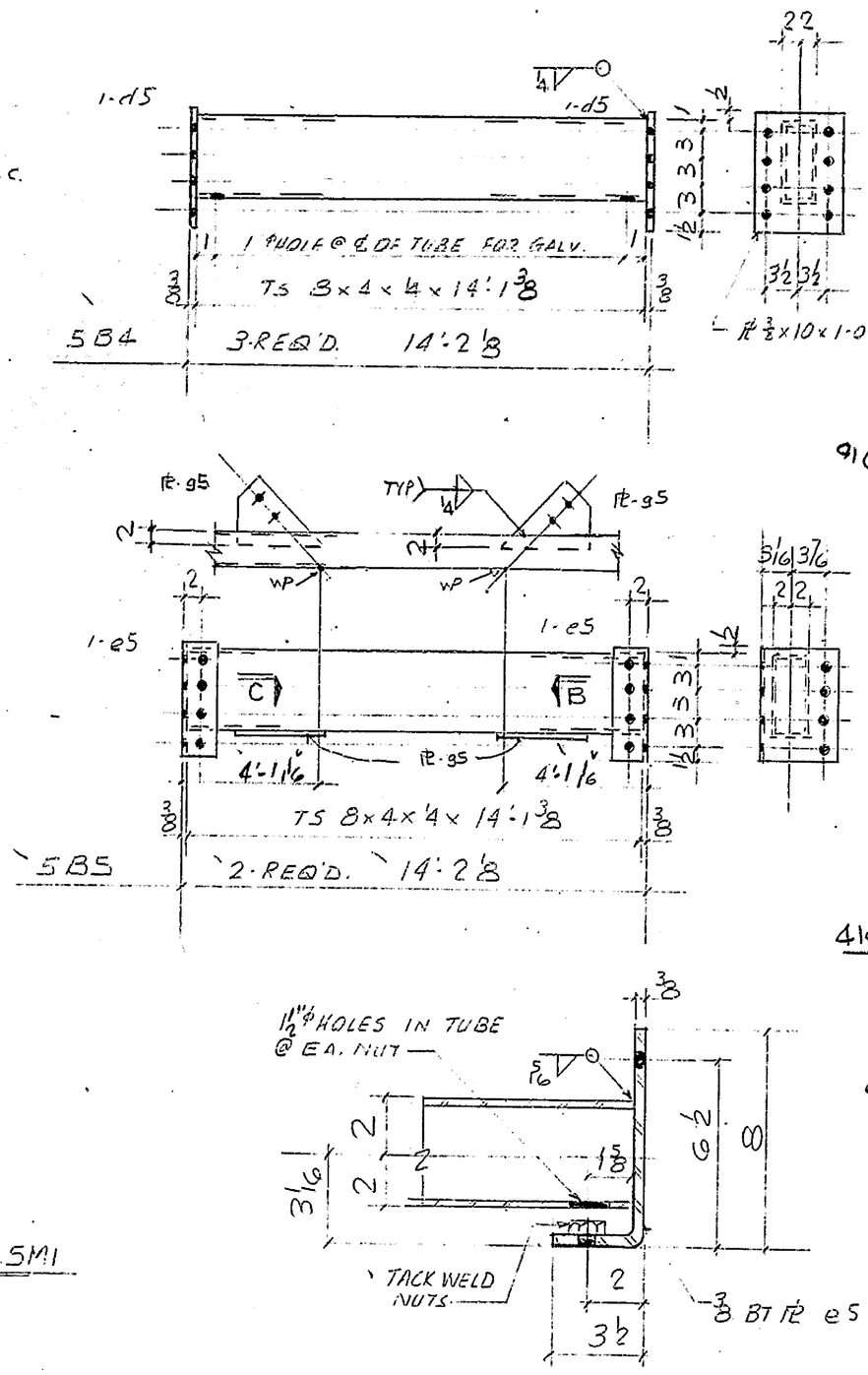

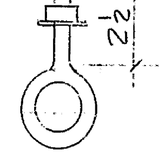

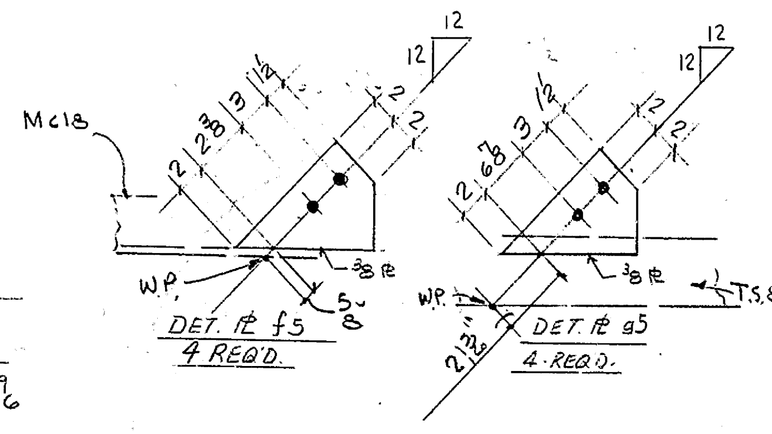

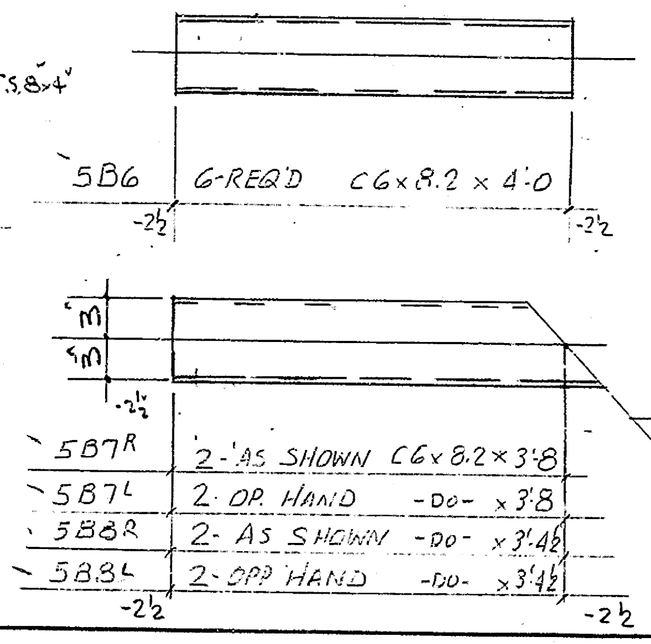

NOTE: HOLES 13/16ϕ UNL. NOTED.
ALL STRUCTURAL STEEL - ASTM A588

BILL OF MATERIAL

REQ'D	ITEM:	LENGTH	MARK
ONE	MC 18×42.7	19'-3	5B1
ONE	DO	19'-3	5B2
2	DO	14'-1 7/8	5B3
2	L 6×6×3/8	4'-7	a5R
2		4'-7	a5L
6		4'-0	b5
2		4'-2 15/16	c5R
2		4'-2 15/16	c5L
3	TS 8×4×1/4	14'-1 3/8"	5B4
6	PL 3/8×10	1'-0	d5
2	TS 8×4×1/4	14'-1 3/8	5B5
4	PL 3/8×10 3/4	1'-0 BENT	e5
16	3/4 H.S. NUTS		
6	C6×8.2	4'-0	5B6
2		3'-11"	5B7R
2		3'-11"	5B7L
2		3'-7 1/2"	5B8R
2		3'-7 1/2"	5B8L
17	1/2ϕ S.S. EYE BOLTS 2 1/2 SHANK		5M1
4	L 3×3×3/8	5'-0 5/16"	5D1
4	3/8 PL	9 1/2"	g5
4	3/8 PL	9 1/16"	f5

9163
4168
4163

ATTN GEN'L. CONT'R.:

IMPORTANT

- ☐ COORDINATION DWGS REQ'D
- ☐ DIMENSIONS ARE FIELD CHECKED
- ☐ DIMENSIONS ARE GUARANTEED

ITEM'S

ARE WE TO PROCEED WITH FABRICATION? ☐ YES ☐ NO

DATE MATERIAL REQ'D .....

HOLDING FABRICATION UNTIL ALL ABOVE INFO. IS COMPLETE

AUTHORIZED SIGNATURE .....

948-7115
301-829-2366
MISCELLANEOUS METALS, INC.
1001 E. RIDGEVILLE BLVD.
P.O. BOX 387
MOUNT AIRY, MD. 21771

ROOF FRAMING

DATE	F.A.	F.C.	SHOP	SHIP	CONT'R	ERECT	PURCH	SEPIA
2/22/83			1			1		
8-9-82	10							

DISTRIBUTION

DRAWN BY: G J | CHECKED BY: | PACK =

SHOP COAT: H. D. GALV.

PROJECT: SAVANNAH ROAD BRIDGE

JOB LOCATION: LEWES, DELAWARE

CONTRACT ITEM:

CONTRACTOR: GEORGE & LYNCH

ARCHITECT: DEL. DEPT. OF TRANSP.

ERECTED BY: M/R | FIELD CHECKED BY:

PERMIT # | REF. DWG:

CONTRACT # 516 | JOB # | SHEET 5 OF

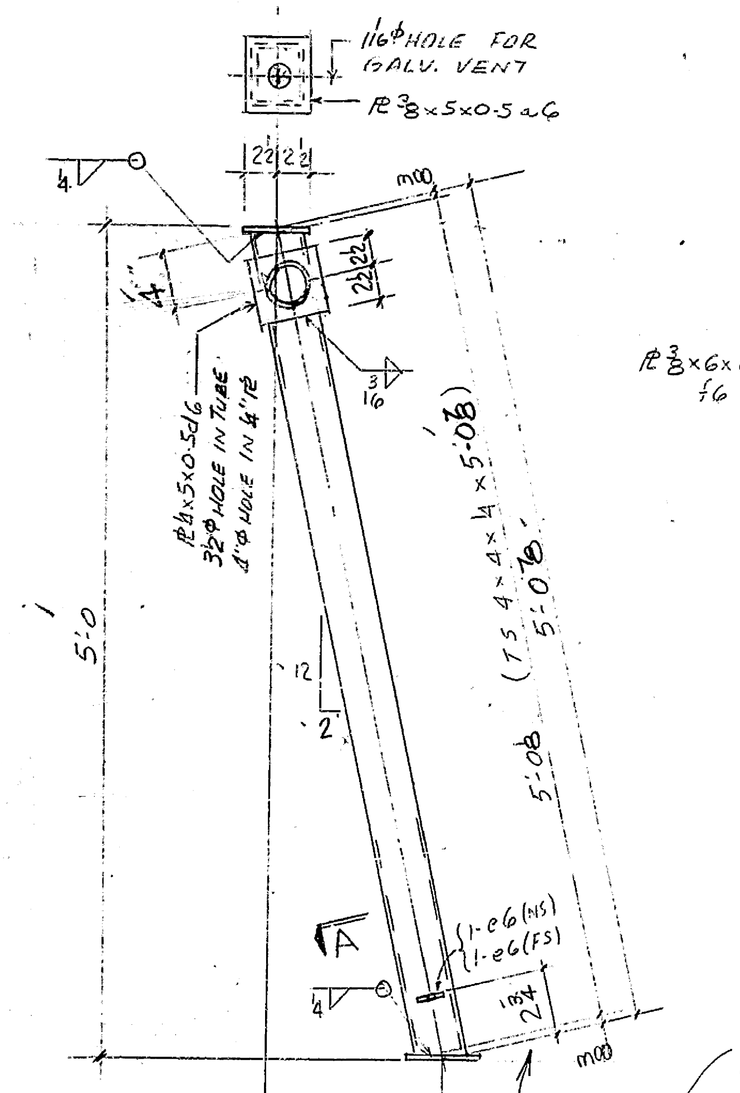

4-TUBE POSTS -NOTED- MK 6P1

ONE -DO- NOTED- MK 6P2

ONE -DO- NOTED- MK 6P3

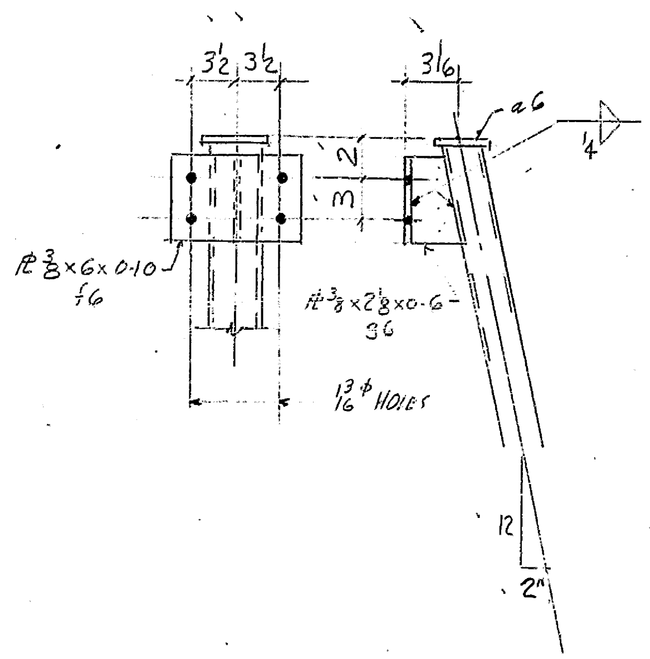

PARTS AND DIMENSIONS NOT SHOWN ARE SAME AS 6P1

4-TUBE POSTS MK 6P4

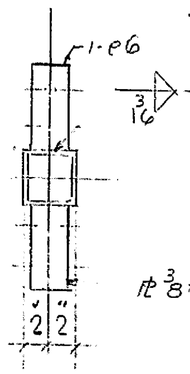

SECT @ A

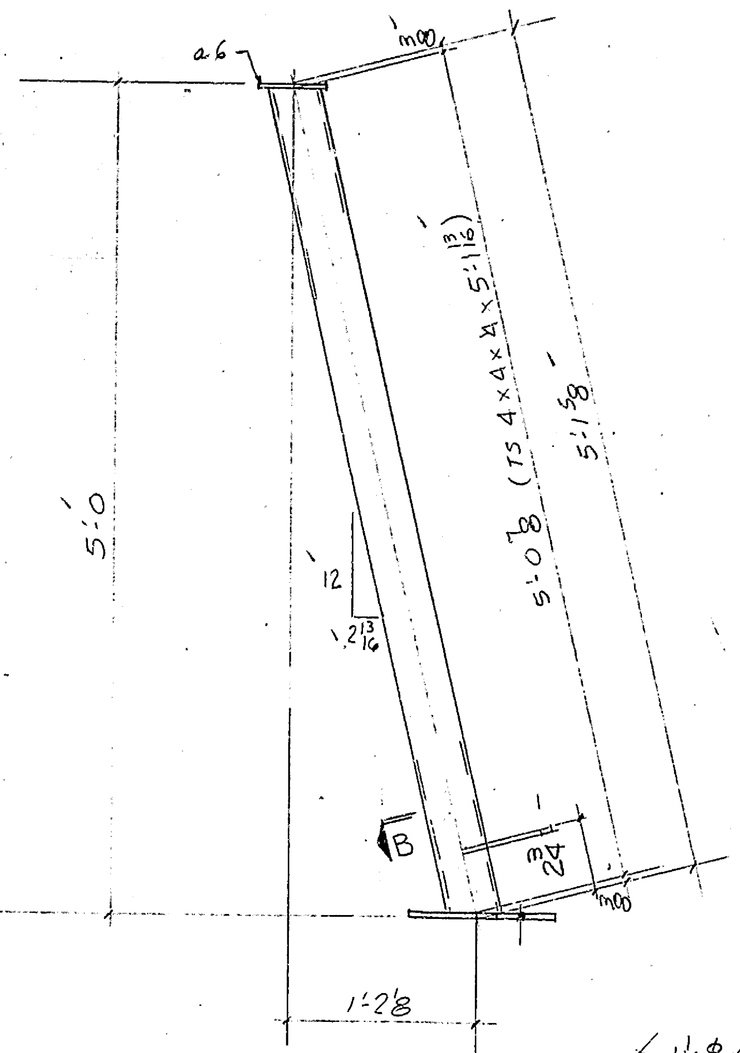

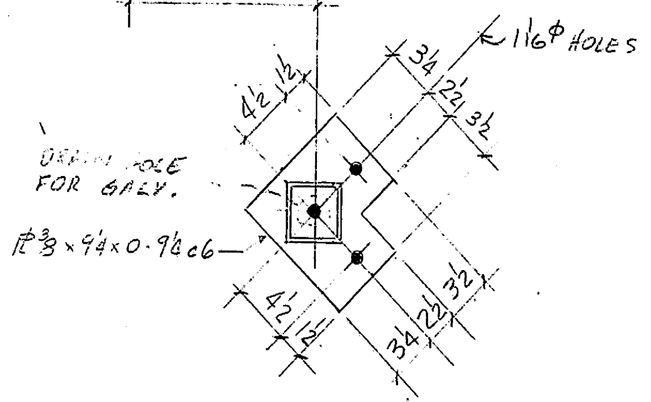

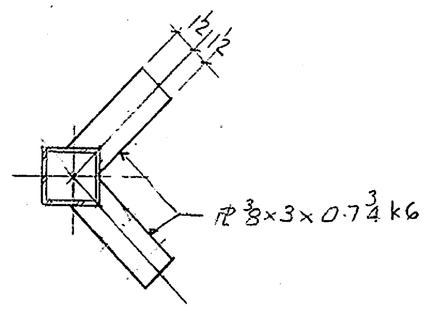

SECT @ C

4-TUBE POSTS MK 6P5

4163

BILL OF MATERIAL

REQ'D	ITEM:	LENGTH	MARK
4	TS 4 x 4 x ¼	5'-0 7/8	6P1
ONE		5'-0 7/8	6P2
ONE		5'-0 7/8	6P3
4		5'-0 7/8	6P4
4		5'-1 13/16	6P5
14	PL 3/8 x 5	0'-5	a6
10	PL 3/8 x 5	0'-10	b6
4	PL 3/8 x 9¼	0'-9 1/4"	c6
2	PL ¼ x 5	0'-5	d6
8	PL 3/8 x 3	7 3/4"	k6
4	PL 3/8 x 6	0'-10	f6
4	PL 3/8 x 2 3/8	0'-6	g6
20	PL 3/8 x 3	0'-6½	h6

ATTN GEN'L. CONT'R.:

IMPORTANT

- ☐ COORDINATION DWGS REQ'D
- ☐ DIMENSIONS ARE FIELD CHECKED
- ☐ DIMENSIONS ARE GUARANTEED

ITEM'S

ARE WE TO PROCEED WITH FABRICATION? ☐ YES ☐ NO

DATE MATERIAL REQ'D .....

HOLDING FABRICATION UNTIL ALL ABOVE INFO. IS COMPLETE

AUTHORIZED SIGNATURE .....

948-7115
301-829-2365
MISCELLANEOUS METALS, INC.
1001 E. RIDGEVILLE BLVD.
P.O. BOX 387
MOUNT AIRY, MD. 21771

DATE	F.A.	F.C.	SHOP	SHIP	CONT'R	ERECT	PURCH	SEPIA
2/27/83			1			1		
8-9-82	10							

DISTRIBUTION

DRAWN BY: GJ	CHECKED BY:	RACK #
SHOP COAT: H.D. GALV.		
PROJECT: SAVANNAH ROAD BRIDGE		
JOB LOCATION: LEWES. DELAWARE		
CONTRACT ITEM:		
CONTRACTOR: GEORGE & LYNCH		
ARCHITECT: DEL. DEPT. OF TRANSPORTATION		
ERECTED BY: MMI	FIELD CHECKED BY:	
PERMIT #: N/R	REF. DWG:	
CONTRACT # 5160	JOB #	SHEET 6 OF

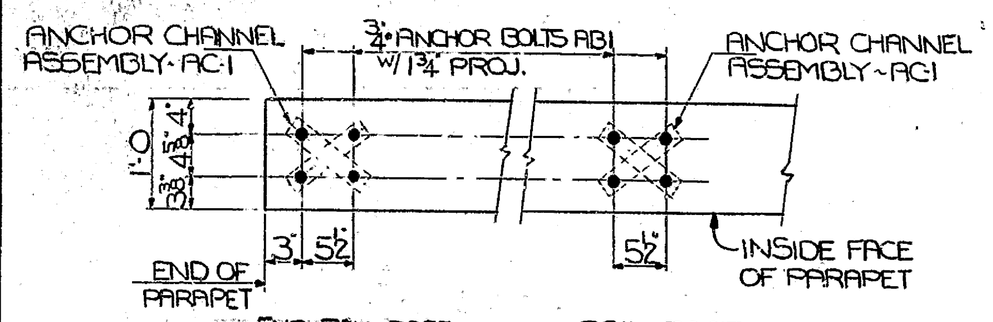

ANCHOR BOLT PLAN

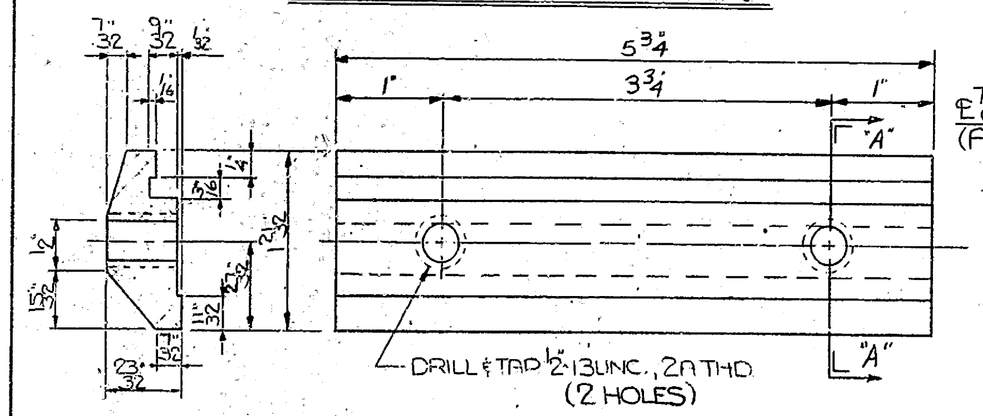

SECTION "A-A"

86 ~REQ'D CLAMPING BAR (CB1)

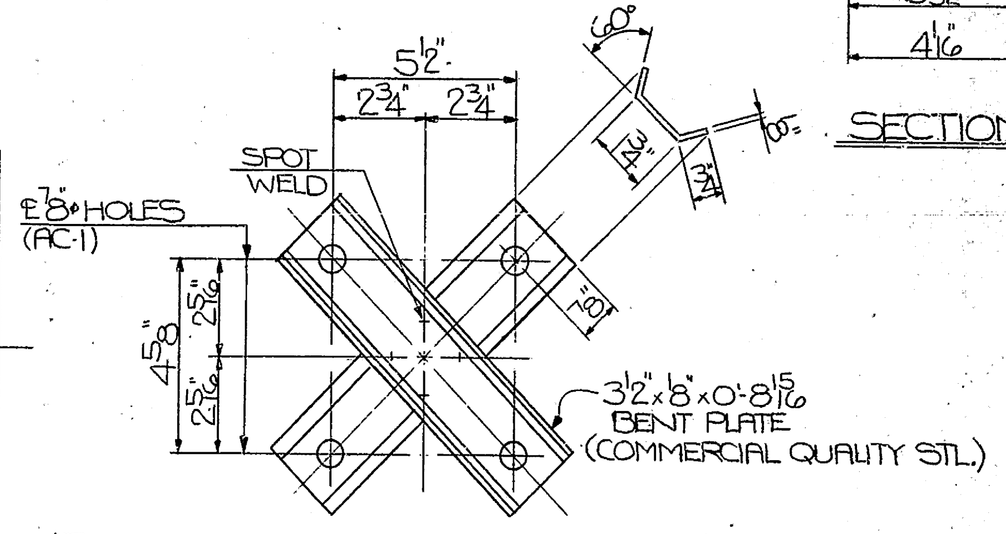

47 ~ANCHOR CHANNEL ASS'BLY (AC-1)

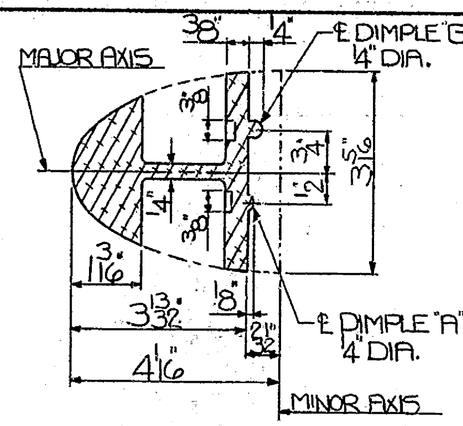

SECTION "C-C"

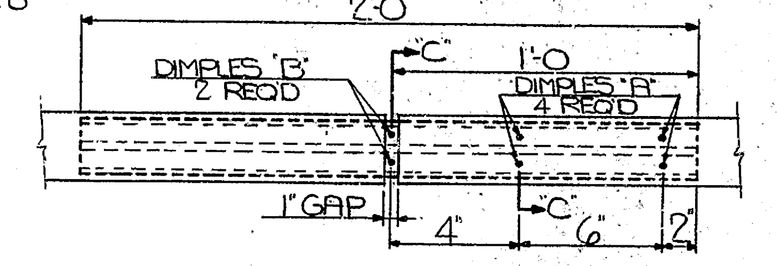

4 ~REQ'D SPLICE SLEEVES S-1

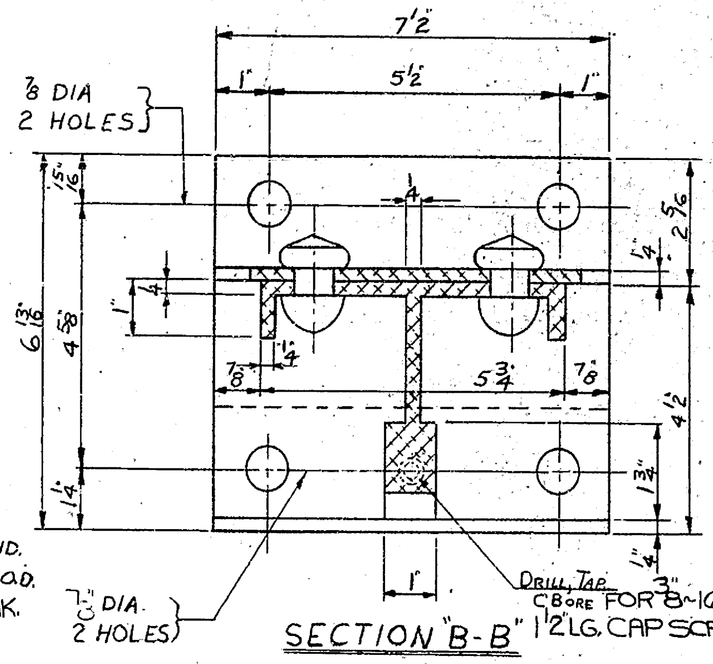

SECTION "B-B"

GENERAL NOTES

- MATERIAL FOR POSTS, POST BASES, END RAIL BASES, CLAMP BARS AND SPLICES SHALL BE ALUM. ALLOY 6061-T6 PER ASTM B221.
- MATERIAL FOR RAILS SHALL BE ALUM. ALLOY 6061-T6 OR 6351-T5 PER ASTM B221.
- ALUM. WASHERS SHALL BE ASTM B209 ALLOY ALCLAD 2024-T3
- RAIL END CAPS SHALL BE ALUM. PERMANENT MOLD CASTINGS CONFORMING TO ASTM B108 ALLOY A-356.F OR ALUM. SAND CASTINGS CONFORMING TO ASTM B26 ALLOY A-356.F
- STAINLESS STEEL BOLTS AND CAP SCREWS SHALL CONFORM TO A.S.T.M. A193 AND ANY OF THE 300 SERIES HAVING A MINIMUM YIELD STRENGTH OF 30,000 P.S.I.
- MATERIAL FOR ALUM. RIVETS SHALL BE ASTM B316 OR B221-1, ALLOY 6061-T6 OR 6053-T6. RIVETS TO BE 'HIGH' BUTTON HEAD AND CONE POINT, COLD DRIVEN.
- ALUM. SHIMS, IF REQ'D, SHALL CONFORM TO ASTM B209 ALLOY 1100-0
- FILLER METAL FOR WELDING SHALL BE 5356 OR 5556
- BOTTOM OF POST BASES AND END RAIL BASES SHALL BE THOROUGHLY COATED WITH WITH AN APPROVED CAULKING COMPOUND. (BY OTHERS)
- EACH RAIL SECTION SHALL BE ATTACHED TO A MINIMUM OF 4 POSTS WHERE POSSIBLE.

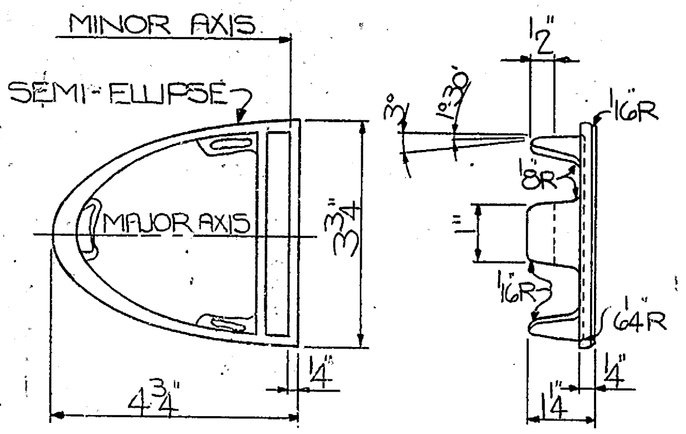

10 ~REQ'D END CAPS

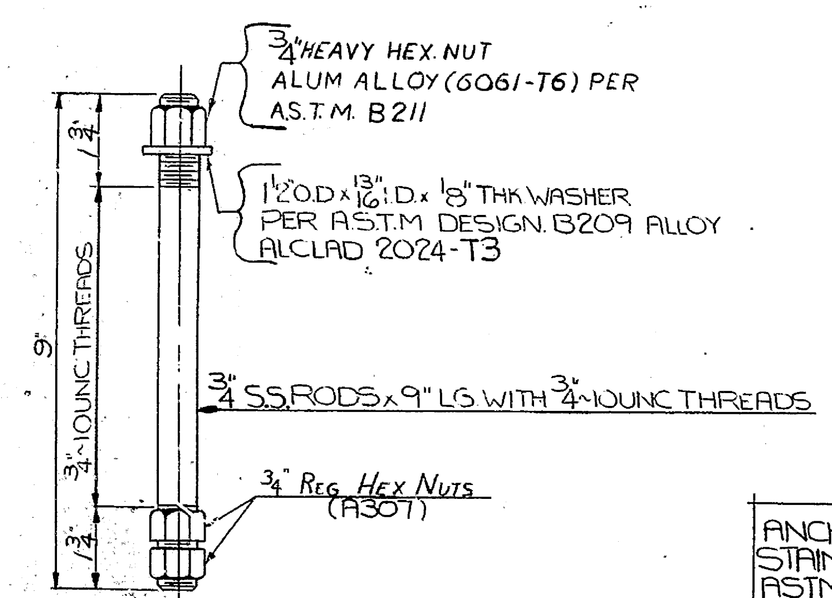

188 ~REQ'D ANCHOR BOLTS AB-1

ANCHOR BOLTS TO BE STAINLESS STEEL PER ASTM A276, TYPE 430 THREADS TO BE ROLLED

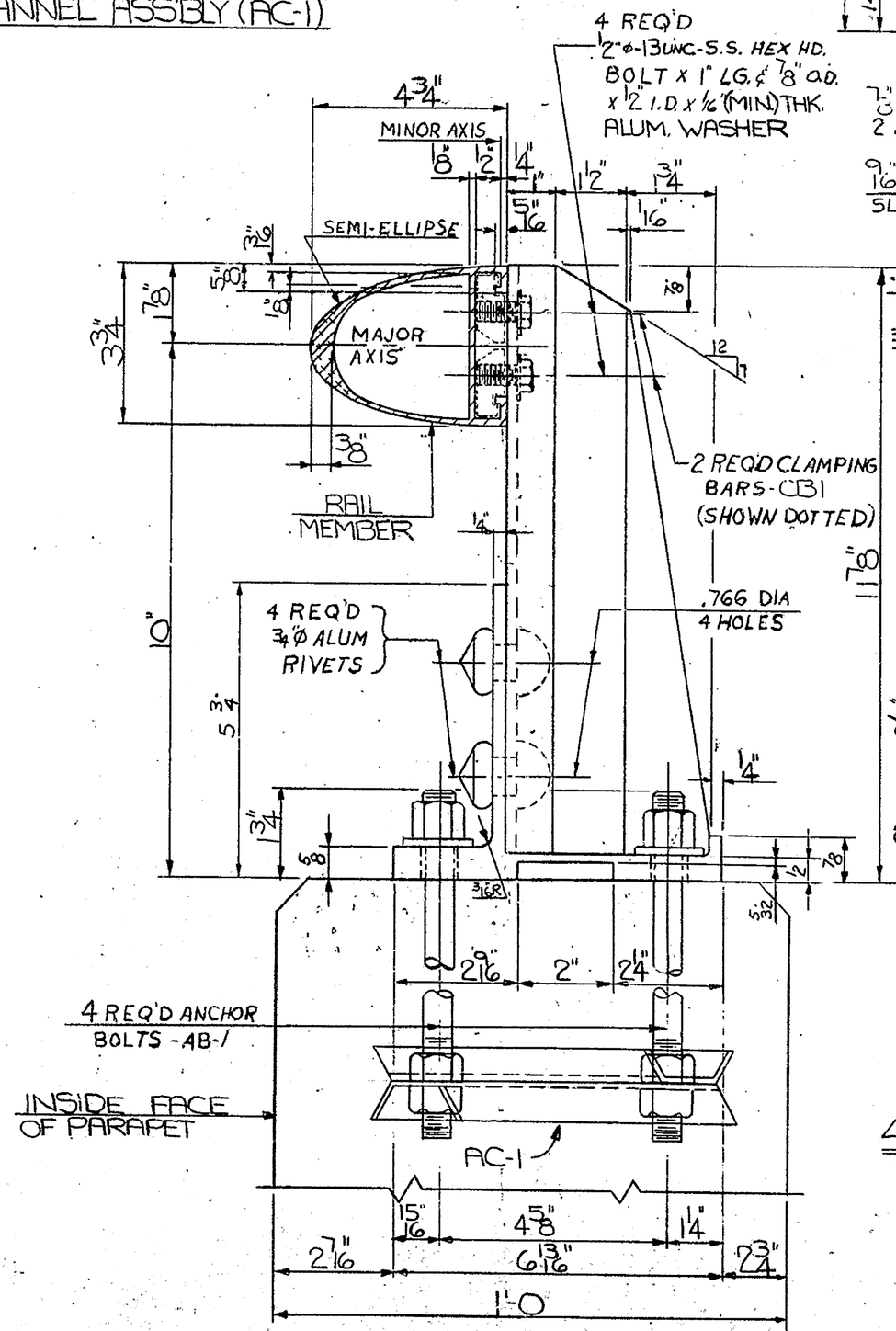

43 ~REQ'D FABRICATED ALUM. POSTS

NOTE:
DULL ALL SHARP CUT EDGES ON POST.

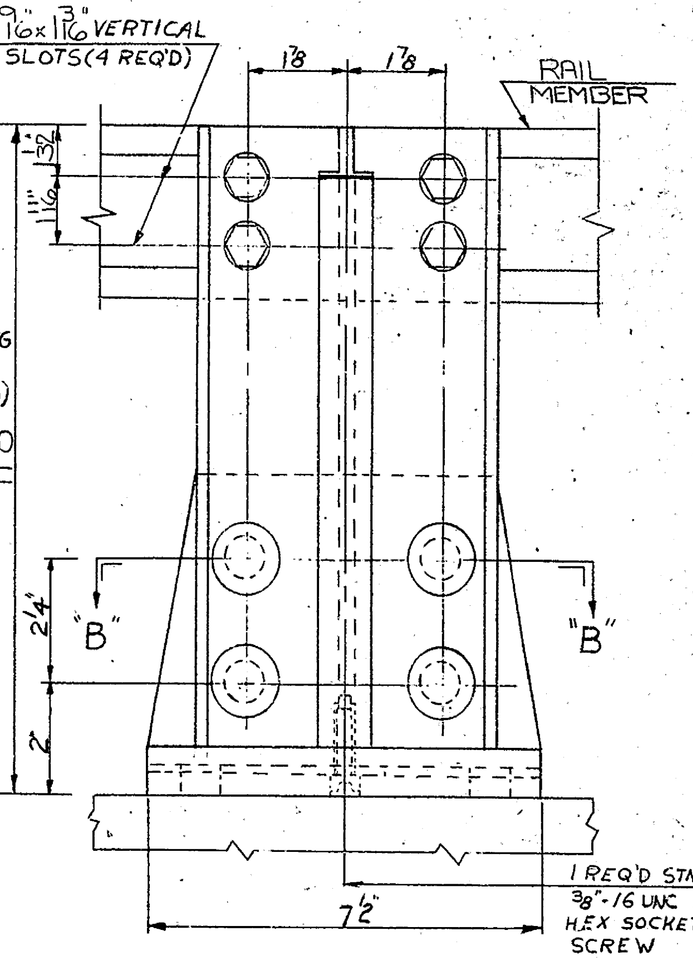

FOR END RAIL DETAILS SEE DWG. LB-3

APPROVED 2-9-83 D.D.O.T.	RECD APPROVAL DRAWING 2-15-83

L. B. FOSTER CO.
415 HOLIDAY DRIVE
PITTSBURGH, PENNSYLVANIA 15220

FOR: GEORGE & LYNCH, INC.
DELAWARE DEPT. OF TRANSPORTATION
SUSSEX CO. FAP NO. RS-1047(2)
ONE-LINE ALUMINUM RAILING
GENERAL NOTES & TYPICAL DETAILS

MADE KAD	DATE 12/82	JOB NO. AL-1818	PRINT NO. NO. 832
CHECK ELT	DATE 1/14/83	DRAWING NO. LB-1	CUST. NO.

INSPECTION BY _____ REVISIONS

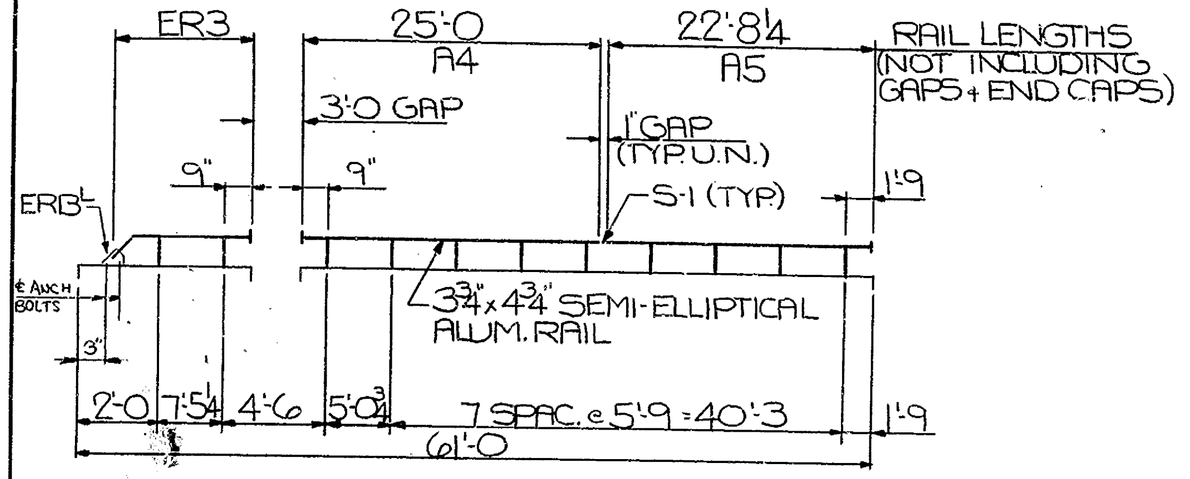

INSIDE RAIL ELEV. ~ SOUTHEAST RAIL
INSIDE RAIL ELEV. ~ NORTHWEST RAIL

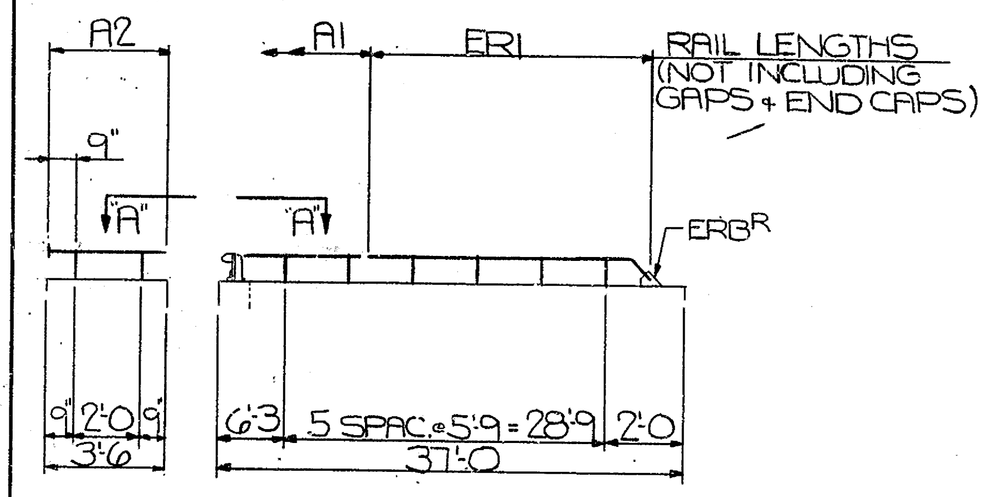

INSIDE RAIL ELEV. ~ SOUTHWEST RAIL

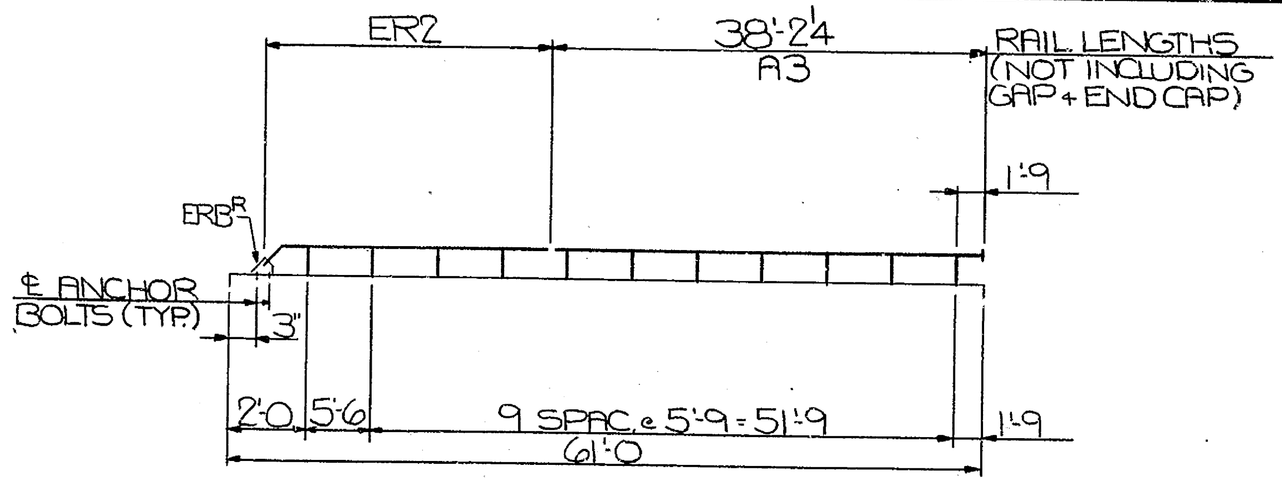

OUTSIDE RAIL ELEV. ~ NORTHEAST RAIL

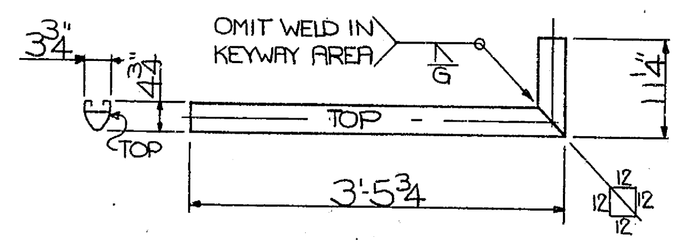

ONE ~ REQ'D MK. A2 x 4'-0¼ o.c.
ORDER LENGTH = 4'-6

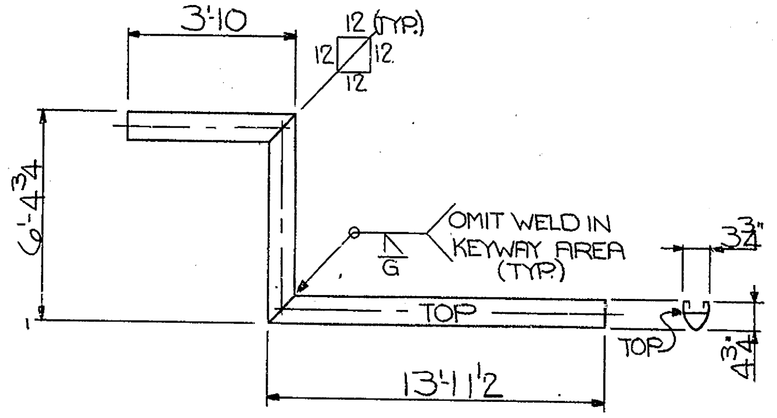

ONE ~ REQ'D MK. A1 x 23'-4¾ o.c.
ORDER LENGTH = 24'-4

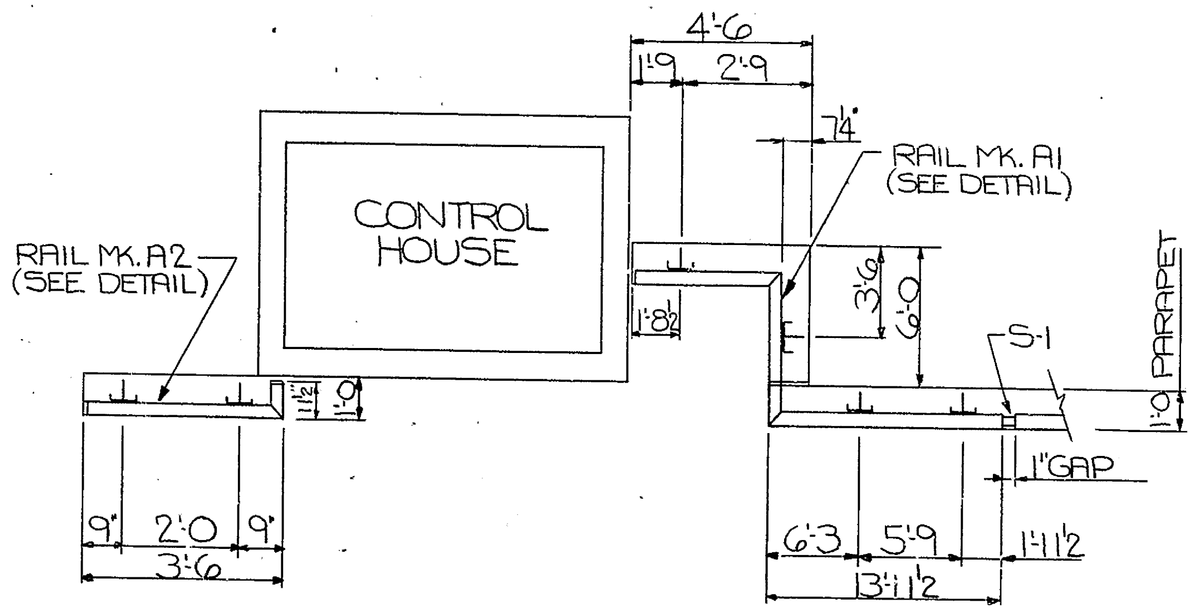

PLAN VIEW "A-A"

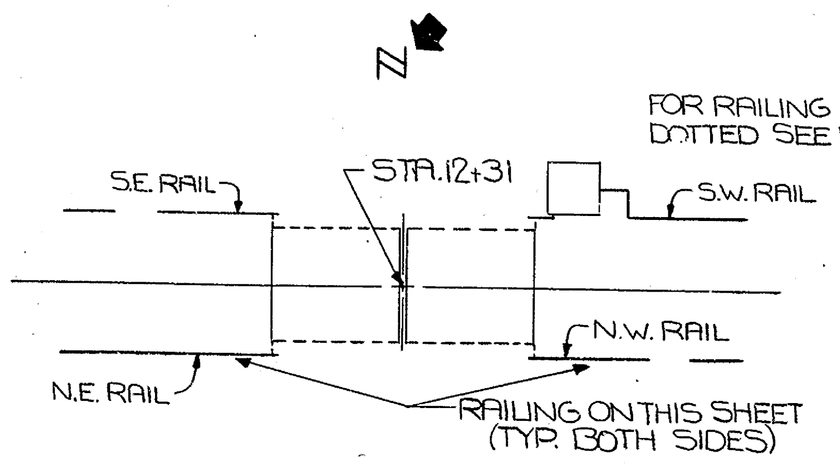

SAVANNAH ROAD BRIDGE
OVER
LEWES AND REHOBOTH CANAL

BILL OF MATERIAL

MARK NO.		NO. REQD.	DESCRIPTION	LENGTH FT.	LENGTH IN.	REMARKS
			FOR SPECS. SEE LB-1 & 3			
		43	ALUM. RAIL POSTS			ONE-LINE
CB1		86	ALUM. CLAMP BAR 1½"x5¾"	0	5¾	
		180	⅞" HEX. HD. BOLT	0	1	STNL. STL.
		180	1⅝" O.D. x ⅞" I.D. x ⅛" THK. WASHER			ALUM.
AB1		188	5'-5" S.S. ROD 7"-3½" ROLLED THDS.	0	9	
		188	¾" HVY. HEX NUT			ALUM.
		188	1¾" O.D. x ⅞" I.D. x ⅛" THK. WASHER			ALUM.
		376	¾" STL. HEX NUT (A307)			PLAIN
AC1		47	ANCHOR CHANNEL ASSBLY			
S-1		4	ALUM. SPLICE SLEEVES	2	0	
		10	3¾"x4¾" ALUM. END CAPS			DRIVE TYPE
CB2		8	ALUM. CLAMP BAR 1½"x5¾"	0	2	
ERB^R		2	END RAIL BASE			
ERB^L		2	"DO"			
ER1		1	3¾"x4¾" SEMI-ELLIPTICAL ALUM. RAIL	23	1½	MITERED END RAIL
ER2		1		22	10½	MITERED END RAIL
ER3		2		10	4	MITERED END RAIL
A1		1		24	4	MITERED RAIL SEE DETAIL
A2		1		4	6	MITERED RAIL SEE DETAIL
A3		1		38	2¼	
A4		1		25	0	
A5		1		22	8¼	

• FOR END RAIL DETAILS SEE DWG LB-3

NOTE:

FOR GENERAL NOTES & TYPICAL DETAILS SEE DWG LB-1 & 3
THIS DRAWING IS NOT TO SCALE.
LENGTH OF RAILING ON THIS SHEET = 227.3' PAY LENGTH.
SPLICE GAP & SLEEVE = 1" (TYP.)

THIS CONTRACT IS BASED UPON THE CONTRACTOR SETTING AND SPACING THE ANCHOR BOLTS TO THE MEASUREMENTS SHOWN ON THE APPROVED SHOP DRAWINGS THE L. B. FOSTER CO. WILL NOT BE RESPONSIBLE FOR WORK NECESSITATED BY ANY OTHER SETTING AND SPACING.

APPROVED: 2-9-83 D.D.O.T. | REC'D APPROVAL DRAWING 2-15-83

L. B. FOSTER CO.
GENERAL OFFICES
415 HOLIDAY DRIVE
PITTSBURGH, PENNSYLVANIA 15220

FOR: GEORGE & LYNCH, INC.
DELAWARE DEPT. OF TRANSPORTATION
SUSSEX CO., F.A.P. NO. RS-1041(2)
ONE-LINE ALUM. RAIL FOR SAVANNAH ROAD BRIDGE OVER LEWES AND REHOBOTH CANAL

MADE KAD DATE 12/9/82 JOB NO. AL-18182 ORDER NO. N-068321
CHECK E.L.T. DATE 1/13/83 DRAWING LB-2 CUSTOMER'S NO.

INSPECTION BY | REVISIONS

BRUNING 40-107 47709

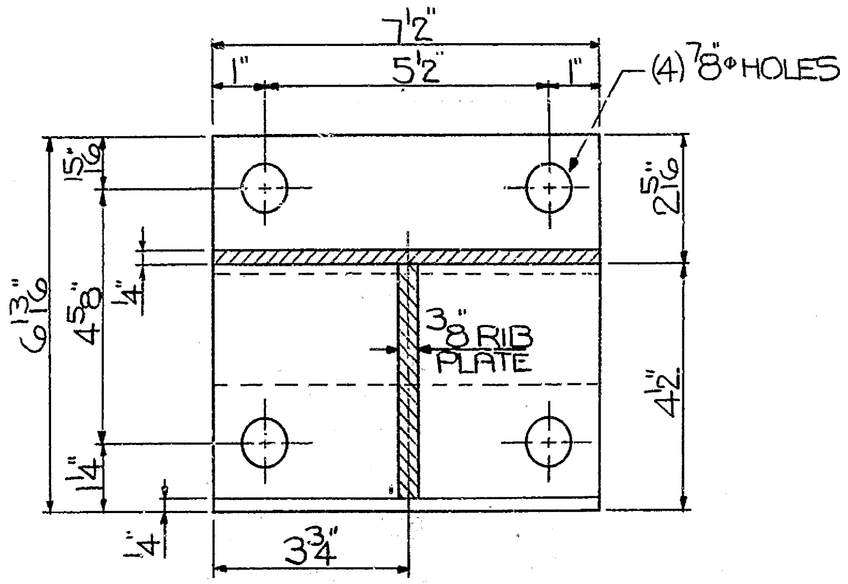

SECTION "E-E"

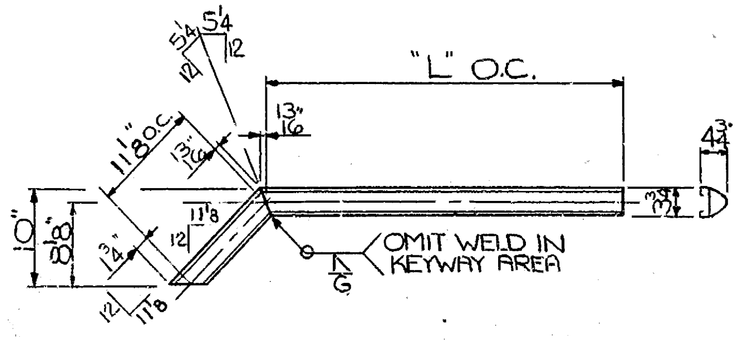

MITERED END RAILS						
MARK NO	NO. REQ'D	DESCRIPTION	ORD LENGTH FT.	ORD LENGTH IN	DIM "L" FT.	DIM "L" IN
ER1	1	AS SHOWN	23	1 1/2	21	10 1/4
ER2	1	AS SHOWN	22	10 2/2	21	7 1/4
ER3	2	OPP. HAND	10	4	9	0 3/4

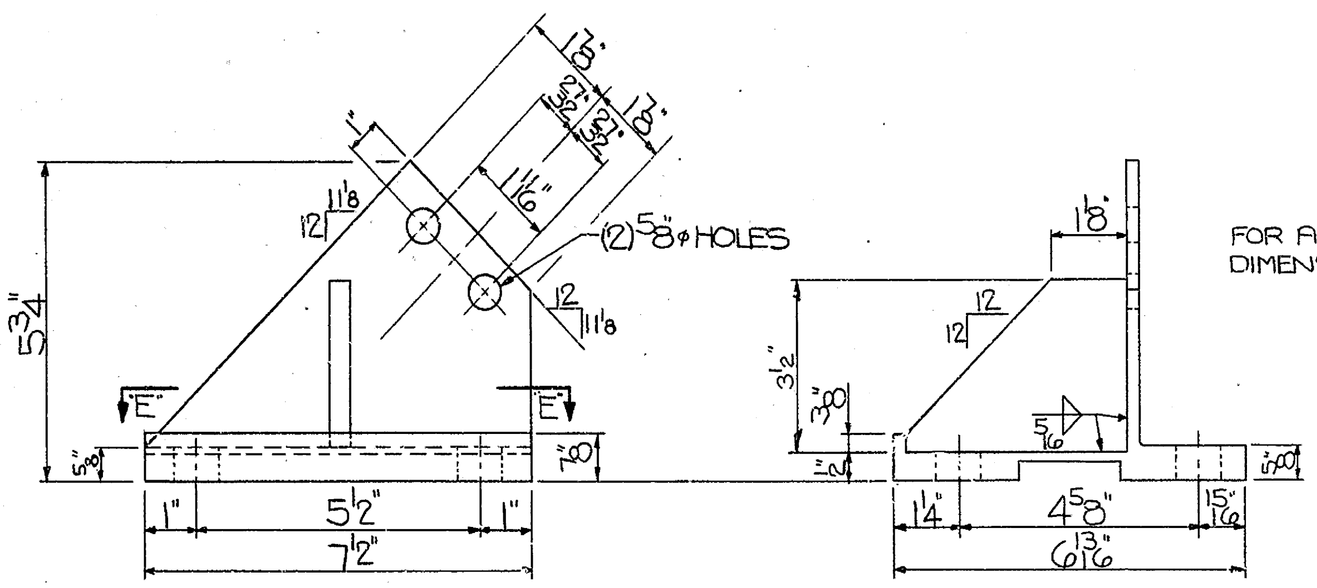

FOR ADDITIONAL POST BASE DIMENSIONS SEE DWG. LB-1

2 ~ REQ'D END RAIL BASE ERB^{R} (AS SHOWN)
2 ~ REQ'D END RAIL BASE ERB^{L} (OPP HAND)

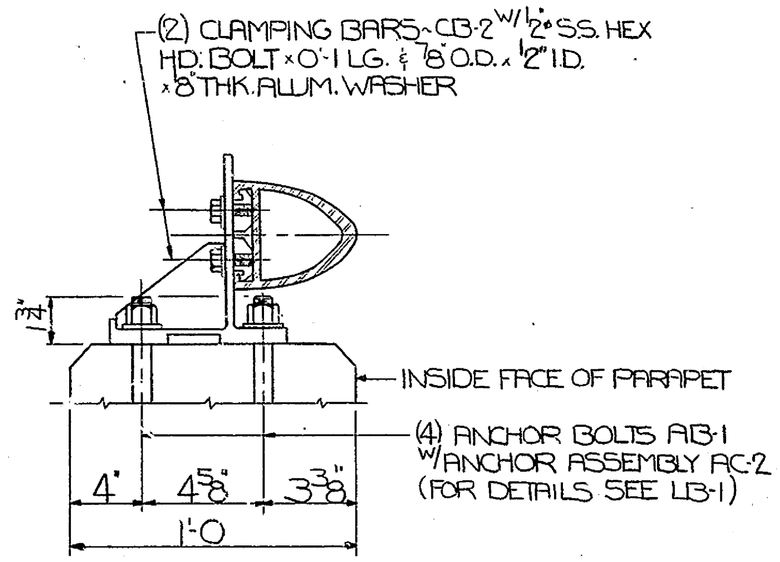

TYP. SECTION @ END RAIL BASE

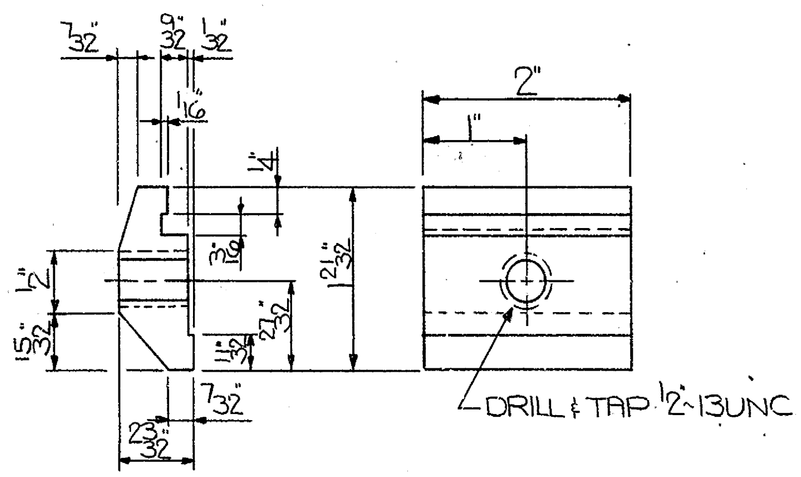

8 ~ REQD CLAMPING BARS ~ CB-2
(END RAIL BASE)

- FOR RAILING ELEVATION AND BILL OF MATERIAL SEE DWG LB-2
- FOR RAILING DETAILS AND GENERAL NOTES SEE DWG. LB-1

APPROVED: 2-9-83 D.D.O.T. | REC'D APPROVAL DRAWING - 2-15-83

L. B. FOSTER CO.
GENERAL OFFICES
415 HOLIDAY DRIVE
PITTSBURGH, PENNSYLVANIA 15220

FOR: GEORGE & LYNCH, INC.
DELAWARE DEPT. OF TRANSPORTATION
SUSSEX CO., F.A.P. NO. RS-1047(2)
MITERED END RAIL DETAILS
SAVANNAH ROAD BRIDGE

MADE KAD DATE 12/5/82 JOB NO. AL-18182 ORDER NO. N-X-9321
CHECK ELT DATE 1/13/83 DRAWING LB-3 CUSTOMER'S NO.

INSPECTION BY _____ REVISIONS

BRUNING 40-107 47709

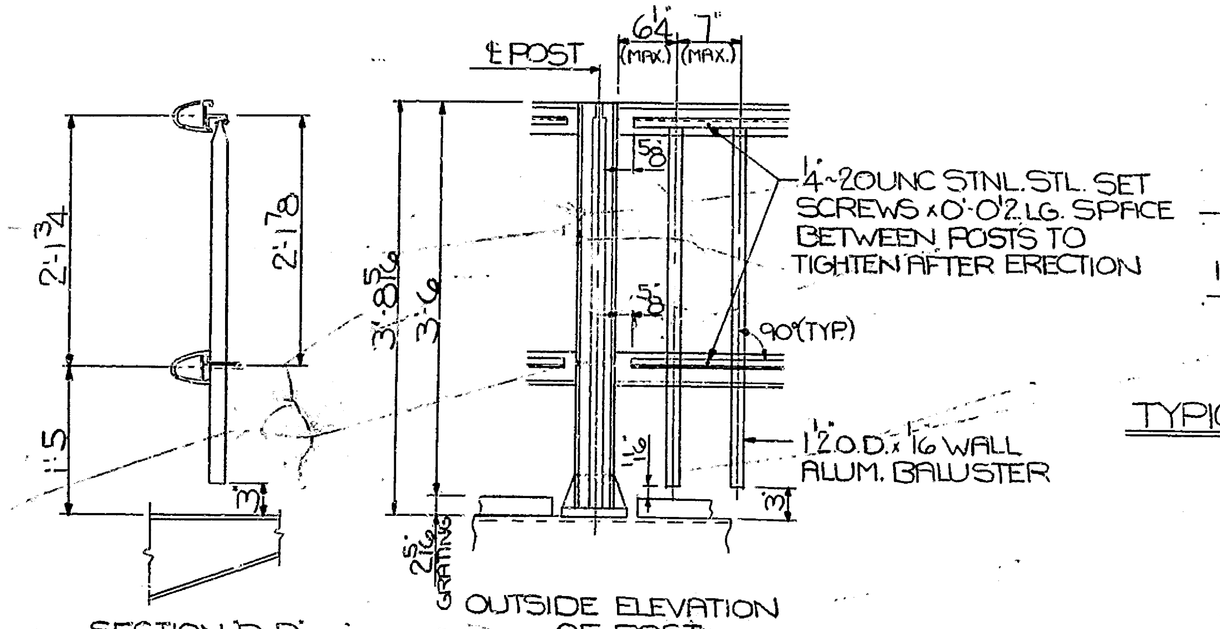

TYPICAL DETAILS OF BALUSTER PANELS

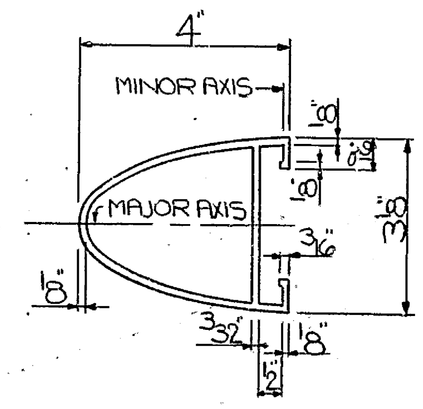

TYPICAL SECTION THRU RAIL

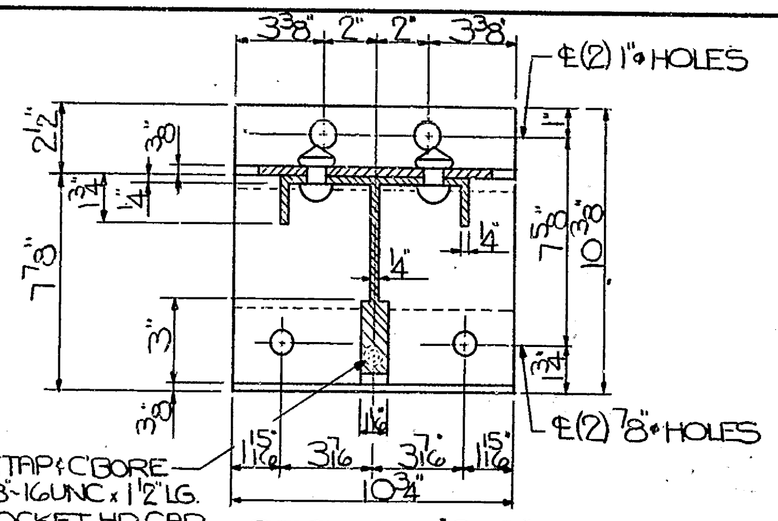

SECTION 'A-A'

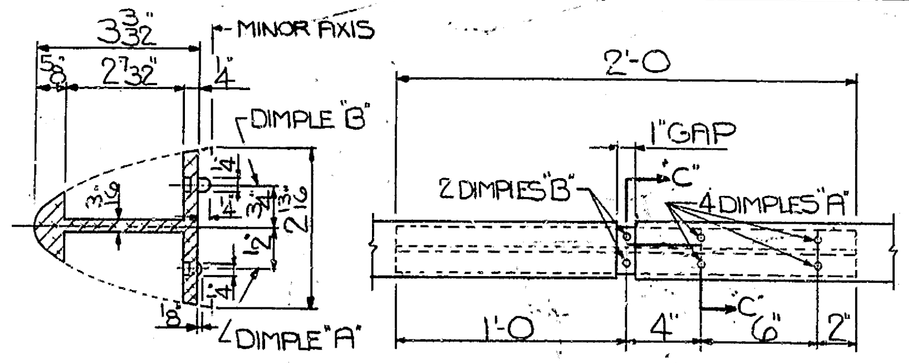

SECTION 'C-C'

8~REQ'D SPLICE SLEEVES-S2

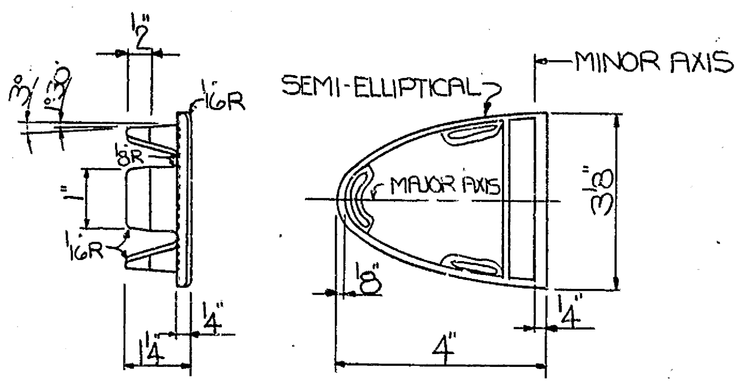

16~REQ'D END CAPS

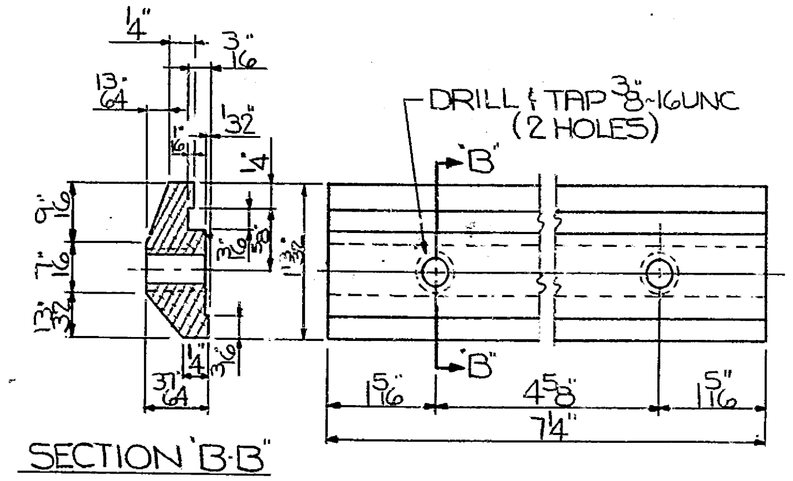

SECTION 'B-B'

144~REQ'D CLAMPING BARS-CB3

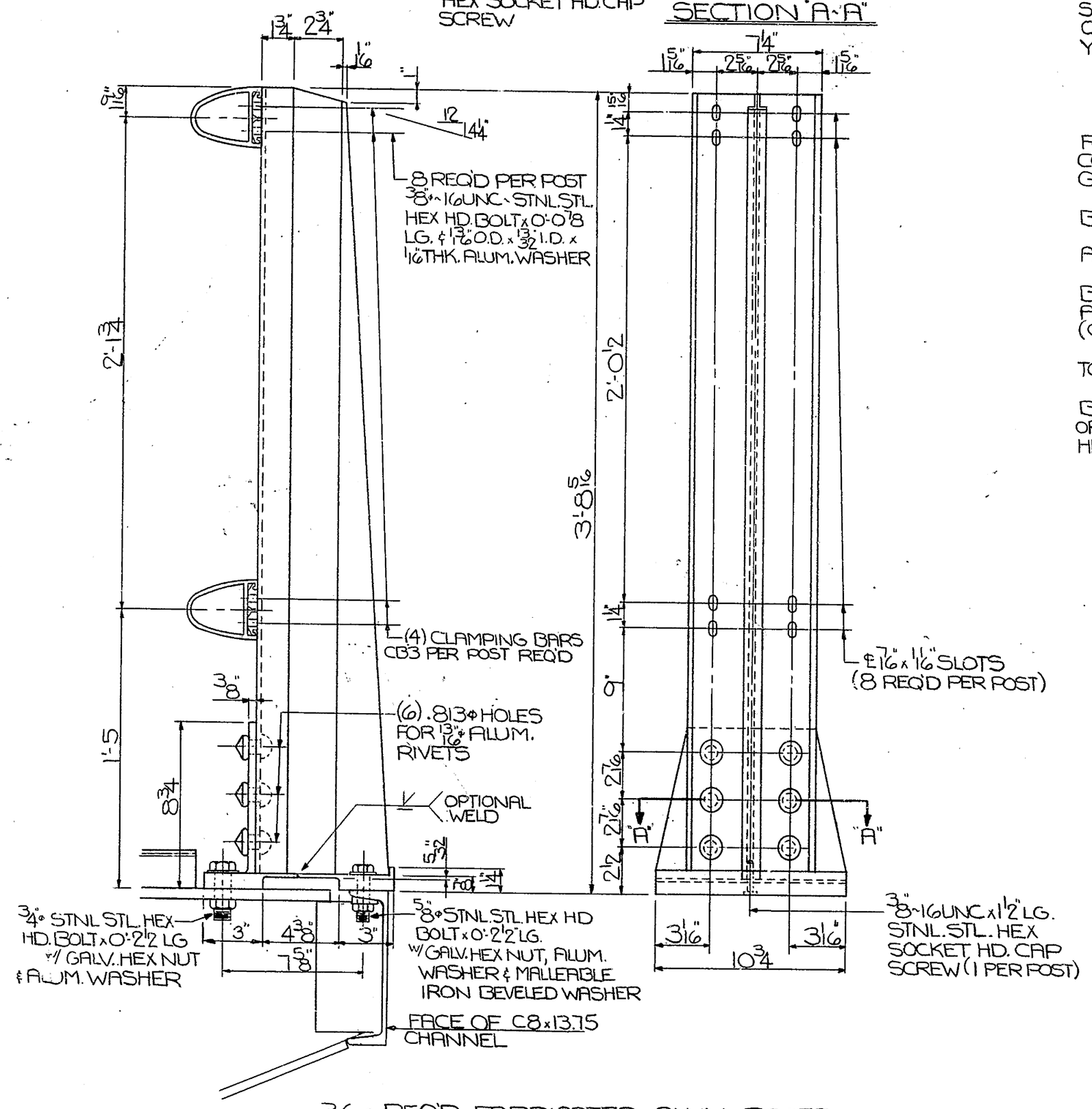

36~REQ'D FABRICATED ALUM. POSTS

NOTE:
DULL ALL SHARP CUT EDGES ON POST

GENERAL NOTES

- MATERIAL FOR POSTS, POST BASES, CLAMP BARS & SPLICES SHALL BE ALUM. ALLOY 6061-T6 PER ASTM B221.
- MATERIAL FOR BALUSTER FRAMES AND BALUSTERS SHALL BE ALUM. ALLOY 6061-T6 OR 6351-T6 PER ASTM B221.
- MATERIAL FOR RAILS SHALL BE ALUM. ALLOY 6061-T6 OR 6351-T5 PER ASTM B221
- ALUM. WASHERS SHALL BE ASTM B209 ALLOY ALCLAD 2024-T3.
- RAIL END CAPS SHALL BE ALUM. PERMANENT MOLD CASTING CONFORMING TO ASTM B108 ALLOY A-356F OR ALUM. SAND CASTINGS CONFORMING TO ASTM B26 ALLOY A-356F
- STAINLESS STEEL BOLTS AND CAP SCREWS SHALL CONFORM TO ASTM A193 AND ANY OF THE 300 SERIES HAVING A MINIMUM YIELD STRENGTH OF 30,000 P.S.I.
- MATERIAL FOR STEEL HEX NUTS FOR STAINLESS STEEL BOLTS SHALL CONFORM TO ASTM A307 AND SHALL BE GALVANIZED PER ASTM A153.
- FILLER METAL FOR WELDING SHALL BE 5356 OR 5556.
- EACH RAIL SECTION SHALL BE ATTACHED TO A MINIMUM OF 4 POSTS.
- BOTTOM OF POST BASES SHALL BE THOROUGHLY COATED WITH AN APPROVED CAULKING COMPOUND (COMPOUND BY OTHERS)
- ALUM. SHIMS, IF REQ'D, SHALL CONFORM TO ASTM B209 ALLOY 1100.0
- MATERIAL FOR ALUM. RIVETS SHALL BE ASTM B316 OR B211, ALLOY 6061-T6 OR 6053-T6. RIVETS TO BE HIGH BUTTON HEAD AND CONE POINT, COLD DRIVEN

APPROVED: 2-9-83 D.D.O.T. — REC'D APPROVAL — DRAWING: 2-15-83

L. B. FOSTER CO.
GENERAL OFFICES
415 HOLIDAY DRIVE
PITTSBURGH, PENNSYLVANIA 15220

FOR: GEORGE & LYNCH, INC.
DELAWARE DEPT. OF TRANSPORTATION
SUSSEX CO., F.A.P. NO. RS-1047(2)
2-LINE ALUM. RAIL W/SPINDLES
GENERAL NOTES & TYPICAL DETAILS

MADE KAD DATE 12/6/82 JOB NO. AL-18182 ORDER NO. N-028321
CHECK ELT DATE 1/17/83 DRAWING LB-4 CUSTOMER'S NO.

INSPECTION BY _____ REVISIONS

BRUNING 40-107 47709

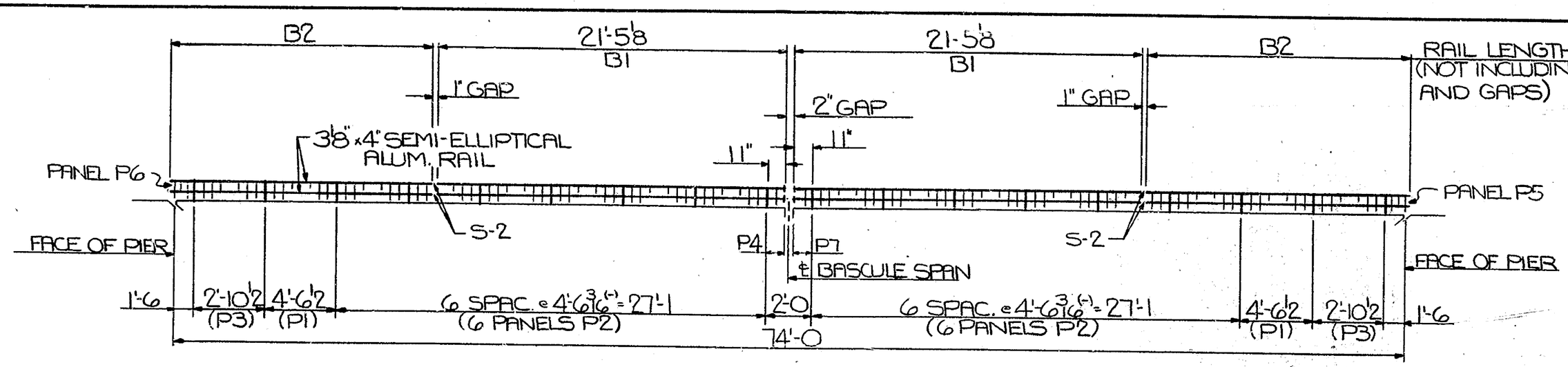

TYP. INSIDE RAIL ELEV. - 2 REQ'D

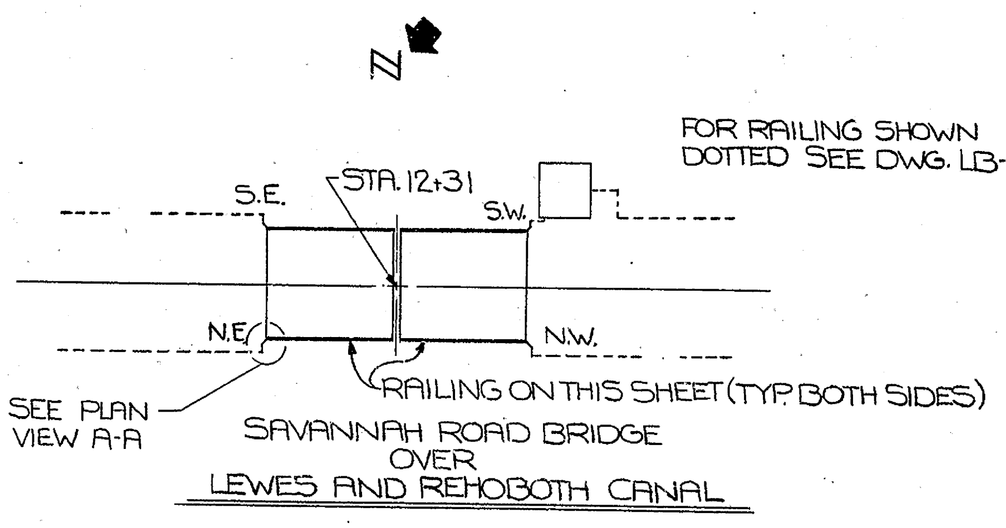

SAVANNAH ROAD BRIDGE
OVER
LEWES AND REHOBOTH CANAL

BILL OF MATERIAL

MARK NO.		NO. REQD.	DESCRIPTION	LENGTH FT.	LENGTH IN.	REMARKS
			FOR SPECS. SEE LB-3			
		36	ALUM. RAIL POSTS			2-LINE
CB3		144	ALUM. CLAMP BAR 1⅝" x 3½"	0	7¼	
		288	⅜"ø HEX HD. BOLT	0	0⅞	STNL. STL.
		288	⅜" I.D. x 1" O.D. x 1/16" THK. WASHER			ALUM.
		16	3⅛"x4" ALUM. END CAPS			DRIVE TYPE
		72	¾"ø HEX HD. BOLT	0	2½	STNL. STL.
		72	¾" HEX NUT (GALV.)			A307 (STL.)
		72	¾" WASHER (2" O.D.)			ALUM.
		72	⅝" HEX HD. BOLT	0	2½	STNL. STL.
		72	⅝" HEX NUT (GALV.)			A307 (STL.)
		72	⅝" WASHER			ALUM.
		72	⅝" BEVELED WASHER			MALLEABLE IRON (UNCOATED)
		40	BALUSTER PANELS (MK'S P1 THRU P7)			FOR MATL. BREAKDOWN SEE DWG. LB-6 & 7
B1		8	3⅛"x4" SEMI-ELLIPTICAL ALUM. RAIL	21	5⅛	
B2		8		16	4½	MITERED RAIL - SEE DETAIL BELOW
S-2		8	ALUM. SPLICE SLEEVES	2	0	

NOTE:

FOR GENERAL NOTES & TYPICAL DETAILS SEE DWG LB-4
THIS DRAWING IS NOT TO SCALE.
LENGTH OF RAILING ON THIS SHEET = 149' PAY LENGTH.

FOR BALUSTER PANEL DETAILS SEE
DWG. LB-6 & LB-7

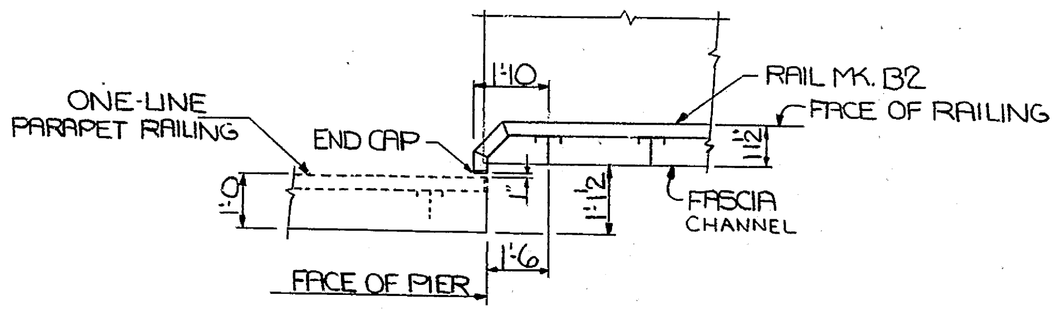

PLAN VIEW "A-A"

N.E. & S.W. CORNERS - AS SHOWN
S.E. & N.W. CORNERS - OPP. HAND

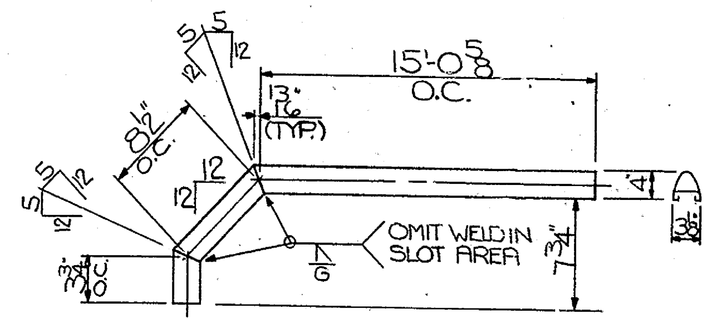

8 - REQ'D MK. B2 x 16'-0⅜ O.C.

ORDER LENGTH = 16'-4½

APPROVED: 2-9-83 D.D.O.T.	REC'D APPROVAL DRAWING - 2-15-83

L. B. FOSTER CO.
GENERAL OFFICES
415 HOLIDAY DRIVE
PITTSBURGH, PENNSYLVANIA 15220

FOR: GEORGE & LYNCH, INC.
DELAWARE DEPT. OF TRANSPORTATION
SUSSEX CO., F.A.P. NO. RS-1047(2)
2-LINE ALUM. RAIL W/ SPINDLES FOR
SAVANNAH ROAD BRIDGE OVER LEWES
AND REHOBOTH CANAL

MADE KAD DATE 12/4/82 JOB NO. AL-18187 ORDER NO. N069321
CHECK ELT DATE 1/17/83 DRAWING LB-5 CUSTOMER'S NO.

INSPECTION BY _____ REVISIONS

BRUNING 31186

D C B A 1 5 10 A B C D

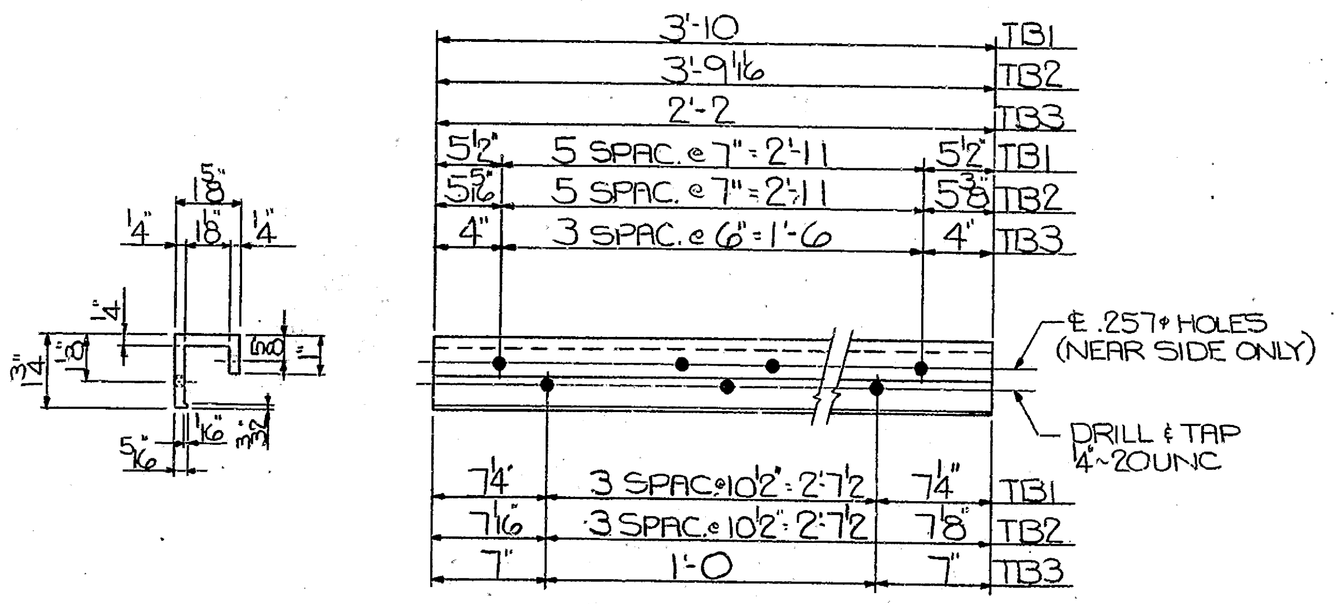

TOP BALUSTER PANEL BARS

4~REQ'D x 3'-10 LG. MK. TB1
24~REQ'D x 3'-9 11/16 LG. MK. TB2
4~REQ'D x 2'-2 LG. MK. TB3

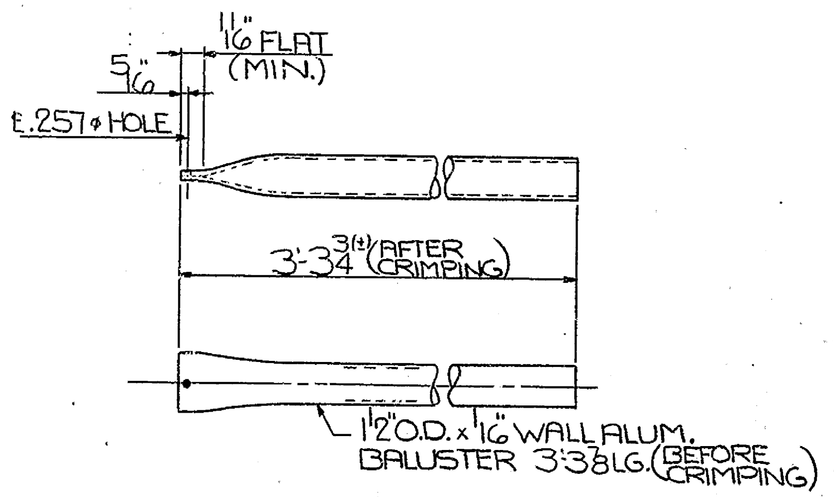

200~REQ'D BALUSTERS

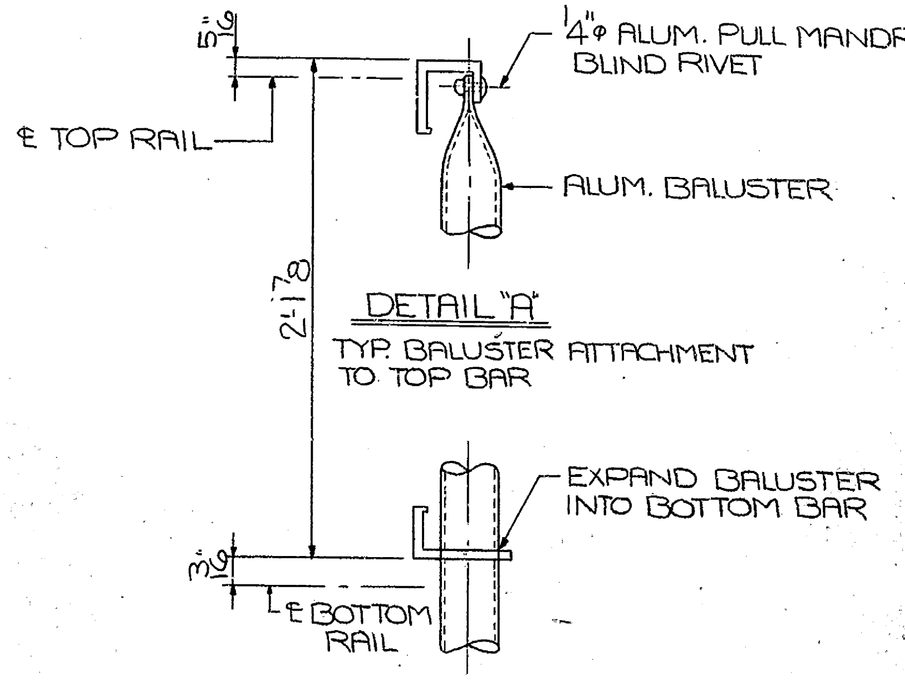

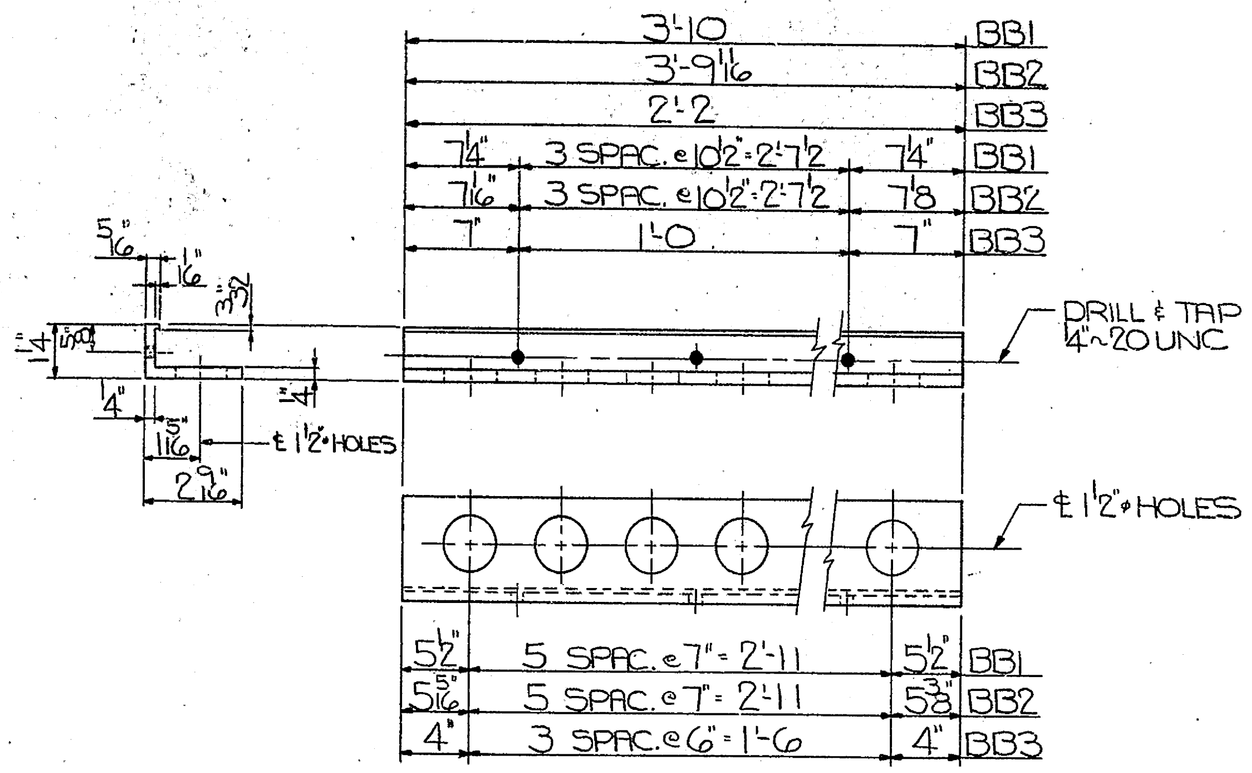

BOTTOM BALUSTER PANEL BARS

4~REQ'D x 3'-10 LG. MK. BB1
24~REQ'D x 3'-9 11/16 LG. MK. BB2
4~REQ'D x 2'-2 LG. MK. BB3

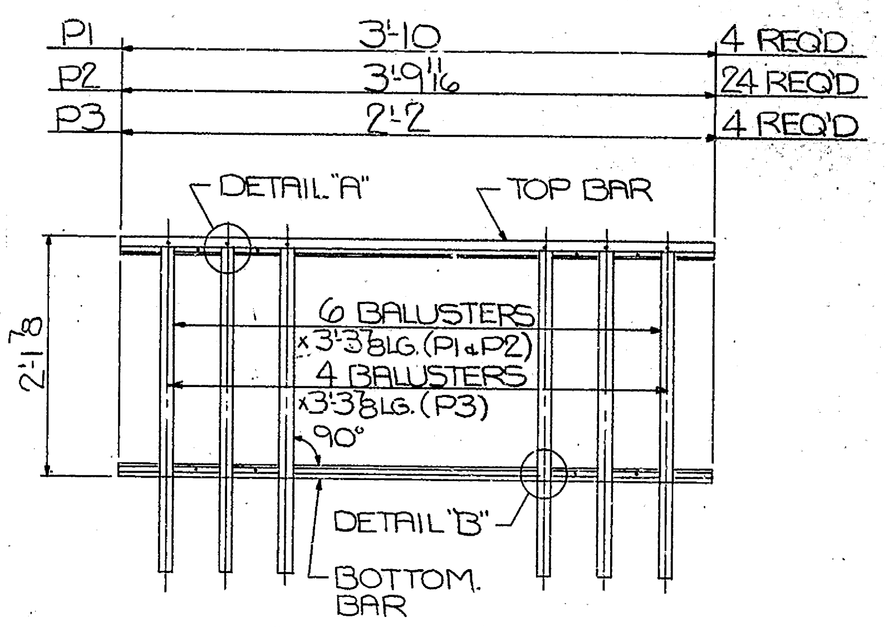

BALUSTER PANEL ASSEMBLY

BILL OF MATERIAL

MARK NO	NO. REQ'D	DESCRIPTION	LENGTH FT.	LENGTH IN.	REMARKS
		4 BALUSTER PANELS - MK. P1 - CONSISTING OF:			
TB-1	4	TOP PANEL BARS	3	10	ALUM.
BB-1	4	BOTTOM PANEL BARS	3	10	ALUM.
	24	1 1/2" O.D. x 1/16" WALL BALUSTERS	3	3 3/8	ALUM.
	24	1/4" ø PULL MANDREL BLIND RIVET			ALUM.
		24 BALUSTER PANELS - MK. P2 - CONSISTING OF:			
TB-2	24	TOP PANEL BARS	3	9 11/16	ALUM.
BB-2	24	BOTTOM PANEL BARS	3	9 11/16	ALUM.
	144	1 1/2" O.D. x 1/16" WALL BALUSTERS	3	3 3/8	ALUM.
	144	1/4" ø PULL MANDREL BLIND RIVET			ALUM
		4 BALUSTER PANELS - MK. P3 - CONSISTING OF:			
TB-3	4	TOP PANEL BARS	2	2	ALUM
BB-3	4	BOTTOM PANEL BARS	2	2	ALUM.
	16	1 1/2" O.D. x 1/16" WALL BALUSTERS	3	3 3/8	ALUM.
	16	1/4" ø PULL MANDREL BLIND RIVET			ALUM.

NOTE:
- FOR RAILING ELEVATION SEE DWG. LB-5
- FOR GENERAL NOTES AND TYPICAL DETAIL SEE DWG. LB-4
- FOR ADDITIONAL BALUSTER PANELS SEE DWG. LB-7

APPROVED: 2-9-83 D.D.O.T. — REC'D APPROVAL DRAWING - 2-15-83

L. B. FOSTER CO.
GENERAL OFFICES
415 HOLIDAY DRIVE
PITTSBURGH, PENNSYLVANIA 15220

FOR: GEORGE & LYNCH, INC.
DELAWARE DEPT. OF TRANSPORTATION
SUSSEX CO. F.A.P.NO. RS-1047(2)
ALUM. BALUSTER PANEL DETAILS AND BILL OF MATERIAL

MADE KAD DATE 12/6/82 JOB NO. AL-18182 ORDER NO. N-069321
CHECK E.L.T. DATE 1/17/83 DRAWING LB-6 CUSTOMER'S NO.

INSPECTION BY _____ REVISIONS

BRUNING 40-135 31186

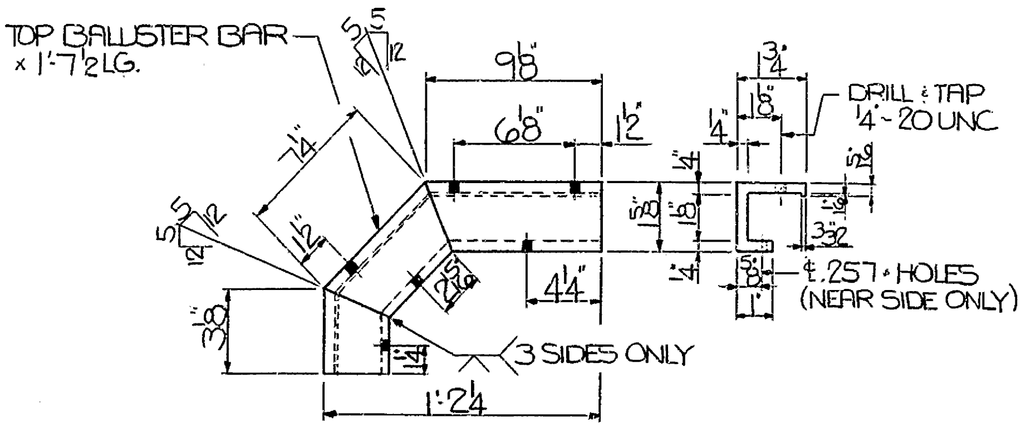

2 - TOP BALUSTER PANEL BARS TB5 (AS SHOWN)
2 - TOP BALUSTER PANEL BARS TB6 (OPP. HAND)

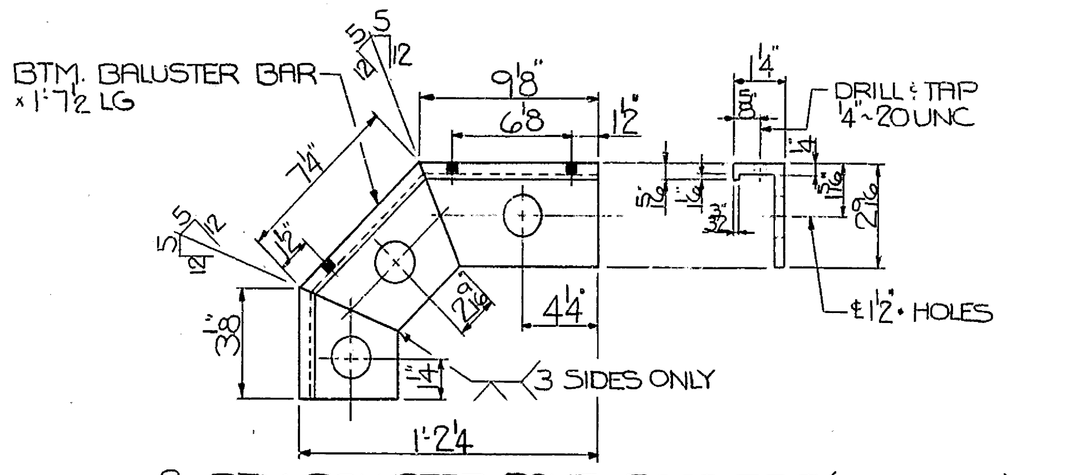

2 - BTM. BALUSTER PANEL BARS BB5 (AS SHOWN)
2 - BTM. BALUSTER PANEL BARS BB6 (OPP HAND)

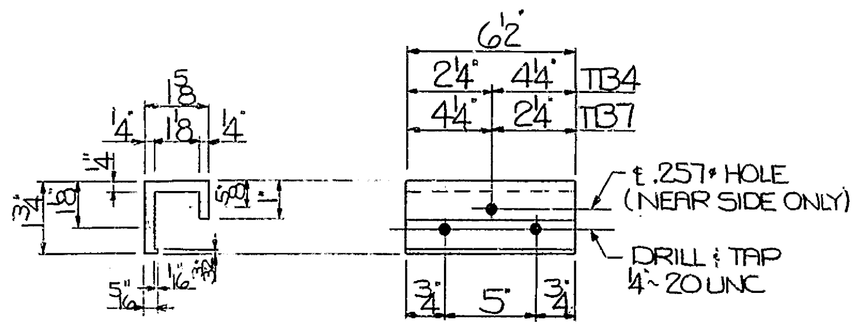

2 - TOP BALUSTER PANEL BARS TB4 x 0'-6½ LG.
2 - TOP BALUSTER PANEL BARS TB7 x 0'-6½ LG.

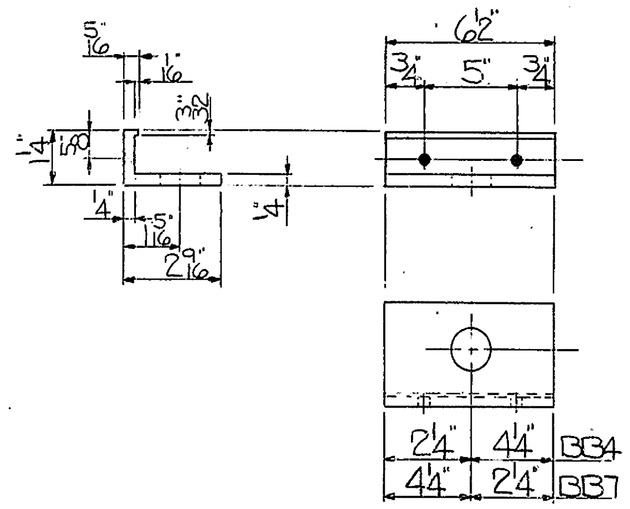

2 - BTM. BALUSTER PANEL BARS BB4 x 0'-6½ LG.
2 BTM. BALUSTER PANEL BARS BB7 x 0'-6½ LG.

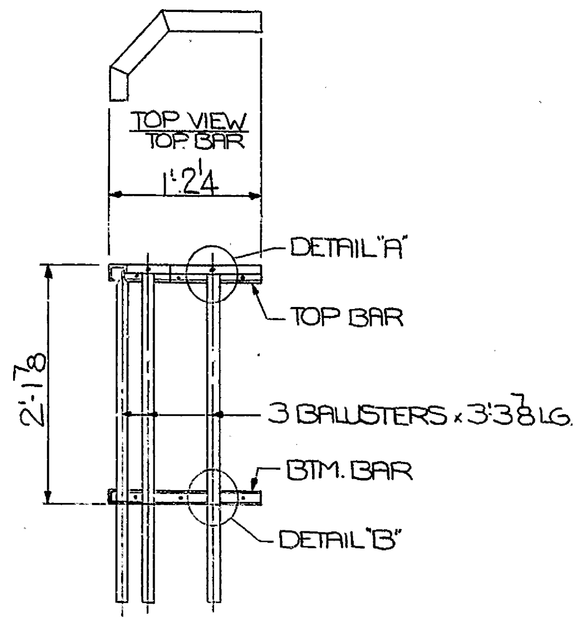

2 - BALUSTER PANEL ASSEMBLIES P5 (AS SHOWN)
2 - BALUSTER PANEL ASSEMBLIES P6 (OPP HAND)

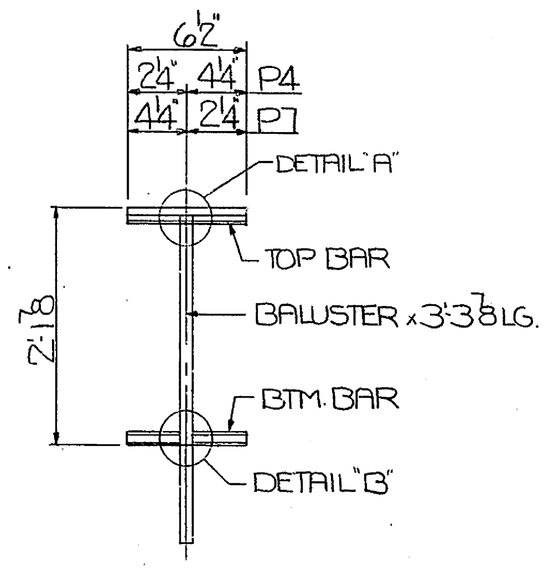

2 - BALUSTER PANEL ASSEMBLIES P4
2 - BALUSTER PANEL ASSEMBLIES P7

BILL OF MATERIAL

MARK NO.	NO. REQ'D	DESCRIPTION	LENGTH FT.	LENGTH IN.	REMARKS
		2 - BALUSTER PANELS - MK. P4			CONSISTING OF:
TB4	2	TOP PANEL BARS	0	6½	ALUM.
BB4	2	BTM. PANEL BARS	0	6½	ALUM.
	2	1" O.D. x 16 GA WALL BALUSTERS	3	3⅞	ALUM.
	2	¼" PULL MANDREL BLIND RIVET			ALUM.
		2 - BALUSTER PANELS - MK. P5			CONSISTING OF:
TB5	2	TOP PANEL BARS	1	7½	ALUM.
BB5	2	BTM. PANEL BARS	1	7½	ALUM.
	6	1" O.D. x 16 GA WALL BALUSTERS	3	3⅞	ALUM.
	6	¼" PULL MANDREL BLIND RIVET			ALUM.
		2 - BALUSTER PANELS - MK. P6			CONSISTING OF:
TB6	2	TOP PANEL BARS	1	7½	ALUM.
BB6	2	BTM. PANEL BARS	1	7½	ALUM.
	6	1" O.D. x 16 GA WALL BALUSTERS	3	3⅞	ALUM.
	6	¼" PULL MANDREL BLIND RIVET			ALUM.
		2 - BALUSTER PANELS - MK. P7			CONSISTING OF:
TB7	2	TOP PANEL BARS	0	6½	ALUM.
BB7	2	BTM. PANEL BARS	0	6½	ALUM.
	2	1" O.D. x 16 GA WALL BALUSTERS	3	3⅞	ALUM.
	2	¼" PULL MANDREL BLIND RIVET			ALUM.
	308	¼"-20 UNC S.S. SET SCREWS	0	0½	INCLUDES 10% EXTRA

NOTE:
- FOR RAILING ELEVATION SEE DWG. LB-5
- FOR GENERAL NOTES AND TYPICAL DETAIL SEE DWG. LB-4
- FOR ADDITIONAL BALUSTER PANELS AND DETAILS NOT SHOWN SEE DWG. LB-6

APPROVED: 2-9-83 D.D.O.T. — REC'D APPROVAL DRAWING - 2-15-83

L. B. FOSTER CO.
GENERAL OFFICES
415 HOLIDAY DRIVE
PITTSBURGH, PENNSYLVANIA 15220

FOR: GEORGE & LYNCH, INC.
DELAWARE DEPT. OF TRANSPORTATION
SUSSEX CO., F.A.P. NO. RS-1047(2)
ALUM. BALUSTER PANEL DETAILS & BILL OF MATERIAL

MADE KAD DATE 12/8/82 JOB NO. AL-18182 ORDER NO. N-06132
CHECK ELT DATE 1/17/83 DRAWING LB-7 (LAST) CUSTOMER'S NO.

INSPECTION BY _____ REVISIONS

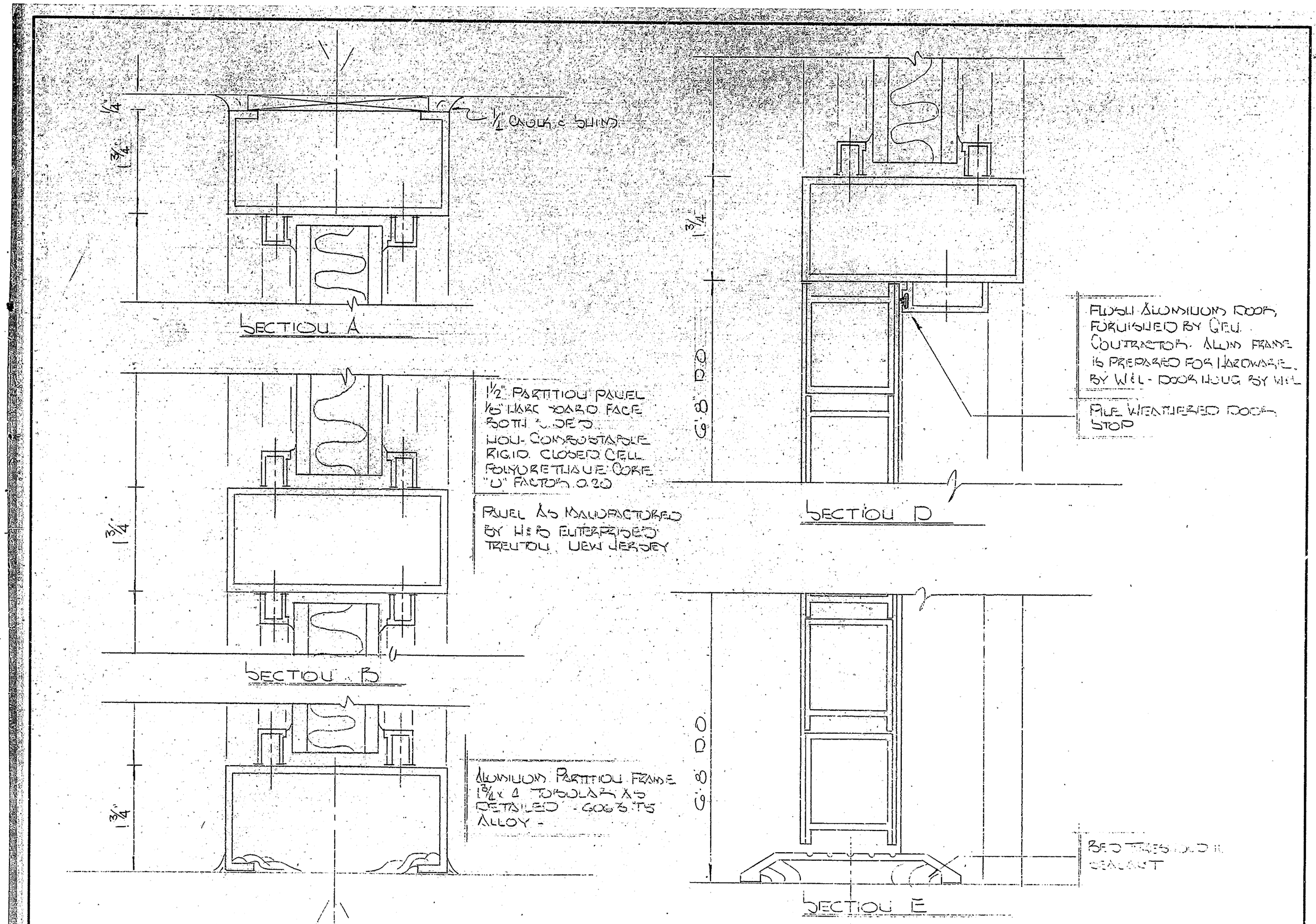

TOLERANCES (EXCEPT AS NOTED)	REVISIONS			
DECIMAL ±	NO.	DATE	BY	
FRACTIONAL ±	1			
ANGULAR ±	2			
	3			
	4			
	5			

DRAWN BY	SCALE	MATERIAL
CHK'D	DATE	DRAWING NO
TRACED	APP'D	

TELEDYNE POST 18AE-15E-18X24

D C B A A B C D

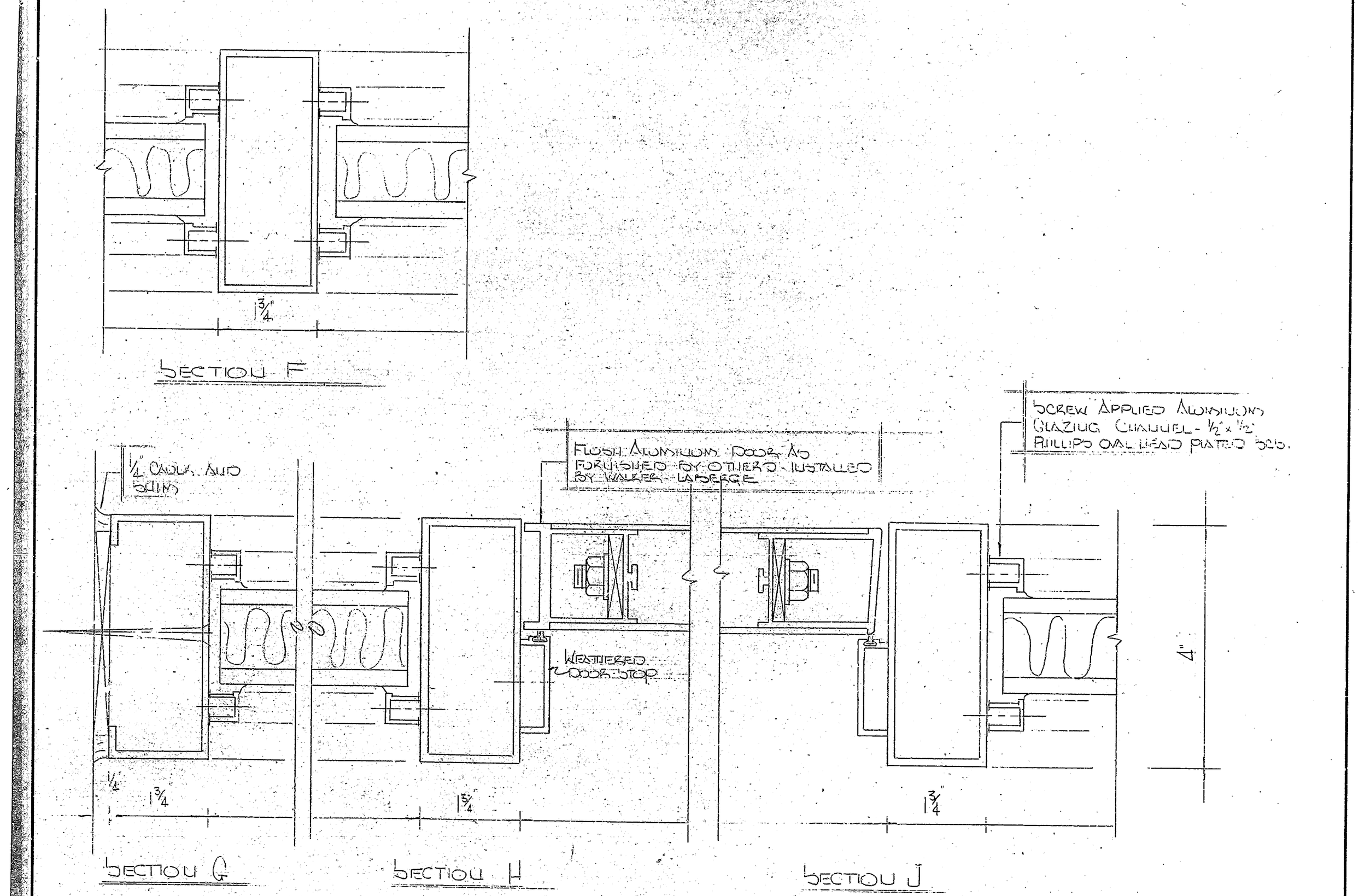

TOLERANCES (EXCEPT AS NOTED)	REVISIONS			SAVANNAH ROAD BRIDGE INTERIOR PARTITIONS
DECIMAL ±	NO.	DATE	BY	WALKER LABERGE CO DELMAR DELAWARE
FRACTIONAL ±	1			DRAWN BY R. RICKARDS · SCALE · MATERIAL
ANGULAR ±	2			CHK'D · DATE FEB 83 · DRAWING NO. SRB-4
	3			TRACED · APP'D
	4			
	5			

TELEDYNE POST 18AE-15E-18X24

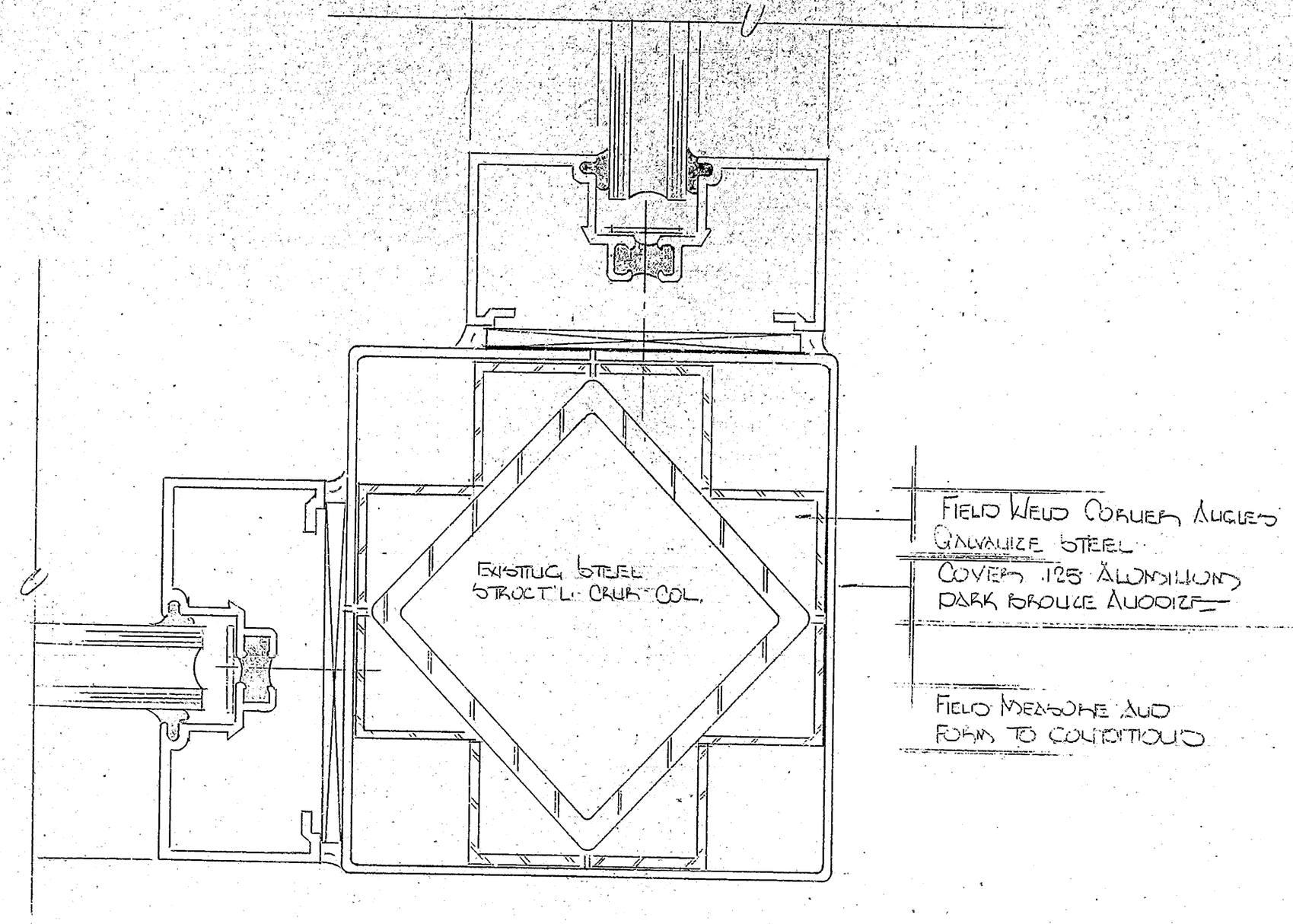

REVISED CORNER COLUMN COVER DETAIL

TOLERANCES (EXCEPT AS NOTED)	REVISIONS NO.	DATE	BY	SAVANNAH BRIDGE HOUSE
DECIMAL ±	1			WALKER UNDERGE CO
FRACTIONAL ±	2			DELMAR DELAWARE
ANGULAR ±	3			DRAWN BY RICHARDS · SCALE · MATERIAL
	4			CHK'D · DATE MAY 60 · DRAWING NO. BRH-4RV
	5			TRACED · APP'D

TELEDYNE POST 18AE-15C-18X24

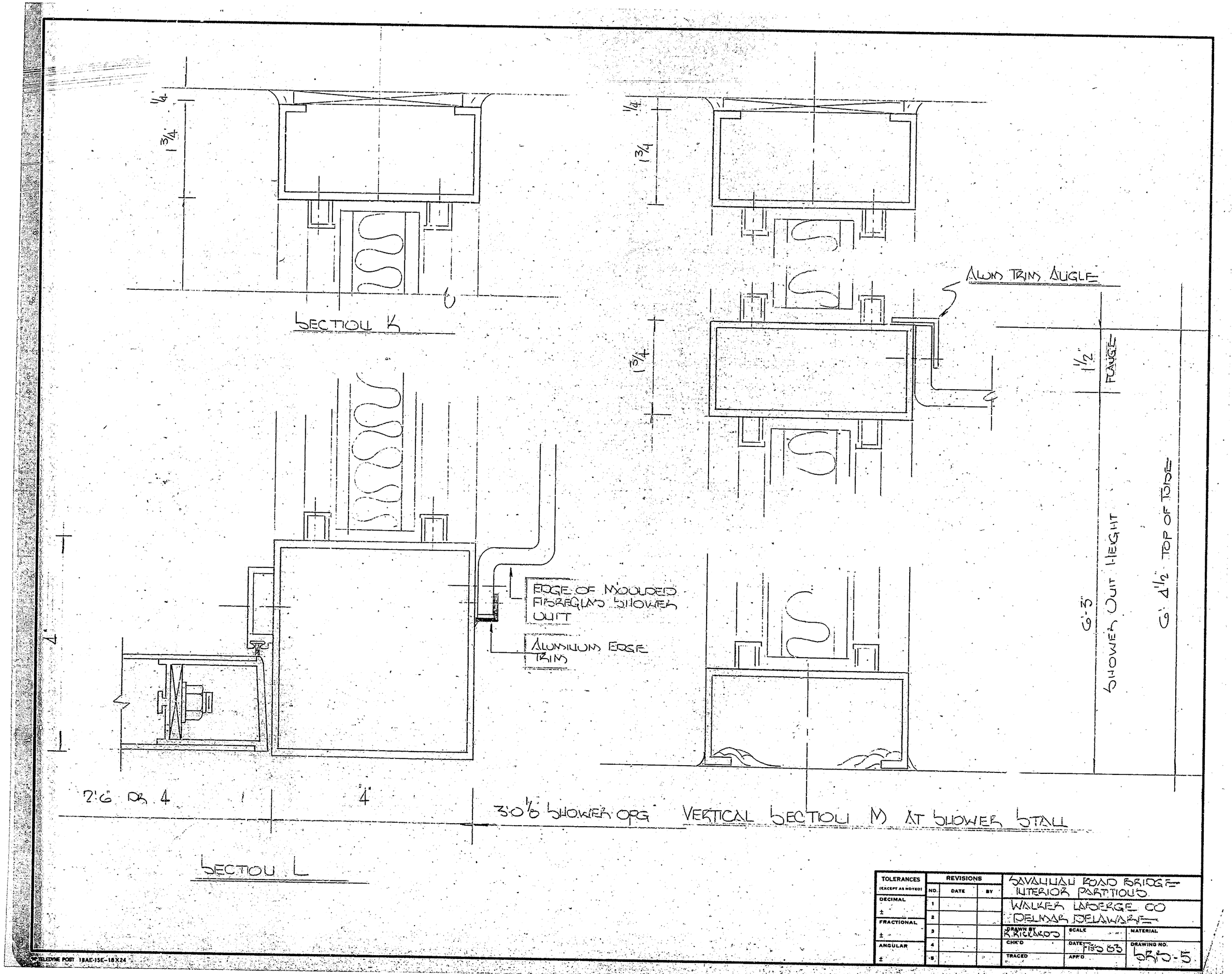

TOLERANCES (EXCEPT AS NOTED)	REVISIONS			SAVANNAH ROAD BRIDGE INTERIOR PARTITIONS
DECIMAL ±	NO.	DATE	BY	WALKER LAPERGE CO DELMAR DELAWARE
FRACTIONAL ±	1			
ANGULAR ±	2			
	3			DRAWN BY K.RICHARDS
	4			CHK'D
	5			TRACED
				SCALE
				DATE FEB 63
				APP'D
				MATERIAL
				DRAWING NO. SP-5-5

TELEDYNE POST 18AE-15E-18X24

D C B A 1 5 10 A B C D

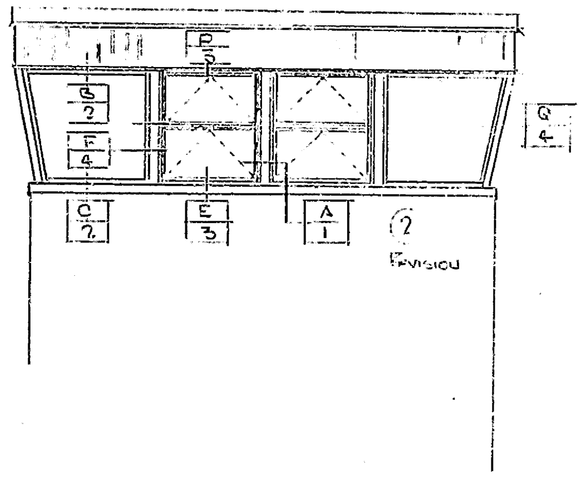

NORTH ELEVATION
SOUTH ELEVATION

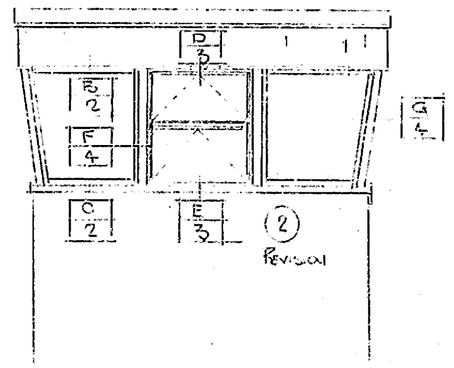

EAST ELEVATION
WEST ELEVATION

SEALANTS - ALL JOINT AND PERIMETER SEALANTS SHALL BE SILICONE - DOW CORNING SERIES 99 - BRONZE TO MATCH

FABRICATION FIELD MEASUREMENTS OF EXISTING STRUCTURE AND CONDITIONS WILL BE TAKEN PRIOR TO ANY AND ALL FABRICATION

SPECIFICATIONS

GLAZING FRAMING SYSTEM - THERMALLY BROKEN BRONZE ANODIZE ALUMINUM FLUSH GLAZE TUBULAR 2" x 4½" WITH NEOPRENE PERIMETER GASKETS - FRAMES SHALL BE FABRICATED TO FIELD MEASURED OPENINGS AND SIZED TO TOLERANCES AS DETAILED - FRAMES SHALL BE SECURELY ANCHORED TO ALUMINUM COVERED STRUCTURAL FRAMING

ALUMINUM TRIM SECTIONS - .125 ALUMINUM SHAPES FORM FITTED COVERING HEAD AND SILL - COLUMN COVERS ARE TO BE EXTRUDED INTERLOCKING ALUMINUM SECTIONS - BRONZE ANODIZED - AS DETAILED

ALUMINUM WINDOWS - WINDOWS ARE TO BE COMMERCIAL PROJECTED AS MANUFACTURED BY REBCO INC. WEST PATERSON N J - WINDOW SECTIONS .125 THICKNESS INSTALLATION AS DETAILED. SINGULAR VENT OPERATION SLIDING WICKET SCREENS. INTERIOR - FINISH DARK BRONZE TO MATCH PERIMETER FIXED GLAZED FRAMES AND TRIM

GLAZING - FIXED AND OPERATING - TRAPEZOIDAL SHAPES SHALL BE ONE INCH ANNEALED BRONZE INSULATED - CONSTRUCTED AS FOLLOWING.

EXTERIOR LITE - ¼" BRONZE FLOAT GLASS
SPACER ½" AIR SPACE
INTERIOR LITE - ¼" CLEAR FLOAT GLASS

OPERATING WINDOWS -
½" ANNEALED BRONZE INSULATED.
EXTERIOR LITE - ⅛" BRONZE FLOAT GLASS
AIR SPACE - ¼"
INTERIOR LITE - ⅛" CLEAR FLOAT GLASS

INSULATED UNITS TO BE POLYSULFIDE DOUBLE SEAL INSULATED WITH FIVE YEAR WARRANTY AS MANUFACTURED BY WALKER LABERGE CO. NORFOLK VIRGINIA

*FASTENERS - STAINLESS STEEL - ¼-20 PHILLIPS FLAT HEAD MACHINE SCREWS - TAPPED INTO STEEL

(1) REVISION

WINDOW FINISH - DARK BRONZE ANODIZE - 3.3 R. DURANODIC

(1) REVISION

DIS-SIMILAR METAL PROTECTION AT ALL AREAS WHERE ALUMINUM IS INSTALLED ADJACENT TO FOREIGN METALS, A PPG ZINC CHROMATE PRIMER SHALL BE APPLIED TO THE INTERFACING SIDE OF THE ALUMINUM

(1) REVISION

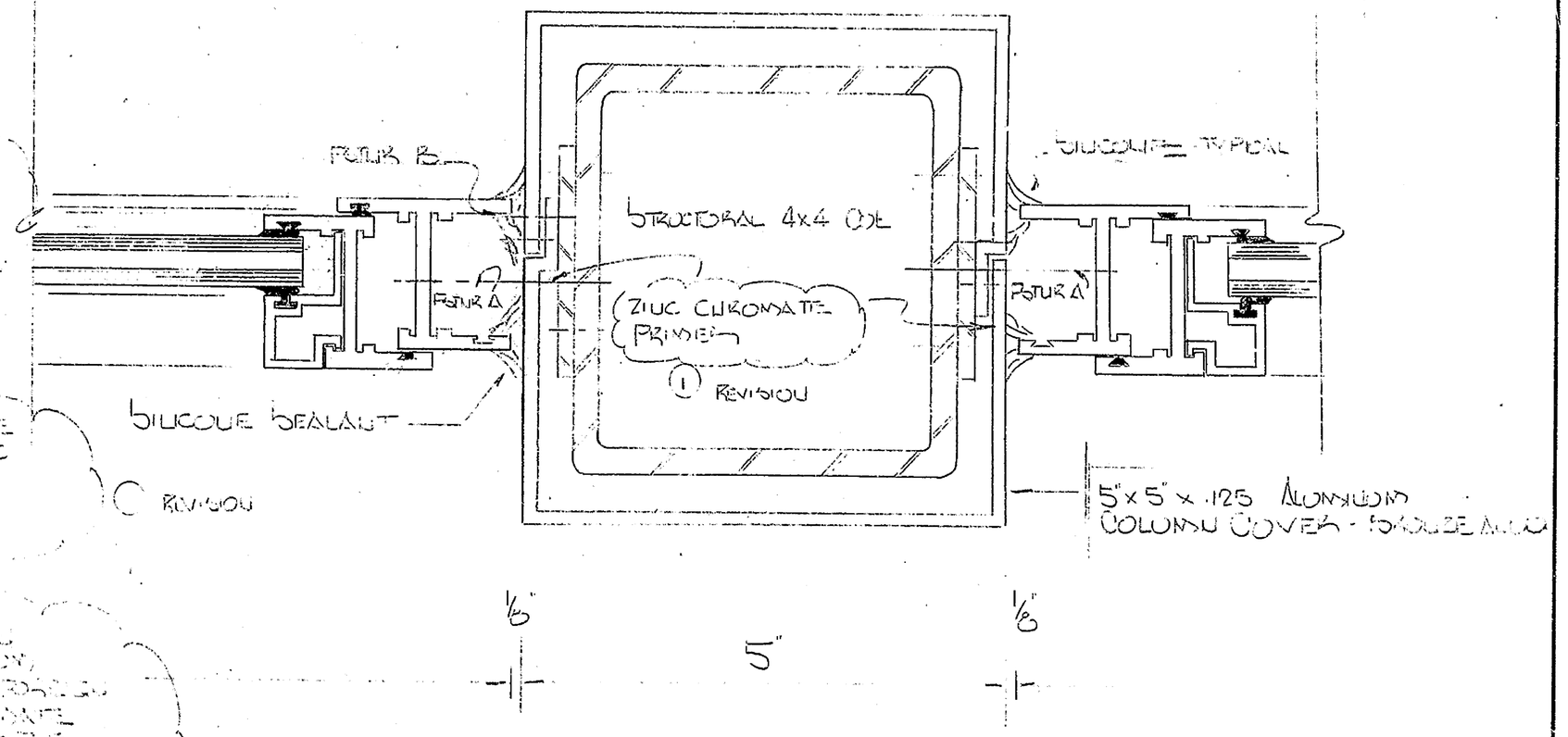

SECTION - A

(1) REVISION

FASTENER SCHEDULE
TYPE A - ¼-20 PHIL FLAT HEAD - ST STL.
TYPE B - 10-24 x 1¼ PHIL OVAL HEAD - ST STL.

TOLERANCES (EXCEPT AS NOTED)	REVISIONS			SAVANNAH BRIDGE HOUSE
DECIMAL ±	NO.	DATE	BY	WALKER LABERGE CO
	1	2-25-83	RLH	DELMAR DELAWARE
FRACTIONAL ±	2	3-18-83	RLH	
	3			DRAWN BY R. FERRARIS / SCALE / MATERIAL
ANGULAR ±	4			CHK'D / DATE JAN 83 / DRAWING NO. SBH-1
	5			TRACED / APP'D

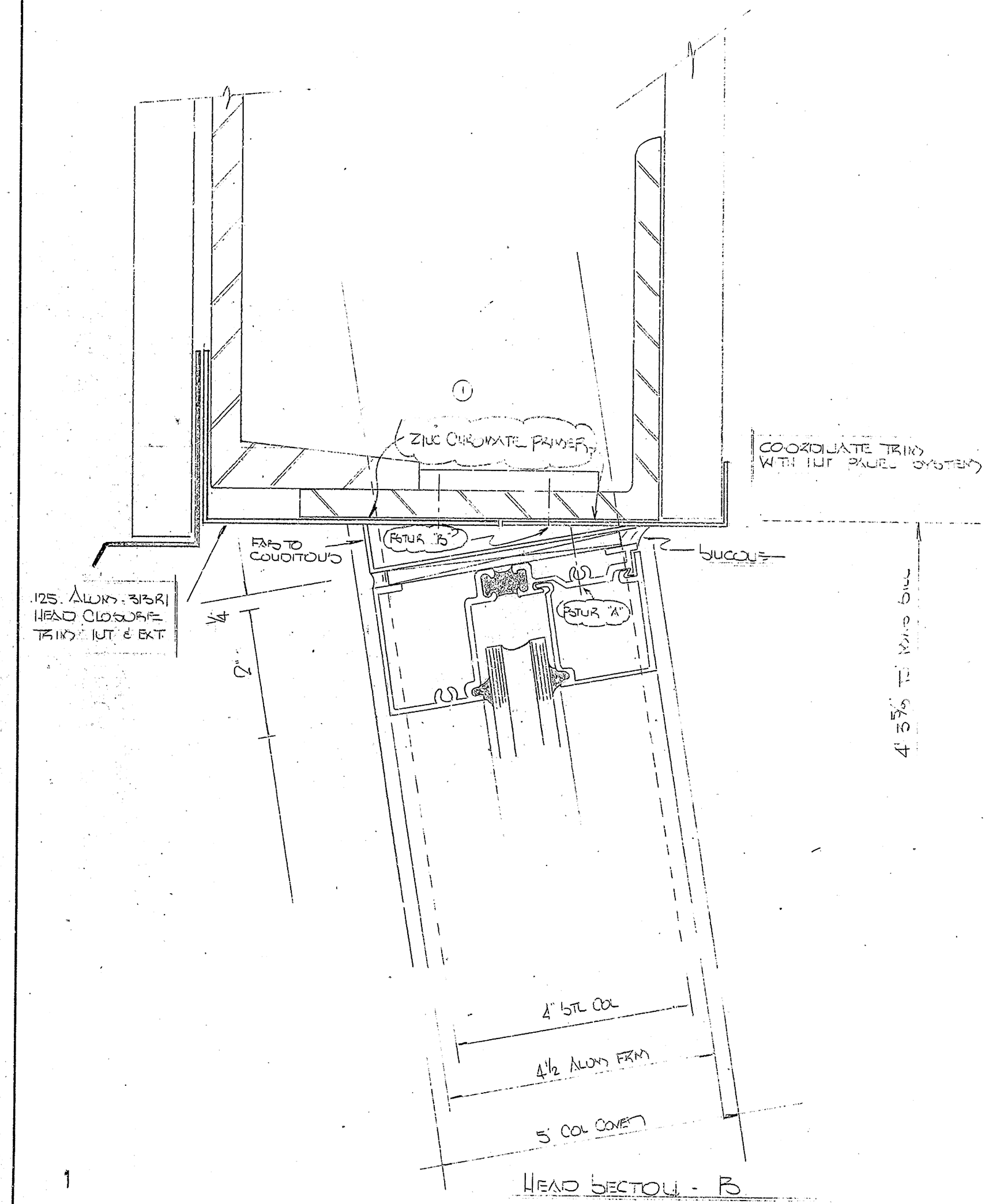

HEAD SECTION - B

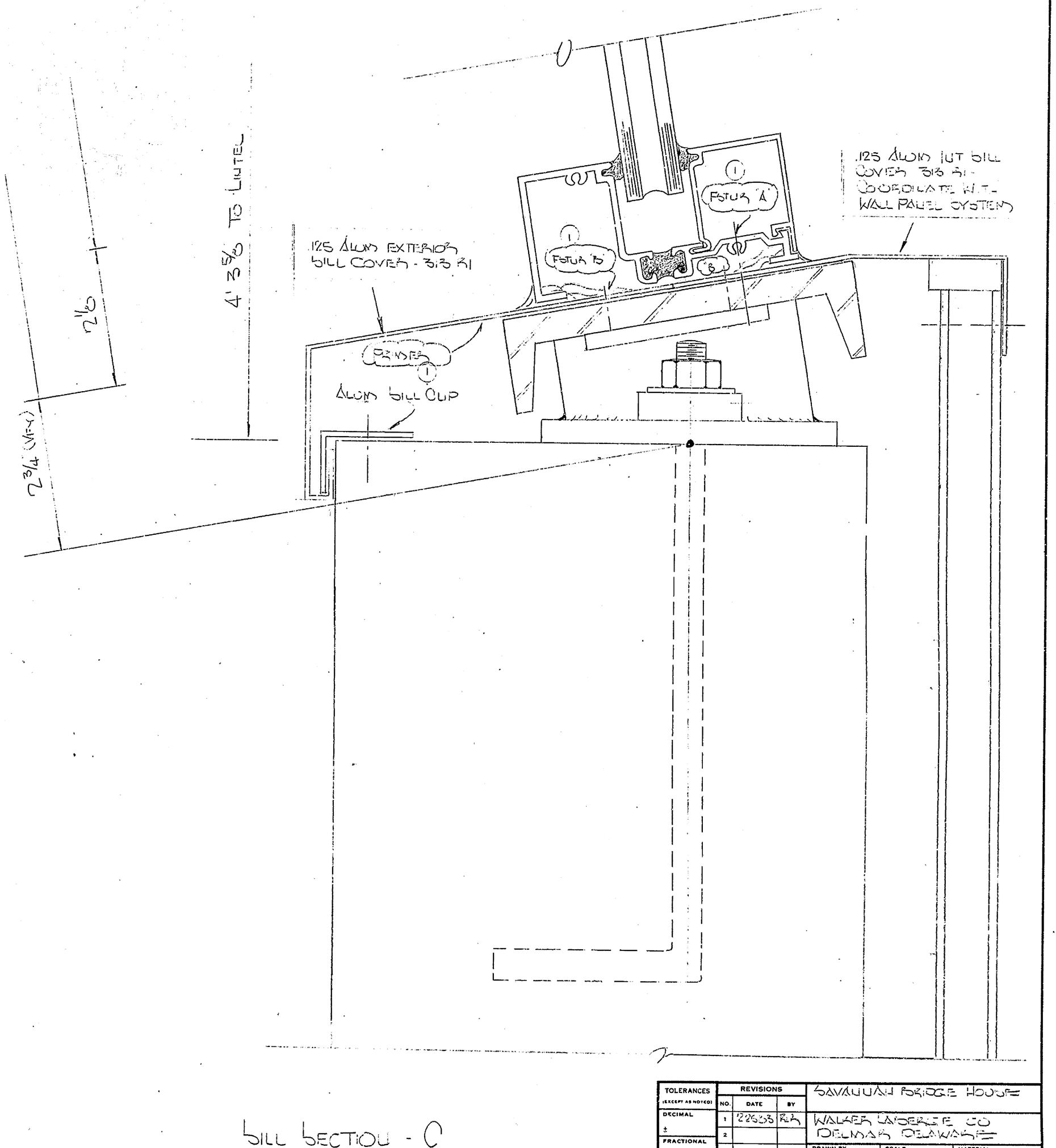

SILL SECTION - C

TOLERANCES (EXCEPT AS NOTED)	REVISIONS			SAVANNAH BRIDGE HOUSE
	NO.	DATE	BY	
DECIMAL ±	1	22633	RLR	WALKER LABORATE CO DELMAR DELAWARE
	2			
FRACTIONAL ±	3			DRAWN BY RICHARDS · SCALE · MATERIAL
	4			CHK'D · DATE JAN 83 · DRAWING NO. SBH-2
ANGULAR ±	5			TRACED · APP'D

1

6

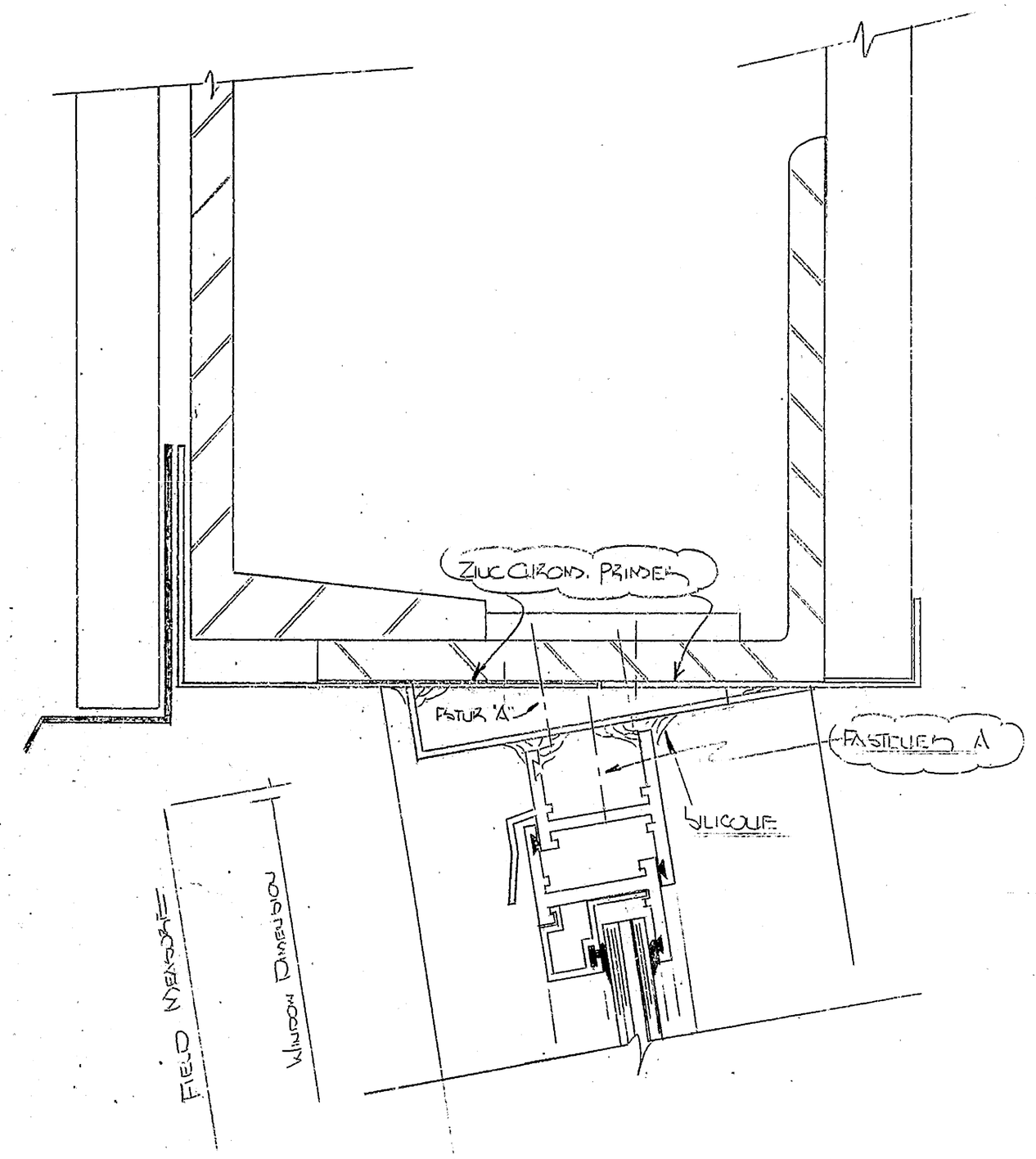

SECTION – D

REFER TO SHEET TWO FOR DIMENSIONS AND FURTHER NOTES

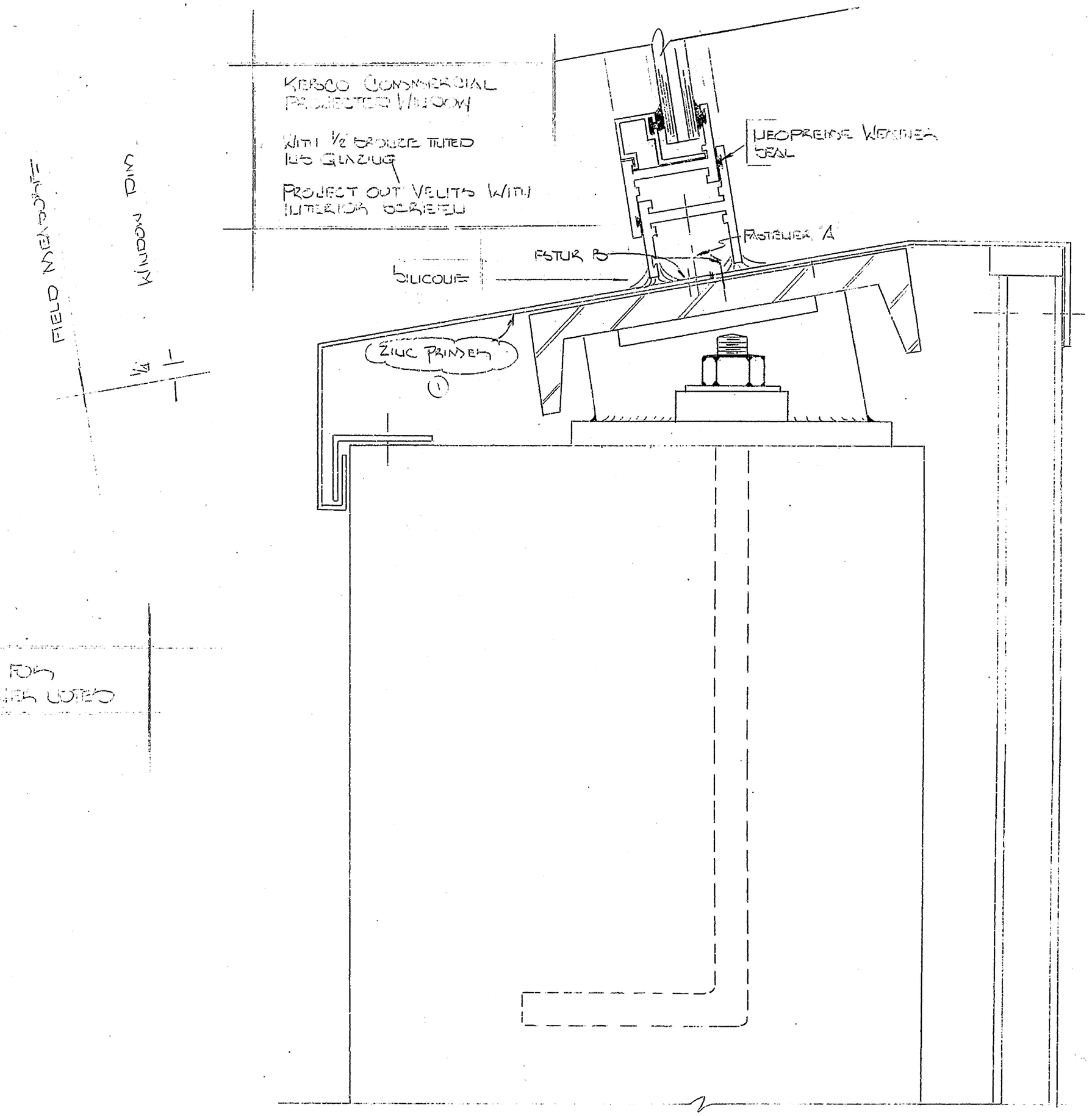

SECTION – E

TOLERANCES (EXCEPT AS NOTED)	REVISIONS			SAVANNAH BRIDGE HOUSE
DECIMAL ±	NO.	DATE	BY	WALKER LANDERGE CO DELMAR DELAWARE
FRACTIONAL ±	1	2-25-83	RM	
ANGULAR ±	2	3-31-83	RM	
	3			DRAWN BY R RICHARDS / SCALE / MATERIAL
	4			CHK'D / DATE JAN 83 / DRAWING NO. SBH-3
	5			TRACED / APP'D

TELEDYNE POST 18AE-20E – 24 x 36

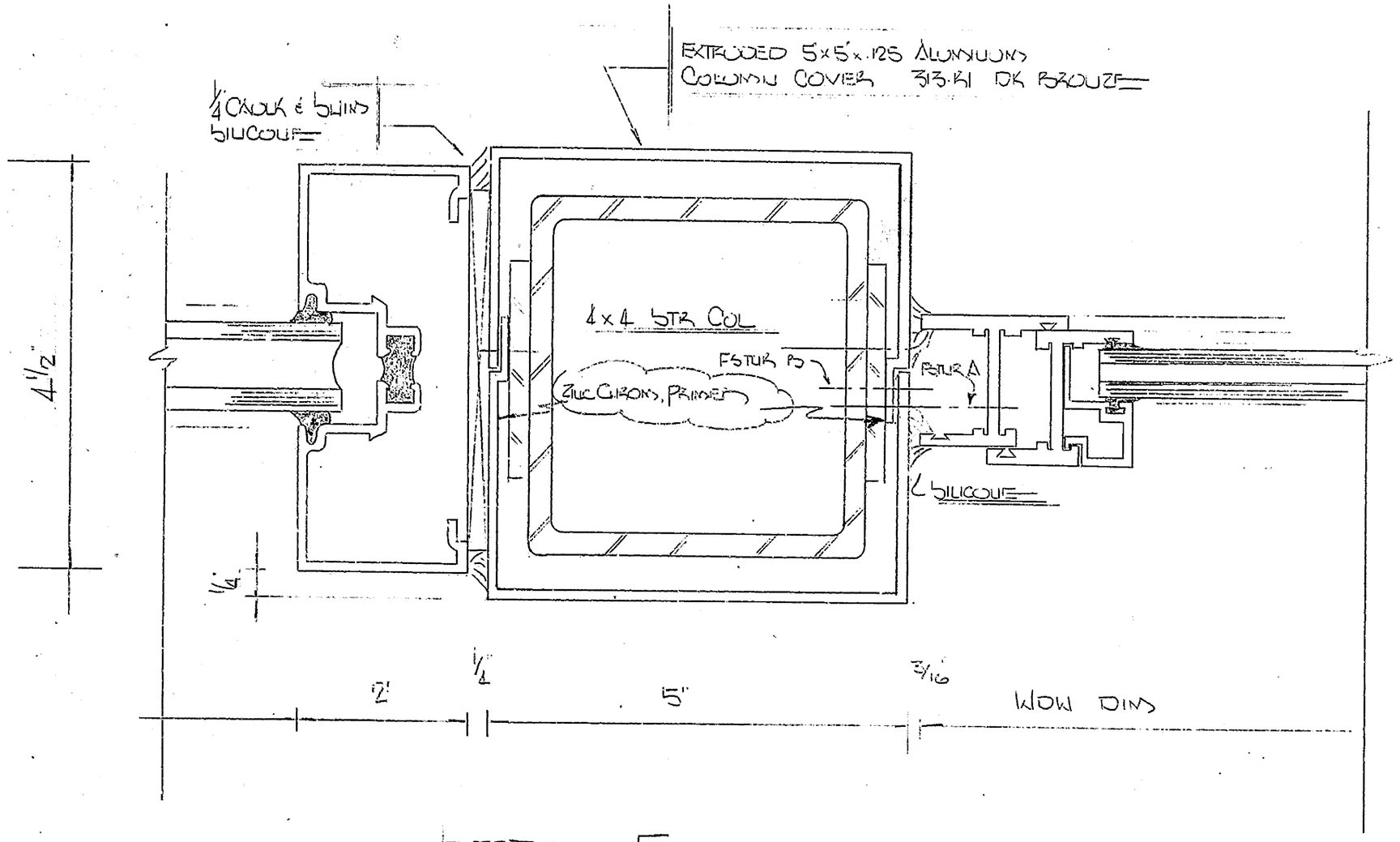

SECTION - F

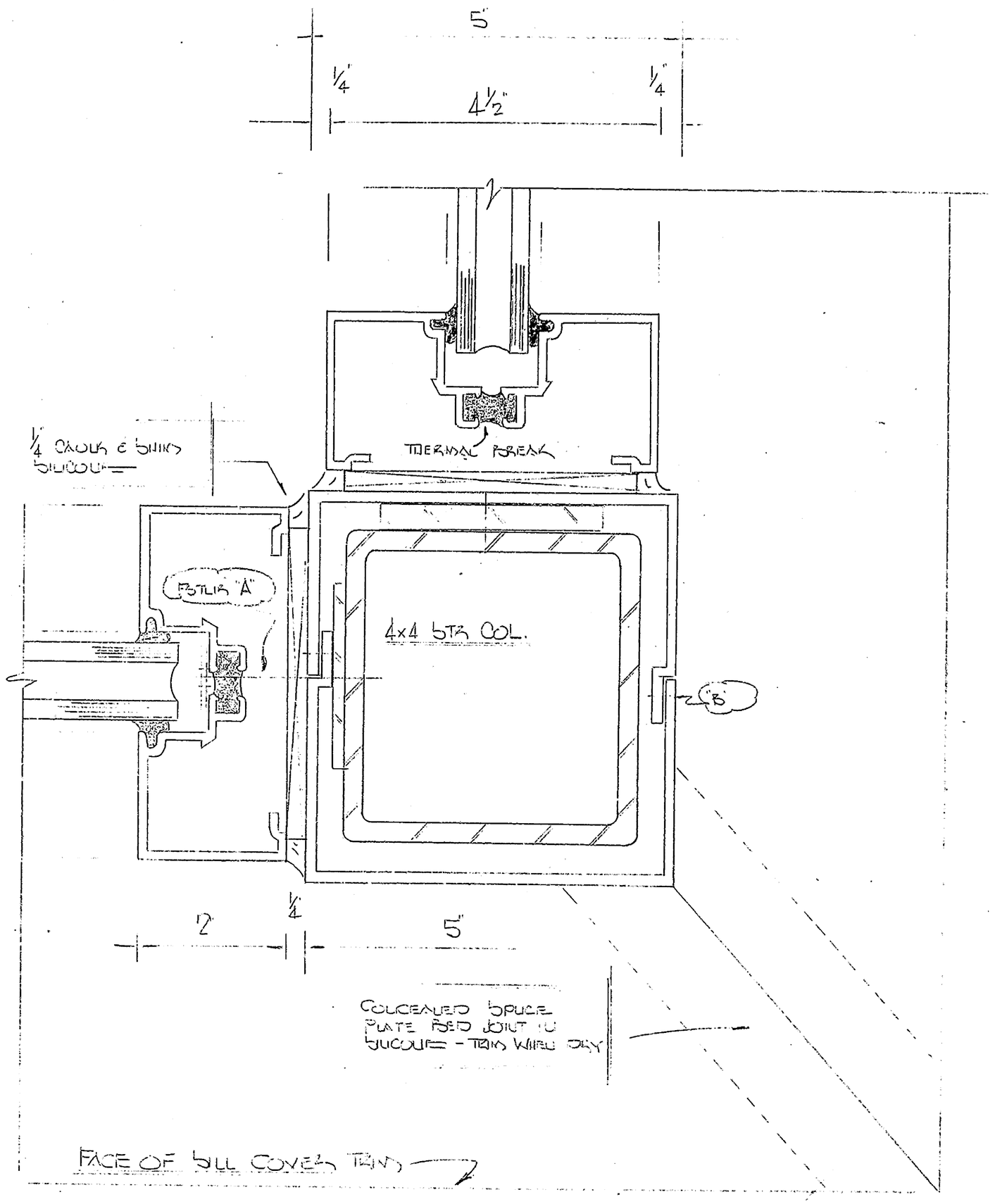

SECTION - G

TOLERANCES (EXCEPT AS NOTED)	REVISIONS			SAVANNAH BRIDGE HOUSE
DECIMAL ±	NO.	DATE	BY	
	1	2.25.83	RLK	WALKER LABERGE CO
FRACTIONAL ±	2	3.31.83	RLK	DELMAR DELAWARE
	3			DRAWN BY R RICKARDS / SCALE / MATERIAL
ANGULAR ±	4			CHK'D / DATE JAN 83 / DRAWING NO. SBH-4
	5			TRACED / APP'D

TELEDYNE POST 18AE-20E – 24 x 36

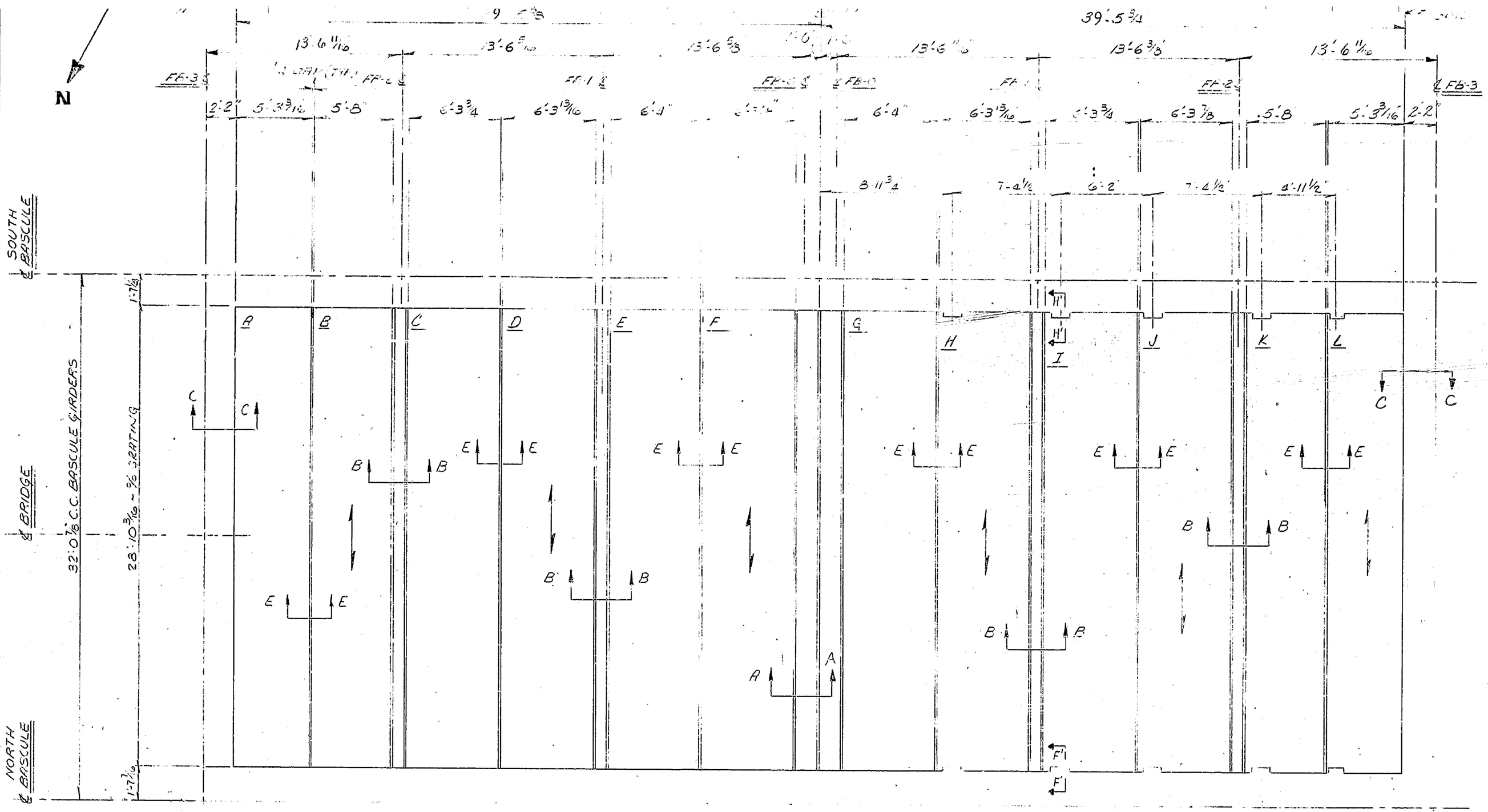

PLAN VIEW

NOTES

1. ALL DIMENSIONS TO BE VERIFIED BY FIELD CHECK BEFORE FABRICATION OF STEEL GRID FLOOR
2. MARK EACH PANEL IN UPPER LEFT HAND CORNER AND MATCH IN FIELD AT INSTALLATION
3. WELD HIGHWAY AND RAILROAD BRIDGE SPECIFICATIONS - A.W.S.D.1.1 - LATEST REVISION
4. AREA SEE NOTE #10
5. SEE GREULICH STANDARD DRAWINGS 10503-6 (2)
6. RE BARS —
7. FORM PANS —
8. SERRATIONS [illegible]
9. ⟶ SYMBOL DENOTES DIRECTION OF MAIN BARS

10. AREA ~ 2091 [illegible] INCH TYPE RB/B OPEN GRID
11. FOR SECTIONS [illegible] PERTAINING TO THIS DRAWING SEE SHEETS [illegible]
12. PAINT: ALL SURFACES OF 5 INCH GRID TO RECEIVE ONE (1) SHOP COAT OF INORGANIC ZINC PRIMER CARBO ZINC 11 AND ONE (1) FIELD COAT OF VINYL. (2)

SHOP INSPECTION REQUIRED
AGENCY
PAINT SAMPLE REQUIRED
CERTIFICATES REQUIRED
WELDING ROD:
WELDERS:
MATERIAL
PAINT
REFERENCE DRAWINGS

GREULICH, INC.
BRIDGE FLOORING SYSTEMS
1376 FREEPORT ROAD, PITTSBURGH, PENNSYLVANIA 15238 TELEPHONE [illegible]

DIVISION

REVISIONS	DATE
[illegible]	[illegible]
[illegible]	1-1-[illegible]

MADE BTY DATE 12-[illegible]
CHECK DATE
SCALE [illegible]
APPROVED

FOR STATE [illegible] DIV. OF [illegible]
TITLE [illegible]
CUSTOMER NO. JOB NO. DWG NO. [illegible]-1

BRUN-[illegible] 40 22 49802

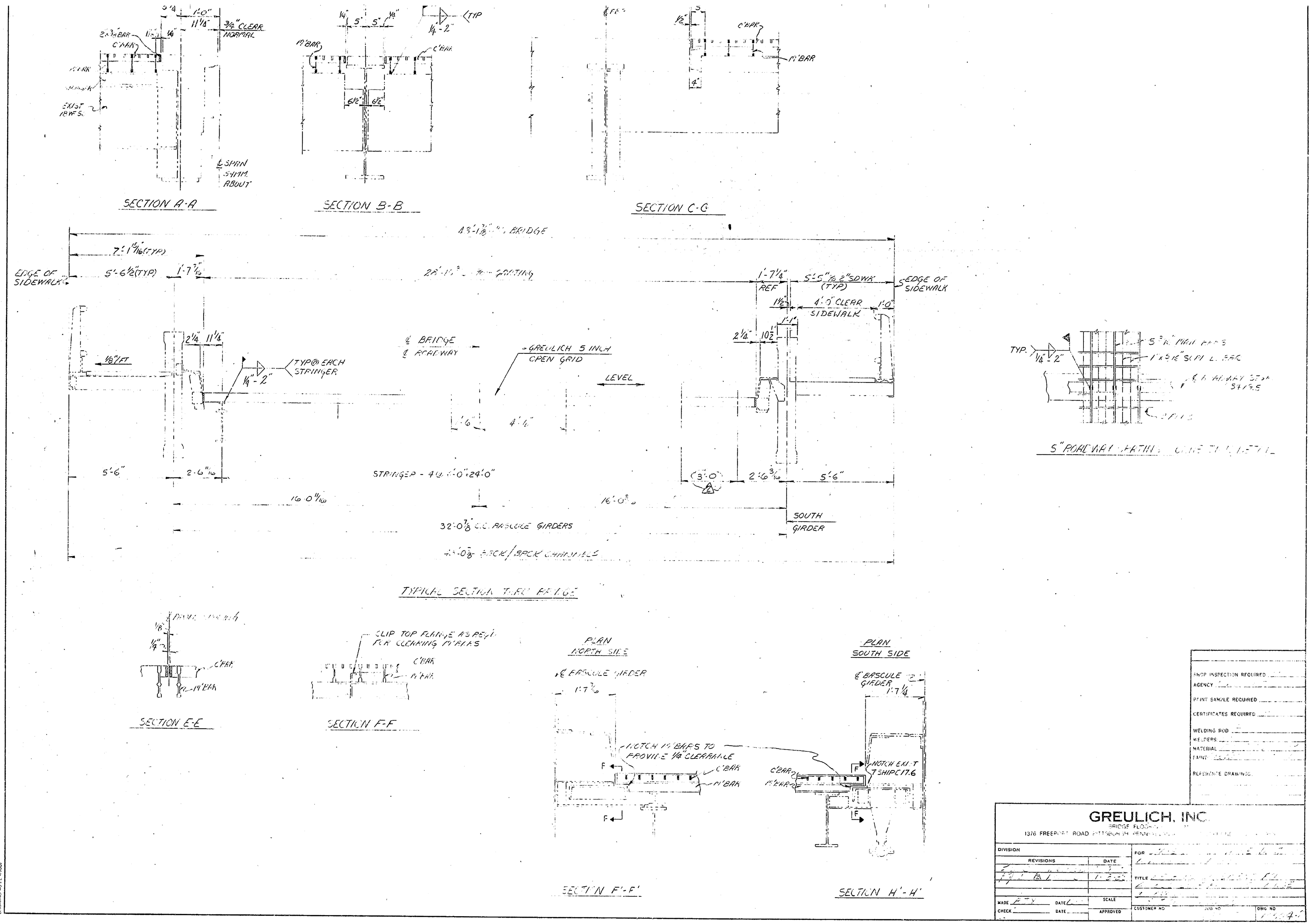
SECTION A-A
SECTION B-B
SECTION C-C
TYPICAL SECTION THRU BRIDGE
SECTION E-E
SECTION F-F
SECTION F'-F'
SECTION H'-H'
PLAN NORTH SIDE
PLAN SOUTH SIDE
GREULICH 5 INCH OPEN GRID
LEVEL
SOUTH GIRDER
EDGE OF SIDEWALK
4'-0" CLEAR SIDEWALK
TYP @ EACH STRINGER
STRINGER - 4 @ 4'-0" = 24'-0"
32'-0 7/8" C.C. BASCULE GIRDERS
NOTCH M'BARS TO PROVIDE 1/4" CLEARANCE
NOTCH EXIST 7 SHIP C17.6
SHOP INSPECTION REQUIRED
AGENCY
PAINT SAMPLE REQUIRED
CERTIFICATES REQUIRED
WELDING ROD
WELDERS
MATERIAL
PAINT
REFERENCE DRAWINGS
GREULICH, INC.
BRIDGE FLOOR
1376 FREEPORT ROAD PITTSBURGH PENNSYLVANIA
DIVISION
REVISIONS
DATE
FOR
TITLE
MADE
CHECK
DATE
SCALE
APPROVED
CUSTOMER NO
JOB NO
DWG NO

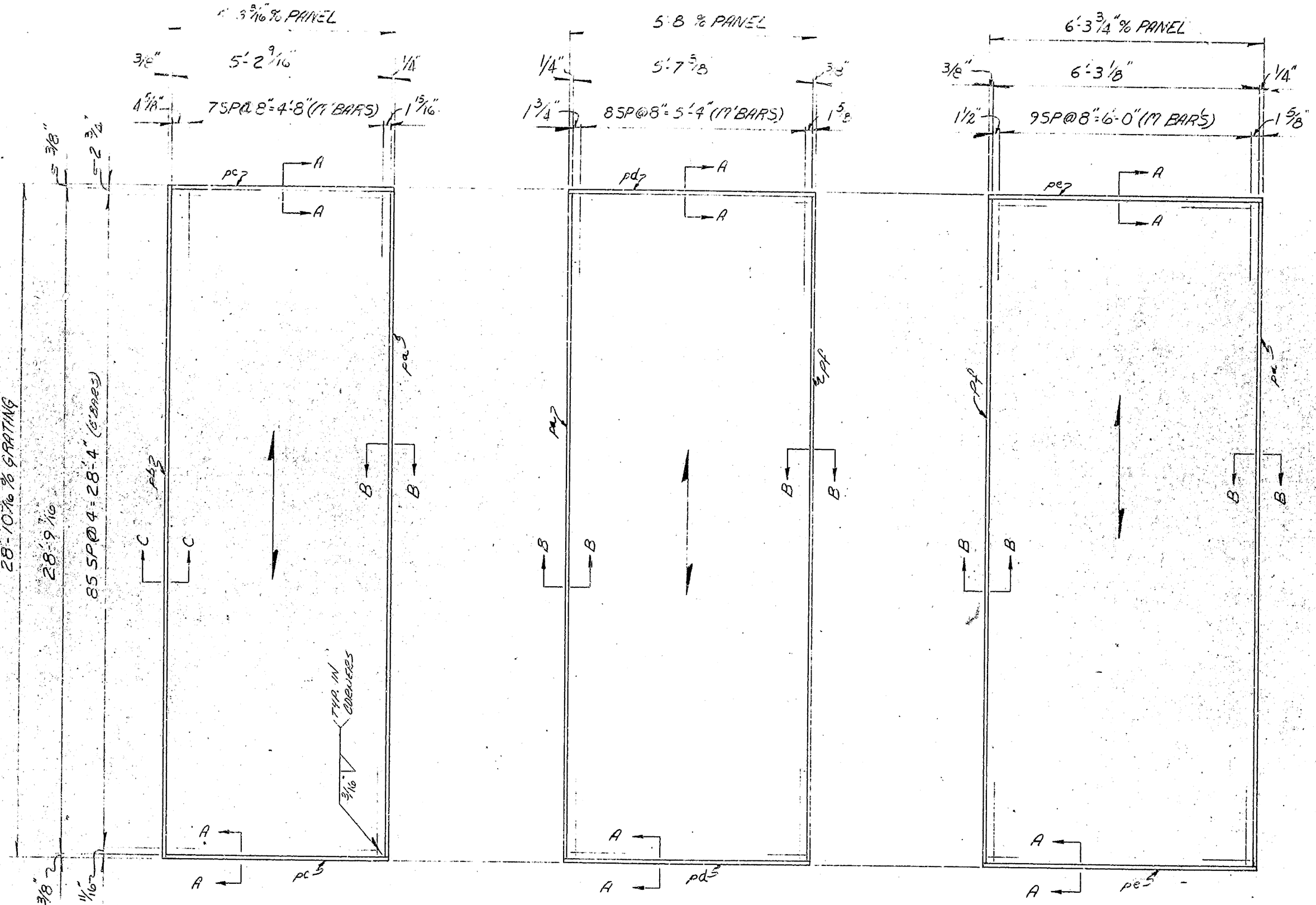

ONE ~ PANEL "A" AS SHOWN
ONE ~ PANEL "L" OPP HAND

ONE ~ PANEL "B" AS SHOWN
ONE ~ PANEL "K" OPP HAND

ONE ~ PANEL "C"
ONE ~ PANEL "I"

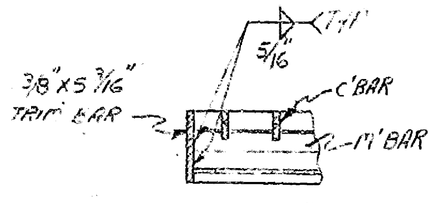

SECTION "A-A"

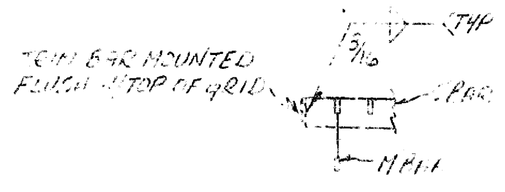

SECTION F-F

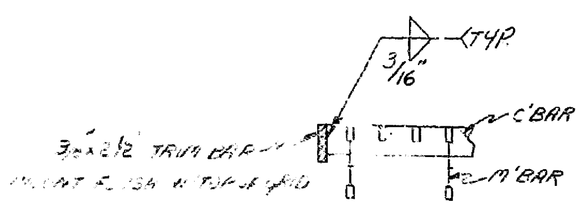

SECTION "C-C"

MK.	QTY.	DESCRIPTION	MATL	REMARKS	WT
A	1				
	8	M'BARS x 28'-9 7/16			
	86	C'BARS x 5'-2 9/16"			
B	1				
	9	M'BARS x 28'-9 7/16			
	86	C'BARS x 5'-7 5/8"			
C	1				
	10	M'BAR x 28'-9 7/16			
	86	C'BAR x 6'-3 1/8"			
I	1				
	10	M'BARS x 28'-9 7/16			
	86	C'BARS x 6'-3 1/8"			
K	1				
	9	M'BARS x 28'-9 7/16			
	86	C'BARS x 5'-7 5/8"			
L	1				
	8	M'BARS x 28'-9 7/16			
	86	C'BARS x 5'-2 9/16"			
		TRIM BARS			
pa1	6	1/4" x 2" x 28'-9 7/16			
pb	2	3/8" x 2 1/2" x 28'-10 3/16			
pc	4	3/8" x 5 3/16" x 5'-2 13/16			
pd	4	3/8" x 5 3/16" x 5'-8"			
pe	4	3/8" x 5 3/16" x 6'-3 3/4			
pf	4	3/8" x 2" x 28'-9 7/16			
		SUPP'L. BARS AS REQ'D			

SHOP INSPECTION REQUIRED
AGENCY
PAINT SAMPLE REQUIRED
CERTIFICATES REQUIRED
WELDING ROD
WELDERS
MATERIAL
PAINT
REVISIONS

NOTE:

THE PANELS SHALL BE FABRICATED TO MEET THE FOLLOWING TOLERANCES:
LENGTH ± 1/8
WIDTH ± 1/16
SQUARENESS ± 1/8 (MEASURED ON DIAGONAL)
FLATNESS ± 1/8 IN 10 FEET

GREULICH, INC
BRIDGE ENGINEERS
345 FREEPORT ROAD PITTSBURGH PENNSYLVANIA

DIVISION
REVISIONS DATE
MARK
DATE

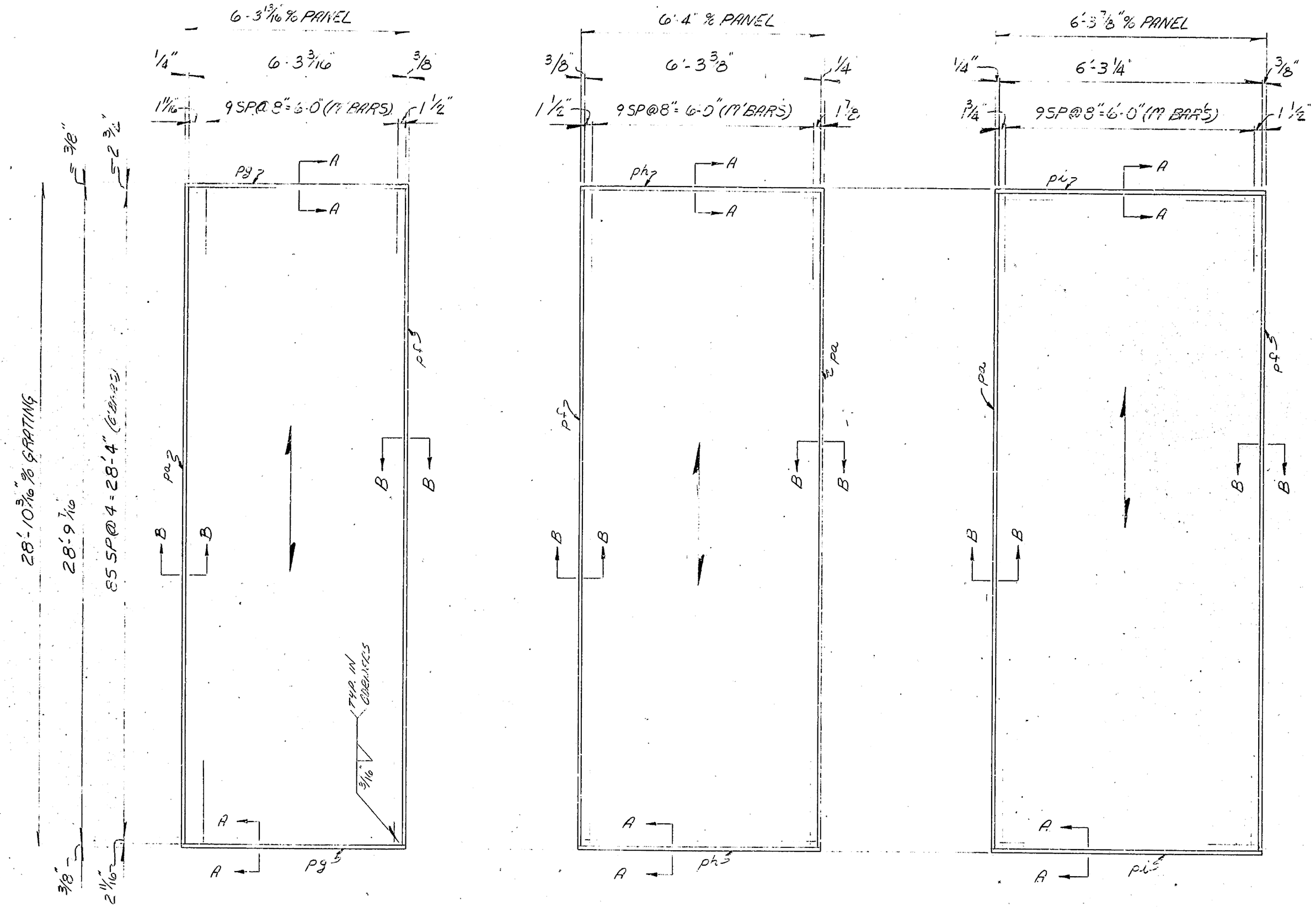

ONE ~ PANEL "D"

ONE ~ PANEL "E"
ONE ~ PANEL "G"

ONE ~ PANEL "F"

MK.	QTY.	DESCRIPTION	MATL	REMARKS	WT.
D	1				
	10	M' BARS x 28'-9 7/16			
	86	C' BARS x 6'-3 3/16"			
E	1				
	10	M' BARS x 28'-9 7/16			
	86	C' BARS x 6'-3 3/16			
F	1				
	10	M' BAR x 28'-9 7/16			
	86	C' BAR x 6'-3 1/4			
G	1				
	10	M' BARS x 28'-9 7/16			
	86	C' BARS x 6'-3 3/16"			
		TRIM BARS			
pa	4	1/4" x 2" x 28'-9 7/16			
pf	4	3/8" x 2" x 28'-9 7/16			
pg	2	3/8" x 5 3/16 x 6'-3 13/16			
ph	4	3/8" x 5 3/16 x 6'-4			
pi	2	3/8" x 5 3/16" x 6'-3 7/8			
		SUPP'L. BARS AS REQ'D.			

NOTE:

FOR SECTIONS & PANEL TOLERANCES SEE DWG. 10503-3

SHOP INSPECTION REQUIRED:
AGENCY:
PAINT SAMPLE REQUIRED:
CERTIFICATES REQUIRED:
WELDING ROD:
WELDERS:
MATERIAL:
PAINT:
REFERENCE DRAWINGS

GREULICH, INC.
BRIDGE FLOORING SYSTEMS
1376 FREEPORT ROAD, PITTSBURGH, PENNSYLVANIA 15238 TELEPHONE (412) 963-9800

DIVISION

REVISIONS	DATE
[illegible]	[illegible]
[illegible]	[illegible]

MADE [illegible] DATE 12-81
CHECK DATE
SCALE
APPROVED

FOR [illegible]
TITLE [illegible]
CUSTOMER NO
JOB NO
DWG NO

BRUNING 40-22 49802

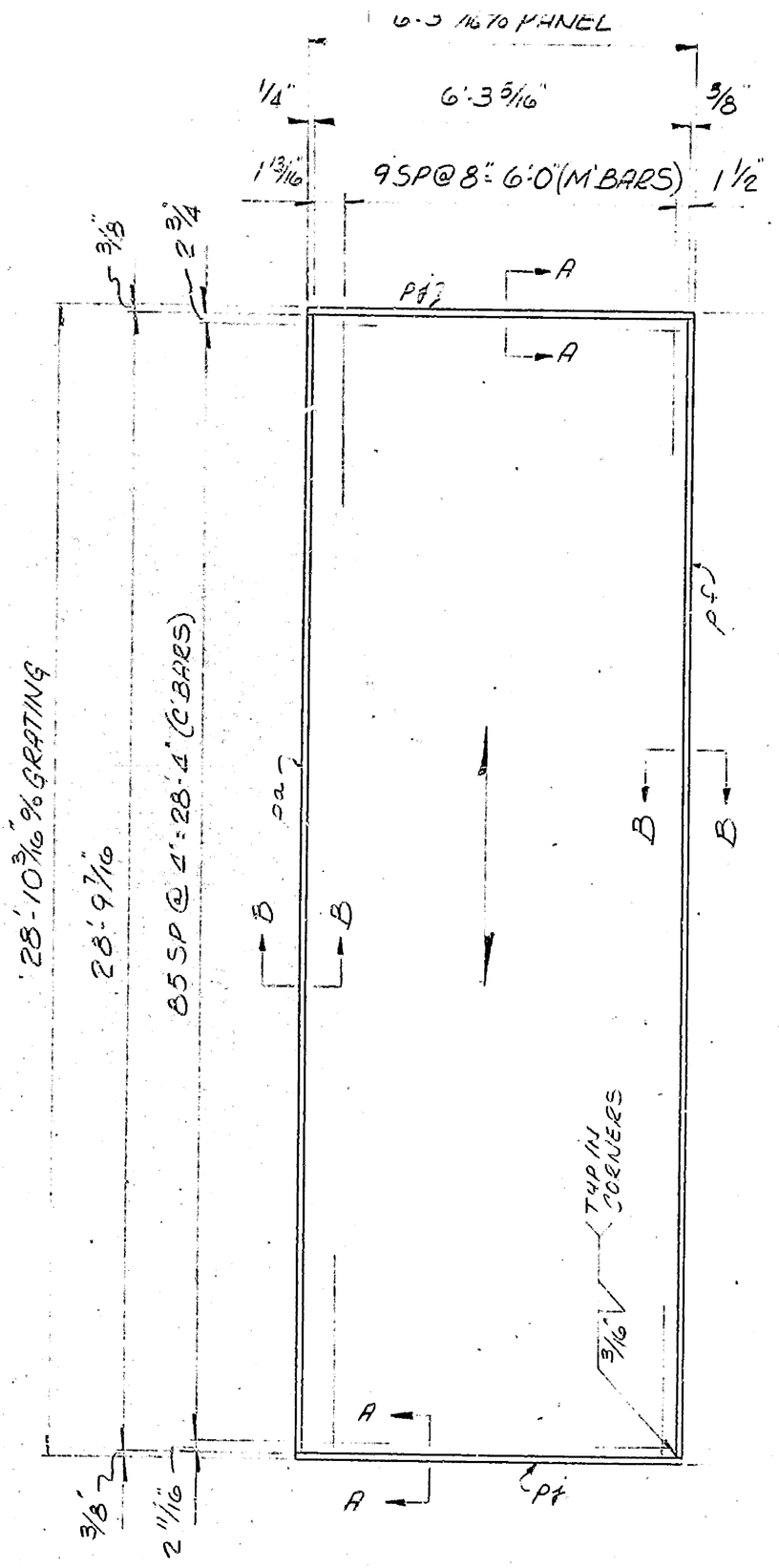

ONE ~ PANEL "H"

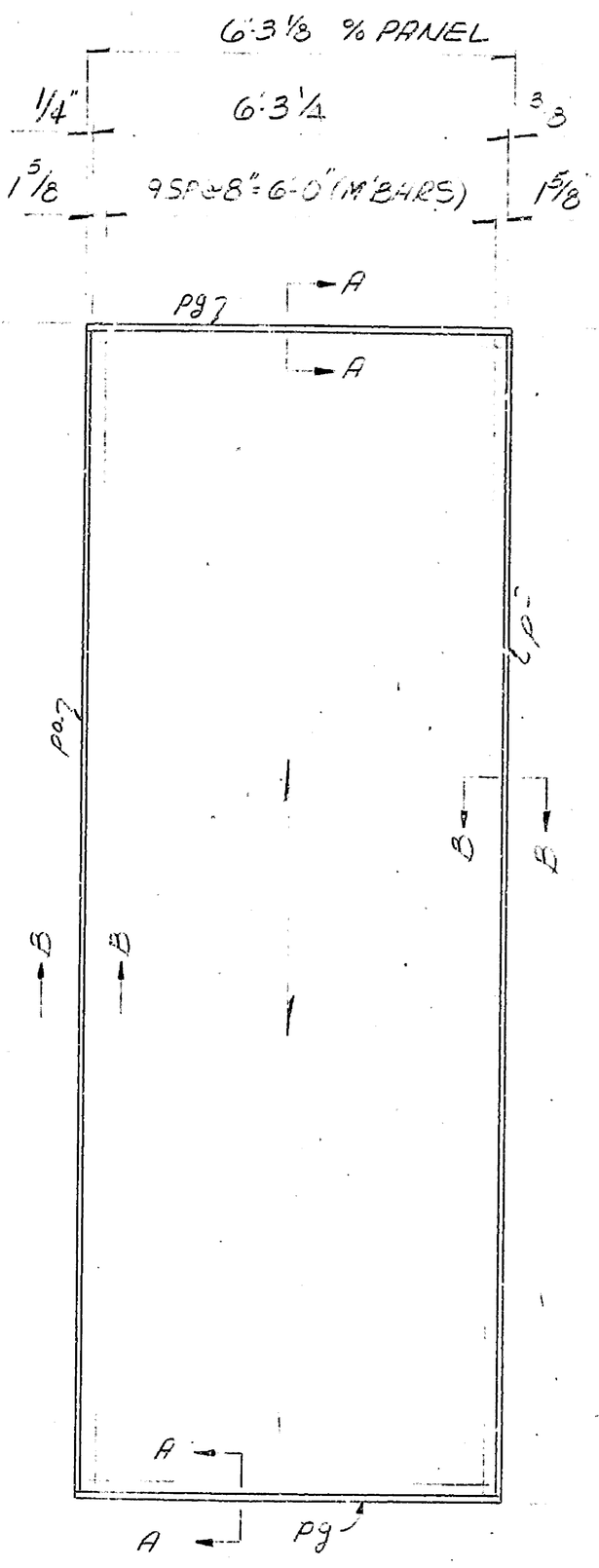

ONE ~ PANEL "J"

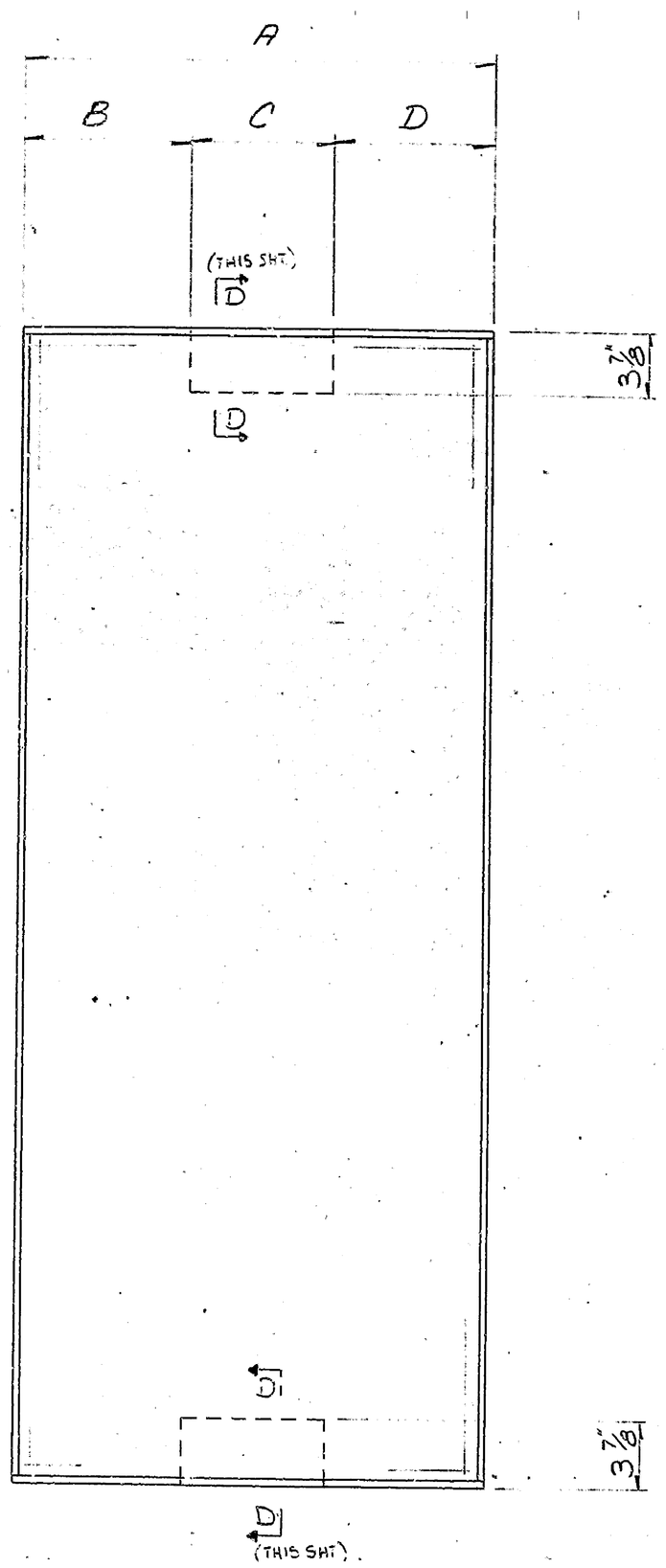

PANEL	A	B	C	D
"H"	6'-3 15/16"	6 3/4"	1'-3"	4'-6 3/16"
"I"	6'-3 3/4"	8 13/16"	1'-3"	4'-3 15/16"
"J"	6'-3 7/8"	6 13/16"	1'-3"	4'-6 1/16"
"K"	5'-8"	8 15/16"	1'-3"	3'-8 1/16"
"L"	5'-3 3/16"	11/16	1'-2	4'-0 1/2"

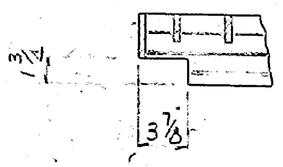

SECTION 'D-D'

H	1		
	10	M BARS	x 28'-9 7/16
	86	C BARS	x 6'-3 5/16
J	1		
	10	M BARS	x 28'-9 7/16
	86	C BARS	x 6'-3 1/4

TRIM BARS

pa	2	1/4	x 2" x 28'-9 7/16
pf	2	3/8	x 2" x 28'-9 7/16
pg	2	3/8	x 5 3/16 x 6'-3 3/16
pt	2	3/8	x 5 3/16 x 6'-3 5/16

SUPP'L. BARS AS REQ'D

SHOP INSPECTION REQUIRED	YES
AGENCY	STATE
PAINT SAMPLE REQUIRED	
CERTIFICATES REQUIRED	YES
WELDING ROD	YES
WELDERS	YES
MATERIAL	ASTM A 709 GR 50
PAINT	SEE NOTE 8 SHT 1
REFERENCE DRAWINGS	

NOTE:

FOR ERECTION & PANEL TOLERANCES SEE DWG 10503-3

GREULICH, INC.

BRIDGE FLOORING SYSTEMS

1376 FREEPORT ROAD, PITTSBURGH PENNSYLVANIA 15238 TELEPHONE 412 963-9800

DIVISION		FOR	STATE OF DELAWARE D.O.T.
REVISIONS	DATE		DIV. OF HIGHWAYS
C.L. REVISED	7-15-02	TITLE	DECK REPLACEMENT FOR DOUBLE LEAF BASCULE BRIDGE @ SAINT RD
			STEEL DETAILS
MADE J.J.L.	DATE 7-8-02	SCALE	
CHECK	DATE	APPROVED	
CUSTOMER NO		JOB NO	01-031
		DWG NO	10503-5

5 of 6

BRUNING 10-22-15802

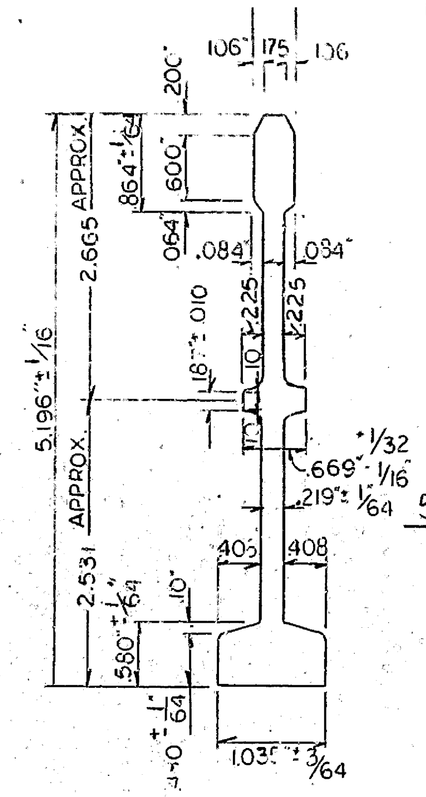

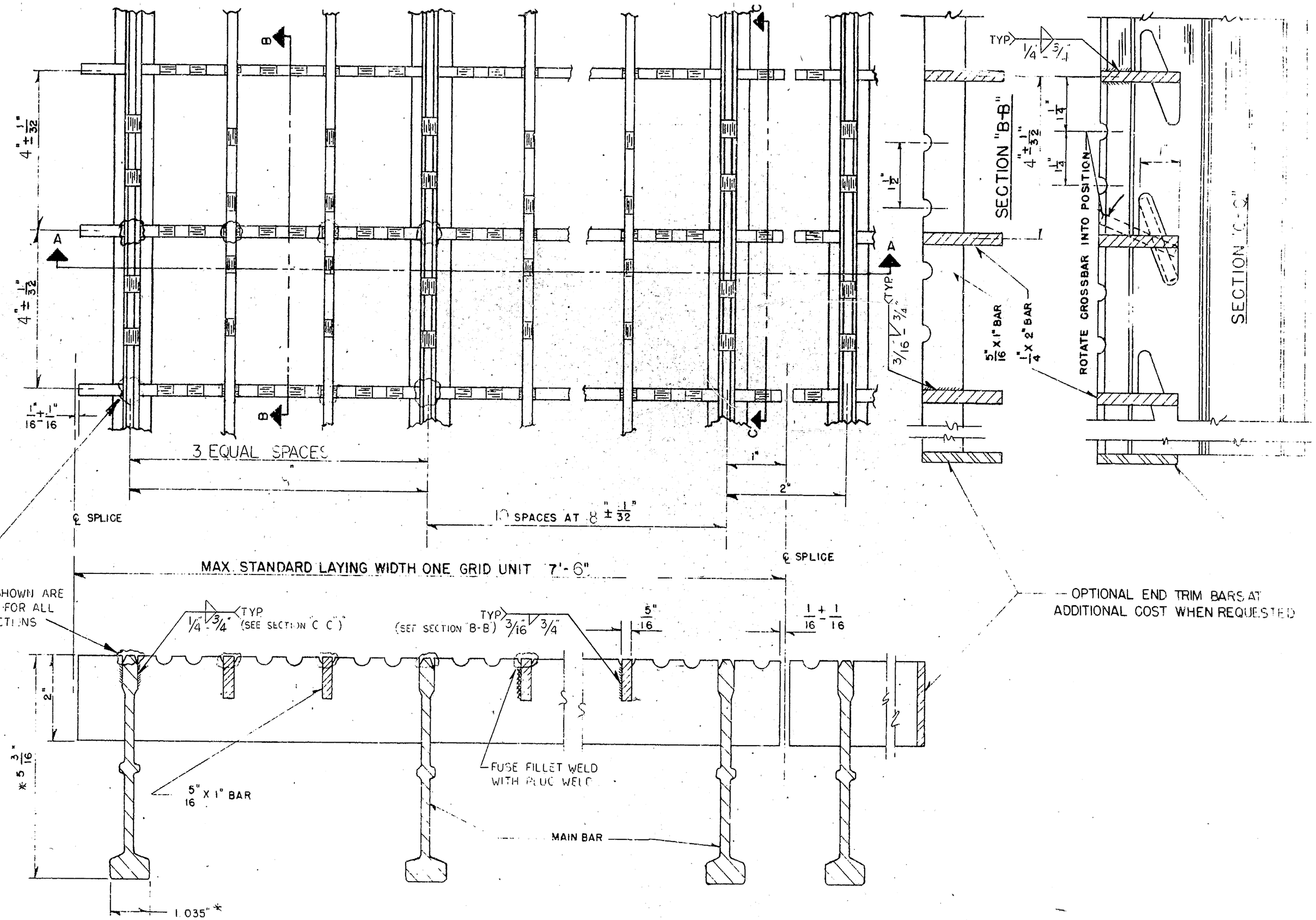

SECTION "A-A"

WEIGHT- 17.3 LBS.(APPROX) PER SQ. FT.

MATERIAL SPECIFICATIONS

STEEL: BEAMS & BARS SHALL BE A-588 STEEL CAPABLE OF DEVELOPING A TIGHTLY ADHERENT IMPERVIOUS OXIDE COATING AS THE STEEL WEATHERS.

PAINT: FOR PAINT NOTE SEE SHT. 1 NOTE #12

WELDING PROCESS:

a) FLUX CORED ARC WELDING (F.C.A.W.)
b) GAS METAL ARC WELDING (G.M.A.W.)

LOAD TABLES A-588 STEEL

SECTIONAL PROPERTIES PER EACH FT. OF ELEMENT		
MOMENT OF INERTIA	SECTION MODULUS-TOP	SECT. MODULUS BOTTOM
10.433 in.⁴	4.275 in.³	4.076 in.³
MAXIMUM SPAN		
HS-10	HS-15	HS-20
		7'-0 7/8"

NOTE: MAXIMUM SPAN BASED ON APPLICATIONS CONTINUOUS OVER THREE OR MORE SUPPORTS.

* SUBJECT TO MILL TOLERANCES.

STATE OF DELAWARE [illegible]
DECK REPLACEMENT FOR [illegible] BASCULE BRIDGE [illegible] LEWES SUSS. X [illegible] INTY

JOB No. 81631

A-588 WEATHERING STEEL

CUSTOMER'S NOTE: This drawing is to be used as a reference drawing ONLY! Refer to detail drawings for actual installation specifications

GREULICH, INC.
BRIDGE FLOORING SYSTEMS
1376 FREEPORT ROAD
PITTSBURGH, PENNSYLVANIA 15238
TELEPHONE (412) 963-9900

"5-INCH RB/8 M[illegible]
OPEN STEEL GRID [illegible]

DRAWING NO. 10503-6

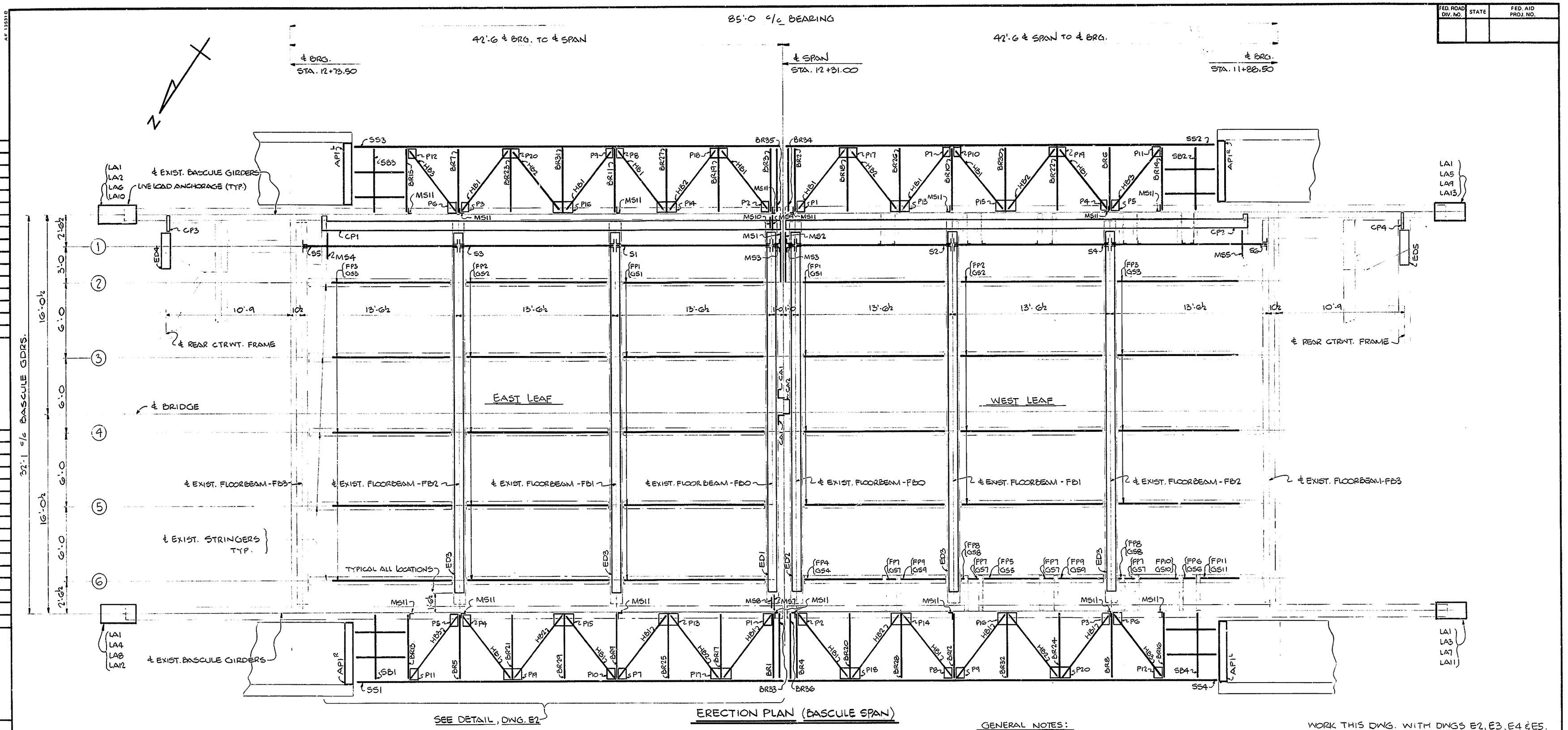

ERECTION PLAN (BASCULE SPAN)

FIELD BOLT SUMMARY
(BASCULE SPAN & LIVE LOAD ANCHORAGE)

7/8"φ H.S. (A325, TYPE 1) BOLTS W/HVY. HEX HD. & A563 GR. DH HVY. HEX NUTS. (MECHANICALLY GALVANIZED)

505 @ 2" LG.	434.81
103 @ 2¼" LG.	93.01
257 @ 2½" LG.	243.12
250 @ 2¾" LG.	247.00
245 @ 3" LG.	252.35
5 @ 3¼" LG.	5.35

(MECHANICALLY GALV.) — 1365 - F436 WASHERS FOR 7/8"φ H.S.B. 92.82
HOT DIP GALV. PER ASTM-A153 — 58 - BEVELED CLIPPED F436 WASHERS FOR 7/8"φ H.S. BOLTS 3.94
△1

GENERAL NOTES:

1. ALL DIMENSIONS ARE GIVEN HORIZONTALLY.
2. ALL SHOP AND FIELD BOLTS TO BE A.S.T.M. A325, TYPE 1 H.S. BOLTS MECHANICALLY GALVANIZED TO A.S.T.M. B-454 CLASS - 50.
3. ALL STEEL TO BE A.S.T.M. A588 (U.N.)
4. ALL STEEL TO BE BLAST CLEANED TO SSPC-SP6 PRIOR TO PAINTING.
5. PAINT ONE SHOP COAT OF INORGANIC ZINC (MOBIL ZINC 7) (U.N.) 3.0 MILS DRY MIN. THICKNESS.
6. SHOP INSPECTION BY: R.W. HUNT COMPANY.
7. AWS SPECIFICATION: D1-1-81, AS MODIFIED BY 1977 AASHTO.
8. STATE SPECIFICATION YEAR: 1974 AND 1980 SUPPLEMENTAL.

WORK THIS DWG. WITH DWGS E2, E3, E4 & E5.

ERECTION NOTE:

No credit will be allowed for work performed by others in replacing or correcting materials or workmanship covered by this drawing unless expressly authorized by High Steel Structures, Inc.

NO. △1	REVISION CHANGE WASHER GALV. SPEC.	DATE 3/24/83

HIGH STEEL STRUCTURES, INC.
1905 Old Philadelphia Pike
Lancaster, Pennsylvania 17604
Phone 717/299-5211
A Subsidiary of High Industries, Inc

ERECTION PLAN (BASCULE SPAN)
SAVANNAH ROAD BRIDGE OVER LEWES & REHOBOTH CANAL
ROUTE 18 - SAVANNAH RD.
SUSSEX COUNTY, DELAWARE
STATE OF DELAWARE, DEPARTMENT OF TRANSPORTATION
DIVISION OF HIGHWAYS

STATE CONTRACT OR REF. NO. 80-023-02 CONTRACTOR GEORGE & LYNCH, INC.
IN CHARGE: CHRISTMAN MADE BY: KMA CHK'D. BY: WBW & WRC DATE: 1-29-82
CONTRACT NUMBER: D-81116 DRAWING NUMBER: E1

FED. ROAD DIV. NO.	STATE	FED. AID PROJ. NO.

FED ROAD DIV. NO	STATE	FED AID PROJ NO

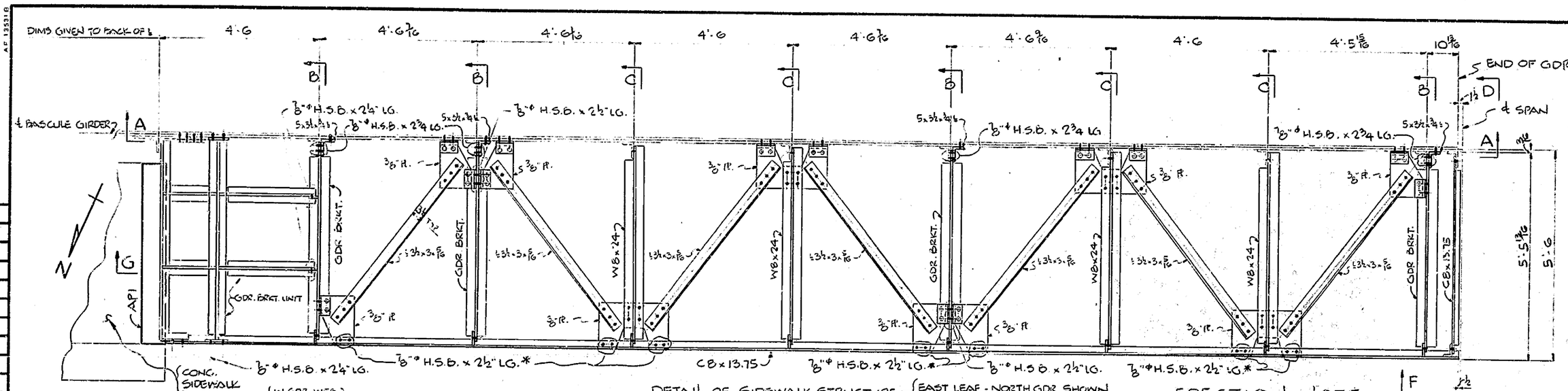

DETAIL OF SIDEWALK STRUCTURE — {EAST LEAF - NORTH GDR. SHOWN / OTHER LOCATIONS - SIMILAR}

(FOR MARKS, SEE DRAWING E1.)

ERECTION NOTE:

ALL FIELD BOLTS ON THIS DRAWING TO BE 7/8"ø H.S. BOLTS x 2" LG. (U.N.)

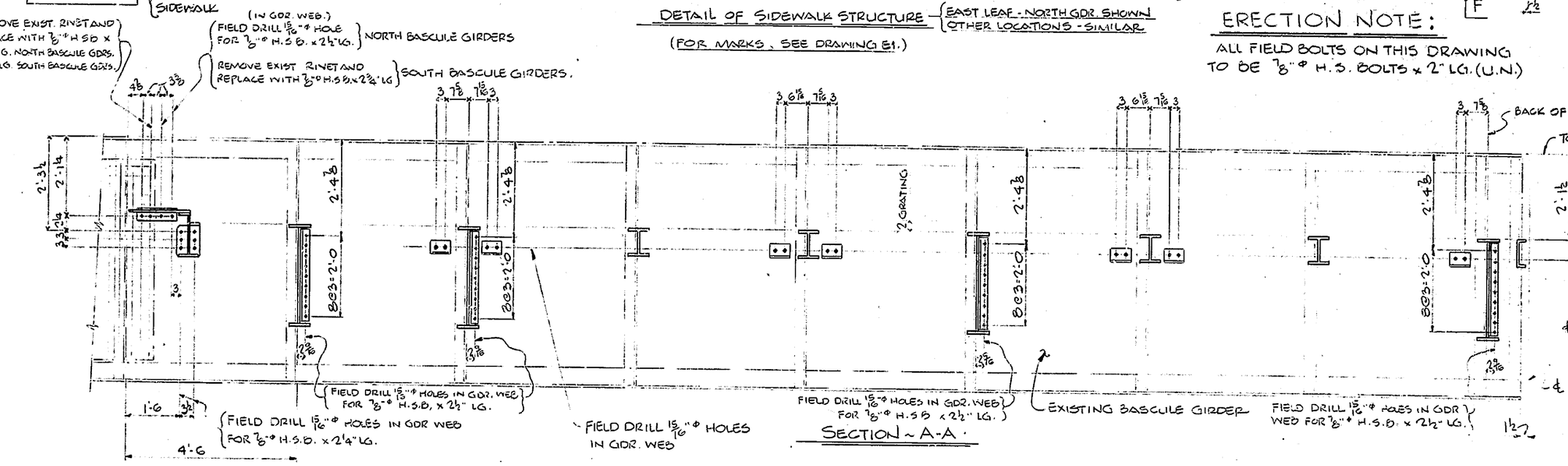

SECTION ~ A-A

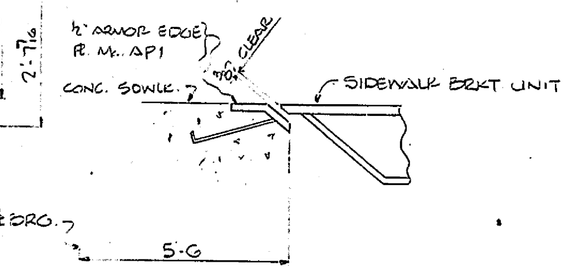

SECTION ~ G

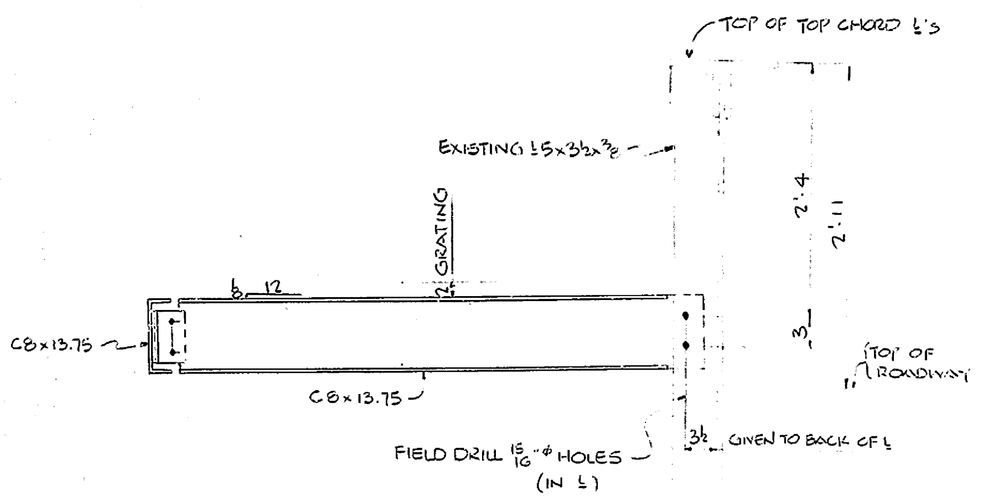

SECTION ~ D

EXISTING BASCULE GDR.

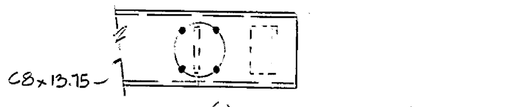

SECTION ~ F

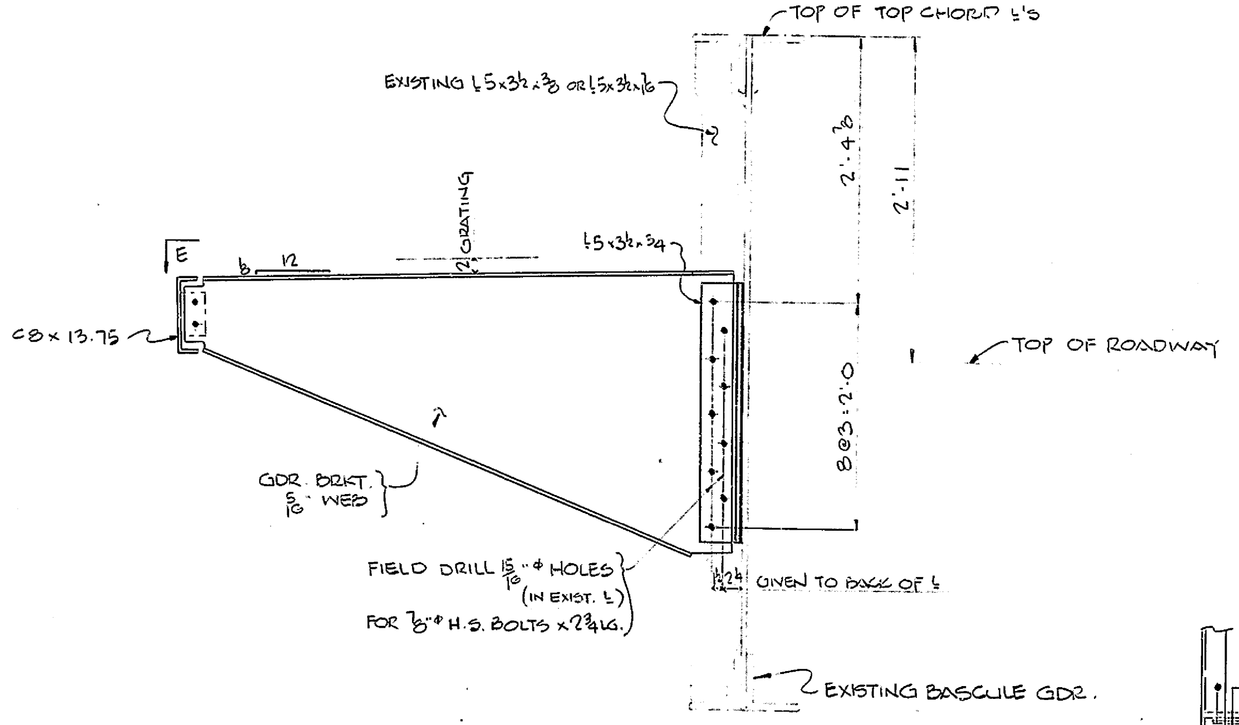

SECTION ~ B

(HORIZ. BRACING GUSSET ℄S NOT SHOWN)

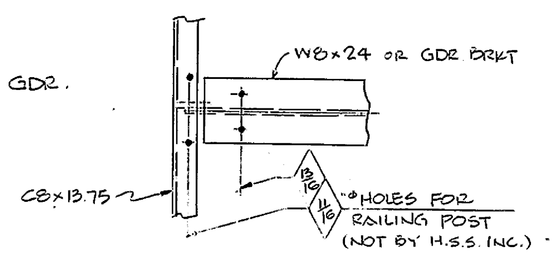

SECTION ~ E

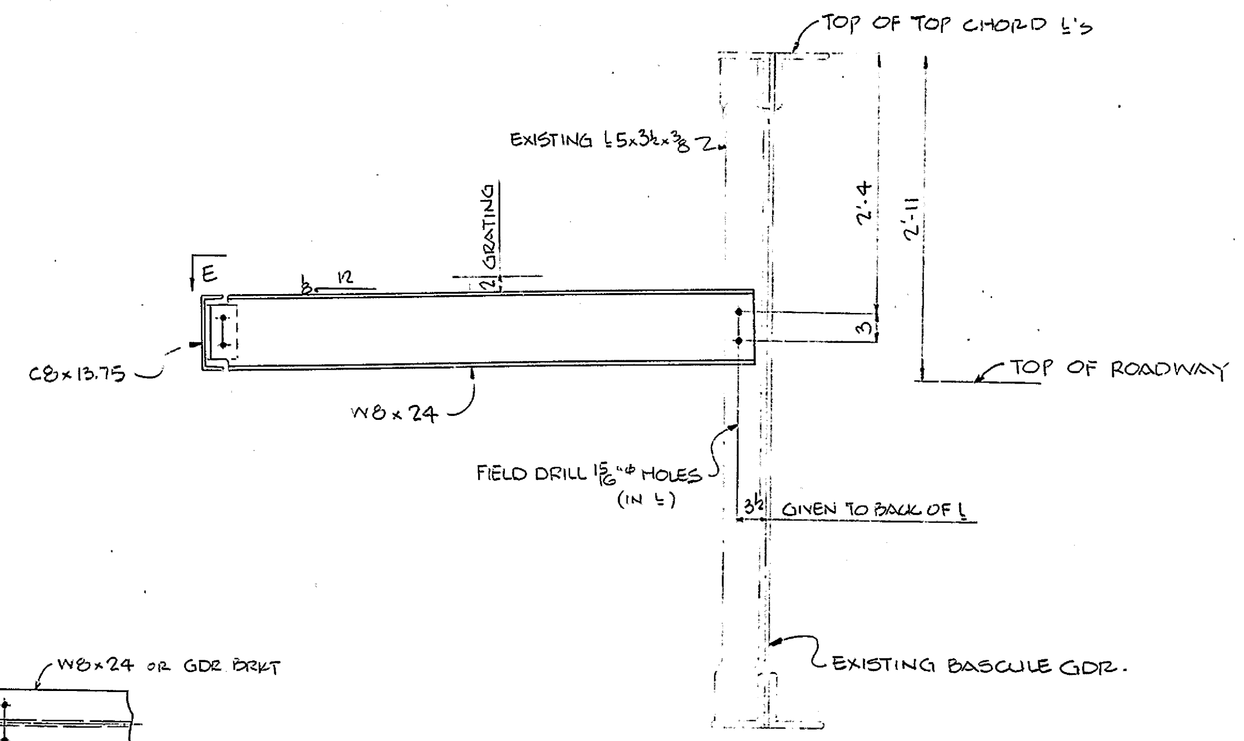

SECTION ~ C

(HORIZ. BRACING GUSSET ℄S NOT SHOWN)

* - 2 - WASHERS PER BOLT - BEVELED CLIPPED WASHER INSIDE OF FLANGE.

WORK THIS DWG WITH DWG E1.

NO.	REVISION	DATE

HIGH STEEL STRUCTURES, INC.
1905 Old Philadelphia Pike
Lancaster Pennsylvania 17604
Phone 717/299-5211
A Subsidiary of High Industries Inc

ERECTION PLAN SECTIONS - (BASCULE SPAN)

SAVANNAH ROAD BRIDGE OVER LEWES & REHOBOTH CANAL

ROUTE 18 - SAVANNAH RD.

SUSSEX COUNTY, DELAWARE

STATE OF DELAWARE, DEPARTMENT OF TRANSPORTATION

DIVISION OF HIGHWAYS

STATE CONTRACT OR REF. NO. 80-023-02 CONTRACTOR GEORGE & LYNCH, INC

IN CHARGE: CHRISTMON MADE BY: K.M.A. CHK'D BY: W.R.C. DATE 1-29-82

CONTRACT NUMBER: D-8111G DRAWING NUMBER: E2

AP 1325-10

POLYTRACE 038

FED ROAD DIV. NO	STATE	FED AID PROJ. NO

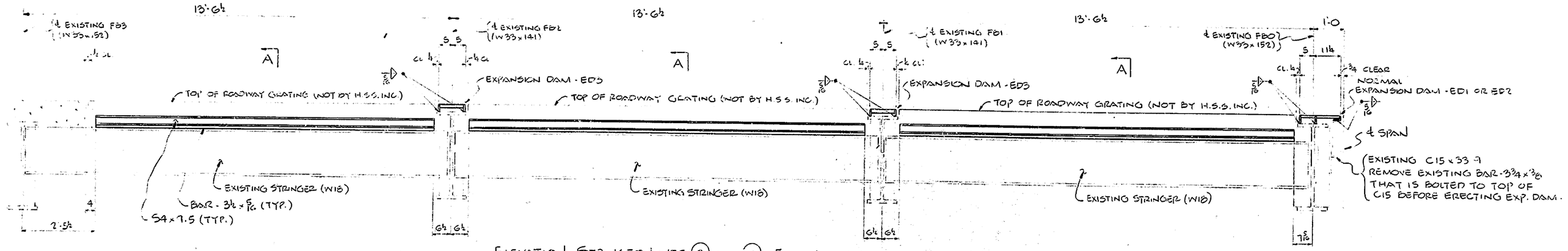

ELEVATION STRINGER LINES (2) THRU (6) - EAST LEAF (LOOKING SOUTH)

ELEVATION STRINGER LINES (2) THRU (5) - WEST LEAF (LOOKING NORTH)

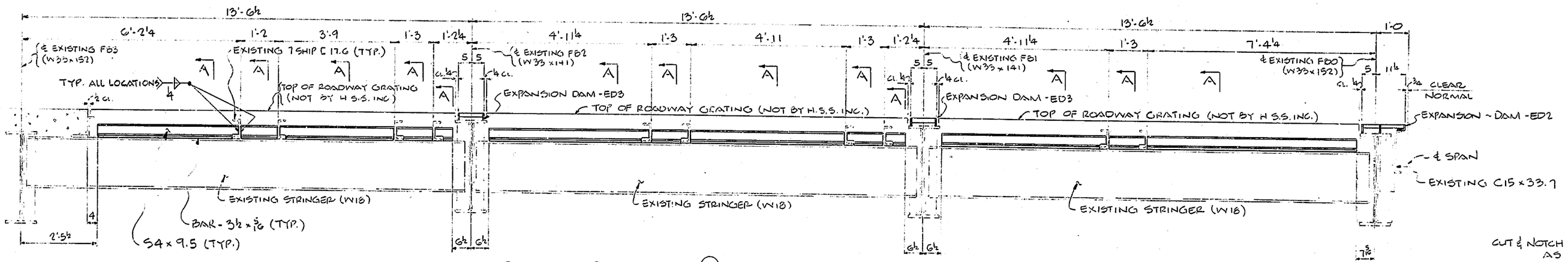

ELEVATION STRINGER LINE (6) - WEST LEAF (LOOKING NORTH)

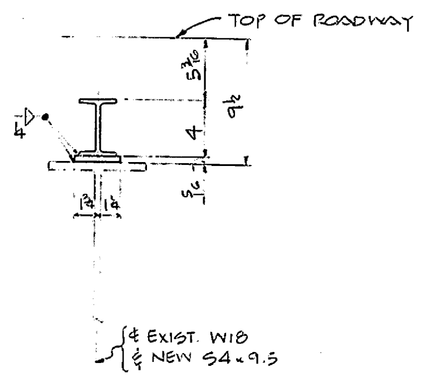

SECTION ~ A

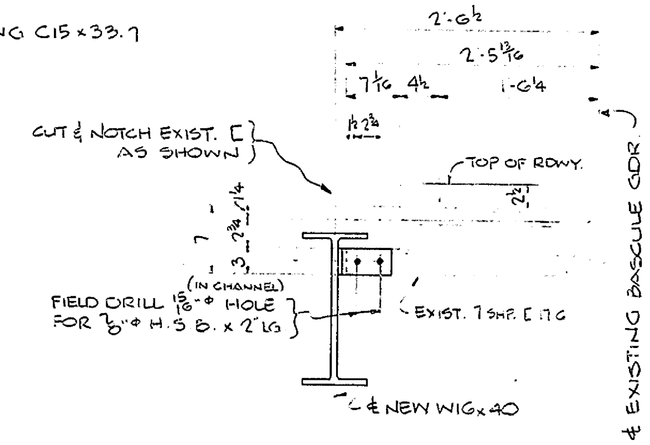

(AS SHOWN) SECTION ~ F
(OPP. HAND) SECTION ~ G
} FOR WEST LEAF ONLY

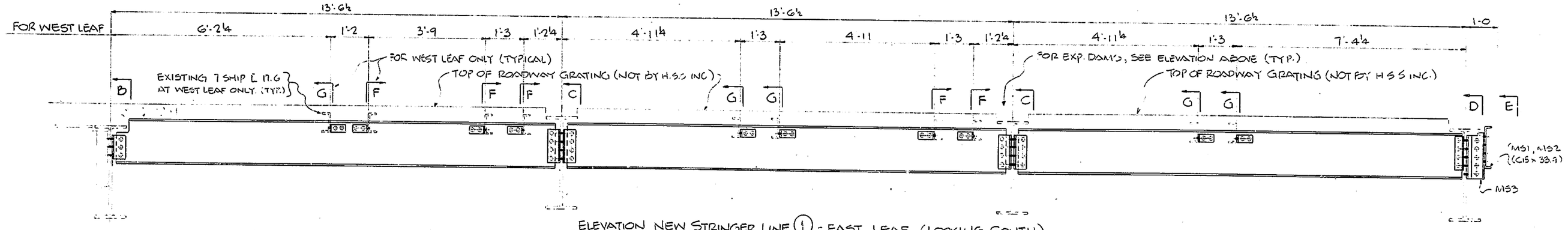

ELEVATION NEW STRINGER LINE (1) - EAST LEAF (LOOKING SOUTH)

ELEVATION NEW STRINGER LINE (1) - WEST LEAF (LOOKING NORTH)

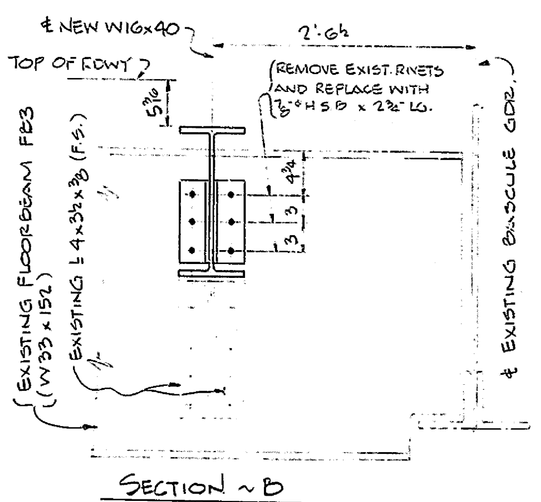

SECTION ~ B
(AS SHOWN - EAST LEAF)
(OPP. HAND - WEST LEAF)

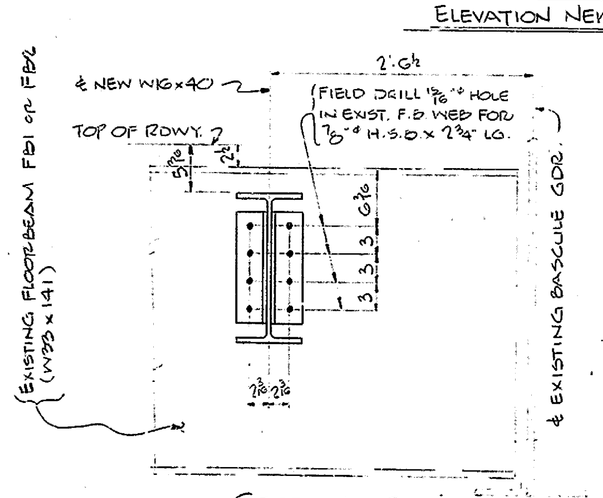

SECTION ~ C
(AS SHOWN - EAST LEAF)
(OPP. HAND - WEST LEAF)

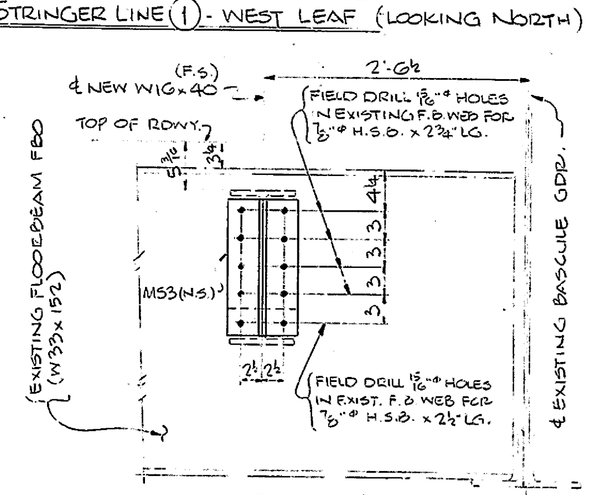

SECTION ~ D
(AS SHOWN - EAST LEAF)
(OPP. HAND - WEST LEAF)

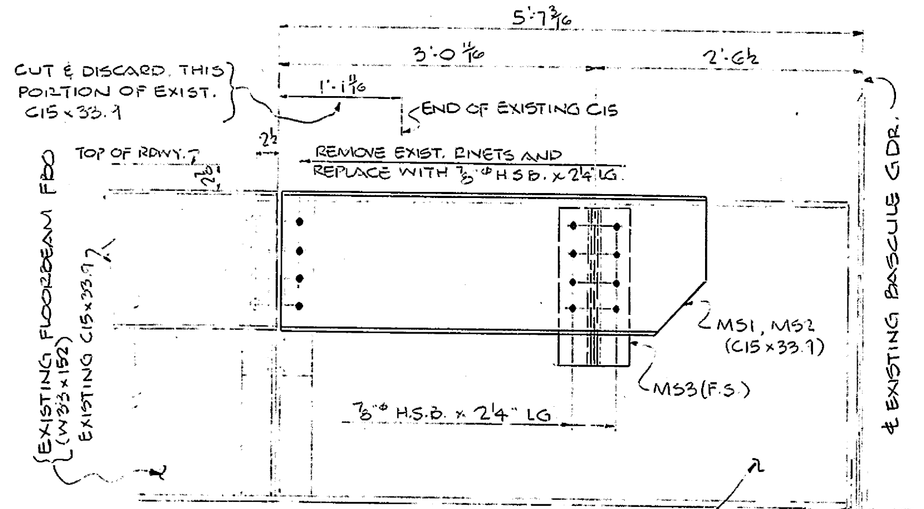

SECTION ~ E
(AS SHOWN - EAST LEAF)
(OPP. HAND - WEST LEAF)

FOR LOCK PLS., SEE DWG E4.

WORK THIS DWG. WITH DWG. E1

NO.	REVISION	DATE

HIGH STEEL STRUCTURES, INC.
1905 Old Philadelphia Pike
Lancaster, Pennsylvania 17604
Phone 717/299-5211
A Subsidiary of High Industries Inc

ERECTION PLAN SECTIONS (BASCULE SPAN)
SAVANNAH ROAD BRIDGE OVER LEWES & REHOBOTH CANAL
ROUTE 18 - SAVANNAH RD
SUSSEX COUNTY, DELAWARE
STATE OF DELAWARE, DEPARTMENT OF TRANSPORTATION
DIVISION OF HIGHWAYS

STATE CONTRACT OR REF. NO. 80-023-02 CONTRACTOR GEORGE & LYNCH, INC.

IN CHARGE: CHRISTMAN MADE BY: KMA CHK.D. BY: WBW DATE 1-29-82

CONTRACT NUMBER: D-81116 DRAWING NUMBER: E3

AC 1955-10
POLYTRACE 035

FED ROAD DIV NO	STATE	FED AID PROJ NO

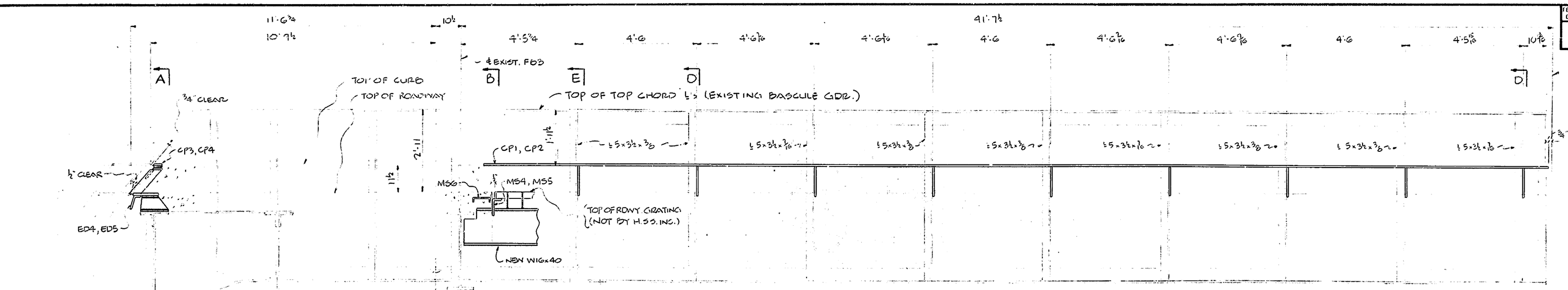

ELEVATION - SOUTH BASCULE GIRDER ~ EAST LEAF (AS SHOWN)

ELEVATION - SOUTH BASCULE GIRDER ~ WEST LEAF (OPP. HAND)

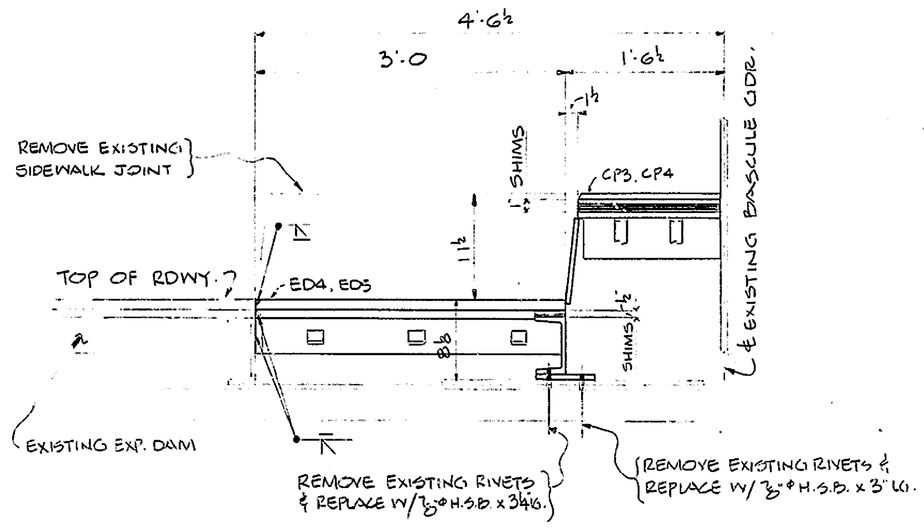

SECTION ~ A

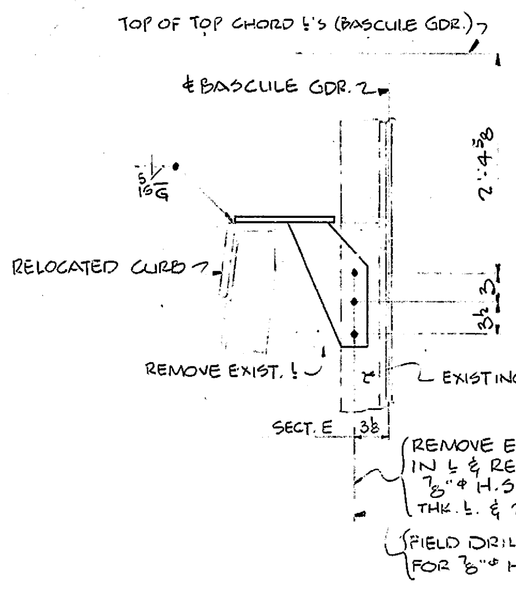

SECTIONS ~ D & E

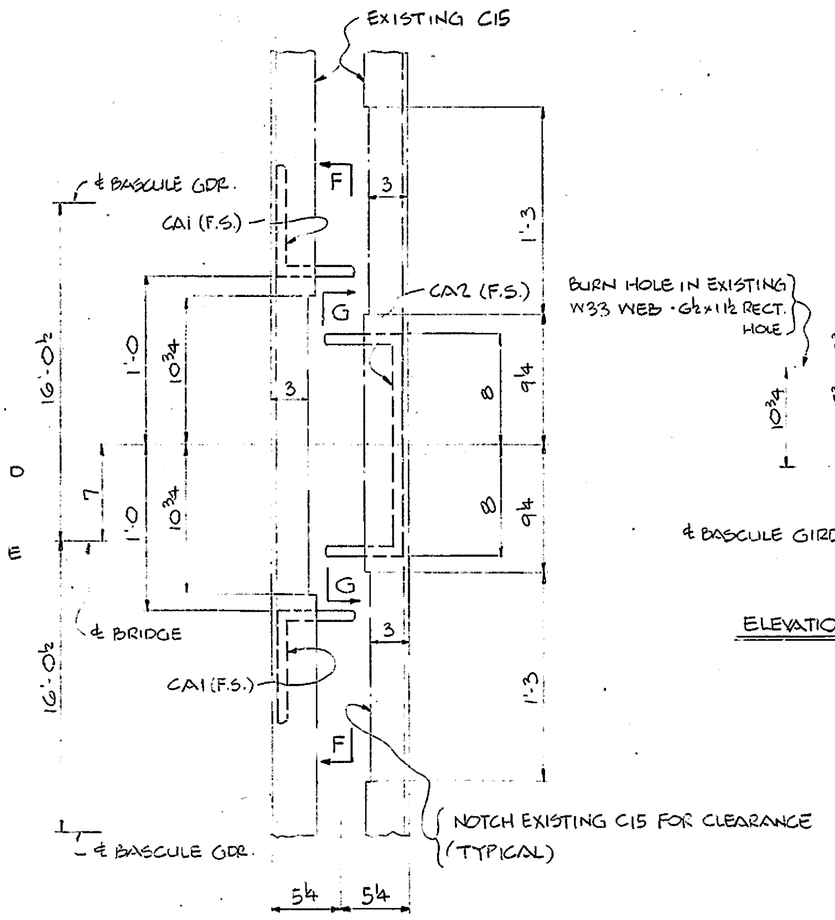

PLAN VIEW OF CENTERING DEVICE

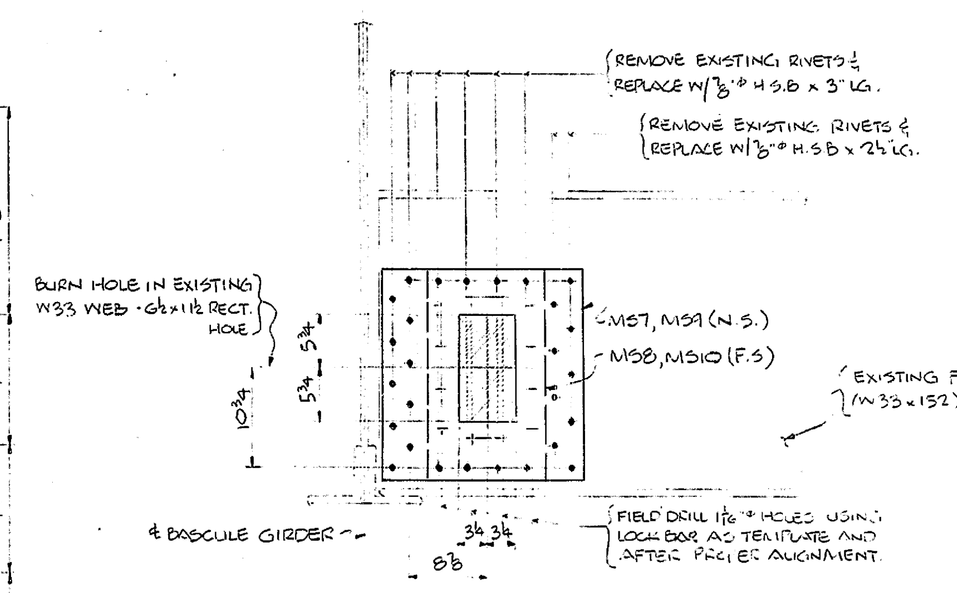

ELEVATION ~ LOCK PTS. AT EAST LEAF ON FLOORBEAM FBO

(AS SHOWN) - NORTH END

(OPP. HAND) - SOUTH END

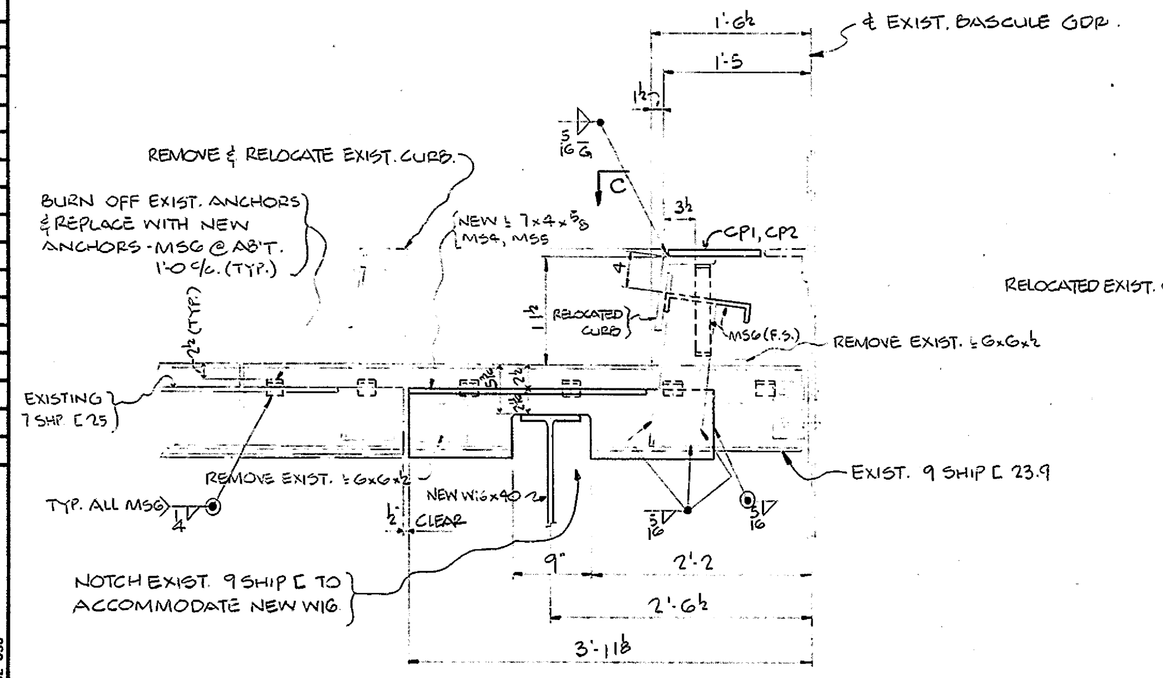

SECTION ~ B

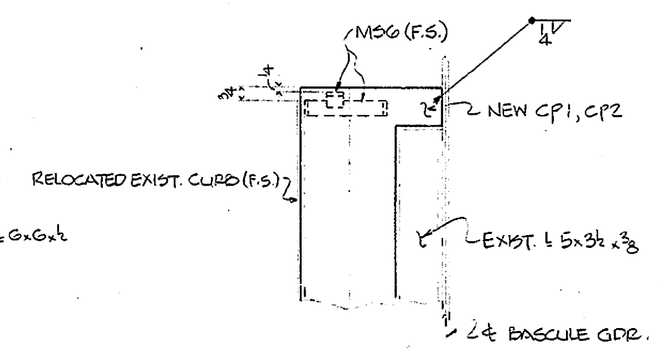

SECTION ~ C

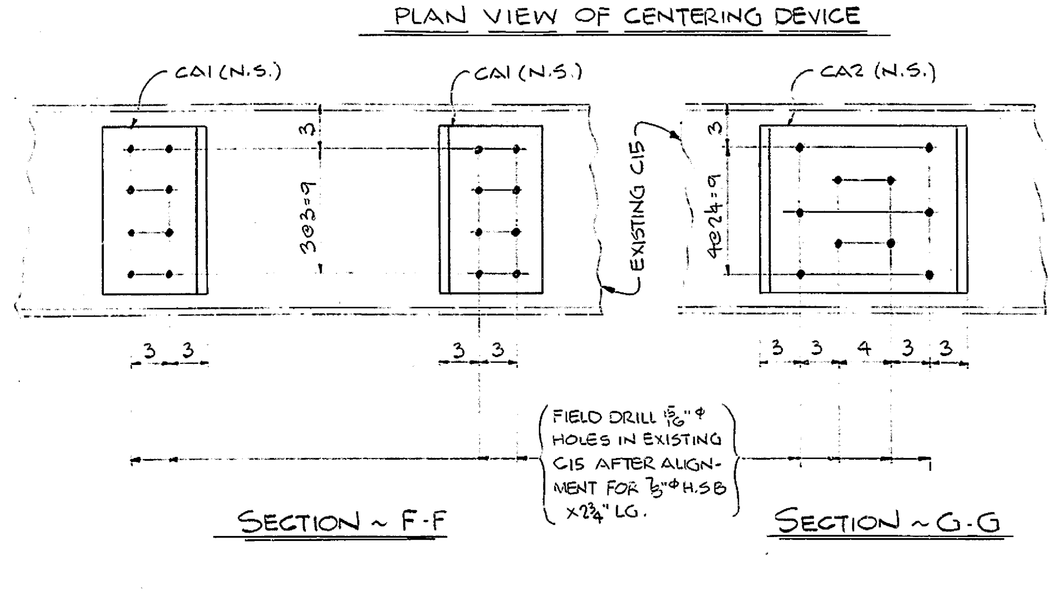

SECTION ~ F-F

SECTION ~ G-G

WORK THIS DWG. WITH DWG E1

NO.	REVISION	DATE

HIGH STEEL STRUCTURES, INC.

1905 Old Philadelphia Pike
Lancaster, Pennsylvania 17602
Phone 717 299-5211

A Subsidiary of High Industries Inc

ERECTION PLAN SECTION - (BASCULE SPAN)

SAVANNAH ROAD BRIDGE OVER LEWES & REHOBOTH CANAL

ROUTE 18 - SAVANNAH ROAD

SUSSEX COUNTY, DELAWARE

STATE OF DELAWARE, DEPARTMENT OF TRANSPORTATION

DIVISION OF HIGHWAYS

STATE CONTRACT OR REF. NO. 80-023-002 CONTRACTOR GEORGE & LYNCH, INC

IN CHARGE: CHRISTMAN MADE BY: KMA CHK.D BY: WBW DATE 1-29-82

CONTRACT NUMBER: D-81116 DRAWING NUMBER: E4

EF POLYTRACE 038

FED ROAD DIV NO	STATE	FED AID PROJ NO

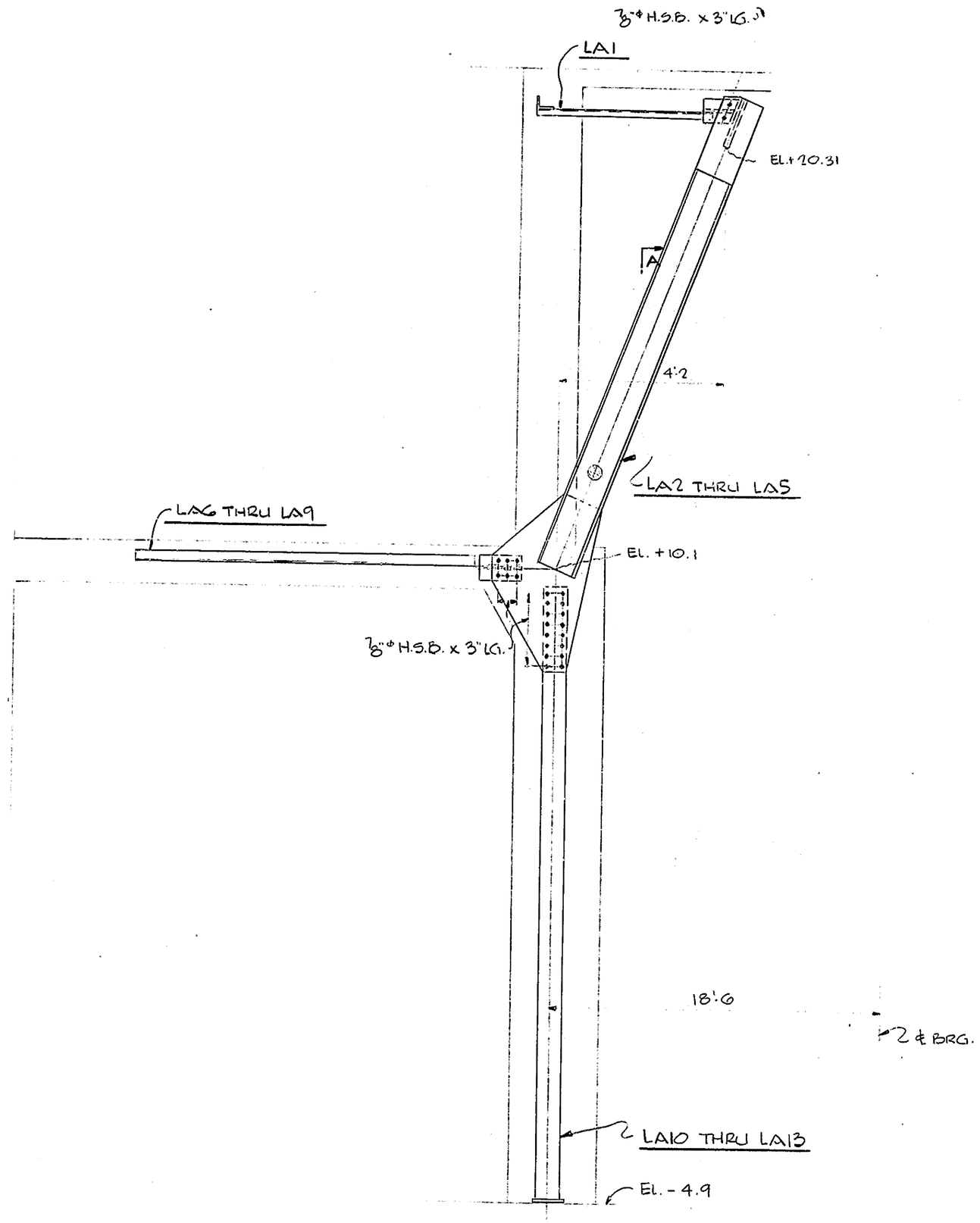

ELEVATION LINE LOAD ANCHORAGE
(EAST LEAF SHOWN)
(WEST LEAF OPP. HAND)

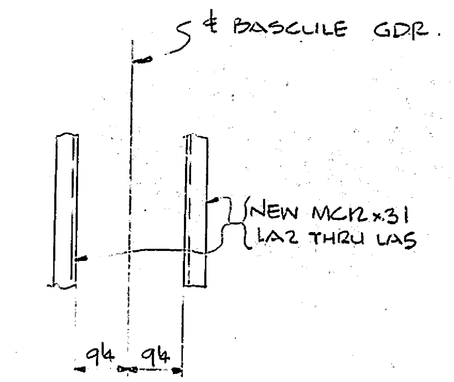

SECTION ~ A

ONE UNIT TYPICAL
- LA1, LA2, LA6, LA10 — SOUTH BASCULE GDR., EAST LEAF
- LA1, LA3, LA7, LA11 — NORTH BASCULE GDR., WEST LEAF
- LA1, LA4, LA8, LA12 — NORTH BASCULE GDR., EAST LEAF
- LA1, LA5, LA9, LA13 — SOUTH BASCULE GDR., WEST LEAF

WORK THIS DWG. WITH DWG. E1

NO.	REVISION	DATE

HIGH STEEL STRUCTURES, INC.
1905 Old Philadelphia Pike
Lancaster, Pennsylvania 17604
Phone 717-299-5211
A Subsidiary of High Industries Inc

ERECTION PLAN LINE LOAD ANCHORAGE
SAVANNAH RD. BRIDGE OVER LEWES & REHOBOTH CANAL
ROUTE 18 - SAVANNAH RD.
SUSSEX COUNTY, DELAWARE
STATE OF DELAWARE, DEPARTMENT OF TRANSPORTATION
DIVISION OF HIGHWAYS

STATE CONTRACT OR REF. NO. 80-023-02 CONTRACTOR GEORGE & LYNCH, INC.

IN CHARGE: CHRISTMAN MADE BY: KMA CHK.D. BY: WRC DATE: 1-29-82

CONTRACT NUMBER: D-81116 DRAWING NUMBER: E5

POLYTRACE 038

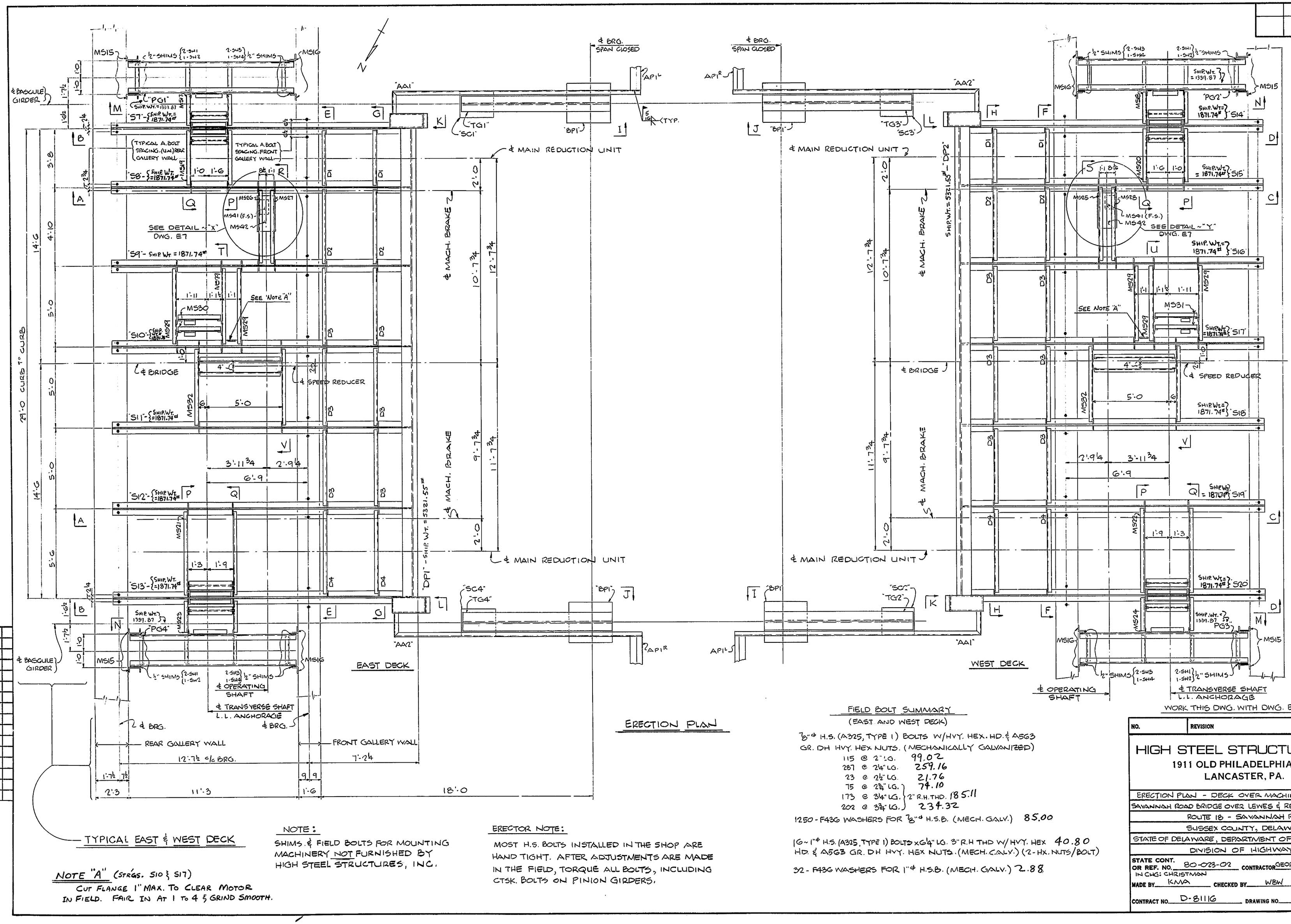

TYPICAL EAST & WEST DECK

ERECTION PLAN

WORK THIS DWG. WITH DWG. E7

NOTE "A" (STRGS. S10 & S17)
CUT FLANGE 1" MAX. TO CLEAR MOTOR IN FIELD. FAIR IN AT 1 TO 4 & GRIND SMOOTH.

NOTE:
SHIMS & FIELD BOLTS FOR MOUNTING MACHINERY NOT FURNISHED BY HIGH STEEL STRUCTURES, INC.

ERECTOR NOTE:
MOST H.S. BOLTS INSTALLED IN THE SHOP ARE HAND TIGHT. AFTER ADJUSTMENTS ARE MADE IN THE FIELD, TORQUE ALL BOLTS, INCLUDING CTSK. BOLTS ON PINION GIRDERS.

FIELD BOLT SUMMARY
(EAST AND WEST DECK)

⅞"ϕ H.S. (A325, TYPE 1) BOLTS W/HVY. HEX. HD. & A563 GR. DH HVY. HEX NUTS. (MECHANICALLY GALVANIZED)

115	@ 2" LG.	99.02	
287	@ 2¼" LG.	259.16	
23	@ 2½" LG.	21.76	
75	@ 2⅝" LG.	74.10	
173	@ 3¼" LG.	} 2" R.H. THD.	185.11
202	@ 3⅜" LG.		234.32

1250 - F436 WASHERS FOR ⅞"ϕ H.S.B. (MECH. GALV.) 85.00

16 - 1"ϕ H.S. (A325, TYPE 1) BOLTS x 6¼" LG. 3" R.H THD W/HVY. HEX HD & A563 GR. DH HVY. HEX NUTS. (MECH. GALV.) (2 - HX. NUTS/BOLT) 40.80

32 - F436 WASHERS FOR 1"ϕ H.S.B. (MECH. GALV.) 2.88

NO.	REVISION	DATE

HIGH STEEL STRUCTURES, INC.
1911 OLD PHILADELPHIA PIKE
LANCASTER, PA.

ERECTION PLAN - DECK OVER MACHINERY GALLERY
SAVANNAH ROAD BRIDGE OVER LEWES & REHOBOTH CANAL
ROUTE 18 - SAVANNAH ROAD
SUSSEX COUNTY, DELAWARE
STATE OF DELAWARE, DEPARTMENT OF TRANSPORTATION
DIVISION OF HIGHWAYS

STATE CONT. OR REF. NO. 80-023-02 CONTRACTOR GEORGE & LYNCH, INC.
IN CHG: CHRISTMAN
MADE BY KMA CHECKED BY WBW DATE 5-13-82
CONTRACT NO. D-81116 DRAWING NO. E6

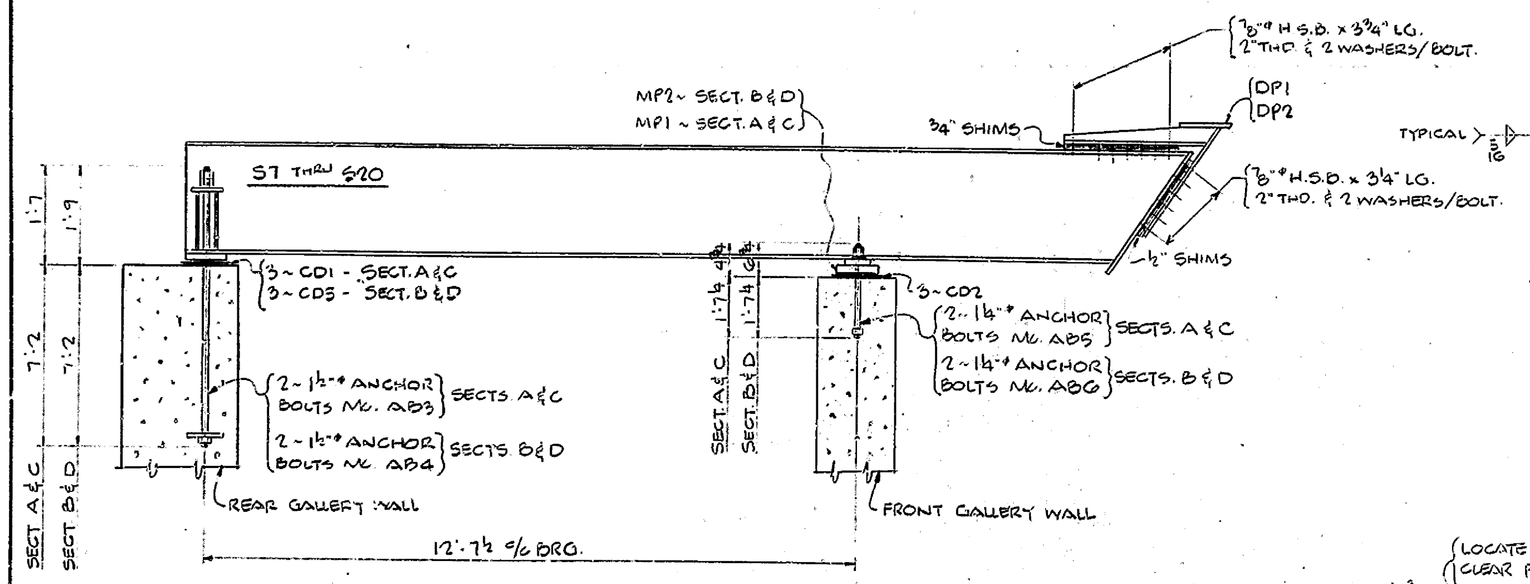

(AS SHOWN) SECTIONS A & B
(OPP. HAND) SECTIONS C & D

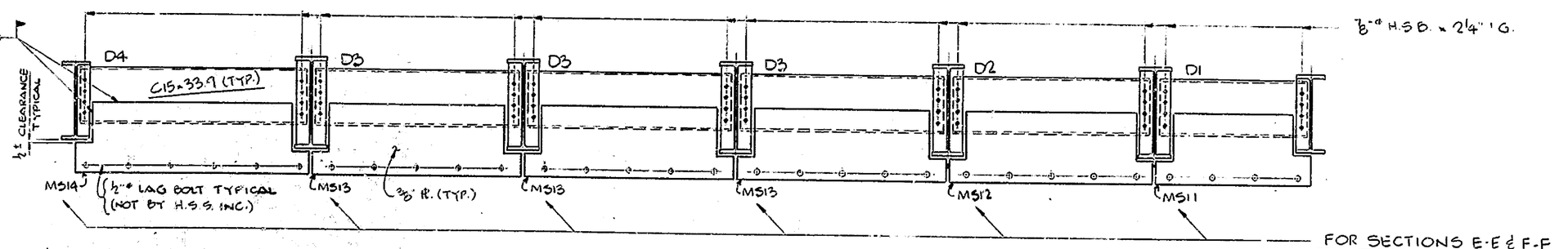

(AS SHOWN) SECTIONS E-E & G-G
(OPP. HAND) SECTIONS F-F & H-H

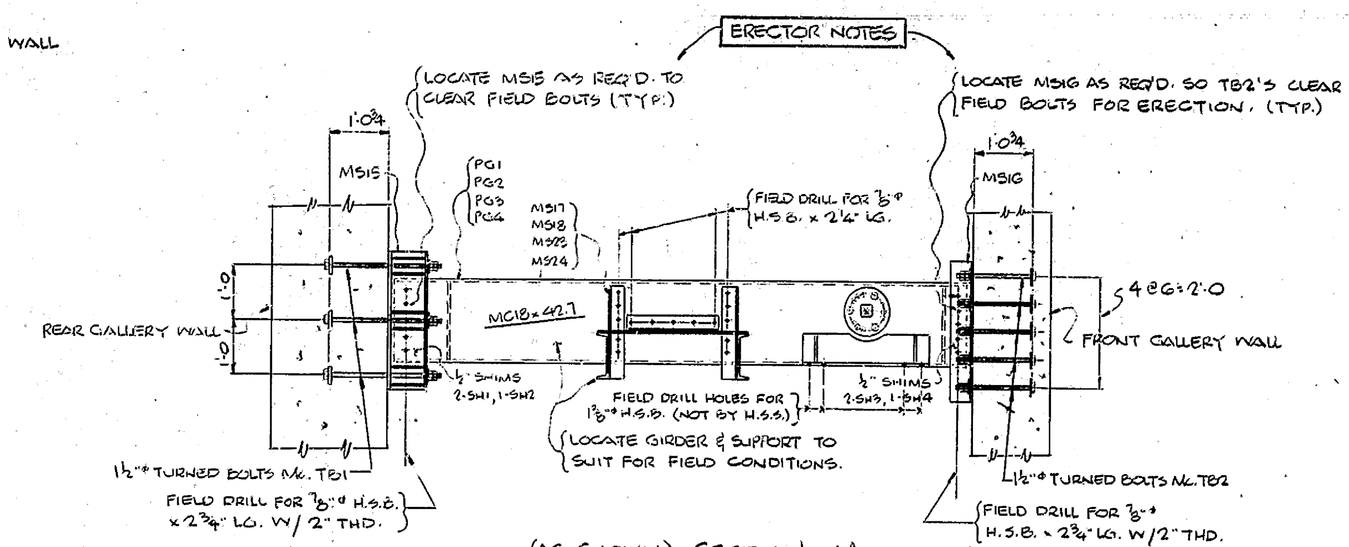

(AS SHOWN) SECTION ~ M
(OPP. HAND) SECTION ~ N

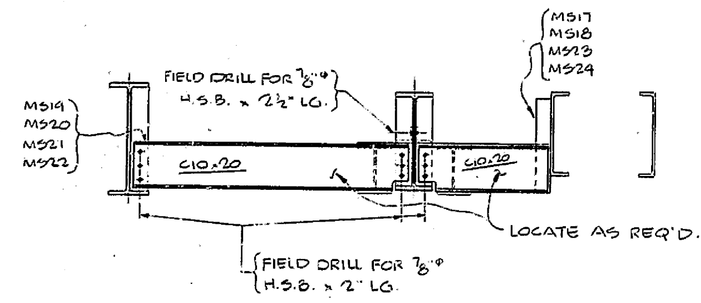

(AS SHOWN) SECTION ~ P
(OPP. HAND) SECTION ~ Q

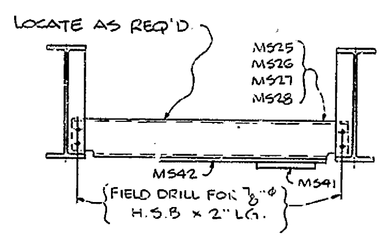

(AS SHOWN) SECTION ~ R
(OPP. HAND) SECTION ~ S

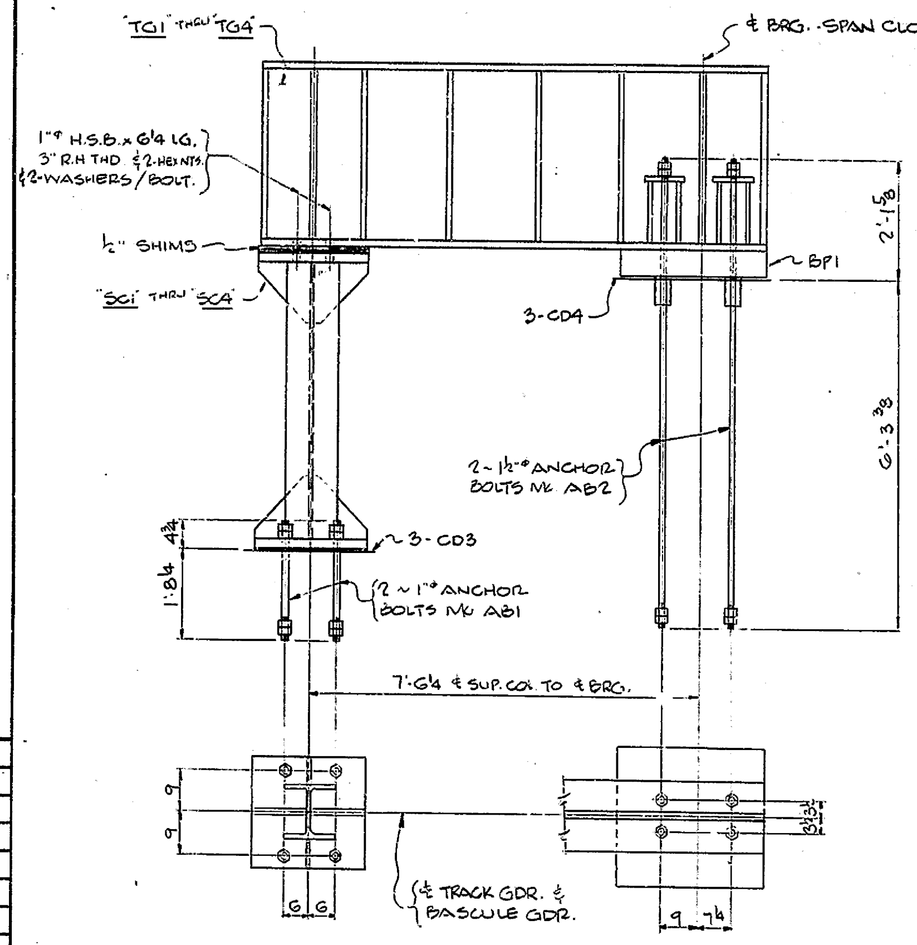

(AS SHOWN) SECTION ~ I
(OPP. HAND) SECTION ~ J

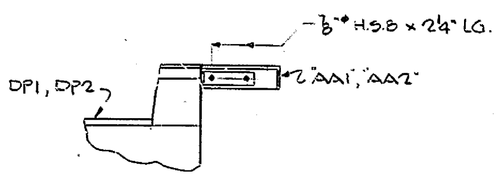

(AS SHOWN) SECTION ~ K
(OPP. HAND) SECTION ~ L

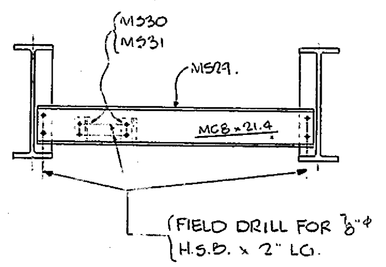

(AS SHOWN) SECTION ~ T
(OPP. HAND) SECTION ~ U

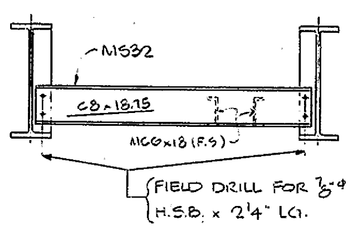

SECTION ~ V

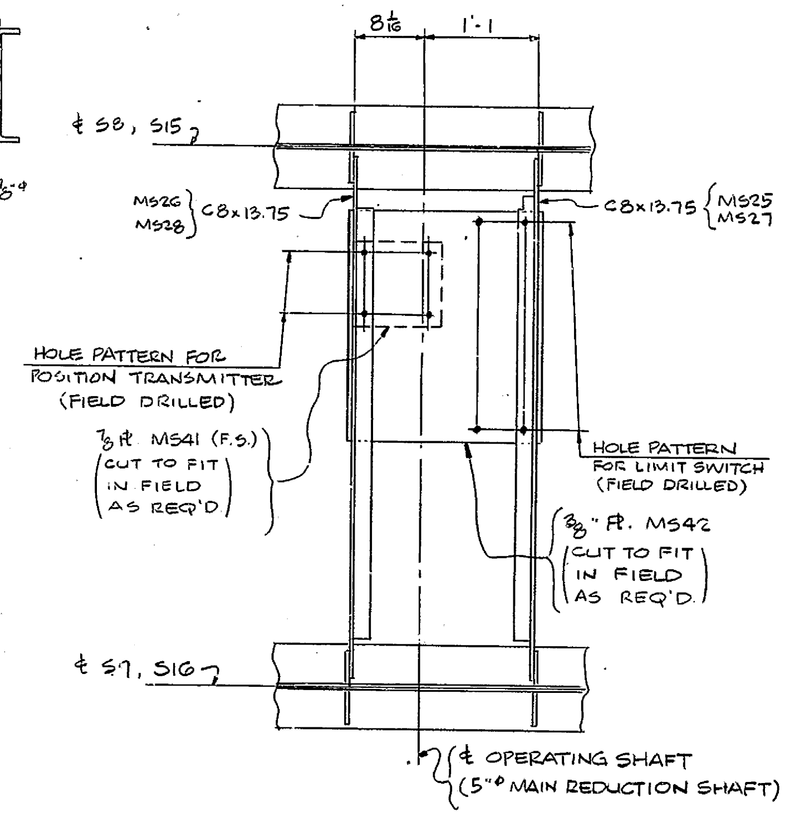

(AS SHOWN) DETAIL ~ "X"
(OPP HAND) DETAIL ~ "Y"

WORK THIS DWG. WITH DWG. E6

NO.	REVISION	DATE

HIGH STEEL STRUCTURES, INC.
1911 OLD PHILADELPHIA PIKE
LANCASTER, PA.

DECK PLAN SECTIONS
SAVANNAH ROAD BRIDGE OVER LEWES & REHOBOTH CANAL
ROUTE 18 - SAVANNAH ROAD
SUSSEX COUNTY, DELAWARE
STATE OF DELAWARE, DEPARTMENT OF TRANSPORTATION
DIVISION OF HIGHWAYS

STATE CONT. OR REF. NO. 80-013-02 CONTRACTOR GEORGE & LYNCH, INC.
IN CHG. CHRISTMAN
MADE BY KMA CHECKED BY WBW DATE 5-13-82
CONTRACT NO. D-8111G DRAWING NO. E7

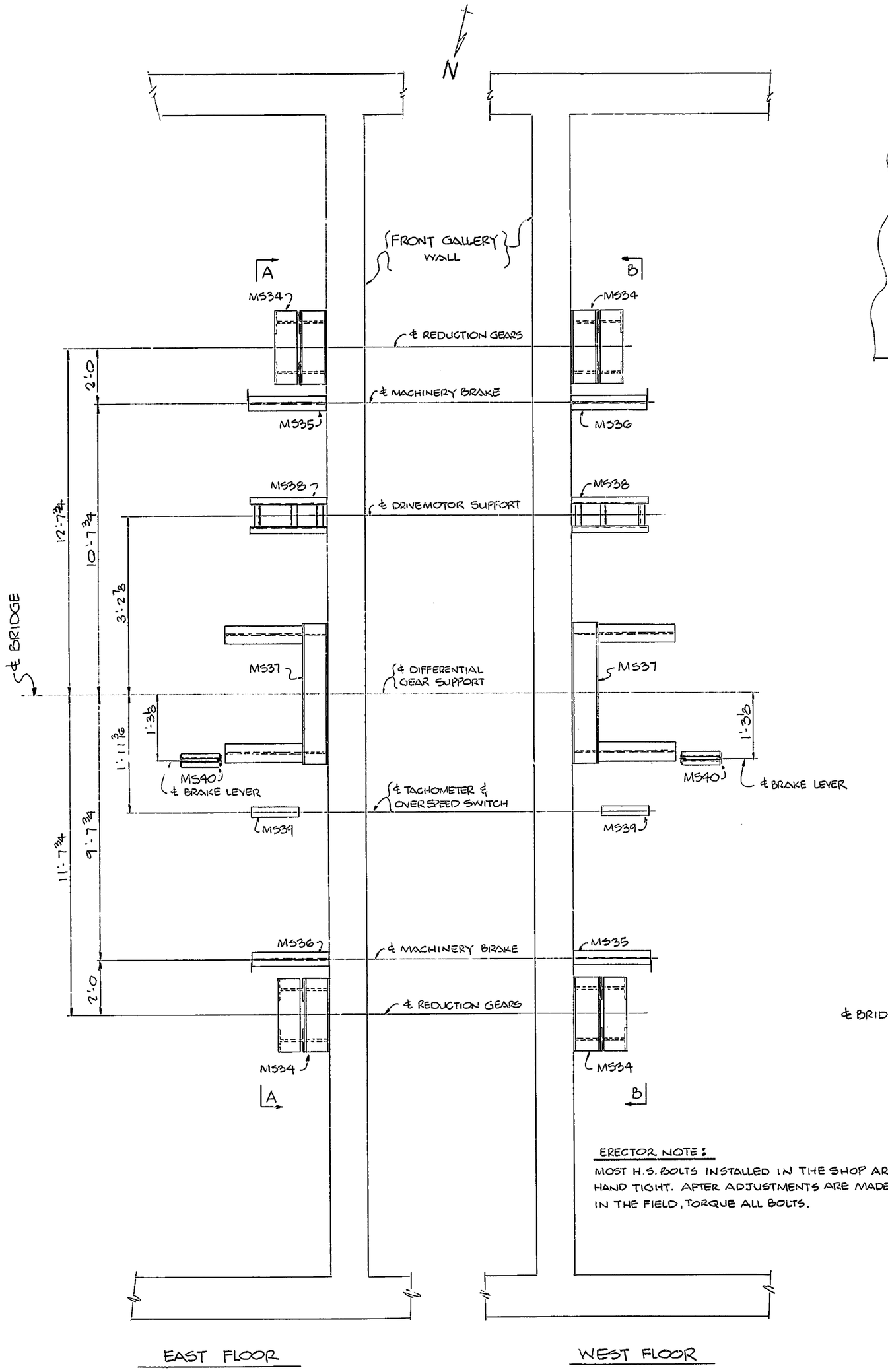

ERECTOR NOTE:
MOST H.S. BOLTS INSTALLED IN THE SHOP ARE HAND TIGHT. AFTER ADJUSTMENTS ARE MADE IN THE FIELD, TORQUE ALL BOLTS.

FLOOR PLAN OF MACHINERY SUPPORTS

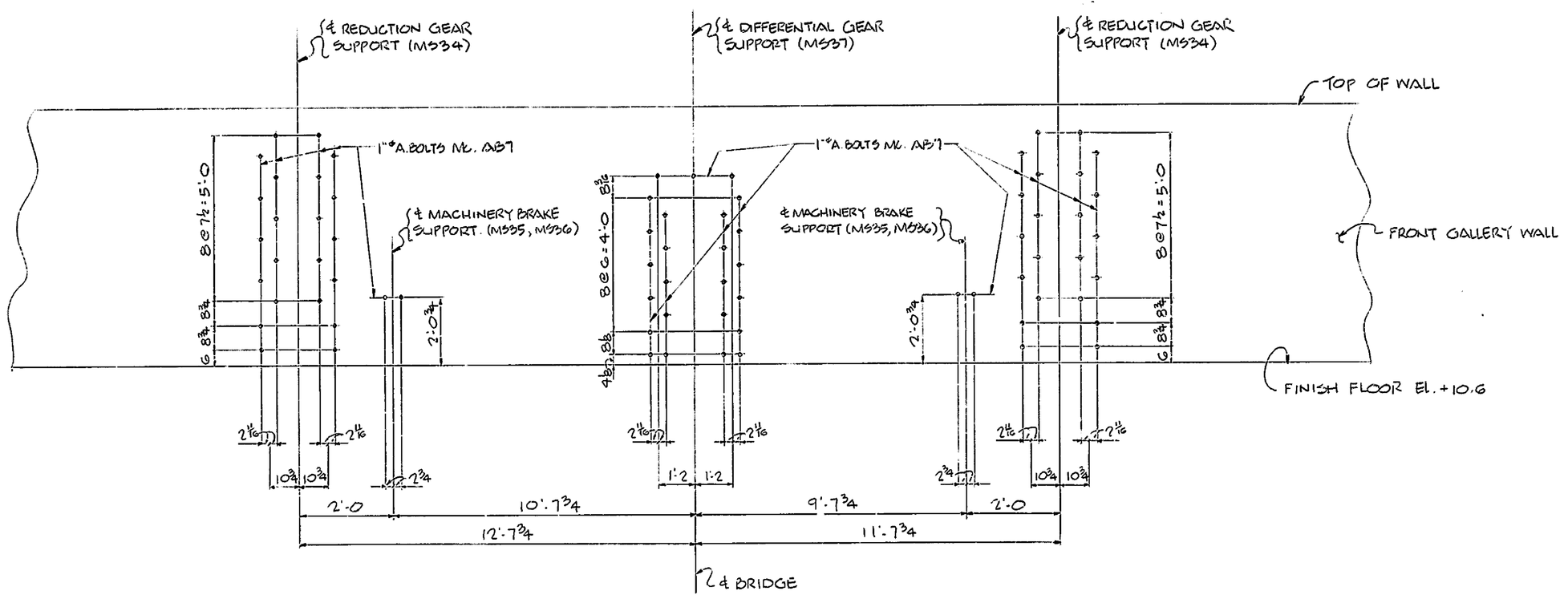

(AS SHOWN) SECTION ~ A-A
(OPP. HAND) SECTION ~ B-B

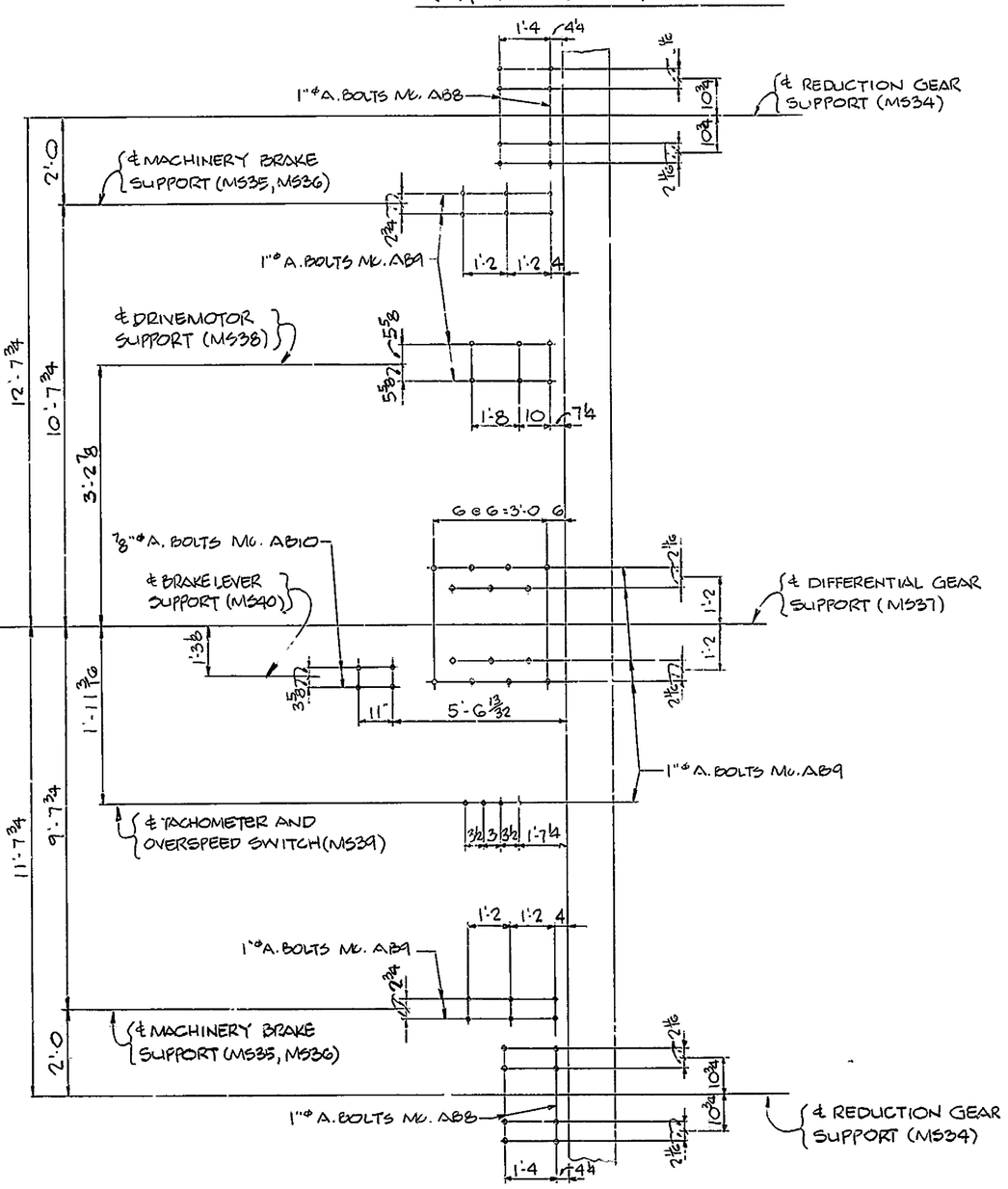

ANCHOR BOLT FLOOR PLAN OF MACHINERY SUPPORTS

(AS SHOWN) EAST FLOOR
(OPP. HAND) WEST FLOOR

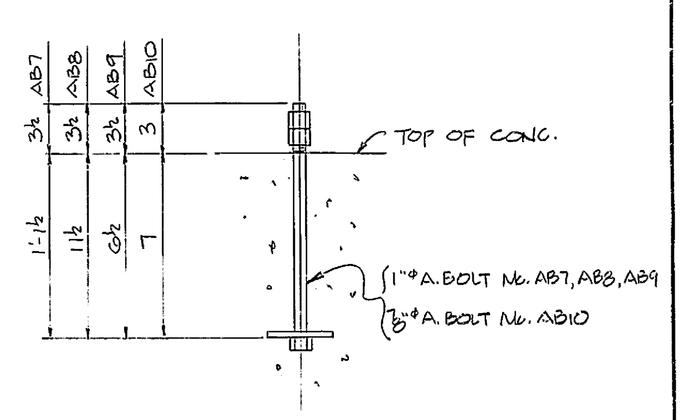

TYPICAL A. BOLT EMBEDMENT

ERECTOR NOTE:
MACHINERY FLOOR TO BE POURED FIRST WITH ANCHOR BOLTS CAST IN PLACE, SUPPORTS ERECTED, THEN GALLERY WALLS POURED WITH ANCHOR BOLTS CAST IN PLACE.

NOTE: ERECTION BOLTS (NOT FURNISHED BY HIGH STEEL) FOR MACHINERY WILL BE ADDED TO THIS SHEET AT A LATER DATE.

NO.	REVISION	DATE

HIGH STEEL STRUCTURES, INC.
1911 OLD PHILADELPHIA PIKE
LANCASTER, PA.

ERECTION PLAN - MACHINERY SUPPORTS A.BOLT PLAN
SAVANNAH ROAD BRIDGE OVER LEWES & REHOBOTH CANAL
ROUTE 18 - SAVANNAH ROAD
SUSSEX COUNTY, DELAWARE
STATE OF DELAWARE, DEPARTMENT OF TRANSPORTATION
DIVISION OF HIGHWAYS

STATE CONT. OR REF. NO. 80-023-02 CONTRACTOR GEORGE & LYNCH, INC.
IN CHG: CHRISTMAN
MADE BY KMA CHECKED BY WBW DATE 5-13-82
CONTRACT NO. D-8116 DRAWING NO. E8

I. DEFINITIONS

The welding terms used in these procedures are to be interpreted according to the definitions given in Appendix I of A.W.S. Structural Welding Code D1.1.

II. PREPARATION OF MATERIAL FOR WELDING

Details of welds and welded pieces shall be in accordance with approved shop detail drawings. Dimensional tolerances, straightness and flatness of structural shapes and plates shall be within the limits prescribed by the current A.S.T.M. A-6 specifications.

The attached welding procedures and shop detail drawings shall indicate the proper joint preparation for a welding procedure proposed by the fabricator when he prefers a joint configuration not detailed on the design drawings. If the joint configuration is not prequalified, the fabricator will submit to the engineer for approval the welding procedure specification of the joint with qualification test records.

The faying surfaces of the web and flange plates and the adjacent surfaces that are to be fillet welded shall have all mill scale removed prior to assembly and welding of the web to flange joint.

III. ASSEMBLY

Abutting parts to be joined by butt welds shall be cut square and true and aligned accurately within the A.W.S. D1.1 tolerances. The cross section of the weld shall not be reduced after grinding. The grinding shall produce a smooth machine-like finish which meets or exceeds a 250 mu on the surface roughness scale. (i.e.125,63,32)

Parts to be joined by fillet welds shall be brought into as close contact as practicable. If the separation is 1/16" or greater, the leg of the fillet weld shall be increased by the amount of separation. The maximum separation shall not exceed 3/16".

IV. Flux used for submerged arc welding shall be dry and free of contamination from dirt, mill scale, or other foreign material. Flux fused in welding shall not be re-used. Flux which has not fused may be re-used only after processing through the Invincible Vacuum Corporation flux cleaner or the Ogden cleaner attached to the dart machine. Filler metals used shall be as specified on the attached weld detail sheets.

V. PROCEDURES FOR SUBMERGED ARC WELDING WITH A SINGLE ELECTRODE

All submerged arc butt welds shall be made in the flat position. Fillet welds may be made in either the flat or horizontal position except that single-pass fillet welds made in the horizontal position shall not exceed 5/16 inch.

The thickness of weld layers, except root and surface layers, shall not exceed 1/4 inch. When the root opening is 1/2 inch or greater, a multiple-pass, split-layer technique shall be used. The split-layer technique shall also be used in making multiple-pass welds when the width of the layer exceeds 5/8 inch.

Tack welds, in the way of fillet welds 3/8 inch or smaller in size, or in the root of joints requiring specific root penetration, shall be sufficiently small, generally 1/8 to 3/16 inch, that they do not produce objectionable changes in appearance of the weld surface or result in a decrease in penetration; otherwise they shall be removed or reduced in size by any suitable means prior to welding.

Each weld pass shall have all slag removed before any additional weld is deposited on it.

Groove welds shall be terminated at the ends of a joint in a manner that will ensure sound welds. This shall be done by use of extension bars or run-off plates. Extensions shall be removed upon completion and cooling of the weld and the ends of the welds shall be made smooth and flush with the edges of the abutting parts.

Roots of groove welds may be sealed with a root pass made by manual shielded metal arc welding with low-hydrogen electrodes when such sealing is necessary to prevent melt-through during the initial submerged arc welding pass.

VI. FABRICATING SEQUENCE

Butt welds in flange and web plates shall be completed prior to assembling the girder. Where plates are ordered in multiple widths the welds shall be made before flame splitting. If straightening is necessary after welding, it shall be done mechanically or by heating. Flange plates up to 3/4 inch thickness may be cupped before being assembled into the girder to compensate for distortion caused by welding.

The web plates shall be trimmed along both edges to correct camber and width, with allowance for shrinkage during welding.

After the flange and web butt welds are complete they shall be assembled and tack welded, fitting the flange plates tight and square against the edges of the web. Flange to web fillet welds shall be made using the submerged arc process.

The stiffeners will then be fit and tack welded in accordance with the detail drawings. Welding of the stiffeners will be by the submerged arc process using the dart machine where practicable.

All auxiliary parts will then be fit and welded to the girder after which it will be trimmed to the detailed length.

All necessary camber adjustments will be made, as much as is possible, by proper blocking of the member when welding the flange to web joint.

Any minor camber and/or sweep adjustments will be made by the application of heat, not exceeding 1100 degrees Fahrenheit, by an experienced technician and under careful supervision.

Camber adjustments will be made by heating an area at the center and quarter points of the member, the area being determined by the amount of camber needed, the thickness and width of the flanges, and the length and weight of the member. Most camber adjustments are completed with the area heated not exceeding two inches by twelve inches at each point.

Sweep adjustments will be made by heating the convex edge of the flange or flanges. The heat shall be applied at the center and quarter points of greatest convexity.

Torsional stress will be relieved by the application of heat to the two edges of each flange the full length of the member. The amount of heat applied, as controlled by the travel speed of the torch, is dependent on the stress to be relieved, therefore; the heat input is variable.

In no instance may the metal temperature exceed 1100 degrees Fahrenheit regardless of the type of adjustment to be accomplished.

WELDING PROCEDURE FOR A.W.S. PREQUALIFIED JOINTS

W 1

PROCEDURE SPECIFICATION

Material Specification............. ASTM A-36, A-572, A-441, A-588
Welding Process.................... Shielded Metal Arc
Manual or Machine.................. Manual
Position of Welding................ 1F and 2F
Filler Metal Specification......... A.W.S. A5.1-78
Filler Metal Classification........ E7018
Flux............................... D.N.A.
Single or Multiple Arc............. Single
Polarity........................... DC+ or AC
Electrical Stick Out............... D.N.A.
Root Treatment..................... Manual Cleaning
Preheat and Interpass Temperature... See attached preheat chart
Open Circuit Voltage............... 60

WELDING PROCEDURE

Pass No.	Wire Size	Welding Current Amps	Welding Current Volts	Travel IPM	Joint Detail
1	1/8	160	*	6-9	TACK & REPAIR WELDS
1	5/32	215	*	8-13	Fillet Welds
1	3/16	230	*	9-15	" "
1	7/32	275	*	9-16	" "
1	1/4	350	*	11-17	" "
					* Weld size determined by travel speed * Voltage adjusted for proper bead shape (DC)

This procedure may vary due to fabrication sequence, fit-up, pass size, etc. within the "Limitation of Variables" given in the American Welding Society Code, A.W.S. D1.1.

WELDING PROCEDURE FOR A.W.S. PREQUALIFIED JOINTS

W 5

PROCEDURE SPECIFICATION

Material Specification............. ASTM A-36, A-572, A-441, A-588
Welding Process.................... Submerged Arc
Manual or Machine.................. Machine
Position of Welding................ 2F
Filler Metal Specification......... A.W.S. A5.17-76
Filler Metal Classification........ F72-EM12K
Flux............................... Lincoln 761
Single or Multiple Arc............. Lincoln L61 Single Electrode
Polarity........................... DC-
Electrical Stick Out............... Standard
Root Treatment..................... Manual Cleaning
Preheat and Interpass Temperature... See attached preheat chart
Open Circuit Voltage............... 60

WELDING PROCEDURE

Pass No.	Wire Size	Welding Current Amps	Welding Current Volts	Travel IPM	Joint Detail
1	3/32	400	34	20	1/4" Fillet
1	3/32	400	34	16	5/16" Fillet

This procedure may vary due to fabrication sequence, fit-up, pass size, etc. within the "Limitation of Variables" given in the American Welding Society Code, A.W.S. D1.1.

WELDING PROCEDURE FOR A.W.S. PREQUALIFIED JOINTS

W 6

PROCEDURE SPECIFICATION

Material Specification............. ASTM A-36, A-572, A-441, A-588
Welding Process.................... Submerged Arc
Manual or Machine.................. Machine
Position of Welding................ 2F
Filler Metal Specification......... A.W.S. A5.17-76
Filler Metal Classification........ F72-EM12K
Flux............................... Lincoln 360
Single or Multiple Arc............. Lincoln L61 Single Electrode
Polarity........................... DC-
Electrical Stick Out............... Standard
Root Treatment..................... Manual Cleaning
Preheat and Interpass Temperature... See attached preheat chart
Open Circuit Voltage............... 60

WELDING PROCEDURE

Pass No.	Wire Size	Welding Current Amps	Welding Current Volts	Travel IPM	Joint Detail
1	3/32	400	34	16	} 3/8" Fillet
2	3/32	400	34	16	
1	3/32	400	34	20	} 1/2" Fillet
2	3/32	400	34	16	
3	3/32	400	34	16	

This procedure may vary due to fabrication sequence, fit-up, pass size, etc. within the "Limitation of Variables" given in the American Welding Society Code, A.W.S. D1.1.

WELDING PROCEDURE FOR A.W.S. PREQUALIFIED JOINTS

W 14

PROCEDURE SPECIFICATION

Material Specification............. ASTM A-36, A-572, A-441, A-588
Welding Process.................... Submerged Arc
Manual or Machine.................. Machine
Position of Welding................ 1G
Filler Metal Specification......... A.W.S. A5.17-76
Filler Metal Classification........ F72-EM12K
Flux............................... Lincoln 860
Single or Multiple Arc............. Lincoln L61 Single Electrode
Polarity........................... DC+
Electrical Stick Out............... Standard
Root Treatment..................... Hand Brush Clean
Preheat and Interpass Temperature... See attached preheat chart
Open Circuit Voltage............... 60

WELDING PROCEDURE

Pass No.	Wire Size	Welding Current Amps	Welding Current Volts	Travel IPM	Joint Detail
1 & 2	3/32	410	32	14	

This procedure may vary due to fabrication sequence, fit-up, pass size, etc. within the "Limitation of Variables" given in the American Welding Society Code, A.W.S. D1.1.

MINIMUM PREHEAT AND INTERPASS TEMPERATURE

Thickness of Thickest Part at Point of Welding - Inches	Shielded Metal-Arc Welding with Low Hydrogen Electrodes or Submerged Arc Welding ASTM A36; A441; A572 Grades 42, 45, and 50; A588
To 3/4, incl.	50° F
Over 3/4 to 1-1/2, incl.	70° F
Over 1-1/2 to 2-1/2, incl.	150° F
Over 2-1/2	225° F

1. Welding shall not be done when the ambient temperature is lower than 0° F. When the base metal is below the temperature listed for the welding process being used and the thickness of material being welded, it shall be preheated (except as otherwise provided) in such manner that the surface of the parts on which weld metal is being deposited are at or above the specified minimum temperature for a distance equal to the thickness of the part being welded, but not less than 3 inches, both laterally and in advance of the welding. Preheat and interpass temperatures must be sufficient to prevent crack formation. Temperature above the minimum shown may be required for highly restrained welds.
2. When the base metal temperature is below 32° F, preheat the base metal to at least 70° F and maintain this minimum temperature during welding.

FED ROAD DIV NO	STATE	FED AID PROJ NO

NO.	REVISION	DATE

HIGH STEEL STRUCTURES, INC.
1905 Old Philadelphia Pike
Lancaster, Pennsylvania 17604
Phone 717/299-5211
A Subsidiary of High Industries, Inc

WELDING PROCEDURE
SAVANNAH ROAD BRIDGE OVER LEWES & REHOBOTH CANAL
ROUTE 18 - SAVANNAH ROAD
SUSSEX COUNTY, DELAWARE
STATE OF DELAWARE DEPARTMENT OF TRANSPORTATION
DIVISION OF HIGHWAYS

STATE CONTRACT OR REF. NO. 80-023-02 CONTRACTOR GEORGE & LYNCH, INC.
IN CHARGE: ______ MADE BY: SWK CHK.D BY: CAH DATE: ______
CONTRACT NUMBER: D-81116 DRAWING NUMBER: WP-1

AF 13531 B
POLYTRACE 036

FED ROAD DIV. NO	STATE	FED AID PROJ NO

LA1 LA2 LA6 LA10 — ONE UNIT

LA1 LA3 LA7 LA11 — ONE UNIT

LA1 LA4 LA8 LA12 — ONE UNIT

LA1 LA5 LA9 LA13 — ONE UNIT

REAM ASSEMBLY SCHEDULE

ONE-ANCHOR SECTION EA. MK. LA6, LA7, LA8 & LA9 (ALIKE)
SHIP. WT. EA. - 402.11#

(AS SHOWN) { ONE-ANCHOR SECTION MK. LA2 / ONE-ANCHOR SECTION MK. LA3 } ALIKE
(OPP. HAND) { ONE-ANCHOR SECTION MK. LA4 / ONE-ANCHOR SECTION MK. LA5 } ALIKE
} SHIP. WT. EA. ~ 1541.23#

4-ANCHOR SECTIONS MK. LA1
SHIP. WT. EA. ~ 329.61#

SHOP NOTE: CHANGE IN GAGE

SHOP NOTE: BORE 3⅛"ø & 4⅛"ø HOLES WITH RS. IN ASSEMBLED POSITION AND CHANNELS BACK TO BACK TO INSURE PROPER ALIGNMENT.

ONE-ANCHOR SECTION EA. MK. LA10, LA11, LA12 & LA13 (ALIKE)
SHIP. WT. EA. ~ 1105.96#

PLAN SHOWING LIVE LOAD ANCHORAGE

TYPICAL PAINT SKETCH

MECHANICAL GALV: A-ST M1. B-695 CLASS 50

& BASCULE GIRDER

BILL OF MATERIAL

NO.	MARK	DESCRIPTION	LENGTH		REMARKS	ITEM	SHIP WEIGHT EA
4	LA1						329.61
4	ma	C12×25	4	9 3/4		1/2	
4	mb	L 8×4×3/8	5	3		1/9	
4	mc	W16×57	0	10 3/8		1/7	
ONE	EA. LA2, LA3, LA4, LA5						1541.23
4	md	R. 15×1 5/8	1	4½		1/13	
8	mf	R. 12×1	3	3½		1/12	
2	mg^R	MC12×31	10	6 3/8	FOR LA2 & LA3	1/3	
2	mh^R	MC12×31	10	6 3/8		1/3	
2	mg'	MC12×31	10	6 3/8	FOR LA4 & LA5	1/3	
2	mh'	MC12×31	10	6 3/8		1/3	
4	mk	R 9½×3/8	1	6		1/10	
4	mm	R. 7½×3/8	1	6		1/10	
4	mn	R 9½×3/4	1	0		1/10	
8	mp	R. 28 1/16×7/16	4	2 13/16		1/16	
8	ms	BAR 7×7/16	0	8½		1/15	
4	mt	W16×50	0	8½		1/6	
ONE	EA. LA6, LA7, LA8, LA9						402.11
4	mw	C12×20.7	10	0		1/4	
8	my	BAR 7×5/8	1	0½		1/14	
4	maa	W16×50	1	0½		1/6	
56	mab	L 3½×2½×3/8	0	9½		1/9	
ONE	EA LA10, LA11, LA12, LA13						1105.96
4	mac	W16×50	14	6½		1/5	
4	mac'	R. 10½×3/8	2	1		1/1	
8	maf	BAR 7×3/8	2	6¼		1/14	
64	mag	L 3½×2½×3/8	0	7		1/9	
64	mah	L 3½×2½×3/8	1	1		1/9	
	SHOP BOLT SUMMARY						
⅞"ø	H.S. (A325, TYPE 1) BOLTS W/ HVY. HEX. HD. & ONE ASGS GRADE DH HEX NUT.						
48				2"		1/23	
228				2¼"		1/24	
312				2½"		1/25	
96				2¾"		1/26	
40				3¼"		1/27	
32				3½"		1/28	
16	⅞"ø H.S.	COUNTERSUNK (A325, TYPE 1) BOLT x 2½" HEX HD. & ONE ASGS GRADE DH HEX NUT.				1/29	w/HVY
772	F436 WASHERS FOR ⅞"ø H.S. BOLTS					1/30	

NOTES:
ALL STEEL TO BE A.S.T.M. A588 (U.N)
BLAST CLEAN STEEL TO SSPC-SP6.

[R4] NOTE:
HOLES MARKED [R4] TO BE SUB-PUNCHED 11/16"ø AND REAMED TO 15/16"ø WITH CONNECTING PARTS ASSEMBLED AND MATCH MARKED.

SHOP NOTE

HOLES: 15/16"ø (U.N.)

BOLTS: AS NOTED

PAINT: ONE SHOP COAT OF INORGANIC ZINC (MOBIL ZINC 1)(U.N) 3.0 MILS DRY MIN. THK.

NO.	REVISION	DATE

HIGH STEEL STRUCTURES, INC.
1905 Old Philadelphia Pike
Lancaster, Pennsylvania 17602
Phone 717/299-5211
A Subsidiary of High Industries Inc

LIVE LOAD ANCHORAGE
SAVANNAH ROAD BRIDGE OVER LEWES & REHOBOTH CANAL
ROUTE 18 - SAVANNAH ROAD
SUSSEX COUNTY, DELAWARE
STATE OF DELAWARE, DEPARTMENT OF TRANSPORTATION
DIVISION OF HIGHWAYS

STATE CONTRACT OR REF. NO. 80-023-02 CONTRACTOR GEORGE & LYNCH, INC.

IN CHARGE: CHRISTMAN MADE BY KMA CHK'D BY: WRC DATE 10-13-81

CONTRACT NUMBER: D-81116 DRAWING NUMBER: 1 OF 21

CODE : 6800

POLYTRACE 038

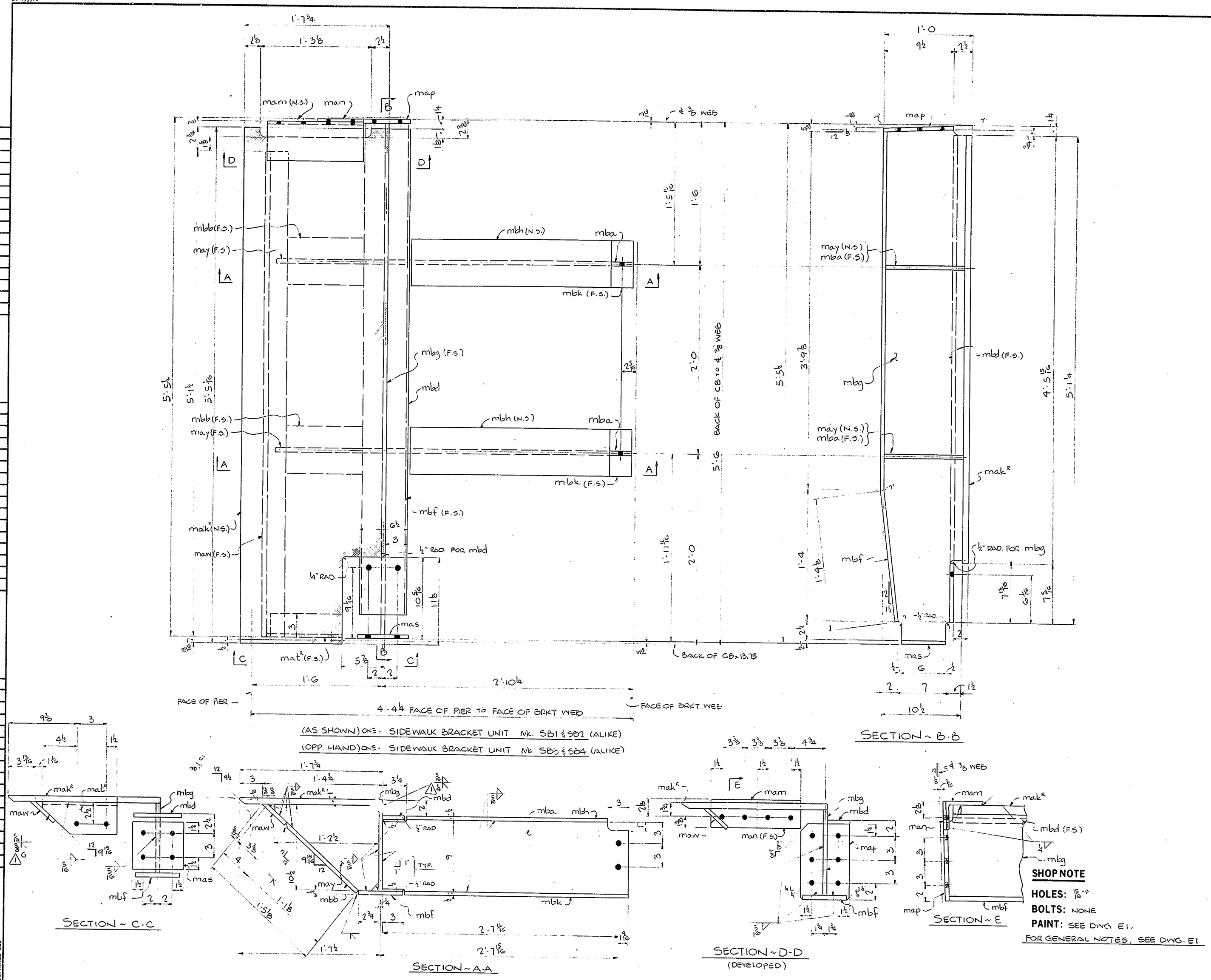

FED ROAD DIV. NO	STATE	FED AID PROJ NO

BILL OF MATERIAL

	NO.	MARK	DESCRIPTION	LENGTH		REMARKS	ITEM	SHIP. WEIGHT EA.
	ONE	EA Mk.	SB1, SB2	SB3	SB4			883.6
FOR SB1,2	2	mak^R	PL 19¾ x 1"	5	5 1/16	(CHECKER PL)	2/2	
FOR SB3,4	2	mak^L	PL 19¾ x 1"	5	5 1/16	(CHECKER PL)	2/2	
	4	mam	= 5 x 3½ x ⅜	1	1⅛	BENT	2/3	
	4	man	BAR - 3½ x ⅜	0	6⅜	(FILL) BENT TO SHIP	2/11	
	4	map	BAR - 6½ x ½	0	9½		2/8	
	4	mas	BAR - 6 x ½	0	7		2/7	
FOR SB1,2	2	mat^R	L 4 x 3 x ⅜	0	9		2/4	
FOR SB3,4	2	mat^L	L 4 x 3 x ⅜	0	9		2/4	
	4	maw	BAR - 4 x ½	5	1½		2/10	
	8	may	PL 10½ x ½	1	2½		2/14	
	8	mba	PL 9 x ½	2	9¼		2/12	
	8	mbb	BAR 6 x ½	1	1⅛		2/7	
	4	mbd	BAR 6½ x ½	5	1¼	(T)	2/6	
	4	mbf	BAR 6 x ½	5	2	(T) BENT	2/5	
	4	mbg	PL 10½ x ½	5	4½	(T)	2/13	
	8	mbh	BAR 6 x ½	2	3		2/7	
	8	mbk	BAR 6 x ½	2	6¼		2/7	

ALL RE-ENTRANT CUTS TO HAVE ¾" RAD MIN (U.N.)

SHOP NOTE

HOLES: 15/16"φ

BOLTS: NONE

PAINT: SEE DWG E1.

FOR GENERAL NOTES, SEE DWG. E1

NO.	REVISION	DATE
1	CORRECTED WELDING SYMBOL	5/7/82

HIGH STEEL STRUCTURES, INC.
1905 Old Philadelphia Pike
Lancaster, Pennsylvania 17604
Phone 717 299-5211
A Subsidiary of High Industries, Inc.

SIDEWALK BRACKET UNITS
SAVANNAH ROAD BRIDGE OVER LEWES & REHOBOTH CANAL
ROUTE 18 - SAVANNAH ROAD
SUSSEX COUNTY, DELAWARE
STATE OF DELAWARE, DEPARTMENT OF TRANSPORTATION
DIVISION OF HIGHWAYS

STATE CONTRACT OR REF. NO. 80-023-02 CONTRACTOR GEORGE & LYNCH, INC.

IN CHARGE: CHRISTMAN MADE BY: KMA CHK'D BY: WRC DATE 1-29-82

CODE: 6800

CONTRACT NUMBER: D-81116 DRAWING NUMBER 2 OF 21

AP 13531A

FED. ROAD DIV. NO.	STATE	FED. AID PROJ. NO.

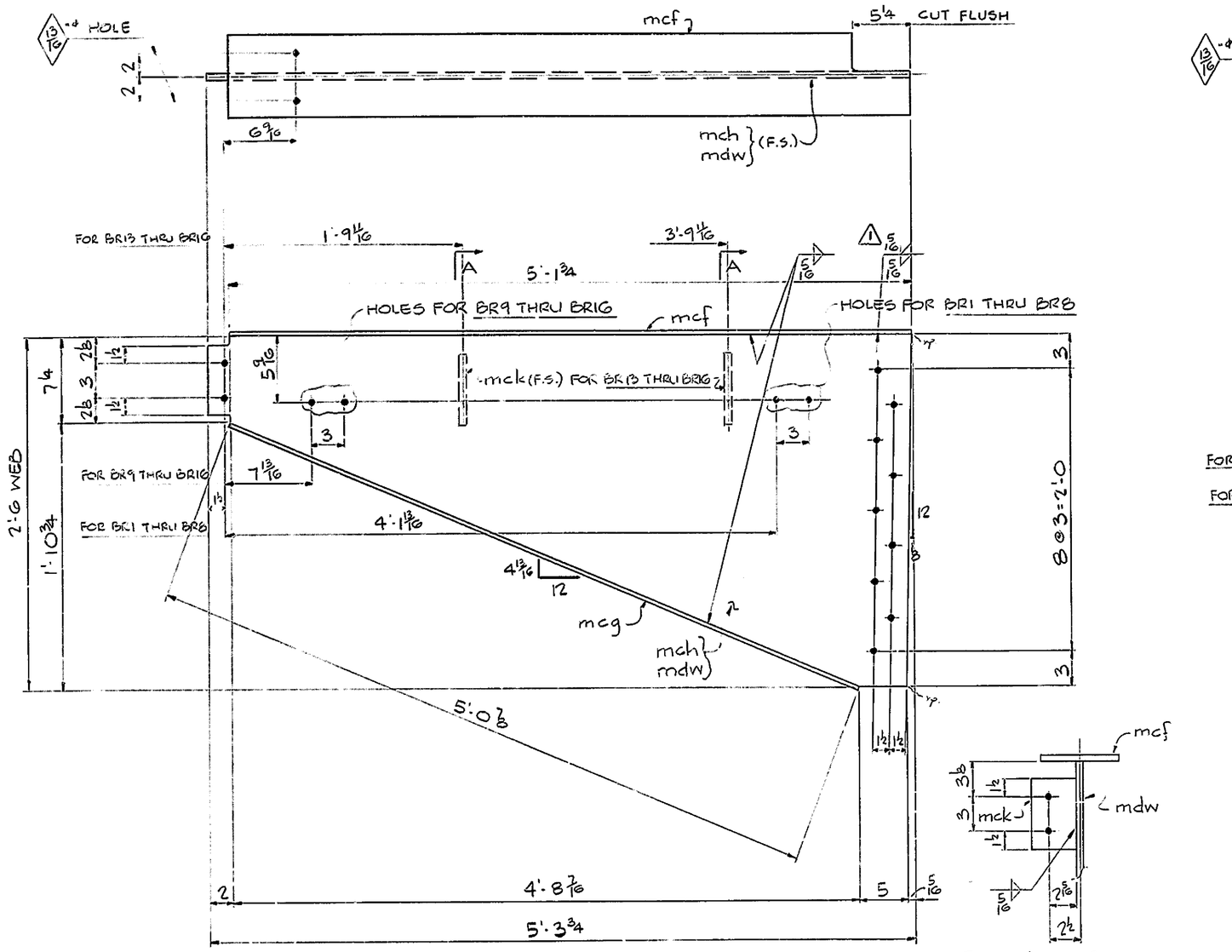

SECT. A FOR BR3 THRU BR16

(AS SHOWN) ONE ~ SIDEWALK BRACKET EA. Mk. BR1, BR2, BR5, BR6, BR9, BR10, BR13 & BR14 (ALIKE)

(OPP HAND) ONE ~ SIDEWALK BRACKET EA. Mk. BR3, BR4, BR7, BR8, BR11, BR12, BR15 & BR16 (ALIKE)

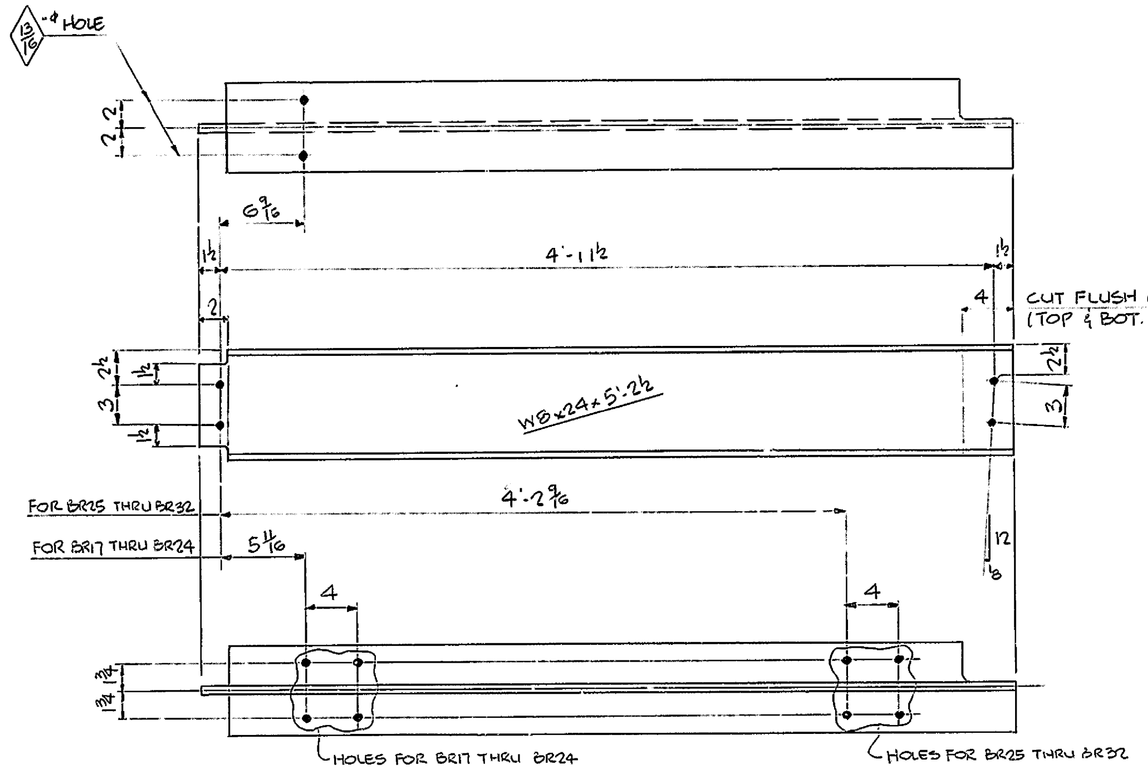

(AS SHOWN) ONE ~ SIDEWALK BRACKET EA. Mk. BR17, BR18, BR21, BR22 (ALIKE), BR25, BR26, BR29 & BR30 (ALIKE)

(OPP. HAND) ONE ~ SIDEWALK BRACKET EA. Mk. BR19, BR20, BR23, BR24 (ALIKE), BR27, BR28, BR31 & BR32 (ALIKE)

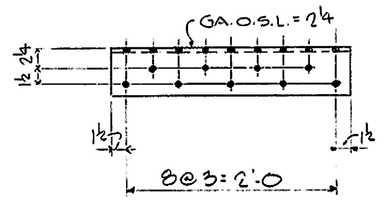

16 ~ ANGLES Mk. MS11

BILL OF MATERIAL

NO.	MARK	DESCRIPTION	LENGTH	REMARKS	ITEM	SHIP. WEIGHT
ONE ~ EA. Mk.		BR1, BR2, BR3, BR4, BR5, BR6, BR7, BR8, BR9, BR10, BR11, BR12, BR13, BR14, BR15, BR16				267.6
16	mcf	BAR - 7 x ⅜	5	1¾ (T)	2/26	
16	mcg	BAR - 7 x ⅜	5	0⅜ (T)	2/26	
8	mch	R. 30 x ⅝	5	3¾ (T)	2/25	
8	mck	BAR - 4 x ½	0	6	2/10	
8	mdw	R. 30 x ⅝	5	3¾ (T)	2/25	
ONE ~ EA. Mk.		BR17, BR18, BR19, BR20, BR21, BR22, BR23, BR24, BR25, BR26, BR27, BR28, BR29, BR30, BR31 & BR32				
16		W8 x 24	5	2½	2/24	125.0
ONE	EA. Mk.	SS1, SS2, SS3, SS4				529.1
4		C8 x 13.75	36	7⅜ (T)	2/23	
32	mcm	BAR 4 x ⅜	0	6	2/27	
4	mcn	L 4 x 3½ x ⅜	0	6	2/18	
16	MS11	L 5 x 3½ x ¾	2	3	3/31	44.5

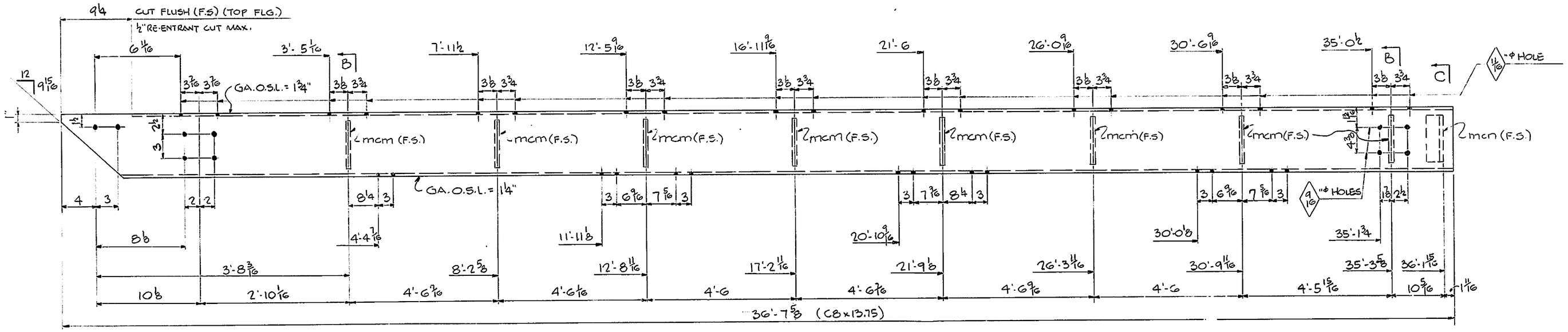

(AS SHOWN) ONE ~ SIDEWALK SUPPORT EA. Mk. SS1 & SS2 (ALIKE)

(OPP. HAND) ONE ~ SIDEWALK SUPPORT EA. Mk. SS3 & SS4 (ALIKE)

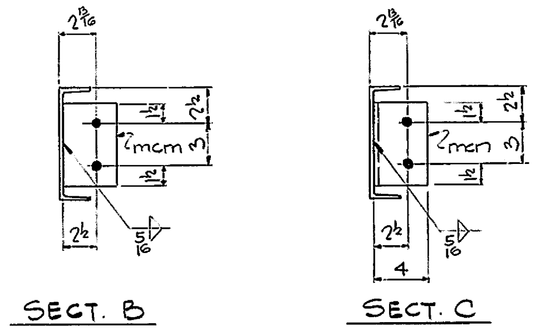

SECT. B SECT. C

SHOP NOTE

HOLES: 15/16 ⌀ (U.N.)

BOLTS: NONE

PAINT: SEE DWG. E1

FOR GENERAL NOTES, SEE DWG. E1.

ALL R-ENTRANT CUTS TO HAVE ¾" MIN. RAD. (U.N.)

CODE : 6800

NO.	REVISION	DATE
1	CORRECTED WELDING SYMBOL	5/7/82

HIGH STEEL STRUCTURES, INC.
1905 Old Philadelphia Pike
Lancaster, Pennsylvania 17604
Phone 717/299-5211
A Subsidiary of High Industries, Inc

SIDEWALK BRACKETS & SUPPORTS

SAVANNAH ROAD BRIDGE OVER LEWES & REHOBOTH CANAL

ROUTE 18 - SAVANNAH ROAD

SUSSEX COUNTY, DELAWARE

STATE OF DELAWARE, DEPARTMENT OF TRANSPORTATION

DIVISION OF HIGHWAYS

STATE CONTRACT OR REF. NO. 80-023-02 CONTRACTOR GEORGE & LYNCH, INC.

IN CHARGE: CHRISTMAN MADE BY: KMA CHK.D. BY: WRC DATE: 1-29-82

CONTRACT NUMBER: D-81116 DRAWING NUMBER: 4 OF 21

POLYTRACE 038

AP 135314

FED ROAD DIV. NO	STATE	FED AID PROJ NO

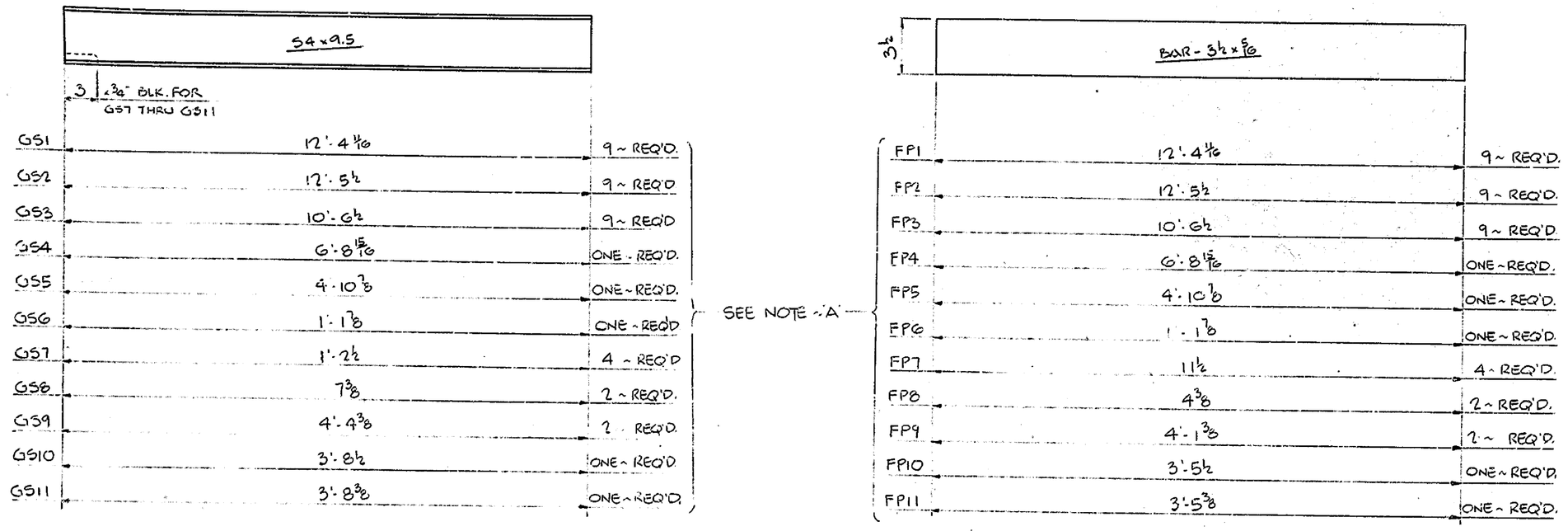

SEE NOTE 'A'

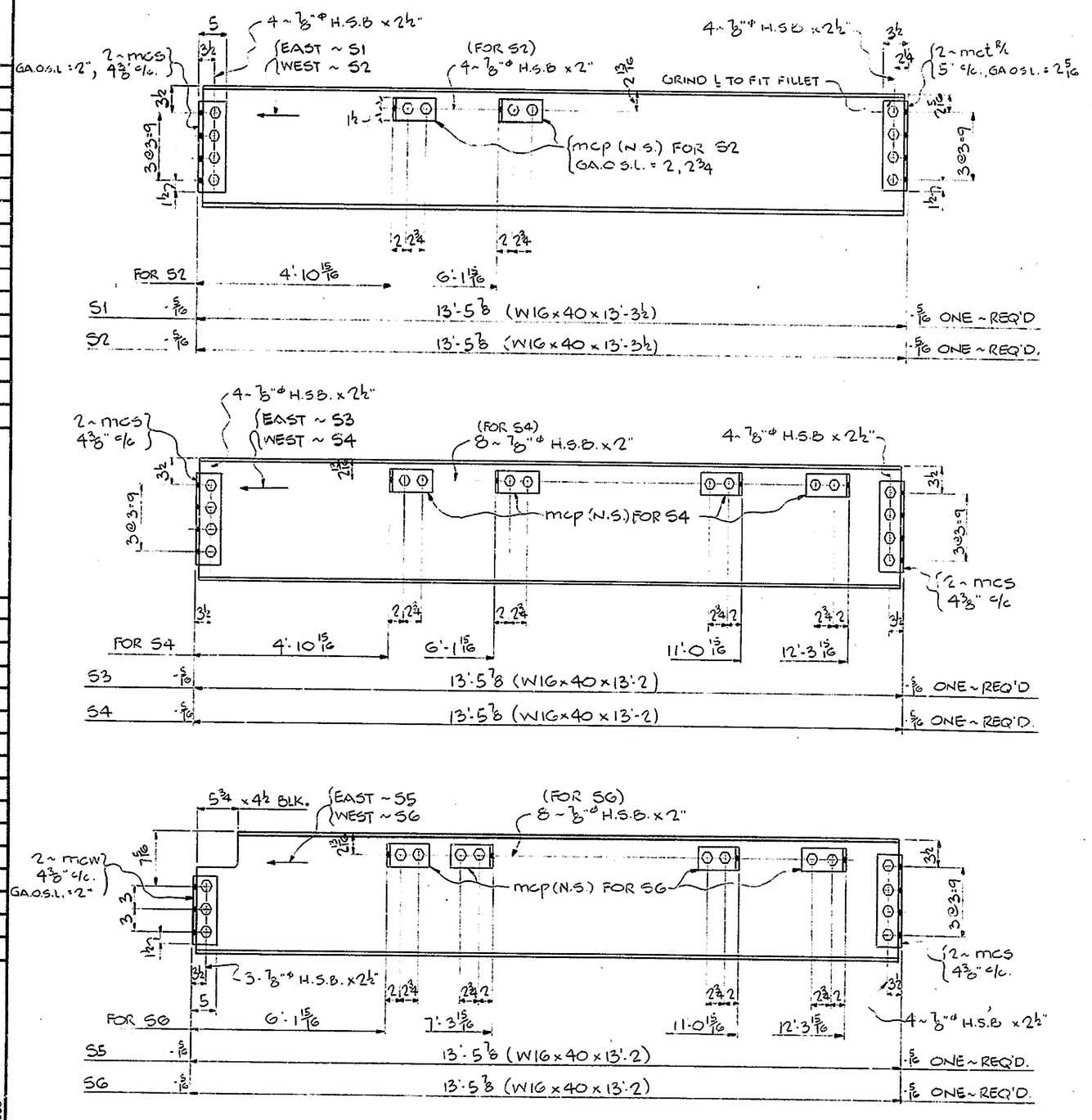

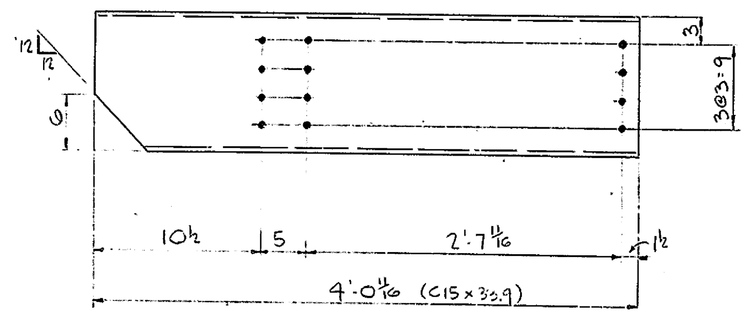

(AS SHOWN) ONE ~ CHANNEL Mk. MS1
(OPP. HAND) ONE ~ CHANNEL Mk. MS2

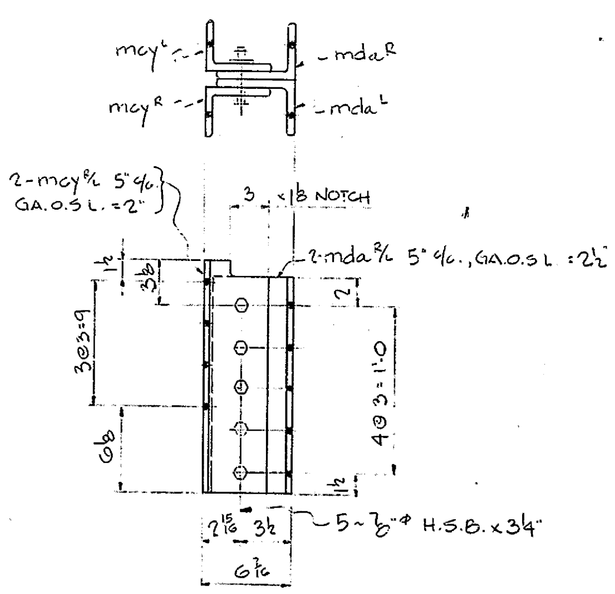

2 ~ MISC. CONNECTORS Mk MS3

MECHANICAL GALVANIZE A.S.T.M. B-454 CLASS 50

NOTE 'A'

SURFACES INDICATED ARE TO RECEIVE A DUST COAT OF SHOP PAINT. 3/4 MILS DRY MAX.

NOTE:

1. ALL RE-ENTRANT CUTS TO HAVE 3/4" RAD. MIN.
2. ALL SHOP BOLTS TO BE INSTALLED HAND TIGHT.
3. FOR GENERAL NOTES, SEE DWG. E1.

SHOP NOTE

HOLES: 15/16"ø
BOLTS: AS NOTED
PAINT: SEE DWG. E1 (U.N.)

BILL OF MATERIAL

NO.	MARK	DESCRIPTION	LENGTH		REMARKS	ITEM	SHIP WEIGHT
9	GS1	S4 x 9.5	12	4 11/16		3/1	117.7
9	GS2		12	5 1/2		3/3	118.4
9	GS3		10	6 1/2		3/4	100.1
ONE	GS4		6	8 15/16		3/5	64.1
ONE	GS5		4	10 3/8		3/6	46.6
ONE	GS6		1	1 3/8		3/7	11.0
4	GS7		1	2 1/2		3/8	11.5
2	GS8		0	7 3/8		3/9	5.8
2	GS9		4	4 3/8		3/10	41.5
ONE	GS10		3	8 1/2		3/11	35.2
ONE	GS11	S4 x 9.5	3	8 3/8		3/12	35.1
9	FP1	BAR 3 1/2 x 5/16	12	4 11/16		3/13	46.1
9	FP2		12	5 1/2		3/14	46.4
9	FP3		10	6 1/2		3/15	39.2
ONE	FP4		6	8 15/16		3/16	25.1
ONE	FP5		4	10 3/8		3/17	18.3
ONE	FP6		1	1 3/8		3/21	4.3
4	FP7		0	1 1/2		3/21	3.6
2	FP8		0	4 3/8		3/21	1.4
2	FP9		4	1 3/8		3/20	15.3
ONE	FP10		3	5 1/2		3/19	12.9
ONE	FP11	BAR 3 1/2 x 5/16	3	5 3/8		3/18	12.8
ONE	EA. Mk. S1, S2						578.1
2		W16 x 40	13	3 1/2	(T)	3/22	
4	mcs	L 5 x 3 1/2 x 3/8	1	0		3/24	
2	mct	L 4 x 3 1/2 x 3/8	1	0		3/26	
2	mct	L 4 x 3 1/2 x 3/8	1	0		3/26	
2	mcp	L 6 x 6 x 3/8	0	3	FOR S2	3/25	
ONE	EA. Mk. S3, S4						583.1
2		W16 x 40	13	2	(T)	3/23	
8	mcs					3/24	
4	mcp				FOR S4	3/25	
ONE	EA. Mk. S5, S6						577.9
2		W16 x 40	13	2	(T)	3/23	
4	mcs					3/24	
4	mcw	L 5 x 3 1/2 x 3/8	0	9		3/24	
4	mcp				FOR S6	3/25	
ONE	MS1	C15 x 33.9	4	0 11/16		3/27	137.5
ONE	MS2	C15 x 33.9	4	0 11/16		3/29	137.5
2	MS3						79.4
2	mcy R	L 5 x 3 1/2 x 1/2	1	4 5/8		3/17	
2	mcy L	L 5 x 3 1/2 x 1/2	1	4 3/8		3/27	
2	mda R	L 6 x 4 x 1/2	1	3 1/2		3/28	
2	mda L	L 6 x 4 x 1/2	1	3 1/2		3/28	
		SHOP BOLT SUMMARY					
7/8"ø H.S. (A325, TYPE 1) BOLT W/ HVY HEX. HD. & ASCO GR. DH HVY. HEX. NUTS							
20				2"		82/9	
46				2 1/2		82/10	
10				3 1/4"		82/11	
70	F436	WASHERS FOR 7/8"ø H.S. BOLT				82/14	

NO.	REVISION	DATE

HIGH STEEL STRUCTURES, INC.
1905 Old Philadelphia Pike
Lancaster, Pennsylvania 17602
Phone 717-299-5711
A Subsidiary of High Industries Inc

GRATING SUPPORT BEAMS, FILL R.S., STRINGERS & MISC.
SAVANNAH ROAD BRIDGE OVER LEWES & REHOBOTH CANAL
ROUTE 8 ~ SAVANNAH ROAD
SUSSEX COUNTY, DELAWARE
STATE OF DELAWARE, DEPARTMENT OF TRANSPORTATION
DIVISION OF HIGHWAYS

STATE CONTRACT OR REF. NO. 80-023-02 CONTRACTOR GEORGE & LYNCH, INC

IN CHARGE: CHRISTMAN MADE BY: KMA CHK.D BY: WSW DATE 1-29-82

CONTRACT NUMBER: D-81116 DRAWING NUMBER 5 OF 21

CODE: 6800

POLYTRACE 038

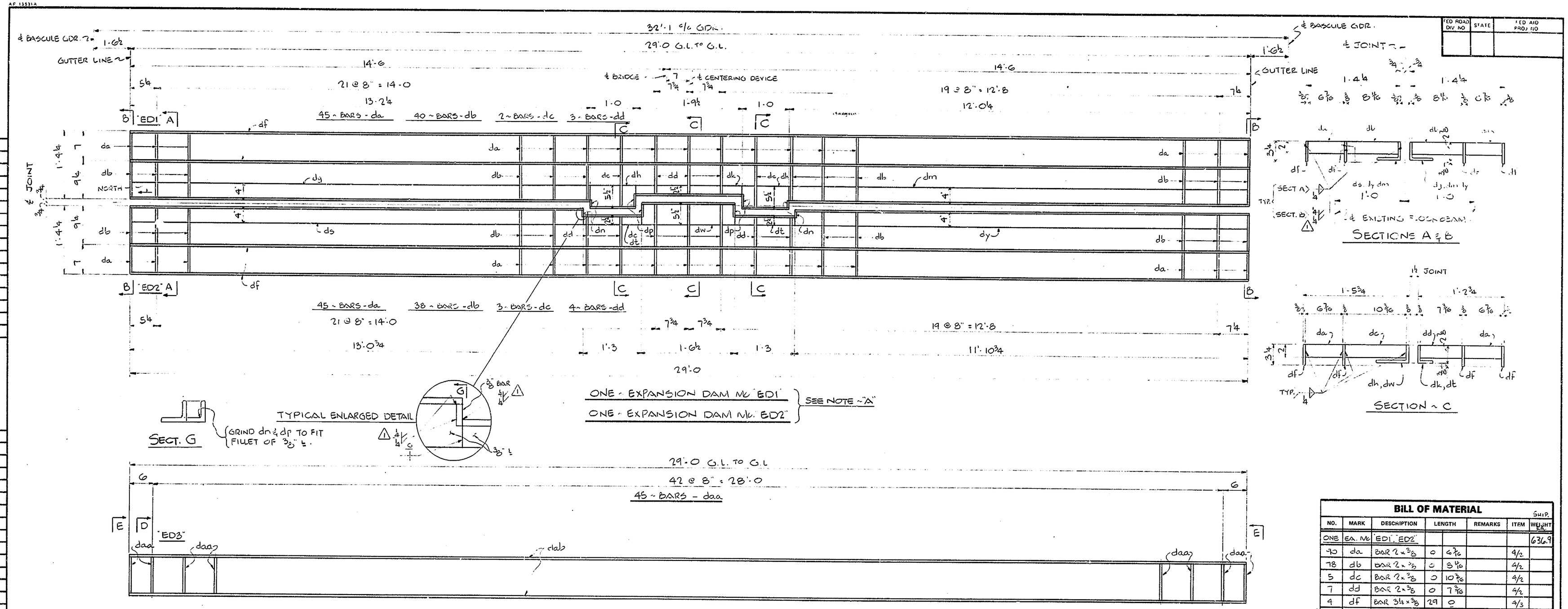

FED. ROAD DIV. NO.	STATE	FED. AID PROJ. NO.

BILL OF MATERIAL

NO.	MARK	DESCRIPTION	LENGTH		REMARKS	ITEM	SHIP. WEIGHT EA.
ONE	EA. MK.	"ED1", "ED2"					636.9
90	da	BAR 2 x 3/8	0	6 7/16		4/2	
78	db	BAR 2 x 3/8	0	8 11/16		4/2	
5	dc	BAR 2 x 3/8	0	10 3/16		4/2	
7	dd	BAR 2 x 3/8	0	7 3/16		4/2	
4	df	BAR 3 1/4 x 3/8	29	0		4/3	
ONE	dg	∠ 4 x 2 7/8 x 3/8	13	2 1/4	CUT FROM 4 x 3 x 3/8	4/7	
2	dh	∠ 5 1/2 x 2 7/8 x 3/8	1	0	CUT FROM 6 x 3 1/2 x 3/8	4/11	
ONE	dk	∠ 2 7/8 x 2 1/2 x 3/8	1	7 1/2	CUT FROM 3 x 3 x 3/8	4/12	
ONE	dm	∠ 4 x 2 7/8 x 3/8	12	0 1/4	CUT FROM 4 x 3 x 3/8	4/8	
4	dn	BAR 1 1/2 x 3/8	0	2 1/2		4/6	
4	dp	BAR 3 x 3/8	0	2 1/2		4/6	
ONE	ds	∠ 4 x 2 7/8 x 3/8	13	0 3/4	CUT FROM 4 x 3 x 3/8	4/9	
2	dt	∠ 2 7/8 x 2 1/2 x 3/8	1	3	CUT FROM 3 x 3 x 3/8	4/12	
ONE	dw	∠ 5 1/2 x 2 7/8 x 3/8	1	6 1/2	CUT FROM 6 x 3 1/2 x 3/8	4/11	
ONE	dy	∠ 4 x 2 7/8 x 3/8	11	10 3/4	CUT FROM 4 x 3 x 3/8	4/10	
4	"ED3"						221.0
180	daa	BAR 1 1/4 x 1/4	0	9 1/4		4/5	
8	dab	BAR 2 1/2 x 3/8	29	0		4/4	
2-R 2-L	AP1						67.2
4	dac	BAR 7 3/16 x 1/2	4	9	(BENT)	4/13	
16	dad	BAR 1 1/2 x 3/8	1	0	(BENT)	4/14	

FOR "ED1"

FOR "ED2"

NO.	REVISION	DATE
2	ADD SHOP SPL. FOR df & dab	6/2/82
1	CORRECTED WELDING SYMBOL	5/7/82

NOTE ~ "A"

SURFACES INDICATED ARE TO RECEIVE A DUST COAT OF SHOP PAINT. 3/4 MILS DRY MAX.

SHOP NOTE

HOLES: NONE

BOLTS: NONE

PAINT: SEE DWG E1 (U.N.)

FOR GENERAL NOTES, SEE DWG. E1.

HIGH STEEL STRUCTURES, INC.
1905 Old Philadelphia Pike
Lancaster, Pennsylvania 17604
Phone 717/299-5211
A Subsidiary of High Industries, Inc.

EXPANSION DAMS & ARMORED EDGE PLS.
SAVANNAH ROAD BRIDGE OVER LEWES & REHOBOTH CANAL
ROUTE 18 - SAVANNAH ROAD
SUSSEX COUNTY, DELAWARE
STATE OF DELAWARE, DEPARTMENT OF TRANSPORTATION
DIVISION OF HIGHWAYS

STATE CONTRACT OR REF. NO. 80-023-02 CONTRACTOR GEORGE & LYNCH, INC.

IN CHARGE: CHRISTMAN MADE BY: KMA CHK.D BY: WBW & WRC DATE 1-29-82

CODE: 5800 (U.N.) CONTRACT NUMBER: D-81116 DRAWING NUMBER 6 OF 21

AP 13531A

FED ROAD DIV. NO.	STATE	FED AID PROJ NO.

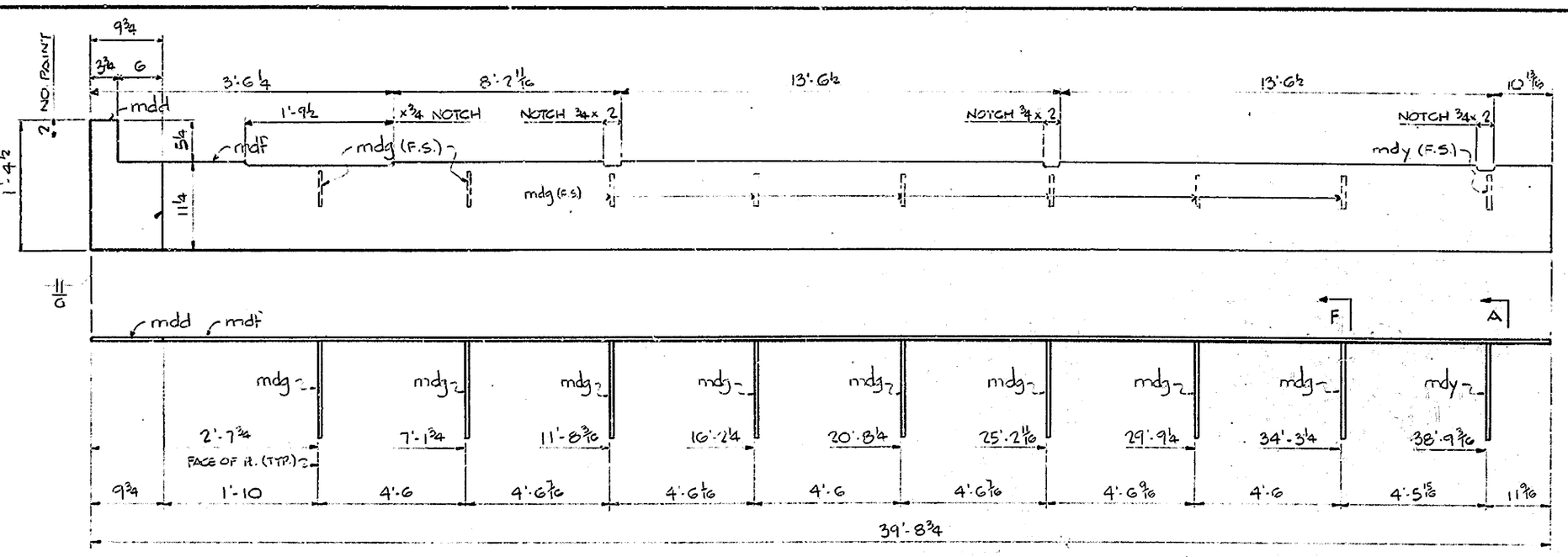

(AS SHOWN) ONE ~ CURB ft. Mk. CP1
(OPP. HAND) ONE ~ CURB ft. Mk. CP2

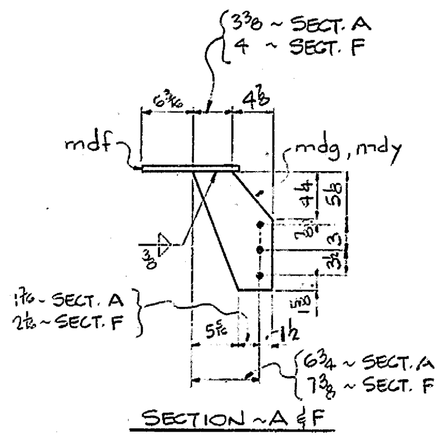

SECTION ~ A & F

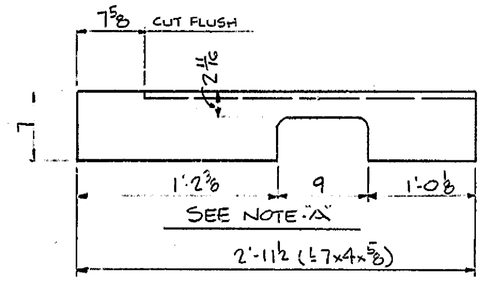

(AS SHOWN) ONE ~ SHELF ANGLE Mk. MS4
(OPP. HAND) ONE ~ SHELF ANGLE Mk. MS5

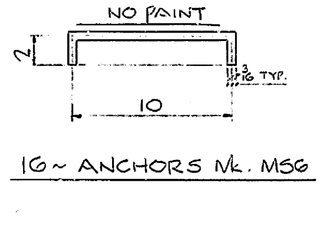

16 ~ ANCHORS Mk. MS6

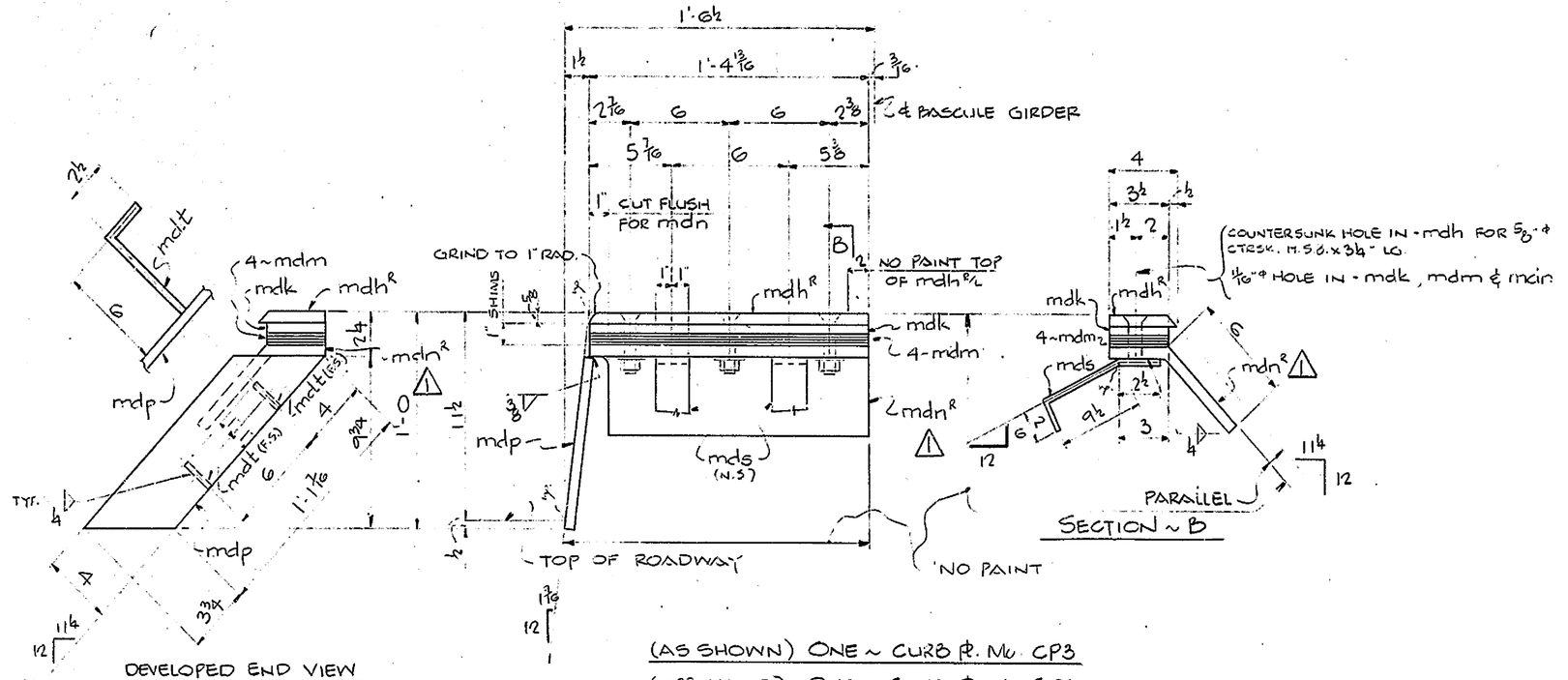

(AS SHOWN) ONE ~ CURB ft. Mk. CP3
(OPP. HAND) ONE ~ CURB ft. Mk. CP4

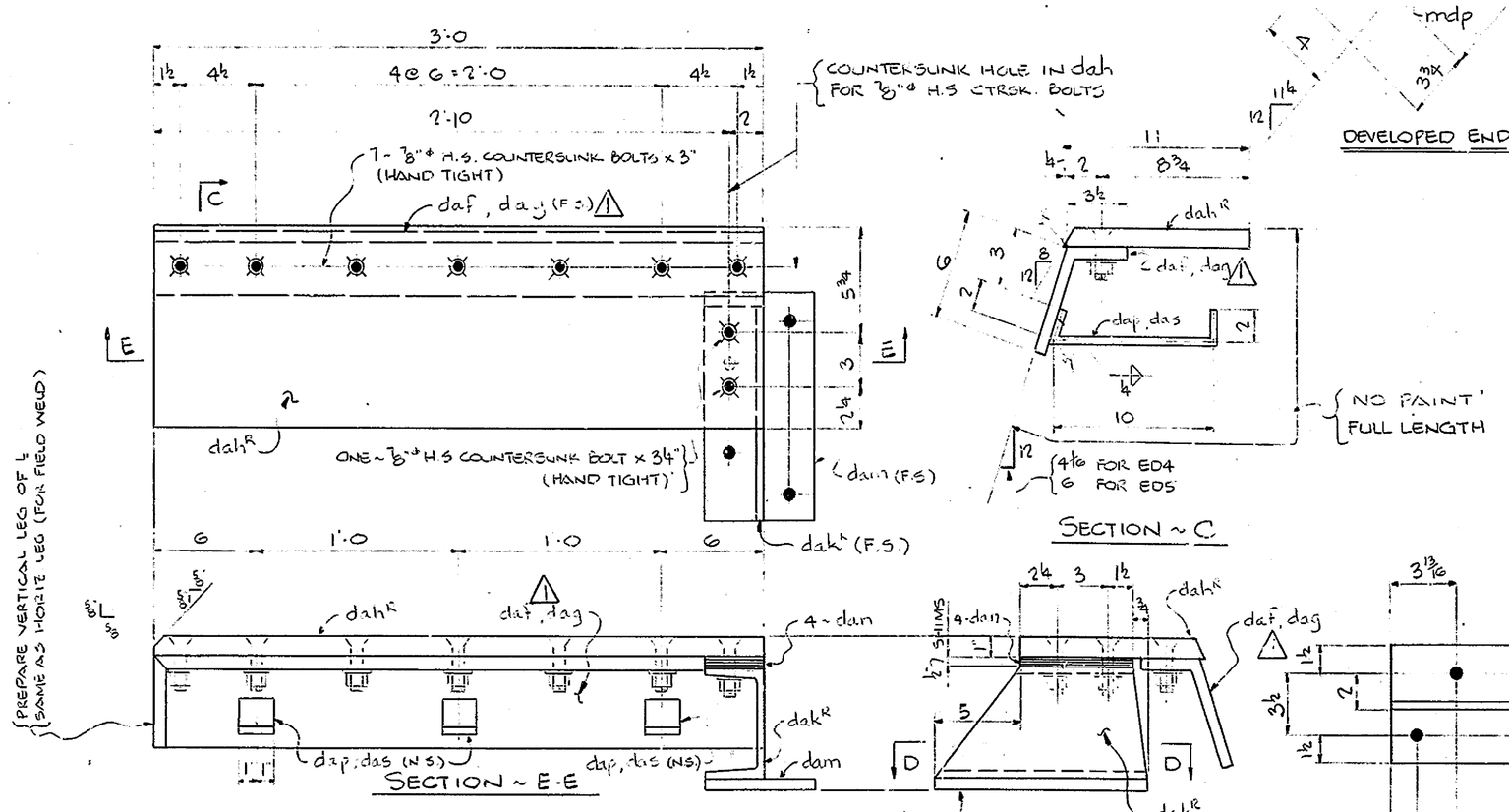

(AS SHOWN) ONE ~ EXPANSION DAM Mk. ED4
(OPP. HAND) ONE ~ EXPANSION DAM Mk. ED5
CODE: 5800

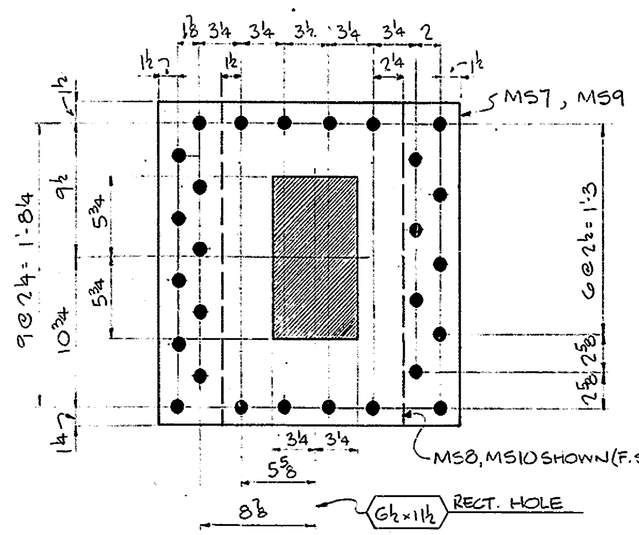

ONE ~ LOCK ft. Mk. MS7
ONE ~ LOCK ft. Mk. MS8
ONE ~ LOCK ft. Mk. MS9
ONE ~ LOCK ft. Mk. MS10
FABRICATE TOGETHER TO ASSURE HOLE ALIGNMENT

NOTE ~ "A"

SURFACES INDICATED ARE TO RECEIVE A DUST COAT OF SHOP PAINT. 3/4 MILS DRY (MAX.)

SHOP NOTE

HOLES: 15/16" ϕ (U.N.)
BOLTS: AS NOTED
PAINT: SEE DWG. E1. (U.N)

FOR GENERAL NOTES, SEE DWG. E1.
ALL RE-ENTRANT CUTS TO HAVE 3/4" MIN. RAD.

BILL OF MATERIAL

NO.	MARK	DESCRIPTION	LENGTH		REMARKS	ITEM	SHIP WEIGHT
ONE	EA. Mk. CP1, CP2						687.6
2	mdd	ft. 9 3/4 x 3/8	1	4 1/2		4/25	
2	mdf	ft 11 1/4 x 3/8	38	11		4/24	
16	mdg	ft. 8 1/8 x 3/8	1	1 1/4		4/26	
2	mdy	ft 8 1/4 x 3/8	1	1 1/4		4/26	
ONE	MS4	L 7 x 4 x 5/8	2	11 1/2	CUT FROM 18 x 5/8	4/18	65.4
ONE	MS5	L 7 x 4 x 5/8	2	11 1/2	CUT FROM 18 x 5/8	4/16	65.4
16	MS6	BAR 2 x 3/8	1	2	BENT	4/27	3.0
ONE	EA. Mk. CP3, CP4						75.9
1 / 1	mdh^R	BAR 4 x 5/8	1	4 7/8		4/19	
2	mdk	BAR 3 1/2 x 1/2	1	4 5/8	SHIMS	4/22	
8	mdm	BAR 3 1/2 x 10GA	1	4 5/8	SHIMS	4/28	
1 / 1	mdn^R	ft 16 13/16 x 5/8	0	9 1/4	BENT	4/29	
2	mdp	BAR 4 x 1/2	1	5 3/16		4/21	
4	mds	BAR 2 x 3/8	1	2	BENT	4/27	
4	mdt	BAR 2 x 3/8	0	6 1/2	BENT	4/27	
ONE	ED4						214.8
ONE	daf	ft. 36 x 5/8	0	9	BENT	4/16	
ONE	dah^R	ft. 11 x 1"	3	0		4/15	
ONE	dak^R	MC6 x 15.3	1	0 1/2		4/17	
ONE	dam	BAR G 1/2 x 5/8	1	0 1/2	FILL	4/20	
4	dan	BAR 3 1/2 x 10GA	0	6 3/4	SHIMS	4/28	
3	dap	BAR 2 x 3/8	1	2	BENT	4/27	
ONE	ED5						214.8
ONE	dag	ft. 36 x 5/8	0	9	BENT	4/16	
ONE	dah^L					4/15	
ONE	dak^L					4/17	
ONE	dam					4/20	
4	dan					4/28	
3	das	BAR 2 x 3/8	1	2	BENT	4/27	
ONE	MS7	ft. 23 x 1/2	1	11 3/8		4/23	76.2
ONE	MS8	ft 13 3/4 x 1/2	1	11		4/23	94.8
ONE	MS9	ft. 23 x 1/2	1	11 3/8		4/23	76.2
ONE	MS10	ft 13 3/4 x 1/2	1	11		4/23	94.8

SHOP BOLT SUMMARY

H.S. (A325, TYPE 1) COUNTERSUNK SLOTTED FLAT HD. BOLT W/ ASG3 GR. DH HVY. HEX NUT.						
6		5/8" ϕ	0	3/4	2" R.H. THD	B3/4
14		7/8" ϕ	0	3		B3/6
4		7/8" ϕ	0	3/4	2" R.H. THD	B3/7
6	F436	WASHER FOR 5/8" ϕ H.S.B.				B2/13
18	F436	WASHER FOR 7/8" ϕ H.S.B.				B2/14

MECHANICAL GALVANIZE A.S.T.M. B-454 CLASS 50

NO.	REVISION	DATE
1	CHANGED L 6 x 3 1/2 x 5/8 TO BENT PLATE.	5-28-82

HIGH STEEL STRUCTURES, INC.
1905 Old Philadelphia Pike
Lancaster, Pennsylvania 17604
Phone 717/299-5211
A Subsidiary of High Industries Inc

MISC., CURB RS., EXPANSION DAMS & LOCK PLATES
SAVANNAH ROAD BRIDGE OVER LEWES & REHOBOTH CANAL
ROUTE 18 - SAVANNAH ROAD
SUSSEX COUNTY, DELAWARE
STATE OF DELAWARE, DEPARTMENT OF TRANSPORTATION
DIVISION OF HIGHWAYS

STATE CONTRACT OR REF. NO. 80-023-02 CONTRACTOR GEORGE & LYNCH, INC.
IN CHARGE: CHRISTMAN MADE BY: KMA CHK'D BY: WBW DATE 1-29-82
CONTRACT NUMBER: D-81116 DRAWING NUMBER: 7 OF 21

CODE: 6800 (U.N.)

POLYTRACE 038

FED ROAD DIV. NO.	STATE	FED AID PROJ. NO.

BILL OF MATERIAL

NO.	MARK	DESCRIPTION	LENGTH		REMARKS	ITEM	SHIP. WEIGHT
ONE	TREAD FR. GDR EA. MK.		TG1 & TG2				5781.95
2	mfa	PL 37 × 1½	9	9¾	(T)	5/2	
2	mfb	PL 15 × 1½	9	9¾	(T)	5/3	
2	mfc	PL 15 × 1½	9	9¾	(T)	5/3	
12	mfd	BAR 6½ × 1½	3	1		5/4	
14	mff	BAR 6½ × 1½	3	1		5/4	
6	mfh	BAR 6½ × 1½	3	1		5/4	
6	mfk	C15 × 33.9	4	10		5/7	
6	mgh	BAR 6 × ½	1	3		5/8	
16	mfm	BAR 6½ × 1"	1	2½		5/5	
8	mfn	BAR 5 × ¾	0	5		5/6	
10	mfp	BAR 2 × ⅜	0	11	(BENT)	5/9	
10	mfs	BAR 2 × ⅜	1	3	(BENT)	5/9	
6	mft	BAR 2 × ¾	1	1½	(BENT)	5/10	
ONE	TREAD	R. GDR. EA. MK.	TG3 & TG4				5781.95
2	mfa						
2	mfb						
2	mfc						
12	mfd						
14	mff						
3	mfg	BAR 6½ × 1½	3	1	FOR TG3	5/4	
3	mfh				FOR TG4		
6	mfk						
6	mgh						
16	mfm						
8	mfn						
10	mfp						
10	mfs						
6	mft						
ONE	SUPPORT COLUMN EA. MK.		SC1	SC2	SC3	SC4	1511.78
4	mfw	W 12 × 106	5	0½	(T)	5/16	
16	mfy	PL 12⅛ × 1"	1	6		5/17	
8	mga	BAR 5⅛ × 1"	0	10		5/18	
8	mgb	BAR 4⅛ × 1"	0	10		5/18	
4	mgc	PL 21 × 1½	2	2		5/12	
4	mgd	PL 24 × 2	2	2		5/13	
4	mgf	PL 21 × ¼	2	2	SHIMS	5/14	
8	mgg	PL 21 × 16GA	2	2	SHIMS	5/15	
4	BP1	PL 30 × 5½	2	10		5/11	1654.61
16	ANCHOR BOLTS MK. A01		2	1	SEE DET. 'X' (A36)	5/20	7.43
16	ANCHOR BOLTS MK. A02		8	5			53.72
16	mgk	1½"ø RD.	8	5	SEE DET. 'Y' (A36)	5/21	
16	mgm	2½"ø FITE CUBENE	0	6	(A53)	5/22	
		SHOP BOLT SUMMARY					
84 ~	⅞"ø H.S. 'A325, TYPE 1' BOLTS × 3¼ LG W/HVY HEX HD & A-563 GR. DH HVY HEX NUT					83/3	
84 ~	F436 WASHERS FOR ⅞"ø H.S.B.					83/5	

HOT DIP GALV. A.S.T.M. A153

MECHANICAL GALVANIZE A.S.T.M. B-454 CLASS-50

SECTION ~ H

SECTION ~ J

SECTION ~ B

SECTION ~ G

SECTION ~ A-A

SECTIONS ~ C & D

SECTIONS ~ E & F

SECTION ~ K

SECTION ~ L

SECTION ~ M

SECTION ~ P

DETAIL ~ 'X'

DETAIL ~ 'Y'

TYPICAL SHOP PREP. FOR 1½" WEB & 1½" STIFFS

SHOP NOTE:
MILL TOP & BOTT FLG. FROM 1⅜ THK TO 1½" THK AFTER FABRICATION (SOC'S) BRINGING TOTAL DEPTH OF GDR TO 3'-4".

ONE ~ TREAD FR. GDR EA. MK. TG1, TG2 TG3 & TG4 CODE: 4000
AS SHOWN — OPP. HAND

ONE ~ SUPPORT COLUMN EA MK. SC1, SC2, SC3 & SC4 CODE: 6800

4 ~ BILLET PRS MK. BP1 CODE: 4000

16 ~ ANCH. BOLTS MK. A01

16 ~ ANCHOR BOLTS MK A02

SHOP NOTE

HOLES: 15/16"ø (U.N.)
BOLTS: AS NOTED
PAINT: NO PAINT

FOR GENERAL NOTES, SEE DWG E1

NO.	REVISION	DATE
1	CORRECTED WELDING SYMBOL	5/5/82

HIGH STEEL STRUCTURES, INC.
1905 Old Philadelphia Pike
Lancaster, Pennsylvania 17603
Phone 717/299-5211
A Subsidiary of High Industries Inc

THEAD FR GIRDERS
SAVANNAH RD BRIDGE OVER LEWES & REHOBOTH CANAL
ROUTE 18 - SAVANNAH RD
SUSSEX COUNTY, DELAWARE
STATE OF DELAWARE, DEPARTMENT OF TRANSPORTATION
DIVISION OF HIGHWAYS

STATE CONTRACT OR REF. NO. 80-033-05 CONTRACTOR C. FORTE & LYNCH, INC.

IN CHARGE: CHRISTMAN MADE BY: M.M.K. CHK'D. BY: WBW DATE: 2-17-82

CONTRACT NUMBER: D-8111G DRAWING NUMBER: 8 OF 21

AC 250918
BY POLYTRACE 038

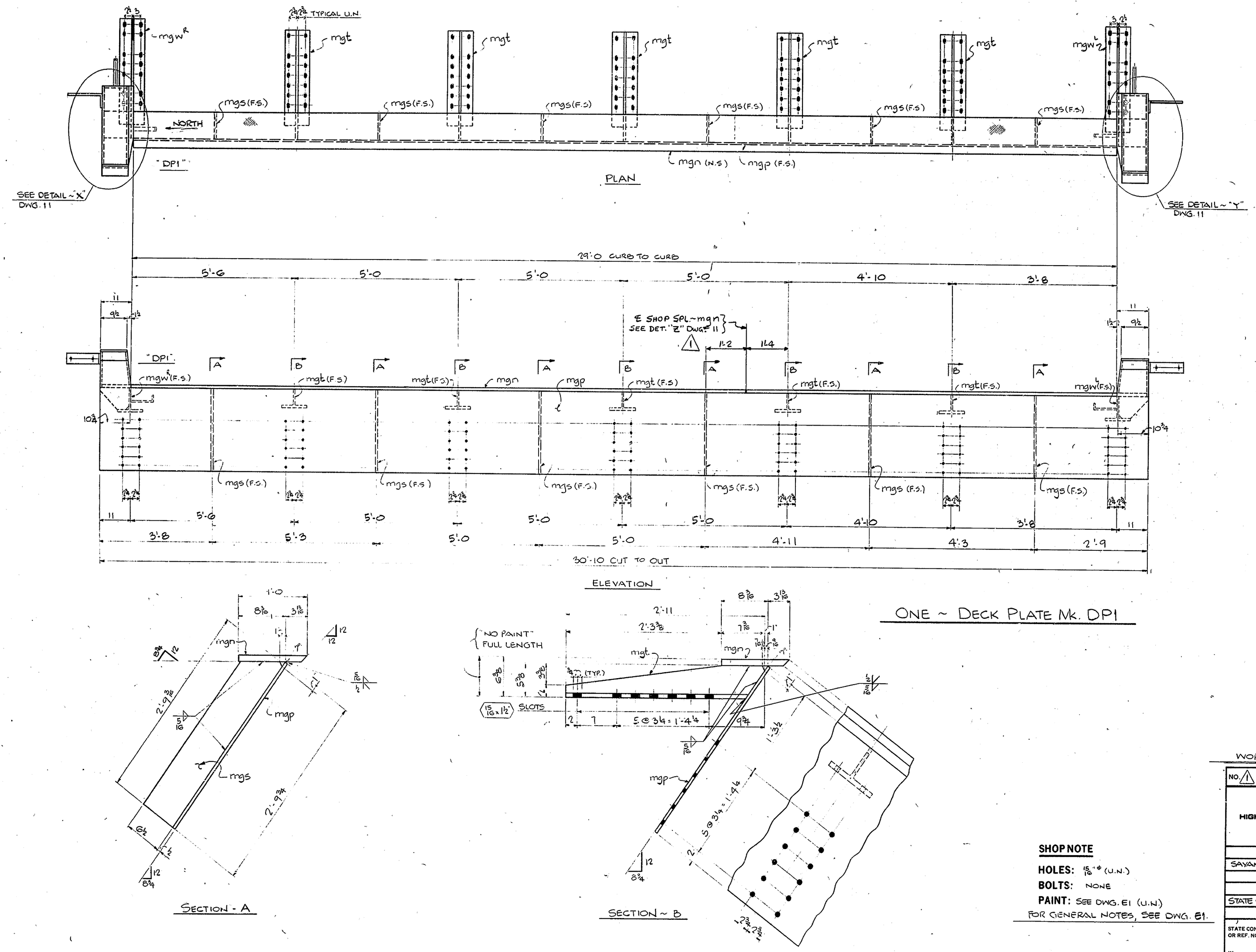

ONE ~ DECK PLATE Mk. DP1

FED. ROAD DIV. NO.	STATE	FED. AID PROJ. NO.

BILL OF MATERIAL

NO.	MARK	DESCRIPTION	LENGTH		REMARKS	ITEM	SHIP. WEIGHT
ONE	~ DECK PL. MK. DP1						5321.55
ONE	mgn	PL. 12 x 1"	30	9	CHECKERED PLATE	6/2	
ONE	mgp	PL. 33¾ x ½	30	10		6/3	
6	mgs	BAR 6½ x ⅜	2	9 3/16		6/4	
5	mgt	PL. W24 x 84	2	11		6/11	
1/1	mgw^R/L	PL. W24 x 84	3	2¼		6/11	
1/1	mgy^R/L	PL. 10 x ½	1	5½		6/5	
1/1	mha^R/L	PL. 12⅛ x ½	2	1½	BENT	6/6	
1/1	mhb^R/L	PL. 12½ x ½	2	1½		6/6	
2	mhc	PL. 9½ x ½	2	1⅝		6/7	
1/1	mhd^R/L	PL. 11 x ½	1	3½		6/9	
1/1	mhf^R/L	BAR 5½ x ½	0	10		6/8	
1/1	mhg^R/L	BAR 6¾ x ½	0	9⅛	BENT	6/8	
8	mhh	BAR 1½ x ⅜	1	2	BENT	6/10	
2	mhk	BAR 3½ x ½	1	3½	BENT	6/9	

SHOP NOTE

HOLES: 15/16" ⌀ (U.N.)
BOLTS: NONE
PAINT: SEE DWG. E1 (U.N.)
FOR GENERAL NOTES, SEE DWG. E1.

WORK THIS DWG. WITH DWG. No. 11

NO. 1	REVISION ADD SHOP SPLICE ~ mgn	DATE 2/4/83

HIGH STEEL STRUCTURES, INC.
1905 Old Philadelphia Pike
Lancaster, Pennsylvania 17603
Phone 717/299-5211
A Subsidiary of High Industries, Inc.

DECK PLATE
SAVANNAH ROAD BRIDGE OVER LEWES & REHOBOTH CANAL
ROUTE 18 - SAVANNAH ROAD
SUSSEX COUNTY, DELAWARE
STATE OF DELAWARE, DEPARTMENT OF TRANSPORTATION
DIVISION OF HIGHWAYS

STATE CONTRACT OR REF. NO. 80-023-02 CONTRACTOR GEORGE & LYNCH, INC.
IN CHARGE: CHRISTMAN MADE BY: KMA CHK.D. BY: WBW DATE: 5-13-82
CONTRACT NUMBER: D-81116 DRAWING NUMBER: 9 OF 21

CODE: 6800

FED. ROAD DIV. NO.	STATE	FED. AID PROJ. NO.

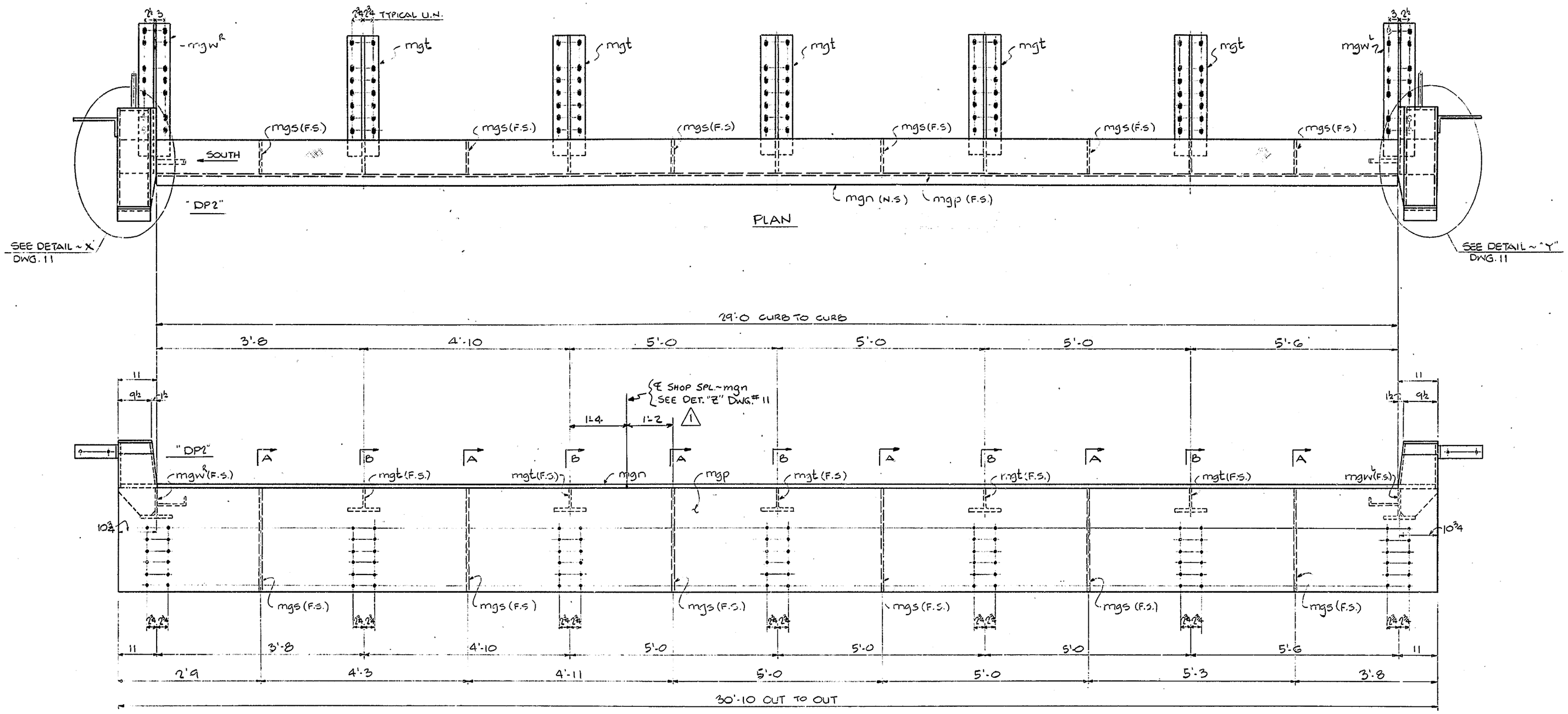

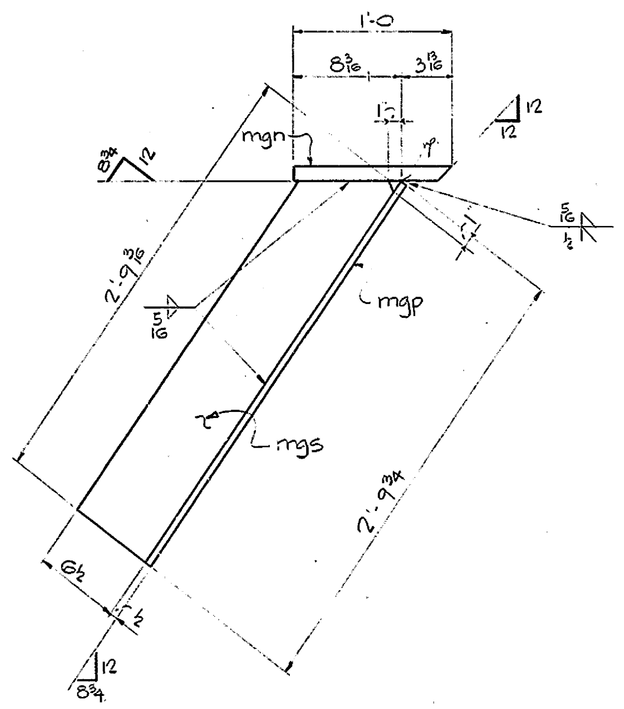

SECTION - A

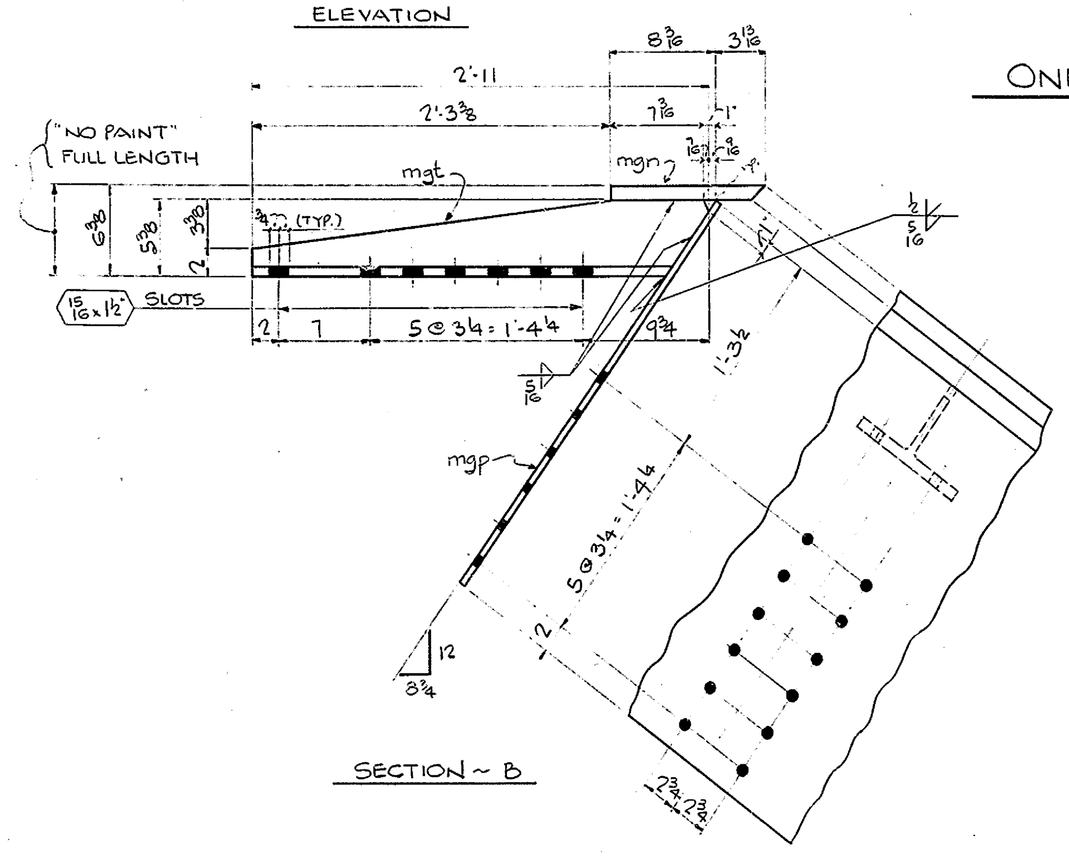

SECTION ~ B

ONE ~ DECK PLATE Mk. DP2

BILL OF MATERIAL

NO.	MARK	DESCRIPTION	LENGTH		REMARKS	ITEM	SHIP WEIGHT
ONE	~ DECK PL. Mk. DP2						5321.55
ONE	mgn	PL. 12 x 1"	30	9	CHECKERED PLATE	6/2	
ONE	mgp	PL. 33¾ x ¼	30	10		6/3	
6	mgs	BAR 6½ x ⅜	2	9 3/16		6/4	
5	mgt	PL. W24 x 84	2	11		6/11	
1/1	mgw R/L	PL. W24 x 84	3	2¼		6/11	
1/1	mgy R/L	PL. 10 x ½	1	5½		6/5	
1/1	mha R/L	PL. 12⅛ x ½	2	1½	BENT	6/6	
1/1	mhb R/L	PL. 12½ x ½	2	1½		6/6	
2	mhc	PL. 9½ x ½	2	1⅝		6/7	
1/1	mhd R/L	PL. 11 x ½	1	3½		6/9	
1/1	mhf R/L	BAR 5½ x ½	0	10		6/8	
1/1	mhg R/L	BAR 6¾ x ½	0	9⅞	BENT	6/8	
8	mhh	BAR 1½ x ⅜	1	2	BENT	6/10	
2	mhk	BAR 3½ x ½	1	3½	BENT	6/9	

WORK THIS DWG WITH DWG. Nº 11

SHOP NOTE

HOLES: 15/16 ⌀ (U.N.)

BOLTS: NONE

PAINT: SEE DWG. E1 (U.N.)

FOR GENERAL NOTES, SEE DWG E1.

NO. 1	REVISION ADD SHOP SPL. ~ mgn	DATE 2-4-83

HIGH STEEL STRUCTURES, INC.
1905 Old Philadelphia Pike
Lancaster, Pennsylvania 17603
Phone 717/299-5211
A Subsidiary of High Industries Inc

DECK PLATE
SAVANNAH ROAD BRIDGE OVER LEWES & REHOBOTH CANAL
ROUTE 18 - SAVANNAH ROAD
SUSSEX COUNTY, DELAWARE
STATE OF DELAWARE, DEPARTMENT OF TRANSPORTATION
DIVISION OF HIGHWAYS

STATE CONTRACT OR REF. NO. 80-023-02 CONTRACTOR GEORGE & LYNCH, INC.

IN CHARGE: CHRISTMAN MADE BY: KMA CHK'D. BY: WBW DATE: 5-13-82

CONTRACT NUMBER: D-81116 DRAWING NUMBER: 10 OF 21

CODE: 6800

AF 226830

POLYTRACE 036

FED. ROAD DIV. NO.	STATE	FED. AID PROJ. NO.

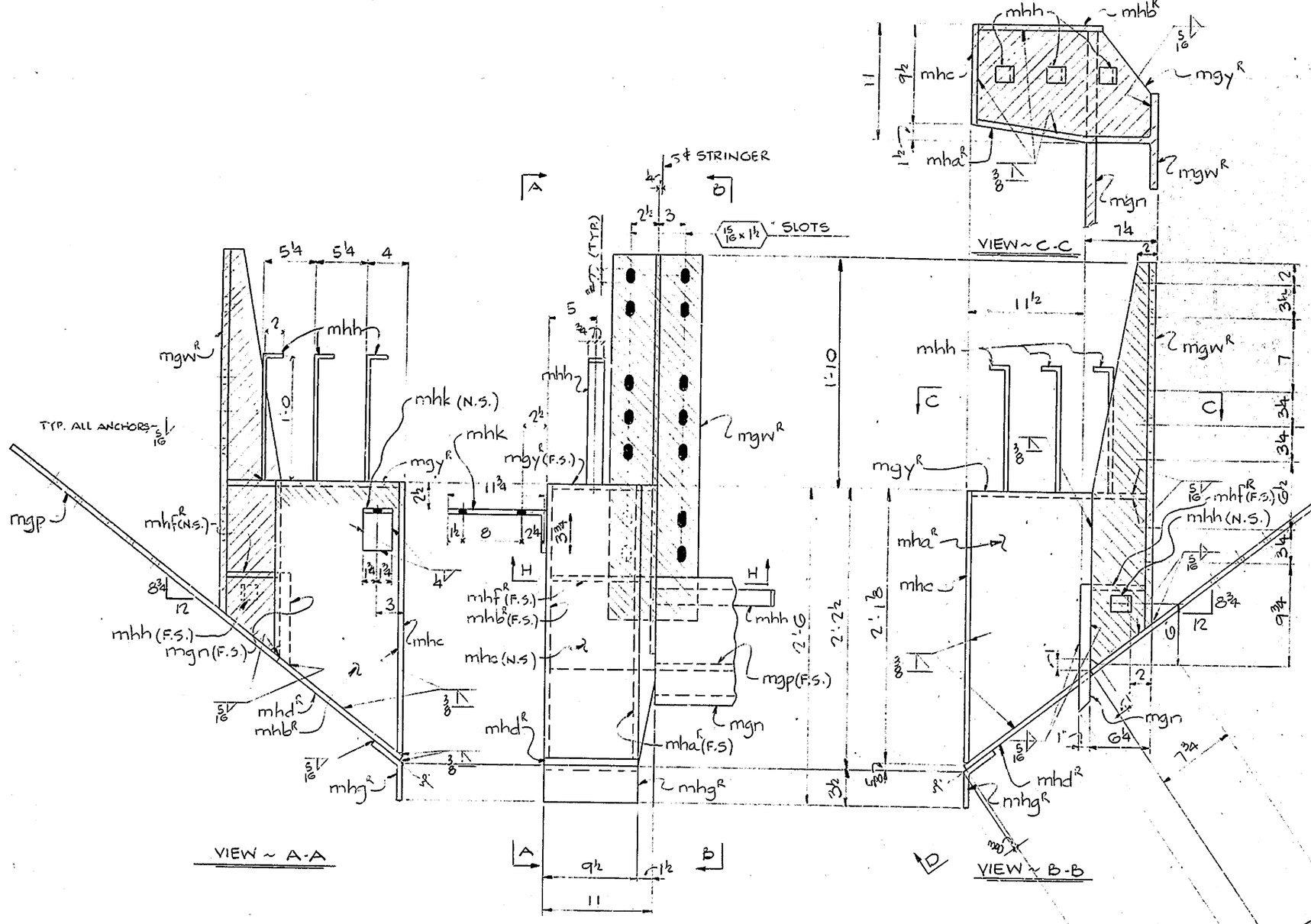

(AS SHOWN) DETAIL ~ "X"

(OPP. HAND) DETAIL ~ "Y"

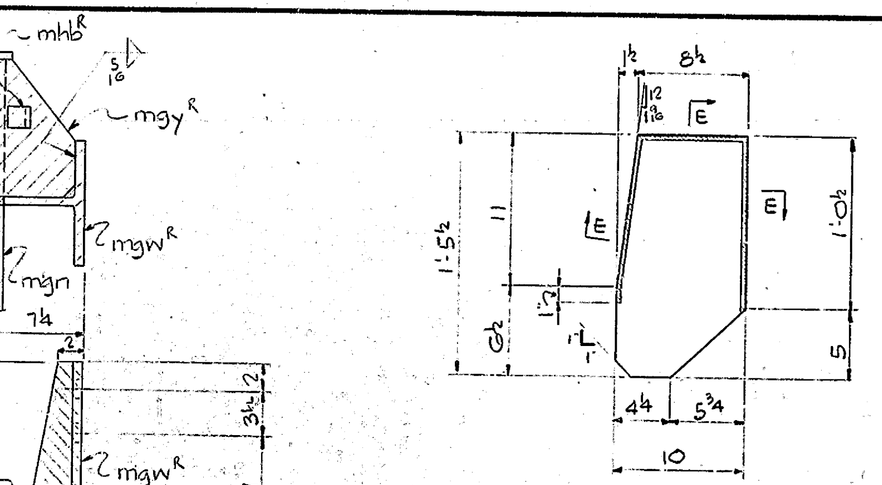

DETAIL OF PLATE ~ mgy R

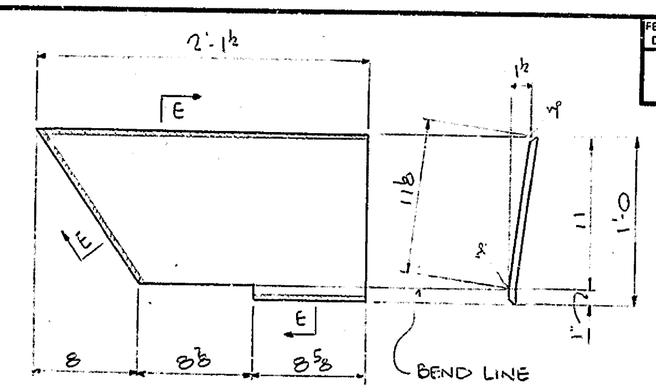

DETAIL OF PLATE ~ mha R (BENT)

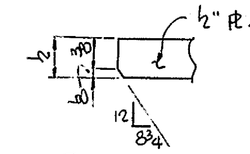

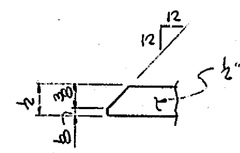

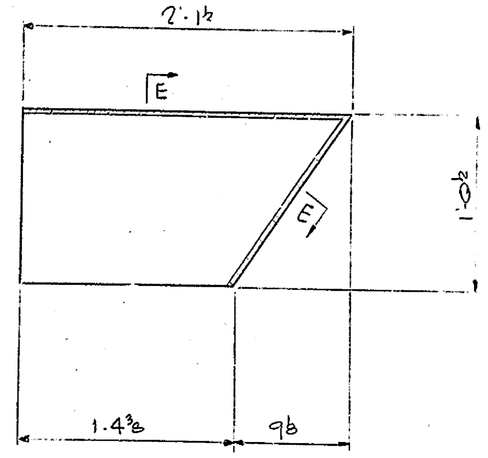

DETAIL OF PLATE ~ mhb R

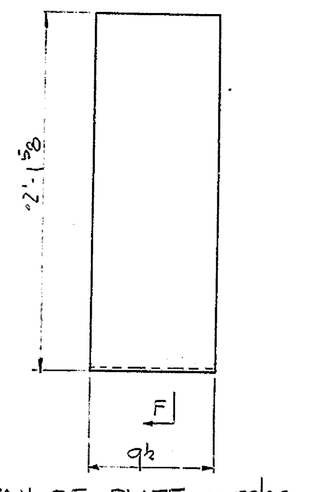

DETAIL OF PLATE ~ mhc

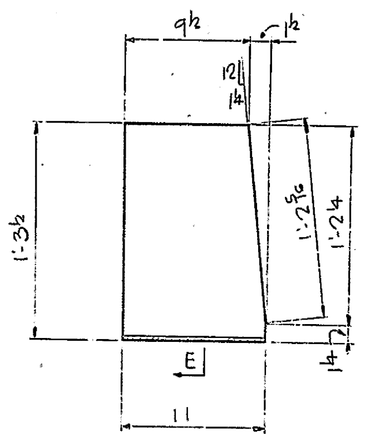

DETAIL OF PLATE ~ mhd R

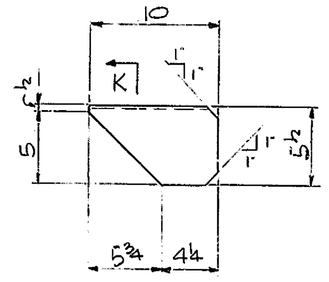

DETAIL OF PLATE ~ mhf R

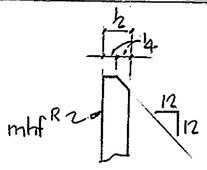

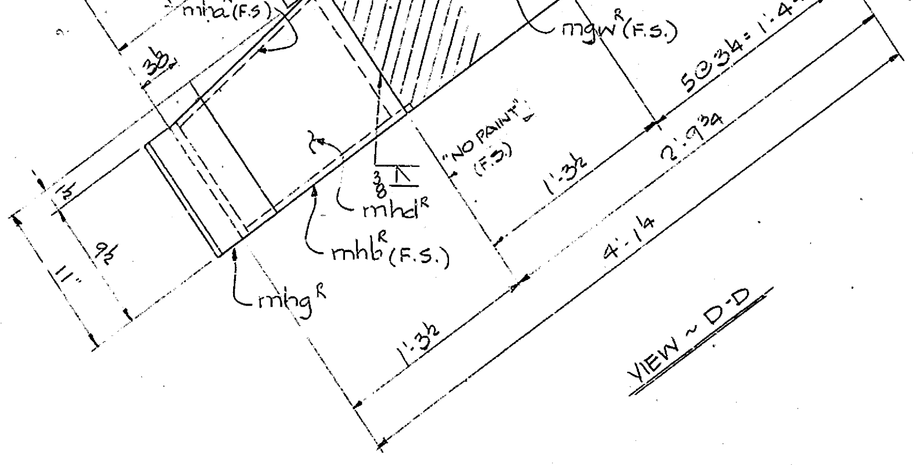

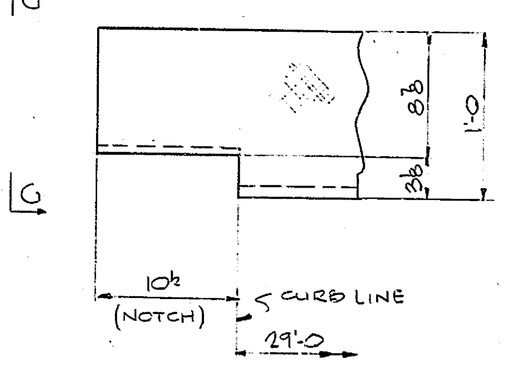

DETAIL OF CHECKERED PLATE ~ mgn

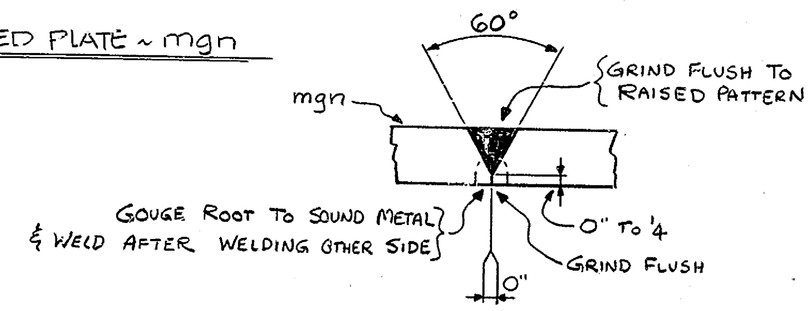

DETAIL "Z"
(B-L2c-S)
(ULTRASONICALLY TESTED 100%)
△1

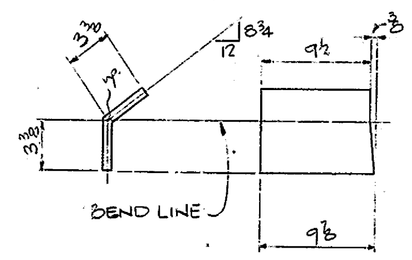

DETAIL OF PLATE ~ mhg R (BENT)

SHOP NOTE

HOLES: 15/16" ø U.N.

BOLTS: NONE

PAINT: SEE DWG. E1 (U.N.)

INDICATES "NO PAINT"

FOR GENERAL NOTES, SEE DWG. E1.

WORK THIS DWG WITH DWGS. 9 & 10.

NO.	REVISION	DATE
△1	ADD SHOP SPLICE DETAIL "Z" FOR mgn	2/4/83

HIGH STEEL STRUCTURES, INC.
1905 Old Philadelphia Pike
Lancaster, Pennsylvania 17602
Phone 717/299-5211
A Subsidiary of High Industries, Inc

DECK PLATE SECTIONS
SAVANNAH ROAD BRIDGE OVER LEWES & REHOBOTH CANAL
ROUTE 18 - SAVANNAH ROAD
SUSSEX COUNTY, DELAWARE
STATE OF DELAWARE, DEPARTMENT OF TRANSPORTATION
DIVISION OF HIGHWAYS

STATE CONTRACT OR REF. NO. 80-023-02 CONTRACTOR GEORGE E. LYNCH, INC.

IN CHARGE: CHRISTMAN MADE BY: EMA CHK.D. BY: WBW DATE: 5-13-82

CONTRACT NUMBER: D-81116 DRAWING NUMBER: 11 OF 21

AF 226930

POLYTRACE 036

FED. ROAD DIV. NO.	STATE	FED. AID PROJ. NO.

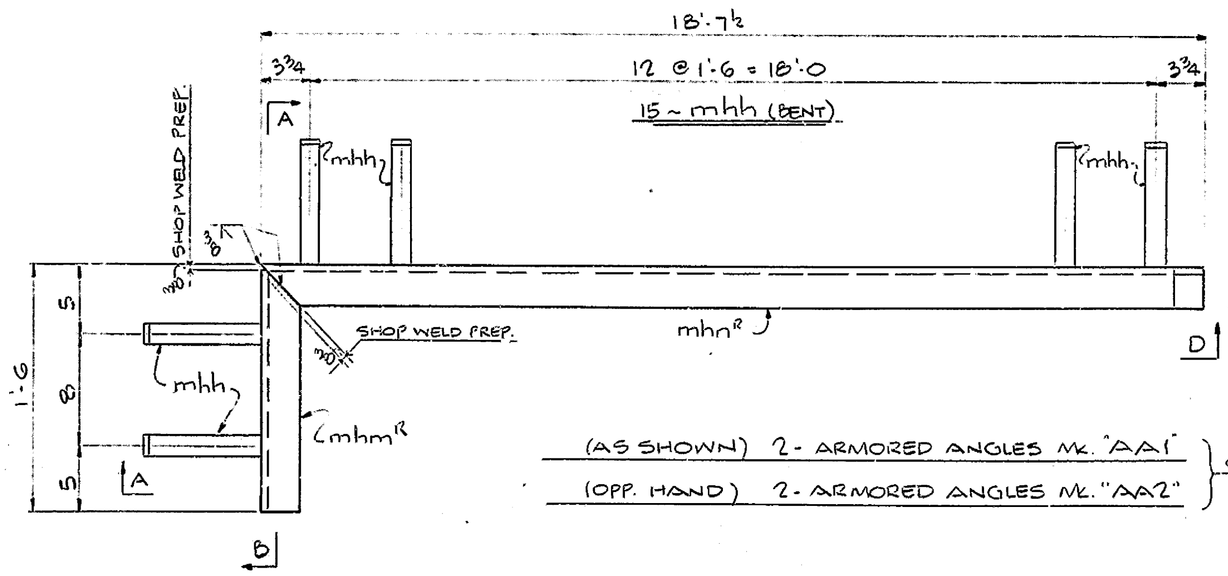

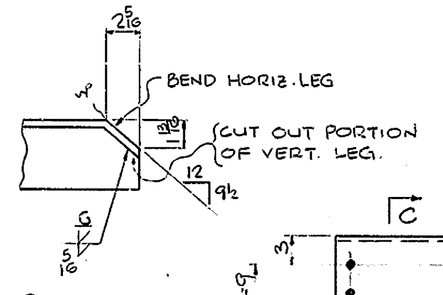

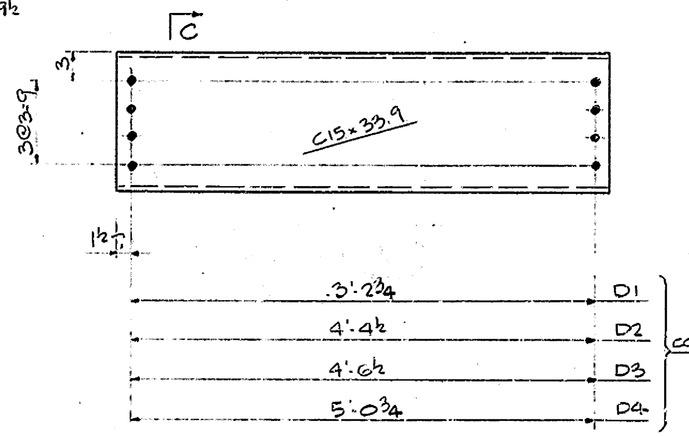

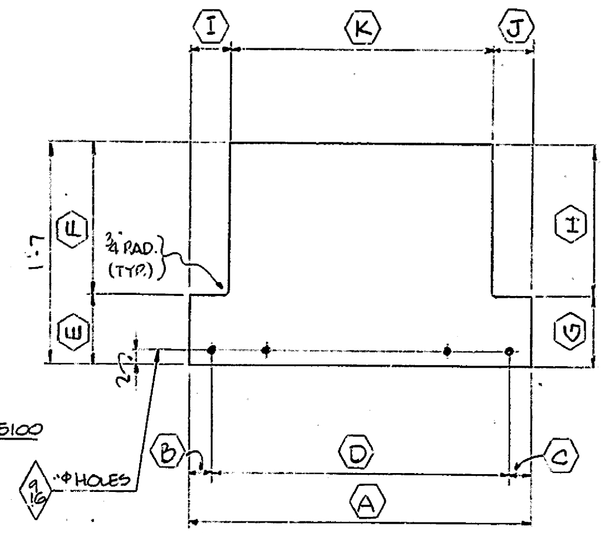

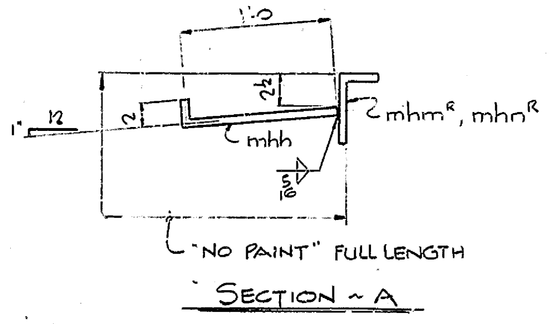

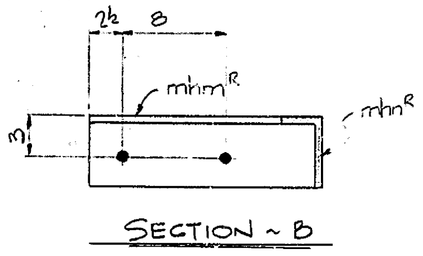

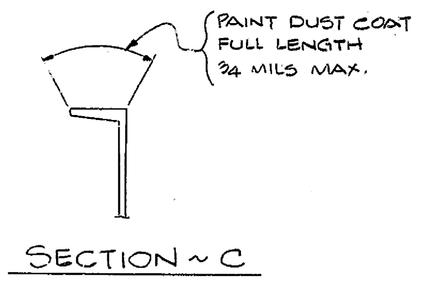

Mk.	A	B	C	D	E	F	G	H	I	J	K
MS11	3'-7¾	3⅜	3⅜	3@1'-0=3'-0	6⅜	1'-0⅝	8⅜	10⅝	4¾	4⅝	1'-10⅜
MS12	4'-4½	4¾	4¾	4@1'-0=4'-0	6⅜	1'-0⅝	6⅜	10⅝	4¾	4¾	4'-0
MS13	4'-11½	5¾	5¾	4@1'-0=4'-0	6⅜	1'-0⅝	6⅜	10⅝	4¾	4¾	4'-2
MS14	5'-5¾	⅞	2⅜	5@1'-0=5'-0	8⅜	10⅝	6⅜	10⅝	4⅝	4¾	4'-8⅜

CODE: 6800

GALV. A153 (HOT DIP)

BILL OF MATERIAL

NO.	MARK	DESCRIPTION	LENGTH		REMARKS	ITEM	SHIP WEIGHT
2 ~ ARMORED ANGLES MK. "AA1"							290.65
30	mhh	BAR 1½ x ⅜	1	2	BENT	6/16	
2	mhm	L 5 x 3 x ½	1	5⅝		6/12	
2	mhn	L 5 x 3 x ½	18	7½		6/12	
2 ~ ARMORED ANGLES MK. "AA2"							290.65
30	mhh					6/10	
2	mhm					6/12	
2	mhn					6/12	
10	MP1	PL. 10 x 1 3/4	1	6		6/22	89.33
4	MP2	PL. 10 x 3¾	1	6		6/23	191.92
10	ZSP1	PL. 9 x (11⅛ x ⅝)	1	0		6/24	30.63
14	ZSP2	PL. 6 x (11⅛ x 3½)	1	5		6/25	30.63
4	ZSP3	PL. 9 x (3⅛ x 2⅝)	1	0		6/26	91.89
12	CD5	11 x No. 8	1	2	COTTON DUCK		—
30	CD1	11 x No. 8	1	12	do.		—
42	CD2	12 x No. 8	1	8	d.o.		—
12	CD3	26 x No. 8	2	4	d.o.		—
12	CD4	32 x No. 8	3	0	d.o.		—
20 ~ ANCHOR BOLTS MK. AB3							54.54
20	mkf	1½" ø ROD	8	9	A36	6/27	
20	mkh	BAR 4 x ⅜	0	4	A36	6/31	
8 ~ ANCHOR BOLTS MK. AB4							55.65
8	mkg	1½" ø ROD	8	11	A36	6/28	
8	mkh					6/31	
20	AB5	1¼" ø ROD	2	0	A36	6/29	8.39
8	AB6	1¼" ø ROD	2	2	A36	6/30	9.08
4	D1	C15 x 33.9	3	5¾		6/15	117.99
4	D2	C15 x 33.9	4	7½		6/16	156.79
12	D3	C15 x 33.9	4	9½		6/17	162.44
4	D4	C15 x 33.9	5	3¾		6/18	180.81
2	MS11	PL. 19 x ⅜	3	7¾		6/19	88.43
2	MS12	PL. 19 x ⅜	4	9½		6/19	116.23
6	MS13	PL. 19 x ⅜	4	11½		6/19	120.27
2	MS14	PL. 19 x ⅜	5	5¾		6/19	132.91

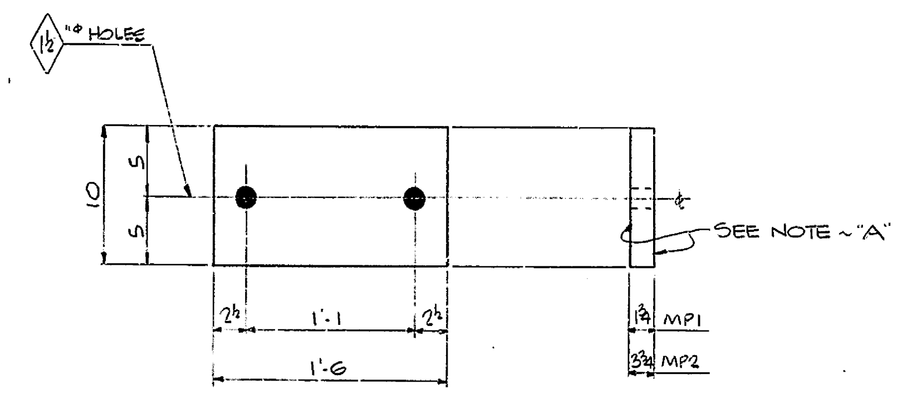

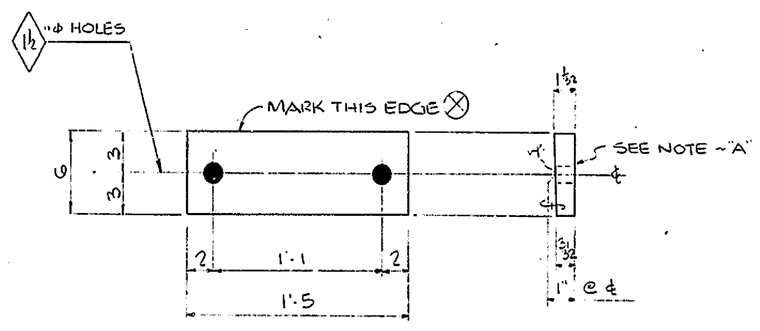

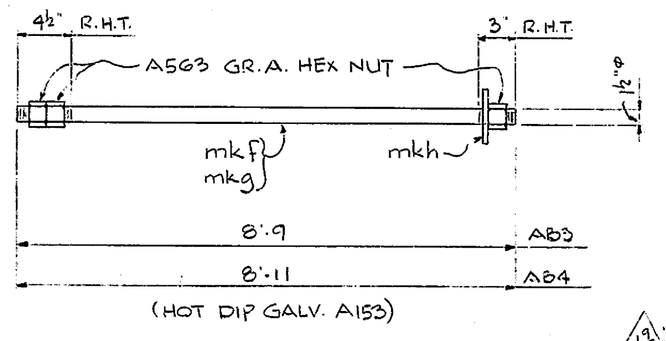

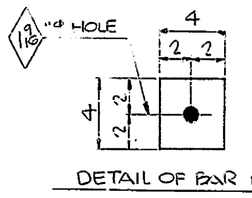

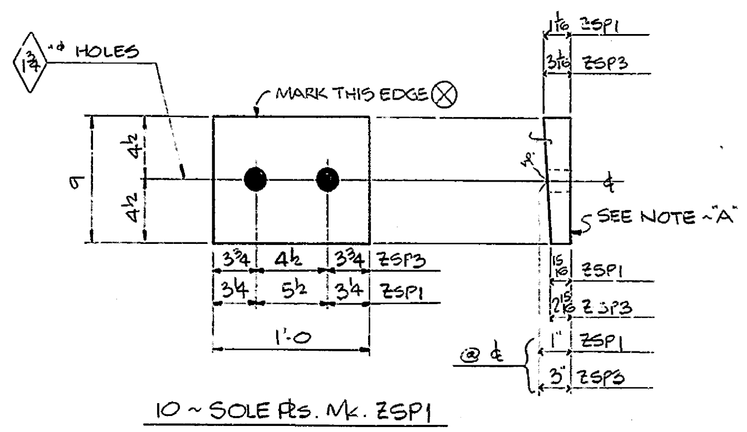

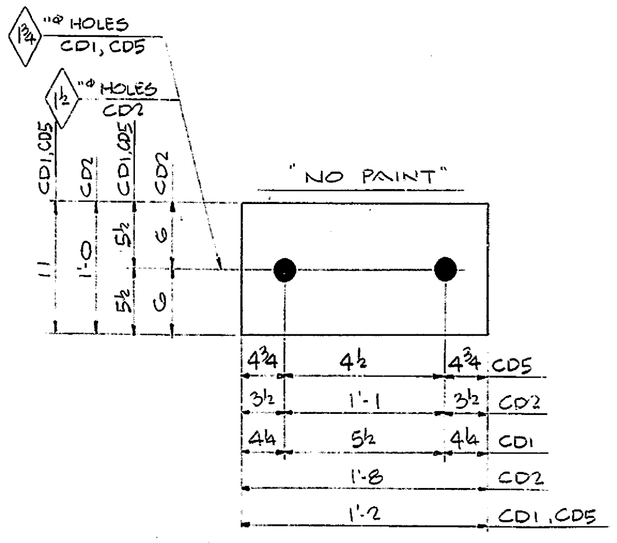

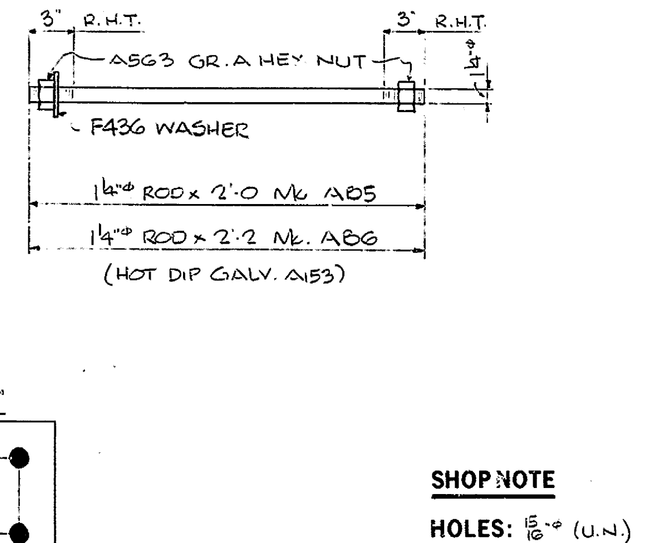

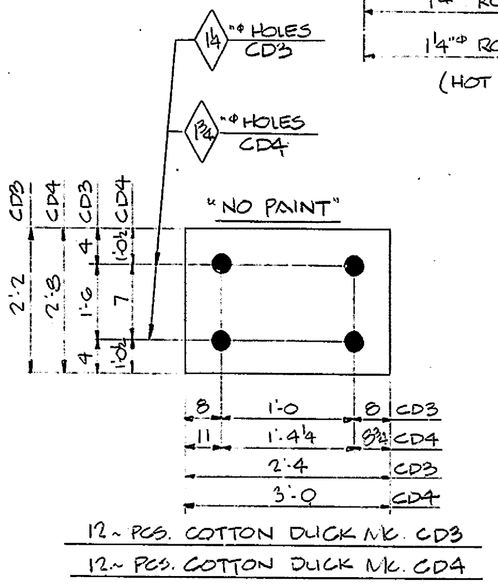

NOTE:
SOLE PLS. MK. ZSP1, ZSP2 & ZSP3 ARE TO BE PAINTED (U.N.) AFTER BEING WELDED TO THE STRINGER IN THE SHOP.

NOTE ~ "A":
SURFACES INDICATED ARE TO BE STRAIGHT AND TRUE; FINISH IF NECESSARY.

SHOP NOTE

HOLES: 15/16" ø (U.N.)
BOLTS: NONE
PAINT: SEE DWG E1 (U.N.)

FOR GENERAL NOTES, SEE DWG. E1.

CODE: 6600 U.N.

NO.	REVISION	DATE

HIGH STEEL STRUCTURES, INC.
1906 Old Philadelphia Pike
Lancaster, Pennsylvania 17603
Phone 717/299-5211
A Subsidiary of High Industries Inc

MISC. PLS, ARMORED L's, BEARING DETAILS & DIAPHS.
SAVANNAH ROAD BRIDGE OVER LEWES & REHOBOTH CANAL
ROUTE 18 ~ SAVANNAH ROAD
SUSSEX COUNTY, DELAWARE
STATE OF DELAWARE, DEPARTMENT OF TRANSPORTATION
DIVISION OF HIGHWAYS

STATE CONTRACT OR REF. NO. 80-023-02 CONTRACTOR GEORGE & LYNCH, INC.
IN CHARGE: CHRISTMAN MADE BY: KMA CHK.D BY: WBW DATE: 5-13-82
CONTRACT NUMBER: D-8111G DRAWING NUMBER: 12 OF 21

AF 226818
POLYTRACE 038

FED. ROAD DIV. NO.	STATE	FED. AID PROJ. NO.

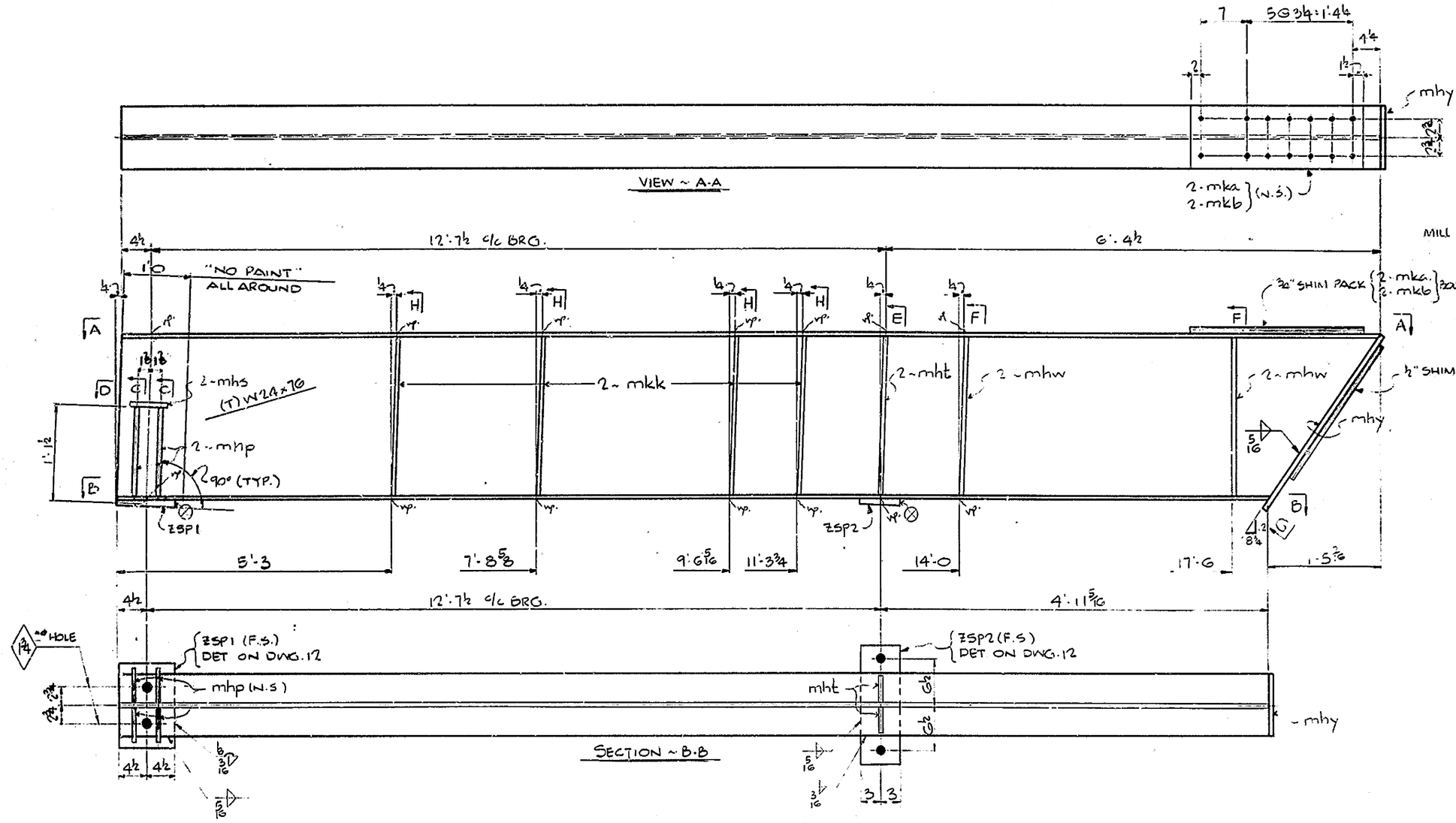

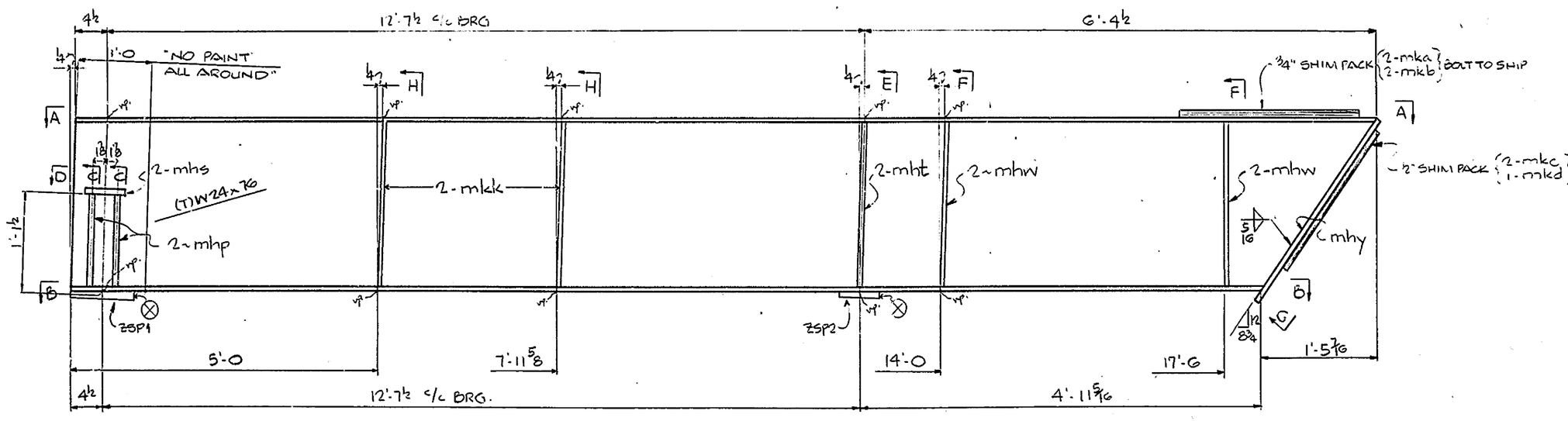

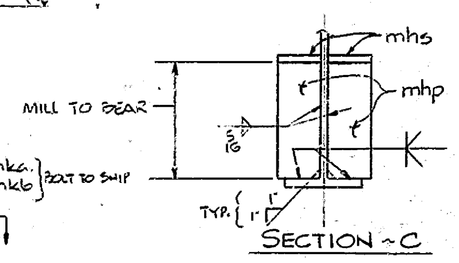

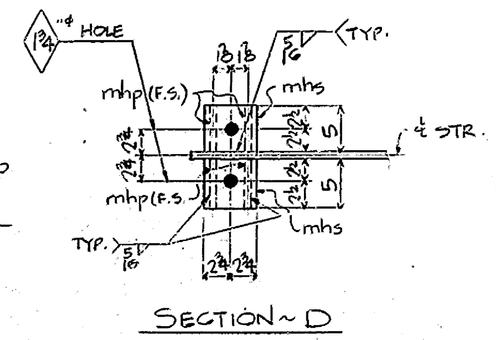

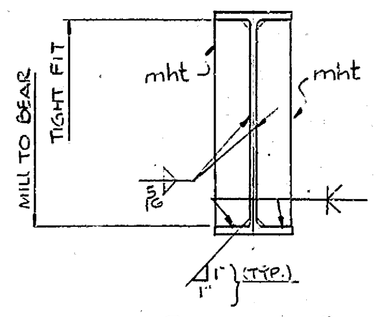

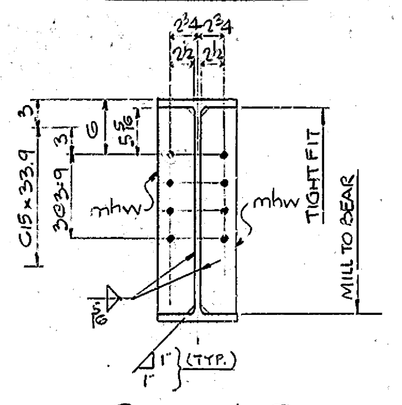

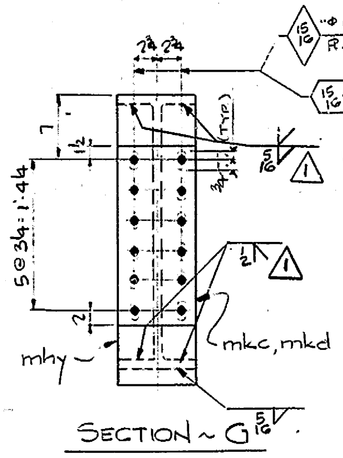

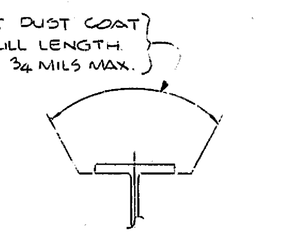

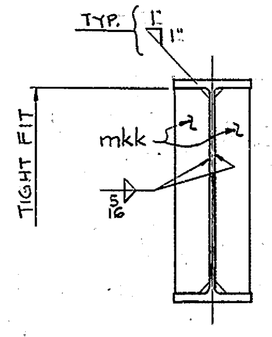

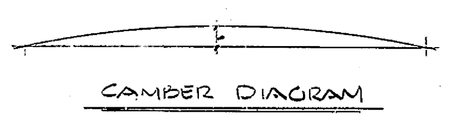

BILL OF MATERIAL

NO.	MARK	DESCRIPTION	LENGTH	REMARKS	ITEM	SHIP WEIGHT LB.
ONE ~	STRINGER EA. MK.	S8, S12, S15 & S19				187174
4		W24 x 76	19 4 3/8	(T)	1/2	
16	mhp	BAR 5 x 3/4	1 0 13/16		1/4	
8	mhs	BAR 5 x 3/4	0 5½		1/6	
8	mht	BAR 4 x ½	1 10 9/16		1/8	
16	mhw	BAR 4 x ½	1 10 9/16		1/8	
4	mhy	PL. 9 x 3/4	2 7		1/7	
8	mka	PL. 9 x 14	2 2 3/4	SHIMS	1/12	
8	mkb	PL. 9 x 10GA.	2 2 3/4	SHIMS	1/13	
8	mkc	PL. 9 x 10GA.	1 7 3/4	SHIMS	1/13	
4	mkd	PL. 9 x 14	1 7 3/4	SHIMS	1/12	
24	mkk	BAR 6 x 3/8	1 10 9/16		1/10	
4	ZSP1	SOLE PL. }	DET. ON DWG. 12			
4	ZSP2	SOLE PL. }				

SHOP NOTE

HOLES: ⅞" ø (U.N.)
BOLTS: NONE
PAINT: SEE DWG. E1 (U.N.)

FOR GENERAL NOTES, SEE DWG. E1.

NO.	REVISION	DATE
1	WELD CHANGE - mhy	2-18-83

HIGH STEEL STRUCTURES, INC.
1905 Old Philadelphia Pike
Lancaster, Pennsylvania 17602
Phone 717-299-5211
A Subsidiary of High Industries Inc

STRINGERS
SAVANNAH ROAD BRIDGE OVER LEWES & REHOBOTH CANAL
ROUTE 18 - SAVANNAH ROAD
SUSSEX COUNTY, DELAWARE
STATE OF DELAWARE, DEPARTMENT OF TRANSPORTATION
DIVISION OF HIGHWAYS

STATE CONTRACT OR REF. NO. 80-023-02 CONTRACTOR GEORGE E. LYNCH, INC.
IN CHARGE: CHRISTMAN MADE BY: LMA CHK.D BY: WBW DATE 5-13-82
CONTRACT NUMBER: D-8116 DRAWING NUMBER: 13 OF 21

CODE : 5000

AP 226838
© POLYTRACE 036

FED. ROAD DIV. NO.	STATE	FED. AID PROJ. NO.

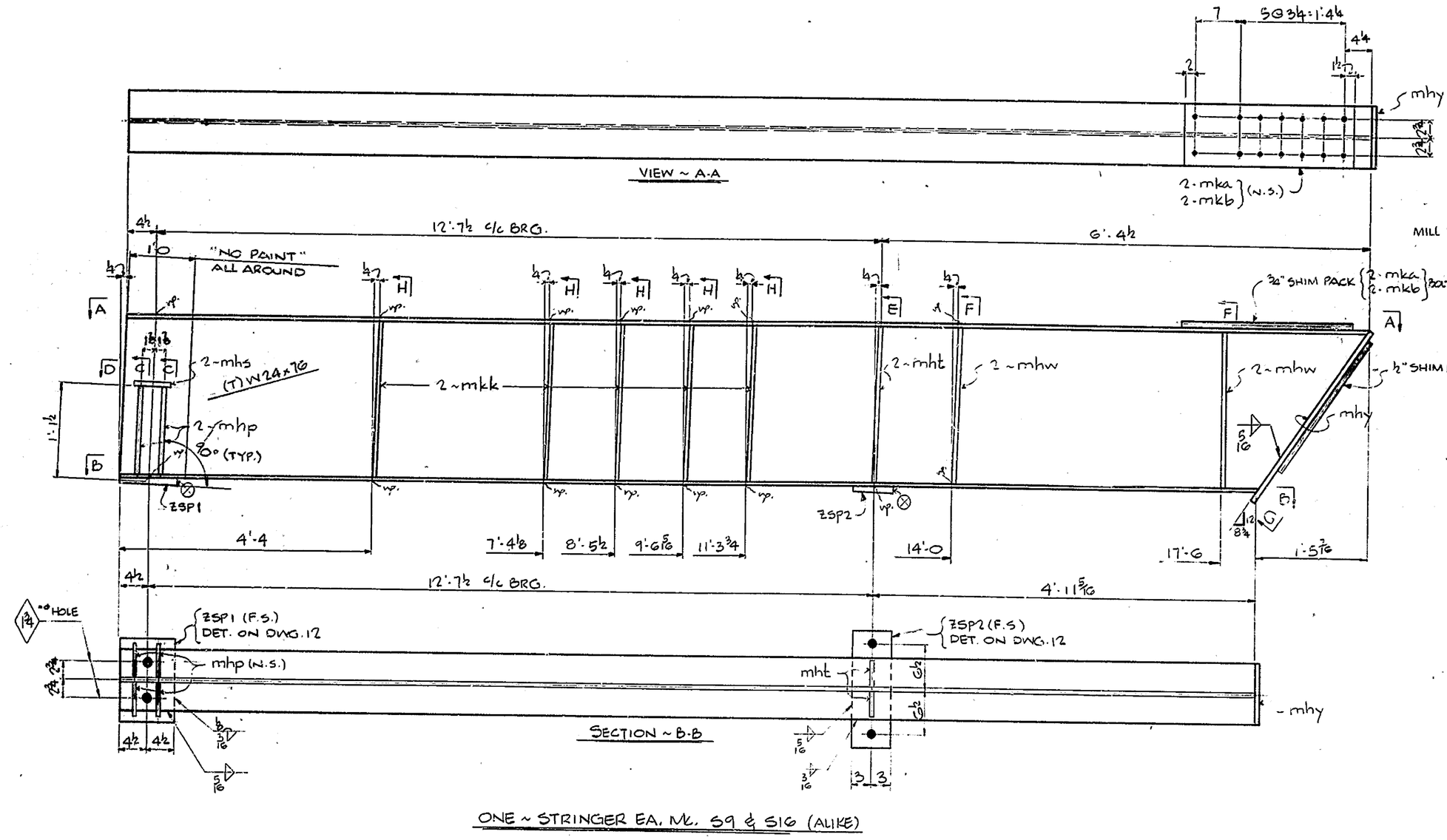

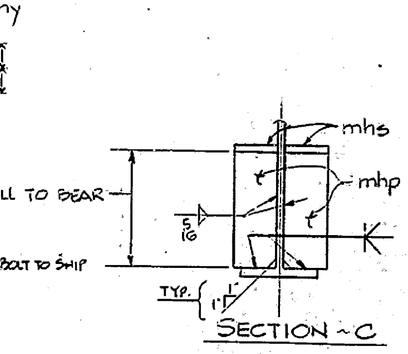

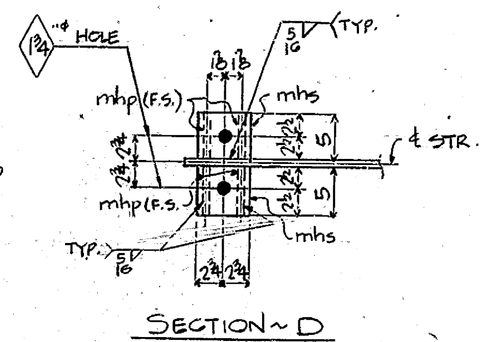

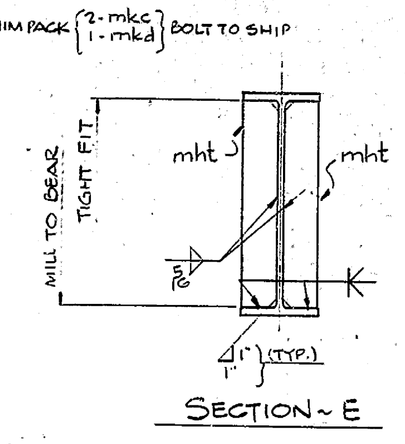

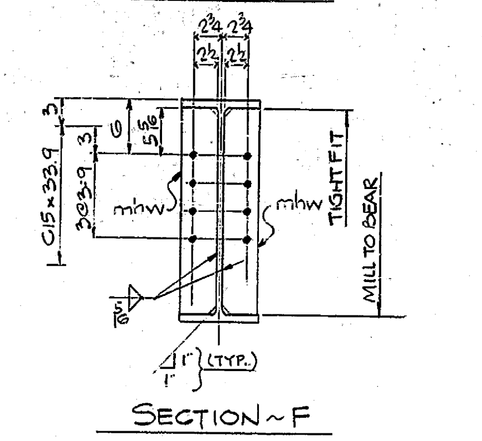

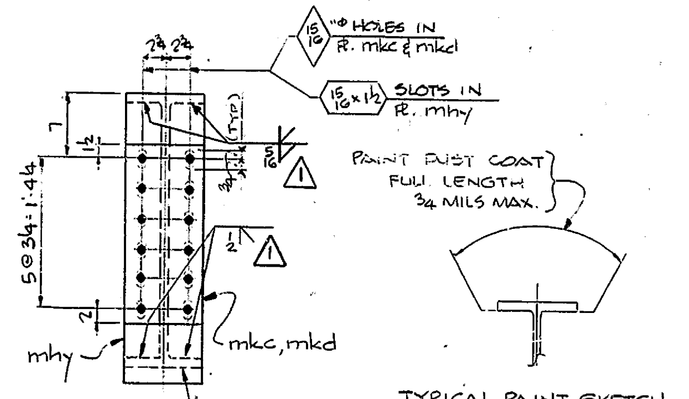

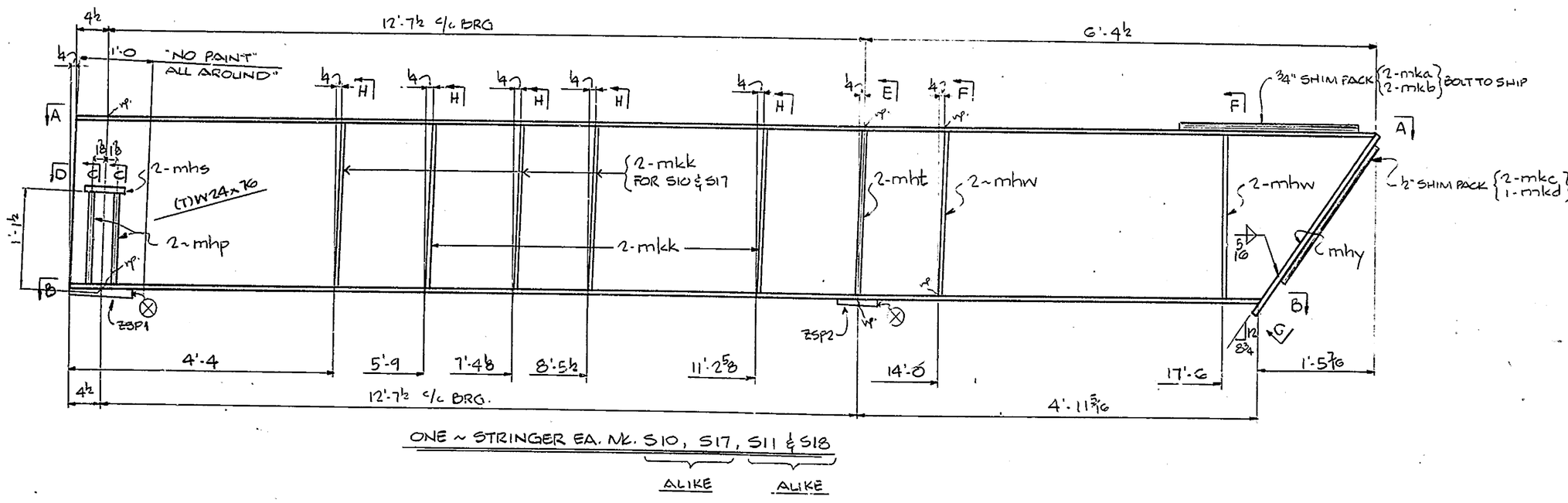

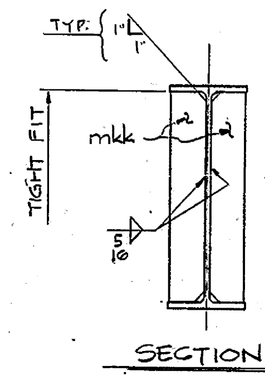

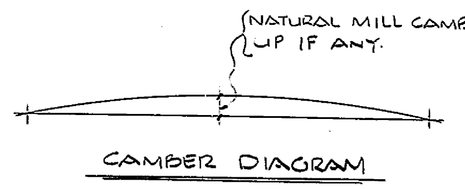

BILL OF MATERIAL

NO.	MARK	DESCRIPTION	LENGTH		REMARKS	ITEM	SHIP WEIGHT EA.
ONE ~	STRINGER EA. MK.	S9, S10, S11, S16, S17 & S18					1871.79
6		W24 x 76	19	4 3/4	(T)	1/2	
24	mhp	BAR 5 x 3/4	1	0 1/16		7/4	
12	mhs	BAR 5 x 3/4	0	5½		7/6	
12	mht	BAR 9 x ½	1	10 7/16		7/8	
24	mhw	BAR 9 x ½	1	10 7/16		7/8	
6	mhy	PL 9 x 3/4	2	7		7/7	
12	mka	PL 9 x ¼	2	2 3/4	SHIMS	7/12	
12	mkb	PL 9 x 10GA.	2	2 3/4	SHIMS	7/13	
12	mkc	PL 9 x 10GA.	1	7 3/4	SHIMS	7/13	
6	mkd	PL 9 x ¼	1	7 3/4	SHIMS	7/12	
48	mkk	BAR 9 x 3/8	1	10 7/16		7/10	
6	ZSP1	SOLE PLS.	DET. ON DWG. 12				
6	ZSP2	SOLE PLS.					

SHOP NOTE

HOLES: 15/16" ø (U.N.)
BOLTS: NONE
PAINT: SEE DWG. E1 (U.N.)

FOR GENERAL NOTES, SEE DWG. E1.

NO.	REVISION	DATE
1	WELD CHANGE - mhy	2-18-83

HIGH STEEL STRUCTURES, INC.
1905 Old Philadelphia Pike
Lancaster, Pennsylvania 17602
Phone 717/299-5211
A Subsidiary of High Industries, Inc

STRINGERS
SAVANNAH ROAD BRIDGE OVER LEWES & REHOBOTH CANAL
ROUTE 18 - SAVANNAH ROAD
SUSSEX COUNTY, DELAWARE
STATE OF DELAWARE, DEPARTMENT OF TRANSPORTATION
DIVISION OF HIGHWAYS

STATE CONTRACT OR REF. NO. 80-023-02 CONTRACTOR GEORGE & LYNCH, INC.
IN CHARGE: CHRISTMAN MADE BY: KMA CHK.D. BY: WBW DATE: 5-13-82
CONTRACT NUMBER: D-8116 DRAWING NUMBER: 14 OF 21

CODE : 5000

© POLYTRACE 038

FED. ROAD DIV. NO.	STATE	FED. AID PROJ. NO.

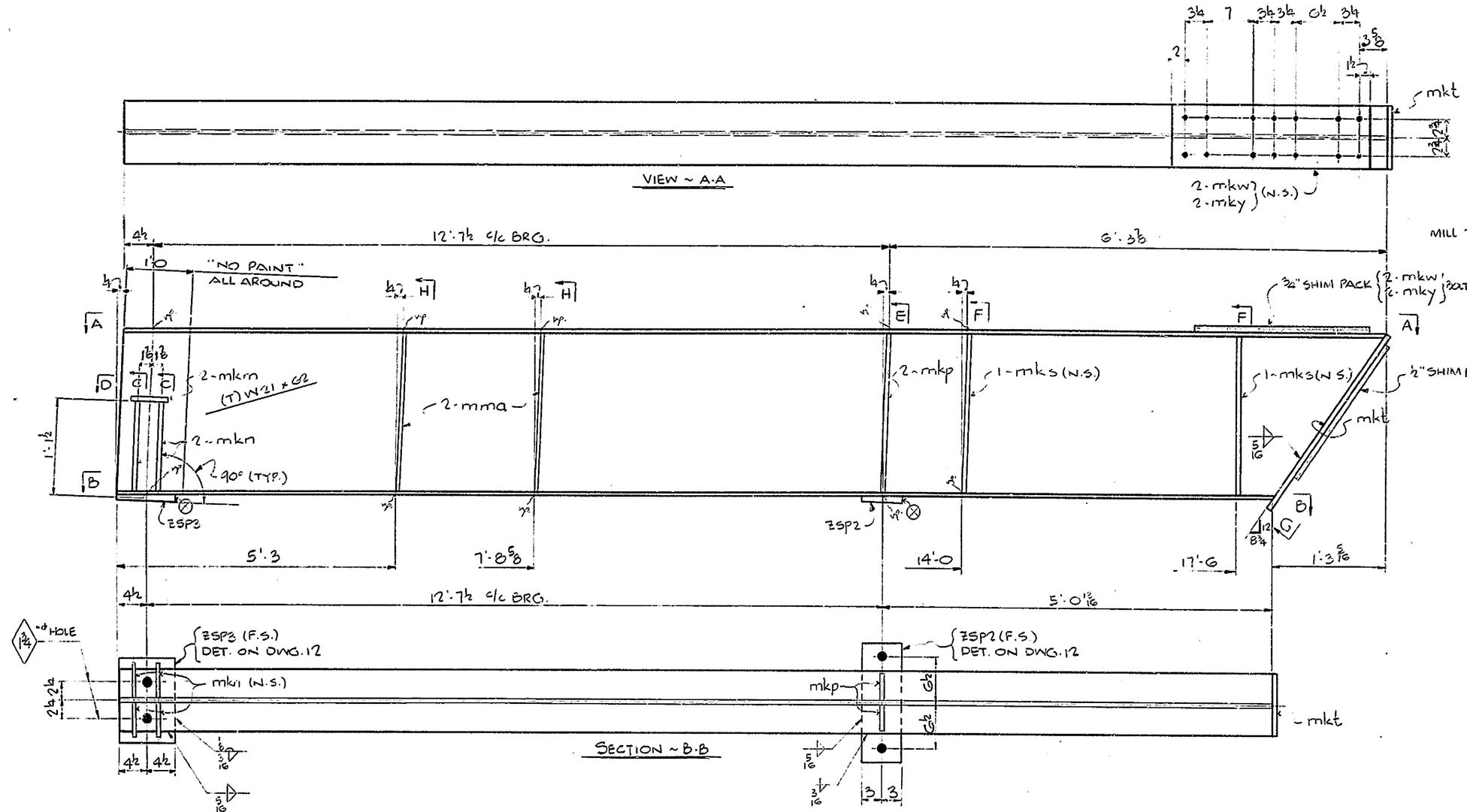

(AS SHOWN) ONE ~ STRINGER Mk. S7
(OPP. HAND) ONE ~ STRINGER Mk. S14

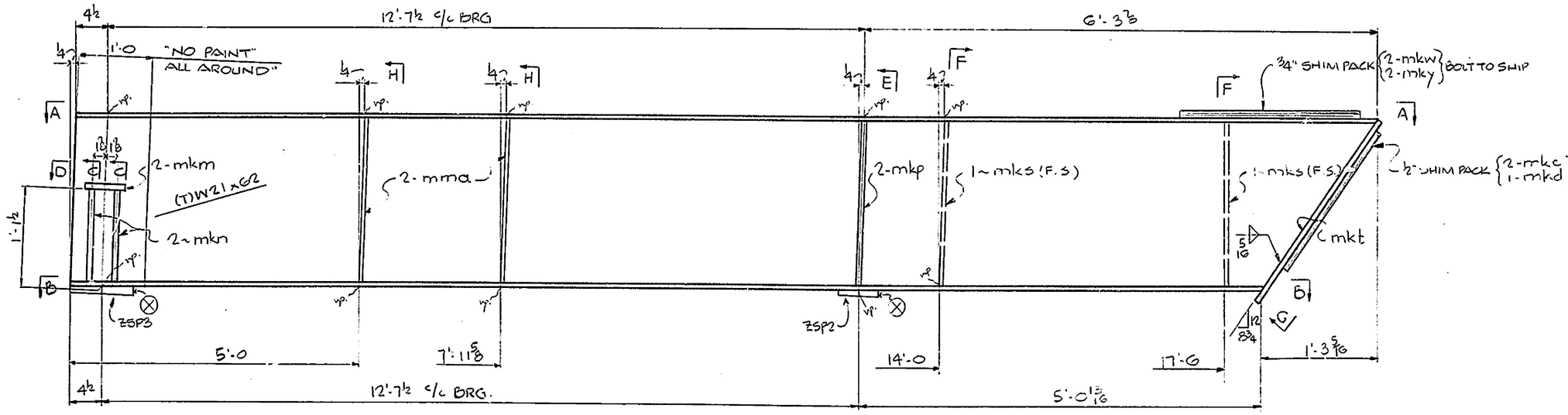

(AS SHOWN) ONE ~ STRINGER Mk. S13
(OPP. HAND) ONE ~ STRINGER Mk. S20

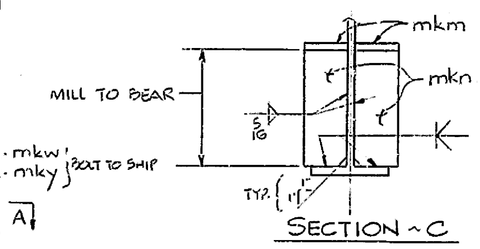

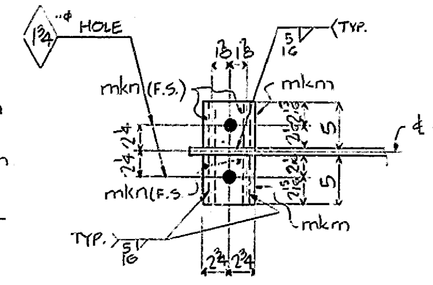

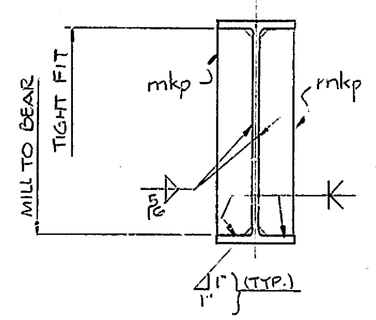

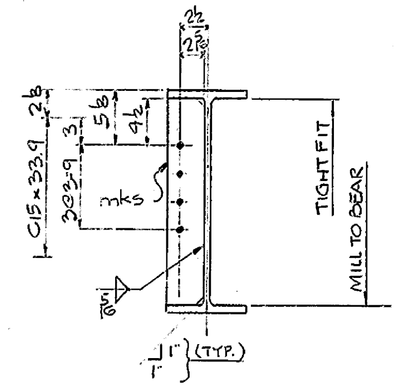

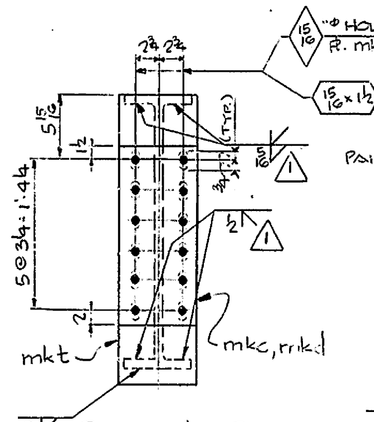

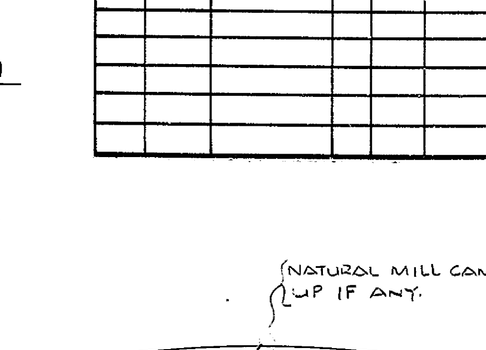

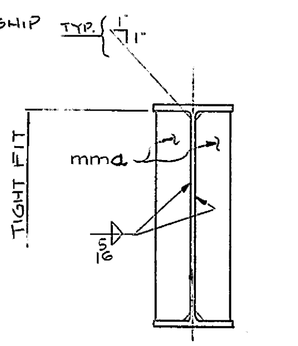

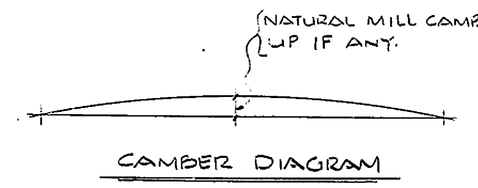

BILL OF MATERIAL

NO.	MARK	DESCRIPTION	LENGTH	REMARKS	ITEM	SHIP WEIGHT
ONE-STRINGER EA. Mk. S7, S13, S14 & S20						1600.0#
4		W 21 x 62	19	4⅛ (T)		7/3
8	mkm	BAR 5 x ¾	0	5½		7/6
16	mkn	BAR 5 x ¾	1	0⅛		7/5
8	mkp	BAR 4 x ½	1	7¾		7/9
8	mks	BAR 4 x ½	1	7¾		7/9
4	mkt	R. 9 x ⅜	2	3½		7/7
8	mkw	R. 8½ x ½	2	6	SHIMS	7/16
8	mky	R. 8½ x 10GA	2	6	SHIMS	7/15
8	mkc	R. 9 x 10GA	1	7¾	SHIMS	7/13
4	mkd	R. 9 x ½	1	7¾	SHIMS	7/12
16	mma	BAR 4 x ⅜	1	7¾		7/11
4	ZSP2	SOLE PLS.				
4	ZSP3	SOLE PLS. } DET. ON DWG. 12				

SHOP NOTE

HOLES: 15/16" ⌀ (U.N.)
BOLTS: NONE
PAINT: SEE DWG. E1 (U.N.)

FOR GENERAL NOTES, SEE DWG. E1.

NO.	REVISION	DATE
1	WELD CHANGE ~ mkt	2-18-83

HIGH STEEL STRUCTURES, INC.
1905 Old Philadelphia Pike
Lancaster, Pennsylvania 17603
Phone 717/299-5211
A Subsidiary of High Industries Inc

STRINGERS
SAVANNAH ROAD BRIDGE OVER LEWES & REHOBOTH CANAL
ROUTE 18 - SAVANNAH ROAD
SUSSEX COUNTY, DELAWARE
STATE OF DELAWARE, DEPARTMENT OF TRANSPORTATION
DIVISION OF HIGHWAYS

STATE CONTRACT OR REF. NO. 80-023-02 CONTRACTOR GEORGE & LYNCH, INC.

IN CHARGE: CHRISTMAN MADE BY: KMA CHK.D. BY: WBW DATE: 5-13-82

CONTRACT NUMBER: D-81116 DRAWING NUMBER: 15 OF 21

CODE : 5000

AF 226830
POLYTRACE® 038

FED. ROAD DIV. NO.	STATE	FED AID PROJ. NO.

BILL OF MATERIAL

NO.	MARK	DESCRIPTION	LENGTH		REMARKS	ITEM	SHIP WEIGHT
ONE ~ PINION GIRDER			EA.	Mk. PG1 & PG2			1391.87
1	mmb	MC18 x 42.7	11	1		10/2	
1	mmc	MC18 x 42.7	11	1		10/2	
8	mmd	C6 x 13	1	9		10/3	
16	mmf	BAR - 3½ x ⅜	1	4⅜		10/4	
2	mmg	PL. 15 x 7/16	1	9		10/5	
1	mmh	L 7 x 4 x ½	2	5		10/10	
2	mmk	L 7 x 4 x ½	2	5		10/10	
8	mmm	BAR - 3½ x ⅜	0	6 7/16		10/4	
8	mmn	BAR - 3½ x ⅜	0	6½		10/4	
2	mmp	PL. 15/16 x ½	1	8½		10/6	
2	mms	PL. 15/16 x ½	1	8½		10/6	
2	mmt	PL. 11" Φ		½" THK.		10/7	
8 - SUPPORTS Mk. MS15							125.96
8	mnc	MC9 x 25.4	2	6		10/14	
48	mnd	BAR 3 x ⅜	0	7⅞		10/16	
8	MS16	L 5 x 5 x ⅜	2	6		10/15	76.75
24 - TURNED BOLTS Mk. TB1 (SHIP WITH MS15)							
24	mnf	1½" Φ BOLT	2	14	A307 GR.A		
24	mng	BAR 5 x ½	0	5		10/17	
24	mnh	3" Φ WASHER	x ½" THK.			10/19	
40 - TURNED BOLTS Mk. TB2 (SHIP WITH MS16)							
40	mnk	1½" Φ BOLT	1	4¾	A307 GR.A		
40	mng					10/17	
40	mnh					10/19	
							TOTAL WT.

SHOP BOLT SUMMARY

⅞" Φ H.S. (A325, TYPE 1) BOLTS W/ HVY. HEX (W.N.) HD & A563 GR D.H. HVY. HEX. NUT.					
82		0	2¼	84/5	71.34
16		0	2½	84/6	13.92
38		0	2¾	84/7	33.06
12	⅞" COUNTERSUNK	0	2¼	84/14	10.44
148	F436 WASHERS FOR ⅞" Φ H.S.			84/16	

MECHANICAL GALVANIZE A.S.T.M. B-454 CLASS-50

Mk. TB3 →	G -	1⅛" Φ TURNED BOLT	0	2½	A307 GR.A		4.32
	G -	F436 WASHERS FOR ¾" Φ BOLT.				10/12	
							WT. EA.
	16	SH1	BAR 8 x 10GA.	1	6		10/9	5.11
	8	SH2	BAR 8 x ¼	1	6	SHIMS	10/8	10.22
	16	SH3	BAR 4 x 10GA.	1	6		10/9	2.55
	8	SH4	BAR 4 x ¼	1	6		10/8	5.11

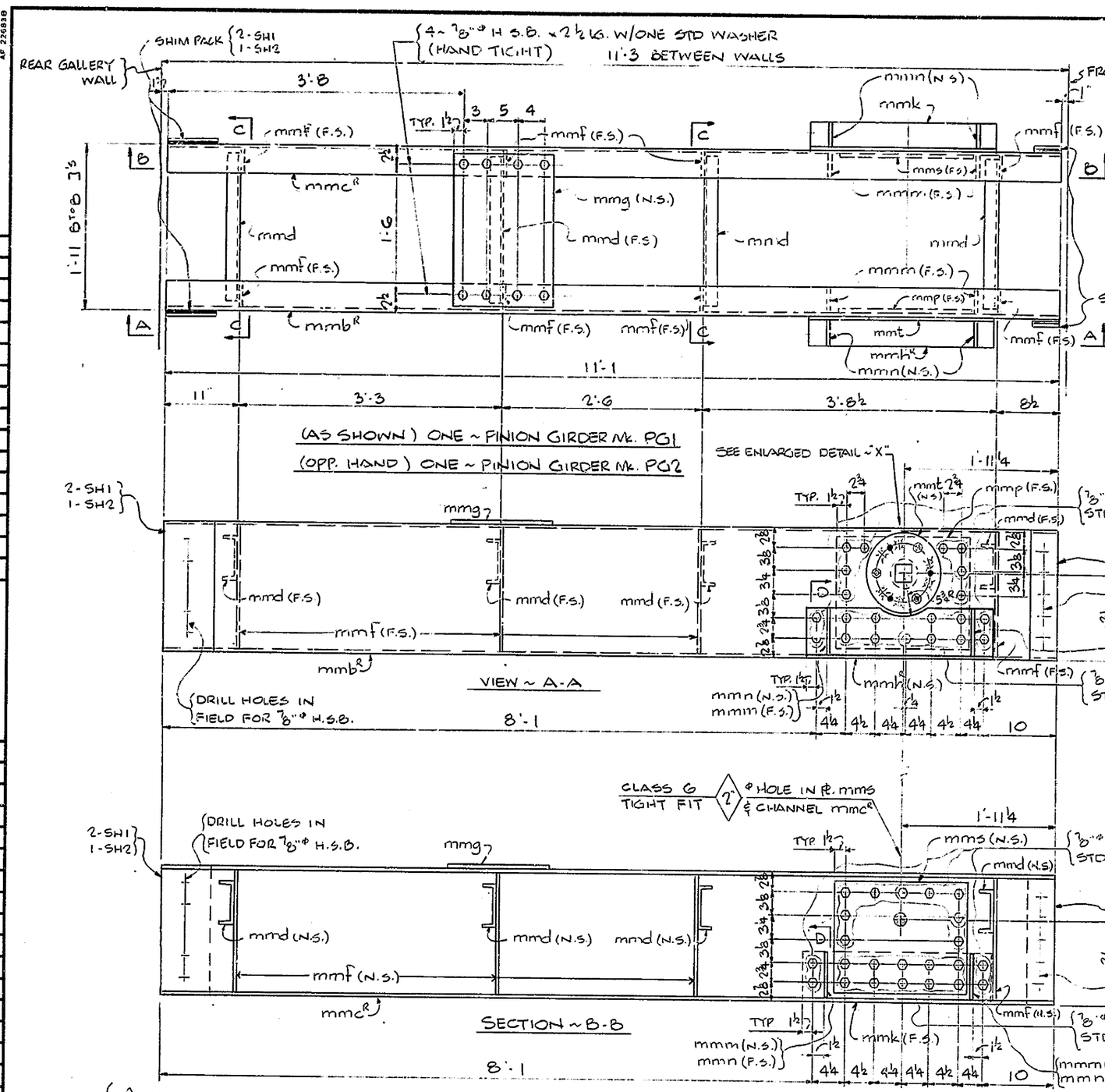

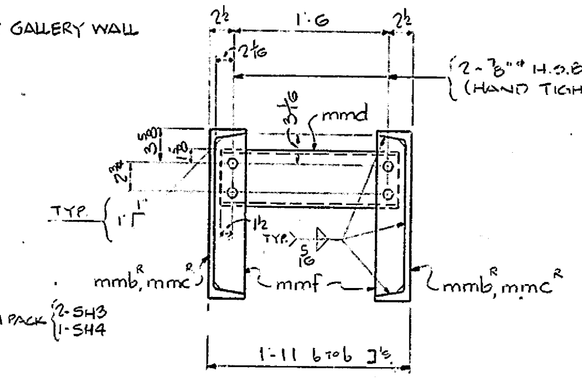

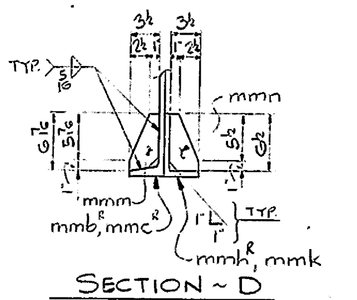

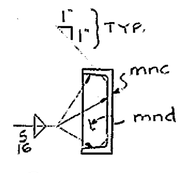

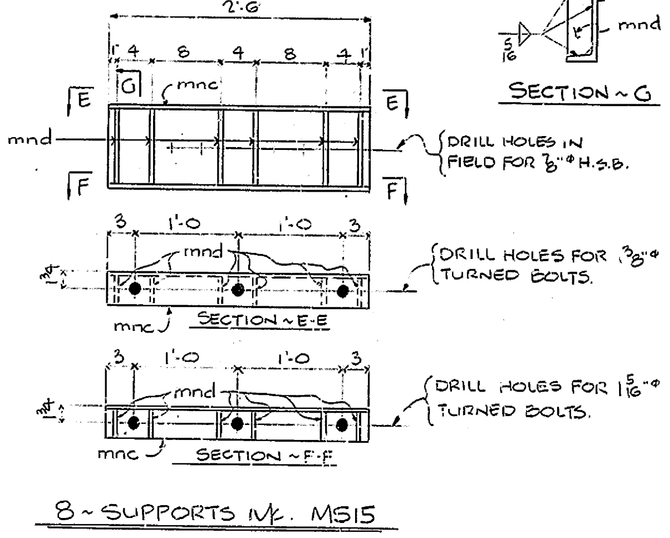

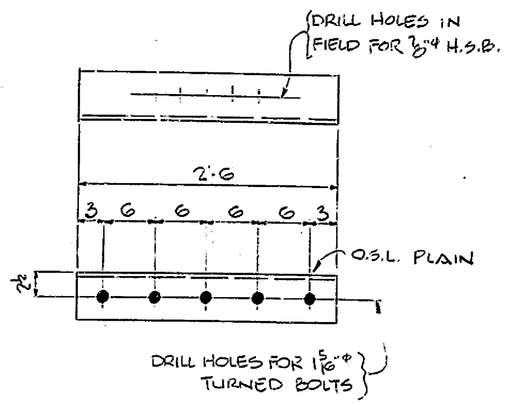

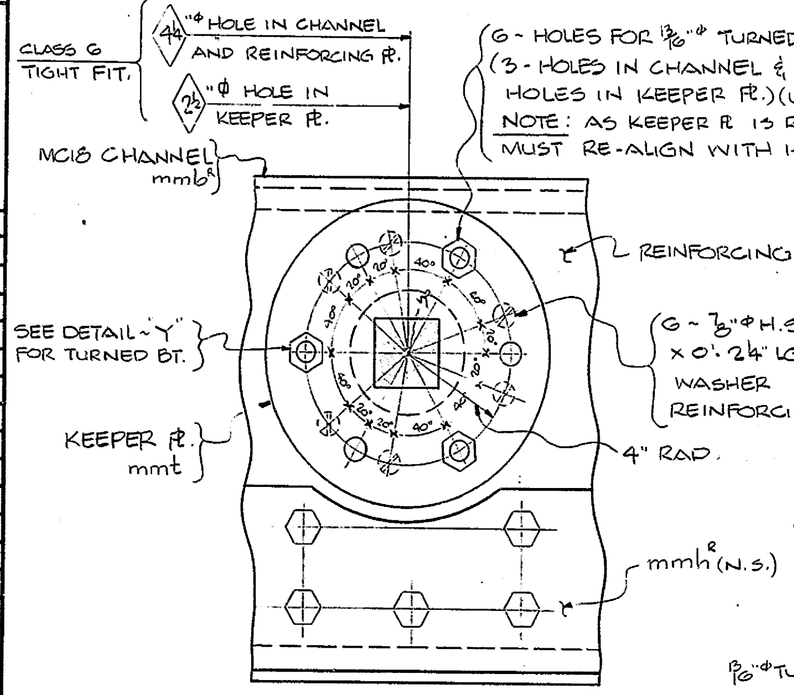

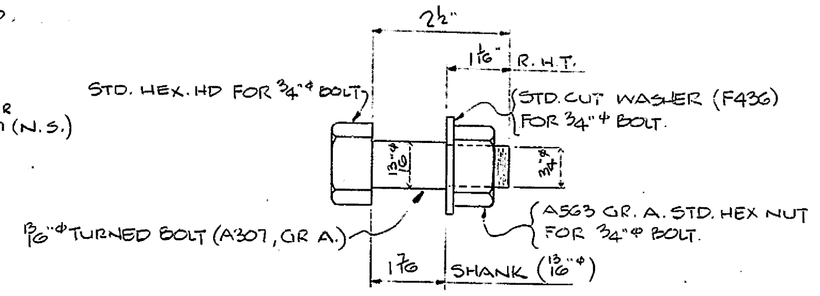

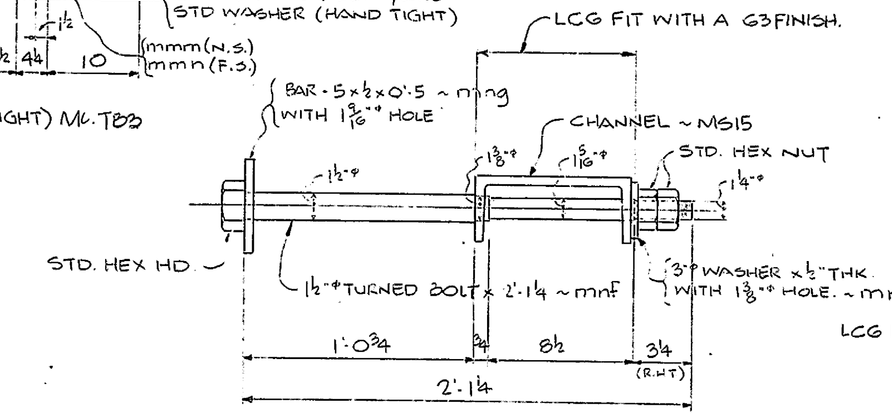

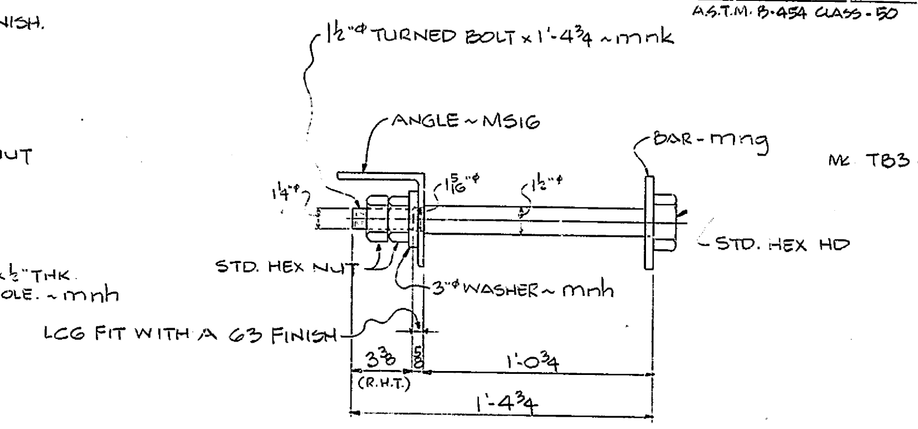

NOTE:
ALL TURNED BOLTS AND TURNED BOLT HOLES TO BE MADE IN ACCORDANCE WITH ANSI B4.1 - LC6 FIT WITH A G3 FINISH.

SHOP NOTE

HOLES: 15/16" Φ (U.N.)
BOLTS: AS NOTED
PAINT: SEE DWG. E1.

FOR GENERAL NOTES, SEE DWG. E1.

NO.	REVISION	DATE

HIGH STEEL STRUCTURES, INC.
1905 Old Philadelphia Pike
Lancaster, Pennsylvania 17603
Phone 717/299-5211
A Subsidiary of High Industries Inc

PINION GIRDERS & SUPPORTS
SAVANNAH RD. BRIDGE OVER LEWES & REHOBOTH CANAL
ROUTE 18 ~ SAVANNAH ROAD
SUSSEX COUNTY, DELAWARE
STATE OF DELAWARE, DEPARTMENT OF TRANSPORTATION
DIVISION OF HIGHWAYS

STATE CONTRACT OR REF. NO. 80-023-02 CONTRACTOR GEORGE & LYNCH, INC.
IN CHARGE: CHRISTMAN MADE BY: KMA CHK.D BY: WBW DATE: 5-13-82
CONTRACT NUMBER: D-81116 DRAWING NUMBER: 16 OF 21

CODE: 6800

AF 235898
SF POLYTRACE 039

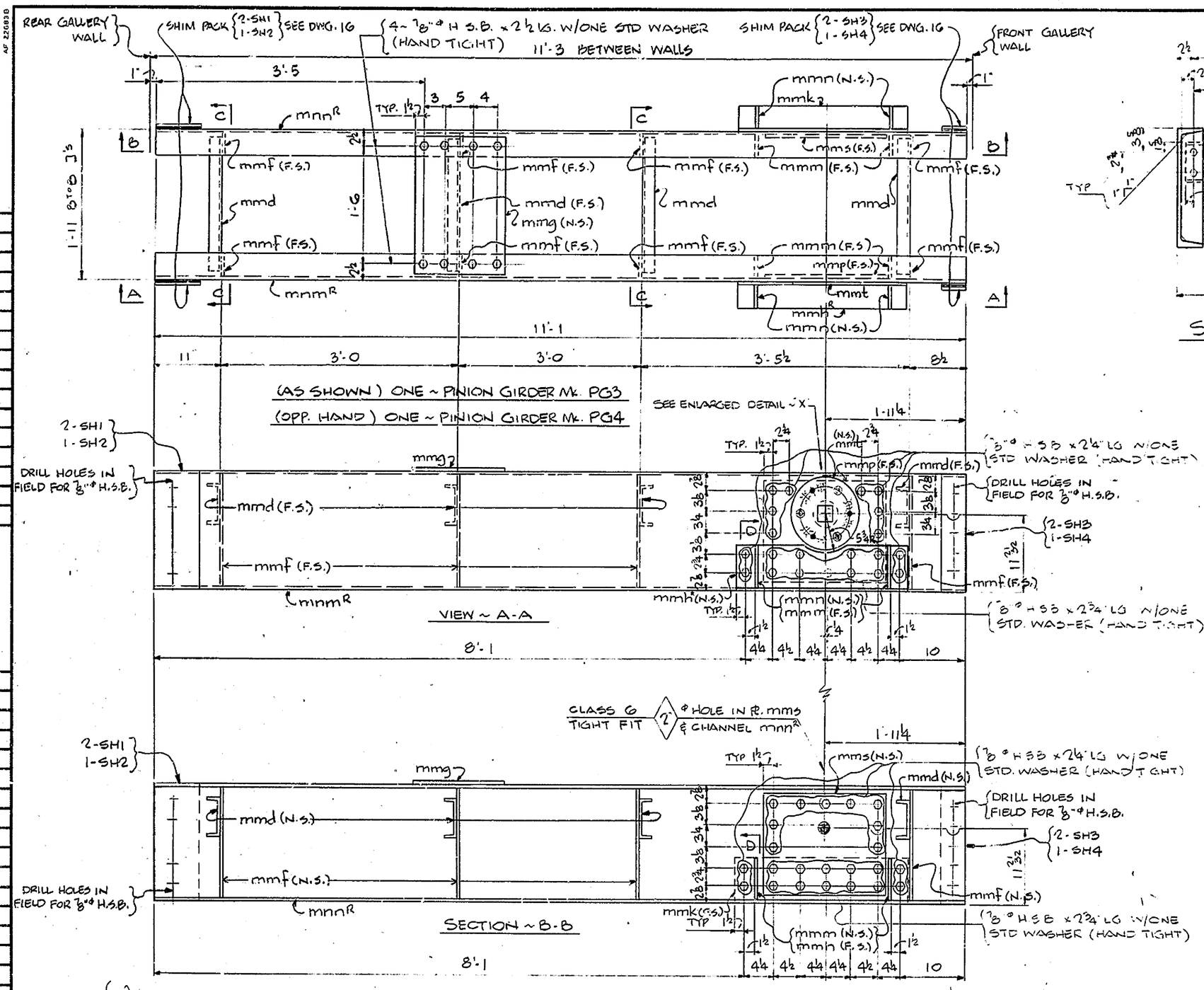

FED. ROAD DIV. NO.	STATE	FED. AID PROJ. NO.

BILL OF MATERIAL

NO.	MARK	DESCRIPTION	LENGTH		REMARKS	ITEM	SHIP WEIGHT lbs.
ONE ~ PINION GIRDER			EA.	Mk. PG3 & PG4			1369.0#
1	mmnR	MC18 x 42.7	11	1		10/2	
1	mmnR	MC18 x 42.7	11	1		10/2	
8	mmd	CG x 13	1	9		10/3	
16	mmf	BAR - 3 1/2 x 3/8	1	4 3/8		10/4	
2	mmg	PL 15 x 1/2	1	9		10/5	
1	mmnR	L 7 x 4 x 1/2	2	5		10/10	
2	mmk	L 7 x 4 x 1/2	2	5		10/10	
8	mmm	BAR - 3 1/2 x 3/8	0	6 3/16		10/4	
8	mmn	BAR - 3 1/2 x 3/8	0	6 1/2		10/4	
2	mmp	PL 15 1/4 x 1/2	1	8 1/2		10/6	
2	mms	PL 15 1/4 x 1/2	1	8 1/2		10/6	
2	mmt	PL 11"ø		1/2" THK.		10/7	
							TOTAL WT.
SHOP BOLT SUMMARY							
7/8"ø H.S. (A325, TYPE 1) BOLTS W/HVY. HEX HD. & A563 GR. D.H. HVY. HEX NUT.							(U.N.)
82			0	2 1/4		B4/5	71.34
16			0	2 1/2		B4/6	13.92
38			0	2 3/4		B4/7	33.06
12	7/8"ø	COUNTER SUNK	0	2 1/4	H.S.B.	B4/14	10.44
148	F436	WASHERS	FOR	7/8"ø	H.S.B.	B4/16	-
Mk. TB3 → 6	-	1 3/16"ø	TURNED BOLT	0	2 1/2	A307 GR.A	4.32
6	F436	WASHERS	FOR	3/4"ø	BOLT	10/12	-

MECHANICAL GALVANIZE ASTM B-454 CLASS 50

NOTE:
ALL TURNED BOLTS AND TURNED BOLT HOLES TO BE MADE IN ACCORDANCE WITH ANSI B4.1 - LCG FIT WITH A 63 FINISH.

SHOP NOTE

HOLES: 15/16"ø (U.N.)
BOLTS: AS NOTED
PAINT: SEE DWG. E1.

FOR GENERAL NOTES, SEE DWG. E1.

CODE: 6800

NO.	REVISION	DATE

HIGH STEEL STRUCTURES, INC.
1905 Old Philadelphia Pike
Lancaster, Pennsylvania 17603
Phone 717/299-5211
A Subsidiary of High Industries, Inc

PINION GIRDERS
SAVANNAH RD. BRIDGE OVER LEWES & REHOBOTH CANAL
ROUTE 18 ~ SAVANNAH ROAD
SUSSEX COUNTY, DELAWARE
STATE OF DELAWARE, DEPARTMENT OF TRANSPORTATION
DIVISION OF HIGHWAYS

STATE CONTRACT OR REF. NO. 80-023-02 CONTRACTOR GEORGE & LYNCH, INC.
IN CHARGE: CHRISTMAN MADE BY: KMA CHK.D. BY: WBW DATE: 5-13-82
CONTRACT NUMBER: D-81116 DRAWING NUMBER: 17 OF 21

AF 226930

POLYTRACE 038

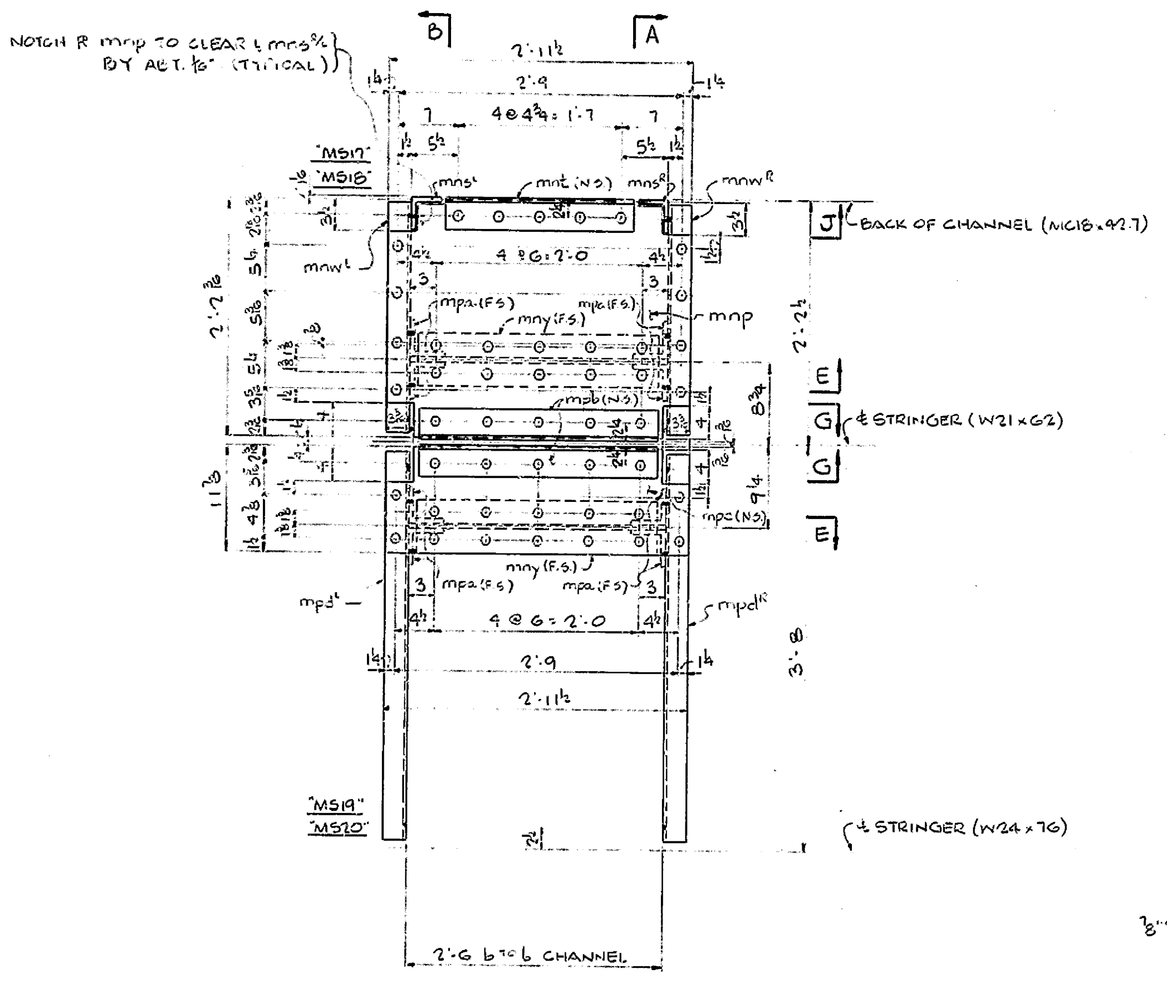

FED ROAD DIV. NO.	STATE	FED AID PROJ. NO.

BILL OF MATERIAL

NO.	MARK	DESCRIPTION	LENGTH		REMARKS	ITEM	SHIP WEIGHT EA.
ONE ~ MISC. SUPPORT EA. MK. MS17 & MS18							338.82
3/2	mns⅝	℄ 3½ x 3½ x ⅜	1	7⅜		7/24	
2	mnt	℄ 3½ x 3½ x ⅜	1	10		7/24	
2/2	mnw⅝	C10 x 20	2	0'3¾		7/19	
2	mnp	PL 26⅜ x ⅜	2	11½		7/26	
2	mny	W10 x 30	2	3½		7/22	
8	mpa	℄ 4 x 3½ x ⅜	0	8½		7/25	
2	mpb	℄ 3½ x 3½ x ⅜	2	3		7/24	
ONE ~ MISC. SUPPORT EA. MK. MS19 & MS20							298.53
2	mny					7/22	
8	mpa					7/25	
2	mpb					7/24	
2	mpc	PL 11⅜ x ⅜	2	11½		7/26	
2/2	mpd⅝	C10 x 20	3	6		7/20	
ONE ~ MISC. SUPPORT EA. MK. MS21 & MS22							398.70
8	mpa					7/25	
2/2	mpf⅝	C10 x 20	5	4		7/21	
2	mpg	PL 11⅜ x ⅜	3	5½		7/27	
2	mph	W10 x 30	2	9½		7/23	
2	mpk	℄ 3½ x 3½ x ⅜	2	9		7/24	
ONE ~ MISC. SUPPORT EA. MK. MS23 & MS24							374.04
2/2	mns⅝					7/24	
2/2	mnw⅝					7/19	
8	mpa					7/25	
2	mph					7/23	
2	mpk					7/24	
2	mpm	PL 26⅜ x ⅜	3	5½		7/27	
2	mpn	℄ 3½ x 3½ x ⅜	2	4		7/24	
							TOTAL WT.

SHOP BOLT SUMMARY

⅞"ø H.S. (A325, TYPE 1) BOLTS W/ HVY. HEX. HD. & A563 GR. DH HVY. HEX NUT.							
186			0	2		8⅝	161.82
88			0	2½		8⅝	76.56
96			0	2½		8⅝	83.52
370	F436	WASHERS FOR ⅞"ø H.S.B.				8⅝	
98	F436	BEVELED WASHERS FOR ⅞"ø H.S.B.				8⅝	

MECHANICALLY GALVANIZED A.S.T.M. B-454 CLASS-50

8⅝/17

SHOP NOTE

HOLES: 15/16"ø

BOLTS: AS NOTED

PAINT: SEE DWG. E1

FOR GENERAL NOTES, SEE DWG. E1.

ALL SHOP BOLTS TO BE INSTALLED "HAND TIGHT"

RE-ENTRANT CUTS TO HAVE ½" MIN. RAD. (U.N.)

NO.	REVISION	DATE

HIGH STEEL STRUCTURES, INC.
1905 Old Philadelphia Pike
Lancaster, Pennsylvania 17602
Phone 717/299-5211
A Subsidiary of High Industries Inc

MISC. SUPPORTS

SAVANNAH ROAD BRIDGE OVER LEWES & REHOBOTH CANAL

ROUTE 18 ~ SAVANNAH ROAD

SUSSEX COUNTY, DELAWARE

STATE OF DELAWARE, DEPARTMENT OF TRANSPORTATION

DIVISION OF HIGHWAYS

STATE CONTRACT OR REF. NO. 80-023-02 CONTRACTOR GEORGE & LYNCH, INC.

IN CHARGE: CHRISTMAN MADE BY: KMA CHK.D. BY: WBW DATE: 5-13-82

CONTRACT NUMBER: D-81116 DRAWING NUMBER: 18 OF 21

CODE: 6800

POLYTRACE 038

AF 22683A

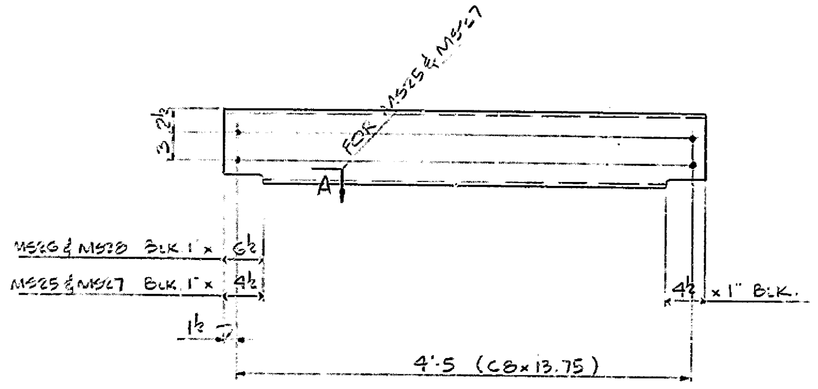

SECTION ~ A
(FOR MS25 & MS27)

(AS SHOWN) ONE ~ MISC. SUPPORT EA. MK. MS25 & MS26
(OPP. HAND) ONE ~ MISC. SUPPORT EA. MK. MS27 & MS28

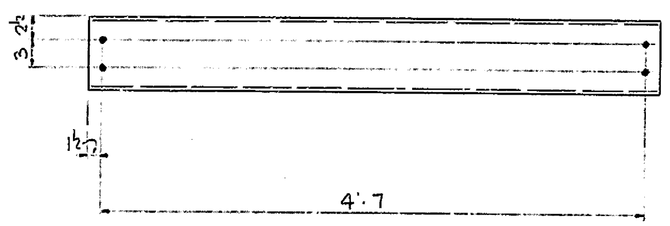

6 ~ MISC. SUPPORTS MK. MS29

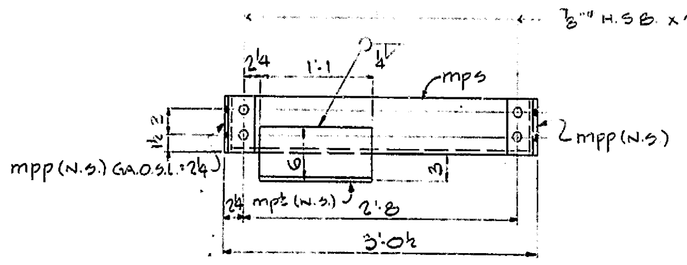

(AS SHOWN) 2 ~ MISC. SUPPORTS MK. MS30
(OPP. HAND) 2 ~ MISC. SUPPORTS MK. MS31

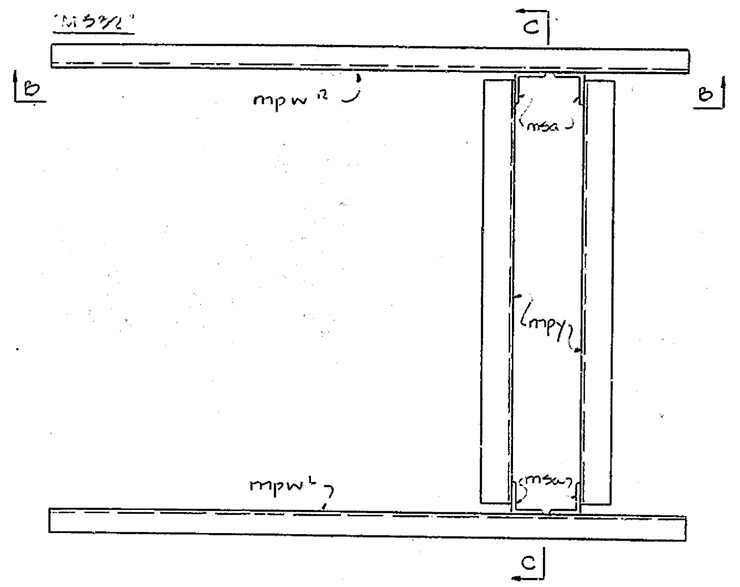

2 ~ MISC. SUPPORTS MK. MS32

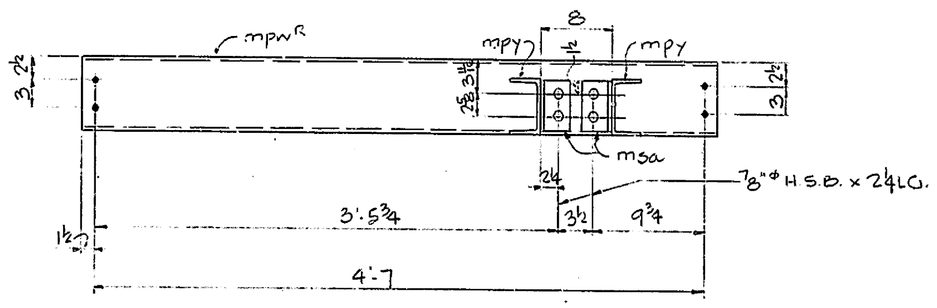

SECTION ~ B-B

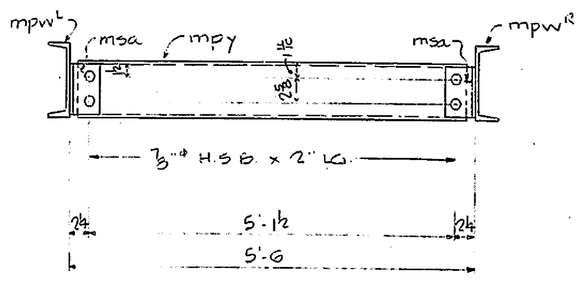

SECTION ~ C-C

FED. ROAD DIV. NO.	STATE	FED AID PROJ. NO.

BILL OF MATERIAL

NO.	MARK	DESCRIPTION	LENGTH		REMARKS	ITEM	SHIP WEIGHT EACH
ONE	MS25	C8 x 13.75	4	8		B/2	64.0
ONE	MS26	C8 x 13.75	4	8		B/2	64.0
ONE	MS27	C8 x 13.75	4	8		B/2	64.0
ONE	MS28	C8 x 13.75	4	8		B/2	64.0
6	MS29	MC8 x 21.4	4	10		B/5	103.93
2~	MISC	SUPPORTS EA MK. MS30 & MS31					59.00
8	mpp	L 4 x 4 x ⅜	0	6		B/8	
4	mps	L 6 x 4 x ⅜	2	11		B/7	
4	mpt	L 6 x 4 x ⅜	1	1		B/7	
2	~MISC. SUPPORTS		MK. MS32				390.66
2/2	mpw R/L	C8 x 18.75	4	10		B/9	
4	mpy	MC6 x 18	5	4½		B/10	
8	msa	L 3½ x 3½ x ⅜	0	5⅝		B/11	
							Total wt.

SHOP BOLT SUMMARY

		⅞" ø H.S. (A325, TYPE 1) BOLTS W/ HVY HEX HD & A563 GR. D.H. HVY HEX NUT.					
32			0	2"		B4/4	27.84
16			0	24		B4/5	13.92
48	F436	WASHERS FOR ⅞" ø H.S.B.				B4/6	

MECHANICALLY GALV. A.S.T.M. B-454 CLASS-50

PLAIN MAT'L.

							WT EA.
2	MS41	PL. 9 x ⅜	0	11		9/19	25.0
2	MS42	PL. 24 x ⅜	2	2		9/20	67.0

SHOP NOTE

HOLES: 15/16" ø
BOLTS: AS NOTED
PAINT: SEE DWG. E1.
FOR GENERAL NOTES, SEE DWG. E1.
ALL SHOP BOLTS TO BE INSTALLED "HAND TIGHT"
RE-ENTRANT CUTS TO HAVE ¾" MIN. RAD.

CODE: 6800

NO.	REVISION	DATE

HIGH STEEL STRUCTURES, INC.
1905 Old Philadelphia Pike
Lancaster, Pennsylvania 17603
Phone 717/299-5211
A Subsidiary of High Industries Inc

MISC. SUPPORTS
SAVANNAH ROAD BRIDGE OVER LEWES & REHOBOTH CANAL
ROUTE 18 ~ SAVANNAH ROAD
SUSSEX COUNTY, DELAWARE
STATE OF DELAWARE, DEPARTMENT OF TRANSPORTATION
DIVISION OF HIGHWAYS

STATE CONTRACT OR REF. NO. 80-023-02 CONTRACTOR GEORGE & LYNCH, INC.
IN CHARGE: CHRISTMAN MADE BY: KMA CHK.D. BY: WBW DATE: 5-13-82
CONTRACT NUMBER: D-81116 DRAWING NUMBER: 19 OF 21

EF POLYTRACE 035

AF 27683A

FED. ROAD DIV. NO.	STATE	FED. AID PROJ. NO.

BILL OF MATERIAL

NO.	MARK	DESCRIPTION	LENGTH		REMARKS	ITEM	SHIP WEIGHT EACH
4		~ MISC. SUPPORTS Mk. MS34					1708.87
4/4	msb¹,⁸	W12 x 58	9	4⅜	FIE	8/13	
8	msc	W12 x 58	2	8	FIE	8/14	
16	msd	L 4 x 4 x ½	1	10		8/18	
4	msf	C10 x 25	1	7½		8/16	
4	msg	PL 9 x ½	1	6		8/19	
4	msl₁	PL 11 x ½	2	7½		8/20	
24	msk	L 4 x 3½ x ⅜	0	9		8/17	
4	msm	C12 x 25	2	7½		8/15	
2	MISC.	SUPPORTS EA. Mk. MS35 & MS36					381.29
4	msn	PL 33½ x ½	2	11		8/23	
4	msp	PL 9 x ½	3	0½		8/19	
4	mss	PL 9 x ½	3	0½		8/19	
4	mst	PL 9 x ½	2	9½		8/19	
4	msw	PL 7 x ½	2	9½		8/19	
8	msy	BAR 4 x ½	2	9½		8/21	
4	mta	BAR 6 x ⅜	0	11		8/22	
							TOTAL WT.
SHOP BOLT SUMMARY							
⅞" H.S. (A325, TYPE 1) BOLTS W/HVY HEX HD & ASS'G GR. D HVY HEX NUT							
104			0	2½		84/6	90.98
24			0	3		84/8	20.88
128	F436	WASHERS FOR ⅞" H.S.B.				84/16	

MECHANICALLY GALV. A.S.T.M. B-454 CLASS-50

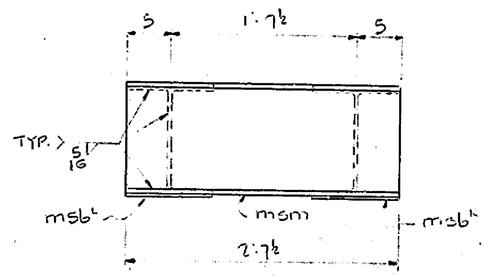

SECTION ~ D-D

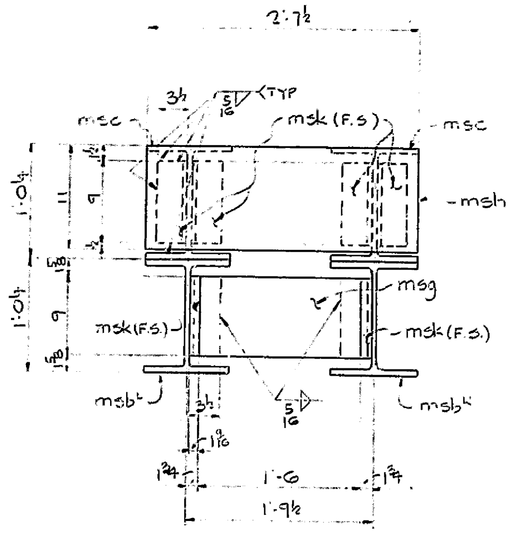

SECTION ~ C-C

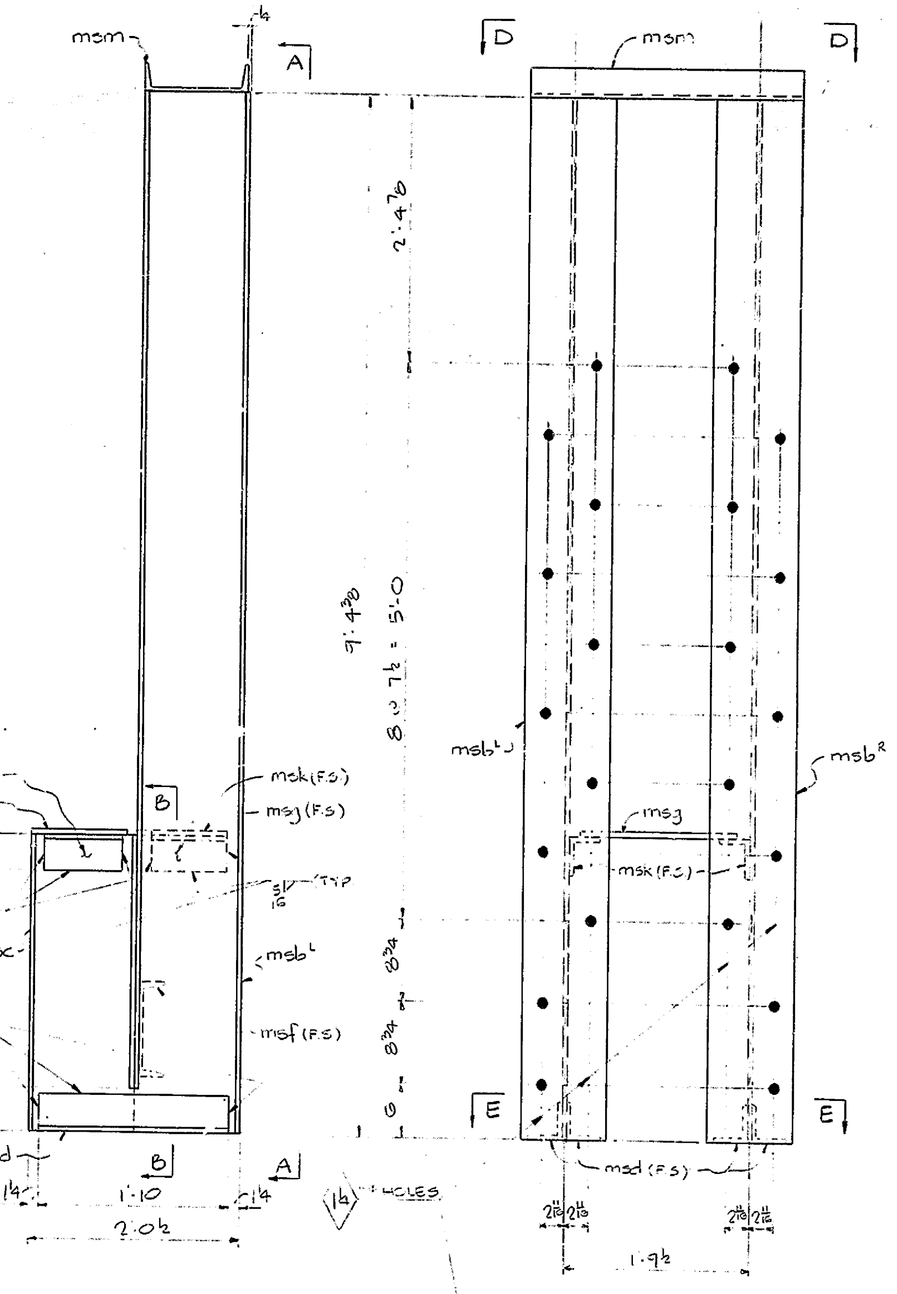

SECTION ~ A-A

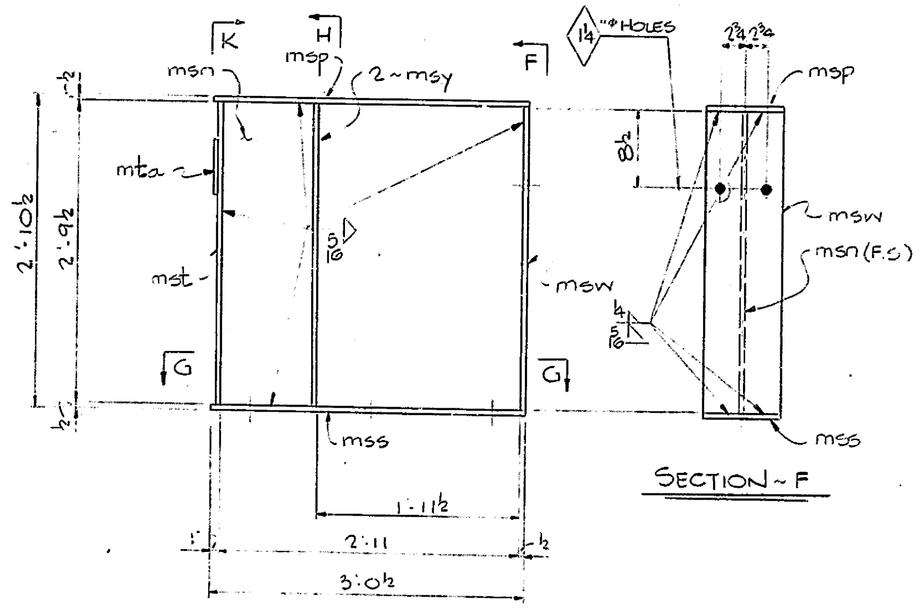

SECTION ~ F

2 ~ MISC. SUPPORTS EA. Mk. MS35 & MS36

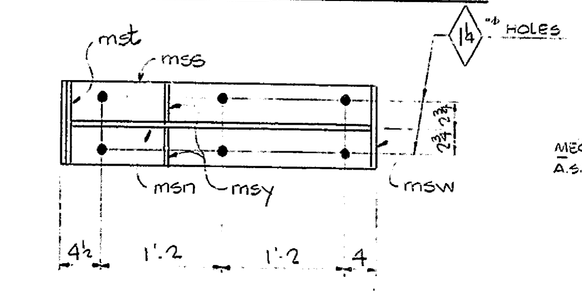

SECTION ~ G-G

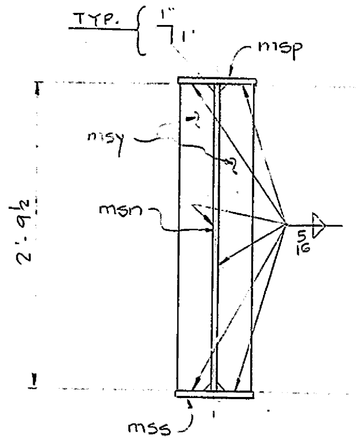

SECTION ~ H

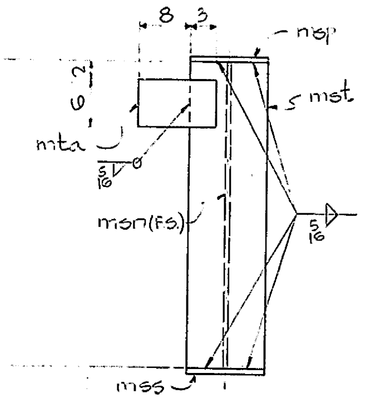

SECTION ~ K

(AS SHOWN) ~ MS35
(OPP. HAND) ~ MS36

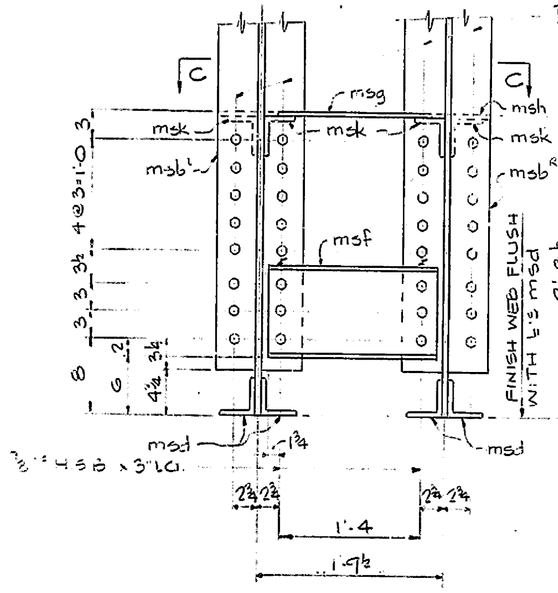

SECTION ~ B-B

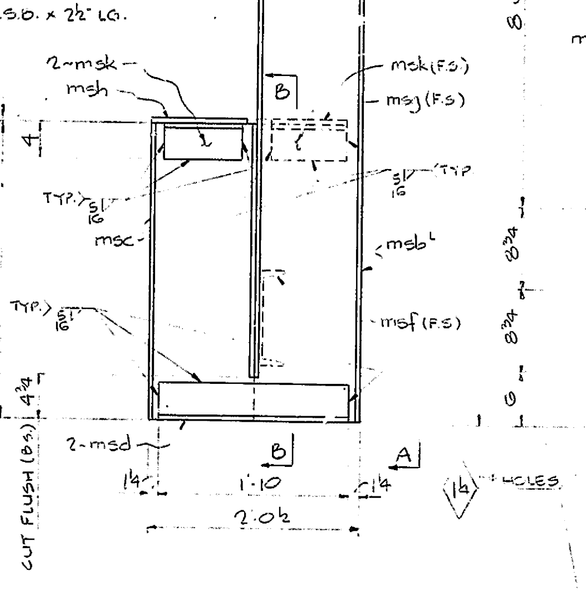

4 ~ MISC. SUPPORTS Mk. MS34

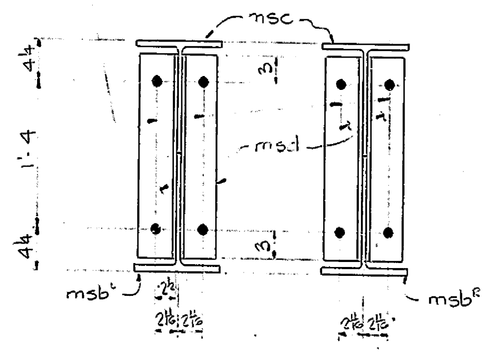

SECTION ~ E-E

SHOP NOTE

HOLES: 15/16" ⌀ (U.N.)
BOLTS: AS NOTED
PAINT: SEE DWG. 51.
FOR GENERAL NOTES, SEE DWG. 51.
RE-ENTRANT CUTS TO HAVE ¾" MIN. RAD.

CODE: 6800

NO.	REVISION	DATE

HIGH STEEL STRUCTURES, INC.
1905 Old Philadelphia Pk.
Lancaster, Pennsylvania 603
Phone 717/299-5211
A Subsidiary of High Industries Inc

MISC. SUPPORTS
SAVANNAH ROAD BRIDGE OVER LEWES & REHOBOTH CANAL
ROUTE 18 - SAVANNAH ROAD
SUSSEX COUNTY, DELAWARE
STATE OF DELAWARE, DEPARTMENT OF TRANSPORTATION
DIVISION OF HIGHWAYS

STATE CONTRACT OR REF. NO. 80-023-02 CONTRACTOR GEORGE & LYNCH, INC.

IN CHARGE: CHRISTMAN MADE BY: KMA CHK'D. BY: WBW DATE: 5-13-82

CONTRACT NUMBER: D-81116 DRAWING NUMBER: 20 OF 21

F POLYTRACE 035

AF 32683A

FED. ROAD DIV. NO.	STATE	FED. AID PROJ. NO.

BILL OF MATERIAL

NO.	MARK	DESCRIPTION	LENGTH		REMARKS	ITEM	SHIP WEIGHT EACH
2 ~ MISC. SUPPORTS MK. M537							986.90
2/2	mtb'	W8 x 40	3	11¼		9/3	
2/2	mtc'	W12 x 58	4	10⅞		9/2	
8	mtd	L 4 x 3½ x ⅜	0	5		9/6	
2	mtf	C12 x 25	3	2		9/4	
6	mtg	2½"Φ BEVELED WASHER			CUT FROM FLG OF C12x25	9/5	
2 ~ MISC. SUPPORTS MK. M538							227.23
4	mth	L 4 x 3½ x ⅜	3	0		9/7	
2/2	mtk	L 4 x 3½ x ⅜	3	0		9/7	
4	mtm	PL 8⅞ x ⅜	3	0		9/12	
6	mtn	C8 x 13.75	0	6½		9/10	
20	mtp	BAR 3½ x ⅜	0	8⅝	(T2E)	9/11	
2 ~ MISC. SUPPORTS MK. M539							80.22
8	mts	BAR 5 x ⅜	1	4⅜		9/13	
2	mtt	BAR 6 x ⅜	1	3		9/14	
2	mtw	BAR 6 x ⅜	1	3		9/14	
2	mty	PL 15 x ⅜	1	4⅜		9/15	
2 ~ BRAKE LEVER SUPPORTS MK. M540							131.92
4	mwa	BAR 3½ x ⅜	0	9¼	(FILL)	9/16	
4	mwb	BAR 3½ x ¾	1	0½	(FILL)	9/17	
2/2	mwc'	L 6 x 4 x ⅜	1	3¼		9/9	
4	mwd	L 3 x 3 x ⅜	1	2		9/18	
4	mwh	BAR 2 x ¾	0	6½	(FILL)	9/16	
2/2	mwk'	L 3 x 3 x ⅜	1	10		9/8	
2/2	mwm'	L 3 x 3 x ⅜	1	10		9/8	TOTAL WT
146	ANCHOR BOLTS MK. AB7						1085.28
146		1"Φ BOLT	1	5	A307 GR.A.	8/26	
146	mwf	BAR 5 x ½	0	5	A36	8/30	
32 ~ ANCHOR BOLTS MK. AB8							121.50
32		1"Φ BOLT	1	3	A307 GR A	8/27	
32	mwf					8/30	
72 ~ ANCHOR BOLTS MK. AB9							417.87
72		1"Φ BOLT	0	10	A307 GR A	8/28	
72	mwf					8/30	
8 ~ ANCHOR BOLTS MK. AB10							42.21
8		⅞"Φ BOLT	0	10	A307 GR. A.	8/29	
8	mwg	BAR 5 x ½	0	5	A36	8/30	
		SHOP BOLT SUMMARY					
¾"Φ	H.S. (A325, TYPE 1) BOLTS W/HVY. HEX HD. & A563 GR. DH HVY HEX NUT						
2	¾"Φ		0	4¼		8a/9	
?	¾"Φ		0	5		8a/10	
10	F436	WASHERS FOR ¾" H.S.B.				8a/18	

HOT DIP GALV. A.S.T.M. A153

NO.	REVISION	DATE

HIGH STEEL STRUCTURES, INC.
1905 Old Philadelphia Pike
Lancaster, Pennsylvania 17603
Phone 717/299-5211
A Subsidiary of High Industries, Inc

MISC. SUPPORTS
SAVANNAH ROAD BRIDGE OVER LEWES & REHOBOTH CANAL
ROUTE 18 - SAVANNAH ROAD
SUSSEX COUNTY, DELAWARE
STATE OF DELAWARE, DEPARTMENT OF TRANSPORTATION
DIVISION OF HIGHWAYS

STATE CONTRACT OR REF. NO. 80-023-02 CONTRACTOR GEORGE & LYNCH, INC.

IN CHARGE: CHRISTMAN MADE BY: KMA CHK'D. BY: WBW DATE: 5-13-82

CONTRACT NUMBER: D-81116 DRAWING NUMBER: 21 OF 21

CODE: 6800

SHOP NOTE

HOLES: $\frac{15}{16}$"Φ (U.N.)
BOLTS: AS NOTED
PAINT: SEE DWG E1.

FOR GENERAL NOTES, SEE DWG. E1.
SHOP BOLTS TO BE INSTALLED HAND TIGHT.

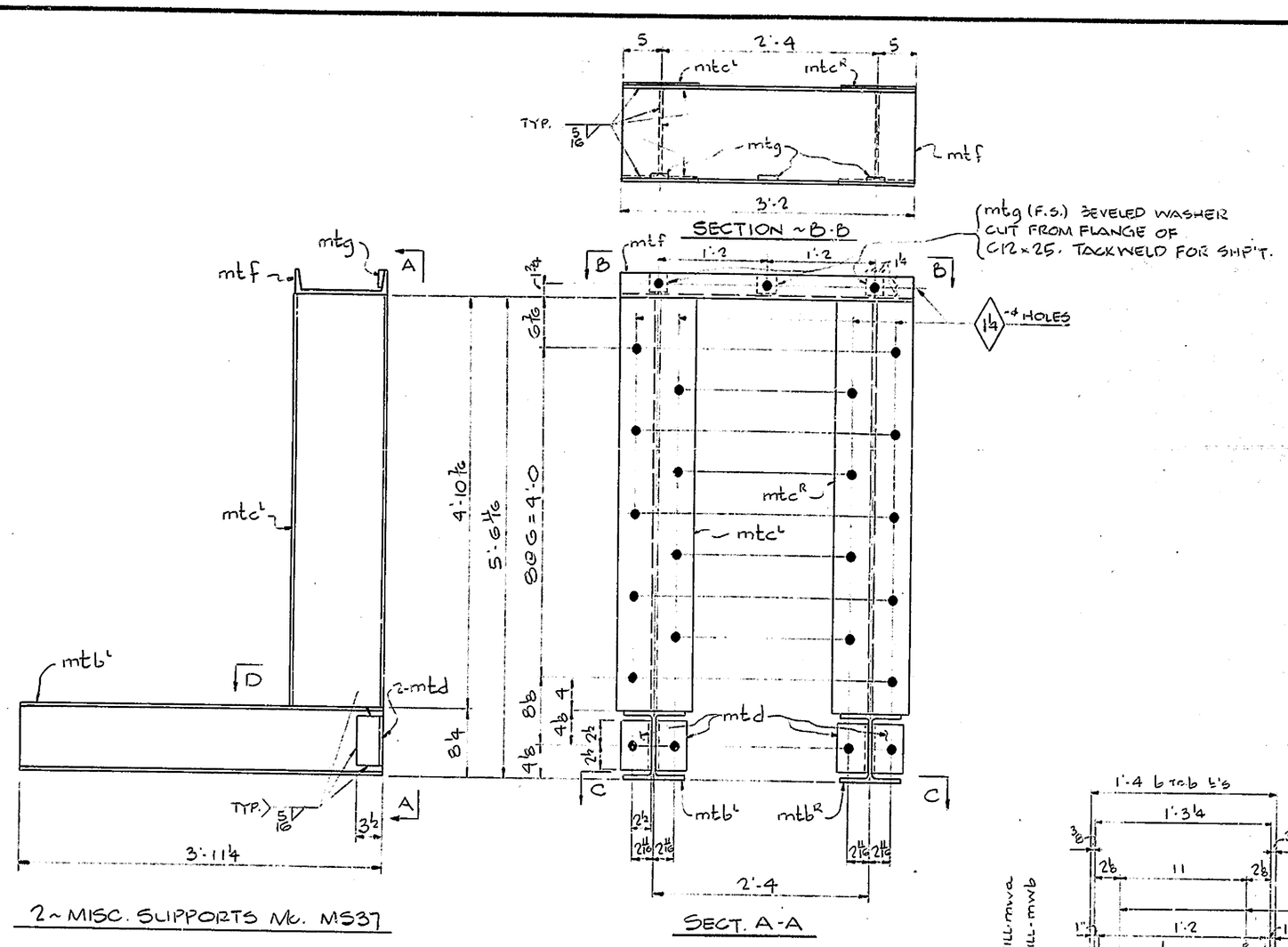

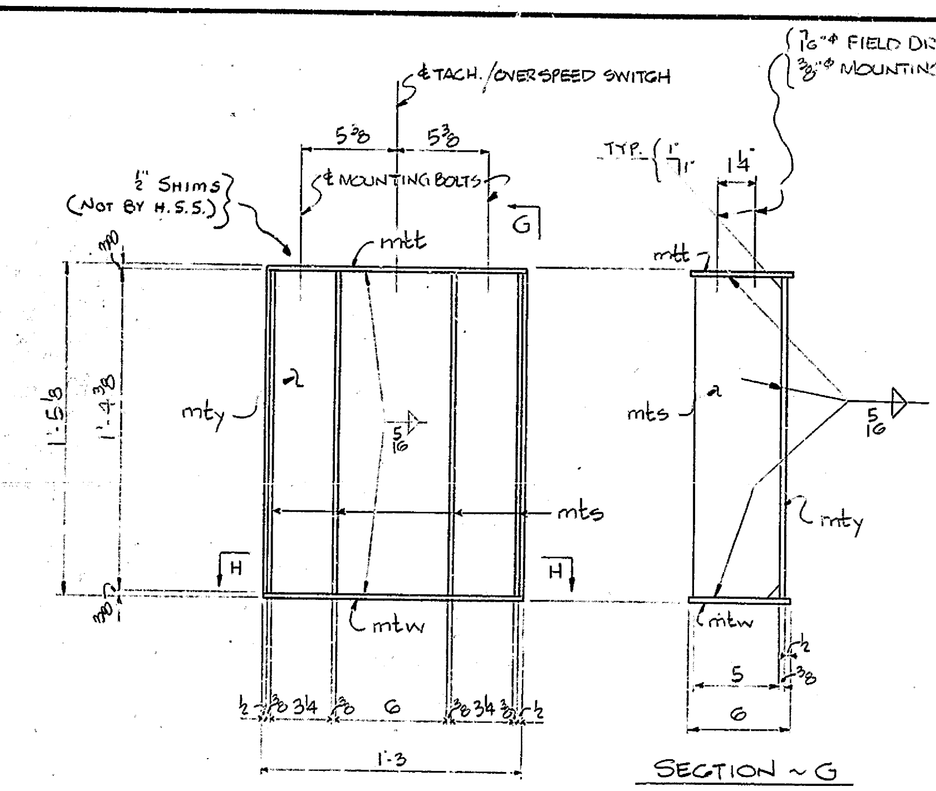

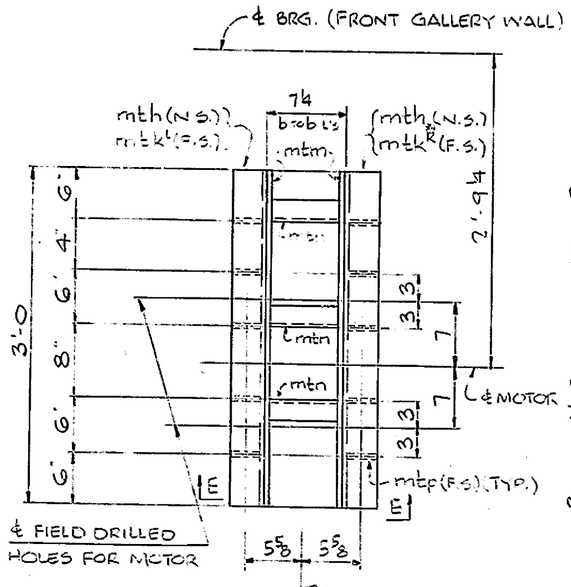

POLYTRACE 038

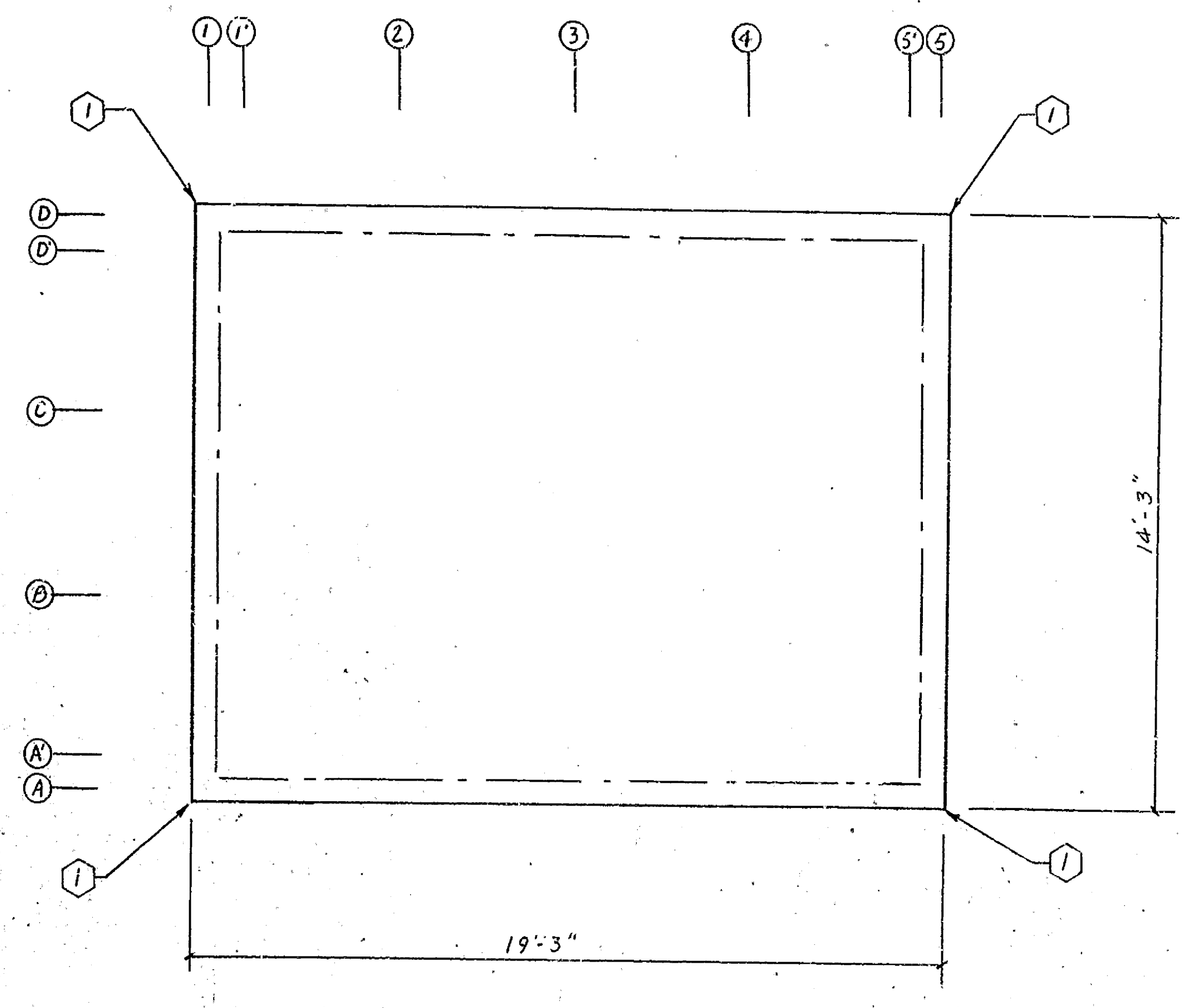

ROOF PLAN
SCALE: 3/8" = 1'-0"

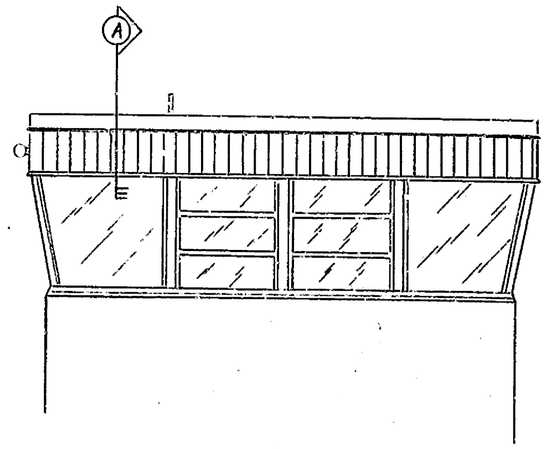

NORTH ELEVATION
SCALE: 1/4" = 1'-0"

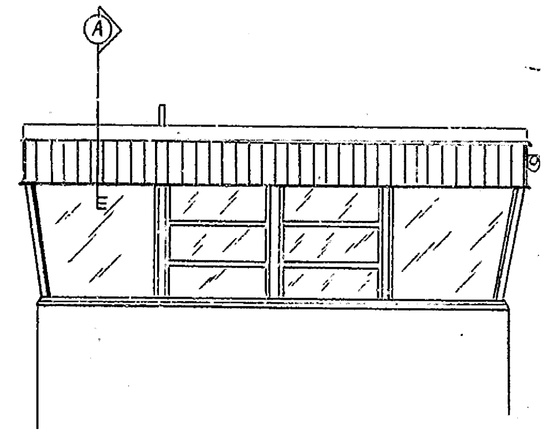

SOUTH ELEVATION
SCALE: 1/4" = 1'-0"

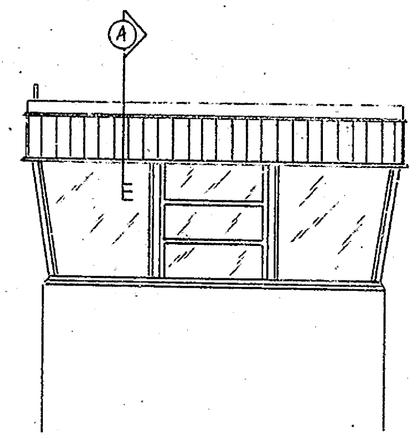

WEST ELEVATION
SCALE: 1/4" = 1'-0"

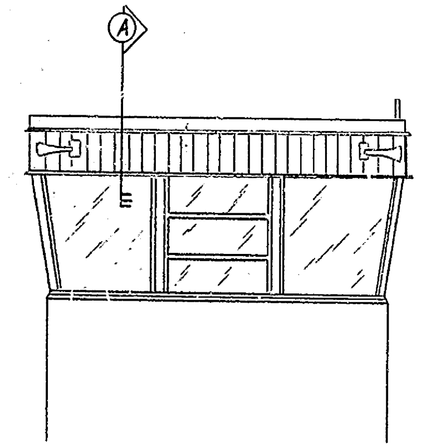

EAST ELEVATION
SCALE: 1/4" = 1'-0"

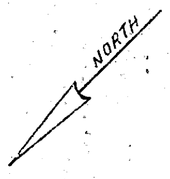

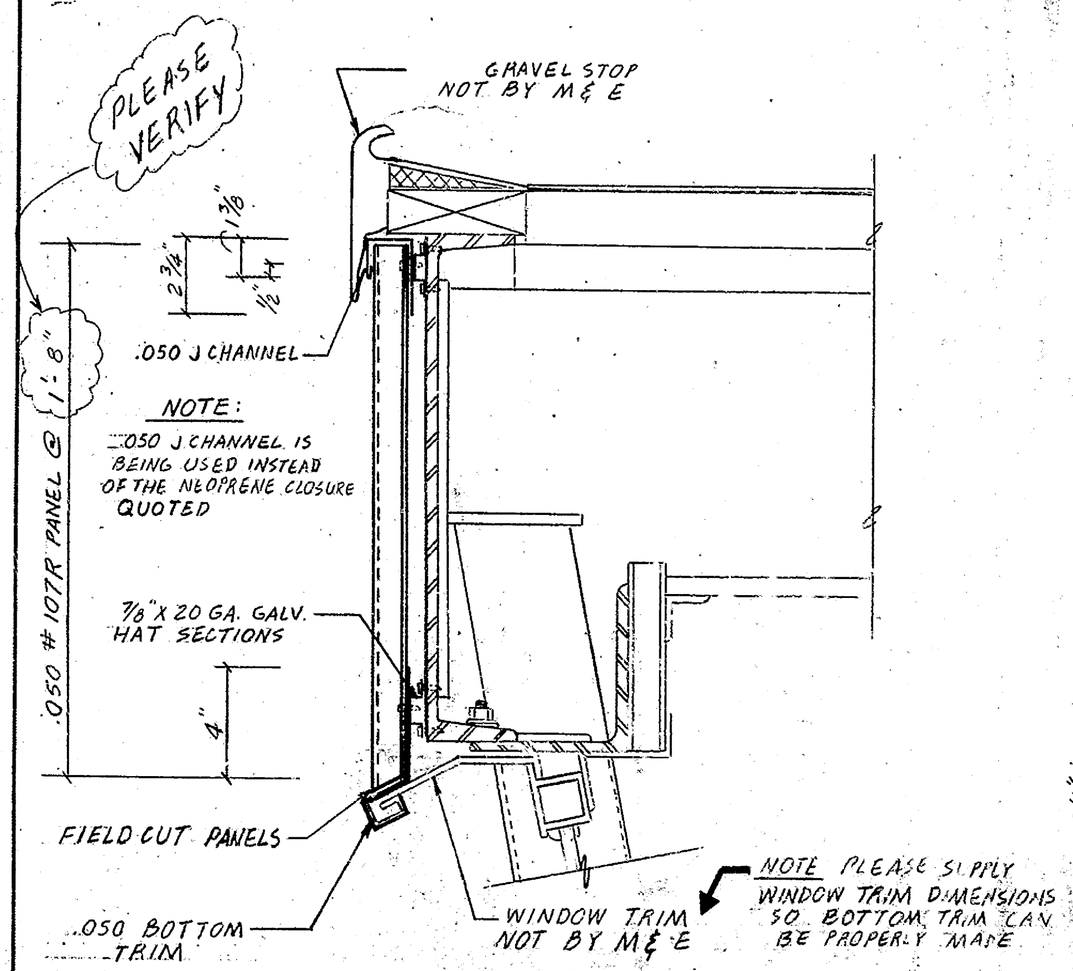

SECTION "A"
SCALE: 3" = 1'-0"

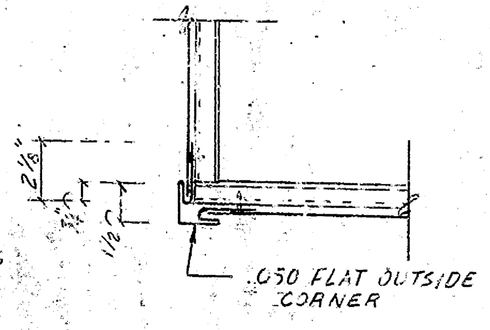

DETAIL (1)
SCALE: 3" = 1'-0"

MATERIAL: .050 ALUM. STUCCO EMBOSSED
FINISH: DURANODIC
COLOR: DARK BRONZE

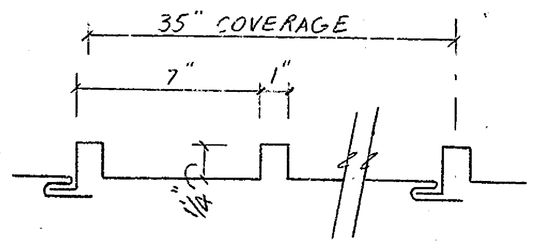

107 R PANEL DETAIL

Mechanic Installation Notice

[illegible] as noted for [illegible] panels to match [illegible] Due to [illegible] and [illegible] variations."

NOTE: [illegible]

JOB NO. F 2934
DATE 3-4-83
SCALE: AS NOTED
DRAWN PJF
CHECKED

JOB NAME: SAVANNAH RD BRIDGE

ARCHITECT: DELAWARE DEPT. OF TRANSPORTATION
AGENT: E. DONNELLY
CUSTOMER: C.C. OLIPHANT & SONS INC.

Custom-formed

MERCHANT & EVANS INDUSTRIES, INC.
suppliers of architectural products since 1866
CROSSROADS INDUSTRIAL COMMUNITY 100 CONNECTICUT DRIVE
WILMINGTON, DELAWARE 19801 (302) 652-3600

NO	DATE	REVISIONS	BY

ATTENTION

All dimensions field checked and verified on final approved print, with stated order to fabricate, will be considered correct and final. Any changes or revisions after receipt of approved print will be considered customer or contractor's responsibility for the additional material charges.

SHEET NO. 1 OF 1

NOTES: ALL WATER [illegible]
ALL WASTE LINES SHALL BE CAST IRON SERVICE WEIGHT CAST IRON SCH 40 PVC [illegible]
CONNECTIONS TO FIXTURES & EQUIPMENT SHALL BE AS SHOWN ON PAGE 98 OF "CONTRACT SPECIFICATIONS"
ELECTRICAL CONTRACTOR WILL YIELD TO PLUMBER IF PIPE PLACEMENT IS A PROBLEM

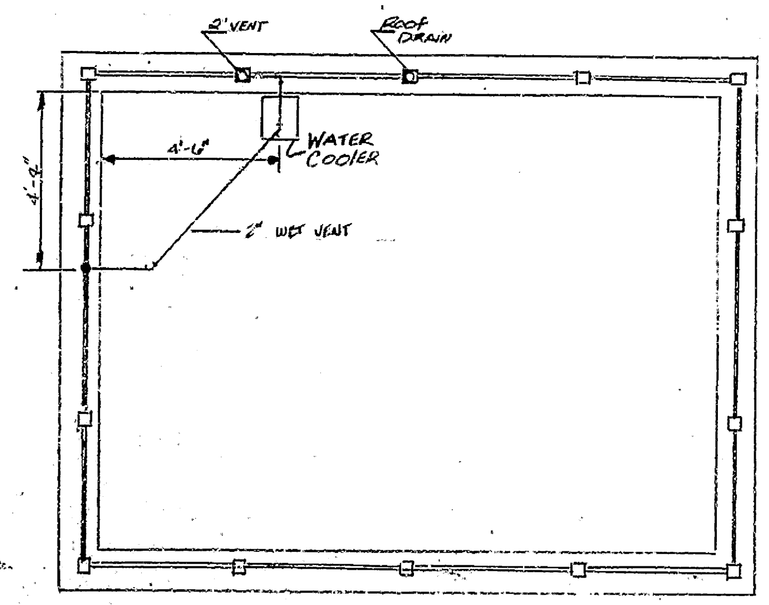

OPERATOR'S ROOM
3/8" = 1'-0"
WASTE PIPING DIAGRAM

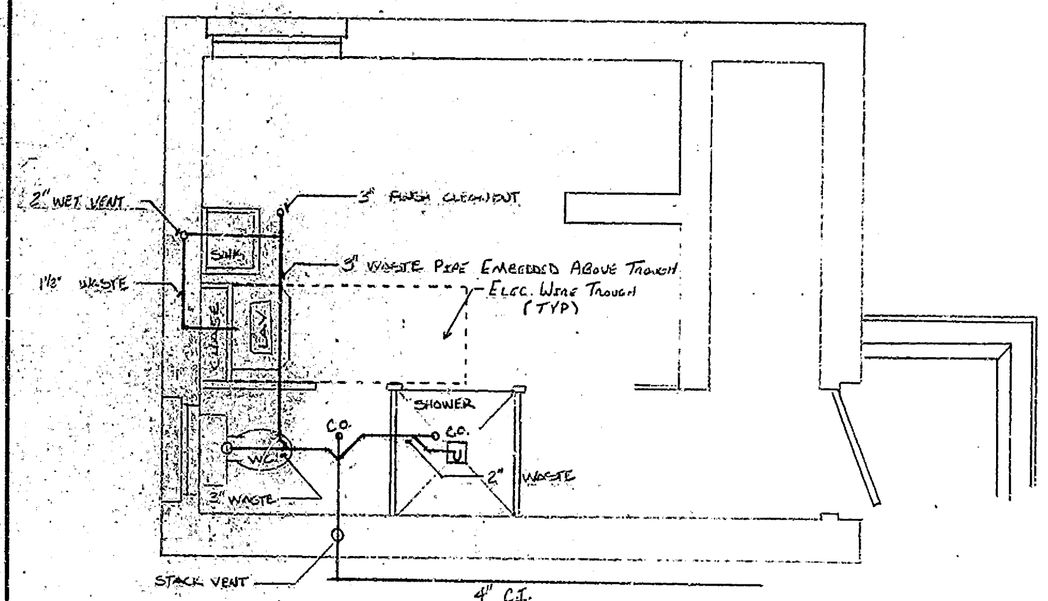

UTILITY ROOM
3/16" = 1'-0"
WASTE PIPING DIAGRAM

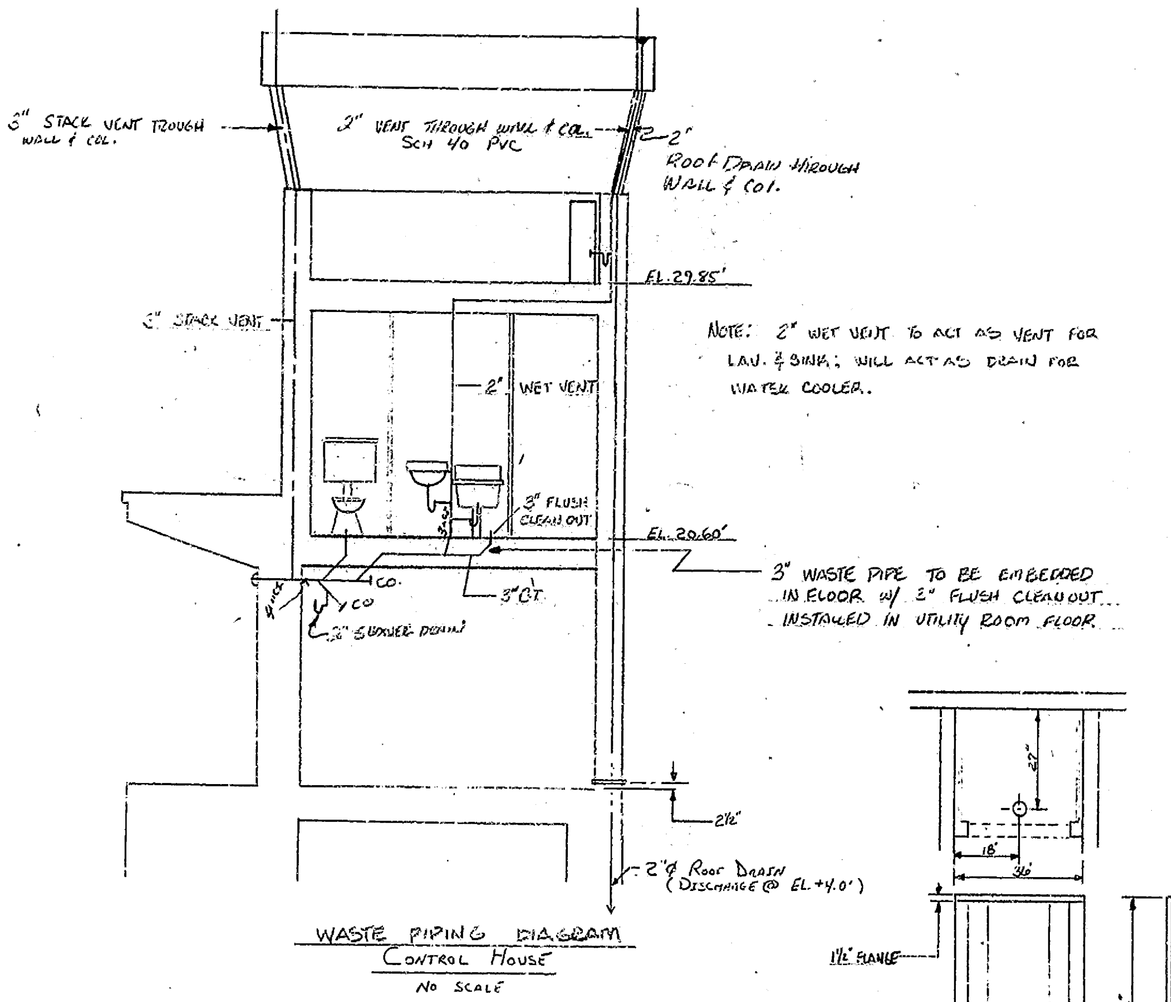

NOTE: 2" WET VENT TO ACT AS VENT FOR LAV. & SINK; WILL ACT AS DRAIN FOR WATER COOLER.

3" WASTE PIPE TO BE EMBEDDED IN FLOOR W/ 3" FLUSH CLEANOUT INSTALLED IN UTILITY ROOM FLOOR

WASTE PIPING DIAGRAM
CONTROL HOUSE
NO SCALE

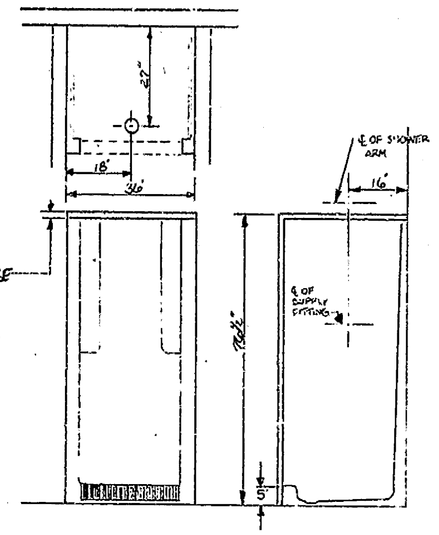

DETAIL "K-1936
NO SCALE
SHOWER

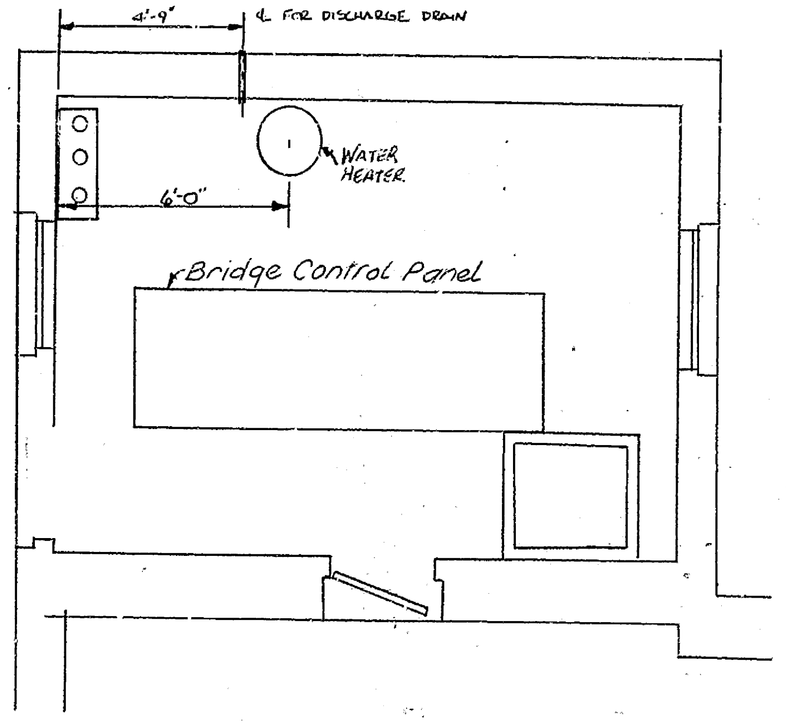

SWITCHBOARD ROOM
SCALE 3/8"=1'-0"

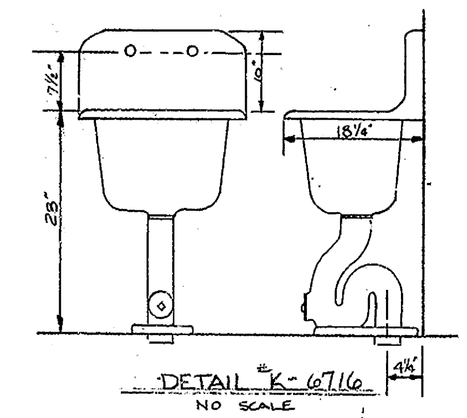

DETAIL "K-6716
NO SCALE
SERVICE SINK

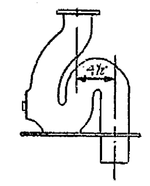

DETAIL "K-6671
NO SCALE
SERVICE SINK TRAP

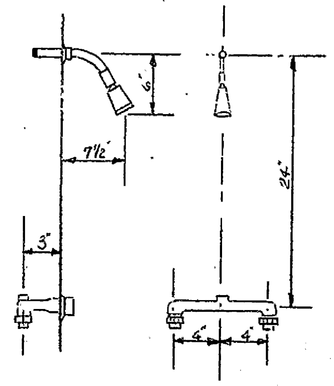

DETAIL "K-7226-T
NO SCALE
SHOWER FAUCET

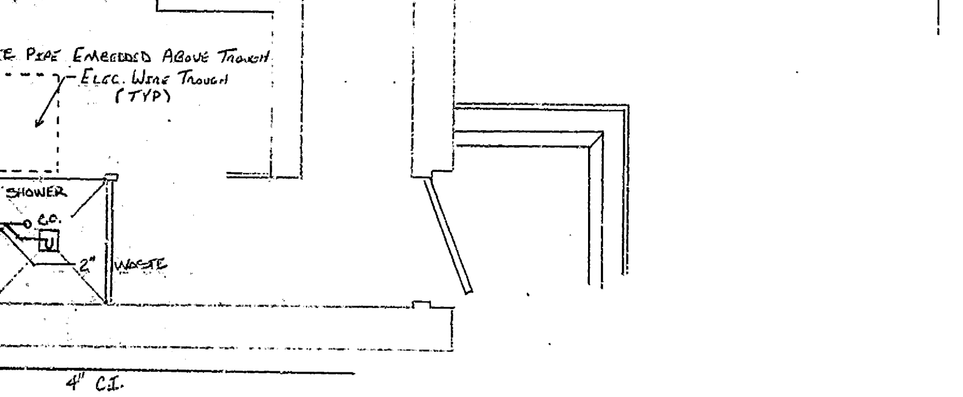

UTILITY ROOM
3/8" = 1'-0"
... PIPE CASING LOCATIONS

DISCHARGE & DRAIN FOR HOT WATER HEATER AND COLD WATER (BELOW IN SWITCHBOARD ROOM)

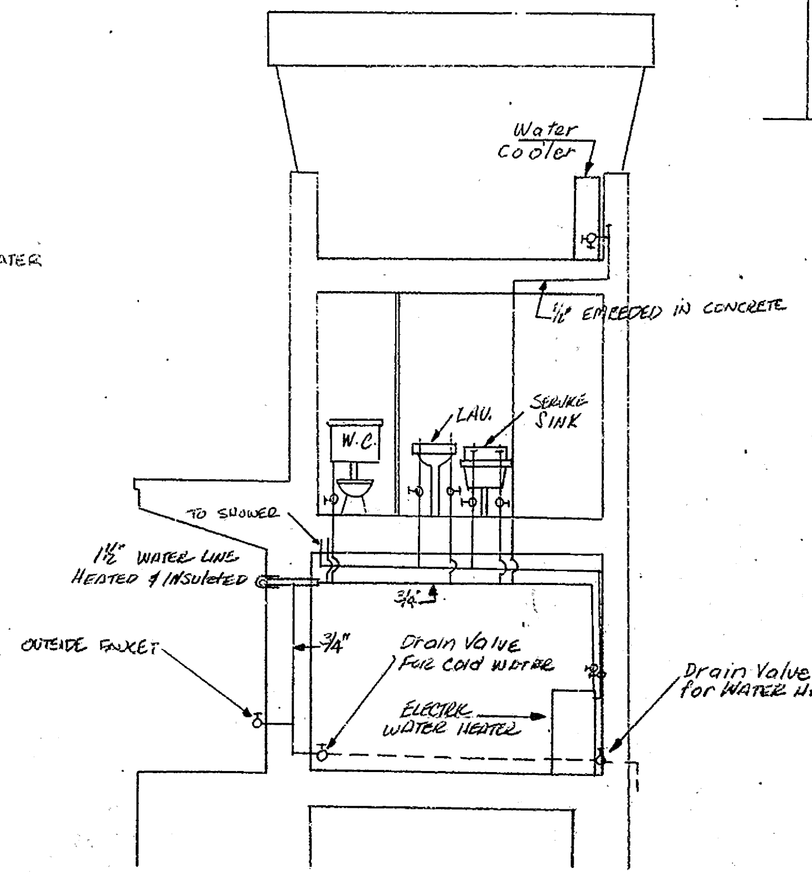

WATER PIPING DIAGRAM
NO SCALE
NOTE: ALL UTILITY ROOM FIXTURES TO HAVE WATER SUPPLY OF RECOMMENDED SIZE EXTENTING FROM FLOOR

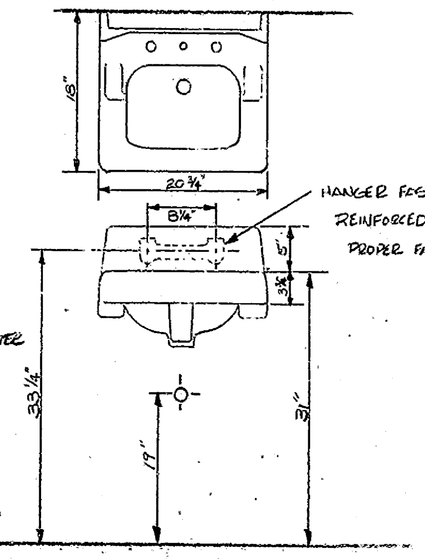

DETAIL "K-2030
NO SCALE
LAVATORY

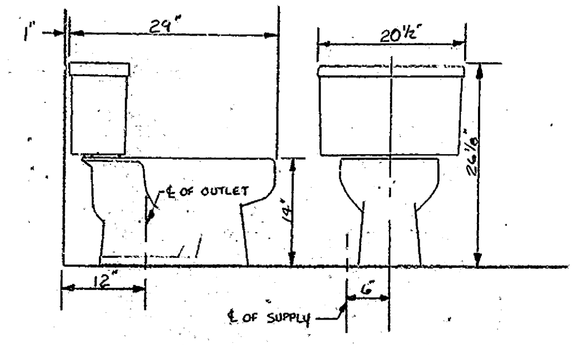

DETAIL "K-3500-EB
NO SCALE
TOILET

NOTE: ALL PIPE SLEEVES GALV. PIPE: ESCUTCHEON PLATES PROVIDED WHERE PIPING IS EXPOSED TO VIEW.

SAVANNAH ROAD BRIDGE	
GEORGE SHERMAN CORPORATION	
SCALE AS SHOWN	SHOP DRAWINGS AND DIAGRAMS
DATE 12/16/82	

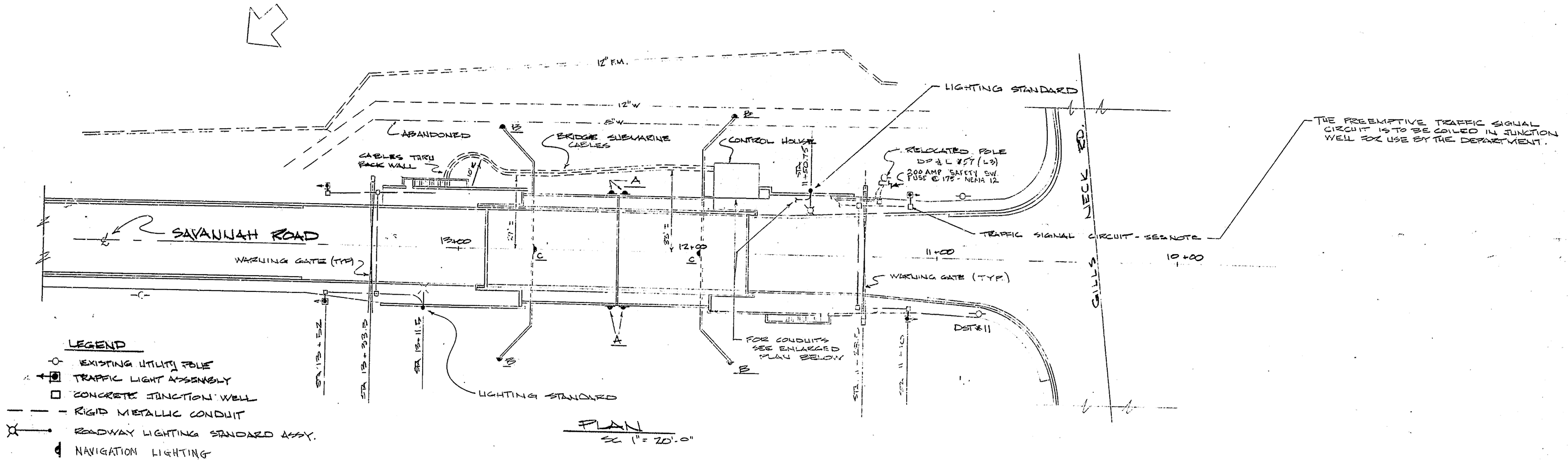

PLAN
SC 1" = 20'-0"

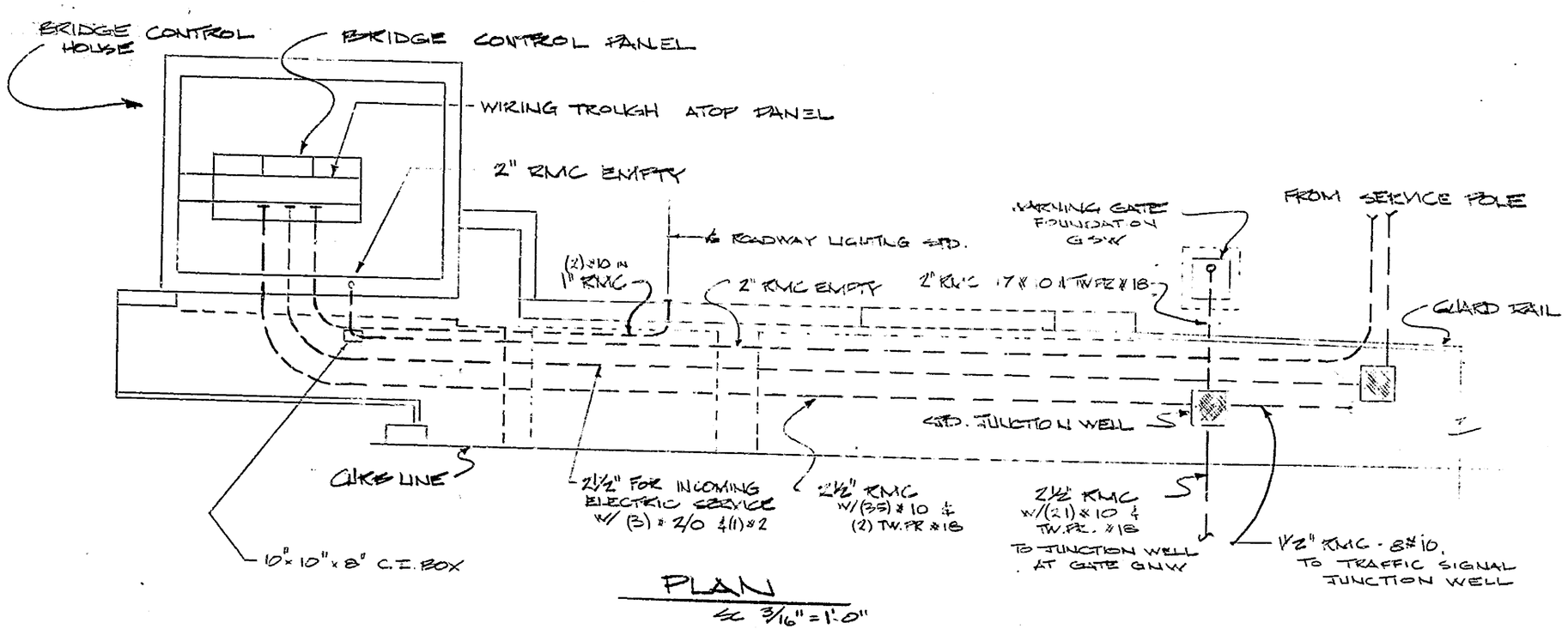

PLAN
SC 3/16" = 1'-0"

SAVANNAH ROAD BRIDGE
LEWES, DEL

SCALE: AS NOTED	APPROVED BY	DRAWN BY JET TUCKER
DATE: 1/11/85		

SITE ELECTRICAL PLAN

THOR ELEC DOVER DEL. | DRAWING NUMBER E-1

NO. 188A-24X36

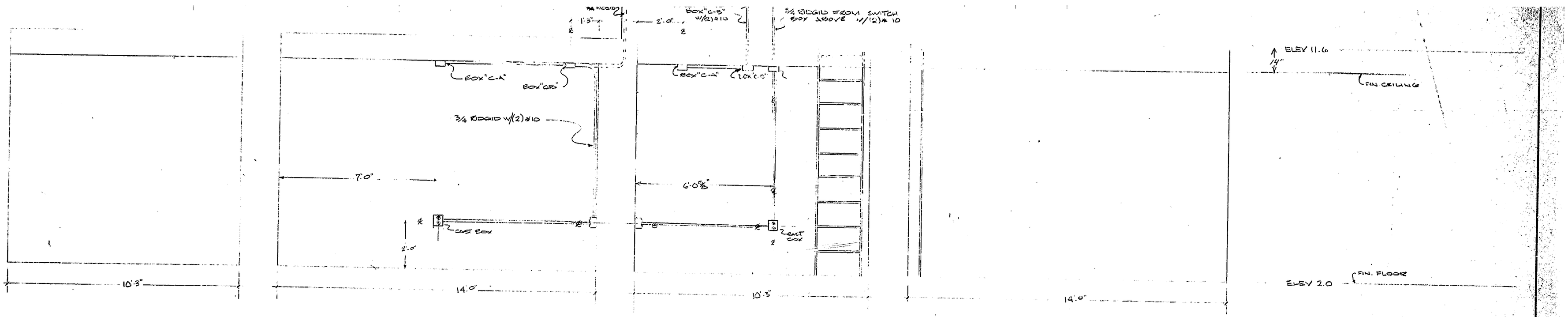

EAST INTERIOR WALL — SOUTH INT. WALL — WEST INT. WALL — NORTH INT. WALL

ELEVATIONS OF WALLS
1/2" = 1'0" (orig)

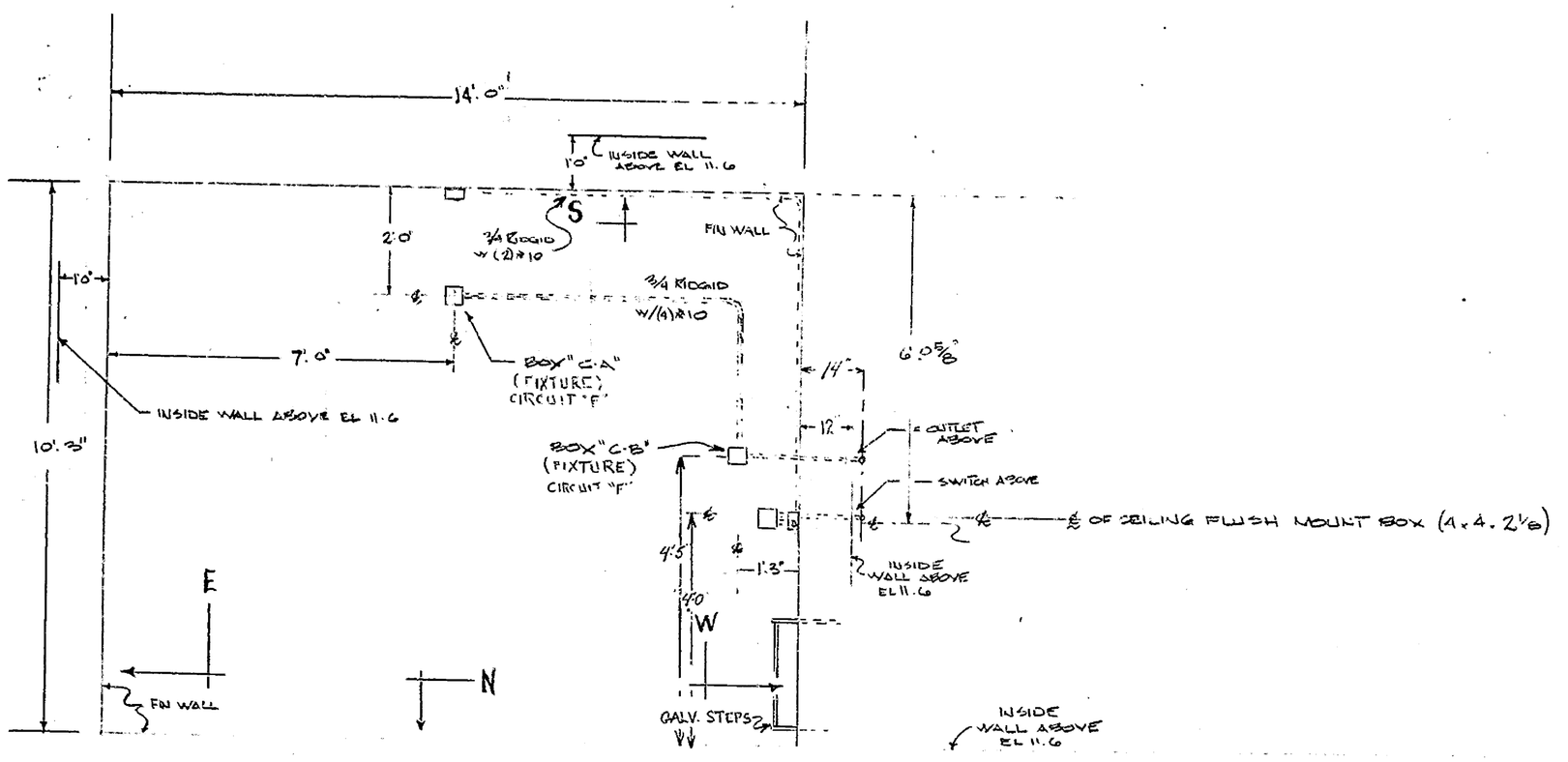

PLAN VIEW
1/2" = 1'0"

SAVANNAH RD BRIDGE LEWES, DEL.		
SCALE: AS NOTED	APPROVED BY	DRAWN BY CBT Tucker
DATE: 11/23/82		
STORAGE RM. LIGHTS & RECPT'S.		
TUDOR ELEC DOVER DEL.		DRAWING NUMBER E-2

NO. 185A-24936

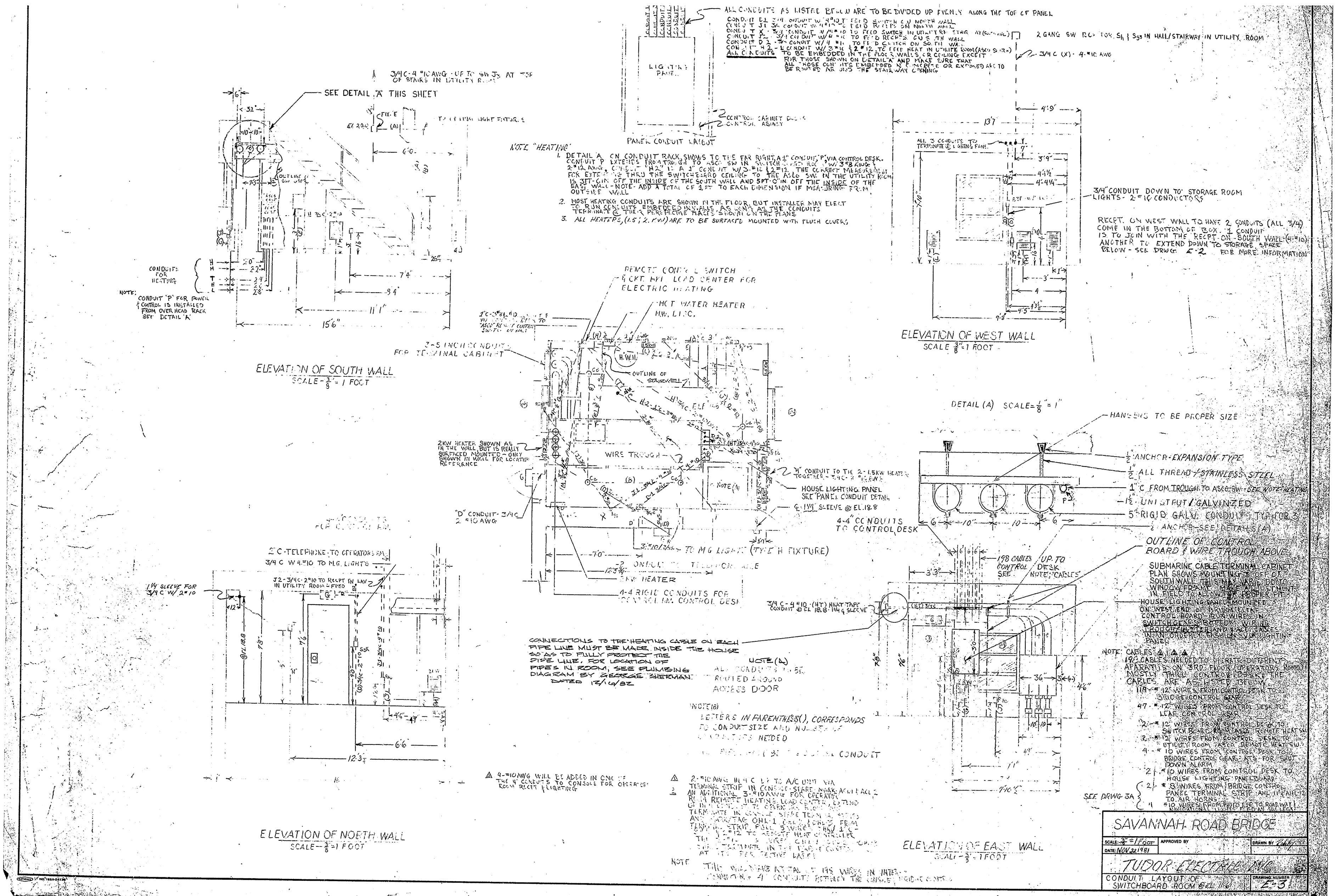

ALL CONDUITS AS LISTED BELOW ARE TO BE DIVIDED UP EVENLY ALONG THE TOP OF PANEL
CONDUIT D1 3/4 CONDUIT W/ 4#10 TO FEED SWITCH ON NORTH WALL
CONDUIT J1 3/4 CONDUIT W/ 4#10 TO FEED RECEPTS ON NORTH WALL
CONDUIT X - 3/4 CONDUIT W/ 4#10 TO FEED SWITCH IN UTILITY RM. STAIRWAY (ASCO SWITCH)
CONDUIT D2 - 3/4 CONDUIT W/ 4#10 TO FEED RECEPTS ON SOUTH WALL
CONDUIT H2 - 1 CONDUIT W/ 3#10 & 2#12 TO FEED HEAT IN UTILITY ROOM (ASCO SWITCH)
ALL CONDUITS TO BE EMBEDDED IN THE FLOOR, WALLS, OR CEILING EXCEPT FOR THOSE SHOWN ON DETAIL "A" AND MAKE SURE THAT ALL THOSE CONDUITS EMBEDDED IN CONCRETE OR EXPOSED ARE TO BE ROUTED AROUND THE STAIRWAY OPENING
2 GANG SW BOX FOR S1 & S3 IN HALL/STAIRWAY IN UTILITY ROOM
3/4 C (X) - 4-#10 AWG
LIGHTING PANEL
CONTROL CABINET DOORS
CONTROL CABINET
PANEL CONDUIT LAYOUT
3/4 C-4 #10 AWG - UP TO SW J3 AT TOP OF STAIRS IN UTILITY ROOM
SEE DETAIL "A" THIS SHEET
TO CEILING LIGHT FIXTURES
CONDUITS FOR HEATING
NOTE: CONDUIT "P" FOR POWER & CONTROL IS INSTALLED FROM OVER HEAD RACK SEE DETAIL "A"
ELEVATION OF SOUTH WALL
SCALE - 3/8" = 1 FOOT
NOTE "HEATING"
1. DETAIL "A" ON CONDUIT RACK SHOWS TO THE FAR RIGHT, A 1" CONDUIT "P" VIA CONTROL DESK. CONDUIT P EXTENDS FROM TROUGH TO ASCO SW IN SWITCHBOARD ROOM W/ 3#8 AWG & 2#12 AWG. CONDUIT "H2" IS A 1" CONDUIT W/ 3#10 & 2#12. THE CORRECT MEASUREMENT FOR EXTENDING THRU THE SWITCHBOARD CEILING TO THE ASCO SW IN THE UTILITY ROOM IS 3FT-6IN OFF THE INSIDE OF THE SOUTH WALL AND 5FT-0IN OFF THE INSIDE OF THE EAST WALL - NOTE - ADD A TOTAL OF 1 FT TO EACH DIMENSION IF MEASURING FROM OUTSIDE WALL
2. MOST HEATING CONDUITS ARE SHOWN IN THE FLOOR, BUT INSTALLER MAY ELECT TO RUN CONDUITS EMBEDDED IN WALLS, AS LONG AS THE CONDUITS TERMINATE @ THEIR PERSPECTIVE PLACES SHOWN ON THE PLANS
3. ALL HEATERS, (1.5 & 2 KW) ARE TO BE SURFACED MOUNTED WITH FLUSH COVERS
ALL 3 CONDUITS TO TERMINATE @ LIGHTING PANEL
3/4" CONDUIT DOWN TO STORAGE ROOM LIGHTS - 2-#10 CONDUCTORS
RECPT. ON WEST WALL TO HAVE 2 CONDUITS (ALL 3/4) COME IN THE BOTTOM OF BOX. 1 CONDUIT IS TO JOIN WITH THE RECPT. ON SOUTH WALL (4-#10) ANOTHER TO EXTEND DOWN TO STORAGE SPACE BELOW - SEE DRWG E-2 FOR MORE INFORMATION
ELEVATION OF WEST WALL
SCALE 3/8" = 1 FOOT
REMOTE CONTROL SWITCH & CKT. BKR. LOAD CENTER FOR ELECTRIC HEATING
HOT WATER HEATER H.W. DISC.
3-5 INCH CONDUITS FOR TERMINAL CABINET
OUTLINE OF STAIRWELL
2KW HEATER SHOWN AS IN THE WALL, BUT IS REALLY SURFACED MOUNTED - ONLY SHOWN IN WALL FOR LOCATION REFERENCE
WIRE TROUGH
"H" CONDUIT TO TIE 2-1.5KW HEATER TOGETHER - 3/4 C - 2 #10 AWG
HOUSE LIGHTING PANEL SEE PANEL CONDUIT DETAIL
1 1/4" SLEEVE @ EL. 18.8
"D" CONDUIT - 3/4 C 2 #10 AWG
TO M.G. LIGHTS (TYPE H FIXTURE)
2 CONDUIT TO TELEPHONE SIZE
2KW HEATER
4-4 RIGID CONDUITS FOR CONTROL DESK
DETAIL (A) SCALE = 1/8" = 1"
HANGERS TO BE PROPER SIZE
1/2" ANCHOR - EXPANSION TYPE
1/2" ALL THREAD / STAINLESS STEEL
1" C FROM TROUGH TO ASCO SW - SEE NOTE HEATING
1 1/2" UNISTRUT / GALVINIZED
5" RIGID GALV. CONDUIT TYP. FOR 3
1/2" ANCHOR - SEE DETAILS (A)
4-4" CONDUITS TO CONTROL DESK
OUTLINE OF CONTROL BOARD & WIRE TROUGH ABOVE
SUBMARINE CABLE TERMINAL CABINET PLAN SHOWS MOUNTING 3" OFF OF SOUTH WALL. THIS MAY VARIE DO TO WINDOW FRAME. MAKE ADJUSTMENT IN FIELD TO ALLOW FOR PROPER FIT.
HOUSE LIGHTING PANEL MOUNTED ON WEST END OF BRIDGE LEAF CONTROL BOARD - RUN WIRES IN SWITCHGEARS BOTTOM WIRING TROUGH/GUTTER AND LACE CABLES IN AN ORDERLY FASHION VIA LIGHTING PANEL
198 CABLES CONTROL SEE
UP TO DESK NOTE "CABLES"
3/4 C - 4 #10 (HT) HEAT TAPE CONDUIT @ EL 18.8 - 1 1/4 SLEEVE
CONNECTIONS TO THE HEATING CABLE ON EACH PIPE LINE MUST BE MADE INSIDE THE HOUSE SO AS TO FULLY PROTECT THE PIPE LINE. FOR LOCATION OF PIPES IN ROOM, SEE PLUMBING DIAGRAM BY GEORGE SHERMAN DATED 12/16/82
NOTE (A) ALL CONDUITS TO BE ROUTED AROUND ACCESS DOOR
NOTE (B) LETTERS IN PARENTHESIS (), CORRESPONDS TO CONDUIT SIZE AND NUMBER OF CONDUCTORS NEEDED
NOTE: CABLES △ & △△
198 CABLES NEEDED TO OPERATE DIFFERENT APARATUS ON 3RD FLOOR (OPERATORS ROOM) MOSTLY THRU CONTROL DESK. THE CABLES ARE AS LISTED BELOW
119 - #12 WIRES FROM CONTROL DESK TO BRIDGE CONTROL GEAR
47 - #12 WIRES FROM CONTROL DESK TO LEAF CONTROL GEAR
2 - #12 WIRES FROM CONTROL DESK TO SWITCHBOARD ROOM ASCO REMOTE HEAT SW.
2 - #12 WIRES FROM CONTROL DESK TO UTILITY ROOM ASCO REMOTE HEAT SW.
4 - #10 WIRES FROM CONTROL DESK TO BRIDGE CONTROL GEAR - ATS FOR SHUT DOWN ALARM
2 - #10 WIRES FROM CONTROL DESK TO HOUSE LIGHTING PANELBOARD
SEE DRWG 3A
2 - #8 WIRES FROM BRIDGE CONTROL PANEL TERMINAL STRIP AHL 11 & AHL 12 TO AIR HORNS
1 - #10 WIRES FROM PHOTO EYE TO ROADWAY NAVIGATIONAL LIGHTS FIELD AN SW LEGS
2" C-TELEPHONE TO OPERATORS RM.
3/4 C W 4-#10 TO M.G. LIGHTS
J2 - 3/4 C - 2#10 TO RECPT IN LAV IN UTILITY ROOM - FEED
1 1/4 SLEEVE FOR 3/4 C W/ 2#10
ELEVATION OF NORTH WALL
SCALE - 3/8" = 1 FOOT
△ 4-#10 AWG WILL BE ADDED IN ONE OF THE 4" CONDUITS TO CONSOLE FOR OPERATORS ROOM RECPT & LIGHTING
△ 2-#10 AWG IN 4 C UP TO A/C UNIT VIA TERMINAL STRIP IN CONSOLE SPARE WORK ACH & ACL 2
AN ADDITIONAL 3-#10 AWG FOR OPERATOR ROOM REMOTE HEATING LOAD CENTER, EXTEND UP IN 4 CONDUIT TO OPERATOR ROOM AND TERMINATE IN CONSOLE SPARE TERMINAL STRIPS AND MARK/TAG OHL 1 OHL 2 & OHL 3 FROM TERMINAL STRIP. PULL 5 WIRES THRU 1 C - 3#10 & 2#12 TO REMOTE HEAT CONTROLLER
NOTE THE WALL MAKE AT TAL OF 198 WIRES IN INTER-CONNECTING 4" CONDUITS BETWEEN THE CONSOLE & BRIDGE CONTROL
ELEVATION OF EAST WALL
SCALE - 3/8" = 1 FOOT
SAVANNAH ROAD BRIDGE
SCALE: 3/8" = 1 FOOT
APPROVED BY
DRAWN BY
DATE: NOV 22 1981
TUDOR ELECTRIC INC.
CONDUIT LAYOUT OF SWITCHBOARD ROOM @ EL 11.6
DRAWING NUMBER E-3

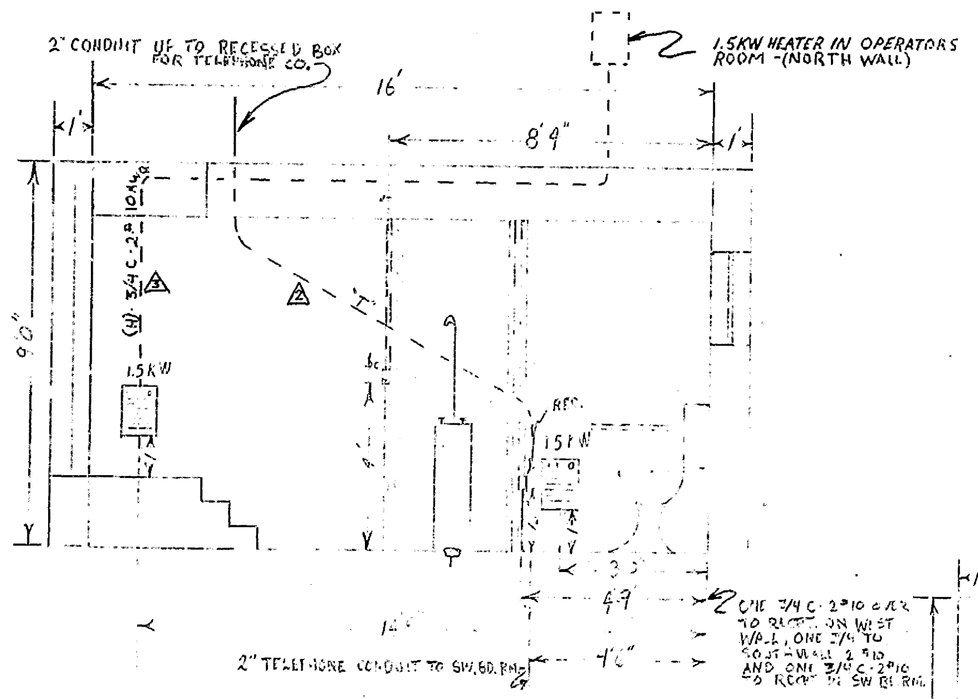

⚠ ELEVATION OF NORTH WALL
SCALE - 3/8" = 1 FOOT

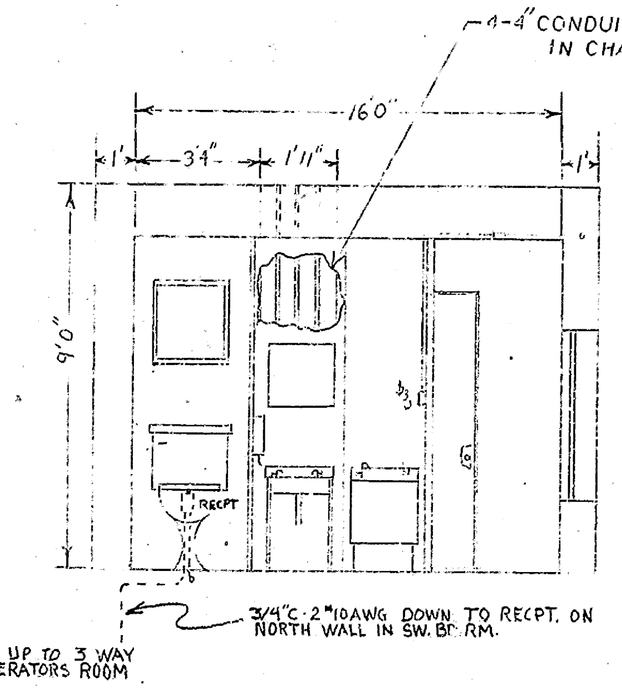

⚠ ELEVATION OF EAST WALL
SCALE - 3/8" = 1 FOOT

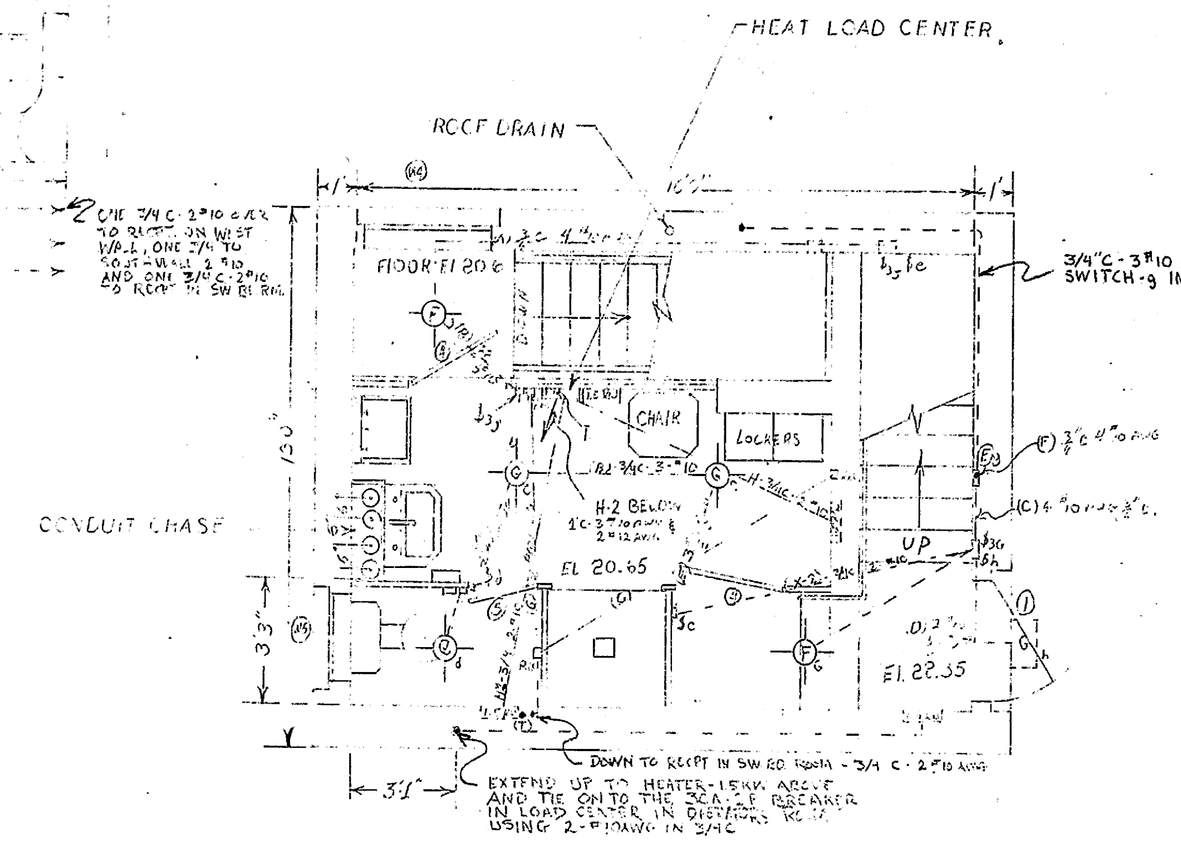

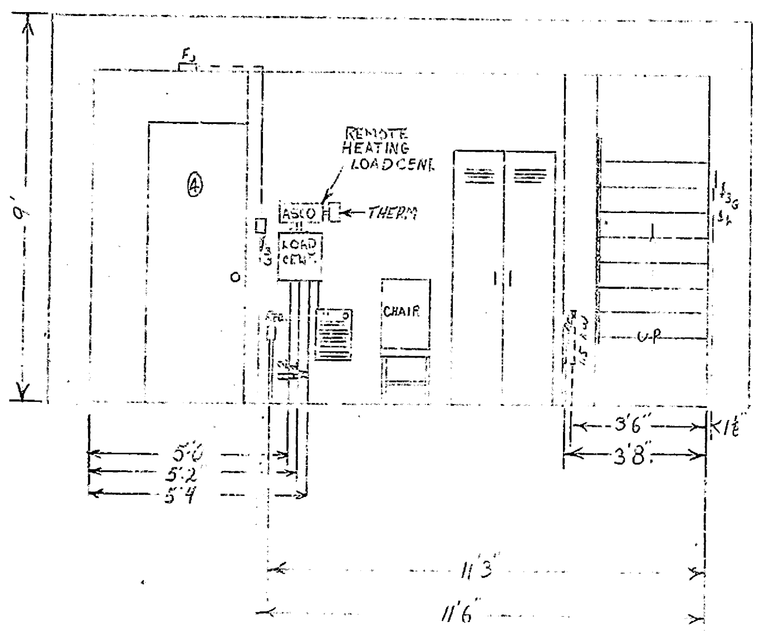

⚠ ELEVATION OF SOUTH WALL
SCALE - 3/8" = 1 FOOT

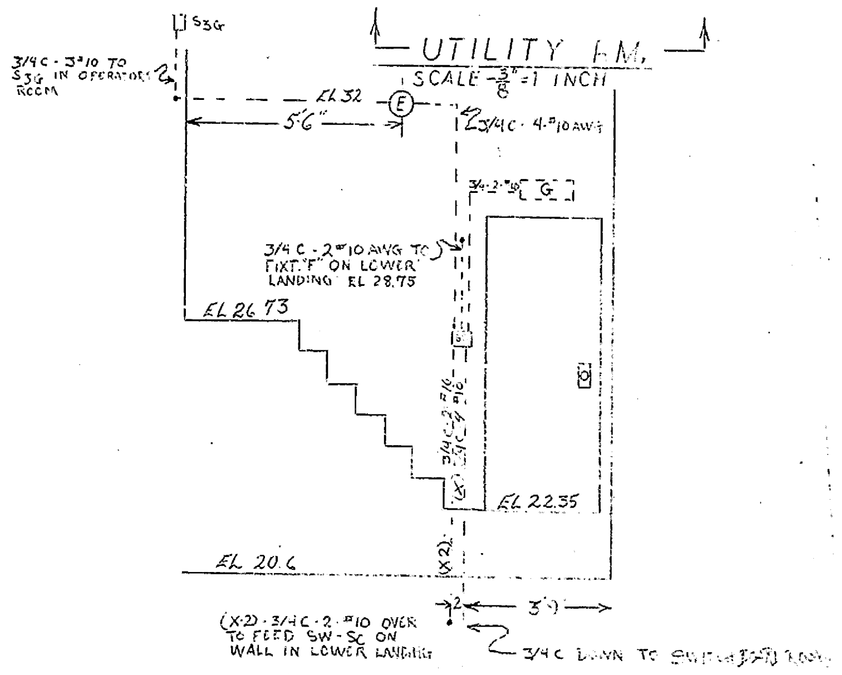

WEST STAIRWAY ELEVATION
SCALE - 3/8" = 1 FOOT

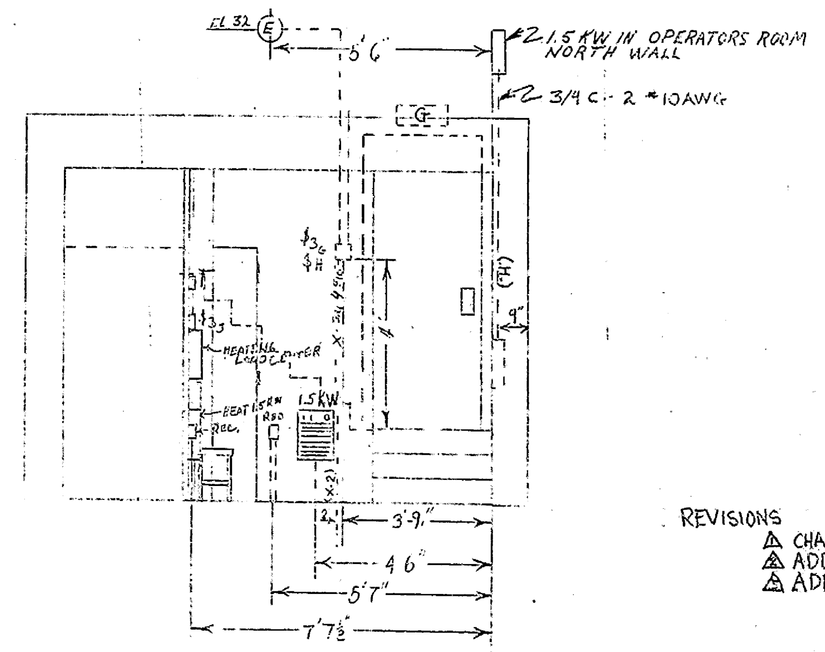

⚠ ELEVATION OF WEST WALL
SCALE - 3/8" = 1 FOOT

REVISIONS
⚠ CHANGED LETTERING
⚠ ADDED 2" TELEPHONE CONDUIT
⚠ ADDED 3/4" HEATING CONDUIT

SAVANNAH ROAD BRIDGE

SCALE 3/4" = 1 FOOT	APPROVED BY	DRAWN BY RMH
DATE: AUG. 30, 1982		

CONDUIT LAYOUT OF UTILITY ROOM.

TUDOR ELECTRIC INC. — DRAWING NUMBER E4

NO. 185A-24236

SAVANNAH RCAD BRIDGE

SCALE: 3/8" = 1 FOOT	APPROVED BY
DATE: 8/30/82	DRAWN BY Kelly

OPERATORS ROOM CONDUIT LAY OUT

TUDOR ELECTRIC INC — DRAWING NUMBER E-5

ELEVATION OF WEST WALL
SCALE 3/8" = 1 FOOT

ELEVATION OF SOUTH WALL
SCALE-3/8" = 1 FOOT

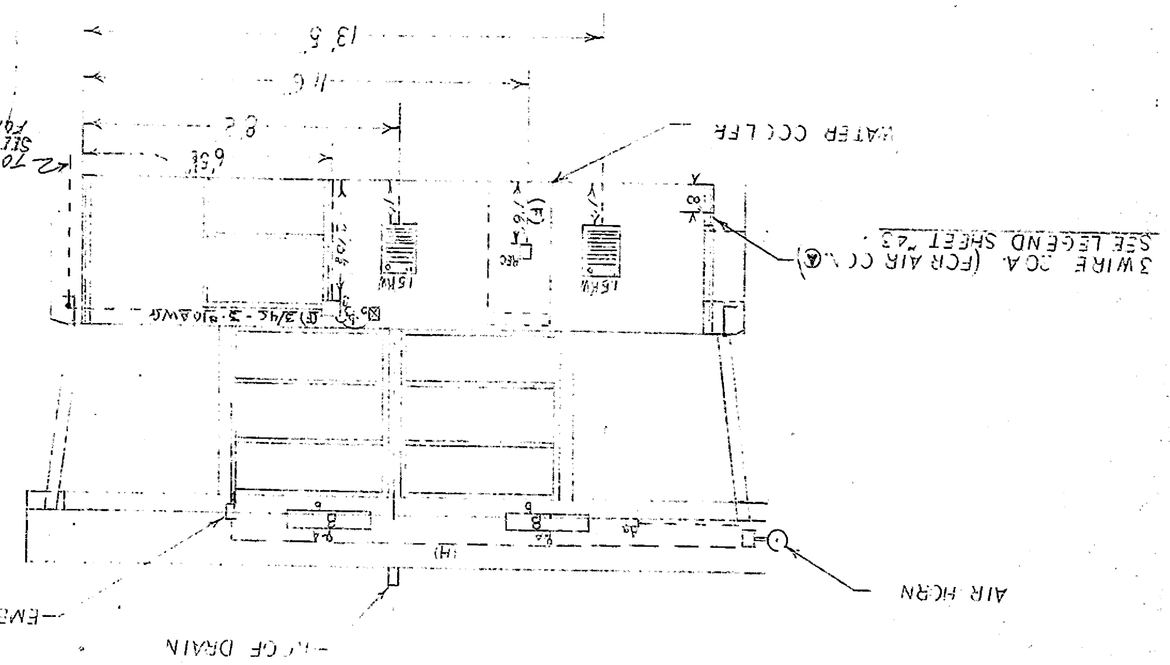

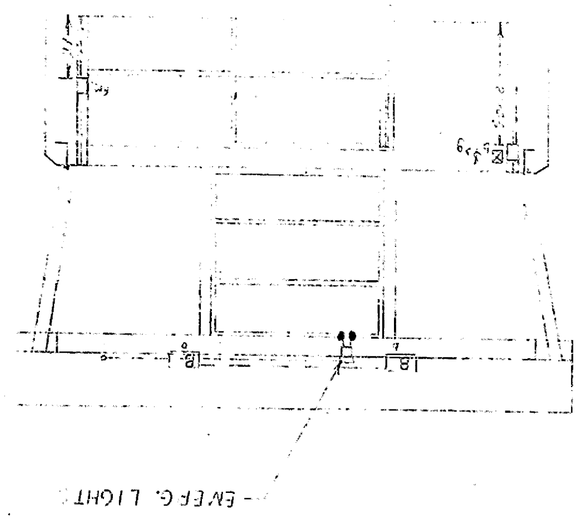

OPERATORS PCW
SCALE-3/8" = 1 FOOT

NOTE (A)
SEE FACT ELEVATION FOR
CONTINUATION CF (A)

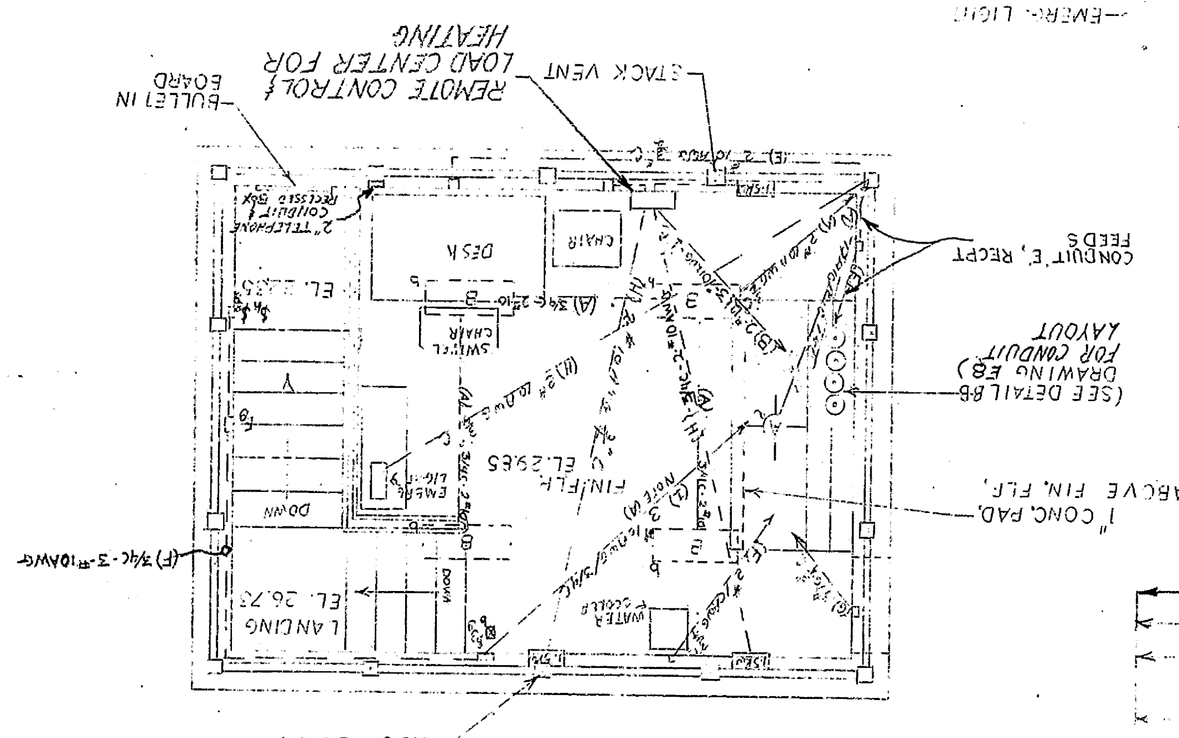

ELEVATION OF NORTH WALL
SCALE-3/8" = 1 FCCT

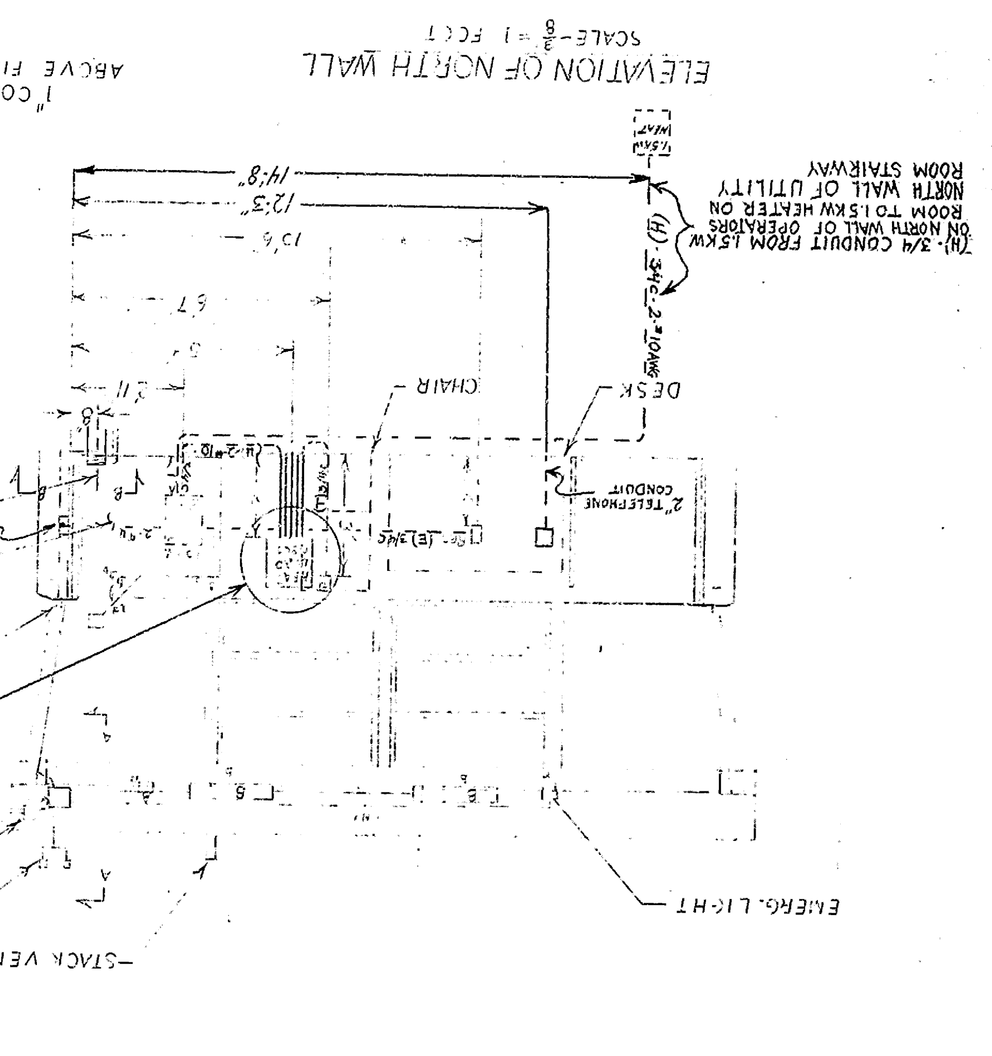

ELEVATION OF EAST WALL
SCALE 3/8" = 1 FCCT

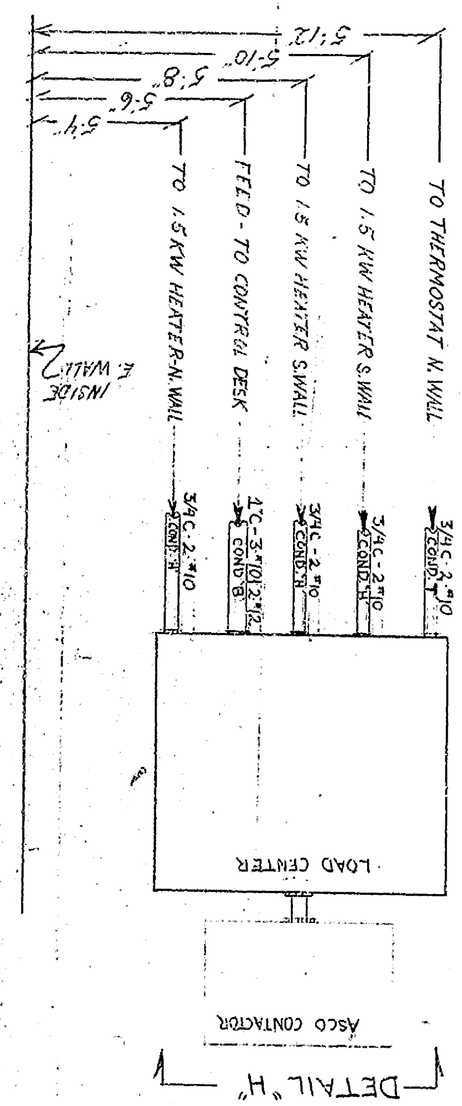

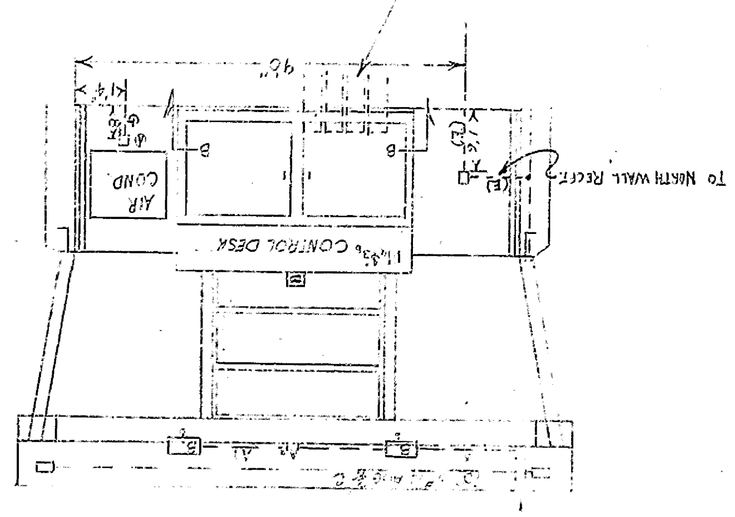

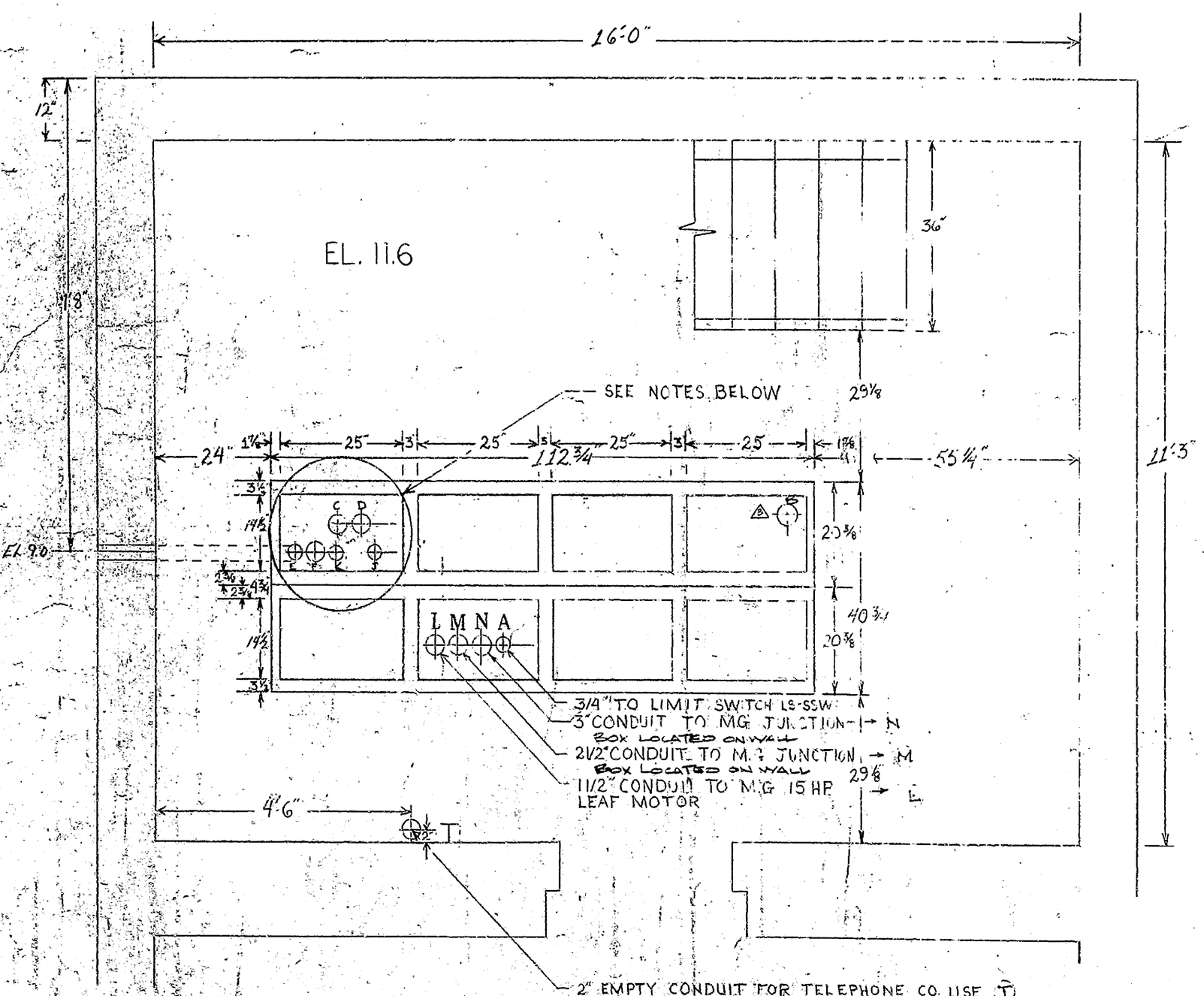

NOTES FOR CONDUIT REFERENCE

B - 2½"C FOR SERVICE
C - 1"C FOR ROADWAY LIGHTS
D - 2½"C FOR WARNING GATES & GONGS - ETC.
E - 1"C FOR FENDER LIGHTS
F - 2½"C FOR GEN. SET POWER CABLES
K - 3/4"C FOR GEN. SET CONTROL WIRING
J - 3/4"C FOR M.G. RECPT. FEED

SCALE ~ 3/4" = 1'

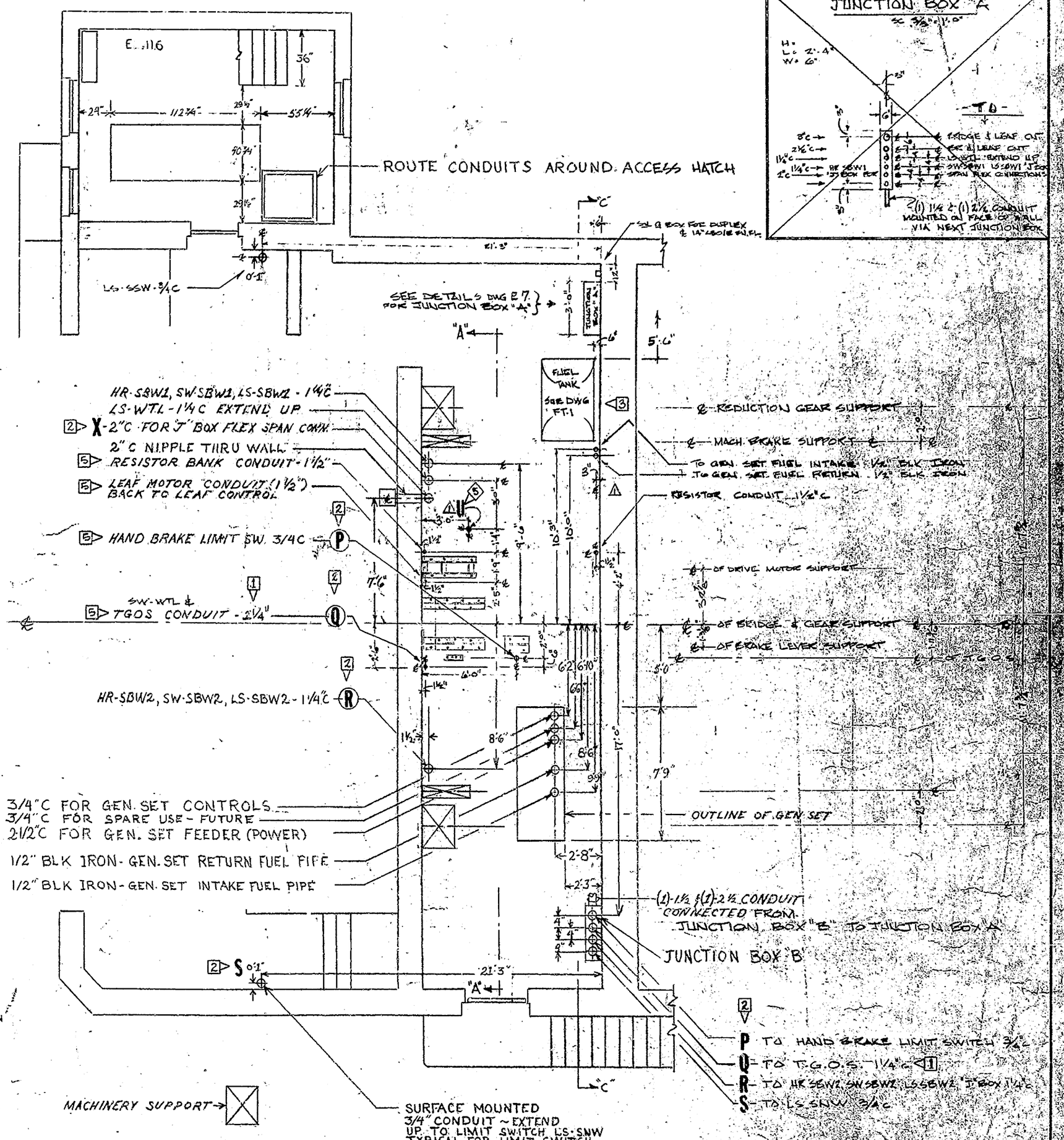

SCALE ~ 1/4" = 1'

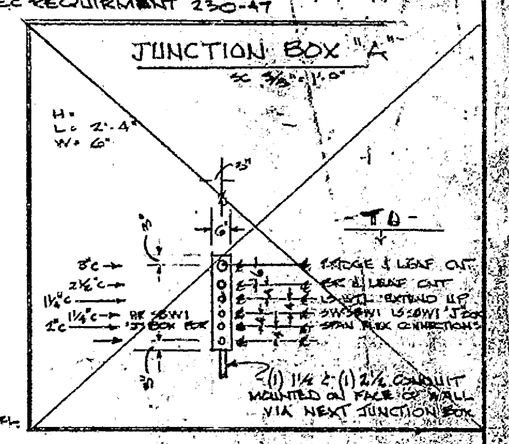

WEST LEAF MACHINE GALLERY & BRIDGE CONTROL HOUSE
CONDUIT ARRANGEMENT

U 1 ⚠ REVISIONS
1¼"C W/7-#10 FROM JUNCTION BOX "A" TO EAST N.L. WALL FOR SW-MBW, HR-MBW & LS-MBW
⚠2 CONDUIT "B" FROM LETTER DATED MAY 13, 1982 IS DELETED FROM FOUR NEW LABEL W AND IS NOW ROUTED OVER HEAD FROM JUNCTION BOX "A" - 2C-#12-#10
⚠ AS PER NEC REQUIREMENT 230-47

※	REVISIONS	DATE
1	CHANGE FROM 1"C TO 1¼"C	9/30/82
2	ADDITIONAL LABELING	9/30/82
3	FUEL TANK REVISIONS	9/30/82
4	NEW LABEL W	10/1/82
5	NEW DIMENSIONS FOR CONDUIT	10/1/82

ALSO SEE EARLIER REVISIONS THIS PAGE.

SAVANNAH BRIDGE RD

SCALE: VARIES | APPROVED BY: | DRAWN BY: JOSTAK
DATE: 6-15-82 | CHECKED BY: (BLANK)

DECK POUR-1 REVISED

TUDOR ELECTRIC | DRAWING NUMBER E-6

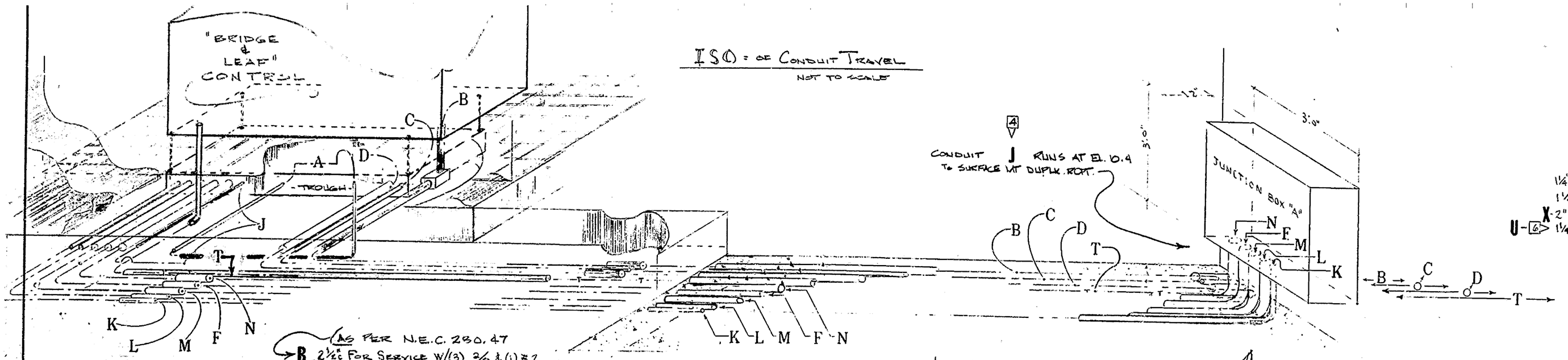

ISO = OF CONDUIT TRAVEL
NOT TO SCALE

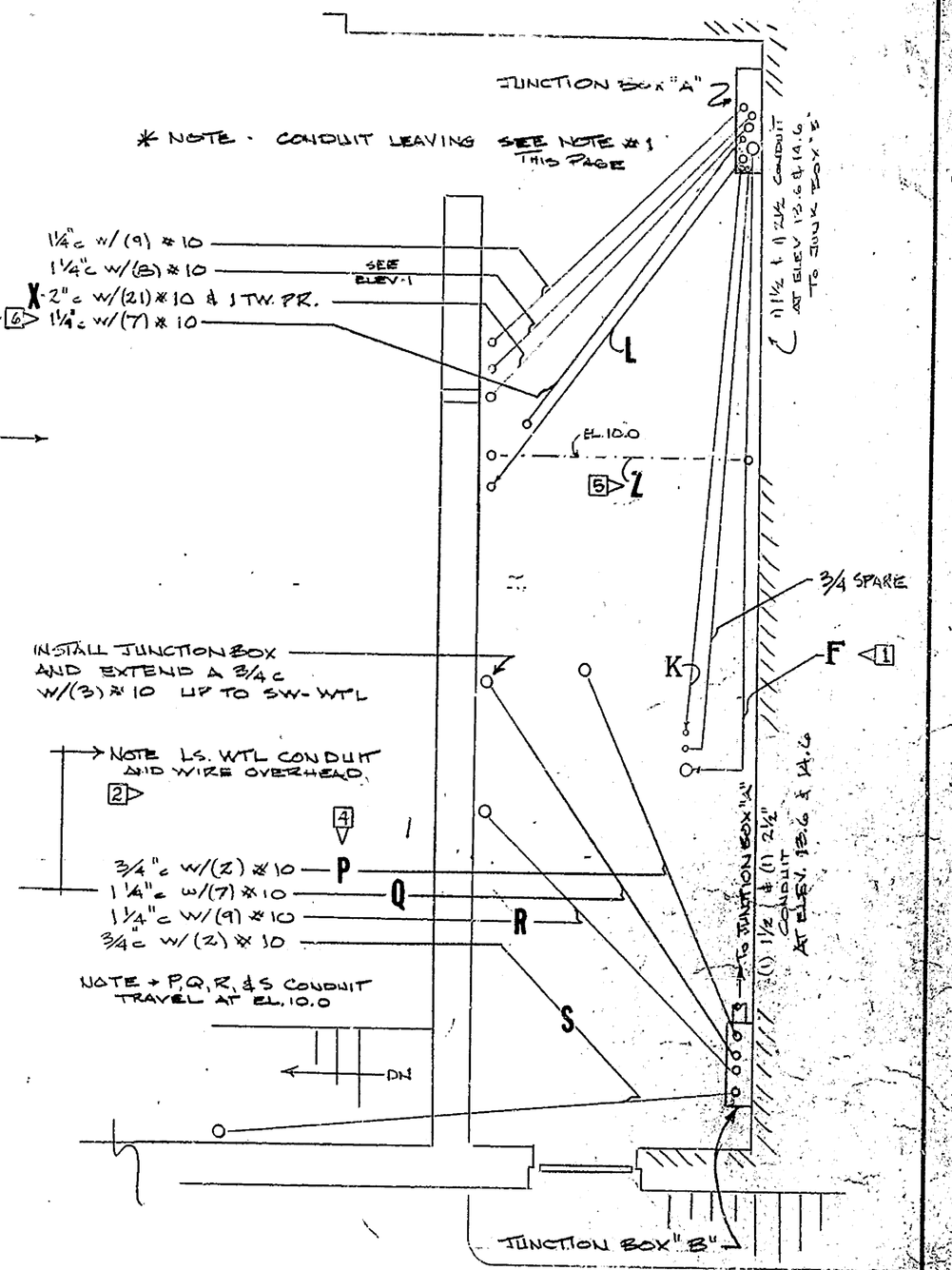

A ¾"c w/(2) #10 TO LS-SSW

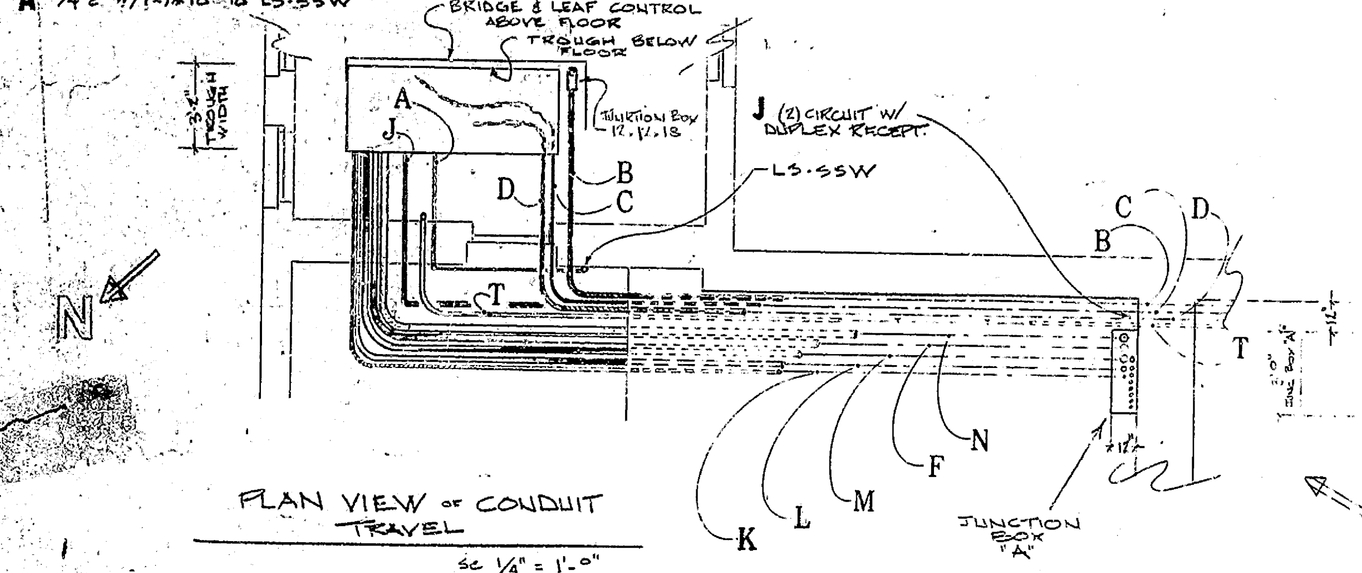

PLAN VIEW OF CONDUIT TRAVEL
SC ¼" = 1'-0"

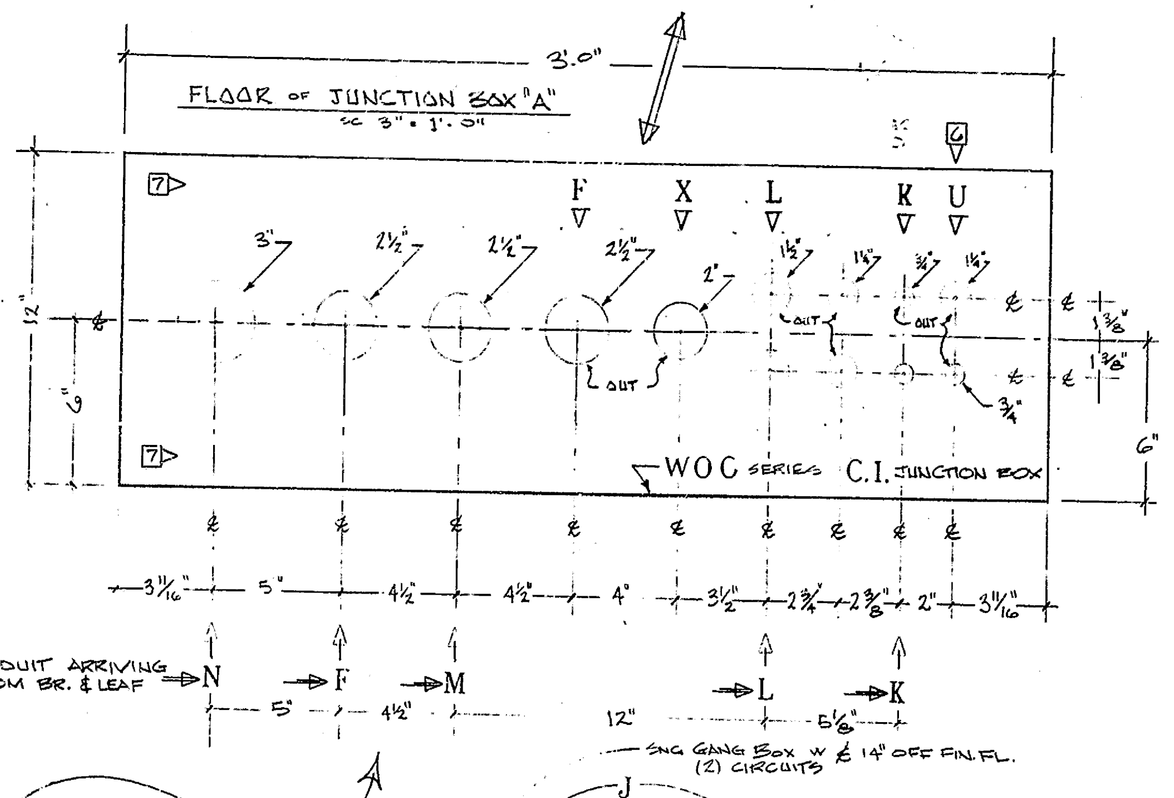

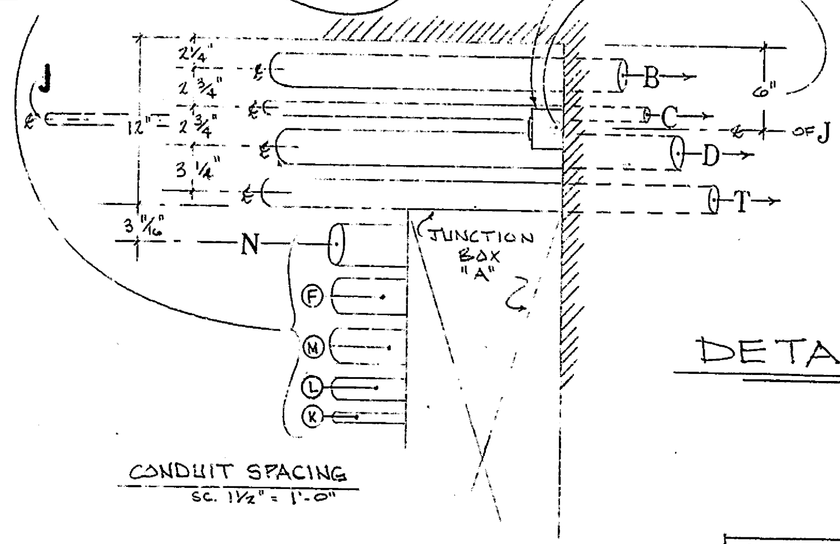

CONDUIT SPACING
SC. 1½" = 1'-0"

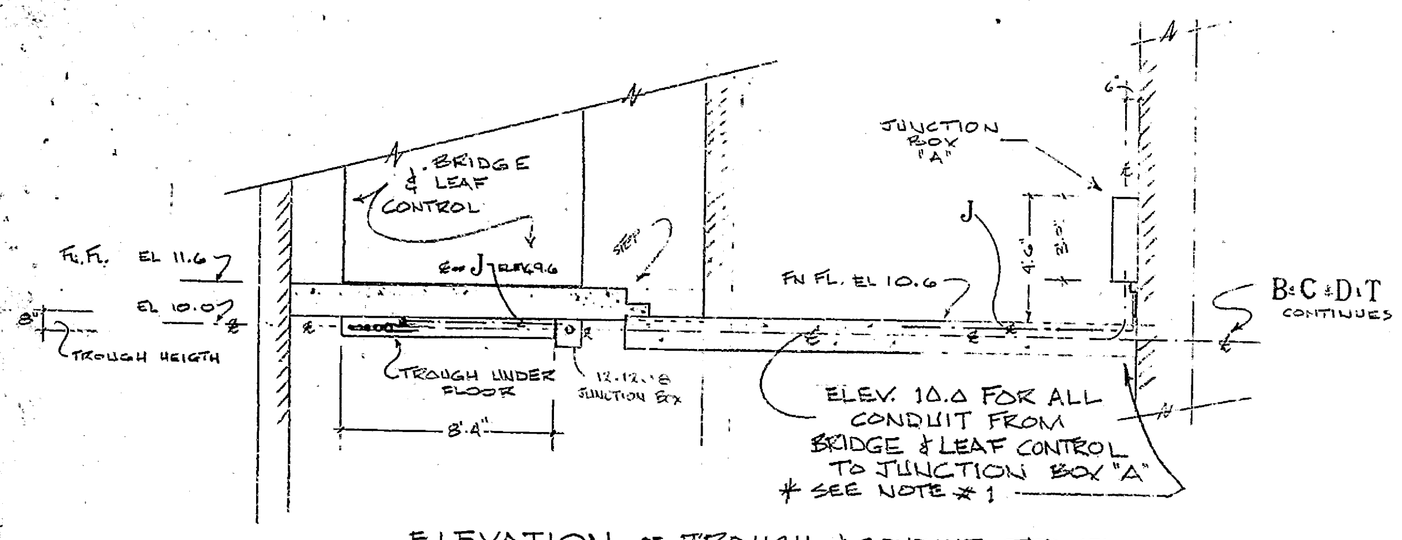

ELEVATION OF TROUGH & CONDUIT TRAVEL
SC ¼" = 1'-0"

NOTES

* 1 - CONDUIT, LEAVING JUNCTION BOX "A", (WITH EXCEPTION OF CONDUIT TO AND/OR FROM BRIDGE & LEAF CONTROL) HAS HORIZONTAL ELEVATION OF 9.65
CONDUIT "J" ELEV 10.4 (TO RECEPT BOX)

A - ¾"c w/(2) #10 TO LS-SSW
B - 2½"c FOR SERVICE w/(3) 3/0 & (1) #2
C - 2"c FOR ROADWAY SERVICE w/(6) #10
D - 2½"c FOR WARNING GATES & GONGS EST. w/(34) #10 & 1 TW. PR. #18
F - 2½"c FOR GENERATOR SET POWER CABLES w/(3) 1/0, (1) #2 & (2) #10
J - ¾"c FOR RECEPTICLE FEED w/(6) #10 (DUPLEX RECEPT TO BE LOCATED BY (JUNCTION BOX "A")
K - ¾"c w/(2) #10 (START CONTROL)
L - 1½"c TO M.G. 15 HORSE w/(3) #4
M - 2½"c TO M.G. w/(3-5) #10
N - 3"c TO M.G. w/(4-3) #10 & (1) TW. PR.
5 Z - 1½"c FOR LINE RESISTOR w/(3) #4
AS PER N.E.C. 230, 47

CONDUIT LINES OUT OF JUNCTION BOXES "A" & "B"
NOT TO SCALE

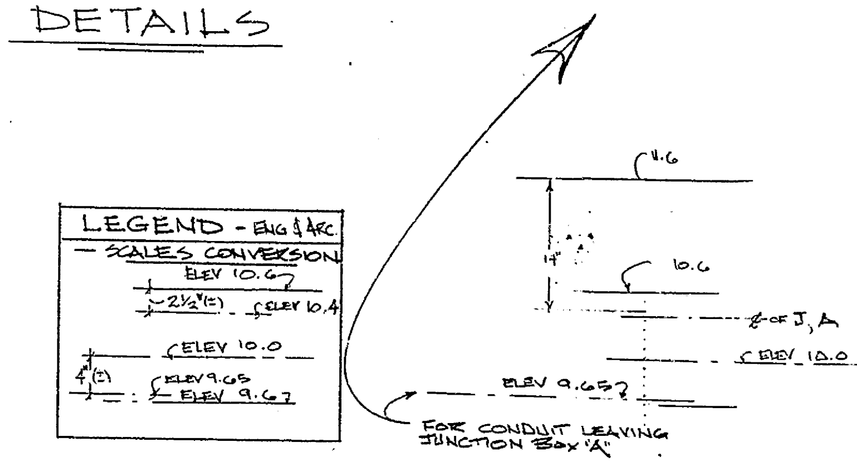

ELEV OF 10.6 IS APPROX 10'-7⅜"

DETAILS

*	REVISIONS	BY/DATE
1	M CHANGED TO F	CF 9/30/82
2	DROP REDUNDANT WORDING	CF 9/30/82
3	CHANGE DWG # FROM #2 TO CR1 TO E7	CF 9/30/82
4	ADDITIONAL LABELING	CF 9/30/82
5	VIEW LABEL "Z" FOR 1½"c RESISTOR	CF 9/30/82
6	CHANGE FROM 1"c TO 1¼"c & LABEL	CF 9/30/82
7	DIMENSIONS & LABELING - AS PER APPELTON ELEC. CO. SHOP DWG	CF 10/5/82

SAVANNAH BRIDGE — LEWES DEL.

SCALE: AS NOTED	APPROVED BY	REVISIONS 9/30/82 10/5/82	DRAWN BY CF/WOLFER
DATE: 8/30/82			

CONDUIT RUNS - & JUNCTION BOX "A"

TUDOR ELEC. OF Dover, Del. — DRAWING NUMBER E-7 [3]

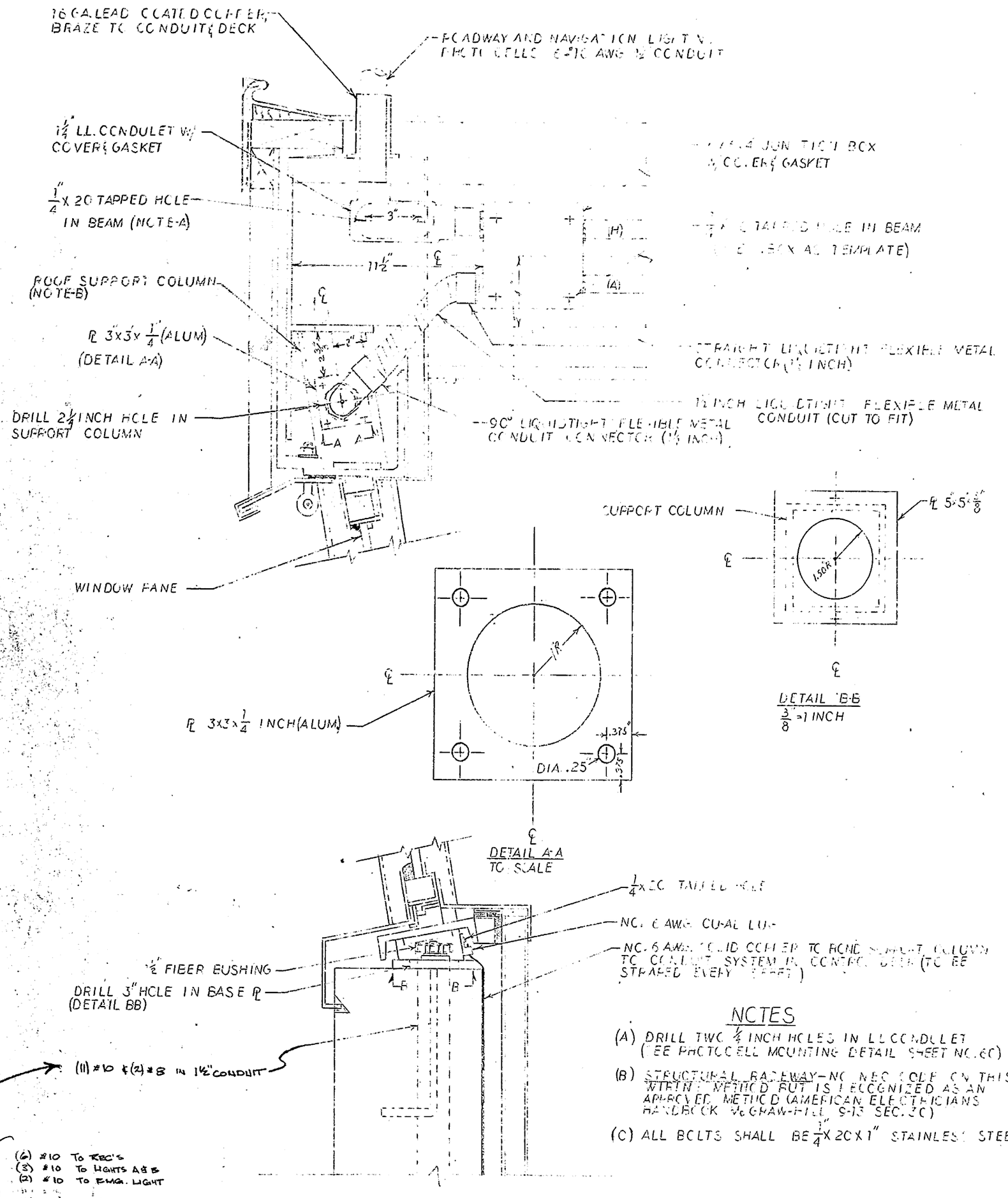

NOTES

(A) DRILL TWO ¼ INCH HOLES IN LL CONDULET (SEE PHOTOCELL MOUNTING DETAIL SHEET NO. 6C)

(B) STRUCTURAL RACEWAY - NOT USED ON THIS WORK METHOD BUT IS RECOGNIZED AS AN APPROVED METHOD (AMERICAN ELECTRICIANS HANDBOOK & GRAW-HILL 9-13 SEC. 20)

(C) ALL BOLTS SHALL BE ¼"X 20 X 1" STAINLESS STEEL

DETAIL A-A
SCALE 3"=1 FOOT

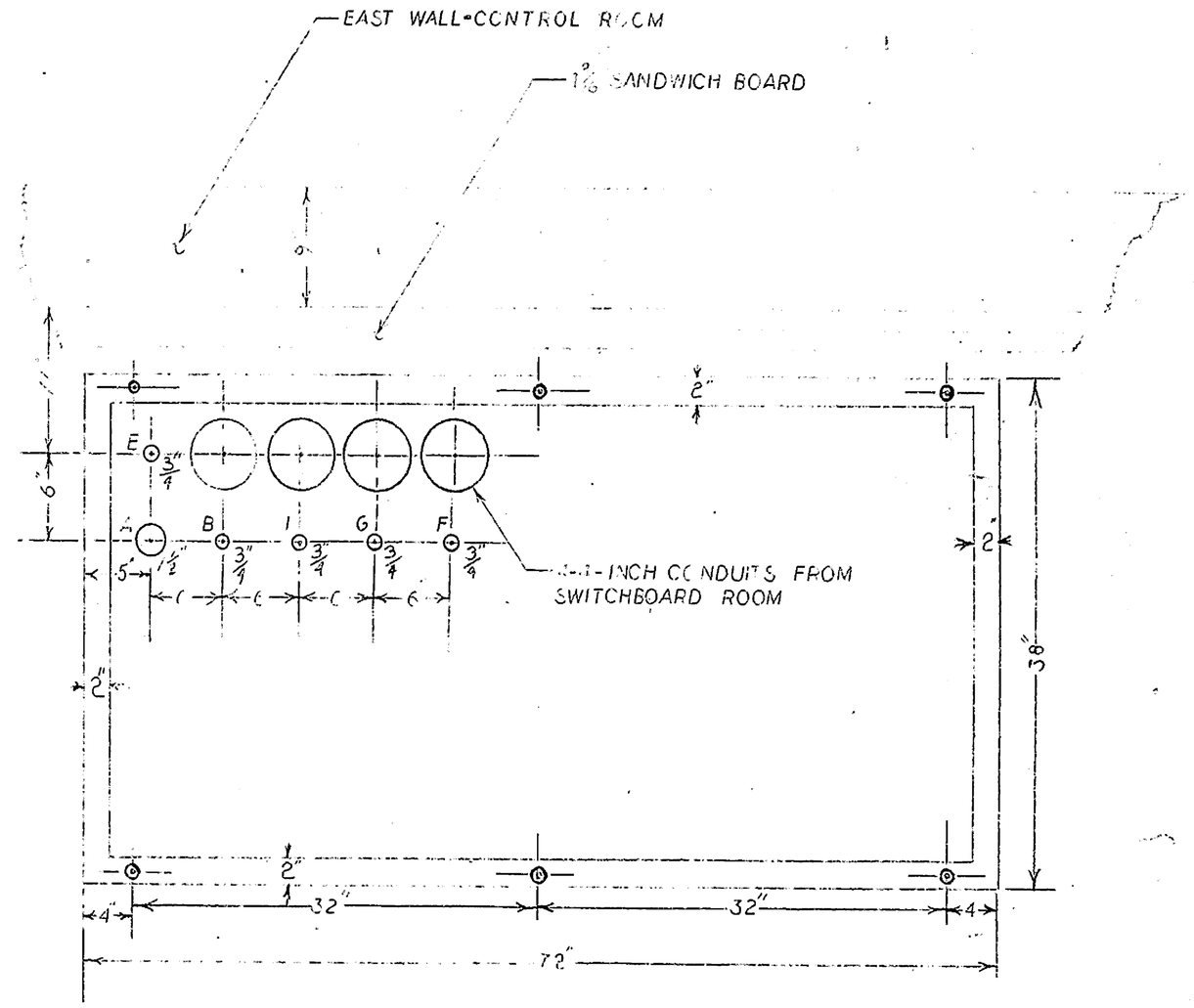

NOTES

ALL CONDUITS TO BE BONDED TOGETHER WITH BONDING BUSHINGS (USE NO. 6-CU)

DETAIL B-B
SCALE 1" = 1 FOOT

SAVANNAH ROAD BRIDGE

SCALE: AS NOTED	APPROVED BY	DRAWN BY: L.M.D.
DATE: SEPT. 15, 1982		

THOR ELEC. CO. POWER DEPT.

CONTROL ROOM DETAILS. DRAWING NUMBER: E-8

NO. 185A-24536

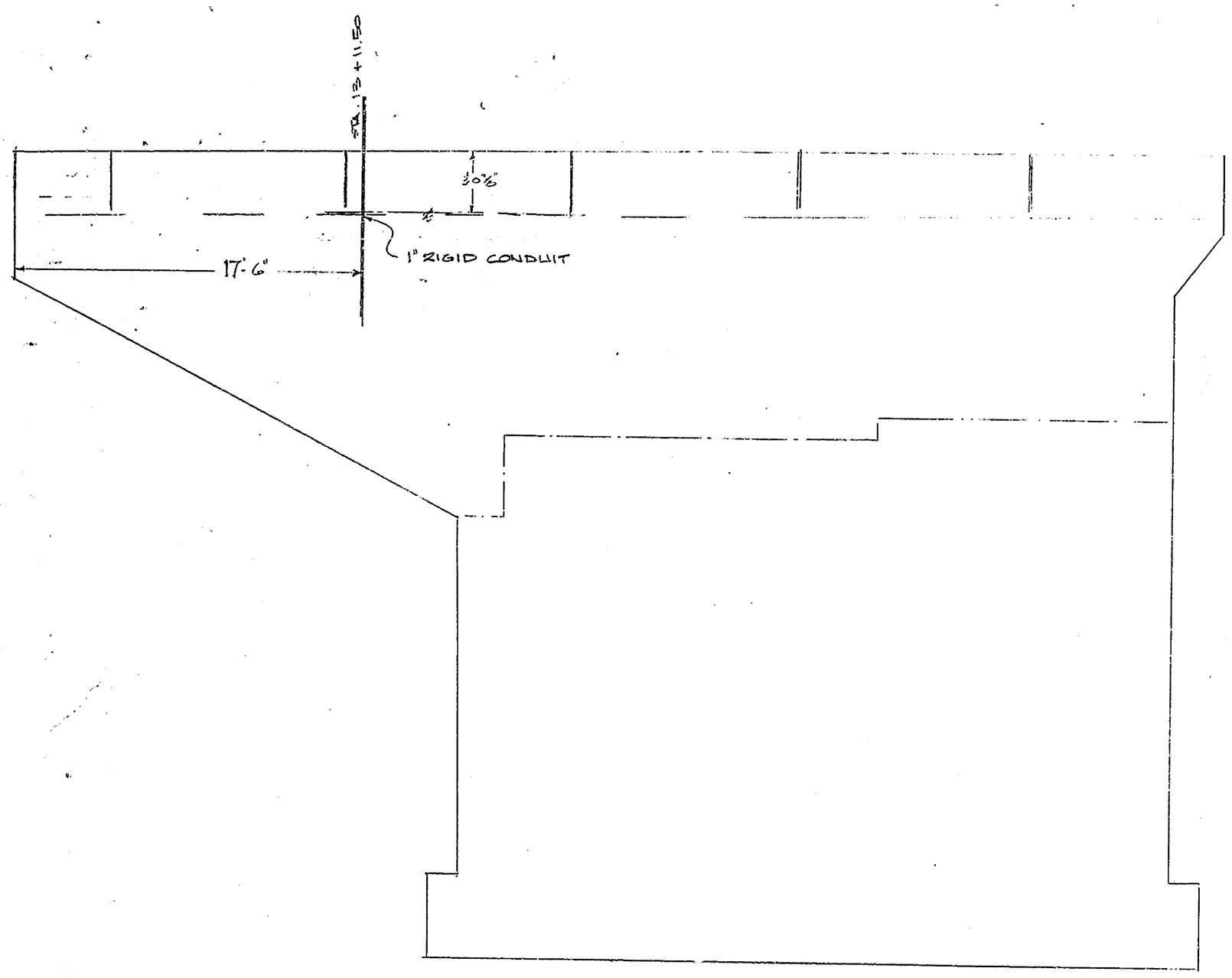

NORTH ELEVATION

EAST PIER

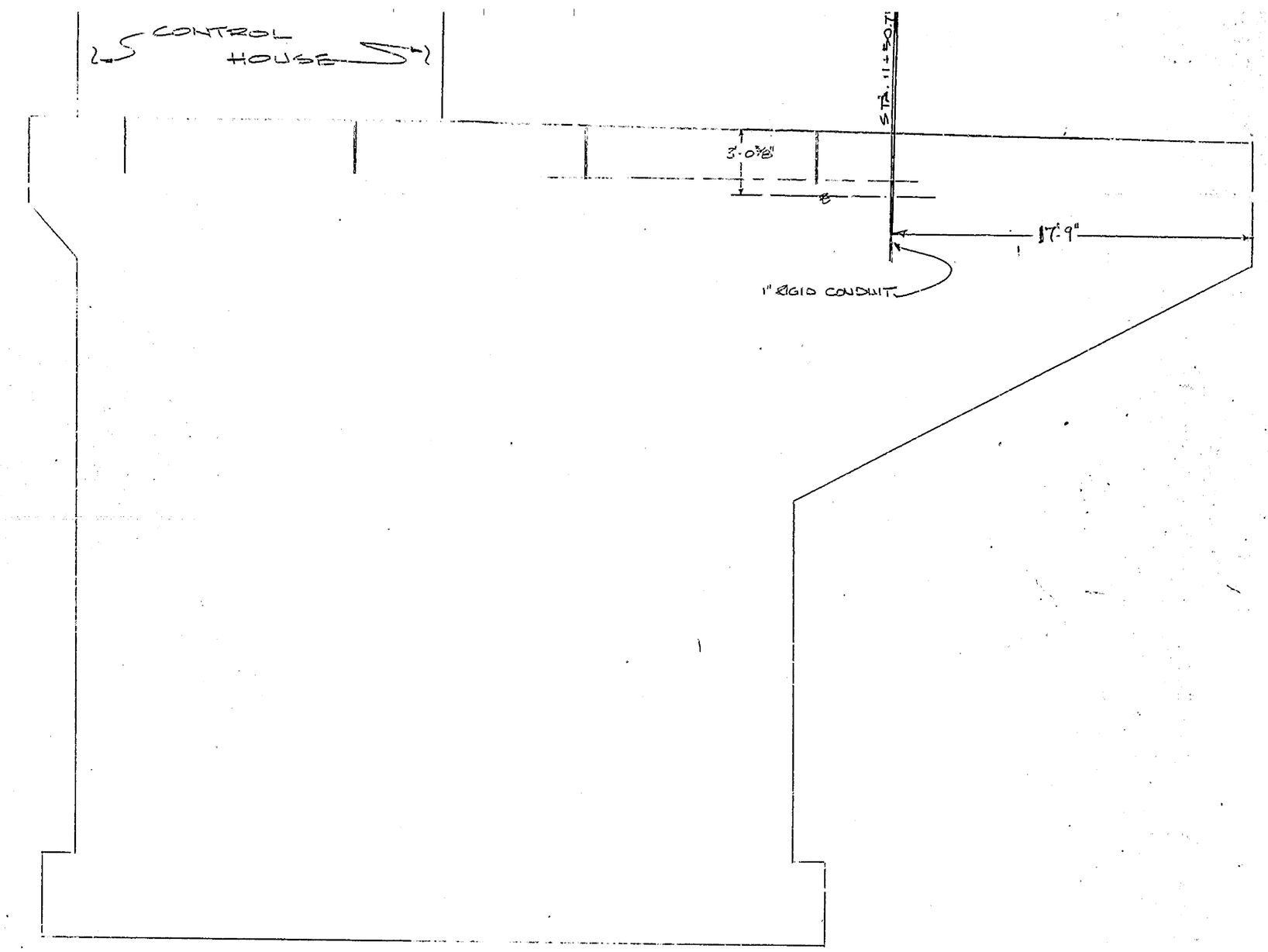

SECTION LOOKING SOUTH AT INSIDE OF SOUTH WINGWALL

WEST PIER

NOTE:
SEE DRWG. 61 OF State HIGHWAY PRINTS FOR DETAILS ON BOLT PATTERN FOR PARAPET LIGHTING STANDARD MOUNTING

SEE SHEET NO. 61 OF CONTRACT DWGS. SECTION A-A OF LIGHTING STANDARD MOUNTING.

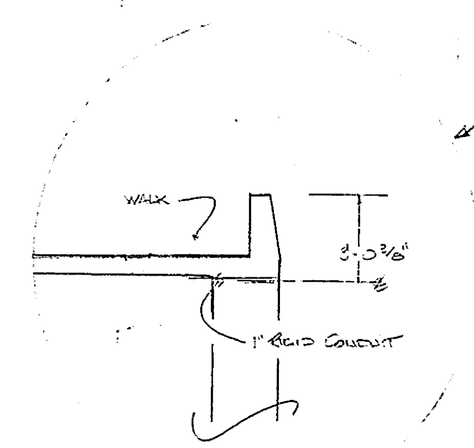

TYP. ELEV. SHOWING CURB
SC 1/4" = 1'-0"
TYP. F.K. STA. 11+50.75 & Sta. 13+11.5

SAVANNAH RD. BRIDGE LEWIS, DEL		
SCALE: 1/4" = 1'-0"	APPROVED BY	DRAWN BY
DATE: 01/02/82		
LIGHTING STANDARD CONDUIT PENETRATION		
TUDOR ELEC. Z Co. DOVER, DEL.		DRAWING NUMBER E-9

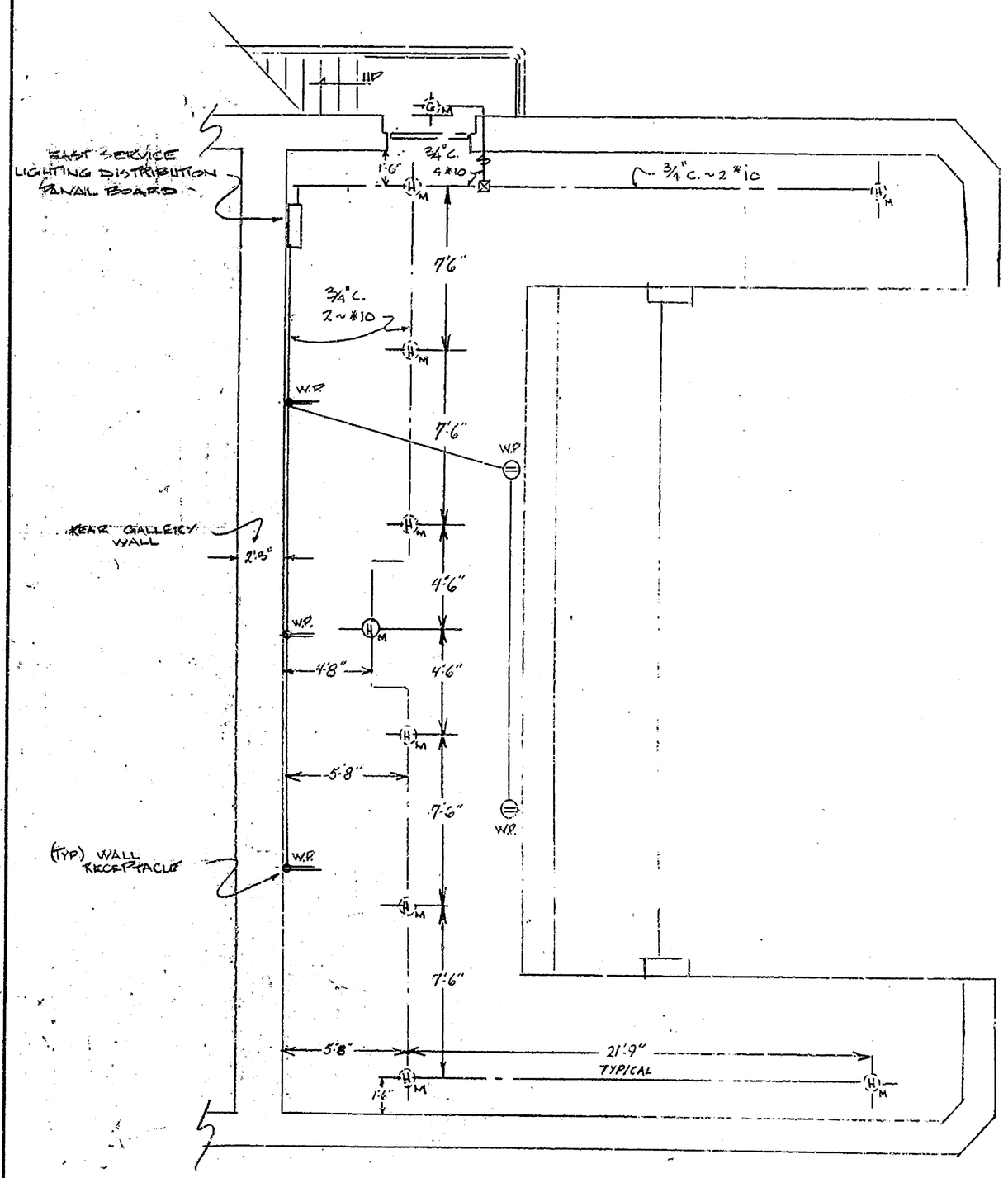

= EAST =

MACHINERY PLATFORM

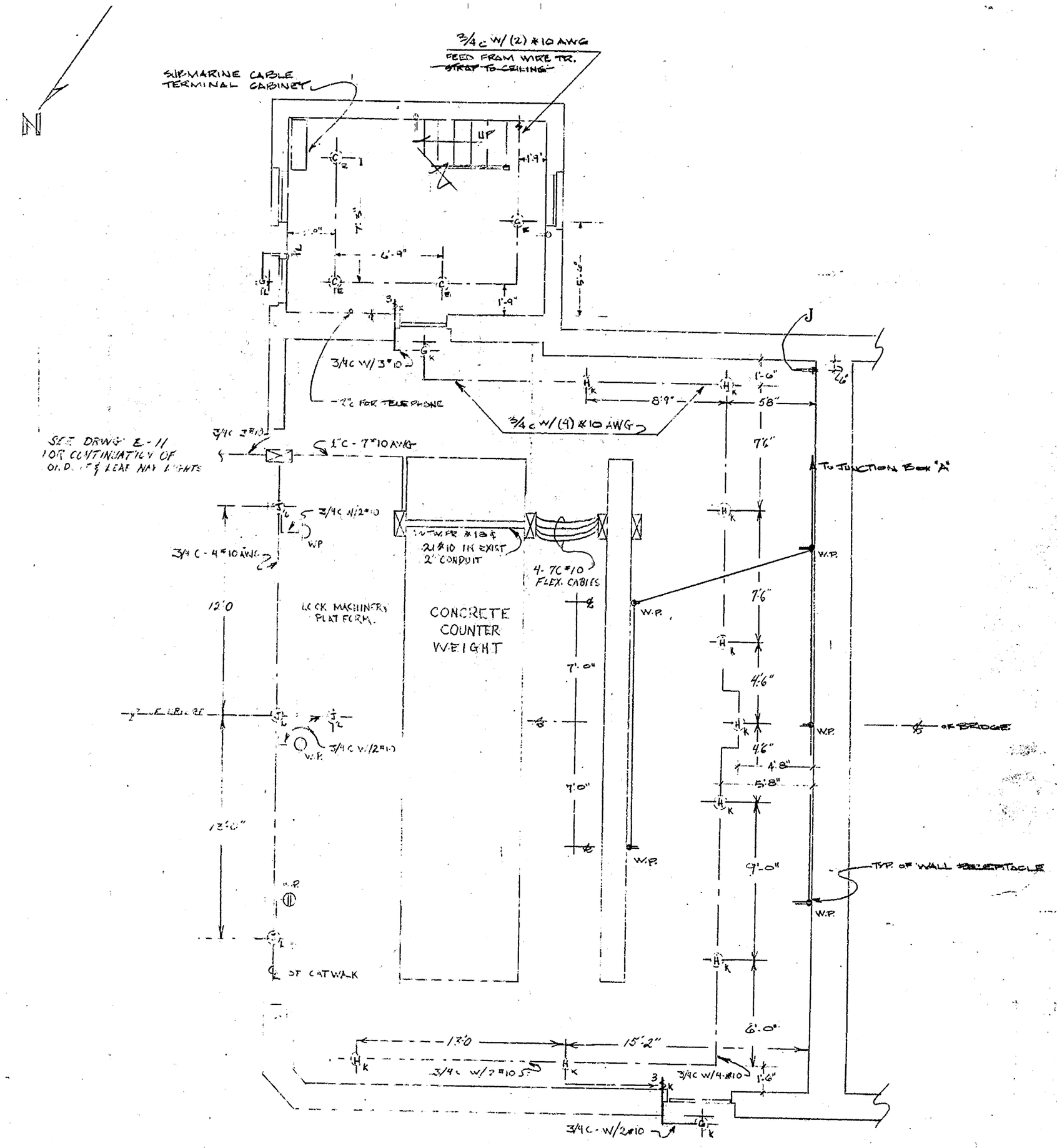

= WEST =

MACHINERY PLATFORM / SCALE: 1/4" = 1'

CIRCUIT LINE	
S	SURFACE MOUNT LIGHT
C	CEILING MOUNT LIGHT - CONCEALED IN SLAB
W	WALL MOUNT LIGHT
E	EMERGANCY LIGHT

SAVANNAH BRIDGE LEWES, DEL

SCALE: AS NOTED | APPROVED BY | DRAWN BY: CAR

DATE: 9/6/82

EAST & WEST MACHINERY PLATFORM LIGHTING LAYOUT

TUDOR ELEC. DOVER DEL. | DRAWING NUMBER E-10

SCALE

3/16" = 1'-0" 1/4" = 1'-0"

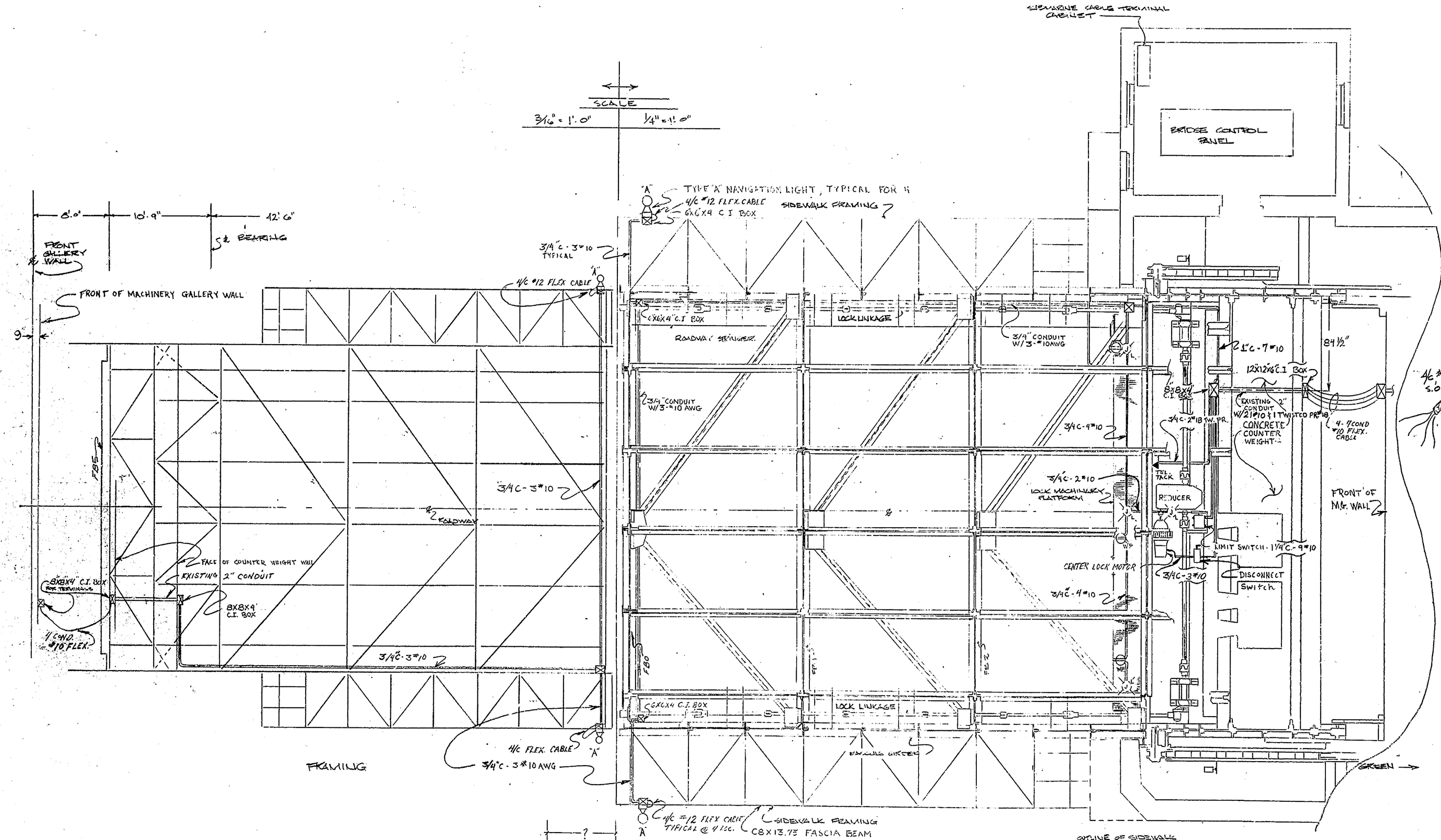

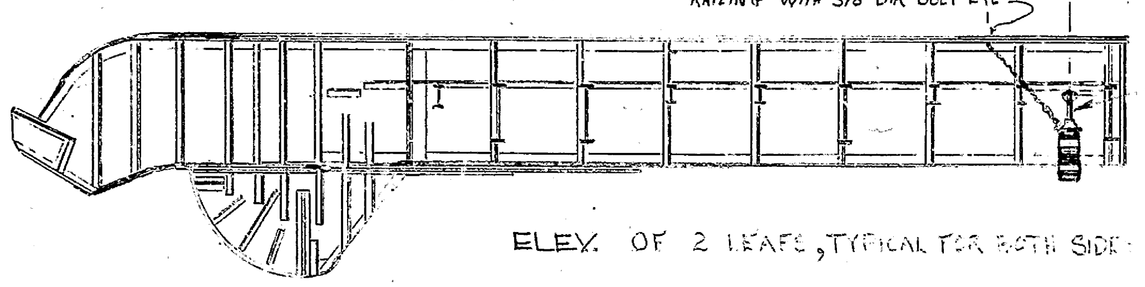

ELEV. OF 2 LEAFS, TYPICAL FOR BOTH SIDE

WEST LEAF

CAST IRON JUNCTION OR TERMINAL BOX

NOTES:
1. ALL BOXES ARE 6X6X4 UNLESS MARKED OTHER WISE
2. CONDUIT RUNS SHALL INSTALLED ON THE SIDE OF BASCULE GIRDERS
3. MOUNT TELEPHONE JACK @ NEAREST COLUMN TO CENTER LOCK MACHIERY EQUIP.

NAVIGATIONAL LIGHT DETAILS
N.T.S.

SAVANNAH ROAD BRIDGE
LEWIS, DEL.

SCALE: AS NOTED	APPROVED BY	DRAWN BY CAB/TIMONE
DATE: 1/29/83		

BASCULE LEAF LIGHTING & POWER

TUDOR ENGINEERING CO. ELEC.

DRAWING NUMBER E-11

NO. 1884-24424

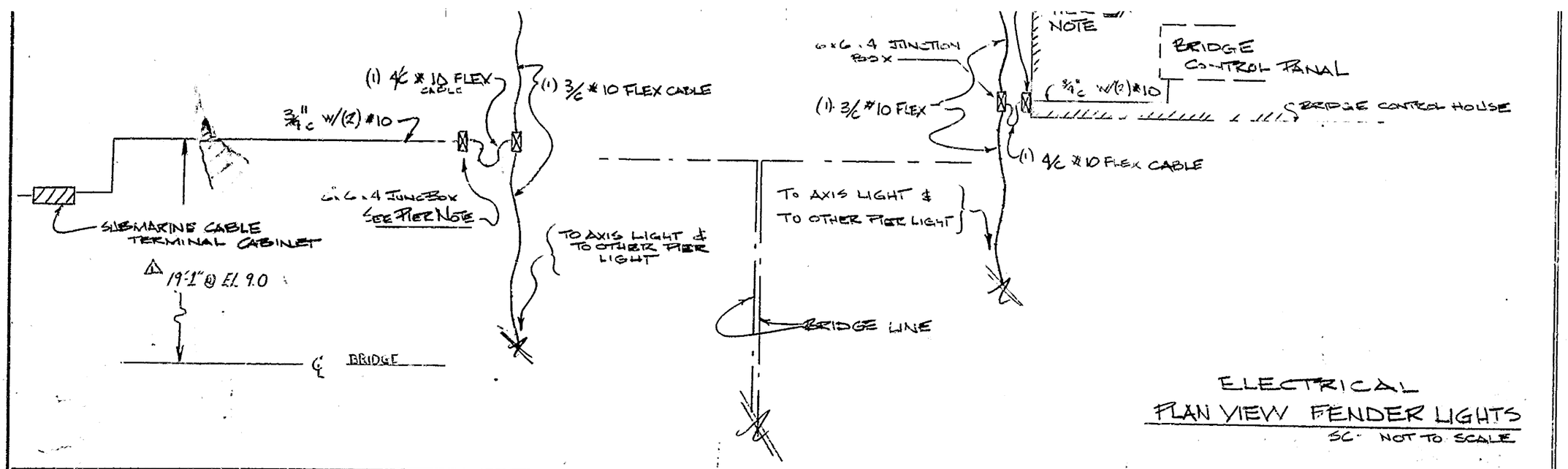

ELECTRICAL
PLAN VIEW FENDER LIGHTS
SC NOT TO SCALE

GENERAL NOTES

1. PIER LIGHTS TO SHOW 90° ON EITHER SIDE OF A LINE PARALLEL TO THE AXIS OF THE NAVIGABLE CHANNEL
2. AXIS LIGHTS TO SHOW 90° ON EITHER SIDE OF A LINE NORMAL TO THE AXIS OF THE NAVIGABLE CHANNEL.

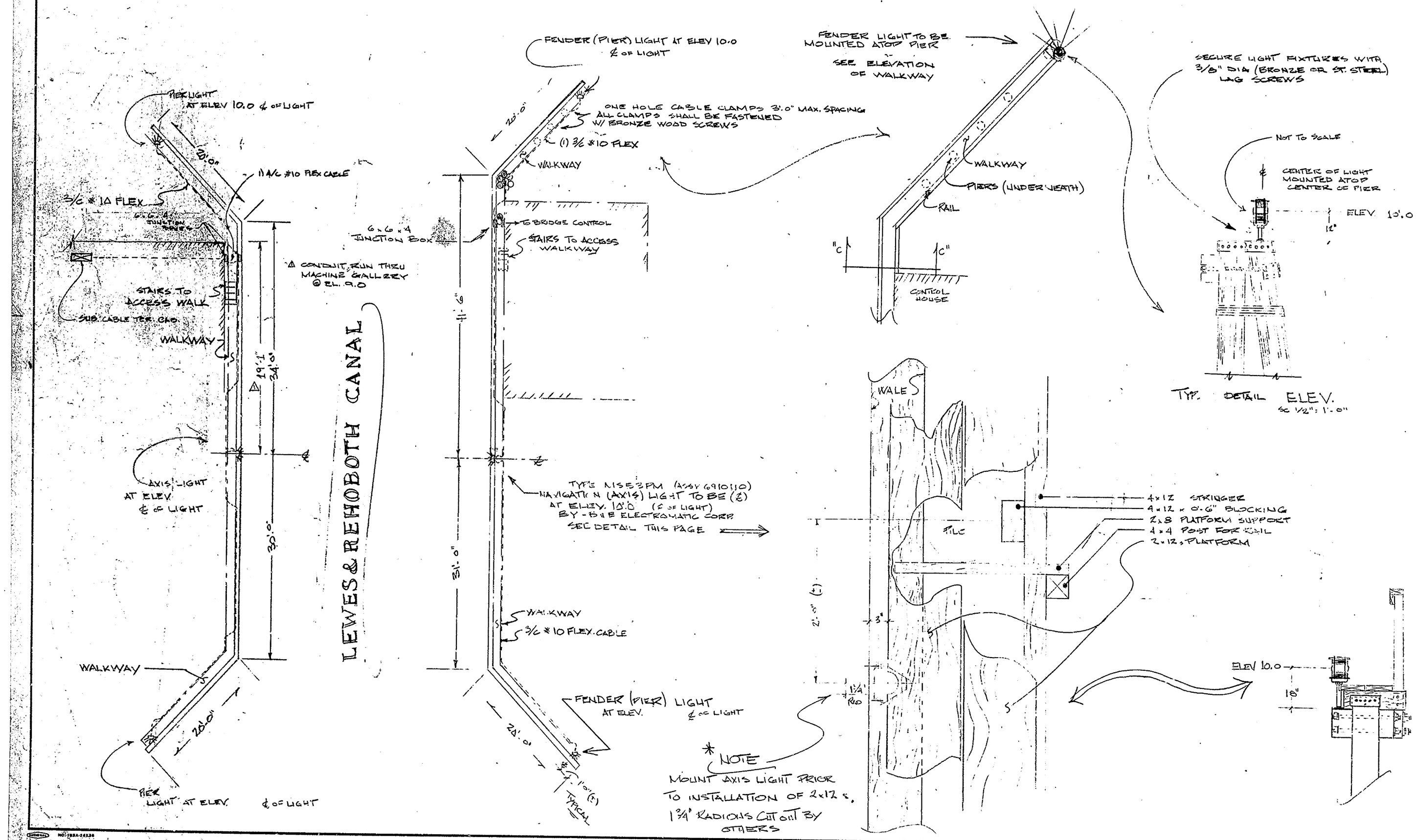

REVISIONS
△ ADDED DIMMENSIONS & ELEVATIONS FOR EAST PIER FENDER LIGHTS

SAVANNAH BRIDGE LEWES, DEL.		
SCALE: AS NOTED	APPROVED BY	DRAWN BY [illegible]
DATE: 9/5/82		
FENDER LIGHT DETAILS		
TUDOR ELEC DOVER DEL.		DRAWING NUMBER E-12

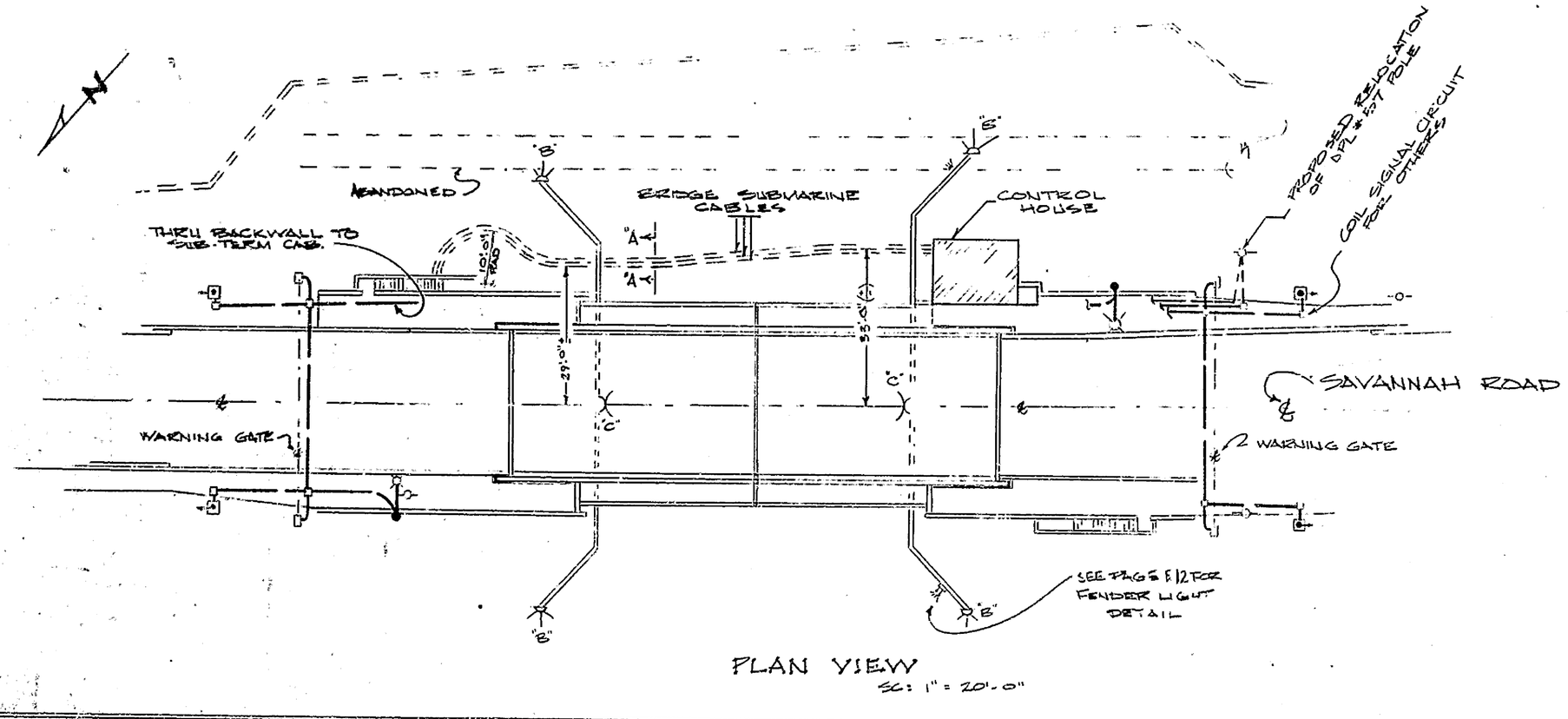

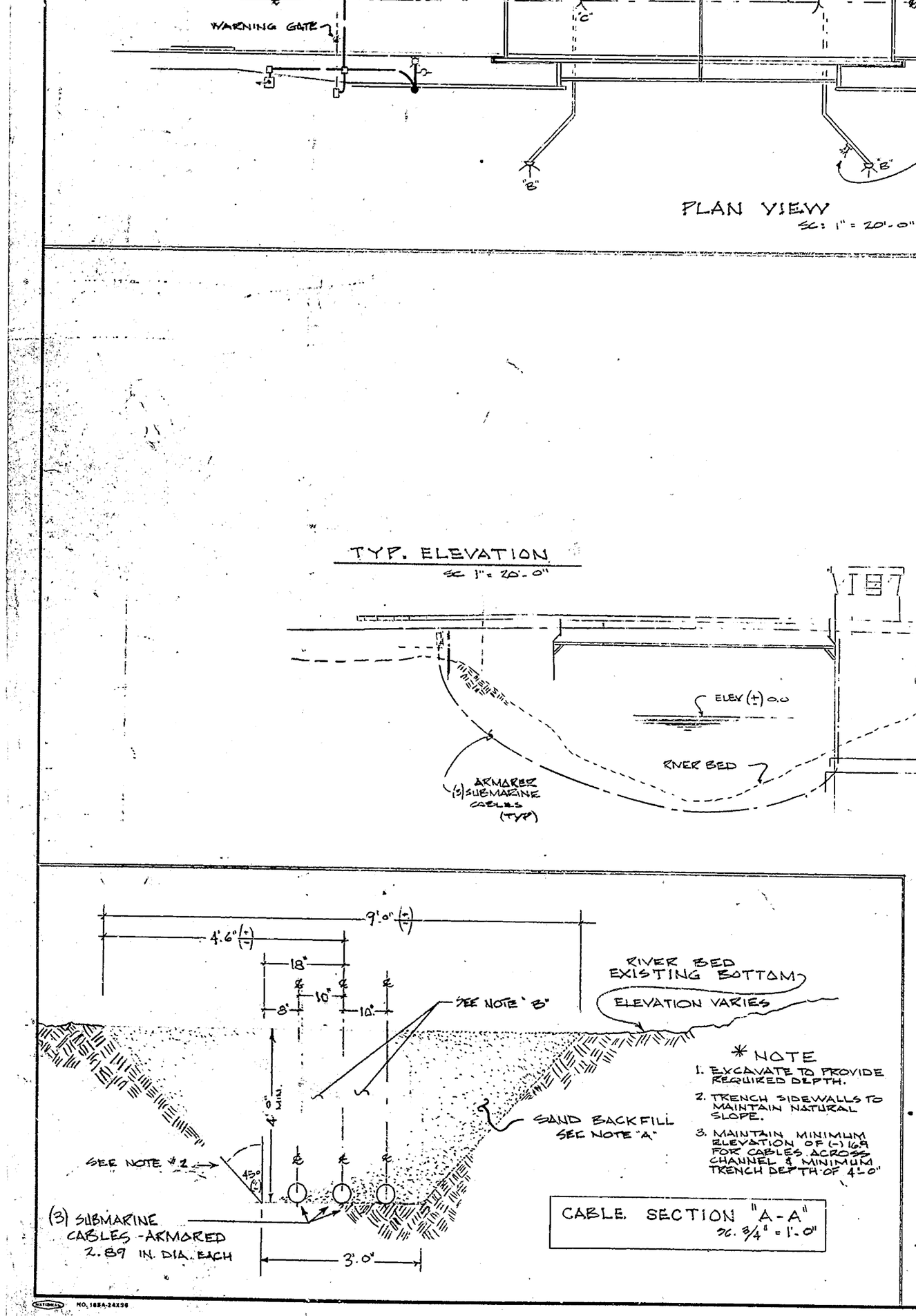

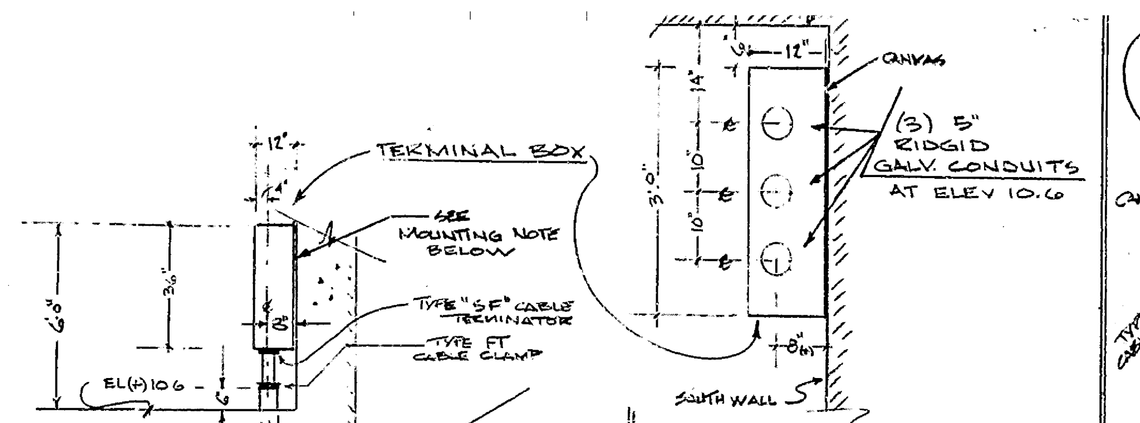

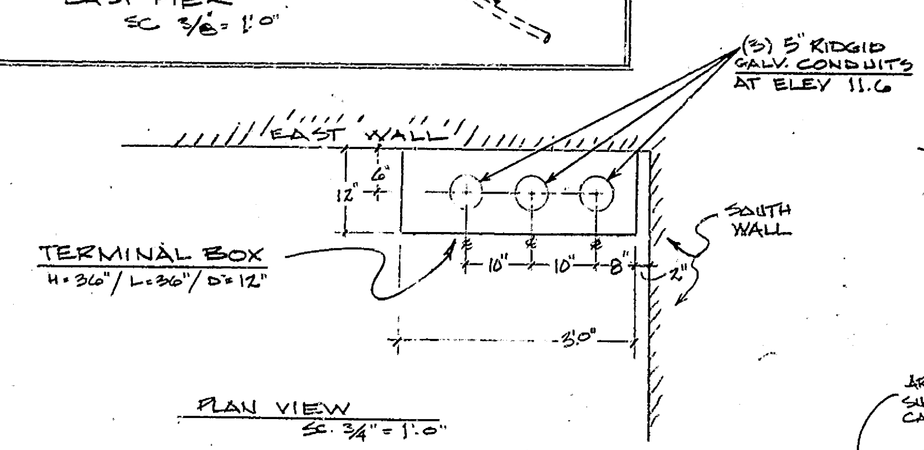

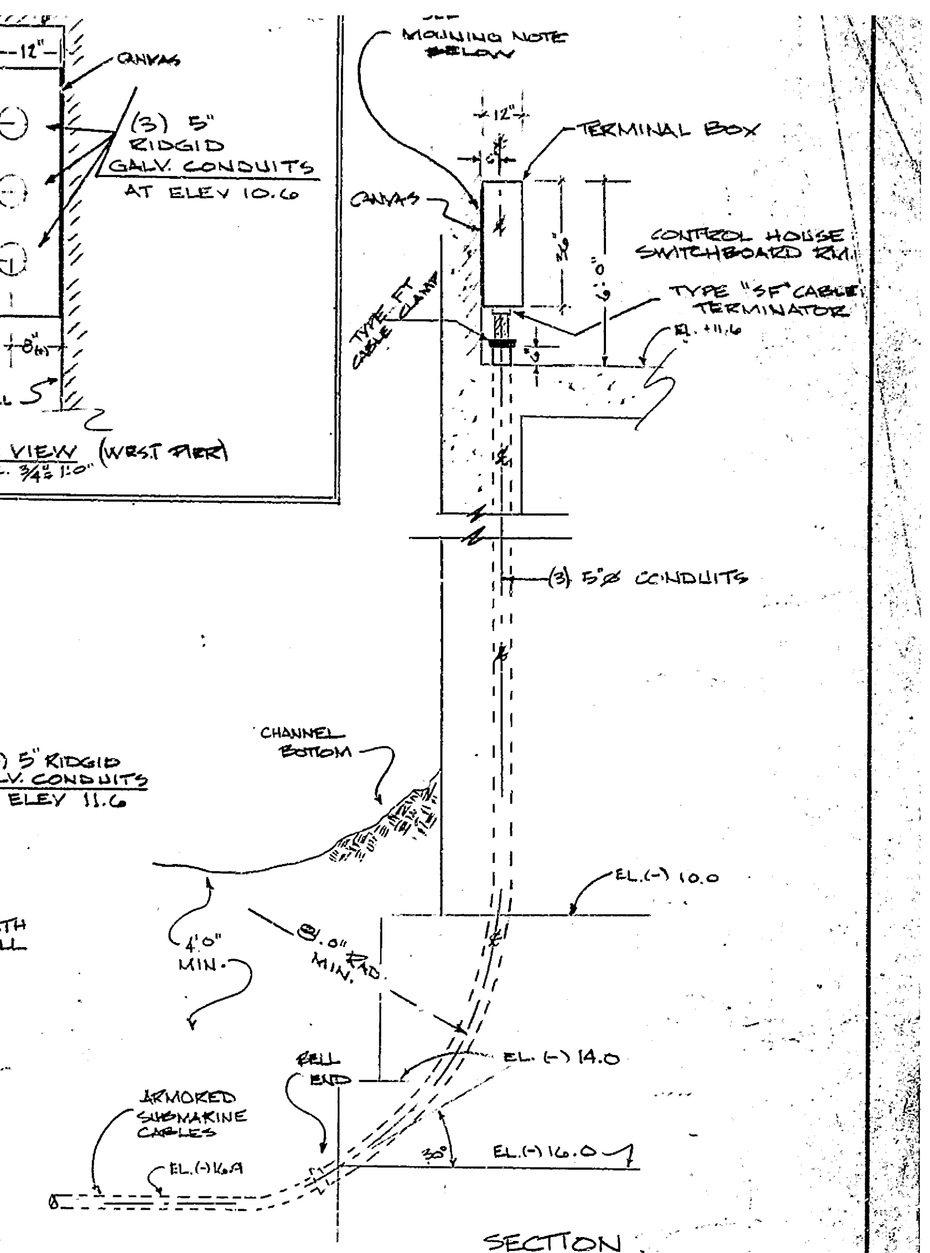

MOUNTING NOTE

1. SUBMARINE CABLE TERMINAL BOX TO BE MOUNTED TO WALL WITH EXPANSION (WEDGE TYPE) ANCHORS DRILLED INTO CONCRETE WITH CARBIDE BIT - AS DESCRIBED ON CONTRACT SPECS. PAGE 184
2. BETWEEN SUB CABLE TER. BOX & WALL IS TO BE CANVAS (SHEET). APPLIED TO CANVAS WILL BE 2 COATS OF RED LEAD. INSTALLATION TO BE AS PER PAGE 183 OF CONTRACT SPECS.

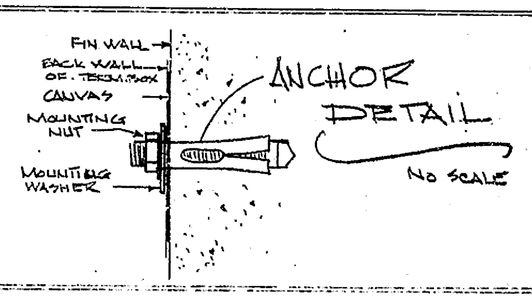

NOTE "A" - PRIOR TO BACKFILLING:

1. EACH CABLE SHALL BE TESTED TO DETERMINE IT'S INSULATION RESISTANCE TO GROUND
2. SIX COPIES OF THE TEST REPORT SHALL BE SUBMITTED TO THE ENGINEER FOR APPROVAL.
3. DIVER HAS DIRECTLY REPORTED TO THE ENGINEER THAT CABLES HAVE BEEN PROPERLY PLACED IN THE EXCAVATED TRENCH AND THE ENGINEER HAS GIVEN HIS APPROVAL FOR BACKFILLING.

NOTE "B"

SPACING TO BE MAINTAINED - NO CABLE CROSSOVER ALLOWED

* NOTE

1. EXCAVATE TO PROVIDE REQUIRED DEPTH.
2. TRENCH SIDEWALLS TO MAINTAIN NATURAL SLOPE.
3. MAINTAIN MINIMUM ELEVATION OF (-) 16.9 FOR CABLES ACROSS CHANNEL & MINIMUM TRENCH DEPTH OF 4'-0"

SAVANNAH ROAD BRIDGE

SCALE: AS NOTED	APPROVED BY	DRAWN BY JOKER
DATE:		

BY: TUDOR ELECTRIC OF DOVER
DOVER, DEL. 1990.

SUBMARINE CABLE PLACEMENT — DRAWING NUMBER E-13

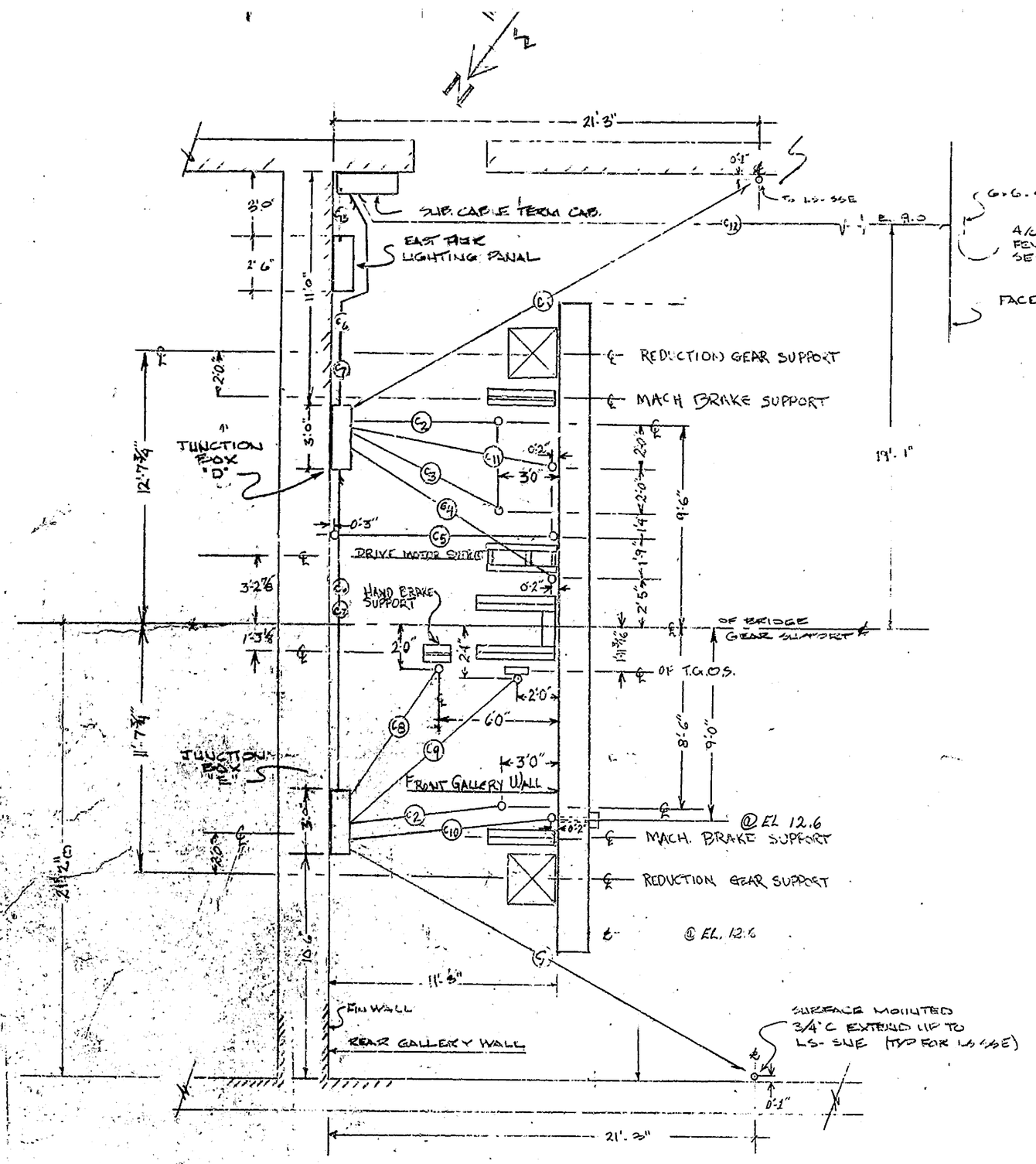

EAST PIER CONDUIT RUNS

SC 1/4" = 1'-0"

⑥ CONDUIT LEGEND

C1	2-3/4"c w/(12) #10 IN EA. CONDUIT - 1-3/4"C W/ #10 TO LS-E & 1-3/4" W/2 #10 TO LS-SE
C2	1 1/4"c w/(9) #10 TO MACHINERY GRAVITY
C3	1 1/4c w/(7) #10 TO MOTOR BRAKE
C4	1 1/2c w/(3) #4 TO M.G. 15 HORSE
C5	1 1/2c w/(3) #4 (RESISTOR LINE CONDUIT)
C6	1 1/2c w/(17) #10 FROM JUNCTION "D" TO JUNCTION BOX "E"
C7	2 1/2c w/(19) #10 FROM JUNCTION "D" TO JUNCTION BOX E
C8	3/4c w/(2) #10 TO HAND BRAKE LIMIT SWITCH
C9	1 1/4c w/(7) #10 TO T.G.O.S.
C10	3/4c w/(5) #10 TO BASCULE LEAF LIGHTS
C11	1 1/2c w/(9) #10 TO LS. ETL
C12	3/4c w/(2) #10 TO FENDER LIGHTS
C13	1 1/4c w/(3) #4 TO LIGHTING PANEL
C14	2"c w/(22) #10 TO LS-E & SELT-E

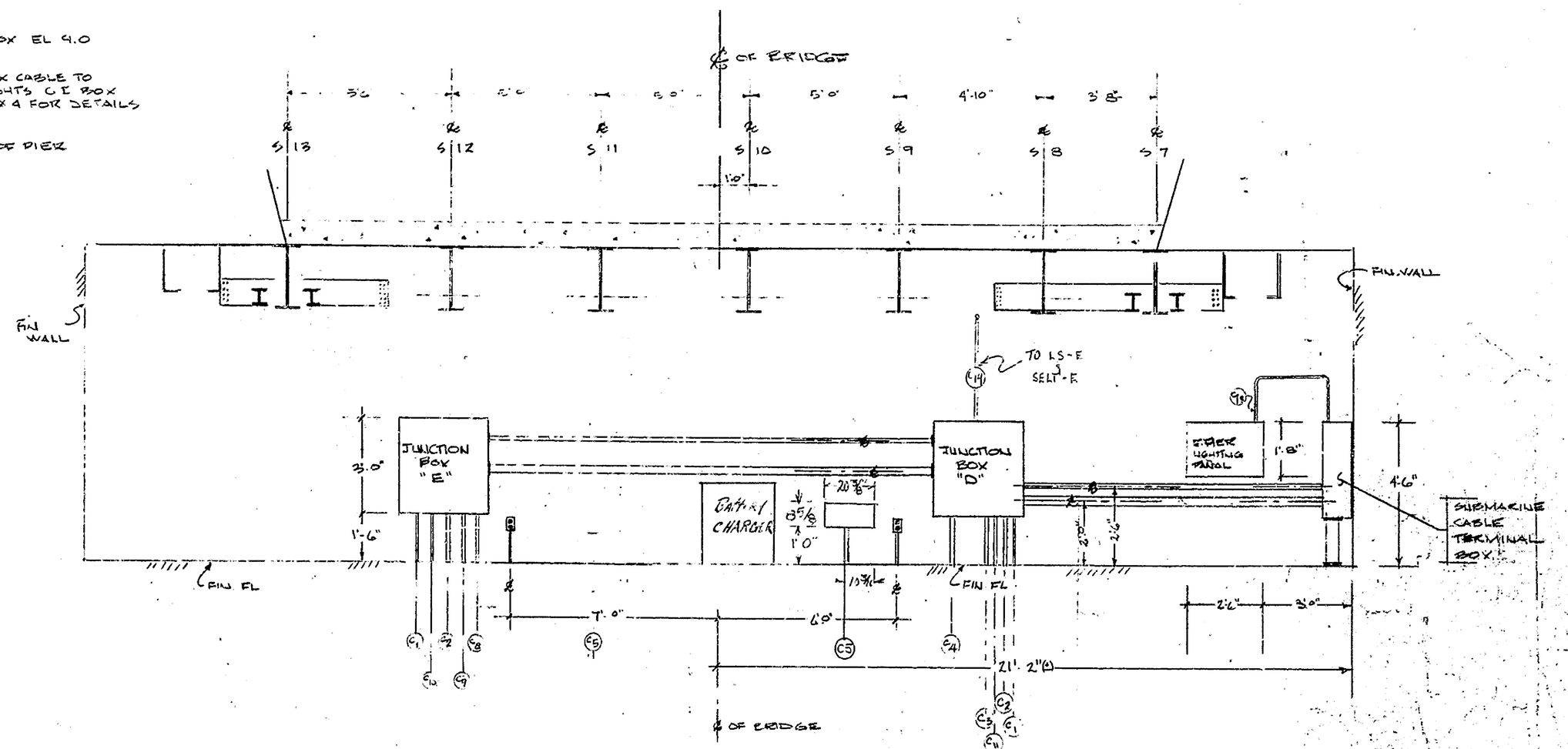

REAR GALLERY WALL OF EAST PIER ELEVATION

SC 3/8" = 1'-0"

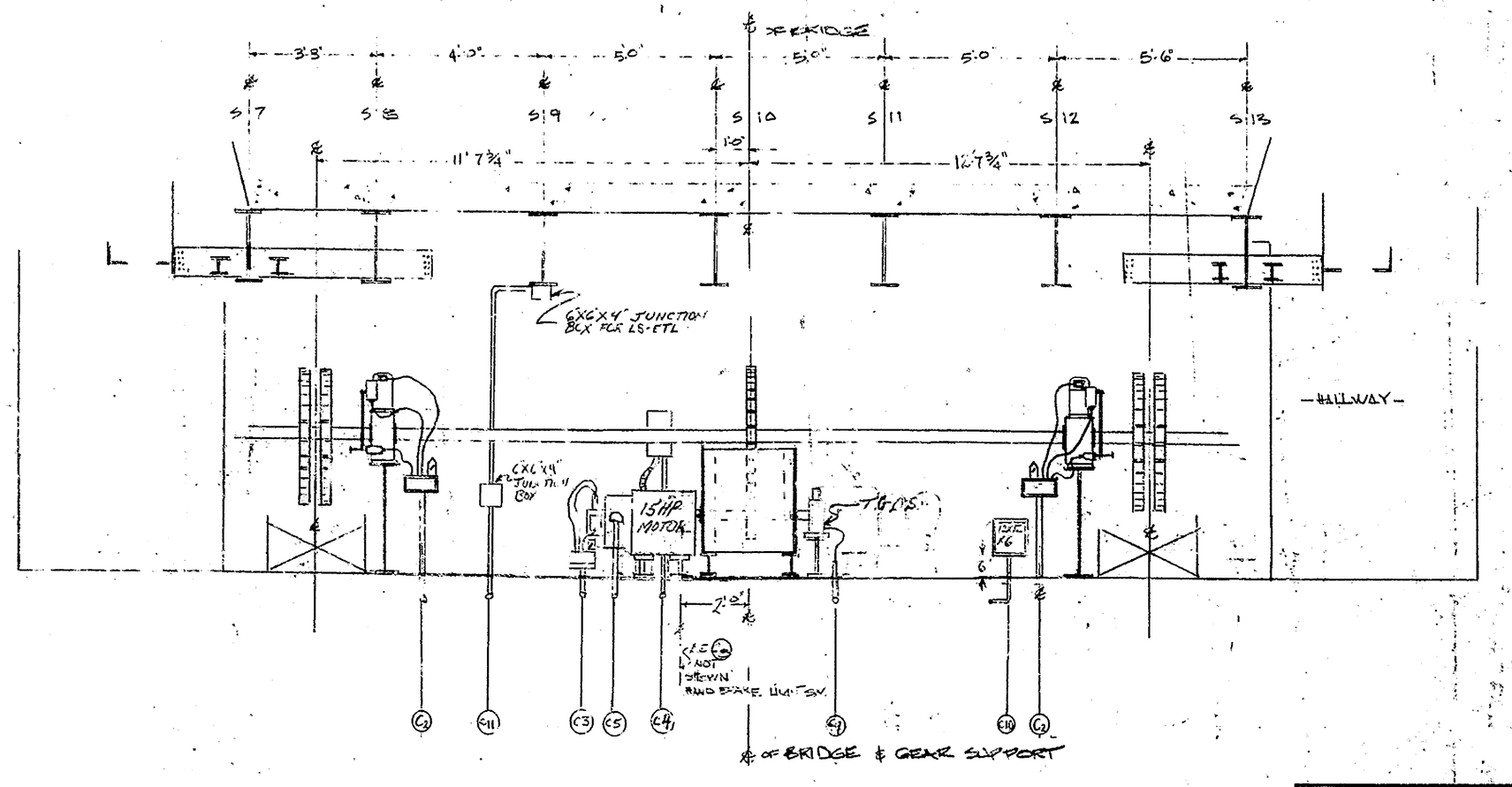

FRONT GALLERY WALL OF EAST PIER ELEVATION

SC 3/8" = 1'-0"

SAVANNAH BRIDGE OVER LEWES CREEK, DEL.

SCALE: AS NOTED	APPROVED BY	DRAWN BY: LSK/GLK/KER
DATE: 6/19/62		

EAST TIER - CONDUIT RUNS - ELEVATIONS

TUDOR ENGINEERING CO. DESIGN P.E.

DRAWING NUMBER E-14

NO. 183A-24236

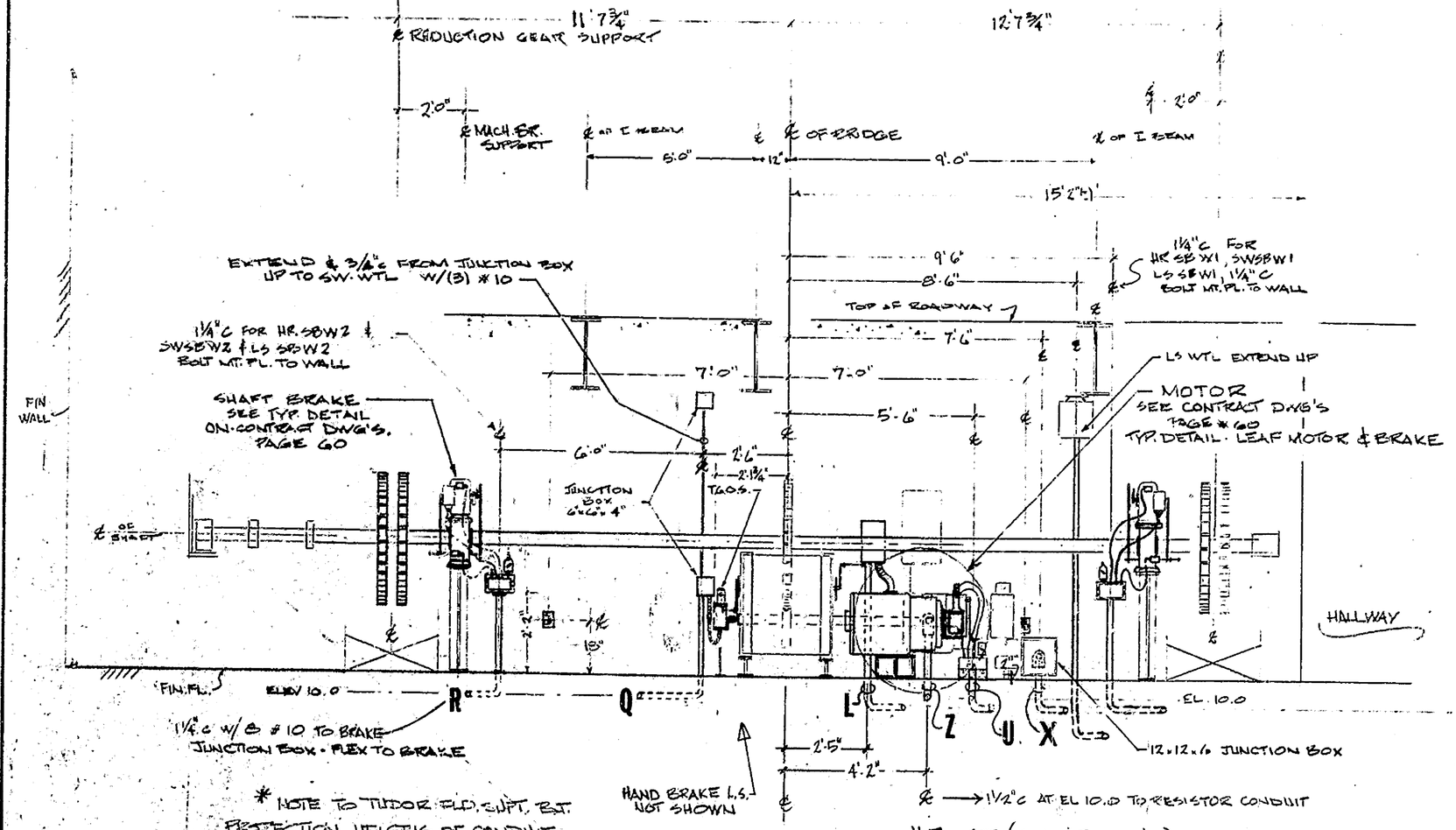

EAST WALL OF WEST TIER (REFER TO DWG E-6 ↑A A↑)
SC 3/8" = 1'-0"

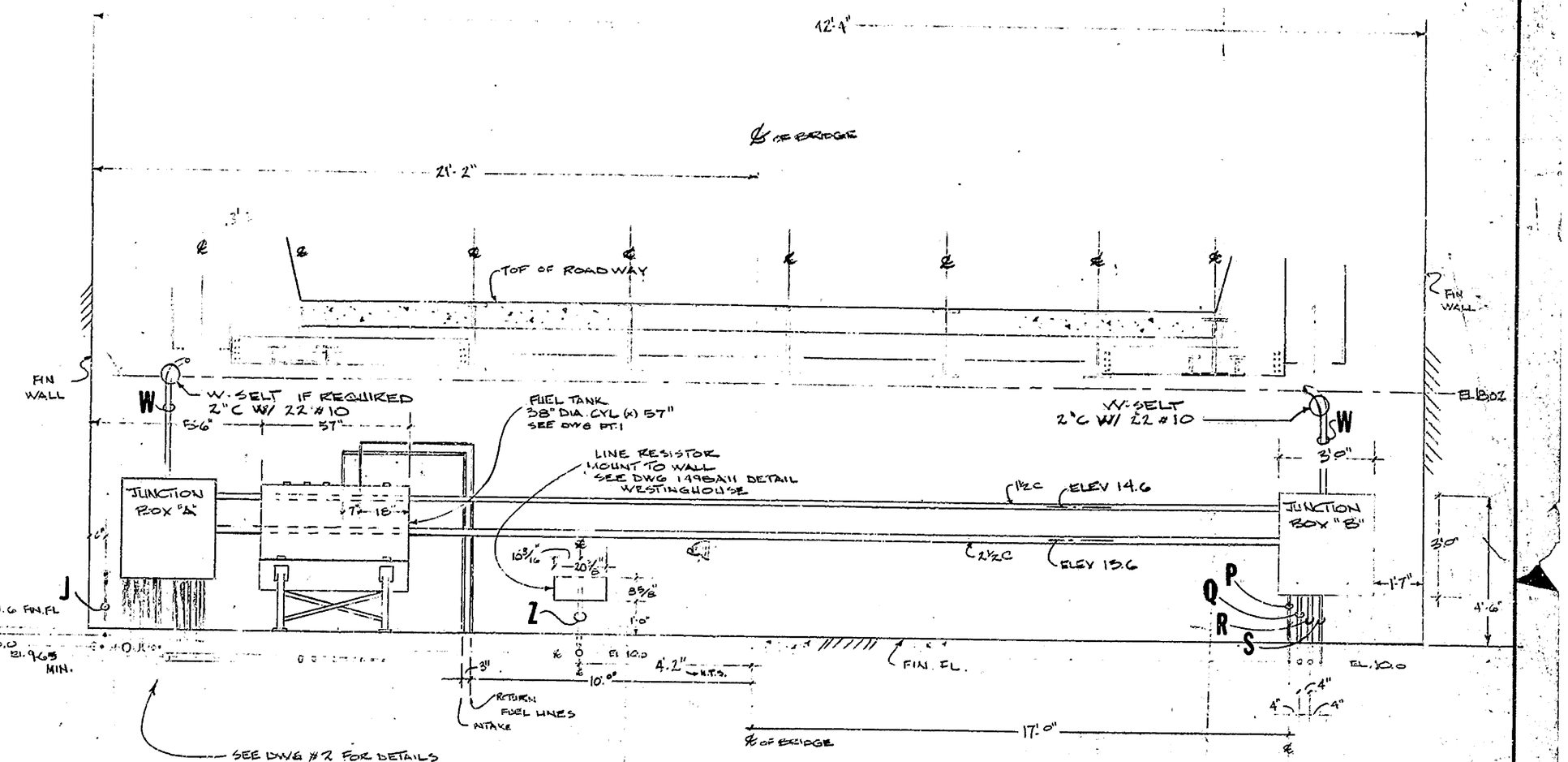

WEST WALL OF WEST TIER (REFER TO E-6 ↑C C↑)
SC 3/8" = 1'-0"

JUNCTION BOX "B" CONDUIT RUNS

P 3/4"c TO HANDBRAKE LIMIT SWITCH
Q 1¼"c TO T.G.O.S.
R 1¼"c TO HR SBW2, SWSBW2, LSSBW2, "J" BOX
S 3/4"c TO LS SNW (SEE DP-1-R)

NOTE

Z 1½"c W/(3) #4 RUN CONDUIT AT EL 10.0

CONDUIT LEAVING JUNCTION BOX "A" ELEVATIONS

F IS AT EL 9.0
K IS AT EL 9.2
3/4 SPARE IS AT EL. 9.2
L IS AT EL 9.2
U IS AT EL. 9.35
X IS AT EL 9.35
FRONT 1) 1¼ CONDUIT FEEDING MACHINE BRAKE IS AT EL 9.65
BACK 1) 1¼ CONDUIT FEEDING LS SBW1 IS AT EL. 8.8

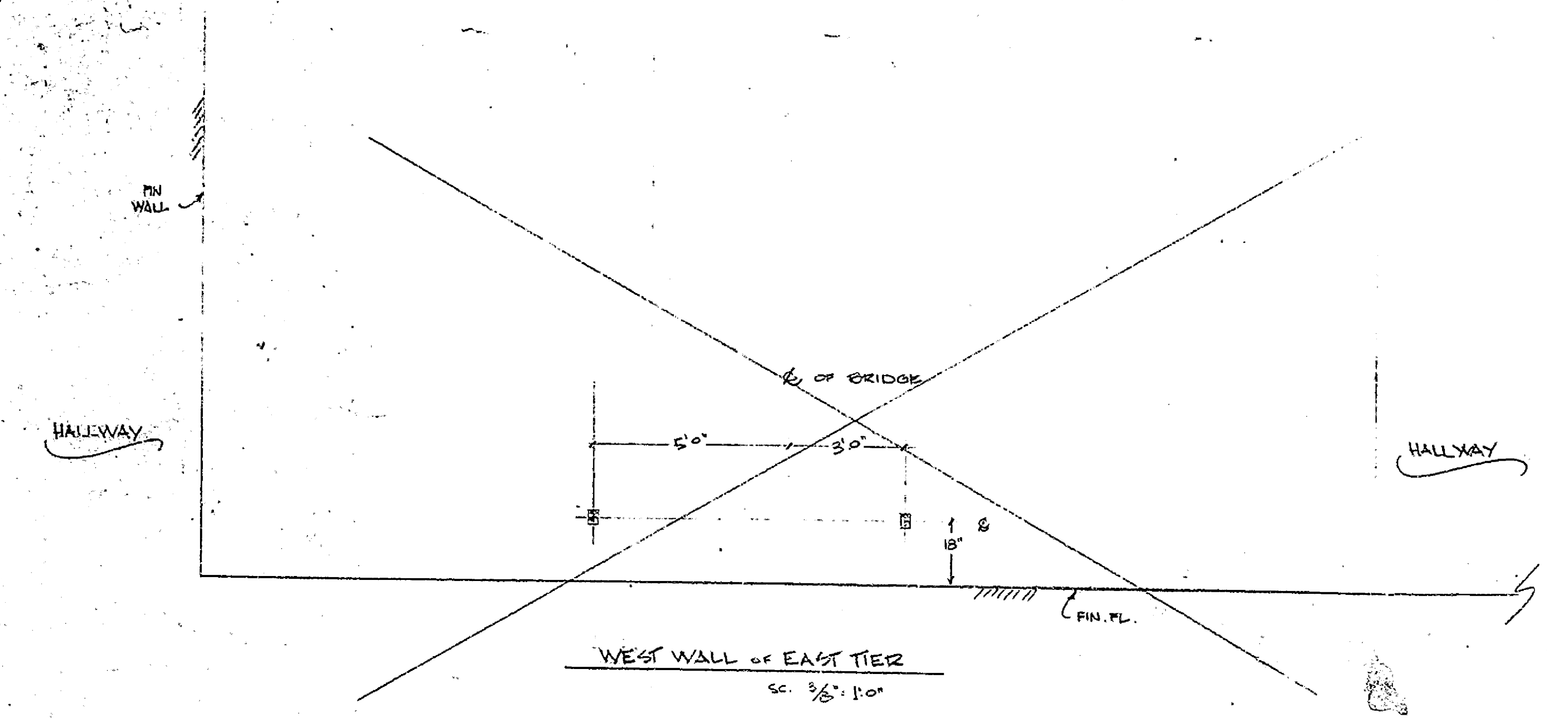

WEST WALL OF EAST TIER
SC. 3/8" = 1'-0"

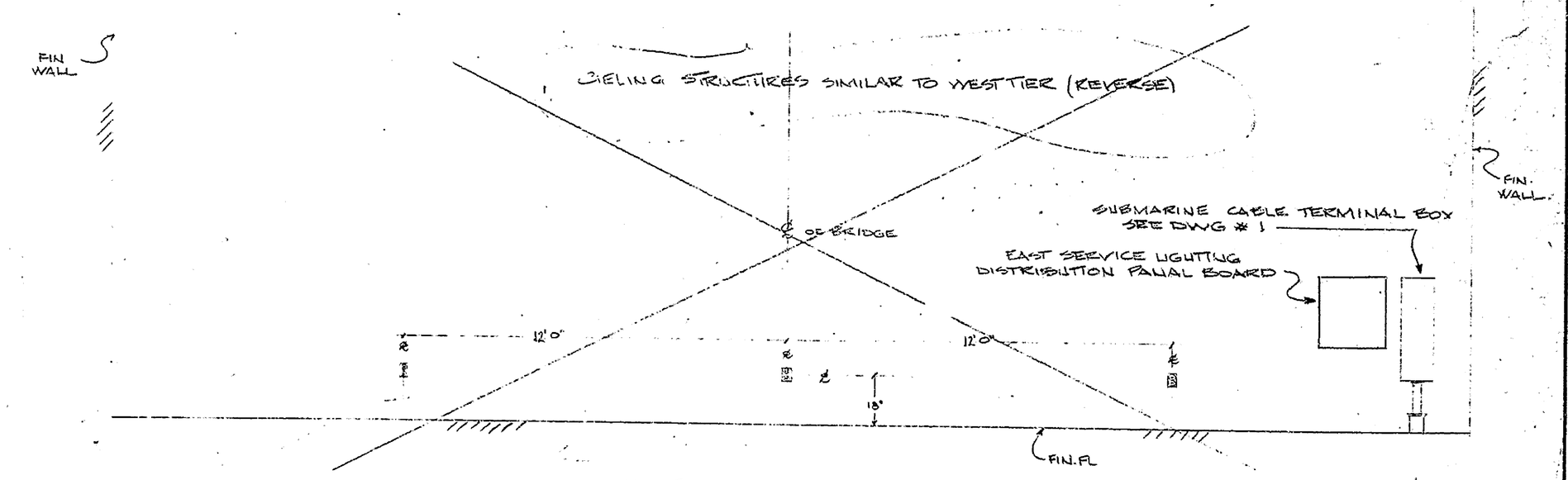

EAST WALL OF EAST TIER
SC 3/8" = 1'-0"

*NOTE N.T.S. = NOT TO SCALE

SAVANNAH BRIDGE LEWES DEL		
SCALE: AS NOTED DATE: 10/6/82	APPROVED BY	DRAWN BY E.F. JACKER
ELEVATIONS OF MACHINE GALLERY (WEST)		
TUDOR ELECTRIC DOVER DEL		DRAWING NUMBER E-15

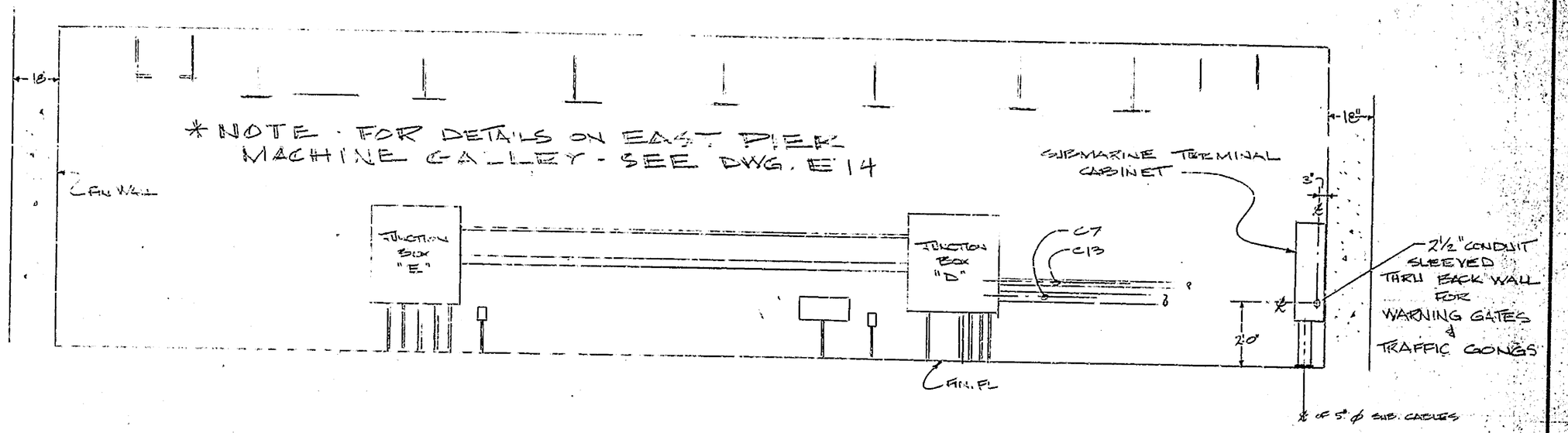

ELEV. OF EAST SIDE (MACH GALLEY) EAST WALL SHOWING LOCATION OF 2½" CONDUIT SLEEVED THRU BACK WALL

SC. 3/8" = 1'-0"

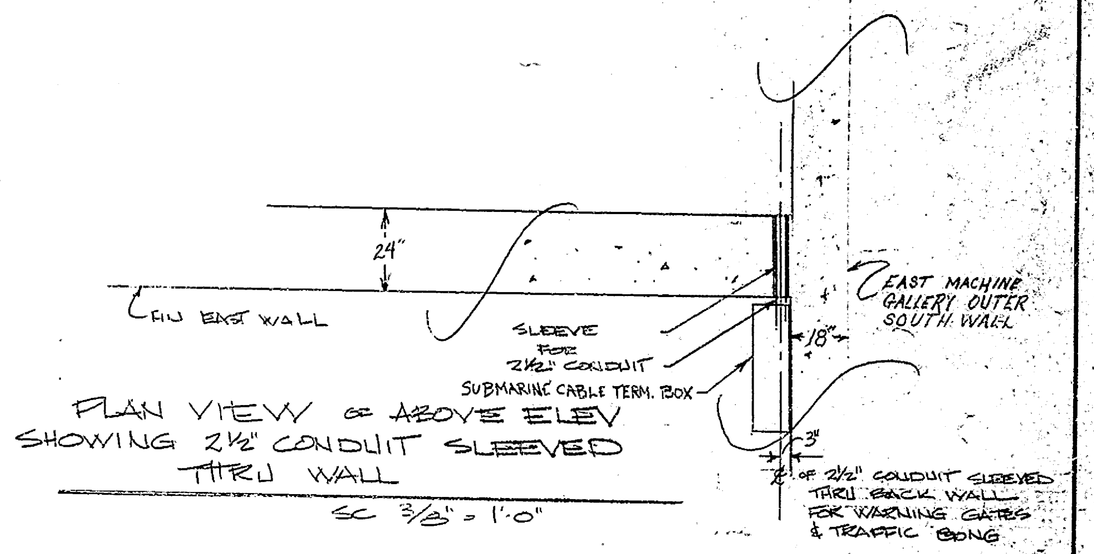

PLAN VIEW OF ABOVE ELEV SHOWING 2½" CONDUIT SLEEVED THRU WALL

SC 3/8" = 1'-0"

SAVANNAH RD. BRIDGE LEWIS, DEL.		
SCALE: 3/8" = 1'-0"	APPROVED BY	DRAWN BY CALL TUCKER
DATE: 1/7/83		
SLEEVE FOR EAST MACHINE GALLERY		
TUDOR ELEC DOVER DEL		DRAWING NUMBER E-16

PLAN VIEW OF MACHINE GALLEY WEST PIER

EAST TIER SIMILAR (REVERSE)

SC: 1"=1'0"

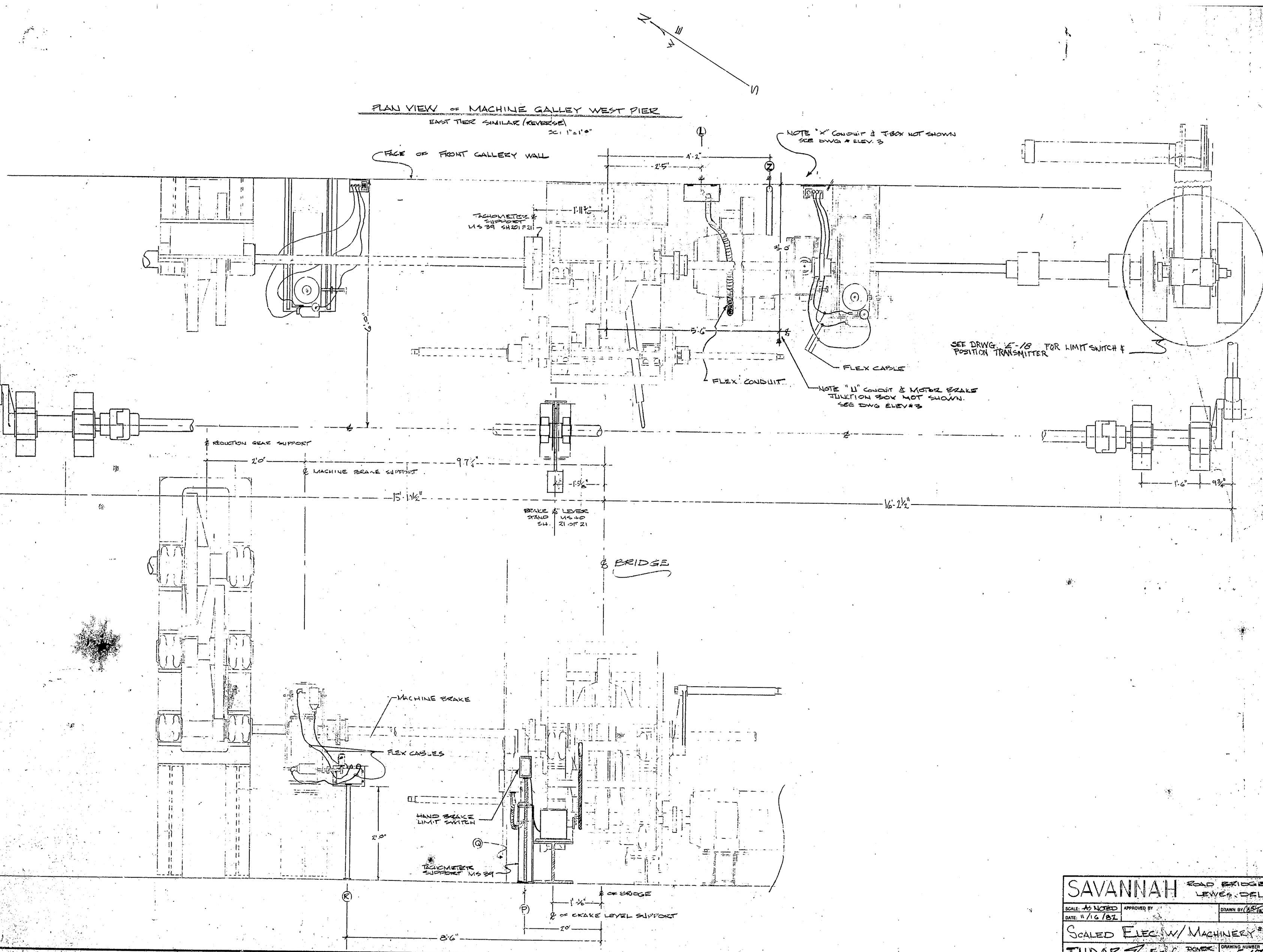

SAVANNAH ROAD BRIDGE LEWES, DEL		
SCALE: AS NOTED	APPROVED BY	DRAWN BY: [illegible]
DATE: 11/16/82		
SCALED ELEC. W/ MACHINERY #2		
TUDOR ELEC. CO. POWER DEL		DRAWING NUMBER E-17

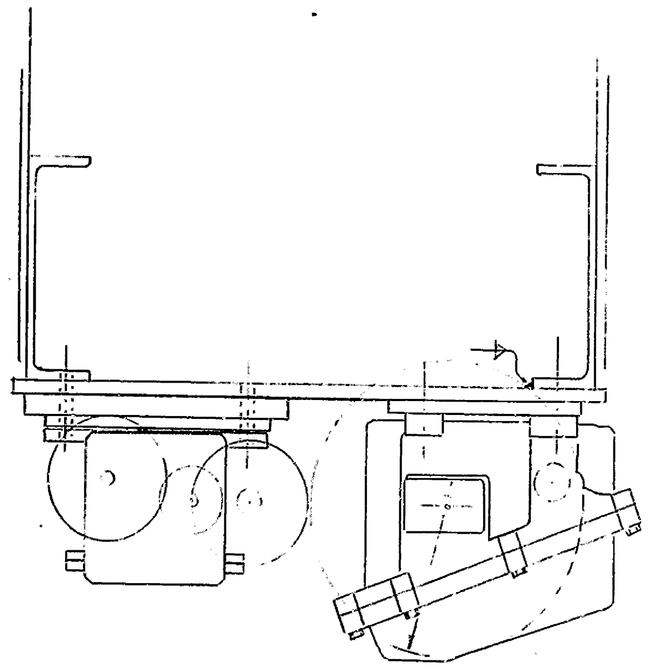

SECTION A-A

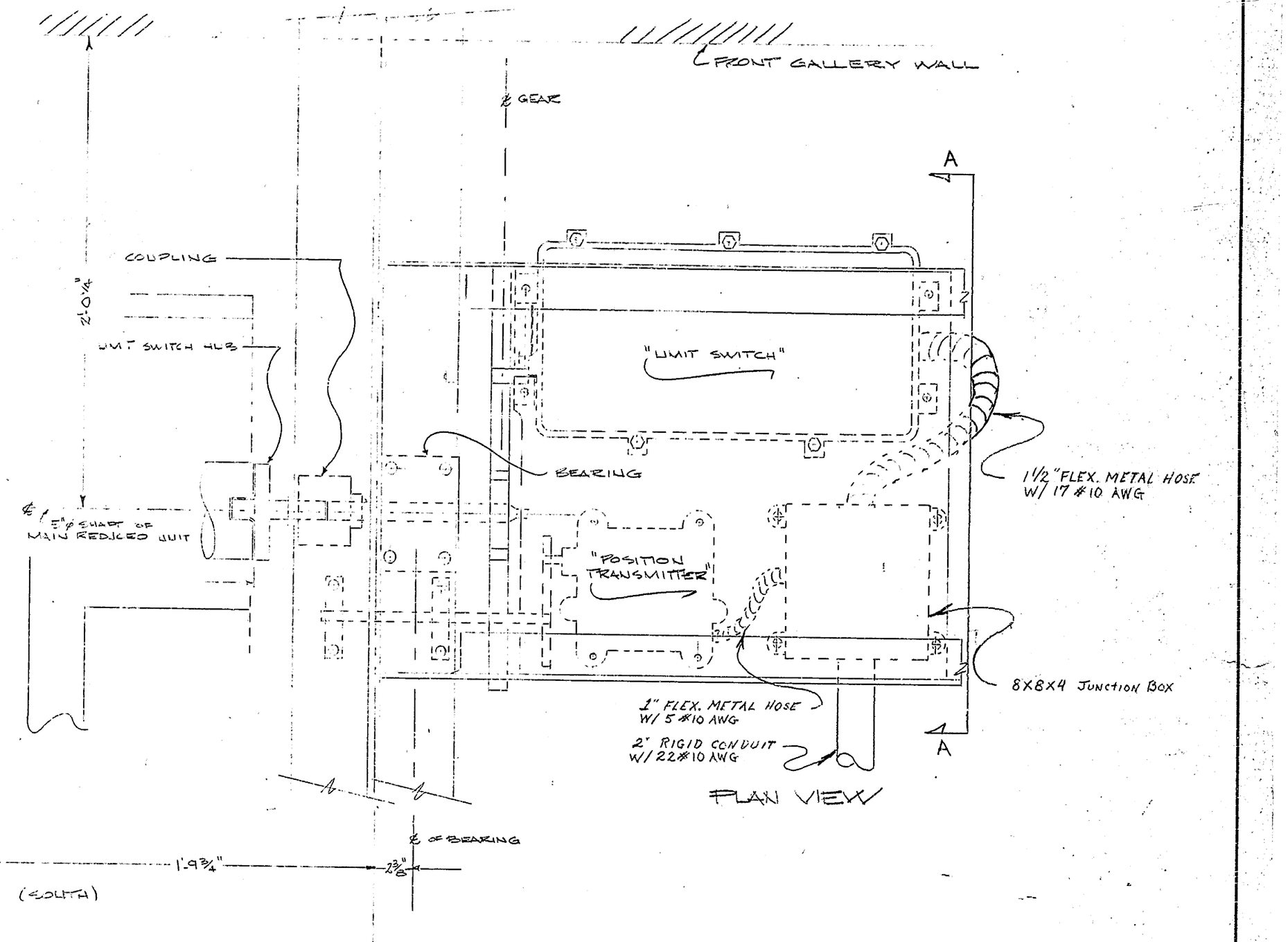

SAVANNAH ROAD BRIDGE LEWES DEL.

SCALE:	APPROVED BY	DRAWN BY
DATE:		

LIMIT SW. & POSITION TRANS. DETAIL

TUDOR FIFC COVER | DRAWING NUMBER E-18

NO. 188A-24X36

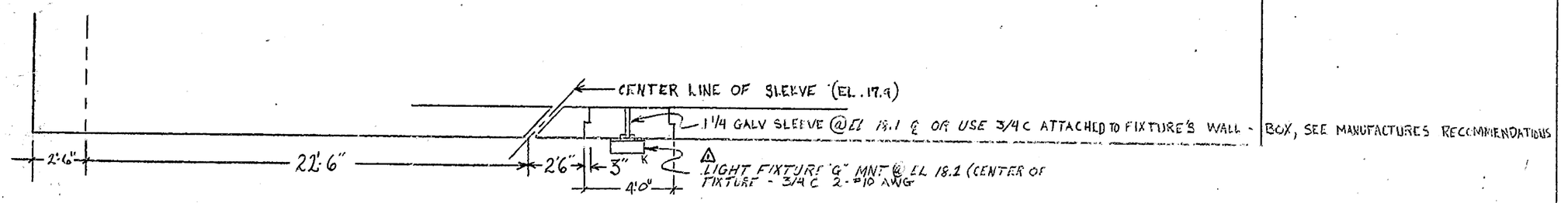

TOP VIEW OF 6" EXHAUST SLEEVE

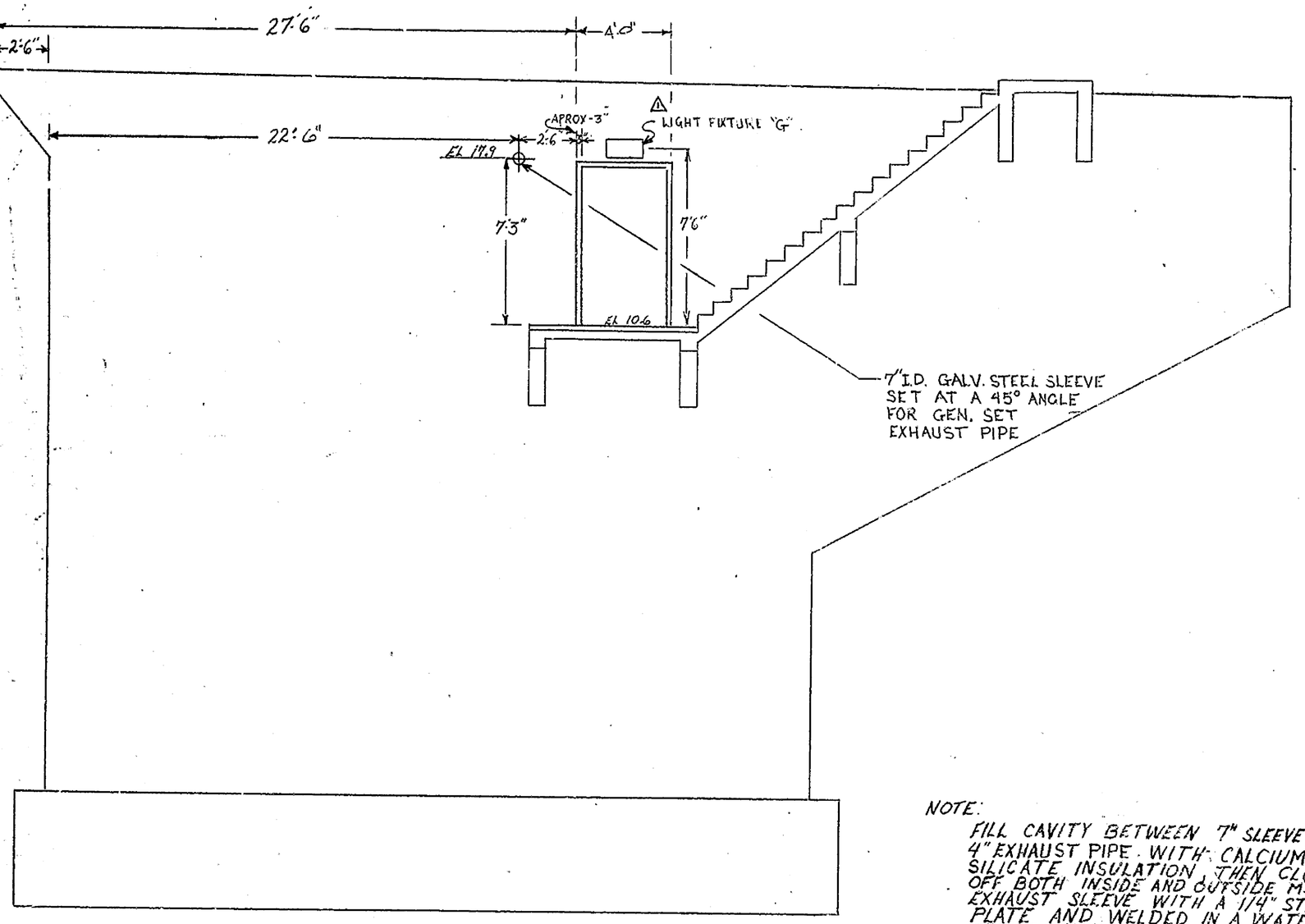

NORTH WALL ~ WEST LEAF

SCALE ~ 1/4" = 1 FT

NOTE:
FILL CAVITY BETWEEN 7" SLEEVE & 4" EXHAUST PIPE WITH CALCIUM SILICATE INSULATION, THEN CLOSE-OFF BOTH INSIDE AND OUTSIDE M.G. EXHAUST SLEEVE WITH A 1/4" STEEL PLATE AND WELDED IN A WATER TIGHT MANNER. SEE PAGE 138 PARGH. 3 FOR REFERENCE, ALSO TUDOR ELECTRIC DRAWING E-30 FOR MORE DETAILS

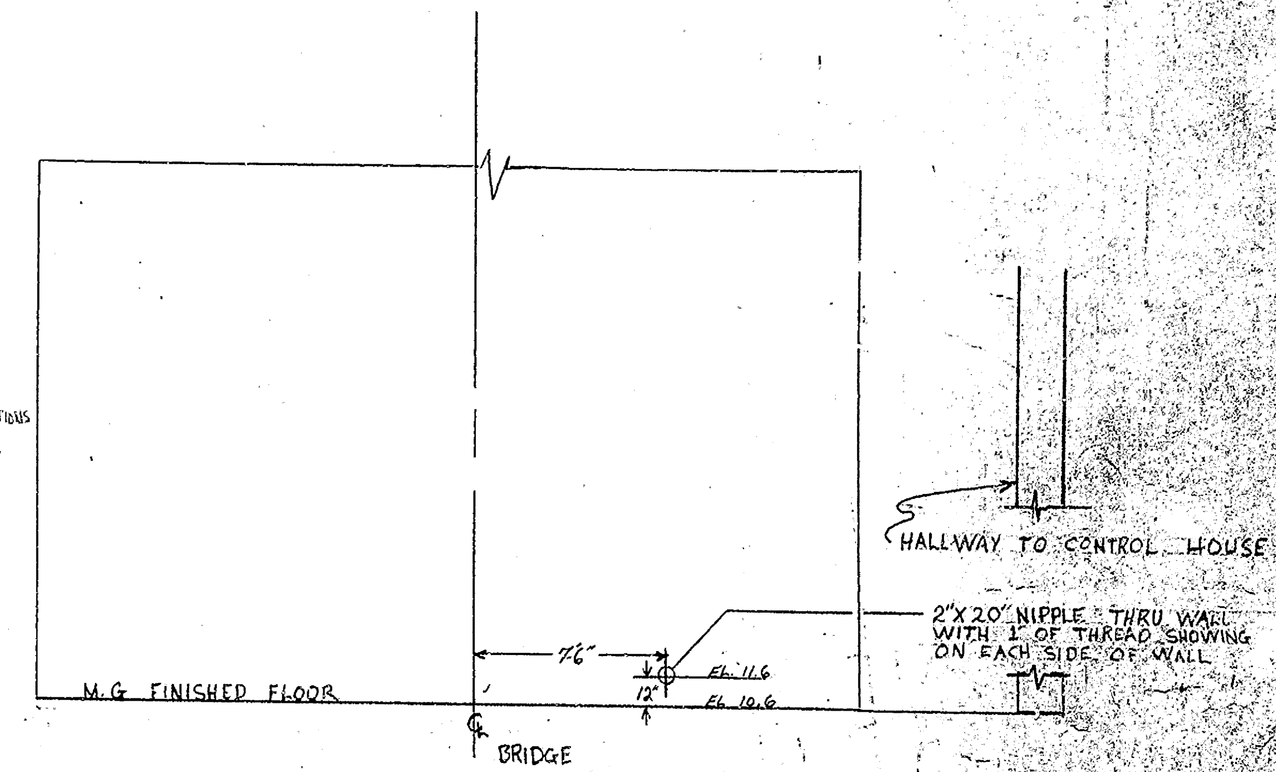

EAST WALL OF M.G. ~ WEST LEAF
AS LOOKING FROM INSIDE M.G.
SCALE ~ 1/4" = 1 FT

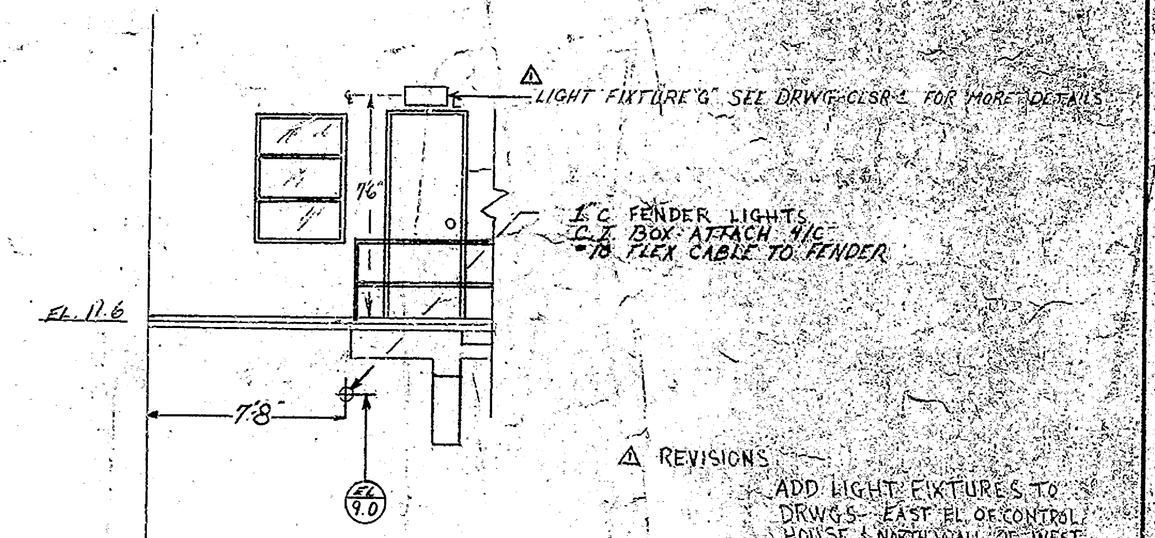

EAST EL. OF CONTROL HOUSE
CONDUIT STUB OUTS
SCALE ~ 1/4" = 1 FT

⚠ REVISIONS
ADD LIGHT FIXTURES TO DRWGS - EAST EL. OF CONTROL HOUSE & NORTH WALL OF WEST LEAF MACHINE GALLERY

SAVANNAH ROAD BRIDGE

SCALE: AS NOTED	APPROVED BY	DRAWN BY
DATE: 6-28-82		

MISC. CONDUIT DETAILS

TUDOR ELECTRIC — DRAWING NUMBER: E-19

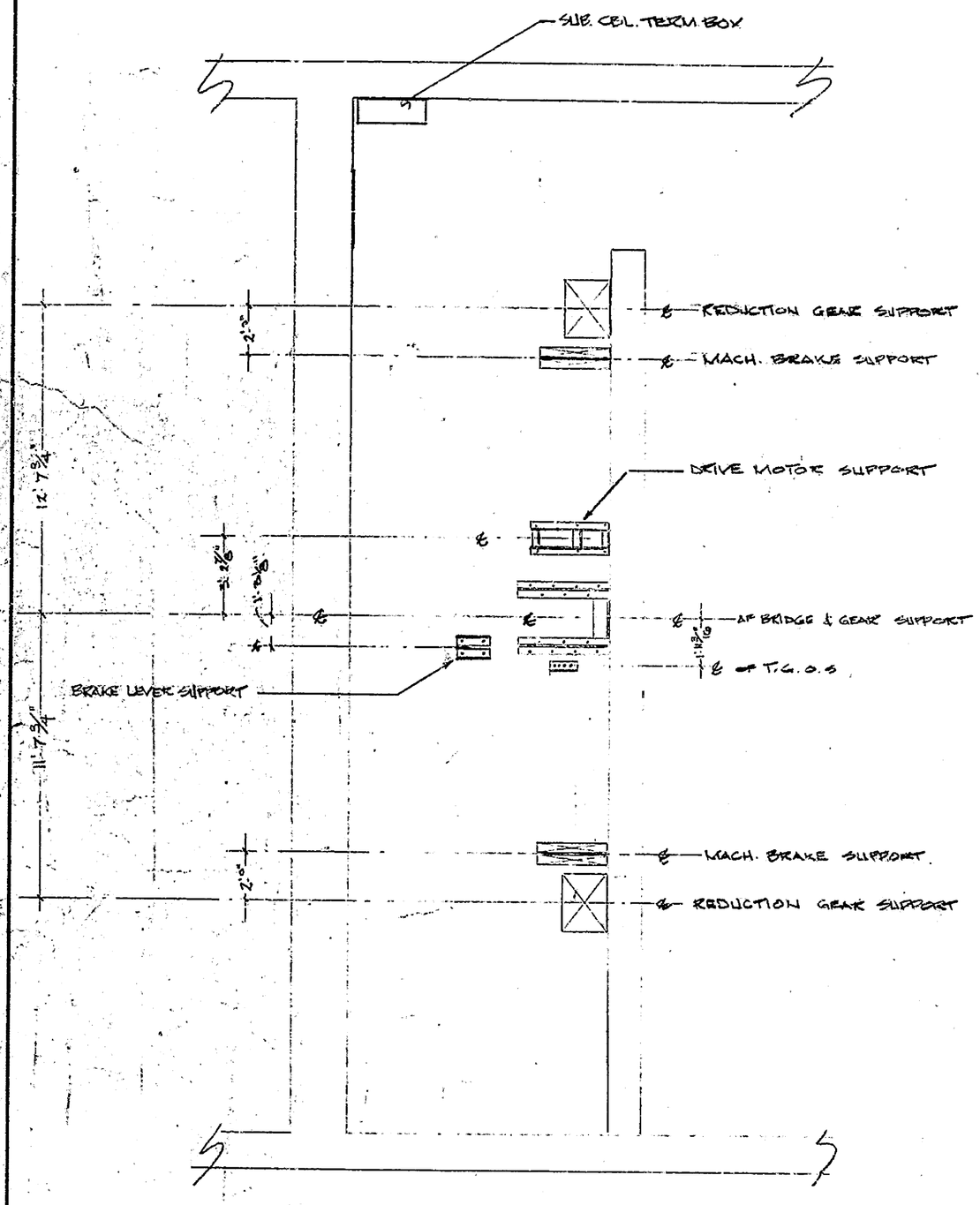

EAST PIER MACH. GAL. SUPPORTS.
SC 1/4" = 1'-0"

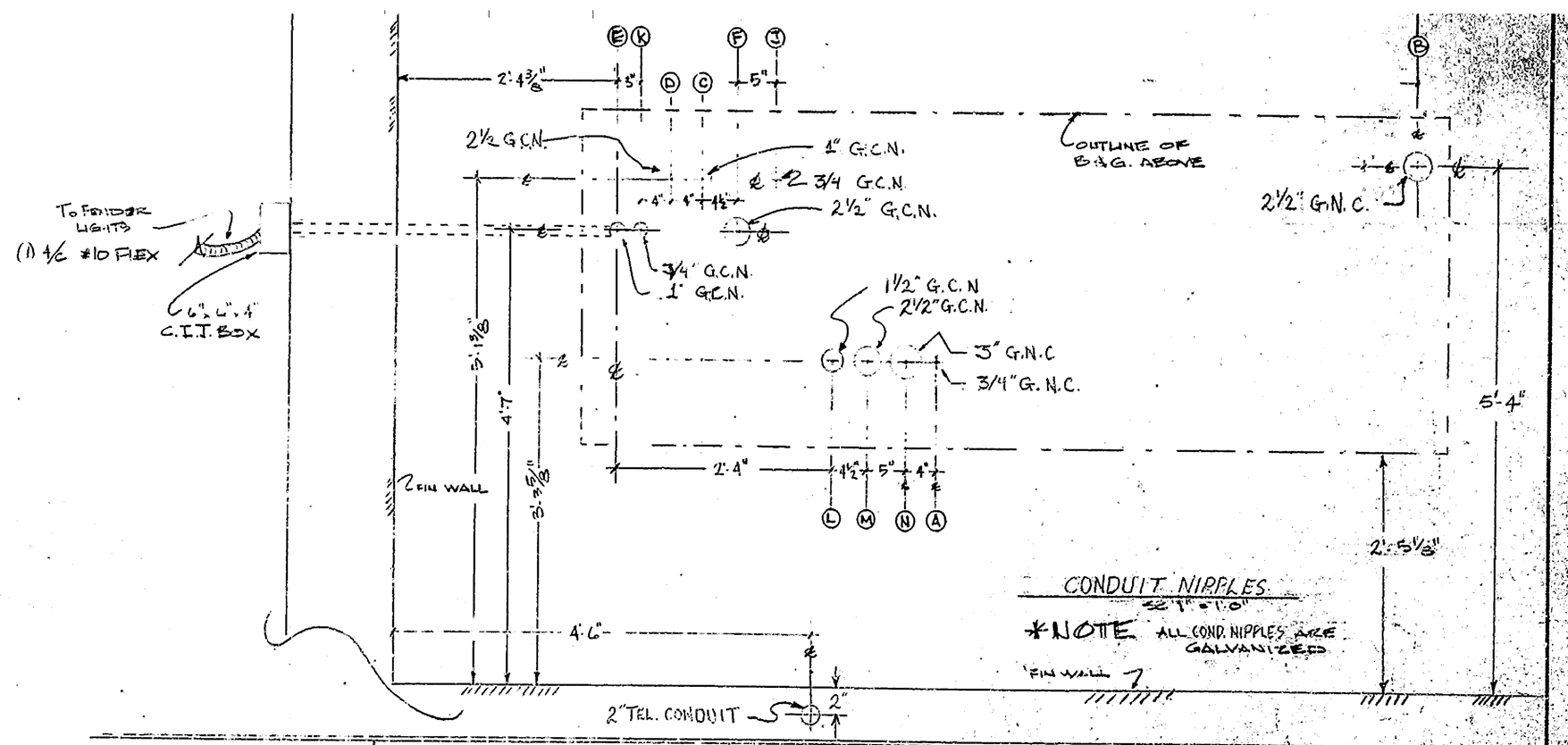

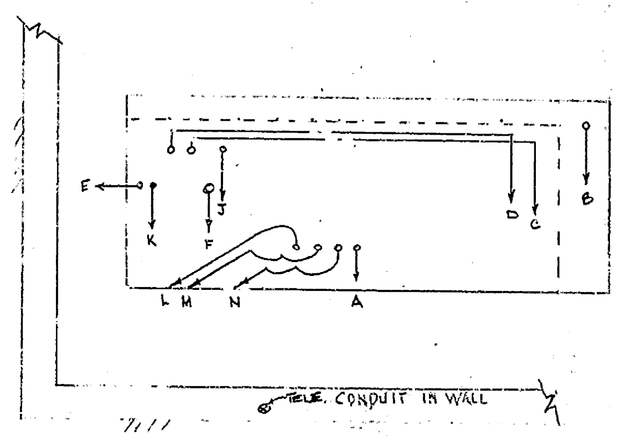

WIRE RUN IN TROUGH (PLAN)
NO SCALE

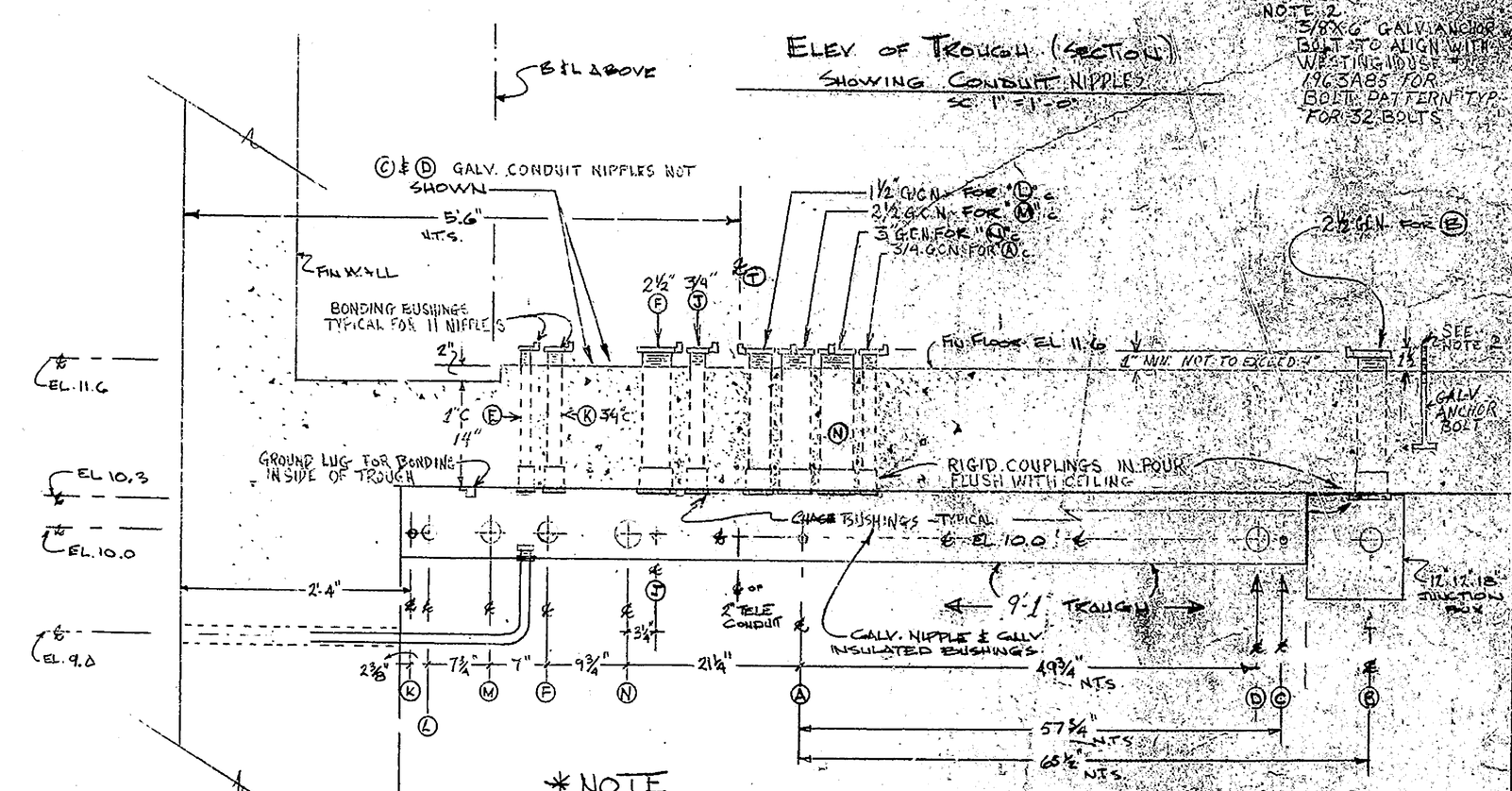

*NOTE
SEE TR #1 FOR TROUGH DIM.

ABREVIATIONS:
G.N.C. - GALVINIZIED CONDUIT NIPPLE

SAVANNAH ROAD BRIDGE		
SCALE: AS NOTED	APPROVED BY	DRAWN BY
DATE: 10/13/82		
TUDOR & ELEC CO.		DOVER DEL.
BRIDGE & LEAF SW. BD PAD		DRAWING NUMBER E-20

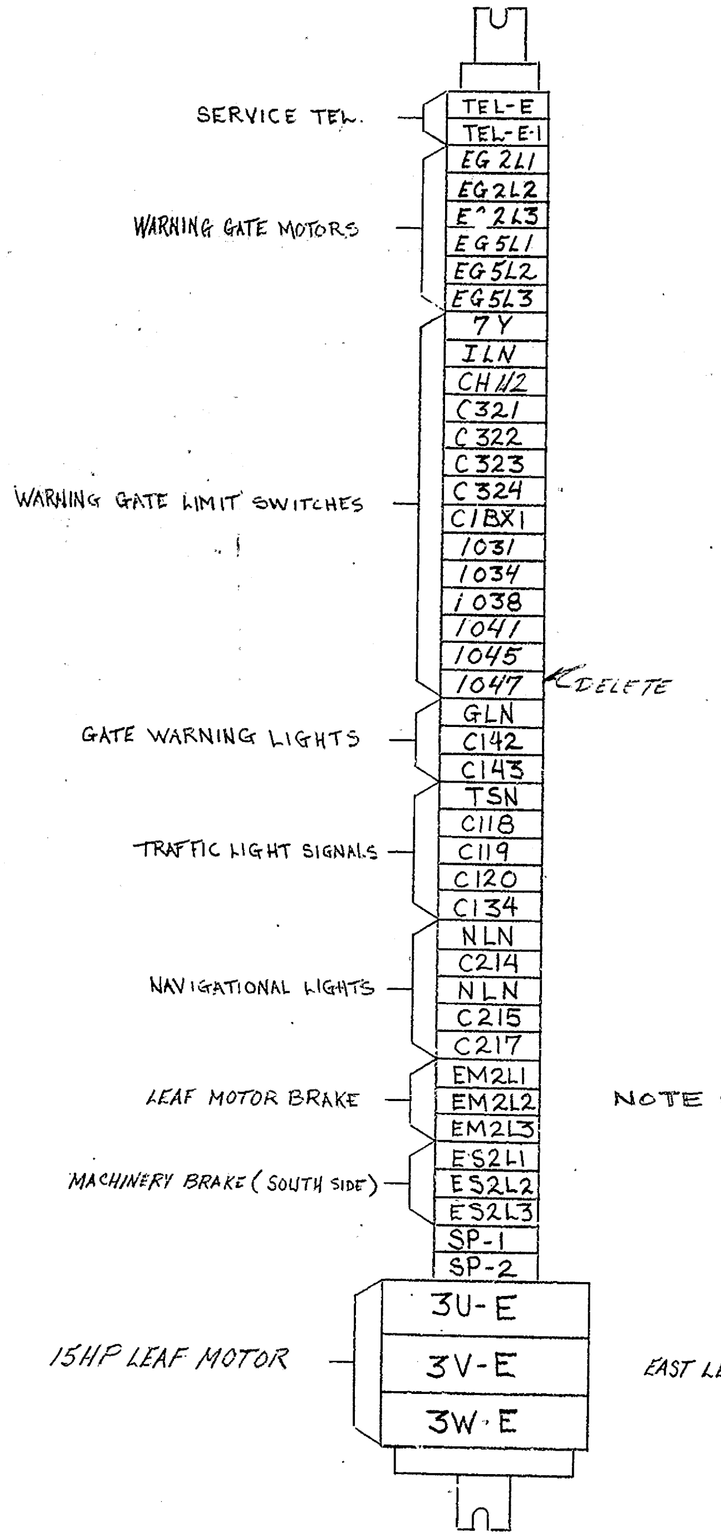

NOTES:

1. THE DESIGNATION "SP" ON TERMINAL STRIP REFERS TO "SPARE" WIRE AND TERMINAL
2. REFER TO WESTINGHOUSE DRWG. #3090D91 SHEET Nº 5, 6, 17 FOR ADDITIONAL INFORMATION
3. PAGE 190 OF THE SPECIFICATIONS DESCRIBE THE CABLE INSTALLATIONS WITHIN CABINET, INSTALLER SHOULD FAMILIARIZE HIMSELF ON LACING & SLACK IN THE CABLE REQUIREMENTS

EAST & WEST LEAF SUBMARINE CABINET
TERMINAL BLOCK LAYOUT

N.T.S.

SAVANNAH ROAD BRIDGE LEWES DEL.		
SCALE: NONE	APPROVED BY	DRAWN BY Bobby
DATE: 3/21/93		
SUB. CABINET TERMINAL STRIPS		
TUDOR ELECTRIC		DRAWING NUMBER E-21

KEUFFEL & ESSER CO. NO. 168A-24X36

LOWER TROUGH

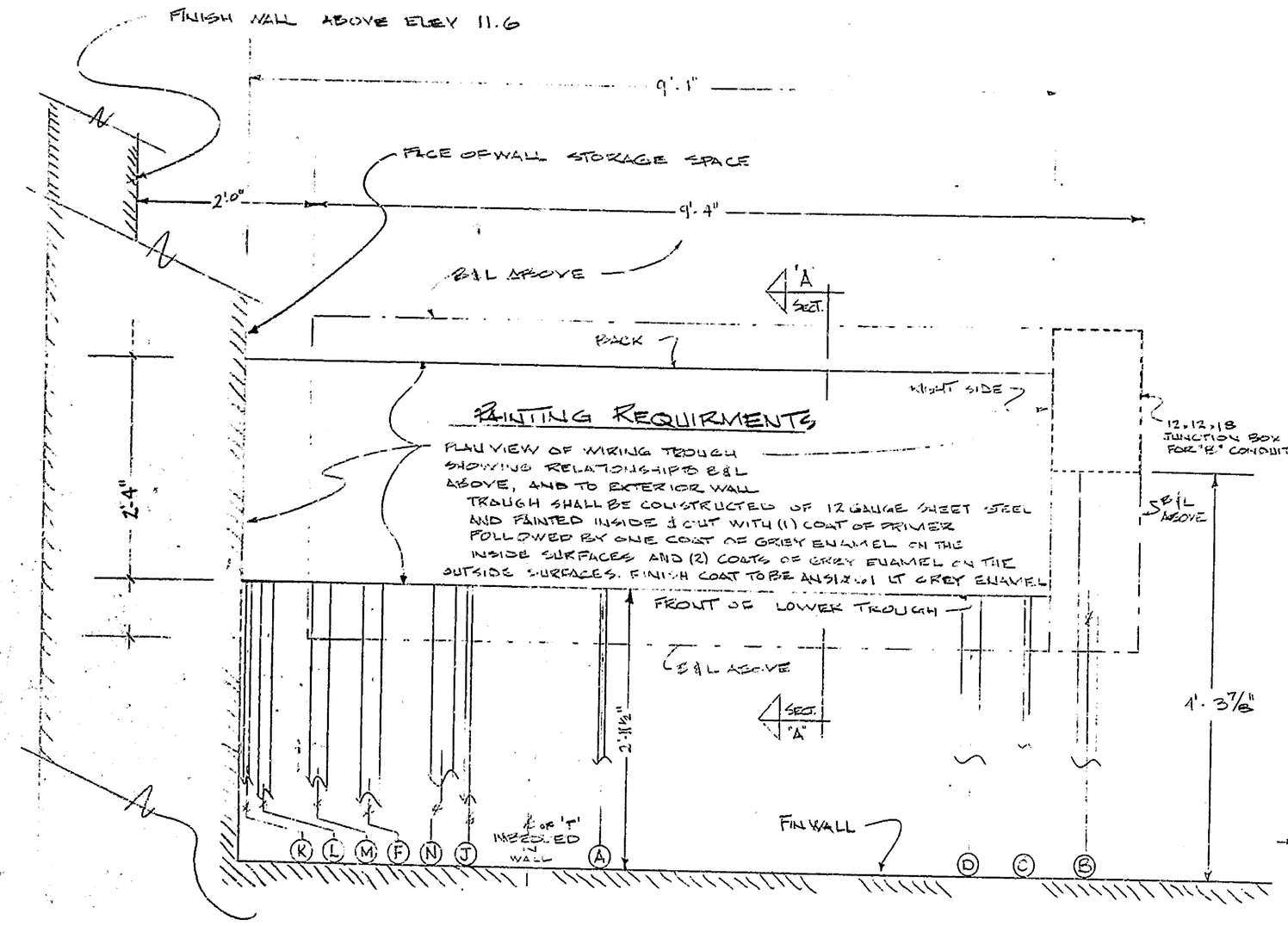

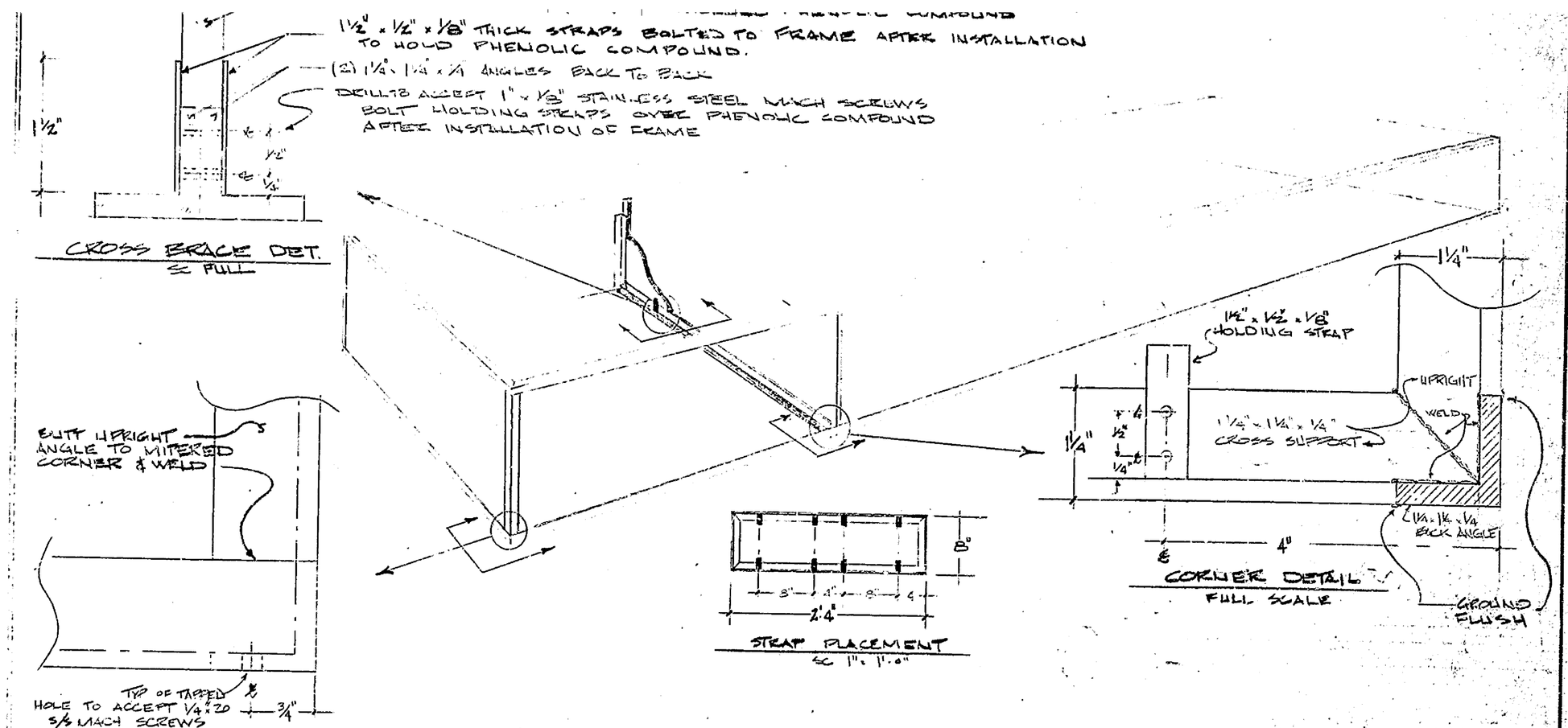

NOTES

1. TROUGH FRAME TO BE CONSTRUCTED OF 1¼" x 1¼" x ¼" ANGLE IRON AS SHOWN ABOVE. 12 GAUGE SHEET STEEL SKIN TO BE ATTACHED TO TOP AND FOUR SIDES BY CONTINUOUS WELDS. ALL EXTERIOR WELDS TO BE GROUND FLUSH WITH ANGLE IRON BEFORE PAINTING
2. ALL MOUNTING BOLTS, FASTENERS ETC. TO BE STAINLESS STEEL

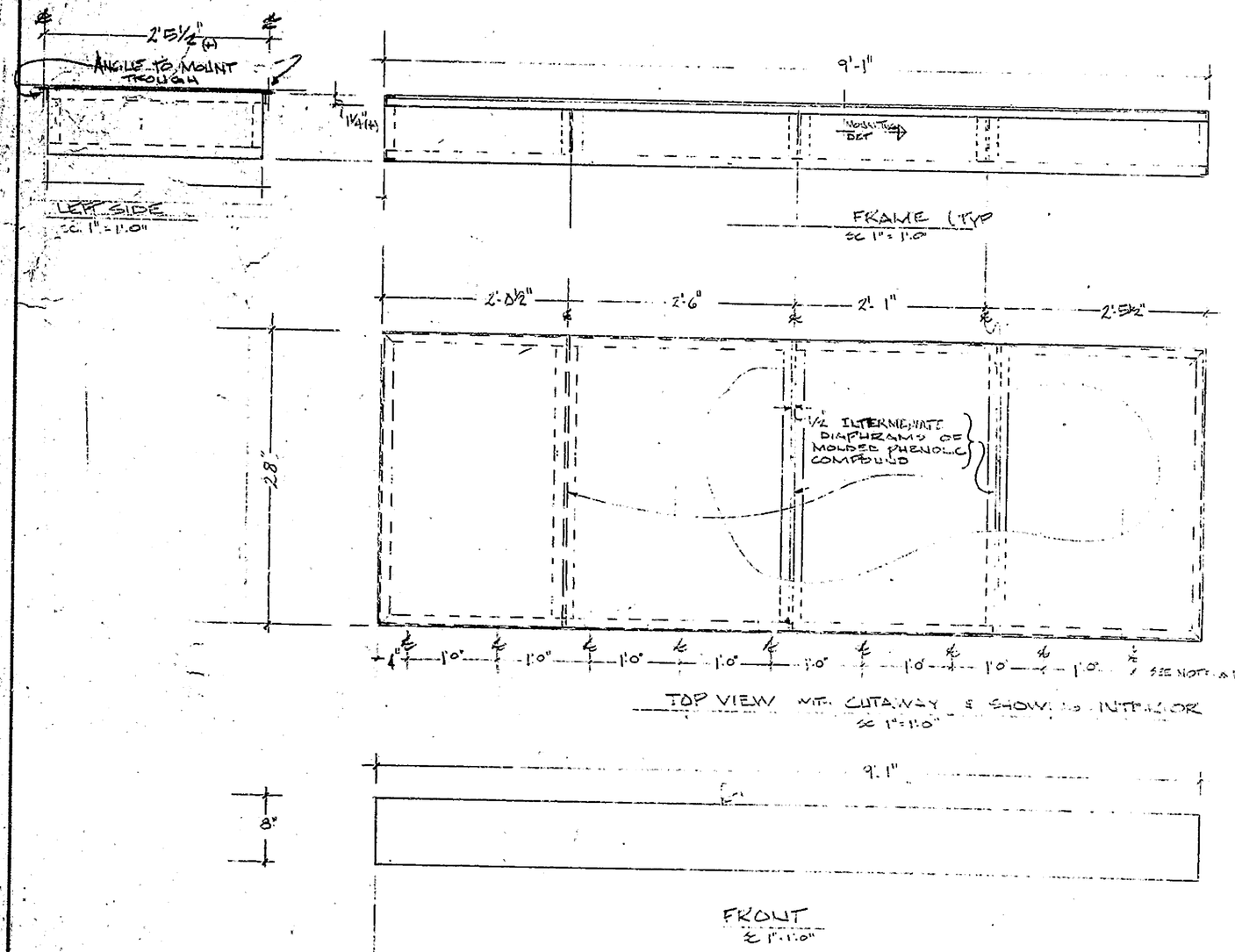

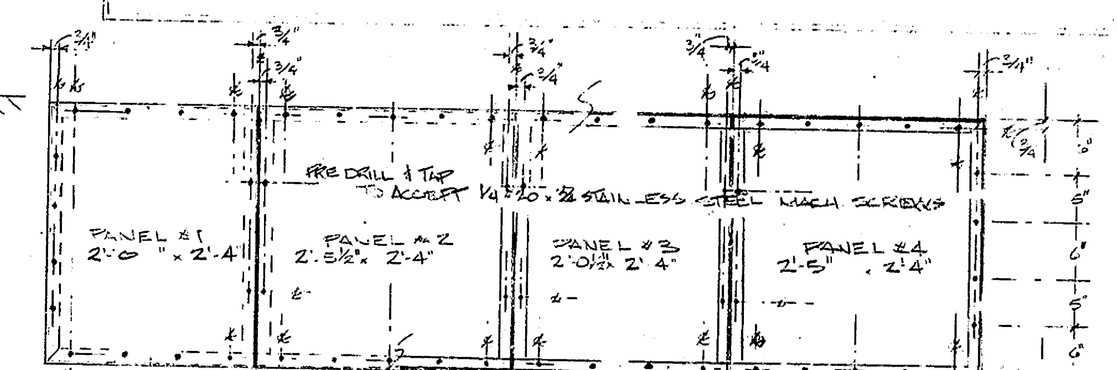

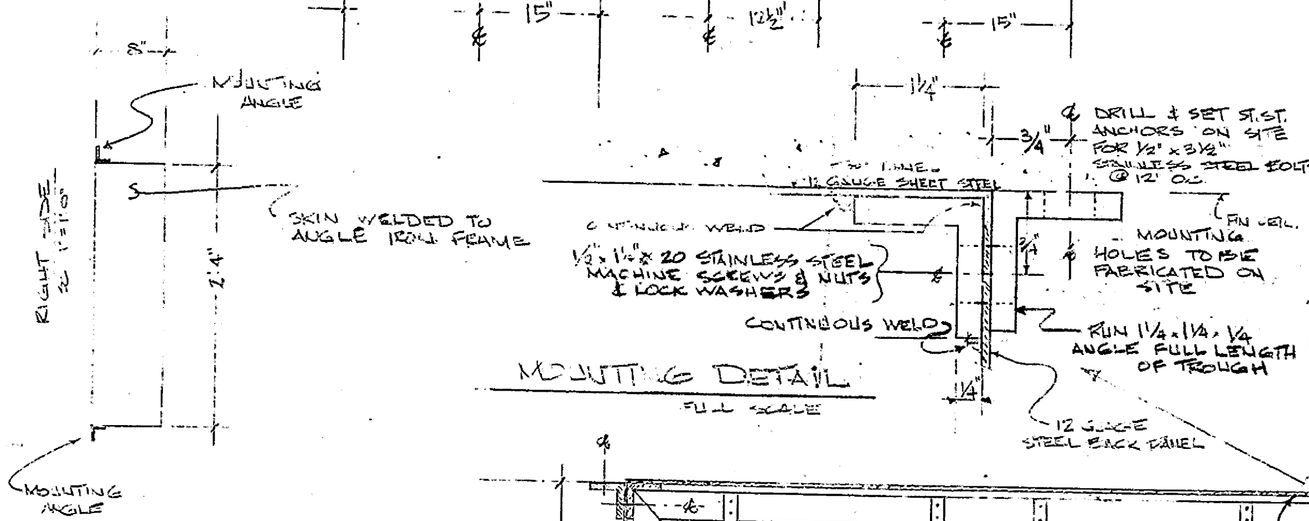

* NOTES

PLACED 1'-0" C TO C FOR RE-INFORCEMENT
EXACT DIMENSIONS TO BE DETERMINED BY ANGLE IRON WILL BE USED

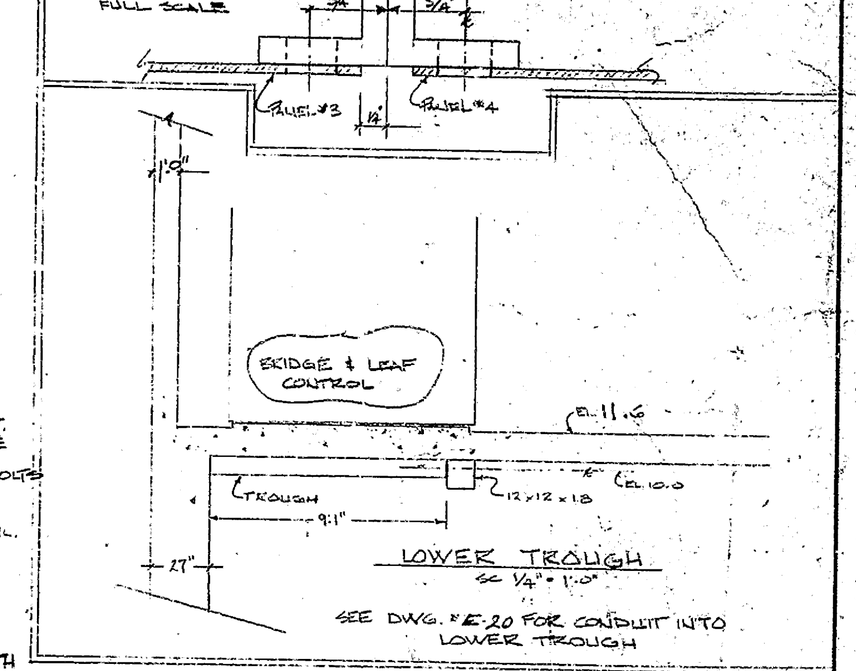

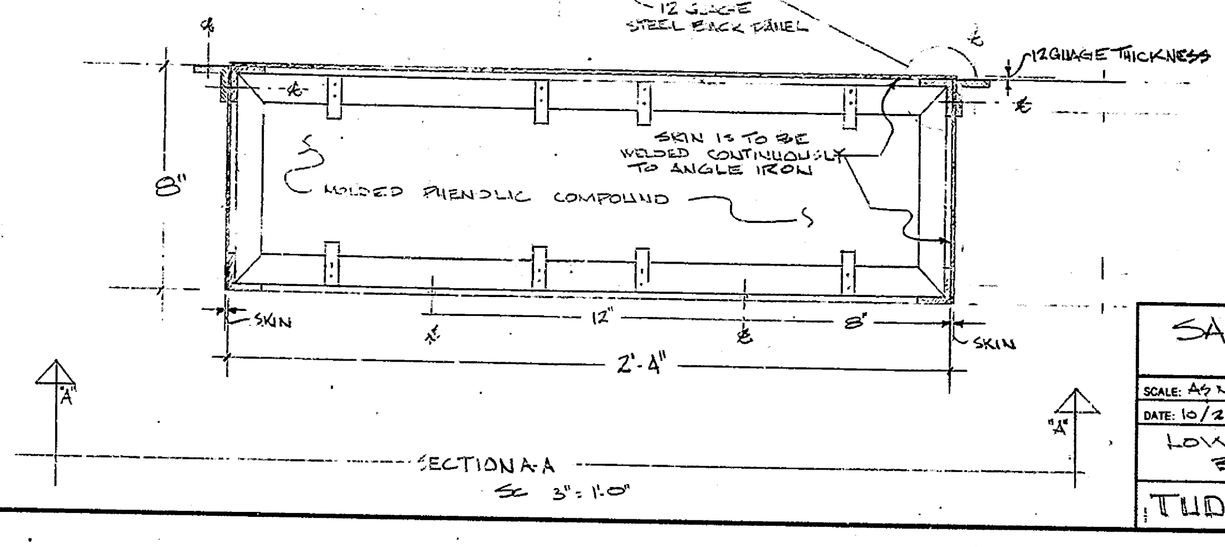

SAVANNAH BRIDGE, LEWES, DEL		
SCALE: AS NOTED	APPROVED BY	DRAWN BY CAS/TOUCE
DATE: 10/2/82		
LOWER TROUGH FOR BRIDGE & LEAF CONTROL		
TUDOR ELEC. CO. DOVER DEL.		DRAWING NUMBER E-22

UPPER TROUGH

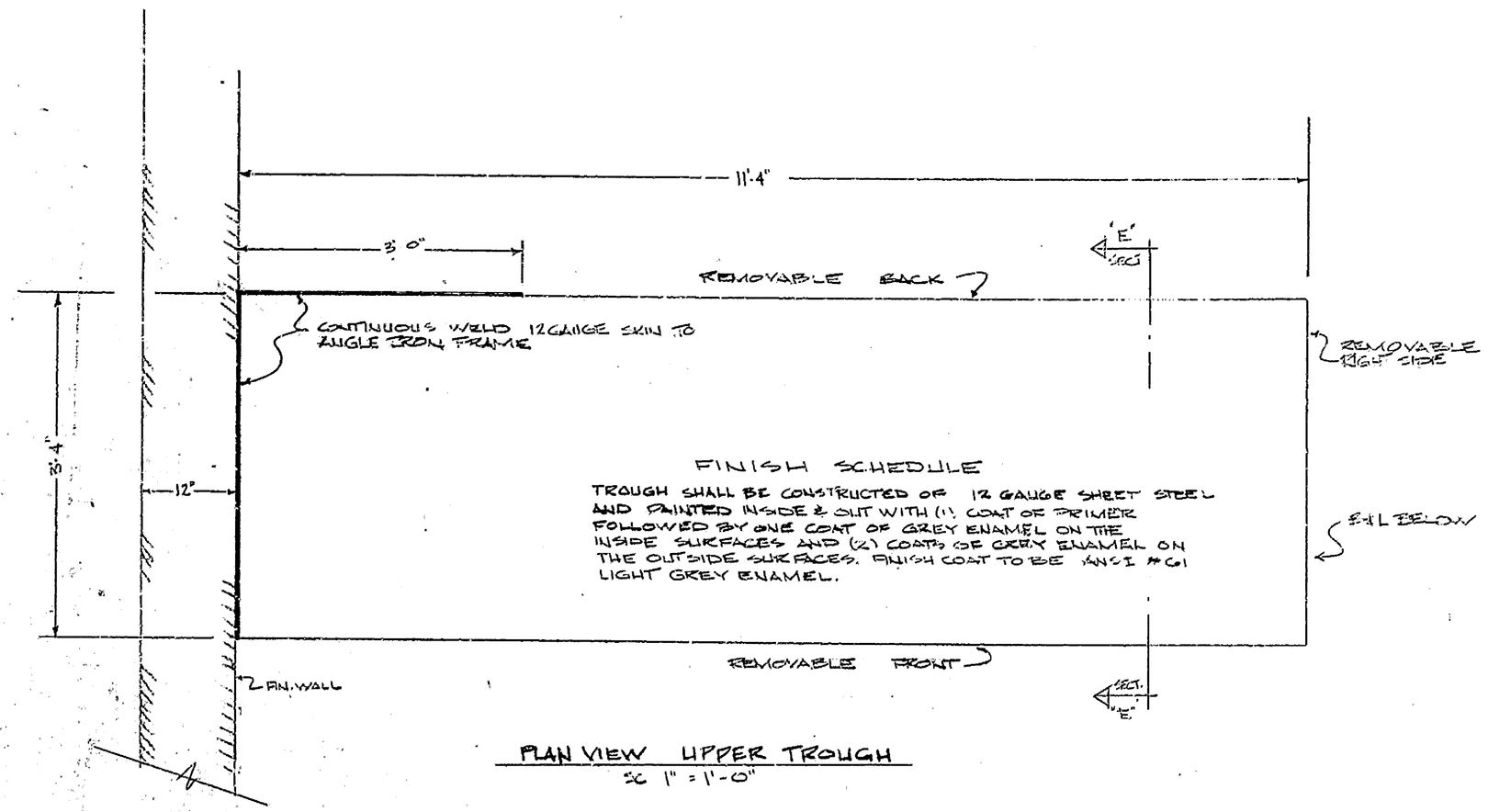

PLAN VIEW UPPER TROUGH
SC 1" = 1'-0"

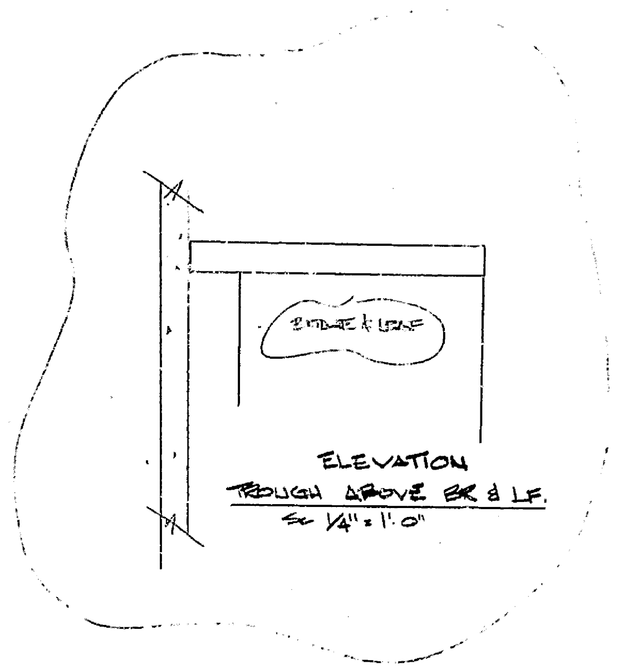

ELEVATION
TROUGH ABOVE BR & LF.
SC 1/4" = 1'-0"

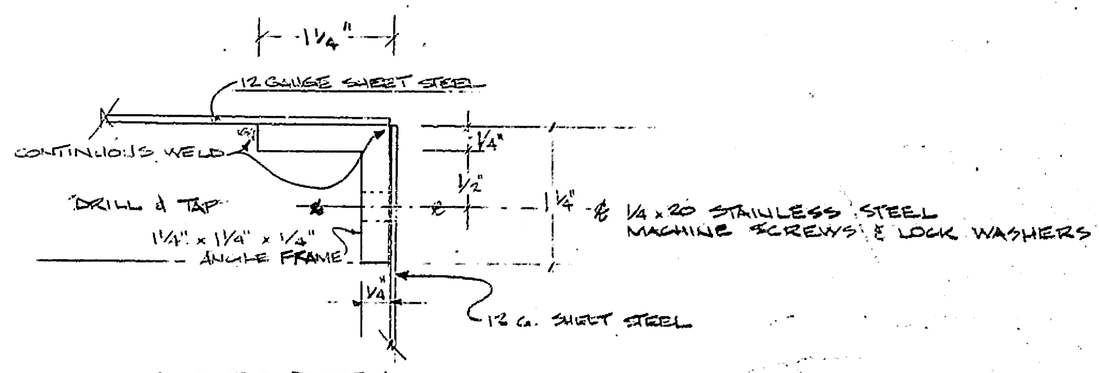

CORNER DETAIL
FULL SCALE

NOTE
SEE DWG # E-3 FOR CONDUIT ARRANGEMENT

3) 3" CONDUITS FROM SUBMARINE CABINET & CONDUITS #1 & #2 ENTER TROUGH HERE

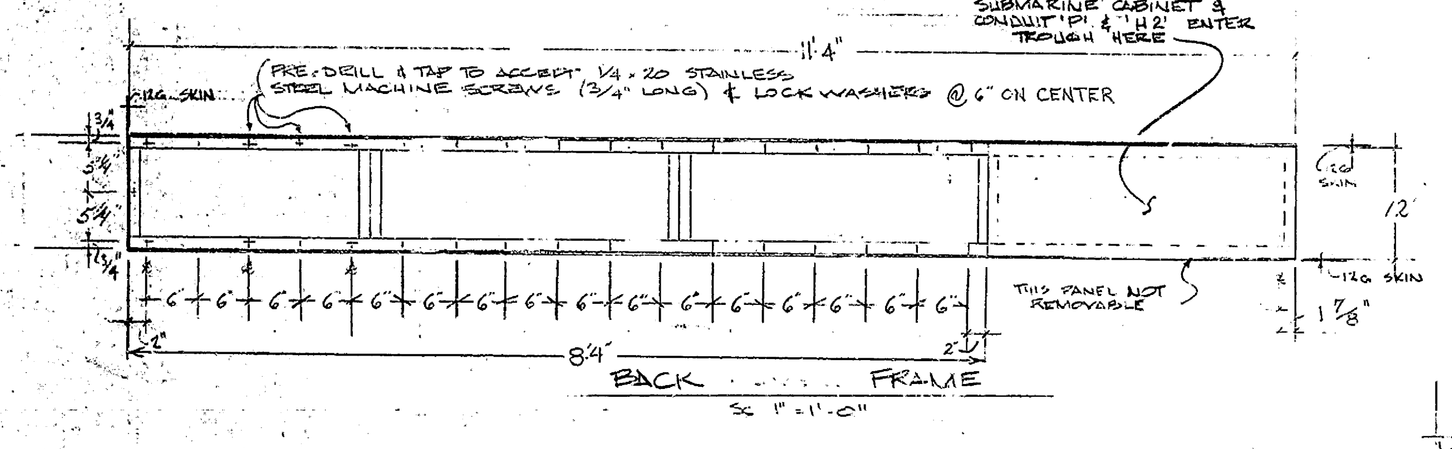

BACK FRAME
SC 1" = 1'-0"

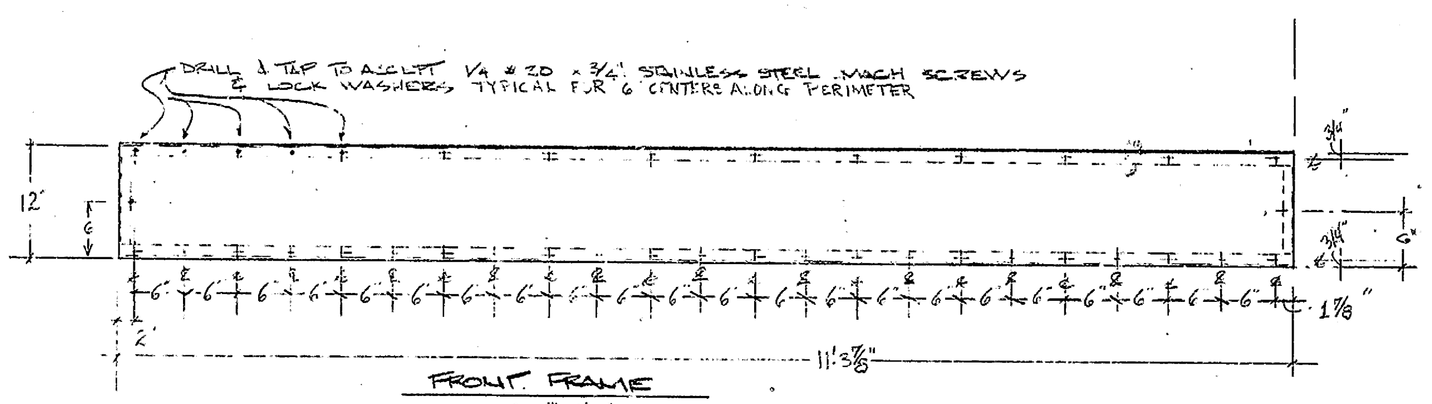

FRONT FRAME
SC 1" = 1'-0"

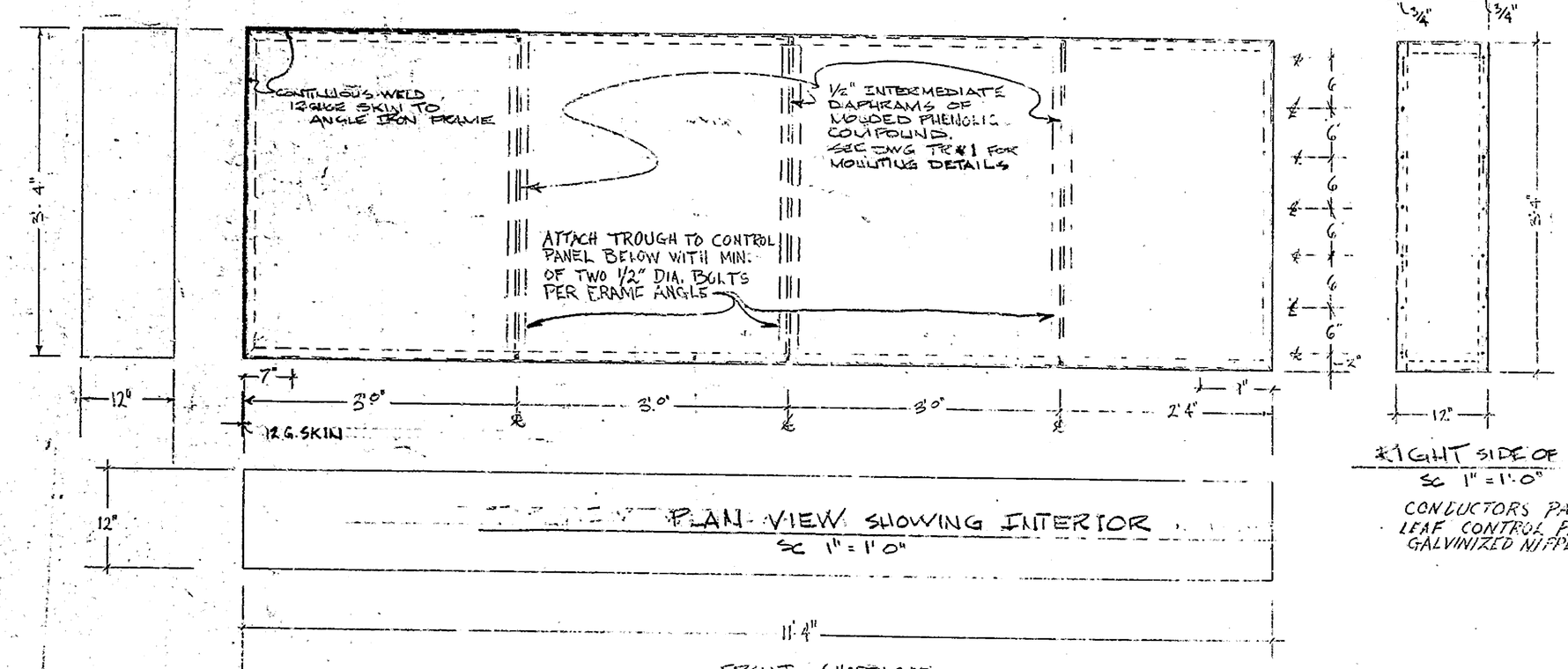

PLAN VIEW SHOWING INTERIOR
SC 1" = 1'-0"

FRONT (NORTH SIDE)
SC 1" = 1'-0"

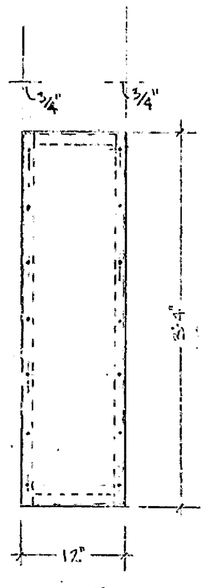

RIGHT SIDE OF FRAME
SC 1" = 1'-0"

CONDUCTORS PASSING THRU TROUGH TO BRIDGE & LEAF CONTROL PANELS SHALL BE ROUTED VIA GALVINIZED NIPPLES W/ BUSHINGS ON BOTH ENDS

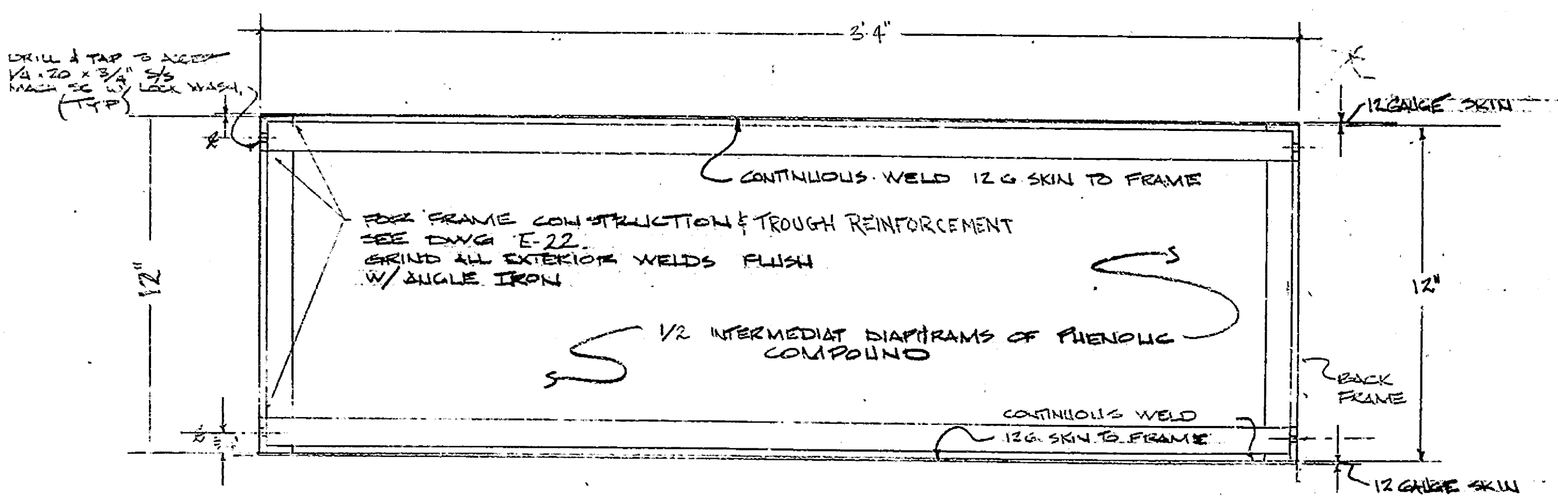

SECTION "E"-"E"
SC 3" = 1'-0"

-NOTES-

#1. STRUCTUAL STEEL ANGLES TYPE 1 1/4" - 1 1/4" - 1/4"

SAVANNA BRIDGE
LEWES, DEL.

SCALE: AS NOTED	APPROVED BY	DRAWN BY
DATE: 11/8/82		

UPPER TROUGH

TUDOR ELEC. — DRAWING NUMBER E-23

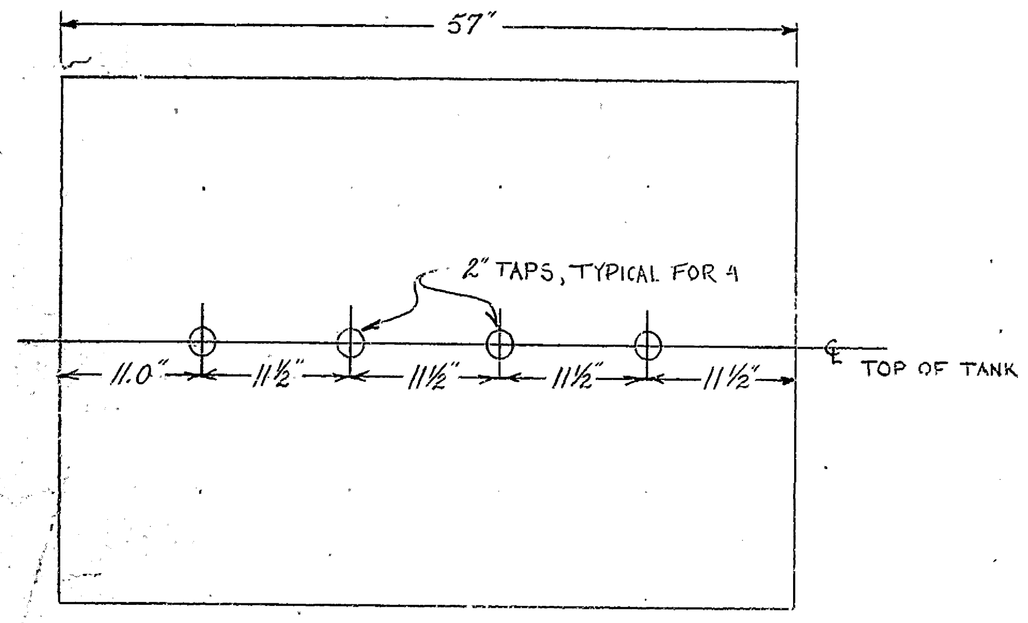

TOP VIEW
SC 1½" = 1'-0"

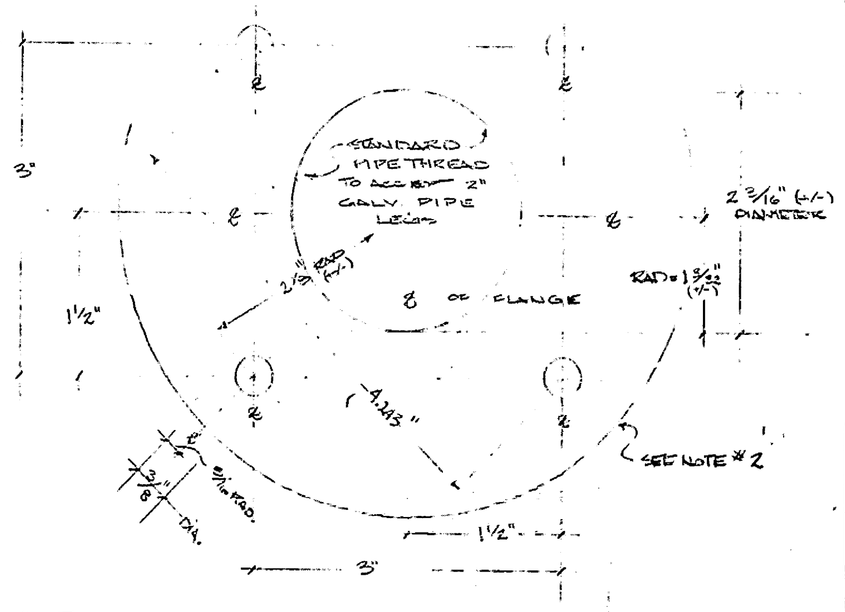

ACTUAL SIZE PLAN VIEW OF FLOOR FLANGE
DETAIL

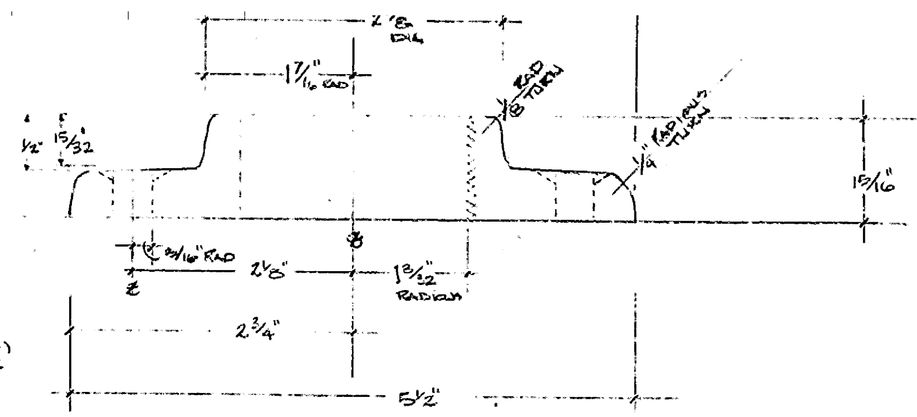

ACTUAL SIZE ELEVATION OF
FLOOR FLANGE

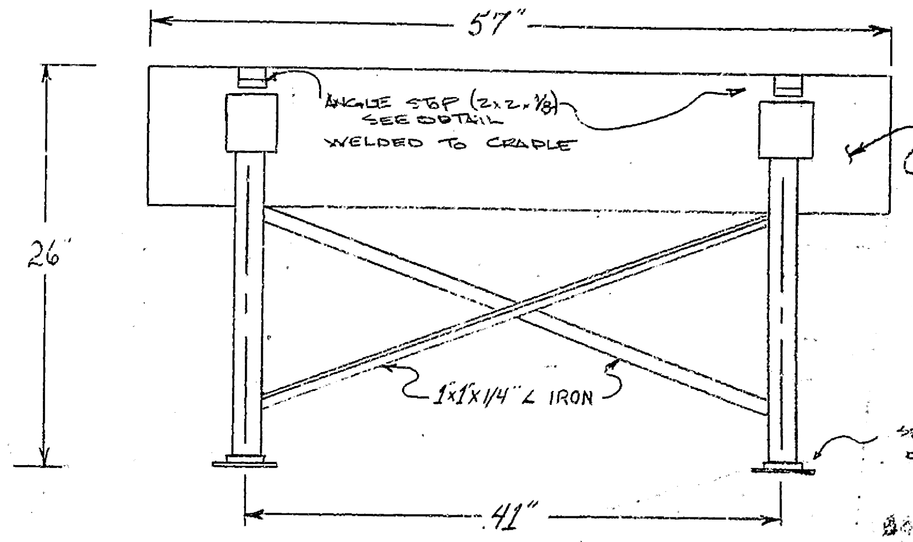

SIDE VIEW OF CRADLE
SC 1½" = 1'-0"

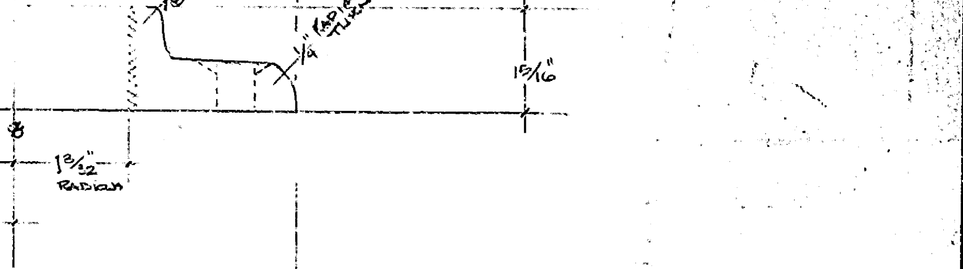

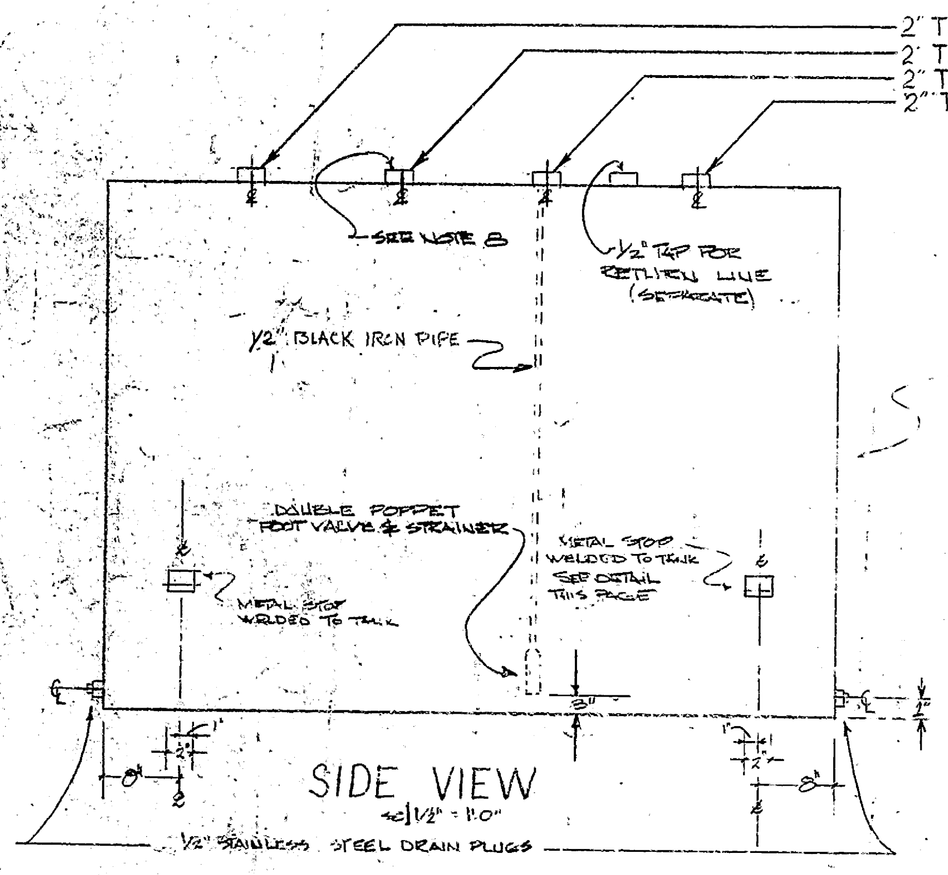

SIDE VIEW
SC ½" = 1'-0"

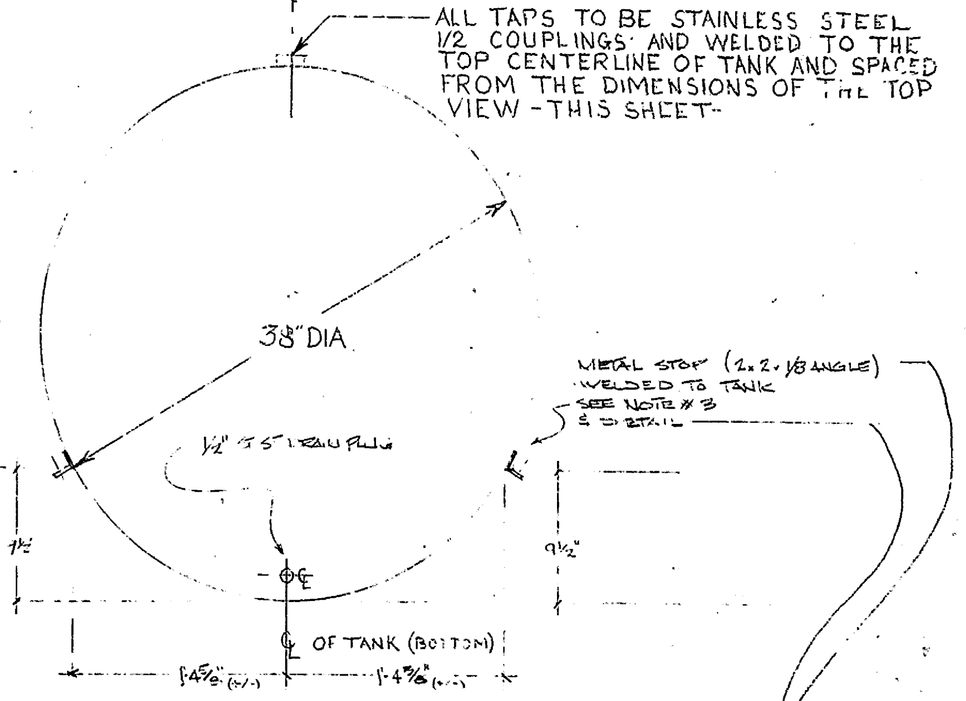

END VIEW - TYPICAL
AT EACH END
SC 1½" = 1'-0"

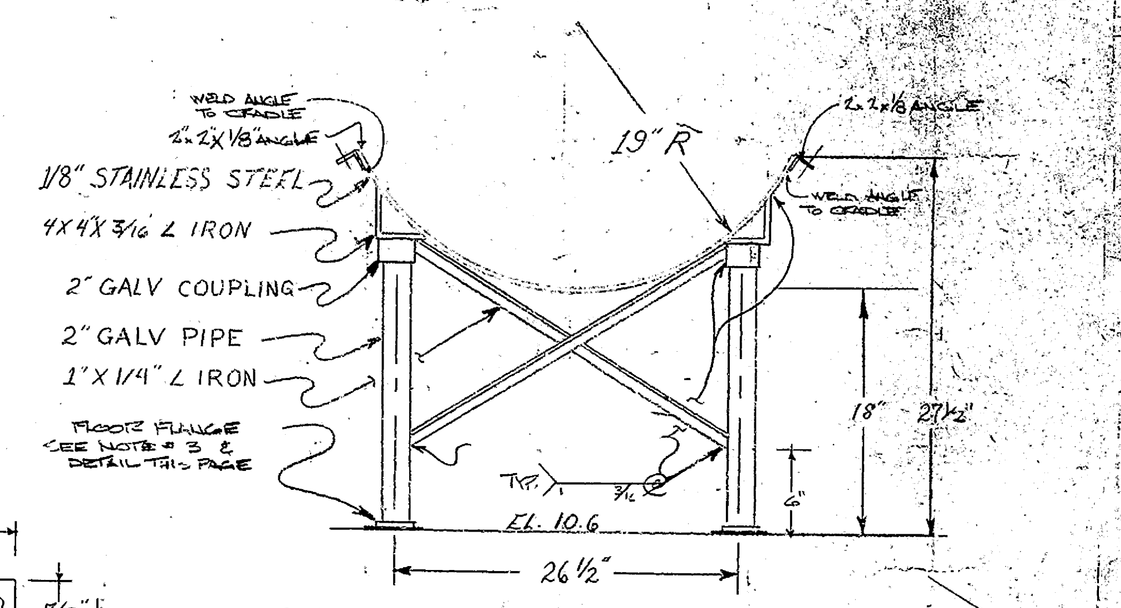

END VIEW OF TANK CRADLE
SC 1½" = 1'-0"

275 GALLON FUEL TANK

* NOTE

1. TANK SHALL BE FABRICATED OF #12 GAUGE 18-8 TYPE 304 L STAINLESS STEEL W/ CONTINUOUSLY WELDED JOINTS.
2. FLANGE TO BE CAST IRON
3. STOPS TO BE STAINLESS STEEL
4. STAINLESS STEEL - ASTM 276 TYPE 304 L
5. STEEL - ASTM A 36
6. PIPE - ASTM A 53 GRADE B
7. PAINT: INORGANIC ZINC & VINYL TOP COAT PER SEC 606
8. 2" TAP FOR 2 - ½ FUEL LINES (SUPPLY & RETURN), INSTALLATION OF ½ FUEL LINES INTO TANK SHALL BE MADE WITH A 2 BUSHING, DOUBLE TAPED (BOTH TOP & BOTTOM @ ½ STANDARD PIPE THREADS. SUPPLY LINE WILL BE CUT & THREADED TO PROPER LENGHT (APPROX. 33 INCHES, THEN INSTALLED BY SCREWING INTO ONE OF THE ½" TAPPED HOLES ON THE BOTTOM OF THE 2" BUSHING, BEFORE INSTALLING BUSHING IN TANK. RETURN LINE WILL BE FLUSH WITH THE BOTTOM OF BUSHING.
9. INSTALLATION & EQUIPMENT DETAIL ARE FORTH COMING ON SHOP DRAWINGS FOR FUEL GUAGE

PROVIDE WELDED PIPE PLUG FOR CONNECTION TO HALF COUPLING

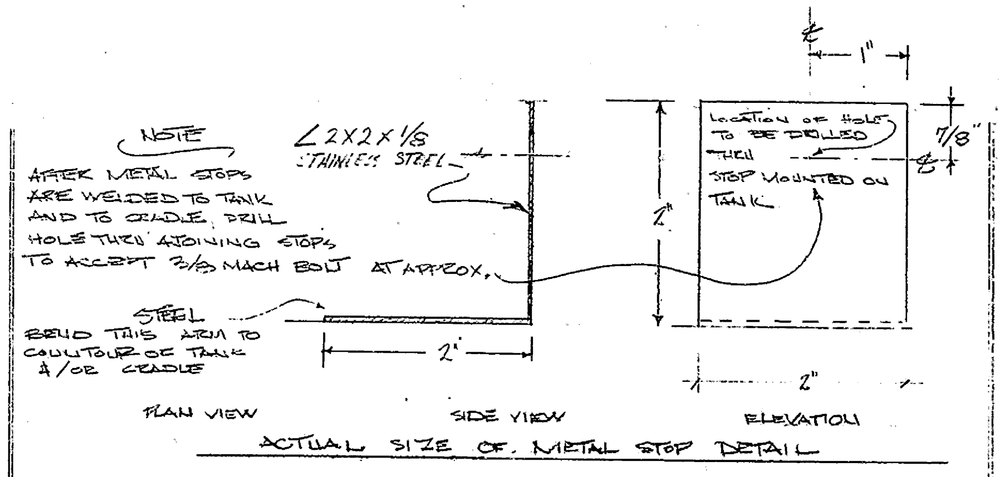

ACTUAL SIZE OF METAL STOP DETAIL

SAVANNAH ROAD BRIDGE	
SCALE: 1/2" = 1"	APPROVED BY
DATE: 7-23-82	DRAWN BY BWH
275 GALLON TANK & CRADLE	
TUDOR ELECTRIC	DRAWING NUMBER E-24

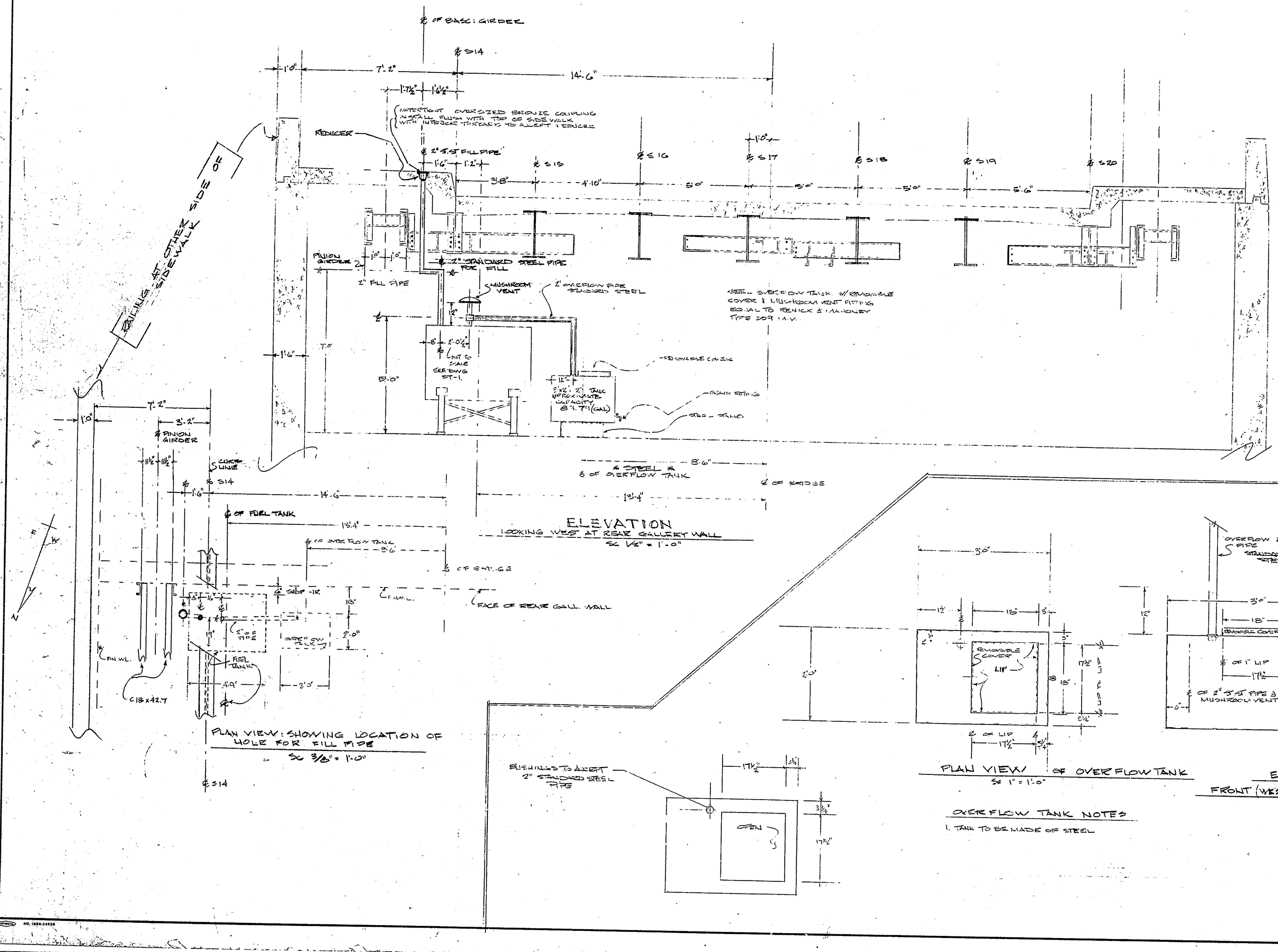

OVERFLOW TANK NOTES

1. TANK TO BE MADE OF STEEL

SAVANNAH RD BRIDGE
LEWES DEL

SCALE: AS NOTED	APPROVED BY	DRAWN BY [illegible]
DATE: 12/09/82		REVISED 2/15/85

FILL PIPE LOCATION & OVER FLOW TANK

TUDOR ELEC POWER DEL

DRAWING NUMBER E-25

NO. 183A-24X36

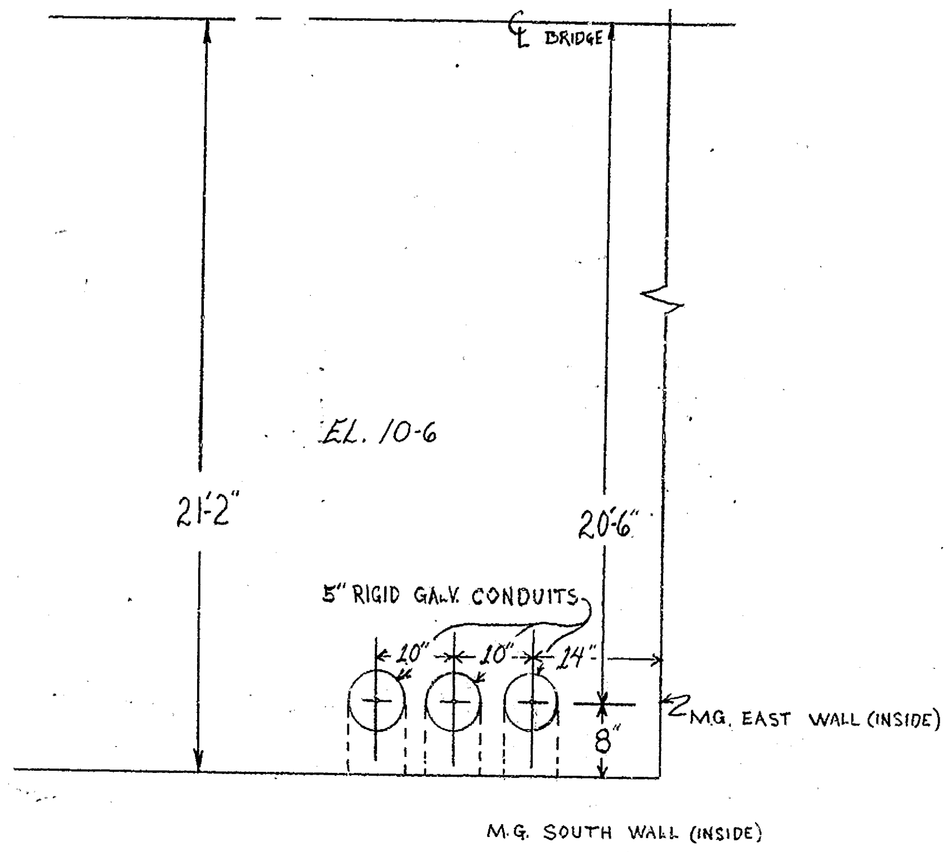

TOP VIEW

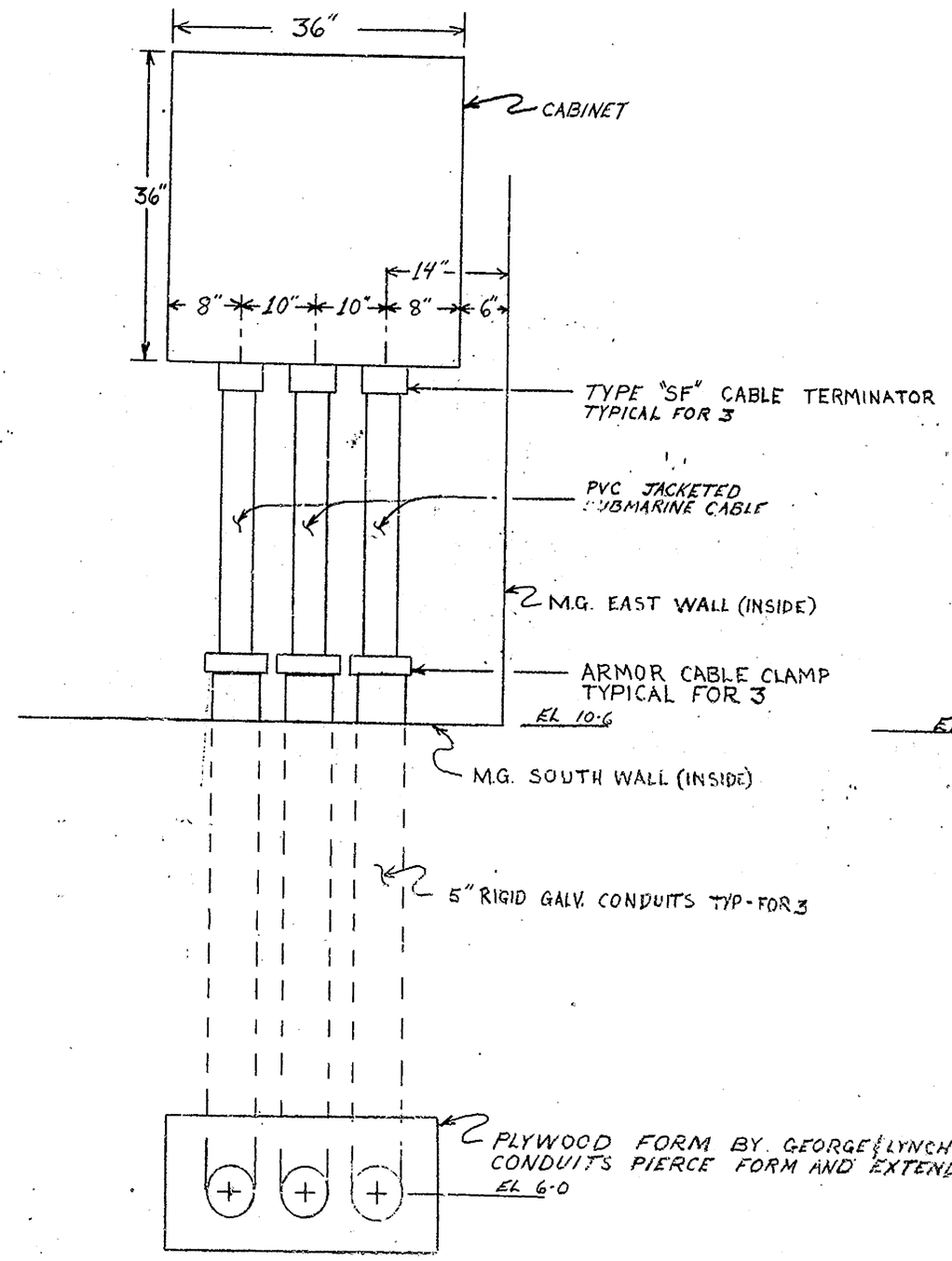

FRONT VIEW

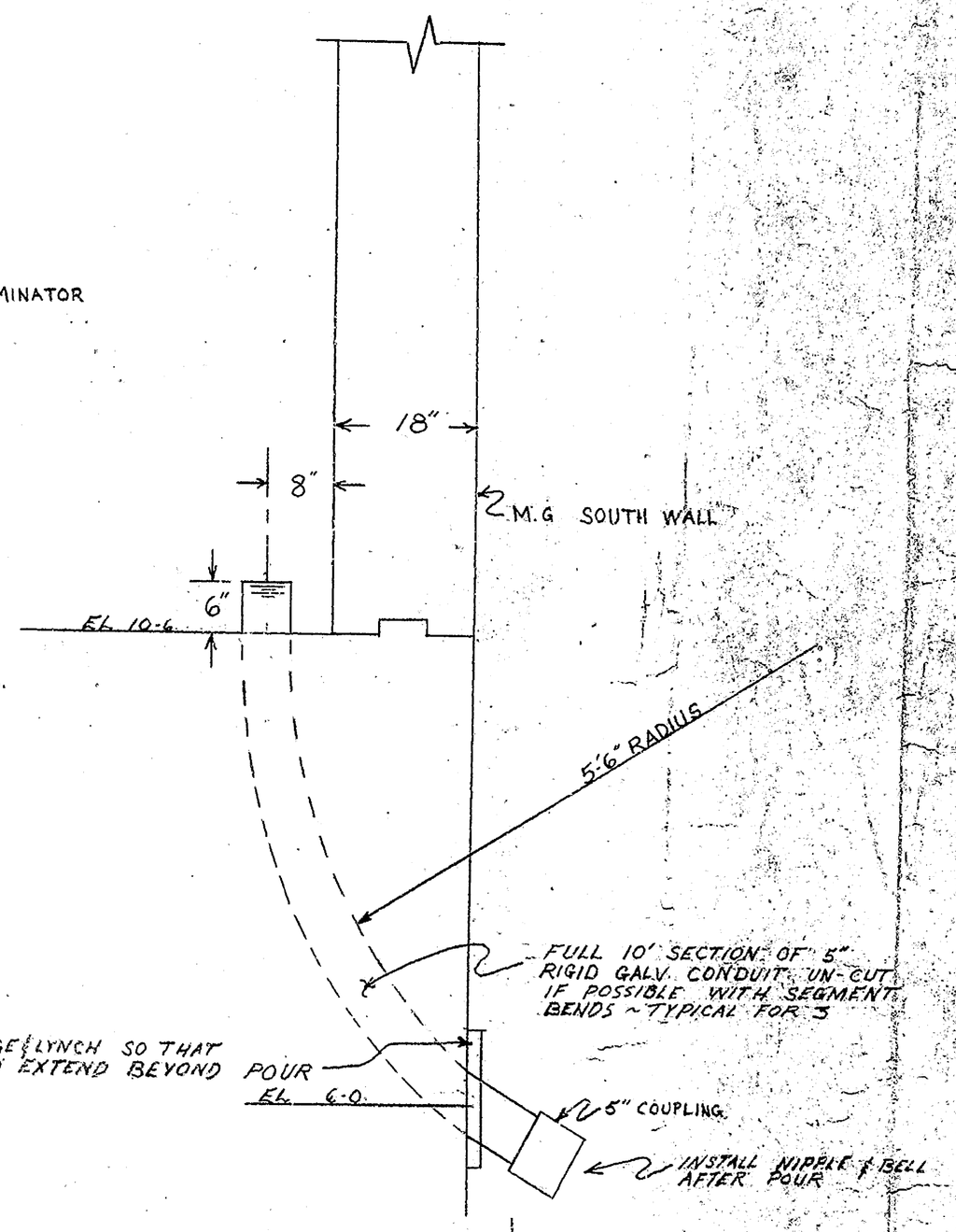

SIDE VIEW

EAST PIER SUBMARINE CABLE CONDUITS AND LAYOUT FOR FOOTER POUR.

SAVANNAH BRIDGE		
SCALE: 1" = 1 FT.	APPROVED BY	DRAWN BY: BAILEY
DATE:		
EAST PIER FOOTER POUR		
TUDOR ELECTRIC		DRAWING NUMBER E-20

D C B A 1 5 10 A B C D

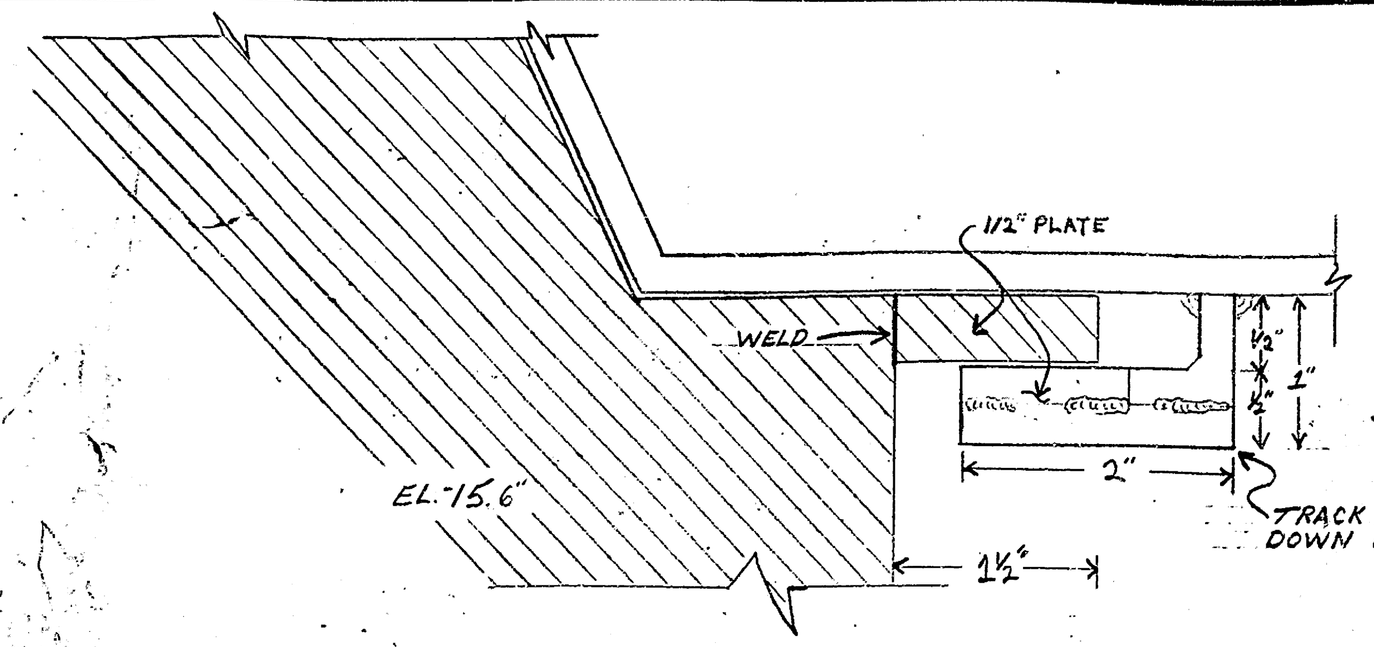

SECTION "BB" SCALE 1"-1"

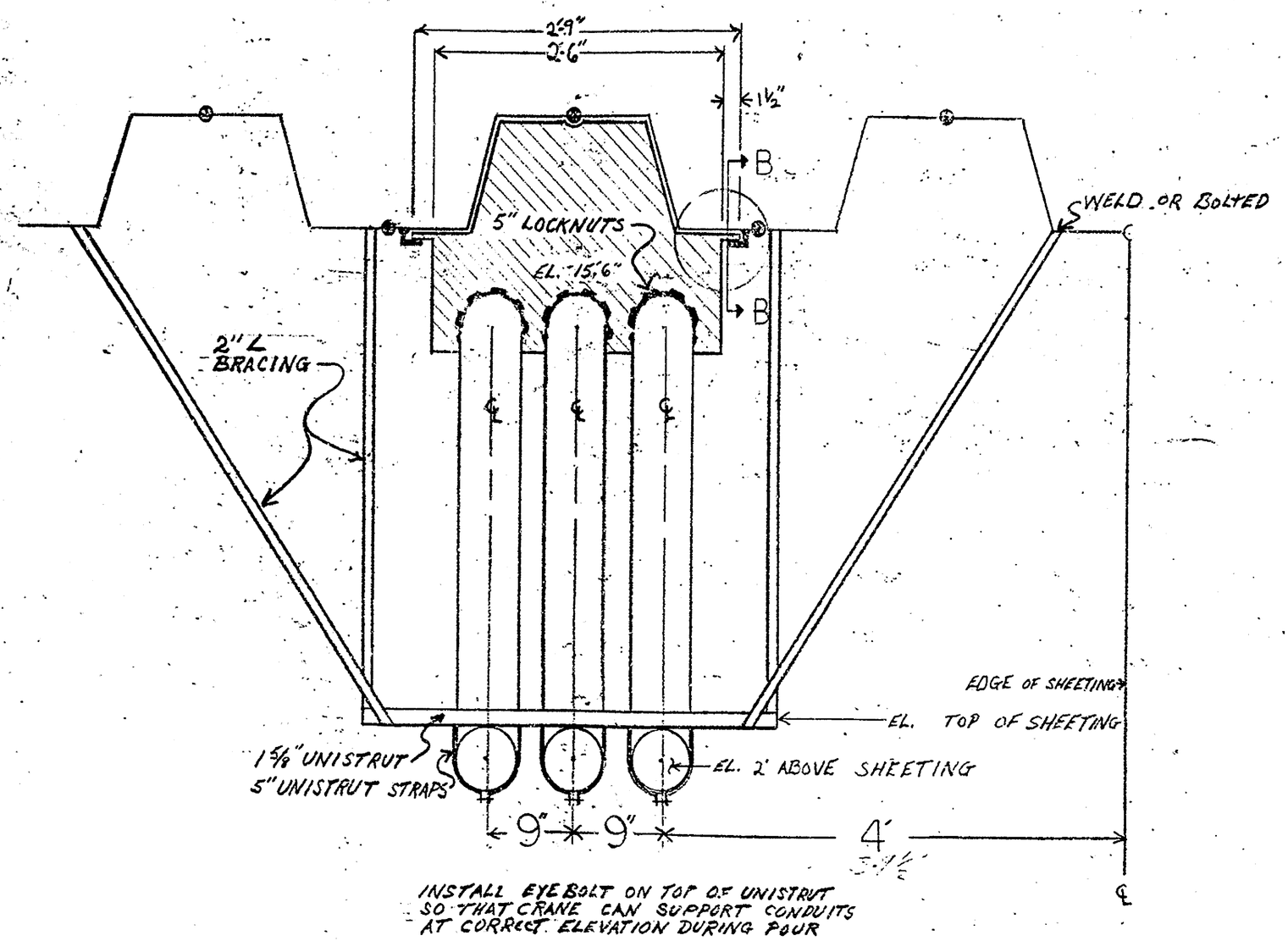

SECTION AA TOP VIEW
SCALE: 1"=1'

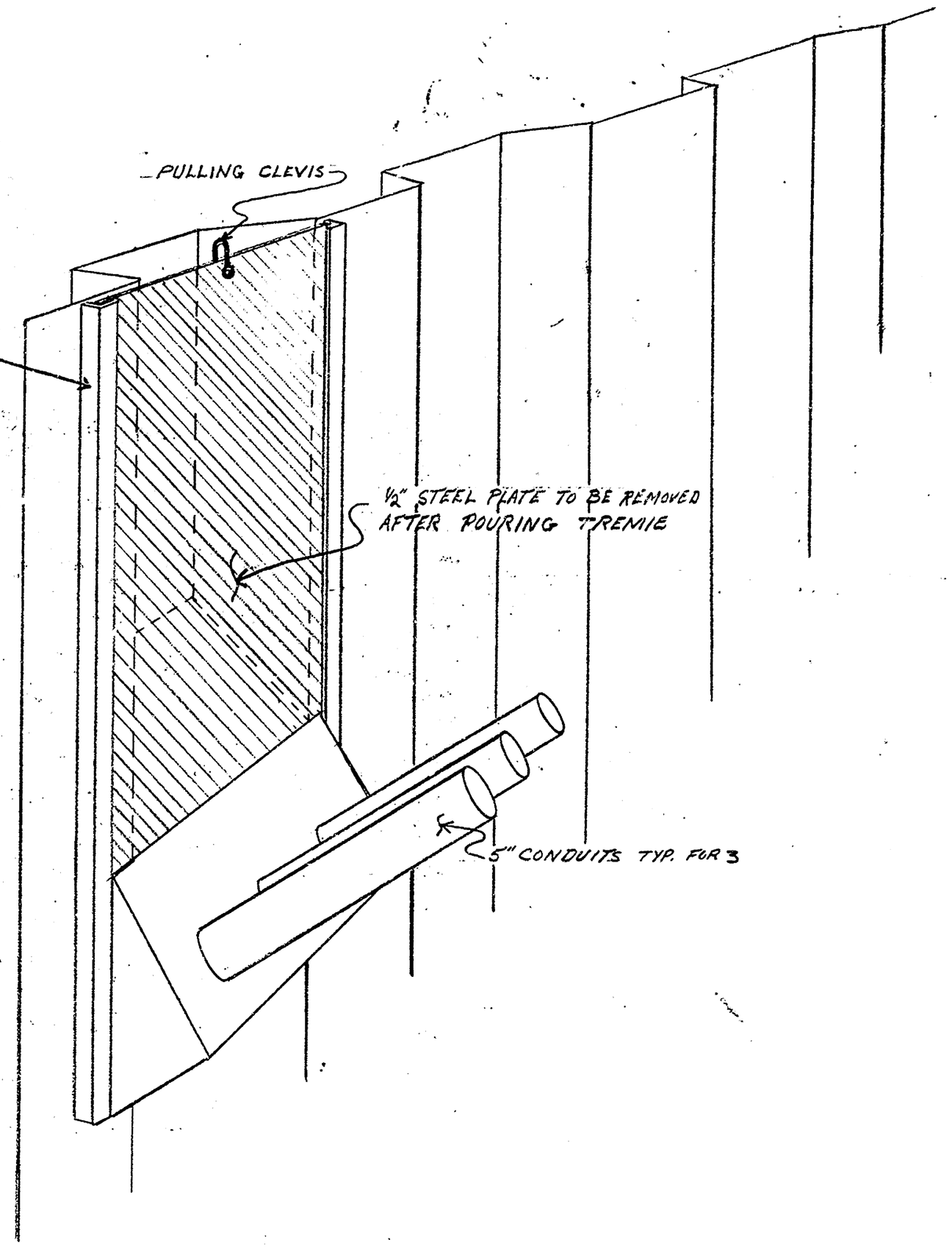

TREMIE CONDUIT POUR

SCALE: AS NOTED	APPROVED BY	DRAWN BY Foley
DATE: 1-11-82		

SAVANNAH ROAD BRIDGE

TUDOR ELECTRIC — DRAWING NUMBER E-27

NO. 185A-18X24

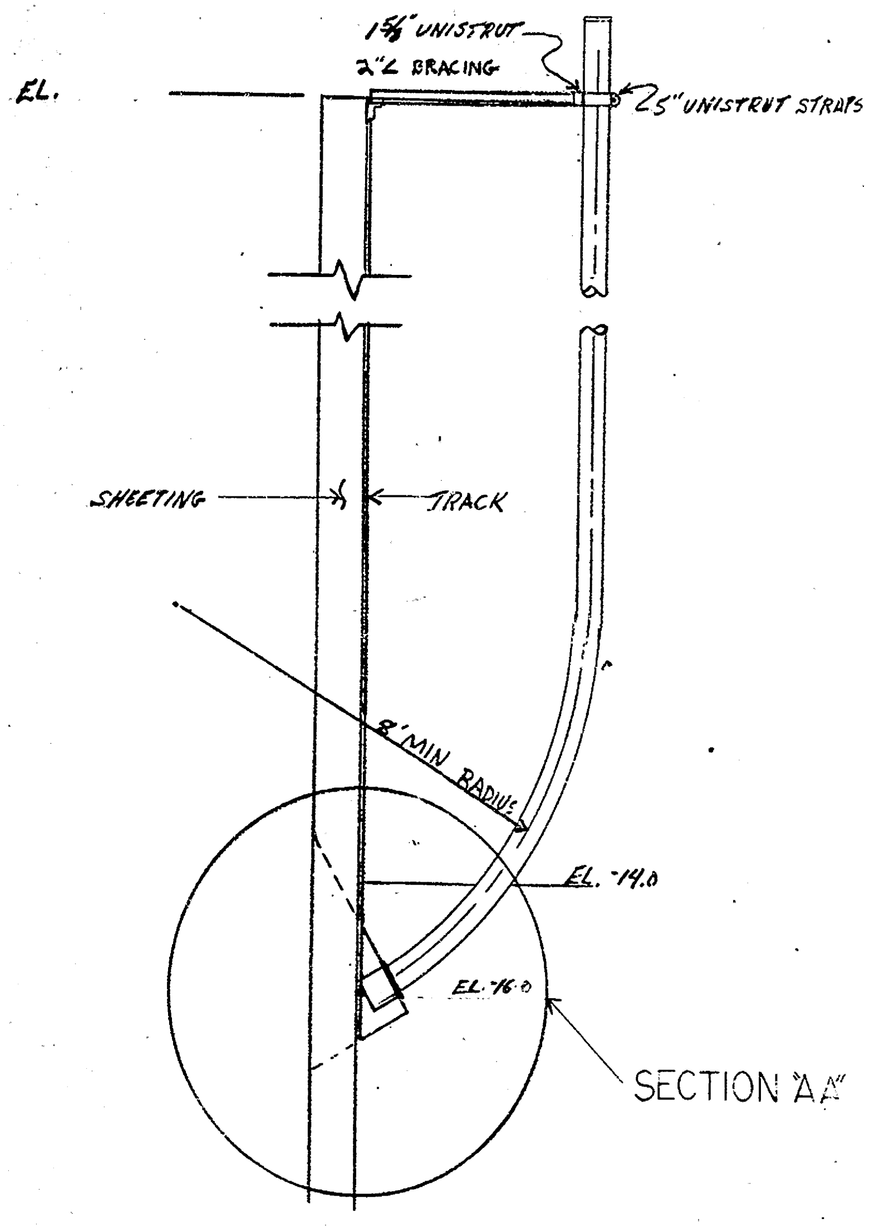

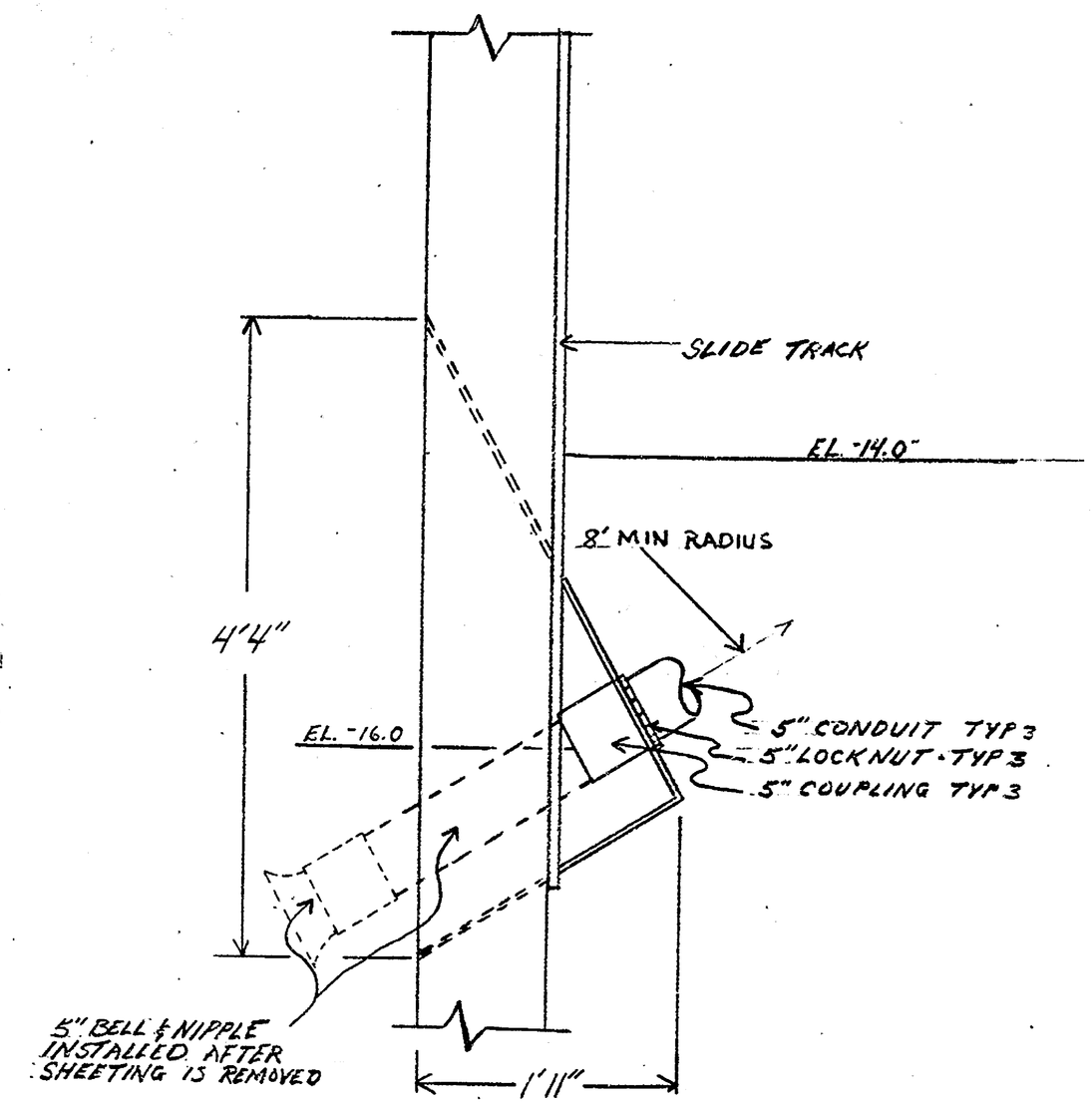

SECTION "AA"
SCALE 1-1

NOTE

STEEL CONCRETE BOX OUT IS CONSTRUCTED OF ¼ STEEL PLATE UNLESS OTHERWISE NOTED

TREMIE CONDUIT POUR		
SCALE: AS NOTED DATE: 1-11-82	APPROVED BY	DRAWN BY R.O.H.
SAVANNAH ROAD BRIDGE		
TUDOR ELECTRIC		DRAWING NUMBER E-28

NO. 185A-18X24

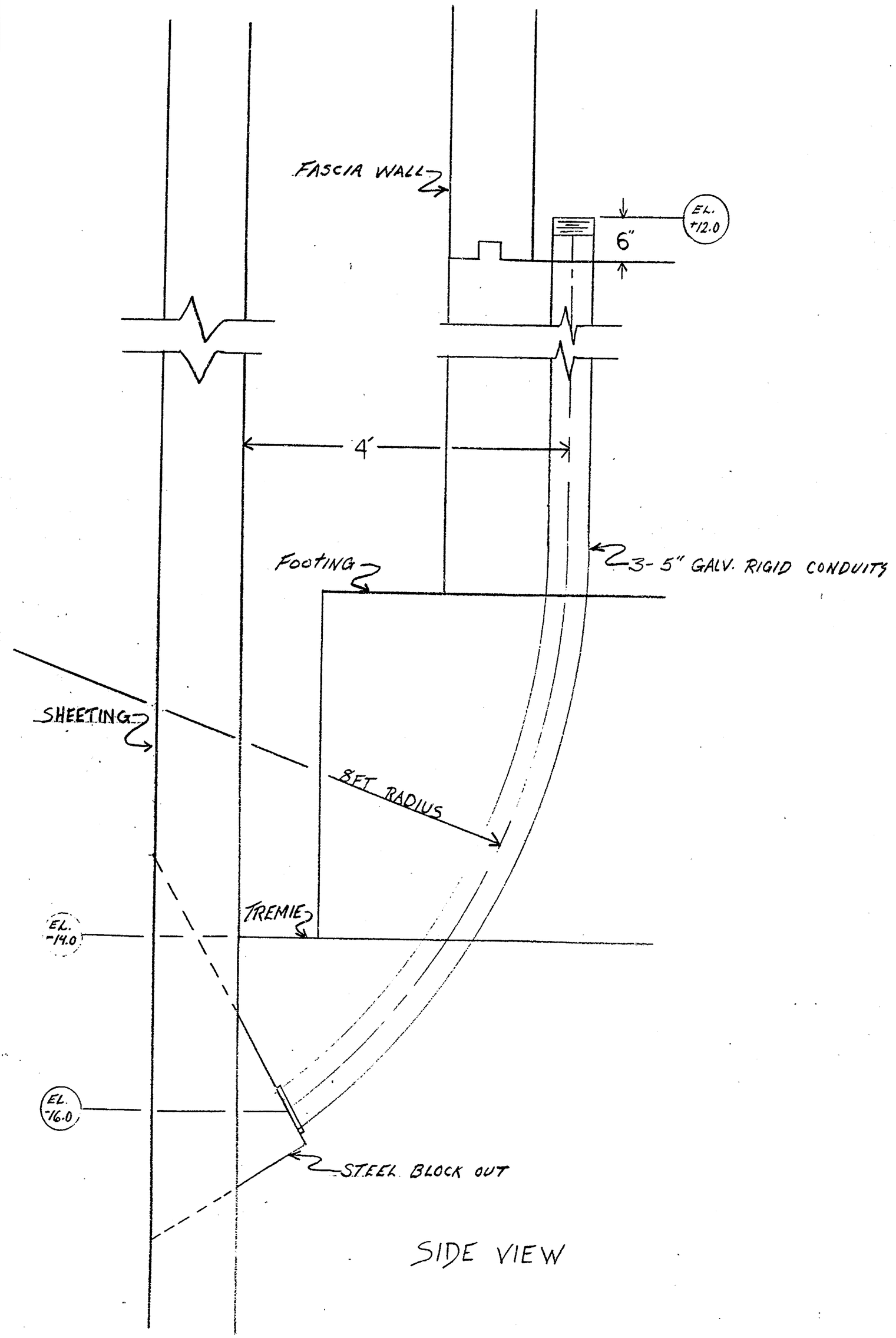

SIDE VIEW

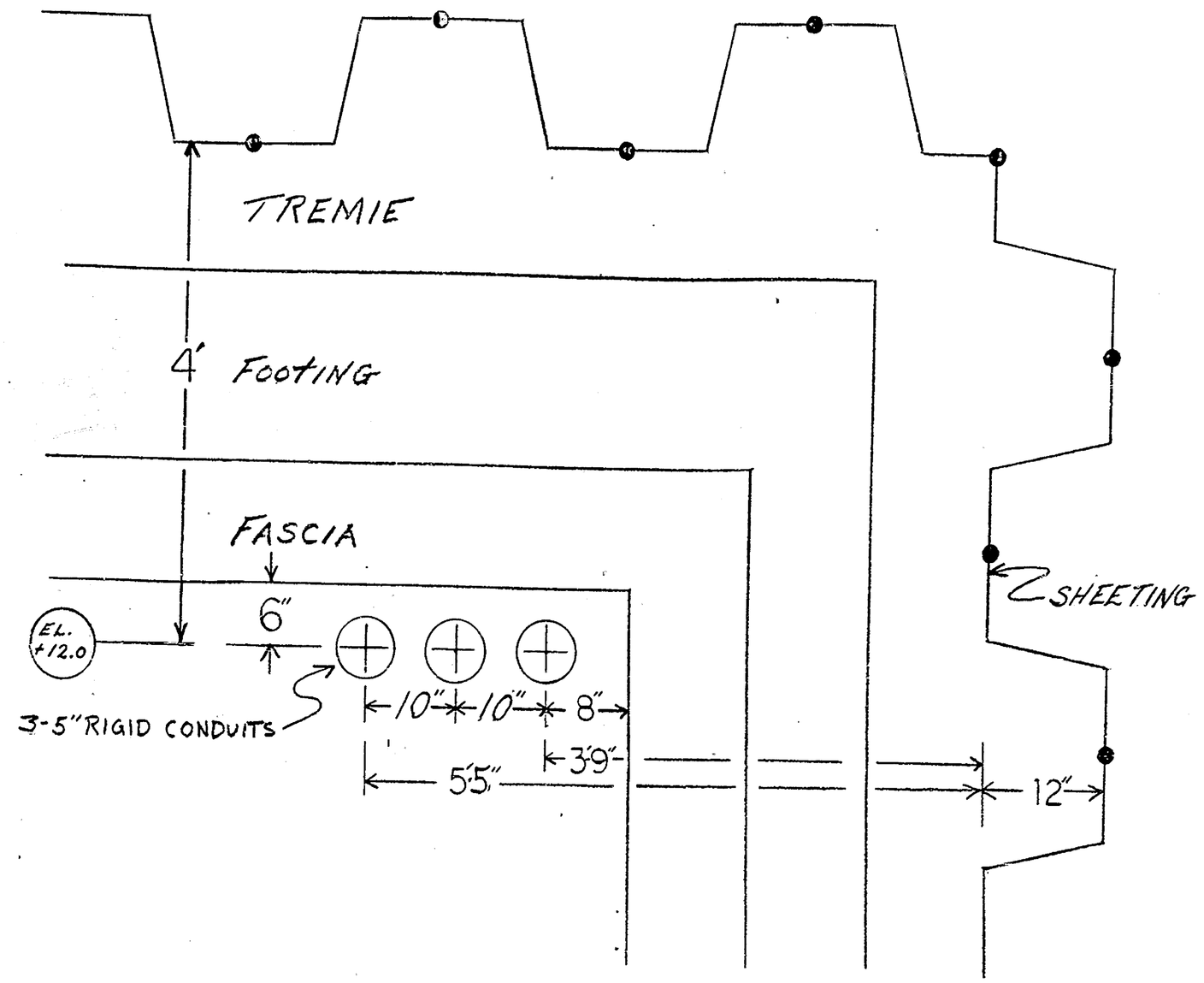

TOP VIEW

Tudor Electric
Approved Sheet
Job SAVANNAH BRIDGE
Date 3-4-82
Item CONDUIT ARRANGEMENT

SAVANNAH ROAD BRIDGE		
SCALE: 1" = 1'	APPROVED BY	DRAWN BY Tobey
DATE: 3-4-82		
FOOTER POUR - CONDUITS		
TUDOR ELECTRIC INC		DRAWING NUMBER E-29

NATIONAL NO. 1858-18226

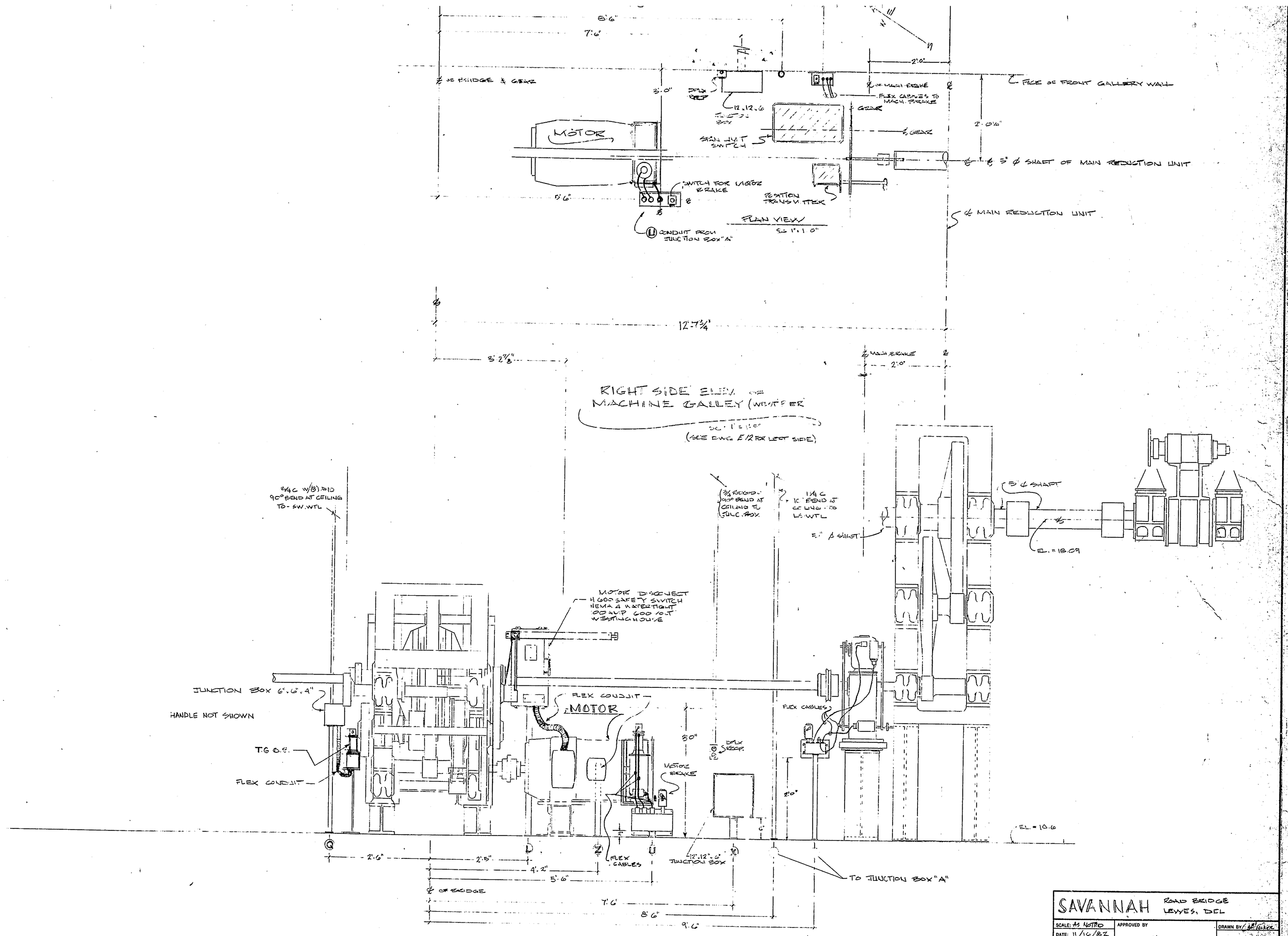

SAVANNAH ROAD BRIDGE LEWES, DEL		
SCALE: AS NOTED	APPROVED BY	DRAWN BY: [illegible]
DATE: 11/16/82		
SCALED MACHINERY w/ELECTRICAL		
TUDOR ELEC Co. DOVER DEL.		DRAWING NUMBER E-31