CONTRACT	COUNTY	FEDERAL AID PROJECT Nº	SHEET Nº	TOTAL SHEETS
82-073-05	SUSSEX	BRF-1009(3)	54	155

PLAN AND ELEVATION BASCULE BRIDGE

HARDESTY & HANOVER CONSULTING ENGINEERS NEW YORK, N.Y.

REVISIONS

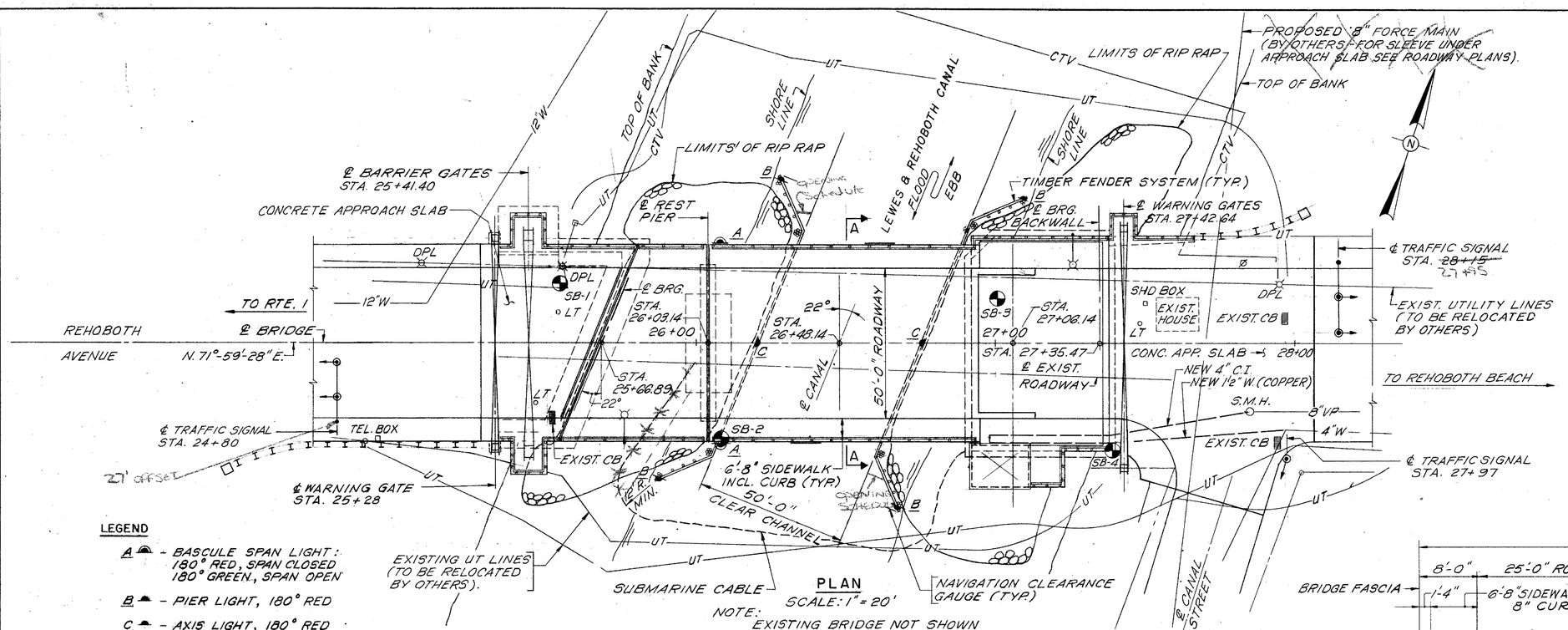

PLAN
SCALE: 1" = 20'

LEGEND

- A — BASCULE SPAN LIGHT: 180° RED, SPAN CLOSED 180° GREEN, SPAN OPEN
- B — PIER LIGHT, 180° RED
- C — AXIS LIGHT, 180° RED
- TRAFFIC SIGNAL ASSEMBLY
- SB — STRUCTURE BORING
- ROADWAY LIGHTING STD. ASSY. w/ 250 W H.P.S. LUMINAIRE

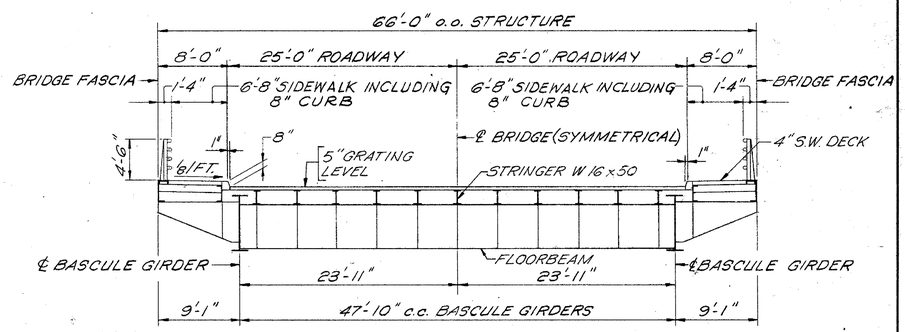

SECTION A-A
SCALE: 1/8" = 1'-0"

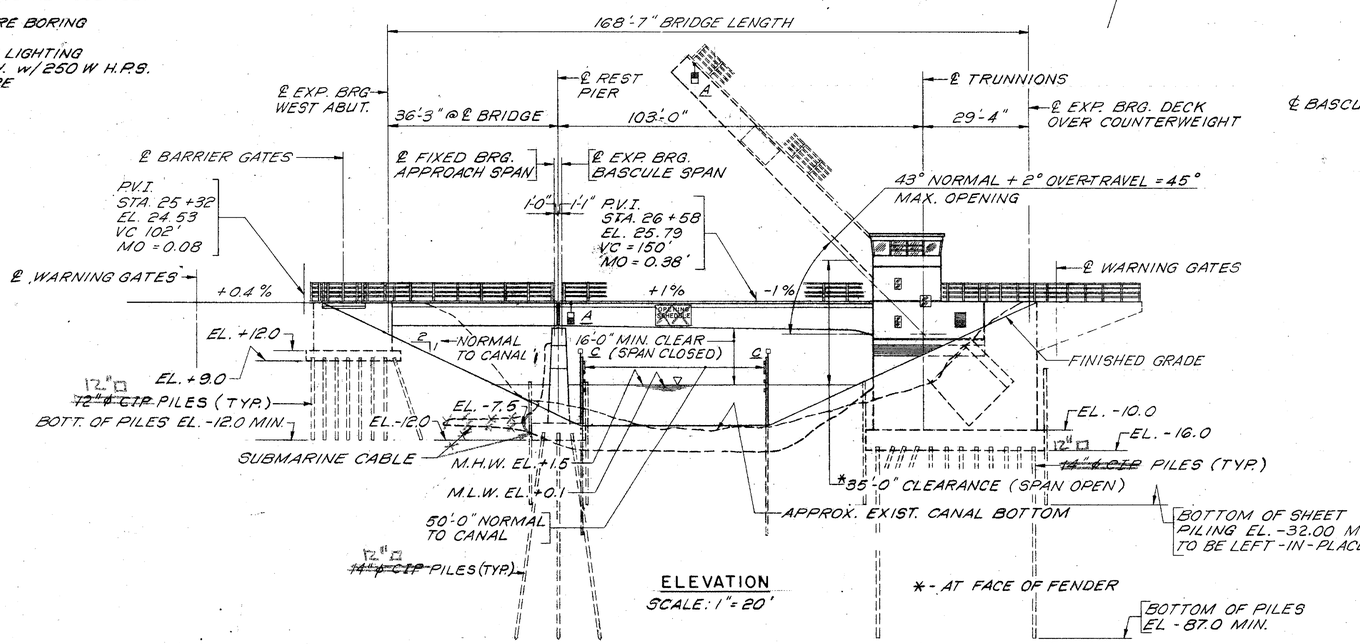

ELEVATION
SCALE: 1" = 20'

*- AT FACE OF FENDER

FROM SHEET #57 OF 155

10'-6"

BRIDGE OPENING SCHEDULE

MAY 1 - OCTOBER 31		NOVEMBER 1 - APRIL 30
7am - 8pm	ON SIGNAL	24HRS ADV. NOTICE
8pm - 7am	2HRS ADV. NOTICE	

CALL 302-645-6537

5 SPA. @ 2'-0" O.C.

NOTES:

1. FOR GENERAL NOTES, QUANTITIES AND LIST OF DRAWINGS SEE SHEET NO. 56
2. FOR LONGITUDINAL AND TRANSVERSE SECTIONS AND RIP RAP DETAILS SEE SHEET NO. 55
3. CHANNEL TO BE EXCAVATED TO ELEV. -8.0 PLUS 2 FT. OVERDREDGE WITHIN 100 FT EITHER SIDE OF FENDERS.

PREL. TRACING MP DESIGN LMB CHKD LMB

HARDESTY & HANOVER
CONSULTING ENGINEERS
NEW YORK, N.Y.

REVISIONS

CONTRACT	COUNTY	FEDERAL AID PROJECT Nº	SHEET Nº	TOTAL SHEETS
82-073-05	SUSSEX	BRF-1009(3)	55	155

TYPICAL BRIDGE SECTIONS AND RIPRAP DETAILS

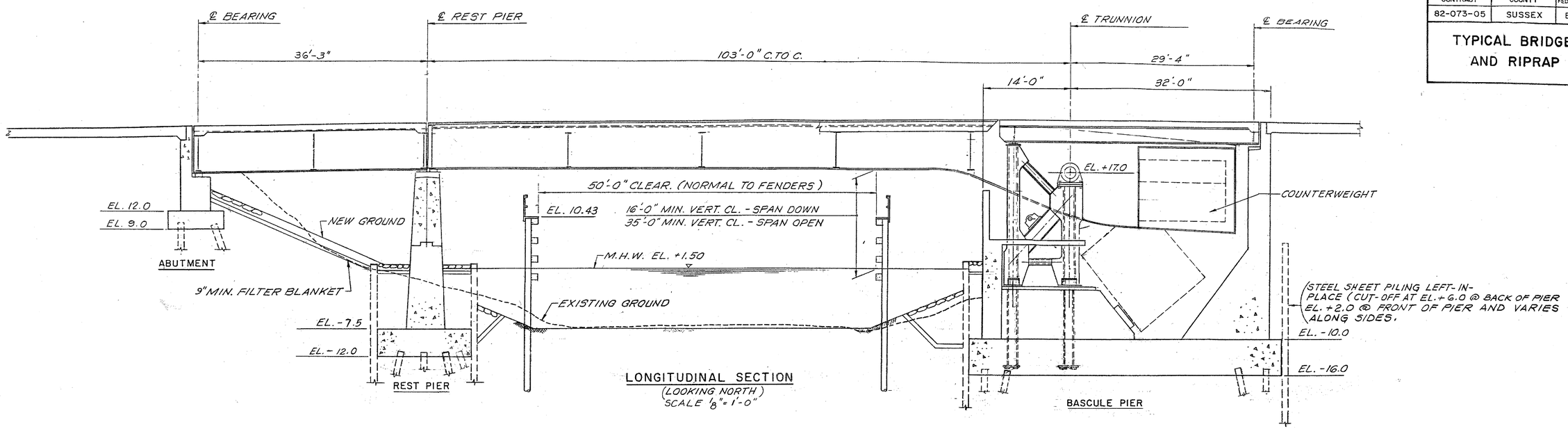

LONGITUDINAL SECTION
(LOOKING NORTH)
SCALE 1/8" = 1'-0"

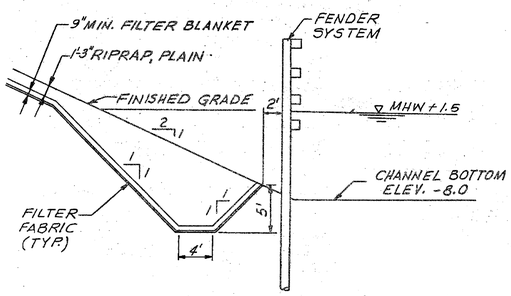

RIPRAP BLANKET & TOE DETAIL
SCALE: 1/8" = 1'-0"

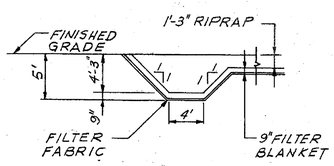

DETAIL OF CUTOFF AT EDGES OF RIPRAP BLANKET
N.T.S.

NOTE:
RIPRAP WILL BE ROADWAY ITEM

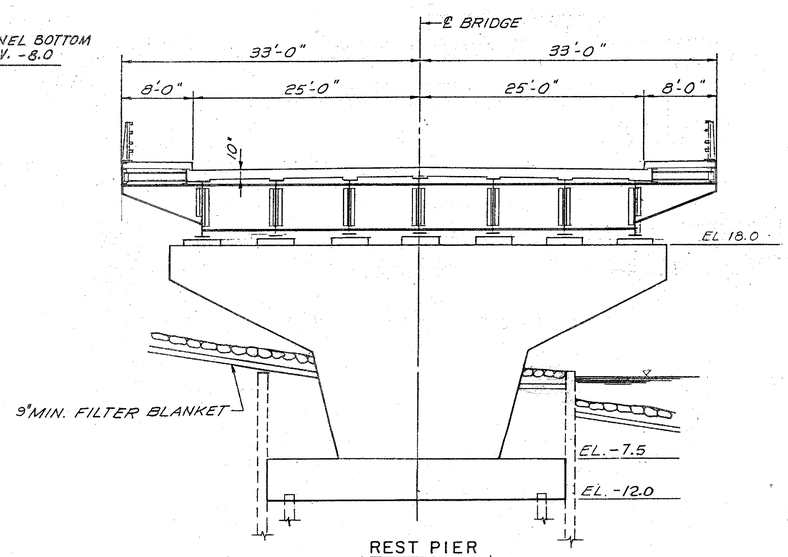

REST PIER
(LOOKING EAST)
SCALE: 1/8" = 1'-0"

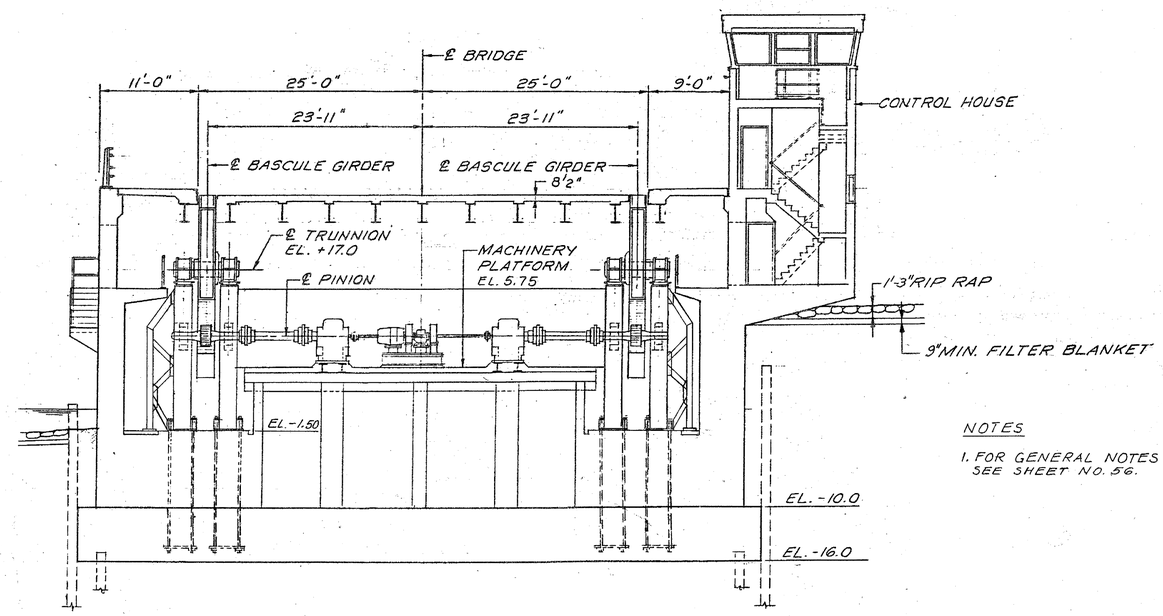

TRANSVERSE SECTION
LOOKING EAST
SCALE: 1/8" = 1'-0"

NOTES

1. FOR GENERAL NOTES SEE SHEET NO. 56.

PREL. TRACING B.G.S. & A.S. DESIGN BGS CHKD. JP

QUANTITIES - NOTES
LIST OF DRAWINGS

LIST OF DRAWINGS

54. GENERAL PLAN AND ELEVATION
55. TYPICAL BRIDGE SECTIONS AND RIPRAP DETAILS
56. QUANTITIES - NOTES - LIST OF DRAWINGS
57. FENDER SYSTEM
58. WEST ABUTMENT - PLAN AND ELEVATION
59. WEST ABUTMENT - DETAILS I
60. WEST ABUTMENT - DETAILS II
61. REST PIER
62. BASCULE PIER - PLAN AND ELEVATIONS
63. BASCULE PIER - SECTION AT ELEVATION -10.0
FOOTING AND PILE LAYOUT PLAN
64. BASCULE PIER - SECTION AT ELEVATION +1.0 AND 9.0
65. BASCULE PIER- SECTION AT ELEVATION +18.0
66. BASCULE - LONGITUDINAL AND TRANSVERSE SECTIONS
67. BASCULE PIER - ELEVATIONS I
68. BASCULE PIER - ELEVATIONS II
69. BASCULE PIER - EAST WALL - BACKWALL DETAILS
70. BASCULE PIER - MISCELLANEOUS DETAILS I
71. BASCULE PIER - MISCELLANEOUS DETAILS II
72. BASCULE PIER - CONTROL HOUSE DETAILS I
73. BASCULE PIER - CONTROLL HOUSE DETAILS II
74. CONTROL HOUSE PLANS AND ELEVATIONS
75. CONTROL HOUSE DETAILS I
76. CONTROL HOUSE DETAILS II
77. BASCULE SPAN AND APPROACH SPAN - FRAMING PLAN
78. BASCULE SPAN - STRESS AND BALANCE TABLES
79. BASCULE SPAN - GIRDER DETAILS I
80. BASCULE SPAN - GIRDER DETAILS II
81. BASCULE SPAN - FLOORBEAMS FB0 THRU FB3
82. BASCULE SPAN - FLOORBEAM FB4
83. BASCULE SPAN - LATERAL BRACING
84. BASCULE SPAN - LONGITUDINAL BRACING
85. BASCULE SPAN - COUNTERWEIGHT DETAILS
86. DECK JOINT PLAN AND DETAILS
87. CENTERING DEVICE AND MISCELLANEOUS DETAILS
88. DECK OVER COUNTERWEIGHT STRUCTURAL AND BEARING DETAILS
89. ACCESS TO COUNTERWEIGHT POCKETS
90. TRUNNION TOWER AND OPERATING MACHINERY SUPPORTS
91. TRUNNION TOWER - ELEVATIONS
92. TRUNNION TOWER - SECTIONS AND DETAILS
93. OPERATING MACHINERY SUPPORTS - DETAILS
94. APPROACH SPAN - STRUCTURAL DETAILS
95. LOCK MACHINERY SUPPORTS
96. DECK SLAB OVER COUNTERWEIGHT
97. APPROACH SPAN - DECK SLAB
98. EXPANSION JOINT DETAILS
99. WALKWAY DETAILS AT REST PIER
100. BRIDGE RAILING DETAILS
101. APPROACH SLABS
102. OPERATING MACHINERY ASSEMBLY
103. OPERATING MACHINERY DETAILS
104. LOCK MACHINERY ASSEMBLY
105. LOCK MACHINERY DETAILS
106. TRUNNIONS, BEARINGS, RACK AND PINION DETAILS
107. BARRIER GATE DETAILS I
108. BARRIER GATE DETAILS II

LIST OF DRAWINGS(CONT'D)

109. ONE LINE WIRING DIAGRAM
110. WIRING DIAGRAM - POWER DISTRIBUTION AND CONTROL AUXILIARIES
111. WIRING DIAGRAM - LEAF CONTROL
112. WIRING DIAGRAM - MOTORS AND BRAKES
113. WIRING DIAGRAM - LIGHTING CIRCUITS
114. SCHEDULE OF ELECTRICAL APPARATUS
115. CONTROL DESK LAYOUT AND DETAILS
116. SCHEMATIC CONDUIT DIAGRAM
117. SUBMARINE CABLE DETAILS
118. ELECTRICAL DETAILS I
119. ELECTRICAL DETAILS II
120. ELECTRICAL DETAILS III
121. BAR LIST - WEST ABUTMENT - BAR BENDING DETAILS
122. BAR LIST - REST PIER, BASCULE PIER
123. BAR LIST - BASCULE PIER
124. BAR LIST - BASCULE PIER
125. BAR LIST - BASCULE PIER
126. BAR LIST - APPROACH SPAN DECK
DECK OVER COUNTERWEIGHT AND APPROACH SLAB
127. TEMPORARY BRIDGE - GENERAL PLAN AND ELEVATION
128. TEMPORARY BRIDGE - PLAN AND ELEVATION
129. TEMPORARY BRIDGE - ABUTMENTS
130. TEMPORARY BRIDGE - PILE BENTS
131. DEMOLITION OF EXISTING BRIDGE

GENERAL NOTES

1. DESIGN SPECIFICATIONS TO BE 1977 AASHTO STANDARD SPECIFICATIONS FOR HIGHWAY BRIDGES, INCLUDING 1978, 1979, 1980, 1981, 1982, AND 1983 INTERIM SPECIFICATIONS AND THE 1978 AASHTO STANDARD SPECIFICATIONS FOR MOVABLE HIGHWAY BRIDGES.

2. MATERIALS, FABRICATION AND CONSTRUCTION TO CONFORM WITH THE 1974 STATE OF DELAWARE DEPARTMENT OF TRANSPORTATION DIVISION OF HIGHWAYS STANDARD SPECIFICATIONS THE JANUARY 1980 SUPPLEMENTAL SPECIFICATIONS, AND SPECIAL PROVISIONS FOR THIS PROJECT.

3. DESIGN LOADING TO BE HS 20-44.

   DEAD LOAD INCLUDES 25 LBS./SQ. FT. PROVISION FOR FUTURE WEARING SURFACE EXCEPT ON BASCULE SPAN AND TEMPORARY BRIDGE.

4. PILE CAPACITIES:
   12" ~~Ø C.I.P.~~ CONCRETE PILES FOR THE ABUTMENT SHALL BE DRIVEN TO PRODUCE AN ALLOWABLE BEARING VALUE (MIN.) EQUAL TO 35 TONS AND TO A PENETRATION (MIN.) ELEV. -12.0 FT. THE MAXIMUM PENETRATION SHALL NOT EXCEED ELEV. -15.0 FT. SEE SPECIAL PROVISIONS FOR FUSION BONDING.

   14" ~~Ø C.I.P.~~ CONCRETE PILES FOR THE REST PIER AND BASCULE PIER SHALL BE DRIVEN TO PRODUCE AN ALLOWABLE BEARING VALUE (MIN.) EQUAL TO 60 TONS AND TO A PENETRATION OF -87.0.

   12" Ø TREATED TIMBER PILES FOR THE FENDER SYSTEM SHALL BE DRIVEN TO A PENETRATION (MIN.) ELEV. -40.0 FT.

   16" ~~Ø C.I.P. CONCRETE~~ PILES FOR TEMPORARY BRIDGE SHALL BE DRIVEN TO PRODUCE AN ALLOWABLE BEARING VALUE (MIN.) EQUAL TO 35 TONS AND TO A PENETRATION (MIN.) ELEV. -66.0 FT FOR QUADRUPLE SINGLE, SIMPLE SPAN CONSTRUCTION AND TO AN ALLOWABLE BEARING VALUE (MIN.) EQUAL TO 45 TONS AND A PENETRATION (MIN.) ELEV. -80.0 FT. FOR TRIPLE SINGLE CONTINUOUS SPAN CONSTRUCTION.

GENERAL NOTES (CONT'D)

5. ALLOWABLE DESIGN STRESSES:

CONCRETE IN FOOTINGS (CLASS B)	$F'c$ = 3,000 P.S.I.
	F_c = 1,200 P.S.I.
CONCRETE IN DECKS (CLASS D)	$F'c$ = 4,500 P.S.I
	F_c = 1,800 P.S.I.
ALL OTHER CONCRETE (CLASS A)	$F'c$ = 4,000 P.S.I.
	F_c = 1,600 P.S.I.

   REINFORCEMENT PLAIN AND EPOXY COATED
   F_s = 24,000 P.S.I. (ASTM A615 GRADE 60)

   STRUCTURAL STEEL
   F_s = 27,000 P.S.I. (ASTM A572) GRADE 50 FOR ALL STEEL ≤ 2" THICK. F_s = 27,000 P.S.I. (ASTM A588) FOR ALL STEEL > 2" THICK. BASCULE GIRDERS INCLUDING SPLICE PLATES, THE BOTTOM FLANGE AND WEB OF THE GIRDER SUPPORTING THE THE STRINGERS OF THE DECK OVER COUNTERWEIGHT AND ALL MEMBERS OF THE TRUNNION TOWERS EXCLUDING BASE PLATES SHALL BE CONSIDERED AS FRACTURE CRITICAL MEMBERS.* ALL QUALIFICATIONS FROM AASHTO 1978 GUIDE SPECIFICATIONS FOR FRACTURE CRITICAL NON-REDUNDANT STEEL BRIDGE MEMBERS INCLUDING ALL INTERIM SPECIFICATIONS ARE REQUIRED FOR THESE MEMBERS. ALL FLANGE PLATES SHALL BE FLAME-CUT AND INSPECTED FOR LAMINATIONS IN ACCORDANCE WITH ARTICLE 3.2.3 OF AASHTO STANDARD SPECIFICATIONS FOR WELDING OF STRUCTURAL STEEL BRIDGES, 1981.

   CHARPY V-NOTCH REQUIREMENTS FOR FRACTURE CRITICAL MEMBERS ARE:
   BASE METAL UP TO 1½" 25 FT. LBS. @ 40°F
   BASE METAL OVER 1½" 25 FT. LBS @ 20°F
   CHARPY TEST FOR WELD METAL SHALL BE 25 FT. LBS @ -20°F

   STRUCTURAL STEEL FOR THE BASCULE SPAN SHALL BE PRODUCED BY A STRUCTURAL STEEL FABRICATION PLANT CURRENTLY CERTIFIED UNDER THE AISC QUALITY CERTIFICATION PROGRAM FOR CATEGORY III, MAJOR STEEL BRIDGES.

   ALL BOLTS SHALL BE 7/8 DIAMETER H.S. BOLTS ASTM A325 TYPE 1 UNLESS OTHERWISE NOTED. ALL BOLTS SHALL BE MECHANICALLY GALVANIZED EXCEPT ASTM A490 WHICH SHALL BE CLEANED AND PAINTED AFTER INSTALLATION.

   TIMBER STRESS GRADE 1,600 #f

6. STRUCTURAL STEEL PAINTING
   1) PRIME COAT - INORGANIC ZINC SYSTEM
   2) TIE COAT-SEE SPECIAL PROVISIONS
   3) FINISH COAT - VINYL

7. ELEVATIONS REFER TO U.S.C. & G.S. DATUM.

8. REINFORCEMENT COVER
   2 1/2 " TOP OF DECKS
   1" BOTTOM OF DECKS
   3" FOOTINGS & WALLS TO ELEVATION + 15 (MIN.)
   2" ELSEWHERE UNLESS OTHERWISE NOTED.

9. DRAWINGS OF THE EXISTING BRIDGE FOR DEMOLITION CAN BE OBTAINED FROM DELAWARE DEPARTMENT OF TRANSPORTATION. A GENERAL PLAN AND ELEVATION IS SHOWN ON SHEET NO 131.

*THE BOTTOM FLANGE AND ~~WALE~~ WEB OF THE GIRDER SUPPORTING THE STRINGER OF THE DECK OVER THE COUNTERWEIGHT IS NOT A FRACTURE CRITICAL MEMBER (FCM) BY THE A.A.S.H.T.O. DEFINITION, HOWEVER, IT IS DECIDED THAT THE REQUIREMENTS OF (FCM) SHALL APPLY TO THIS MEMBER AS DEFINED.

ESTIMATED QUANTITIES
BASCULE BRIDGE

SECT NO.	ITEM	UNIT	
203	CHANNEL EXCAVATION	C.Y.	525
207	EXCAVATION AND BACKFILL FOR STRUCTURES	C.Y.	4,620
210	REMOVAL OF EXISTING BASCULE BRIDGE	L.S.	LUMP SUM
601	*TIMBER STRUCTURES, TREATED	MFBM	12
602	*PORTLAND CEMENT CONCRETE MASONRY - PIER AND ABUTMENT FOOTINGS	C.Y.	1,066
602	*PORTLAND CEMENT CONCRETE MASONRY - PIER AND ABUTMENT ABOVE FOOTINGS	C.Y.	1,877
602	*PORTLAND CEMENT CONCRETE MASONRY - COUNTERWEIGHT	C.Y.	291
602	*PORTLAND CEMENT CONCRETE MASONRY - APPROACH SLAB	C.Y.	475
602	*PORTLAND CEMENT CONCRETE MASONRY - SUPERSTRUCTURE	C.Y.	193
602	*PORTLAND CEMENT CONCRETE MASONRY - BALANCE BLOCKS	EA.	870
602	PROTECTIVE COATING FOR CONCRETE MASONRY - BRIDGE	S.Y.	1,465
602	PREFABRICATED EXPANSION JOINT SYSTEM	L.F.	140
605A	*BAR REINFORCEMENT, EPOXY COATED	LB.	626,700
606(S)	STEEL STRUCTURES, (COMPUTED NET WEIGHT 1,100,000 LBS.)	L.S.	LUMP SUM
606(S)	ROADWAY GRATING	S.F.	4,496
606(S)	SIDEWALK DECK	S.F.	1,439
607	METAL BRIDGE RAILING	L.F.	496
621	TIMBER PILES, TREATED	L.F.	4,756
624	CAST-IN-PLACE CONCRETE PILES 12-INCH DIAMETER (7 GAGE MIN)	L.F.	1,988
624	CAST-IN-PLACE CONCRETE PILES, 14-INCH DIAMETER (7 GAGE MIN)	L.F.	10,188
624	STEEL SHELL TEST PILES, 14-INCH DIAMETER (7 GAGE MIN)	L.F.	148
624	PILE LOAD TEST, 14-INCH DIAMETER (7 GAGE MIN)	EA.	2
626	STEEL SHEET PILES LEFT-IN-PLACE	S.F.	10,900
S.P.(S)	CONTROL HOUSE	L.S.	LUMP SUM
S.P.(S)	BRIDGE MACHINERY	L.S.	LUMP SUM
S.P.(S)	STANDBY ENGINE GENERATOR	L.S.	LUMP SUM
S.P.(S)	ELECTRICAL WORK	L.S.	LUMP SUM
S.P.(S)	BARRIER GATE	L.S.	LUMP SUM
S.P.	BRIDGE OPERATION	L.S.	LUMP SUM

TEMPORARY BRIDGE

SECT NO.	ITEM	UNIT	
207	EXCAVATION AND BACKFILL FOR STRUCTURES	C.Y.	400
210	REMOVAL OF TEMPORARY BRIDGE	L.S.	LUMP SUM
601	*TIMBER STRUCTURES, TREATED	MFBM	4
602	*PORTLAND CEMENT CONCRETE MASONRY - ABUTMENT FOOTINGS	C.Y.	82
602	*PORTLAND CEMENT CONCRETE MASONRY - PIERS AND ABUTMENTS ABOVE FOOTINGS	C.Y.	69
605	*BAR REINFORCEMENT	LB.	19,600
606 (S)	STEEL STRUCTURES, (COMPUTED NET WEIGHT 14,416 LBS.)	L.S.	LUMP SUM
S.P.(S)	TEMPORARY BRIDGE (ACROW OR APPROVED EQUAL)	L.S.	LUMP SUM
624	CAST-IN-PLACE CONCRETE PILES, 16-INCH DIAMETER (.500" MIN. WALL THICKNESS) (THREE SIMPLE SPAN 1750 L.F.) (THREE CONTINUOUS SPAN 2054 L.F.)	L.S.	LUMP SUM

*ESTIMATED FIXED QUANTITY, PAYMENT IN ACCORDANCE WITH SUBSECTION 109.06 OF THE STANDARD SPECIFICATIONS.

NOTE: FOR INFORMATIONAL PURPOSES THE QUANTITIES THAT ARE COMMON TO BOTH THE BASCULE BRIDGE AND TEMPORARY BRIDGE HAVE BEEN BROKEN DOWN FOR EACH BRIDGE.

(S) SPECIALTY ITEM

HARDESTY & HANOVER
CONSULTING ENGINEERS
NEW YORK, N.Y.

REVISIONS
7 REVISED GEN. NOTE * 10-30-84 T.F.F.

PREL. TRACING V.A. & L.S. DESIGN L.M.B. CHKD. L.M.B.

CONTRACT	COUNTY	FEDERAL AID PROJECT Nº	SHEET Nº	TOTAL SHEETS
82-073-05	SUSSEX	BRF-1009(3)	57	155

FENDER SYSTEM

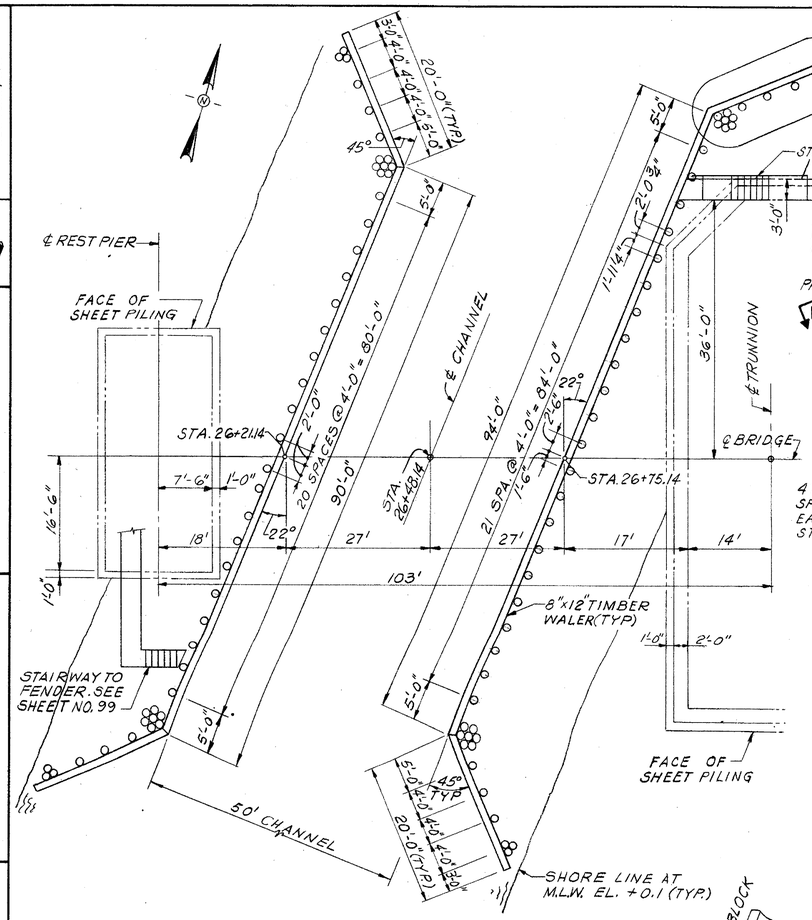

PLAN OF FENDER
SCALE: 1"=10'

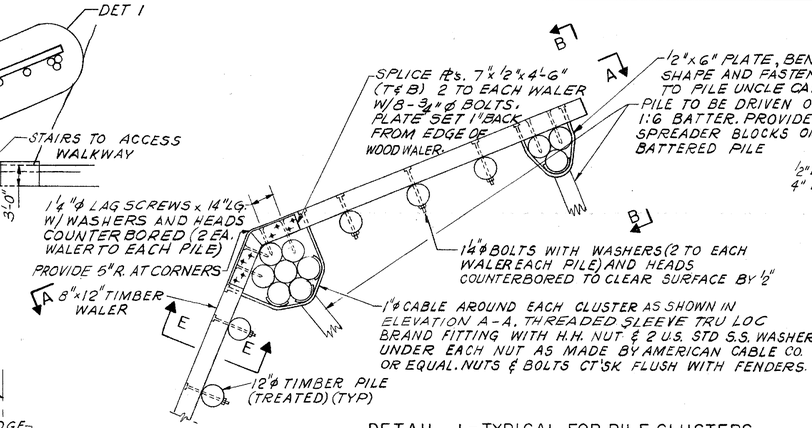

DETAIL 1 - TYPICAL FOR PILE CLUSTERS
SCALE: 1/4"=1'-0"

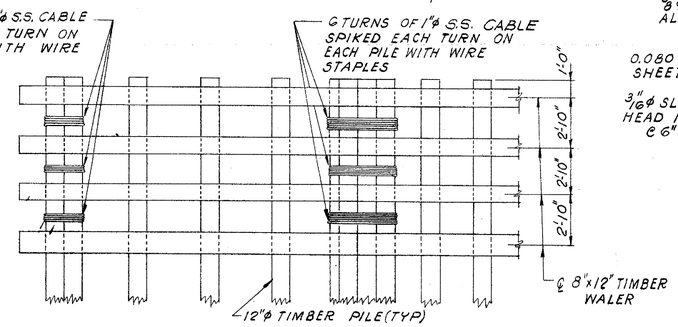

ELEVATION A-A
SCALE: 1/4"=1'-0"

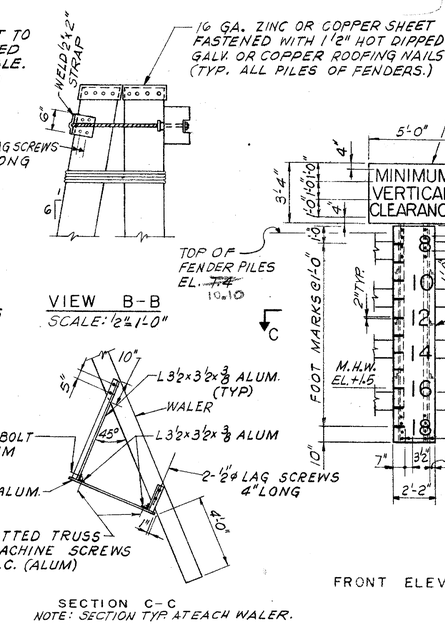

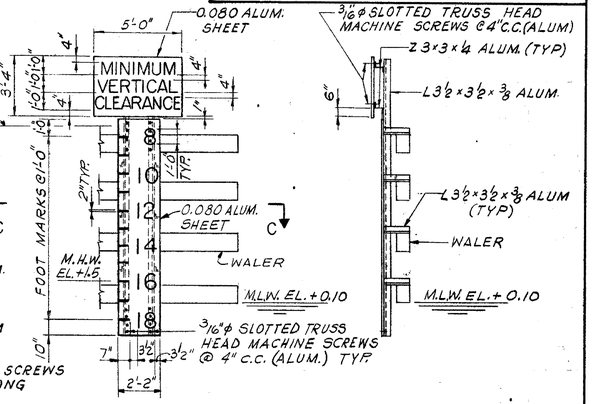

NAVIGATION CLEARANCE GAUGE DETAIL
SCALE: 1/4"=1'-0"

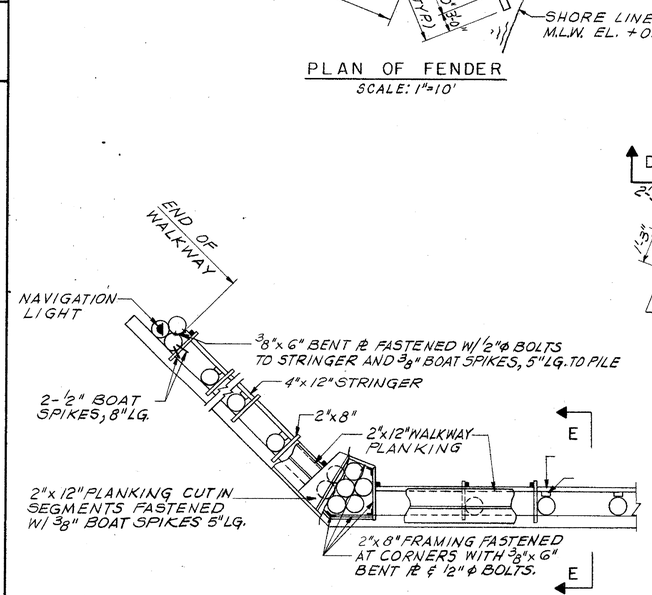

TYPICAL WALKWAY PLAN
SCALE: 1/4"=1'-0"

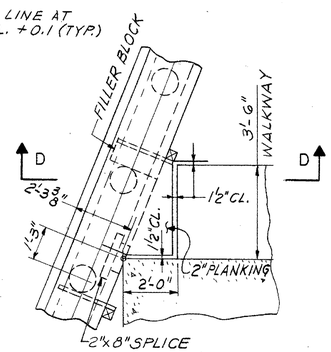

ACCESS WALKWAY TO BASCULE PIER
SCALE: 3/8"=1'-0"

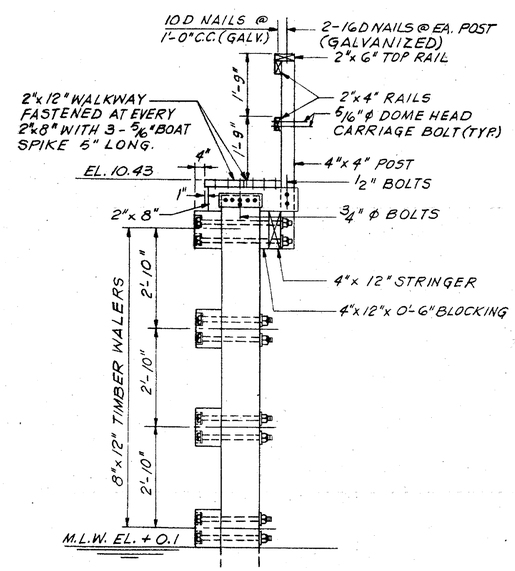

SECTION E-E

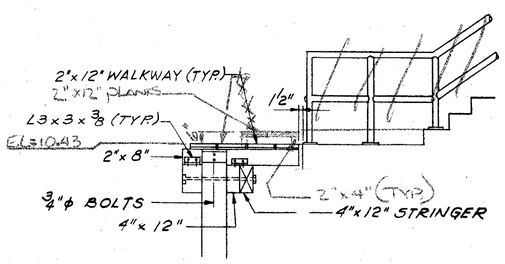

SECTION D-D
SCALE: 3/8"=1'-0"

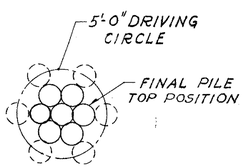

TYPICAL DRIVING OF 7 PILE CLUSTER
SCALE: 1/4"=1'-0"

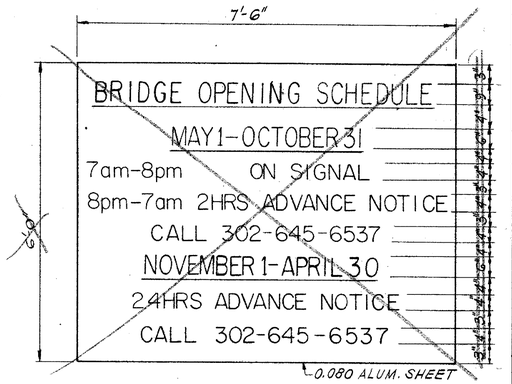

BRIDGE OPENING SCHEDULE SIGN
NO SCALE SEE SHEET #54 OF 155

NOTES:

1. FOR GENERAL NOTES SEE SHEET NO. 5G.
2. SEE SPECIAL PROVISIONS FOR CLEARANCE GAUGE AND BRIDGE OPENING SCHEDULE SIGN FACING MATERIAL.
3. ALL HARDWARE INCLUDING BOLTS, LAG SCREWS, BOAT SPIKES, WASHERS, RAILS, SPLICE PLATES AND WOOD SCREWS SHALL BE GALVANIZED EXCEPT AS OTHERWISE NOTED.
4. SPACING OF TIMBER FENDER PILES MAY BE VARIED IF REQ'D. TO CLEAR ANY BATTERED PILES IN BASCULE PIER OR REST PIER.

HARDESTY & HANOVER CONSULTING ENGINEERS NEW YORK, N.Y.

REVISIONS

PREL. TRACING GR & AS DESIGN JD CHKD. ERS

4389

CONTRACT	COUNTY	FEDERAL AID PROJECT Nº	SHEET Nº	TOTAL SHEETS
82-073-05	SUSSEX	BRF-1009(3)	58	155

WEST ABUTMENT PLAN AND ELEVATION

HARDESTY & HANOVER
CONSULTING ENGINEERS
NEW YORK, N.Y.

REVISIONS
7 REVISED DIMENSION IN ELEVATION VIEW AND QUANTITY OF BAR F-A409 (F.F.) 10-30-84 TFF
6 REVISED PAD ELEV. IN ELEV. VIEW 2-29-84

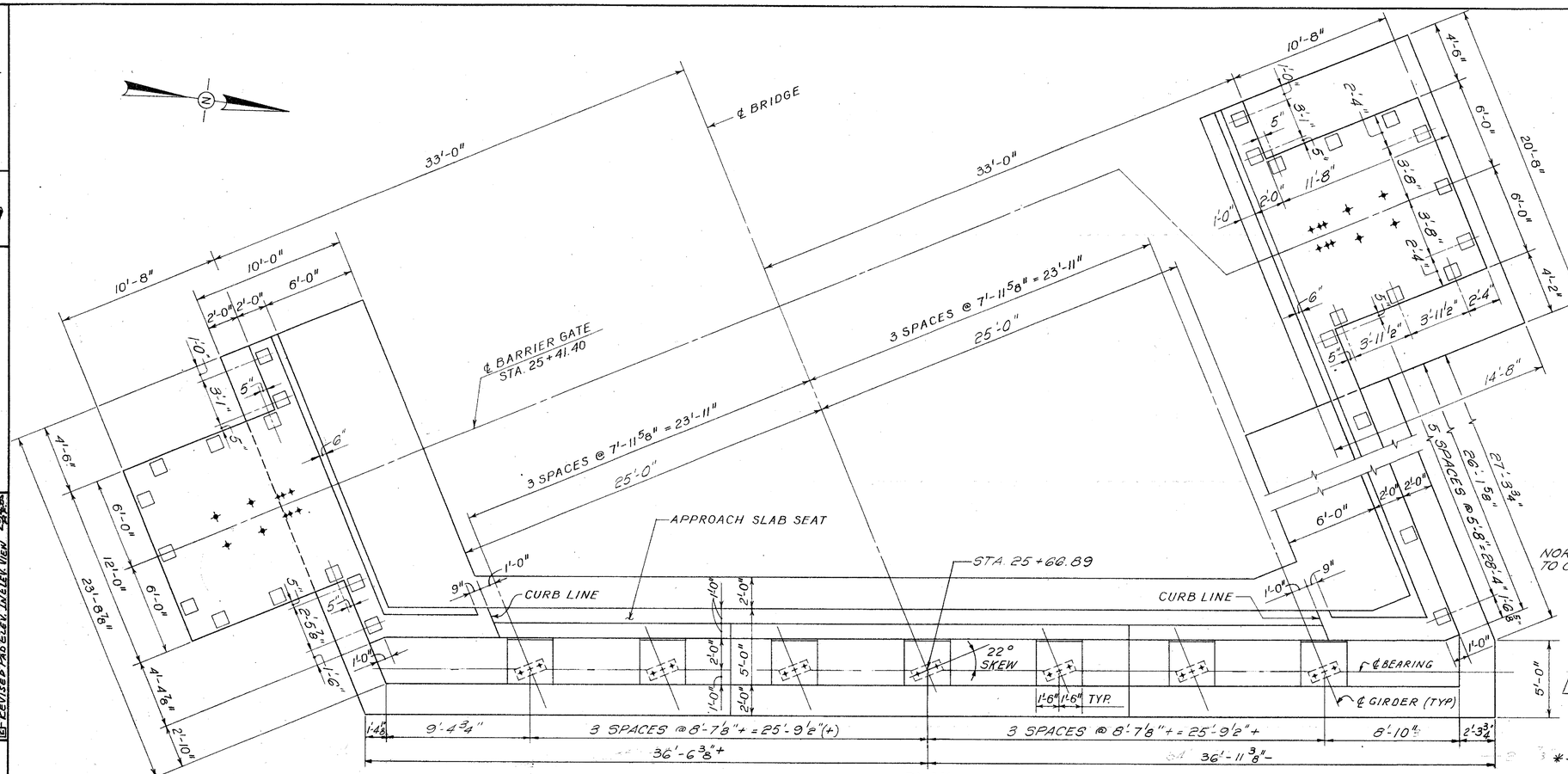

PLAN
SCALE: 1/4" = 1'-0"

NOTES:
1. FOR LOCATION OF BARRIER GATE ANCHOR BOLTS SEE DETAIL ON SHEET NO. 60 & 107.
2. FOR RAILING SPACING SEE NORTH WINGWALL. FOR DETAIL OF BASE PLATE SEE SHEET NO. 100.

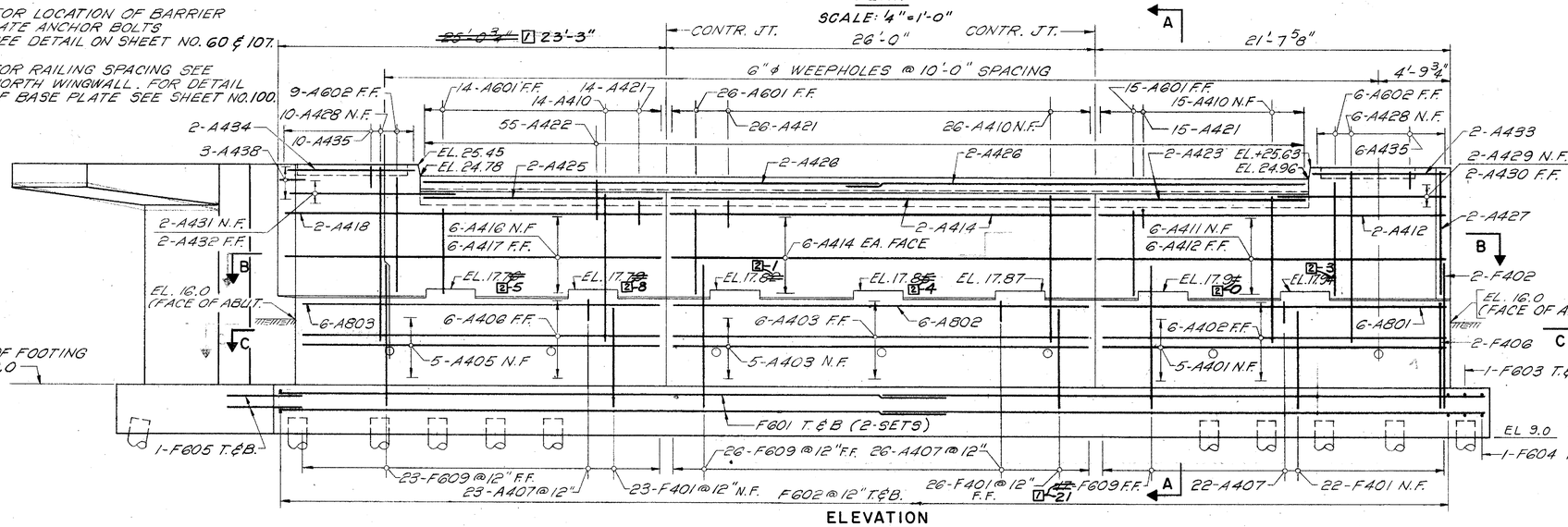

ELEVATION
SCALE: 1/4" = 1'-0"

NOTE: FOR FOOTING SEE SHEET NO. 60.

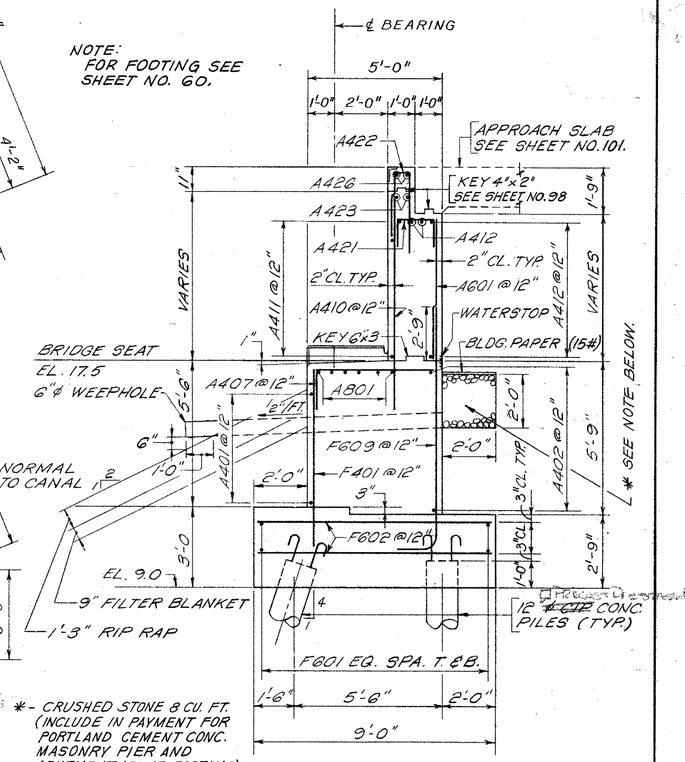

*- CRUSHED STONE 8 CU. FT. (INCLUDE IN PAYMENT FOR PORTLAND CEMENT CONC. MASONRY PIER AND ABUTMENT ABOVE FOOTING.)

SECTION A-A
SCALE: 3/8" = 1'-0"

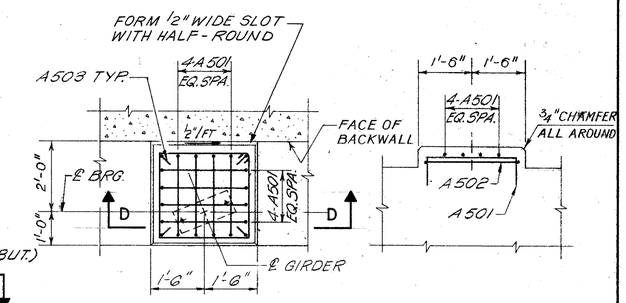

PLAN SECTION D-D

TYPICAL PEDESTAL DETAIL
SCALE: 1/2" = 1'-0"

NOTES:
1. FOR GENERAL NOTES SEE SHEET NO. 56.
2. ALL CORNERS OR EDGES SHALL BE CHAMFERED 3/4" EXCEPT AS OTHERWISE SHOWN IN PLANS
3. FOR WALL JOINT DETAILS SEE SHEET NO. 67.
4. FOR SECTIONS B-B & C-C SEE SHEET NO. 59.
5. WORK THIS SHEET WITH SHEET NO'S. 59 AND 60, FOR BAR LIST SEE SHEET NO. 121.

PREL. TRACING M.P. & A.K. DESIGN LMB CHKD. FG

CONTRACT	COUNTY	FEDERAL AID PROJECT Nº	SHEET Nº	TOTAL SHEETS
82-073-05	SUSSEX	BRF-1009(3)	59	155

WEST ABUTMENT DETAILS I

HARDESTY & HANOVER CONSULTING ENGINEERS NEW YORK, N.Y.

REVISIONS

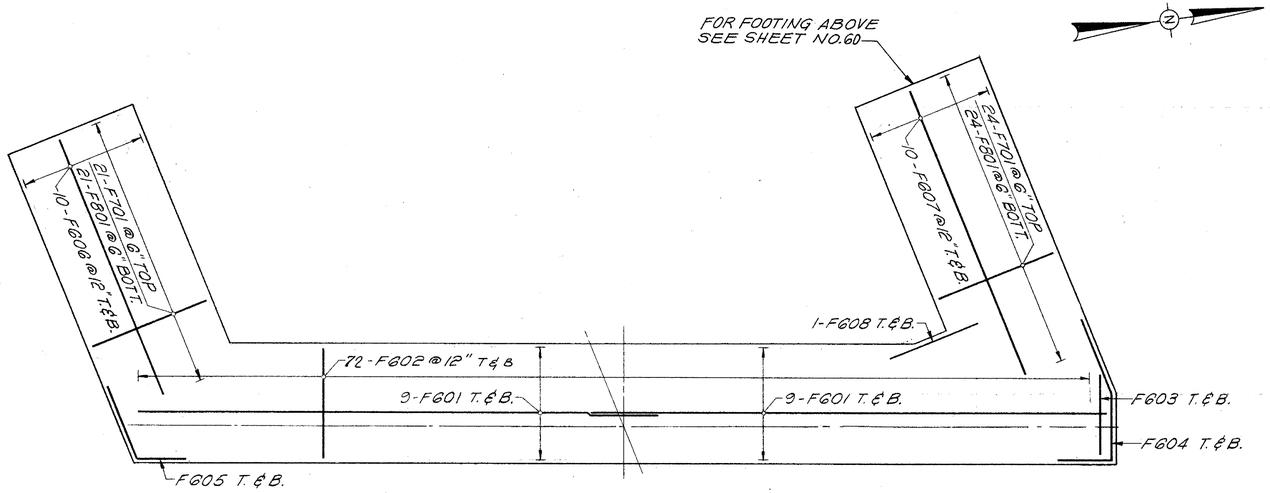

FOOTING REINFORCEMENT PLAN
SCALE: 3/16"=1'-0"

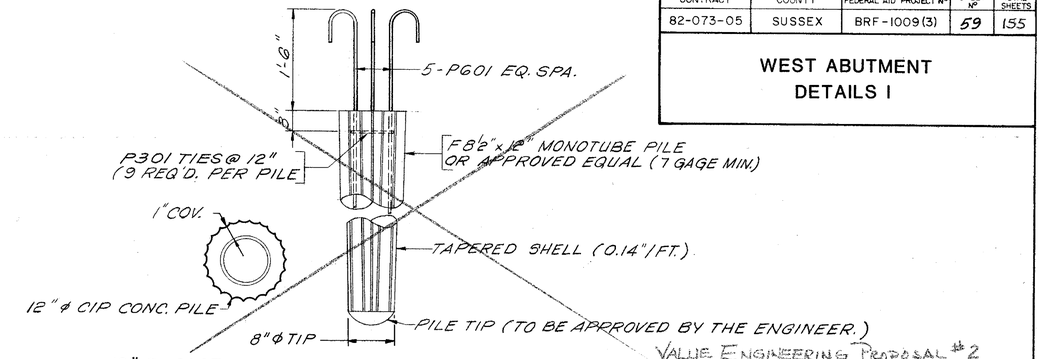

12" Ø CAST-IN-PLACE CONCRETE PILE
N.T.S.

NOTES:
1. FLUTED STEEL SHELL MONOTUBE PILE SHOWN. CONTRACTOR MAY SUPPLY STEEL PIPE PILE OF SIMILAR CONFIGURATION AS PER SPECIAL PROVISIONS.
2. CONTRACTOR MAY PROVIDE 14" ϕ C.I.P. IN LIEU OF 12" ϕ C.I.P. AT HIS OPTION AND COST. FOR DETAILS SEE SHEET NO. 10

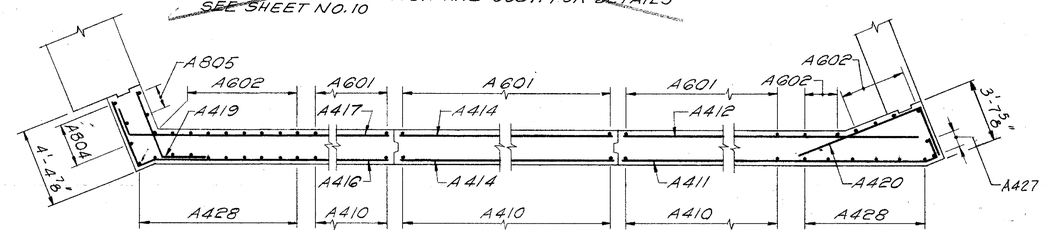

SECTION B-B
SCALE: 1/4"=1'-0"

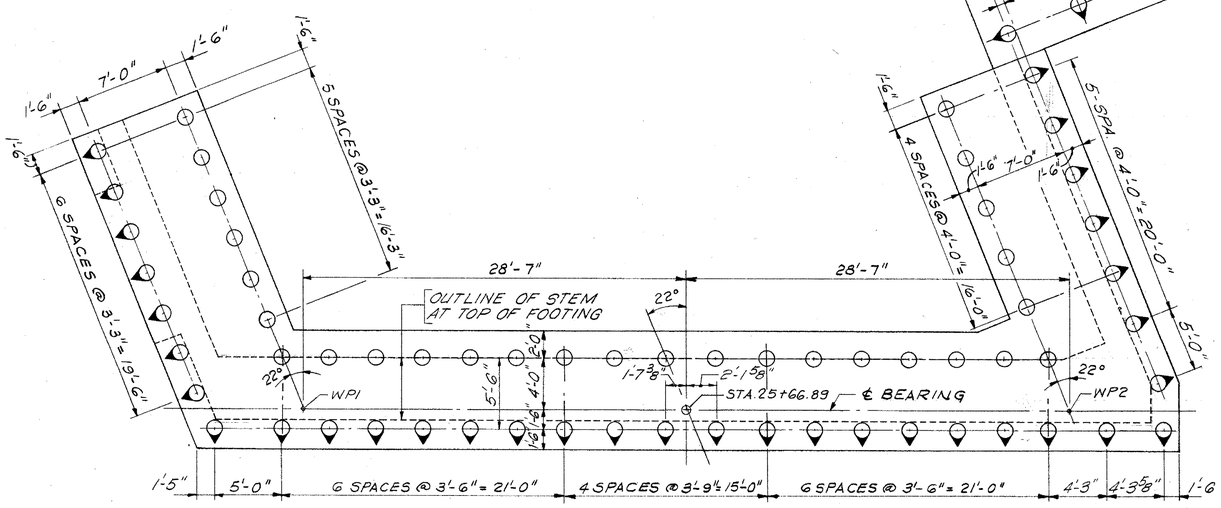

FOOTING PILE LAYOUT
SCALE: 3/16"=1'-0"

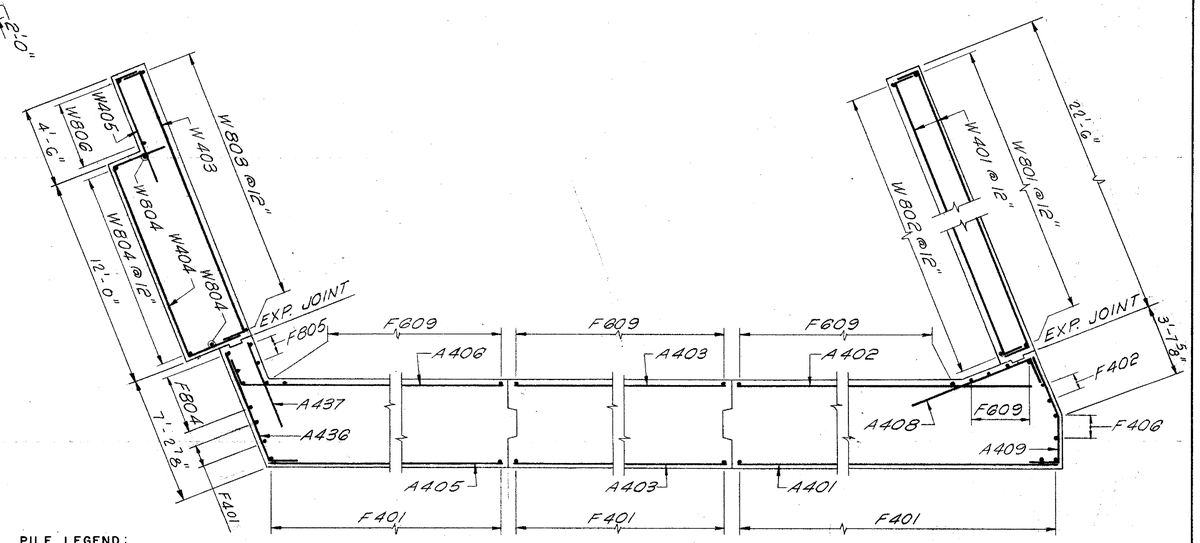

SECTION C-C
SCALE: 1/4"=1'-0"

PILE LEGEND:
C.I.P. PILE
C.I.P. PILE BATTERED 1 ON 4 IN DIRECTION INDICATED.
12" □ PRECAST PRESTRESSED

NOTE:
SECTIONS B-B & C-C TAKEN ON SHEET NO. 58.

PREL. TRACING BGS, MP, & AS DESIGN LMB CHKD FG

CONTRACT	COUNTY	FEDERAL AID PROJECT Nº	SHEET Nº	TOTAL SHEETS
82-073-05	SUSSEX	BRF-1009(3)	60	155

WEST ABUTMENT DETAILS II

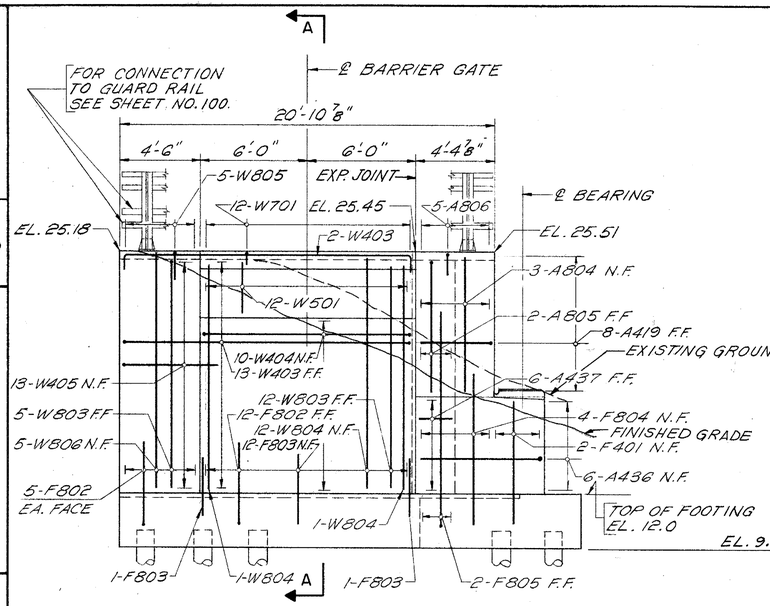

ABUTMENT SOUTH WINGWALL

SCALE: 1/4"=1'-0"

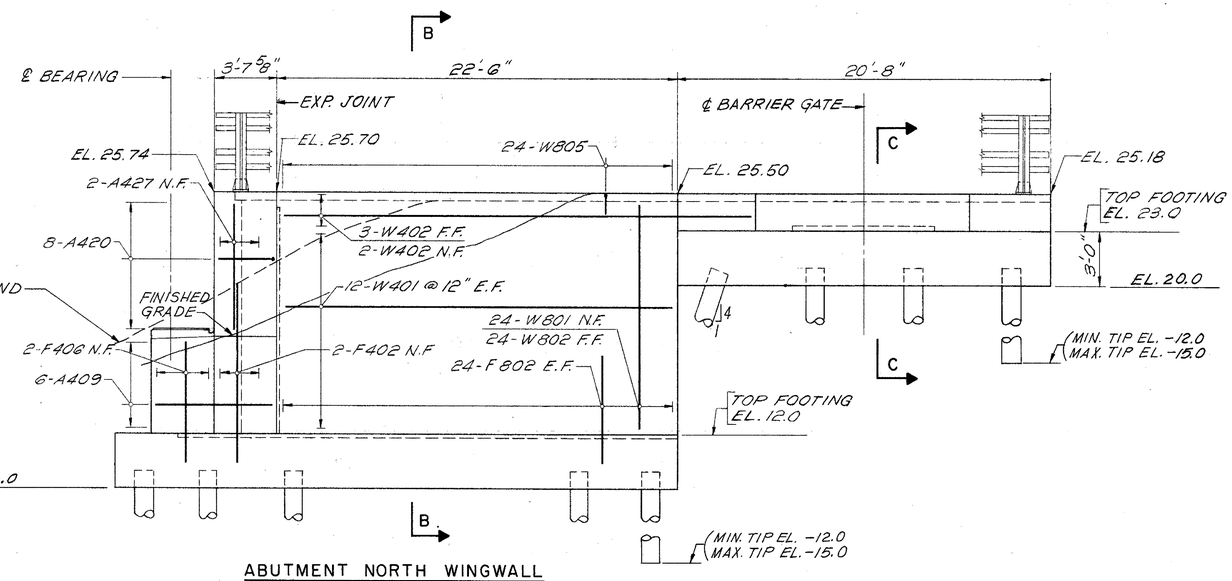

ABUTMENT NORTH WINGWALL

SCALE: 1/4"=1'-0"

NOTE:
WORK THIS SHEET WITH SHEET NO. 58.

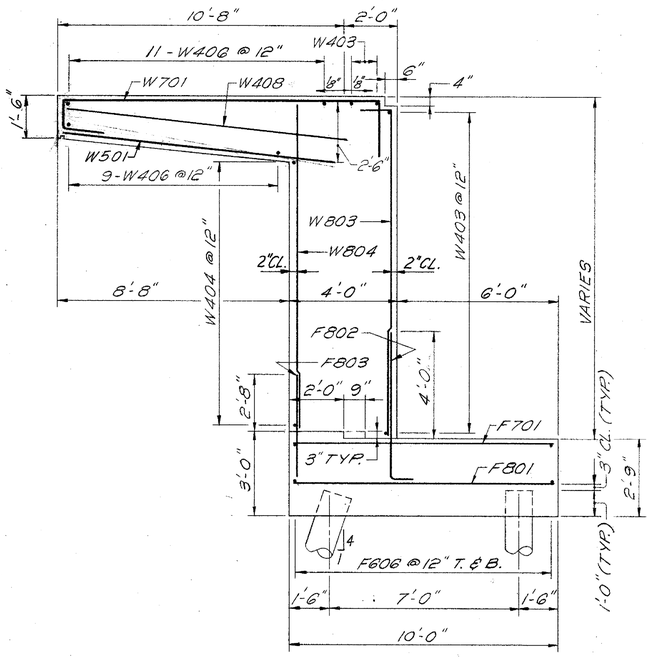

SECTION A-A

SCALE: 3/8"=1'-0"

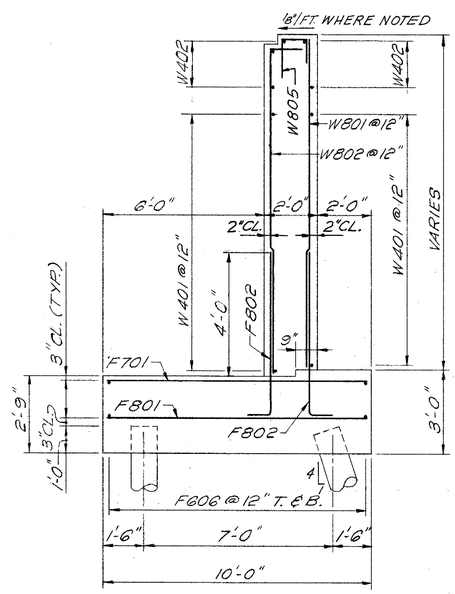

SECTION B-B

SCALE: 3/8"=1'-0"

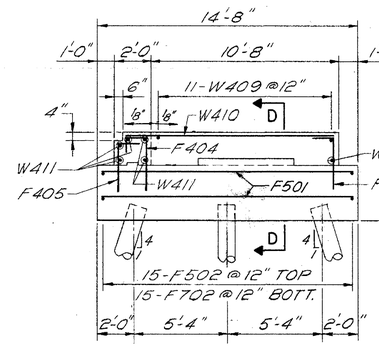

SECTION C-C

SCALE: 1/4"=1'-0"

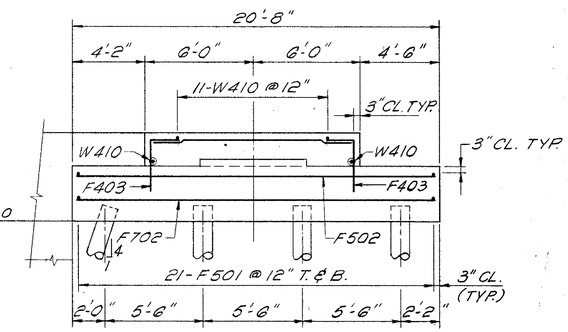

SECTION D-D

SCALE: 1/4"=1'-0"

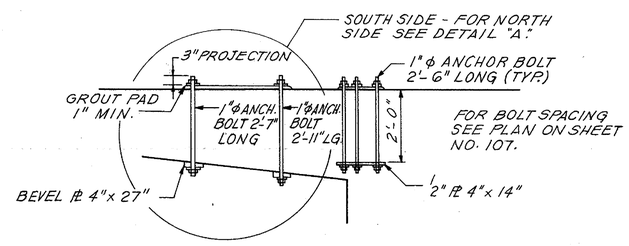

ANCHOR BOLT ELEVATION

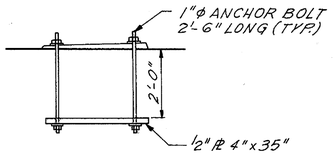

ANCHOR BOLT DETAIL A

NORTH

HARDESTY & HANOVER CONSULTING ENGINEERS NEW YORK, N.Y.

REVISIONS

PREL. TRACING M. POBLETE DESIGN LMB CHKD. FG

4088

CONTRACT	COUNTY	FEDERAL AID PROJECT Nº	SHEET Nº	TOTAL SHEETS
82-073-05	SUSSEX	BRF-1009(3)	61	155

REST PIER

HARDESTY & HANOVER
CONSULTING ENGINEERS
NEW YORK, N.Y.

REVISIONS
1. Revision to Pier Elev., Sect. A-A & "B-B" 2-26
2. Revised Pad Elevations in Elev. View 2-25-25

PREL. TRACING A. SOSA DESIGN LMB CHKD RB

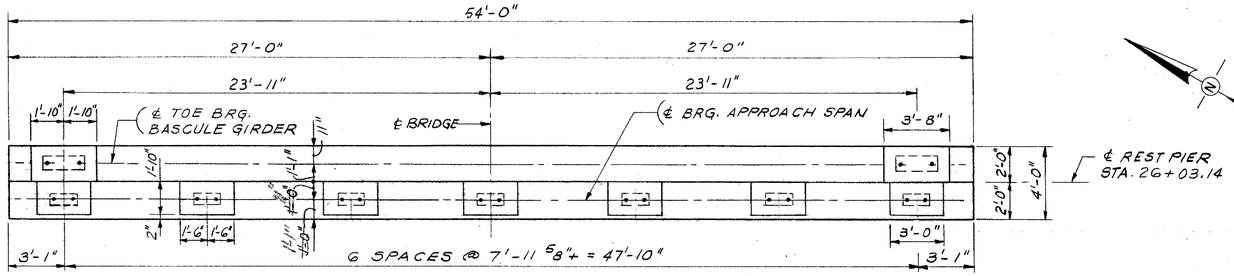

PLAN
SCALE: 1/4" = 1'-0"

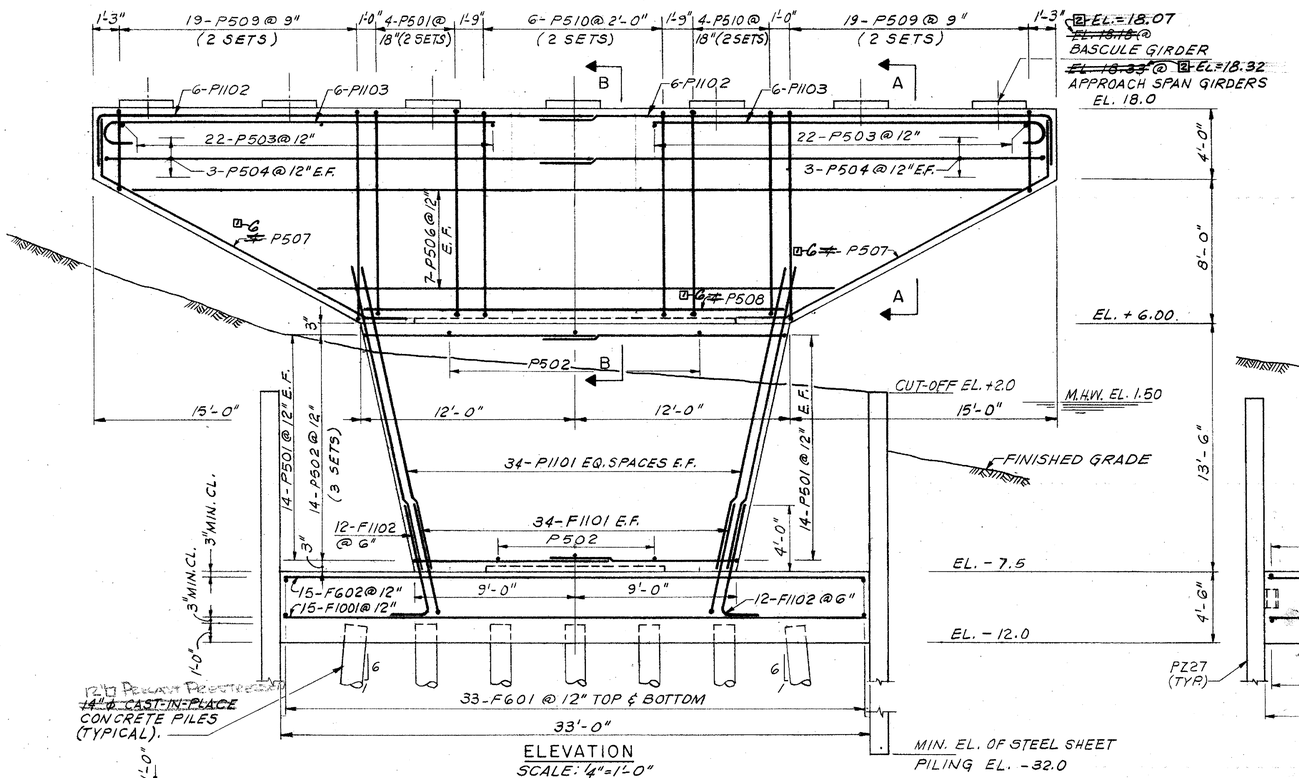

ELEVATION
SCALE: 1/4" = 1'-0"

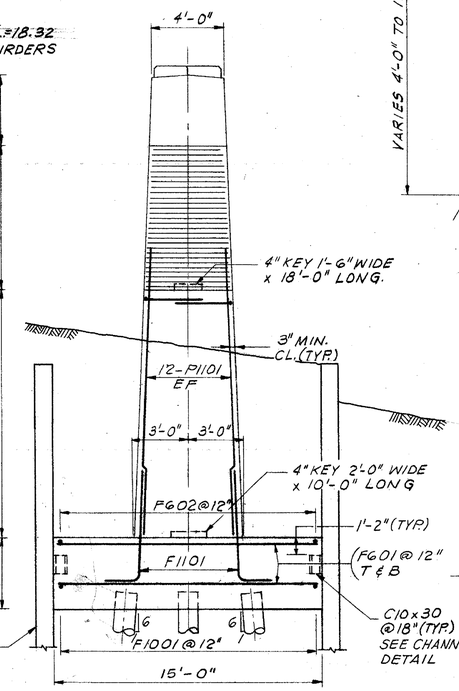

END VIEW
SCALE: 1/4" = 1'-0"

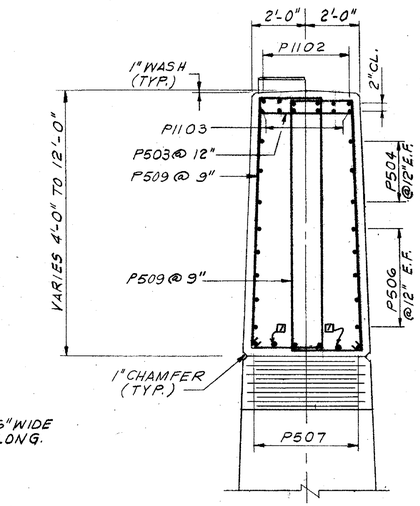

SECTION A-A
SCALE: 3/8" = 1'-0"

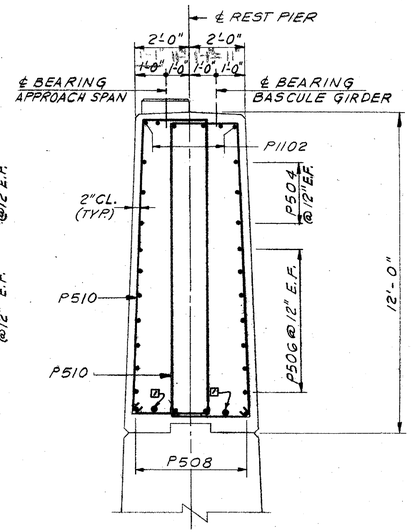

SECTION B-B
SCALE: 3/8" = 1'-0"

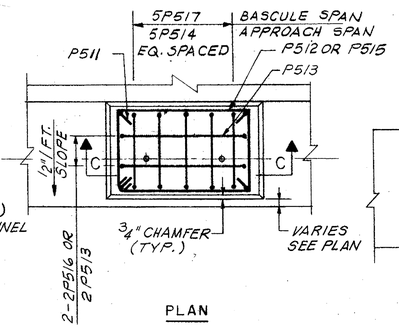

PLAN

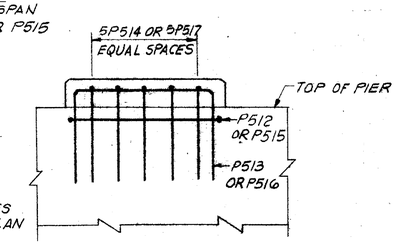

SECTION C-C

TYPICAL PEDESTAL DETAILS
SCALE: N.T.S.

NOTES:
1. FOR GENERAL NOTES SEE SHEET NO. 56.
2. FOR SUBMARINE CABLE AND TERMINAL CABINET SEE SHEET NO. 117.
3. FOR WALKWAY DETAILS SEE SHEET NO. 99.
4. FOR BAR LIST SEE SHEET NO. 122.

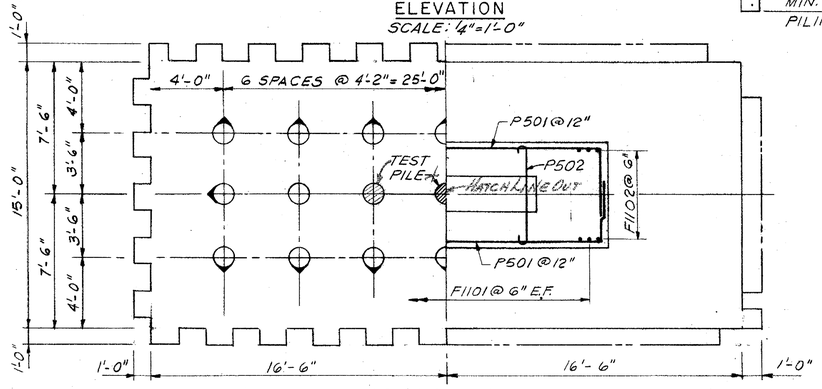

FOOTING PLAN
SCALE: 1/4" = 1'-0"

PILE LEGEND:
- ~~C.I.P.~~ PILE 12" Precast Prestressed
- ~~C.I.P.~~ PILE BATTERED 1 ON 6 IN DIRECTION INDICATED.
- TEST PILE TO BE PILE LOAD TESTED, SEE FOOTING PLAN.

FOR PILE DETAIL SEE SHEET NO. 63.

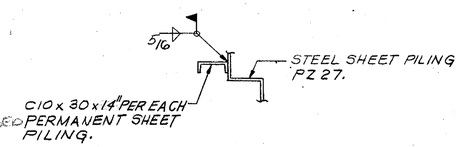

CHANNEL DETAIL

NOTE: SEE END VIEW FOR LOCATION.

CONTRACT	COUNTY	FEDERAL AID PROJECT Nº	SHEET Nº	TOTAL SHEETS
82-073-05	SUSSEX	BRF-1009(3)	62	155

BASCULE PIER
PLAN AND ELEVATIONS

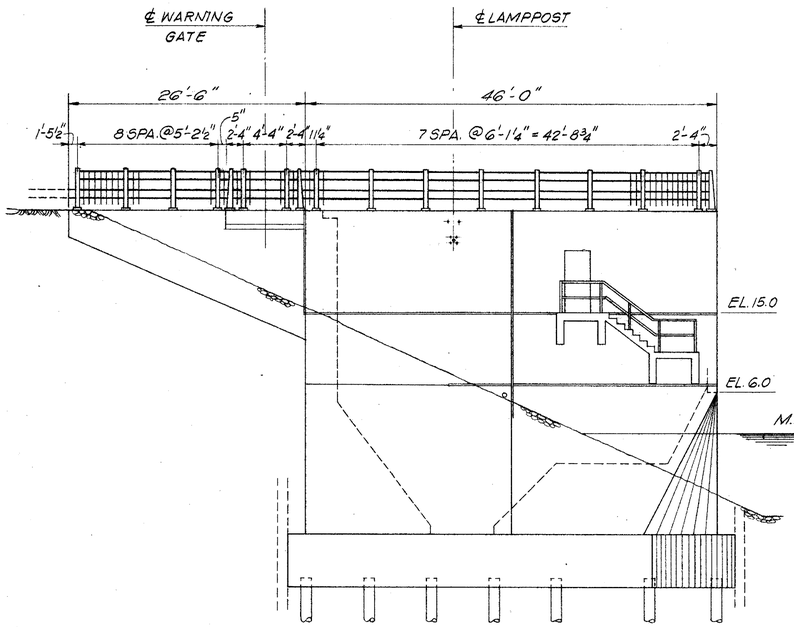

NORTH ELEVATION

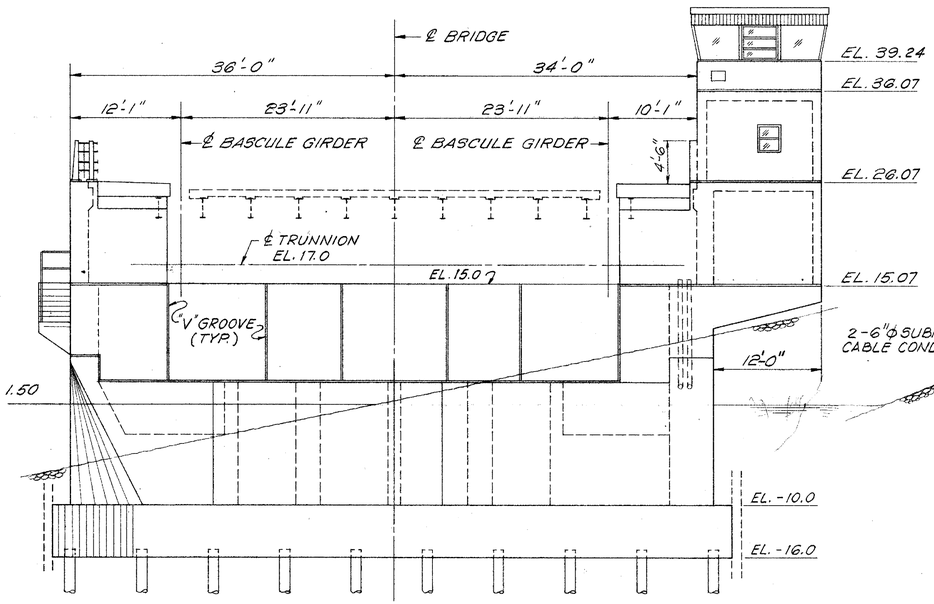

WEST ELEVATION

SCALE: 1/8" = 1'-0"

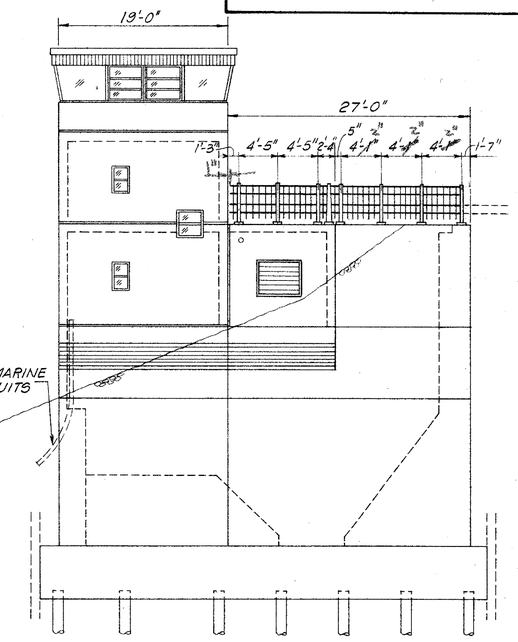

SOUTH ELEVATION

SCALE: 1/8" = 1'-0"

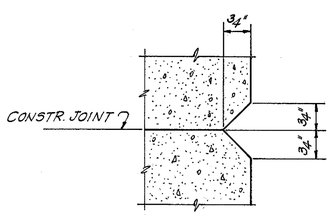

TYPICAL "V" GROOVE DETAIL

HALF SIZE

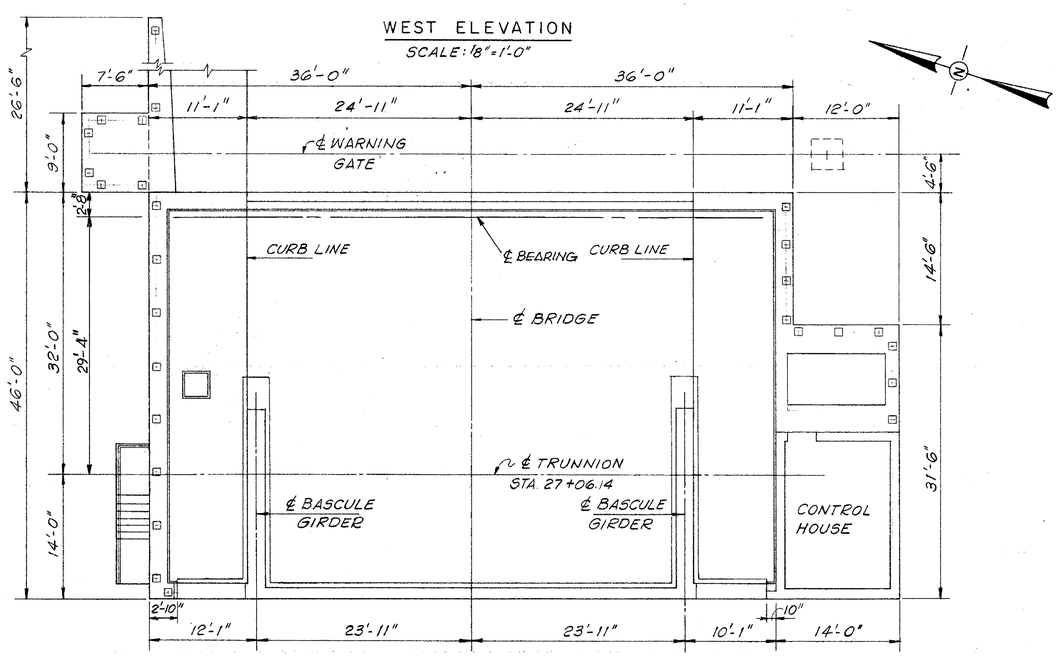

PLAN

SCALE: 1/8" = 1'-0"

NOTES:

1. FOR GENERAL NOTES SEE SHEET NO. 56.
2. ALL CORNERS OR EDGES SHALL BE CHAMFERED ¾" EXCEPT AS OTHERWISE NOTED.
3. FOR FENDER SYSTEM SEE SHEET NO. 57.
4. FOR BRIDGE RAILING DETAILS SEE SHEET NO. 100.

HARDESTY & HANOVER
CONSULTING ENGINEERS
NEW YORK, N.Y.

REVISIONS

PREL. TRACING A.K. & R.G. DESIGN B.G.S. CHKD. B.G.S.

40389

CONTRACT	COUNTY	FEDERAL AID PROJECT Nº	SHEET Nº	TOTAL SHEETS
82-073-05	SUSSEX	BRF-1009(3)	63	155

BASCULE PIER
SECTION AT ELEVATION -10.0
FOOTING AND PILE LAYOUT PLAN

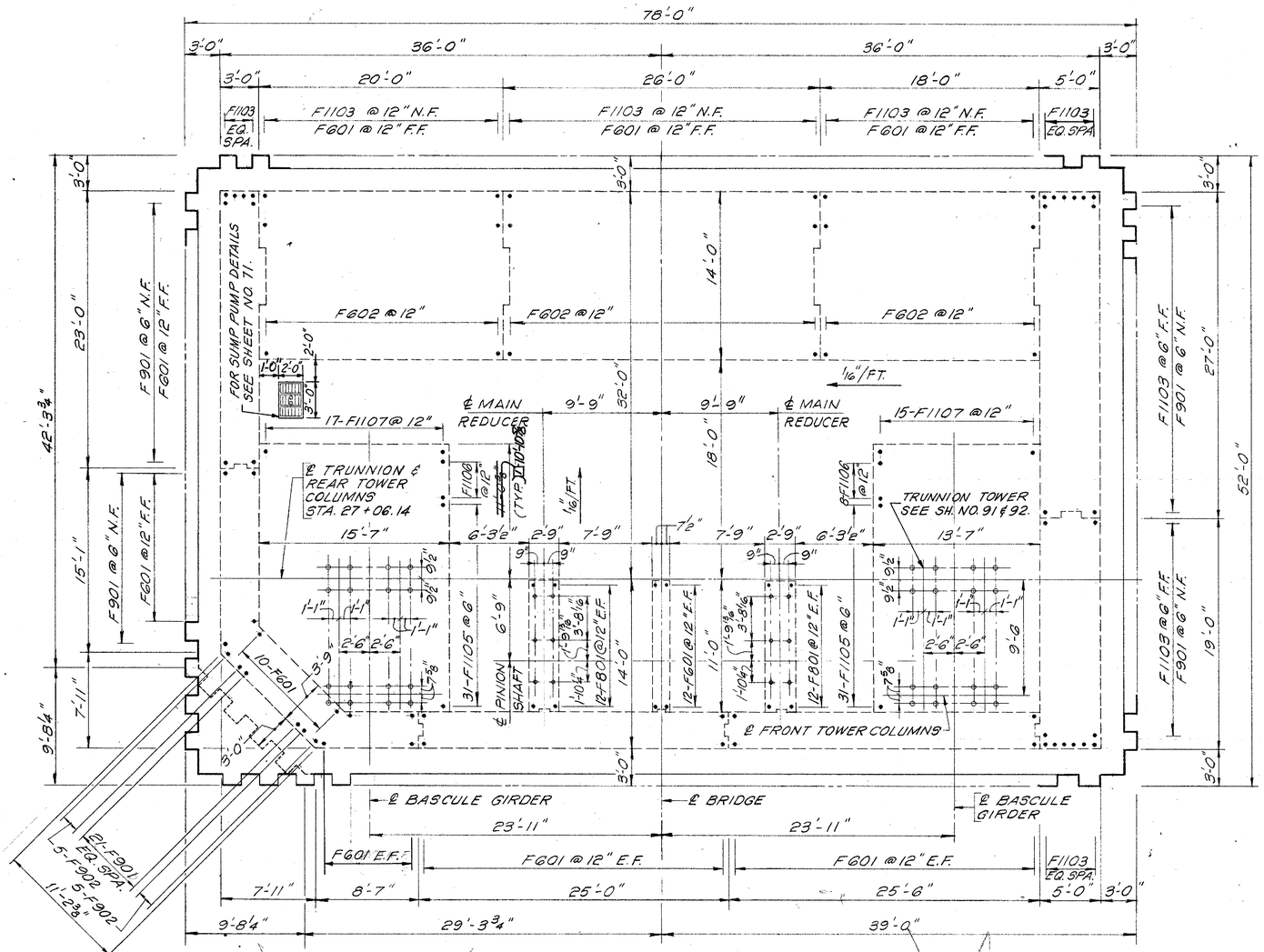

SECTION AT ELEVATION -10.0

SCALE: 3/16" = 1'-0"

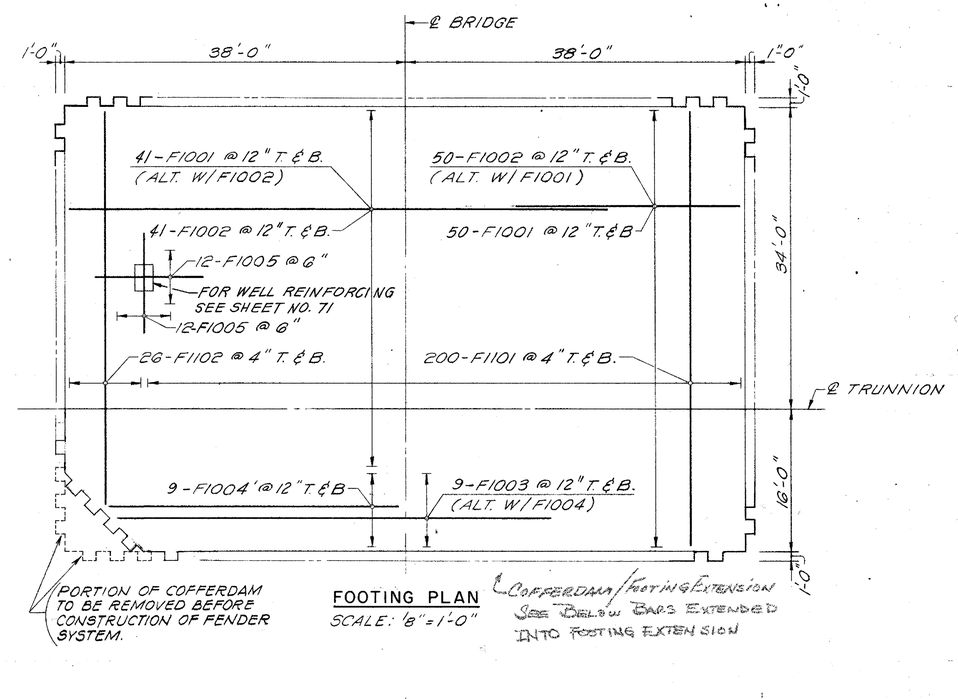

FOOTING PLAN

SCALE: 1/8" = 1'-0"

COFFERDAM/FOOTING EXTENSION SEE BELOW BARS EXTENDED INTO FOOTING EXTENSION

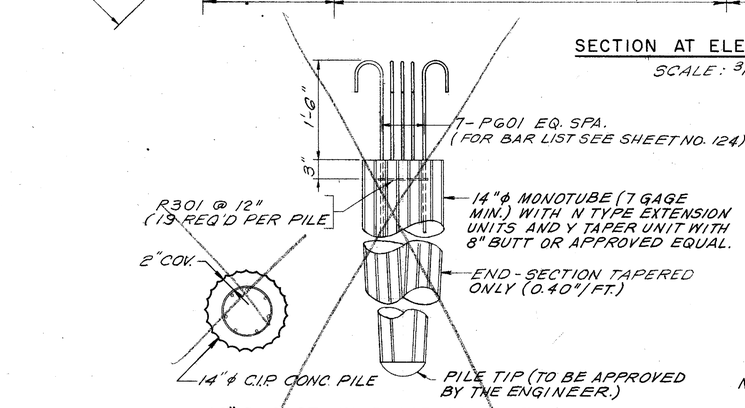

14" Ø CAST-IN-PLACE CONCRETE PILE

N.T.S.

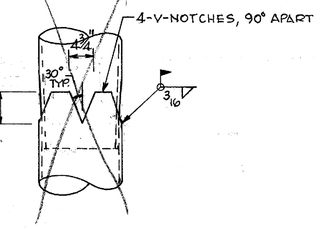

NOTE: VALUE ENGINEERING PROPOSAL #2 PILE 12" SQUARE PRECAST PRESTRESSED

PILE SPLICE DETAIL

(N.T.S.)

PILE LEGEND:

- ~~C.I.P.~~ PRECAST PRESTRESSED PILE
- ~~C.I.P.~~ PILE BATTERED 1 ON 4 IN DIRECTION INDICATED.
- TEST PILE TO BE PILE LOAD TESTED AS INDICATED IN PILE PLAN.

NOTE:

FLUTED STEEL SHELL PIPE PILE SHOWN. CONTRACTOR MAY SUPPLY STEEL PIPE PILE OF SIMILAR CONFIGURATION AS PER SPECIAL PROVISIONS.

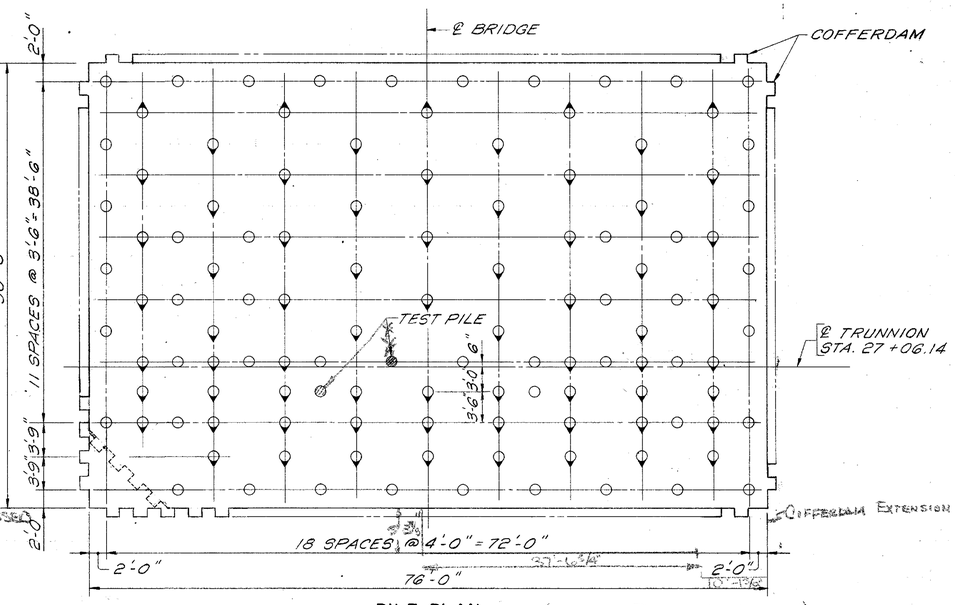

PILE PLAN

SCALE: 1/8" = 1'-0"

(AVERAGE PILE LENGTH 62.4')

HARDESTY & HANOVER CONSULTING ENGINEERS NEW YORK, N.Y.

REVISIONS

1 REVISED DIMENSION TOWER PAD 11-30-84 T.H.F.

PREL. TRACING BGS & MP DESIGN LMB CHKD. RB

CONTRACT	COUNTY	FEDERAL AID PROJECT Nº	SHEET Nº	TOTAL SHEETS
82-073-05	SUSSEX	BRF-1009(3)	64	155

BASCULE PIER
SECTION AT ELEVATIONS +1.0 AND +9.0

HARDESTY & HANOVER
CONSULTING ENGINEERS
NEW YORK, N.Y.

REVISIONS
2 REVISED DIVISION S.T. & QUANTITY DETAILS
B-1115. 12-30-94. T.F.S.

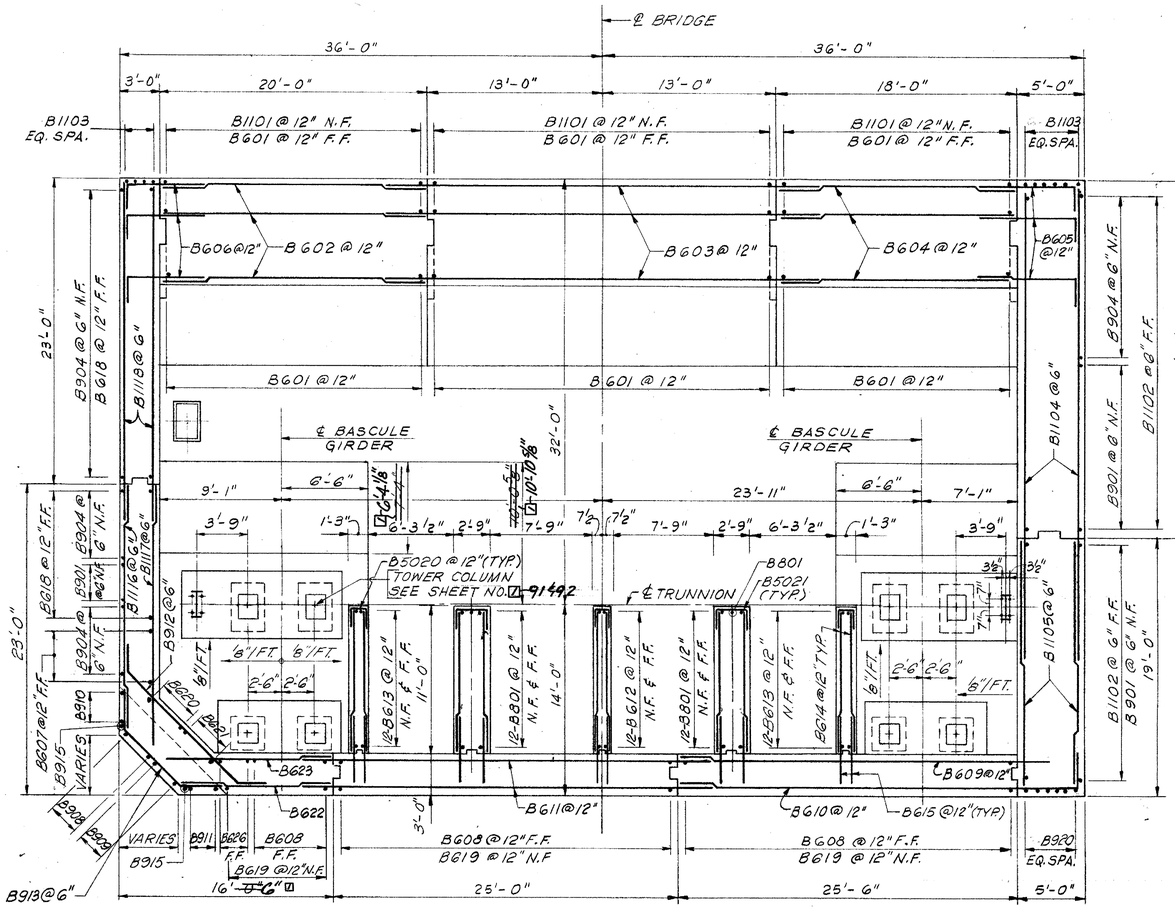

SECTION AT ELEVATION +1.0

SCALE: 3/16" = 1'-0"

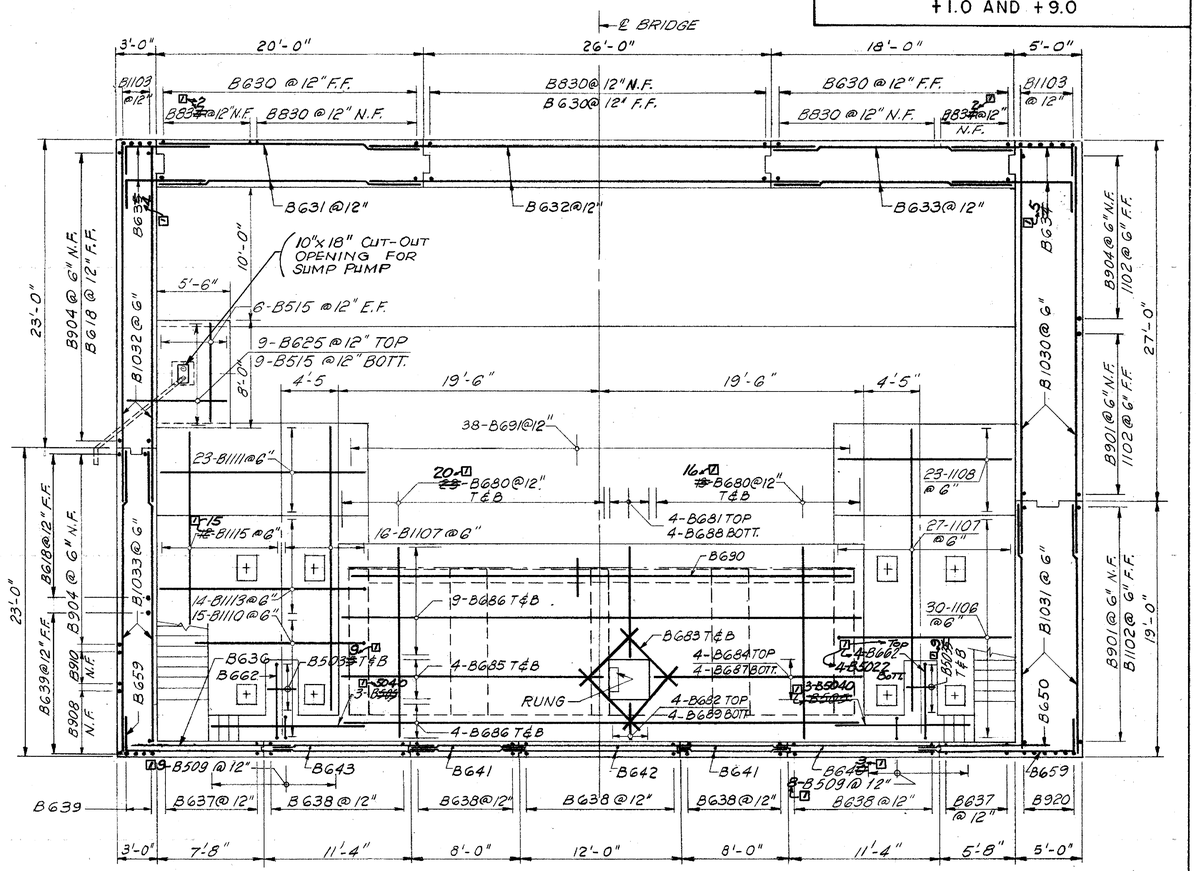

SECTION AT ELEVATION +9.0

SCALE: 3/16" = 1'-0"

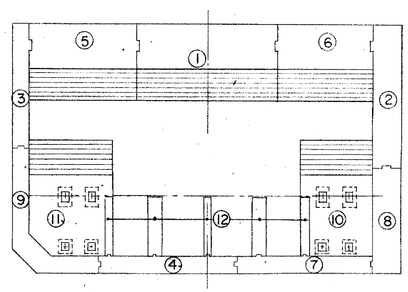

PLAN SECTION BELOW EL. +7.0

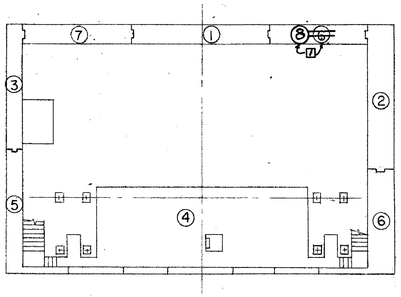

PLAN SECTION ABOVE EL. +7.0

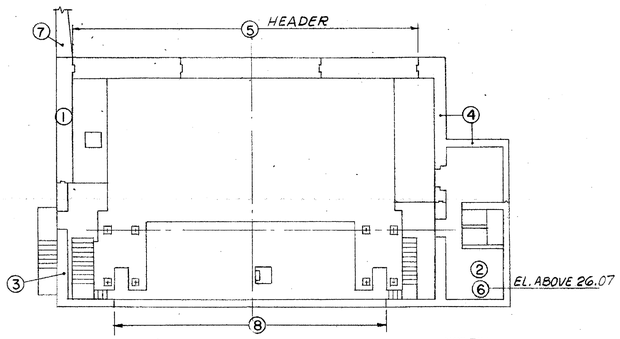

PLAN SECTION ABOVE EL. +15.0

SEQUENCE OF POURS

N.T.S.

NOTES:

1. FOR TRUNNION TOWER AND OPERATING MACHINERY SHEET NO'S 90, 91 & 92.
2. FOR STAIR DETAILS SEE SHEET NO. 70.
3. FOR WATERSTOP DETAILS SEE SHEET NO. 67.
4. FOR BAR LIST SEE SHEET NO'S. 123 & 124.

NOTES:

1. THERE SHALL BE A MINIMUM DELAY OF 10 DAYS BETWEEN EACH CONCRETE PLACEMENT.
2. CONCRETE FOR FLOOR PLACEMENT SHALL BE DELAYED UNTIL CONCRETE IN WALLS HAS REACHED A STRENGTH OF 1600PSI.

PREL. TRACING AS, MP & JK DESIGN HED, JD, BGS CHKD JMD, BGS

CONTRACT	COUNTY	FEDERAL AID PROJECT Nº	SHEET Nº	TOTAL SHEETS
82-073-05	SUSSEX	BRF-1009(3)	65	155

BASCULE PIER
SECTION AT ELEVATION +18.0

HARDESTY & HANOVER
CONSULTING ENGINEERS
NEW YORK, N.Y.

REVISIONS
1 Revised Dimension in Sect. Elev. +18.0 10-30-84 T.F.F.

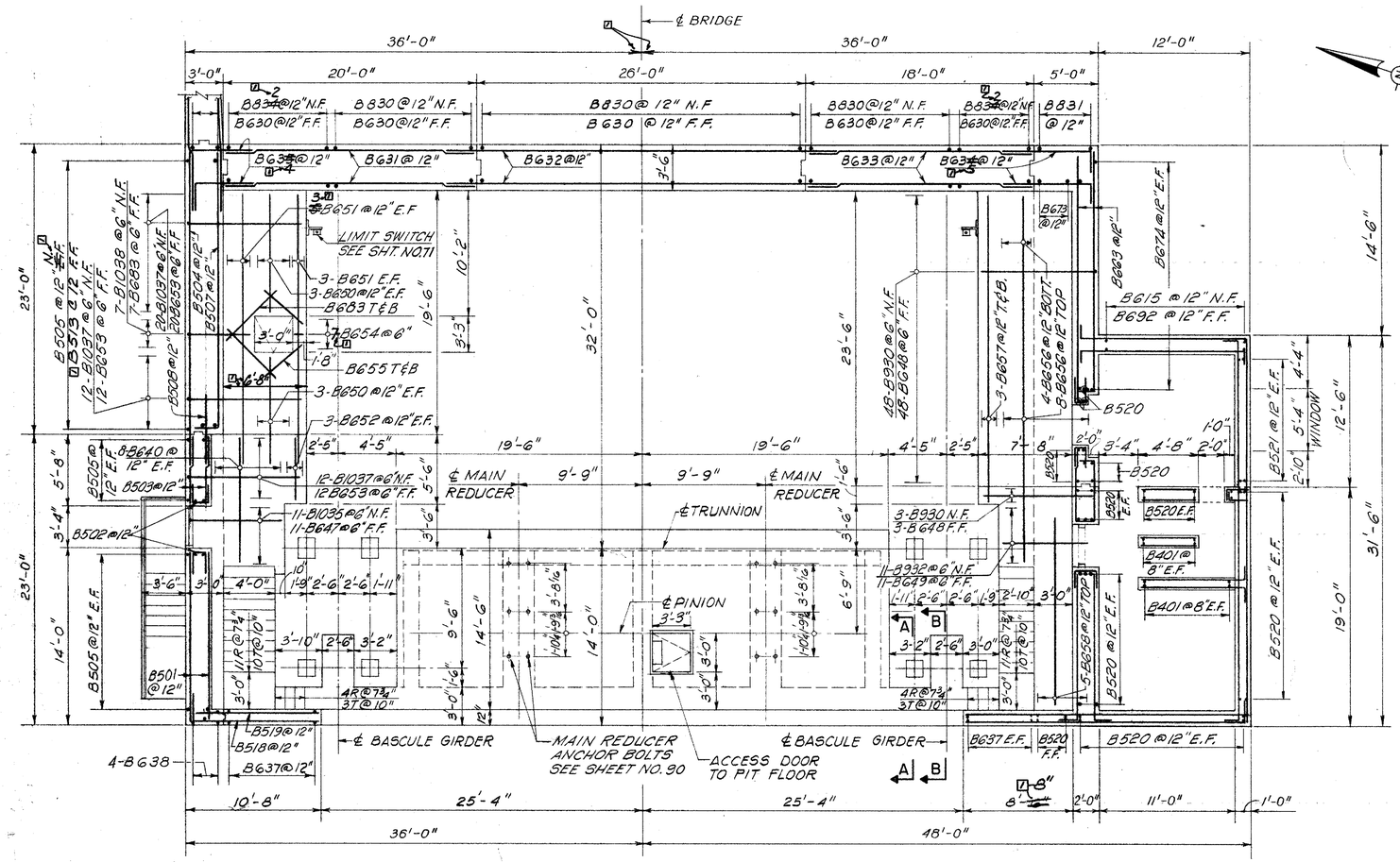

SECTION AT ELEVATION +18.0
SCALE: 3/16"=1'-0"

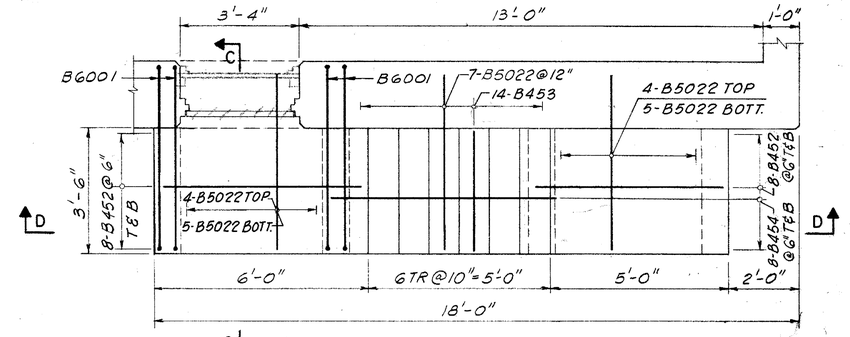

PLAN
STAIRS TO FENDER SYSTEM
SCALE: 1/2"=1'-0"

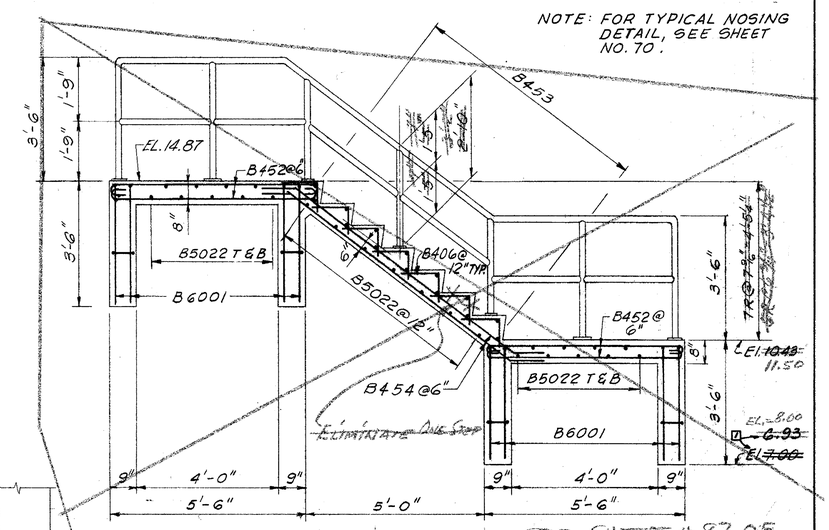

SECTION D-D
SCALE: 1/2"=1'-0"

SEE SHEET # 87 OF 155 FOR REVISED DETAIL

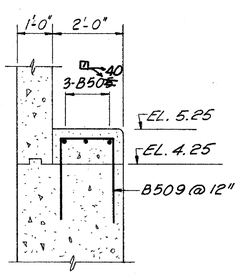

SECTION A-A
SCALE: 1/2"=1'-0"

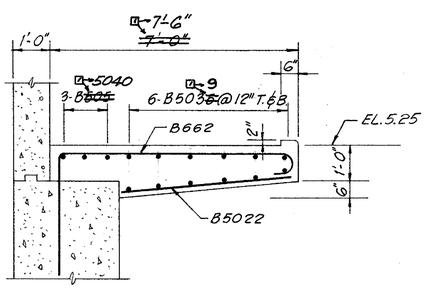

SECTION B-B
SCALE: 1/2"=1'-0"

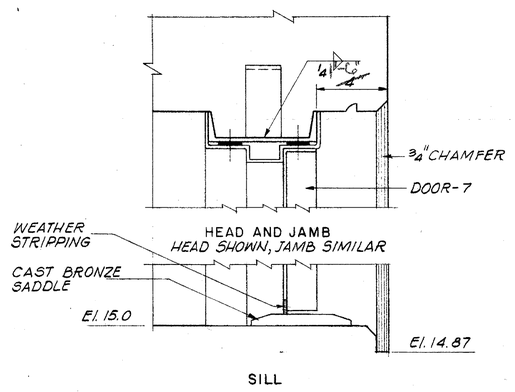

EXIT DOOR TO FENDER
Scale: 3"=1'-0"

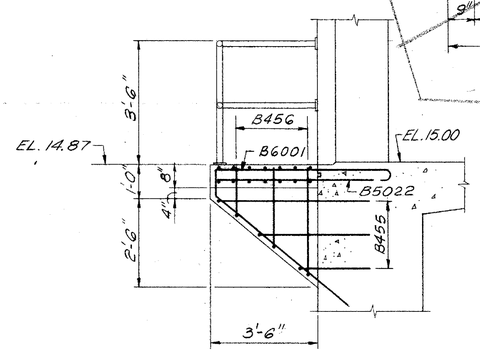

SECTION C-C
SCALE: 1/2"=1'-0"

NOTES:
1. WORK THIS SHEET WITH SHEET NO'S. 64 & 66.
2. FOR CONTROL HOUSE DETAILS SEE SHEET NO'S. 72 & 73.
3. FOR OPERATING MACHINERY DETAILS SEE SHEET NO'S. 102 & 103.
4. FOR BAR LIST SEE SHEET NO'S. 122 THRU 125.

PREL. TRACING MP & AS DESIGN HED, JMD, BGS CHKD JMD, BGS

CONTRACT	COUNTY	FEDERAL AID PROJECT Nº	SHEET Nº	TOTAL SHEETS
82-073-05	SUSSEX	BRF-1009(3)	66	155

BASCULE PIER LONGITUDINAL AND TRANSVERSE SECTIONS

HARDESTY & HANOVER
CONSULTING ENGINEERS
NEW YORK, N.Y.

REVISIONS

1 Revisions In Transverse Sect. & Bumper Block Detail 11-30-84 T.F.F.

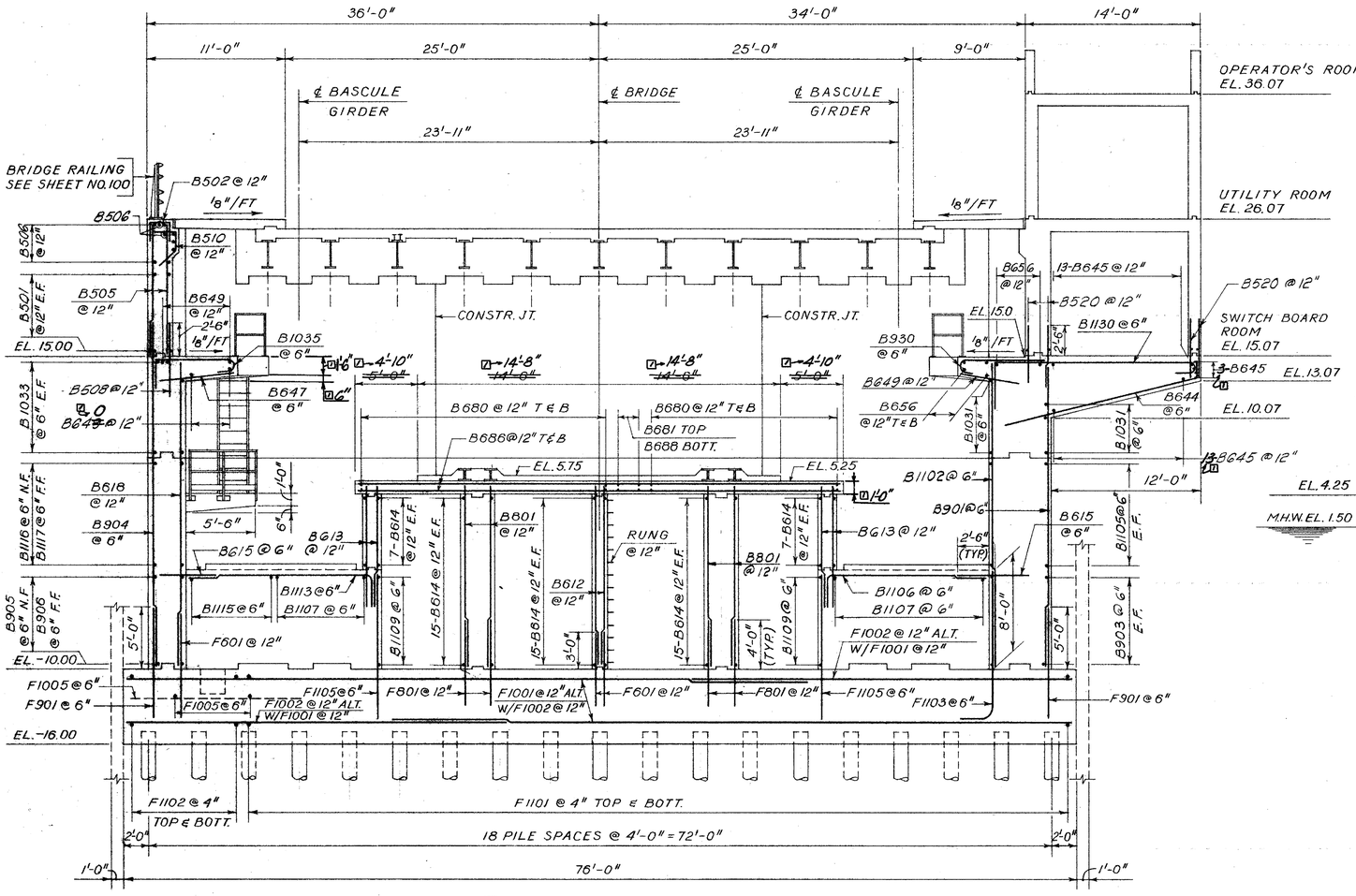

TRANSVERSE ~~LONGITUDINAL~~ SECTION
SCALE: 3/16" = 1'-0"

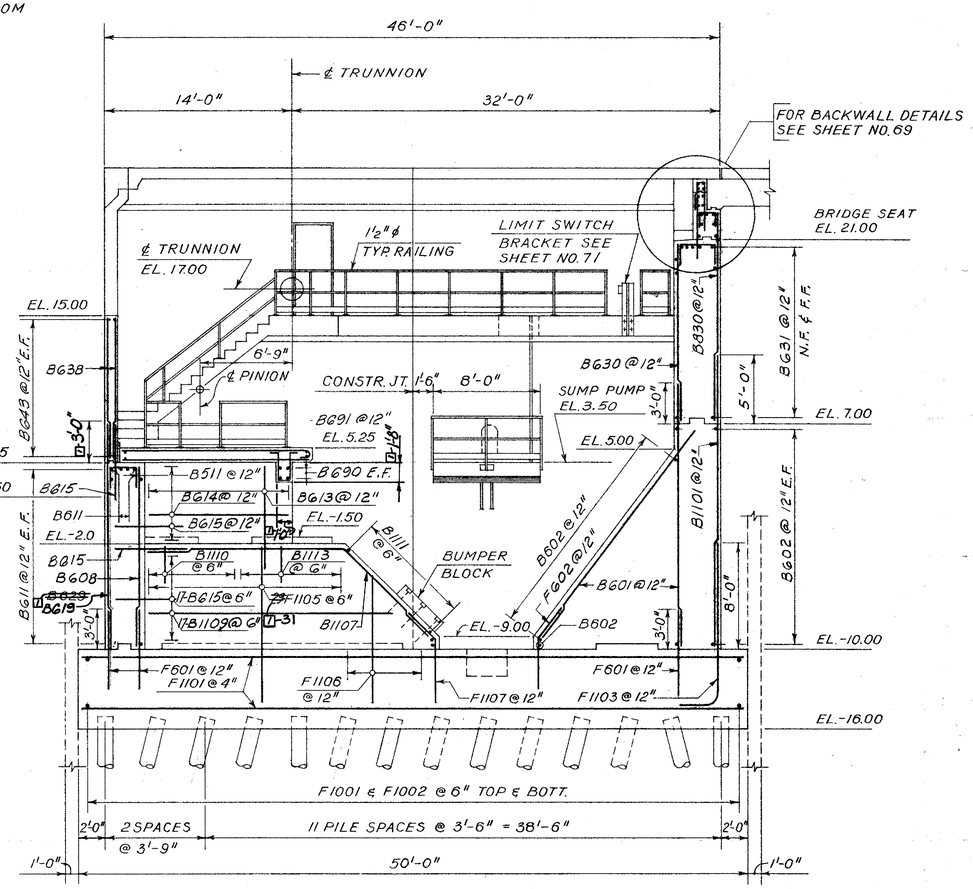

LONGITUDINAL ~~TRANSVERSE~~ SECTION
SCALE: 3/16" = 1'-0"

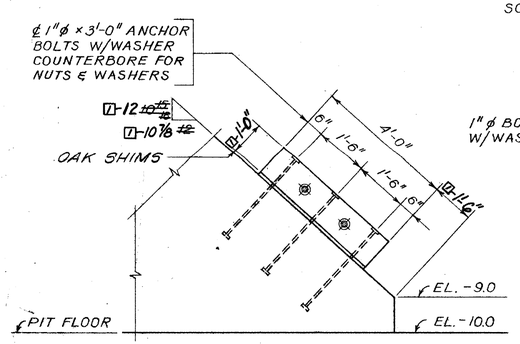

SIDE ELEVATION

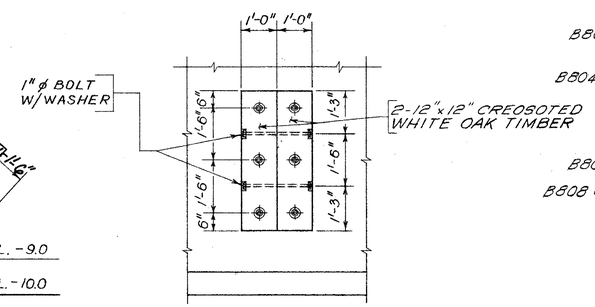

FRONT ELEVATION

BUMPER BLOCK DETAILS
SCALE: 1/2" = 1'-0"

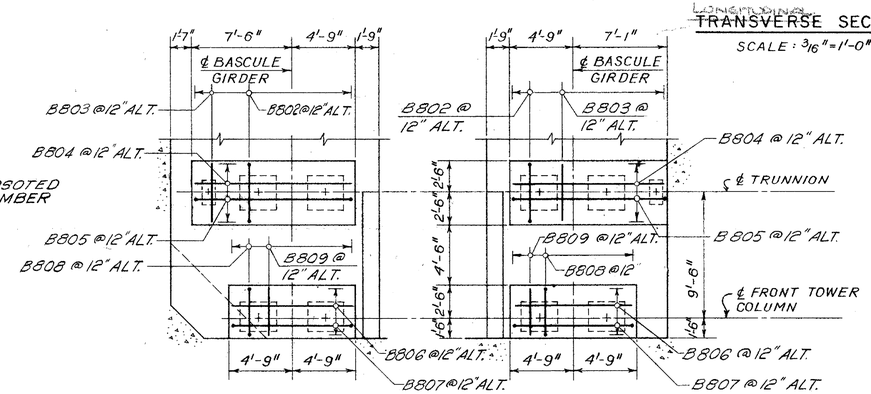

TOWER PEDESTAL DETAIL
SCALE: 1/4" = 1'-0"

NOTES:

1. FOR GENERAL NOTES SEE SHEET NO. 56
2. FOR PILE AND FOOTING PLAN SEE SHEET NO. 63
3. FOR TRUNNION TOWER SEE SHEETS NO's 90, 91 & 92
4. FOR KEYWAY AND WATERSTOP SEE SHEET NO. 67

FREL. TRACING A.K. DESIGN HED, TMD, BGS CHKD. TMD, BGS

CONTRACT	COUNTY	FEDERAL AID PROJECT Nº	SHEET Nº	TOTAL SHEETS
82-073-05	SUSSEX	BRF-1009(3)	67	155

BASCULE PIER
ELEVATIONS I

HARDESTY & HANOVER
CONSULTING ENGINEERS
NEW YORK, N.Y.

REVISIONS
10 REVISED REBAR QUANTITY IN WEST & SOUTH ELEVATIONS 10-30-84 T.E.F.

PREL. TRACING A.G. & R.B. DESIGN HED, BGS, JMD CHKD. BGS, JMD

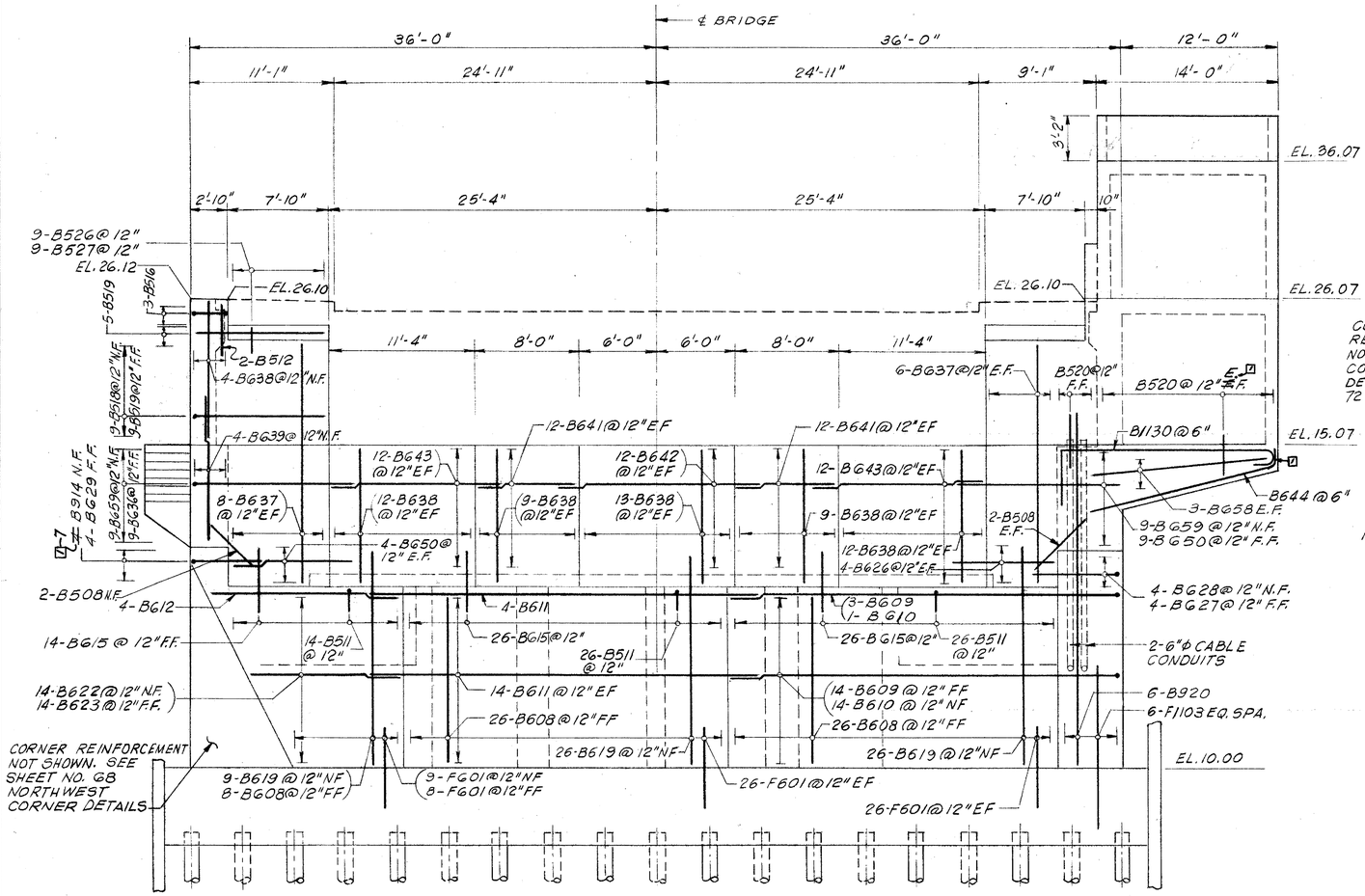

WEST ELEVATION
SCALE: 3/16"=1'-0"

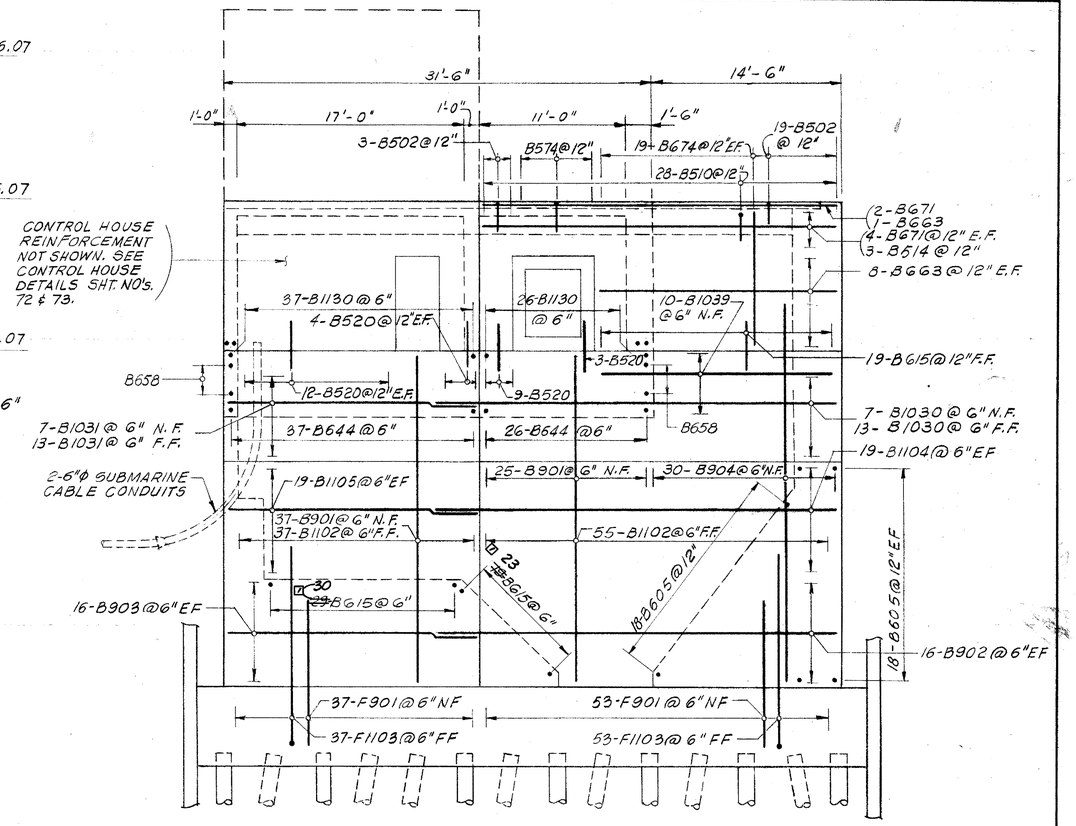

SOUTH ELEVATION
SCALE: 3/16"=1'-0"

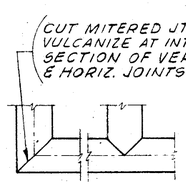

ELEVATION

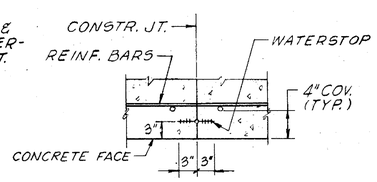

PLAN SECTION

NOTE:
WATERSTOP AT HORIZ. CONSTR. JTS. SIMILAR. WATERSTOP TO BE CONTINUOUS AT ALL CONSTR. JTS.

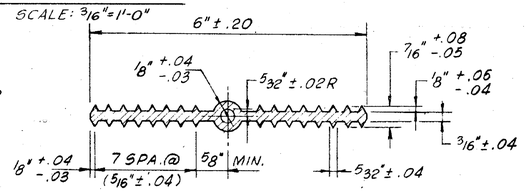

TYPE A
HORIZONTAL WATERSTOP

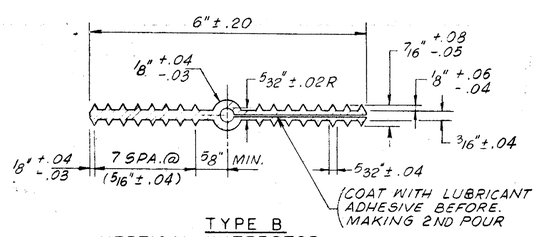

TYPE B
VERTICAL WATERSTOP

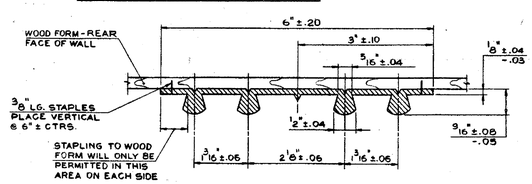

TYPE C WATERSTOP

KEYWAY TABLE		
CONSTRUCTION JOINTS		
C	B	T/3
1/4"	1 1/2"	TO 6"
1/2"	3 1/2"	6" TO 10"
3/4"	5 1/2"	OVER 10"

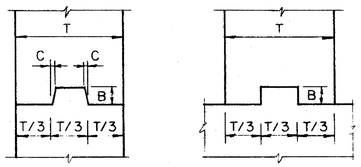

VERTICAL HORIZONTAL

KEYWAY DETAILS
NOT TO SCALE

NOTES:
1. FOR LIMITS OF 3/4" V-GROOVE SEE SHEET NO. 62.
2. FOR BRIDGE RAILING DETAILS SEE SHEET NO. 100.
3. FOR DECK OVER COUNTERWEIGHT SEE SHEET NO. 96.
4. FOR BAR LIST SEE SHEET NO's. 123 & 124.

CONTRACT	COUNTY	FEDERAL AID PROJECT Nº	SHEET Nº	TOTAL SHEETS
82-073-05	SUSSEX	BRF-1009(3)	68	135

BASCULE PIER ELEVATIONS II

HARDESTY & HANOVER CONSULTING ENGINEERS NEW YORK, N.Y.

REVISIONS

7 Revised Bore #, Quantity & Elev. In Tie Cast & North Elevation, Phase Details 11/30/94 T.F.

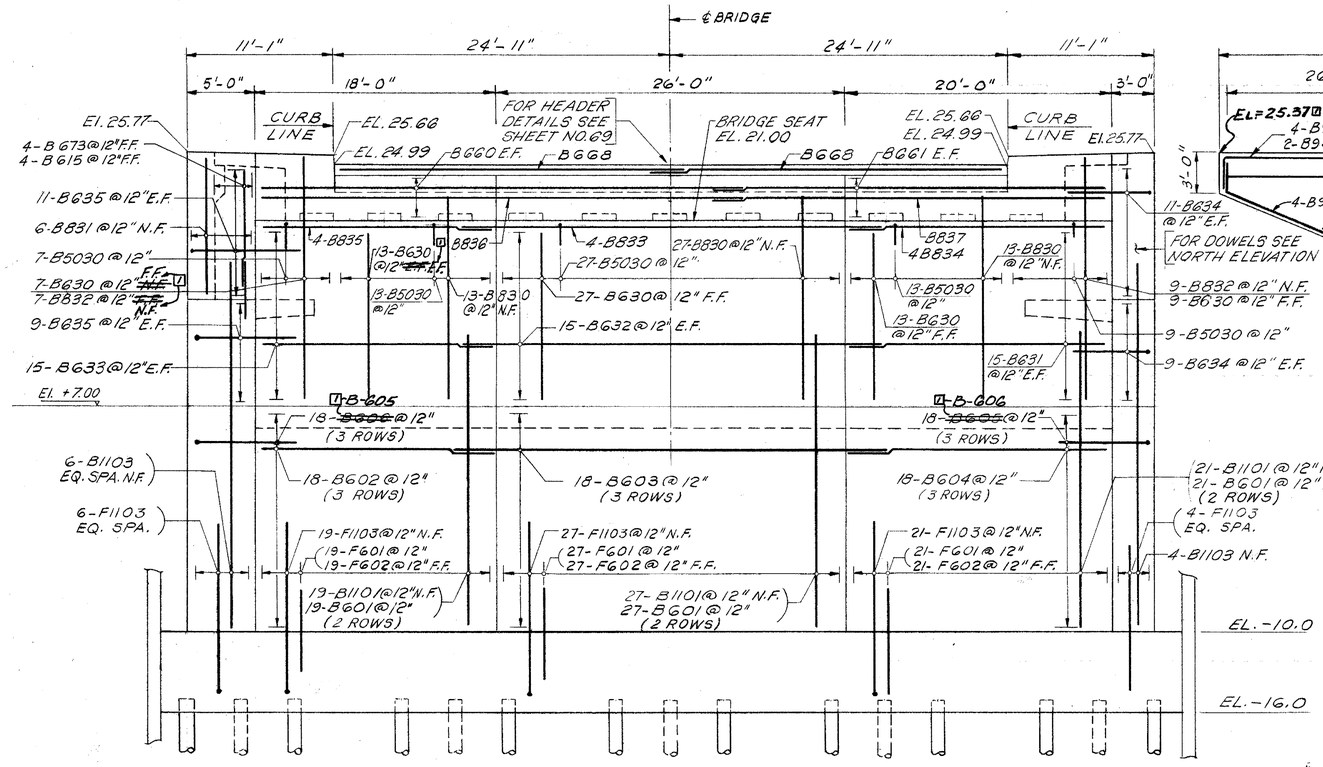

EAST ELEVATION
SCALE: 3/16" = 1'-0"

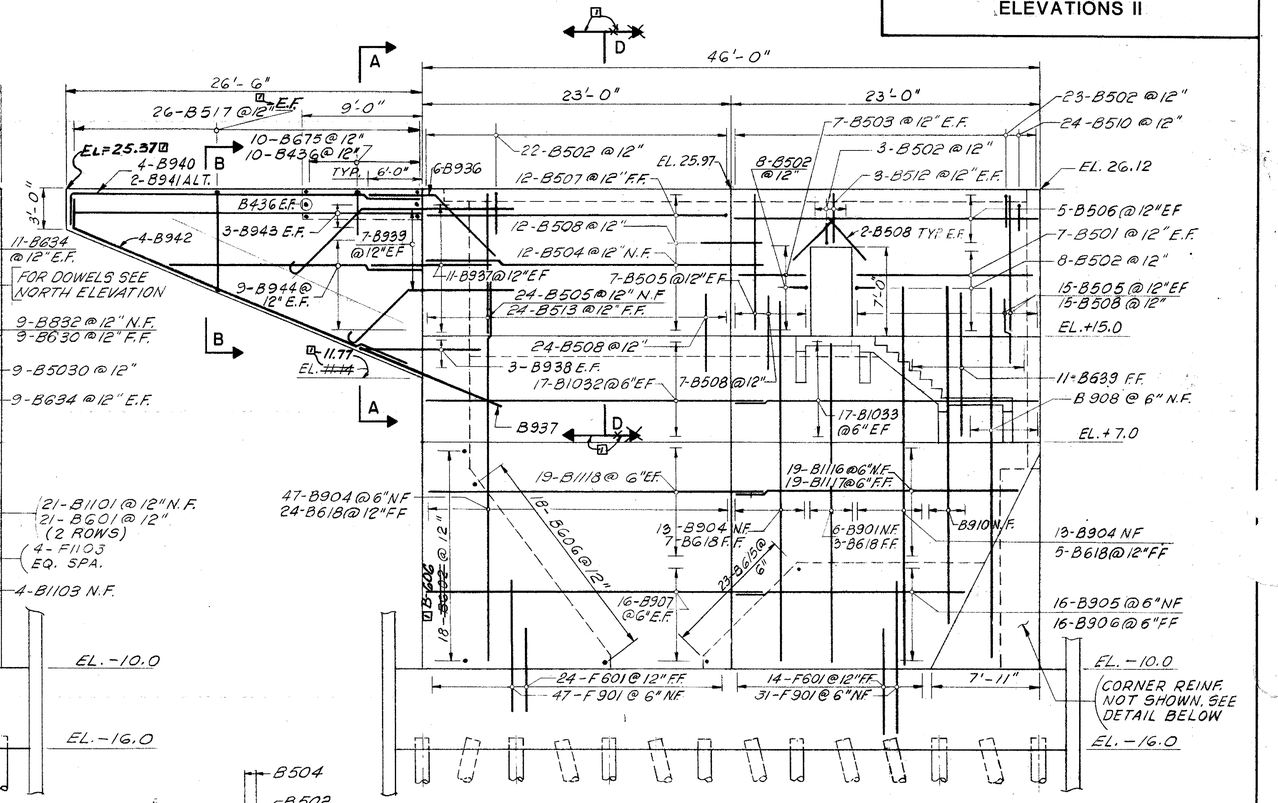

NORTH ELEVATION
SCALE: 3/16" = 1'-0"

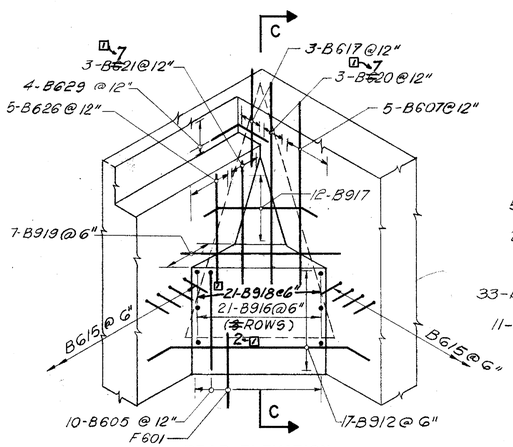

REAR ELEVATION

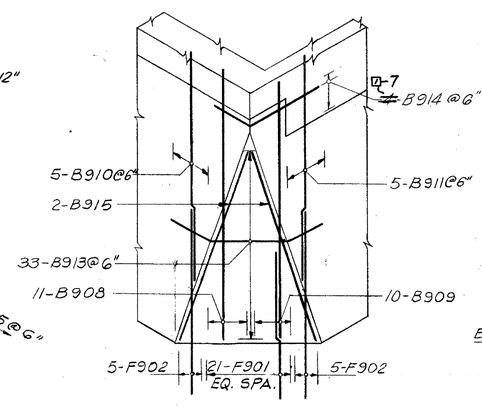

FRONT ELEVATION

NORTHWEST CORNER DETAILS
SCALE: 3/16" = 1'-0"

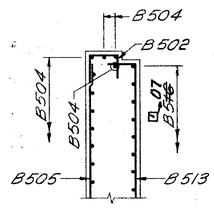

SECTION D-D

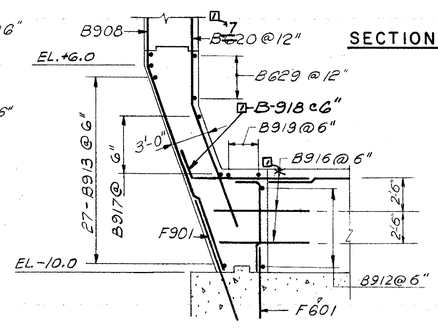

SECTION C-C
SCALE: 3/16" = 1'-0"

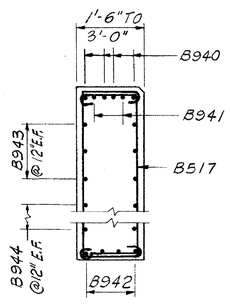

SECTION B-B
SCALE: 3/8" = 1'-0"

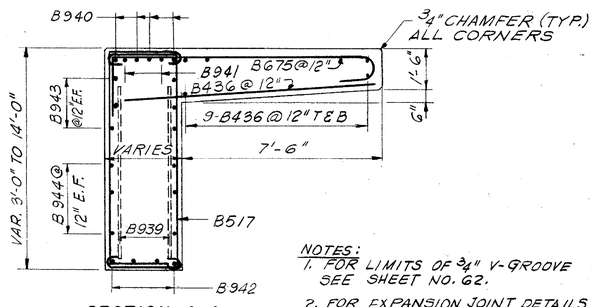

SECTION A-A
SCALE: 3/8" = 1'-0"

NOTES:
1. FOR LIMITS OF 3/4" V-GROOVE SEE SHEET NO. 62.
2. FOR EXPANSION JOINT DETAILS SEE SHEET NO. 98.
3. FOR BAR LIST SEE SHEET NO.s 123 & 124.

7 NOTE: FOR DETAIL OF SIDEWALK SEAT SEE SECTION D-D

PREL. TRACING BGS & AS DESIGN HED, JMD, BGS CHKD. BGS, JMD