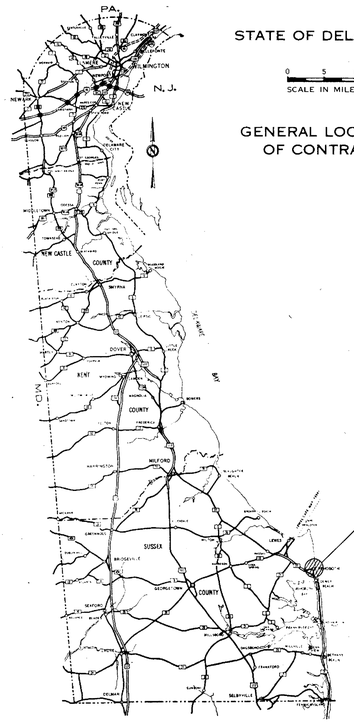

STATE OF DELAWARE

0 5 10
SCALE IN MILES

GENERAL LOCATION OF CONTRACT

LOCATION OF PROJECT

DESIGN DESIGNATION

FEDERAL CLASS	PRIMARY
A.D.T.	14,948
D.H.V.	1,345
DESIGN SPEED	40 M.P.H.
MIN. STOPPING SIGHT DISTANCE	275 FT.
MAX. S.E.	0 FT./FT.
MAX. DEGREE CURVE	1°-25'-57"
MAX. % GRADE	2.5 %

THE STATE OF DELAWARE

DEPARTMENT OF TRANSPORTATION

DIVISION OF HIGHWAYS

CONSTRUCTION PLAN FOR:

CONTRACT NUMBER 82-073-05

FEDERAL AID PROJECT NUMBER BRF-1009(3)

BEGIN PROJECT: STATION NO. 23 + 30 **END:** STATION NO. 40 + 50

LENGTH: 1720 FEET = 0.326 MILES
LENGTH: 524.23 METERS = 0.524 KILOMETERS

CONTRACT	COUNTY	STATE	F.H.W.A. REG. NO.	FEDERAL AID PROJECT NUMBER	FISCAL YEAR	SHEET NUMBER	TOTAL SHEETS
82-073-05	SUSSEX	DEL.	2	BRF-1009(3)		1	155

REHOBOTH AVENUE BRIDGE NO. 153

SURVEY BOOKS

1-15-87 AS BUILT PLANS P.K. E.I.

SHEET NO.	DESCRIPTION
1	TITLE AND INDEX SHEET
2-3	CONSTRUCTION ITEMS
4-6	SUMMARY OF QUANTITIES
7-10	TYPICAL SECTIONS
11-14	DETAILS & DRAINAGE TABLES
15	EARTHWORK SUMMARY
16	ALIGNMENT & CURVE DATA TABLE
17	PLAN SHEET INDEX
18-24	CONSTRUCTION PLANS - DETOUR
25-30	CONSTRUCTION PLANS - REHOBOTH AVE
31-36	PROFILES
37-43	GRADING PLANS - DETOUR
44-49	GRADING PLANS - REHOBOTH AVE
50-53	TRAFFIC CONTROL PLANS
54-131	BRIDGE PLANS
132-133	SIGNALIZATION
134-139	SIGNING & STRIPING
140-155	STANDARD SHEETS

STANDARD DETAIL SHEETS

C-1, C-2
D-1-11, D-7-5, D-9-7, D-14-2, D-15, D-16
G-2-9, G-3-5, G-4-6, G-5
S-2
T-1-1, T-2, T-3-1

UTILITIES

DIAMOND STATE TELEPHONE CO.
DELMARVA POWER AND LIGHT CO., INC.
CITY OF REHOBOTH (WATER AND SEWER)
GENERAL CATV
SUSSEX COUNTY (SANITARY SEWER FORCE MAIN)

PLAN
SCALE: 1"=200'

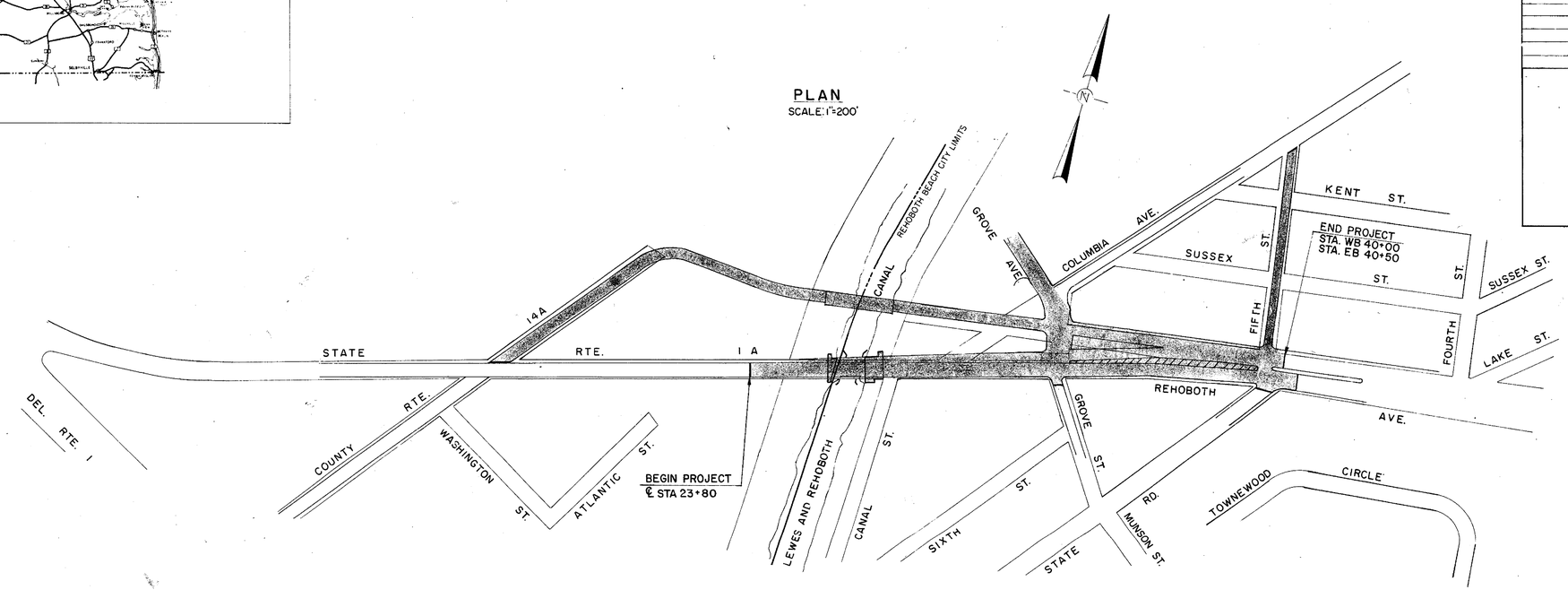

SCALES		
TITLE SHEET	1" = 200 FEET	60 METERS
CONSTRUCTION	1" = 20 FEET	6.1 METERS
VERTICAL PROFILE	1" = 3 FEET	0.9 METERS

DIVISION OF HIGHWAYS

RECOMMENDED	RECOMMENDED	RECOMMENDED	APPROVED
Joseph M. Satterfield, Jr. PROJECT ENGINEER	Dave Jamison REVIEW ENGINEER	Gary B. Homewood DEPUTY DIRECTOR OF HIGHWAYS	John T. Davis DIRECTOR OF HIGHWAYS
RECOMMENDED August 28 1984	RECOMMENDED Aug 28th 1984	RECOMMENDED 8-28 1984	APPROVED 8/29/1984
Joseph M. Satterfield, Jr. REGISTERED NO. 4328 DELAWARE PROFESSIONAL ENGINEER SEAL	C. DAVID JAMISON REGISTERED NO. 4814 DELAWARE PROFESSIONAL ENGINEER SEAL	GARY B. HOMEWOOD REGISTERED NO. 2662 DELAWARE PROFESSIONAL ENGINEER SEAL	JOHN TYLER DAVIS REGISTERED NO. 4376 DELAWARE PROFESSIONAL ENGINEER SEAL

DEPARTMENT OF TRANSPORTATION
FEDERAL HIGHWAY ADMINISTRATION

APPROVED _____ 19 ____

DIVISION ADMINISTRATOR

CONTRACT	COUNTY	FEDERAL AID PROJECT Nº	SHEET Nº	TOTAL SHEETS
82-073-05	SUSSEX	BRF-1009(3)	2	155

SUMMARY OF QUANTITIES

SECTION NO.	DESCRIPTION	UNIT	PROPOSAL
201	CLEARING AND GRUBBING	L.S.	LUMP SUM
202	EXCAVATION AND EMBANKMENT	C.Y.	2,270
208	EXCAVATION AND BACKFILL FOR PIPE TRENCHES	C.Y.	4,142
302	SELECT BORROW BASE COURSE	C.Y.	291
209	BORROW, TYPE F	C.Y.	975
210	REMOVAL OF STRUCTURES AND OBSTRUCTIONS	L.S.	LUMP SUM
309	BITUMINOUS CONCRETE BASE COURSE	TONS	3,543
401	HOT-MIX, HOT LAID BITUMINOUS CONCRETE PAVEMENT, TYPE B	TONS	3,375
401	HOT-MIX, HOT LAID BITUMINOUS CONCRETE PAVEMENT, TYPE C	TONS	2,569
402	HOT-MIX BITUMINOUS CONCRETE AND/OR ASPHALT COLD PATCH (TRM)	TONS	100
609	COARSE AGGREGATE FOR FOUNDATION STABILIZATION	TONS	100
615	REINFORCED CONCRETE PIPE CLASS III 15 IN.	L.F.	1,512
615	REINFORCED CONCRETE PIPE CLASS III 18 IN.	L.F.	324
615	REINFORCED CONCRETE PIPE CLASS III 24 IN.	L.F.	424
615	REINFORCED CONCRETE PIPE CLASS III 30 IN.	L.F.	836
615	REINFORCED CONCRETE PIPE CLASS III 36 IN.	L.F.	120
620	FLARED END SECTION 30 IN. R.C.P.	EACH	2
620	FLARED END SECTION 36 IN. R.C.P.	EACH	1
620	FLARED END SECTION 15 IN. R.C.P.	EACH	1
705	PORTLAND CEMENT CONCRETE CURB, TYPE 1	L.F.	225
707	INTEGRAL PORTLAND CEMENT CONCRETE CURB AND GUTTER, TYPE 3	L.F.	4,439
708	PORTLAND CEMENT CONCRETE SIDEWALK (4 IN.)	S.F.	1,688
708	PORTLAND CEMENT CONCRETE SIDEWALK (6 IN.)	S.F.	1,305
711	CATCH BASIN B	EACH	15
711	CATCH BASIN J	EACH	19
711	CATCH BASIN J MODIFIED	EACH	8
711	CATCH BASIN A	EACH	1
712	MANHOLE, STANDARD	EACH	3
713	ADJUSTING AND REPAIRING EXISTING CATCH BASINS AND MANHOLES	EACH	13
715	GALVANIZED STEEL BEAM GUARDRAIL (STEEL POST)	L.F.	391
~~716~~	~~TWISTED END ANCHORAGE~~	~~EACH~~	~~6~~
722	TOPSOIL (4 IN. DEPTH)	S.Y.	4,350
724	PERMANENT SEEDING SUBURBAN DEVELOPMENT	S.Y.	4,350
726	MULCHING (WOOD CELLULOSE FIBER)	S.Y.	4,350
727	SODDING	S.Y.	511
730	WATERING	M/GAL.	20
733	RIPRAP, PLAIN	S.Y.	1,238
736	REMOVAL OF EXISTING PORTLAND CEMENT CONCRETE PAVEMENT, CURB, SIDEWALK, ETC.	S.Y.	985
738	FLAGMAN	HOUR	1,000
739	FIELD OFFICE	L.S.	LUMP SUM

SECTION NO.	DESCRIPTION	UNIT	PROPOSAL
S.P.	TRAINEE (1)	HOUR	4,000
S.P.	INITIAL EXPENSE	L.S.	LUMP SUM
S.P.	CONSTRUCTION ENGINEERING	L.S.	LUMP SUM
S.P.	WARNING SIGNS - TEMPORARY	EACH	10
S.P.	WARNING SIGNS - STATIONARY	EACH	15
S.P.	BARRICADE WARNING LIGHT - TYPE B	EACH	12
S.P.	BARRICADE WARNING LIGHT - TYPE C	EACH	40
715	GALVANIZED STEEL BEAM GUARDRAIL - (STEEL POST) (PERMANENT HIGHWAY BARRIERS)	L.F.	68
S.P.	TEMPORARY BARRICADES, TYPE II	EACH	18
S.P.	TEMPORARY BARRICADES, TYPE III	EACH	13
S.P.	MAINTENACE OF TRAFFIC	L.S.	LUMP SUM
S.P.	TEMPORARY FENCE	L.F.	365
S.P.	TREE REMOVAL 6" TO LESS THAN 11"	EACH	18
S.P.	TREE REMOVAL 11" TO LESS THAN 15"	EACH	11
S.P.	TREE REMOVAL 15" TO LESS THAN 19"	EACH	7
S.P.	TREE REMOVAL 19" TO LESS THAN 25"	EACH	6
S.P.	TREE REMOVAL 25" TO LESS THAN 31"	EACH	2
S.P.	TREE REMOVAL 31" TO LESS THAN 37"	EACH	3
S.P.	TREE REMOVAL 37" TO LESS THAN 43"	EACH	1
S.P.	TREE REMOVAL 43" TO LESS THAN 49"	EACH	1
S.P.	ROTO-MILLING	S.Y.	267
S.P.	SAWING OF JOINTS - HOT MIX	L.F.	492
S.P.	SAWING OF JOINTS - CONCRETE	L.F.	40
S.P.	BUILD CATCH BASINS WITH TOP SLABS	EACH	3
~~713~~	ADJUSTING EXISTING SANITARY MANHOLE	EACH	17
S.P.	PLUGGING EXISTING PIPES	C.Y.	1
S.P.	ADJUSTING EXISTING VALVE COVERS	EACH	10
S.P.	18" STEEL SLEEVE	L.F.	158
S.P.	CRUSHER RUN (TRM)	TONS	100
S.P.	BUTT JOINTS	S.Y.	588
S.P.	FURNISHING BORROW TYPE C FOR PIPE AND UTILITY TRENCH BACKFILL	C.Y.	1,207
S.P.	UNDERCUT EXCAVATION	C.Y.	100
713	MODIFIED SANITARY MANHOLE	EACH	1

HARDESTY & HANOVER CONSULTING ENGINEERS NEW YORK, N.Y.

REVISIONS

ADDENDUM #2: DELETED T.E.A.S. JMSJ. 9/24/04

PREL. TRACING R. Bright DESIGN A.F. Senor CHKD. W. L. Titus

40389

CONTRACT	COUNTY	FEDERAL AID PROJECT Nº	SHEET Nº	TOTAL SHEETS
82-073-05	SUSSEX	BRF-1009(3)	3	155

SUMMARY OF QUANTITIES

SECTION NO.	DESCRIPTION	UNIT	PROPOSAL
	REHOBOTH AVENUE BASCULE BRIDGE		
203	CHANNEL EXCAVATION	C.Y.	525
207	EXCAVATION AND BACKFILL FOR STRUCTURES (4,620 CY)	C.Y.	5,020**
210	REMOVAL OF EXISTING BASCULE BRIDGE	L.S.	LUMP SUM
601	* TIMBER STRUCTURES, TREATED (12 MFBM)	MFBM	16**
602	* PORTLAND CEMENT CONCRETE MASONRY - PIER AND ABUTMENT FOOTINGS (CL. B)	C.Y.	1,066.
602	* PORTLAND CEMENT CONCRETE MASONRY - PIER AND ABUTMENT ABOVE FOOTINGS (CL. A) (1,877 CY)	C.Y.	1,946**
602	* PORTLAND CEMENT CONCRETE MASONRY - COUNTERWEIGHT (CL. A)	C.Y.	291
602	* PORTLAND CEMENT CONCRETE MASONRY - APPROACH SLAB (CL. A)	C.Y.	475.
602	* PORTLAND CEMENT CONCRETE MASONRY - SUPERSTRUCTURE ~~(CL. A)~~ (CL. D) △1	C.Y.	193
602	* PORTLAND CEMENT CONCRETE MASONRY - BALANCE BLOCKS (CL. A)	△1 ~~C.Y.~~ E.A.	870
602	PROTECTIVE COATING FOR P.C.C. MASONRY - BRIDGE	S.Y.	1,465
602	PREFABRICATED EXPANSION JOINT SYSTEM	L.F.	140
605A	* BAR REINFORCEMENT, EPOXY COATED	L.B.	626,700
606	(S) STEEL STRUCTURES, (COMPUTED NET WEIGHT 1,100.000 LBS.)	L.S.	LUMP SUM
606	(S) ROADWAY GRATING	S.F.	4,496
606	(S) SIDEWALK DECK	S.F.	1,439
607	METAL BRIDGE RAILING	L.F.	496
621	TREATED TIMBER PILES	L.F.	4,756
624	CAST-IN-PLACE CONCRETE PILES, 12-INCH DIAMETER (7 GAGE MIN.)	L.F.	1,988
624	CAST-IN-PLACE CONCRETE PILES, 14-INCH DIAMETER (7 GAGE MIN.)	L.F.	10,188
624	STEEL SHELL TEST PILES, 14-INCH DIAMETER (7 GAGE MIN.)	L.F.	148
624	PILE LOAD TEST, 14-INCH DIAMETER (7 GAGE MIN.)	E.A.	2
626	STEEL SHEET PILES LEFT-IN-PLACE	S.F.	10,900
S.P.	(S) CONTROL HOUSE	L.S.	LUMP SUM
S.P.	(S) BRIDGE MACHINERY	L.S.	LUMP SUM
S.P.	(S) STANDBY ENGINE GENERATOR	L.S.	LUMP SUM
S.P.	(S) ELECTRICAL WORK	L.S.	LUMP SUM
S.P.	(S) BARRIER GATE	L.S.	LUMP SUM
S.P.	BRIDGE OPERATION	L.S.	LUMP SUM
			**INCLUDES TEMPORARY BRIDGE QUANTITY
	TEMPORARY BRIDGE		
207	EXCAVATION AND BACKFILL FOR STRUCTURES	C.Y.	400 ***
210	REMOVAL OF TEMPORARY BRIDGE	L.S.	LUMP SUM
601	* TIMBER STRUCTURES, TREATED	MFBM	4 ***
602	* PORTLAND CEMENT CONCRETE MASONRY - ABUTMENT FOOTINGS (CL. B)	C.Y.	82
602	* PORTLAND CEMENT CONCRETE MASONRY - PIERS AND ABUTMENTS ABOVE FOOTINGS (CL. A)	C.Y.	69 ***
605	* BAR REINFORCEMENT	L.B.	17,600
606	(S) STEEL STRUCTURES, (COMPUTED NET WEIGHT 14,416 LBS.)	L.S.	LUMP SUM
606	(S) TEMPORARY BRIDGE (ACROW OR APPROVED EQUAL)	L.S.	LUMP SUM
624	CAST-IN-PLACE CONCRETE PILES, 16-INCH DIAMETER (0.5 IN. MIN. WALL THICKNESS)	L.S.	LUMP SUM
	(3 SIMPLE SPAN 1750 L.F.) OR		
	(3 CONTINUOUS SPAN 2054 L.F.)		
			***INCLUDED IN BASCULE BRIDGE QUANTITY

SECTION NO.	DESCRIPTION	UNIT	PROPOSAL
S.P.	1½" GALV. CONDUIT UNDER NEW PAV'T OR IN SODDED TRENCH	L.F.	463
S.P.	2½" GALV. CONDUIT UNDER EXIST. PAV'T	L.F.	214
S.P.	2½" GALV. CONDUIT UNDER NEW PAV'T OR IN SODDED TRENCH	L.F.	38
S.P.	3" NON-METALLIC CONDUIT UNDER EXIST. PAV'T	L.F.	68
S.P.	CONDUIT JUNCTION WELL TYPE 1	EACH	9
S.P.	SMALL CABINET BASE	EACH	1
S.P.	POLE BASE TYPE 2	EACH	2
S.P.	INSTALLATION OF DETECTOR WIRE	L.F.	518
S.P.	INSTALL OR MOVE SPAN WIRE	EACH	1
S.P.	PERMANENT PAVEMENT STRIPING, 4 IN.	L.F.	9,000
S.P.	PERMANENT PAVEMENT STRIPING	S.F.	~~300~~ 614 △1

* ESTIMATED FIXED QUANTITY, PAYMENT IN ACCORDANCE WITH SUBSECTION 109.06 OF THE STANDARD SPECIFICATIONS

(S) SPECIALTY ITEM

HARDESTY & HANOVER CONSULTING ENGINEERS NEW YORK, N.Y.

REVISIONS

△1 INDICATES CORRECTED QUANTITY FOR PAVEMENT STRIPING
CHANGE ITEM "EPOXY PAVEMENT STRIPING" TO "PERMANENT PAVEMENT STRIPING"
CORRECTED QUANTITY PERMANENT PAVT. STRIPING
SEE SHEET 100 FOR CHANGES

PREL. TRACING R. Bright DESIGN A. F. Senor CHKD. W. L. Titus

4/2/99

HARDESTY & HANOVER
CONSULTING ENGINEERS
NEW YORK, N.Y.

CONTRACT	COUNTY	FEDERAL AID PROJECT Nº	SHEET Nº	TOTAL SHEETS
82-073-05	SUSSEX	BRF-1009(3)	4	155

DISTRIBUTION OF QUANTITIES

NOT CORRECTED - SEE SHT 2

SPECIFICATION SECTION NUMBER	ITEM DESCRIPTION	UNIT	STA. – STA.	DR 51+00 TO DR 52+00	DR 52+00 TO DR 57+75	DR 57+75 TO DR 62+25	DR 62+25 TO DR 65+75	DR 65+75 TO DR 72+00	DR 72+00 TO DR 75+00	DR 75+00 TO DR 76+00	℄ 23+80 TO EB 29+00	EB 29+00 TO EB 34+85	DR 65+75 TO DR 72+00	EB 34+85 TO EB 37+85	EB 37+85 TO EB 40+50	F 131+00 TO F 136+97	TRAFFIC CONTROL PLANS	FROM CROSS SECTIONS			PARTICI-PATING	NON-PARTICI-PATING		PROPOSAL QUANTITY
		SH.#		18	19	20	21	22	23	24	25	26	27	28	29	30	50-53							
201	CLEARING AND GRUBBING	L.S.																			LUMP SUM	0		LUMP SUM
202	EXCAVATION AND EMBANKMENT	C.Y.																2,270			2,270	0		2,270
		C.Y.																						
208	EXCAVATION AND BACKFILL FOR PIPE TRENCHES	C.Y.						949	531	300	699	1120	56	56	44	387					3,755	387		4,142
302	SELECT BORROW BASE COURSE	C.Y.		6.32	37.75	9.33	14.94	135.94	19.48	5.92	8.10	3.61	49.20								291	0		291
209	BORROW, TYPE F	C.Y.																975			975	0		975
210	REMOVAL OF STRUCTURES AND OBSTRUCTIONS	L.S.																			LUMP SUM	0		LUMP SUM
309	BITUMINOUS CONCRETE BASE COURSE	TONS		102.97	433.75	302.50	90.08	562.25	263.17	167.49	310.94	703.17	216.91	252.29	81.94	56.00					3,487	56		3,543
401	HOT-MIX, HOT LAID BITUMINOUS CONCRETE PAVEMENT, TYPE B	TONS		80.94	429.60	327.25	91.73	471.54	160.42	66.84	247.97	696.57	151.84	304.54	109.00	236.50					3,375	0		3,375
401	HOT-MIX, HOT LAID BITUMINOUS CONCRETE PAVEMENT, TYPE C	TONS		34.69	202.72	144.84	46.67	206.76	119.35	21.13	151.05	582.48	376.70	260.70	252.72	169.01					2,569			2,569
402	HOT-MIX BITUMINOUS CONCRETE AND/OR ASPHALT COLD PATCH (TRM)	TONS																			100	0		100
609	COARSE AGGREGATE FOR FOUNDATION STABILIZATION	TONS																			100	0		100
615	REINFORCED CONCRETE PIPE CLASS III 15 IN.	L.F.						328	138	108	130	306	84	78	48	292					1,220	292		1,512
615	REINFORCED CONCRETE PIPE CLASS III 18 IN.	L.F.								124						200					124	200		324
615	REINFORCED CONCRETE PIPE CLASS III 24 IN.	L.F.							301	123											424	0		424
615	REINFORCED CONCRETE PIPE CLASS III 30 IN.	L.F.						338			124	374									836	0		836
615	REINFORCED CONCRETE PIPE CLASS III 36 IN.	L.F.									120										120	0		120
620	FLARED END SECTION 30 IN. R.C.P.	EACH									2										2	0		2
620	FLARED END SECTION 36 IN R.C.P.	EACH									1										1	0		1
620	FLARED END SECTION 15 IN R.C.P.	EACH					1														1	0		1
705	PORTLAND CEMENT CONCRETE CURB, TYPE I	L.F.									225										255	0		225
707	INTEGRAL PORTLAND CEMENT CONCRETE CURB AND GUTTER, TYPE 3	L.F.						151	300	149	386	1,561	679	911	302						4,439	0		4,439
708	PORTLAND CEMENT CONCRETE SIDEWALK (4 IN.)	S.F.						340.0	700.0			591.5		55.6							1,688	0		1,688
708	PORTLAND CEMENT CONCRETE SIDEWALK (6 IN.)	S.F.							352.0	320.	437.5	195.0									1,305	0		1,305
711	CATCH BASIN B	EACH						4		1		3	1	2		4					11	4		15
711	CATCH BASIN J	EACH						3	2	4	1	2	5	1	1						19	0		19
711	CATCH BASIN J MODIFIED	EACH						2			2	2	2								8	0		8
711	CATCH BASIN A	EACH									1										1	0		1
712	MANHOLE, STANDARD	EACH							1		1		1								3	0		3
713	ADJUSTING AND REPAIRING EXISTING CATCH BASINS AND MANHOLES	EACH											5	3	5						13	0		13
715	GALVANIZED STEEL BEAM GUARDRAIL (STEEL POST)	L.F.				125	144				122										391	0		391
~~715~~	~~TWISTED END ANCHORAGE~~ △1	~~EACH~~				~~2~~	~~2~~	~~2~~													~~6~~	~~0~~		~~6~~

REVISIONS

△1 ADDENDUM #2 DELETED T.E.A.'S JMSA.

PREL. TRACING R. Bright DESIGN A.F. Senor CHKD. W.L. Titus

HARDESTY & HANOVER
CONSULTING ENGINEERS
NEW YORK, N.Y.

REVISIONS

CONTRACT	COUNTY	FEDERAL AID PROJECT Nº	SHEET Nº	TOTAL SHEETS
82-073-05	SUSSEX	BRF-1009(3)	5	155

DISTRIBUTION OF QUANTITIES

NOT COMPLETED - SEE SHT. 2 & 3

SPECIFICATION SECTION NUMBER	ITEM DESCRIPTION	UNIT	STA. – STA.	DR 51+00 TO DR 52+00	DR 52+00 TO DR 57+75	DR 57+75 TO DR 62+25	DR 62+25 TO DR 65+75	DR 65+75 TO DR 72+00	DR 72+00 TO DR 75+00	DR 75+00 TO DR 76+00	℄ 23+80 TO EB 29+00	EB 29+00 TO EB 34+85	DR 65+75 TO DR 72+00	EB 34+85 TO EB 37+85	EB 37+85 TO EB 40+50	F 131+00 TO F 136+97	TRAFFIC CONTROL PLANS	FROM CROSS SECTIONS			PARTICI-PATING	NON-PARTICI-PATING		PROPOSAL QUANTITY
		SH.#		18	19	20	21	22	23	24	25	26	27	28	29	30	50-53							
722	TOPSOIL (4 IN. DEPTH)	S.Y.																4,350			4,350	0		4,350
724	PERMANET SEEDING SUBURBAN DEVELOPMENT	S.Y.																4,350			4,350	0		4,350
726	MULCHING (WOOD CELLULOSE FIBER)	S.Y.																4,350			4,350	0		4,350
727	SODDING	S.Y.																511			511	0		511
730	WATERING	M/GAL																20			20	0		20
733	RIPRAP, PLAIN	S.Y.					66.6				1,231.26										1,238	0		1,238
736	REMOVAL OF EXISTING PORTLAND CEMENT CONCRETE																							
	PAVEMENT, CURB, SIDEWALK, ETC.	S.Y.									985										985	0		985
738	FLAGMAN	HOUR															1,000				1,000	0		1,000
739	FIELD OFFICE	L.S.																			LUMP SUM	0		LUMP SUM
S.P.	TRAINEE (I)	HOUR		2,000							2,000										4,000	0		4,000
S.P.	INITIAL EXPENSE	L.S.																			LUMP SUM	0		LUMP SUM
S.P.	CONSTRUCTION ENGINEERING	L.S.																			LUMP SUM	0		LUMP SUM
S.P.	WARNING SIGNS – TEMPORARY	EACH															10				10	0		10
S.P.	WARNING SIGNS – STATIONARY	EACH															15				15	0		15
S.P.	BARRICADE WARNING LIGHT - TYPE - B	EACH															12				12	0		12
S.P.	BARRICADE WARNING LIGHT - TYPE - C	EACH															40				40	0		40
715	GALVANIZED STEEL BEAM GUARD RAIL –	L.F.					68														68	0		68
	(PERMANENT HIGHWAY BARRIERS) (STEEL POST)																							
S.P.	TEMPORARY BARRICADES, TYPE II	EACH															18				18	0		18
S.P.	TEMPORARY BARRICADES, TYPE III	EACH															13				13	0		13
S.P.	MAINTENANCE OF TRAFFIC	L.S.																			LUMP SUM	0		LUMP SUM
S.P.	TEMPORARY FENCE	L.F.			68	297															365	0		365
S.P.	RELOCATE CHAIN LINK FENCE (BY OTHERS)	L.F.			75	77															152	0		152
S.P.	TREE REMOVAL 6" TO LESS THAN 11"	EACH				8	2	1			1	6									18	0		18
S.P.	TREE REMOVAL 11" TO LESS THAN 15"	EACH				5	1		1			4									11	0		11
S.P.	TREE REMOVAL 15" TO LESS THAN 19"	EACH					2				1	4									7	0		7
S.P.	TREE REMOVAL 19" TO LESS THAN 25"	EACH			1	1			1		1	2									6	0		6
S.P.	TREE REMOVAL 25" TO LESS THAN 31"	EACH			1							1									2	0		2
S.P.	TREE REMOVAL 31" TO LESS THAN 37"	EACH			2	1															3	0		3
S.P.	TREE REMOVAL 37" TO LESS THAN 43"	EACH				1															1	0		1
S.P.	TREE REMOVAL 43" TO LESS THAN 49"	EACH										1									1	0		1

PREL. TRACING R. Bright DESIGN A. F. Senor CHKD. W. L. Titus

A0396

CONTRACT	COUNTY	FEDERAL AID PROJECT Nº	SHEET Nº	TOTAL SHEETS
82-073-05	SUSSEX	BRF-1009(3)	6	155

DISTRIBUTION OF QUANTITIES

NOT COLLECTED - SEE SHT. 2&3

SPECIFICATION SECTION NUMBER	ITEM DESCRIPTION	UNIT	STA. – STA.	DR 51+00 TO DR 52+00	DR 52+00 TO DR 57+75	DR 57+75 TO DR 62+25	DR 62+25 TO DR 65+75	DR 65+75 TO DR 72+00	DR 72+00 TO DR 75+00	DR 75+00 TO DR 76+00	℄ 23+80 TO EB 29+00	EB 29+00 TO EB 34+85	DR 65+75 TO DR 72+00	EB 34+85 TO EB 37+85	EB 37+85 TO EB 40+50	F 131+00 TO F 136+97	TRAFFIC CONTROL PLANS	FROM CROSS SECTIONS			PARTICI-PATING	NON-PARTICI-PATING		PROPOSAL QUANTITY
		SH.#		18	19	20	21	22	23	24	25	26	27	28	29	30	50-53							
S.P.	ROTO-MILLING	S.Y.									52.06	159.26		55.36							267	0		267
S.P.	SAWING OF JOINTS - HOT MIX	L.F.									31		305	156							492	0		492
S.P.	SAWING OF JOINTS - CONCRETE	L.F.									40										40	0		40
S.P.	BUTT JOINTS	S.Y.		96.89								37.22	80.00		142.23	231.8					588	0		588
S.P.	BUILD CATCH BASINS WITH TOP SLABS	EACH						3													3	0		3
S.P.	ADJUSTING EXISTING SANITARY MANHOLE	EACH						5	1	2	1	3	1	2	2						17	0		17
S.P.	PLUGGING EXISTING PIPES	C.Y.						0.29	0.14	0.21	0.07	0.29									1	0		1
S.P.	ADJUSTING EXISTING VALVE COVERS	EACH						2	1	1	1	3	2								10	0		10
S.P.	18" STEEL SLEEVE	L.F.					58				100										158	0		158
S.P.	FURNISHING BORROW TYPE C FOR PIPE																							
	AND UTILITY TRENCH BACKFILL	C.Y.						288	143	181	169	241	21	20	12	131					1,076	131		1,207
S.P.	UNDERCUT EXCAVATION	C.Y.																			100	0		100
S.P.	CRUSHER RUN (TRM)	TON																			100	0		100
S.P.	MODIFIED SANITARY MANHOLE	EACH								1											1	0		1
S.P.	1½" GALV. CONDUIT UNDER NEW PAV'T OR IN SODDED TRENCH	L.F.																			463	0		463
S.P.	2½" GALV. CONDUIT UNDER EXIST. PAV'T	L.F.																			214	0		214
S.P.	2½" GALV. CONDUIT UNDER NEW PAV'T OR IN SODDED TRENCH	L.F.																			38	0		38
S.P.	3" NON-METALLIC CONDUIT UNDER EXIST. PAV'T	L.F.																			68	0		68
S.P.	CONDUIT JUNCTION WELL TYPE 1	EACH																			9	0		9
S.P.	SMALL CABINET BASE	EACH																			1	0		1
S.P.	POLE BASE TYPE 2	EACH																			2	0		2
S.P.	INSTALLATION OF DETECTOR WIRE	L.F.																			518	0		518
S.P.	INSTALL OR MOVE SPAN WIRE	EACH																			1	0		1
S.P.	PERMANET PAVEMENT STRIPING, 4IN.	L.F.																			9,000	0		9,000
S.P.	PERMANET PAVEMENT STRIPING	S.F.																			614 ~~300~~	0		614 ~~300~~ △

HARDESTY & HANOVER
CONSULTING ENGINEERS
NEW YORK, N.Y.

REVISIONS

△ ADDENDUM #2 REVISED COUNTY & REGIONAL PAVT. STRIPING 5/26/86

PREL. TRACING R. Bright DESIGN A.F. Senor CHKD. W.L. Titus

40389

CONTRACT	COUNTY	FEDERAL AID PROJECT Nº	SHEET Nº	TOTAL SHEETS
82-073-05	SUSSEX	BRF-1009(3)	7	155

TYPICAL SECTION

HARDESTY & HANOVER
CONSULTING ENGINEERS
NEW YORK, N.Y.

REVISIONS

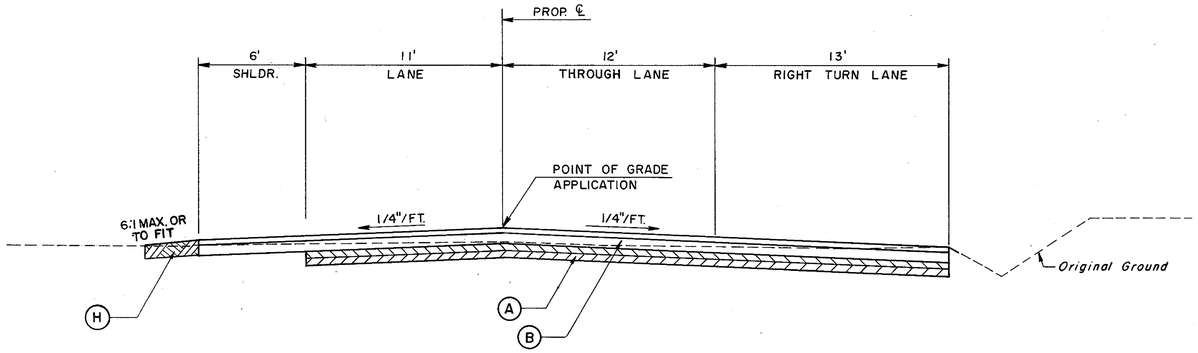

TEMPORARY DETOUR ROAD
STA. DR 68+12 TO STA. DR 69+48

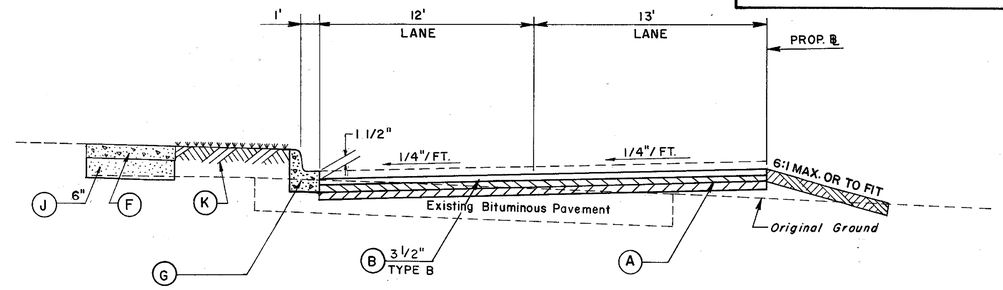

TEMPORARY DETOUR ROAD
(GROVE STREET TO FIFTH STREET ±)

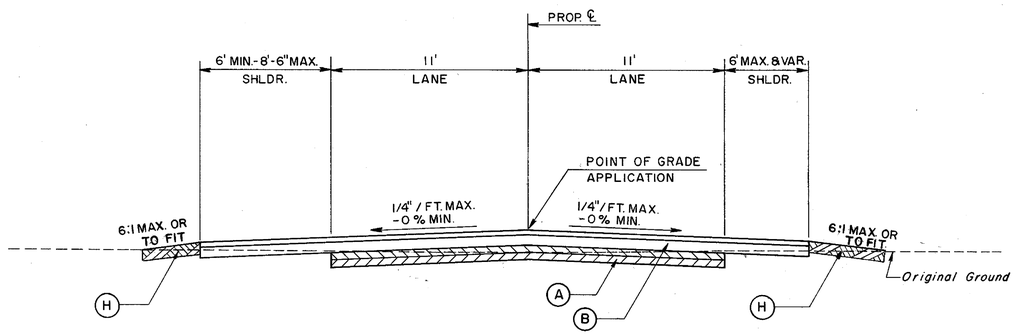

TEMPORARY DETOUR ROAD
STA. DR 62+00 TO STA. DR 62+25
STA. DR 65+20 TO STA. DR 66+87

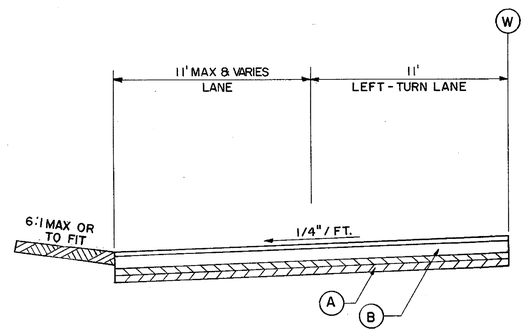

TEMPORARY DETOUR ROAD
STA. DR 51+20 TO STA. DR 54+03

SECTION SYMBOLS

- (A) 5" BITUMINOUS CONCRETE BASE COURSE
- (B) 5" HOT MIX, HOT LAID, BITUMINOUS CONCRETE PAVEMENT CONSISTING OF 1 1/2" TYPE C ON 3 1/2" TYPE B
- (C) 2" MINIMUM TYPE C HOT MIX
- (D) 4" MAXIMUM TYPE B HOT MIX
- (E) 5 1/2" MAXIMUM BITUMINOUS BASE COURSE
- (F) PCC SIDEWALK - 4" TH.
- (G) INTEGRAL PCC CURB & GUTTER - TYPE 3
- (H) TOPSOILING, SEEDING & MULCHING - 4" TH.
- (J) SELECT BORROW BASE
- (K) SODDING, 4" TOPSOIL
- (L) PCC CURB — TYPE I

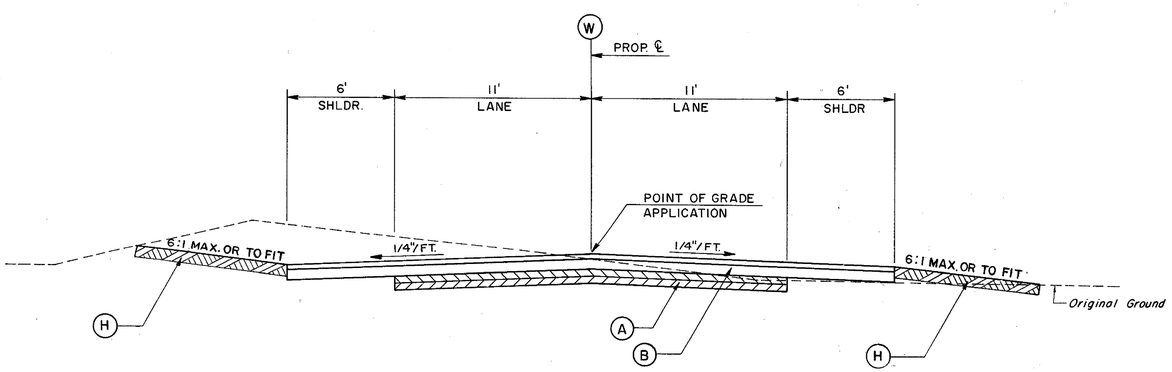

TEMPORARY DETOUR ROAD
STA. DR 54+03 TO STA. DR 62+00

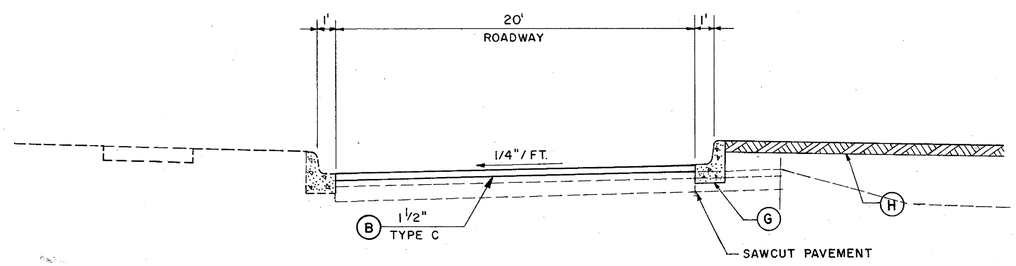

REHOBOTH AVENUE EXTENSION

TYPICAL SECTIONS
SCALE: HORIZ. 1" = 4'
VERT. 1" = 2'

PREL. TRACING A. Siani DESIGN W. L. Titus CHKD. A. R. Jalili

43359

CONTRACT	COUNTY	FEDERAL AID PROJECT Nº	SHEET Nº	TOTAL SHEETS
82-073-05	SUSSEX	BRF-1009(3)	8	155

TYPICAL SECTIONS

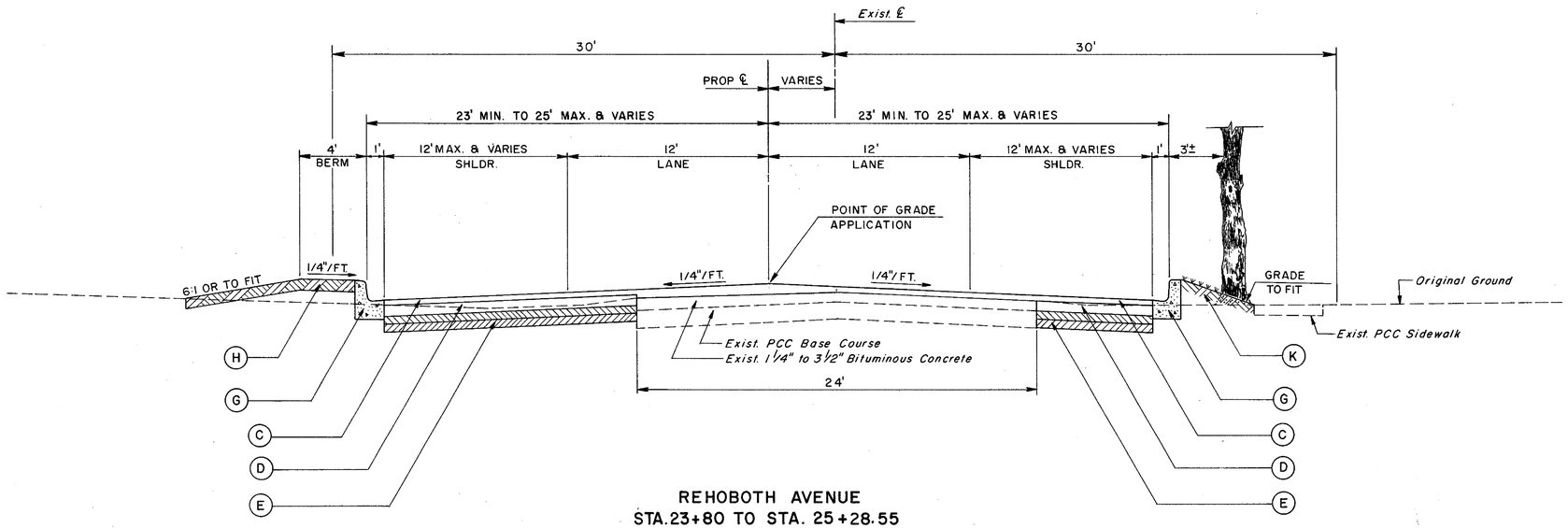

REHOBOTH AVENUE
STA.23+80 TO STA. 25+28.55

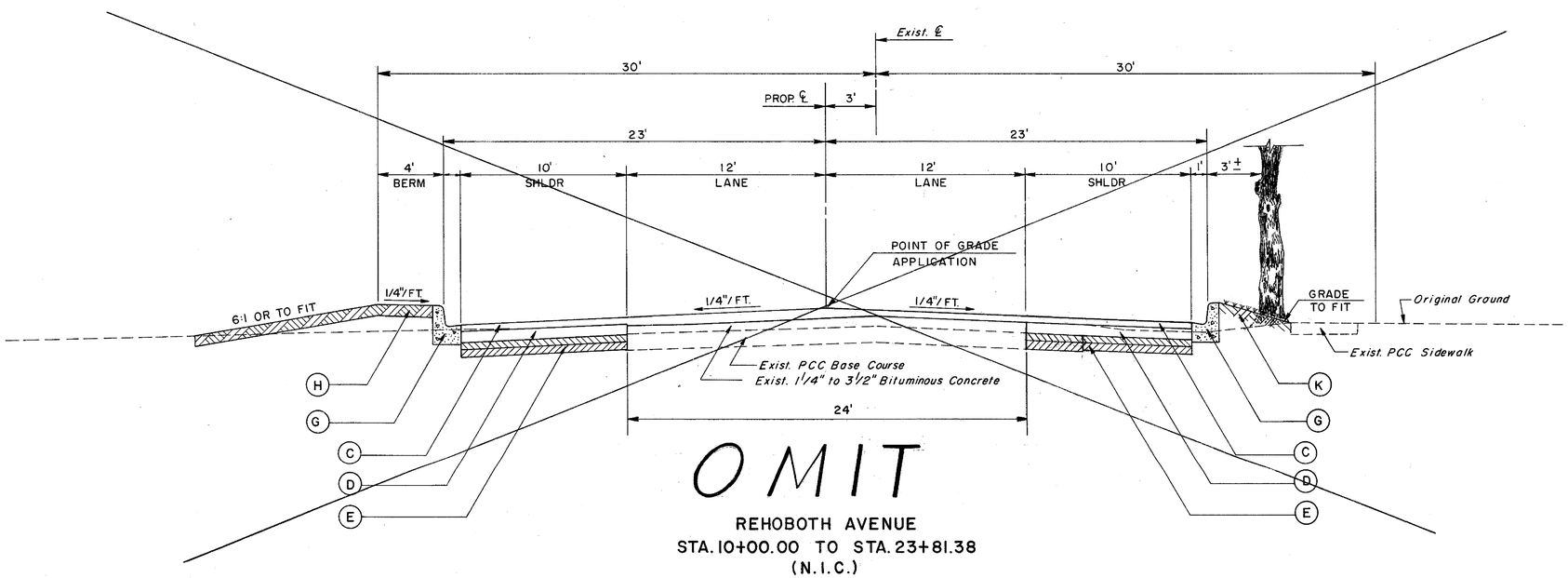

OMIT

REHOBOTH AVENUE
STA. 10+00.00 TO STA. 23+81.38
(N.I.C.)

SECTION SYMBOLS

- (A) 5" BITUMINOUS CONCRETE BASE COURSE
- (B) 5" HOT MIX, HOT LAID BITUMINOUS CONCRETE PAVEMENT CONSISTING OF 1 1/2" TYPE C ON 3 1/2" TYPE B
- (C) 2" MINIMUM TYPE C HOT MIX
- (D) 4" MAXIMUM TYPE B HOT MIX
- (E) 5 1/2" MAXIMUM BITUMINOUS BASE COURSE
- (F) PCC SIDEWALK 4" TH.
- (G) INTEGRAL PCC CURB & GUTTER TYPE 3
- (H) TOPSOILING, SEEDING & MULCHING 4" TH.
- (J) SELECT BORROW BASE
- (K) SODDING
- (L) PCC CURB — TYPE I

TYPICAL SECTIONS
SCALE: HORIZ. 1" = 4'
VERT. 1" = 2'

HARDESTY & HANOVER
CONSULTING ENGINEERS
NEW YORK, N.Y.

REVISIONS

PREL. TRACING A. Siani DESIGN W. L. Titus CHKD. A. R. Jolili

40389

CONTRACT	COUNTY	FEDERAL AID PROJECT Nº	SHEET Nº	TOTAL SHEETS
82-073-05	SUSSEX	BRF-1009(3)	9	155

TYPICAL SECTIONS

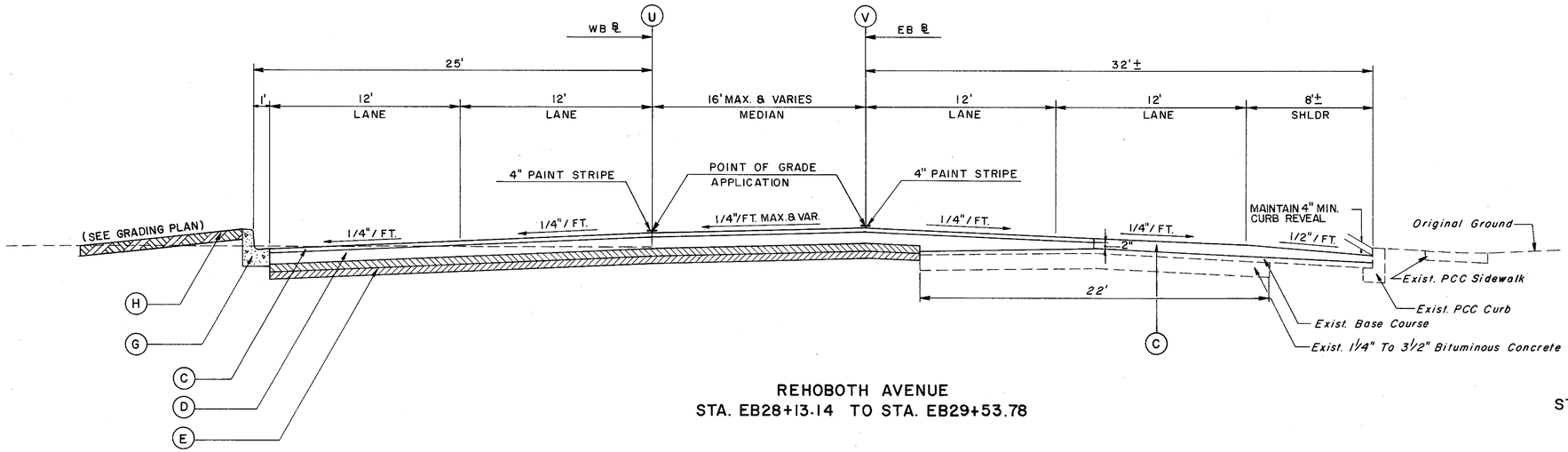

REHOBOTH AVENUE
STA. EB28+13.14 TO STA. EB29+53.78

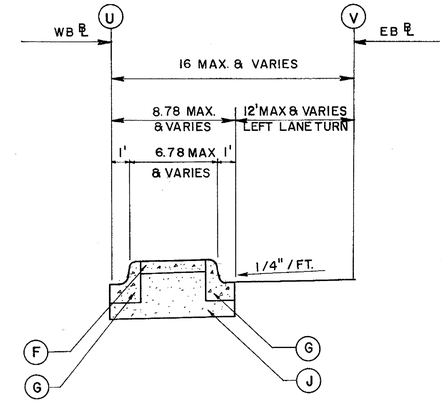

REHOBOTH AVENUE
STA. EB29+53.78 TO STA. EB31+30.70

SECTION SYMBOLS

- (A) 5" BITUMINOUS CONCRETE BASE COURSE
- (B) 5" HOT MIX, HOT LAID, BITUMINOUS CONCRETE PAVEMENT CONSISTING OF 1 1/2" TYPE C ON 3 1/2" TYPE B
- (C) 2" MINIMUM TYPE C HOT MIX
- (D) 4" MAXIMUM TYPE B HOT MIX
- (E) 5 1/2" MAXIMUM BITUMINOUS BASE COURSE
- (F) PCC SIDEWALK - 4" TH.
- (G) INTEGRAL PCC CURB & GUTTER - TYPE 3
- (H) TOPSOILING, SEEDING & MULCHING - 4" TH
- (J) SELECT BORROW BASE
- (K) SODDING, 4" TOPSOIL
- (L) PCC CURB – TYPE I

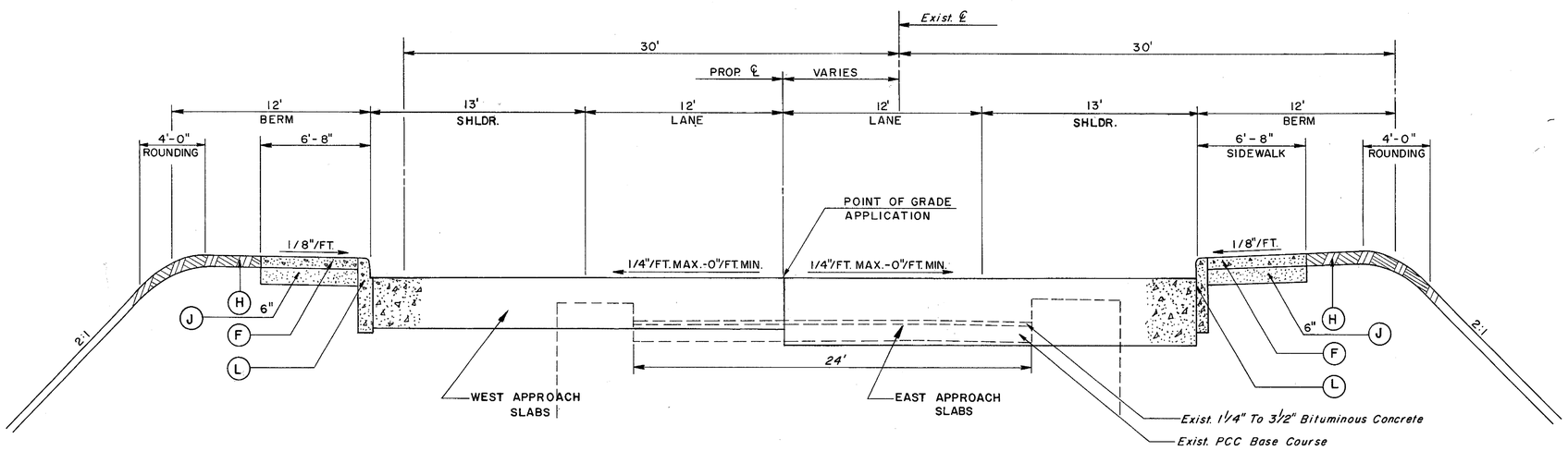

REHOBOTH AVENUE
BRIDGE APPROACH SLABS

TYPICAL SECTIONS
SCALE: HORIZ. 1" = 4'
VERT. 1" = 2'

HARDESTY & HANOVER
CONSULTING ENGINEERS
NEW YORK, N.Y.

REVISIONS

PREL. TRACING A. Siani DESIGN W.L. Titus CHKD. A.R. Jalili

4389

CONTRACT	COUNTY	FEDERAL AID PROJECT Nº	SHEET Nº	TOTAL SHEETS
82-073-05	SUSSEX	BRF-1009(3)	10	155

TYPICAL SECTIONS

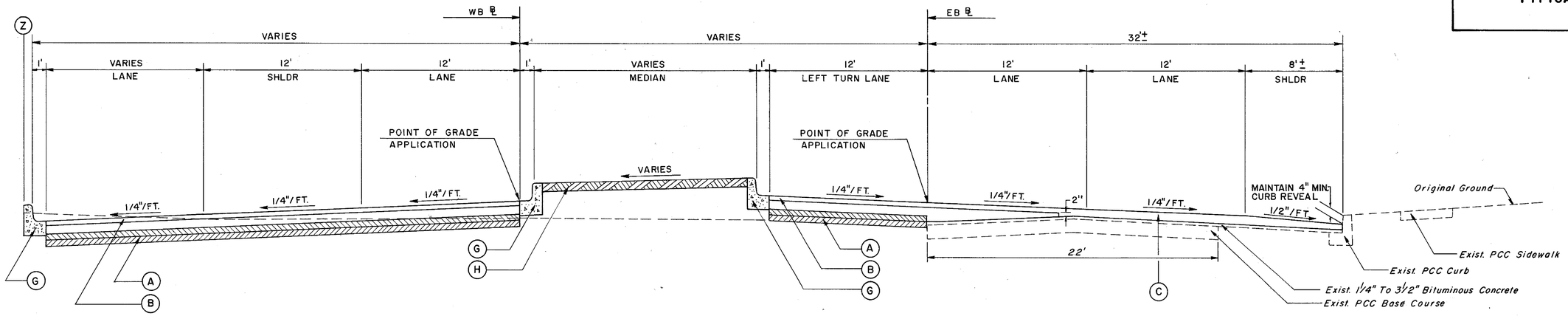

REHOBOTH AVENUE
STA. EB34+25.92 TO FIFTH STREET

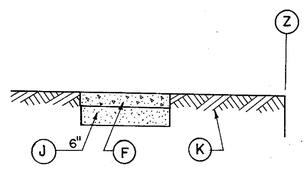

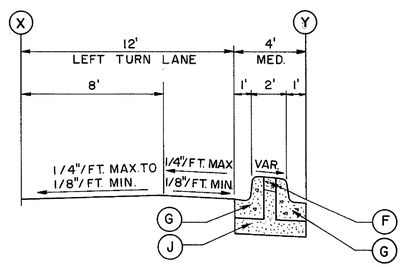

REHOBOTH AVENUE
GROVE STREET TO STA. EB34+25.92

SECTION SYMBOLS

- (A) 5" BITUMINOUS CONCRETE BASE COURSE
- (B) 5" HOT MIX, HOT LAID, BITUMINOUS CONCRETE PAVEMENT CONSISTING OF 1 1/2" TYPE C ON 3 1/2" TYPE B
- (C) 2" MINIMUM TYPE C HOT MIX
- (D) 4" MAXIMUM TYPE B HOT MIX
- (E) 5 1/2" MAXIMUM BITUMINOUS BASE COURSE
- (F) PCC SIDEWALK - 4" TH.
- (G) INTEGRAL PCC CURB & GUTTER - TYPE 3
- (H) TOPSOILING, SEEDING & MULCHING - 4" TH.
- (J) SELECT BORROW BASE
- (K) SODDING, 4" TOPSOIL
- (L) PCC CURB — TYPE I

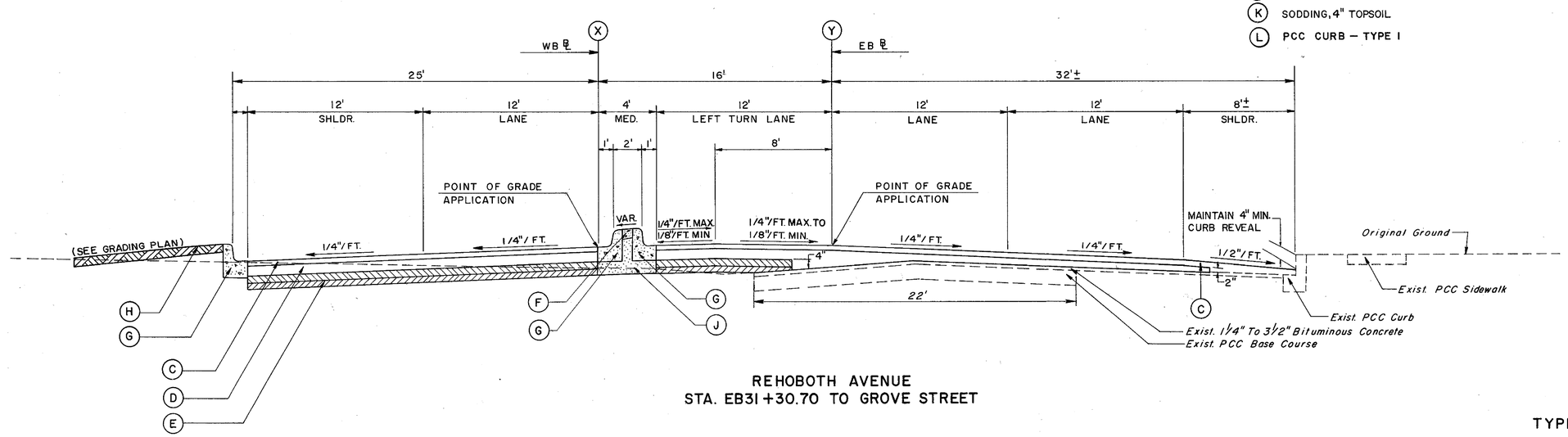

REHOBOTH AVENUE
STA. EB31+30.70 TO GROVE STREET

TYPICAL SECTIONS
SCALE: HORIZ. 1" = 4'
VERT. 1" = 2'

HARDESTY & HANOVER
CONSULTING ENGINEERS
NEW YORK, N.Y.

REVISIONS

PREL. TRACING A. Siani DESIGN W. L. Titus CHKD. A. R. Jalili

40389

HARDESTY & HANOVER
CONSULTING ENGINEERS
NEW YORK, N.Y.

CONTRACT	COUNTY	FEDERAL AID PROJECT Nº	SHEET Nº	TOTAL SHEETS
82-073-05	SUSSEX	BRF-1009(3)	11	155

CONSTRUCTION DETAILS

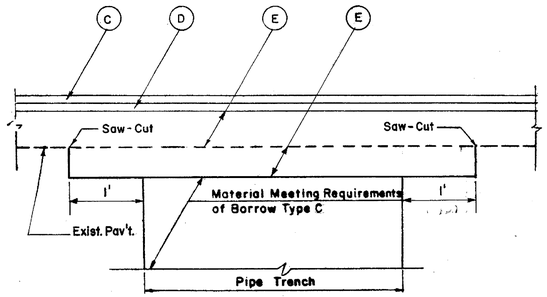

EXISTING PAVEMENT REPLACEMENT AT PIPE TRENCHES DETAIL

Not to Scale

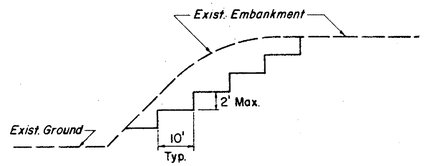

BENCHING DETAIL

Not to Scale

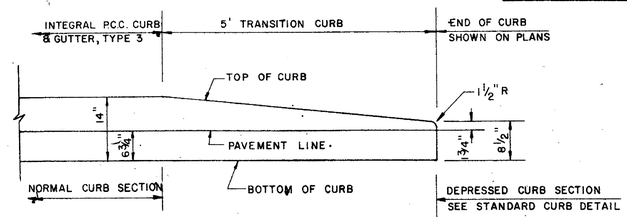

COST OF THE TRANSITION TO BE INCLUDED IN THE UNIT PRICE BID FOR THE CURB

END TRANSITION FOR INTEGRAL P.C.C. CURB & GUTTER, TYPE 3.

(TO BE USED AT END OF CURB)

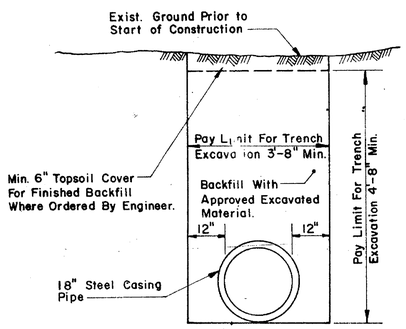

TYPICAL WATER PIPE TRENCH DETAIL

Not to Scale

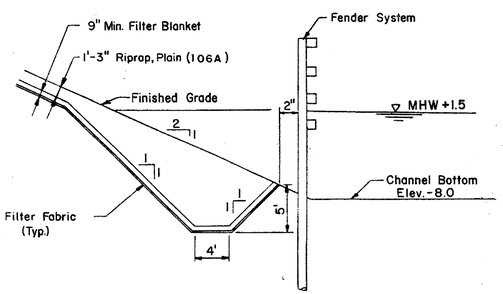

RIPRAP BLANKET & TOE DETAIL

Scale: 1/8" = 1'-0"

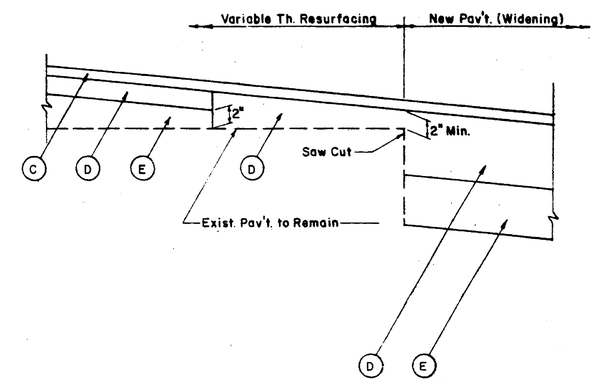

VARIABLE THICKNESS RESURFACING DETAIL

Not to Scale

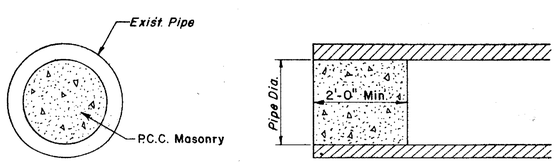

FRONT VIEW SIDE VIEW

PIPE PLUG DETAIL

Not to Scale

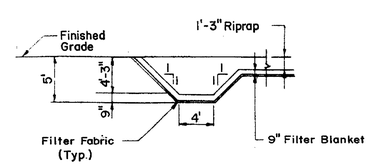

DETAIL OF CUTOFF AT EDGES OF RIPRAP BLANKET

Not to Scale

Note: Riprap Will Be Roadway Item

REVISIONS

PREL. TRACING R. Bright DESIGN A.R. Jolliff CHKD. W. L. Titus

42389

CONTRACT	COUNTY	FEDERAL AID PROJECT Nº	SHEET Nº	TOTAL SHEETS
82-073-05	SUSSEX	BRF-1009(3)	12	155

CONSTRUCTION DETAILS

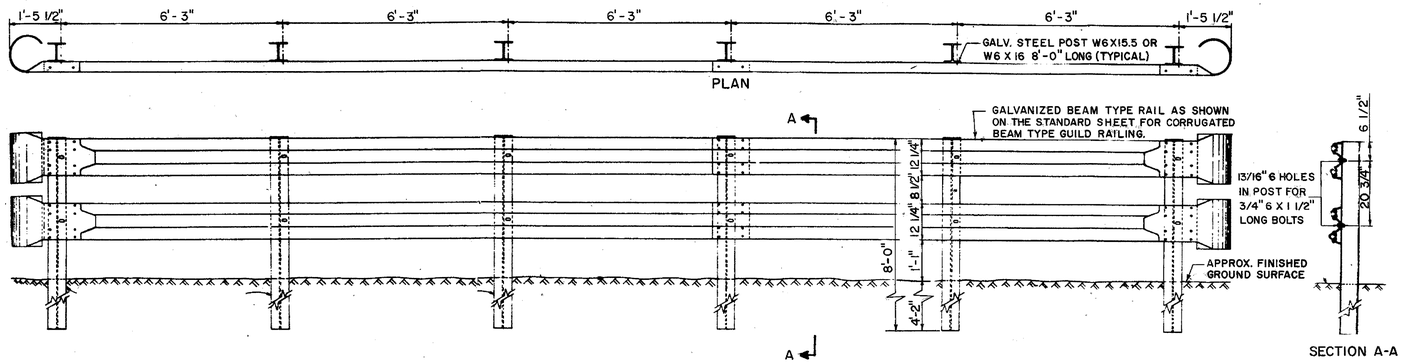

GALVANIZED STEEL BEAM GUARD RAIL
(PERMANENT HIGHWAY BARRIER)

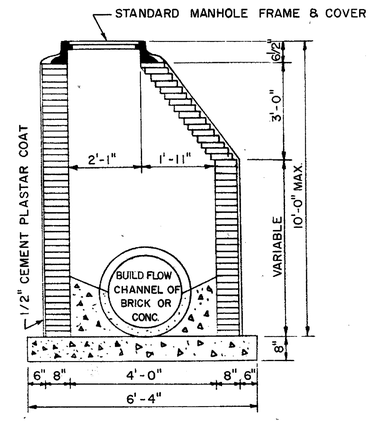

MODIFIED SANITARY MANHOLE

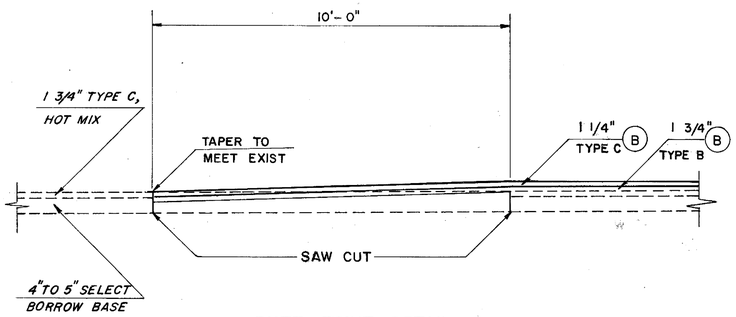

BUTT JOINT DETAIL
FIFTH STREET

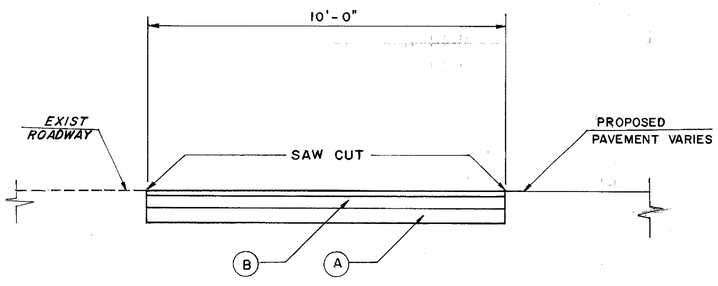

BUTT JOINT DETAIL

Scale: 1" = 2'

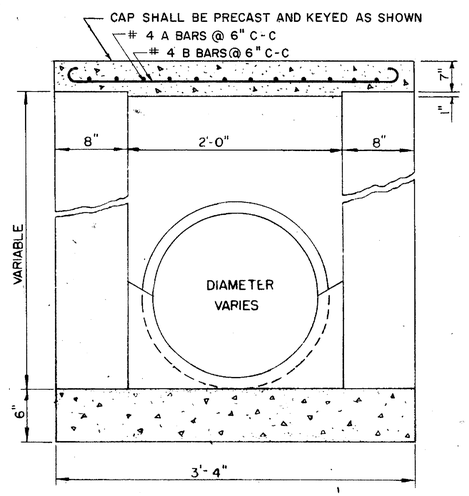

CAP FOR TYPE J CATCH BASIN

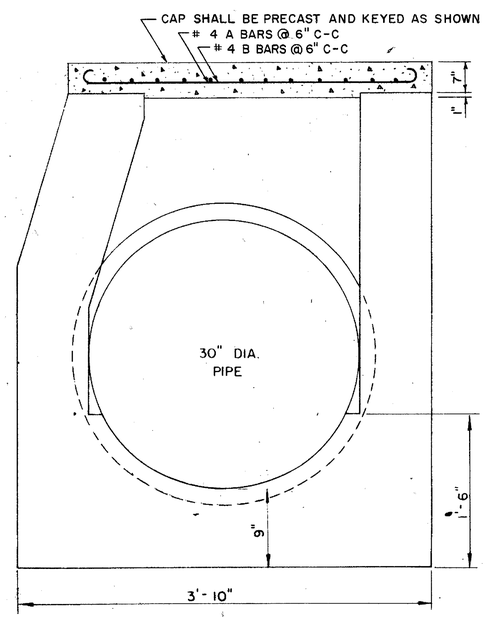

CAP FOR TYPE J-MOD CATCH BASIN

HARDESTY & HANOVER
CONSULTING ENGINEERS
NEW YORK, N.Y.

REVISIONS

DESIGN A.R. Jolli CHKD. W.L. Titus

PREL. TRACING R. Bright

A5358

TEMPORARY DETOUR ROAD

CONTRACT	COUNTY	FEDERAL AID PROJECT Nº	SHEET Nº	TOTAL SHEETS
82-073-05	SUSSEX	BRF-1009(3)	13	155

DRAINAGE TABLES

(30) CENTERLINE STATION DR 67 + 50 - 17' RT
PLACE 122 L.F. 15" R.C.P. @ .003 FT./FT.
BUILD PLUG
INV. 15" OUT 16.67

(31) CENTERLINE STATION DR 66 + 25 - 17' RT
PLACE ~~34~~ 32 L.F. 15" R.C.P. @ .003 FT./FT.
INV. 15" (30-31) IN = ~~16.30~~ 16.08
INV. 15" OUT = ~~16.28~~ 16.08 BUILD TYPE "B" C.B.
TOP GRATE - 22.85

(32) CENTERLINE STATION DR 66 + 23 - 17' LT
PLACE ~~84~~ 67.9 L.F. 30" R.C.P. @ .002 FT./FT.
BUILD TYPE "B" C.B. 3 MOD
INV. 15" (31-32) IN = ~~16.18~~ 15.71
INV. 30" (33-32) IN = ~~12.71~~ 12.84
INV. 30" OUT = ~~12.69~~ 12.84
TOP GRATE = 22.89

(33) CENTERLINE STATION DR 66 + 95 - 3' RT
PLACE ~~72~~ 70.4 L.F. 30" R.C.P. @ .002 FT./FT.
INV. 30" OUT = MEET EXISTING INV.
TOP GRATE = 23.52

(34) CENTERLINE STATION DR 65 + 05 - 37' LT
PLACE ~~20~~ 18 L.F. 30" R.C.P.
GRADE TO 35

(35) CENTERLINE STATION DR 64 + 85 - 26 LT
PLACE 30" END SECTION
INV. OUT = 7.64

(36) CENTERLINE STATION DR 65 + 60 - 16' LT
PLACE ~~50~~ 48 L.F. 30" R.C.P.
~~GRADE TO 34~~ TOP GRATE - 23.14
INV. OUT = ~~12.64~~ 12.02
INV. IN - 12.02

(41) CENTERLINE STATION DR 58 + 05 - 17' LT
PLACE ~~44 L.F.~~ 43.41 15" R.C.P. @ .003 FT./FT.
BUILD TYPE "B" C.B.
TOP GRATE = 22.02 14
INV. 15" OUT = 18.50 64

(42) CENTERLINE STATION DR 58 + 05 - 28' RT
PLACE ~~400~~ 397.38 L.F. 15" R.C.P. @ .003 FT./FT.
BUILD TYPE "B" C.B.
TOP GRATE = 21.29
INV. 15" (41-42) IN = 18.36 68
INV. 15" OUT = 18.34

(44) CENTERLINE STATION DR 62 + 00 - 17' LT
PLACE ~~34~~ 32.4 L.F. 15" R.C.P. @ .003 FT./FT.
BUILD TYPE "B" C.B.
TOP GRATE = ~~22.82~~ 22.09
INV. 15" (44-45) OUT = ~~19.00~~ 18.94

(45) CENTERLINE STATION DR 62 + 00 - 17' RT
PLACE ~~44~~ 48.92 L.F. 15" R.C.P. @ .003 FT./FT.
BUILD TYPE "B" C.B.
TOP GRATE = ~~22.82~~ 22.96
INV. 15" (44-45) IN = ~~18.89~~ 17.96
INV. 15" (42-45) IN = ~~17.14~~ 17.26
INV. 15" OUT = ~~17.12~~ 17.31

(46) CENTERLINE STATION 62 + 45 - 17' RT
PLACE ~~96~~ 98.5 L.F. 15" R.C.P. @ .097 FT./FT.
BUILD TYPE "B" C.B.
INV. 15" (45-46) IN = 16.97
INV. 4" C1 IN = MEET EXISTING
INV. 15" OUT = 16.96
TOP GRATE = 23.11

(58-2) BASELINE STATION DR. 76+55-43' RT
PLACE 184 L.F. 15" RCP
BUILD TYPE 'J' C.B.
TOP GRATE 21.76
INV. 15" (61-58-2) IN = 14.48
INV. 15" (58-1-58-2) OUT = 14.41

(58-1) BASELINE STATION DR 76+54-8' RT
PLACE 82 L.F. 15" RCP
BUILD TYPE 'C' MANHOLE
TOP GRATE = 22.16
INV. 15" (MH62-58-1) IN = 11.67
INV. 15" (58-58-1) IN = 16.82
INV. 15" (58-2-58-1) IN = 14.82
INV. 15" (60a-58-1) IN = 16.82
INV. 24" (65-1-58-1) OUT = 14.82

(47) CENTERLINE STATION 63 + 40 - 45' RT
PLACE 15" FLARED END SECTION
INV. OUT = 7.64

(58) BASELINE STATION DR 76 + 23 - 26' LT
PLACE ~~128~~ 163 L.F. 24" R.C.P., CL III @ .002 FT./FT
BUILD TYPE "J" C.B.
TOP GRATE = 20.~~94~~ 96
~~INV. 18" (57-58) IN = 14.88~~
INV. 15" (61-58) ~~IN = 17.45~~ 17.14
~~INV. 24" OUT = 14.38~~

(159) BASELINE STATION DR 74 + 94 - 24' RT
PLACE ~~48~~ 34.40 L.F. 15" R.C.P., CL III @ .003 FT./FT.
BUILD PLUG
INV. 15" OUT = 14.99

(61) BASELINE STATION DR 76 + 25 - 20' RT
PLACE 40 L.F. 15" R.C.P., CL III @ .005 FT./FT.
BUILD PLUG
INV. 15" OUT = 17.65

(62) BASELINE STATION DR 75 + 46 - 13' RT
PLACE 20 L.F. 15" R.C.P., CL III @ .100 FT./FT.
INV. OUT 17.80

(65) BASELINE STATION DR 74 + 94 - 26' LT
~~PLACE 186 L.F. 24" R.C.P.,~~ CL III @ .002 FT./FT.
BUILD TYPE "J" C.B.
TOP GRATE = 21.~~94~~ 92
~~INV. 24" (58-56) IN = 14.12~~ (65-1-65) IN = 19.77
INV. 15" ~~(159-56) IN = 14.85~~
INV. ~~24"~~ 15" OUT = ~~14.10~~ 19.26

(66) BASELINE STATION DR 73 + 05 - 26' LT
PLACE ~~28~~ 15 L.F. 15" R.C.P., CL III @ .003 FT./FT.
BUILD TYPE "J" C.B.
TOP GRATE = 21.~~73~~ 85
INV. 15" OUT = ~~16.00~~ 15.68

(67) BASELINE STATION DR 71 + 90 - 26' RT
PLACE ~~34~~ 29 L.F. 15" R.C.P. @ .003 FT./FT.
BUILD TYPE "J" C.B.
TOP GRATE = 22.50 44
INV. 15" OUT = ~~15.80~~ 14.99

(68) BASELINE STATION DR 71 + 90 - 8' RT
PLACE 160 L.F. 30" R.C.P. @ .002 FT./FT.
BUILD TYPE ~~"B" C.B.~~ "J" MOD C.B. - CAPPED
TOP GRATE =
INV. 15" (67-68) IN = 15.70
INV. 15" (69-68) IN = 16.29
INV. 24" (71-68) IN = 13.38
OMV/ 30" OUT = 12.88

(69) BASELINE STATION DR 71 + 90 - 14' RT
PLACE 6 L.F. 15" R.C.P. @ .003 FT./FT.
BUILD TYPE "J" ~~C.B.~~ MOD C.B
TOP GRATE = ~~22.41~~ 22.05
INV. 15" (~~72~~-69) IN = ~~16.33~~ 13.04
INV. 15" ~~OUT~~ (68-69) IN = ~~16.31~~ 13.04
INV. 15" (69-1-69) IN = 16.20

(70) BASELINE STATION DR 70 + 59 - 14' RT
PLACE 24 L.F. 30" R.C.P. @ .003 FT./FT.
BUILD TYPE "B" C.B.
TOP GRATE = ~~23.03~~
INV. 30" (~~68~~-70) IN = 12.~~81~~ 76
INV 30" (69-70) OUT = 12.76

(64-1) BASELINE STA. EB. 34+80-36' LT
PLACE 64.6 L.F. 15" RCP
BUILD TYP 'J' C.B.
TOP GRATE 22.~~52~~
INV. 15" (72-64-1) 16.23

(71) BASELINE STATION DR 73 + 10 - 2' RT
PLACE ~~120~~ 112 L.F. 24" R.C.P., CL III @ .002 FT./FT.
BUILD STANDARD MANHOLE
TOP RIM = ~~22.34~~ 23.25
INV. 24" (~~65~~-71) IN = 13.~~72~~ 74
INV. 15" (66-71) IN = ~~15.92~~ 14.95
INV. 15" (90-71) IN = ~~14.46~~ 6.5
INV. 24" OUT = 13.~~70~~ 74

(172) BASELINE STATION DR 71 + 90 - 56' RT
PLACE 42 L.F. 15" R.C.P. @ .003 FT./FT.
BUILD PLUG
INV. 15" OUT = 16.46

(73) BASELINE STATION DR 70 + 31 - 80' RT
PLACE ~~80~~ 56 L.F. 15" R.C.P. @ .003 FT./FT/
BUILD PLUG
INV. 15" OUT = 17.70

(74) BASELINE STATION DR 70 + 31 - 20' RT
PLACE 44 L.F. 30" R.C.P. @ .003 FT./FT.
BUILD TYPE "J" MODIFIED C.B. AND CAP
TOP GRATE = ~~(DO NOT SET)~~ 22.81
INV. 30" (68-74) IN = 12.56 54
INV. 15" (85-74) IN = ~~15.91~~ 13.95
INV. 15" (73-74) IN = 17.52 61
INV. 30" OUT = 12.54

(75) BASELINE STATION WB 32 + 25 - 25' LT
~~PLACE 124 L.F. 30" R.C.P. @ .002 FT./FT.~~
BUILD TYPE "J" MODIFIED C.B.
MH2 TOP GRATE = 23.29
INV. 30" ~~(85-79)~~ 85-79 IN = ~~12.31~~ 12.02
~~INV. 15" (75-75) IN = 14.91~~
INV. 30" IN ~~OUT~~ 85-75 = ~~12.29~~ 11.99

OMIT (76) BASELINE STATION WB 32 + 16 - 4' RT
PLACE 30 L.F. 15" R.C.P. @ .003 FT./FT.
BUILD PLUG
INV. 15" OUT = 15.00

(80) BASELINE STATION WB 31 + 00 - 25' LT
PLACE ~~234~~ 82 L.F. ~~30"~~ 15" R.C.P. @ .002 FT./FT.
BUILD TYPE "J" MODIFIED C.B.
TOP GRATE = 23.~~51~~ 36
~~INV. 30" (75-80) IN = 12.04~~
~~INV. 15" (181-80) IN = 14.91~~
INV. ~~30"~~ 15" OUT = ~~12.02~~ 16.04

(81) BASELINE STATION WB 31 + 00 - 4' RT
PLACE ~~30~~ 52.9 L.F. 15" R.C.P. @ .003 FT./FT.
BUILD ~~PLUG~~ TYPE 'J' C.B. TOP GRATE 23.20
INV. 15" OUT = ~~15.00~~ 16.45

OMIT (182) STATION WB. 27 + 81 - 6' LT
PLACE ~~30~~ 30.5 L.T. 15" R.C.P. @ .003 FT./FT.
BUILD PLUG
INV. 15" OUT = 18.34

(83) STATION WB 28 + 07 - 25' LT
PLACE 70 L.F. 30" R.C.P. @ .004 FT./FT.
BUILD TYPE "J" MODIFIED C.B.
MH3 TOP GRATE = 24.42
INV. 30" (~~80~~-83) IN = ~~11.43~~ 10.97
INV. 15" (~~182~~-83) IN = 18.25 23
INV. 30" OUT = ~~11.41~~ 10.97

(84) CENTERLINE STATION 27 + 36 - 52' LT
PLACE 30" R.C.P., FLARED END SECTION
INV. 30" IN = 11.10
INV. OUT = 11.06

(65-1) BASELINE STATION DR 74+94-16' LT
PLACE 179.3 L.F. 24" RCP
BUILD TYP. STD MANHOLE
TOP GRATE 22.24
INV. 15" (66-65-1) IN = 18.49
INV. 24" (58-65-1) IN = 19.40
INV 15" (91-65-1) IN = 19.40
INV. 24" (71A-65-1) OUT = 19.40

(65-2) BASELINE STATION DR 74+76-51' LT
TOP GRATE 22.01
INV. 12" (66a-65-2) OUT = 20.00
PLACE 36 L.F. 12" C.S.P.
BUILD TYPE "B" C.B.

(85) BASELINE STATION DR 70 + 40 - 4' LT
PLACE ~~22~~ 23.3 L.F. 15" R.C.P. @ .003 FT./FT.
BUILD TYPE "J" C.B. AND CAP
TOP GRATE = ~~(DO NOT SET)~~ 23.12
INV. 15" (87-85) IN = ~~16.00~~ 14.80
INV. 15" (86-85) IN = ~~16.00~~ 14.99
INV. 15" OUT = ~~15.98~~ 14.06

(86) BASELINE STATION DR 70 + 75 - 26' LT
PLACE ~~40~~ 23.7 L.F. 15" R.C.P. @ .003 FT./FT.
BUILD TYPE "J" C.B.
TOP GRATE = 22.76 69
INV. 15" OUT = ~~16.12~~ 15.33

(87) BASELINE STATION DR 70 + 19 - 40' LT
PLACE ~~44~~ 40.7 L.F. 15" R.C.P. @ .003 FT./FT.
BUILD ~~PLUG~~ TYPE 'B' C.B
INV. 15" OUT = ~~16.13~~ 14.93
TOP GRATE = 23.00

(88) BASELINE STATION DR 69 + 87
PLACE ~~34~~ 32.4 L.F. 15" R.C.P. @ .003 FT./FT.
BUILD ~~PLUG~~ 'J' C.B
INV. 15" OUT = ~~18.97~~ 16.34
TOP GRATE = 22.80

(89) BASELINE STATION DR 69 + 87 - 34' RT
PLACE ~~58~~ 59.2 L.F. 30" R.C.P. @ .002 FT./FT.
BUILD TYPE "J" MODIFIED C.B. AND CAP
TOP GRATE = ~~(DO NOT SET)~~ 23.19
INV. 30" (74-89) IN = ~~12.45~~ 16.04
INV. 15" (88-89) IN = ~~18.84~~ 16.04
INV. 30" OUT = 12.43 08

(90) BASELINE STATION DR 73 + 56 - 44' RT
PLACE 64 L.F. 15" R.C.P. @ .002 FT./FT.
BUILD ~~PLUG~~ 'J' C.B. TOP GRATE 22.52
INV. 15" OUT = ~~14.64~~ 15.52
INV 15" IN - 17.35

(170) BASELINE STA EB 36+26 - 30' RT
PLACE 34.34 L.F. 15" RCP
TOP GRATE - 21.67
INV 15" OUT - 17.58

(CB 1) BASELINE STA. WB 30+59-40' LT
PLACE 66.4 L.F. 15" RCP
TOP GRATE = 23.46
BUILD TYPE 'J' C.B.
INV. 15" OUT = 19.16

(CB 2) BASELINE STA. WB 29+72-43' LT
PLACE 46.9 L.F. 15" RCP
BUILD TYPE "J" C.B.
TOP GRATE = 23.43
INV. 15" (CB1-CB2) IN = 18.52
INV 15" (CB3-CB2) OUT = 18.52

CONTRACT	COUNTY	FEDERAL AID PROJECT Nº	SHEET Nº	TOTAL SHEETS
82-073-05	SUSSEX	BRF-1009(3)	14	155

DRAINAGE TABLES

FIFTH STREET

(B 3) BASE LINE STATION 29+34 - 19' LT
PLACE 2.6 LF 15 RCP
BUILD TYPE 'J' C.B
TOP GRATE = 23.86
INV. 15" (CB2-CB3) IN 16.42
INV. 15" (MH3-CB3) OUT 16.42

(51) CENTERLINE STATION F 135 + 23 - 17' RT
PLACE ~~34~~ 50.86 L.F. 15" R.C.P., CL III @ .003 FT./FT.
BUILD TYPE "B" C.B.
TOP GRATE = 22.~~24~~22
INV. 15" OUT = ~~16.62~~ 19.21

(52) CENTERLINE STATION F 135 + 23 - 17' LT
PLACE 224 L.F. 15" R.C.P., CL III @ .003 FT./FT.
BUILD TYPE "B" C.B.
TOP GRATE = 22.~~32~~10
INV. 15" IN = ~~16.52~~ 18.20
INV. 15" OUT ~~16.50~~ 18.20

(53) CENTERLINE STATION F 133 + 00 - 17' RT
PLACE 34 L.F. 15" R.C.P., CL III @ .003 FT./FT.
BUILD TYPE "B" C.B.
TOP GRATE = 21.~~81~~ 73
INV. 15" OUT = ~~16.50~~ 19.03

(54) CENTERLINE STATION F 133 + 00 - 17' LT
PLACE 280 L.F. 18" R.C.P., CL III @ .002 FT./FT.
BUILD TYPE "B" C.B.
TOP GRATE = 21.~~73~~ 70
INV. 15" (52-54) IN = ~~15.83~~ 17.40
INV. 15" (53-54) IN = ~~16.40~~ 19.90
INV. 18" OUT = ~~15.56~~ 17.42

(55) CENTERLINE STATION F 130 + 21 - 17' RT
PLACE 34 L.F. 15" R.C.P., CL III @ .003 FT./FT.
BUILD TYPE "A" C.B.
TOP GRATE = 20.~~77~~ 92
INV. 15" OUT = ~~15.50~~ 18.04

(56) CENTERLINE STATION 130 + 21 - 17' LT
PLACE 12 L.F. 18" R.C.P., CL III @ .003 FT./FT.
BUILD TYPE "J" C.B.
TOP GRATE = ~~20.38~~ 21.58
INV. 18" (54-56) IN = ~~15.00~~ 17.63
INV. 15" (55-56) IN = ~~16.40~~ 19.08
INV. 18" OUT = ~~14.98~~ 17.55

(57) OMIT
CENTERLINE STATION 130 + 08 - 21' LT
PLACE 12 L.F. 18" R.C.P., CL III @ .003 FT./FT.
BUILD TYPE "J" C.B.
INV. 18" (56-57) IN = 14.94
INV. 15" (62-57) IN = 15.80
INV. 18" OUT = 14.92

(39) CENTERLINE STATION C 103 + 17 - 18' RT
~~BUILD TYPE "J-MOD" C.B.~~ ADJUST EXISTING 'PWI' C.B
TOP GRATE = 23.69
MEET EXISTING INV.

(40) OMIT
CENTERLINE STATION C 102 + 80 - 18' RT
PLACE 34 L.F. 30" R.C.P. @ .002 FT./FT.
BUILD TYPE "J-MOD" C.B.
TOP GRATE = 23.81
INV. 30" OUT = 14.19

(A) CENTERLINE STATION 27+55 - 54' RT
PLACE 31 L.F. 12" RCP
BUILD TYPE 'B' C.B.
TOP GRATE = 22.96
INV. 12" (BA) IN 21.54
INV. 12" OUT 21.54

(B) CENTERLINE STATION 27+85 - 64' RT
PLACE 24 LF 12" RCP
BUILD TYPE 'B' C.B.
TOP GRATE = 23.0
INV. 12" OUT 21.82

(C) CENTERLINE STATION 27+93 - 44' LT
PLACE 32 L.F. 12" RCP
BUILD TYPE 'B' C.B.
TOP GRATE = 23.72
INV. 12" OUT = 22.22

(D) BASELINE STATION WB 40+45 - 22' RT
PLACE 75 LF 12" RCP
BUILD TYPE 'B' C.B.
TOP GRATE = 21.57
INV. 12" OUT = 20.05

(25) CENTERLINE STATION 25 + 06 -24' RT
PLACE ~~48~~ 47.5 L.F. 15" R.C.P. @ .003 FT./FT.
BUILD TYPE "J" C.B.
TOP GRATE = 23.~~98~~ 91
INV. OUT = 17.~~40~~ 31

(26) CENTERLINE STATION 25 + 06 - 24' LT
PLACE 48 L.F. 36" R.C.P. @ .005 FT./FT.
BUILD TYPE "J" MODIFIED C.B.
TOP GRATE = 23.~~98~~ 95
INV. 15" (25-26) IN = ~~16.95~~ 16.95
INV. 36" OUT = ~~10.00~~

(27) CENTERLINE 25 + 43 - 56' LT
PLACE 52 L.F. 36" R.C.P. @ 005 FT./FT.
BUILD STANDARD M.H. TOP GRATE 24.73
INV. 36" (27-28) IN = 9.~~60~~ 75
INV. 36" OUT = 9.~~58~~ 75

(28) CENTERLINE STATION 26 + 00 - 46' LT
PLACE 36" END SECTION
INV. OUT = 9.32

(30A) CENTERLINE STATION DR 67 + 50 - 17' RT
~~BUILD TYPE "J" C.B.~~ ABANDONED
TOP GRATE = 23.65
INV. 15" OUT = 16.67

(37) CENTERLINE STATION DR 68 + 40 - 4' RT
BUILD STANDARD M.H. OMIT CAPPED EXIST. "PWI" C.B.
TOP RIM = 23.92
INV. 30" (40-37) IN = 14.12
INV. 15" (38-37) IN = 15.35
INV. 30" OUT = MEET EXISTING

(38) OMIT
CENTERLINE STATION DR 69 + 22 - 8' RT
PLACE 82 L.F. 15" R.C.P. @ .003 FT./FT.
BUILD TYPE "A" C.B.
TOP GRATE = 22.40
INV. 15" OUT = 15.60

(56A) CENTERLINE STATION F 130 + 21 - 17'LT
ADJUST EXISTING C.B.
TOP GRATE = ~~20.51~~ 21.58

(57A) OMIT
CENTERLINE STATION F 130 + 08 - 21' LT
ADJUST EXISTING C.B.
TOP GRATE = 20.71

(58A) BASELINE STATION 76 + 23 - 26' LT
ADJUST EXISTING C.B.
TOP GRATE = ~~21.07~~ 20.96

(59) BASELINE STATION EB 37 + 77 - 32' RT
PLACE 44 L.F. 15" R.C.P. @ .003 FT./FT.

BUILD TYPE "B" C.B.
TOP GRATE = 21.~~68~~ 69
INV. OUT = ~~16.13~~ 17.41

(60) BASELINE STATION EB 38 + 87 - 32' RT
PLACE ~~48~~ 46.2 L.F. 15" R.C.P. @ .003 FT./FT.
ADJUST EXISTING C.B.
TOP GRATE = 21.~~48~~ 35
INV. 15" (61A-60) OUT = 19.48

(MH 1) BASELINE STATION WB 32+24 - 17' LT
PLACE 116.7 L.F. 30" RCP
BUILD TYPE 'B' MANHOLE
TOP GRATE = 23.80
INV. 15" (77 - MH1) IN = 14.95
INV. 30" (75 - MH1) IN = 12.16
INV. 30" (MH2 - MH1) OUT = 12.16

REHOBOTH AVENUE

(MH 2) BASELINE STA WB 31+00 - 76' LT
PLACE 153.3 LF 30" RCP
BUILD TYPE 'B' MANHOLE
TOP GRATE = 23.99
INV. 30" (MH1 - MH2) IN: 11.69
INV. 15" (50 - MH2) IN = 15.20
INV. 15" (81 - MH2) IN = 15.28
INV. 30" (MH2 - MH3) OUT: 11.29

(61A) BASELINE STATION EB 39 + 08 - 12' LT
REMOVE PLUG
BUILD TYPE "J" C.B.
TOP GRATE = 22.~~14~~ 20
INV 15" (60-61A) IN 18.46
INV 15" (59-2 61A) OUT 15.21

(62A) BASELINE STATION WB 39 + 31 - 14' LT
ADJUST EXISTING MANHOLE
TOP RIM = 21.36

(63) BASELINE STATION EB 39 + 72
ADJUST EXISTING C.B.
TOP GRATE = 21.~~78~~ 75

(64) BASELINE STATION WB 39 + 77 - 4' RT
ADJUST EXISTING C.B.
TOP GRATE = 21.79

(65) BASELINE STATION RE 74 + 94 - 21' LT
ADJUST EXISTING C.B.
TOP GRATE = ~~22.07~~ 21.92

(66A) BASELINE STATION RE 73 + 05 - 21' LT
ADJUST EXISTING C.B.
TOP GRATE = 21.85

(67A) BASELINE STATION RE 71 + 90 - 21' LT
ADJUST EXISTING C.B.
TOP GRATE = 22.~~82~~ 44

(68A) BASELINE STATION DR 71 + 90 - 12' RT
ADJUST EXISTING C.B. CAPPED
TOP GRATE = 22.75

(170) BASELINE STATION EB 36 + 25 - 32' RT
PLACE 34 L.F. 15" R.C.P. @ .003 FT./FT.
BUILD TYPE "J" C.B.
TOP GRATE = 21.~~94~~ 67
INV. 15" OUT = 16.29

(71) BASELINE STATION WB 36 + 00 - 30' LT
ADJUST EXISTING MANHOLE

(72) BASELINE STATION EB 34 + 80 - 32' RT
PLACE ~~30~~ 64.6 L.F. 15" R.C.P. @ .003 FT./FT.
BUILD TYPE "J" C.B.
TOP GRATE = 22.~~22~~ 21
INV. OUT = ~~16.55~~ 18.01

(73) BASELINE STATION EB 33 + 27 - 4' LT
~~REMOVE PLUG~~ CAPPED
BUILD TYPE "J" C.B.
TOP GRATE = 23.46
INV. OUT = 17.70

(74A) CENTERLINE STATION G 111 + 76 - 22' LT
REMOVE CAP
BUILD TYPE "J" MODIFIED C.B.
TOP GRATE = 22.~~84~~ 81

(76) OMIT
BASELINE STATION WB 32 + 16 - 4' RT
REMOVE PLUG
BUILD TYPE "J" C.B.
TOP GRATE = 23.77
INV. 15" (77-76) IN = 15.02
INV. 15" OUT 15.00

(MH 3) BASELINE STA. WB 29+30 - 16' LT
PLACE 158.3 LF 30" RCP
BUILD TYPE 'B' MANHOLE
TOP GRATE = 24.05
INV. 30" (MH2 - MH3) IN = 11.17
INV 15" (83 - MH3) IN = 16.33
INV. 30" (83 - MH3) OUT = 11.17

(77A) BASE LINE STA EB 33+32 - ~~32~~ LT
PLACE 44 LF. 15" RCP
BUILD TYPE 'J' C.B
TOP GRATE 22.65
INV. 15" OUT = 20.50

(77) BASELINE STATION EB 32 + 69 - 32' RT
PLACE ~~60~~ 70.2 L.F. 15" R.C.P. @ .003 FT./FT.
BUILD TYPE "J" C.B.
TOP GRATE = 22.~~82~~ 79
INV. 15" OUT = ~~15.22~~ 18.09

(81) BASELINE STATION EB 31 + 00 - 32' RT
REMOVE PLUG @ 181
PLACE ~~42~~ 52.9 L.F. 15" R.C.P. @ .003 FT./FT.
BUILD TYPE "J" C.B.
TOP GRATE = 23.~~35~~ 30
INV. 15" OUT = ~~15.13~~ 16.45

(82) CENTERLINE STATION 27 + 40 - 25' RT
REMOVE PLUG @ 182
PLACE 52 L.F. 15" R.C.P. @ .003 FT./FT.
BUILD TYPE "A" C.B.
TOP GRATE = 24.~~88~~ 84
INV. 15" OUT = 18.~~50~~ 75

(85A) BASELINE STATION RE 70 + 40
REMOVE CAP
BUILD TYPE "J" C.B.
TOP GRATE = 23.~~03~~ 12

(86A) BASELINE STATION RE 70 + 75 - 22' LT
ADJUST EXISTING C.B.
TOP GRATE = 22.~~71~~ 69

(87A) BASELINE STATION G 112 + 37 - 22' RT
BUILD TYPE "J" C.B. AND REMOVE PLUG
TOP GRATE = ~~22.77~~ 23.00
INV. OUT = 16.~~13~~ 93

(88A) BASELINE STATION G 112 + 13 - 22' LT
BUILD TYPE "J" C.B. AND REMOVE PLUG
TOP GRATE = 22.62 89
INV. 16" OUT = ~~17.13~~ 16.34

(89A) BASELINE STATION G 111 + 77 - 22' LT
REMOVE CAP
BUILD TYPE "J" MODIFIED C.B.
TOP GRATE = ~~22.95~~ 23.19

(90) BASELINE STATION EB 36 + 41 - 1' LT
REMOVE PLUG
BUILD TYPE "J" C.B.
TOP GRATE = 22.~~74~~ 82
INV. (70-90A) IN = ~~16.21~~ 17.25
INV. OUT = ~~14.64~~ 15.32

(91) BASELINE STATION EB 37 + 77 - 12' LT
REMOVE PLUG
BUILD TYPE "J" C.B.
TOP GRATE = ~~22.77~~ 22.87
INV. 15" (59-91) IN = ~~16.00~~ 15.87
INV. 15" OUT = ~~14.99~~ 14.85

(92) BASELINE STA. G 113+15 - 22' RT
BUILD TYPE 'B' C.B.
TOP GRATE 22.99
INV. OUT 20.53
PLACE 8.0 LF 15" RCP

HARDESTY & HANOVER CONSULTING ENGINEERS NEW YORK, N.Y.

REVISIONS

PREL. TRACING A.L. Lobel DESIGN W.L. Titus CHKD. J. Bladkin

4/2/99

CONTRACT	COUNTY	FEDERAL AID PROJECT Nº	SHEET Nº	TOTAL SHEETS
82-073-05	SUSSEX	BRF-1009(3)	15	155

EARTHWORK SUMMARIES
ESTIMATE QUANTITIES

ITEM	REHOBOTH AVENUE	DETOUR ROAD	LEWES AND REHOBOTH CANAL	GROVE STREET	IF AND WHERE	TOTAL
EXCAVATION FROM X-SECTIONS	690	2,360	705	295		4,050
EXCAVATION FROM DRIVEWAYS	25	275	—	60		360
SUBTOTAL	715	2,635	705	355		4,410
-LESS STRIPPING IN CUTS	640	1,105	210	185		2,140
TOTAL EXCAVATION (C.Y.)	75	1,530	495	170		2,270
EMBANKMENT FROM X-SECTIONS	490	125	450	20		1,085
PLUS STRIPPING IN FILLS	180	75	200	15		470
TOTAL EMBANKMENT REQUIRED	670	200	650	35		1,555
-LESS AVAILABLE EXCAVATION	75	1,530	495	170		2,270
BORROW REQUIRED	595	—	155	—		750*
TOTAL BORROW (30% SWELL)	775	—	200	—		975*
BORROW TYPE C (30% SWELL)						
STRIPPING IN CUT C.Y.	640	1,105	210	185		2,140
STRIPPING IN FILL C.Y.	180	75	200	15		470
TOTAL STRIPPING	820	1,180	410	200		2,160
4" TOPSOILING S.Y.	1,750	2,195	—	405		4,350
SOD						
SEEDING						
MULCHING						
CHANNEL EXCAVATION	—	—	—	525		525
CHANNEL EMBANKMENT	—	—	—	150		150
FOUNDATION EXCAVATION	3,440					3,440

* TO BE SUPPLIED FROM FOUNDATION EXCAVATION

⚠ GENERAL NOTES

1. ALL COORDINATES ARE EXPRESSED IN TERMS OF GRID COORDINATES AND GRID AZIMUTHS OF THE DELAWARE PLANE COORDINATE SYSTEM AS ESTABLISHED BY THE U.S. COAST AND GEODETIC SURVEY.
2. ALL WORK UNDER THIS CONTRACT SHALL CONFORM TO THE DELAWARE DEPARTMENT OF HIGHWAYS AND TRANSPORTATION STANDARD SPECIFICATIONS FOR ROAD AND BRIDGE CONSTRUCTION DATED JANUARY 1, 1974 AND THE SUPPLEMENTAL SPECIFICATIONS DATED JANUARY 1, 1980 EXCEPT AS MODIFIED IN THE SPECIAL PROVISIONS OR AS DIRECTED BY THE ENGINEER.
3. VERTICAL CONTROL IS BASED ON U.S. COAST AND GEODETIC SURVEY BENCH MARKS.
4. GRADE EXISTING DRIVES TO CONFORM WITH THE PLANS AND/OR AS DIRECTED BY THE ENGINEER. REPLACE DISTURBED SECTIONS OF EXISTING DRIVES AS INDICATED ON THE PLANS OR AS DIRECTED BY THE ENGINEER.
5. ONLY TREES NECESSARY FOR THE PROPOSED CONSTRUCTION SHALL BE REMOVED EXCEPT WHERE OTHERWISE INDICATED ON THE PLANS OR AS DIRECTED BY THE ENGINEER.
6. ALL TRAFFIC CONTROL OR STREET SIGNS WILL BE MAINTAINED, RELOCATED AND IF DAMAGED DURING CONSTRUCTION, REPLACED AT THE CONTRACTOR'S EXPENSE.
7. AS DIRECTED BY THE ENGINEER, THE CONTRACTOR WILL PROVIDE AND INSTALL 4-INCH PLASTIC SLEEVES IN NEW CONCRETE SIDEWALK, ISLAND OR MEDIAN AREAS FOR FUTURE TRAFFIC SIGN POST INSTALLATION.
8. THE CONTRACTOR SHALL PROTECT EXISTING UTILITIES AT ALL TIMES DURING CONSTRUCTION. LOCATION OF UTILITIES SHOWN ON THESE PLANS ARE APPROXIMATE. THE CONTRACTOR SHALL NOTIFY "MISS UTILITY" TWO CONSECUTIVE WORKING DAYS PRIOR TO ANY EXCAVATION SO THAT ALL AFFECTED UTILITIES MAY RESPOND AND DETERMINE THE EXACT LOCATION OF THEIR EXISTING FACILITIES ON THE JOB SITE.
9. ALL PIPE BEDDING SHALL BE CLASS "C" UNLESS OTHERWISE DIRECTED BY THE ENGINEER AS SHOWN ON STANDARD SHEET D-16.
10. DEPRESSED CURB AND WHEELCHAIR RAMPS FOR THE HANDICAPPED SHALL BE CONSTRUCTED AT INTERSECTIONS AS SHOWN ON THE PLANS. PAYMENT FOR DEPRESSED CURB AND WHEELCHAIR RAMPS SHALL BE UNDER SECTION SECTION 708 P.C.C. SIDEWALK AND SECTION 707 INTEGRAL P.C.C. CURB AND GUTTER. TYPE 3.
11. THE CONTRACTOR SHALL, PRIOR TO LAYING A RUN OF DRAINAGE PIPE, EXCAVATE WITHIN THE PROPOSED ALIGNMENT AT POINTS OF POSSIBLE UTILITY CONFLICT TO THE DEPTH OF THE PROPOSED STORM SEWER MAIN TO DETERMINE IF A CONFLICT IS INEVITABLE. IF A CONFLICT IS IMMINENT, THE ENGINEER SHALL DETERMINE A NEW INVERT FOR THE PROPOSED DRAINAGE PIPE IF FEASIBLE. THE EXCAVATION AND BACKFILL OF THE TEST HOLES SHALL BE MEASURED AND PAID FOR IN ACCORDANCE WITH SECTION 208 EXCAVATION AND BACKFILL FOR PIPE TRENCHES, BUT ONLY TO ACTUAL DEPTH EXCAVATED.
12. THE CONTRACTOR SHALL PERFORM ALL WORK IN A MANNER THAT WILL INSURE THE LEAST PRACTICABLE OBSTRUCTION TO TRAFFIC CONSISTENT WITH SAFETY AND SHALL COMPLY WITH THE MANUAL ENTITLED DELAWARE TRAFFIC CONTROLS FOR STREET AND HIGHWAY CONSTRUCTION AND MAINTENANCE OPERATIONS (AS REVISED-JANUARY 1984).
13. ALL HOLES OR TRENCHES WITHIN OR IMMEDIATELY ADJACENT TO PAVED ROADWAY OR SIDEWALKS WHICH CANNOT BE PRACTICALLY BACKFILLED AND PAVED PRIOR TO RESTORING THE AREA TO TRAFFIC SHALL BE COVERED BY PROTECTIVE COVERS, OR BACKFILLED BY THE END OF THE DAY.
14. ALL DISTURBED SOIL SURFACES, INCLUDING SOIL STOCKPILES SUBJECT TO EROSION SHALL BE SEEDED WITHIN FIFTEEN (15) DAYS OF EXPOSURE. PERMANENT SEEDING AND MULCHING CAN BE DONE IMMEDIATELY. TEMPORARY EROSION CONTROL SEEDING, IF NEEDED, WILL BE PAID FOR AT THE UNIT PRICE BID FOR SECTION 724 PERMANENT SEEDING SUBURBAN DEVELOPMENT.

REVISIONS

⚠ ADDENDUM #2 - ADDED GENERAL NOTES JMS 7/24/89

FREL. TRACING A. L. Lobal DESIGN T. W. Davies CHKD. W. L. Titus

42089

ALIGNMENT AND CURVE DATA TABLE

SURVEY BASELINE DATA

	STATION	COORDINATES NORTH	COORDINATES EAST
	SURVEY BASELINE A ON REHOBOTH AVENUE		
BA	10+00	295,825.63	590,717.81
BA	15+51.14= 51+25.30 ALT.	259,890.87	591,246.64
BA	25+07.05	260,250.24	592,164.28
BA	25+27.50	260,255.87	592,183.47
BA	25+37.50	260,258.69	592,193.06
BA	25+45.00	260,260.80	592,200.26
BA	25+45.00	260,256.96	592,201.39
BA	28+00.68	260,328.98	592,446.72
BA	28+00.68	260,341.45	592,443.05
BA	29+48.46= 100+44.34 COLUMBIA AVE.	260,383.08	592,584.85
BA	33+02.07= 111+24 GROVE ST.		
BA	39+93.50	260,677.43	593,587.58
	SURVEY BASELINE B		
BB	10+00	259,796.85	590,726.26
BB	19+85.90+ 80+81.58 ATLANTIC AVE.	260,074.54	591,672.25
BB	25+45.00	260,232.02	592,208.71
BB	27+84.46= 92+84.33 CANAL ST.	260,299.47	592,438.48
BB	29+00.0	260,332.01	592,549.34
BB	29+00.0	260,329.14	592,550.18
BB	32+94.60= 110+81.08 GROVE ST.	260,440.28	592,928.81
BB	39+00	260,610.80	593,509.69
BB	39+00	260,579.14	593,518.99
BB	39+52.65= 120+50.0 STATE ST.	260,593.97	593,569.51
	SURVEY BASELINE 5TH ST.		
5TH	130+00= 76+87.55 ALT.	260,669.96	593,538.66
5TH	131+00	260,768.71	593,522.93
5TH	132+48.16= SUSSEX INTERSECTION	260,915.03	593,499.63
5TH	134+97.44= KENT INTERSECTION	261,161.44	593,461.88
5TH	136+97.29=	261,358.95	593,431.38
	SURVEY BASELINE COLUMBUS AVE.		
C	100+44.34= 29+48.46 BA	260,383.08	592,584.85
C	102+59.55= 68+65.15 ALT.	260,545.81	592,725.68
C	104+23.10= 113+33.42 GROVE ST.	260,669.49	592,832.70
C	113+37.53= 136+97.29 5TH ST.	261,358.95	593,431.38

	STATION	COORDINATES NORTH	COORDINATES EAST
	SURVEY BASELINE GROVE ST.		
G	110+00	260,373.32	592,974.53
G	110+81.08= 32+94.60 BB	260,440.28	592,928.81
G	111+00	260,455.91	592,918.14
G	111+00	260,459.76	592,931.38
G	111+12.03= 33+02.44 EB	260,471.23	592,927.76
	111+24.00= 33+02.07 BA	260,482.68	592,924.14
G	111+28.04= 33+02.54 WB	260,486.50	592,922.96
G	112+01.92	260,556.97	592,900.76
G	112+18.59= 70+33.53 ALT.	260,571.23	592,892.13
G	113+33.42= 104+23.10 COLUMBIA AVE.	260,669.49	592,832.70
	SURVEY BASELINE STATE ST.		
S	120+00	260,553.08	593,540.73
S	120+50= 39+52.65 BB	260,593.97	593,569.51
	SURVEY BASELINE DETOUR ROAD (ALT.)		
DR	50+00	259,881.16	591,170.76
DR	51+25.30= 15+51.14 BA	259,980.87	591,246.64
DR	55+63.09	260,329.24	591,511.77
DR	57+50.65	260,478.49	591,625.36
DR	59+26.20	260,433.66	591,795.09
DR	61+38.76	260,436.17	592,007.64
DR	68+65.15= 102+59.55 COLUMBIA AVE.	260,545.81	592,725.68
DR	70+33.53= 112+18.59 GROVE ST.	260,571.23	592,892.13
DR	76+87.55= 130+00 5TH ST.	260,669.96	593,538.66
DR	77+37.04= 39+93.50 BA	260,677.43	593,587.58
	SURVEY BASELINE WEST-SIDE OF CANAL		
WSC	91+50	260,084.57	592,162.76
WSC	92+00	260,134.57	592,163.22
WSC	93+00	260,234.56	592,164.14
WSC	93+15.68= 25+07.50 BA	260,250.24	592,164.28
WSC	96+00	260,534.55	592,166.88
	SURVEY BASELINE EAST-SIDE OF CANAL ST.		
ESC	90+00	260,015.15	592,435.88
ESC	92+00	260,215.14	592,437.70
ESC	92+84.33= 27+84.46 BB	260,299.47	592,438.48
ESC	94+00	260,415.14	592,439.53
ESC	96+00	260,615.13	592,441.36

CURVE DATA

NO.		R	L	T	C.C. COORDINATES NORTH	C.C. COORDINATES EAST
	REHOBOTH AVENUE CENTER-LINE CURVE					
1	1°-38'-57"	2000.0'	57.567'	28.785'	262,141.893	591,550.313
	REHOBOTH AVENUE EAST-BOUND CURVE					
EB2	1°-38'-57"	2000.0'	57.567'	28.785'	258,416.743	593,029.624
EB3	8°-13'-30"	4000.0'	574.213'	287.601'	256,667.965	594,172.911
	REHOBOTH AVENUE WEST-BOUND CURVE					
WB2	1°-23'-22"	3000.0'	72.751'	36.377'	263,169.439	591,476.582
WB3	3°-02'-19"	1000.0'	53.034'	26.523'	259,475.867	593,030.487
WB4	8°-13'-30"	1400.0'	200.975'	100.660'	259,258.592	593,710.445
	DETOUR ROAD CURVE					
DR1	54°-03'-50"	120.0'	113.231'	61.227'	260,318.514	591,654.416
DR2	12°-09'-00"	600.0'	127.234'	63.857'	261,030.580	592,002.719
DR3	4°-37'-00"	1400.0'	112.806'	56.434'	259,125.717	592,690.123
DR4	2°-29'-10"	2700.0'	117.155'	58.587'	263,213.420	592,354.953
	GROVE STREET CURVE					
G1	30°-26'-18"	300.0'	159.375'	81.616'	260,477.514	592,611.254
	COLUMBIA AVENUE CURVE					
CL1	42°-12'-18"	100.0'	73.662'	38.592'	260,632.377	592,668.344

HARDESTY & HANOVER CONSULTING ENGINEERS NEW YORK, N.Y.

REVISIONS

FIELD TRACING A.L. Lobel DESIGN A.R. Jolliff CHKD A.F. Senor

40389

CONTRACT	COUNTY	FEDERAL AID PROJECT Nº	SHEET Nº	TOTAL SHEETS
82-073-05	SUSSEX	BRF-1009(3)	17	155

PLAN SHEET INDEX

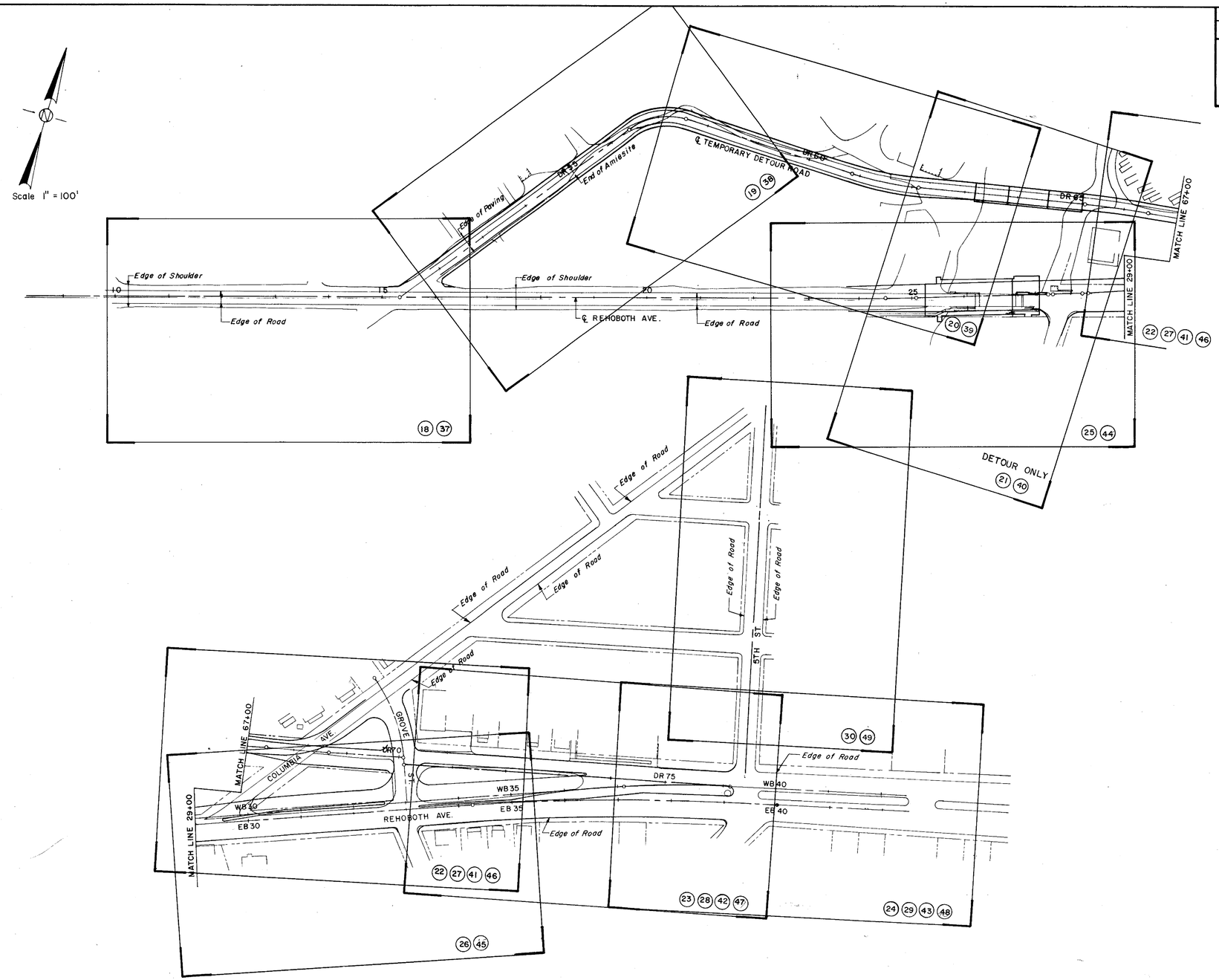

HARDESTY & HANOVER
CONSULTING ENGINEERS
NEW YORK, N.Y.

REVISIONS

PREL. TRACING S. DaCruz DESIGN W. L. Titus CHKD. A. R. Jalili

40389

CONTRACT	COUNTY	FEDERAL AID PROJECT Nº	SHEET Nº	TOTAL SHEETS
82-073-05	SUSSEX	BRF-1009(3)	18	155

CONSTRUCTION PLAN - DETOUR
STA. DR 51+00 TO STA. DR 52+00

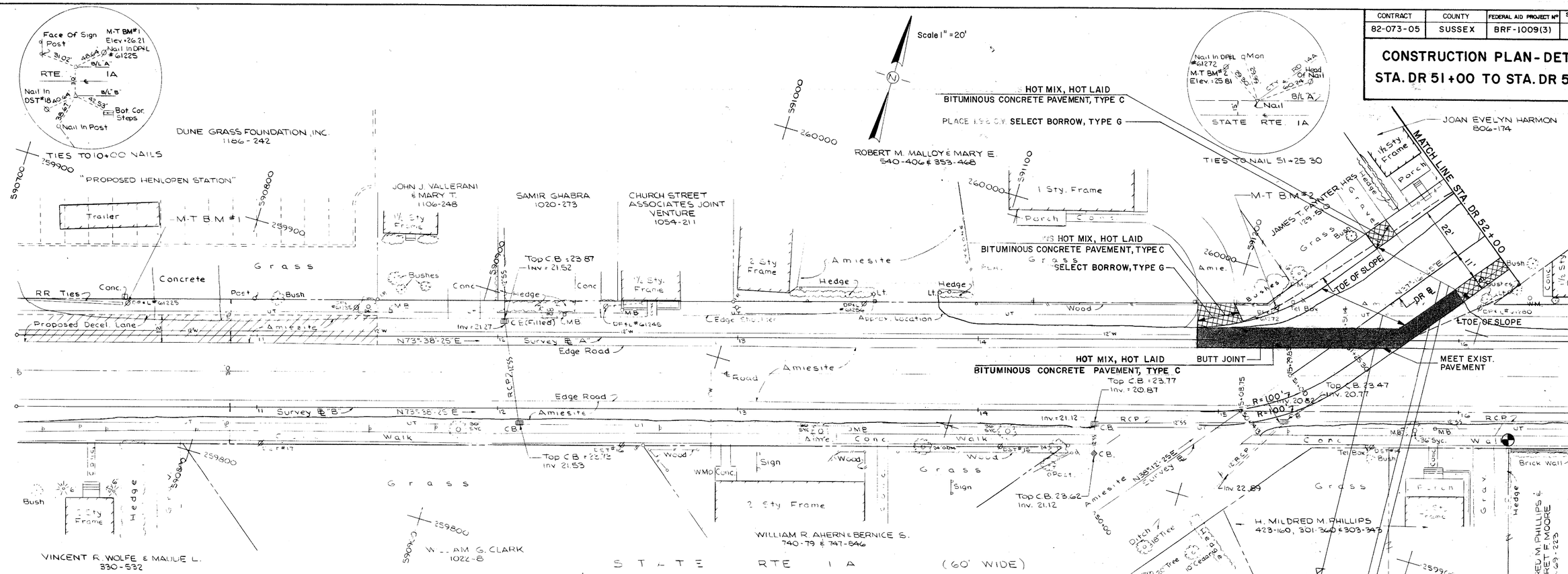

LEGEND

- Hot-Mix, Hot Laid Bituminous Concrete Pav't. (Roadway)
- Hot-Mix, Hot Laid Bituminous Concrete Pav't. (Shoulders)
- Resurfacing (Constant Depth)
- Resurfacing (Variable Depth)
- Residential Driveway Pav't.
- Commercial Driveway Pav't.
- Milling
- P.C. Concrete Pav't. For Bridge Approach Slabs
- Butt Joints
- TR 19"-25" Tree Removal
- C2 Curve Number
- P.C. Concrete Sidewalk
- Machine Boring Location
- P.C.C. Integral Curb & Gutter, Type 3
- 6' Chain Link Fence
- Galvanized Steel Beam Guardrail (Steel Posts)
- Toe of Slope
- R Existing Structures to be Removed by Others
- Plain or Grouted Riprap
- Culvert or Pipe
- Flared End Section
- Catch Basin
- Manhole
- Reset Catch Basin
- Reset Manhole
- 53 Drainage Structure
- Temporary Fence
- P.C.C. Curb, Type I
- Culvert or Pipe (Previous Stage)

HARDESTY & HANOVER CONSULTING ENGINEERS NEW YORK, N.Y.

REVISIONS

PREL. TRACING M. P. Santana DESIGN W. L. Titus CHKD A. R. Jolliff

40389

CONTRACT	COUNTY	FEDERAL AID PROJECT No	SHEET No	TOTAL SHEETS
82-073-05	SUSSEX	BRF-1009(3)	18T	155

CONSTRUCTION PLAN - DETOUR
STA. DR 51+00 TO STA. DR 52+00

NEW PLAN SHEET

806-174

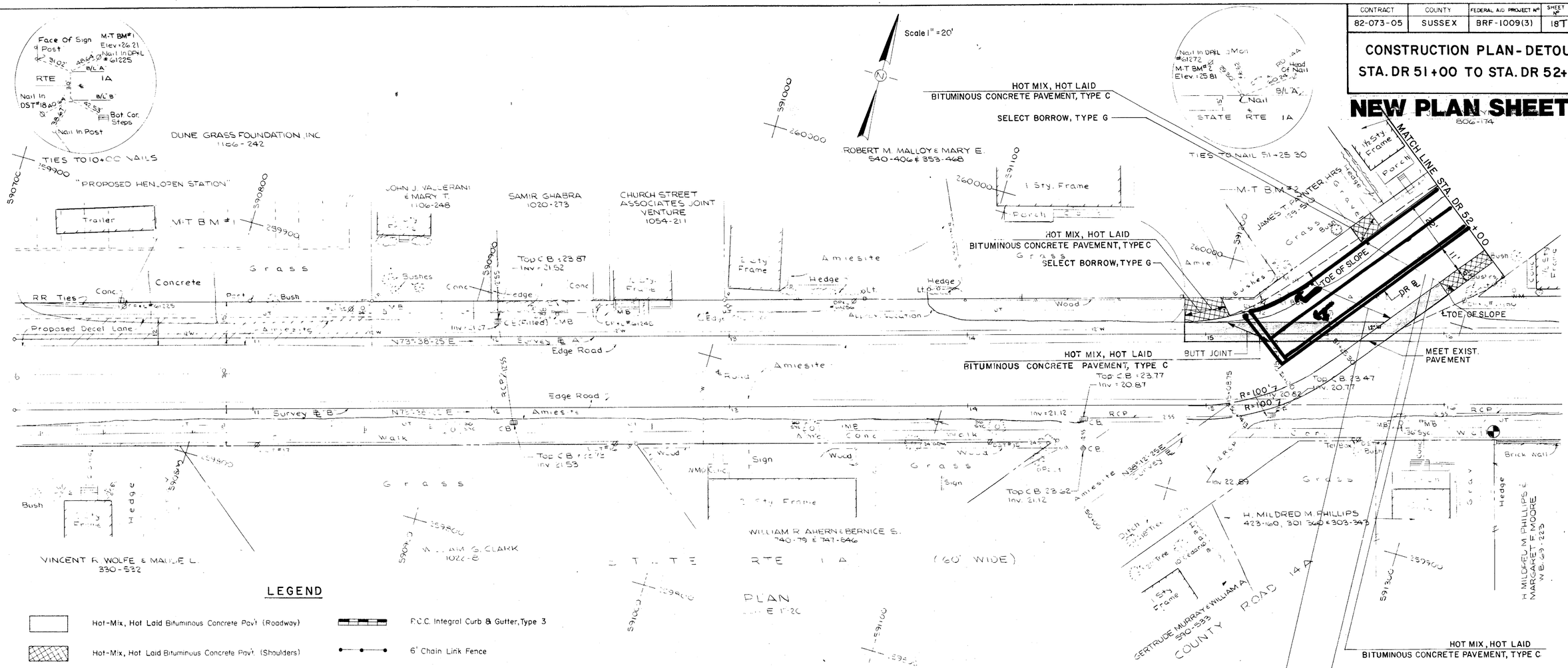

LEGEND

- Hot-Mix, Hot Laid Bituminous Concrete Pav't (Roadway)
- Hot-Mix, Hot Laid Bituminous Concrete Pav't (Shoulders)
- Resurfacing (Constant Depth)
- Resurfacing (Variable Depth)
- Residential Driveway Pav't.
- Commercial Driveway Pav't.
- Milling
- P.C. Concrete Pav't. For Bridge Approach Slabs
- Butt Joints
- TR 19'-25' — Tree Removal
- C2 — Curve Number
- P.C. Concrete Sidewalk
- Machine Boring Location
- P.C.C. Integral Curb & Gutter, Type 3
- 6' Chain Link Fence
- Galvanized Steel Beam Guardrail (Steel Posts)
- Toe of Slope
- R — Existing Structures to be Removed by Others
- Plain or Grouted Riprap
- Culvert or Pipe
- Flared End Section
- Catch Basin
- Manhole
- Reset Catch Basin
- Reset Manhole
- 53 — Drainage Structure
- Temporary Fence
- P.C.C. Curb, Type I
- Culvert or Pipe (Previous Stage)

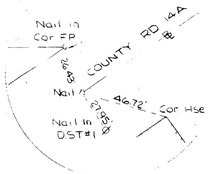

HARDESTY & HANOVER CONSULTING ENGINEERS NEW YORK, N.Y.

REVISIONS

1 New plan sheet 4/25/86 JRSJr.

PREL. TRACING M. P. Santana DESIGN W. L. Titus CHKD. A. R. Jalili

4/25/86

CONTRACT	COUNTY	FEDERAL AID PROJECT Nº	SHEET Nº	TOTAL SHEETS
82-073-05	SUSSEX	BRF-1009(31)	19	155

CONSTRUCTION PLAN - DETOUR
STA. DR 52+00 TO STA. DR 57+75

HARDESTY & HANOVER
CONSULTING ENGINEERS
NEW YORK, N.Y.

REVISIONS
1 Added cross road pipe 12/6/94 JMSJH
2 Added widening on inside of curve & superelev. on outside of curve 4/23/95 JMSJH

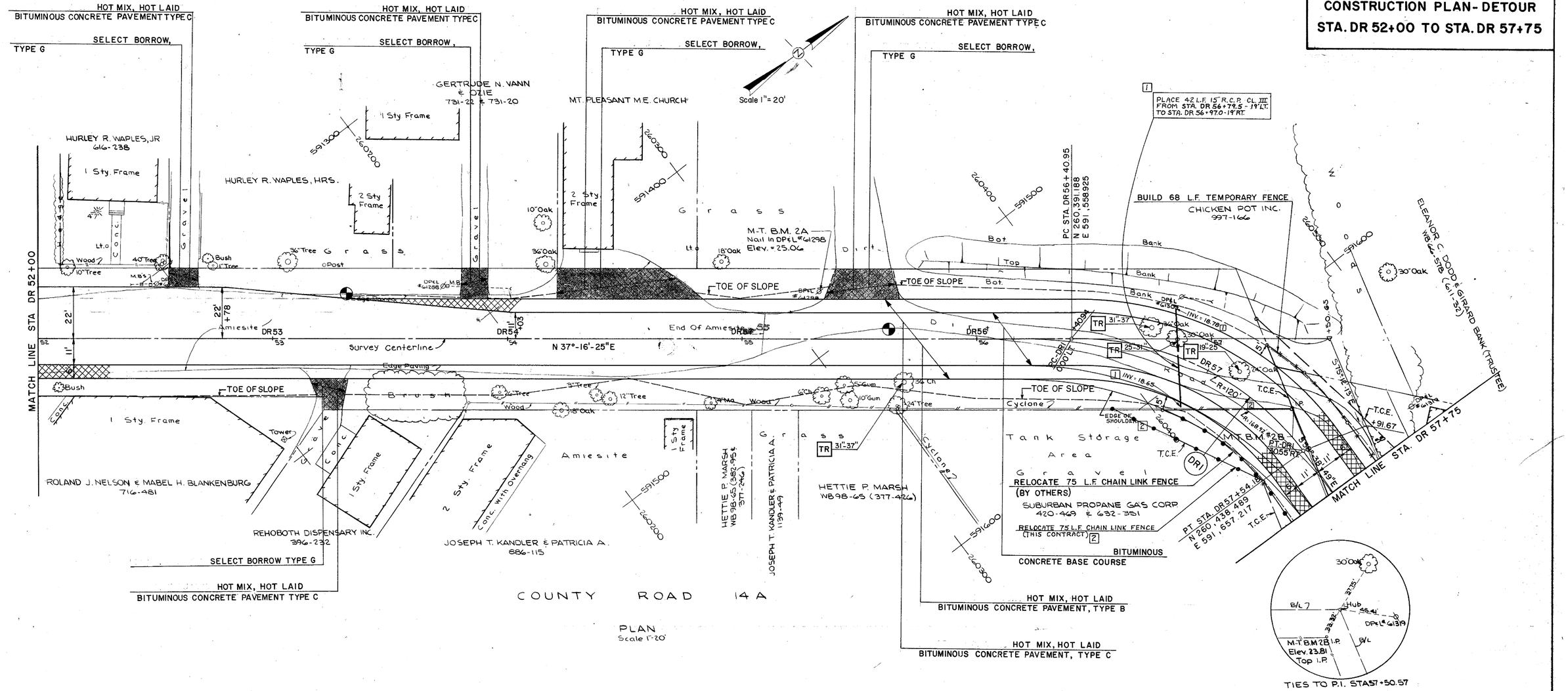

SUPERELEVATION DIAGRAM 2

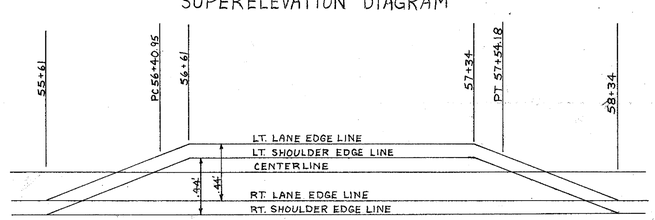

CURVE SUPERELEVATION 2

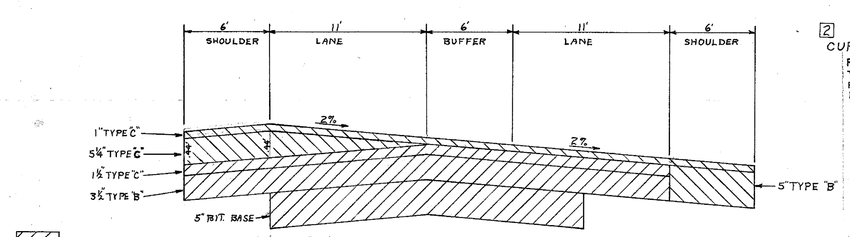

STA. 56+97.56

2 CURVE DATA IN BOUND LANE
R = 168.92'
T = 86.19'
PC = DR 56+15.99
PT = DR 57+79.14

PREL. TRACING M.P. Santana DESIGN W.L. Titus CHKD. A.R. Jolli

CONTRACT	COUNTY	FEDERAL AID PROJECT Nº	SHEET Nº	TOTAL SHEETS
82-073-05	SUSSEX	BRF-1009(3)	19T	155

CONSTRUCTION PLAN - DETOUR
STA. DR 52+00 TO STA. DR 57+75

NEW PLAN SHEET

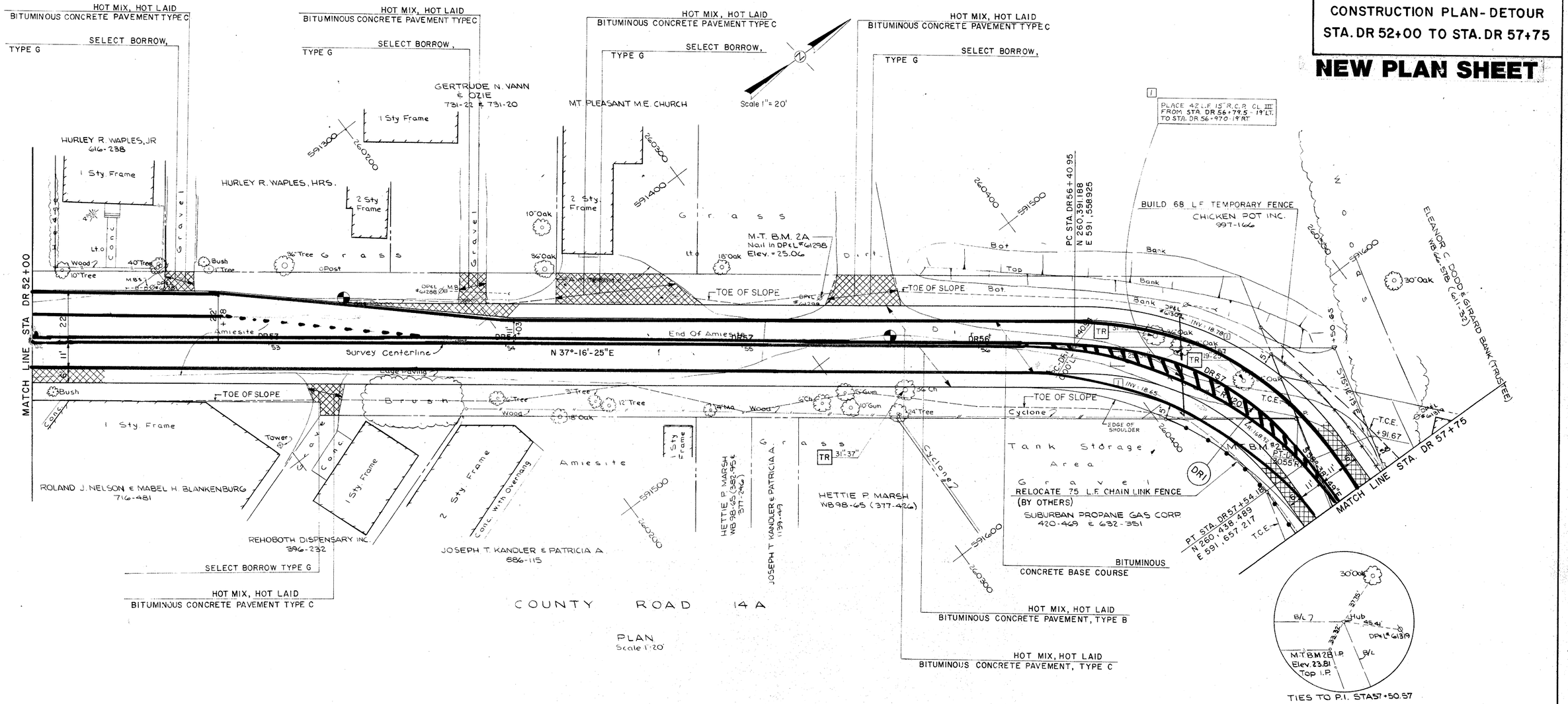

PLAN
Scale 1" = 20'

CURVE DATA IN BOUND LANE
R = 168.92'
T = 86.19'
PC = DR 56+15.99
PT = DR 57+79.14

SEE DETAIL SHT. 19

HARDESTY & HANOVER CONSULTING ENGINEERS NEW YORK, N.Y.

REVISIONS
1) Added road pipe 7/26/85 JMS/r
1) New plan sheet 4/25/85 JMS/r

PREL. TRACING M.P. Santana DESIGN W.L. Titus CHKD A.R. Tolli

CONTRACT	COUNTY	FEDERAL AID PROJECT Nº	SHEET Nº	TOTAL SHEETS
82-073-05	SUSSEX	BRF-1009(3)	20	155

CONSTRUCTION PLAN - DETOUR
STA. DR 57+75 TO STA. DR 62+25

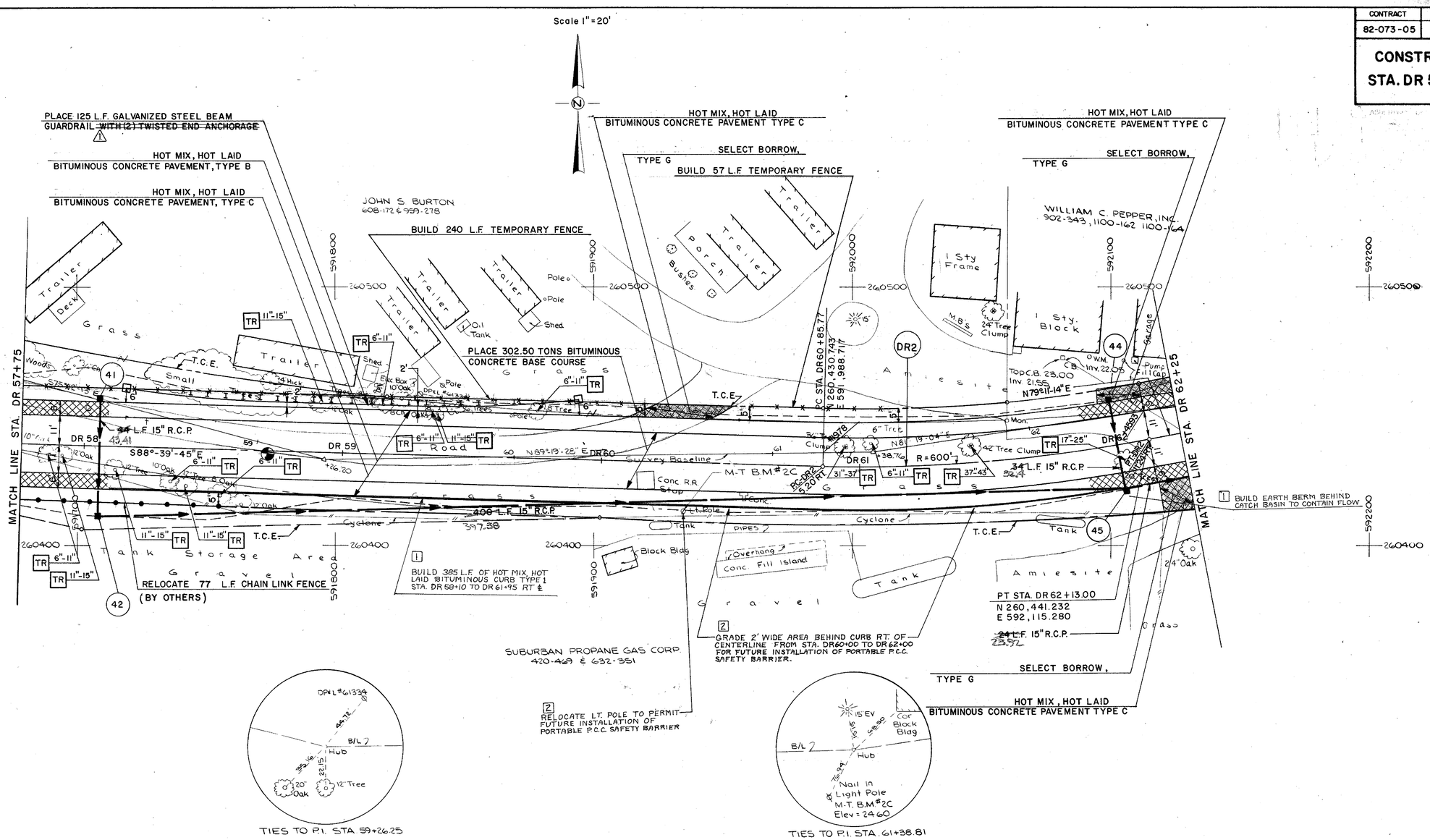

HARDESTY & HANOVER CONSULTING ENGINEERS NEW YORK, N.Y.

REVISIONS

△ ADDENDUM #2 - DELETED T.E.A.'S JMSH. 9/24/04
1 REVISION - ADDED HOT MIX CURB JMSH. 11/5/04
2 Added a pole relocation & grading 4/25/05 JMSH.

PREL. TRACING M.P. Santana DESIGN W.L. Titus CHKD. A.R. Jalili

CONTRACT	COUNTY	FEDERAL AID PROJECT Nº	SHEET Nº	TOTAL SHEETS
82-073-05	SUSSEX	BRF-1009(3)	20T	155

CONSTRUCTION PLAN - DETOUR
STA. DR 57+75 TO STA. DR 62+25

NEW PLAN SHEET

HARDESTY & HANOVER
CONSULTING ENGINEERS
NEW YORK, N.Y.

REVISIONS

1 New plan sheet 4/25/85 JMSV.

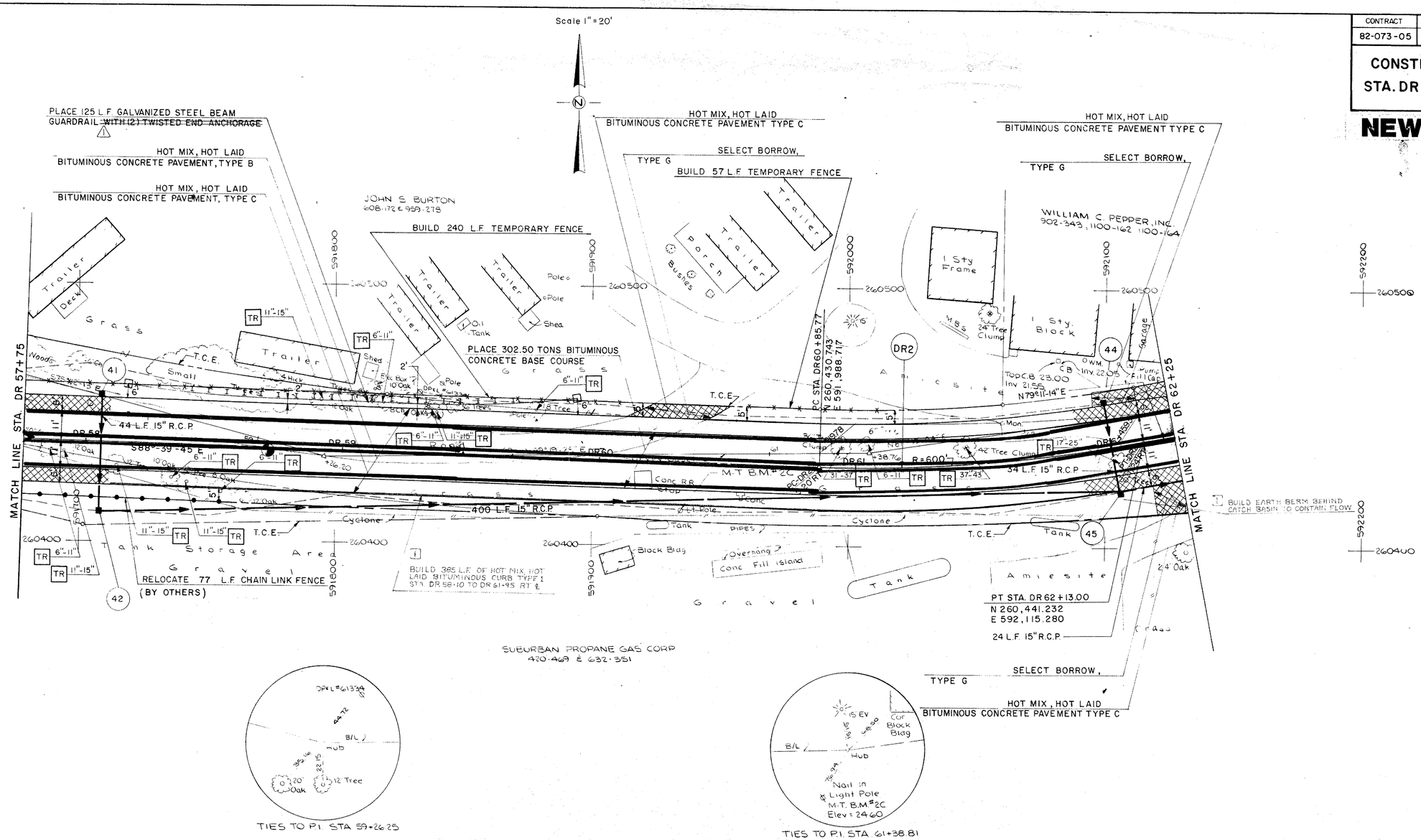

PREL. TRACING M.P. Santana DESIGN W.L. Titus CHKD. A.R. Jalili

SEE SHT. NO. 20

CONTRACT	COUNTY	FEDERAL AID PROJECT Nº	SHEET Nº	TOTAL SHEETS
82-073-05	SUSSEX	BRF-1009(3)	21	155

CONSTRUCTION PLAN-DETOUR
STA. DR 62+25 TO STA. DR 65+75

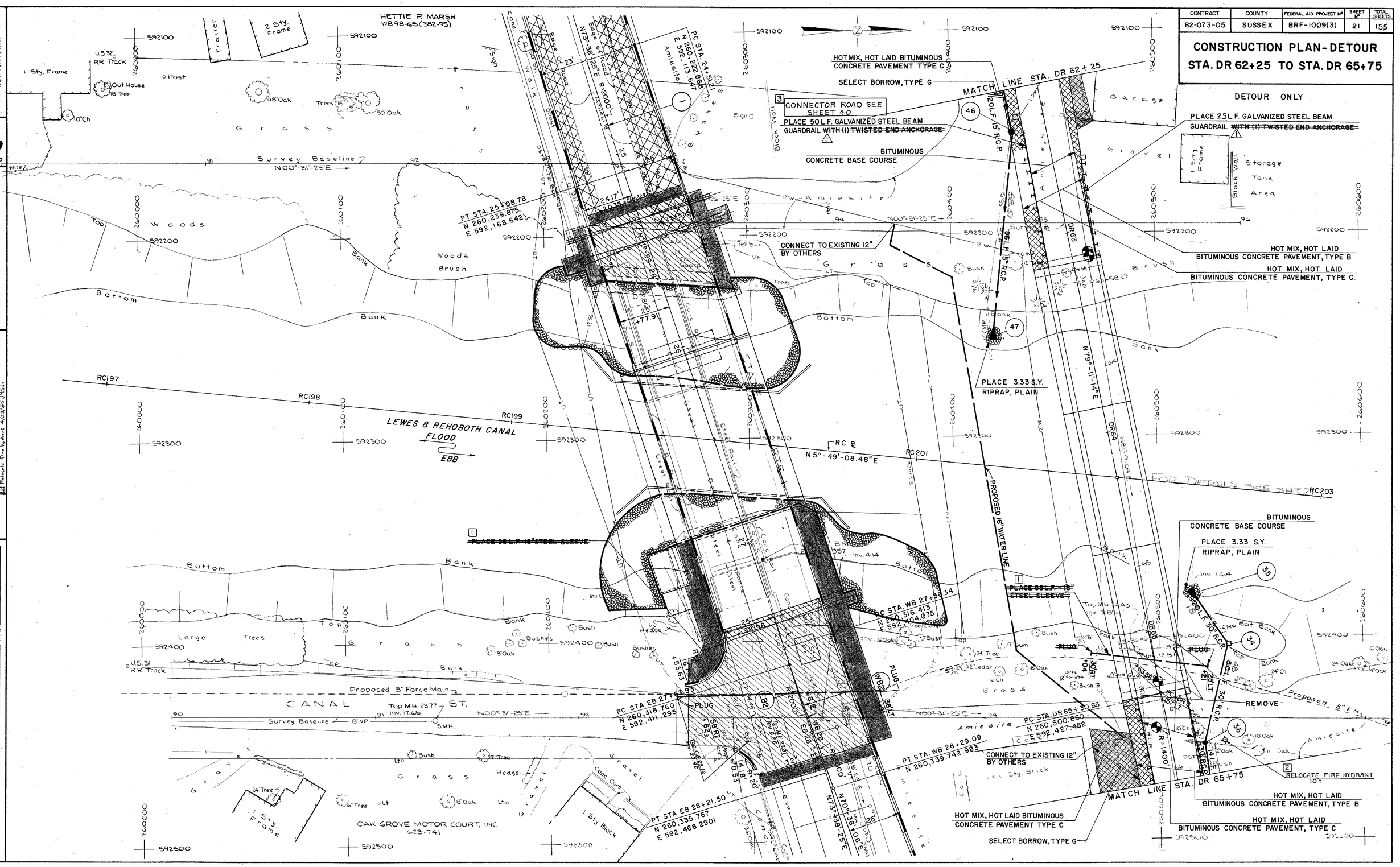

CONTRACT	COUNTY	FEDERAL AID PROJECT Nº	SHEET Nº	TOTAL SHEETS
82-073-05	SUSSEX	BRF-1009(3)	21T	155

CONSTRUCTION PLAN - DETOUR

STA. DR 62+25 TO STA. DR 65+75

NEW PLAN SHEET

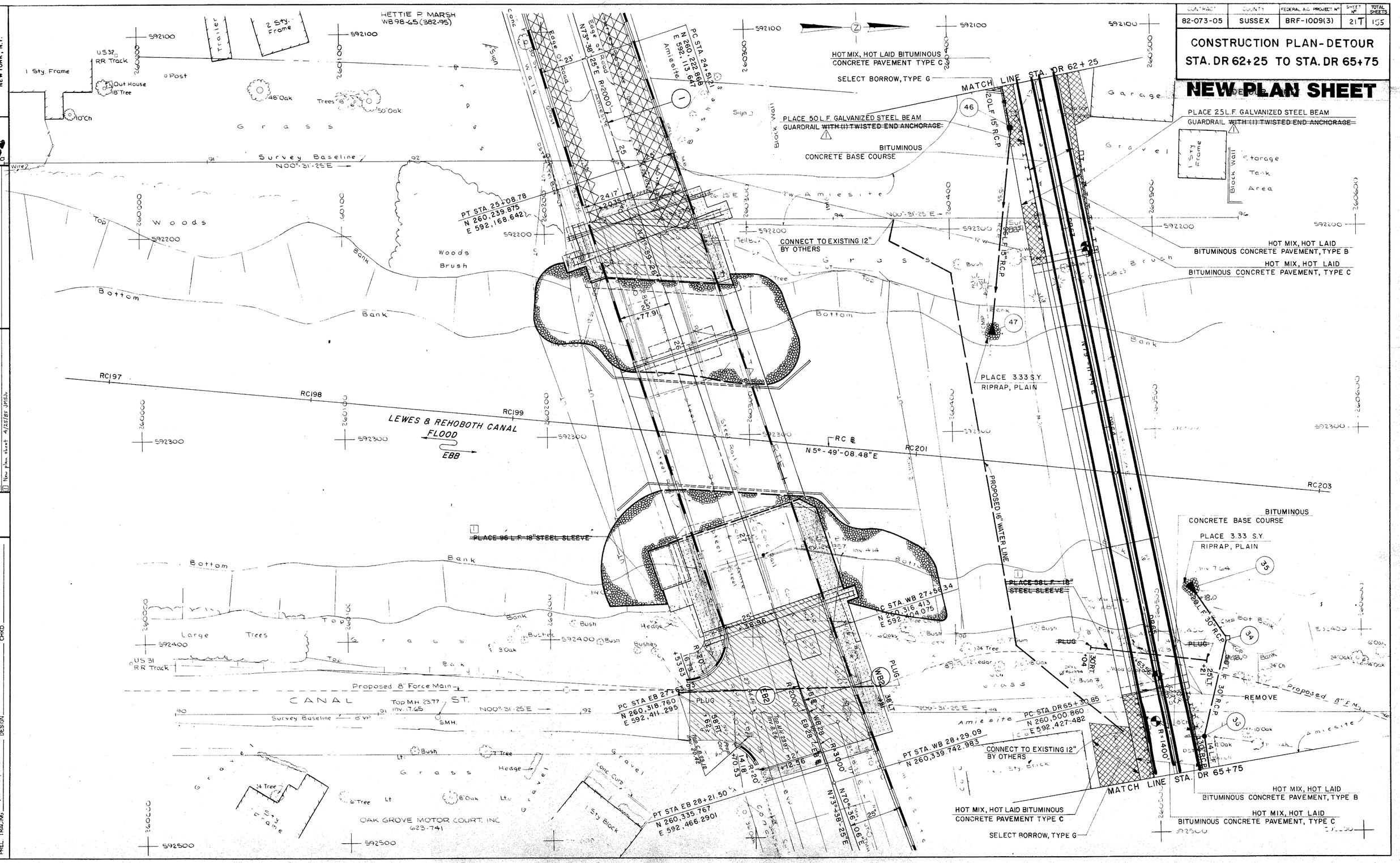

HARDESTY & HANOVER
CONSULTING ENGINEERS
NEW YORK, N.Y.

REVISIONS

1 New plan sheet 4/25/85 JMSch

PREL. TRACING M. Karamon DESIGN W.L. Titus CHKD. A. R. Jalili

CONTRACT	COUNTY	FEDERAL AID PROJECT Nº	SHEET Nº	TOTAL SHEETS
82-073-05	SUSSEX	BRF-1009 (3)	22	155

CONSTRUCTION PLAN - DETOUR
STA. DR 65+75 TO STA. DR 72+00

HARDESTY & HANOVER
CONSULTING ENGINEERS
NEW YORK, N.Y.

REVISIONS
1 ADDENDUM Nº2 - DELETED T.S. A/S JMSch. 9/26/06
2 Defined entrances, guidewall detail 4/21/05 JMSch.

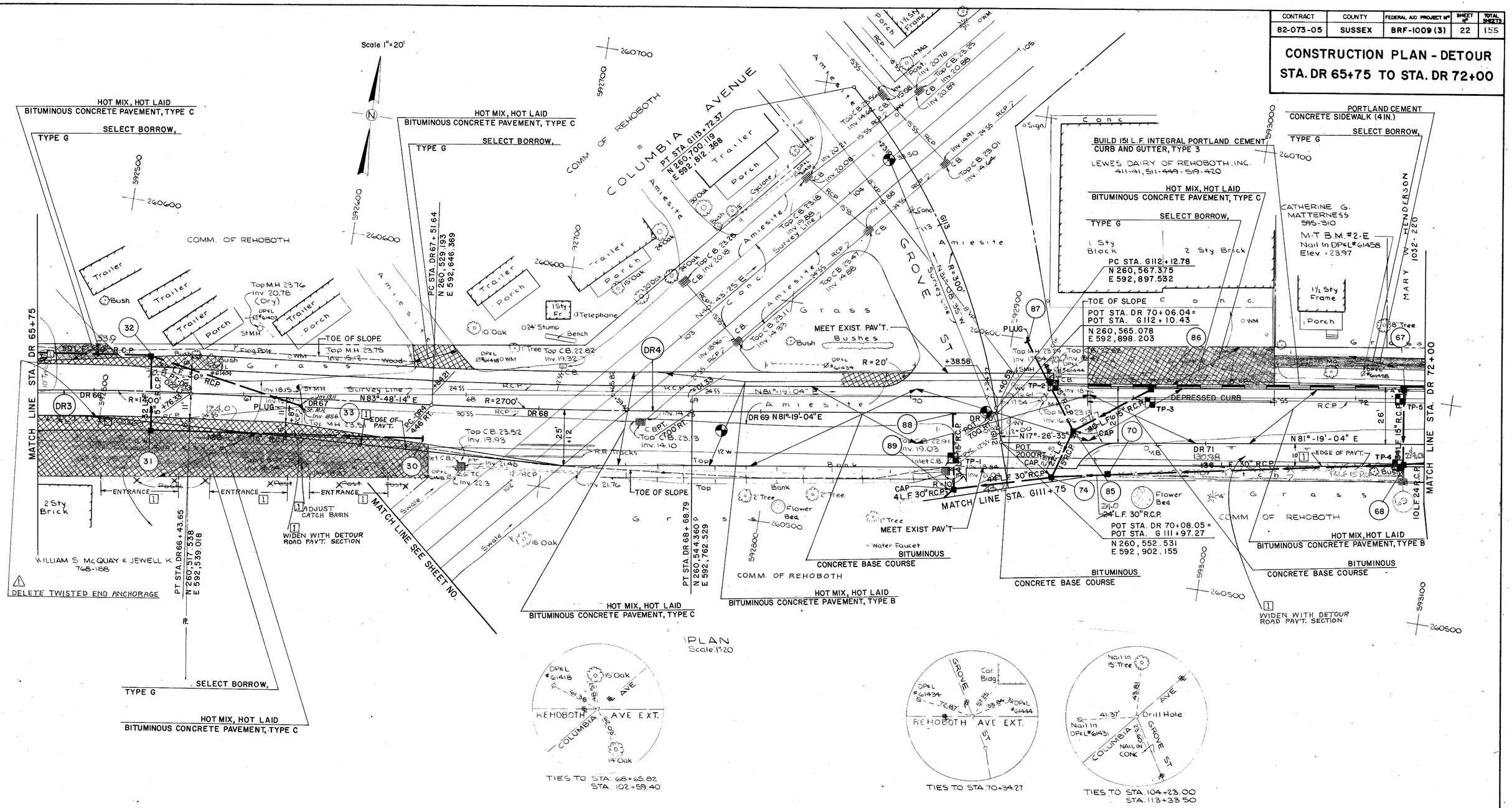

PREL. TRACING M. Karaman DESIGN W.L. Titus CHKD. A.R. Jolitti

CONTRACT	COUNTY	FEDERAL AID PROJECT No.
82-073-05	SUSSEX	BRF-1009(3)

CONSTRUCTION PLAN - DETAIL

STA. DR 65+75 TO STA. DR 72+00

NEW PLAN SHEET

HARDESTY & HANOVER
CONSULTING ENGINEERS
NEW YORK, N.Y.

REVISIONS

1 New plan sheet 4/28/85 JMGh.

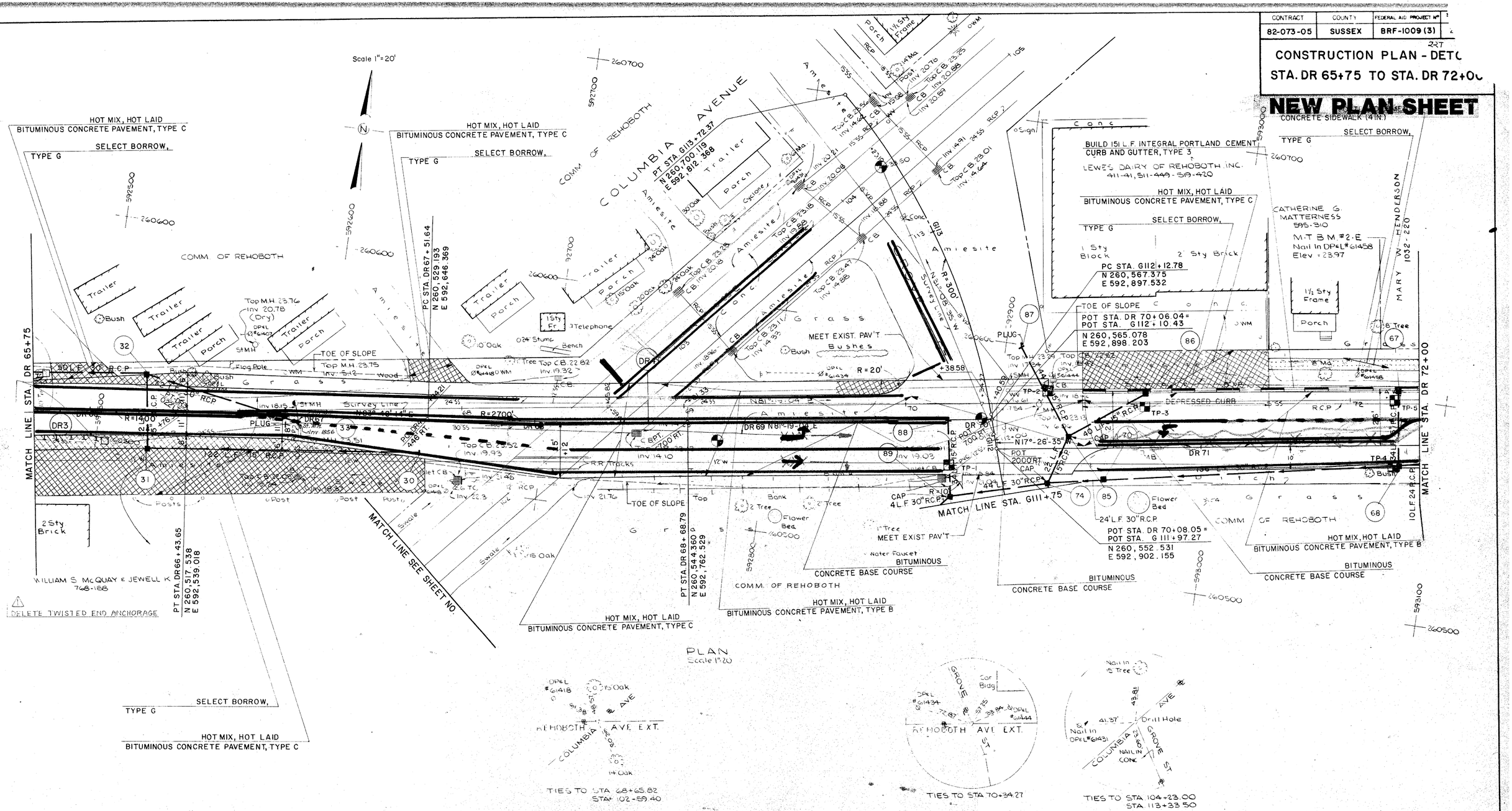

PREL. TRACING M. Karpman DESIGN W. L. Titus CHKD. A. R. Jolitt

FOR DETAILS SEE SHT 22

CONTRACT	COUNTY	FEDERAL AID PROJECT Nº	SHEET Nº	TOTAL SHEETS
82-073-05	SUSSEX	BRF-1009(3)	23	155

CONSTRUCTION PLAN - DETOUR
STA. DR 72+00 TO STA. DR 75+00

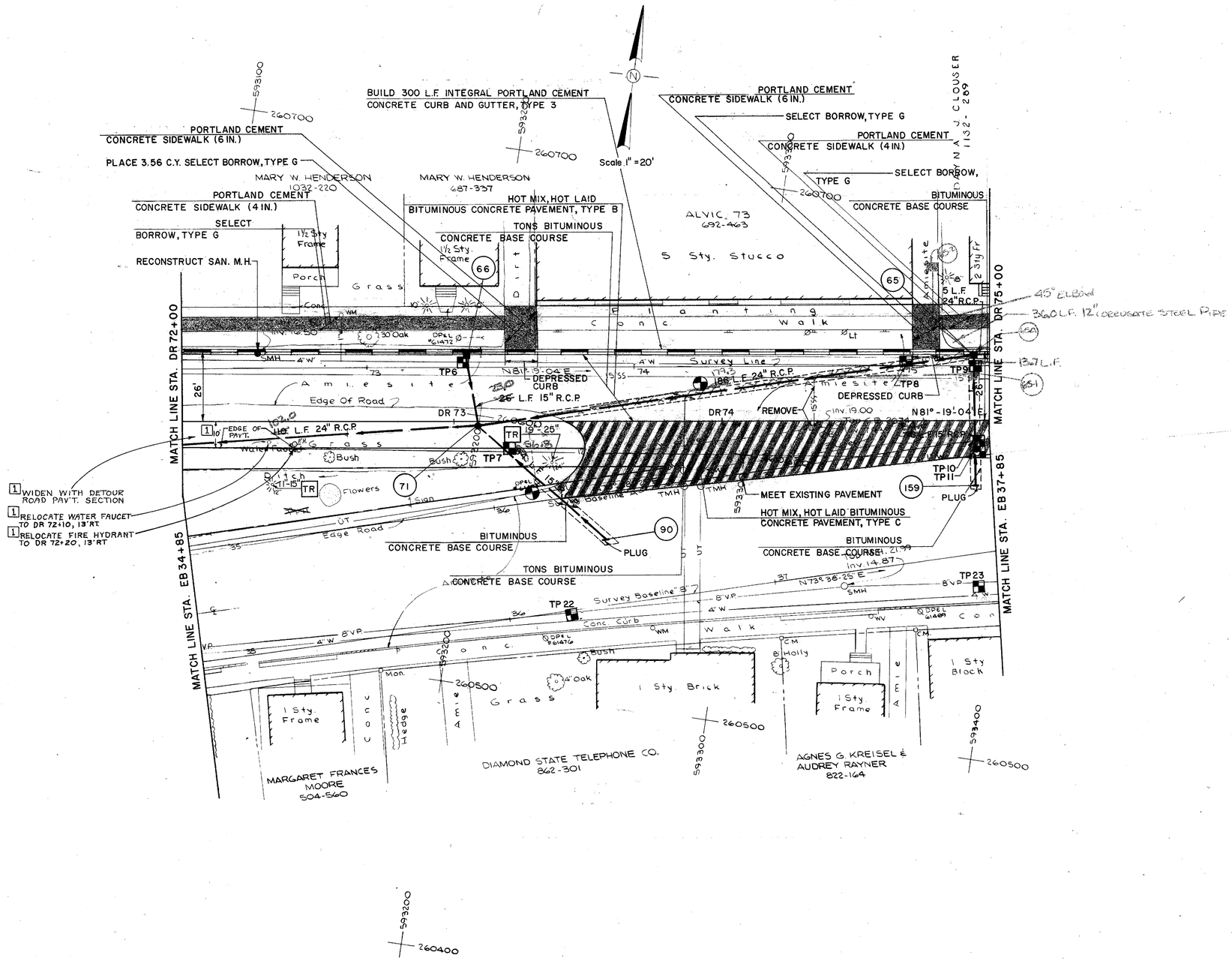

HARDESTY & HANOVER CONSULTING ENGINEERS NEW YORK, N.Y.

REVISIONS

1 Widened detour pavt. 4/21/85 JPSJ.

PREL. TRACING M. Karpman DESIGN W.L. Titus CHKD. A.R. Jalili

CONTRACT	COUNTY	FEDERAL AID PROJECT Nº	SHEET Nº	TOTAL SHEETS
82-073-05	SUSSEX	BRF-1009(3)	D23	155

CONSTRUCTION PLAN - DETOUR
STA. DR 72+00 TO STA. DR 75+00

HARDESTY & HANOVER
CONSULTING ENGINEERS
NEW YORK, N.Y.

REVISIONS

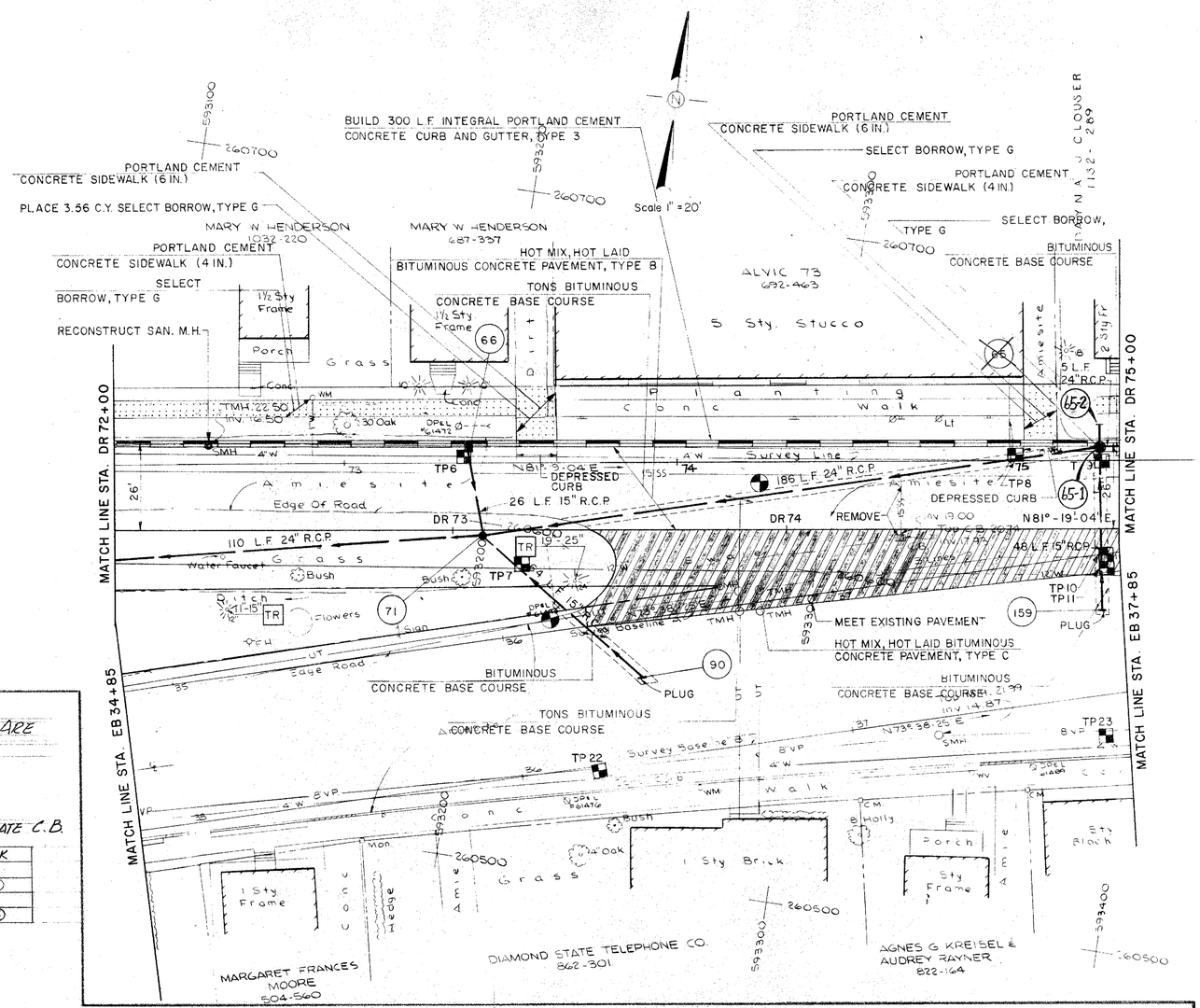

THESE TWO SHEETS (D23, D24) ARE FOR DRAINAGE CHANGE ONLY

A. ELIMINATE PIPES

NO.	MARK
1	54 — 56
2	55 — 56
3	56 — 57
4	62 — 57
5	57 — 58

B. ELIMINATE C.B.

NO.	MARK
1	56
2	57
3	58
4	65

C. ADD M.H.

NO.	MARK	TYPE	TOP EL.	INVERTS	STATION	OFFSET
1	58-1	ST'D	SET IN FIELD	14.38, 14.89, 17.45	76+53.50 (SURVEY)	4' LT.
2	65-1	ST'D	"	17.47, 14.10, 14.12, 14.85	75+27.00 (SURVEY)	4' LT.

D. ADD C.B.

NO.	MARK	TYPE	TOP EL.	INVERTS	STATION	OFFSET
1	56-1	'J'	SET IN FIELD	15.00, 14.98, 16.40	76+69.00 (SURVEY)	21' LT.
2	57-1	'J'	"	14.95, 14.93, 15.40	76+62.50 (SURVEY)	13' LT.

E. ADD PIPES

NO.	MARK INV. IN — INV. OUT	TYPE	LENGTH	SLOPE	INV. IN	INV. OUT	REMARK
1	54 — 56-1	18" RCP	280'	.2 %	15.56	15.00	
2	55 — 56-1	15" RCP	34'	.3 %	16.50	16.40	
3	56-1 — 57-1	18" RCP	10'	.3 %	14.98	14.95	
4	62 — 57-1	15" RCP	24'	10 %	17.80	15.40	
5	57-1 — 58-1	18" RCP	12'	.3 %	14.93	14.89	
6	65-2 — 65-1	15" RCP	6'	.3 %	17.49	17.47	PLUG INV. IN END

F. CHANGE PIPE CONNECTING MARKS

NO.	MARK INV. IN — INV. OUT
1	61 — 58 58-1
2	58 58-1 — 65 65-1
3	59 — 65 65-1
4	65 65-1 — 71

THESE TWO SHEETS (D23, D24) ARE FOR DRAINAGE CHANGE ONLY

PRELIM. TRACING M. Karpman DESIGN W.L. Titus CHKD A.R. Jalili

CONTRACT	COUNTY	FEDERAL AID PROJECT Nº	SHEET Nº	TOTAL SHEETS
82-073-05	SUSSEX	BRF-1009(3)	231	155

CONSTRUCTION PLAN - DETOUR
STA. DR 72+00 TO STA. DR 75+00

NEW PLAN SHEET

HARDESTY & HANOVER
CONSULTING ENGINEERS
NEW YORK, N.Y.

REVISIONS

1 New plan sheet 4/23/85 JM.S.

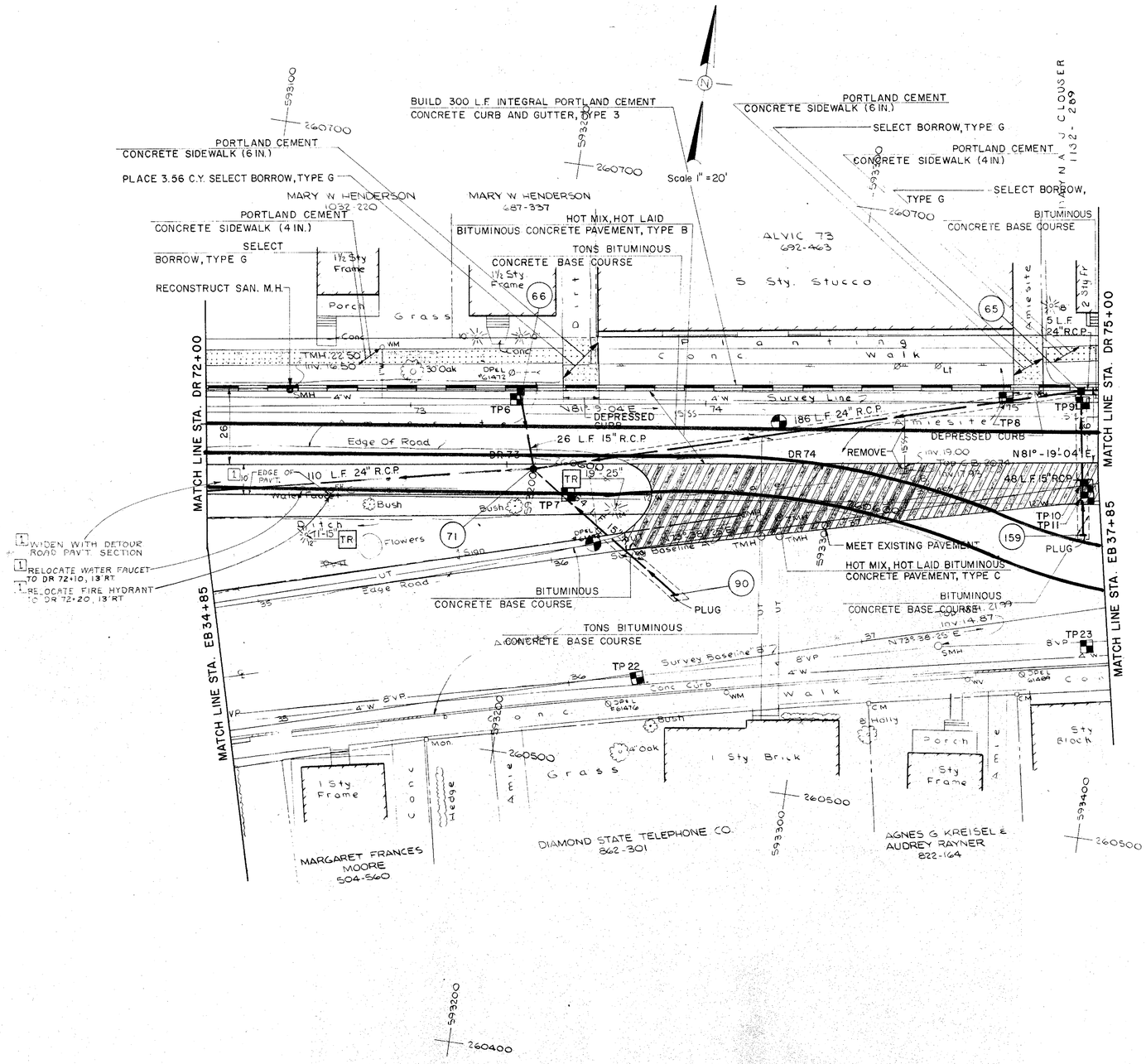

PREL. TRACING M. Korpman DESIGN W.L. Titus CHKD. A.R. Jolli

FOR DETAILS SEE SHT. NO. 23

HARDESTY & HANOVER
CONSULTING ENGINEERS
NEW YORK, N.Y.

CONTRACT	COUNTY	FEDERAL AID PROJECT Nº	SHEET Nº	TOTAL SHEETS
82-073-05	SUSSEX	BRF-1009(3)	24	55

CONSTRUCTION PLAN - DETOUR
STA. DR 75+00 TO STA. DR 76+25

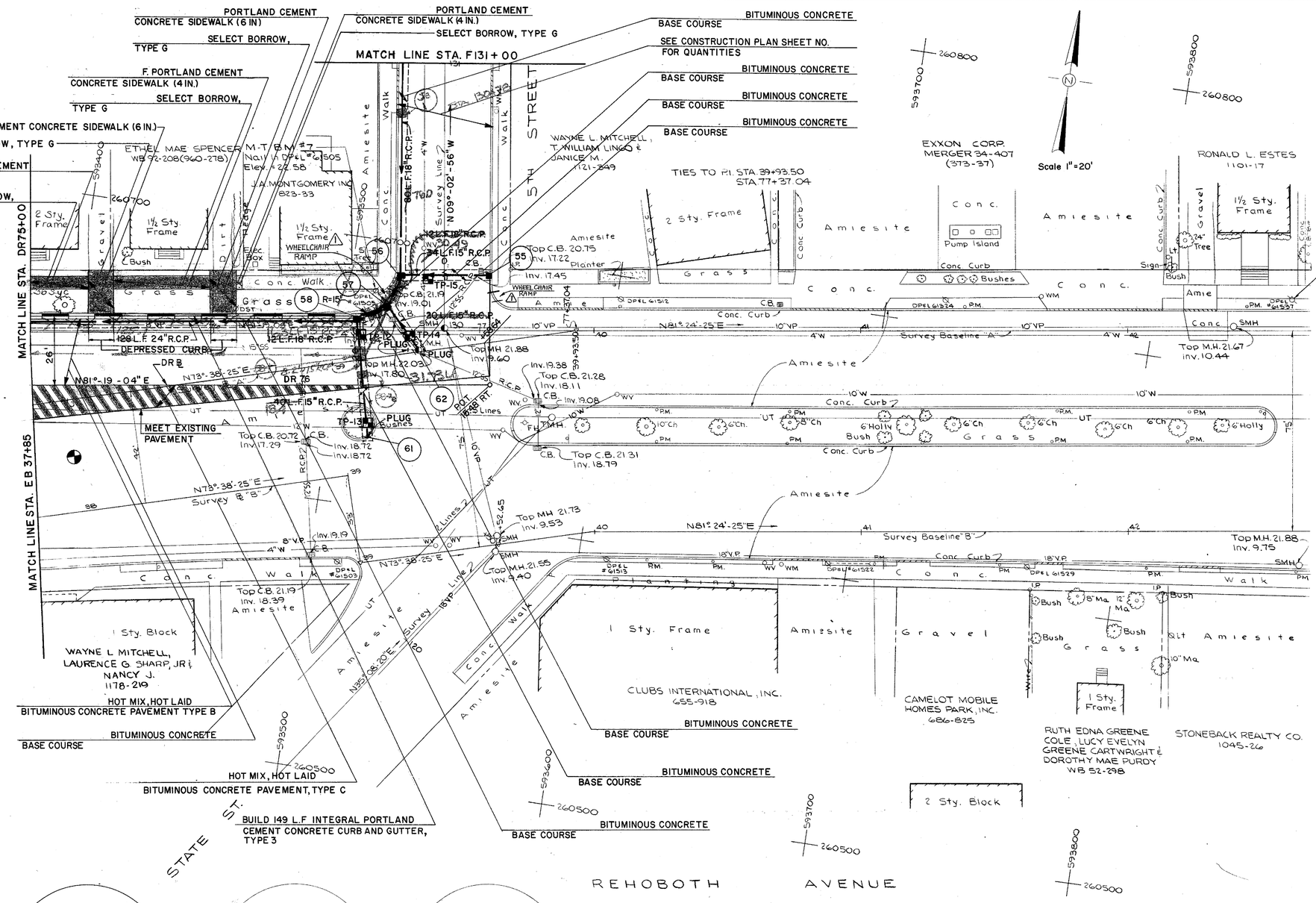

REVISIONS

⚠ ADDENDUM #2 - ADDED WHEELCHAIR RAMPS JUNE 4/24/04

PREL. TRACING M.P. Santana DESIGN W.L. Titus CHKD. A.R. Jalili

CONTRACT	COUNTY	FEDERAL AID PROJECT Nº	SHEET Nº	TOTAL SHEETS
82-073-05	SUSSEX	BRF-1009(3)	D24	155

CONSTRUCTION PLAN-DETOUR
STA. DR 75+00 TO STA. DR 76+25

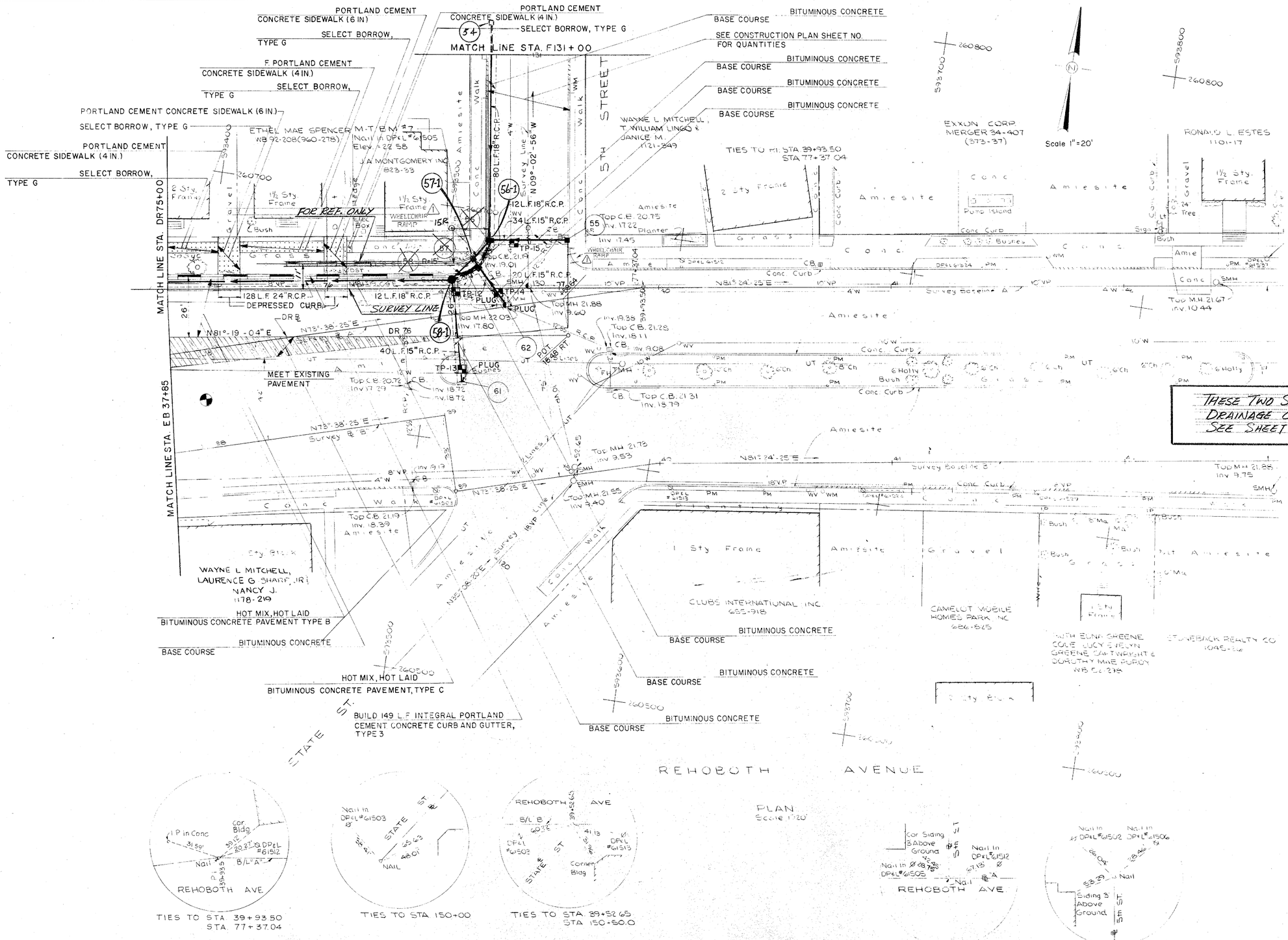

HARDESTY & HANOVER CONSULTING ENGINEERS NEW YORK, N.Y.

REVISIONS

1 REDESIGN 2 POLES, WIRES, TOOK PHOTOS 9/20/04

PREL. TRACING M. P. Santana DESIGN W. L. Titus CHKD A. R. Jolli

40389

CONTRACT	COUNTY	FEDERAL AID PROJECT Nº	SHEET Nº	TOTAL SHEETS
82-073-05	SUSSEX	BRF-1009(3)	24T	155

CONSTRUCTION PLAN - DETOUR
STA. DR 75+00 TO STA. DR 76+25

NEW PLAN SHEET

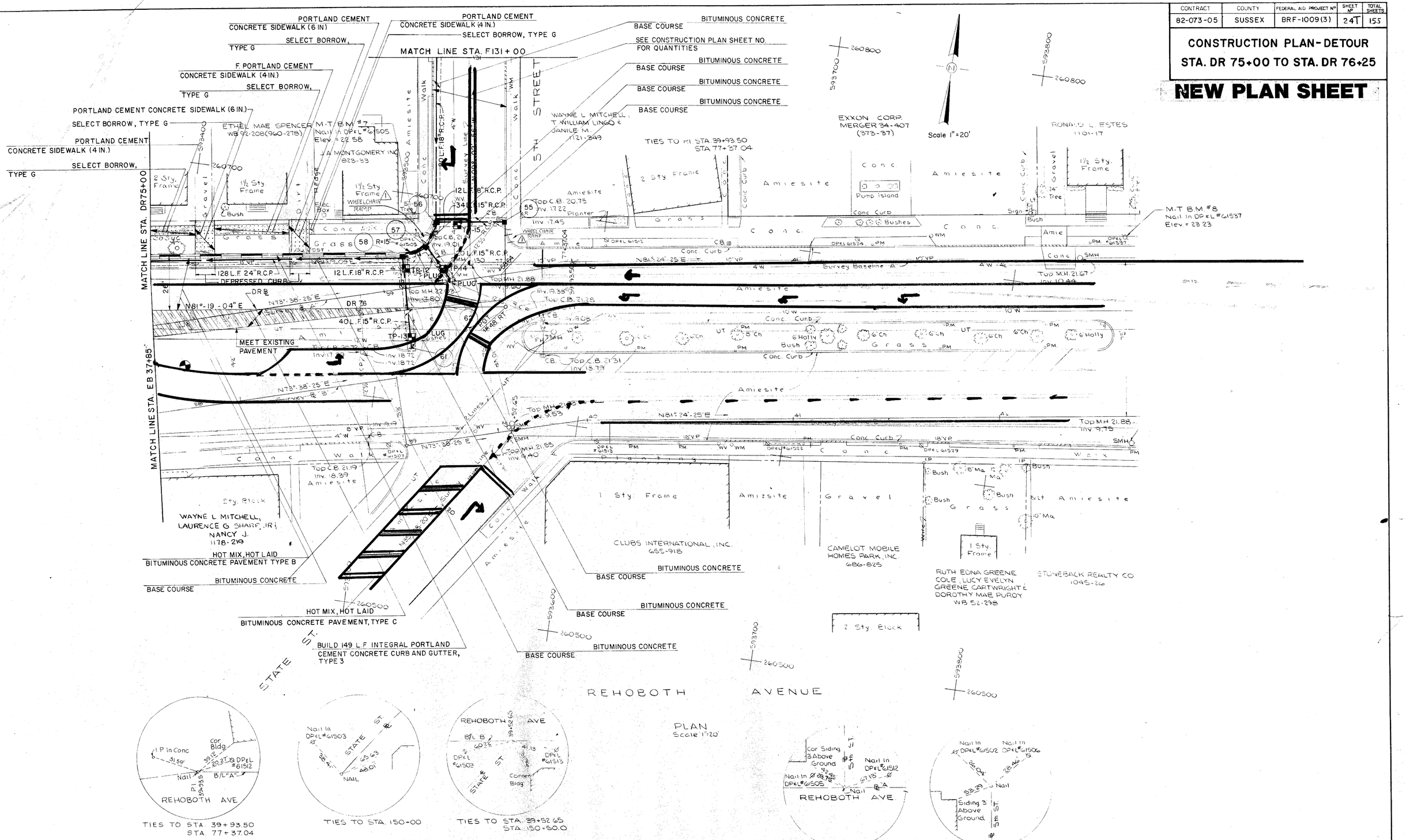

FOR DETAILS SEE SHT. 24

CONTRACT	COUNTY	FEDERAL AID PROJECT Nº	SHEET Nº	TOTAL SHEETS
82-073-05	SUSSEX	BRF-1009(3)	25	155

CONSTRUCTION PLAN-REHOBOTH AVE.
℄ STA. 22+50 TO STA. EB 29+00

Scale 1"=20'

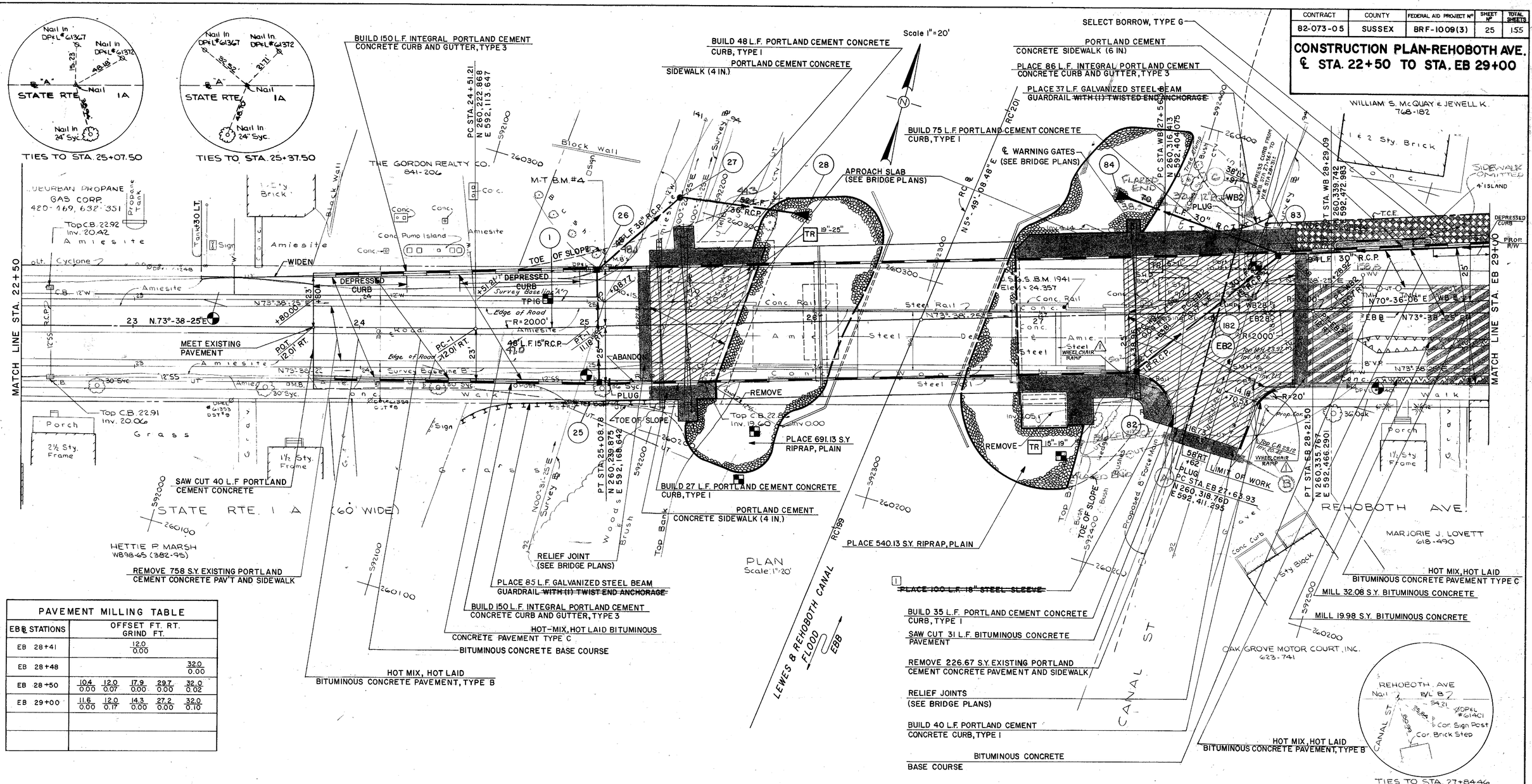

PAVEMENT MILLING TABLE					
EB℄ STATIONS	OFFSET FT. RT. / GRIND FT.				
EB 28+41	12.0 / 0.00				
EB 28+48					32.0 / 0.00
EB 28+50	10.4 / 0.00	12.0 / 0.07	17.9 / 0.00	29.7 / 0.00	32.0 / 0.02
EB 29+00	11.6 / 0.00	12.0 / 0.17	14.3 / 0.00	27.2 / 0.00	32.0 / 0.10

HARDESTY & HANOVER CONSULTING ENGINEERS NEW YORK, N.Y.

REVISIONS
△ ADDENDUM "Z" - ADDED WHEELCHAIR RAMPS JMSJr. 9/26/84
1 REVISION - DELETED STEEL SLEEVE 11/16/84 JMSJr.

FREL. TRACING M.P. Santana DESIGN W.L. Titus CHKD. A.R. Jalil

CONTRACT	COUNTY	FEDERAL AID PROJECT Nº	SHEET Nº	TOTAL SHEETS
82-073-05	SUSSEX	BRF-1009(3)	D 25	1-55

CONSTRUCTION PLAN-REHOBOTH AVE.
℄ STA. 22+50 TO STA. EB 29+00

HARDESTY & HANOVER
CONSULTING ENGINEERS
NEW YORK, N.Y.

REVISIONS
1) ADDED HANDICAP RAMPS JM 9/24/84
2) REVISION - DELETED STEEL SLEEVE 11/5/84 JM

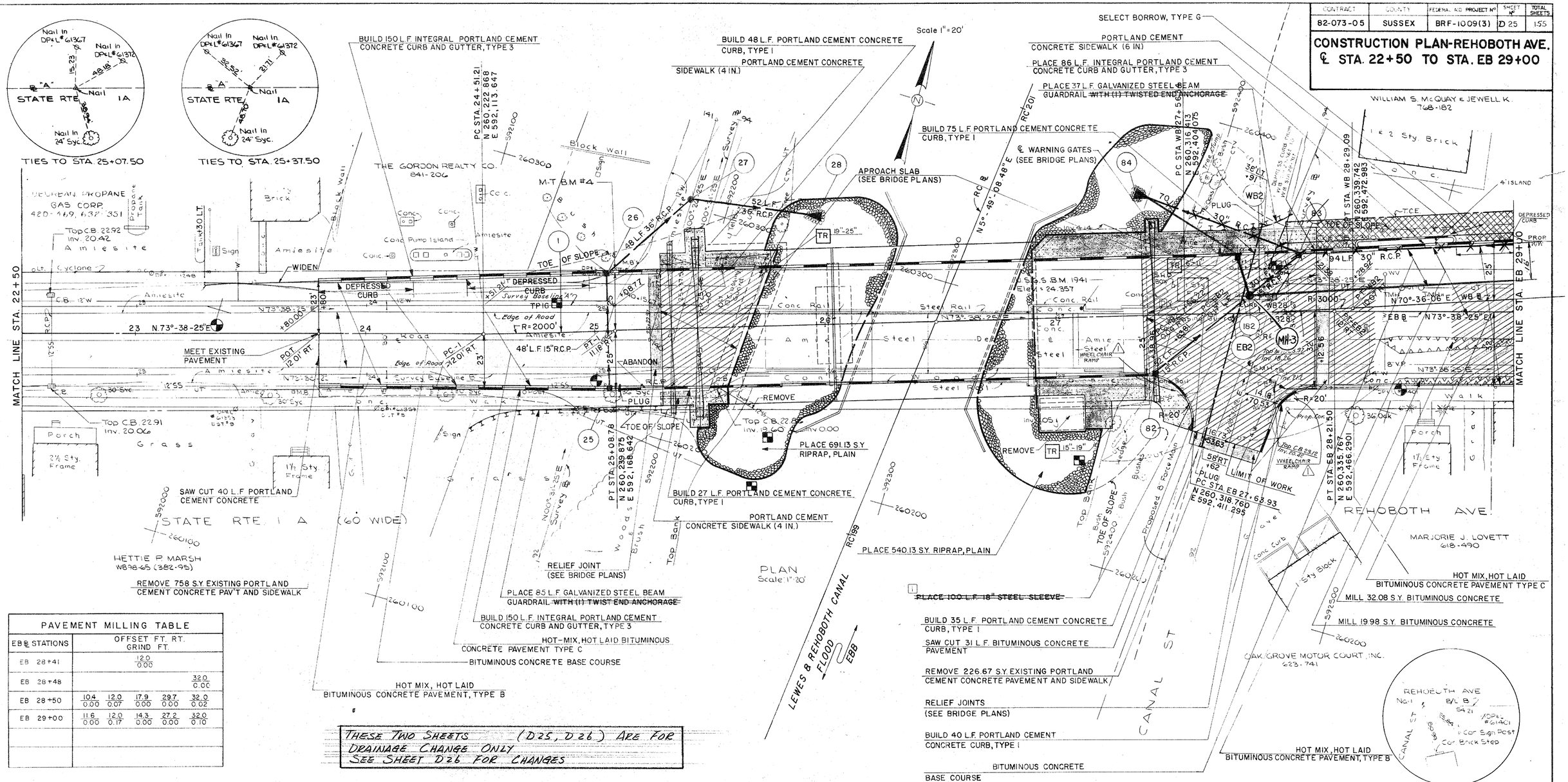

PAVEMENT MILLING TABLE					
EB ℄ STATIONS	OFFSET FT. RT. / GRIND FT.				
EB 28+41	12.0 / 0.00				
EB 28+48					32.0 / 0.00
EB 28+50	10.4 / 0.00	12.0 / 0.07	17.9 / 0.00	29.7 / 0.00	32.0 / 0.02
EB 29+00	11.6 / 0.00	12.0 / 0.17	14.3 / 0.00	27.2 / 0.00	32.0 / 0.10

THESE TWO SHEETS (D25, D26) ARE FOR DRAINAGE CHANGE ONLY. SEE SHEET D26 FOR CHANGES

PREL. TRACING M.P. Santona DESIGN W.L. Titus CHKD A.R. Jolli

CONTRACT	COUNTY	FEDERAL AID PROJECT Nº	SHEET Nº	TOTAL SHEETS
82-073-05	SUSSEX	BRF-1009(3)	25R	155

REHOBOTH AVE.

NEW PLAN SHEET

THESE TWO SHEETS (25R, 26R) ARE FOR DESIGN CHANGE ONLY

1. CONVERT C.B TO J.B.

NO.	MARK
1	73

2. ELIMINATE C.B

NO.	MARK
1	30A

3. ADJ. C.B.

NO.	MARK	TOP GRADE
1	40	~~23.81~~ SET T.G. IN FIELD

4. BUILD C.B.

NO.	MARK	TYPE	TOP EL.*	INVERTS*	STATION	OFFSET
1.	75	'J' MOD.			'WB' 32 + 22	20' LT.
2.	77-1	'J'	23.54	INV. OUT 17.84	'EB' 33+25	35' RT.
3	80	'J'			'WB' 31+00	20' LT.
4	CB-1	'J'	23.37	INV. OUT 17.90	'C' 101+50	19' RT.
5	CB-2	'J'	23.32	INV. OUT 17.57; INV. IN 17.65	'C' 100 + ~~97~~ 94	19' LT.
6	CB-3	'J'	23.89	INV. OUT 17.28; INV. IN 17.36	'WB' 29+38	23' LT.
7	83	'J' MOD.			27+85	24' LT.

5. PLACE PIPES

NO.	MARK INV. IN — INV. OUT	TYPE	LENGTH	SLOPE*	INV. IN*	INV. OUT*	REMARK
1	89 — 75	30" RCP	64 L.F.				63.48'
2	75 — MH2	30" RCP	10 L.F.				9.15'
3	77-1 — 73	15" RCP	40 L.F.	.3%	17.84	17.72	
4	77 — MH1	15" RCP	74 L.F.				70.16'
5	MH1 — MH2	30" RCP	120 L.F.				111.74'
6	80 — MH2	15" RCP	10 L.F.				8.28'
7	81 — MH2	15" RCP	54 L.F.				53.85'
8	MH2 — MH3	30" RCP	162 L.F.				155.29'
9	CB1 — CB2	15" RCP	62 L.F.	.4%	17.90	17.65	60.39'
10	CB2 — CB3	15" RCP	52 L.F.	.4%	17.57	17.36	46.89'
11	CB3 — MH3	15" RCP	5 L.F.	.4%	17.28	17.26	2.61'
12	MH3 — 83	30" RCP	150 L.F.				
13	82 — 83	15" RCP	65 L.F.				
14	83 — 84	30" RCP	54 L.F.				

6. BUILD M.H.

NO.	MARK	TYPE	TOP EL.*	INVERTS*	STATION	OFFSET
1	MH 1	'B'			'WB' 32+21	8' LT.
2	MH 2	'B'			'WB' 31+00	8' LT.
3	MH 3	'B'		INV. IN 17.26	'WB' 29+37	16' LT.

* SLOPE, INVERTS & TOP EL. NOT SHOWN ARE TO BE AS SET IN THE FIELD

FOR INFORMATION OF 84, 82, 81, 77, 89 SEE DRAINAGE TABLES ON SHEET #13, #14

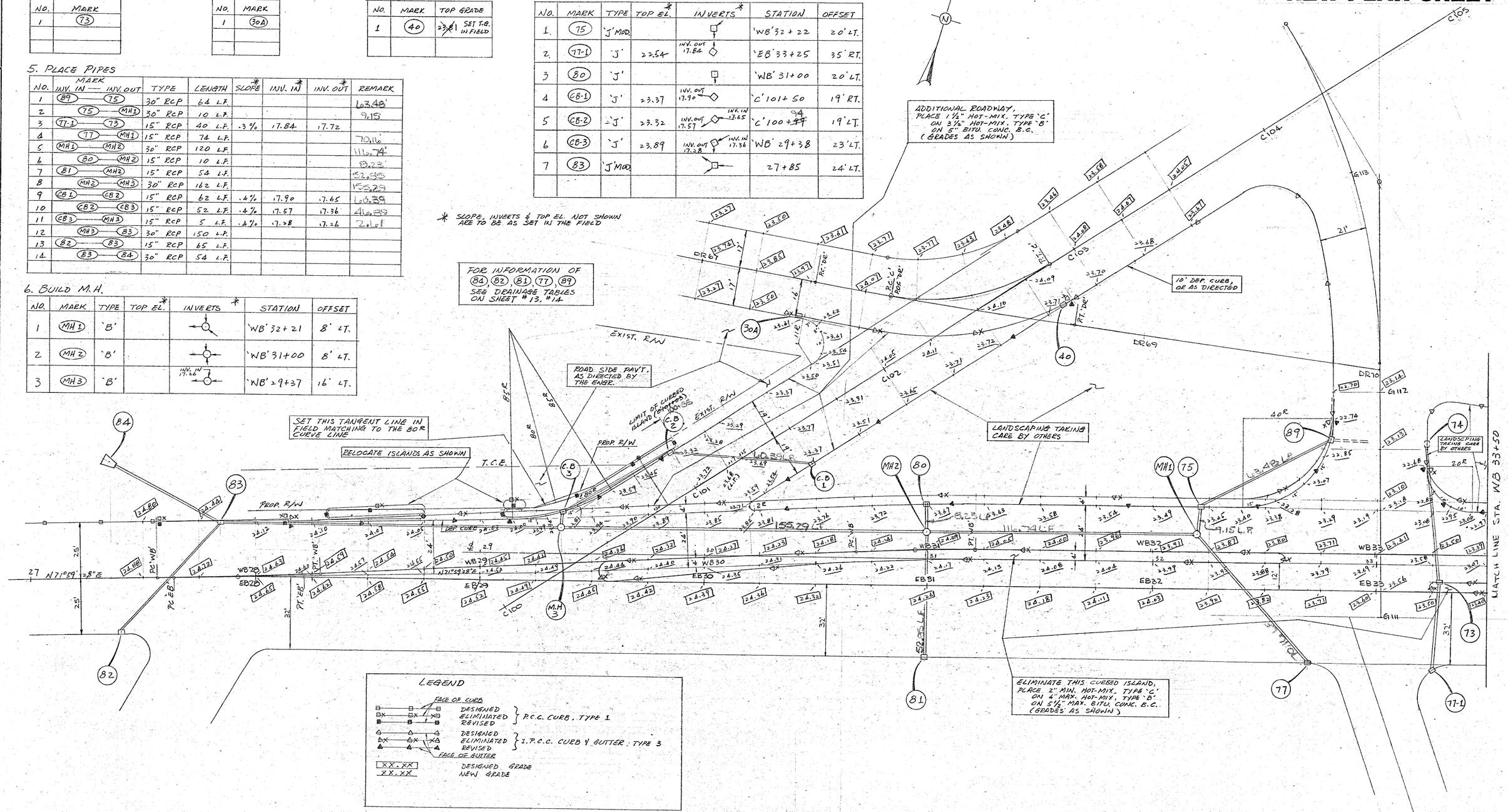

REVISIONS

1 New plan sheet 4/23/95 JMSJ.

DESIGN ____ CHKD. ____

PREL. TRACING ____

CONTRACT	COUNTY	FEDERAL AID PROJECT Nº	SHEET Nº	TOTAL SHEETS
82-073-05	SUSSEX	BRF-1009(3)	26	155

CONSTRUCTION PLAN-REHOBOTH AVE.
STA. EB 29+00 TO STA. EB 34+85

HARDESTY & HANOVER
CONSULTING ENGINEERS
NEW YORK, N.Y.

REVISIONS
ADDENDUM #2 - ADDED WHEELCHAIR RAMPS 3/25/09

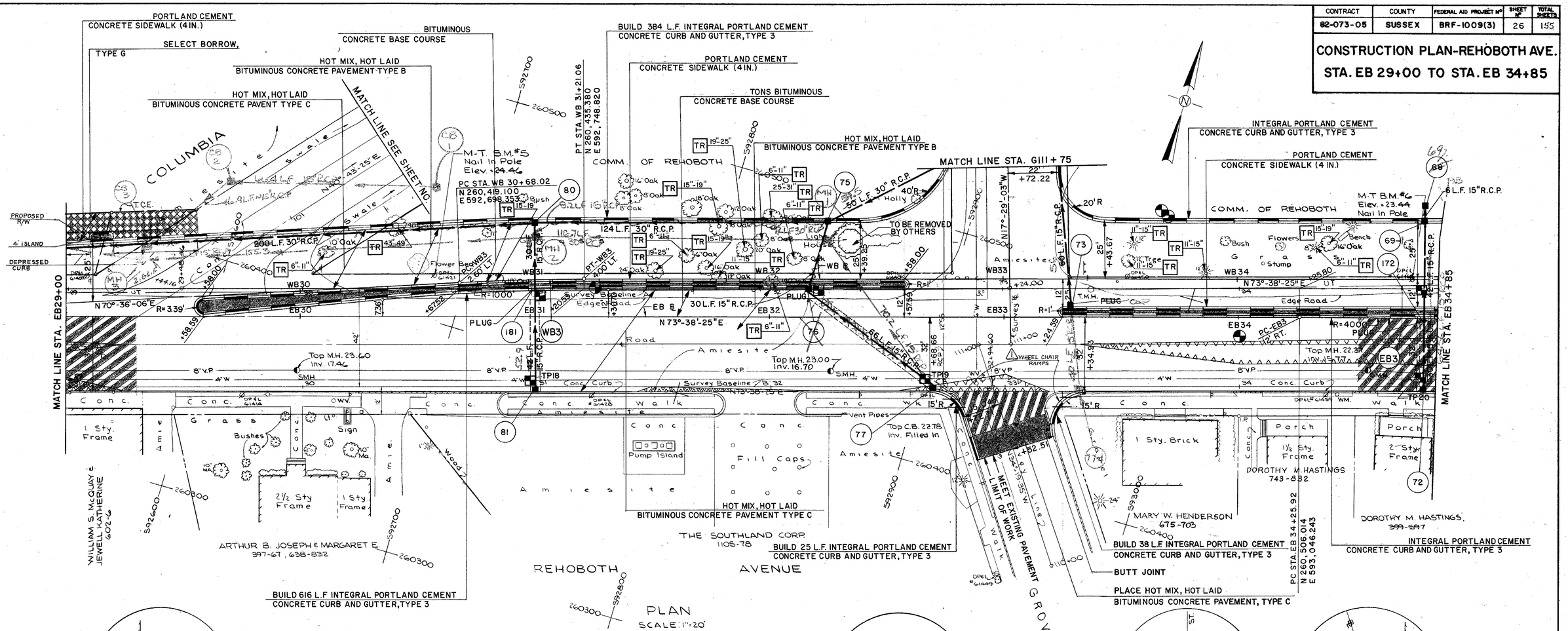

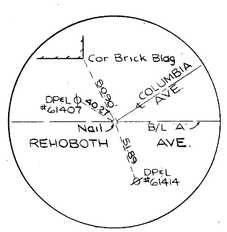

TIES TO STA. 29+48.46
STA. 100+44.16

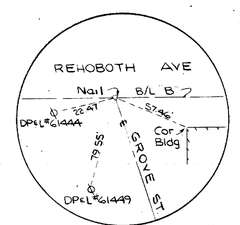

TIES TO STA. 32+94.60
STA. 110+81.08

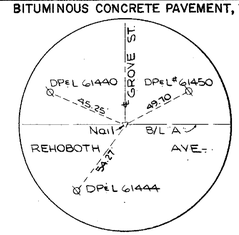

TIES TO STA. 33+02.07
STA. 111+24.00

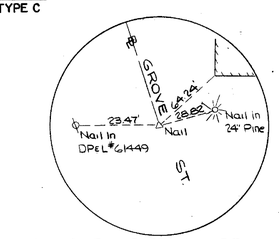

TIES TO STA. 110+00

PAVEMENT MILLING TABLE

EB ℄ STATIONS	OFFSET FT. RT. / GRIND FT.				
EB 29+00	11.6 / 0.00	12.0 / 0.17	14.3 / 0.00	27.2 / 0.00	32.0 / 0.10
EB 29+25		12.0 / 0.00			32.0 / 0.00
EB 31+40					32.0 / 0.00
EB 31+50				30.4 / 0.00	32.0 / 0.03
EB 32+00				31.1 / 0.00	32.0 / 0.02
EB 32+16					32.0 / 0.00
EB 32+51					32.0 / 0.00
EB 33+00				24.5 / 0.00	32.0 / 0.18
EB 33+20					32.0 / 0.00
EB 33+33		12.0 / 0.00			
EB 33+50	11.8 / 0.00	12.0 / 0.01	12.8 / 0.00		
EB 34+00	10.2 / 0.00	12.0 / 0.08	18.4 / 0.00		
EB 34+50	9.5 / 0.00	12.0 / 0.10	19.1 / 0.00		
EB 34+85	8.4 / 0.00	11.0 / 0.13	19.1 / 0.00		

PREL. TRACING M. P. Santana DESIGN W. L. Titus CHKD. A. R. Jalili

CONTRACT	COUNTY	FEDERAL AID PROJECT Nº	SHEET Nº	TOTAL SHEETS
82-073-05	SUSSEX	BRF-1009(3)	D26	155

CONSTRUCTION PLAN-REHOBOTH AVE.

STA. EB 29+00 TO STA. EB 34+85

HARDESTY & HANOVER CONSULTING ENGINEERS NEW YORK, N.Y.

REVISIONS

ADDENDUM #2 ADD WHEELCHAIR RAMPS 3/25/96

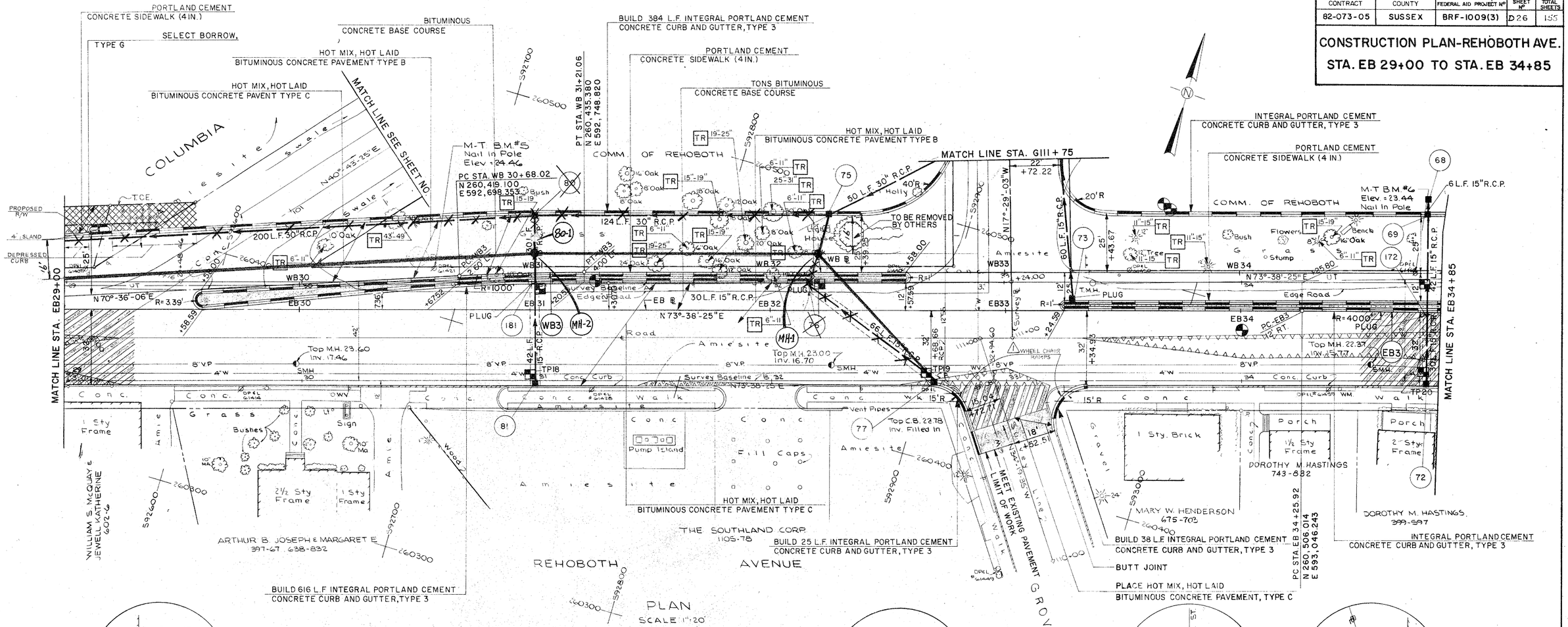

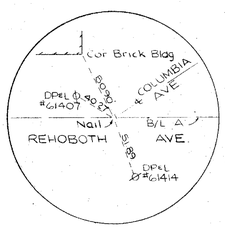

TIES TO STA 29+48.46
STA 100+44.16

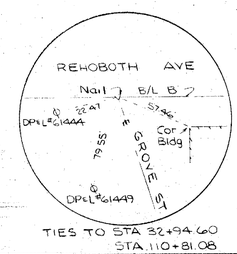

TIES TO STA 32+94.60
STA 110+81.08

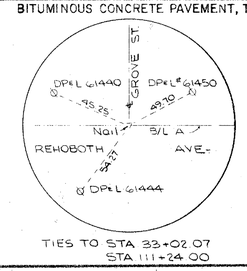

TIES TO STA 33+02.07
STA 111+24.00

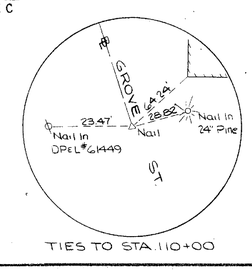

TIES TO STA 110+00

PAVEMENT MILLING TABLE

EB ℄ STATIONS	OFFSET FT RT. GRIND FT.				
EB 29+00	11.6 0.00	12.0 0.17	14.3 0.00	27.2 0.00	32.0 0.10
EB 29+25		12.0 0.00			32.0 0.00
EB 31+40					32.0 0.00
EB 31+50				30.4 0.00	32.0 0.03
EB 32+00				31.1 0.00	32.0 0.02
EB 32+16					32.0 0.00
EB 32+51					32.0 0.00
EB 33+00				24.5 0.00	32.0 0.18
EB 33+20					32.0 0.00
EB 33+33		12.0 0.00			
EB 33+50	11.8 0.00	12.0 0.01	12.8 0.00		
EB 34+00	10.2 0.00	12.0 0.08	18.4 0.00		
EB 34+50	9.5 0.00	12.0 0.10	19.1 0.00		
EB 34+85	8.4 0.00	11.0 0.13	19.1 0.00		

THESE TWO SHEETS (D25, D26) ARE FOR DRAINAGE CHANGE ONLY

A. ELIMINATE PIPES

NO.	MARK
1	77 — 76
2	76 — 75
3	75 — 80
4	181 — 80
5	80 — 83
6	182 — 83
7	83 — 84

B. ELIMINATE C.B.

NO.	MARK
1	76
2	80
3	83

C. ADD M.H.

NO.	MARK	TYPE	TOP EL.	INVERTS	STATION	OFFSET
1	MH-1	B	SET IN FIELD	12.23, 12.25, 15.00	WB 32+21.00	8' LT.
2	MH-2	B	"	11.97, 14.81, 11.99, 14.96	WB 31+0.00	8' LT.
3	MH-3	B	"	11.32, 11.34, 18.33	27+85.00	8' LT.

D. ADD C.B.

NO.	MARK	TYPE	TOP EL.	INVERTS	STATION	OFFSET
1	83-1	J'MODIFIED	SET IN FIELD	11.23, 11.25	27+80	25' LT.

E. ADD PIPES

NO.	MARK INV. IN → INV. OUT	TYPE	LENGTH	SLOPE	INV. IN	INV. OUT	REMARK
1	77 — MH-1	15" RCP	72 L.F.	.3 %	15.22	15.00	
2	75 — MH-1	30" RCP	17 L.F.	.2 %	12.29	12.25	
3	MH-1 — MH-2	30" RCP	120 L.F.	.2 %	12.23	11.99	
4	181 — MH-2	15" RCP	12 L.F.	.3 %	15.00	14.96	
5	80-1 — MH-2	15" RCP	6 L.F.	.3 %	14.83	14.81	PLUG INV. IN END
6	MH-2 — MH-3	30" RCP	314 L.F.	.2 %	11.97	11.34	
7	182 — MH-3	15" RCP	2 L.F.	.3 %	18.34	18.33	
8	MH-3 — 83-1	30" RCP	17 L.F.	.4 %	11.32	11.25	
9	83-1 — 84	30" RCP	46 L.F.	.4 %	11.23	11.04	

F. CHANGE FLARE END SECTION INVERTS

NO.	MARK	INV. IN	INV. OUT
1	84	11.04	11.00

PRELI. TRACING M. P. Santana DESIGN W. L. Titus CHKD. A. R. Jolitt

CONTRACT	COUNTY	FEDERAL AID PROJECT Nº	SHEET Nº	TOTAL SHEETS
82-073-05	SUSSEX	BRF-1009(3)	26R	155

REHOBOTH AVE.

NEW PLAN SHEET

THESE TWO SHEETS (25R, 26R) ARE FOR DESIGN CHANGE ONLY

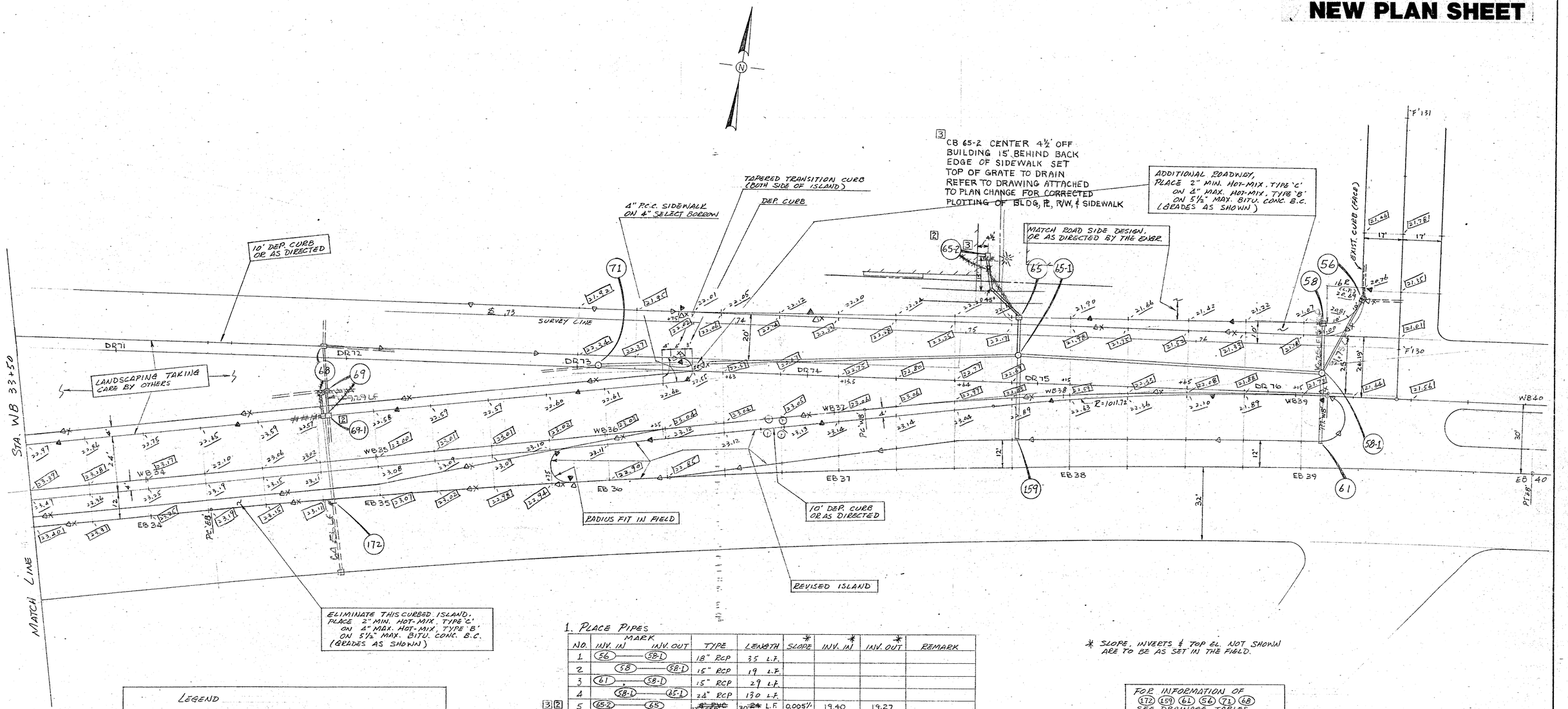

1. PLACE PIPES

NO.	MARK INV. IN	MARK INV. OUT	TYPE	LENGTH	SLOPE*	INV. IN*	INV. OUT*	REMARK
1	56	58-1	18" RCP	35 L.F.				
2	58	58-1	15" RCP	19 L.F.				
3	61	58-1	15" RCP	29 L.F.				
4	58-1	65-1	24" RCP	190 L.F.				
3 2 5	65-2	65	~~24" PVC~~ 12" RCP	30 ~~24~~ L.F.	0.005'/'	19.40	19.27	
6	65	65-1	15" RCP	14 L.F.				
7	159	65-1	15" RCP	35 L.F.				
8	65-1	71	24" RCP	180 L.F.				

* SLOPE, INVERTS & TOP EL. NOT SHOWN ARE TO BE AS SET IN THE FIELD.

FOR INFORMATION OF (172) (159) (61) (56) (71) (68) SEE DRAINAGE TABLES ON SHEET # 13, #14

2. BUILD C.B.

NO.	MARK	TYPE	TOP EL.*	INVERTS*	STATION	OFFSET
1	58	'J'			'DR' 76+23	30' LT.
3 2 2	65-2	'B'	~~21.80~~	19.40	~~'DR' 74+77~~	~~49' LT.~~
3	65	'J'			'DR' 74+92	28' LT.
4	69	'J'			'DR' 71+90	25' RT.

3. BUILD M.H.

NO.	MARK	TYPE	TOP EL.*	INVERTS*	STATION	OFFSET
1	58-1	'C'			'DR' 76+23	9' LT.
2	65-1	'ST'D'			'DR' 74+91.5	12' LT.

FOR DETAILS SEE SH. 26

LEGEND

- DESIGNED / ELIMINATED / REVISED } P.C.C. CURB, TYPE 1 — FACE OF CURB
- DESIGNED / ELIMINATED / REVISED } I.P.C.C. CURB & GUTTER, TYPE 3 — FACE OF GUTTER
- XX.XX — DESIGNED GRADE
- XX.XX — NEW GRADE

REVISIONS

1. New plan sheet 4/25/85 JMS.Jr.
2. Added C.B. 65-2 & 69-1 7/2/85 JMS.Jr.
3. Changed location of C.B. 65-2 12/4/85 JMS.Jr.

DESIGN ____ CHKD. ____

PREL. TRACING ____

40389

CONTRACT	COUNTY	FEDERAL AID PROJECT Nº	SHEET Nº	TOTAL SHEETS
82-073-05	SUSSEX	BRF-1009 (3)	27	155

CONSTRUCTION PLAN - GROVE ST. REHOBOTH AVE. EXT. COLUMBIA AVE.

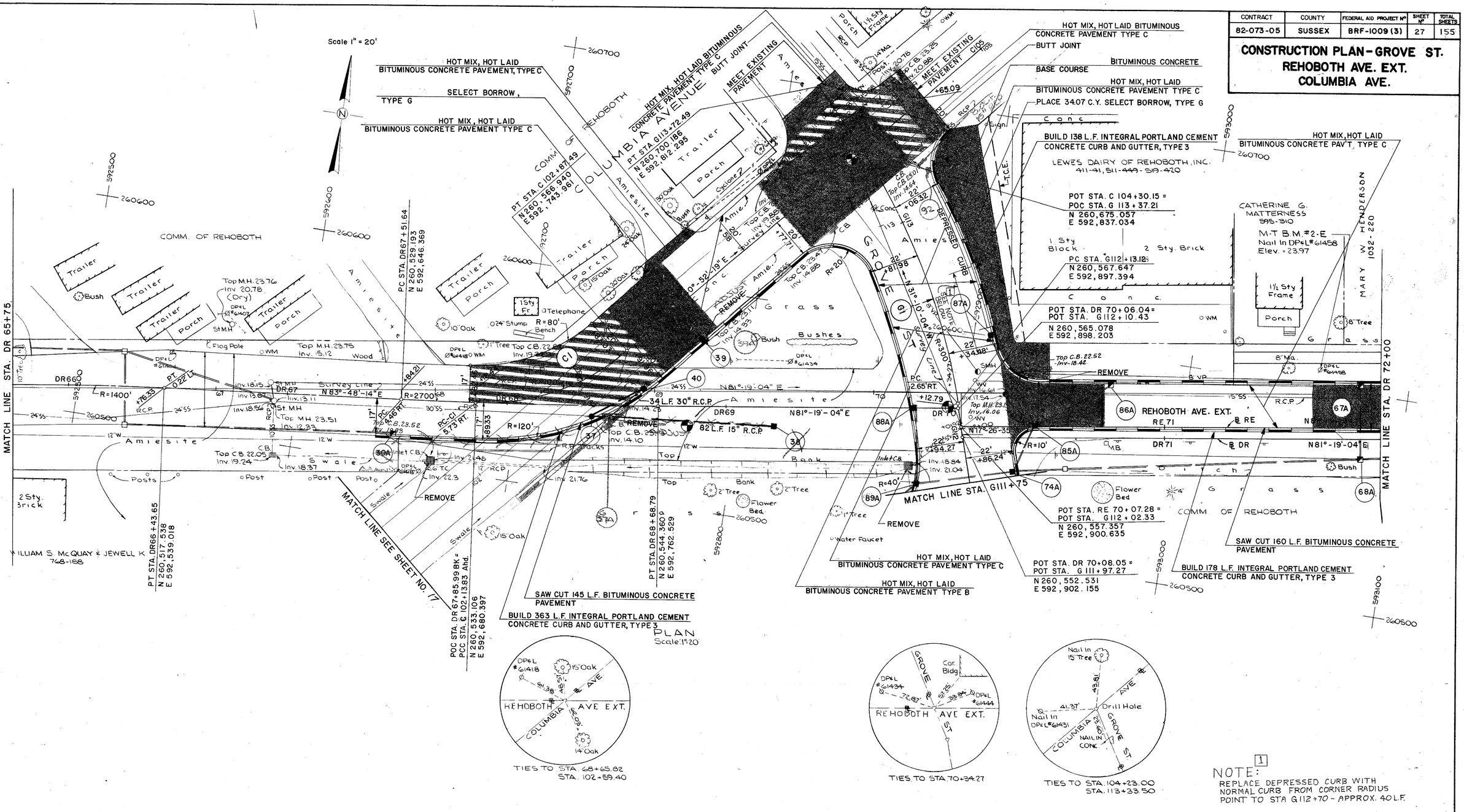

NOTE: [1]
REPLACE DEPRESSED CURB WITH NORMAL CURB FROM CORNER RADIUS POINT TO STA G112+70 - APPROX. 40 L.F.

HARDESTY & HANOVER CONSULTING ENGINEERS NEW YORK, N.Y.

REVISIONS
1 Replaced section of depressed curb with normal curb 2/11/87 W.S.Jr.

PREL. TRACING M. Karpman DESIGN W.L. Titus CHKD. A.R. Tolilli

CONTRACT	COUNTY	FEDERAL AID PROJECT Nº	SHEET Nº	TOTAL SHEETS
82-073-05	SUSSEX	BRF-1009(3)	28	155

CONSTRUCTION PLAN-REHOBOTH AVE.
STA. DR 72+00 TO STA. DR 75+00
STA. EB 34+85 TO STA. EB 37+85

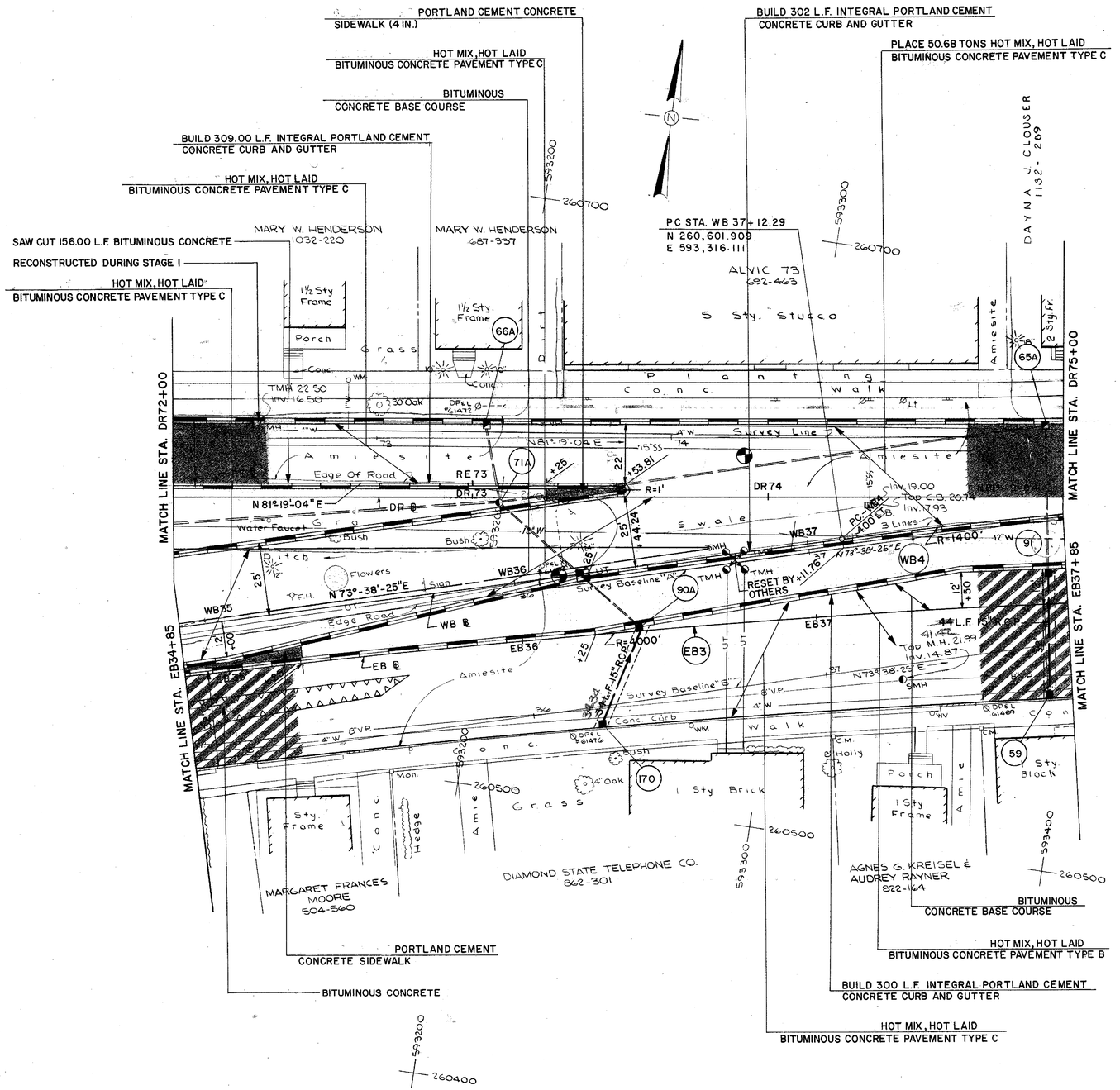

PAVEMENT MILLING TABLE			
REHOBOTH AVE. EB ℄ STATIONS	OFFSET FT. RT. GRIND FT.		
EB 34+85	8.4 / 0.0	11.0 / 0.13	19.1 / 0.0
EB 35+00	9.0 / 0.0	11.0 / 0.09	16.6 / 0.0
EB 35+50	8.3 / 0.0	9.0 / 0.04	14.0 / 0.0
EB 35+60		8.4 / 0.0	

HARDESTY & HANOVER CONSULTING ENGINEERS NEW YORK, N.Y.

REVISIONS

PREL. TRACING M. Karpman DESIGN W. L. Titus CHKD. A. R. Tolli

CONTRACT	COUNTY	FEDERAL AID PROJECT Nº	SHEET Nº	TOTAL SHEETS
82-073-05	SUSSEX	BRF-1009(3)	29	155

CONSTRUCTION PLAN—REHOBOTH AVE.
STA. EB 37+85 TO STA. EB 40+50

HARDESTY & HANOVER
CONSULTING ENGINEERS
NEW YORK, N.Y.

REVISIONS
1 ADDENDUM #2 - ADDED WHEELCHAIR RAMPS JHSJr. 9/24/84
2 ADDED CURB & GUTTER JHSJr. 3/24/86

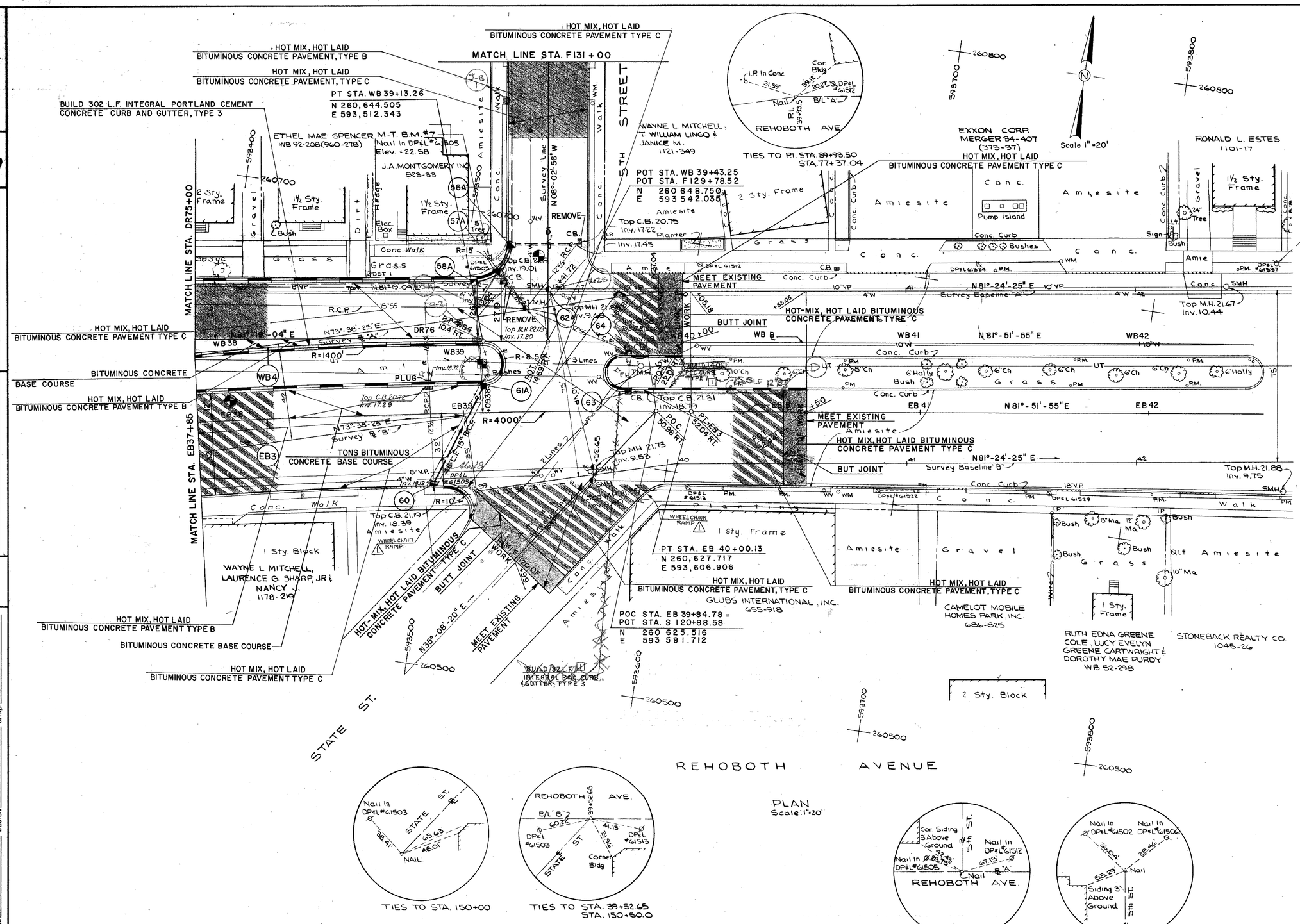

PREL. TRACING M.P. Sontana DESIGN W.L. Titus CHKD. A.R. Tolli

CONTRACT	COUNTY	FEDERAL AID PROJECT Nº	SHEET Nº	TOTAL SHEETS
82-073-05	SUSSEX	BRF-1009(3)	30	155

CONSTRUCTION PLAN - FIFTH ST.
STA. F 131+00 TO STA. F 136+97

HARDESTY & HANOVER
CONSULTING ENGINEERS
NEW YORK, N.Y.

REVISIONS

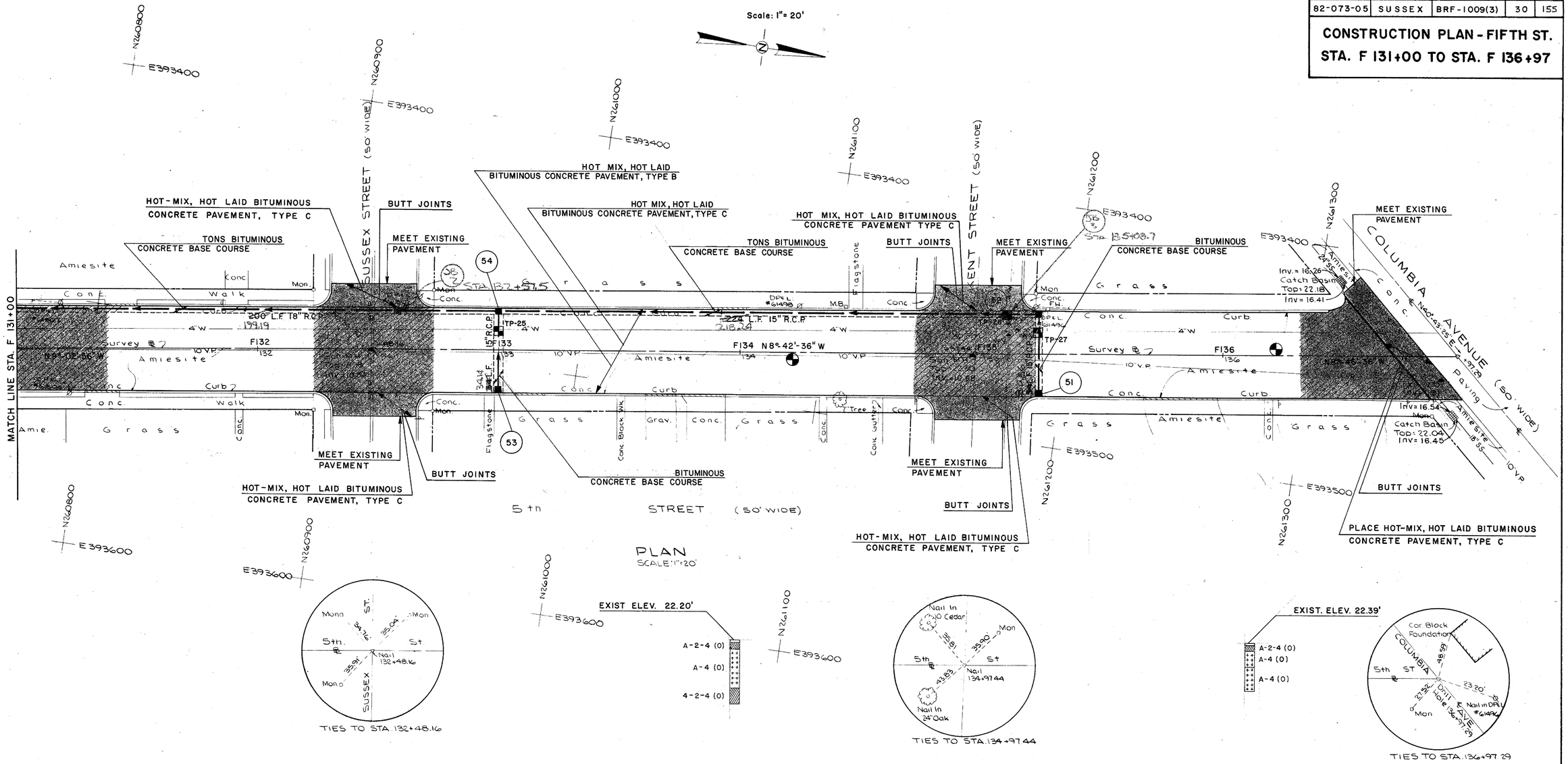

PRELIM. TRACING M. Karpman DESIGN W.L. Titus CHKD. A.R. Jalili

CONTRACT	COUNTY	FEDERAL AID PROJECT Nº	SHEET Nº	TOTAL SHEETS
82-073-05	SUSSEX	BRF-1009(3)	31	155

PROFILE - DETOUR
STA. DR 49+00 TO STA. DR 58+00

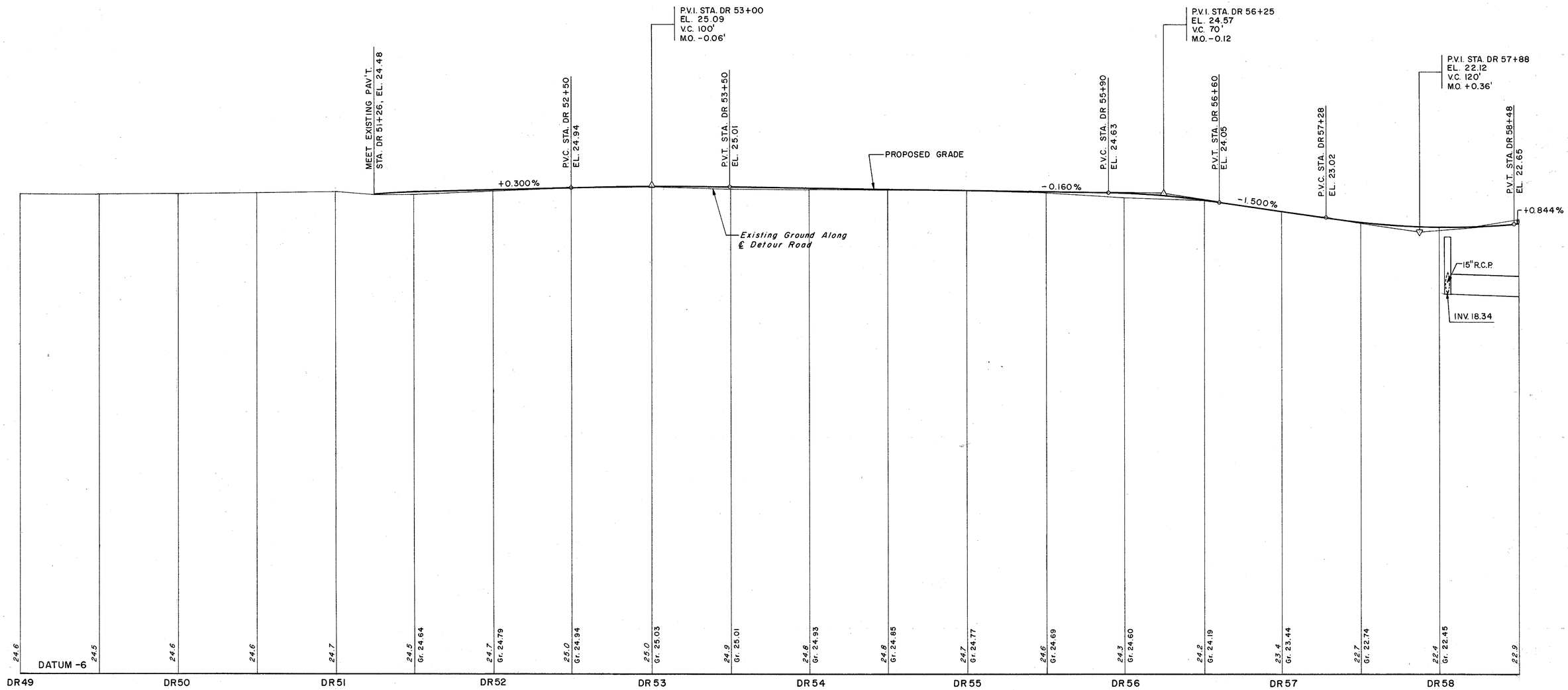

PROFILE - TEMPORARY DETOUR ROAD

Scale: Horiz. 1" = 30'
Vert. 1" = 3'

HARDESTY & HANOVER
CONSULTING ENGINEERS
NEW YORK, N.Y.

REVISIONS

PREL. TRACING S. Da Cruz DESIGN A. R. Jalili CHKD. W. T. Titus

40389

CONTRACT	COUNTY	FEDERAL AID PROJECT Nº	SHEET Nº	TOTAL SHEETS
82-073-05	SUSSEX	BRF-1009(3)	32	135

PROFILE - DETOUR
STA. DR58+50 TO STA. DR 68+00

HARDESTY & HANOVER
CONSULTING ENGINEERS
NEW YORK, N.Y.

REVISIONS

PREL. TRACING S. Da Cruz DESIGN A.R. Tolli CHKD. W.L. Titus

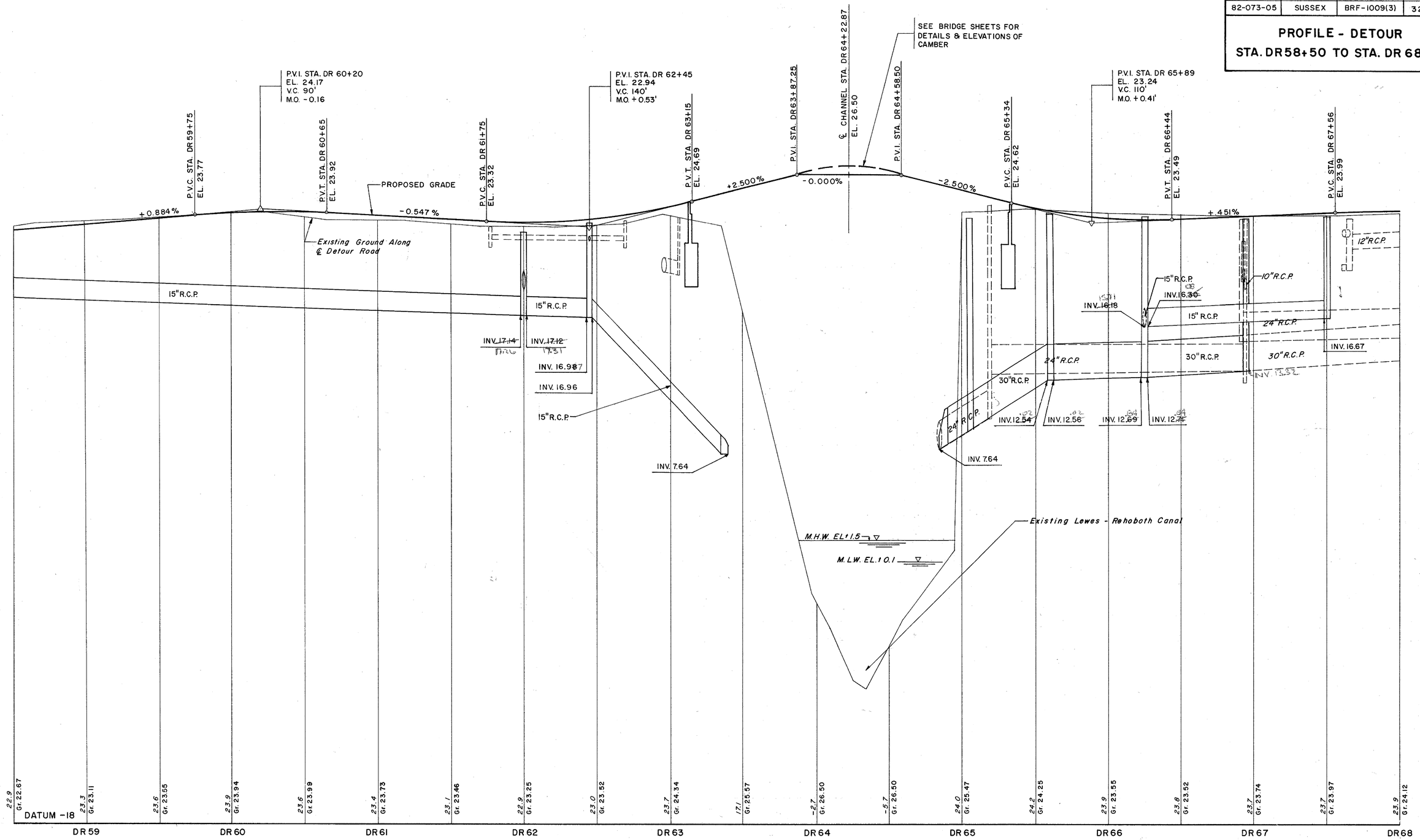

PROFILE - TEMPORARY DETOUR ROAD

Scale: Horiz. 1" = 30'
Vert. 1" = 3'

HARDESTY & HANOVER
CONSULTING ENGINEERS
NEW YORK, N.Y.

REVISIONS

CONTRACT	COUNTY	FEDERAL AID PROJECT Nº	SHEET Nº	TOTAL SHEETS
82-073-05	SUSSEX	BRF-1009(3)	33	155

PROFILE - DETOUR
STA. DR 68+00 TO STA. DR 80+00

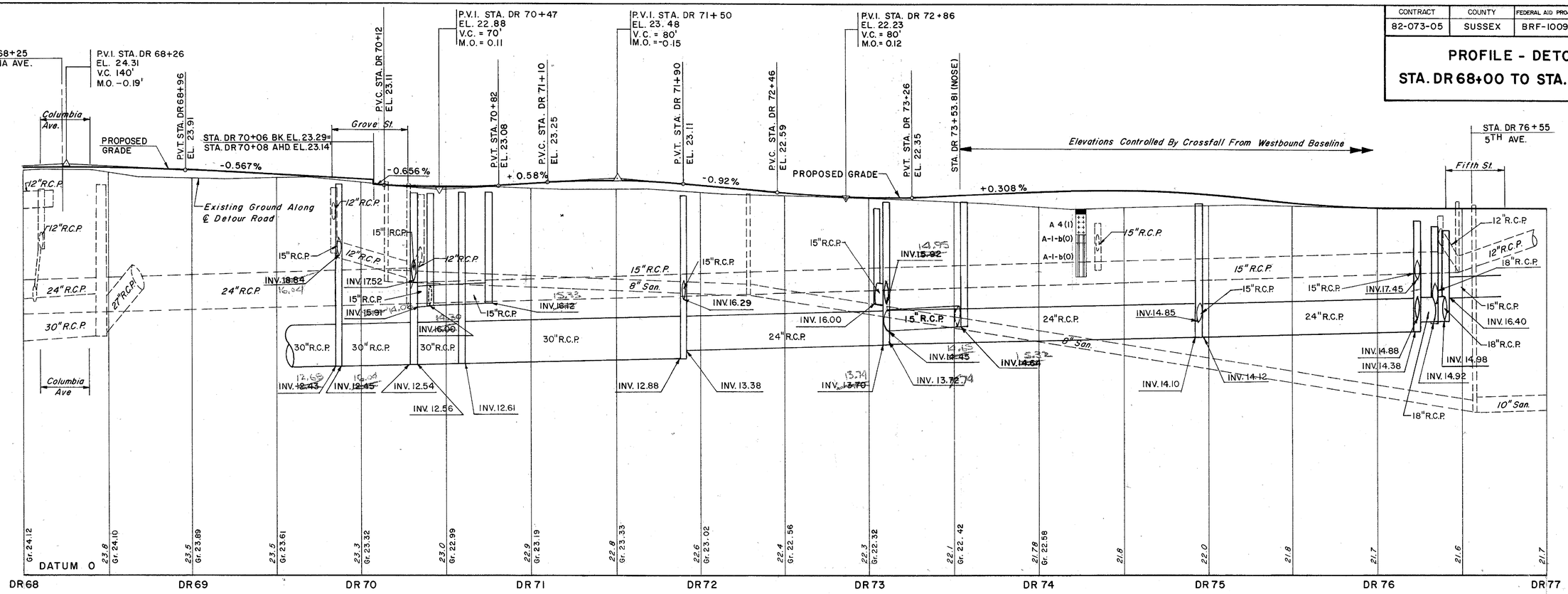

PROFILE - TEMPORARY DETOUR ROAD

Scale: Horiz. 1" = 30'
Vert. 1" = 3'

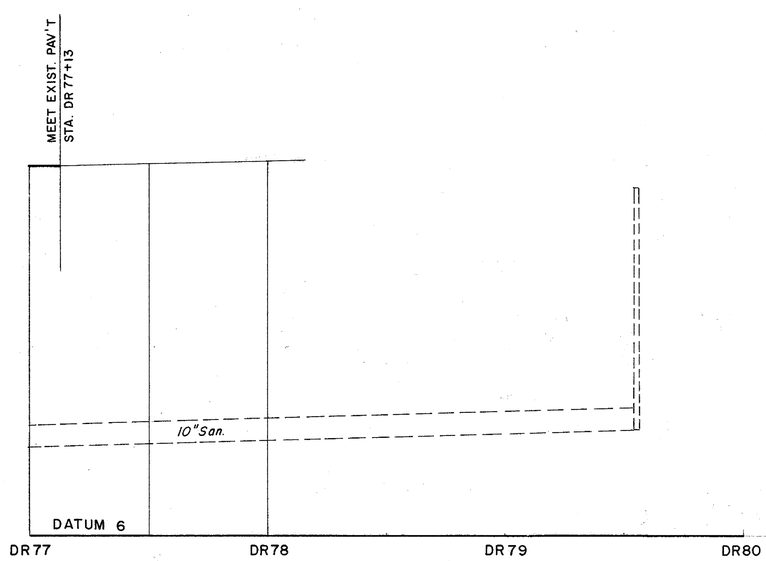

PROFILE - TEMPORARY DETOUR ROAD

Scale: Horiz. 1" = 30
Vert. 1" = 3'

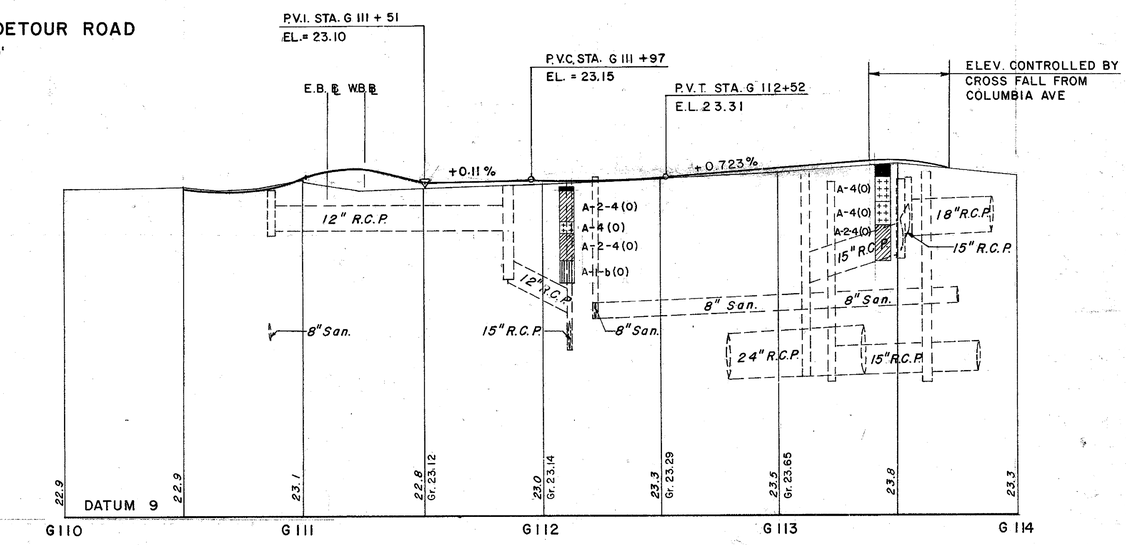

PROFILE - GROVE STREET

Scale. Horiz. 1" = 30
Vert. 1" = 3'

PREL. TRACING S. Da Cruz DESIGN A. R. Tolli CHKD. W. L. Titus

HARDESTY & HANOVER
CONSULTING ENGINEERS
NEW YORK, N.Y.

REVISIONS

CONTRACT	COUNTY	FEDERAL AID PROJECT Nº	SHEET Nº	TOTAL SHEETS
82-073-05	SUSSEX	BRF-1009(3)	34	155

PROFILE - REHOBOTH AVE.
℄ STA. 21+00 TO ℄ STA. 27+50

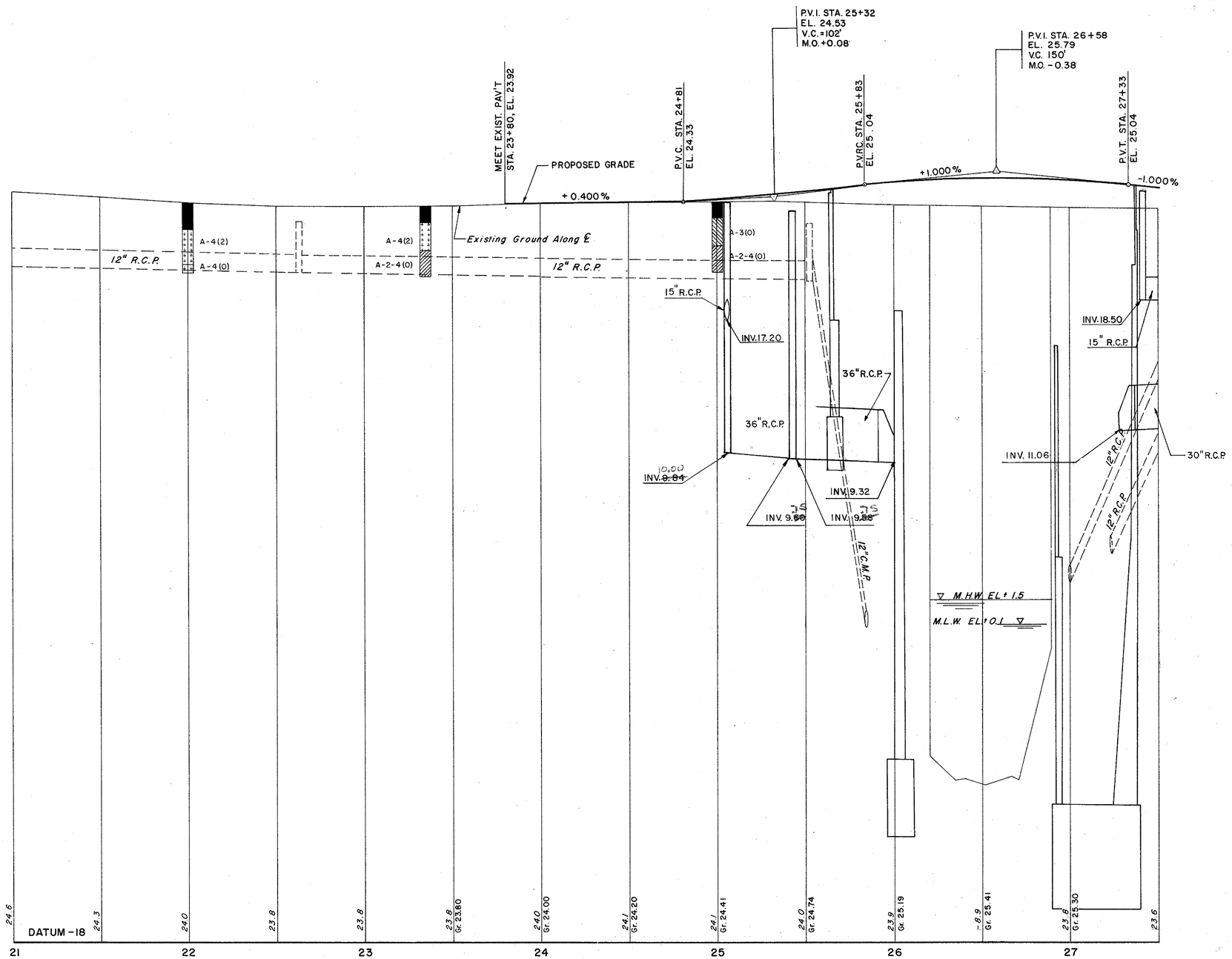

PROFILE-REHOBOTH AVENUE

Scale: Horiz. 1" = 30'
Vert. 1" = 3'

PREL. TRACING S. Da Cruz DESIGN A.R. Jalili CHKD. W.L. Titus

40369

CONTRACT	COUNTY	FEDERAL AID PROJECT Nº	SHEET Nº	TOTAL SHEETS
82-073-05	SUSSEX	BRF-1009(3)	35	155

PROFILE - REHOBOTH AVE.
STA. WB 27+50 TO STA. WB 35+00
STA. EB 27+50 TO STA. EB 35+00

HARDESTY & HANOVER
CONSULTING ENGINEERS
NEW YORK, N.Y.

REVISIONS

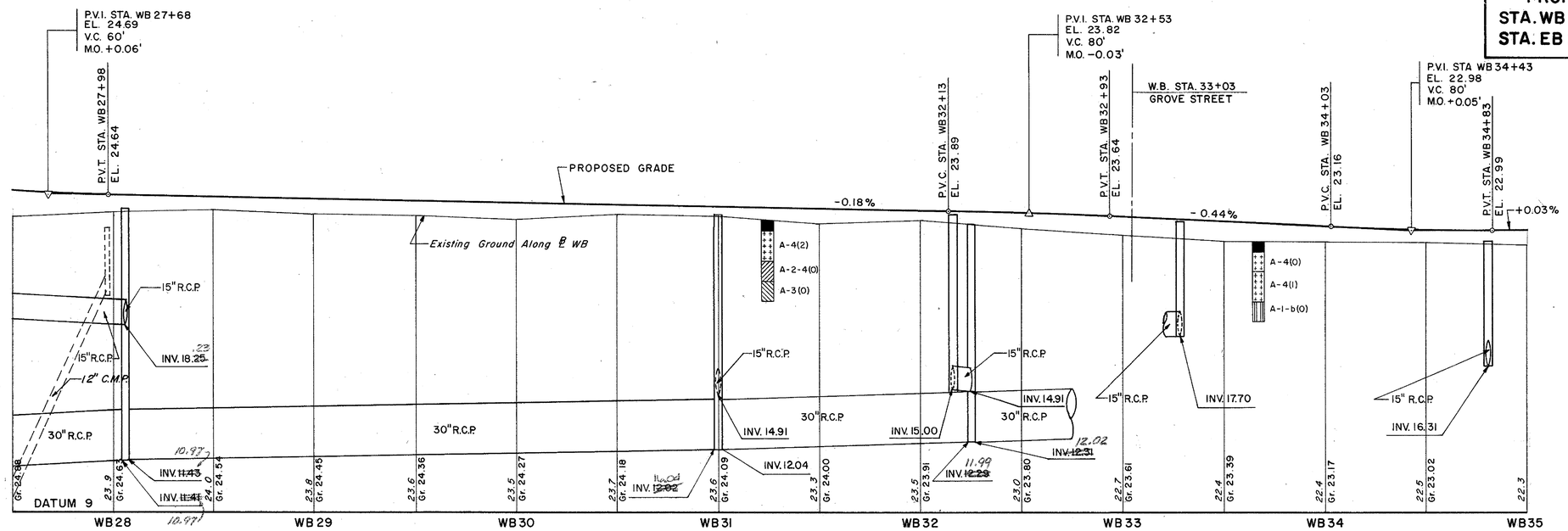

PROFILE-REHOBOTH AVENUE

Scale: Horiz. 1" = 30'
Vert. 1" = 3'

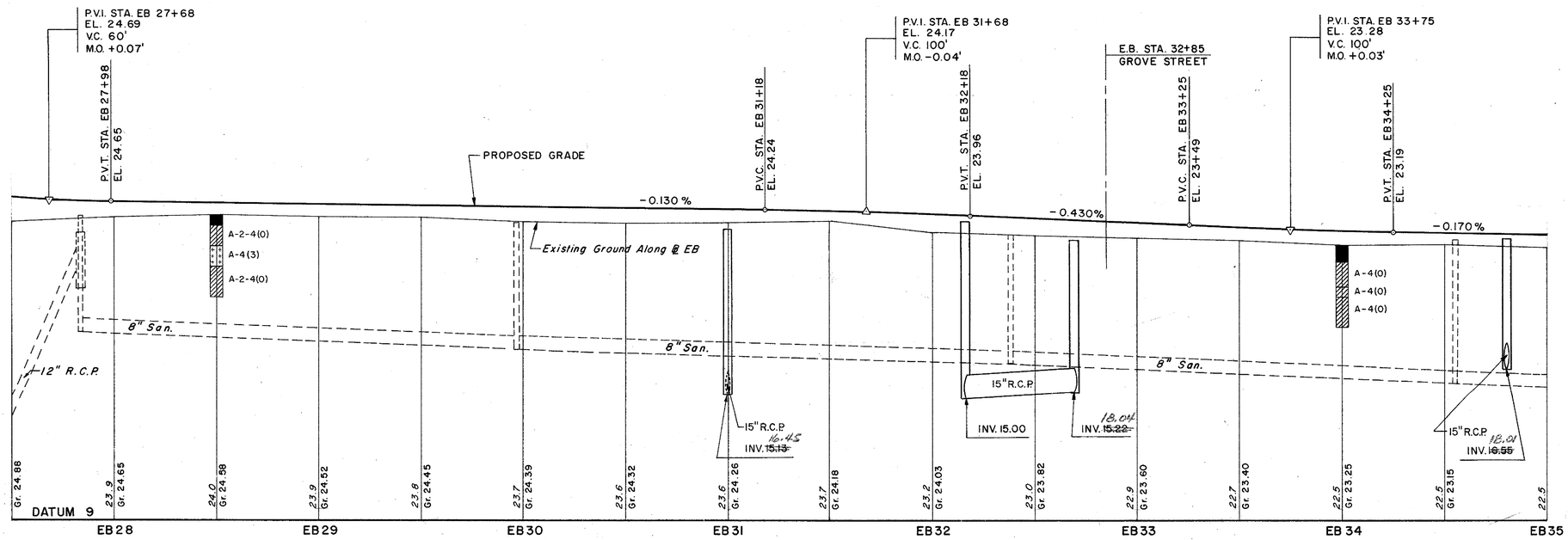

PROFILE-REHOBOTH AVENUE

Scale: Horiz. 1" = 30'
Vert. 1" = 3'

PREL. TRACING S. Da Cruz DESIGN A.R. Jalili CHKD. W.L. Titus

CONTRACT	COUNTY	FEDERAL AID PROJECT Nº	SHEET Nº	TOTAL SHEETS
82-073-05	SUSSEX	BRF-1009(3)	36	155

PROFILE - REHOBOTH AVE.
STA. WB 35+00 TO STA. WB 43+00
STA. EB 35+00 TO STA. EB 43+00

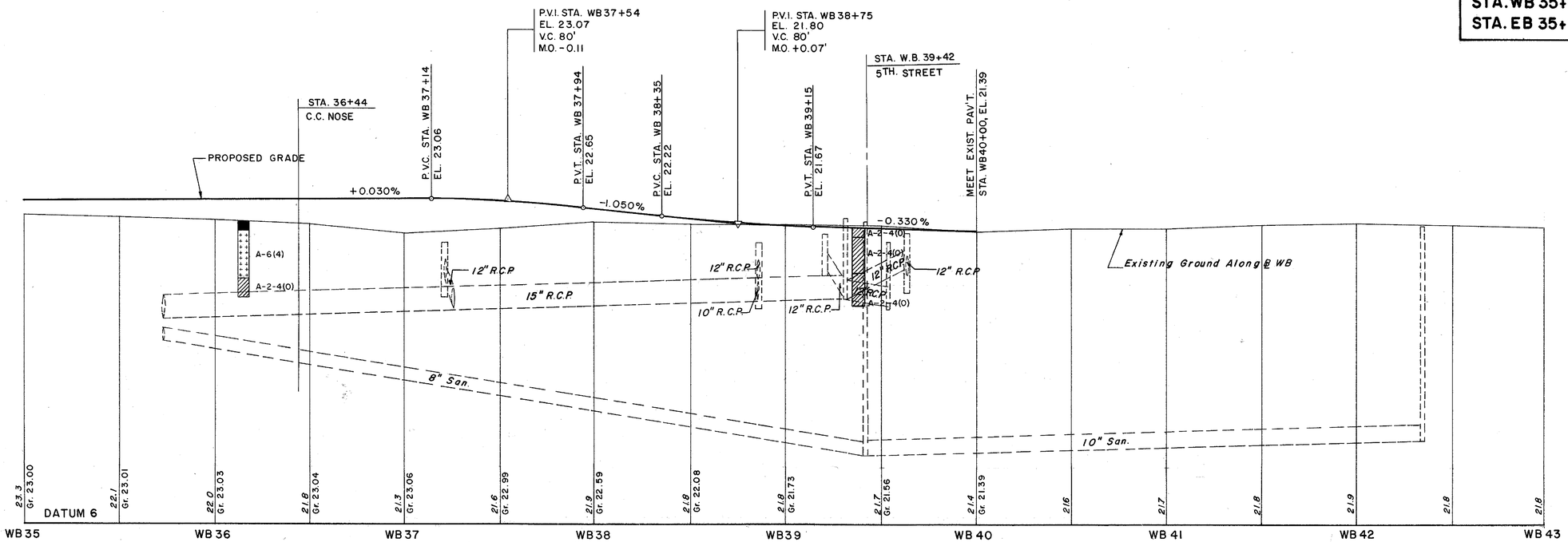

PROFILE REHOBOTH AVENUE

Scale: Horiz. 1" = 30'
Vert. 1" = 3'

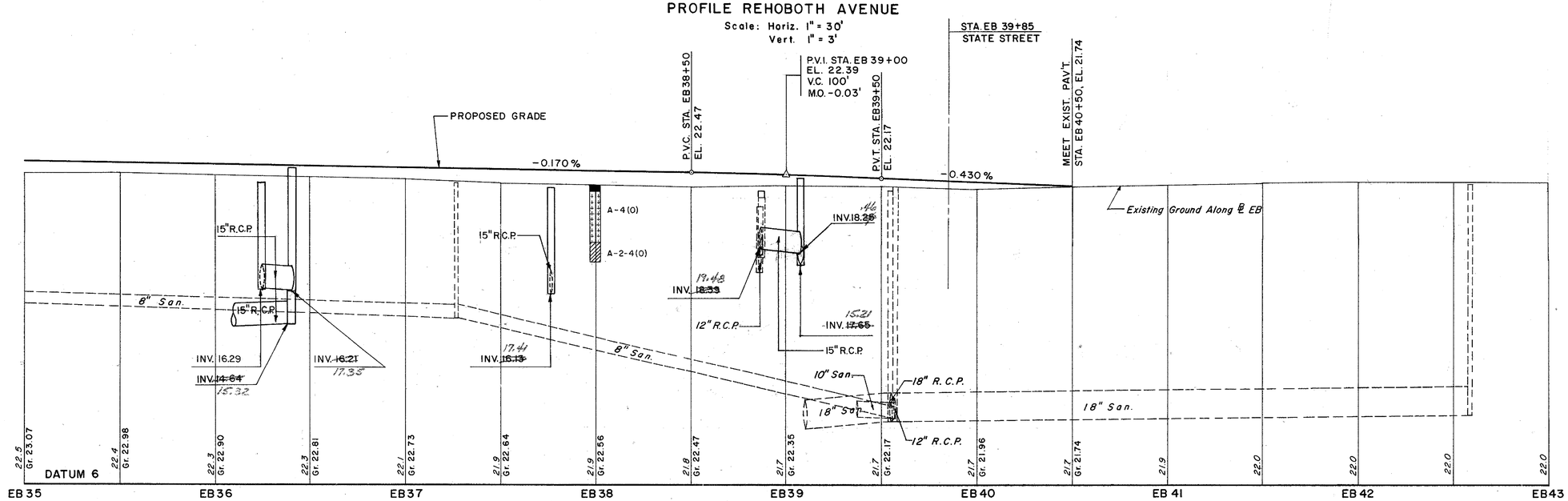

PROFILE REHOBOTH AVENUE

Scale. Horiz. 1" = 30'
Vert. 1" = 3'

HARDESTY & HANOVER
CONSULTING ENGINEERS
NEW YORK, N.Y.

REVISIONS

PREL. TRACING S. Da Cruz DESIGN A.R. Jalili CHKD. W.L. Titus

40389

CONTRACT	COUNTY	FEDERAL AID PROJECT Nº	SHEET Nº	TOTAL SHEETS
82-073-05	SUSSEX	BRF-1009(3)	37	155

GRADING PLAN - DETOUR
STA. DR 51+00 TO STA. DR 52+00

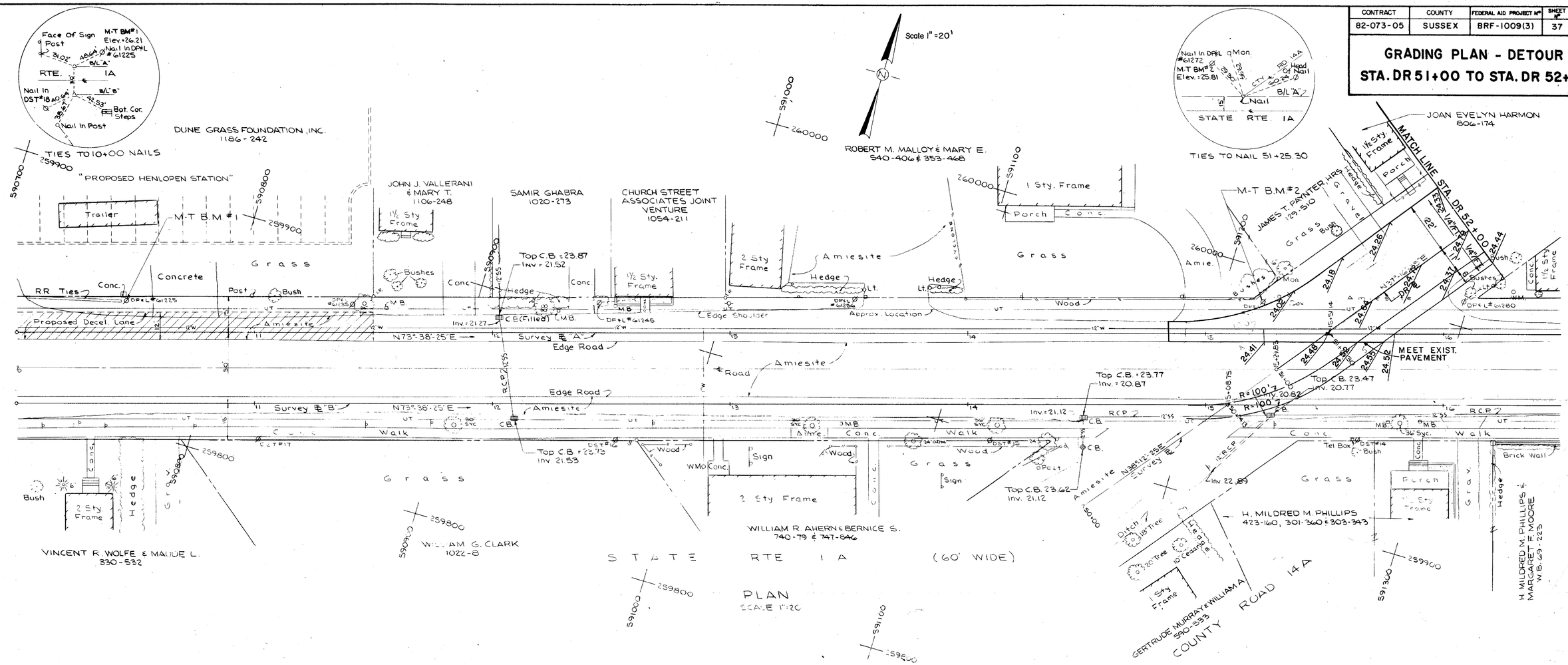

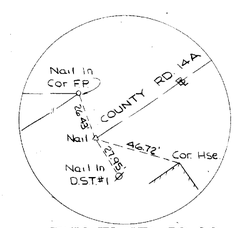

TIES TO STA. 50+00

HARDESTY & HANOVER CONSULTING ENGINEERS NEW YORK, N.Y.

REVISIONS

PREL. TRACING R. Bright DESIGN A. R. Jalili CHKD. A.F. Senor

CONTRACT	COUNTY	FEDERAL AID PROJECT Nº	SHEET Nº	TOTAL SHEETS
82-073-05	SUSSEX	BRF-1009(3)	38	155

GRADING PLAN - DETOUR
STA. DR 52+00 TO STA. DR 57+75

HARDESTY & HANOVER
CONSULTING ENGINEERS
NEW YORK, N.Y.

REVISIONS

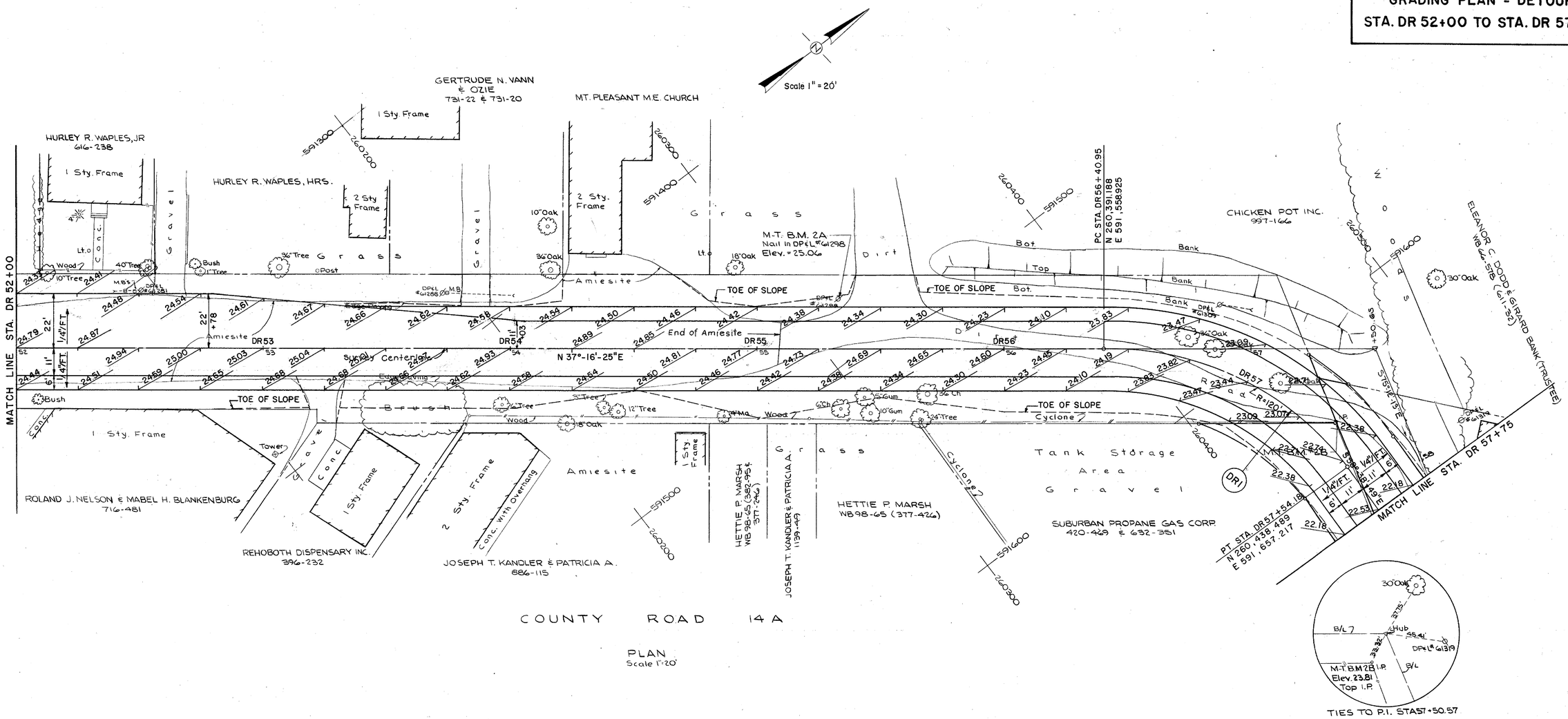

PREL. TRACING R. Bright DESIGN A. R. Jolli CHKD. A.F. Senor

CONTRACT	COUNTY	FEDERAL AID PROJECT Nº	SHEET Nº	TOTAL SHEETS
82-073-05	SUSSEX	BRF-1009(3)	39	155

GRADING PLAN - DETOUR
STA. DR 57+75 TO STA. DR 62+25

HARDESTY & HANOVER
CONSULTING ENGINEERS
NEW YORK, N.Y.

REVISIONS

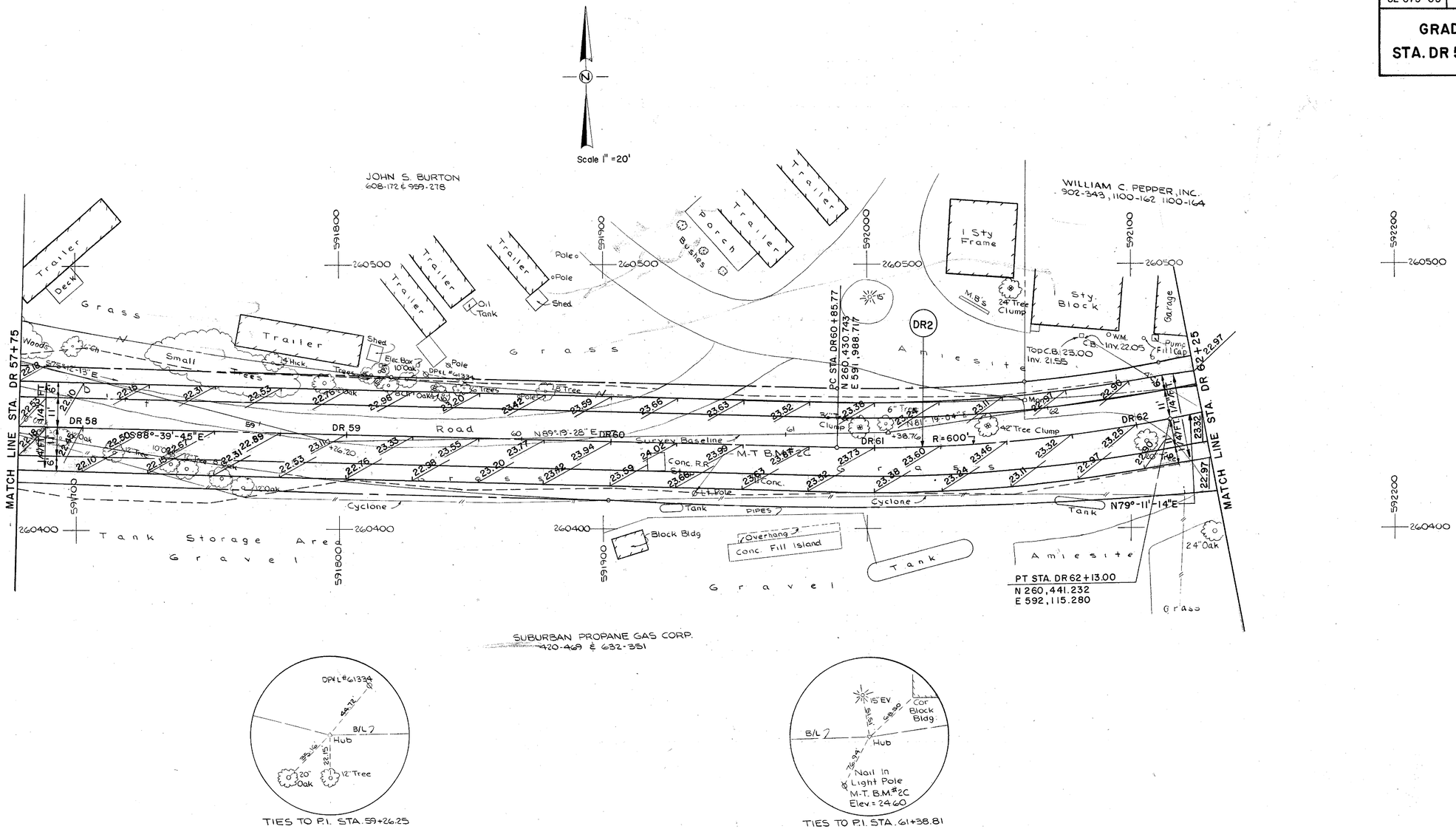

PREL. TRACING R. Bright DESIGN A.R. Jalili CHKD. A.F. Senor

CONTRACT	COUNTY	FEDERAL AID PROJECT Nº	SHEET Nº	TOTAL SHEETS
82-073-05	SUSSEX	BRF-1009(3)	40	155

GRADING PLAN - DETOUR
STA. DR 62+25 TO STA. DR 65+75

1 CONNECTOR ROAD

POINT	STATION	OFFSET
PC	DR 62+44.47	51.81 R
PI	DR 62+40.02	102.61 R
PRC	DR 62+14.53	146.77 R
A	DR 62+52.06	71.30 R
B	DR 62+33.40	60.91 R

HARDESTY & HANOVER
CONSULTING ENGINEERS
NEW YORK, N.Y.

REVISIONS

1 Added connector road 10/3/86 JMS

PREL. TRACING M.P. Santana | DESIGN A.R. Jalili | CHKD. A.F. Senor

CONTRACT	COUNTY	FEDERAL AID PROJECT Nº	SHEET Nº	TOTAL SHEETS
82-073-05	SUSSEX	BRF-1009 (3)	41	155

GRADING PLAN - DETOUR
STA. DR 65+75 TO STA. DR 72+00

HARDESTY & HANOVER
CONSULTING ENGINEERS
NEW YORK, N.Y.

REVISIONS

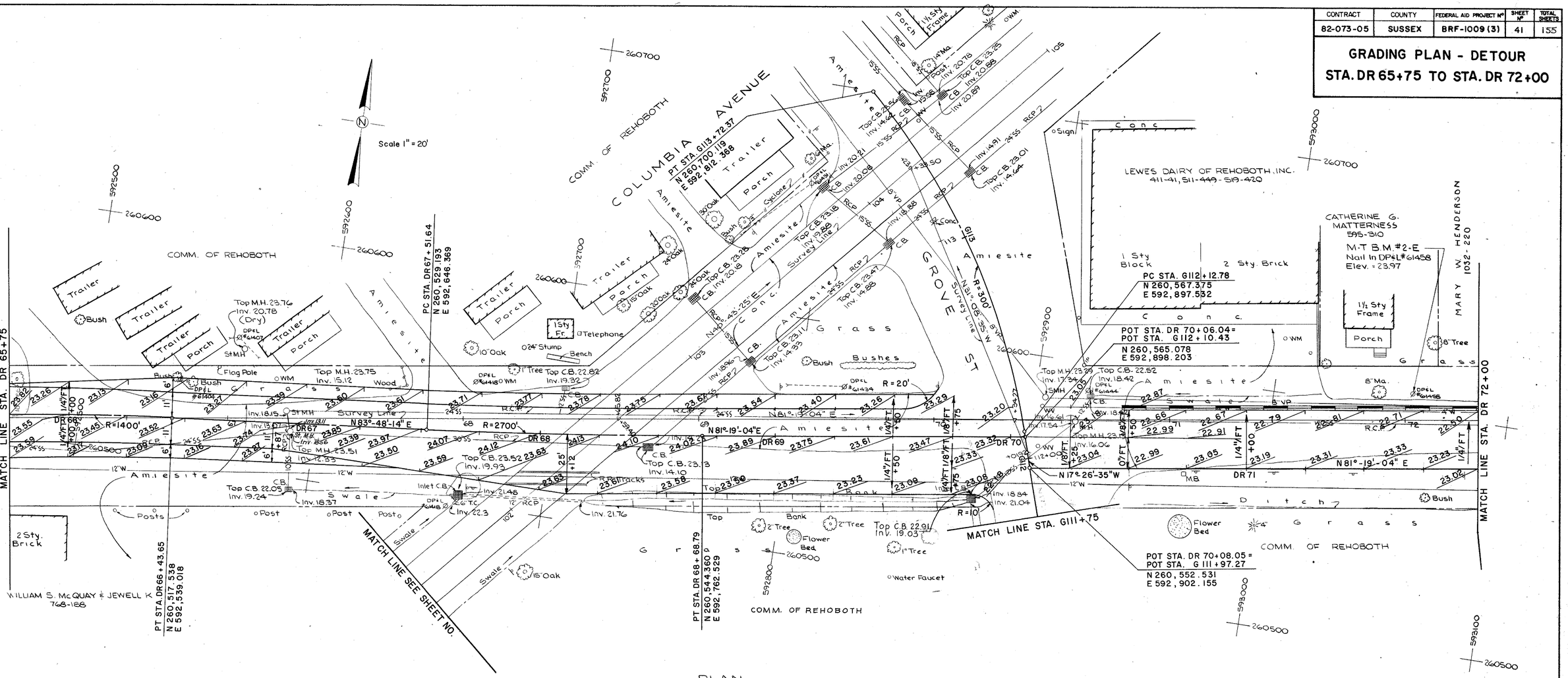

PLAN
Scale: 1" = 20'

FREL. TRACING M.P. Santana DESIGN A.R. Tolli CHKD. A.F. Senor

4039

CONTRACT	COUNTY	FEDERAL AID PROJECT Nº	SHEET Nº	TOTAL SHEETS
82-073-05	SUSSEX	BRF-1009(3)	42	155

GRADING PLAN - DETOUR
STA. DR 72+00 TO STA. DR 75+00

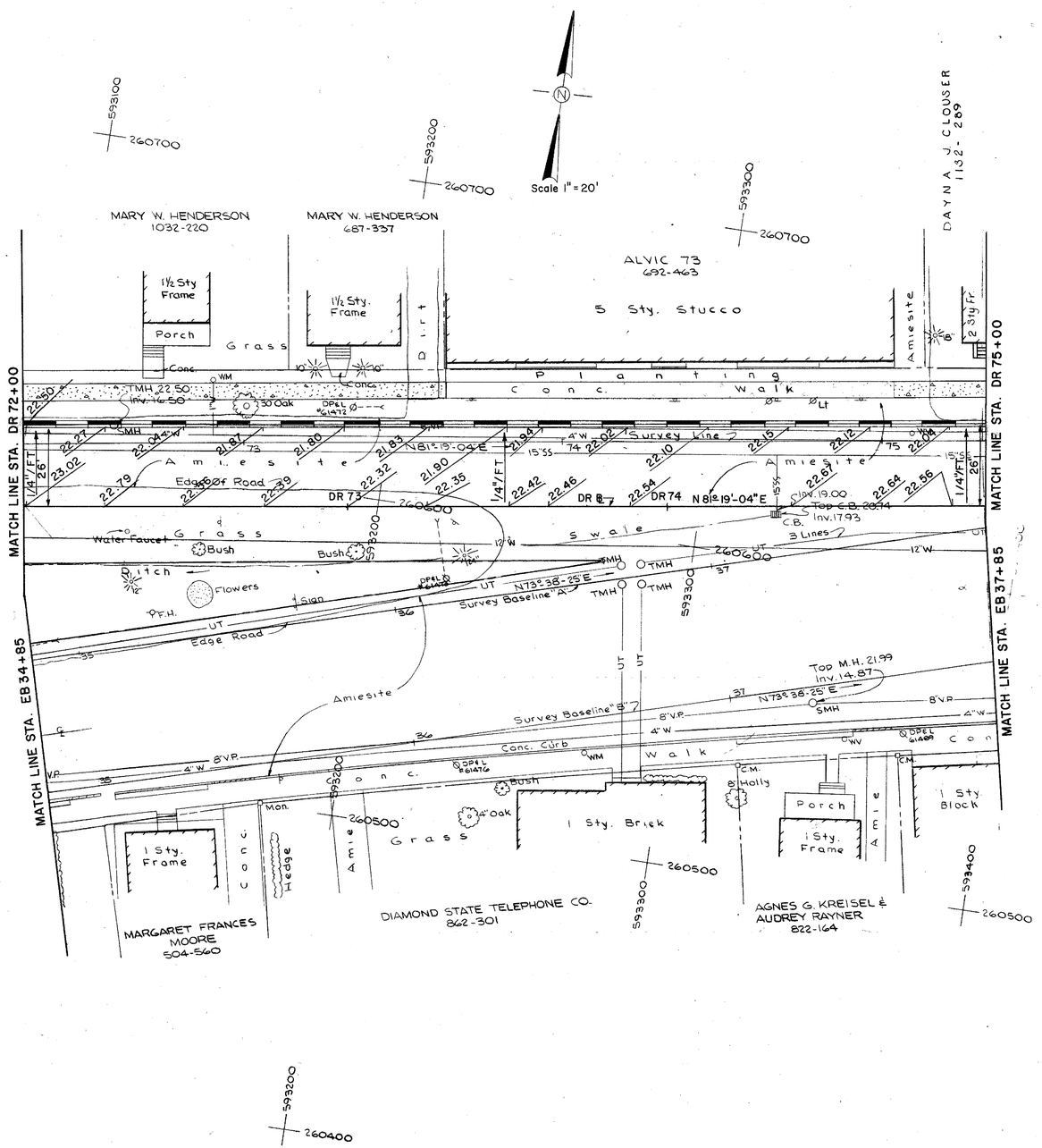

REVISIONS

HARDESTY & HANOVER
CONSULTING ENGINEERS
NEW YORK, N.Y.

PREL. TRACING M.P. Santana DESIGN A.R. Tolli CHKD. A.F. Senor

CONTRACT	COUNTY	FEDERAL AID PROJECT Nº	SHEET Nº	TOTAL SHEETS
82-073-05	SUSSEX	BRF-1009(3)	43	155

GRADING PLAN - DETOUR
STA. DR 75+00 TO STA. DR 76+25

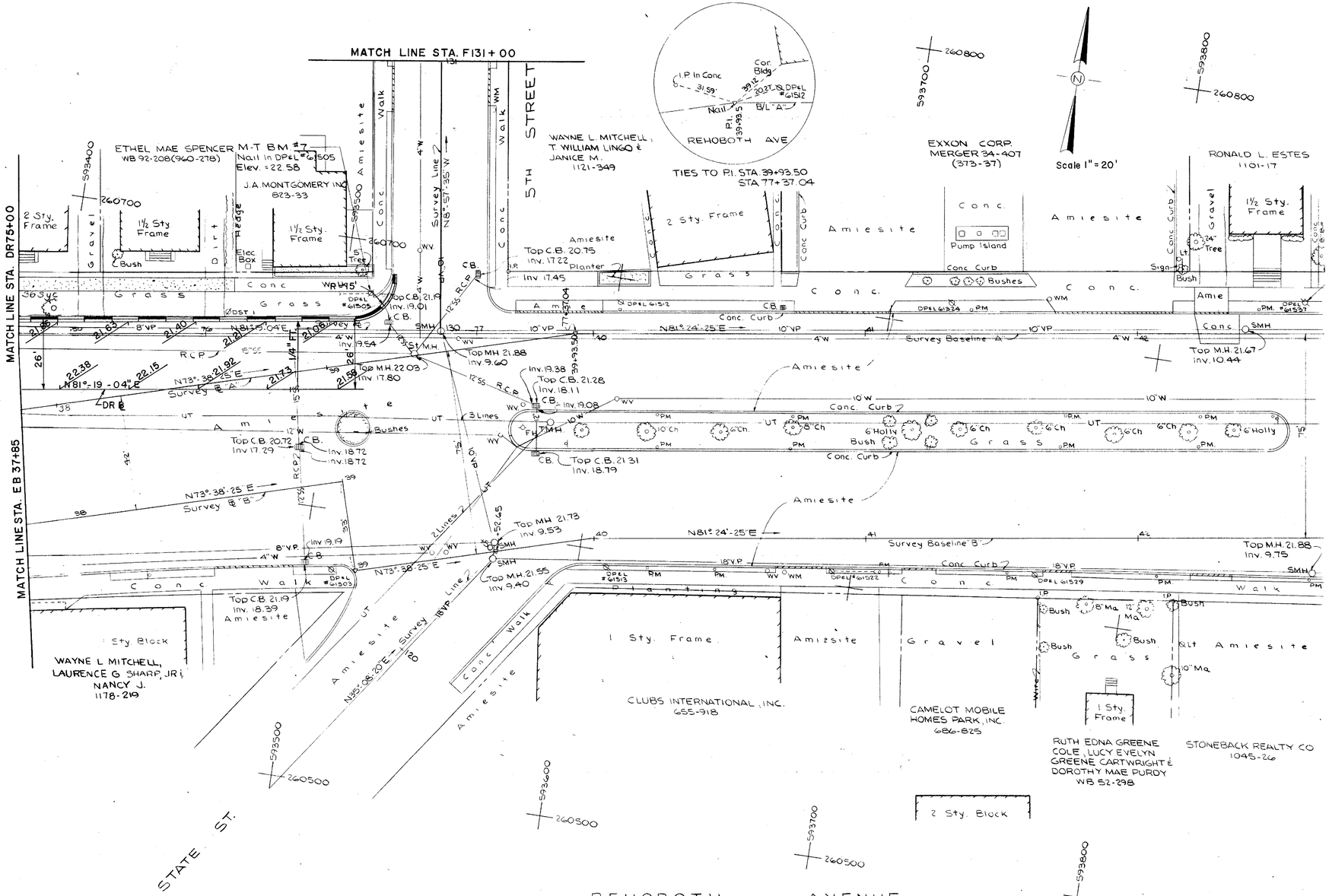

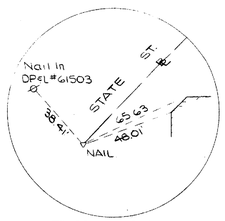

TIES TO STA. 150+00

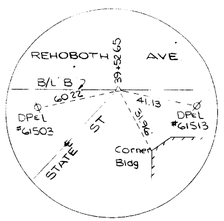

TIES TO STA. 39+52.65
STA. 150+50.0

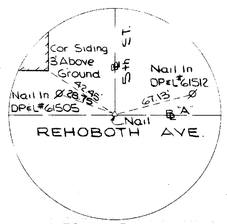

TIES TO STA. 130+00

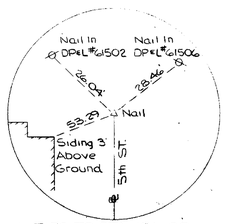

TIES TO STA. 131+00

PLAN
Scale 1" = 20'

HARDESTY & HANOVER
CONSULTING ENGINEERS
NEW YORK, N.Y.

REVISIONS

PREL. TRACING M. Karpman DESIGN A. R. Jalili CHKD. A. F. Sanor

CONTRACT	COUNTY	FEDERAL AID PROJECT Nº	SHEET Nº	TOTAL SHEETS
82-073-05	SUSSEX	BRF-1009(3)	44	155

GRADING PLAN - REHOBOTH AVE.
℄ STA. 22+50 TO STA. EB 29+00

HARDESTY & HANOVER CONSULTING ENGINEERS NEW YORK, N.Y.

REVISIONS

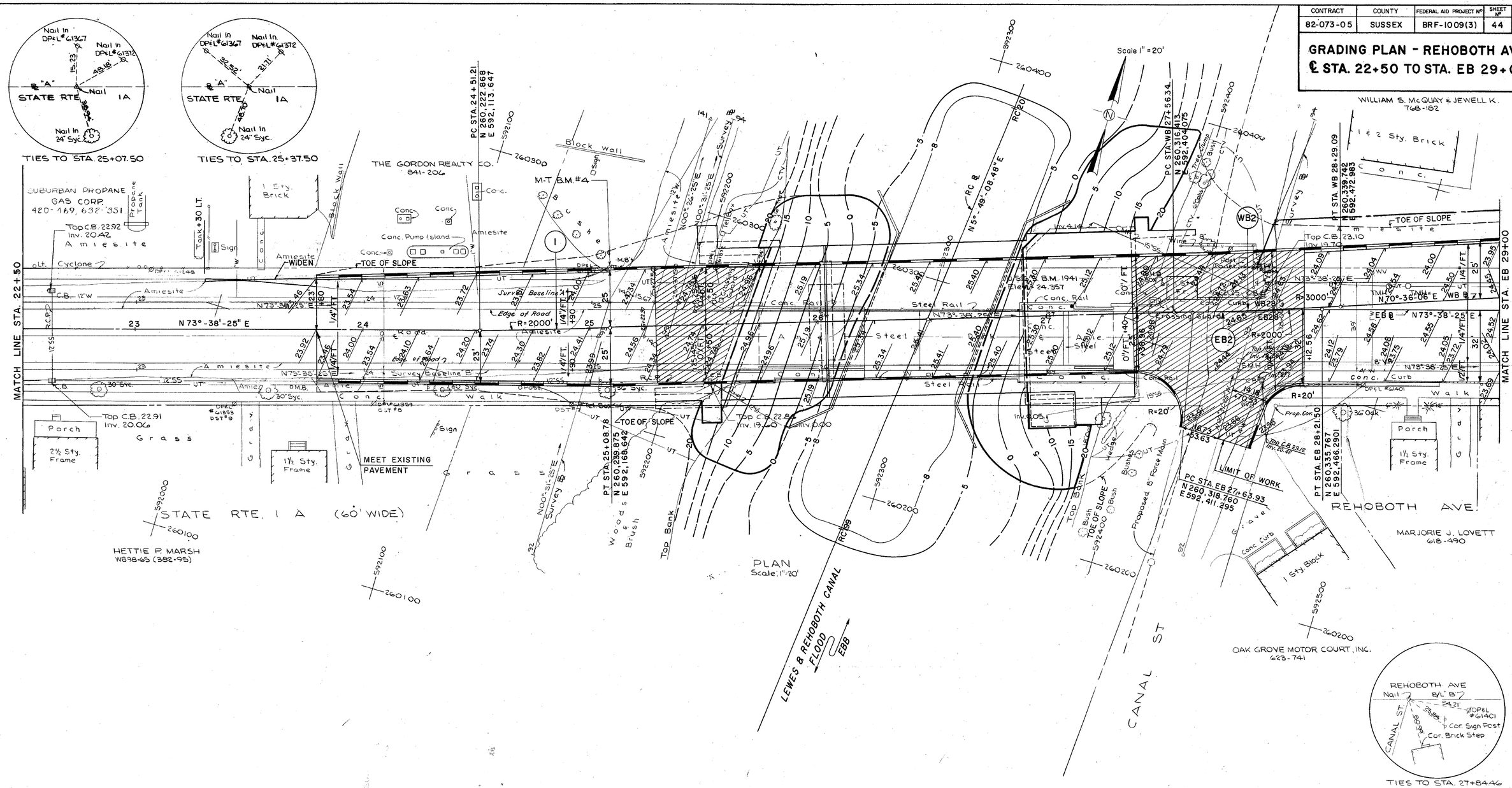

PREL. TRACING M. Karpman DESIGN A.R. Jalili CHKD. T.W. Davies

CONTRACT	COUNTY	FEDERAL AID PROJECT Nº	SHEET Nº	TOTAL SHEETS
82-073-05	SUSSEX	BRF-1009(3)	45	155

GRADING PLAN – REHOBOTH AVE.
STA. EB 29+00 TO STA. EB 34+85

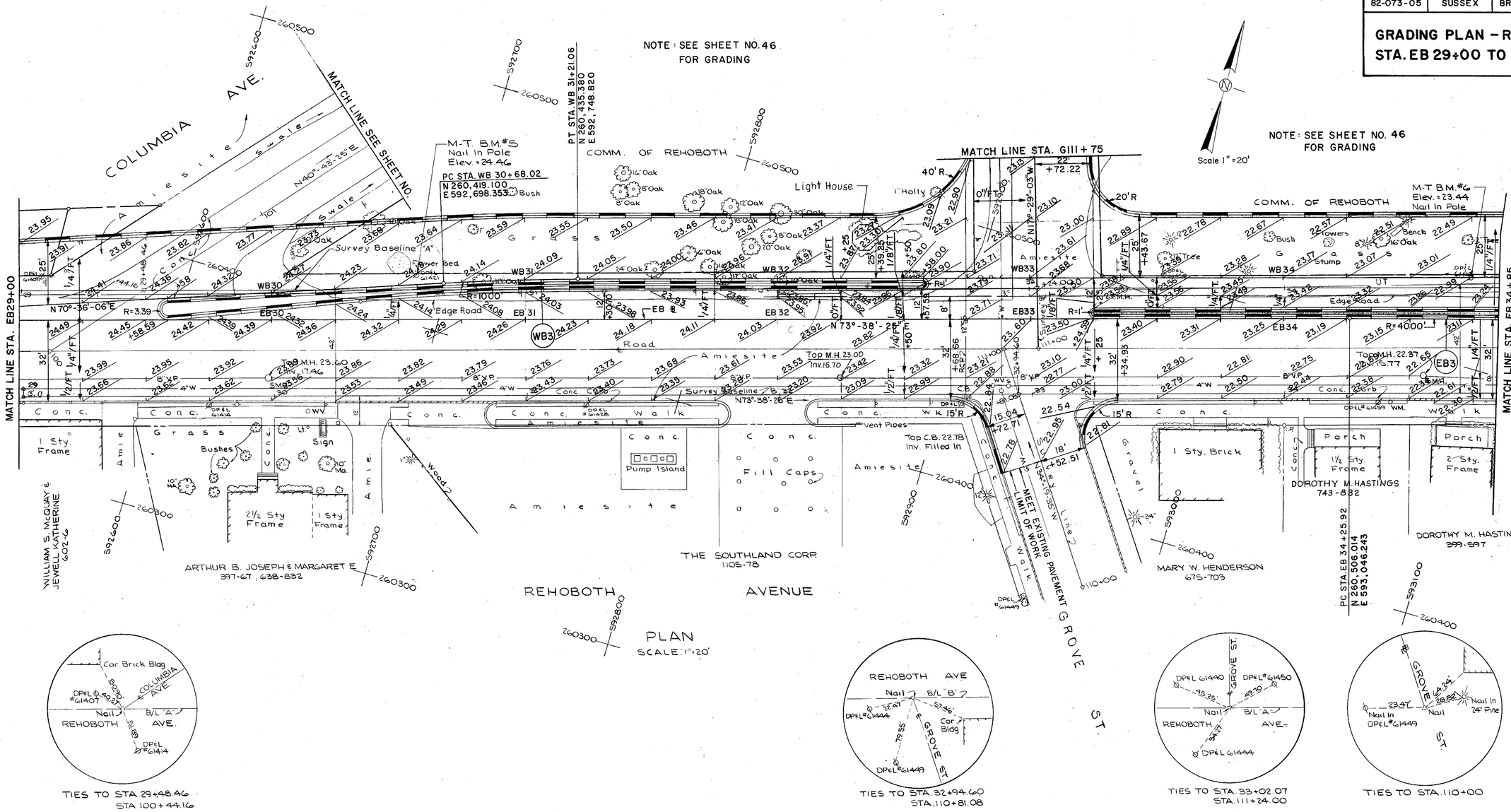

TIES TO STA. 29+48.46
STA. 100+44.16

TIES TO STA. 32+94.60
STA. 110+81.08

TIES TO STA. 33+02.07
STA. 111+24.00

TIES TO STA. 110+00

HARDESTY & HANOVER CONSULTING ENGINEERS NEW YORK, N.Y.

REVISIONS

PREL. TRACING M. Karpman DESIGN A. R. Jalili CHKD. T. W. Davies

CONTRACT	COUNTY	FEDERAL AID PROJECT No	SHEET No	TOTAL SHEETS
82-073-05	SUSSEX	BRF-1009 (3)	46	155

GRADING PLAN- GROVE ST. REHOBOTH AVE. EXT. COLUMBIA AVE.

HARDESTY & HANOVER
CONSULTING ENGINEERS
NEW YORK, N.Y.

REVISIONS

PREL. TRACING M. P. Santana DESIGN A. R. Jalili CHKD. T. W. Davies

CONTRACT	COUNTY	FEDERAL AID PROJECT Nº	SHEET Nº	TOTAL SHEETS
82-073-05	SUSSEX	BRF-1009(3)	47	155

GRADING PLAN - REHOBOTH AVE.
STA. DR 72+00 TO STA. DR 75+00
STA. EB 34+85 TO STA. EB 37+85

Scale 1" = 20'

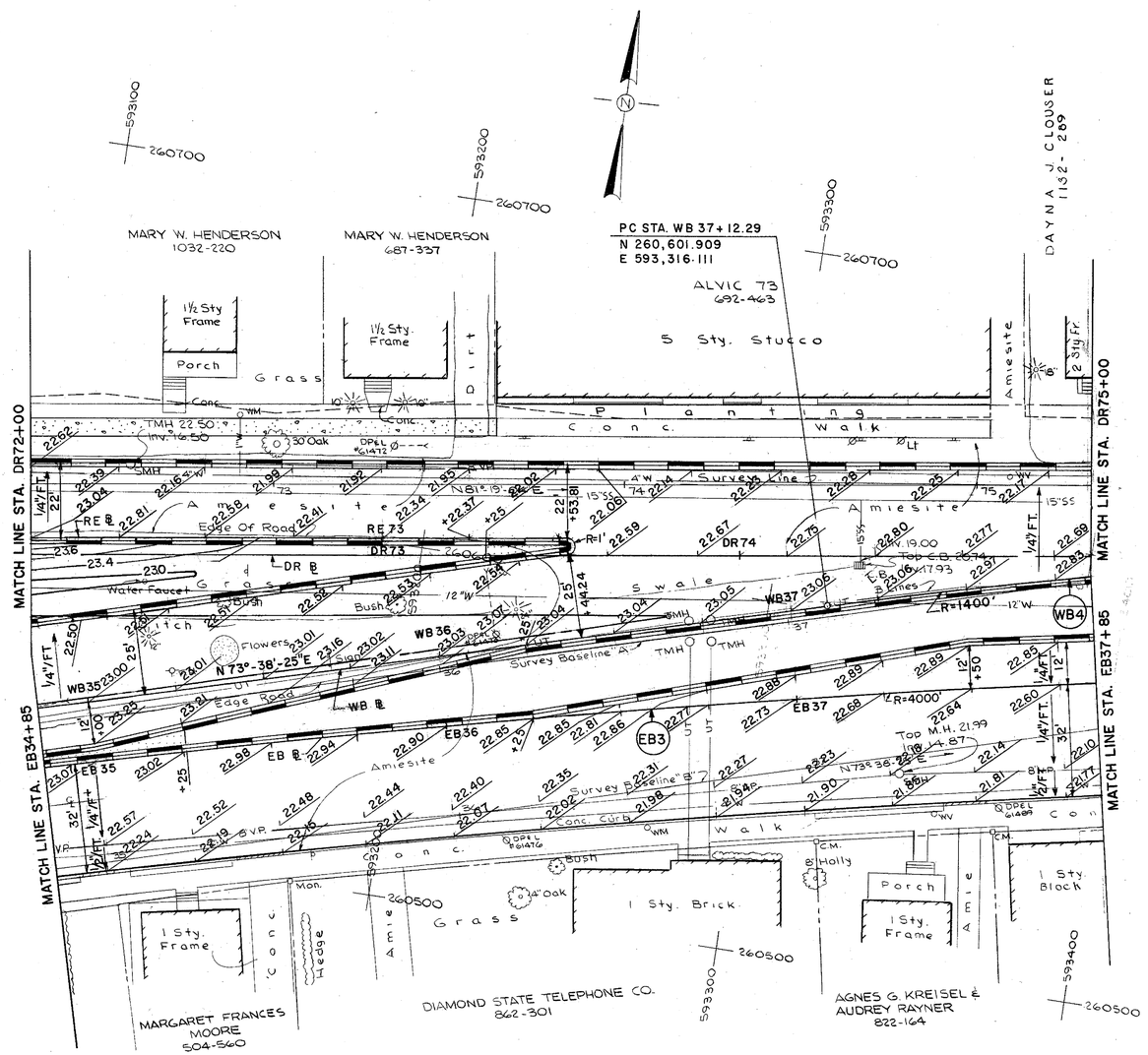

HARDESTY & HANOVER
CONSULTING ENGINEERS
NEW YORK, N.Y.

REVISIONS

PREL. TRACING M. R. Santana DESIGN A. R. Jalili CHKD. T. W. Davies

40399

CONTRACT	COUNTY	FEDERAL AID PROJECT Nº	SHEET Nº	TOTAL SHEETS
82-073-05	SUSSEX	BRF-1009(3)	48	155

GRADING PLAN - REHOBOTH AVE.
STA. EB 37+85 TO STA. EB 40+50

NOTE: (PROP. Gr.) VERTICAL LETTERS
(EXIST. Gr.) SLANTED LETTERS

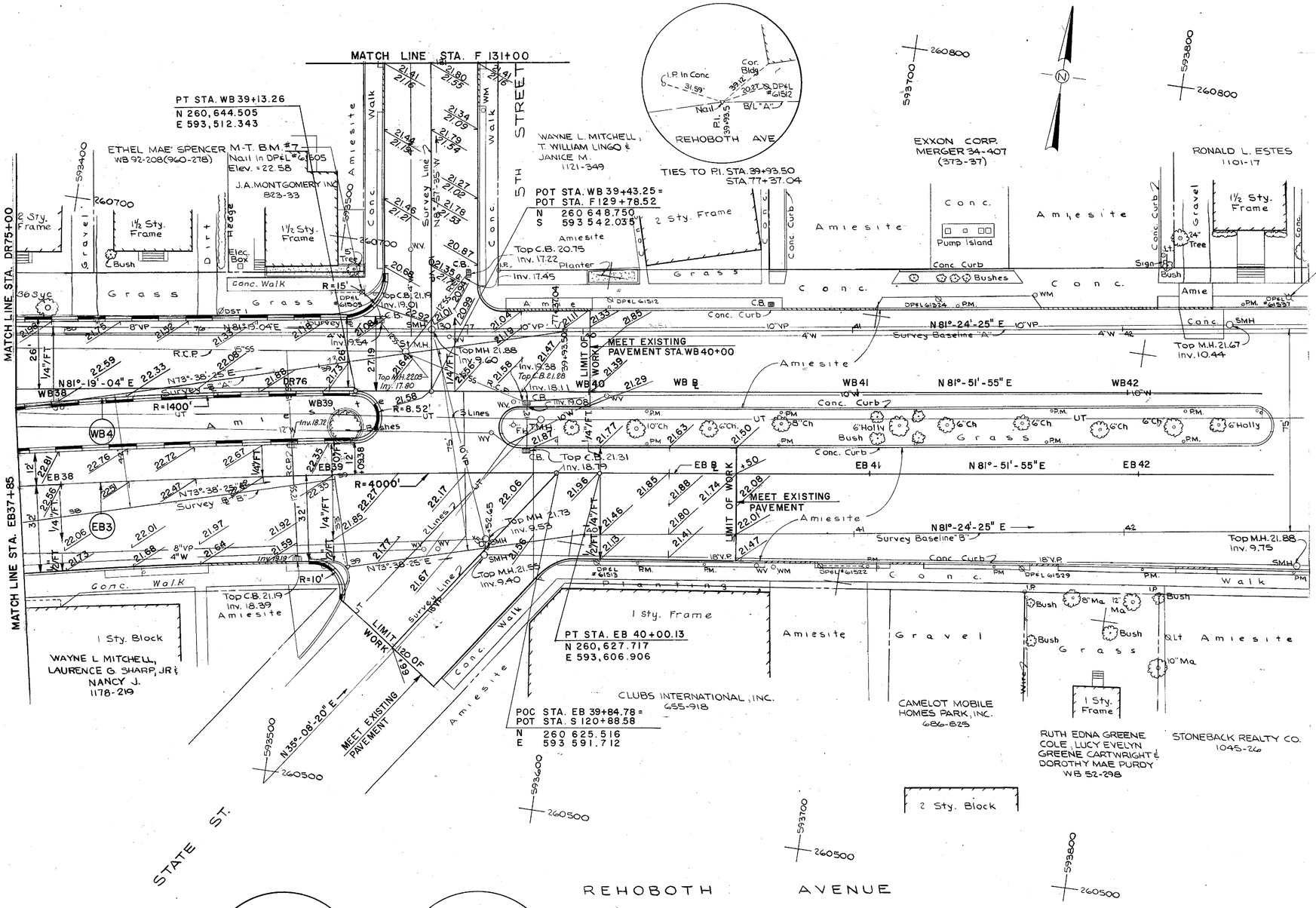

HARDESTY & HANOVER
CONSULTING ENGINEERS
NEW YORK, N.Y.

REVISIONS

PREL. TRACING M. P. Santana DESIGN A. R. Jalili CHKD. T. W. Davies

40389

CONTRACT	COUNTY	FEDERAL AID PROJECT Nº	SHEET Nº	TOTAL SHEETS
82-073-05	SUSSEX	BRF-1009(3)	49	155

GRADING PLAN
STA. F 131+00 TO STA. F 136+97

NOTE: (PROP. Gr.) VERTICAL LETTERS
(EXIST. Gr.) SLANTED LETTERS

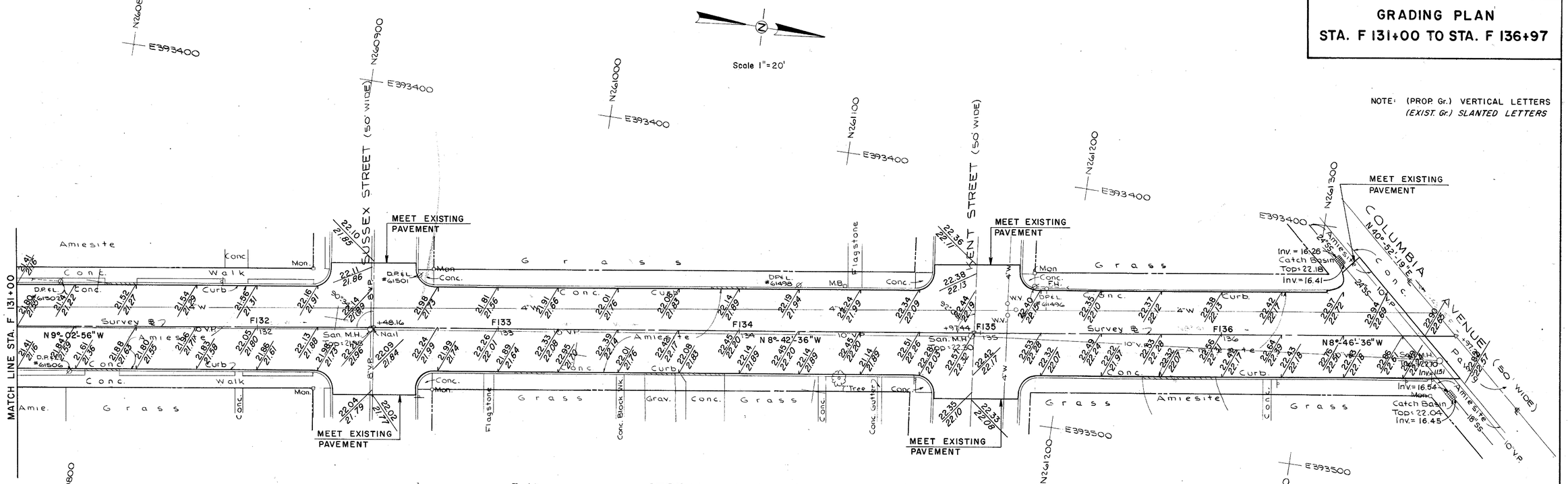

HARDESTY & HANOVER
CONSULTING ENGINEERS
NEW YORK, N.Y.

REVISIONS

PREL. TRACING M. Karpman DESIGN A.R. Jalil CHKD. T.W. Davies

4/2/89

CONTRACT	COUNTY	FEDERAL AID PROJECT Nº	SHEET Nº	TOTAL SHEETS
82-073-05	SUSSEX	BRF-1009(3)	50	155

TRAFFIC CONTROL PLAN
STAGE I

NOTE: ALL STRIPING SHALL BE TEMPORY PAVEMENT MARKINGS – TAPE 4" WIDE. LANES SHALL HAVE A MINIMUM WIDTH OF 11 FEET.

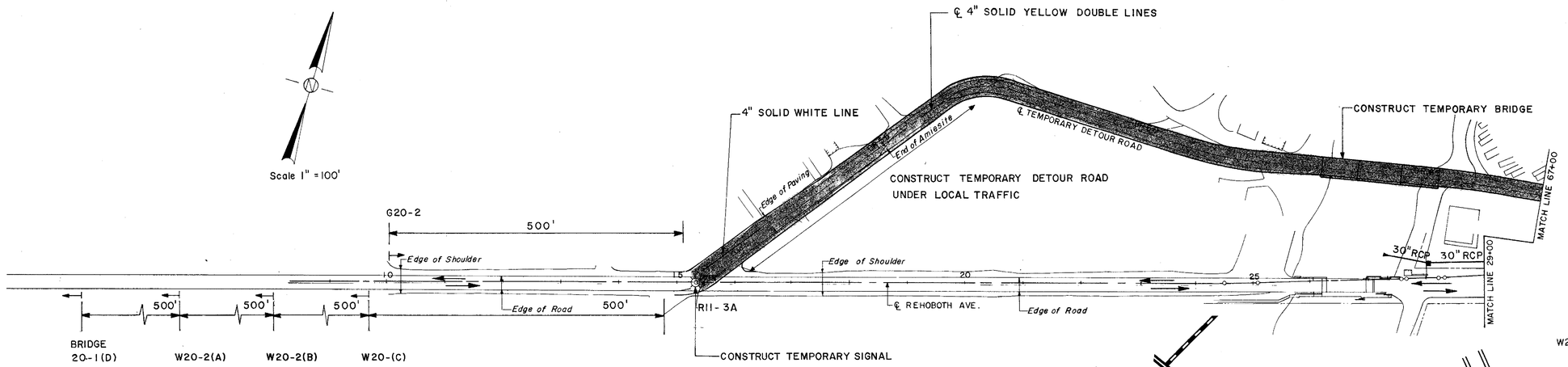

GENERAL NOTES - ALL INTERSECTIONS

1. CONTRACTOR MAY SUBMIT AN ALTERNATE MAINTENANCE OF TRAFFIC AND CONSTRUCTION STAGING PLAN FOR APPROVAL BY THE ENGINEER.

2. THE CONTRACTOR SHALL MAKE PROVISIONS TO MAINTAIN ACCESS, AT ALL TIMES, FOR EMERGENCY EQUIPMENT, FIRE PROTECTION SERVICE, DELIVERY VEHICLES AND RESIDENTS TO ADJACENT PRIVATE PROPERTY ON THOSE STREETS CLOSED TO THROUGH TRAFFIC. THE CONTRACTOR SHALL COOPERATE WITH THE CITY OF REHOBOTH POLICE DEPARTMENT IN ALL RESPECTS DURING THE LIFE OF THE PROJECT.

3. SCHEDULING OF DRAINAGE INSTALLATIONS SHALL BE AT THE CONTRACTOR'S DISCRETION PROVIDED THAT ADEQUATE DRAINAGE AND EROSION CONTROL IS MAINTAINED; AT ALL TIMES AND THAT CULVERT INSTALLATIONS SHALL BE COMPLETED PRIOR TO PLACING ANY PERMANENT PAVEMENTS AT THE SAME LOCATION.

4. ALL LAYOUTS OF TRAFFIC CONTROL DEVICES HEREIN AND IN THE "DELAWARE TRAFFIC CONTROLS FOR STREET AND HIGHWAY CONSTRUCTION AND MAINTENANCE OPERATIONS" ARE SCHEMATIC ONLY, AND ARE INTENDED TO SHOW ONLY THE GENERAL LAYOUT OF CONTROL DEVICES AND TRAFFIC MOVEMENTS. THE ACTUAL QUANTITY, TYPE AND LOCATION OF TRAFFIC CONTROL DEVICES TO BE USED SHALL BE DETERMINED BASED ON ACTUAL FIELD CONDITIONS, THE ABOVE REQUIREMENTS, AND THE GUIDELINES IN THE "DELAWARE TRAFFIC CONTROLS FOR STREET AND HIGHWAY CONSTRUCTION AND MAINTENANCE OPERATIONS. TRAFFIC STRIPPING (TEMPORARY AND PERMANENT), ADDITIONAL SIGNS, BARRICADES, BARRIERS, LIGHTS AND OTHER DELINEATING DEVICES (NOT SHOWN) WILL BE REQUIRED FOR ALL CONTRACTOR OPERATIONS IN OR ADJACENT TO ACTIVE TRAFFIC LANE, AS REQUIRED BY THE "DELAWARE TRAFFIC CONTROLS FOR STREET AND HIGHWAY CONSTRUCTION AND MAINTENANCE OPERATIONS" OR ORDERED BY THE ENGINEER. CASES I THROUGH VII, X-B, XV-B, XVIII AND XX STANDARD DESIGNS AS APPROPRIATE MAY BE USED FOR THIS PURPOSE.

THE CONTRACTOR AND ALL OTHERS SHALL PERFORM ALL WORK IN A MANNER THAT WILL INSURE THE LEAST PRACTICABLE OBSTRUCTION TO TRAFFIC CONSISTANT WITH SAFETY AND SHALL COMPLY WITH THE MANUAL ENTITLED "DELAWARE TRAFFIC CONTROLS FOR STREET AND HIGHWAY CONSTRUCTION AND MAINTENANCE OPERATIONS - AS REVISED JANUARY 1984.

⚠ FLAGMEN SHALL USE SIGN PADDLES IN ADDITION TO FLAGS AS DIRECTED BY THE ENGINEER AND IN ACCORDANCE WITH THE MANUAL ENTITLED "DELAWARE TRAFFIC CONTROLS FOR STREET AND HIGHWAY CONSTRUCTION AND MAINTENANCE OPERATIONS- AS REVISED JANUARY 1984".

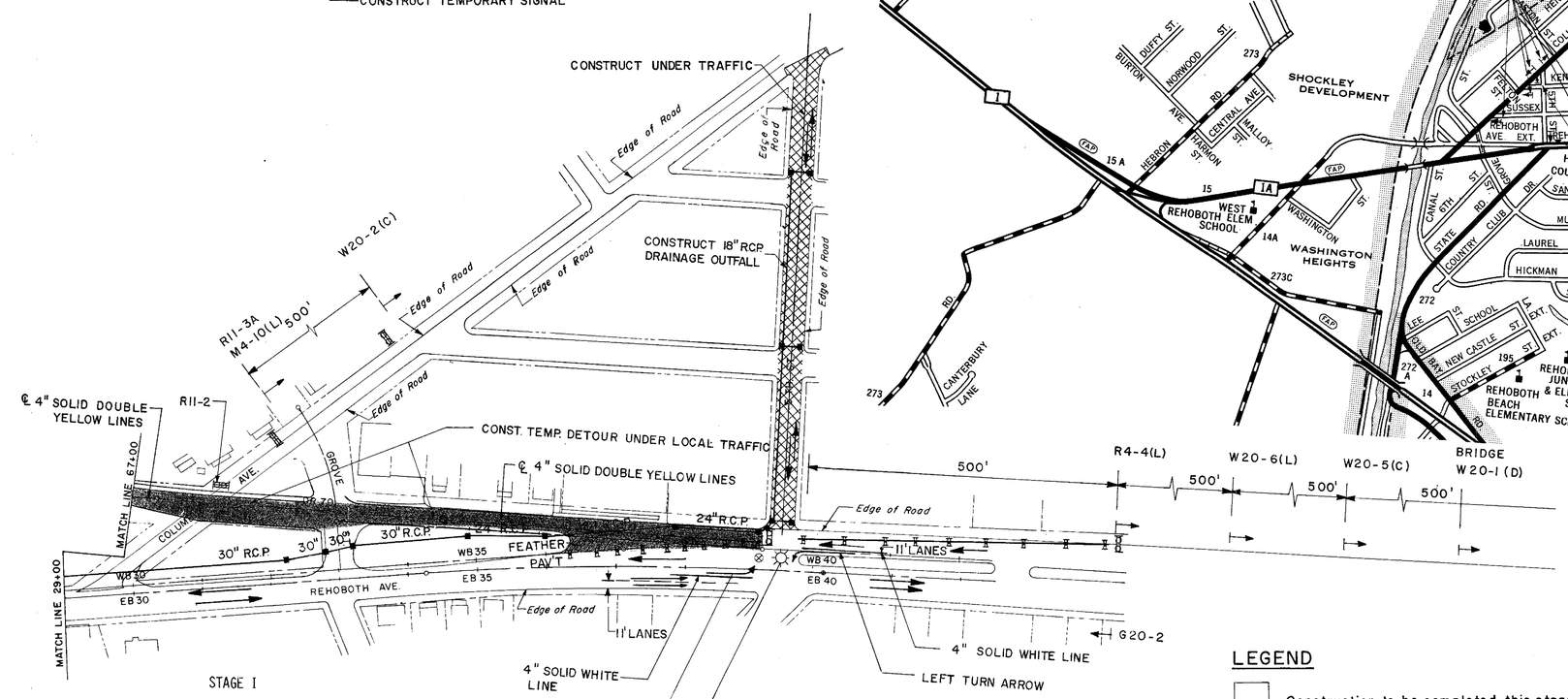

STAGE I

1. CONSTRUCTION SIGNS ARE TO BE SET UP AS SHOWN ON THE PLANS.

2. EXISTING TRAFFIC IS TO BE MAINTAINED ON REHOBOTH AVENUE.

3. CONSTRUCT TEMPORARY DETOUR STRUCTURE ACROSS REHOBOTH CANAL AND TEMPORARY DETOUR ROAD ON APPROACHES AS SHOWN ON THE PLANS.

4. CONSTRUCT MAIN DRAINAGE OUTFALL FROM FIFTH STREET TO THE CANAL.

5. RESURFACE FIFTH STREET FROM COLUMBIA AVENUE TO REHOBOTH AVENUE UNDER TRAFFIC. LOCAL TRAFFIC IS TO BE MAINTAINED ON THESE ROADWAYS DURING THEIR CONSTRUCTION.

LEGEND

- Construction to be completed this stage
- Construction to be staged and performed under traffic during this stage
- Traffic pattern during this stage
- Type II Barricade
- Type III Barricade
- ○ Type "B" Amber High Intensity flashing light
- ● Type "C" Amber steady burning light
- ⊕ Type "B" Red High Intensity flashing light

HARDESTY & HANOVER CONSULTING ENGINEERS NEW YORK, N.Y.

REVISIONS

⚠ ADDENDUM #2 - ADDED NOTE JH 5-4-, 9/24/04

FREL. TRACING S. DaCruz DESIGN J.C. Incandela CHKD. W.L. Titus

HARDESTY & HANOVER
CONSULTING ENGINEERS
NEW YORK, N.Y.

REVISIONS

CONTRACT	COUNTY	FEDERAL AID PROJECT Nº	SHEET Nº	TOTAL SHEETS
82-073-05	SUSSEX	BRF-1009(3)	51	155

TRAFFIC CONTROL PLAN
STAGE II

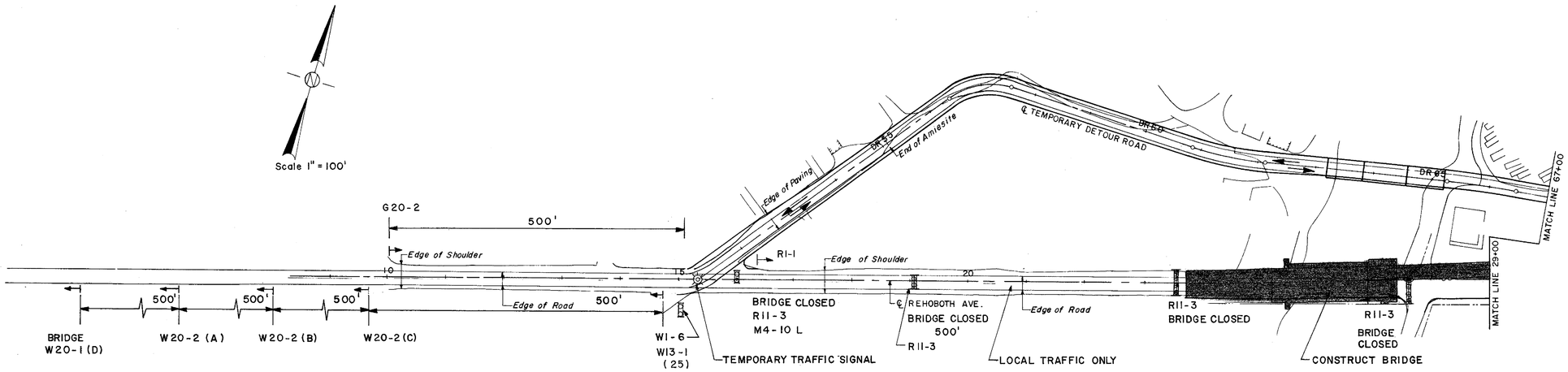

STAGE II

1. DETOUR REHOBOTH AVENUE THROUGH TRAFFIC ONTO NEWLY CONSTRUCTED TEMPORARY DETOUR ROAD, AND CLOSE REHOBOTH AVENUE BRIDGE OVER THE CANAL.

2. BEGIN DEMOLITION OF EXISTING REHOBOTH AVENUE BRIDGE OVER THE CANAL.

3. CONSTRUCT PROPOSED WESTBOUND REHOBOTH AVENUE ROADWAY FROM REHOBOTH CANAL TO FIFTH STREET.

4. UPON COMPLETION OF DEMOLITION OF EXISTING REHOBOTH CANAL BRIDGE, BEGIN CONSTRUCTION OF PROPOSED REHOBOTH AVENUE BASCULE BRIDGE OVER THE CANAL.

5. MAINTAIN LOCAL TRAFFIC ON REHOBOTH AVENUE ON BOTH SIDES OF THE CANAL.

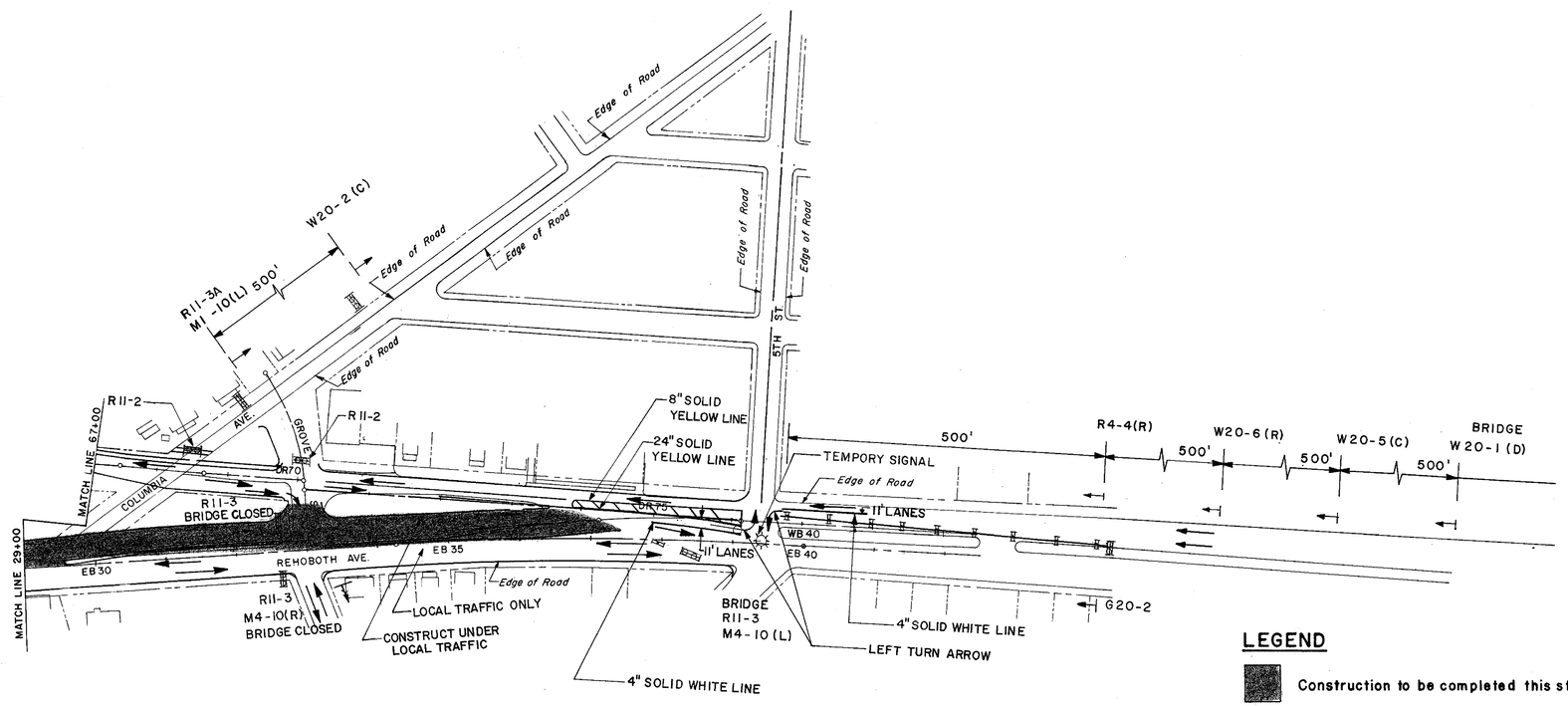

LEGEND

- Construction to be completed this stage
- Construction to be staged and performed under traffic during this stage
- Traffic pattern during this stage
- Type II Barricade
- Type III Barricade
- ○ Type "B" Amber High Intensity flashing light
- ● Type "C" Amber steady burning light
- ⊕ Type "B" Red High Intensity flashing light

PREL. TRACING S. DaCruz DESIGN J. C. Incandela CHKD. W. L. Titus

40389

CONTRACT	COUNTY	FEDERAL AID PROJECT Nº	SHEET Nº	TOTAL SHEETS
82-073-05	SUSSEX	BRF-1009(3)	52	155

TRAFFIC CONTROL PLAN
STAGE III

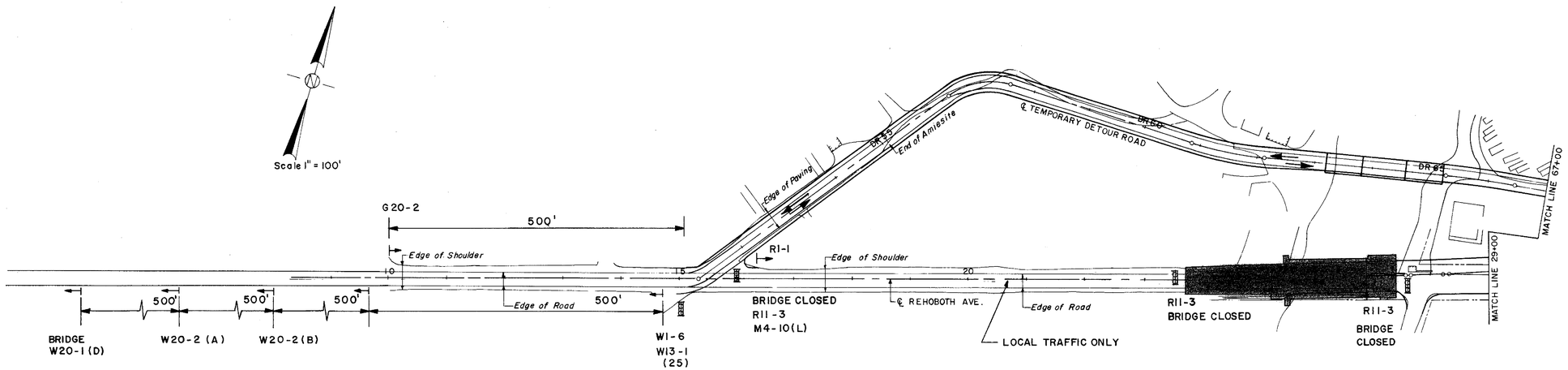

STAGE III

1. CONTINUE TO MAINTAIN REHOBOTH AVENUE THROUGH TRAFFIC ON TEMPORARY DETOUR ROAD DURING THIS STAGE OF CONSTRUCTION.
2. CONTINUE CONSTRUCTION OF PROPOSED REHOBOTH AVENUE BASCULE BRIDGE OVER CANAL DURING THIS CONSTRUCTION STAGE.
3. UPON COMPLETION OF PROPOSED REHOBOTH AVENUE WESTBOUND ROADWAY CONSTRUCTION, BEGIN CONSTRUCTION OF THE EASTBOUND REHOBOTH AVENUE ROADWAY FROM THE CANAL TO FIFTH STREET.
4. MAINTAIN LOCAL TRAFFIC ON REHOBOTH AVENUE DURING CONSTRUCTION.

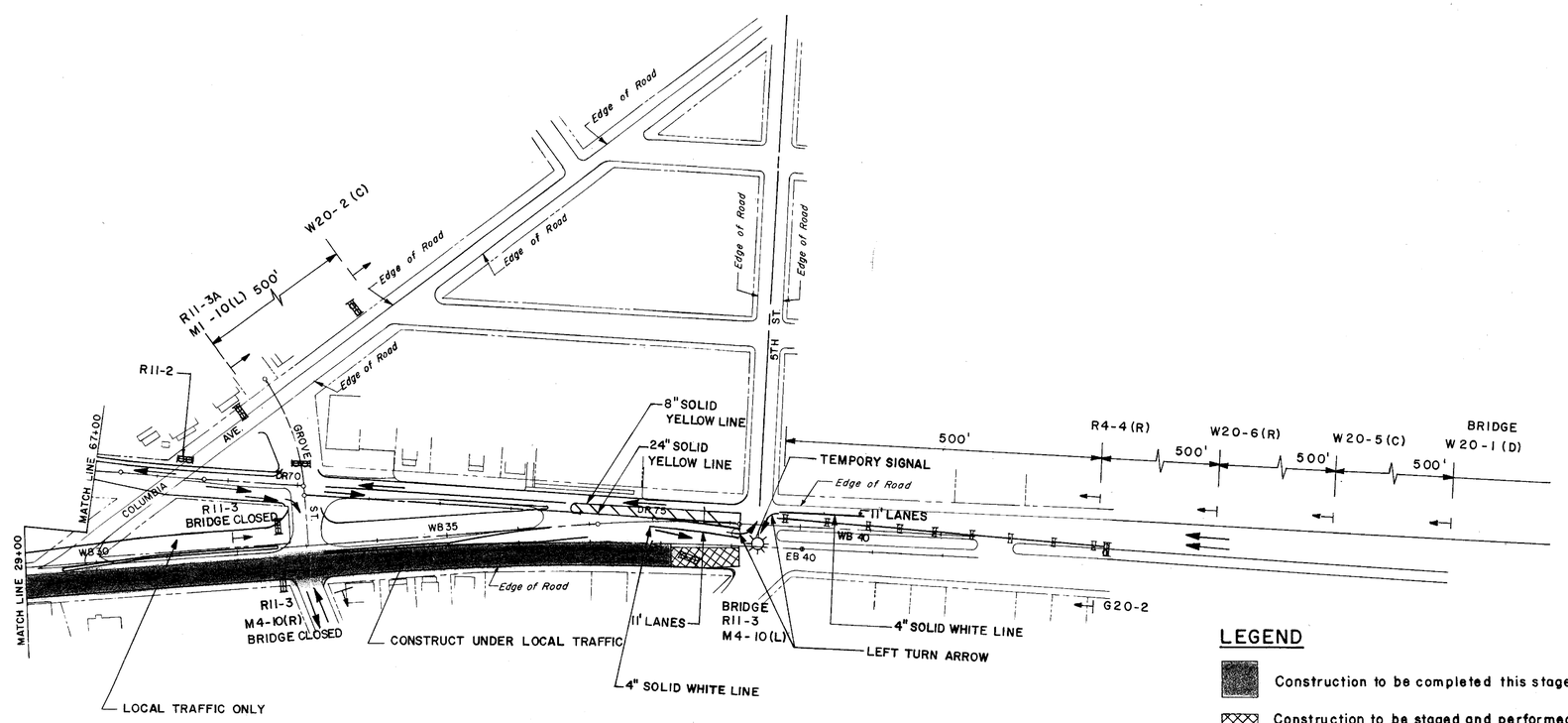

LEGEND

- Construction to be completed this stage
- Construction to be staged and performed under traffic during this stage
- Traffic pattern during this stage
- Type II Barricade
- Type III Barricade
- ○ Type "B" Amber High Intensity flashing light
- ● Type "C" Amber steady burning light
- ⊕ Type "B" Red High Intensity flashing light

HARDESTY & HANOVER
CONSULTING ENGINEERS
NEW YORK, N.Y.

REVISIONS

PREL. TRACING S. DaCruz DESIGN J.C. Incandela CHKD. W.L. Titus

43089

CONTRACT	COUNTY	FEDERAL AID PROJECT Nº	SHEET Nº	TOTAL SHEETS
82-073-05	SUSSEX	BRF-1009(3)	53	155

TRAFFIC CONTROL PLAN
STAGE IV

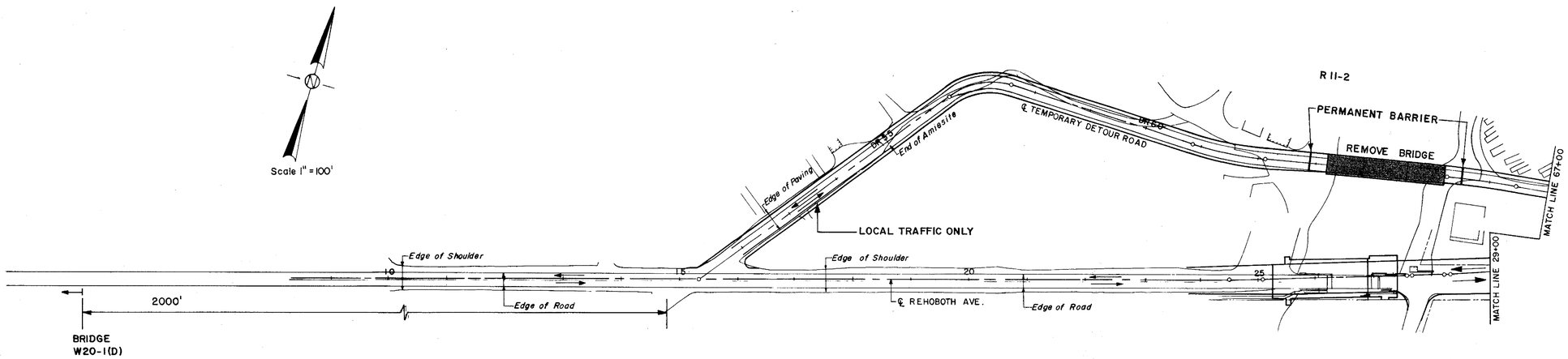

STAGE IV

1. UPON COMPLETION OF PROPOSED REHOBOTH AVENUE BASCULE BRIDGE OVER THE CANAL AND EASTBOUND ROADWAY, OPEN BRIDGE AND APPROACH ROADWAYS, AND DIVERT THROUGH TRAFFIC FROM TEMPORARY DETOUR ROAD BACK ONTO REHOBOTH AVENUE.

2. DISASSEMBLE TEMPORARY DETOUR BRIDGE OVER THE CANAL. PLACE BARRICADES ACROSS DETOUR APPROACH ROADWAYS. DETOUR ROAD ON EACH SIDE OF CANAL SHALL REMAIN AS A LOCAL ROADWAY.

3. CONSTRUCT REHOBOTH AVENUE EXTENSION, GROVE STREET AND COLUMBIA AVENUE WITHIN LIMITS SHOWN ON PLANS.

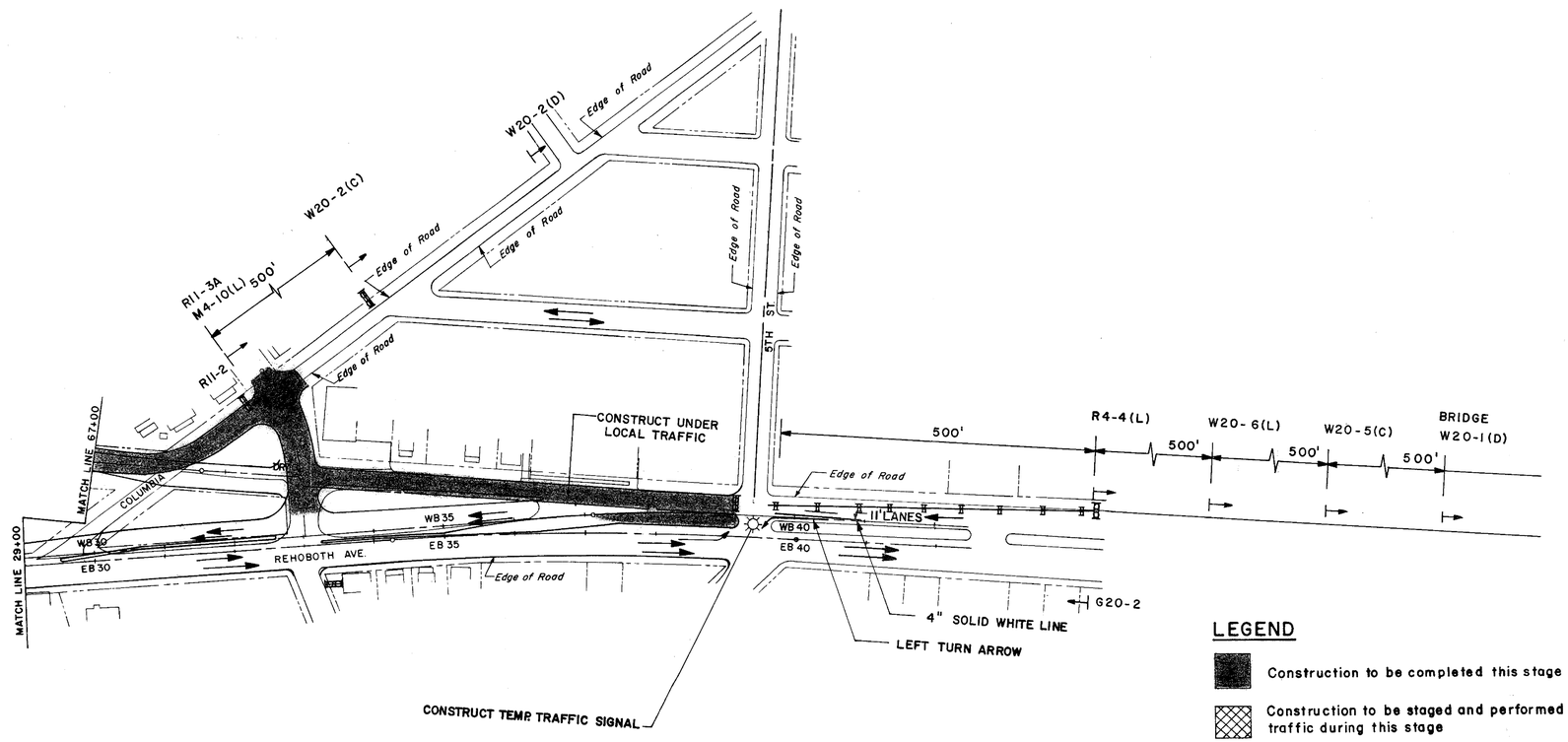

LEGEND

- Construction to be completed this stage
- Construction to be staged and performed under traffic during this stage
- Traffic pattern during this stage
- Type II Barricade
- Type III Barricade
- ○ Type "B" Amber High Intensity flashing light
- ● Type "C" Amber steady burning light
- ⊕ Type "B" Red High Intensity flashing light

HARDESTY & HANOVER
CONSULTING ENGINEERS
NEW YORK, N.Y.

REVISIONS

PREL. TRACING S. DaCruz DESIGN J.C. Incandela CHKD. W. L. Titus

CONTRACT	COUNTY	FEDERAL AID PROJECT Nº	SHEET Nº	TOTAL SHEETS
82-073-05	SUSSEX	BRF-1009(3)	54	155

PLAN AND ELEVATION BASCULE BRIDGE

HARDESTY & HANOVER CONSULTING ENGINEERS NEW YORK, N.Y.

REVISIONS

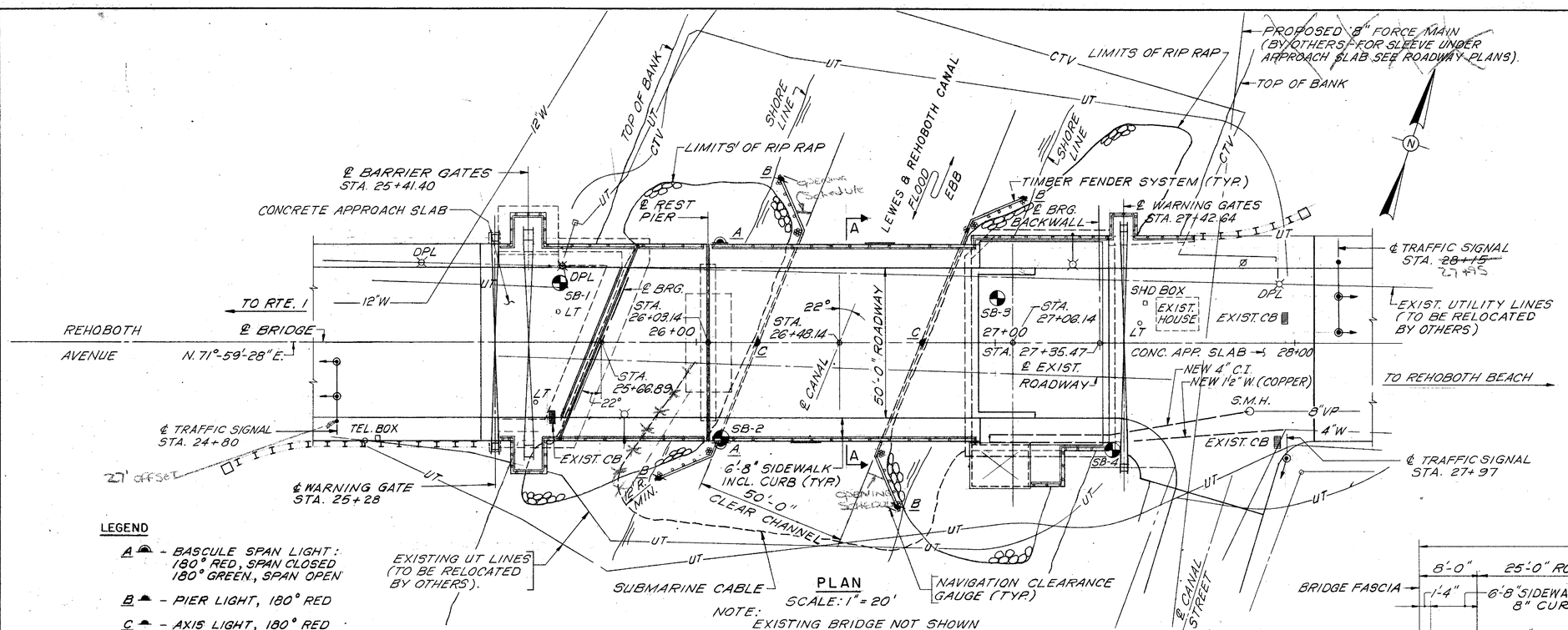

PLAN

SCALE: 1" = 20'

NOTE: EXISTING BRIDGE NOT SHOWN

LEGEND

- A – BASCULE SPAN LIGHT: 180° RED, SPAN CLOSED 180° GREEN, SPAN OPEN
- B – PIER LIGHT, 180° RED
- C – AXIS LIGHT, 180° RED
- TRAFFIC SIGNAL ASSEMBLY
- SB – STRUCTURE BORING
- ROADWAY LIGHTING STD. ASSY. w/250 W H.P.S. LUMINAIRE

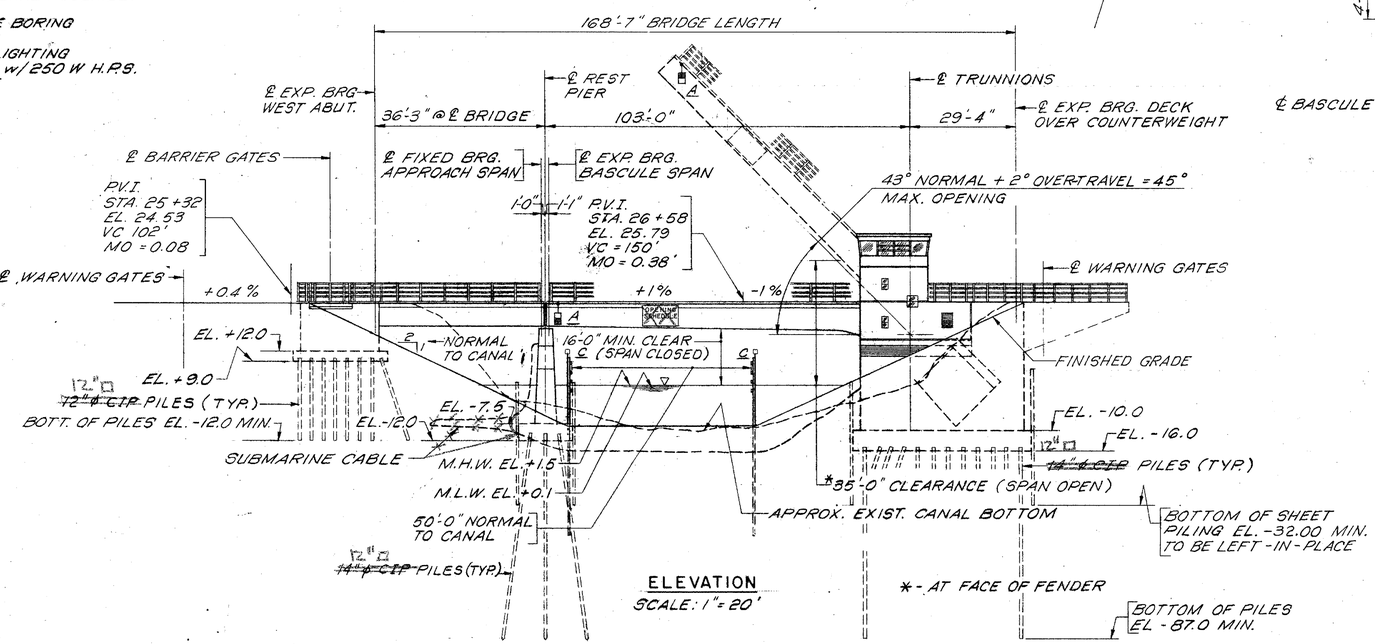

ELEVATION

SCALE: 1" = 20'

*- AT FACE OF FENDER

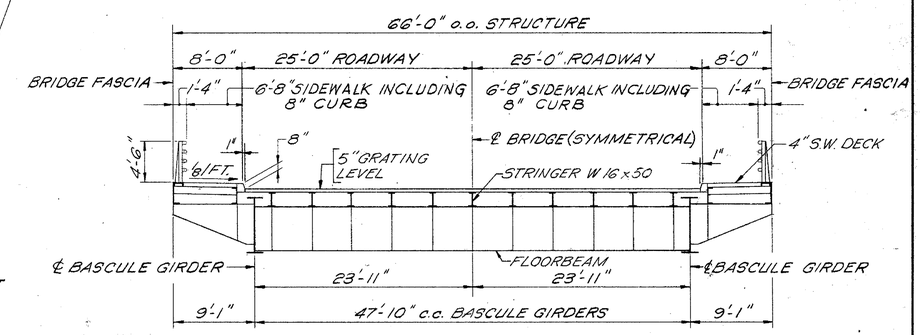

SECTION A-A

SCALE: 1/8" = 1'-0"

FROM SHEET #57 OF 155

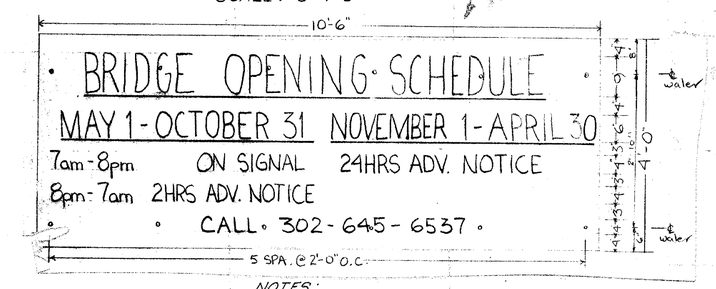

NOTES:

1. FOR GENERAL NOTES, QUANTITIES AND LIST OF DRAWINGS SEE SHEET NO. 56
2. FOR LONGITUDINAL AND TRANSVERSE SECTIONS AND RIP RAP DETAILS SEE SHEET NO. 55
3. CHANNEL TO BE EXCAVATED TO ELEV. -8.0 PLUS 2 FT. OVERDREDGE WITHIN 100 FT EITHER SIDE OF FENDERS.

PREL. TRACING MP DESIGN LMB CHKD. LMB

HARDESTY & HANOVER
CONSULTING ENGINEERS
NEW YORK, N.Y.

REVISIONS

CONTRACT	COUNTY	FEDERAL AID PROJECT Nº	SHEET Nº	TOTAL SHEETS
82-073-05	SUSSEX	BRF-1009(3)	55	155

TYPICAL BRIDGE SECTIONS AND RIPRAP DETAILS

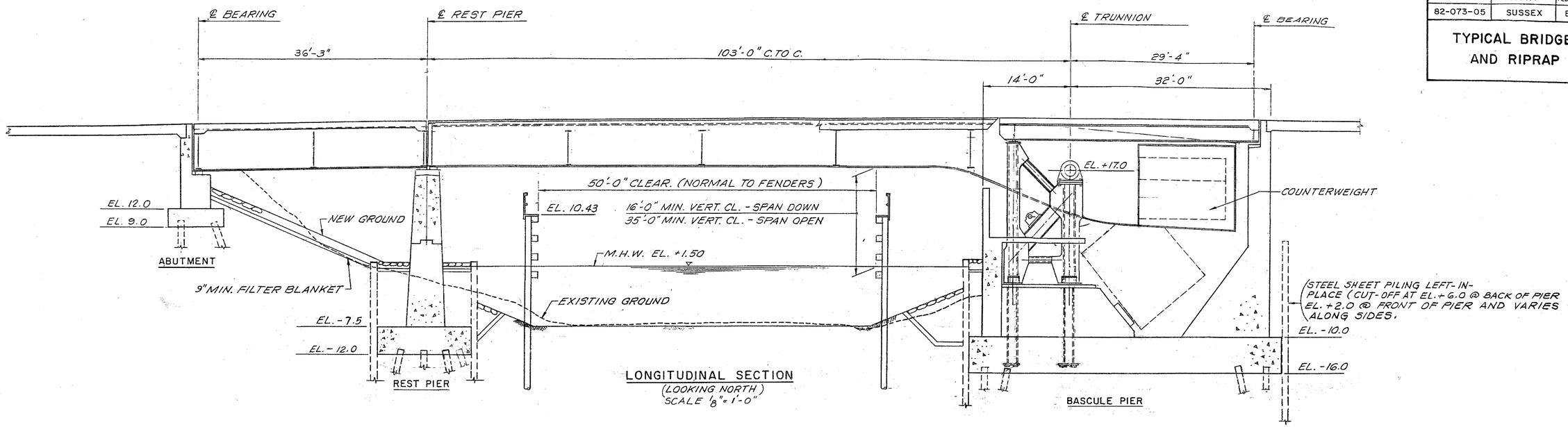

LONGITUDINAL SECTION
(LOOKING NORTH)
SCALE 1/8" = 1'-0"

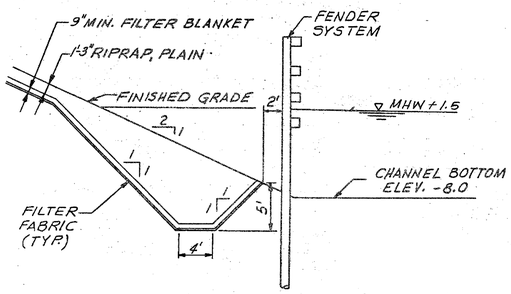

RIPRAP BLANKET & TOE DETAIL
SCALE: 1/8" = 1'-0"

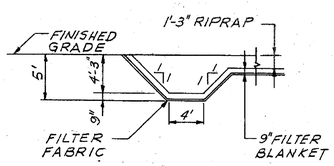

DETAIL OF CUTOFF AT EDGES OF RIPRAP BLANKET
N.T.S.

NOTE:
RIPRAP WILL BE ROADWAY ITEM

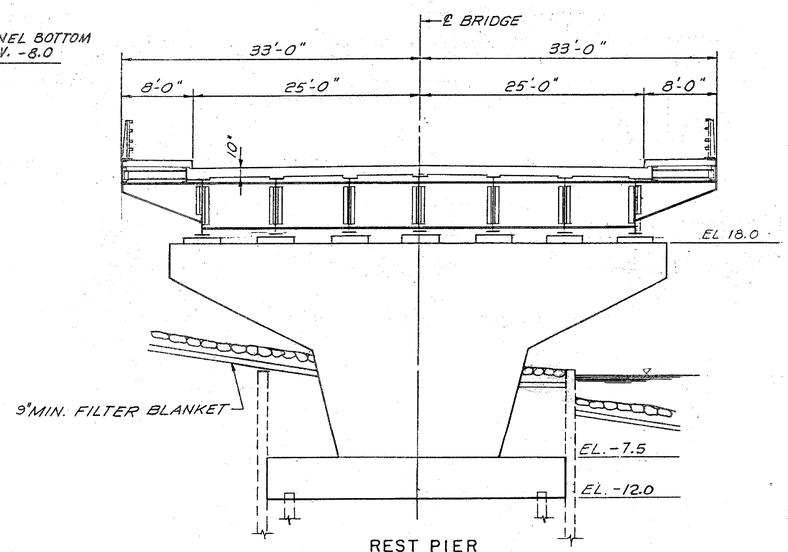

REST PIER
(LOOKING EAST)
SCALE: 1/8" = 1'-0"

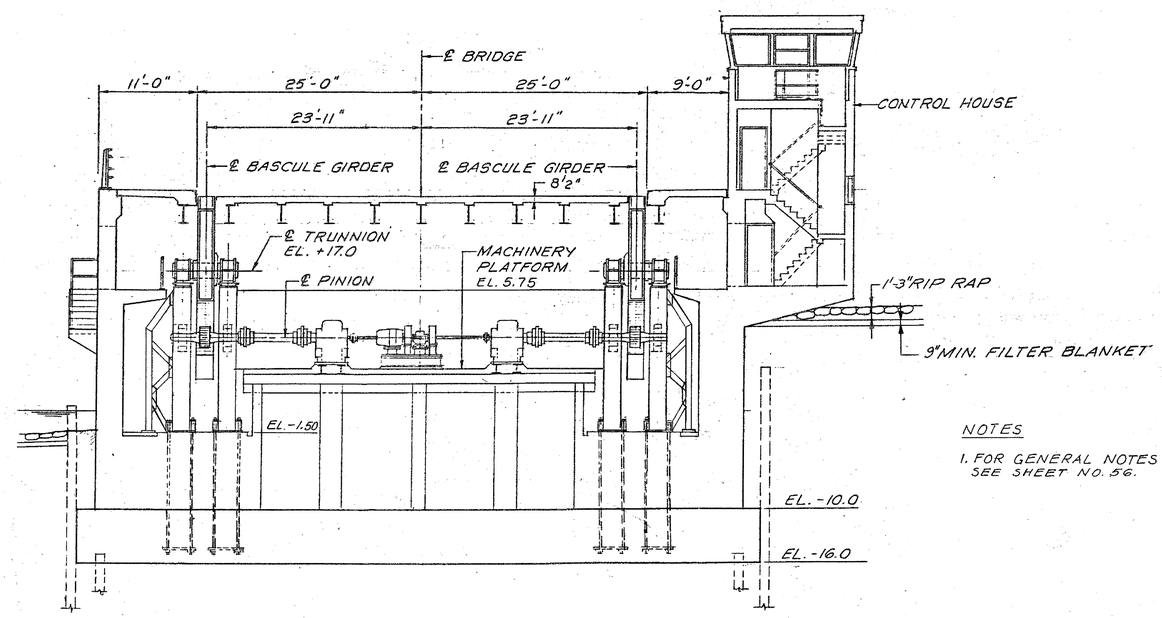

TRANSVERSE SECTION
LOOKING EAST
SCALE: 1/8" = 1'-0"

NOTES

1. FOR GENERAL NOTES SEE SHEET NO. 56.

PREL. TRACING B.G.S. & A.S. DESIGN BGS CHKD. JP

CONTRACT	COUNTY	FEDERAL AID PROJECT Nº	SHEET Nº	TOTAL SHEETS
82-073-05	SUSSEX	BRF-1009(3)	56	155

QUANTITIES - NOTES
LIST OF DRAWINGS

LIST OF DRAWINGS

54. GENERAL PLAN AND ELEVATION
55. TYPICAL BRIDGE SECTIONS AND RIPRAP DETAILS
56. QUANTITIES - NOTES - LIST OF DRAWINGS
57. FENDER SYSTEM
58. WEST ABUTMENT - PLAN AND ELEVATION
59. WEST ABUTMENT - DETAILS I
60. WEST ABUTMENT - DETAILS II
61. REST PIER
62. BASCULE PIER - PLAN AND ELEVATIONS
63. BASCULE PIER - SECTION AT ELEVATION -10.0
FOOTING AND PILE LAYOUT PLAN
64. BASCULE PIER - SECTION AT ELEVATION +1.0 AND 9.0
65. BASCULE PIER- SECTION AT ELEVATION +18.0
66. BASCULE - LONGITUDINAL AND TRANSVERSE SECTIONS
67. BASCULE PIER - ELEVATIONS I
68. BASCULE PIER - ELEVATIONS II
69. BASCULE PIER - EAST WALL - BACKWALL DETAILS
70. BASCULE PIER - MISCELLANEOUS DETAILS I
71. BASCULE PIER - MISCELLANEOUS DETAILS II
72. BASCULE PIER - CONTROL HOUSE DETAILS I
73. BASCULE PIER - CONTROLL HOUSE DETAILS II
74. CONTROL HOUSE PLANS AND ELEVATIONS
75. CONTROL HOUSE DETAILS I
76. CONTROL HOUSE DETAILS II
77. BASCULE SPAN AND APPROACH SPAN - FRAMING PLAN
78. BASCULE SPAN - STRESS AND BALANCE TABLES
79. BASCULE SPAN - GIRDER DETAILS I
80. BASCULE SPAN - GIRDER DETAILS II
81. BASCULE SPAN - FLOORBEAMS FB0 THRU FB3
82. BASCULE SPAN - FLOORBEAM FB4
83. BASCULE SPAN - LATERAL BRACING
84. BASCULE SPAN - LONGITUDINAL BRACING
85. BASCULE SPAN - COUNTERWEIGHT DETAILS
86. DECK JOINT PLAN AND DETAILS
87. CENTERING DEVICE AND MISCELLANEOUS DETAILS
88. DECK OVER COUNTERWEIGHT STRUCTURAL AND BEARING DETAILS
89. ACCESS TO COUNTERWEIGHT POCKETS
90. TRUNNION TOWER AND OPERATING MACHINERY SUPPORTS
91. TRUNNION TOWER - ELEVATIONS
92. TRUNNION TOWER - SECTIONS AND DETAILS
93. OPERATING MACHINERY SUPPORTS - DETAILS
94. APPROACH SPAN - STRUCTURAL DETAILS
95. LOCK MACHINERY SUPPORTS
96. DECK SLAB OVER COUNTERWEIGHT
97. APPROACH SPAN - DECK SLAB
98. EXPANSION JOINT DETAILS
99. WALKWAY DETAILS AT REST PIER
100. BRIDGE RAILING DETAILS
101. APPROACH SLABS
102. OPERATING MACHINERY ASSEMBLY
103. OPERATING MACHINERY DETAILS
104. LOCK MACHINERY ASSEMBLY
105. LOCK MACHINERY DETAILS
106. TRUNNIONS, BEARINGS, RACK AND PINION DETAILS
107. BARRIER GATE DETAILS I
108. BARRIER GATE DETAILS II

LIST OF DRAWINGS(CONT'D)

109. ONE LINE WIRING DIAGRAM
110. WIRING DIAGRAM - POWER DISTRIBUTION AND CONTROL AUXILIARIES
111. WIRING DIAGRAM - LEAF CONTROL
112. WIRING DIAGRAM - MOTORS AND BRAKES
113. WIRING DIAGRAM - LIGHTING CIRCUITS
114. SCHEDULE OF ELECTRICAL APPARATUS
115. CONTROL DESK LAYOUT AND DETAILS
116. SCHEMATIC CONDUIT DIAGRAM
117. SUBMARINE CABLE DETAILS
118. ELECTRICAL DETAILS I
119. ELECTRICAL DETAILS II
120. ELECTRICAL DETAILS III
121. BAR LIST - WEST ABUTMENT - BAR BENDING DETAILS
122. BAR LIST - REST PIER, BASCULE PIER
123. BAR LIST - BASCULE PIER
124. BAR LIST - BASCULE PIER
125. BAR LIST - BASCULE PIER
126. BAR LIST - APPROACH SPAN DECK
DECK OVER COUNTERWEIGHT AND APPROACH SLAB
127. TEMPORARY BRIDGE - GENERAL PLAN AND ELEVATION
128. TEMPORARY BRIDGE - PLAN AND ELEVATION
129. TEMPORARY BRIDGE - ABUTMENTS
130. TEMPORARY BRIDGE - PILE BENTS
131. DEMOLITION OF EXISTING BRIDGE

GENERAL NOTES

1. DESIGN SPECIFICATIONS TO BE 1977 AASHTO STANDARD SPECIFICATIONS FOR HIGHWAY BRIDGES, INCLUDING 1978, 1979, 1980, 1981, 1982, AND 1983 INTERIM SPECIFICATIONS AND THE 1978 AASHTO STANDARD SPECIFICATIONS FOR MOVABLE HIGHWAY BRIDGES.

2. MATERIALS, FABRICATION AND CONSTRUCTION TO CONFORM WITH THE 1974 STATE OF DELAWARE DEPARTMENT OF TRANSPORTATION DIVISION OF HIGHWAYS STANDARD SPECIFICATIONS THE JANUARY 1980 SUPPLEMENTAL SPECIFICATIONS, AND SPECIAL PROVISIONS FOR THIS PROJECT.

3. DESIGN LOADING TO BE HS 20-44.

   DEAD LOAD INCLUDES 25 LBS./SQ. FT. PROVISION FOR FUTURE WEARING SURFACE EXCEPT ON BASCULE SPAN AND TEMPORARY BRIDGE.

4. PILE CAPACITIES:
   12" ~~Ø C.I.P.~~ CONCRETE PILES FOR THE ABUTMENT SHALL BE DRIVEN TO PRODUCE AN ALLOWABLE BEARING VALUE (MIN.) EQUAL TO 35 TONS AND TO A PENETRATION (MIN.) ELEV. -12.0 FT. THE MAXIMUM PENETRATION SHALL NOT EXCEED ELEV. -15.0 FT. SEE SPECIAL PROVISIONS FOR FUSION BONDING.

   14" ~~Ø C.I.P.~~ CONCRETE PILES FOR THE REST PIER AND BASCULE PIER SHALL BE DRIVEN TO PRODUCE AN ALLOWABLE BEARING VALUE (MIN.) EQUAL TO 60 TONS AND TO A PENETRATION OF -87.0.

   12" Ø TREATED TIMBER PILES FOR THE FENDER SYSTEM SHALL BE DRIVEN TO A PENETRATION (MIN.) ELEV. -40.0 FT.

   16" ~~Ø C.I.P. CONCRETE~~ PILES FOR TEMPORARY BRIDGE SHALL BE DRIVEN TO PRODUCE AN ALLOWABLE BEARING VALUE (MIN.) EQUAL TO 35 TONS AND TO A PENETRATION (MIN.) ELEV. -66.0 FT FOR QUADRUPLE SINGLE, SIMPLE SPAN CONSTRUCTION AND TO AN ALLOWABLE BEARING VALUE (MIN.) EQUAL TO 45 TONS AND A PENETRATION (MIN.) ELEV. -80.0 FT. FOR TRIPLE SINGLE CONTINUOUS SPAN CONSTRUCTION.

GENERAL NOTES (CONT'D)

5. ALLOWABLE DESIGN STRESSES:

CONCRETE IN FOOTINGS (CLASS B)	$F'c$ = 3,000 P.S.I.
	F_c = 1,200 P.S.I.
CONCRETE IN DECKS (CLASS D)	$F'c$ = 4,500 P.S.I
	F_c = 1,800 P.S.I.
ALL OTHER CONCRETE (CLASS A)	$F'c$ = 4,000 P.S.I.
	F_c = 1,600 P.S.I.

   REINFORCEMENT PLAIN AND EPOXY COATED
   F_s = 24,000 P.S.I. (ASTM A615 GRADE 60)

   STRUCTURAL STEEL
   F_s = 27,000 P.S.I. (ASTM A572) GRADE 50 FOR ALL STEEL ≤ 2" THICK. F_s = 27,000 P.S.I. (ASTM A588) FOR ALL STEEL > 2" THICK. BASCULE GIRDERS INCLUDING SPLICE PLATES, THE BOTTOM FLANGE AND WEB OF THE GIRDER SUPPORTING THE THE STRINGERS OF THE DECK OVER COUNTERWEIGHT AND ALL MEMBERS OF THE TRUNNION TOWERS EXCLUDING BASE PLATES SHALL BE CONSIDERED AS FRACTURE CRITICAL MEMBERS.* ALL QUALIFICATIONS FROM AASHTO 1978 GUIDE SPECIFICATIONS FOR FRACTURE CRITICAL NON-REDUNDANT STEEL BRIDGE MEMBERS INCLUDING ALL INTERIM SPECIFICATIONS ARE REQUIRED FOR THESE MEMBERS. ALL FLANGE PLATES SHALL BE FLAME-CUT AND INSPECTED FOR LAMINATIONS IN ACCORDANCE WITH ARTICLE 3.2.3 OF AASHTO STANDARD SPECIFICATIONS FOR WELDING OF STRUCTURAL STEEL BRIDGES, 1981.

   CHARPY V-NOTCH REQUIREMENTS FOR FRACTURE CRITICAL MEMBERS ARE:
   BASE METAL UP TO 1½" 25 FT. LBS. @ 40°F
   BASE METAL OVER 1½" 25 FT. LBS @ 20°F
   CHARPY TEST FOR WELD METAL SHALL BE 25 FT. LBS @ -20°F

   STRUCTURAL STEEL FOR THE BASCULE SPAN SHALL BE PRODUCED BY A STRUCTURAL STEEL FABRICATION PLANT CURRENTLY CERTIFIED UNDER THE AISC QUALITY CERTIFICATION PROGRAM FOR CATEGORY III, MAJOR STEEL BRIDGES.

   ALL BOLTS SHALL BE 7/8 DIAMETER H.S. BOLTS ASTM A325 TYPE 1 UNLESS OTHERWISE NOTED. ALL BOLTS SHALL BE MECHANICALLY GALVANIZED EXCEPT ASTM A490 WHICH SHALL BE CLEANED AND PAINTED AFTER INSTALLATION.

   TIMBER STRESS GRADE 1,600 #f

6. STRUCTURAL STEEL PAINTING
   1) PRIME COAT - INORGANIC ZINC SYSTEM
   2) TIE COAT-SEE SPECIAL PROVISIONS
   3) FINISH COAT - VINYL

7. ELEVATIONS REFER TO U.S.C. & G.S. DATUM.

8. REINFORCEMENT COVER
   2 1/2 " TOP OF DECKS
   1" BOTTOM OF DECKS
   3" FOOTINGS & WALLS TO ELEVATION + 15 (MIN.)
   2" ELSEWHERE UNLESS OTHERWISE NOTED.

9. DRAWINGS OF THE EXISTING BRIDGE FOR DEMOLITION CAN BE OBTAINED FROM DELAWARE DEPARTMENT OF TRANSPORTATION. A GENERAL PLAN AND ELEVATION IS SHOWN ON SHEET NO 131.

*THE BOTTOM FLANGE AND ~~WEB~~ WEB OF THE GIRDER SUPPORTING THE STRINGER OF THE DECK OVER THE COUNTERWEIGHT IS NOT A FRACTURE CRITICAL MEMBER (FCM) BY THE A.A.S.H.T.O. DEFINITION, HOWEVER, IT IS DECIDED THAT THE REQUIREMENTS OF (FCM) SHALL APPLY TO THIS MEMBER AS DEFINED.

ESTIMATED QUANTITIES
BASCULE BRIDGE

SECT NO.	ITEM	UNIT	
203	CHANNEL EXCAVATION	C.Y.	525
207	EXCAVATION AND BACKFILL FOR STRUCTURES	C.Y.	4,620
210	REMOVAL OF EXISTING BASCULE BRIDGE	L.S.	LUMP SUM
601	*TIMBER STRUCTURES, TREATED	MFBM	12
602	*PORTLAND CEMENT CONCRETE MASONRY - PIER AND ABUTMENT FOOTINGS	C.Y.	1,066
602	*PORTLAND CEMENT CONCRETE MASONRY - PIER AND ABUTMENT ABOVE FOOTINGS	C.Y.	1,877
602	*PORTLAND CEMENT CONCRETE MASONRY - COUNTERWEIGHT	C.Y.	291
602	*PORTLAND CEMENT CONCRETE MASONRY - APPROACH SLAB	C.Y.	475
602	*PORTLAND CEMENT CONCRETE MASONRY - SUPERSTRUCTURE	C.Y.	193
602	*PORTLAND CEMENT CONCRETE MASONRY- BALANCE BLOCKS	EA.	870
602	PROTECTIVE COATING FOR CONCRETE MASONRY - BRIDGE	S.Y.	1,465
602	PREFABRICATED EXPANSION JOINT SYSTEM	L.F.	140
605A	*BAR REINFORCEMENT, EPOXY COATED	LB.	626,700
606Ⓢ	STEEL STRUCTURES, (COMPUTED NET WEIGHT 1,100,000 LBS.)	L.S.	LUMP SUM
606Ⓢ	ROADWAY GRATING	S.F.	4,496
606Ⓢ	SIDEWALK DECK	S.F.	1,439
607	METAL BRIDGE RAILING	L.F.	496
621	TIMBER PILES, TREATED	L.F.	4,756
624	CAST-IN-PLACE CONCRETE PILES 12-INCH DIAMETER (7 GAGE MIN)	L.F.	1,988
624	CAST-IN-PLACE CONCRETE PILES, 14-INCH DIAMETER (7 GAGE MIN)	L.F.	10,188
624	STEEL SHELL TEST PILES, 14-INCH DIAMETER (7 GAGE MIN)	L.F.	148
624	PILE LOAD TEST, 14-INCH DIAMETER (7 GAGE MIN)	EA.	2
626	STEEL SHEET PILES LEFT-IN-PLACE	S.F.	10,900
S.P.Ⓢ	CONTROL HOUSE	L.S.	LUMP SUM
S.P.Ⓢ	BRIDGE MACHINERY	L.S.	LUMP SUM
S.P.Ⓢ	STANDBY ENGINE GENERATOR	L.S.	LUMP SUM
S.P.Ⓢ	ELECTRICAL WORK	L.S.	LUMP SUM
S.P.Ⓢ	BARRIER GATE	L.S.	LUMP SUM
S.P.	BRIDGE OPERATION	L.S.	LUMP SUM

TEMPORARY BRIDGE

SECT NO.	ITEM	UNIT	
207	EXCAVATION AND BACKFILL FOR STRUCTURES	C.Y.	400
210	REMOVAL OF TEMPORARY BRIDGE	L.S.	LUMP SUM
601	*TIMBER STRUCTURES, TREATED	MFBM	4
602	*PORTLAND CEMENT CONCRETE MASONRY - ABUTMENT FOOTINGS	C.Y.	82
602	*PORTLAND CEMENT CONCRETE MASONRY - PIERS AND ABUTMENTS ABOVE FOOTINGS	C.Y.	69
605	*BAR REINFORCEMENT	LB.	19,600
606 Ⓢ	STEEL STRUCTURES, (COMPUTED NET WEIGHT 14,416 LBS.)	L.S.	LUMP SUM
S.P.Ⓢ	TEMPORARY BRIDGE (ACROW OR APPROVED EQUAL)	L.S.	LUMP SUM
624	CAST-IN-PLACE CONCRETE PILES, 16-INCH DIAMETER (.500" MIN. WALL THICKNESS) (THREE SIMPLE SPAN 1750 L.F.) (THREE CONTINUOUS SPAN 2054 L.F.)	L.S.	LUMP SUM

*ESTIMATED FIXED QUANTITY, PAYMENT IN ACCORDANCE WITH SUBSECTION 109.06 OF THE STANDARD SPECIFICATIONS.

NOTE: FOR INFORMATIONAL PURPOSES THE QUANTITIES THAT ARE COMMON TO BOTH THE BASCULE BRIDGE AND TEMPORARY BRIDGE HAVE BEEN BROKEN DOWN FOR EACH BRIDGE.

Ⓢ SPECIALTY ITEM

HARDESTY & HANOVER CONSULTING ENGINEERS NEW YORK, N.Y.

REVISIONS
1 REVISED GEN. NOTE * 10-30-84 T.F.F.

PREL. TRACING VA & L.S. DESIGN LMB CHKD LMB

CONTRACT	COUNTY	FEDERAL AID PROJECT Nº	SHEET Nº	TOTAL SHEETS
82-073-05	SUSSEX	BRF-1009(3)	57	155

FENDER SYSTEM

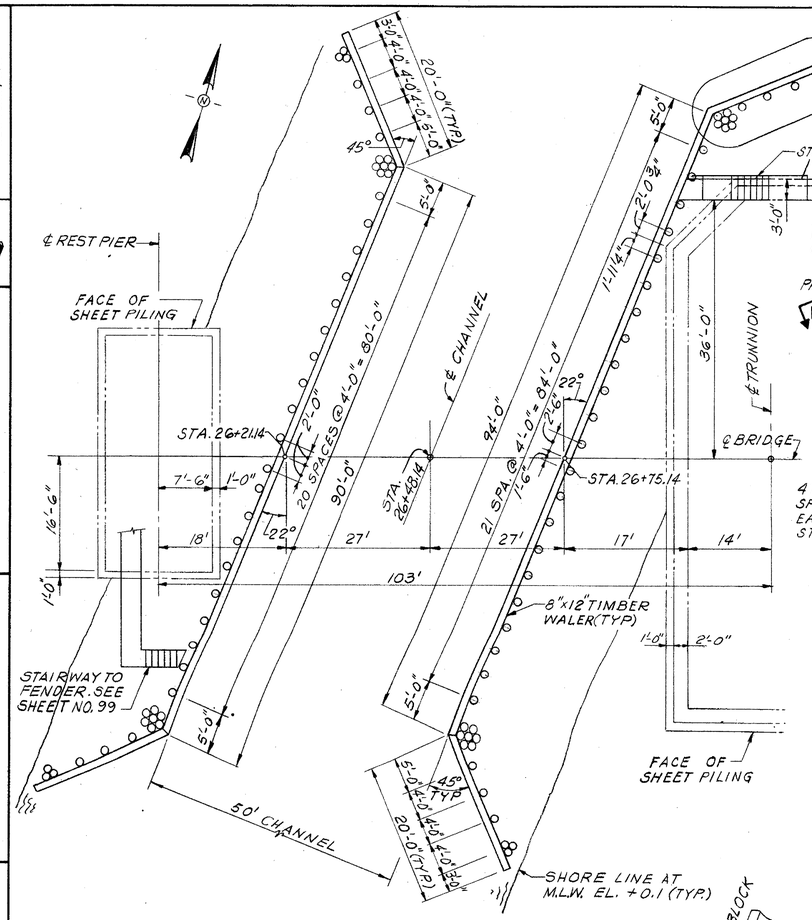

PLAN OF FENDER
SCALE: 1"=10'

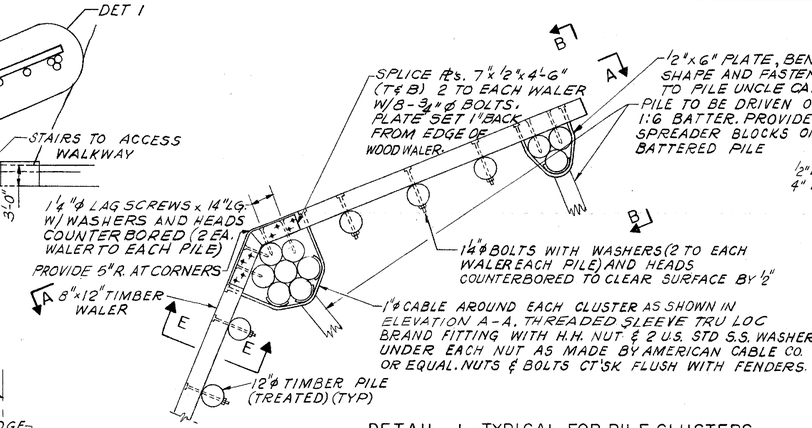

DETAIL 1 - TYPICAL FOR PILE CLUSTERS
SCALE: 1/4"=1'-0"

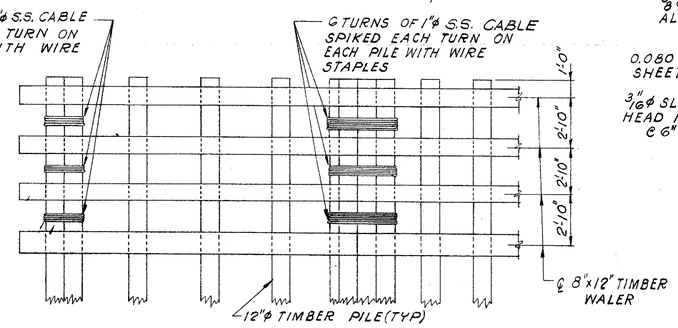

ELEVATION A-A
SCALE: 1/4"=1'-0"

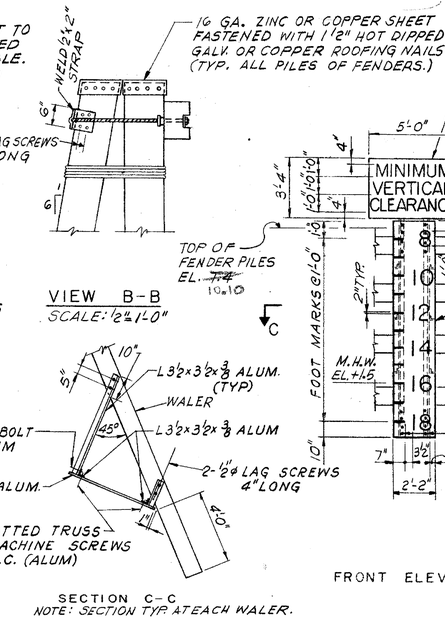

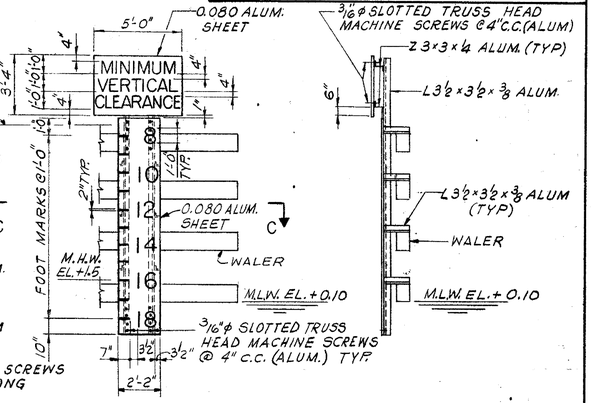

NAVIGATION CLEARANCE GAUGE DETAIL
SCALE: 1/4"=1'-0"

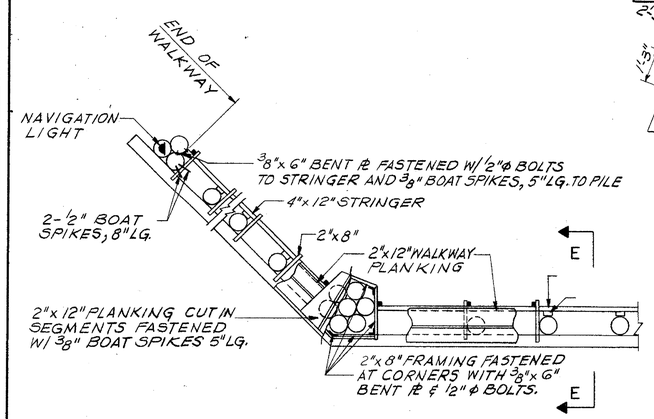

TYPICAL WALKWAY PLAN
SCALE: 1/4"=1'-0"

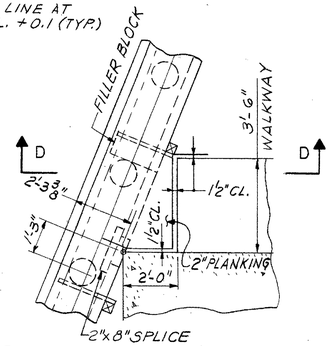

ACCESS WALKWAY TO BASCULE PIER
SCALE: 3/8"=1'-0"

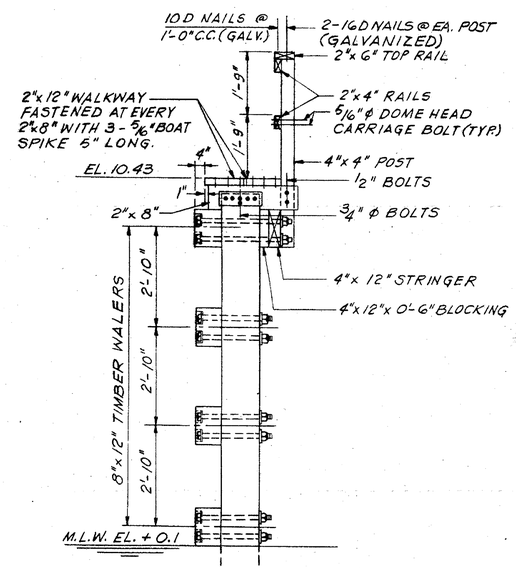

SECTION E-E

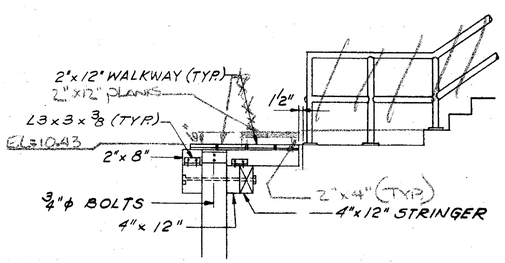

SECTION D-D
SCALE: 3/8"=1'-0"

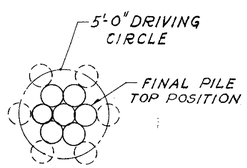

TYPICAL DRIVING OF 7 PILE CLUSTER
SCALE: 1/4"=1'-0"

BRIDGE OPENING SCHEDULE SIGN
NO SCALE SEE SHEET #54 OF 155

NOTES:

1. FOR GENERAL NOTES SEE SHEET NO. 5G.
2. SEE SPECIAL PROVISIONS FOR CLEARANCE GAUGE AND BRIDGE OPENING SCHEDULE SIGN FACING MATERIAL.
3. ALL HARDWARE INCLUDING BOLTS, LAG SCREWS, BOAT SPIKES, WASHERS, RAILS, SPLICE PLATES AND WOOD SCREWS SHALL BE GALVANIZED EXCEPT AS OTHERWISE NOTED.
4. SPACING OF TIMBER FENDER PILES MAY BE VARIED IF REQ'D. TO CLEAR ANY BATTERED PILES IN BASCULE PIER OR REST PIER.

HARDESTY & HANOVER CONSULTING ENGINEERS NEW YORK, N.Y.

REVISIONS

PREL. TRACING QR & AS DESIGN JD CHKD. ERS

CONTRACT	COUNTY	FEDERAL AID PROJECT Nº	SHEET Nº	TOTAL SHEETS
82-073-05	SUSSEX	BRF-1009(3)	58	155

WEST ABUTMENT PLAN AND ELEVATION

HARDESTY & HANOVER CONSULTING ENGINEERS NEW YORK, N.Y.

REVISIONS

7 REVISED DIMENSION IN ELEVATION VIEW AND QUANTITY OF BAR F602 (7/10-30-84 TFF)

8 REVISED PAD ELEV. IN ELEV. VIEW 2/5/85

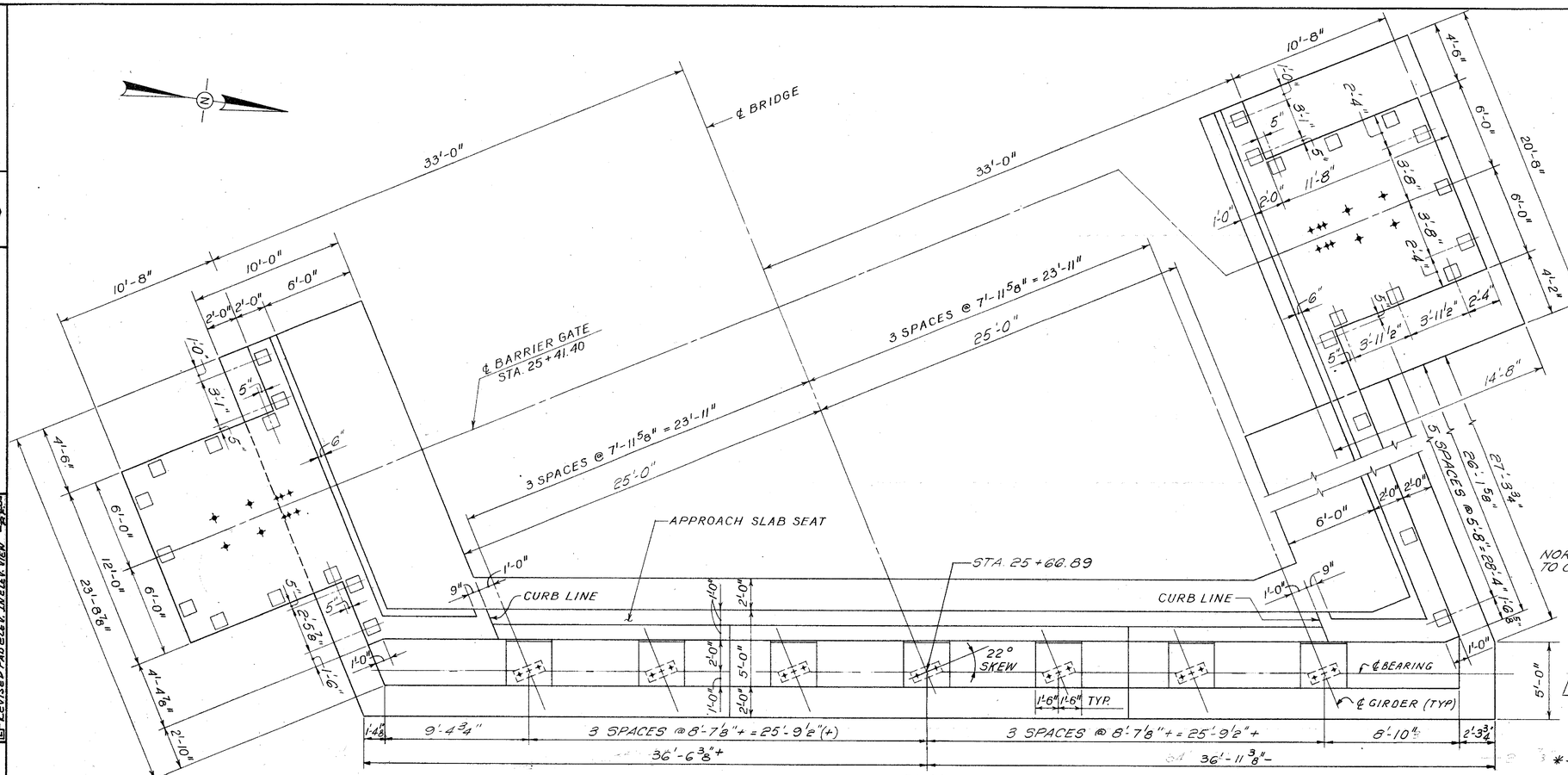

PLAN

SCALE: 1/4" = 1'-0"

NOTES:

1. FOR LOCATION OF BARRIER GATE ANCHOR BOLTS SEE DETAIL ON SHEET NO. 60 & 107.
2. FOR RAILING SPACING SEE NORTH WINGWALL. FOR DETAIL OF BASE PLATE SEE SHEET NO. 100.

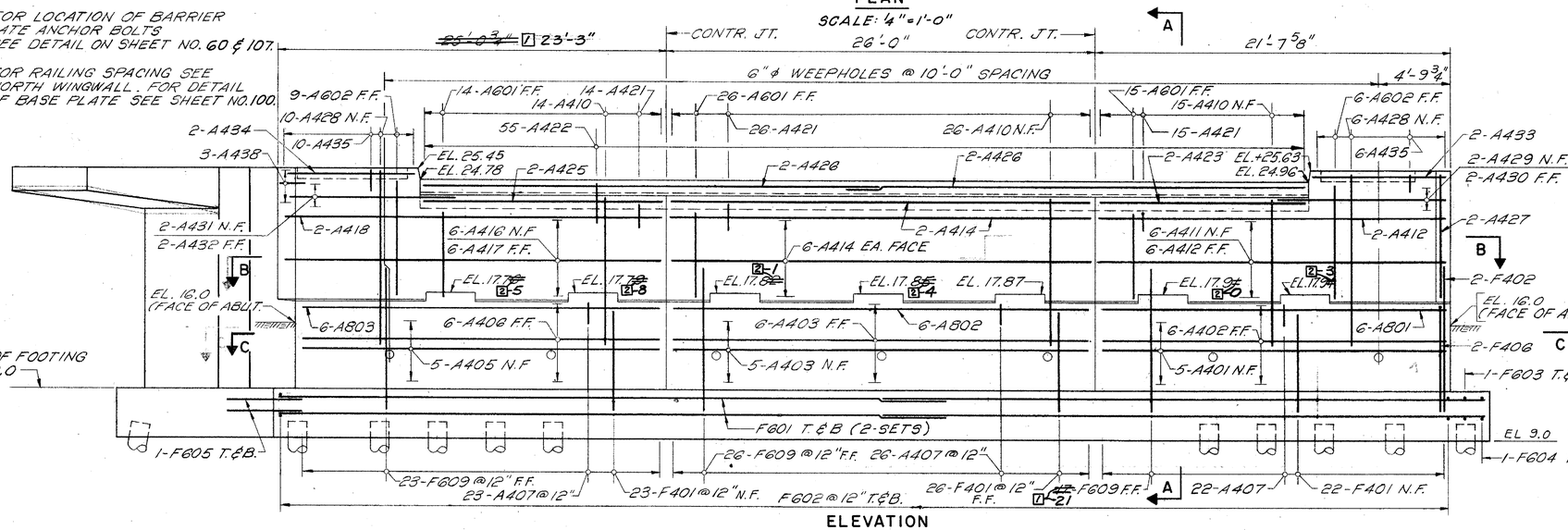

ELEVATION

SCALE: 1/4" = 1'-0"

NOTE: FOR FOOTING SEE SHEET NO. 60.

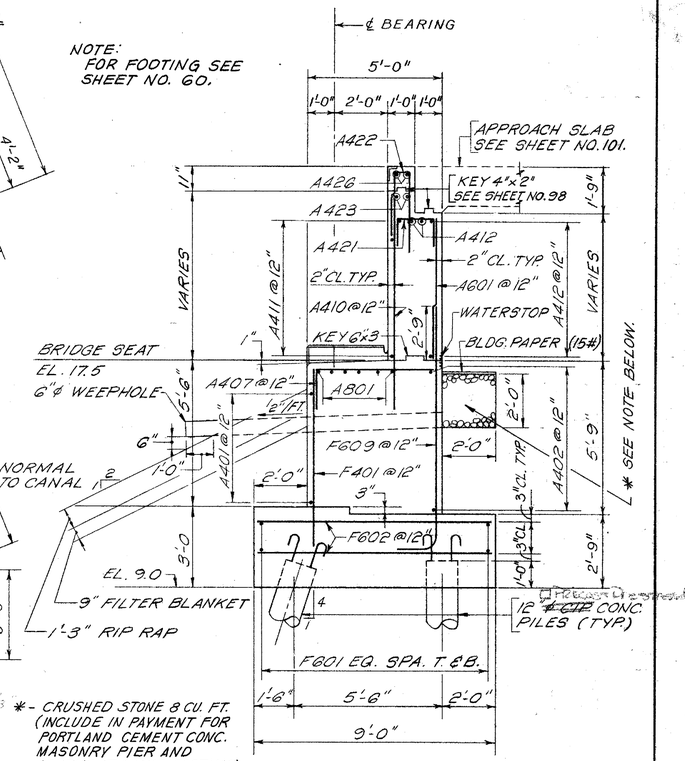

*- CRUSHED STONE 8 CU. FT. (INCLUDE IN PAYMENT FOR PORTLAND CEMENT CONC. MASONRY PIER AND ABUTMENT ABOVE FOOTING.)

SECTION A-A

SCALE: 3/8" = 1'-0"

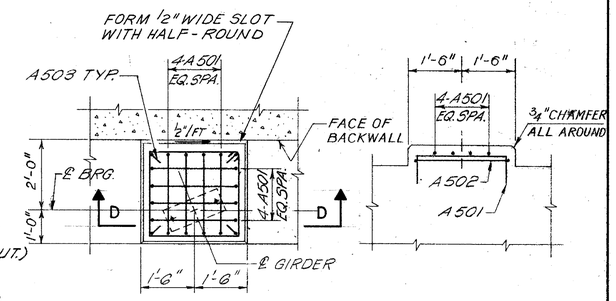

PLAN SECTION D-D

TYPICAL PEDESTAL DETAIL

SCALE: 1/2" = 1'-0"

NOTES:

1. FOR GENERAL NOTES SEE SHEET NO. 56.
2. ALL CORNERS OR EDGES SHALL BE CHAMFERED 3/4" EXCEPT AS OTHERWISE SHOWN IN PLANS
3. FOR WALL JOINT DETAILS SEE SHEET NO. 67.
4. FOR SECTIONS B-B & C-C SEE SHEET NO. 59.
5. WORK THIS SHEET WITH SHEET NO'S. 59 AND 60, FOR BAR LIST SEE SHEET NO. 121.

PREL. TRACING M.P. & A.K. DESIGN LMB CHKD. FG

CONTRACT	COUNTY	FEDERAL AID PROJECT Nº	SHEET Nº	TOTAL SHEETS
82-073-05	SUSSEX	BRF-1009(3)	59	155

WEST ABUTMENT DETAILS I

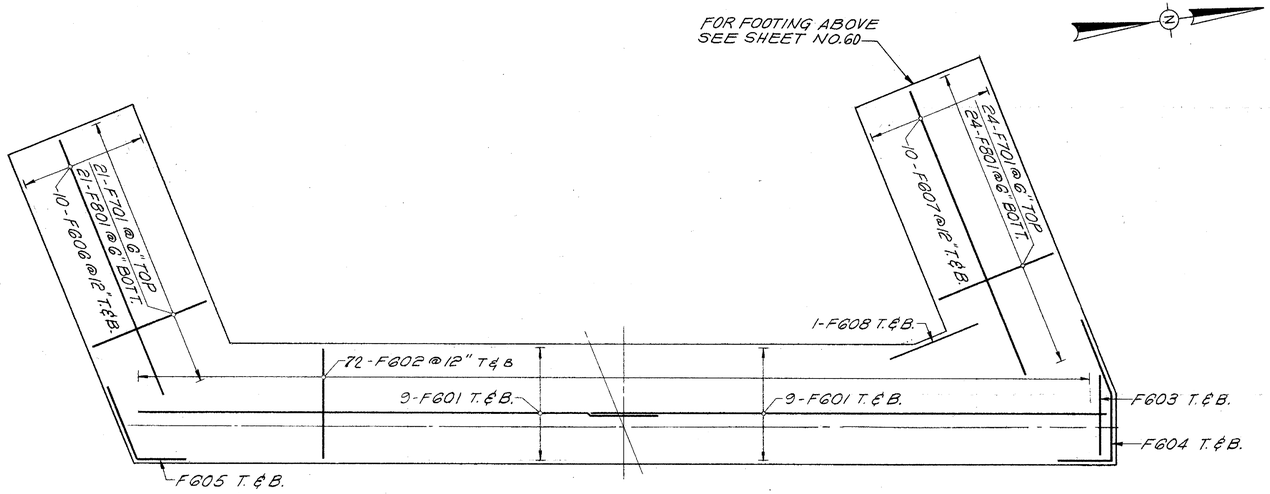

FOOTING REINFORCEMENT PLAN

SCALE: 3/16"=1'-0"

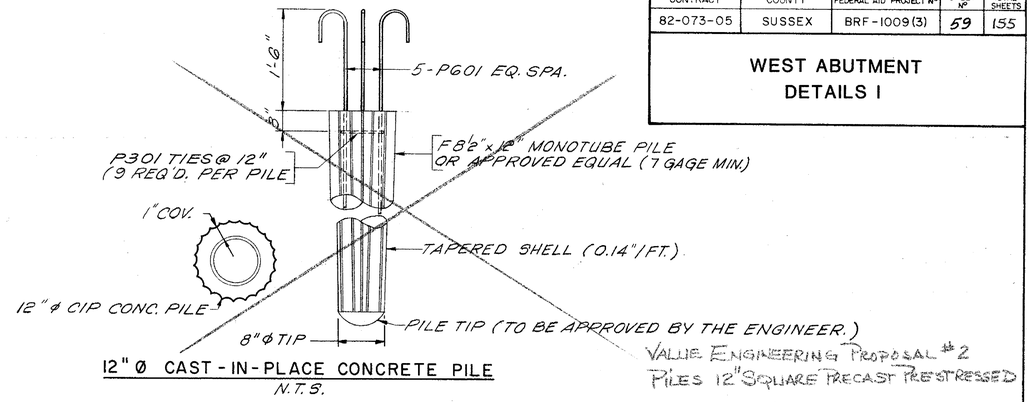

12" Ø CAST-IN-PLACE CONCRETE PILE

N.T.S.

NOTES:

1. ~~FLUTED STEEL SHELL MONOTUBE PILE SHOWN. CONTRACTOR MAY SUPPLY STEEL PIPE PILE OF SIMILAR CONFIGURATION AS PER SPECIAL PROVISIONS.~~
2. ~~CONTRACTOR MAY PROVIDE 14"ϕ C.I.P. IN LIEU OF 12"ϕ C.I.P. AT HIS OPTION AND COST. FOR DETAILS SEE SHEET NO.10~~

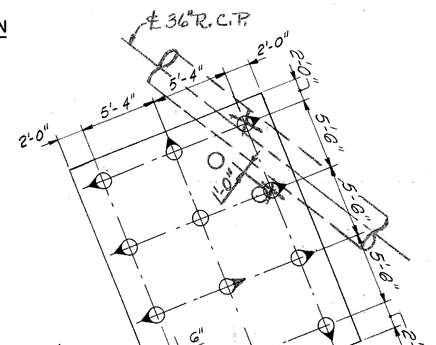

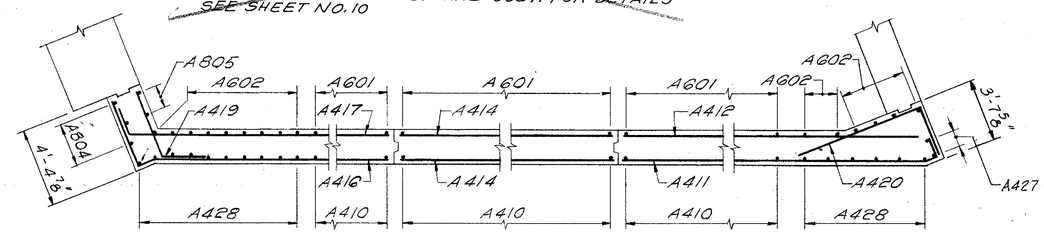

SECTION B-B

SCALE: 1/4"=1'-0"

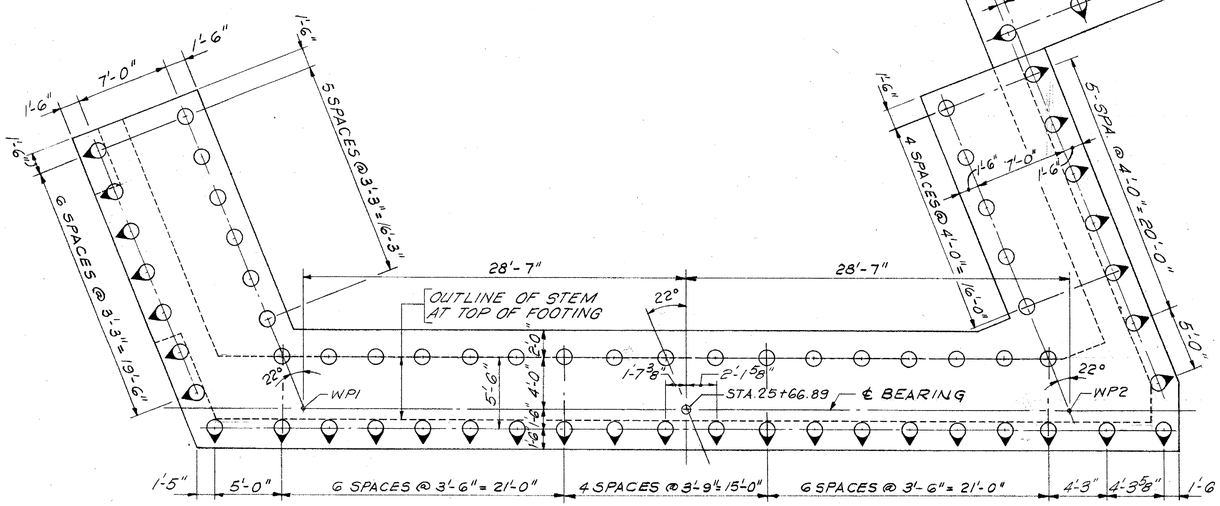

FOOTING PILE LAYOUT

SCALE: 3/16"=1'-0"

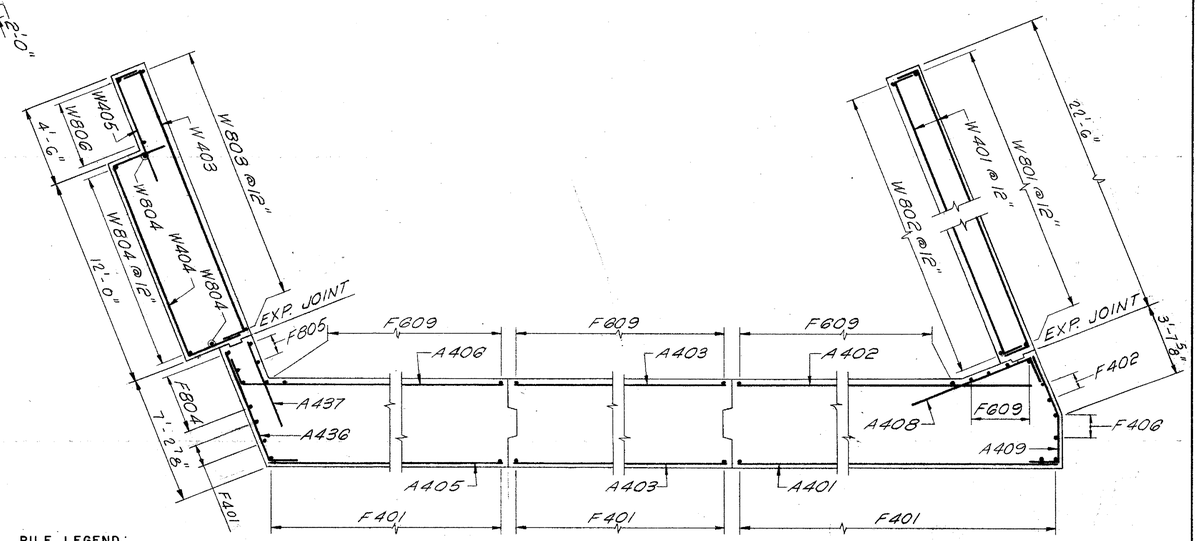

SECTION C-C

SCALE: 1/4"=1'-0"

NOTE:
SECTIONS B-B & C-C TAKEN ON SHEET NO. 58.

PILE LEGEND:

~~C.I.P.~~ PILE 12" □ PRECAST PRESTRESSED

~~C.I.P.~~ PILE BATTERED 1 ON 4 IN DIRECTION INDICATED.

HARDESTY & HANOVER CONSULTING ENGINEERS NEW YORK, N.Y.

REVISIONS

PRELIM. TRACING BGS, MPS & AS DESIGN LMB CHKD FG

CONTRACT	COUNTY	FEDERAL AID PROJECT Nº	SHEET Nº	TOTAL SHEETS
82-073-05	SUSSEX	BRF-1009(3)	60	155

WEST ABUTMENT DETAILS II

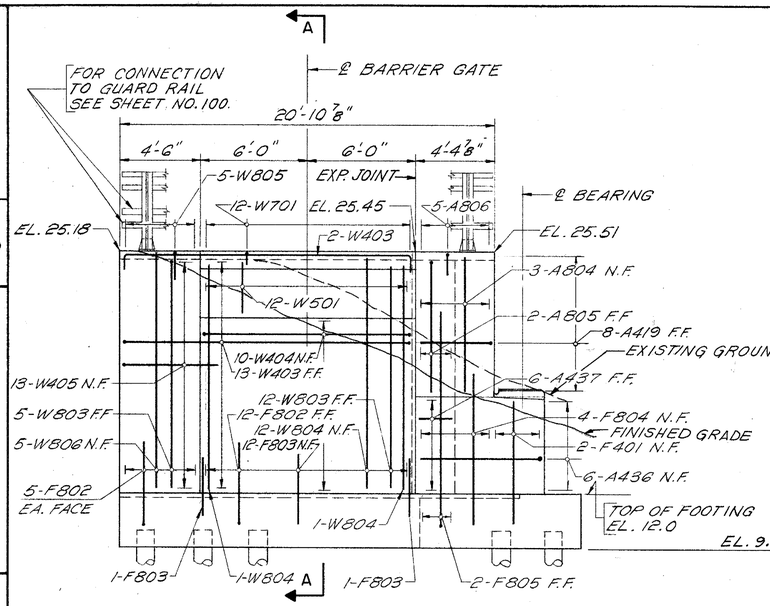

ABUTMENT SOUTH WINGWALL

SCALE: 1/4"=1'-0"

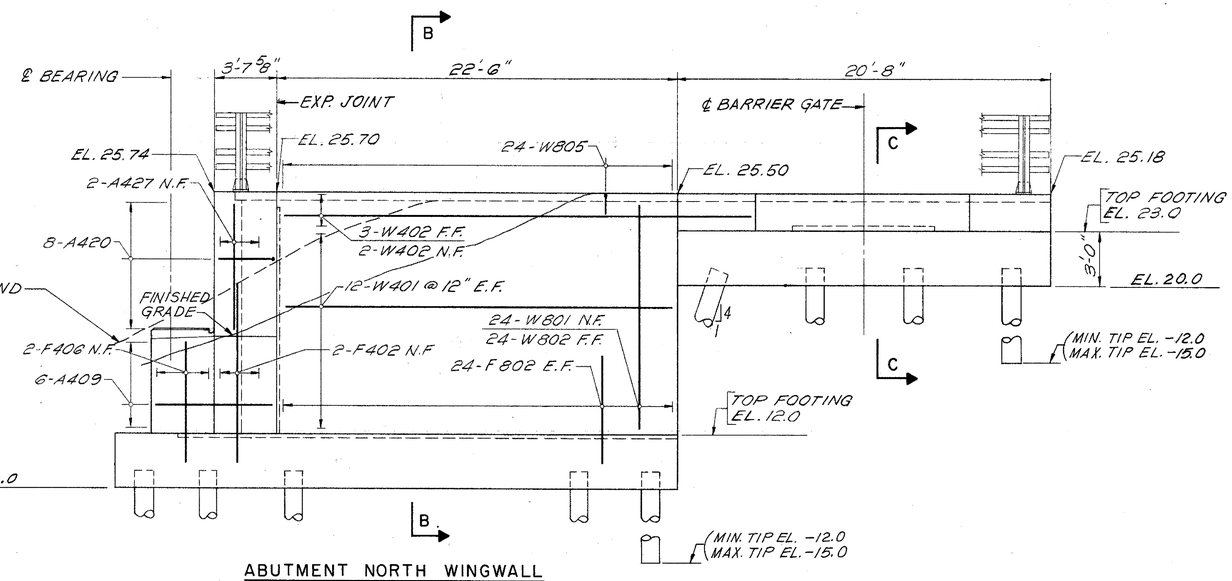

ABUTMENT NORTH WINGWALL

SCALE: 1/4"=1'-0"

NOTE:
WORK THIS SHEET WITH SHEET NO. 58.

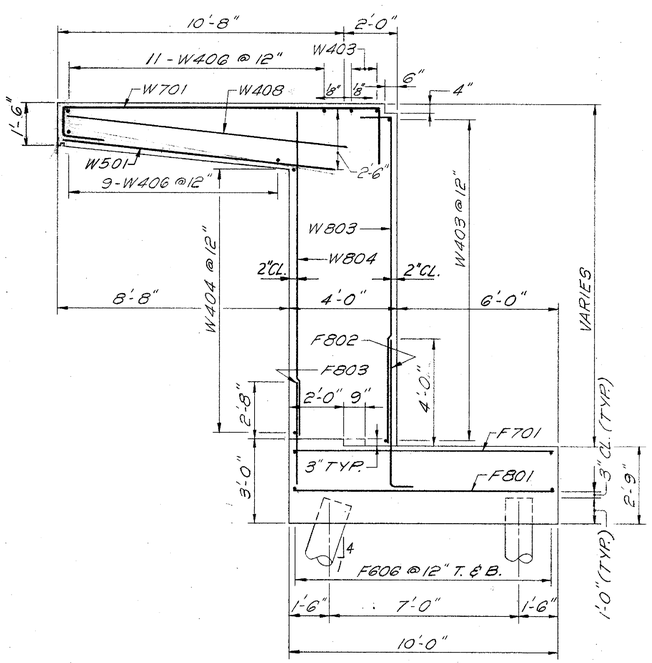

SECTION A-A

SCALE: 3/8"=1'-0"

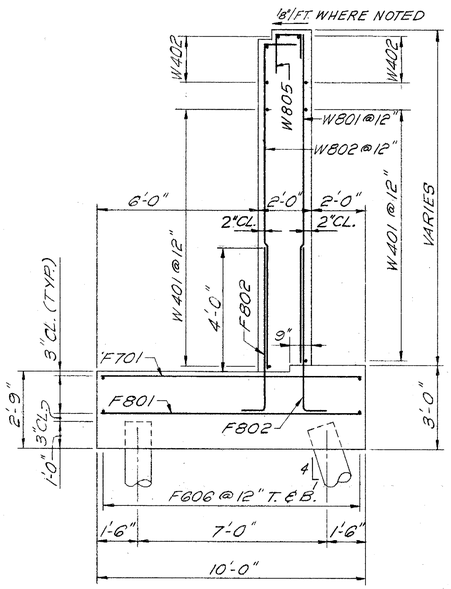

SECTION B-B

SCALE: 3/8"=1'-0"

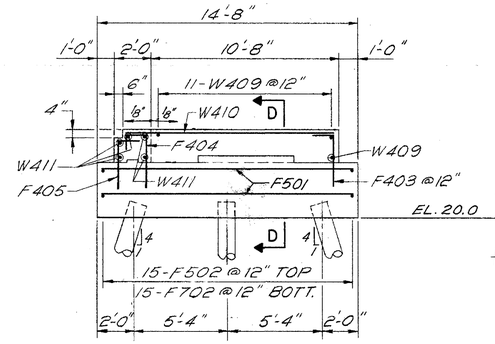

SECTION C-C

SCALE: 1/4"=1'-0"

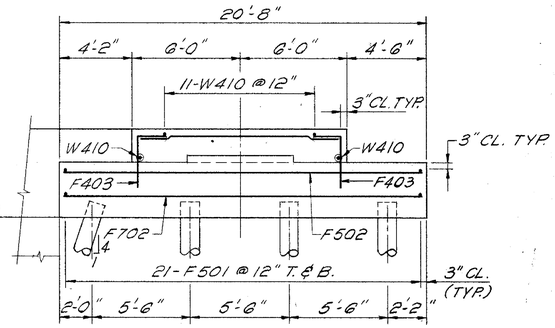

SECTION D-D

SCALE: 1/4"=1'-0"

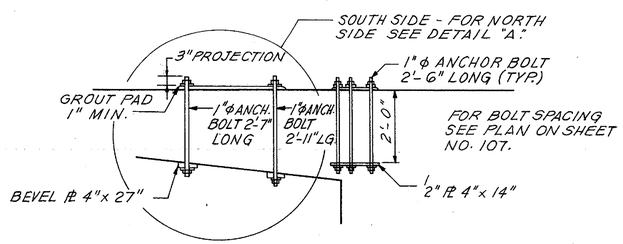

ANCHOR BOLT ELEVATION

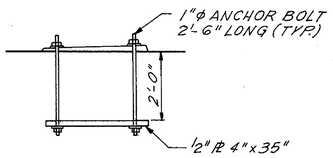

ANCHOR BOLT DETAIL A

NORTH

HARDESTY & HANOVER CONSULTING ENGINEERS NEW YORK, N.Y.

REVISIONS

PREL. TRACING M. POBLETE DESIGN LMB CHKD. FG

40088

CONTRACT	COUNTY	FEDERAL AID PROJECT Nº	SHEET Nº	TOTAL SHEETS
82-073-05	SUSSEX	BRF-1009(3)	61	155

REST PIER

HARDESTY & HANOVER
CONSULTING ENGINEERS
NEW YORK, N.Y.

REVISIONS
1. Revision to Pile Elev. Sect. A-A & "B-B" & Elev.
2. Revised Pad Elevations in Elev. View

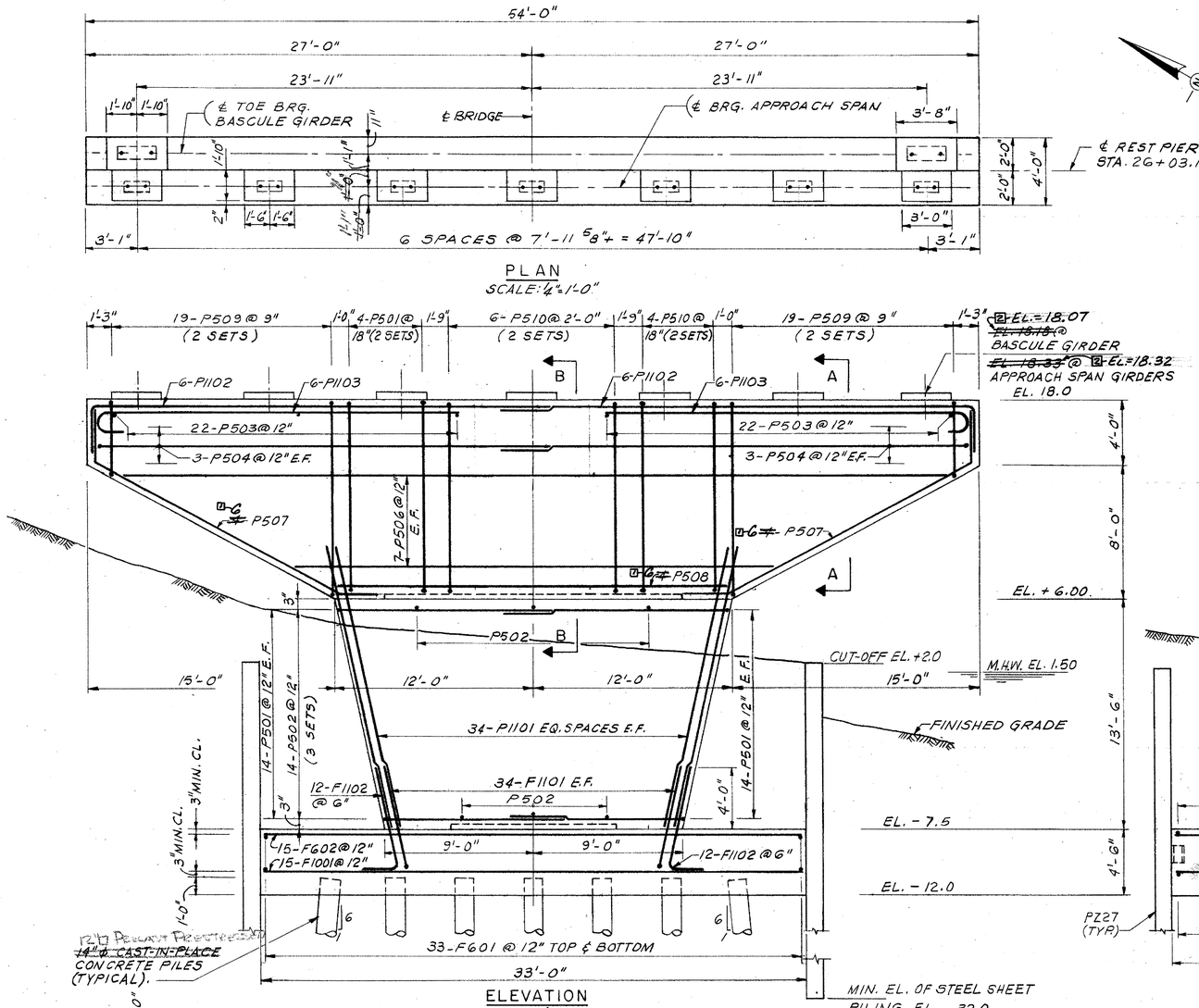

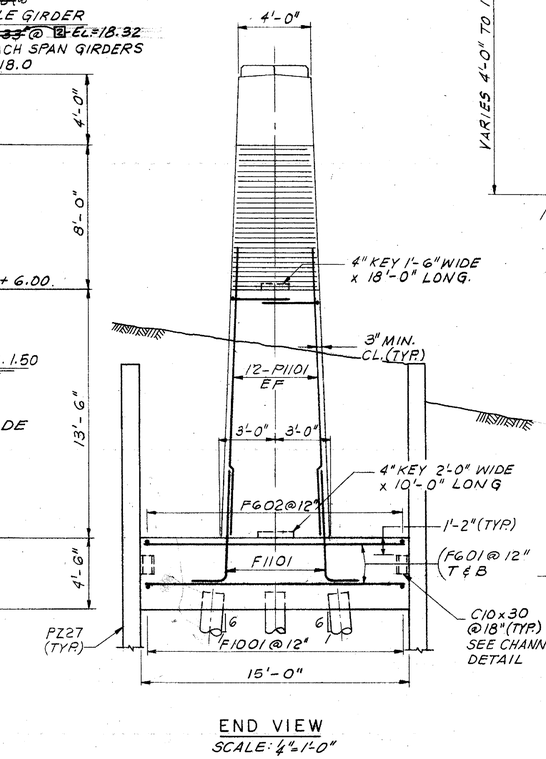

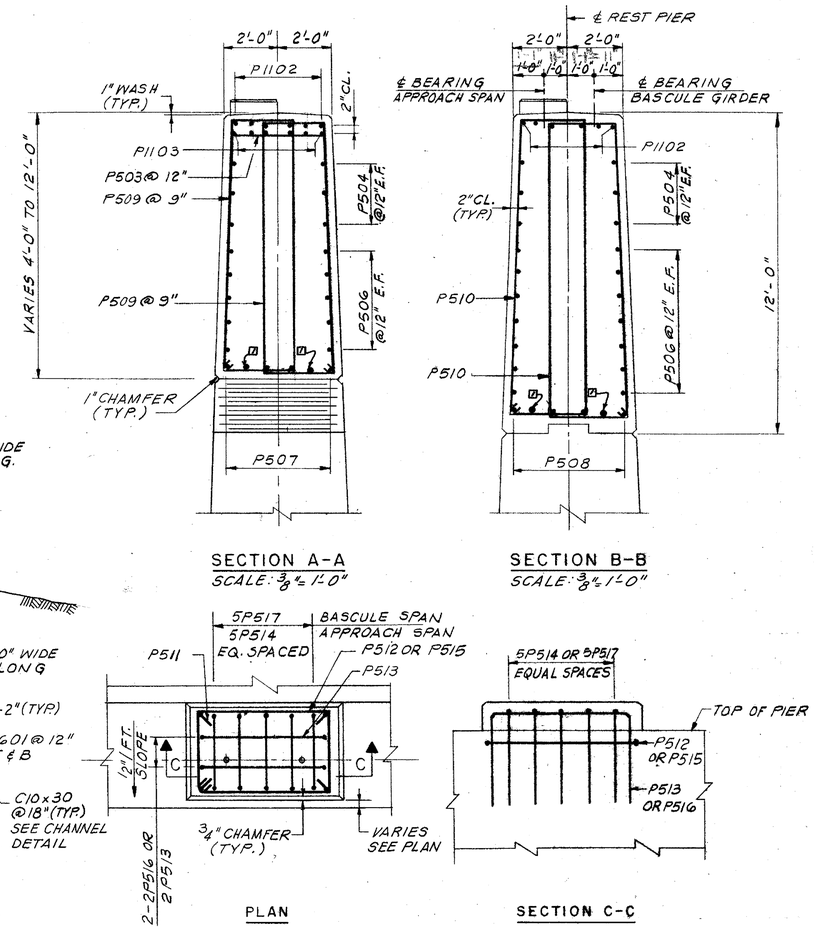

TYPICAL PEDESTAL DETAILS
SCALE: N.T.S.

NOTES:

1. FOR GENERAL NOTES SEE SHEET NO. 56.
2. FOR SUBMARINE CABLE AND TERMINAL CABINET SEE SHEET NO. 117.
3. FOR WALKWAY DETAILS SEE SHEET NO. 99.
4. FOR BAR LIST SEE SHEET NO. 122.

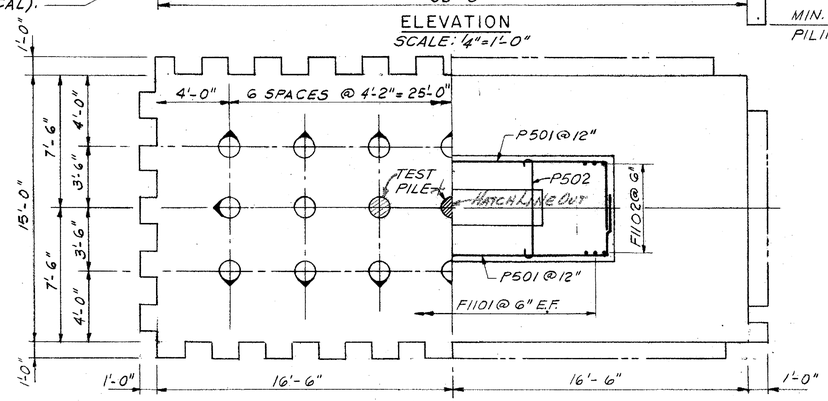

PILE LEGEND:

- ○ - ~~C.I.P.~~ PILE ~~12" ø Precast Prestressed~~
- ○ - ~~C.I.P.~~ PILE BATTERED 1 ON 6 IN DIRECTION INDICATED.
- ● - TEST PILE TO BE PILE LOAD TESTED, SEE FOOTING PLAN.

FOR PILE DETAIL SEE SHEET NO. 63.

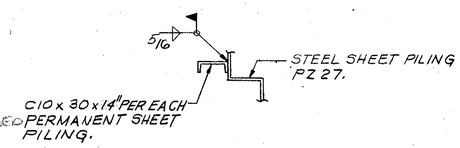

CHANNEL DETAIL

NOTE: SEE END VIEW FOR LOCATION.

PREL. TRACING A. SOSA DESIGN LMB CHKD RB

CONTRACT	COUNTY	FEDERAL AID PROJECT Nº	SHEET Nº	TOTAL SHEETS
82-073-05	SUSSEX	BRF-1009(3)	62	155

BASCULE PIER
PLAN AND ELEVATIONS

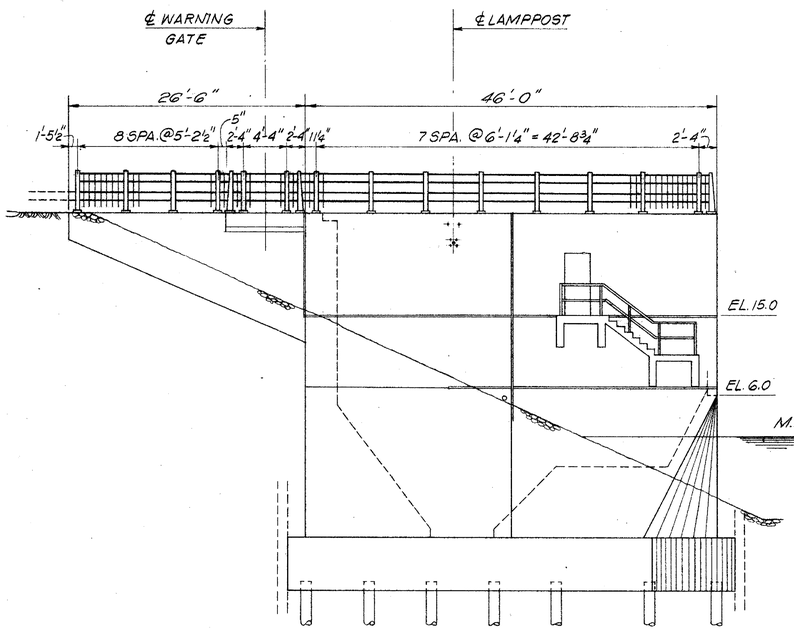

NORTH ELEVATION

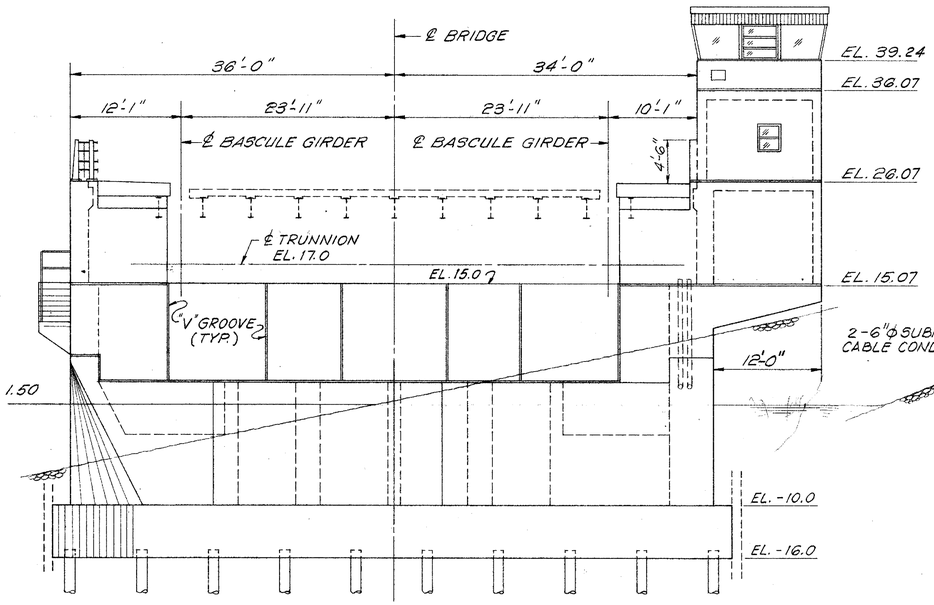

WEST ELEVATION
SCALE: 1/8" = 1'-0"

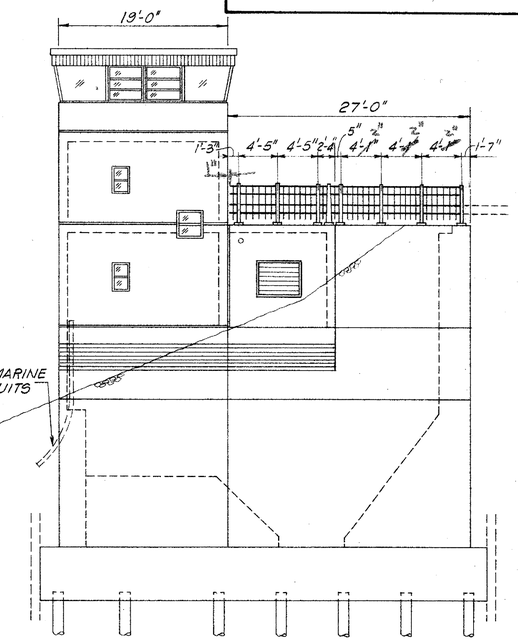

SOUTH ELEVATION
SCALE: 1/8" = 1'-0"

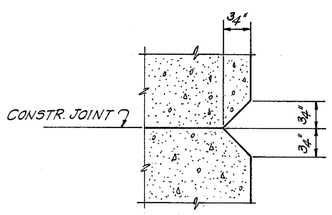

TYPICAL "V" GROOVE DETAIL
HALF SIZE

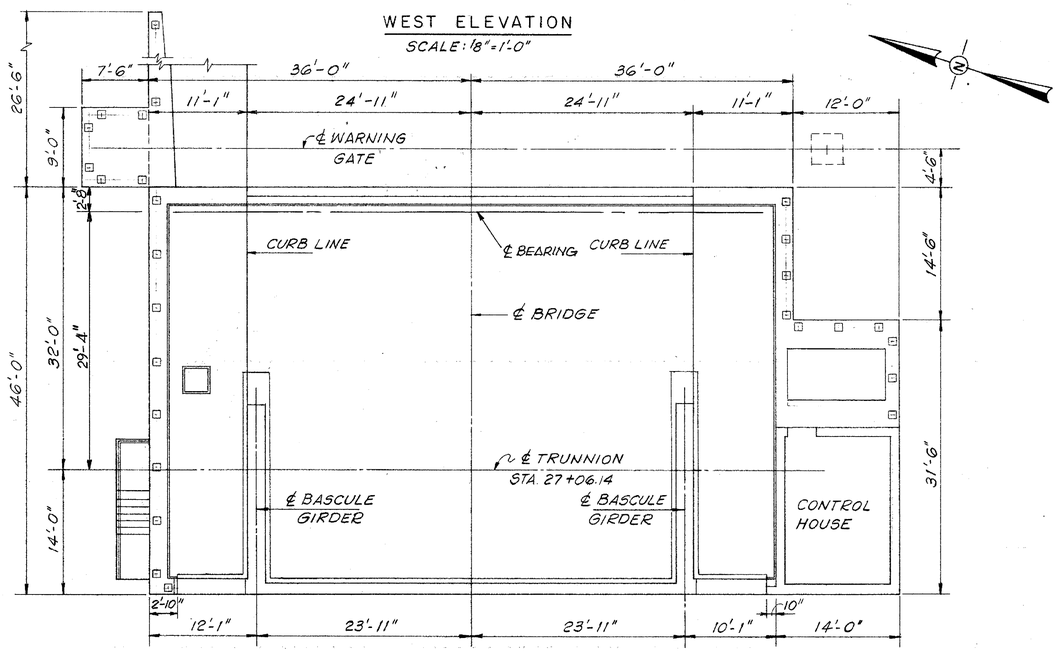

PLAN
SCALE: 1/8" = 1'-0"

NOTES:

1. FOR GENERAL NOTES SEE SHEET NO. 56.
2. ALL CORNERS OR EDGES SHALL BE CHAMFERED 3/4" EXCEPT AS OTHERWISE NOTED.
3. FOR FENDER SYSTEM SEE SHEET NO. 57.
4. FOR BRIDGE RAILING DETAILS SEE SHEET NO. 100.

HARDESTY & HANOVER
CONSULTING ENGINEERS
NEW YORK, N.Y.

REVISIONS

PREL. TRACING A.K. & F.G.L. DESIGN B.G.S. CHKD. B.G.S.

40389

CONTRACT	COUNTY	FEDERAL AID PROJECT Nº	SHEET Nº	TOTAL SHEETS
82-073-05	SUSSEX	BRF-1009(3)	63	155

BASCULE PIER
SECTION AT ELEVATION -10.0
FOOTING AND PILE LAYOUT PLAN

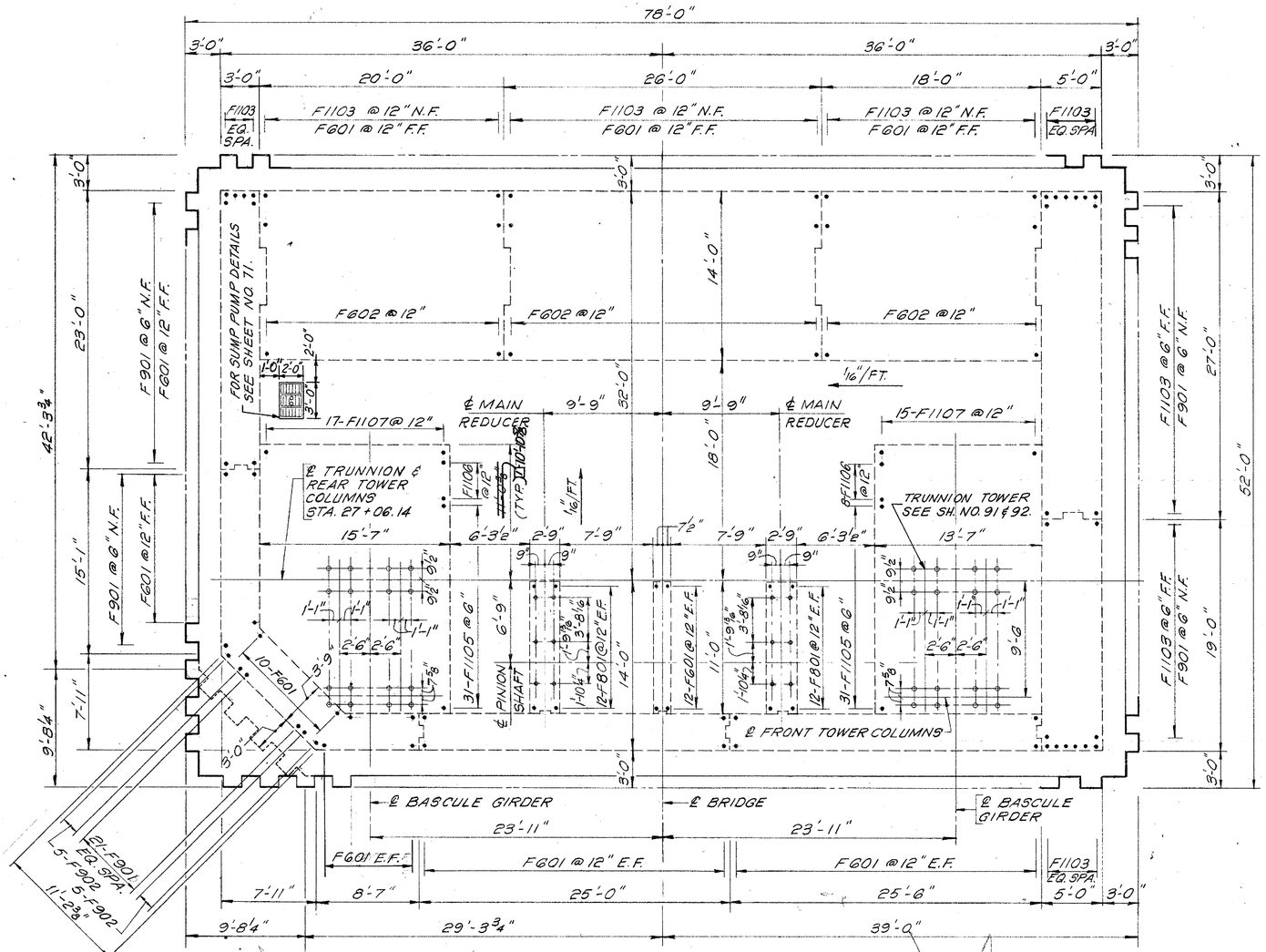

SECTION AT ELEVATION -10.0

SCALE: 3/16" = 1'-0"

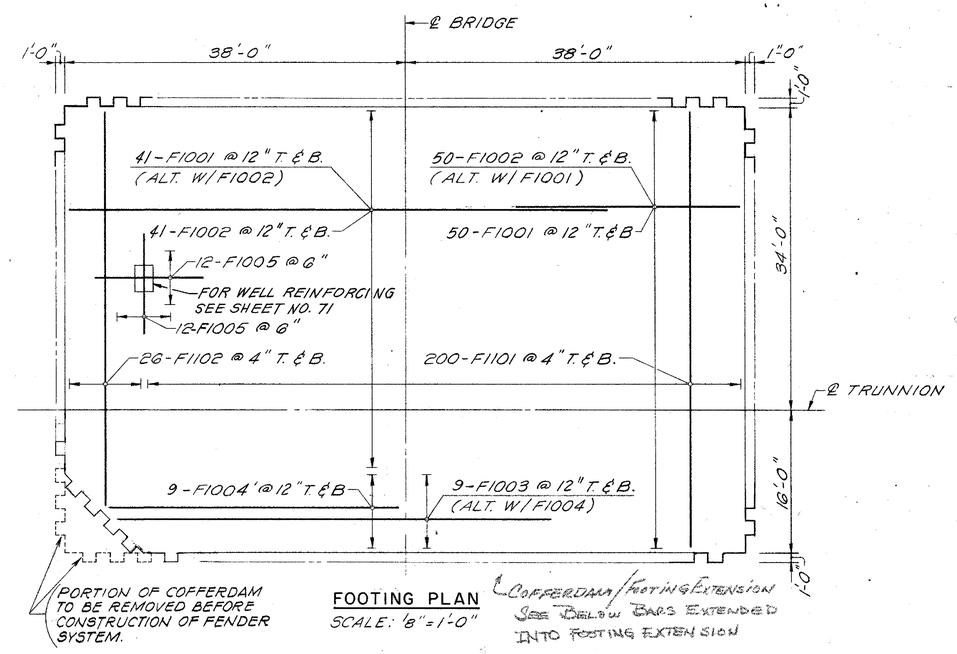

FOOTING PLAN

SCALE: 1/8" = 1'-0"

COFFERDAM/FOOTING EXTENSION SEE BELOW BARS EXTENDED INTO FOOTING EXTENSION

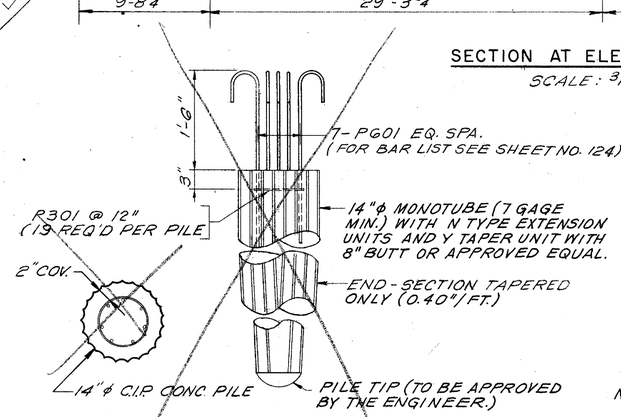

14" Ø CAST-IN-PLACE CONCRETE PILE

N.T.S.

NOTE:
VALUE ENGINEERING PROPOSAL #2 PILE
12" SQUARE PRECAST PRESTRESSED

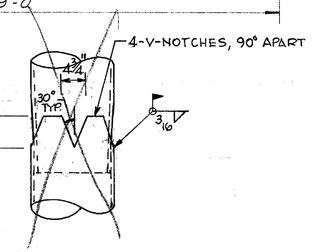

PILE SPLICE DETAIL

(N.T.S.)

PILE LEGEND:

- ~~C.I.P.~~ 12" PRECAST PRESTRESSED PILE
- ~~C.I.P.~~ PILE BATTERED 1 ON 4 IN DIRECTION INDICATED.
- TEST PILE TO BE PILE LOAD TESTED AS INDICATED IN PILE PLAN.

NOTE:
FLUTED STEEL SHELL PIPE PILE SHOWN. CONTRACTOR MAY SUPPLY STEEL PIPE PILE OF SIMILAR CONFIGURATION AS PER SPECIAL PROVISIONS.

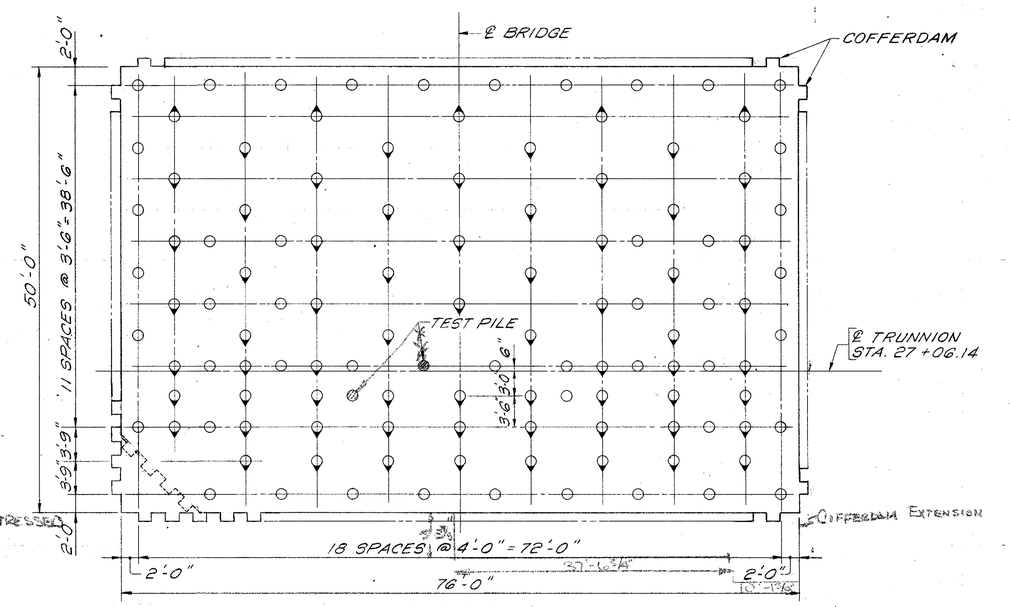

PILE PLAN

SCALE: 1/8" = 1'-0"

(AVERAGE PILE LENGTH 62.4')

HARDESTY & HANOVER CONSULTING ENGINEERS NEW YORK, N.Y.

REVISIONS

1 REVISED DIMENSION TOWER PAD 10-20-94 THF

PRELIM. TRACING BGS & MP DESIGN LMB CHKD. RB

CONTRACT	COUNTY	FEDERAL AID PROJECT Nº	SHEET Nº	TOTAL SHEETS
82-073-05	SUSSEX	BRF-1009(3)	64	155

BASCULE PIER SECTION AT ELEVATIONS +1.0 AND +9.0

HARDESTY & HANOVER CONSULTING ENGINEERS NEW YORK, N.Y.

REVISIONS

7 REVISED DIMENSIONS & QUANTITIES B-1115. 10-30-68. TBS.

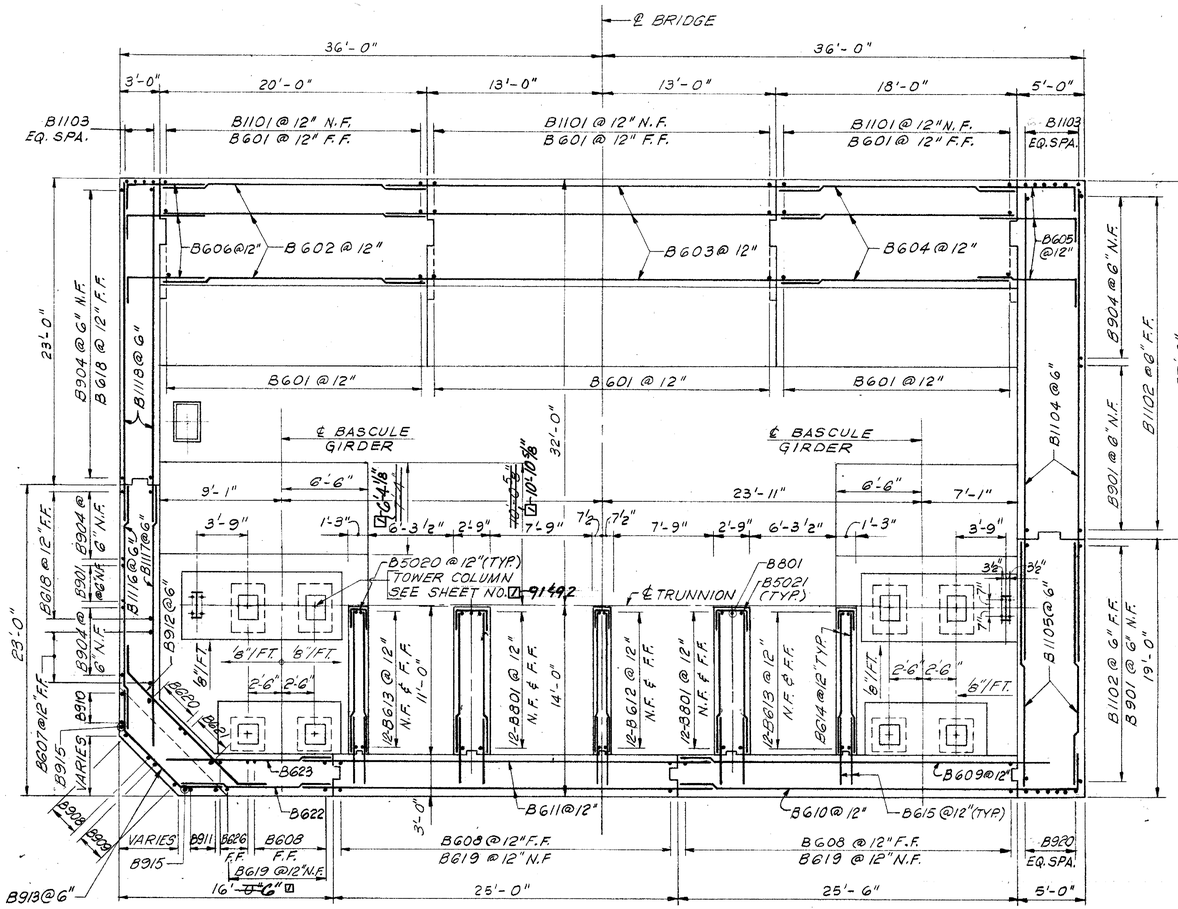

SECTION AT ELEVATION +1.0

SCALE: 3/16" = 1'-0"

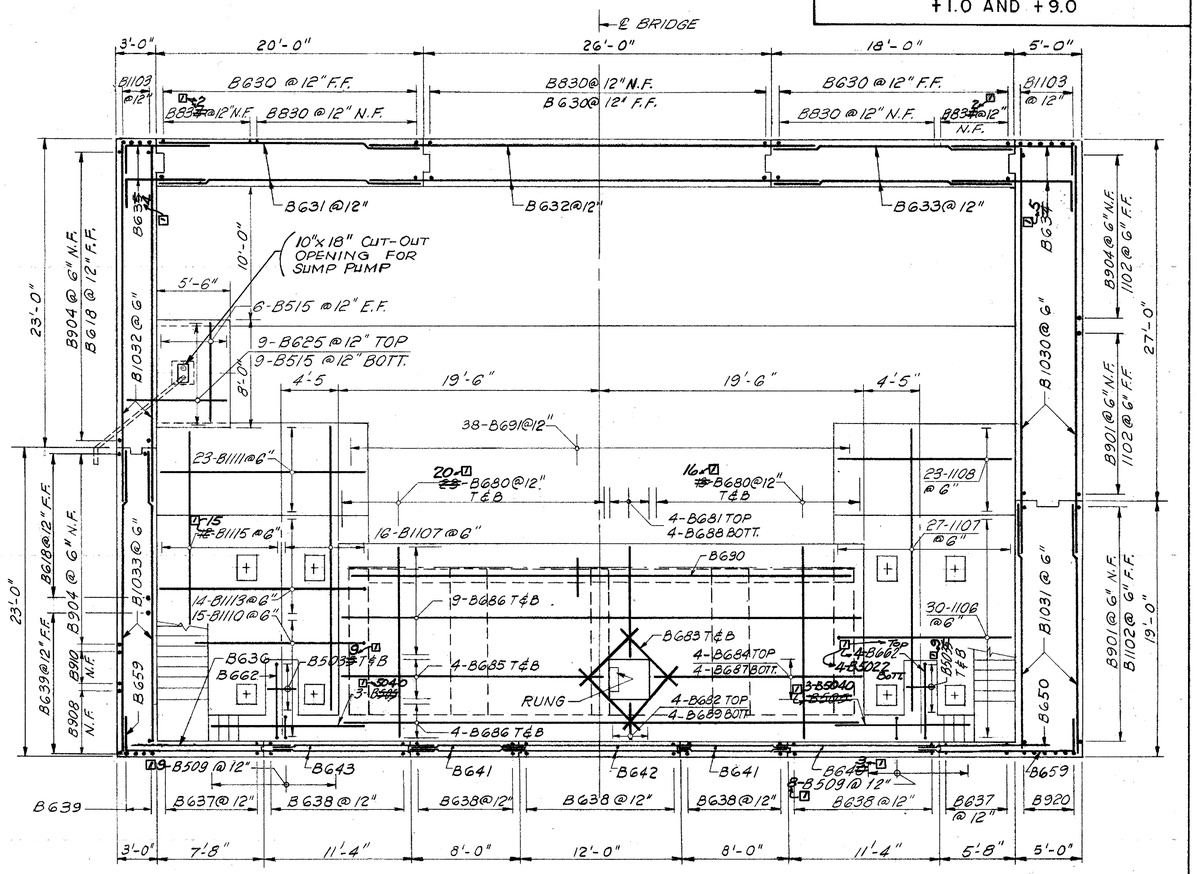

SECTION AT ELEVATION +9.0

SCALE: 3/16" = 1'-0"

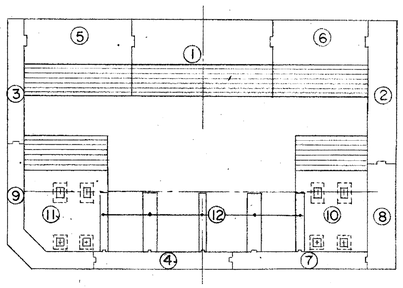

PLAN SECTION BELOW EL. +7.0

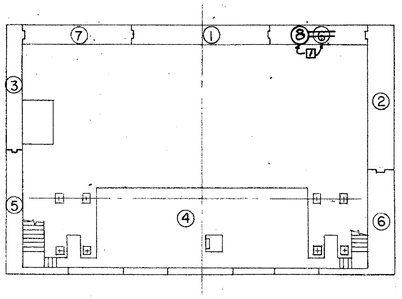

PLAN SECTION ABOVE EL. +7.0

SEQUENCE OF POURS

N.T.S.

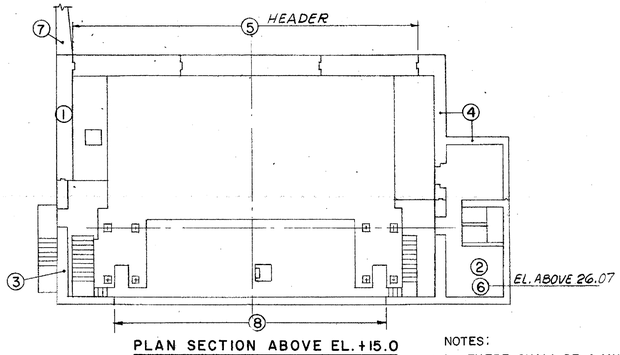

PLAN SECTION ABOVE EL. +15.0

NOTES:

1. FOR TRUNNION TOWER AND OPERATING MACHINERY SHEET NO'S 90, 91 & 92.
2. FOR STAIR DETAILS SEE SHEET NO. 70.
3. FOR WATERSTOP DETAILS SEE SHEET NO. 67.
4. FOR BAR LIST SEE SHEET NO'S. 123 & 124.

NOTES:

1. THERE SHALL BE A MINIMUM DELAY OF 10 DAYS BETWEEN EACH CONCRETE PLACEMENT.
2. CONCRETE FOR FLOOR PLACEMENT SHALL BE DELAYED UNTIL CONCRETE IN WALLS HAS REACHED A STRENGTH OF 1600 PSI.

PREL. TRACING: AS, MP & JK DESIGN: HED, JD, BGS CHKD: JMD, BGS

42369

HARDESTY & HANOVER
CONSULTING ENGINEERS
NEW YORK, N.Y.

CONTRACT	COUNTY	FEDERAL AID PROJECT Nº	SHEET Nº	TOTAL SHEETS
82-073-05	SUSSEX	BRF-1009(3)	65	155

BASCULE PIER
SECTION AT ELEVATION +18.0

REVISIONS
1 Revised Dimension in Sect. Elev. +18.0 10-30-84 T.F.F.

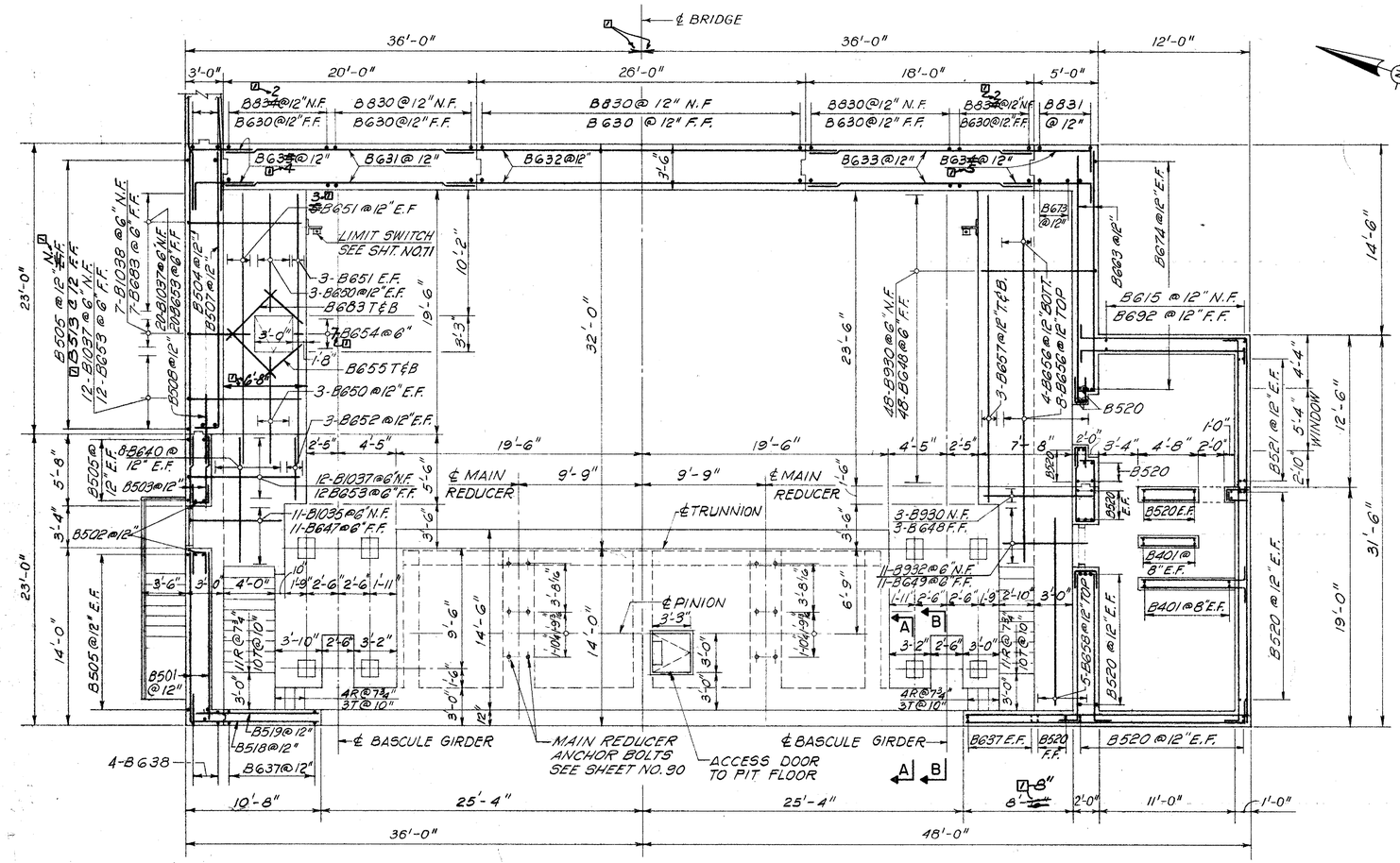

SECTION AT ELEVATION +18.0
SCALE: 3/16"=1'-0"

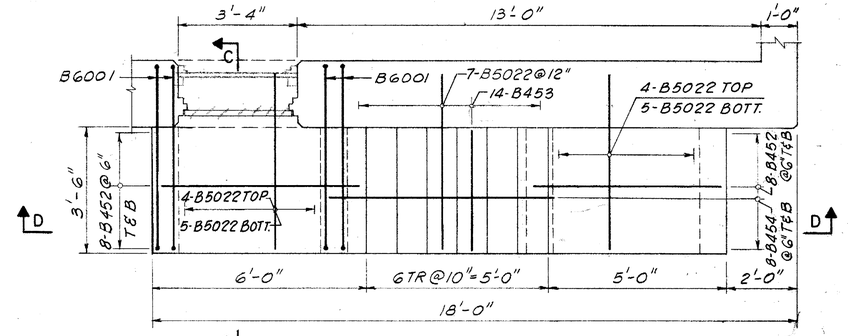

PLAN
STAIRS TO FENDER SYSTEM
SCALE: 1/2"=1'-0"

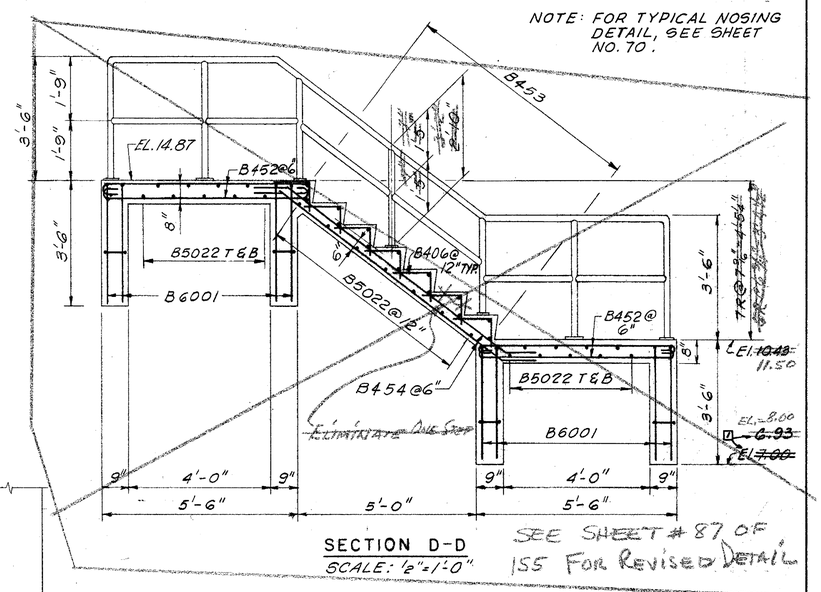

SECTION D-D
SCALE: 1/2"=1'-0"

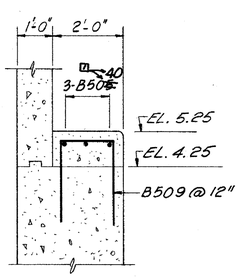

SECTION A-A
SCALE: 1/2"=1'-0"

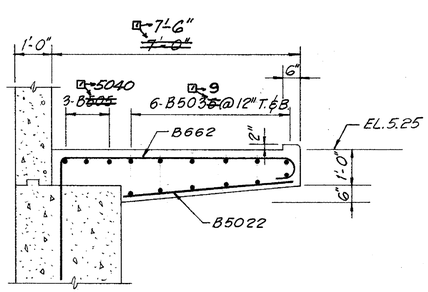

SECTION B-B
SCALE: 1/2"=1'-0"

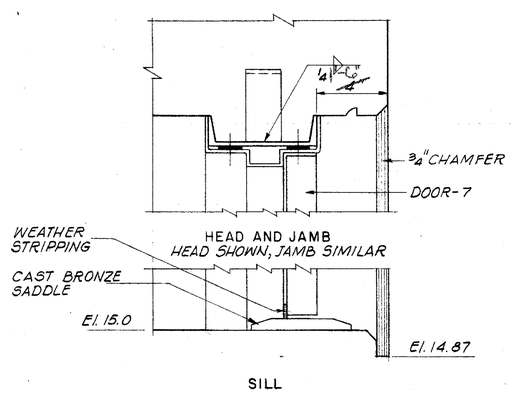

EXIT DOOR TO FENDER
Scale: 3"=1'-0"

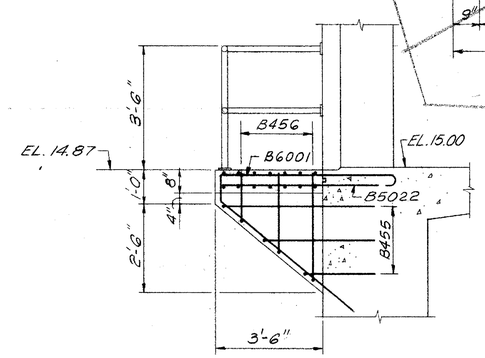

SECTION C-C
SCALE: 1/2"=1'-0"

NOTES:
1. WORK THIS SHEET WITH SHEET NO'S. 64 & 66.
2. FOR CONTROL HOUSE DETAILS SEE SHEET NO'S. 72 & 73.
3. FOR OPERATING MACHINERY DETAILS SEE SHEET NO'S. 102 & 103.
4. FOR BAR LIST SEE SHEET NO'S. 122 THRU 125.

PREL. TRACING MP & AS DESIGN HED, JMD, BGS CHKD JMD, BGS

CONTRACT	COUNTY	FEDERAL AID PROJECT Nº	SHEET Nº	TOTAL SHEETS
82-073-05	SUSSEX	BRF-1009(3)	66	155

BASCULE PIER LONGITUDINAL AND TRANSVERSE SECTIONS

HARDESTY & HANOVER
CONSULTING ENGINEERS
NEW YORK, N.Y.

REVISIONS

1 Revisions in Transverse Sect. & Bumper Block Detail 11-30-94 T.F.F.

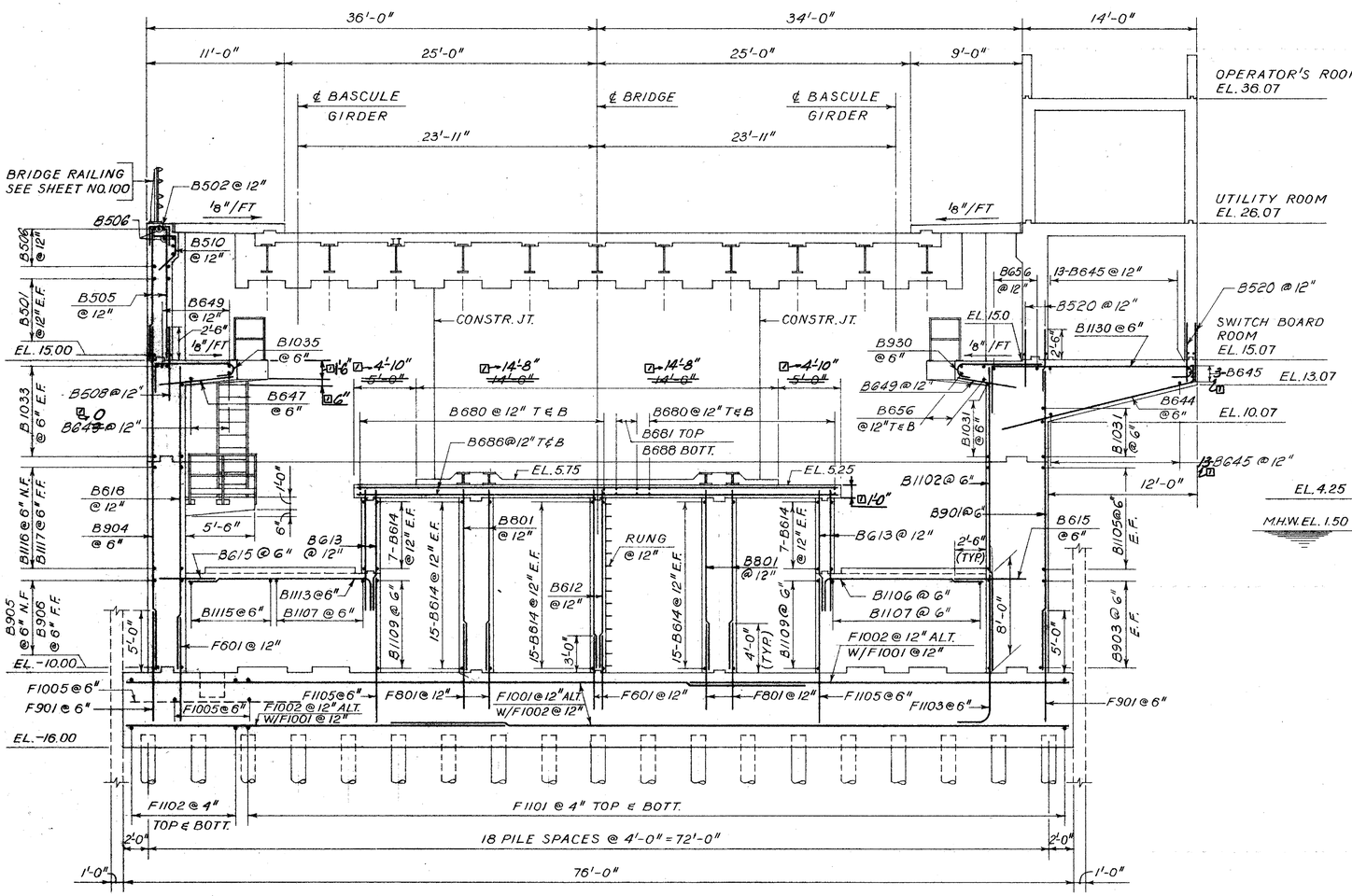

TRANSVERSE ~~LONGITUDINAL~~ SECTION
SCALE: 3/16" = 1'-0"

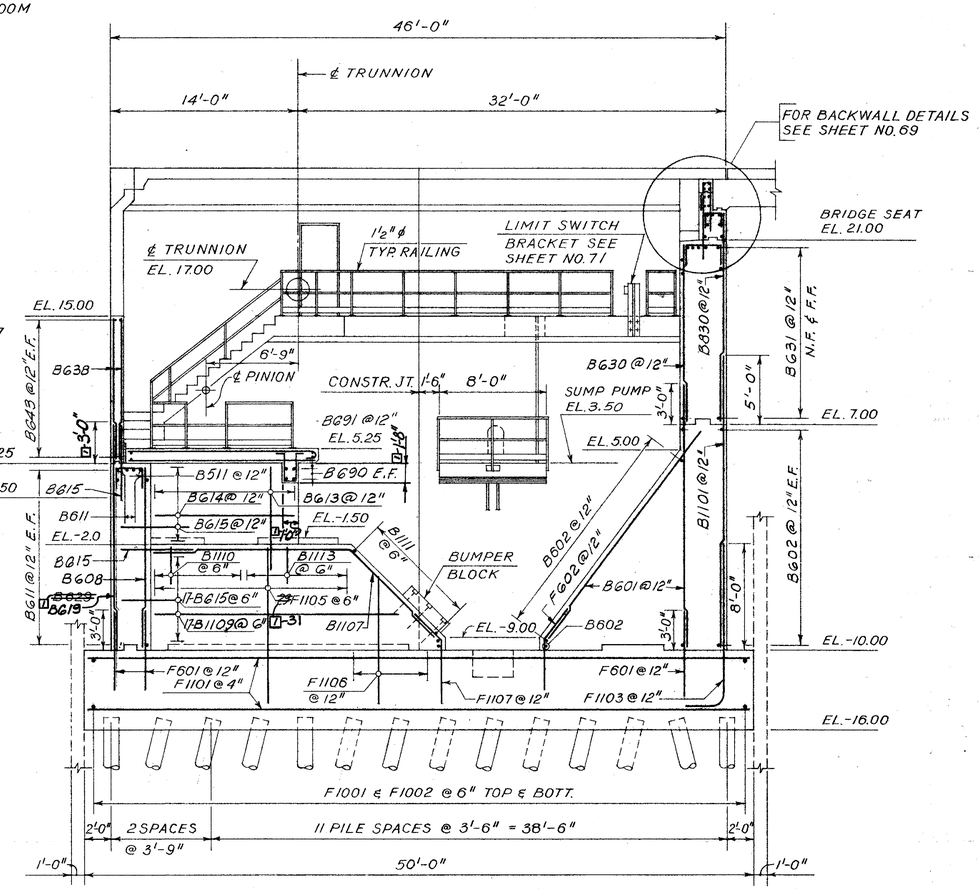

LONGITUDINAL ~~TRANSVERSE~~ SECTION
SCALE: 3/16" = 1'-0"

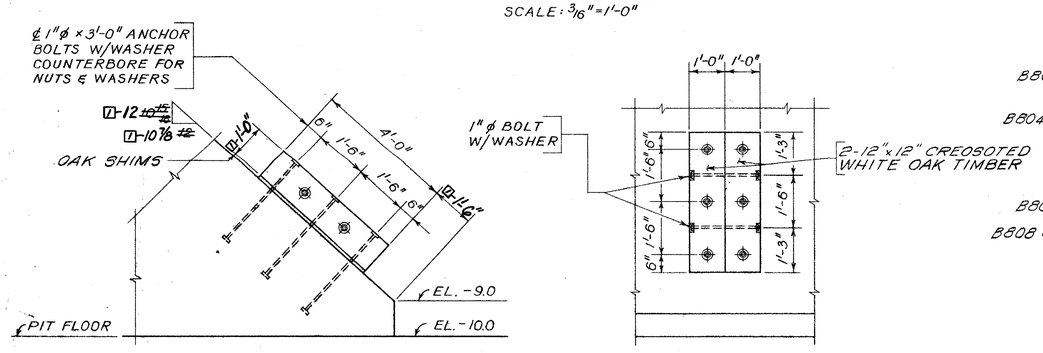

BUMPER BLOCK DETAILS
SCALE: 1/2" = 1'-0"

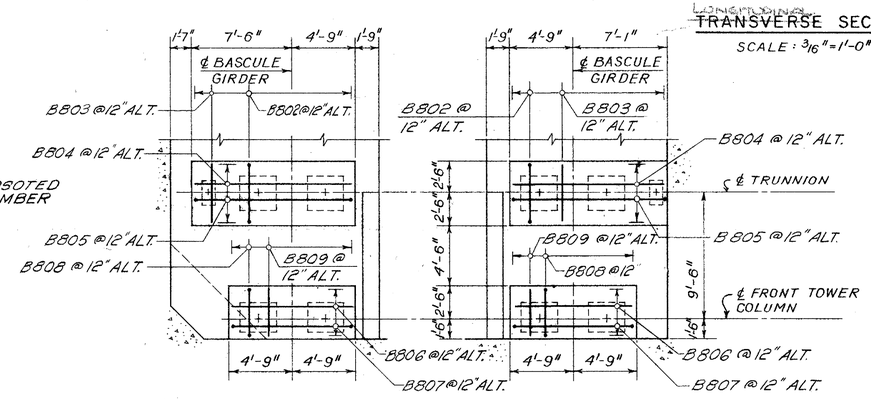

TOWER PEDESTAL DETAIL
SCALE: 1/4" = 1'-0"

NOTES:

1. FOR GENERAL NOTES SEE SHEET NO. 56
2. FOR PILE AND FOOTING PLAN SEE SHEET NO. 63
3. FOR TRUNNION TOWER SEE SHEETS NO's 90, 91 & 92
4. FOR KEYWAY AND WATERSTOP SEE SHEET NO. 67

PREL. TRACING A.K. DESIGN HED, JMD, BGS CHKD. JMD, BGS

CONTRACT	COUNTY	FEDERAL AID PROJECT Nº	SHEET Nº	TOTAL SHEETS
82-073-05	SUSSEX	BRF-1009(3)	67	155

BASCULE PIER
ELEVATIONS I

HARDESTY & HANOVER
CONSULTING ENGINEERS
NEW YORK, N.Y.

REVISIONS
1 REVISED REBAR QUANTITY IN WEST & SOUTH ELEVATIONS 10-30-94 T.E.F.

PREL. TRACING A.S. & R.B. DESIGN HED, BGS, JMD CHKD. BGS, JMD

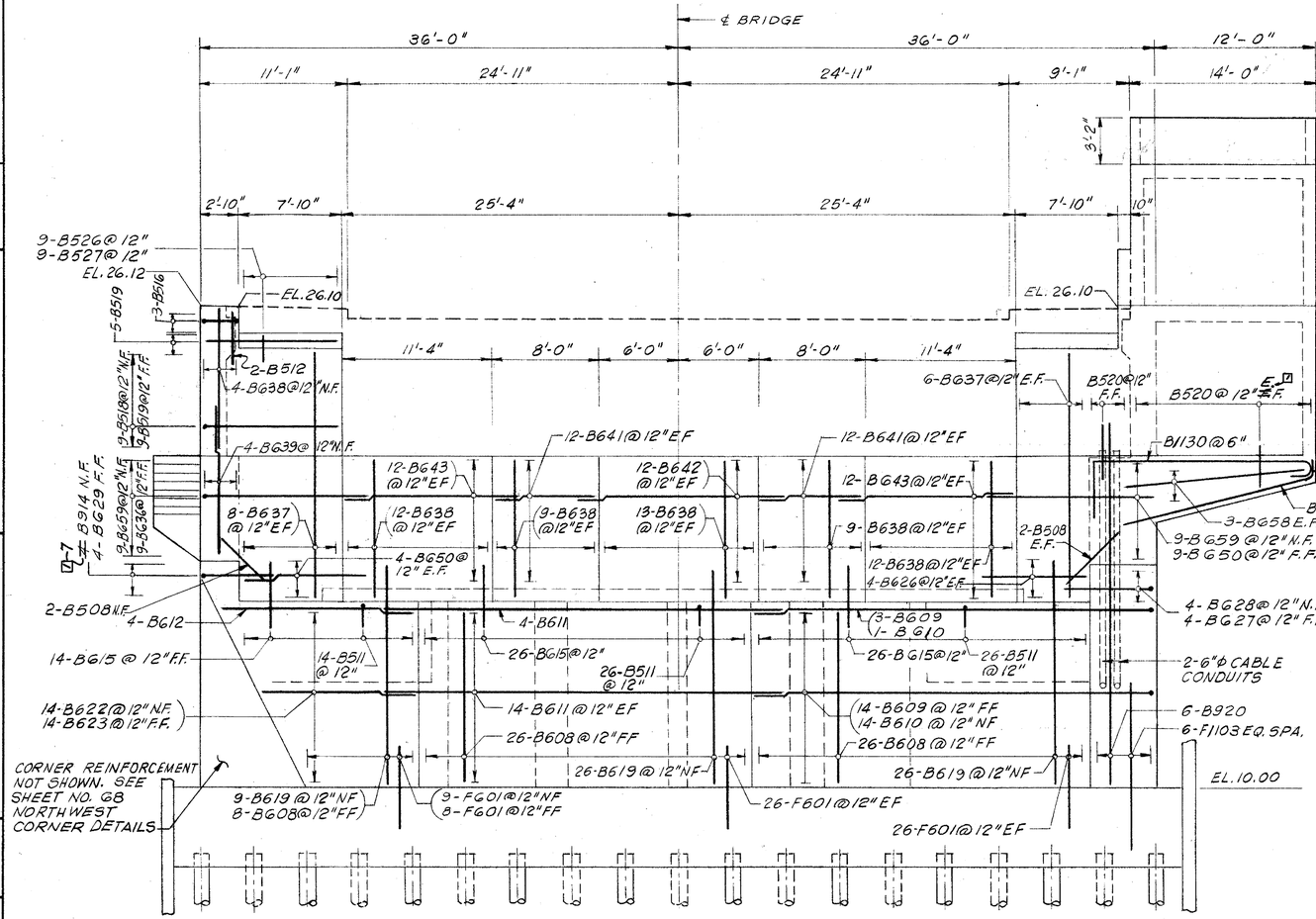

WEST ELEVATION
SCALE: 3/16"=1'-0"

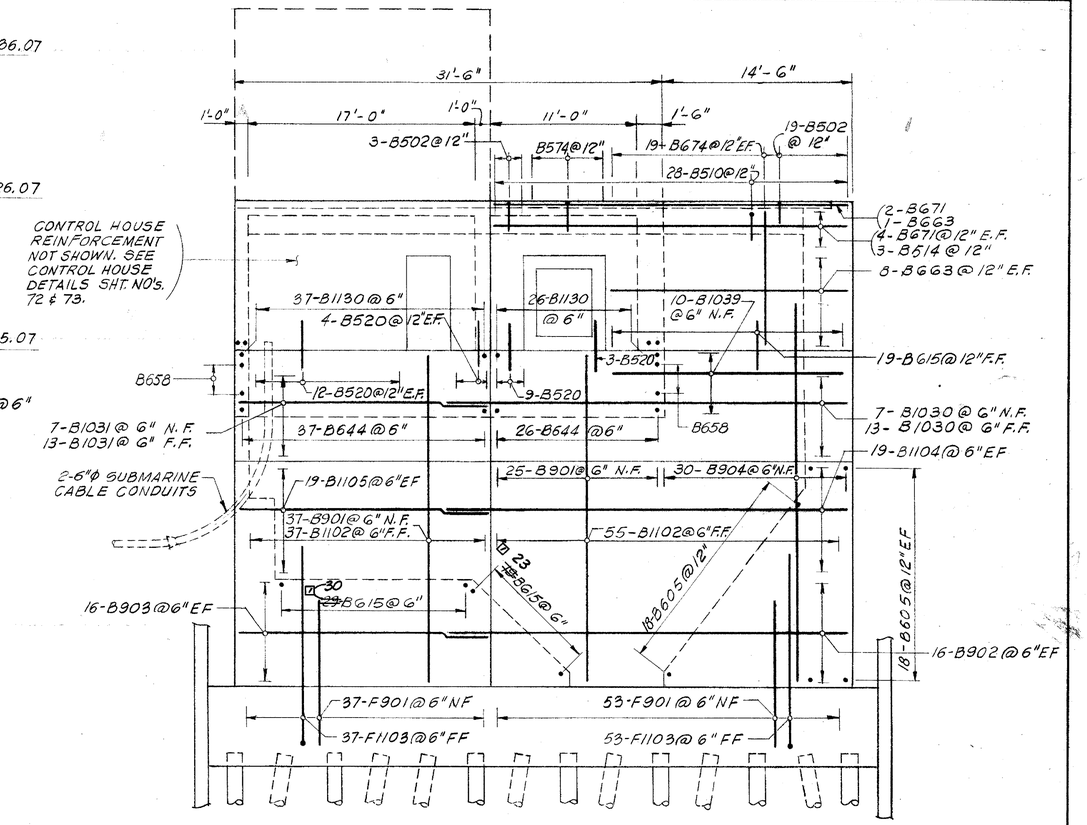

SOUTH ELEVATION
SCALE: 3/16"=1'-0"

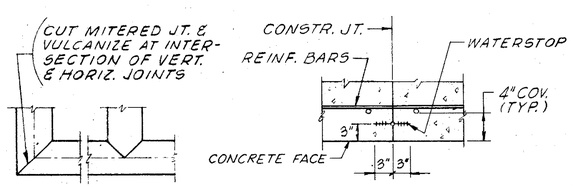

ELEVATION

PLAN SECTION

NOTE:
WATERSTOP AT HORIZ. CONSTR. JTS. SIMILAR. WATERSTOP TO BE CONTINUOUS AT ALL CONSTR. JTS.

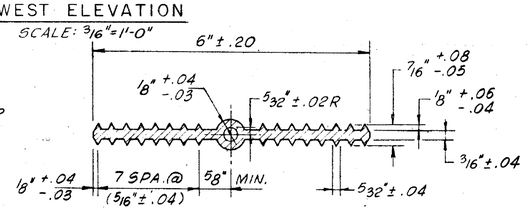

TYPE A
HORIZONTAL WATERSTOP

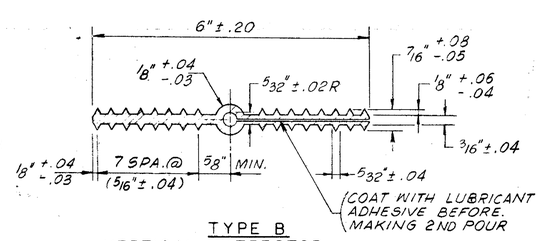

TYPE B
VERTICAL WATERSTOP

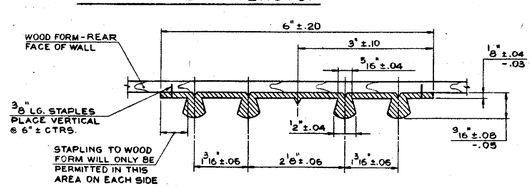

TYPE C WATERSTOP

KEYWAY TABLE		
CONSTRUCTION JOINTS		
C	B	T/3
1/4"	1 1/2"	TO 6"
1/2"	3 1/2"	6" TO 10"
3/4"	5 1/2"	OVER 10"

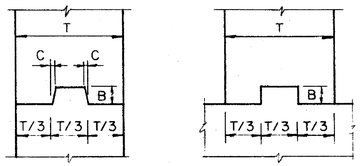

VERTICAL HORIZONTAL

KEYWAY DETAILS
NOT TO SCALE

NOTES:
1. FOR LIMITS OF 3/4" V-GROOVE SEE SHEET NO. 62.
2. FOR BRIDGE RAILING DETAILS SEE SHEET NO. 100.
3. FOR DECK OVER COUNTERWEIGHT SEE SHEET NO. 96.
4. FOR BAR LIST SEE SHEET NO's. 123 & 124.

CONTRACT	COUNTY	FEDERAL AID PROJECT Nº	SHEET Nº	TOTAL SHEETS
82-073-05	SUSSEX	BRF-1009(3)	68	135

BASCULE PIER ELEVATIONS II

HARDESTY & HANOVER
CONSULTING ENGINEERS
NEW YORK, N.Y.

REVISIONS
1 Revised Bar #, Quantity & Elev. In Tier
2 East & North Elevation, Shoe Details 11/30/94 T.F.

PREL. TRACING BGS & AS DESIGN HED, JMD, BGS CHKD. BGS, JMD

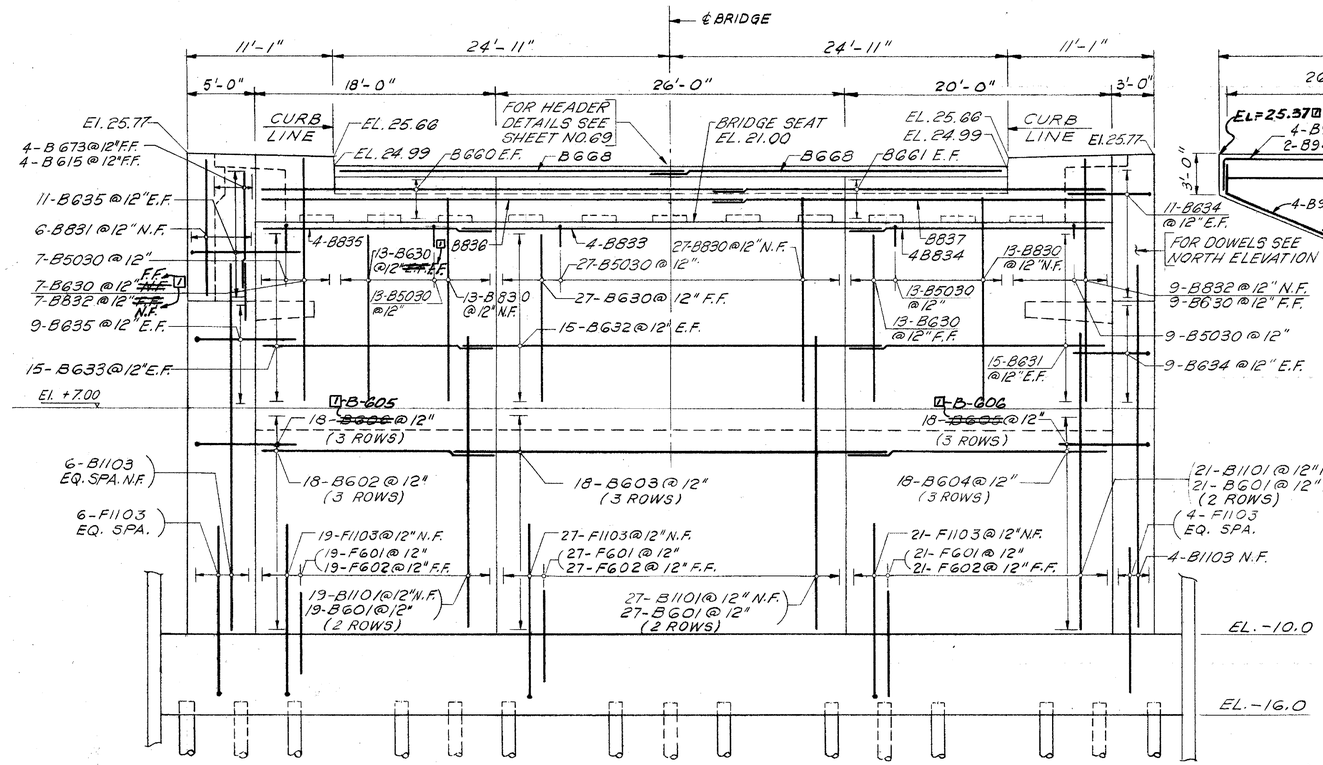

EAST ELEVATION
SCALE: 3/16" = 1'-0"

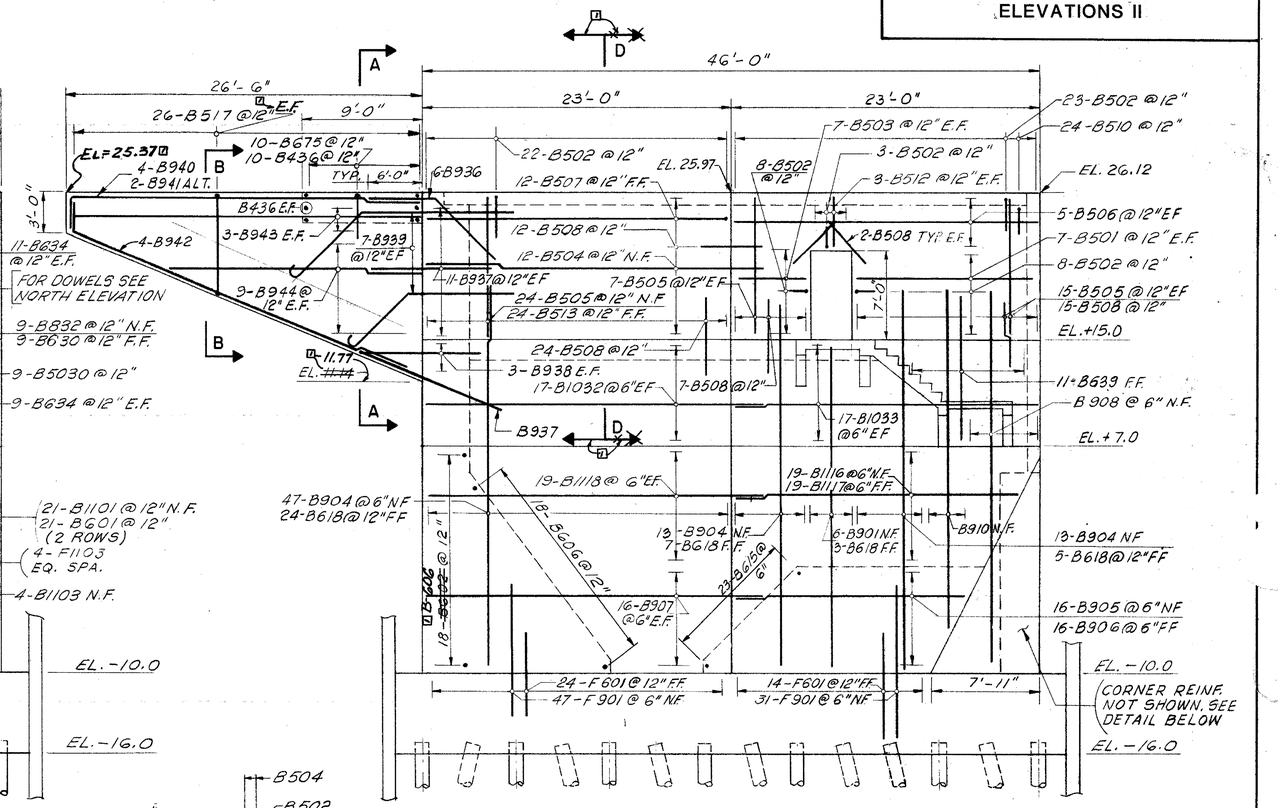

NORTH ELEVATION
SCALE: 3/16" = 1'-0"

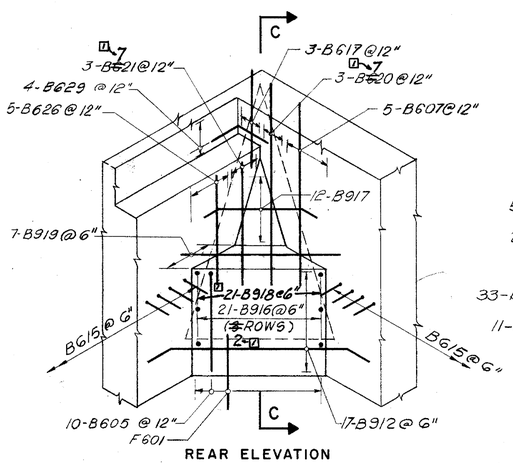

REAR ELEVATION

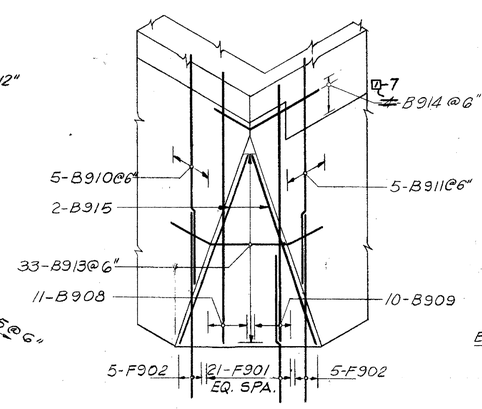

FRONT ELEVATION

NORTHWEST CORNER DETAILS
SCALE: 3/16" = 1'-0"

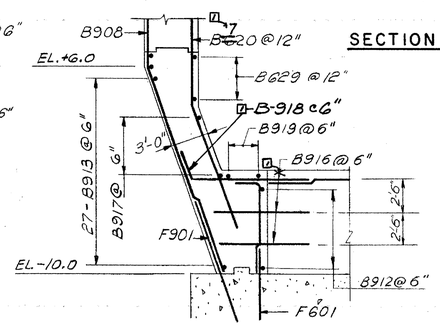

SECTION C-C
SCALE: 3/16" = 1'-0"

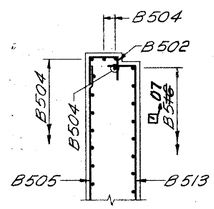

SECTION D-D

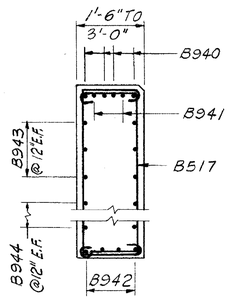

SECTION B-B
SCALE: 3/8" = 1'-0"

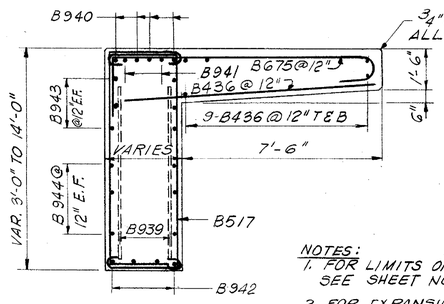

SECTION A-A
SCALE: 3/8" = 1'-0"

NOTES:
1. FOR LIMITS OF 3/4" V-GROOVE SEE SHEET NO. 62.
2. FOR EXPANSION JOINT DETAILS SEE SHEET NO. 98.
3. FOR BAR LIST SEE SHEET NOS. 123 & 124.

NOTE: FOR DETAIL OF SIDEWALK SEAT SEE SECTION D-D

CONTRACT	COUNTY	FEDERAL AID PROJECT Nº	SHEET Nº	TOTAL SHEETS
82-073-05	SUSSEX	BRF-1009(3)	69	155

BASCULE PIER
EAST WALL - BACKWALL DETAILS

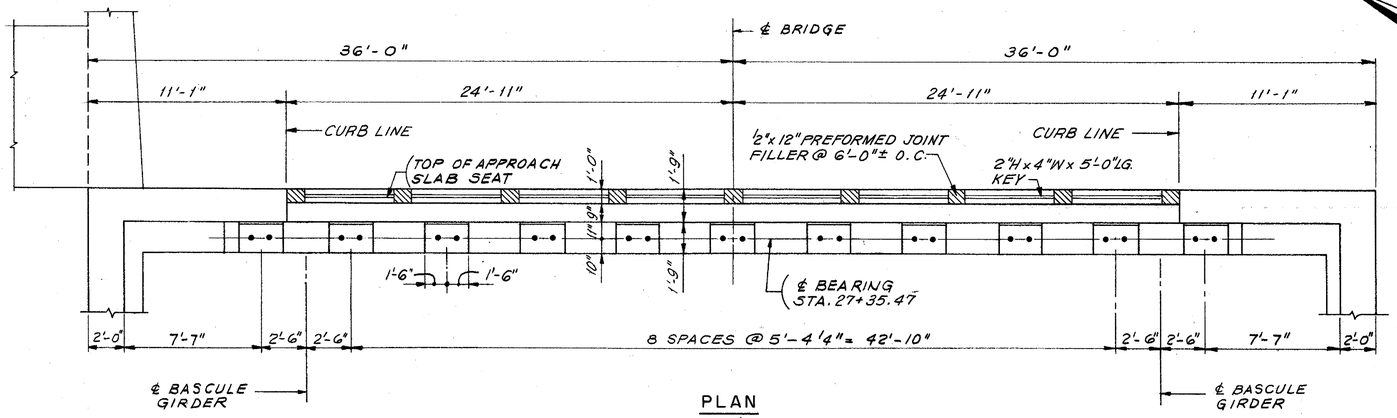

PLAN
SCALE: ¼" = 1'-0"

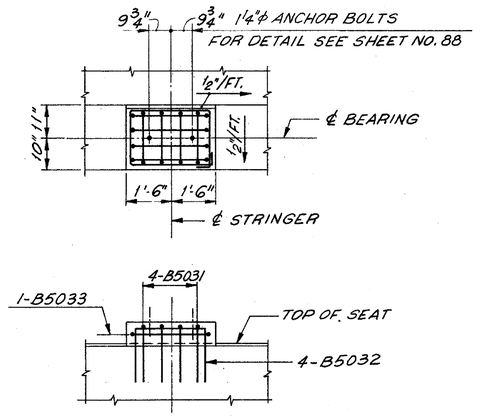

TYPICAL DETAIL OF BEARING PAD
SCALE: ½" = 1'-0"

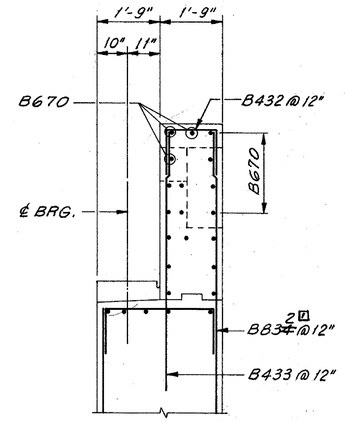

SECTION C-C
SCALE: ½" = 1'-0"

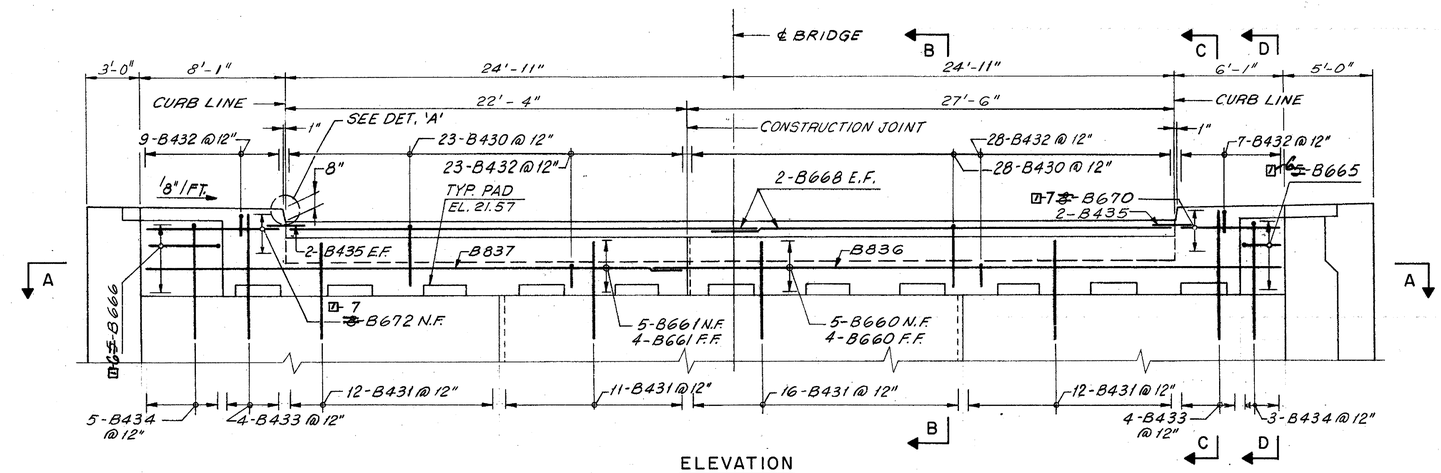

ELEVATION
SCALE: ¼" = 1'-0"

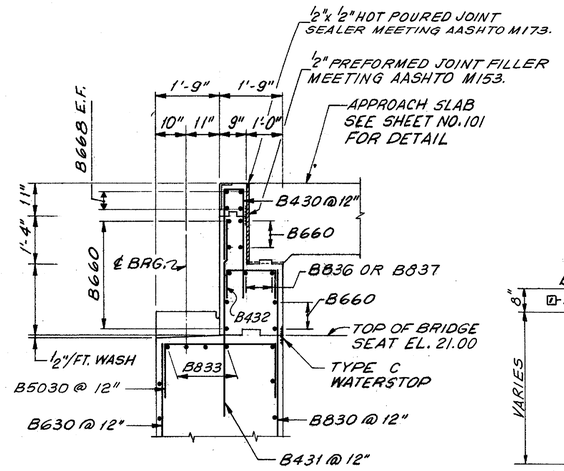

SECTION B-B
SCALE: ½" = 1'-0"

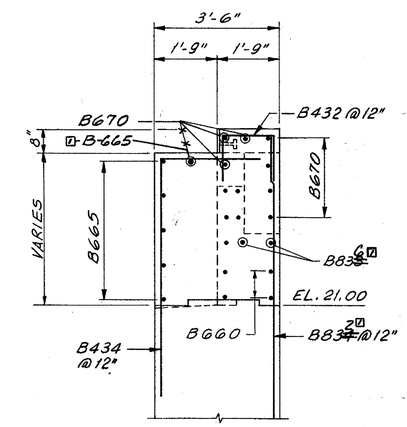

SECTION D-D
SCALE: ½" = 1'-0"

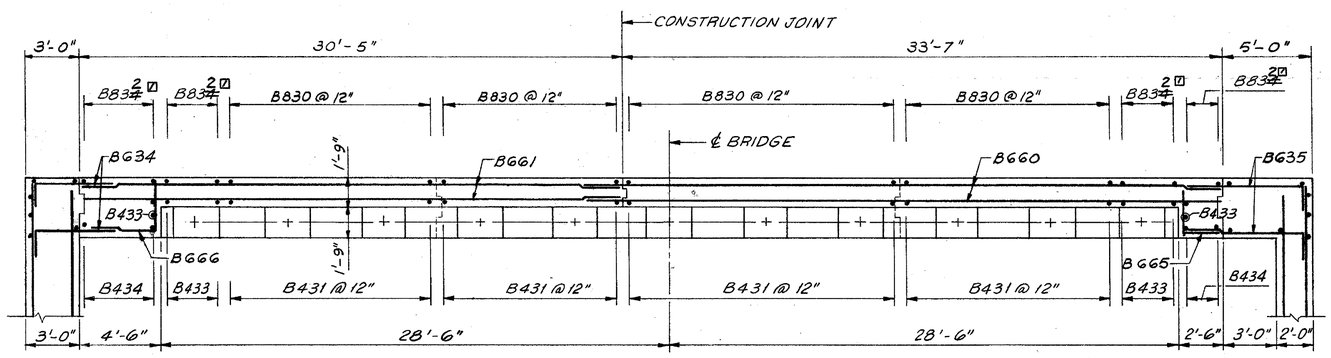

SECTION A-A
SCALE: ¼" = 1'-0"

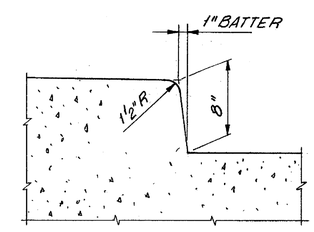

DETAIL 'A'
SCALE: 1½" = 1'-0"

NOTE:

1. WORK THIS SHEET WITH SHEET NO's. 6G, 6T & 6B.
2. FOR DECK JOINT DETAILS SEE SHEET NO. 8G.
3. FOR BEARING DETAILS SEE SHEET NO. 8B.

HARDESTY & HANOVER CONSULTING ENGINEERS NEW YORK, N.Y.

REVISIONS

Revisions in Elev., Sect. A-A, B-C & D-D

PREL. TRACING BGS & MP DESIGN LMB CHKD. RB

CONTRACT	COUNTY	FEDERAL AID PROJECT Nº	SHEET Nº	TOTAL SHEETS
82-073-05	SUSSEX	BRF-1009(3)	70	155

BASCULE PIER
MISCELLANEOUS DETAILS I

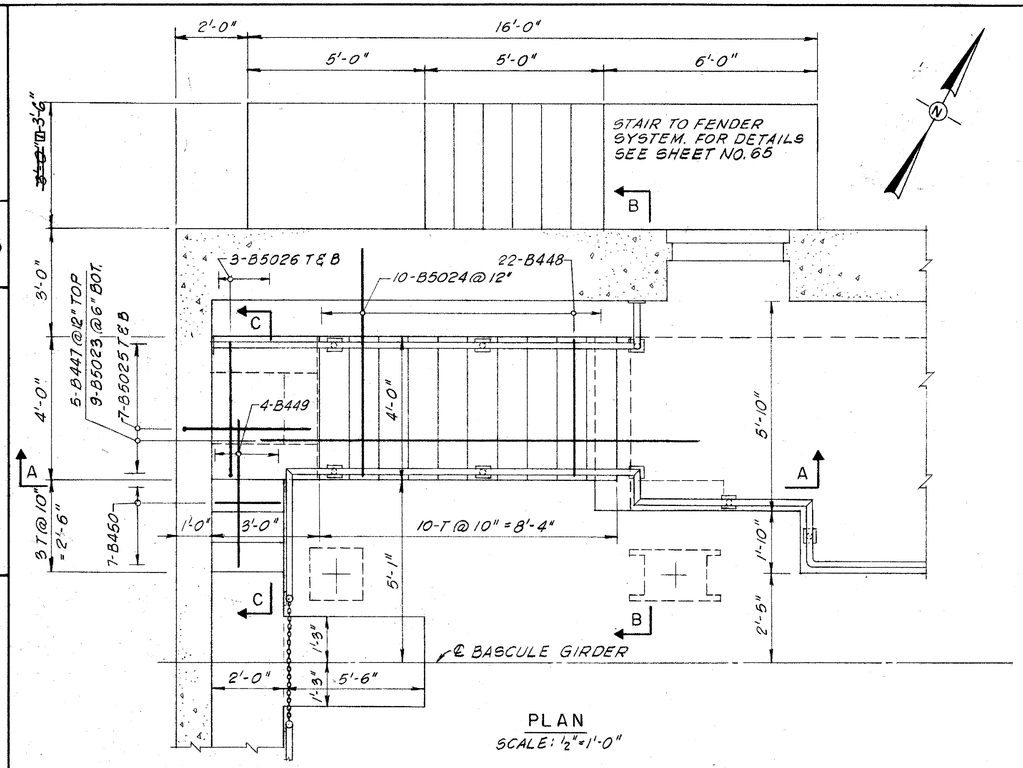

PLAN
SCALE: 1/2"=1'-0"

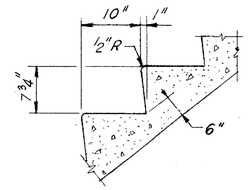

TYPICAL NOSING DETAIL
SCALE: 1"=1'-0"

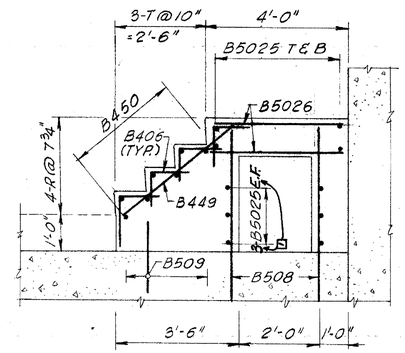

SECTION C-C
SCALE: 1/2"=1'-0"

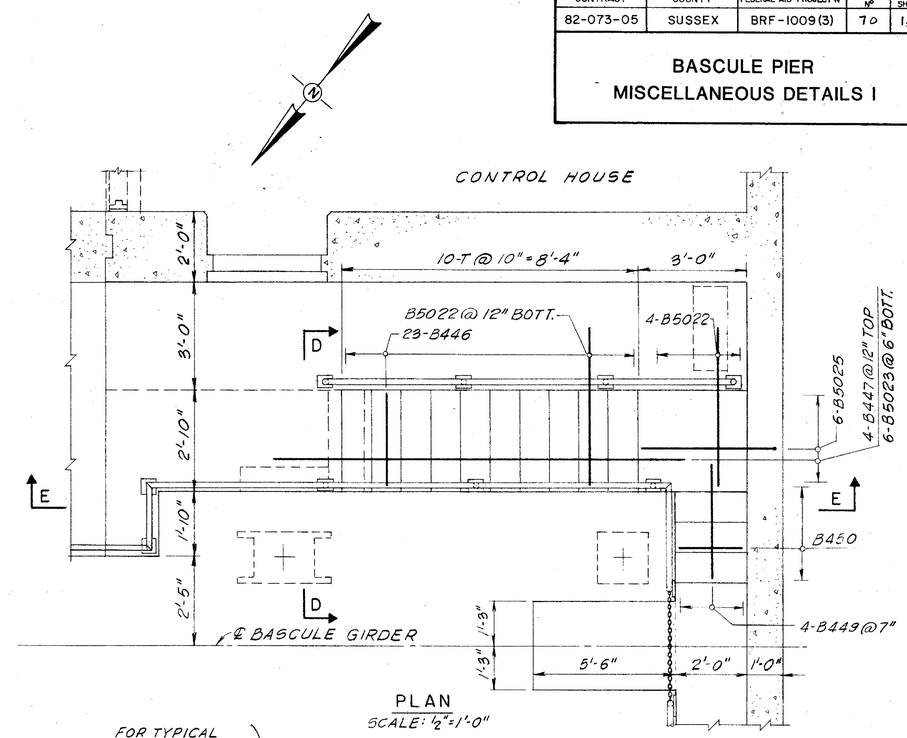

PLAN
SCALE: 1/2"=1'-0"

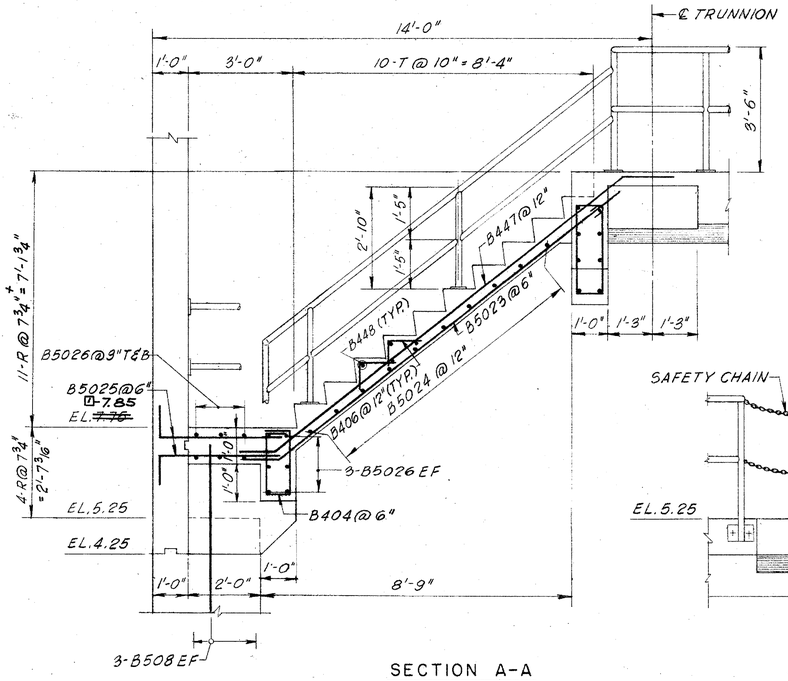

SECTION A-A
SCALE: 1/2"=1'-0"

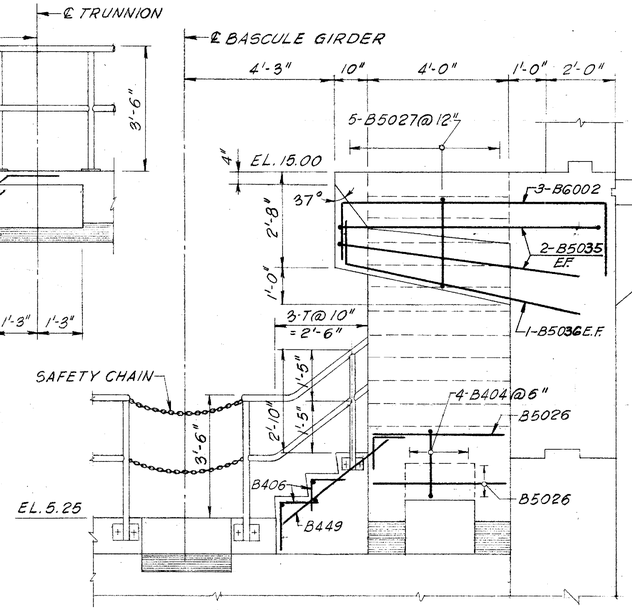

SECTION B-B
SCALE: 1/2"=1'-0"

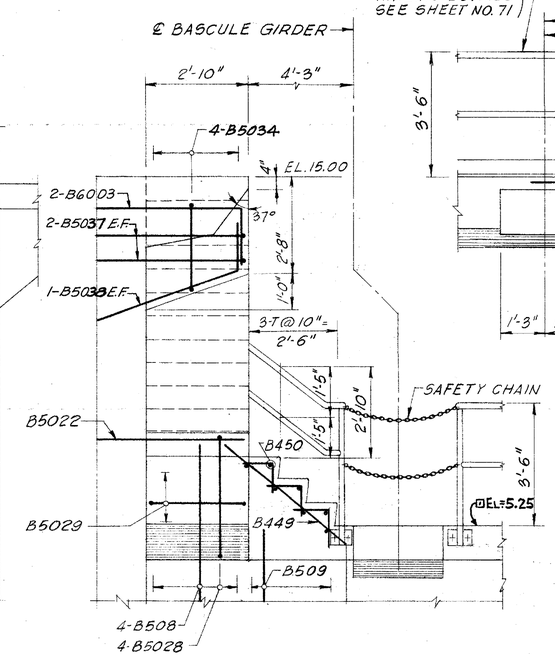

SECTION D-D
SCALE: 1/2"=1'-0"

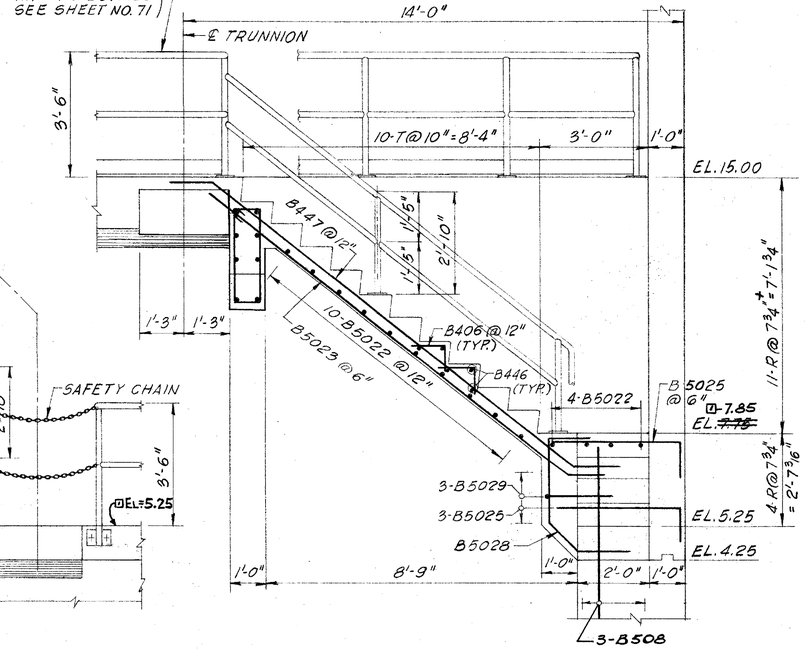

SECTION E-E
SCALE: 1/2"=1'-0"

HARDESTY & HANOVER
CONSULTING ENGINEERS
NEW YORK, N.Y.

REVISIONS

PREL. TRACING AK, MP DESIGN JMD CHKD. BGS

42089

CONTRACT	COUNTY	FEDERAL AID PROJECT Nº	SHEET Nº	TOTAL SHEETS
82-073-05	SUSSEX	BRF-1009(3)	71	155

BASCULE PIER
MISCELLANEOUS DETAILS II

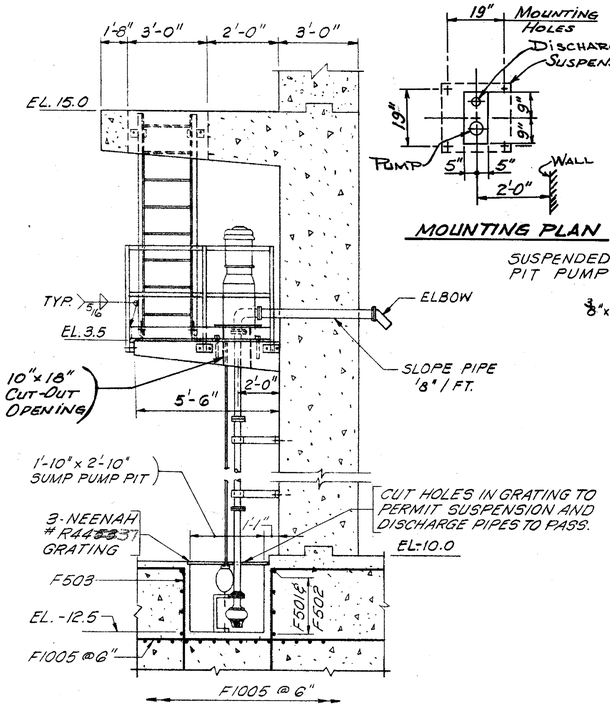

SIDE ELEVATION

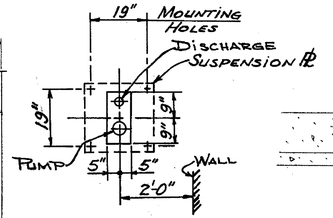

MOUNTING PLAN

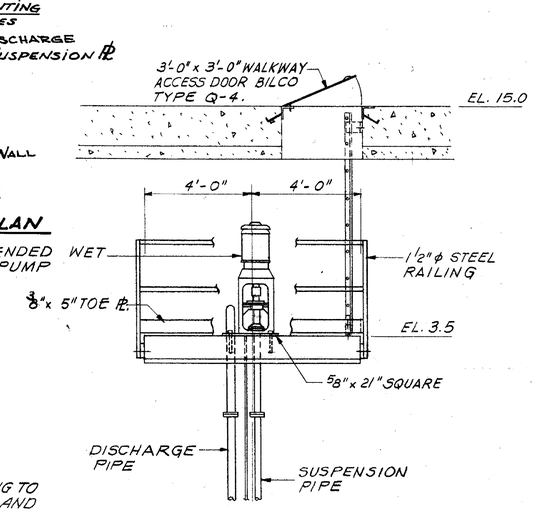

FRONT ELEVATION

SUMP PUMP DETAIL

N.T.S.

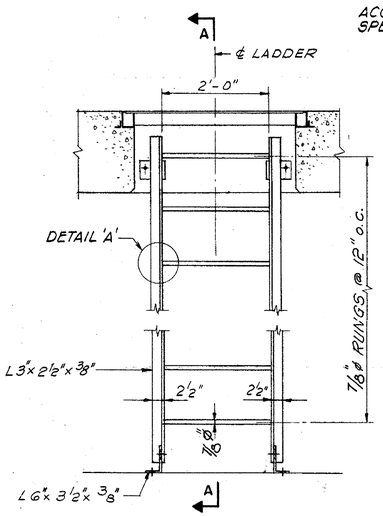

ELEVATION

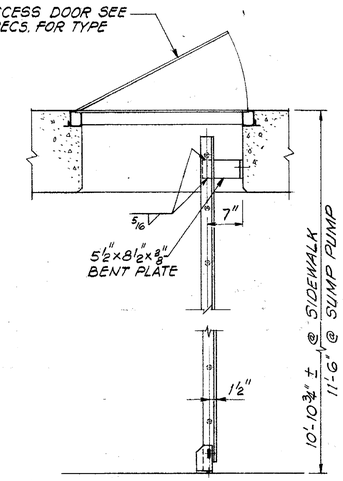

SECTION A-A

TYPICAL LADDER DETAIL

SCALE: 3/4" = 1'-0"

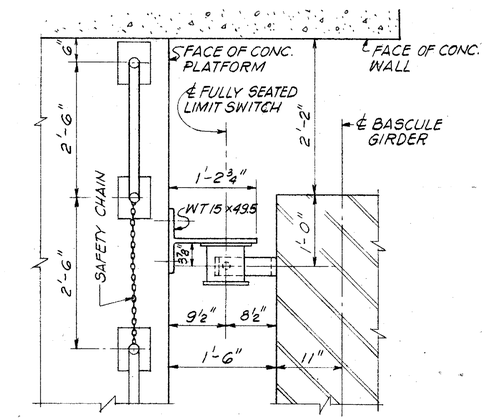

PLAN

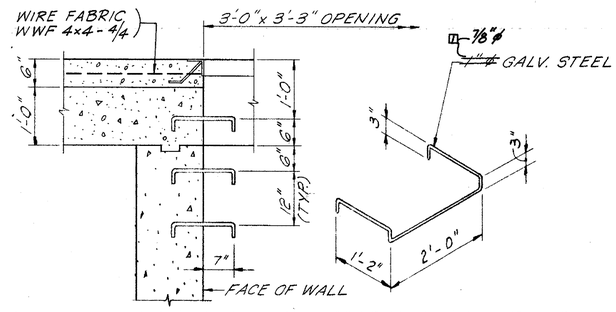

RUNG DETAILS

SCALE: 3/4" = 1'-0"

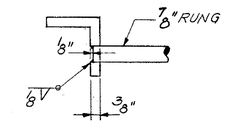

DETAIL 'A'

N.T.S.

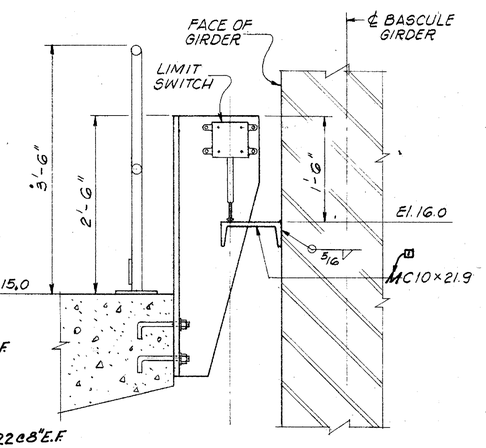

ELEVATION

FULLY SEATED LIMIT SWITCH BRACKET DETAIL

SCALE: 1" = 1'-0"

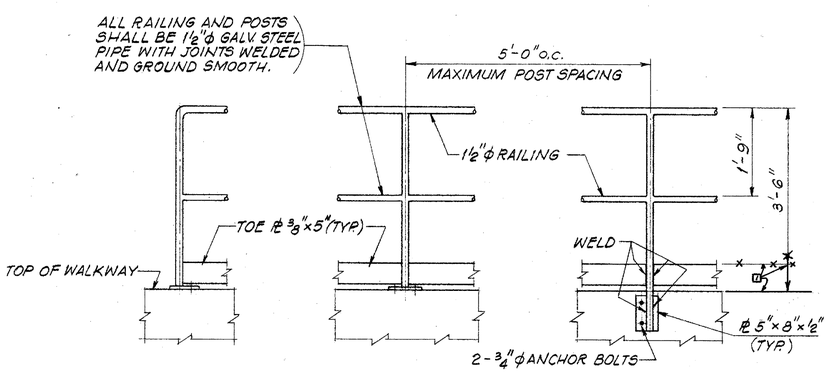

TOP MOUNTING SIDE MOUNTING

TYPICAL RAILING DETAIL

SCALE: 3/4" = 1'-0"

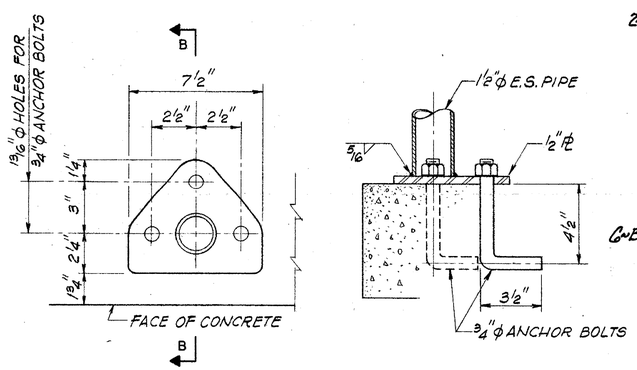

PLAN SECTION B-B

TOP MOUNTING PLATE DETAIL

SCALE: 3" = 1'-0"

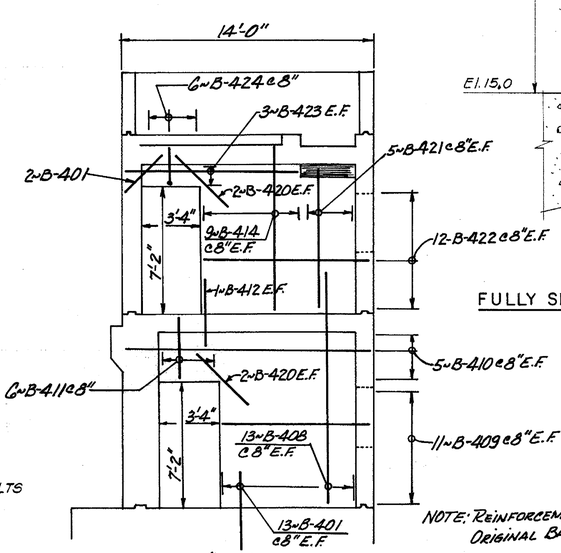

NOTE: REINFORCEMENT INCLUDED IN ORIGINAL BAR LISTS.

1 SECTION "D-D" CONTROL HOUSE

SCALE: 1/4" = 1'-0" FOR LOCATION SEE SHEET Nº 73

HARDESTY & HANOVER CONSULTING ENGINEERS NEW YORK, N.Y.

REVISIONS

1 Revised Dimensions of Bridge Hung Details Added Sect. D-D Control House

FEB 10 2014

A.S., J.K. DESIGN B.G.S. L.M.B. CHKD J.M.B.

PREL. TRACING

CONTRACT	COUNTY	FEDERAL AID PROJECT Nº	SHEET Nº	TOTAL SHEETS
82-073-05	SUSSEX	BRF-1009(3)	72	155

BASCULE PIER
CONTROL HOUSE DETAILS I

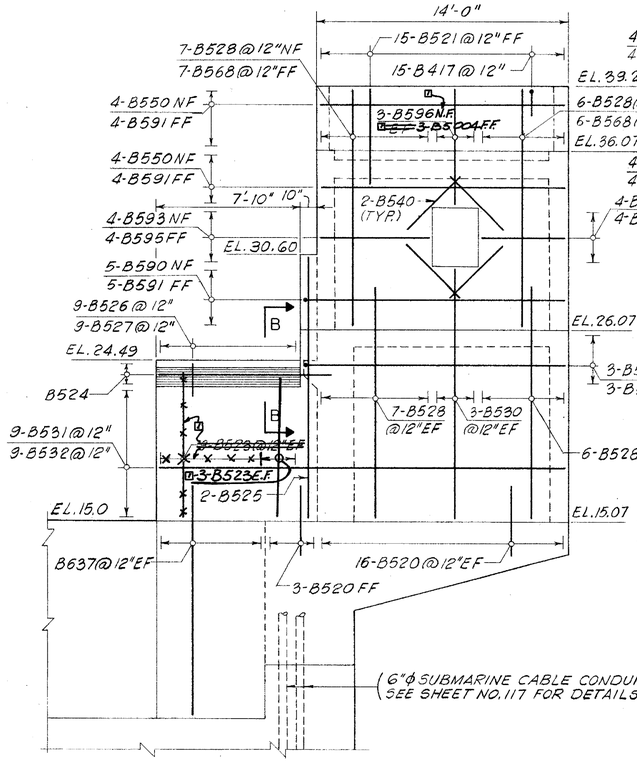

WEST ELEVATION
SCALE: 1/4"=1'-0"

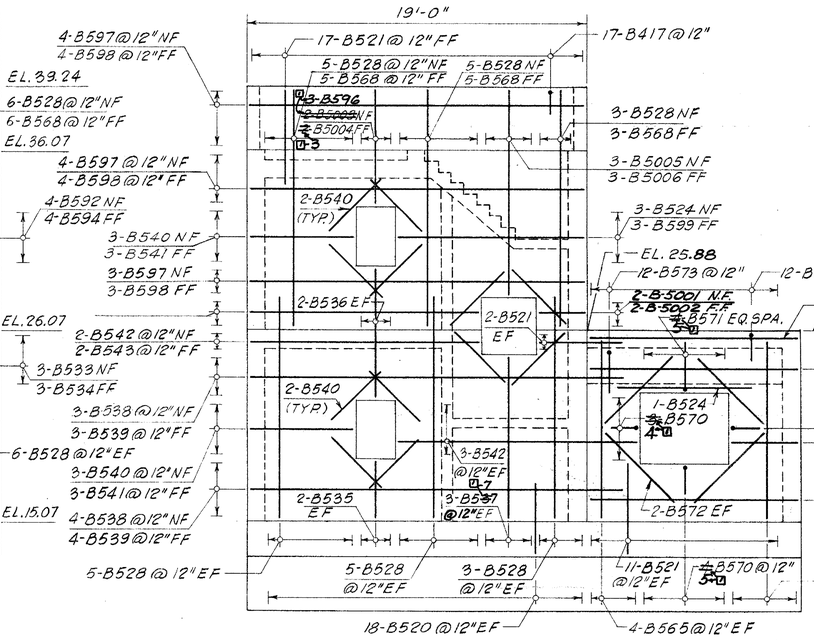

SOUTH ELEVATION
SCALE: 1/4"=1'-0"

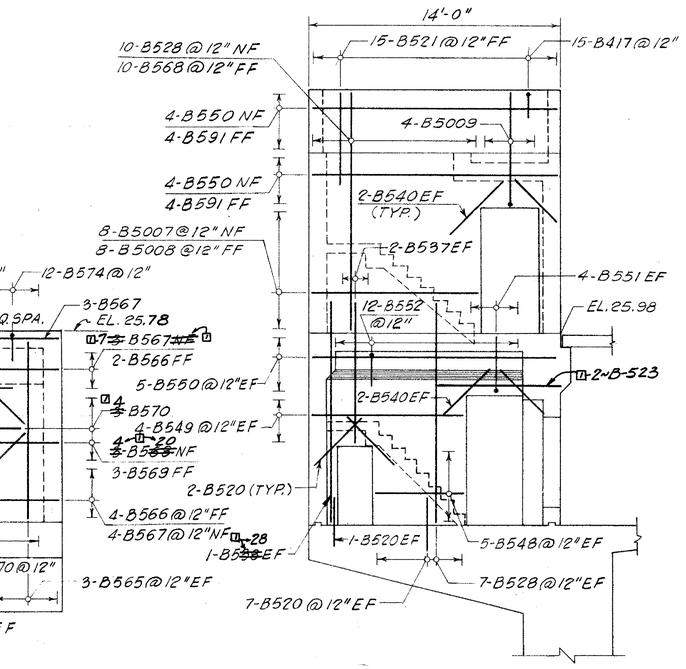

SECTION A-A
SCALE: 1/4"=1'-0"

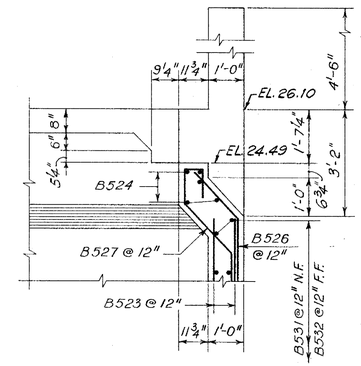

SECTION B-B
SCALE: 1/2"=1'-0"

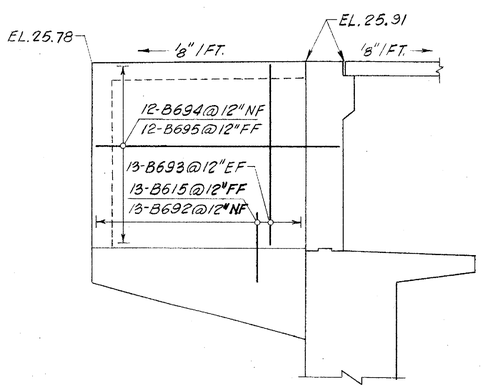

EAST ELEVATION
SCALE: 1/4"=1'-0"

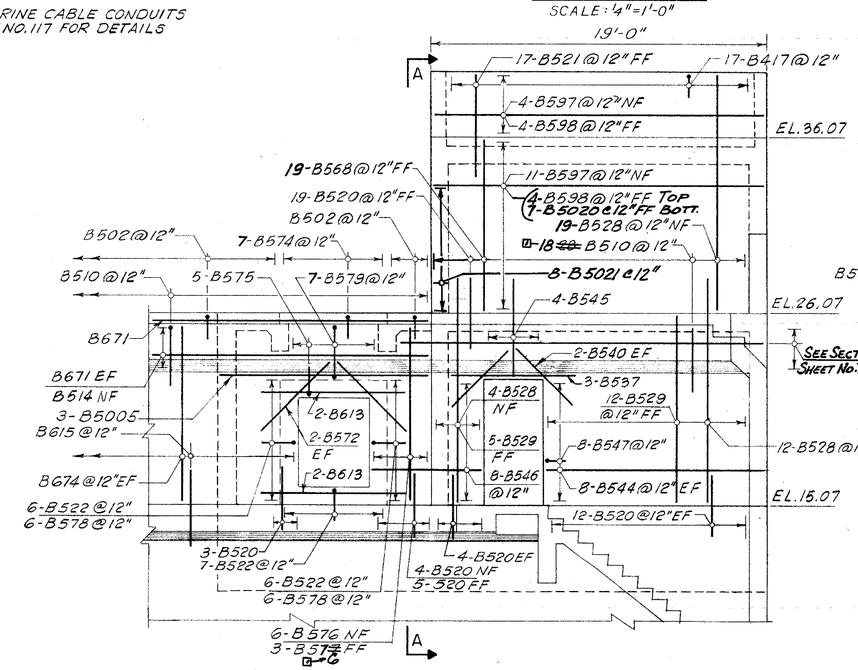

NORTH ELEVATION
SCALE: 1/4"=1'-0"

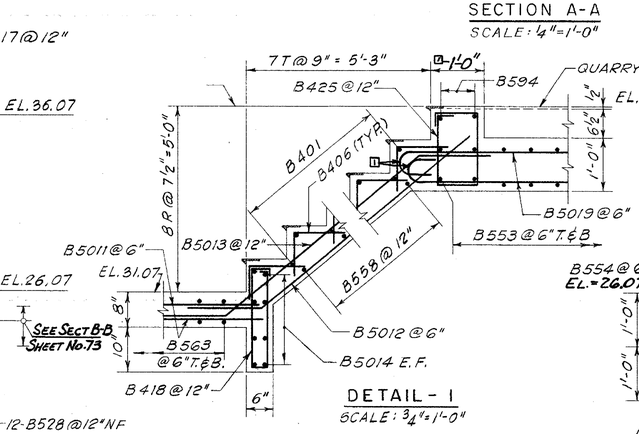

DETAIL - 1
SCALE: 3/4"=1'-0"

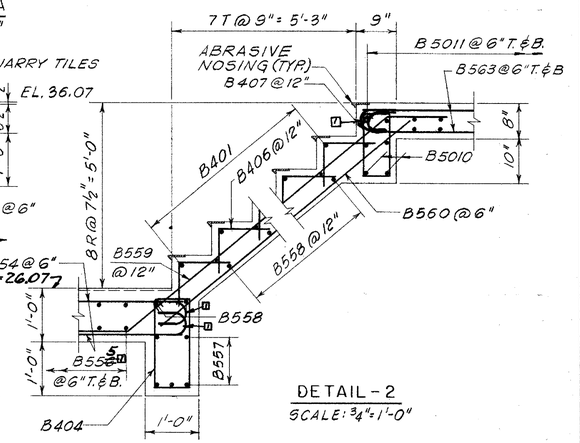

DETAIL - 2
SCALE: 3/4"=1'-0"

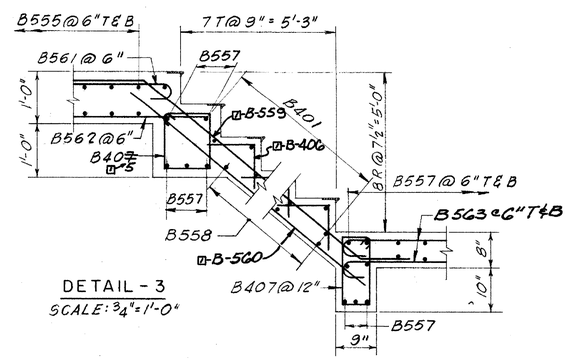

DETAIL - 3
SCALE: 3/4"=1'-0"

NOTES:
1. FOR GENERAL NOTES SEE SHEET NO. 56
2. WORK WITH SHEET NO'S 65, 73 & 74.
3. FOR BAR LIST SEE SHEET NO'S 124 & 125

HARDESTY & HANOVER
CONSULTING ENGINEERS
NEW YORK, N.Y.

REVISIONS
1 GENERAL REVISIONS 11-5-84 T.F.C.

PREL. TRACING A.K. & R.B. DESIGN B.G.S. CHKD. B.G.S.

40389

HARDESTY & HANOVER
CONSULTING ENGINEERS
NEW YORK, N.Y.

REVISIONS

11-5-96		

GENERAL REVISIONS

CONTRACT	COUNTY	FEDERAL AID PROJECT Nº	SHEET Nº	TOTAL SHEETS
82-073-05	SUSSEX	BRF-1009(3)	73	155

BASCULE PIER
CONTROL HOUSE DETAILS II

NOTE:
1. WORK WITH SHEETS NO. 72 & 74, 71
2. FOR BAR LIST SEE SHEETS NO. 124 & 125
3. FOR CONTROL HOUSE RAILING DETAIL SEE SHEET NO. 70
4. FOR DETAILS 1, 2 & 3 SEE SHEET NO. 72.

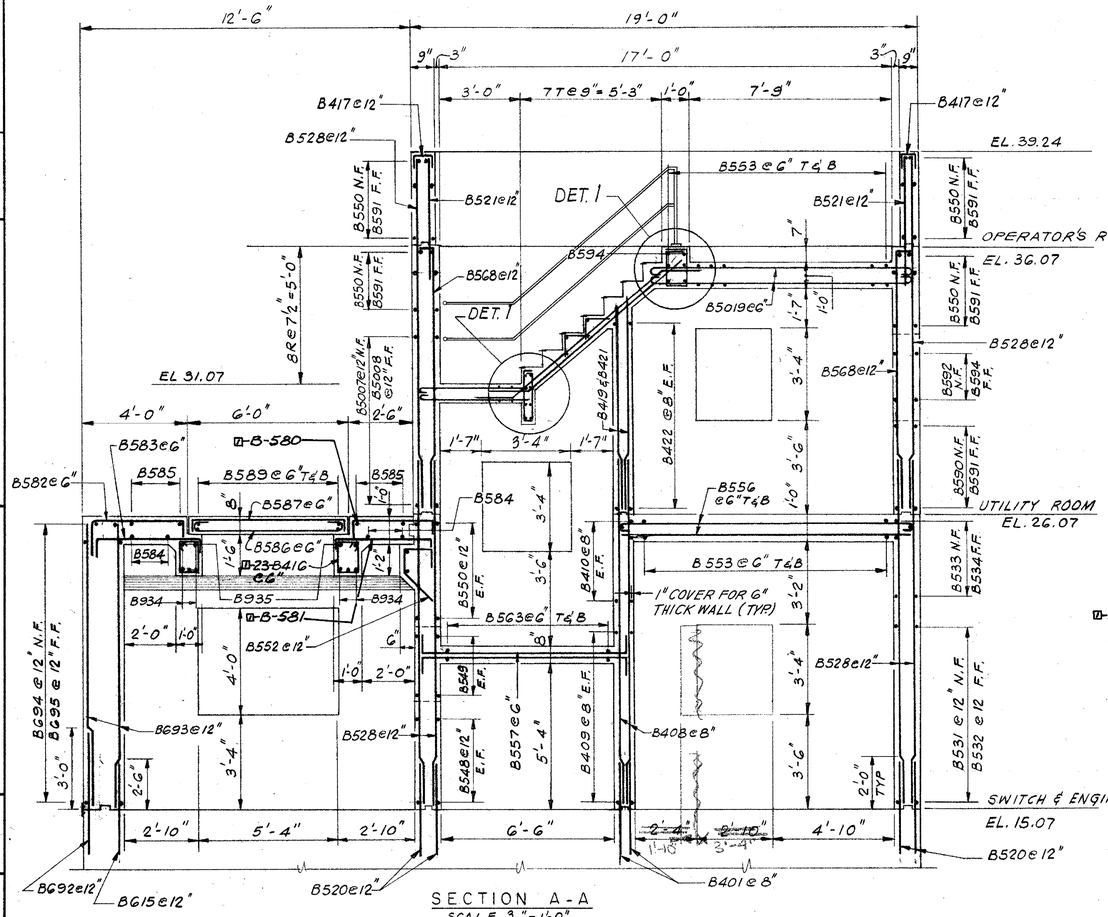

SECTION A-A
SCALE 3/8"=1'-0"

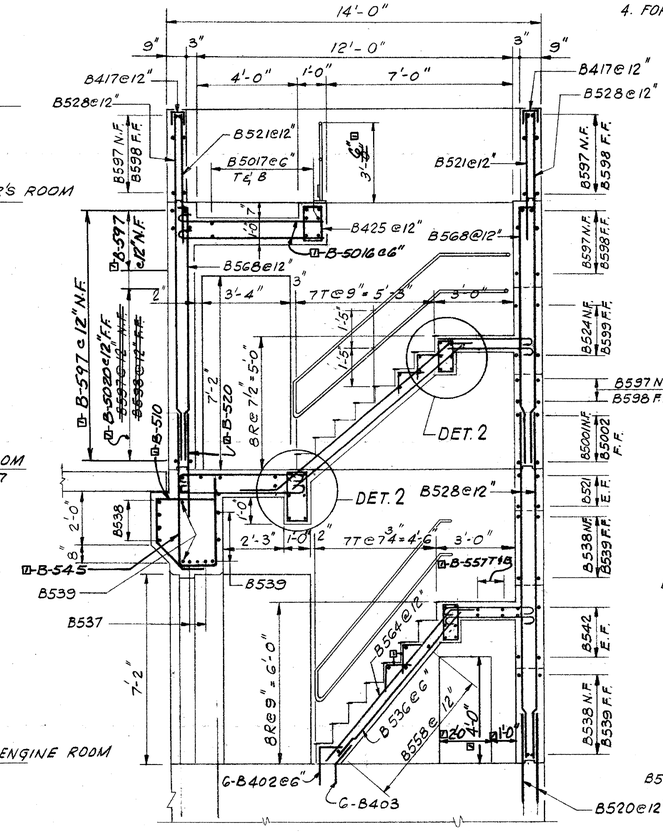

SECTION B-B
SCALE 3/8"=1'-0"

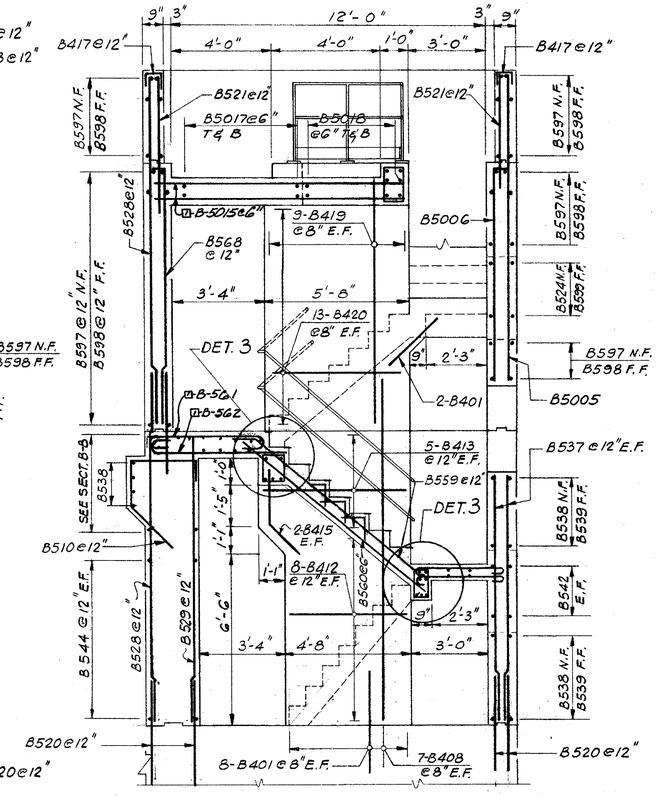

SECTION C-C
SCALE 3/8"=1'-0"

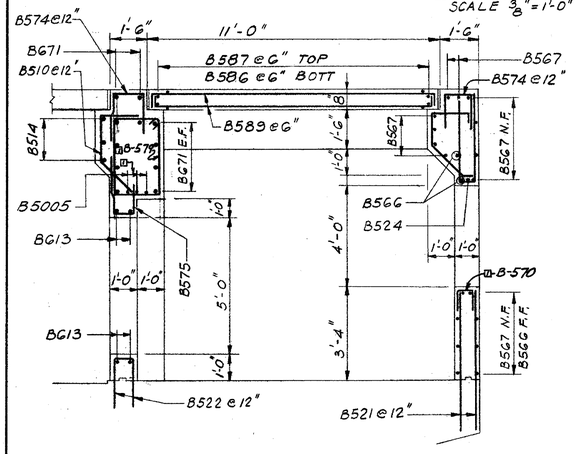

SECTION D-D
SCALE 3/8"=1'-0"

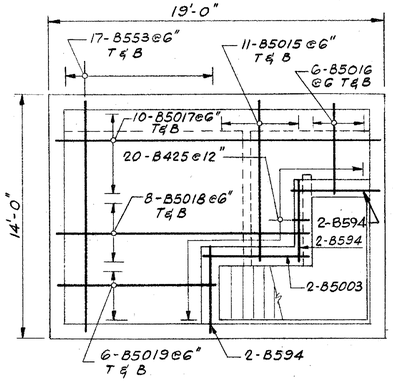

OPERATOR'S ROOM
SCALE 1/4"=1'-0"

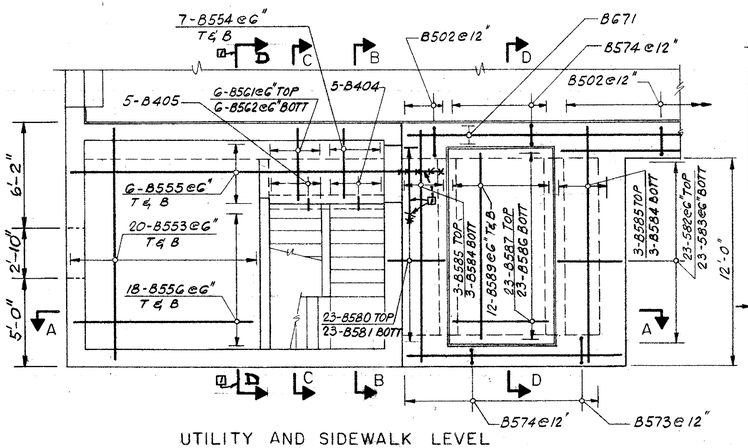

UTILITY AND SIDEWALK LEVEL
SCALE 1/4"=1'-0"

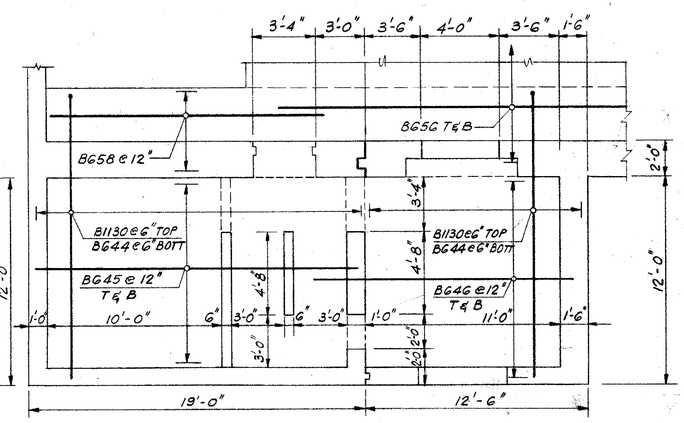

SWITCH BOARD AND ENGINE ROOM LEVEL
SCALE 1/4"=1'-0"

PREL. TRACING MP, RB DESIGN HED, JMD, BGS CHKD. JMD, BGS

HARDESTY & HANOVER
CONSULTING ENGINEERS
NEW YORK, N.Y.

REVISIONS

CONTRACT	COUNTY	FEDERAL AID PROJECT Nº	SHEET Nº	TOTAL SHEETS
82-073-05	SUSSEX	BRF-1009(3)	74	155

CONTROL HOUSE PLANS AND ELEVATIONS

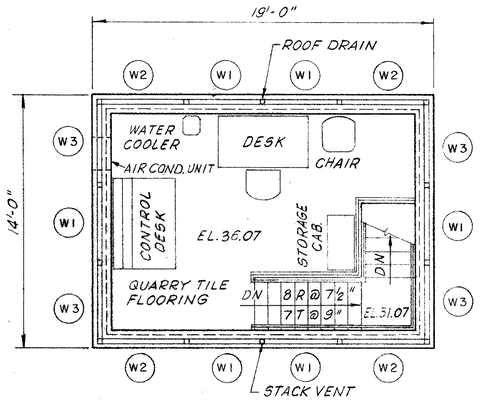

NOTE:
CONTROL DESK ON 1" HT. CONCRETE PAD ABOVE FINISH FLOOR

OPERATOR'S ROOM
SCALE: ¼" = 1'-0"

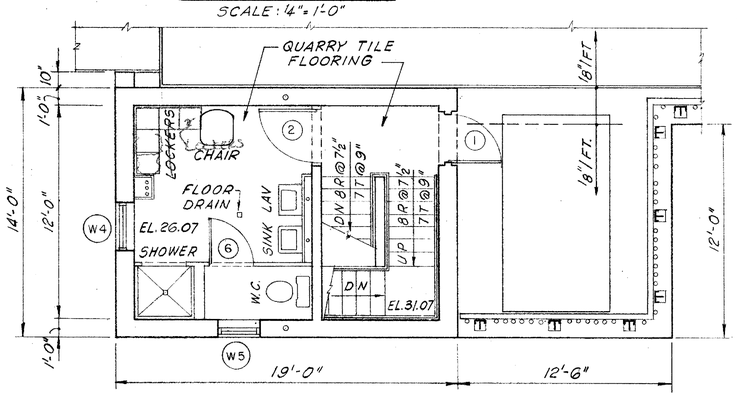

UTILITY ROOM
SCALE: ¼" = 1'-0"

PROJECTION OF AWNINGS ON WINDOWS TO BE LOCKED SO AS NOT TO EXCEED THIS DIMENSION (NORTH SIDE ONLY)

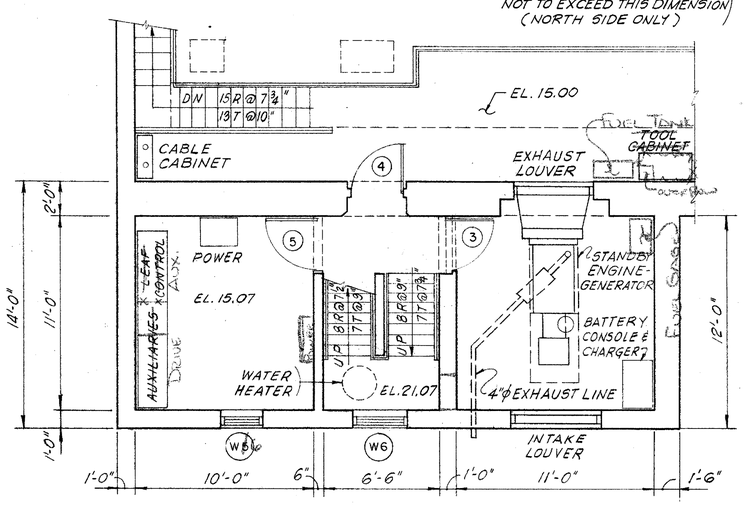

SWITCHBOARD AND ENGINE ROOM
SCALE: ¼" = 1'-0"

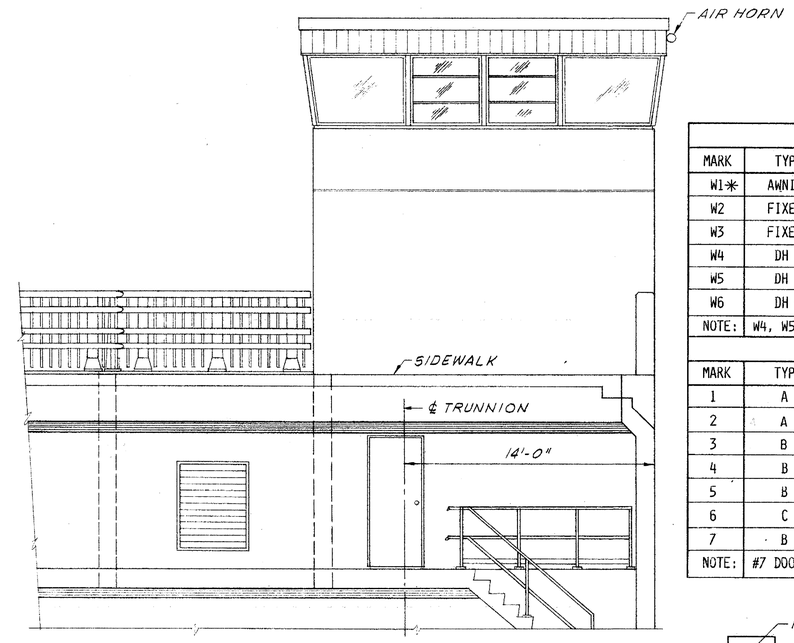

NORTH ELEVATION
SCALE: ¼" = 1'-0"

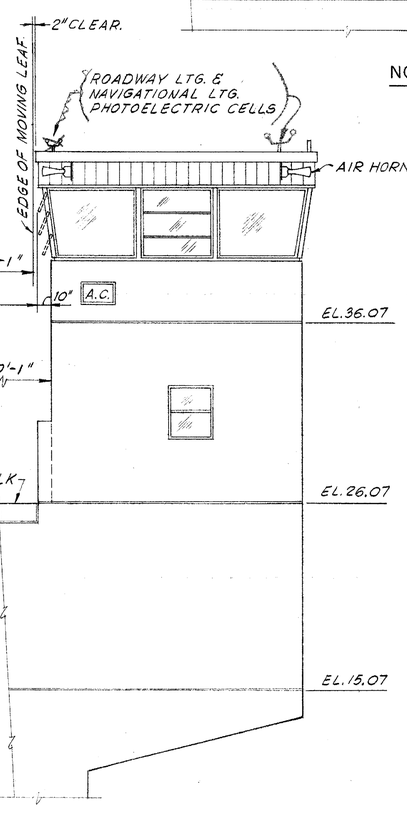

WEST ELEVATION
SCALE: ¼" = 1'-0"

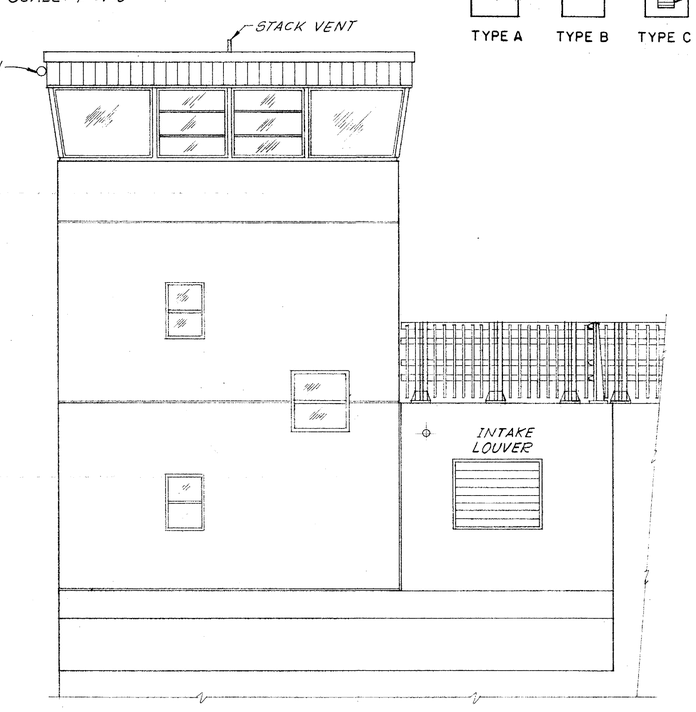

SOUTH ELEVATION
SCALE: ¼" = 1'-0"

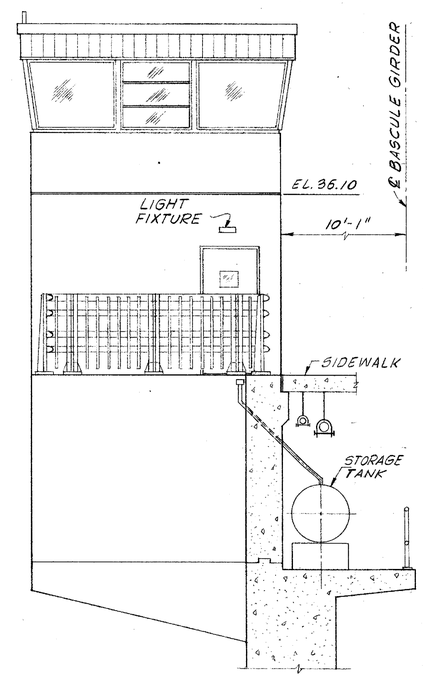

EAST ELEVATION
SCALE: ¼" = 1'-0"

AWNING TYPE

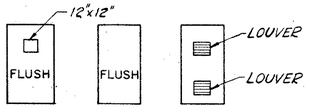

TYPE A TYPE B TYPE C

WINDOW SCHEDULE				
MARK	TYPE	SIZE (WXH)	NO. REQ'D.	DESCRIPTION
W1*	AWNING	4'-0" X 4'-0"	6	ANODIZED ALUM. 1/2" TINTED POLISHED, INSUL. GLASS
W2	FIXED	SIZED TO FIT	4	ANODIZED ALUM. 1" TINTED POLISHED, INSUL. GLASS
W3	FIXED	SIZED TO FIT	4	ANODIZED ALUM. 1" TINTED POLISHED, INSUL. GLASS
W4	DH	2'-6" X 3'-0"	1	ANODIZED ALUM. 3/4" TINTED POLISHED, INSUL. GLASS
W5	DH	2'-6" X 3'-0"	~~2~~ 1	ANODIZED ALUM. 3/4" TINTED POLISHED, INSUL. GLASS
W6	DH	3'-0" X 3'-0"	~~1~~ 2	ANODIZED ALUM. 3/4" TINTED POLISHED, INSUL. GLASS
NOTE:	W4, W5, AND W6 (THERMAL WINDOW)			* SEE NOTE AT WEST ELEVATION

DOOR SCHEDULE					
MARK	TYPE	SIZE	NO. REQ'D.	DESCRIPTION	SADDLE
1	A	3'-0" X 7'-0" X 1-3/4"	1	FLUSH ALUMINUM	CAST BRONZE
2	A	3'-0" X 7'-0" X 1-3/4"	1	FLUSH ALUMINUM	NONE
3	B	3'-0" X 7'-0" X 1-3/4"	1	FLUSH ALUMINUM	CAST BRONZE
4	B	3'-0" X 7'-0" X 1-3/4"	1	FLUSH ALUMINUM	CAST BRONZE
5	B	3'-0" X 7'-0" X 1-3/4"	1	FLUSH ALUMINUM	NONE
6	C	2'-6" X 7'-0" X 1-3/4"	1	FLUSH ALUMINUM	NONE
7	B	3'-0" X 7'-0" X 1-3/4"	1	FLUSH ALUMINUM	CAST BRONZE
NOTE:	#7 DOOR GOING TO THE FENDER SYSTEM				

PRIEL. TRACING R.B. DESIGN B.G.S. CHKD. B.G.S.

CONTRACT	COUNTY	FEDERAL AID PROJECT Nº	SHEET Nº	TOTAL SHEETS
82-073-05	SUSSEX	BRF-1009(3)	75	155

CONTROL HOUSE DETAILS I

HARDESTY & HANOVER
CONSULTING ENGINEERS
NEW YORK, N.Y.

REVISIONS

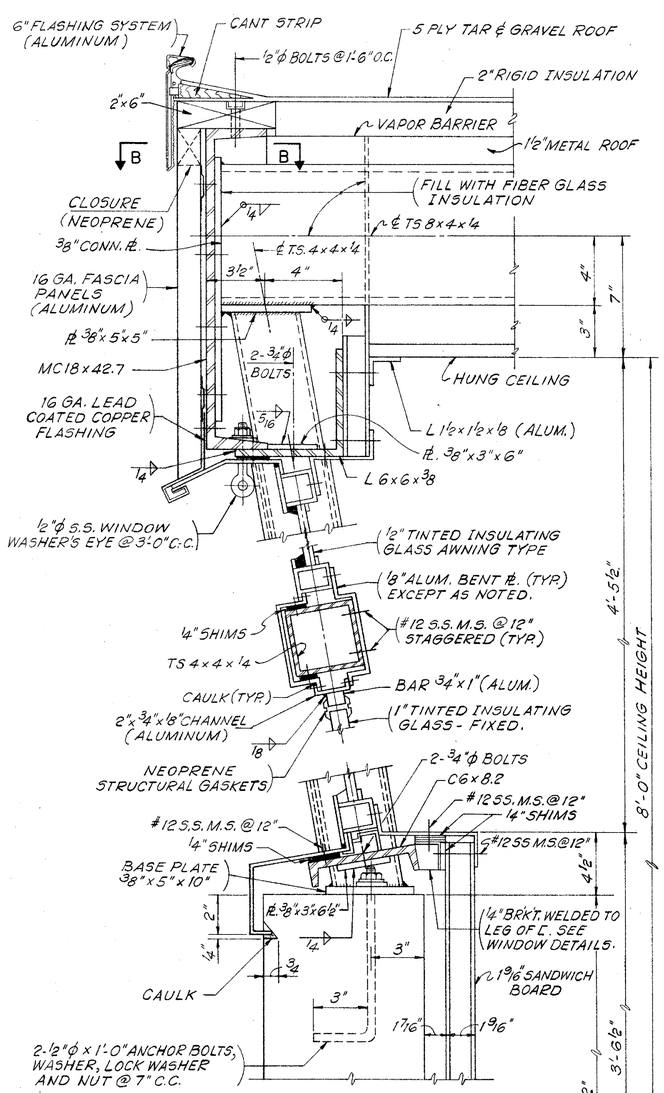

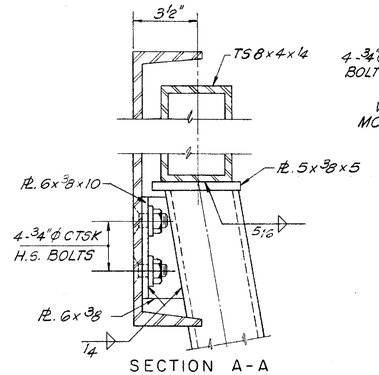

SECTION A-A
SCALE: 3"=1'-0"

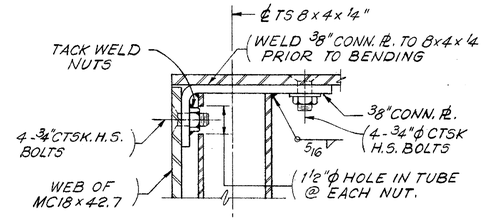

SECTION B-B
SCALE: 3"=1'-0"

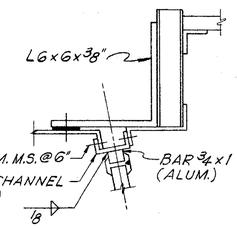

HEAD

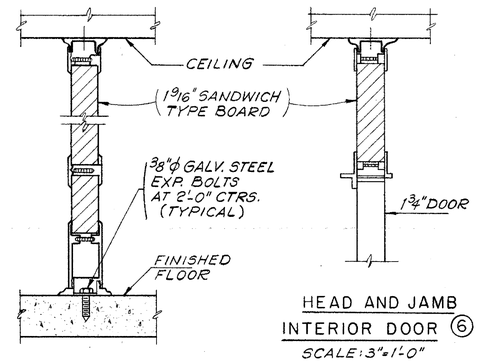

INTERIOR PARTITION
SCALE: 3"=1'-0"

HEAD AND JAMB
INTERIOR DOOR (6)
SCALE: 3"=1'-0"

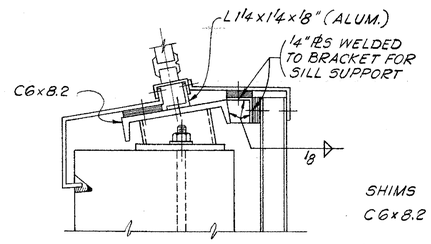

SILL

FIXED WINDOW DETAILS
SCALE: 3"=1'-0"

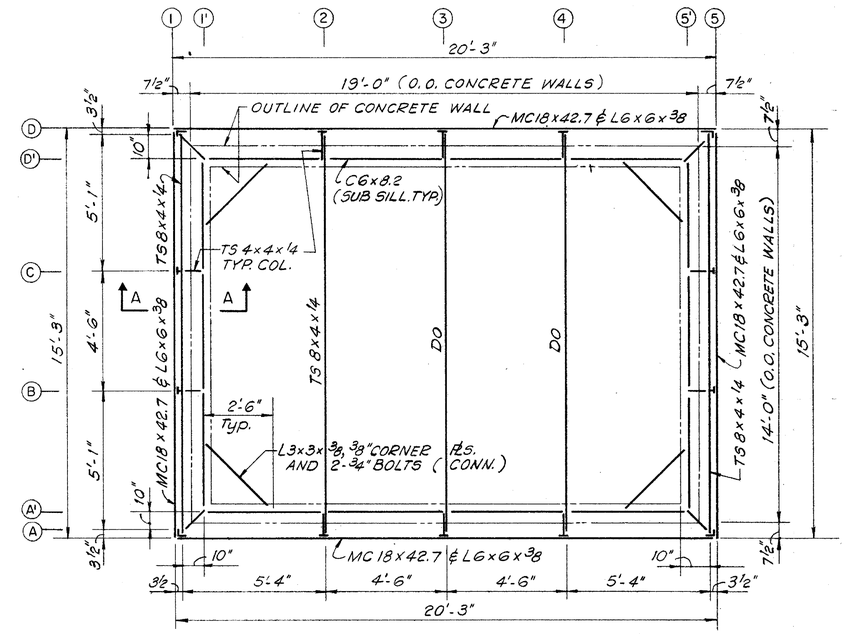

FRAMING PLAN
SCALE: 3/8"=1'-0"

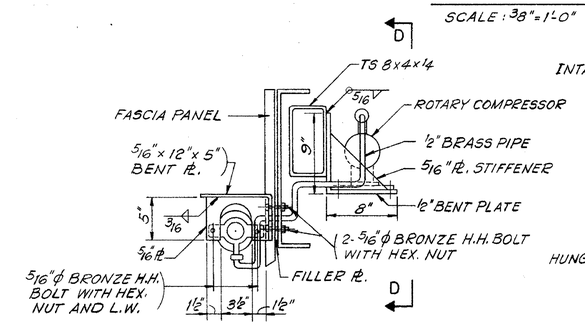

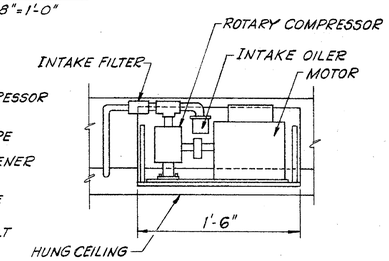

SECTION D-D

HORN MOUNTING DETAIL
SCALE: 1 1/2"=1'-0"

NOTE:
AIR HORN WILL BE CAST BRONZE WITH 4"ϕ DIAPHRAGM, 292 CPS CUNNINGHAM SIZE 2B WHICH WILL OPERATE FROM A CUNNINGHAM DIRECT OPERATING AIR WHISTLE UNIT NO. 1-NEA.

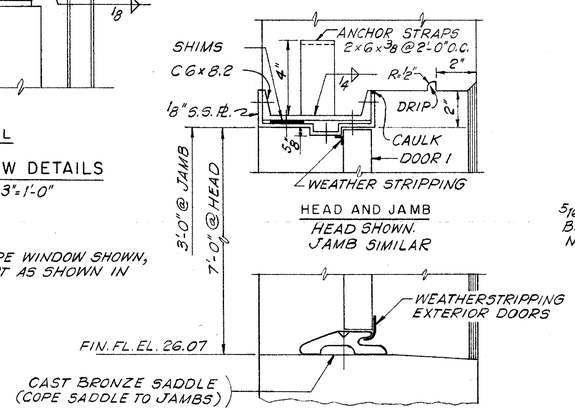

HEAD AND JAMB
HEAD SHOWN.
JAMB SIMILAR

SILL

ENTRANCE DOOR DETAILS
SCALE: 3"=1'-0"
DOOR 1 - SHOWN
DOORS 2-3-4-5-7-SIMILAR

NOTE:
SECTION THROUGH AWNING TYPE WINDOW SHOWN, FIXED WINDOW - SIMILAR EXCEPT AS SHOWN IN FIXED WINDOW DETAILS.

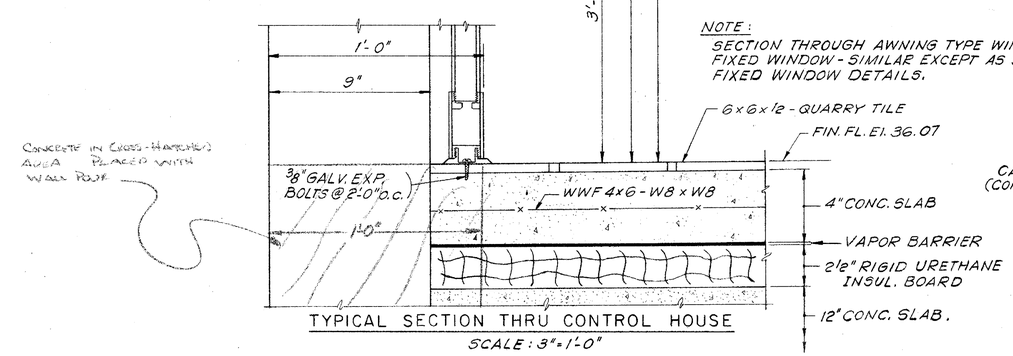

TYPICAL SECTION THRU CONTROL HOUSE
SCALE: 3"=1'-0"

PREL. TRACING A. Quinn DESIGN B.G.S. CHKD. LMB

CONTRACT	COUNTY	FEDERAL AID PROJECT Nº	SHEET Nº	TOTAL SHEETS
82-073-05	SUSSEX	BRF-1009(3)	76	155

CONTROL HOUSE DETAILS II

HARDESTY & HANOVER CONSULTING ENGINEERS NEW YORK, N.Y.

REVISIONS

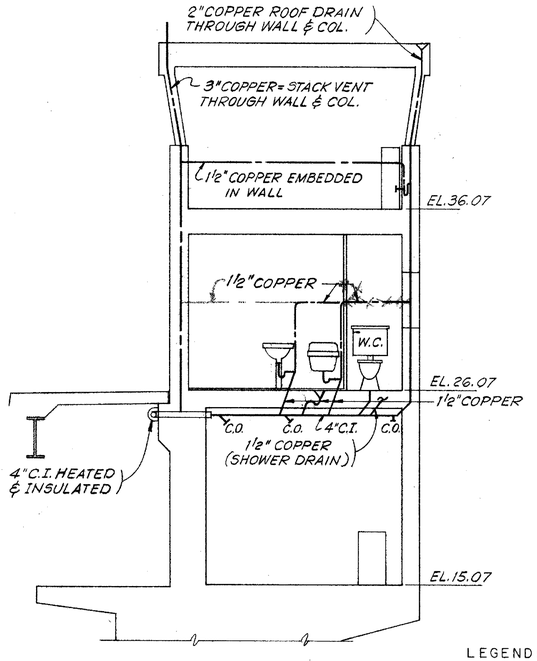

WASTE PIPING DIAGRAM

SCALE: 1/4"=1'-0"

LEGEND:

= VENT

= DRAIN

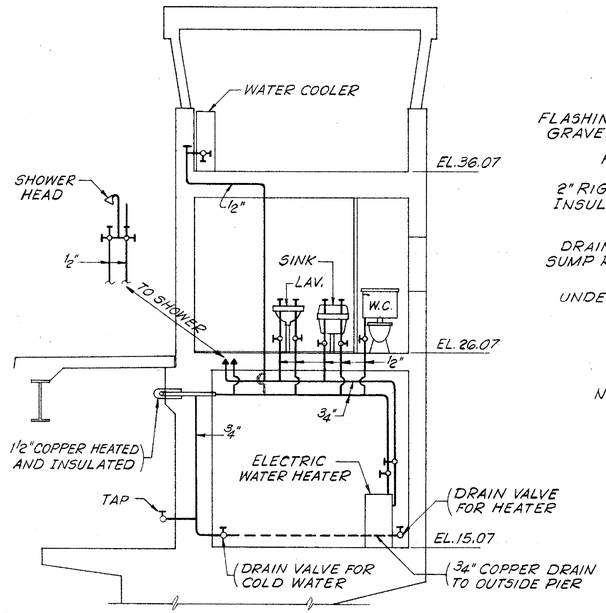

WATER PIPING DIAGRAM

SCALE: 1/4"=1'-0"

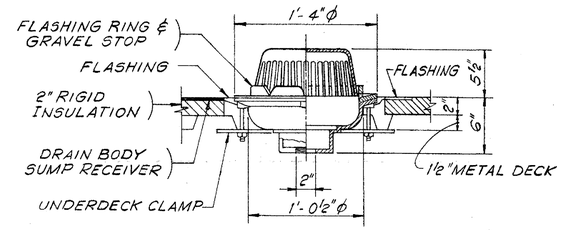

ROOF DRAIN

SCALE: 1½"=1'-0"

NOTE: ROOF DRAIN TO BE J.R. SMITH FIG. 1010R-UDC, GALVANIZED CAST IRON, OR APPROVED EQUAL.

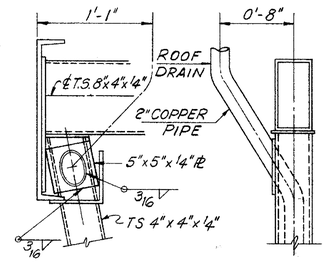

ROOF DRAIN DETAILS THROUGH COLUMN

SCALE: 1½"=1'-0"

NOTE:
HOLE IN COLUMN AND PLATE SHALL BE CUT TO SUIT. DETAIL IS SIMILAR FOR STACK VENT.

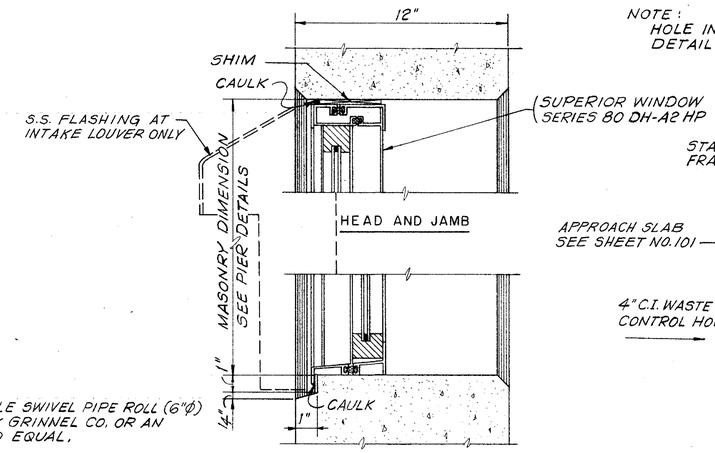

DOUBLE HUNG WINDOW DETAIL

SCALE: 3"=1'-0"

(INTAKE LOUVER OPENING SIMILAR)

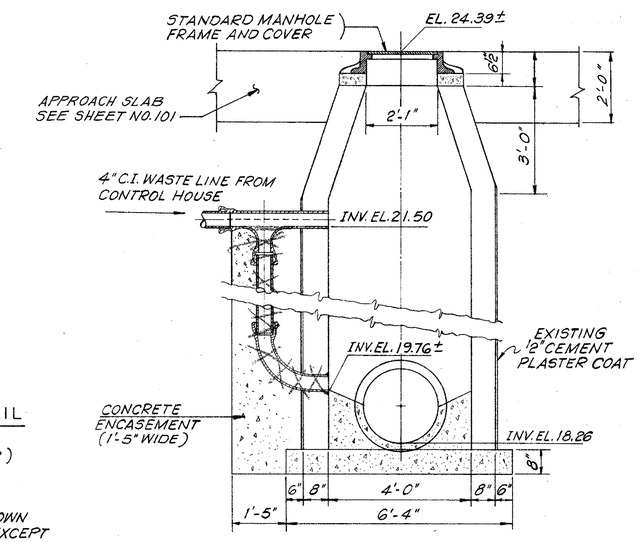

DROP MANHOLE

SCALE: ½"=1'-0"

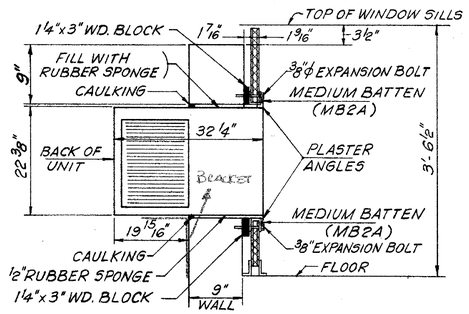

INSTALLATION OF AIR CONDITIONER CASING

SCALE: 1"=1'-0"

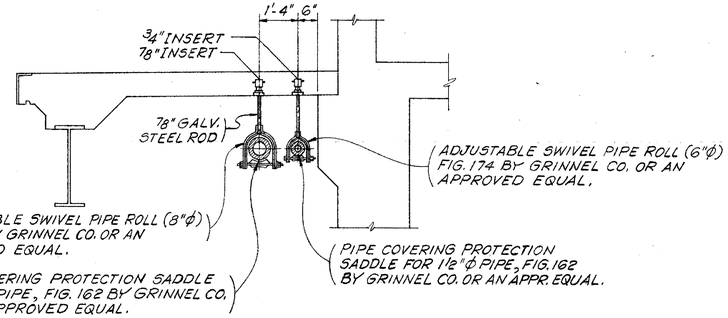

TYPICAL SUPPORT UNDER CANTILEVERED SIDEWALK

SCALE: ½"=1'-0"

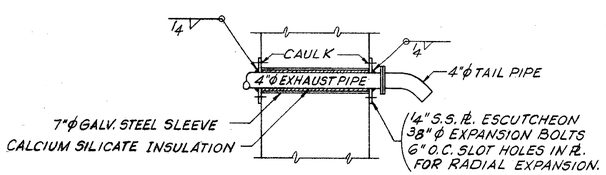

EXHAUST PIPE DETAIL

AT CONTROL HOUSE SOUTH WALL

NO SCALE

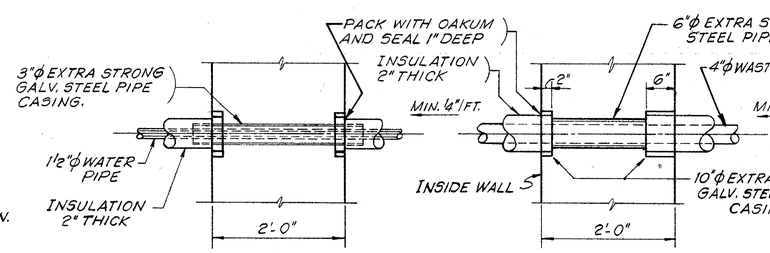

SECTION AT CONTROL HOUSE WALL

SCALE: ¾"=1'-0"

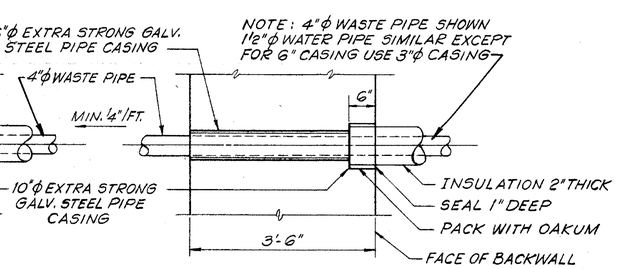

SECTION AT PIER BACKWALL

SCALE: ¾"=1'-0"

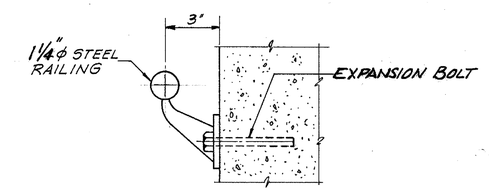

CONTROL HOUSE RAILING DETAIL

NOT TO SCALE

PREL. TRACING A. Gizini DESIGN BGS CHKD. BGS

CONTRACT	COUNTY	FEDERAL AID PROJECT Nº	SHEET Nº	TOTAL SHEETS
82-073-05	SUSSEX	BRF-1009(3)	77	155

BASCULE SPAN AND APPROACH SPAN FRAMING PLAN

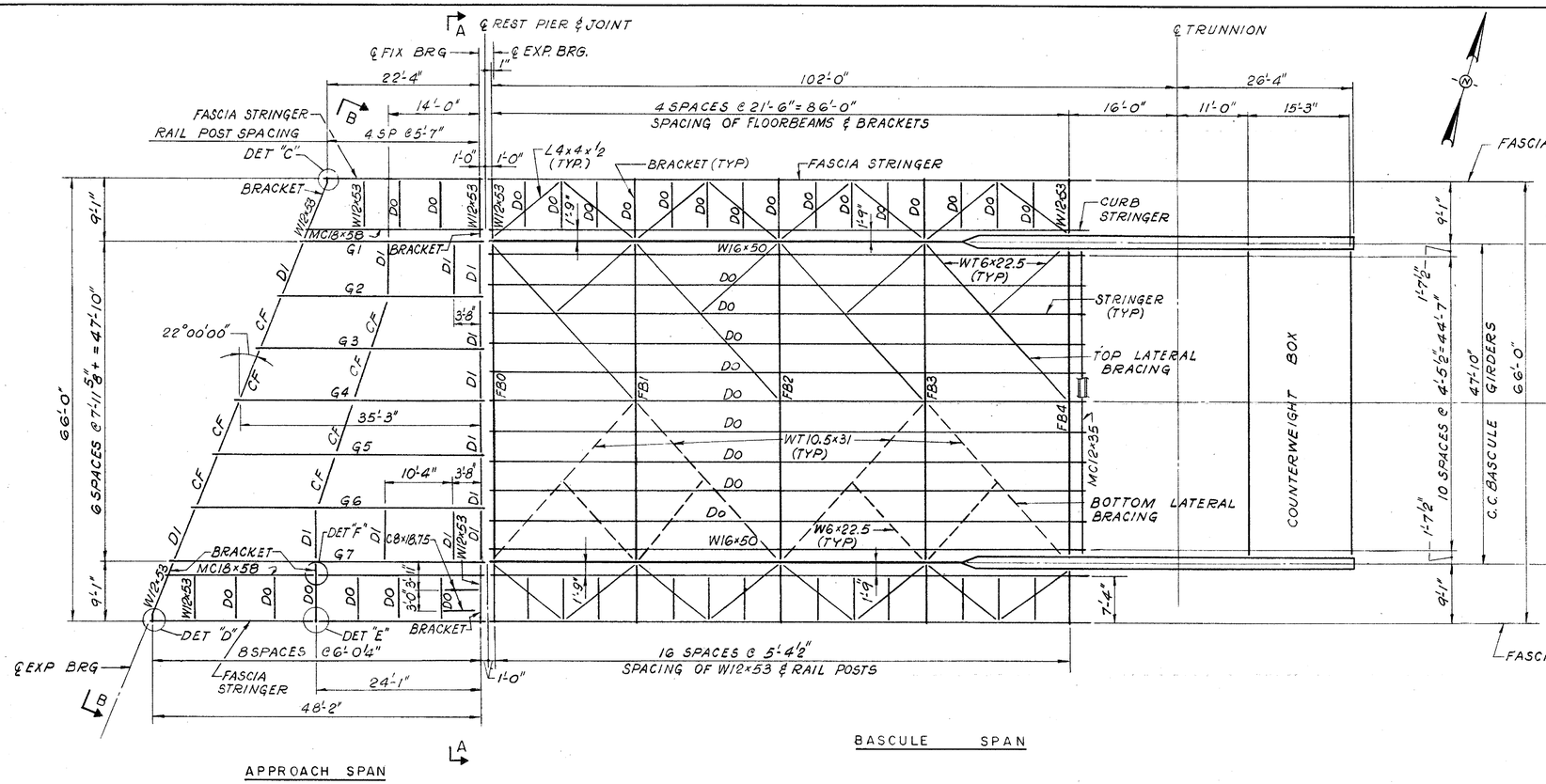

FRAMING PLAN

SCALE: 1" = 10'

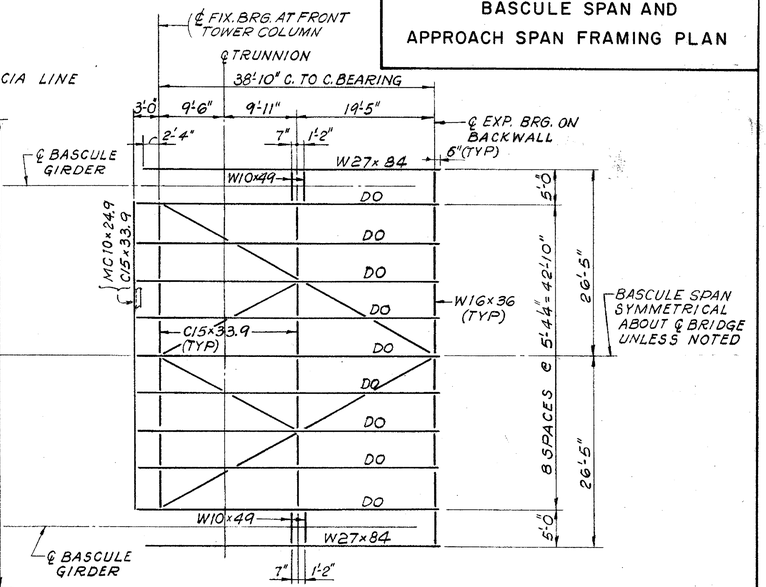

DECK OVER COUNTERWEIGHT

FOR ADDITIONAL DETAILS SEE FRAMING PLAN ON SHEET NO. 88

NOTES:

1. FOR GENERAL NOTES SEE SHEET NO. 56
2. FOR LATERAL BRACING SEE SHEET NO. 83.
3. FOR SECTION A-A, B-B, C-C, DETAIL "C", "D", E AND "F" SEE SHEET NO. 94

HARDESTY & HANOVER CONSULTING ENGINEERS NEW YORK, N.Y.

REVISIONS

PREL. TRACING GR DESIGN WWC CHKD. WWC

HARDESTY & HANOVER
CONSULTING ENGINEERS
NEW YORK, N.Y.

REVISIONS
17 Rev. In Deck Chee CTWT. Stringers. HEM

CONTRACT	COUNTY	FEDERAL AID PROJECT Nº	SHEET Nº	TOTAL SHEETS
82-073-05	SUSSEX	BRF-1009(3)	78	155

BASCULE SPAN STRESS AND BALANCE TABLES

BASCULE SPAN GIRDERS

SHEAR	UNIT	FB0	FB1	FB2	FB3	FB4	CENTERLINE TRUNNION	FRONT CTWT CONNECTION	REAR CTWT CONNECTION
DEAD LOAD	KIPS	- 32	- 88	- 143	- 200	- 264	+ 800	+ 780	+ 380
DEAD LOAD × 20% IMPACT	KIPS	- 7	- 18	- 29	- 40	- 53	+ 160	+ 156	+ 76
LIVE LOAD - HS20	KIPS	+ 119	- 18	- 45	- 71	- 101	—	—	—
IMPACT	KIPS	+ 26	- 4	- 10	- 16	- 22	—	—	—
LIVE LOAD - SIDEWALK	KIPS	+ 18	- 1	- 4	- 8	- 15	—	—	—
TOTAL	KIPS	+ 131	- 111	- 202	- 295	- 402	+ 960	+ 936	+ 456
ALLOWABLE STRESS	KSI	17.0	17.0	17.0	17.0	17.0	17.0	17.0	17.0
WEB AREA REQUIRED	SI	7.7	6.6	11.9	17.4	23.6	56.5	55.1	26.9
WEB AREA FURNISHED	SI	49.5	52.4	54.8	75.6	170.2	269.0	301.5	382.5
MOMENT									
DEAD LOAD	FT-KIPS	—	- 850	- 2,870	- 6,080	- 10,690	- 15,100	- 6,500	—
DEAD LOAD × 20% IMPACT	FT-KIPS	—	- 170	- 574	- 1,216	- 2,138	- 3,020	- 1,300	—
LIVE LOAD - HS20	FT-KIPS	—	+ 1,953	+ 2,797	+ 2,664	+ 1,604	—	—	—
IMPACT	FT-KIPS	—	+ 430	+ 616	+ 586	+ 353	—	—	—
LIVE LOAD - SIDEWALK	FT-KIPS	—	+ 307	+ 450	+ 421	+ 226	—	—	—
TOTAL (MAX.)	FT-KIPS	—	+ 1,840	- 3,444	- 7,296	- 12,828	- 18,120	- 7,800	—
TOTAL (MIN.)	FT-KIPS	—	- 1,020	+ 993	- 2,409	- 8,507	- 15,100	- 6,500	—
TOTAL STRESS (MAX.)	KSI	—	+ 7.6	- 9.8	- 15.5	- 19.6	- 12.2	- 5.3	—
TOTAL STRESS (MIN.)	KSI	—	- 4.3	+ 2.8	- 5.1	- 13.0	- 10.1	- 4.4	—
ALLOWABLE STRESS	KSI	25.0	25.0	25.0	25.0	23.8	23.8	23.8	27.0
STRESS RANGE	KSI	—	11.9	12.6	10.4	6.6	2.1	0.9	—
ALLOWABLE STRESS RANGE *	KSI	13.0	13.0	13.0	13.0	13.0	13.0	13.0	13.0
SECTIONS USED — FLANGES	IN	1 1/2 X 22	1 1/2 X 22	2 1/4 X 22	3X 22	3X22	3 X 22	2X 22	2X 22
SECTIONS USED — WEB	IN	3/4 X 66.0	3/4 X 69.9	3/4 X 73.1	1 X 75.6	2 - 1X85.1	2-1 3/8 X157	2-1 1/8 X174.3	2 - 1 1/8 X170
SECTION MODULUS - GROSS	CI	2,700	2,890	4,250	5,650	7,860	20,064	18,800	18,060
SECTION MODULUS - NET	CI	2,700	2,890	4,250	5,650	7,860	17,850	17,800	18,060
DL CAMBER	IN	5.33	3.53	1.91	0.72	0.08	0	0.03	0.09

* FOR 500,000 STRESS CYCLES

BASCULE SPAN BALANCE

	ITEM	WEIGHT (LBS)	MOMENT AT ℄ TRUNNION (FT.-LBS) HORIZONTAL	VERTICAL
FORWARD	STRUCTURAL STEEL	427,430	20,285,900	2,049,800
FORWARD	ROADWAY GRATING AND SIDEWALK DECK	120,480	6,918,800	1,011,900
FORWARD	BRIDGE RAILING	5,390	312,700	60,000
FORWARD	RACK (INCL. CONCRETE)	9,000	24,500	- 67,600
FORWARD	FORWARD TOTAL	562,300	27,541,900	3,054,100
REAR	STRUCTURAL STEEL	105,470	- 1,378,900	- 159,600
REAR	COUNTERWEIGHT BOX	164,250	- 3,095,400	- 369,900
REAR	COUNTERWEIGHT REINFORCEMENT	3,770	- 72,300	- 6,700
REAR	COUNTERWEIGHT CONCRETE CF AT 145 LBS/CF	1,136,590	- 21,571,700	- 2,660,700
REAR	BALANCE BLOCKS AT 80 LBS EACH	46,800	- 1,012,600	- 89,400
REAR	REAR TOTAL	1,456,880	- 27,130,900	- 3,286,300
TOTAL LEAF (EXCLUDING COUNTERWEIGHT)		667,770	26,163,000	2,894,500
TOTAL COUNTERWEIGHT (CONCRETE, BOX REINFORCEMENT AND BLOCKS)		1,351,410	- 25,752,000	- 3,126,700
TOTAL LEAF AND COUNTERWEIGHT		2,019,180	411,000	- 232,200

THEORETICAL - EXISTING BALANCE ACHIEVED WITH LEAD BLOCKS DIVIDED EQUALLY IN 2 TOP POCKETS

: NOTE PENDING CHANGE IF WALKWAY IS ADDED TO CWT

BASCULE SPAN FLOORBEAMS

SHEAR	UNIT	FB0	FB1	FB2	FB3	FB4
DEAD LOAD	KIPS	22	34	28	34	28
LIVE LOAD - HS20	KIPS	78	97	95	97	90
IMPACT	KIPS	47	29	29	29	54
TOTAL	KIPS	147	160	152	160	172
ALLOWABLE STRESS	KSI	17.0	17.0	17.0	17.0	17.0
WEB AREA REQUIRED	SI	8.7	9.5	9.0	9.5	10.2
WEB AREA FURNISHED	SI	33.1	27.5	29.0	30.5	31.5
MOMENT						
DEAD LOAD	FT-KIPS	+ 268	+ 430	+ 333	+ 430	+ 318
LIVE LOAD (MAX.)	FT-KIPS	+ 906	+ 1,124	+ 1,099	+ 1,124	+ 1,044
IMPACT	FT-KIPS	+ 543	+ 337	+ 330	+ 337	+ 627
LIVE LOAD (MIN.)	FT-KIPS	- 68	- 105	- 141	- 174	- 68
IMPACT	FT-KIPS	- 40	- 32	- 43	- 52	- 41
TOTAL (MAX.)	FT-KIPS	+ 1,717	+ 1,891	+ 1,762	+ 1,891	+ 1,989
TOTAL (MIN.)	FT-KIPS	+ 160	+ 293	+ 149	+ 204	+ 209
TOTAL STRESS (MAX.)	KSI	14.0	18.0	15.7	15.8	16.5
TOTAL STRESS (MIN.)	KSI	1.3	2.8	1.3	1.7	1.7
ALLOWABLE STRESS	KSI	26.7	26.7	26.7	26.7	26.7
STRESS RANGE	KSI	12.7	15.2	14.4	14.1	14.8
ALLOWABLE STRESS RANGE **	KSI	13.0	18.0	18.0	18.0	18.0
SECTIONS USED — FLANGES	IN	1 1/2 X 12	1 5/8 X 14	1 5/8 X 14	1 5/8 X 14	1 1/2 X 14
SECTIONS USED — WEB	IN	5/8 X 68	1/2 X 55	1/2 X 58	1/2 X 61	1/2 X 63
SECTION MODULUS - GROSS	CI	1,685	1,490	1,585	1,683	1,639
SECTION MODULUS - NET	CI	1,480	1,266	1,350	1,435	1,450
DL CAMBER AT ℄ SPAN	IN	0.07	0.14	0.10	0.12	0.09

** FOR 2,000,000 STRESS CYCLES

BASCULE SPAN STRINGERS

	EXTERIOR		INTERIOR	
DEAD LOAD	3.3		2.1	
LIVE LOAD - HS20	25.3		20.5	
IMPACT	7.6		6.2	
TOTAL	36.2		28.8	
ALLOWABLE STRESS	17.0		17.0	
WEB AREA REQUIRED	2.2		1.7	
WEB AREA FURNISHED	5.7		5.7	
MOMENT	NEGATIVE	POSITIVE	NEGATIVE	POSITIVE
DEAD LOAD	- 12.4	+ 9.0	- 7.9	+ 5.8
LIVE LOAD (MAX.)	- 69.3	+ 77.9	- 56.0	+ 62.9
IMPACT	- 20.8	+ 23.4	- 16.8	+ 18.9
LIVE LOAD (MIN.)	+ 14.6	- 38.2	+ 11.8	- 30.9
IMPACT	+ 4.4	- 11.5	+ 3.6	- 9.3
TOTAL (MAX.)	- 102.5	+ 110.3	- 80.7	+ 87.6
TOTAL (MIN.)	+ 6.6	- 40.7	+ 7.5	- 34.4
TOTAL STRESS (MAX.)	- 19.9	+ 16.4	- 15.7	+ 16.3
TOTAL STRESS (MIN.)	+ 1.3	- 6.0	+ 1.5	- 6.4
ALLOWABLE STRESS	25.7	27.0	25.7	27.0
STRESS RANGE	21.2	22.4	17.2	22.7
ALLOWABLE STRESS RANGE **	24.0	24.0	24.0	24.0
SECTIONS USED	W 16 X 50		W 16 X 50	
SECTION MODULUS - GROSS	81.0	81.0	81.0	81.0
SECTION MODULUS - NET	61.8	81.0	61.8	64.5
DL CAMBER AT ℄ SPAN	NATURAL CAMBER UP		NATURAL CAMBER UP	

DECK OVER CTWT. STRINGERS

	EXTERIOR	INTERIOR
DEAD LOAD	104 (DL1) 66 (DL2)	138 (DL1) 53 (DL2)
LIVE LOAD (MAX.)	+ 216	211
IMPACT	+ 65	63
LIVE LOAD (MIN.)	- 24	- 24
IMPACT	- 14	- 14
TOTAL (MAX.)	+ 451	+ 465
TOTAL (MIN.)	+ 132	+ 153
TOTAL STRESS (MAX.)	19.1 (STEEL), 0.86 (CONC.)	22.4 (STEEL), 0.48 (CONC.)
TOTAL STRESS (MIN.)	6.5	8.9
ALLOWABLE STRESS	27.0	27.0
STRESS RANGE	12.6	~~13.5~~ 12.2
ALLOWABLE STRESS RANGE **	~~24.0~~ 13.0	~~24.0~~ 13.0
SECTIONS USED	W 27 X 84 (COMPOSITE BEAM)	W 27 X 84 (COMPOSITE BEAM)
SECTION MODULUS - GROSS	STEEL ONLY: 213 (T) 213 (B); n = 30: 9,930 (CONC) 288 (B); n = 10: 6,640 (CONC) 327 (B)	STEEL ONLY: 205 (T) 184 (B); n = 30: 12,180 (CONC) 267 (B); n = 10: 8,260 (CONC) 300 (B)
SECTION MODULUS - NET		
DL CAMBER AT ℄ SPAN	0.5	0.5

APPROACH SPAN CAMBER

	G1 TO G3	G4 & G5	G6	G7
DEAD LOAD CAMBER AT ℄ SPAN (IN.)	—	0.06	0.09	0.13

PREL. TRACING GR & AG DESIGN WWC CHKD WWC

CONTRACT	COUNTY	FEDERAL AID PROJECT Nº	SHEET Nº	TOTAL SHEETS
82-073-05	SUSSEX	BRF-1009(3)	79	155

BASCULE SPAN GIRDER DETAILS I

HARDESTY & HANOVER CONSULTING ENGINEERS NEW YORK, N.Y.

REVISIONS: ADDENDUM Nº2 C.H.H. 9-21-84 — 1-Revisions Made As Per H.H. Letter Dated 4-25-85 S.Z. 4-25-85

GR DESIGN WWC CHKD. WWC PREL. TRACING

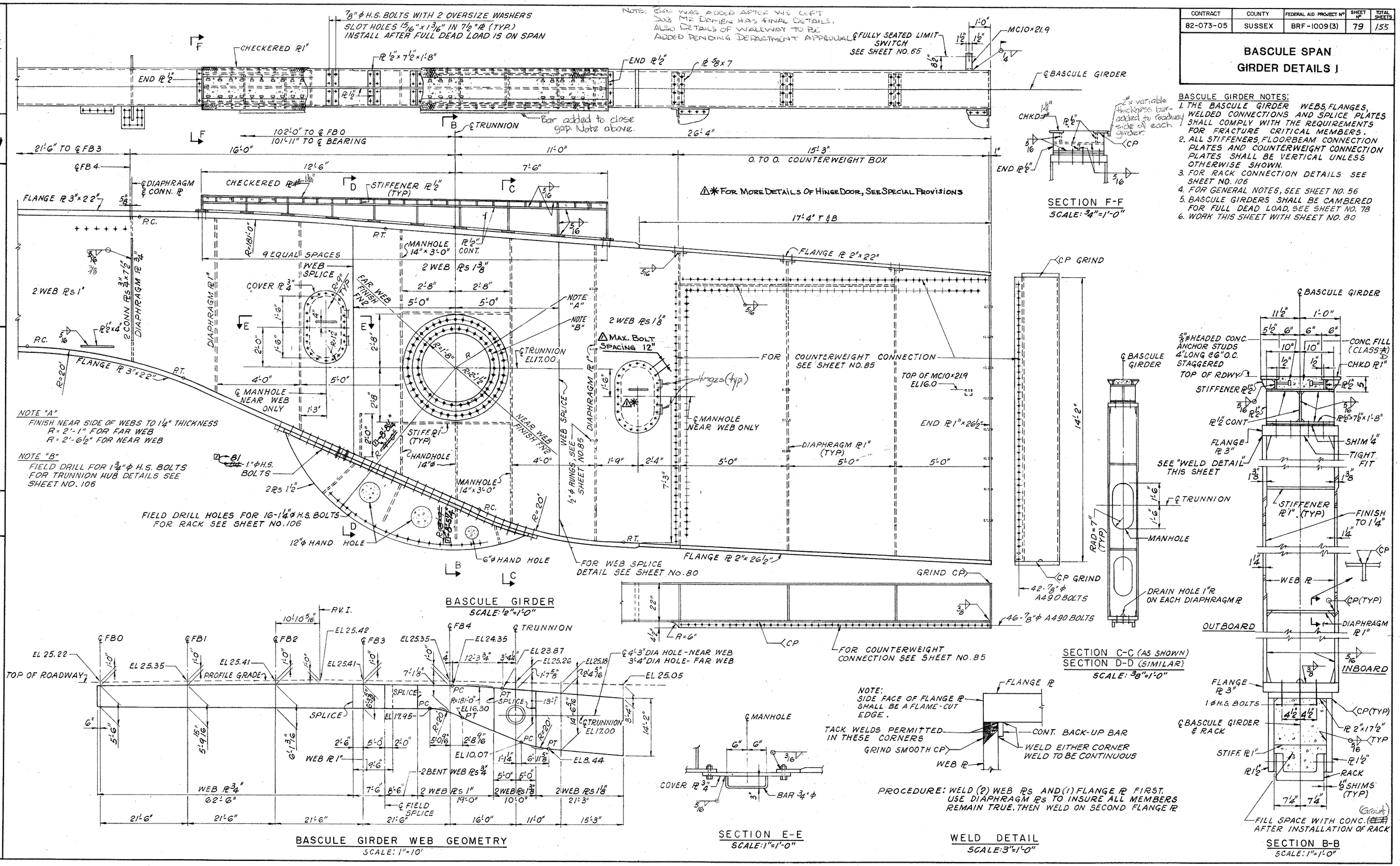

CONTRACT	COUNTY	FEDERAL AID PROJECT Nº	SHEET Nº	TOTAL SHEETS
82-073-05	SUSSEX	BRF-1009(3)	80	155

BASCULE SPAN GIRDER DETAILS II

NOTES:
1. FOR BASCULE GIRDER NOTES SEE SHEET NO. 79
2. SCALE: 1/2"=1'-0" UNLESS OTHERWISE NOTED
3. WORK THIS SHEET WITH SHEET NO. 79

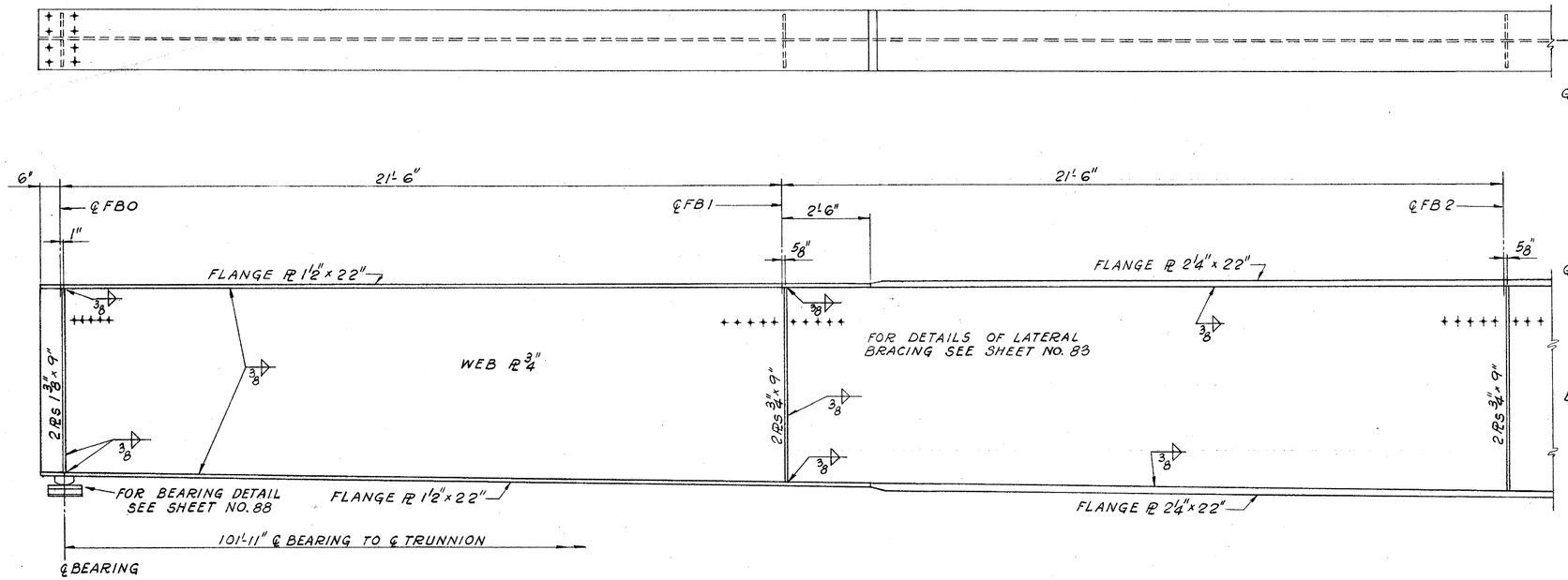

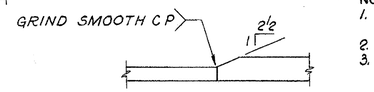

FLANGE TRANSITION SPLICE
NO SCALE

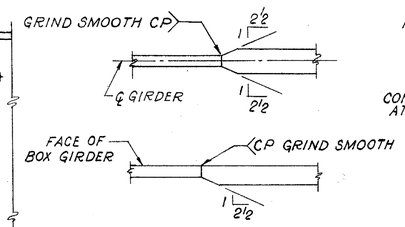

TYPICAL WEB SPLICE
NO SCALE

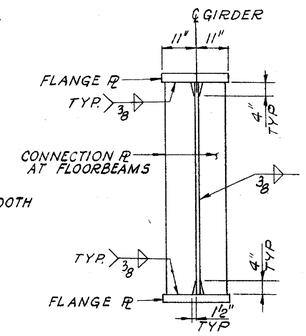

TYPICAL GIRDER SECTION

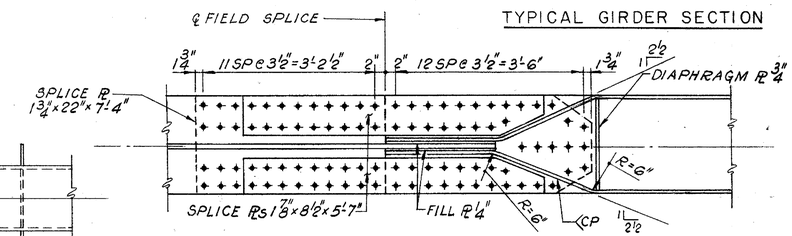

NOTE: ALL BOLTS AT FIELD SPLICE SHALL BE 1 1/8"-A490 FRICTION TYPE BOLTS

FIELD FLANGE SPLICE
SECTION A-A
(BOTTOM FLANGE SHOWN. TOP FLANGE SIMILAR)
SCALE: 3/4"=1'-0"

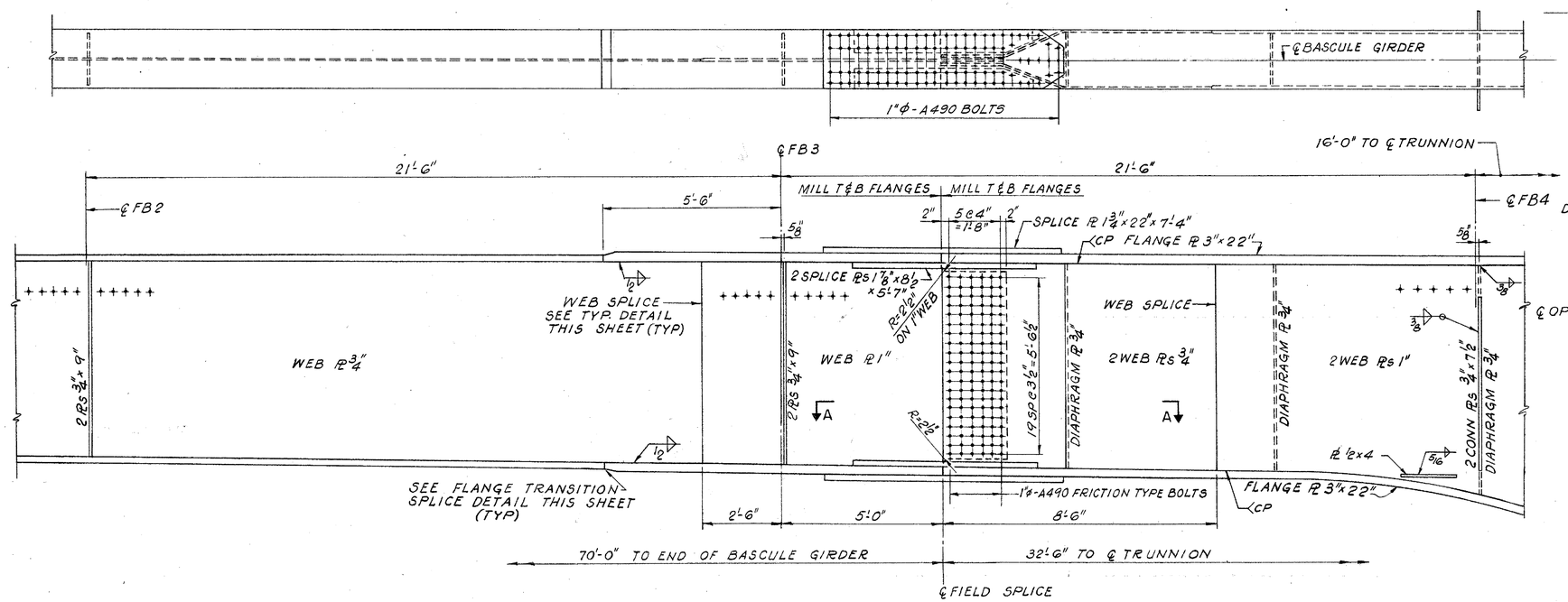

BASCULE GIRDER

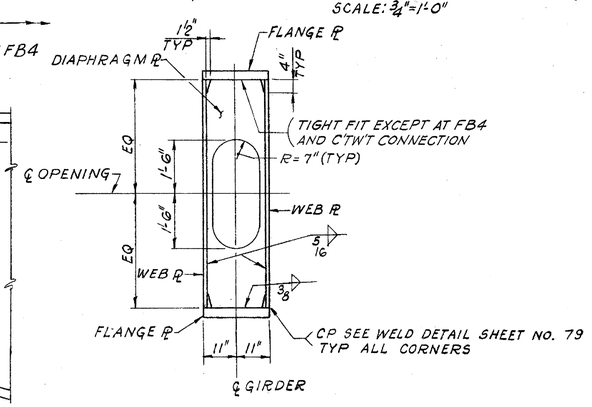

TYPICAL BOX GIRDER SECTION

HARDESTY & HANOVER
CONSULTING ENGINEERS
NEW YORK, N.Y.

REVISIONS

PREL. TRACING GR DESIGN WWC CHKD. WWC

HARDESTY & HANOVER CONSULTING ENGINEERS NEW YORK, N.Y.

REVISIONS

CONTRACT	COUNTY	FEDERAL AID PROJECT Nº	SHEET Nº	TOTAL SHEETS
82-073-05	SUSSEX	BRF-1009(3)	81	155

BASCULE SPAN
FLOORBEAMS FB0 THRU FB3

NOTES:
1. FLOORBEAMS SHALL BE VERTICAL WITH LEAF IN CLOSED POSITION.
2. ALL STRUCTURAL STEEL SHALL BE A572 GRADE 50 UNLESS OTHERWISE NOTED.
3. FOR GENERAL NOTES SEE SHEET NO. 56

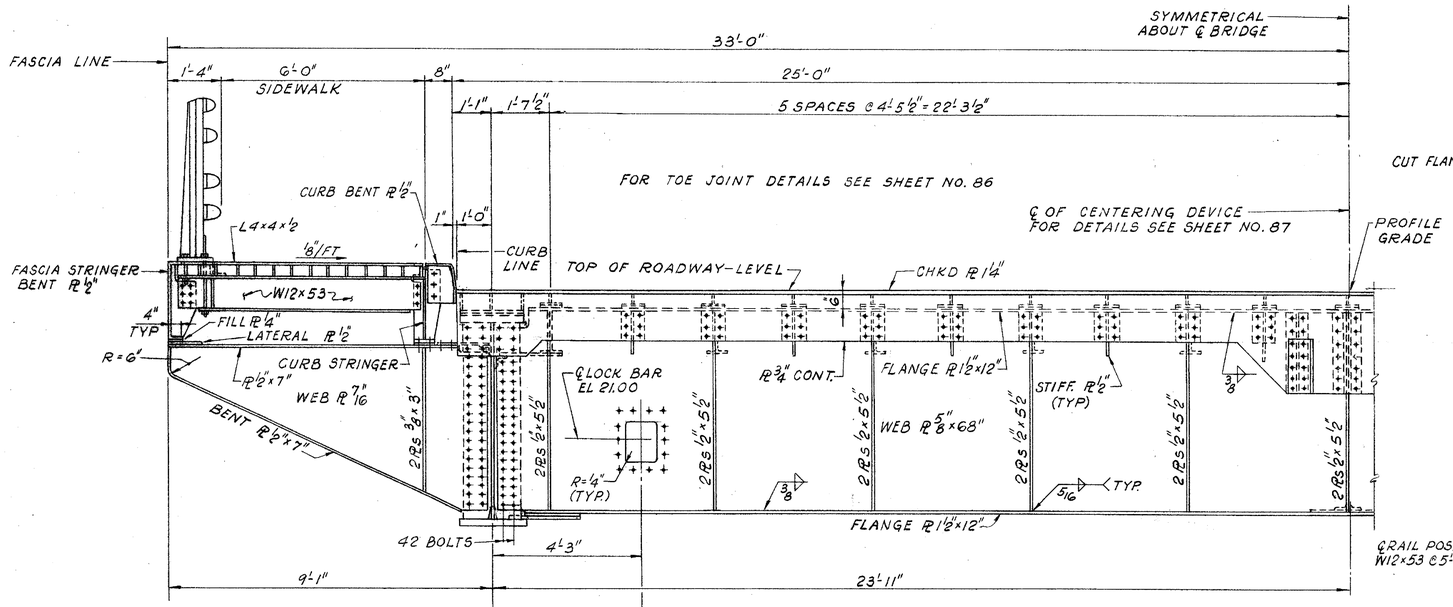

FB0
SCALE: ½" = 1'-0"

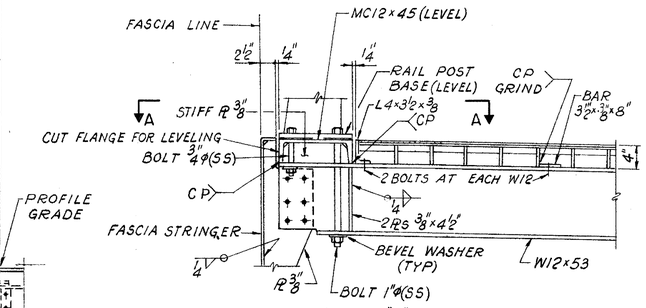

DETAIL "A"
SCALE: 1" = 1'-0"

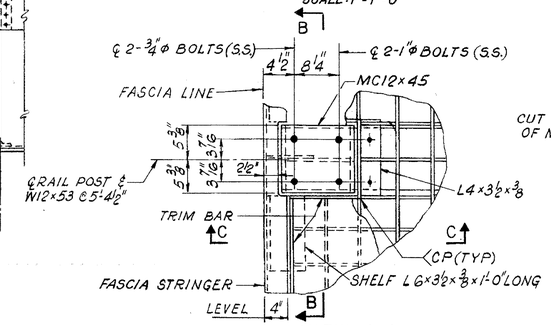

VIEW A-A
SCALE: 1" = 1'-0"

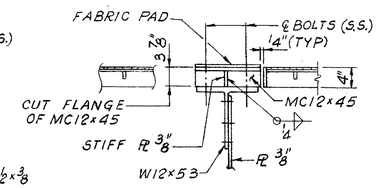

SECTION B-B
SCALE: 1" = 1'-0"

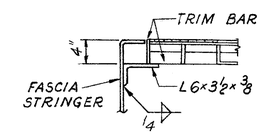

SECTION C-C
SCALE: 1" = 1'-0"

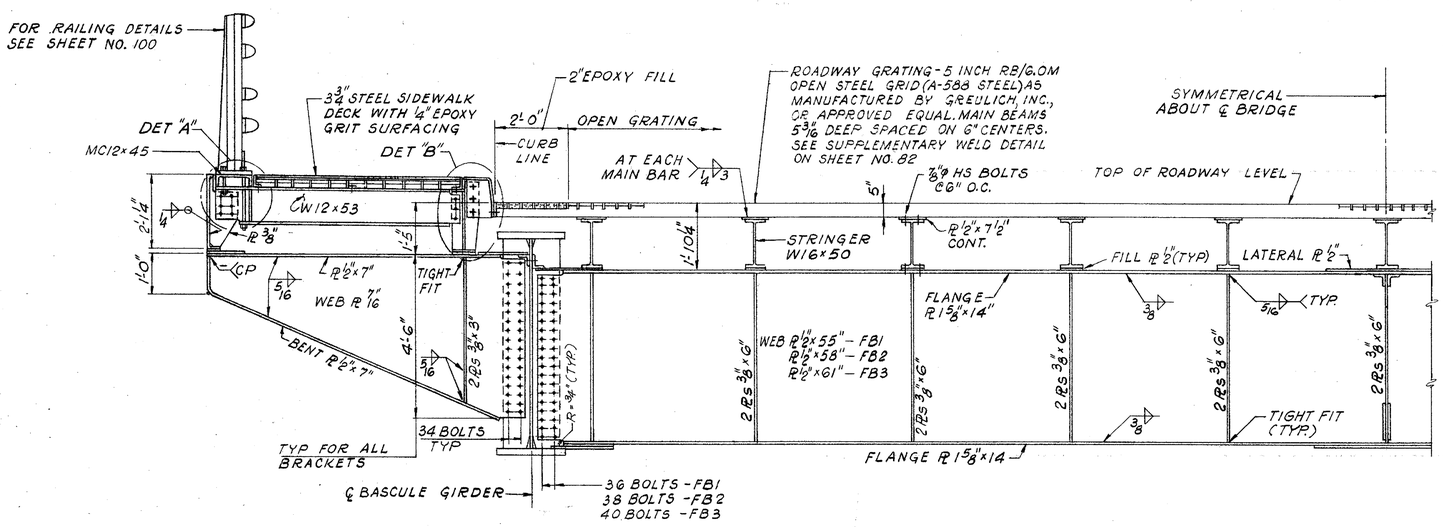

FB1, FB2, AND FB3
SCALE: ½" = 1'-0"

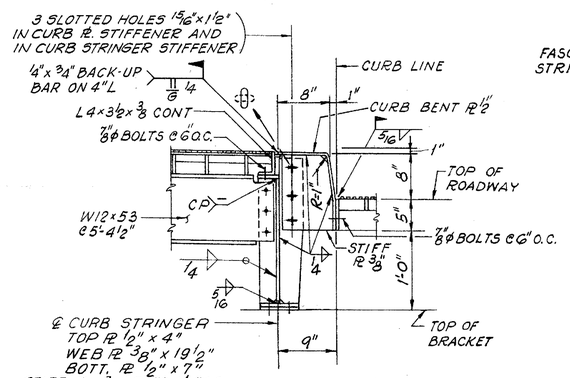

DETAIL "B"
SCALE: 1" = 1'-0"

PREL. TRACING GR DESIGN WWC CHKD. WWC

40389

CONTRACT	COUNTY	FEDERAL AID PROJECT Nº	SHEET Nº	TOTAL SHEETS
82-073-05	SUSSEX	BRF-1009(3)	82	155

BASCULE SPAN
FLOORBEAM FB4

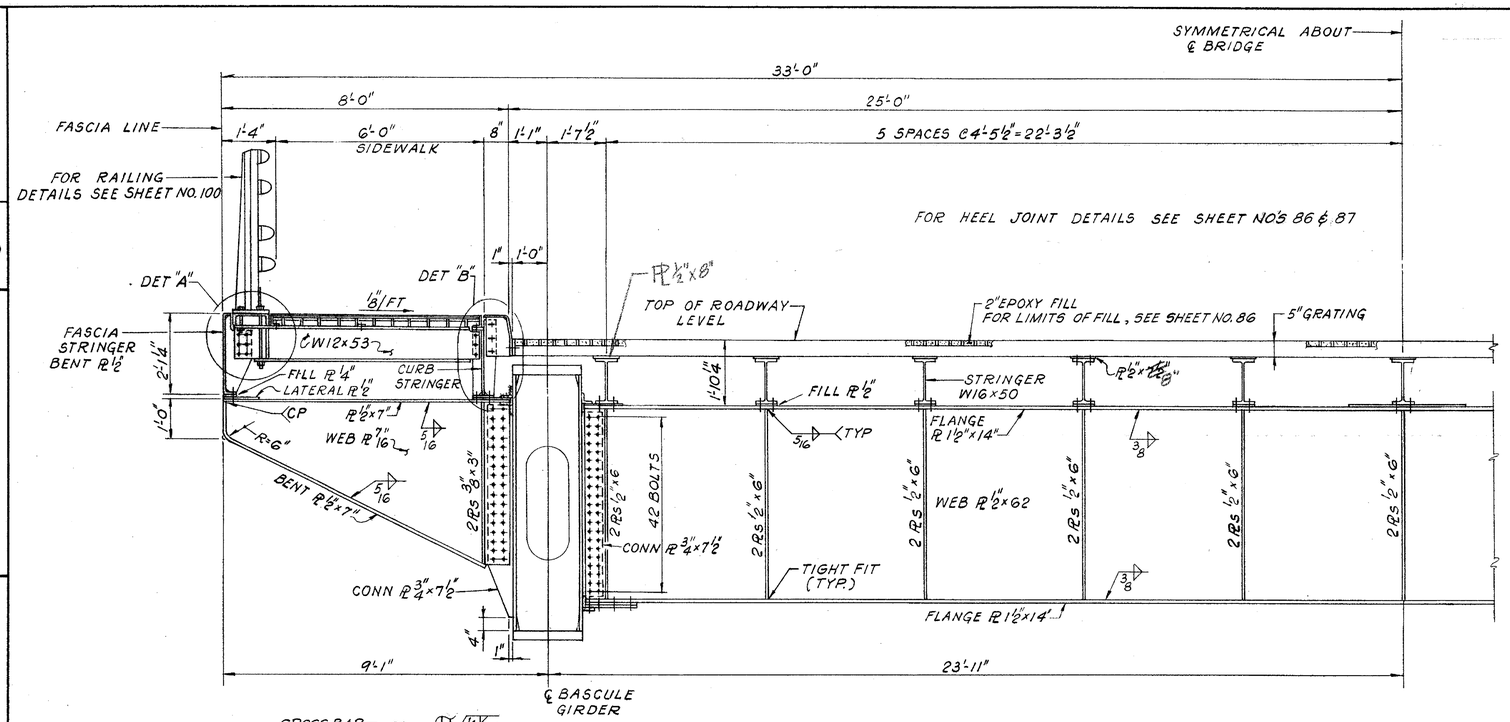

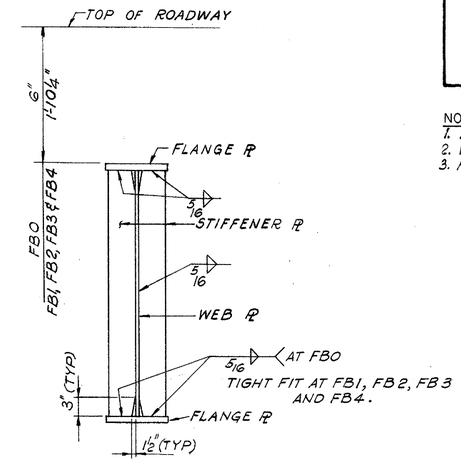

TYPICAL FLOORBEAM SECTION

FB 4
SCALE: ½" = 1'-0"

NOTES:
1. FOR NOTES SEE SHEET NO. 81
2. WORK THIS DWG WITH SHEET NO. 81
3. FOR GENERAL NOTES SEE SHEET NO. 56

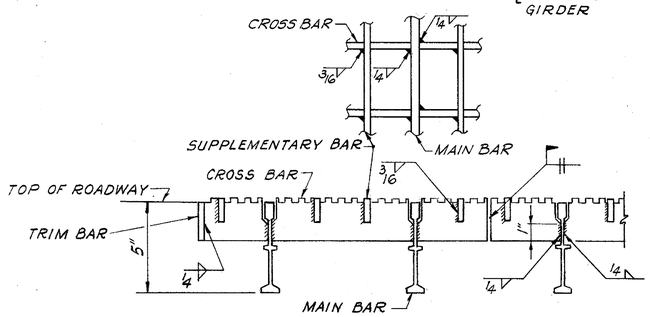

TYPICAL SUPPLEMENTARY WELD
FOR ROADWAY GRATING
NOT TO SCALE

NOTE:
WELDING SHOWN ABOVE IS IN ADDITION TO MANUFACTURERS STANDARD WELDING INCLUDING PUDDLE WELDS.

HARDESTY & HANOVER
CONSULTING ENGINEERS
NEW YORK, N.Y.

REVISIONS

PREL. TRACING GR DESIGN WWC CHKD. WWC

CONTRACT	COUNTY	FEDERAL AID PROJECT Nº	SHEET Nº	TOTAL SHEETS
82-073-05	SUSSEX	BRF-1009(3)	83	155

BASCULE SPAN LATERAL BRACING

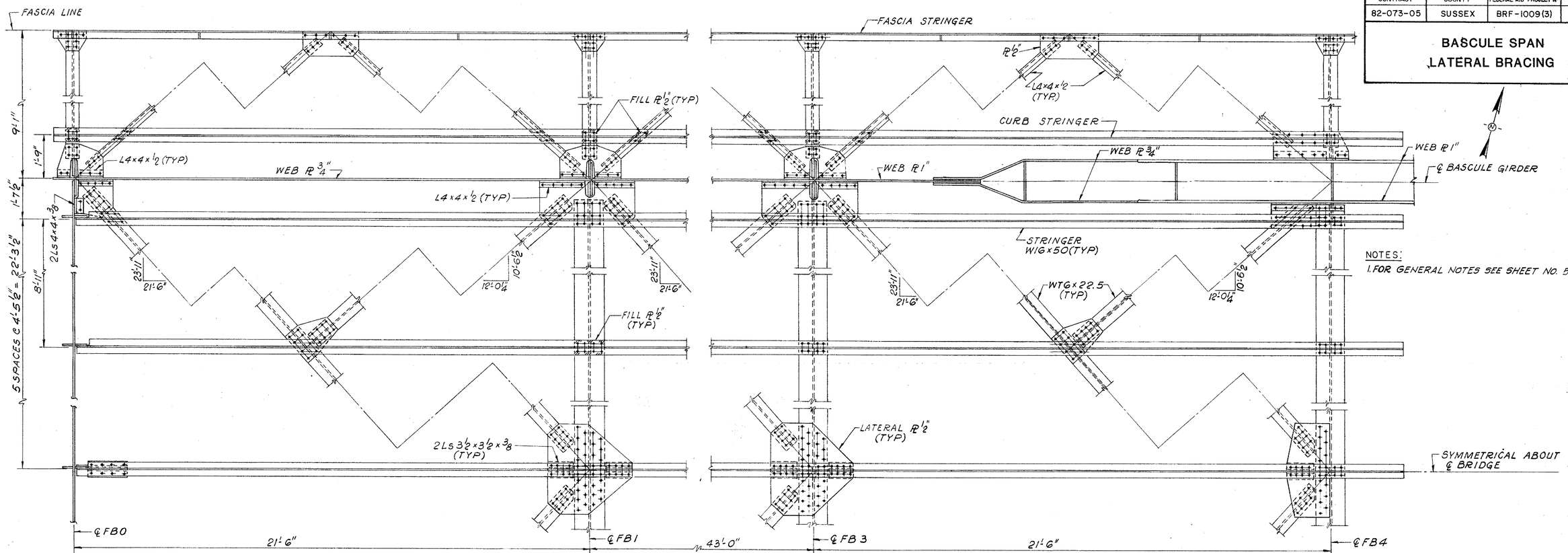

PLAN OF TOP LATERAL BRACING

SCALE: 1/2" = 1'-0"

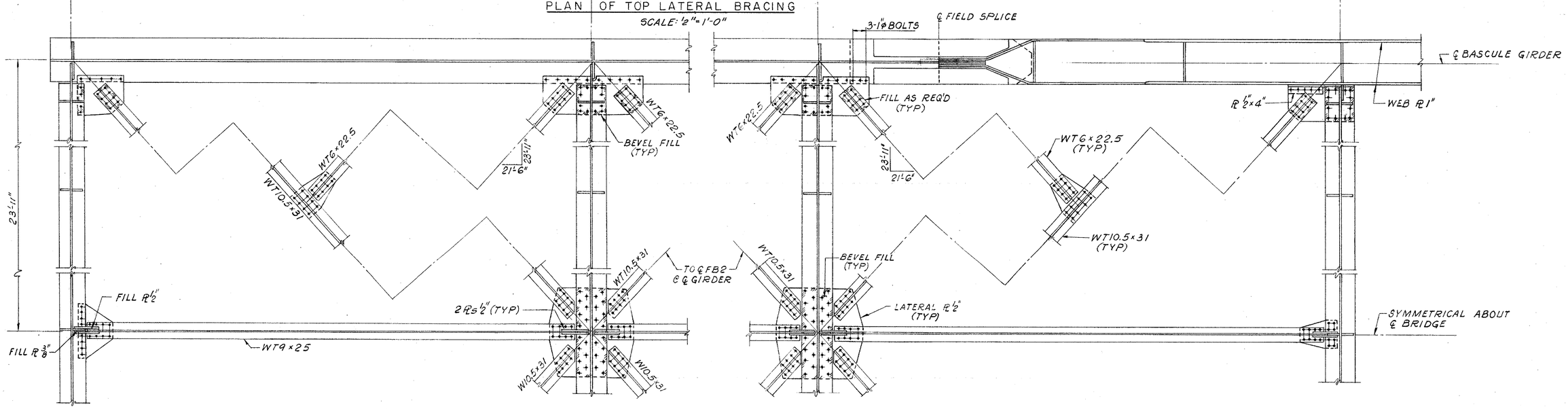

PLAN OF BOTTOM LATERAL BRACING

SCALE: 1/2" = 1'-0"

NOTES:

1. FOR GENERAL NOTES SEE SHEET NO. 56

HARDESTY & HANOVER CONSULTING ENGINEERS NEW YORK, N.Y.

REVISIONS

DESIGN WWC CHKD. WWC

FREL. TRACING GR

40380

HARDESTY & HANOVER
CONSULTING ENGINEERS
NEW YORK, N.Y.

CONTRACT	COUNTY	FEDERAL AID PROJECT Nº	SHEET Nº	TOTAL SHEETS
82-073-05	SUSSEX	BRF-1009(3)	84	155

BASCULE SPAN
LONGITUDINAL BRACING

NOTES:
1. FOR GENERAL NOTES SEE SHEET NO. 56
2. ALL BOLTS TO BE 7/8" ϕ H.S. BOLTS UNLESS OTHERWISE NOTED.

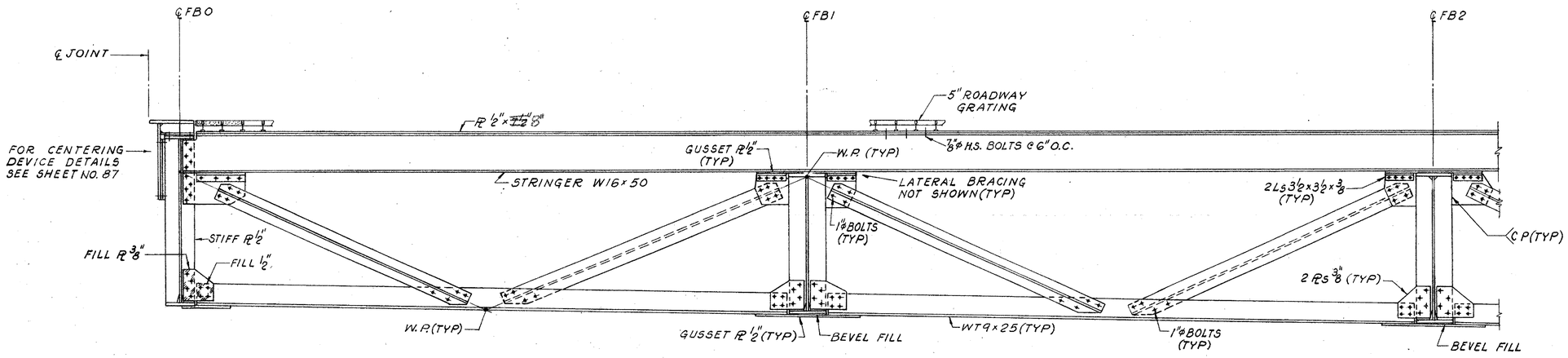

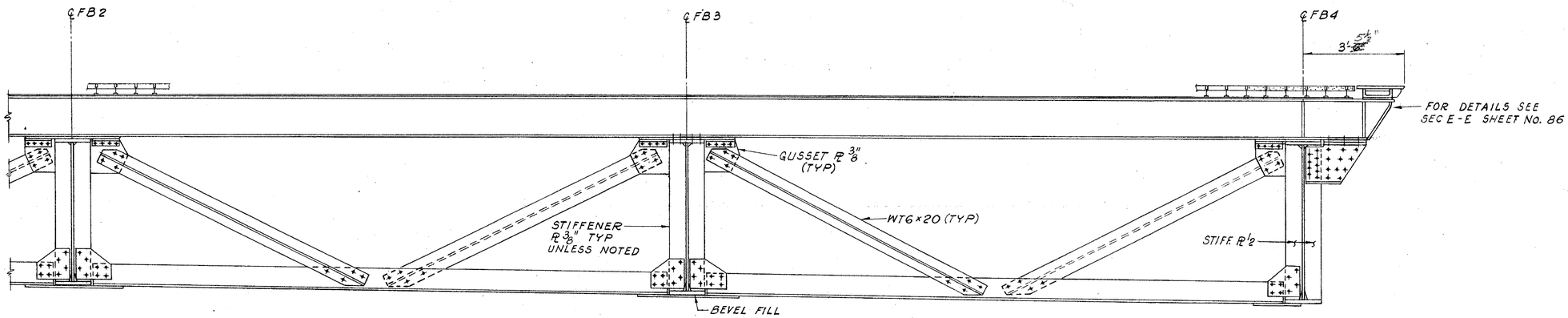

LONGITUDINAL BRACING

SCALE 1/2" = 1'-0"

REVISIONS

PREL. TRACING GR DESIGN WWC CHKD. WWC

40389

CONTRACT	COUNTY	FEDERAL AID PROJECT Nº	SHEET Nº	TOTAL SHEETS
82-073-05	SUSSEX	BRF-1009(3)	85	155

BASCULE SPAN
COUNTERWEIGHT DETAILS

NOTES:

1. FOR GENERAL NOTES, SEE SHEET NO. 56
2. FOR BALANCE OF LEAF, SEE SHEET NO. 78
3. FOR BASCULE GIRDER DETAILS, SEE SHEET NO. 79
4. FOR ACCESS PLATFORMS, SEE SHEET NO. 89
5. ALL BOLTS TO BE 7/8" ϕ A325 EXCEPT WHERE A490 BOLTS AS INDICATED.

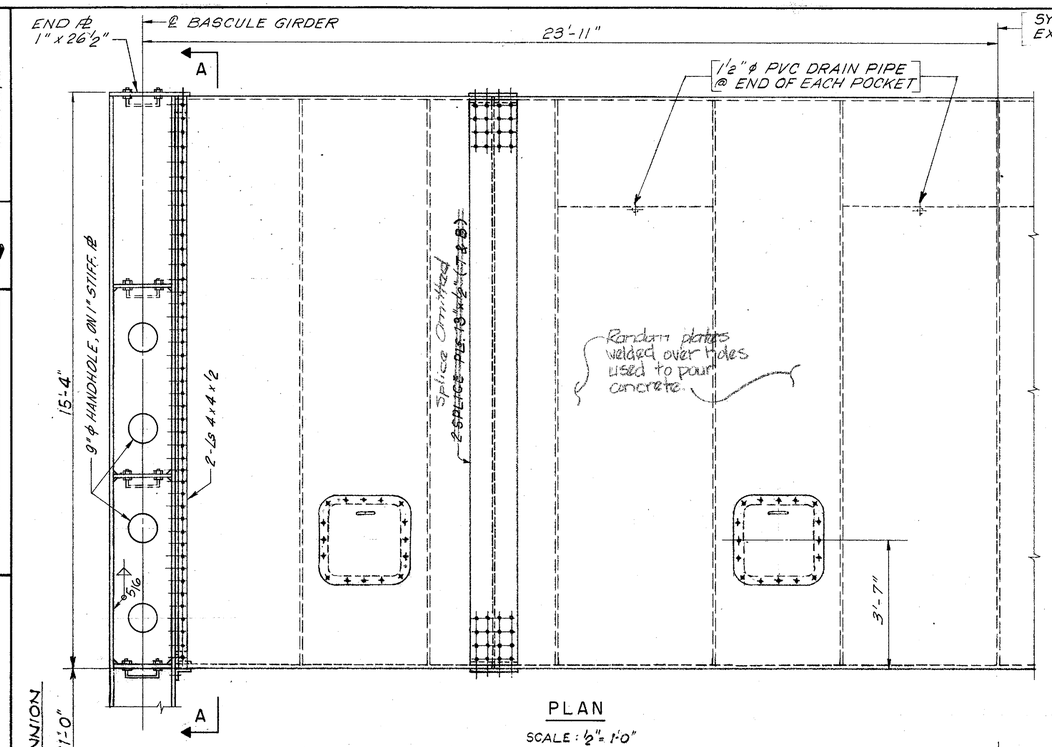

PLAN

SCALE: 1/2" = 1'-0"

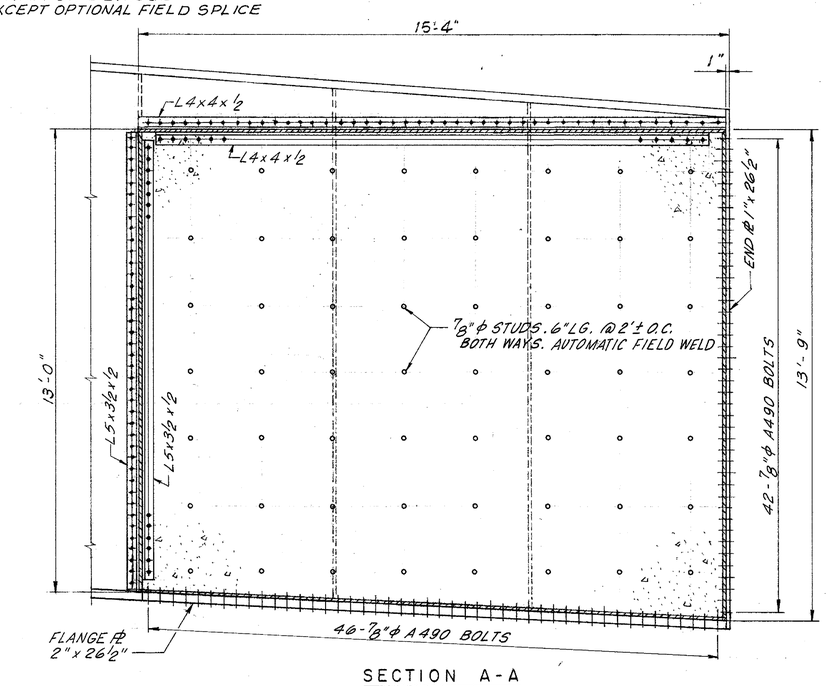

SECTION A-A

(CONN. TO BASCULE GIRDER)

SCALE: 1/2" = 1'-0"

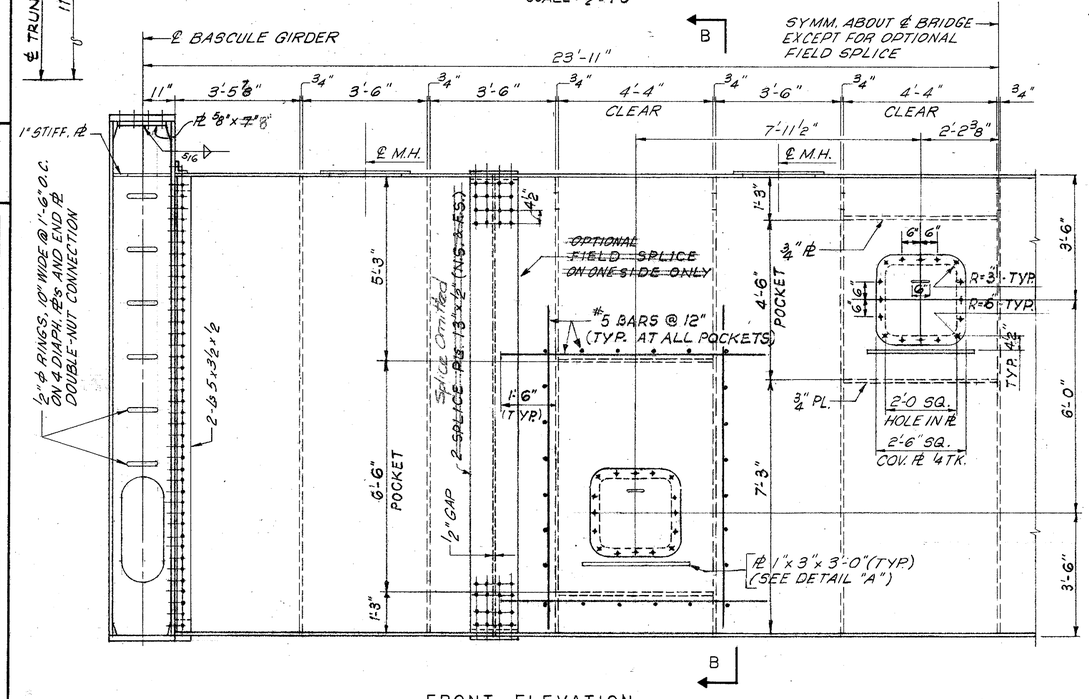

FRONT ELEVATION

SCALE: 1/2" = 1'-0"

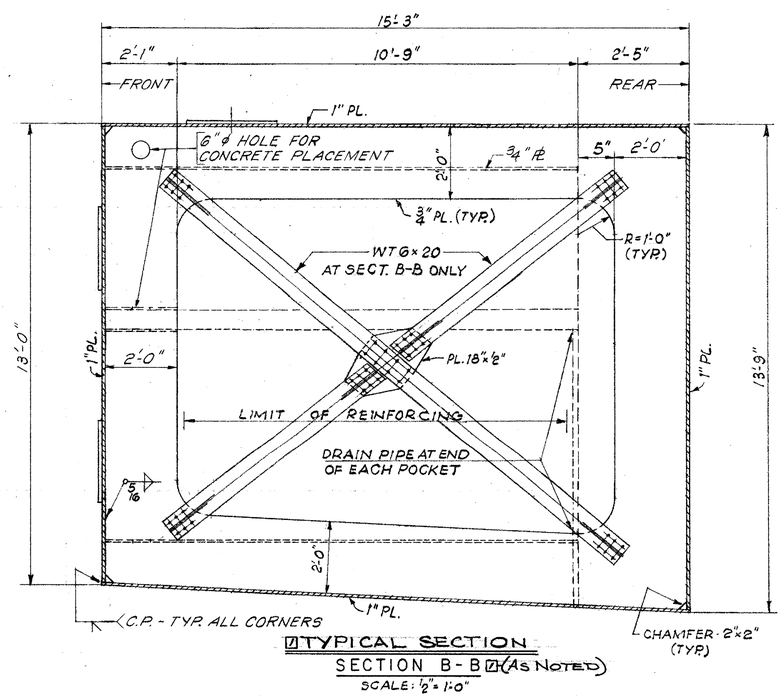

TYPICAL SECTION

SECTION B-B (AS NOTED)

SCALE: 1/2" = 1'-0"

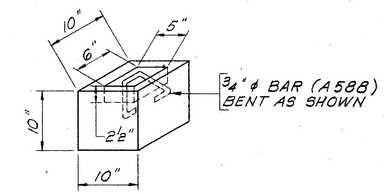

CONCRETE BALANCING BLOCK

SCALE: 1" = 1'-0"

WEIGHT ONE BLOCK = 80 LBS.

NO. REQUIRED: TO BALANCE = ~~580~~ 585

SPARE = ~~120~~ 285

TOTAL = ~~700~~ 870 △1

81* 690 180 *

*Pending Change

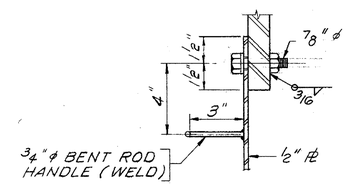

MANHOLE COVER DETAIL

SCALE: 3" = 1'-0"

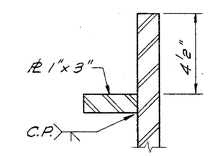

DETAIL "A"

SCALE: 3" = 1'-0"

HARDESTY & HANOVER CONSULTING ENGINEERS NEW YORK, N.Y.

REVISIONS

△1 POSSIBLY #2 CORRECTED NUMBER OF BALANCE BLOCKS. JRS 3/30/84

△2 REVISED SECTION B-B 8-30-84 T.F.F.

PREL. TRACING GR DESIGN WWC CHKD. WWC

CONTRACT	COUNTY	FEDERAL AID PROJECT Nº	SHEET Nº	TOTAL SHEETS
82-073-05	SUSSEX	BRF-1009(3)	86	155

DECK JOINT PLAN AND DETAILS

NOTES:
1. FOR GENERAL NOTES SEE SHEET NO. 56
2. WORK THIS SHEET WITH SHEET NO. 87

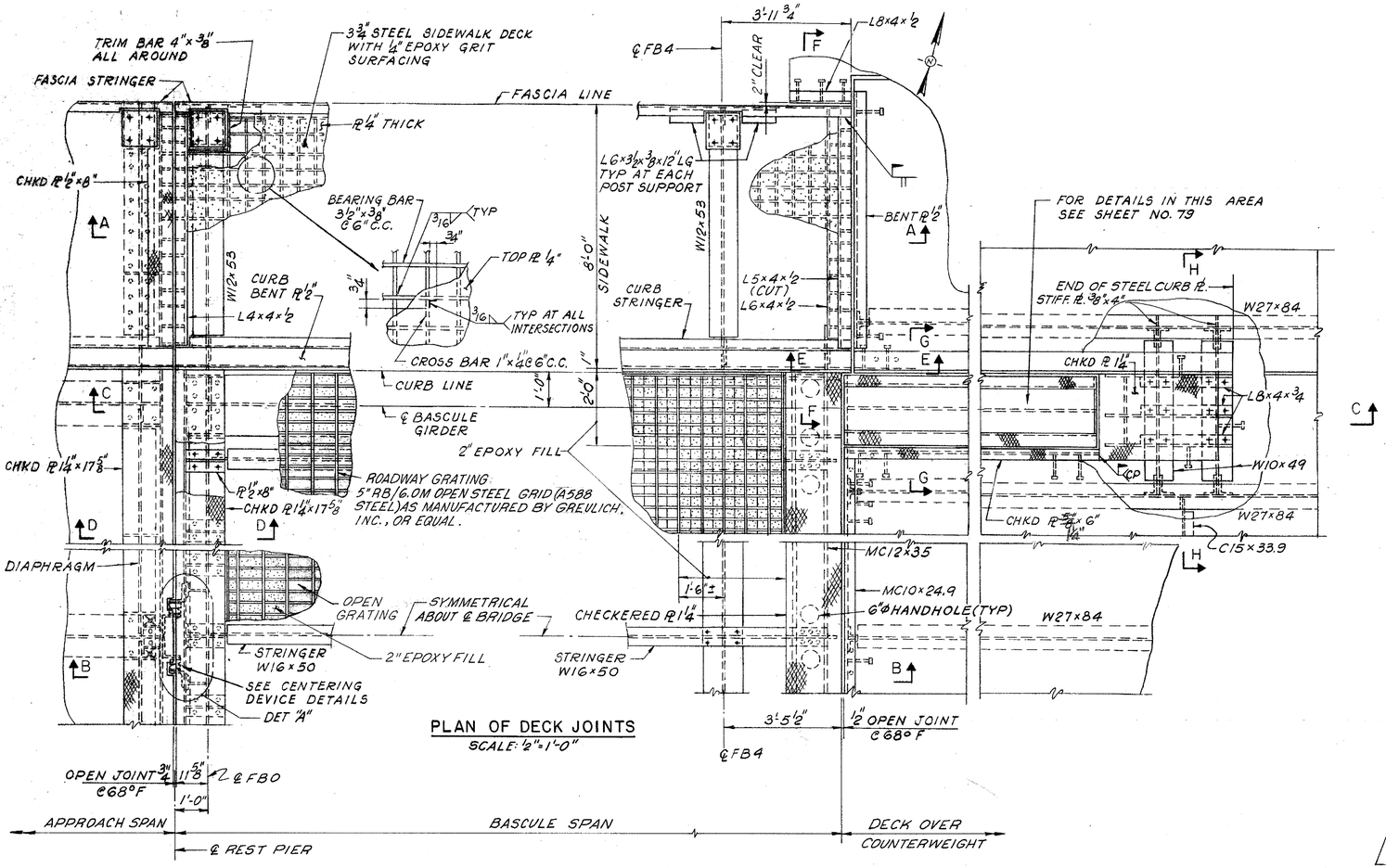

PLAN OF DECK JOINTS
SCALE: 1/2"=1'-0"

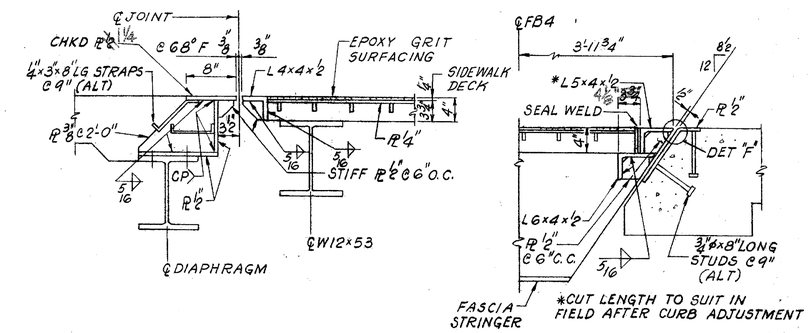

SECTION A-A
SCALE: 1"=1'-0"

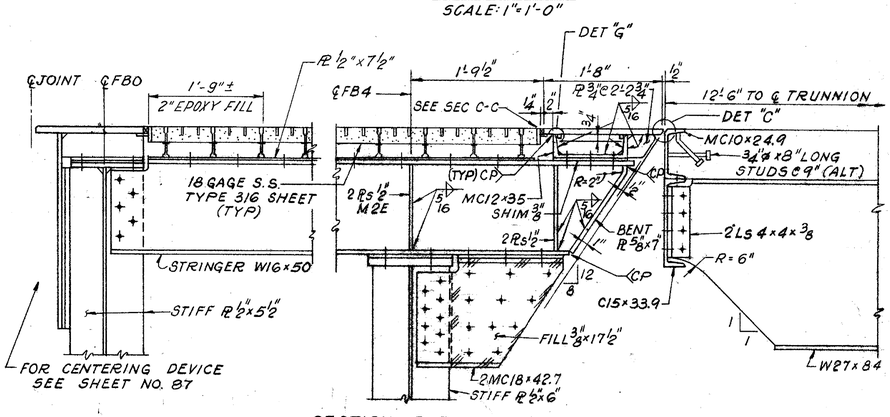

SECTION B-B
SCALE: 1"=1'-0"

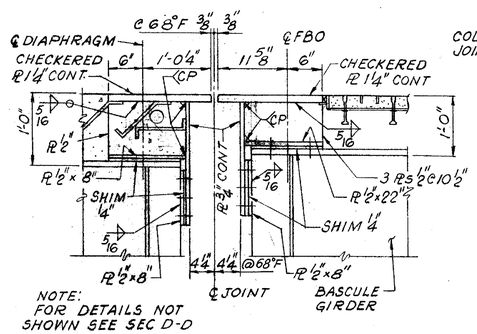

NOTE: FOR DETAILS NOT SHOWN SEE SEC D-D

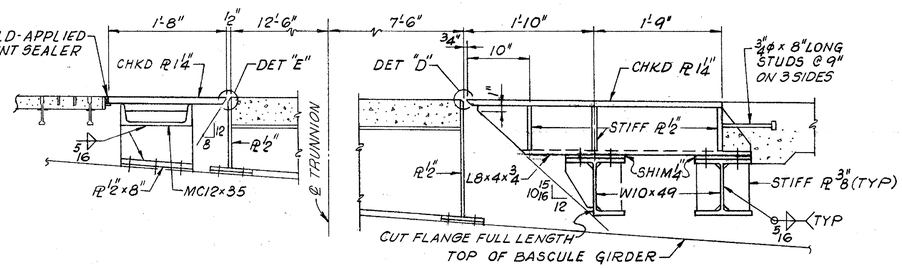

SECTION C-C
SCALE: 1"=1'-0"

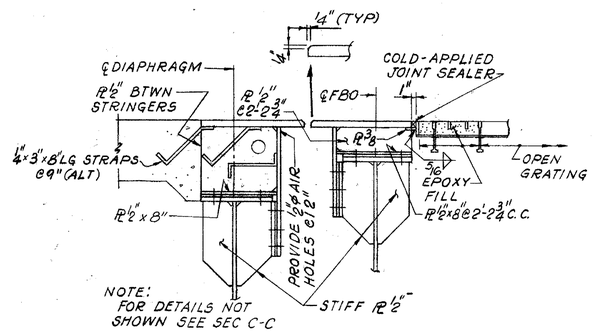

NOTE: FOR DETAILS NOT SHOWN SEE SEC C-C

SECTION D-D
SCALE: 1"=1'-0"

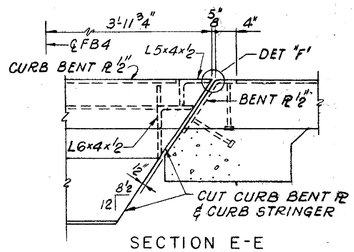

SECTION E-E
SCALE: 1"=1'-0"

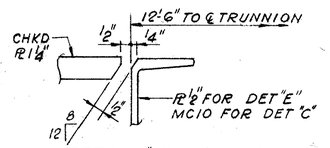

DETAIL "C" (AS SHOWN)
DETAIL "E" (AS NOTED)
SCALE: 3"=1'-0"

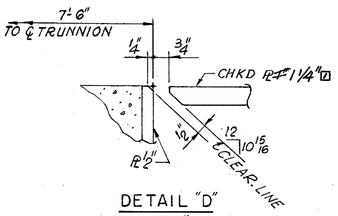

DETAIL "D"
SCALE: 3"=1'-0"

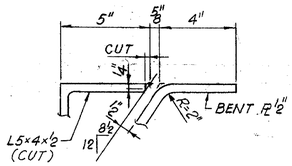

DETAIL "F"
SCALE: 3"=1'-0"

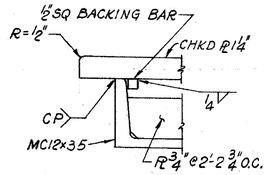

DETAIL "G"
SCALE: 3"=1'-0"

HARDESTY & HANOVER CONSULTING ENGINEERS NEW YORK, N.Y.

REVISIONS
10- REVISION IN DETAIL "D" 11-5-84 T.S.F.

GR DESIGN WWC CHKD WWC

PREL. TRACING

4.0399

CONTRACT	COUNTY	FEDERAL AID PROJECT Nº	SHEET Nº	TOTAL SHEETS
82-073-05	SUSSEX	BRF-1009(3)	87	155

CENTERING DEVICE AND MISCELLANEOUS DETAILS

NOTE:
WORK THIS SHEET WITH SHEET NO. 86

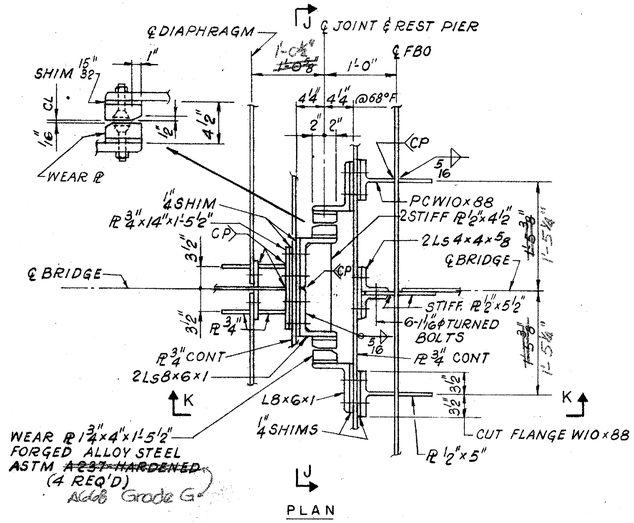

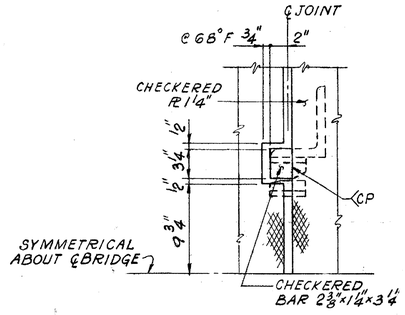

DETAIL "A"
SCALE: 1"=1'-0"

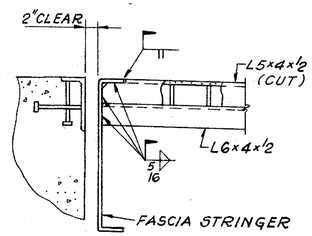

SECTION F-F
SCALE: 1"=1'-0"

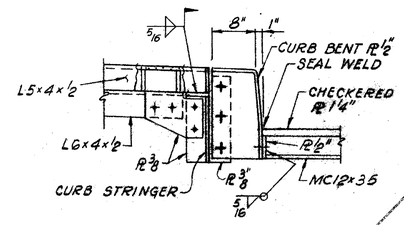

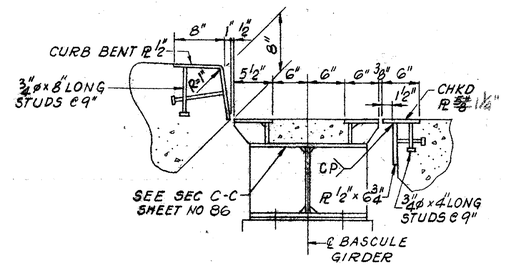

SECTION G-G
SCALE: 1"=1'-0"

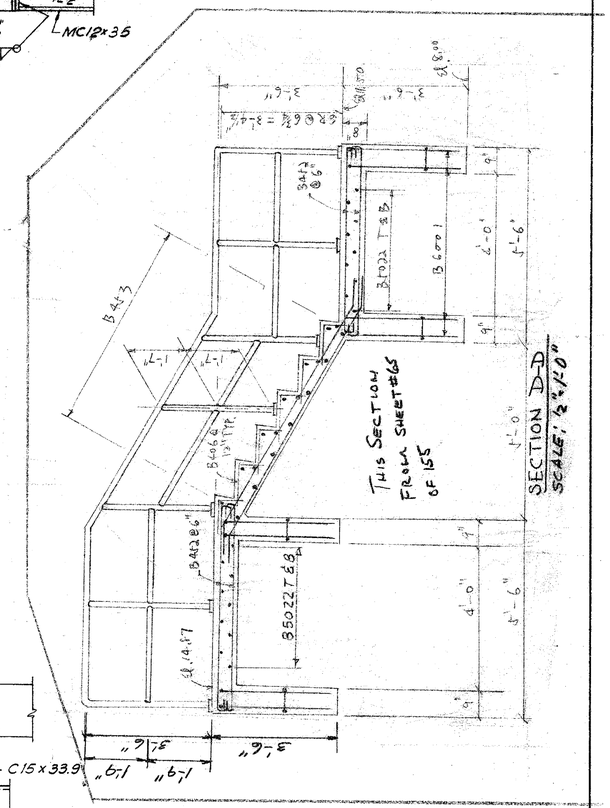

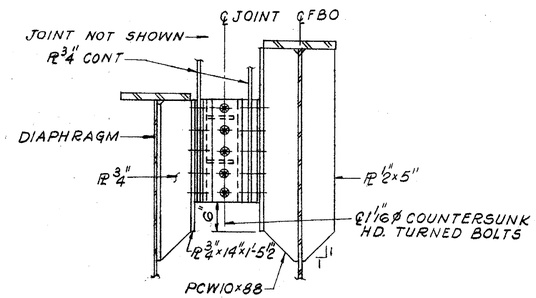

SECTION K-K

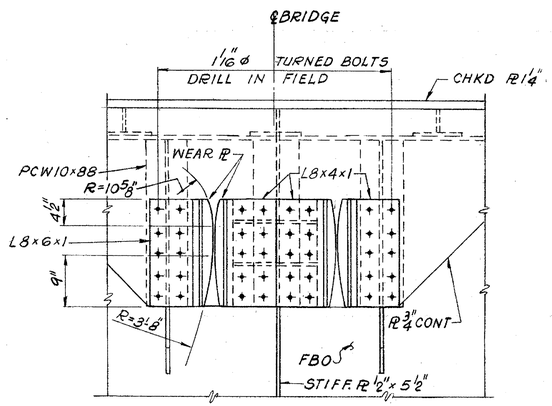

SECTION J-J

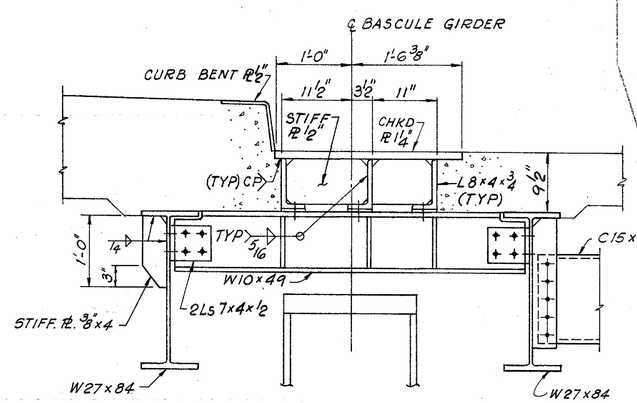

SECTION H-H
SCALE: 1"=1'-0"

CENTERING DEVICE DETAILS
SCALE: 1"=1'-0"

HARDESTY & HANOVER CONSULTING ENGINEERS NEW YORK, N.Y.

REVISIONS

PREL. TRACING GR DESIGN WWC CHKD WWC

CONTRACT	COUNTY	FEDERAL AID PROJECT Nº	SHEET Nº	TOTAL SHEETS
82-073-05	SUSSEX	BRF-1009(3)	68	155

DECK OVER COUNTERWEIGHT STRUCTURAL AND BEARING DETAILS

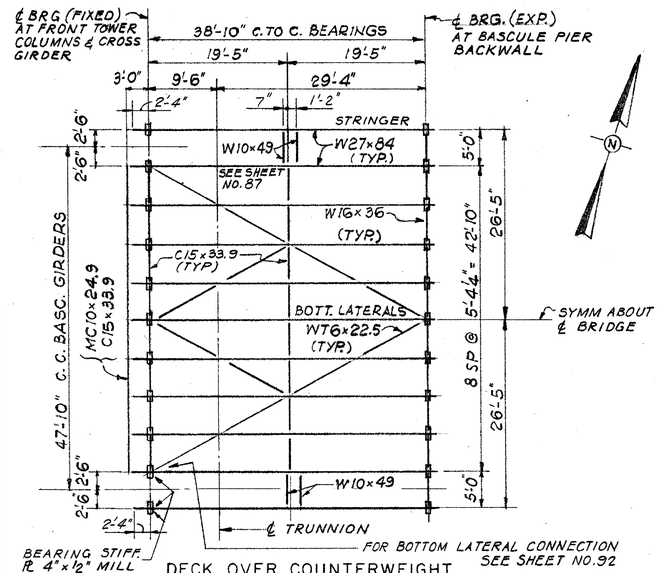

DECK OVER COUNTERWEIGHT

FRAMING PLAN

SCALE 1" = 10'

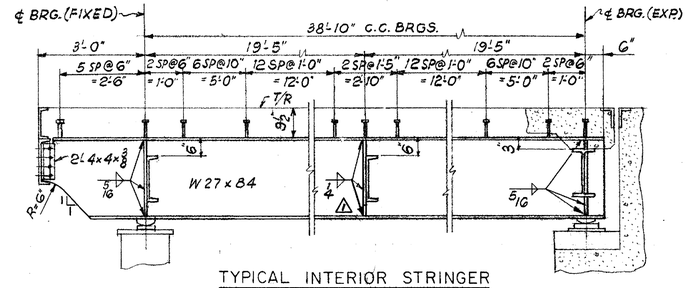

TYPICAL INTERIOR STRINGER

SCALE ½" = 1'-0"

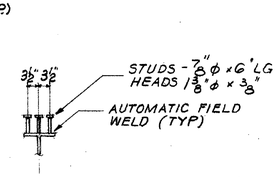

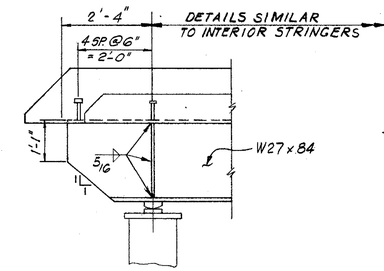

FASCIA STRINGER END DETAIL

SCALE ½" = 1'-0"

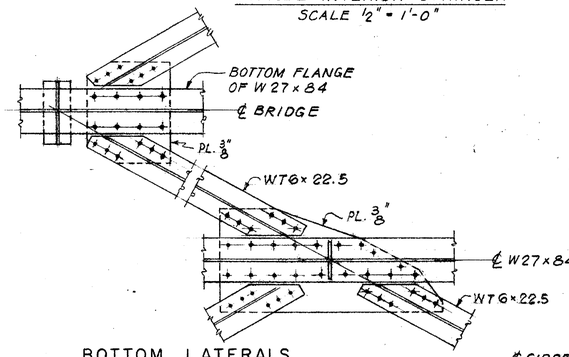

BOTTOM LATERALS

SCALE ¾" = 1'-0"

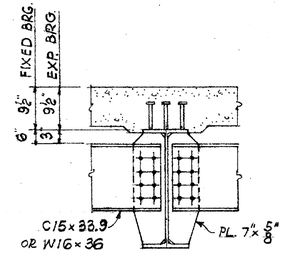

DIAPHRAGM AT BEARINGS

SCALE ¾" = 1'-0"

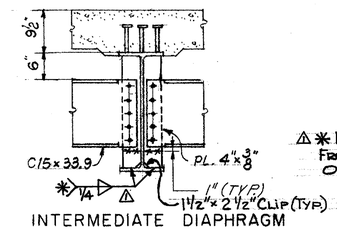

INTERMEDIATE DIAPHRAGM

SCALE ¾" = 1'-0"

⚠ ✱ END WELD AT ¼" ± ⅛" FROM END OF PLATE OR FLANGE.

NOTES:

1. FOR GENERAL NOTES SEE SHT. NO. 56.
2. FILL HOLES AROUND ANCHOR BOLTS WITH NON-HARDENING CAULKING COMPOUND OR ELASTIC JT. SEALER.
3. FINISHED SURFACES SHALL BE COATED WITH A MULTIPURPOSE GREASE BEFORE SHIPMENT WHICH SHALL BE REMOVED WITH A SOLVENT PRIOR TO ERECTION.
4. ALL BEARINGS SHALL BE SHOP ASSEMBLED AND MATCH MARKED TO ENSURE PROPER FIT.
5. ANCHOR BOLTS SHALL HAVE HEX HEAD NUT AND WASHER. AT FIXED BEARINGS, NUT IS TO BE FINGER TIGHT, THEN BACKED OFF ¼ TURN. BURR THREADS AT FACE OF NUT.
6. SEE SPECIAL PROVISIONS FOR BEARING MATERIALS.

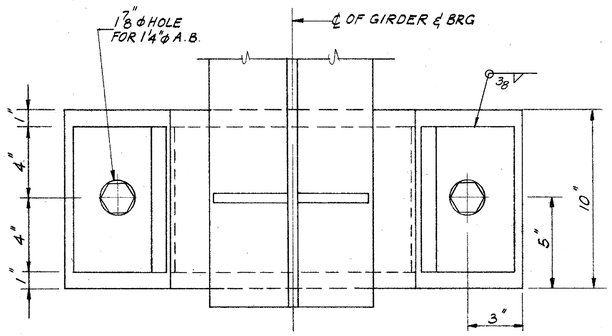

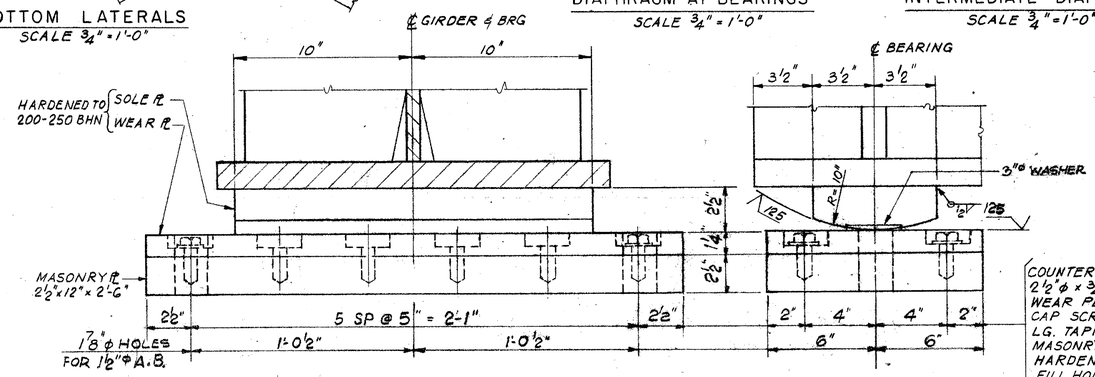

COUNTERBORE HOLES 2½" ϕ × ¾" DEEP IN WEAR PL FOR A325 ¾" CAP SCREWS ¾" ϕ × 1¾" LG. TAPPED HOLE IN MASONRY PLATE. HARDENED WASHER. FILL HOLE WITH SEALER

BEARING AT TOE OF BASCULE GIRDER

SCALE 3" = 1'-0"

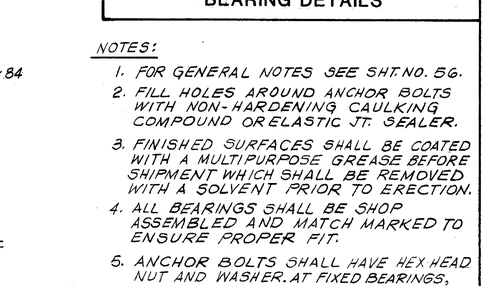

ANCHOR BOLT DETAIL

SCALE 3" = 1'-0"

NOTE: ANCHOR BOLTS, CIRCULAR WASHERS AND NUTS SHALL BE A307 (GALVANIZED)

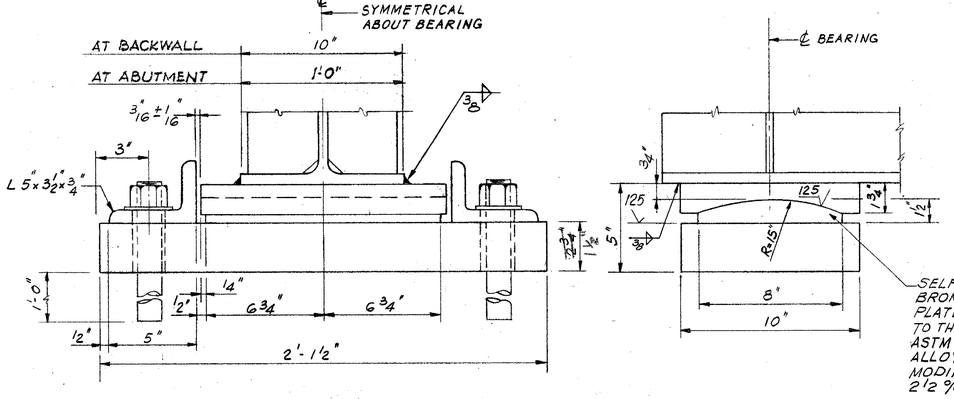

SELF LUBRICATING BRONZE BEARING PLATES SHALL CONFORM TO THE REQUIREMENTS OF ASTM B-22, COPPER ALLOY UNS C90500 MODIFIED WITH UP TO 2½% LEAD MAXIMUM.

EXPANSION BEARING AT BACKWALL AND ABUTMENT

SCALE 3" = 1'-0"

NOTE: ALL COMPONENTS TO BE IN LINE AT 68°F

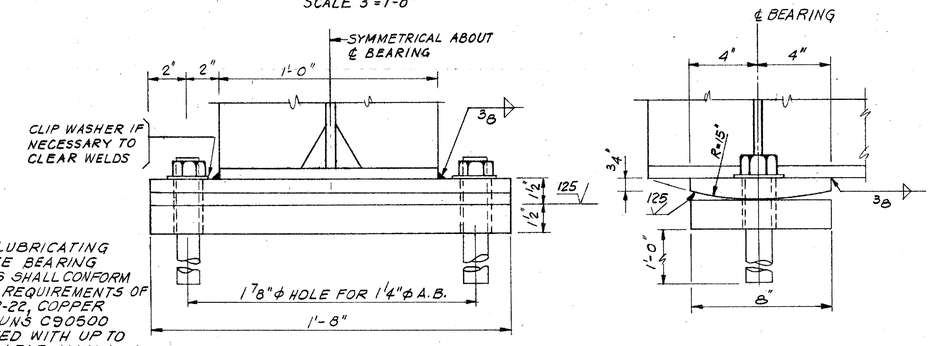

FIXED BEARINGS AT REST PIER

SCALE 3" = 1'-0"

HARDESTY & HANOVER CONSULTING ENGINEERS NEW YORK, N.Y.

REVISIONS

⚠ ADDENDUM Nº 2 C.H.H. 9-21-84

PREL. TRACING ERS, JB DESIGN WWC CHKD. ERS

HARDESTY & HANOVER
CONSULTING ENGINEERS
NEW YORK, N.Y.

REVISIONS

CONTRACT	COUNTY	FEDERAL AID PROJECT Nº	SHEET Nº	TOTAL SHEETS
82-073-05	SUSSEX	BRF-1009(3)	89	155

ACCESS TO COUNTERWEIGHT POCKETS

FOR GENERAL NOTES SEE SHEET NO. 56.

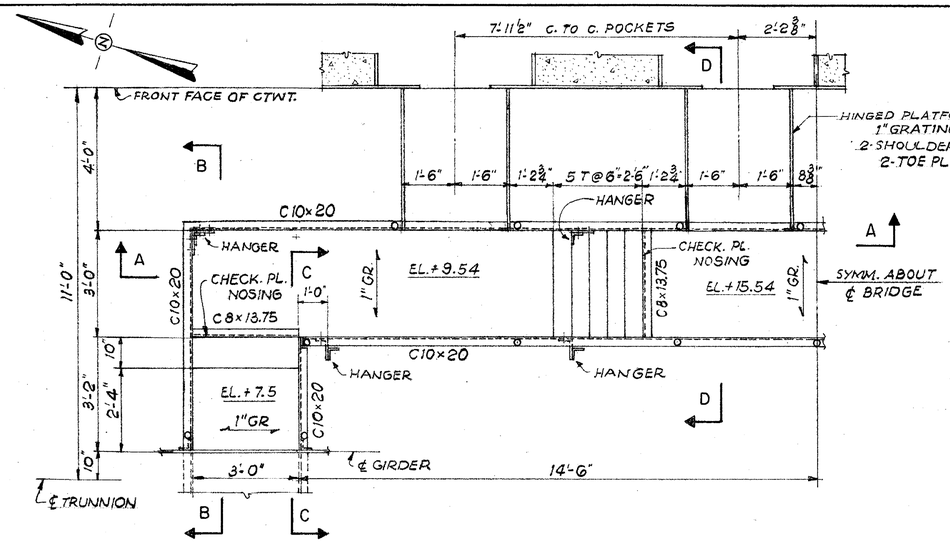

PLAN - ACCESS TO COUNTERWEIGHT POCKETS
SCALE ½" = 1'-0"

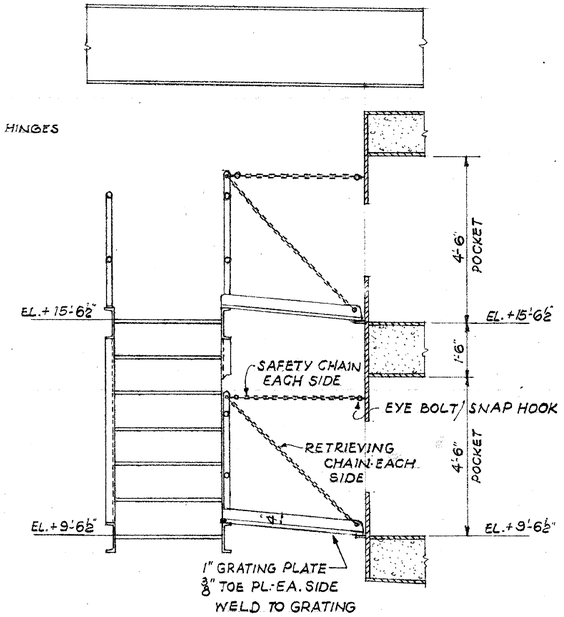

SECTION D-D
SCALE ½" = 1'-0"

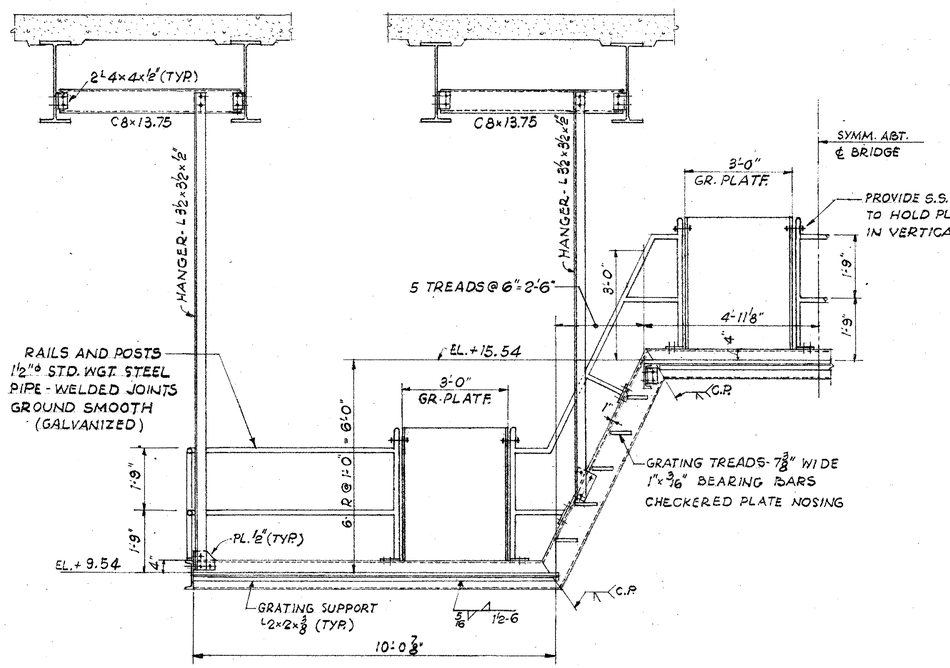

SECTION A-A
SCALE ½" = 1'-0"

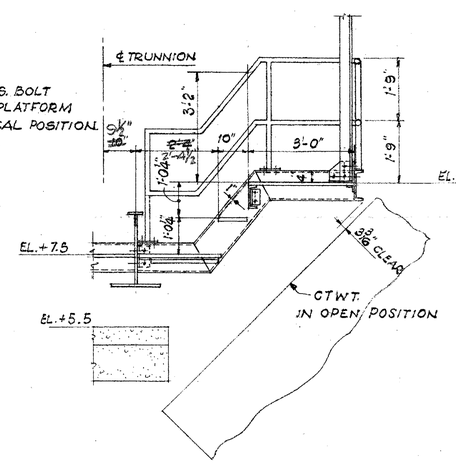

SECTION B-B
SCALE ½" = 1'-0"

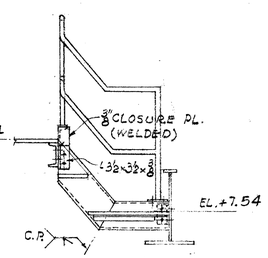

SECTION C-C
SCALE ½" = 1'-0"

Note: Additions pending walkway approval

PREL. TRACING ERS DESIGN WWC CHKD. ERS

CONTRACT	COUNTY	FEDERAL AID PROJECT Nº	SHEET Nº	TOTAL SHEETS
82-073-05	SUSSEX	BRF-1009(3)	90	155

TRUNNION TOWERS AND OPERATING MACHINERY SUPPORTS

NOTES:
1. FOR GENERAL PLAN SEE SHEET NO 54.
2. FOR GENERAL NOTES SEE SHEET NO 56.
3. FOR TRUNNION TOWER DETAILS SEE SHEET NO 91 & 92.
4. FOR OPERATING MACHINERY SUPPORT AND ENCLOSURE DETAILS SEE SHEET NO 93.

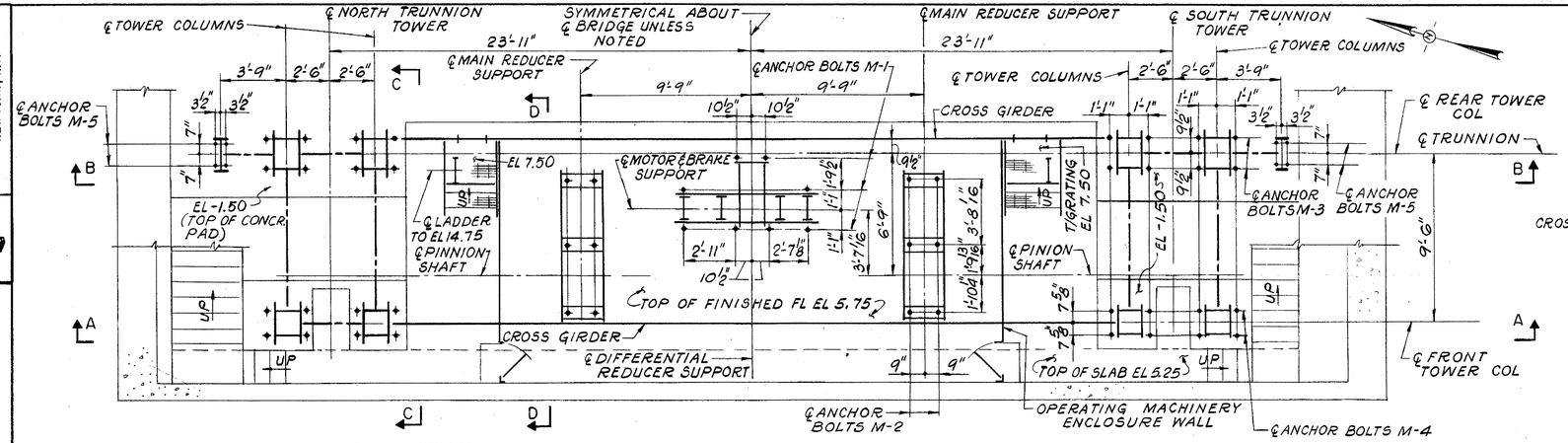

PLAN
SCALE: 1/4"=1'-0"

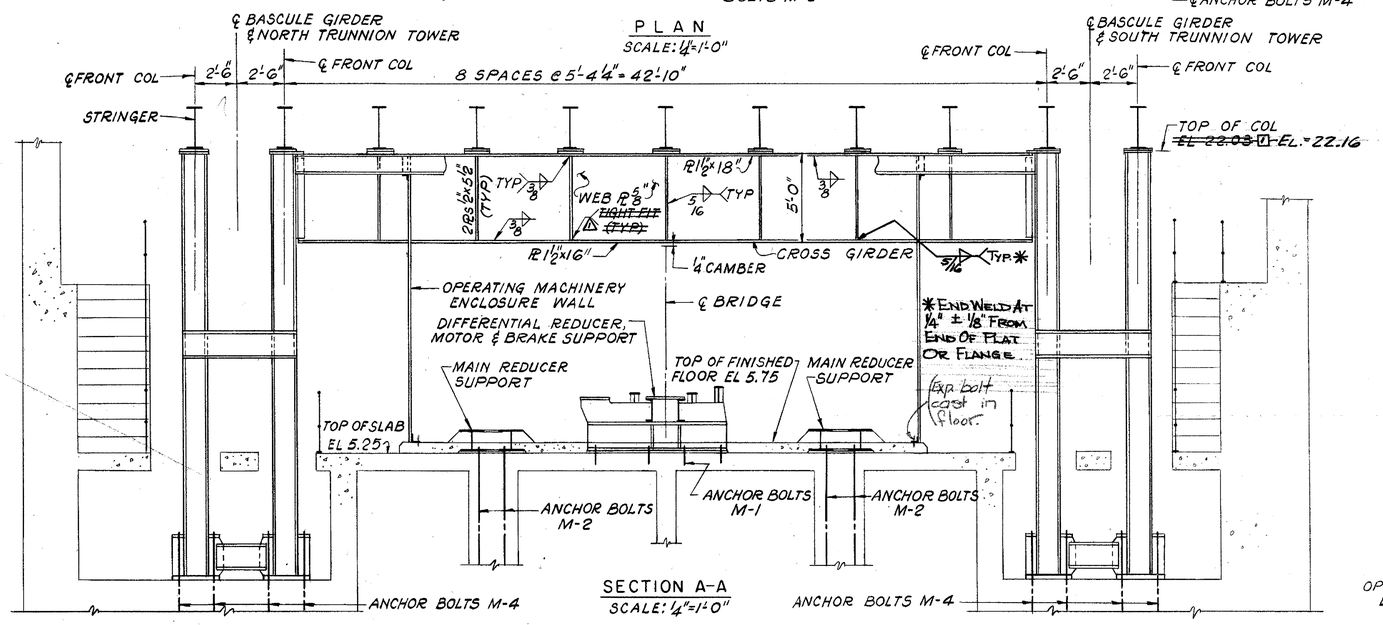

SECTION A-A
SCALE: 1/4"=1'-0"

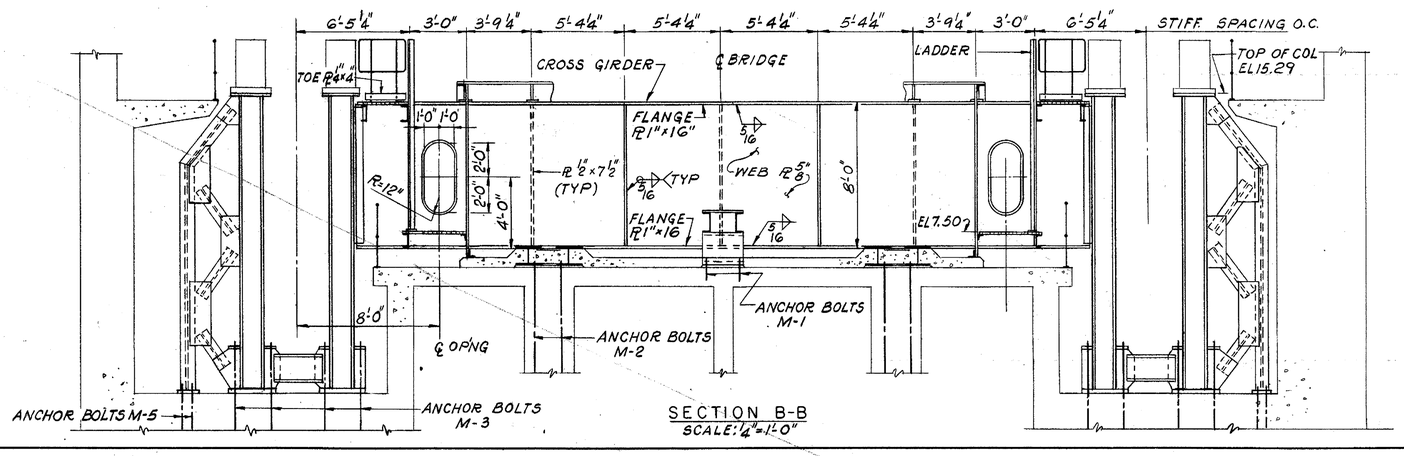

SECTION B-B
SCALE: 1/4"=1'-0"

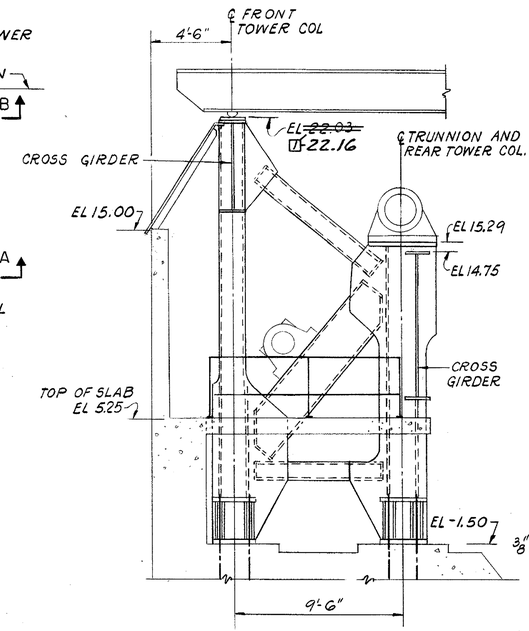

SECTION C-C
SCALE: 1/4"=1'-0"

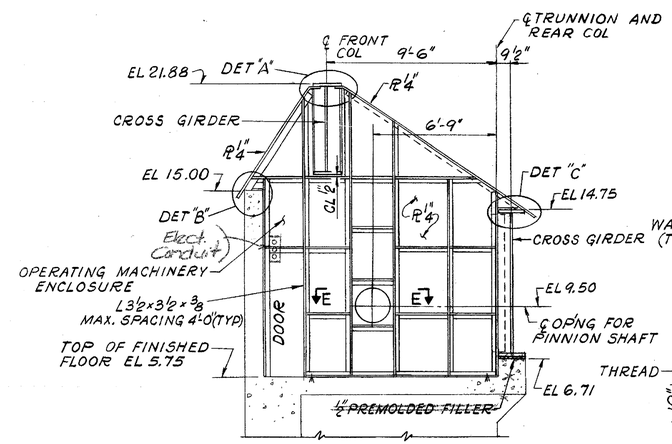

SECTION D-D
SCALE: 1/4"=1'-0"

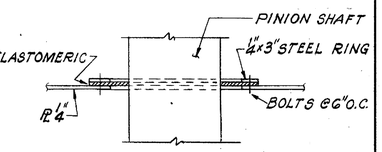

SECTION E-E
SCALE: 1"=1'-0"

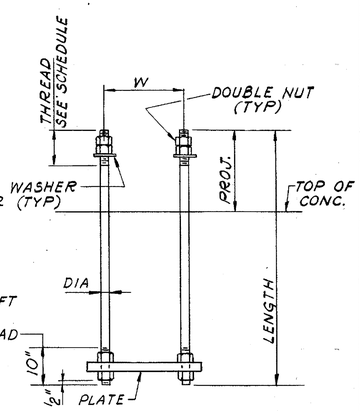

ANCHOR BOLT DETAIL
SET OF 2 BOLTS AS SHOWN
SET OF 1 BOLT SIMILAR
NO SCALE

ANCHOR BOLT SCHEDULE

MARK	DIA	W	LENGTH	PLATE	PROJ	THREAD	NO OF SETS	REMARKS
M-1	1"	—	1'-2 1/4"	1" x 4" x 0'-4"	4 1/4"	3 1/2"	8	SET OF 1 BOLT
M-2	2 1/4"	1'-6"	20'-0"	2" x 8" x 2'-2"	9 1/4"	7"	6	SET OF 2 BOLTS
M-3	2 1/4"	1'-7"	12'-0"	3" x 12" x 2'-4"	3'-1 3/4"	8"	8	" "
M-4	3"	1'-3 3/4"	15'-0"	3" x 12" x 2'-4"	3'-3"	9 1/2"	8	" "
M-5	1 1/2"	1'-2"	3'-0"	1 1/2" x 6" x 1'-8"	8"	5"	4	" "

HARDESTY & HANOVER CONSULTING ENGINEERS NEW YORK, N.Y.

REVISIONS
△1 ADDENDUM Nº 2 C.H.H. 9-21-84
▽1 REVISED TOP COLUMN ELEV. P.F. 2-14-85

PREL. TRACING G.R. DESIGN R.S. CHKD. R.S.

CONTRACT	COUNTY	FEDERAL AID PROJECT Nº	SHEET Nº	TOTAL SHEETS
82-073-05	SUSSEX	BRF-1009(3)	91	155

TRUNNION TOWER ELEVATIONS

HARDESTY & HANOVER
CONSULTING ENGINEERS
NEW YORK, N.Y.

REVISIONS
1 - Revised Top Column Elev. (North Tower) P.F. 2-14-85

GR DESIGN RS CHKD RS PREL. TRACING

NOTE 'A'

INSTALL 7/8" ϕ A307 ERECTION BOLTS IN 1 1/16" ϕ HOLES DURING TOWER ERECTION. REPLACE ONE BY ONE WITH 7/8" ϕ H.S. BOLTS A325 AFTER COMPLETION OF SUPERSTRUCTURE ERECTION INCLUDING PLACING CONCRETE IN COUNTERWEIGHT.

NOTES:

1. FOR TOWER LOCATIONS AND NOTES SEE SHEET NO. 90.
2. FOR SECTIONS C-C, D-D, E-E, F-F, G-G, H-H AND DETAILS SEE SHEET NO. 92.

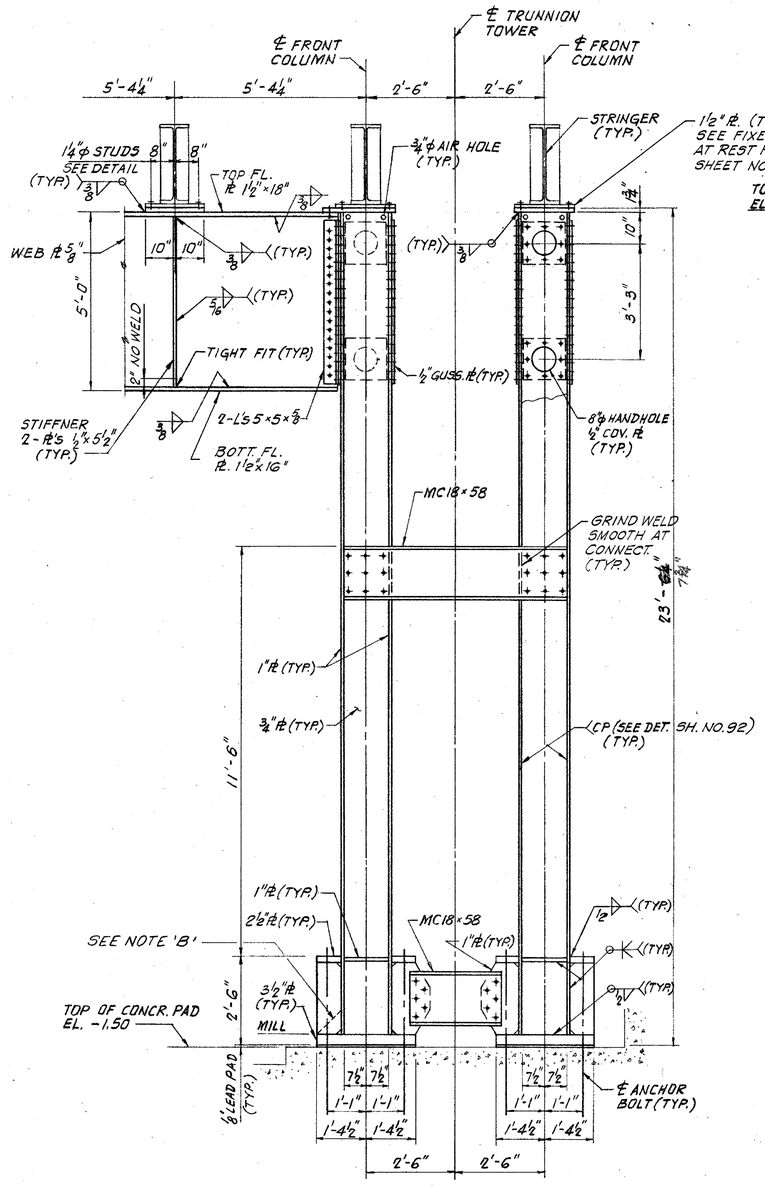

SECTION A-A
SCALE: ½" = 1'-0"

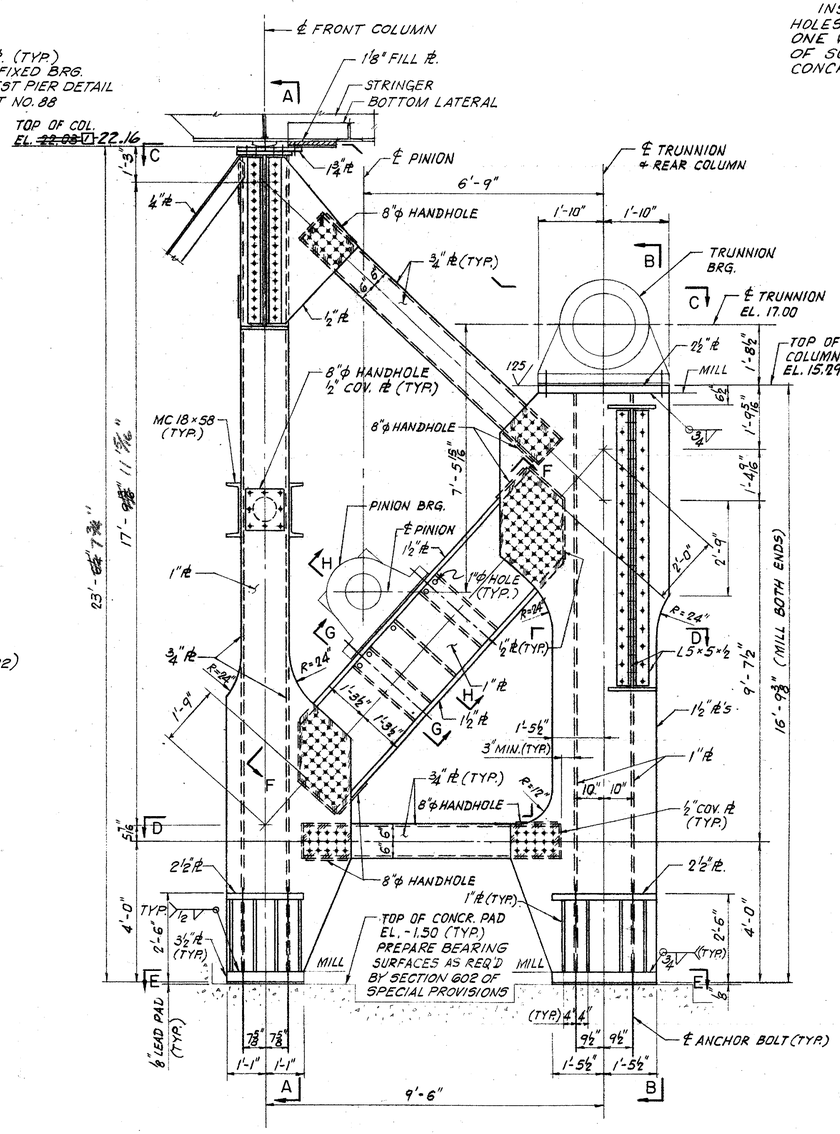

NORTH TRUNNION TOWER
(LOOKING NORTH)
SCALE: ½" = 1'-0"

NOTE: SOUTH TRUNNION TOWER SIMILAR.

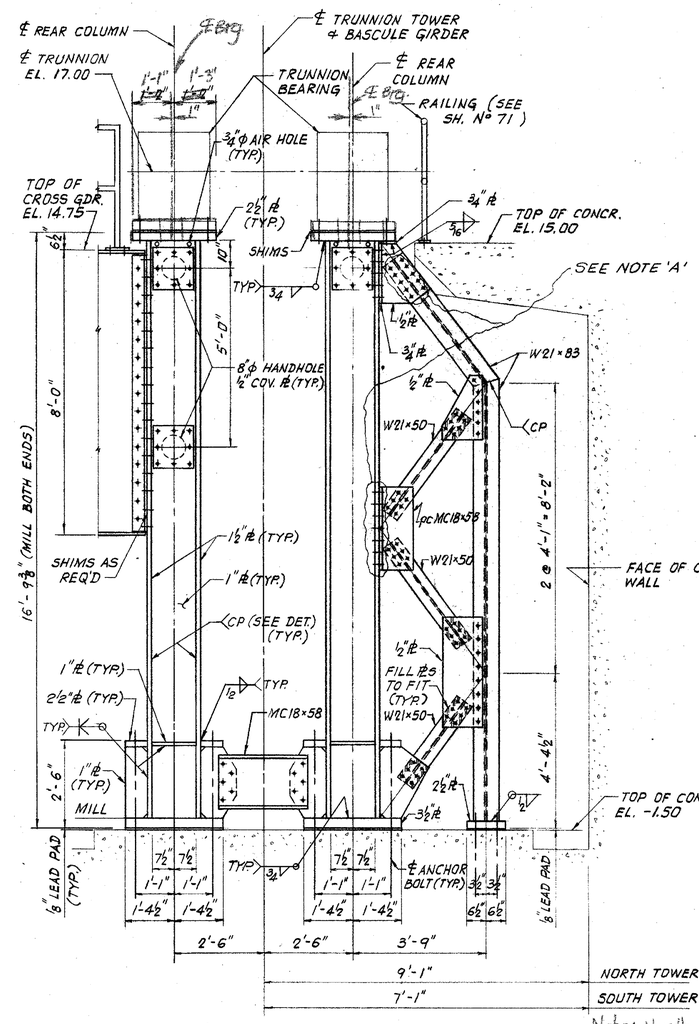

SECTION B-B
SCALE: ½" = 1'-0"

Note: North brgs. shifted 1" north. South brgs. shifted 1" south.

NOTE 'B'

FILL OVERSIZED HOLES WITH MELTED LEAD AFTER COMPLETION OF ERECTION. PROVIDE MASTIC PROTECTION BETWEEN STIFFENERS (SLOPE 1:1) TYPICAL AT ALL TOWER ANCHOR BOLT LOCATIONS.

HARDESTY & HANOVER
CONSULTING ENGINEERS
NEW YORK, N.Y.

REVISIONS

CONTRACT	COUNTY	FEDERAL AID PROJECT Nº	SHEET Nº	TOTAL SHEETS
82-073-05	SUSSEX	BRF-1009(3)	92	155

TRUNNION TOWER SECTIONS AND DETAILS

NOTES:

1. FOR TOWER LOCATIONS AND NOTES SEE SHEET NO 90.
2. FOR TOWER ELEVATIONS SEE SHEET NO 91.
3. ALL HOLES FOR CONNECTION OF TRUNNION AND PINION BEARINGS TO TOWERS SHALL BE DRILLED IN FIELD. HOLE DIAMETER SHALL NOT EXCEED ACTUAL DIAMETER OF BOLT BY MORE THAN 0.01 OF AN INCH.

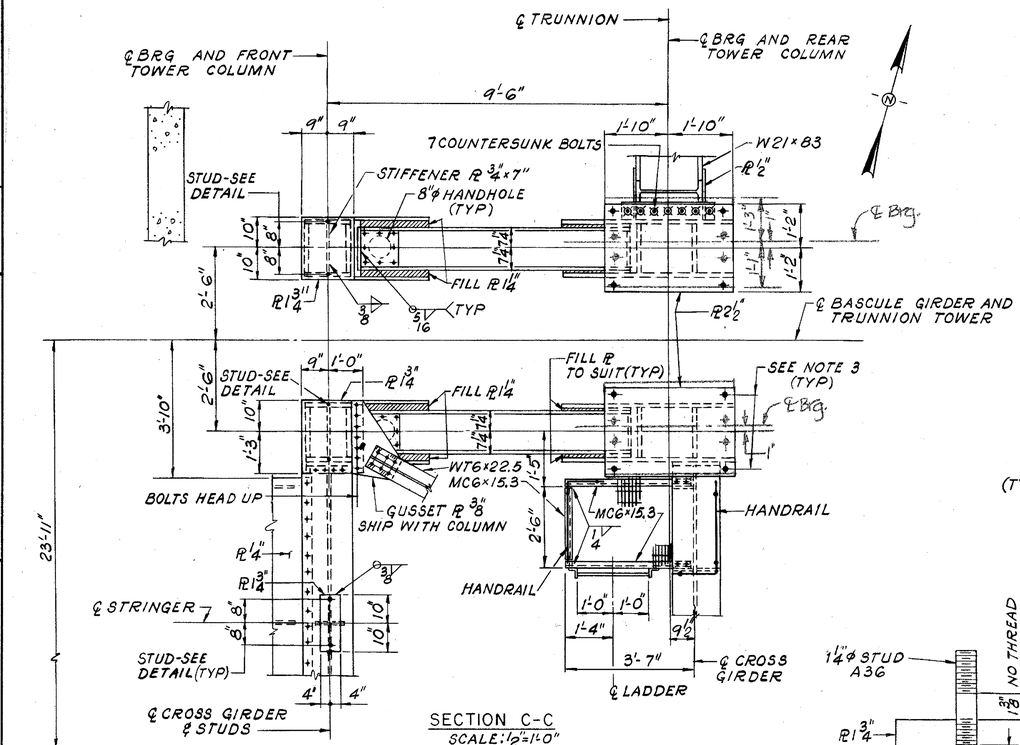

SECTION C-C
SCALE: 1/2"=1'-0"

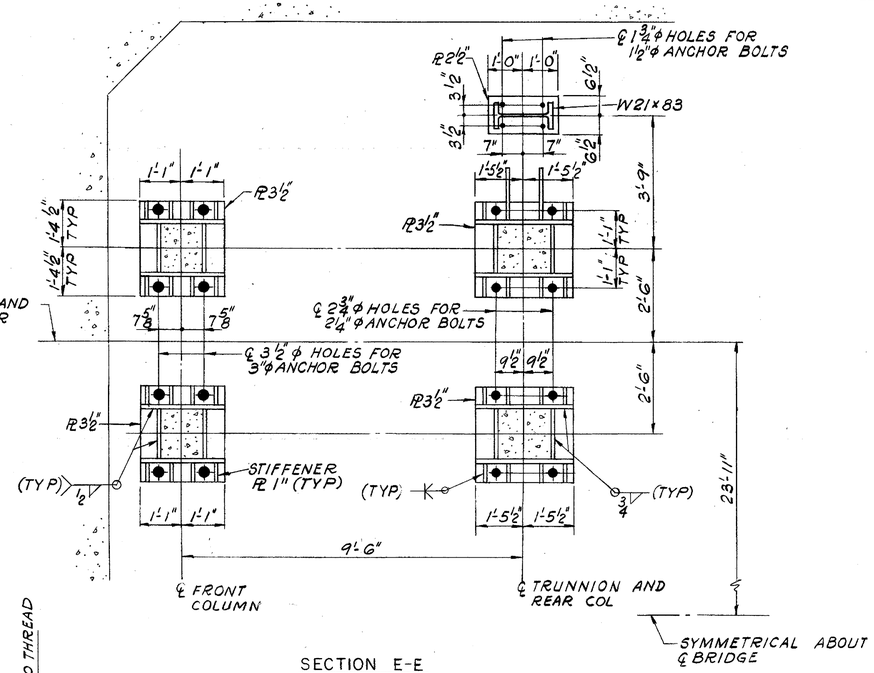

SECTION E-E
SCALE: 1/2"=1'-0"

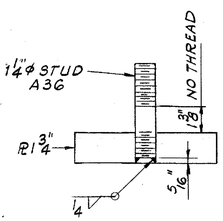

STUD DETAIL
SCALE: 3"=1'-0"

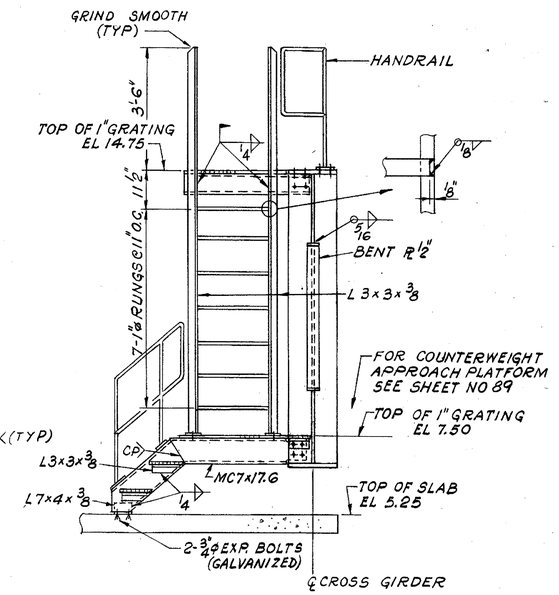

SECTION J-J
SCALE: 1/2"=1'-0"

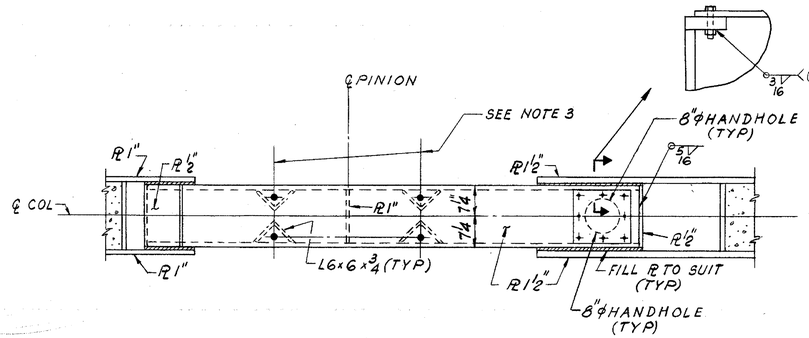

SECTION F-F
SCALE: 3/4"=1'-0"

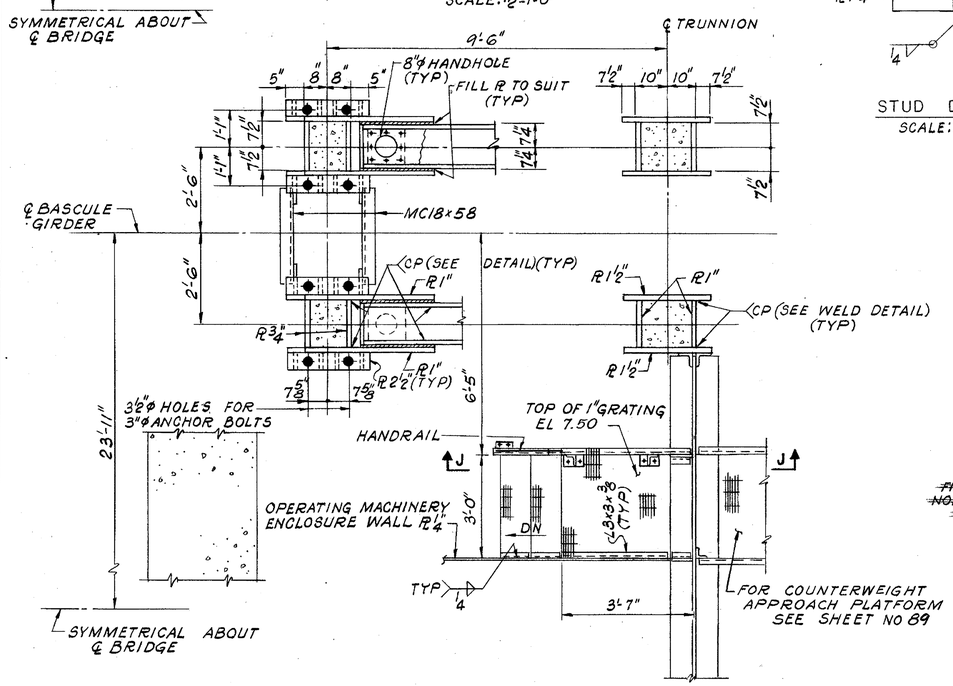

SECTION D-D
SCALE: 1/2"=1'-0"

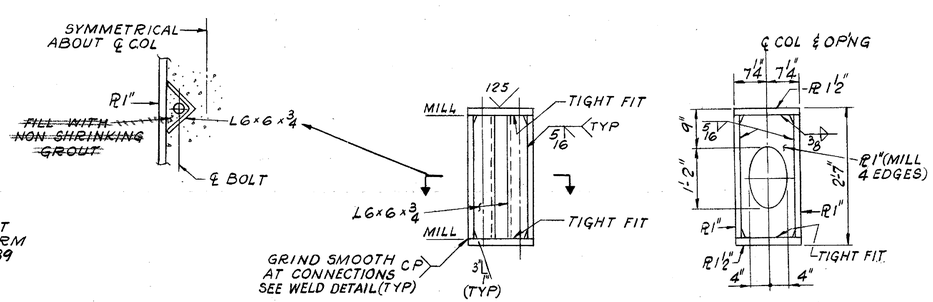

SECTION G-G
SCALE: 3/4"=1'-0"

SECTION H-H
SCALE: 3/4"=1'-0"

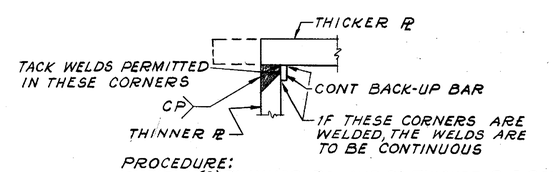

PROCEDURE:
a) WELD (2) THINNER PLS AND (1) THICKER PL FIRST. USE TEMPORARY BRACING OR DIAPHRAGMS TO INSURE ALL MEMBERS REMAIN TRUE.
b) WELD ON SECOND THICKER PL

WELD DETAIL
FOR BOX SECTIONS
NO SCALE

PRELIM. TRACING G.R. DESIGN R.S. CHKD R.S.

CONTRACT	COUNTY	FEDERAL AID PROJECT Nº	SHEET Nº	TOTAL SHEETS
82-073-05	SUSSEX	BRF-1009(3)	93	155

OPERATING MACHINERY SUPPORTS DETAILS

NOTES:
1. FOR SUPPORT LOCATIONS AND NOTES SEE SHEET NO 90
2. ALL HOLES FOR CONNECTION OF MACHINERY PARTS TO SUPPORTS SHALL BE DRILLED IN FIELD. HOLE DIAMETER SHALL NOT EXCEED ACTUAL DIAMETER OF BOLT BY MORE THAN 0.01 OF AN INCH.
3. ALL EXP. BOLTS TO BE $\frac{3}{4}$"ϕ GALVANIZED BOLTS

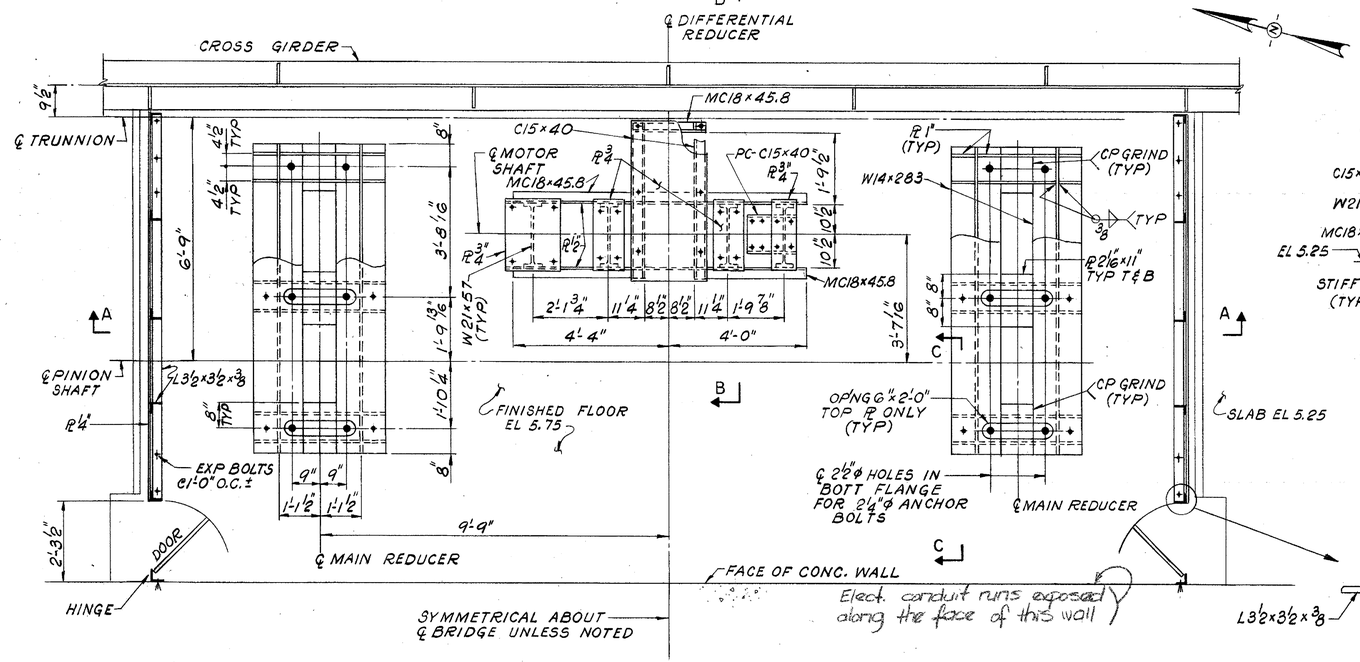

PLAN OF OPERATING MACHINERY SUPPORTS
SCALE: ½"=1'-0"

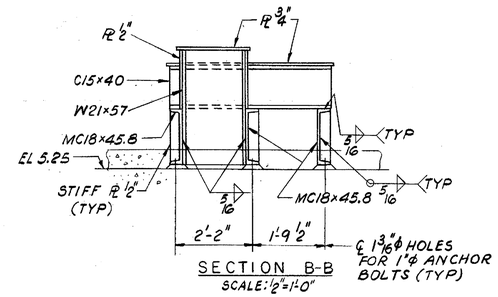

SECTION B-B
SCALE: ½"=1'-0"

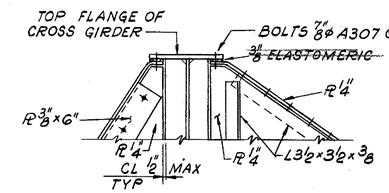

DETAIL "A"
SCALE: ¾"=1'-0"

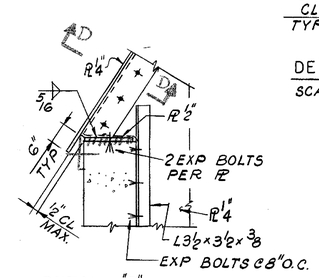

DETAIL "B"
SCALE: ¾"=1'-0"

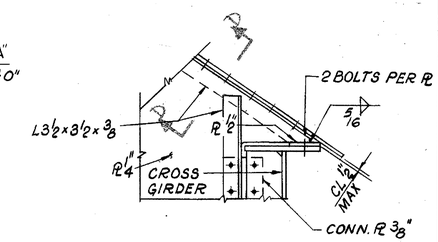

DETAIL "C"
SCALE: ¾"=1'-0"

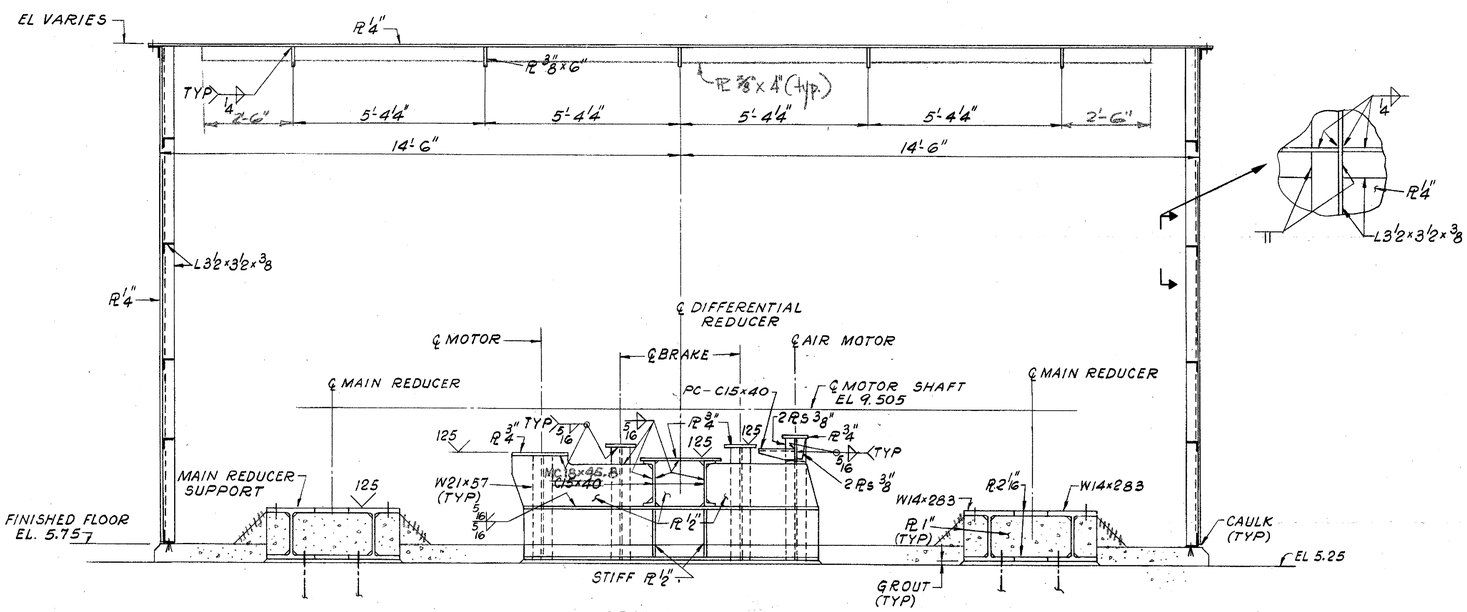

SECTION A-A
SCALE: ½"=1'-0"

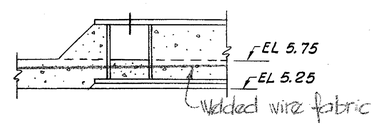

SECTION C-C
SCALE: ¾"=1'-0"

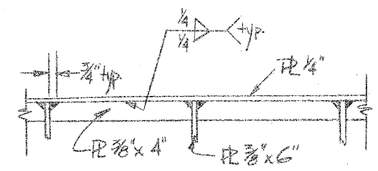

SECTION D-D
N.T.S.

HARDESTY & HANOVER CONSULTING ENGINEERS NEW YORK, N.Y.

REVISIONS

PREL. TRACING G.R. DESIGN R.S. CHKD. R.S.

CONTRACT	COUNTY	FEDERAL AID PROJECT Nº	SHEET Nº	TOTAL SHEETS
82-073-05	SUSSEX	BRF-1009(3)	94	155

APPROACH SPAN STRUCTURAL DETAILS

NOTES:
1. FOR GENERAL NOTES SEE SHEET NO. 56.
2. WORK THIS SHEET WITH SHEET NO. 77
3. CP INDICATES COMPLETE PENETRATION WELD

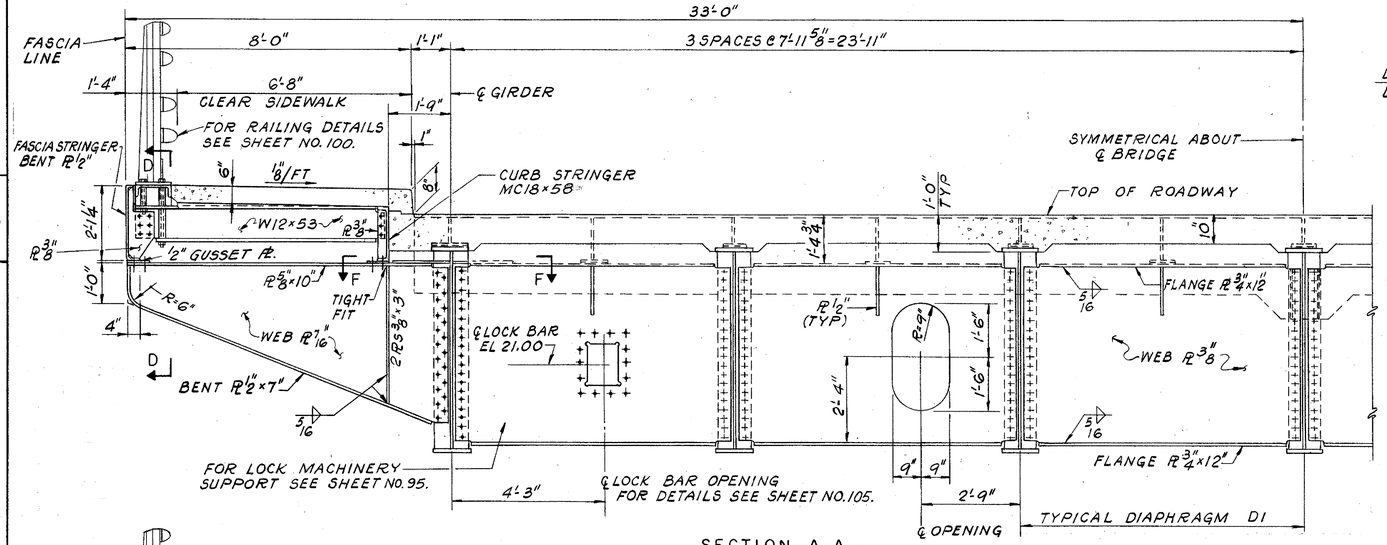

SECTION A-A
SCALE: 1/2"=1'-0"

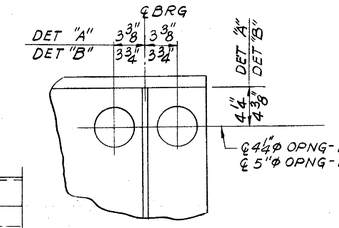

DETAIL "A" (AS SHOWN)
DETAIL "B" (AS NOTED)
FOR GIRDERS G1 & G7 ONLY
SCALE: 1 1/2"=1'-0"

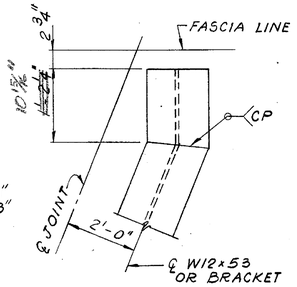

DETAIL "C" (AS SHOWN)
DETAIL "D" (SIMILAR)
SCALE: 1"=1'-0"

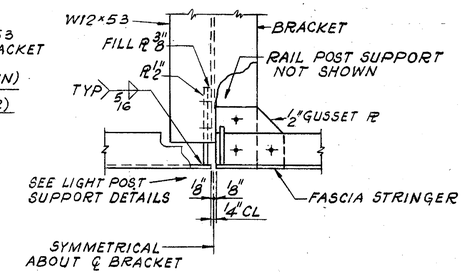

DETAIL "E" (AS SHOWN)
DETAIL "F" (SIMILAR)
SCALE: 1 1/2"=1'-0"

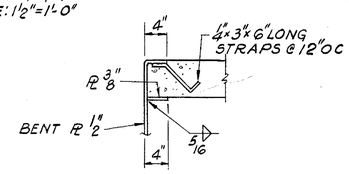

TYPICAL SECTION BETWEEN BRACKETS
SCALE: 1"=1'-0"

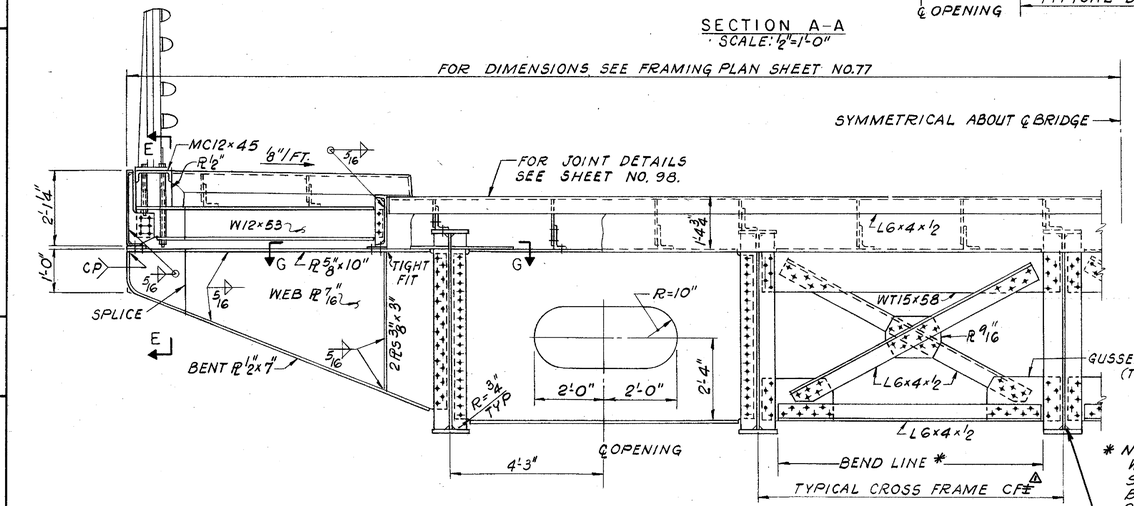

SECTION B-B
SCALE: 1/2"=1'-0"

* NOTE:
WHERE CROSS FRAMES ARE SKEWED TO STIFFENERS BEND GUSSET PL AT BEND LINE SHOWN. (TYP.)

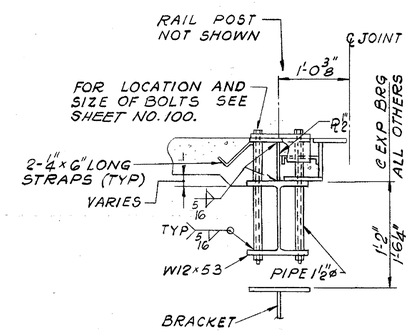

SECTION D-D (AS SHOWN)
SECTION E-E (SIMILAR)
SCALE: 1"=1'-0"

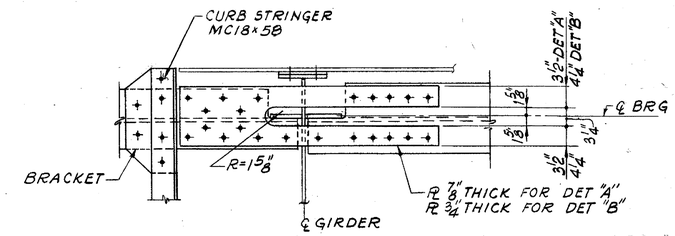

SECTION F-F (AS SHOWN)
SECTION G-G (SIMILAR)
SCALE: 1"=1'-0"

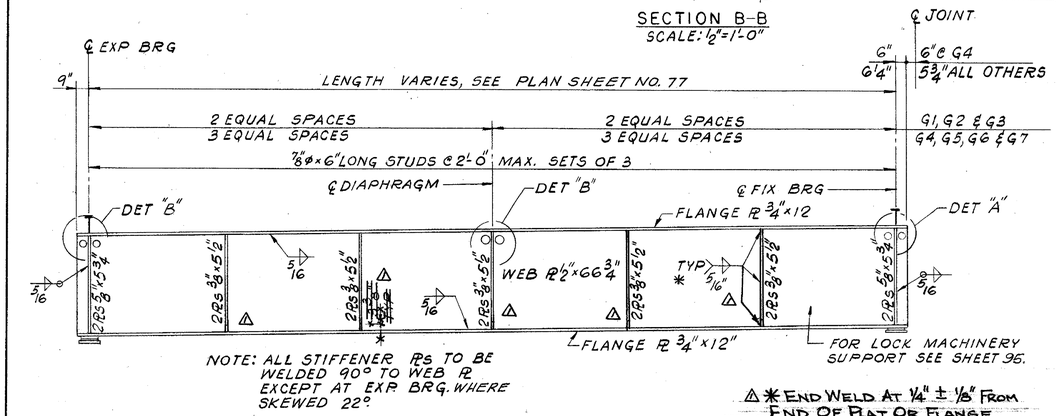

NOTE: ALL STIFFENER PLs TO BE WELDED 90° TO WEB PL EXCEPT AT EXP. BRG. WHERE SKEWED 22°

△ ✱ END WELD AT 1/4" ± 1/8" FROM END OF FLAT OR FLANGE.

TYPICAL GIRDER ELEVATION
SCALE: 1/4"=1'-0"

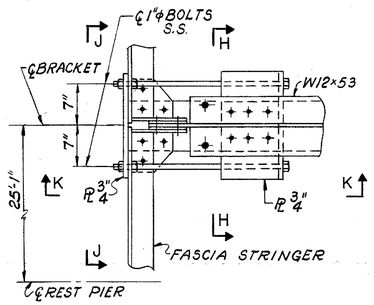

PLAN
SCALE: 1"=1'-0"

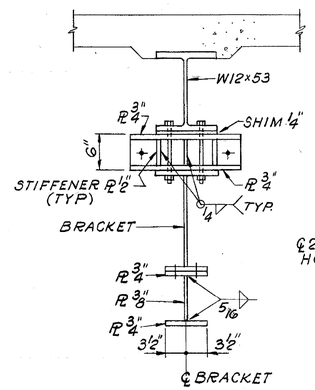

SECTION H-H
SCALE: 1"=1'-0"

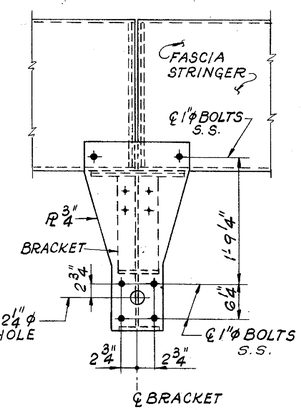

SECTION J-J

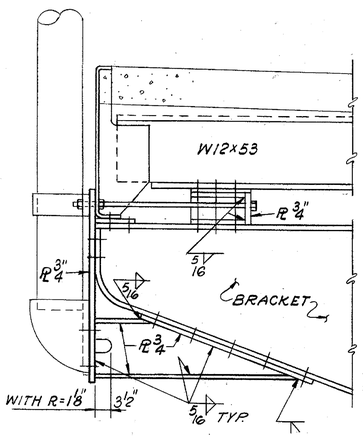

SECTION K-K

LIGHT POST SUPPORT DETAILS
SCALE: 1"=1'-0"

HARDESTY & HANOVER CONSULTING ENGINEERS NEW YORK, N.Y.

REVISIONS
△ ADDENDUM Nº 2 C.H.H. 9-21-84

PREL. TRACING GR DESIGN JD CHKD JD

HARDESTY & HANOVER
CONSULTING ENGINEERS
NEW YORK, N.Y.

REVISIONS

CONTRACT	COUNTY	FEDERAL AID PROJECT Nº	SHEET Nº	TOTAL SHEETS
82-073-05	SUSSEX	BRF-1009(3)	95	155

LOCK MACHINERY SUPPORTS

NOTE:
FOR GENERAL NOTES SEE SHEET NO. 3.

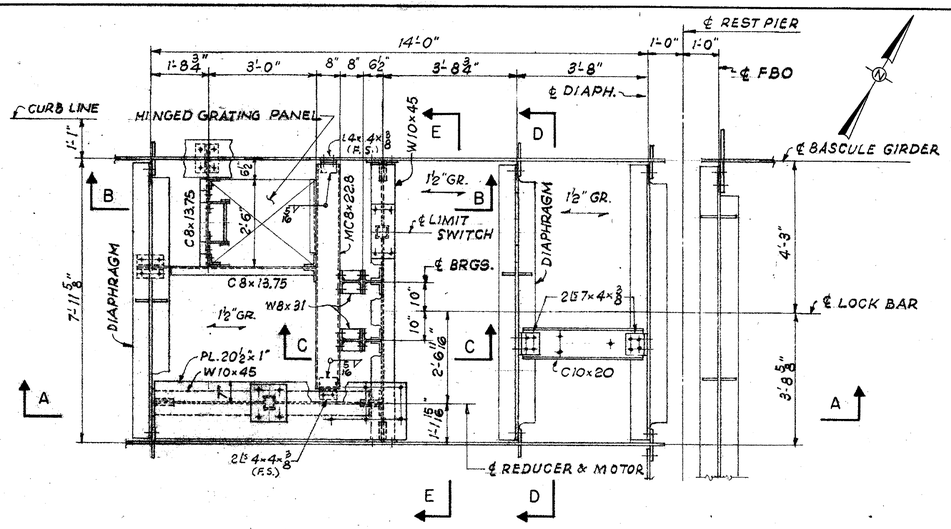

PLAN - LOCK MACHINERY SUPPORTS
SCALE ½" = 1'-0"

ONE PLATFORM REQ'D - AS SHOWN - NORTH SIDE OF ℄ BRIDGE
ONE PLATFORM REQ'D - OPP. HAND - SOUTH SIDE OF ℄ BRIDGE

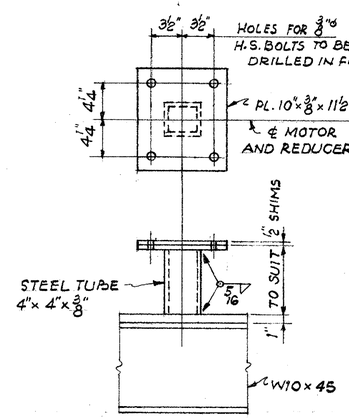

MOTOR SUPPORT
SCALE 1½" = 1'-0"

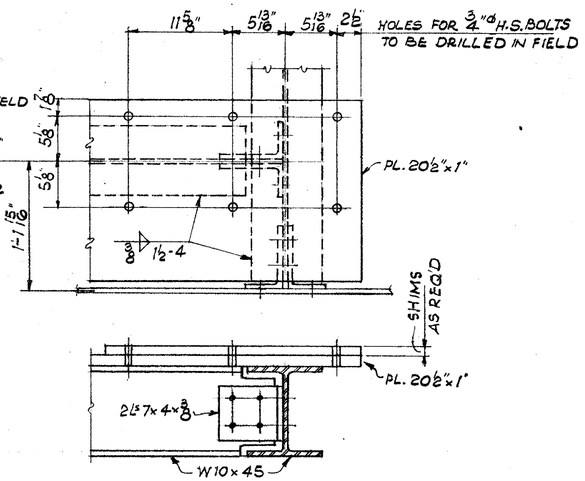

REDUCER SUPPORT
SCALE ½" = 1'-0"

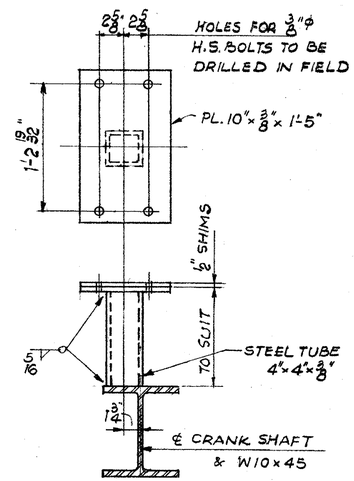

LIMIT SWITCH SUPPORT
SCALE 1½" = 1'-0"

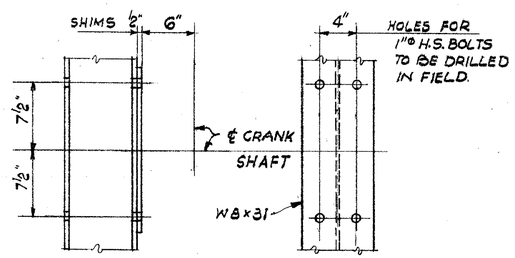

CRANK BEARING SUPPORT
SCALE 1½" = 1'-0"

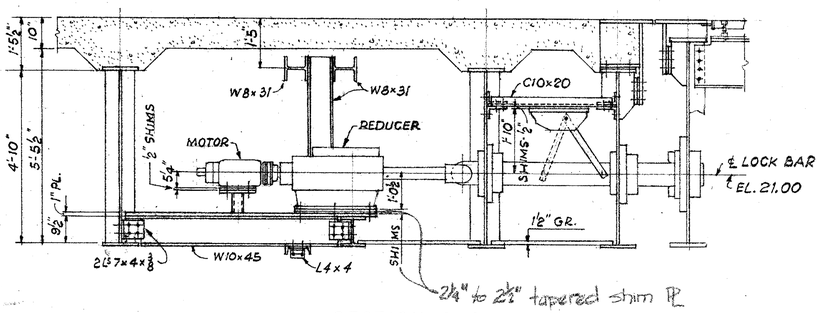

SECTION A-A
SCALE ½" = 1'-0"

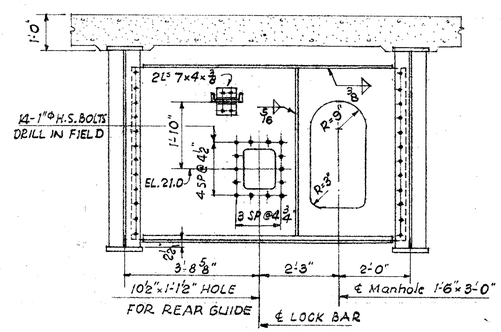

SECTION D-D
SCALE ½" = 1'-0"

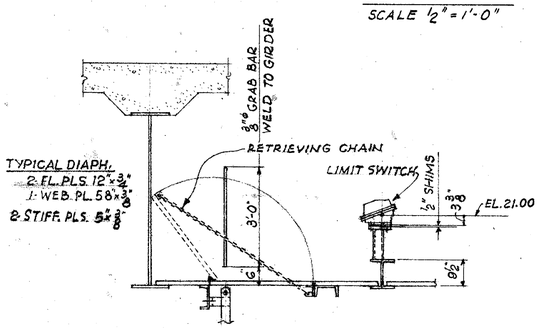

SECTION B-B
SCALE ½" = 1'-0"

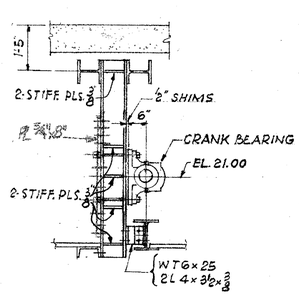

SECTION C-C
SCALE ½" = 1'-0".

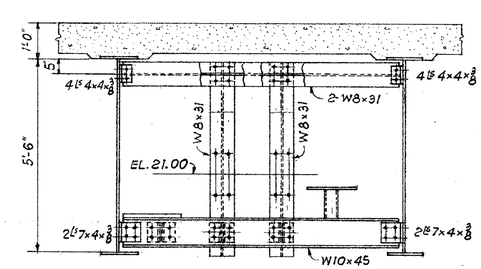

SECTION E-E
SCALE ½" = 1'-0"

PREL. TRACING ERS DESIGN ERS CHKD. JMD

CONTRACT	COUNTY	FEDERAL AID PROJECT Nº	SHEET Nº	TOTAL SHEETS
82-073-05	SUSSEX	BRF-1009(3)	96	155

DECK SLAB OVER COUNTERWEIGHT

HARDESTY & HANOVER CONSULTING ENGINEERS NEW YORK, N.Y.

REVISIONS

DT REVISED SECT "A-A" ADDED DETAIL 1 11-5-84 JJC

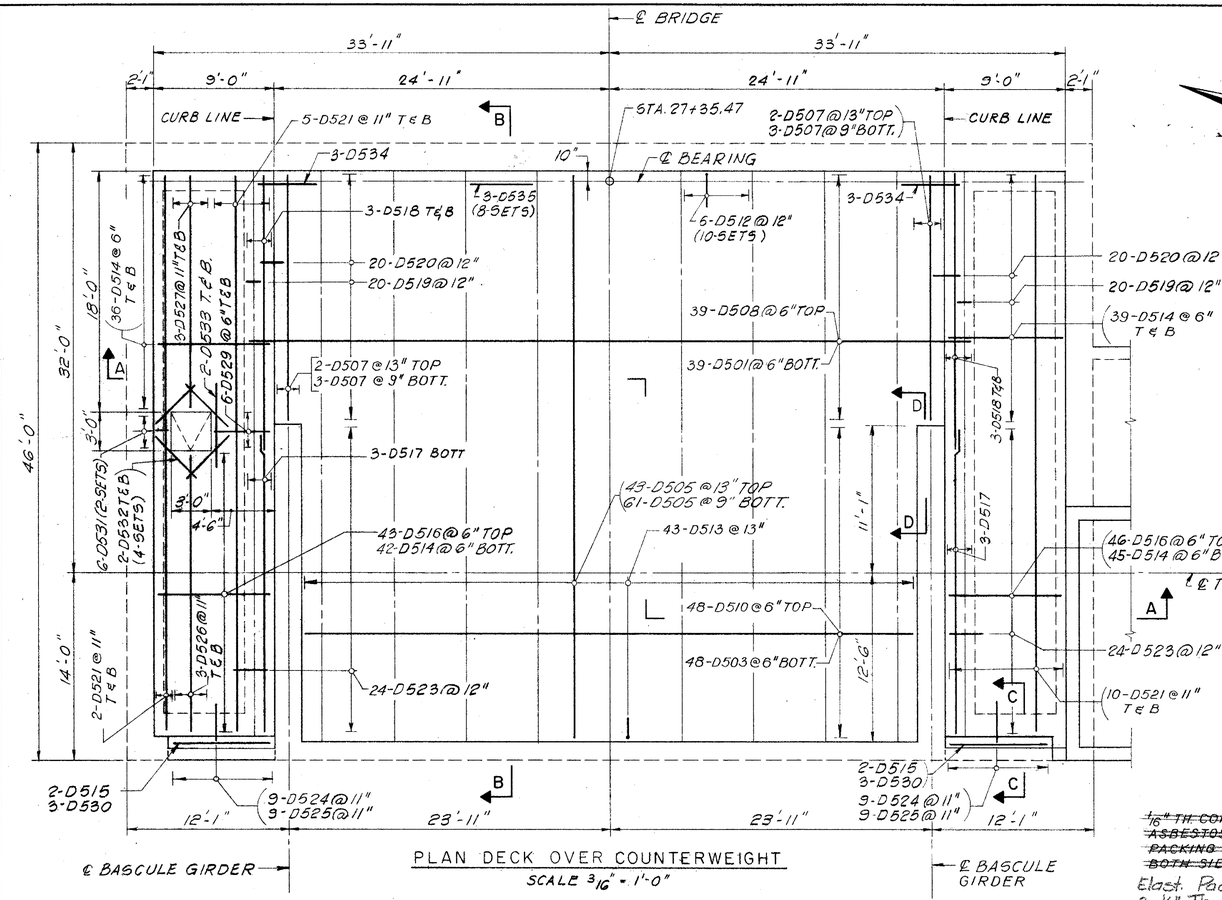

PLAN DECK OVER COUNTERWEIGHT
SCALE 3/16" = 1'-0"

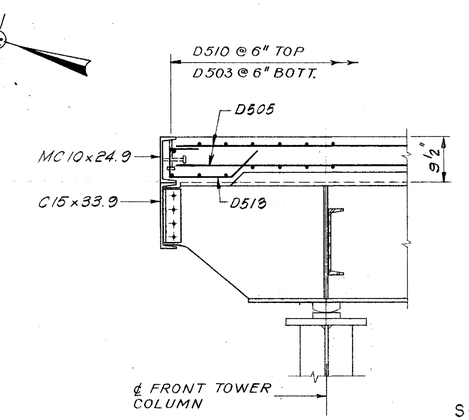

SECTION B-B
SCALE 3/4" = 1'-0"

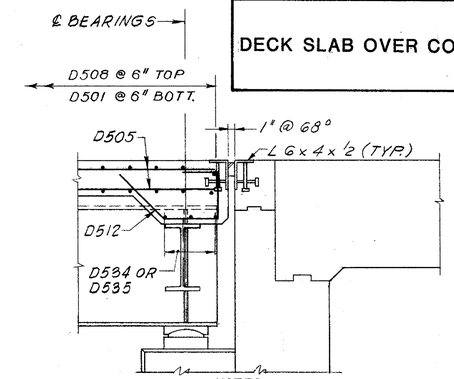

NOTES:
1. IF STAY-IN-PLACE FORMS ARE USED THE METAL FORMS MUST BE GALVANIZED AND MORTAR TIGHT. SELF TAPPING SCREWS SHALL BE TECK NON-CORROSIVE SCREWS AND SHALL BE INSTALLED AT THE SIDE LAP OF THE SHEETS AT MID-SPAN BETWEEN SUPPORTS.
2. WELDING TO FLANGES IN TENSION IS NOT PERMITTED
3. CAULK STAY-IN-PLACE FORMS
4. FOR STEEL JT. DETAILS SEE SHEET NO's. 86, 87 & 98.

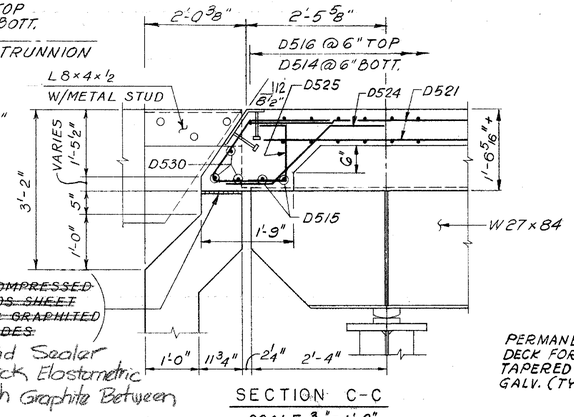

SECTION C-C
SCALE 3/4" = 1'-0"

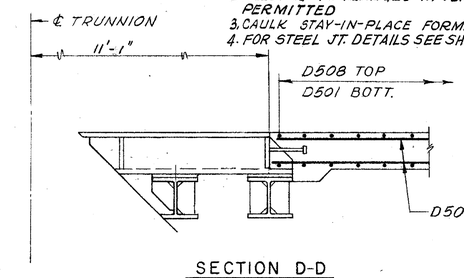

SECTION D-D
SCALE: 3/4" = 1'-0"

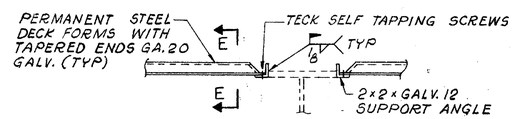

STAY-IN-PLACE FORM DETAIL
SCALE: 1" = 1'-0"

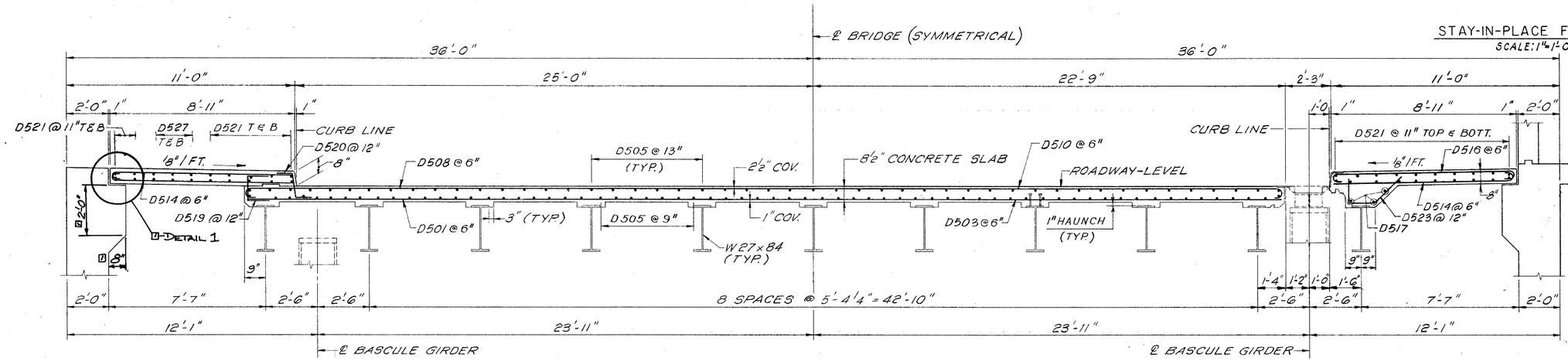

SECTION A-A
SCALE: 3/8" = 1'-0"

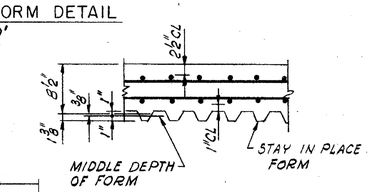

SECTION E-E
SCALE: 1" = 1'-0"

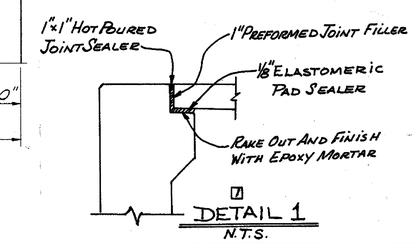

DETAIL 1
N.T.S.

PREL. TRACING M. POBLETE DESIGN WWC, NC CHKD. FG

40389

CONTRACT	COUNTY	FEDERAL AID PROJECT Nº	SHEET Nº	TOTAL SHEETS
82-073-05	SUSSEX	BRF-1009(3)	97	155

APPROACH SPAN - DECK SLAB

HARDESTY & HANOVER
CONSULTING ENGINEERS
NEW YORK, N.Y.

REVISIONS

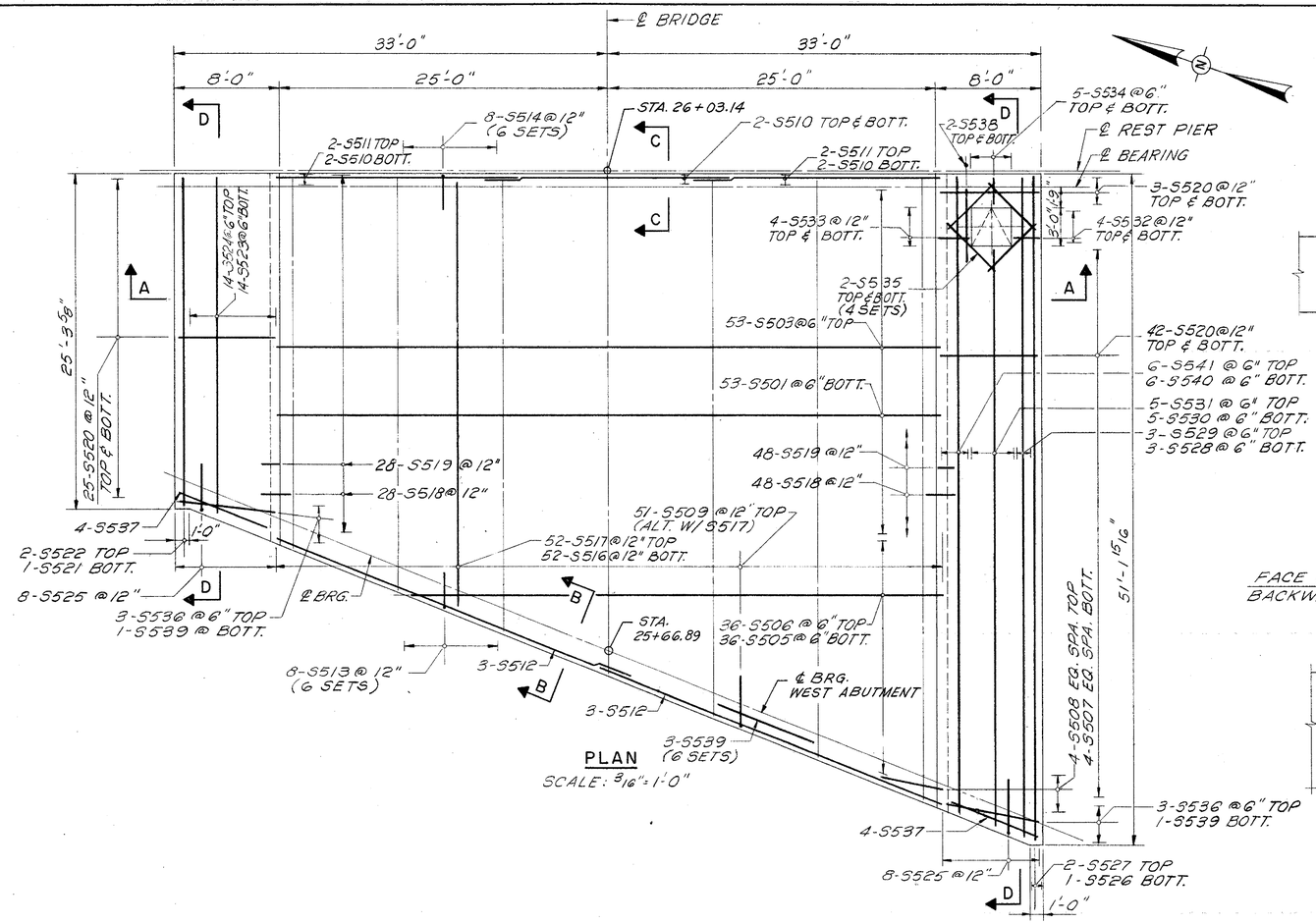

PLAN
SCALE: 3/16" = 1'-0"

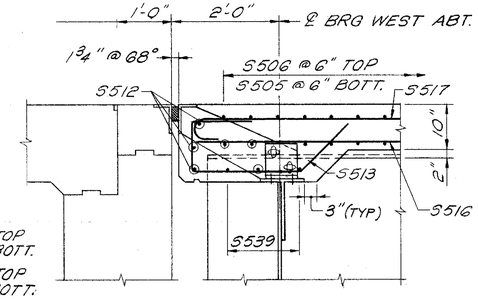

SECTION B-B
SCALE: 3/4" = 1'-0"

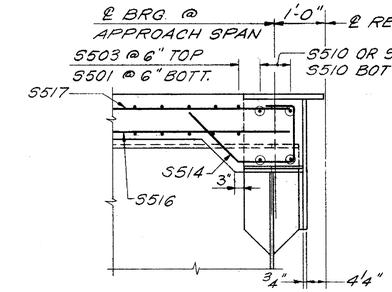

SECTION C-C
SCALE: 3/4" = 1'-0"

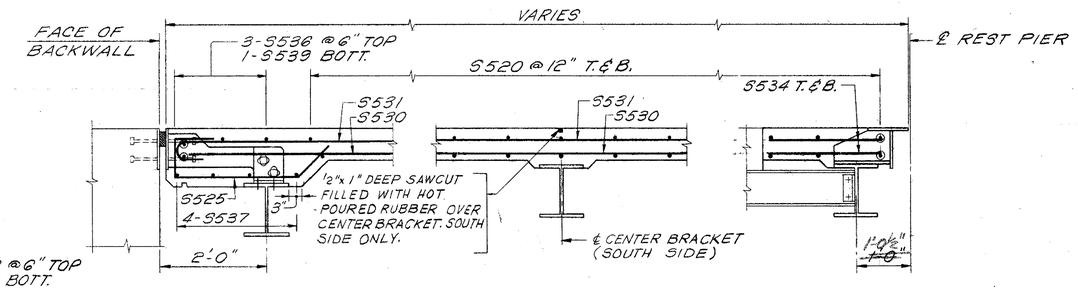

SECTION D-D
SCALE: 3/4" = 1'-0"

NOTES:
1. FOR GENERAL NOTES SEE SHEET NO. 5G
2. FOR TYPICAL STAY IN PLACE FORM DETAILS SEE SHEET NO. 9G
3. FOR DECK JOINT PLAN AND DETAILS SEE SHEET NO's. 8G & 9B.

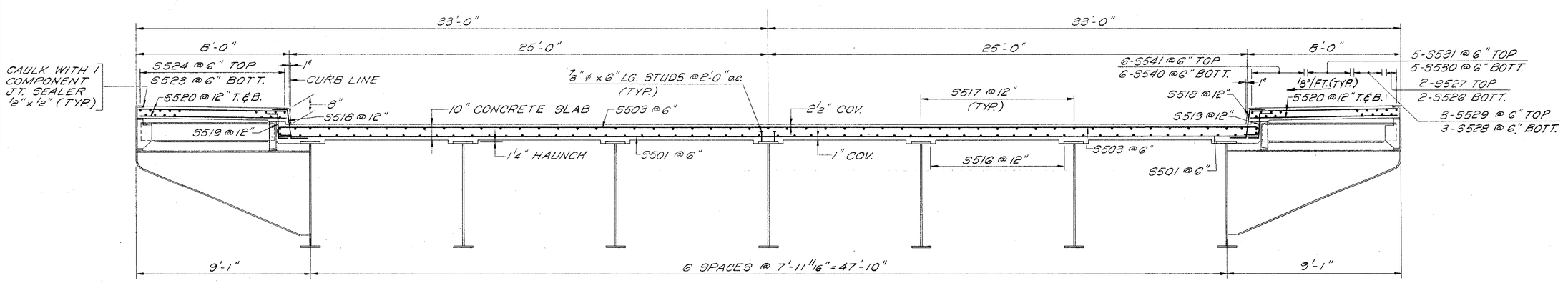

SECTION A-A
SCALE: 3/8" = 1'-0"

PREL. TRACING M. POBLETE DESIGN N.C. CHKD. FG

CONTRACT	COUNTY	FEDERAL AID PROJECT Nº	SHEET Nº	TOTAL SHEETS
82-073-05	SUSSEX	BRF-1009(3)	98	155

EXPANSION JOINT DETAILS

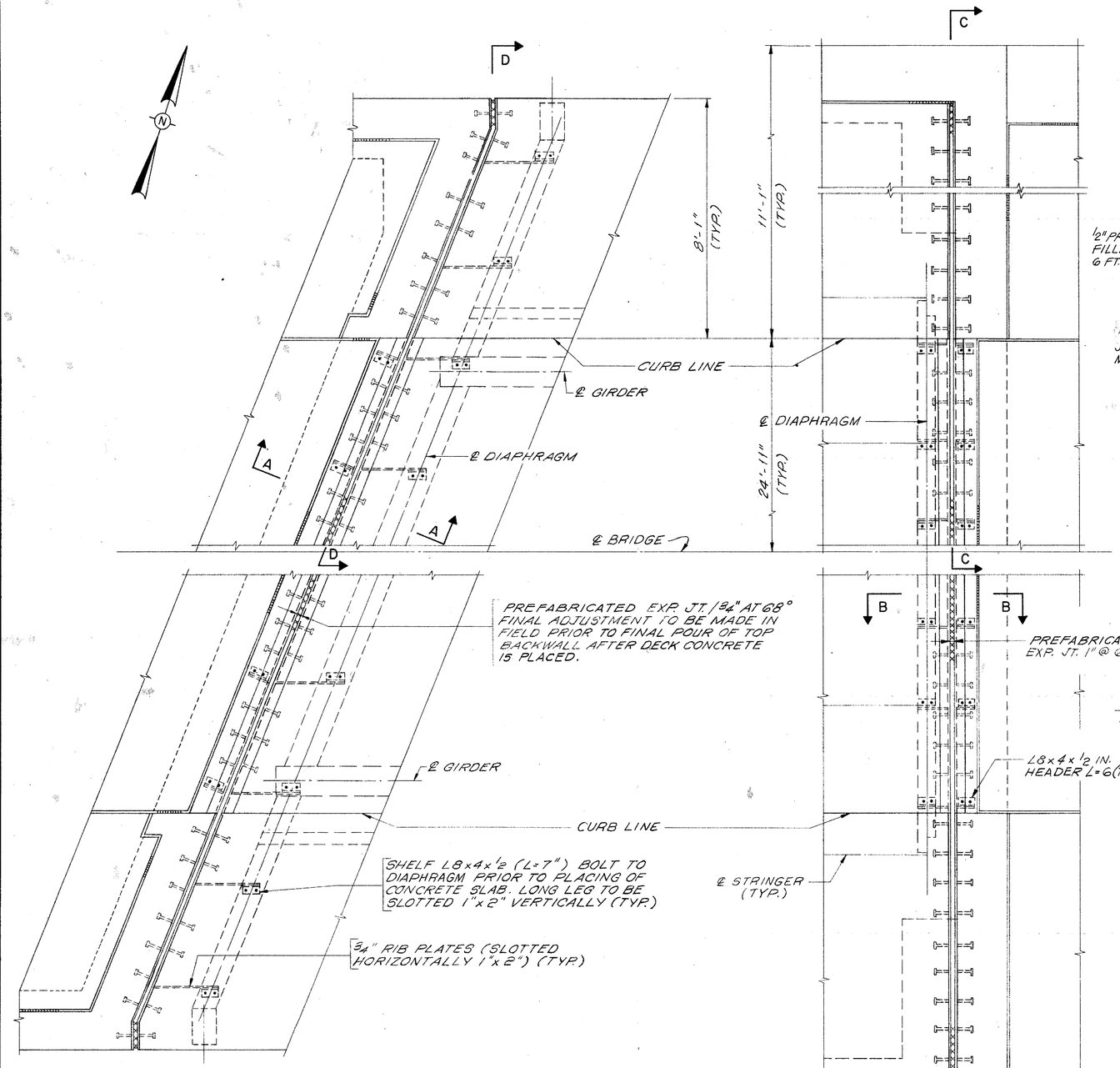

WEST ABUTMENT

DECK OVER COUNTERWEIGHT

EXPANSION JOINT PLAN

SCALE: 1/2" = 1'-0"

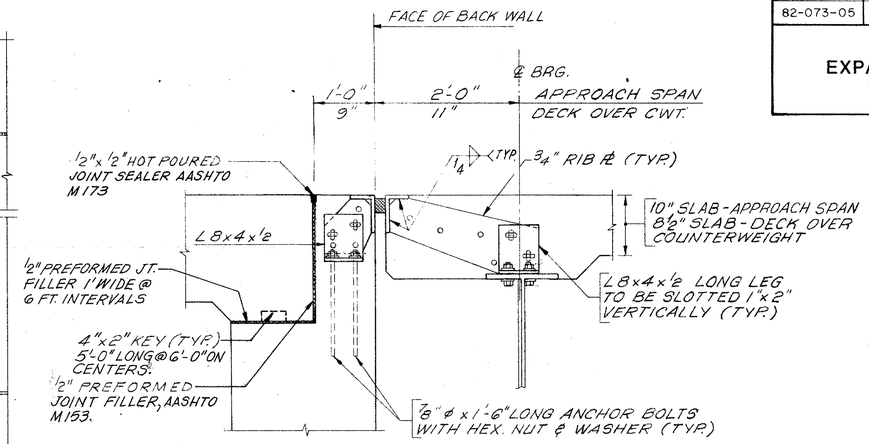

SECTION A-A (AS SHOWN)
SECTION B-B (SIMILAR EXCEPT AS NOTED)

SCALE: 1" = 1'-0"

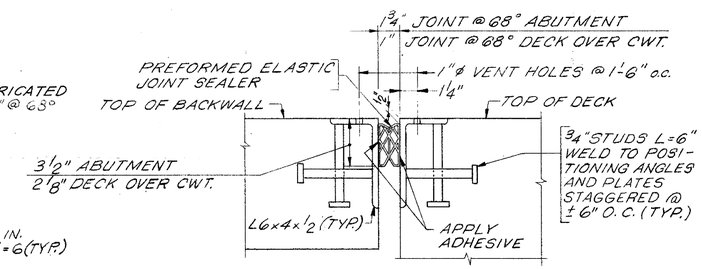

PREFABRICATED EXPANSION JOINT DETAIL

NOT TO SCALE

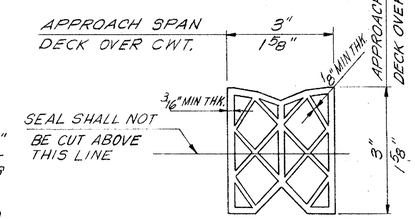

PREFORMED ELASTIC JOINT SEALER

NOT TO SCALE

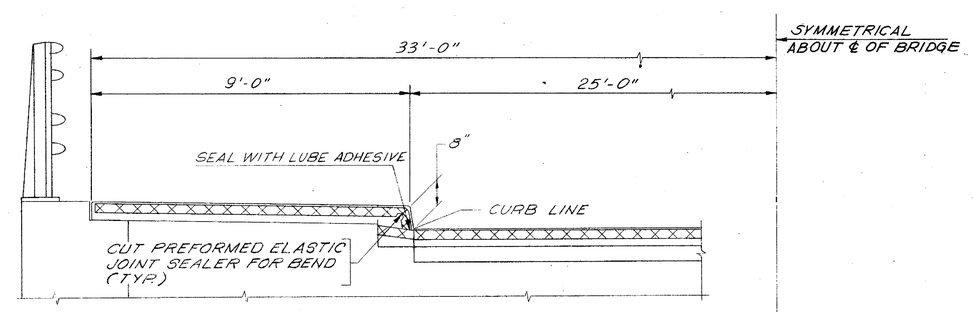

SECTION C-C (AS SHOWN)
SECTION D-D (SIMILAR)

SCALE: 1/2" = 1'-0"

HARDESTY & HANOVER
CONSULTING ENGINEERS
NEW YORK, N.Y.

REVISIONS

PREL. TRACING AS & MP DESIGN LMB CHKD RB

CONTRACT	COUNTY	FEDERAL AID PROJECT Nº	SHEET Nº	TOTAL SHEETS
82-073-05	SUSSEX	BRF-1009(3)	99	155

WALKWAY DETAILS AT REST PIER

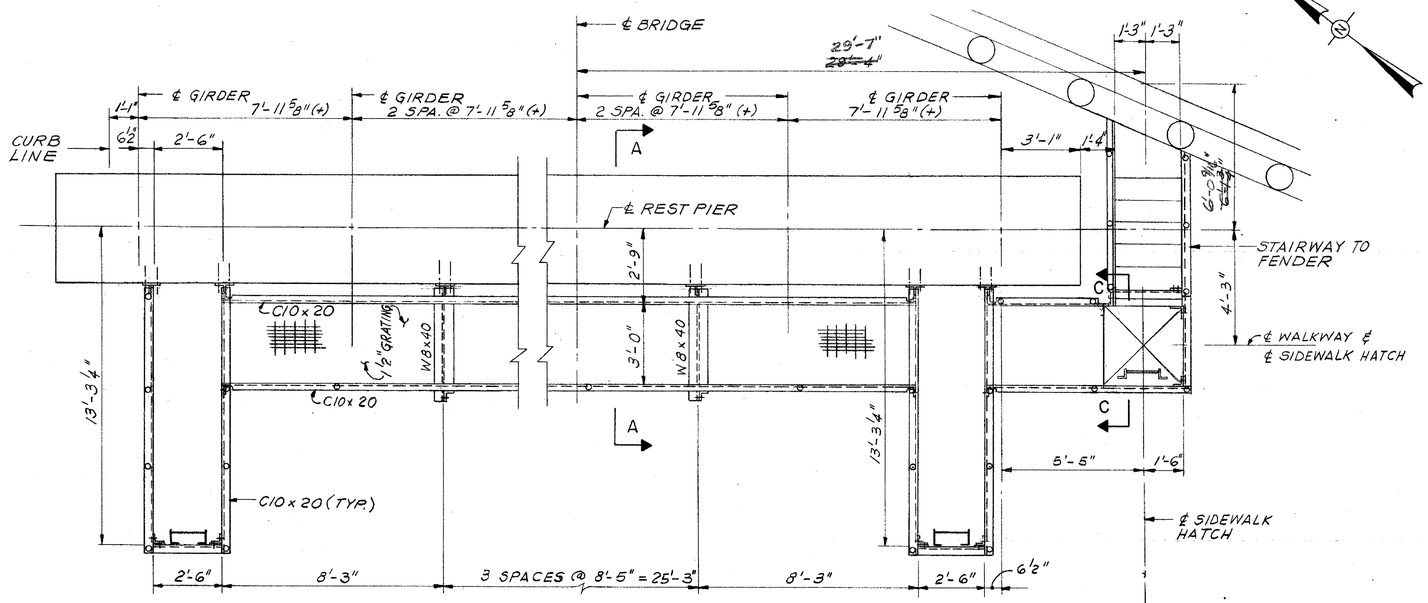

PLAN
SCALE: 3/8"=1'-0"

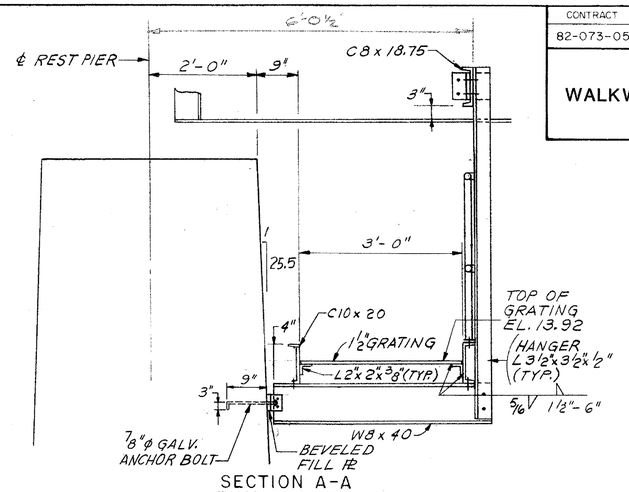

SECTION A-A
SCALE: 3/4"=1'-0"

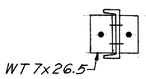

ANCHORAGE DETAILS
NOTE: CONNECTION FOR CHANNEL SHOWN. W8x40 SIMILAR

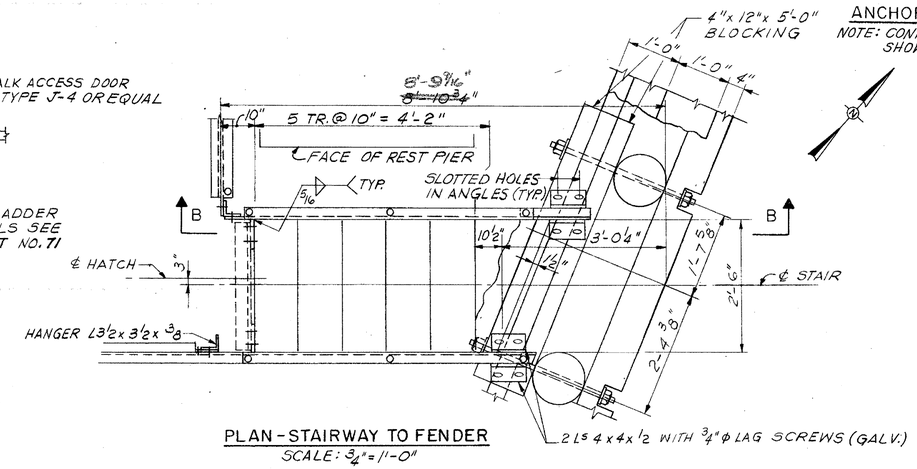

PLAN-STAIRWAY TO FENDER
SCALE: 3/4"=1'-0"

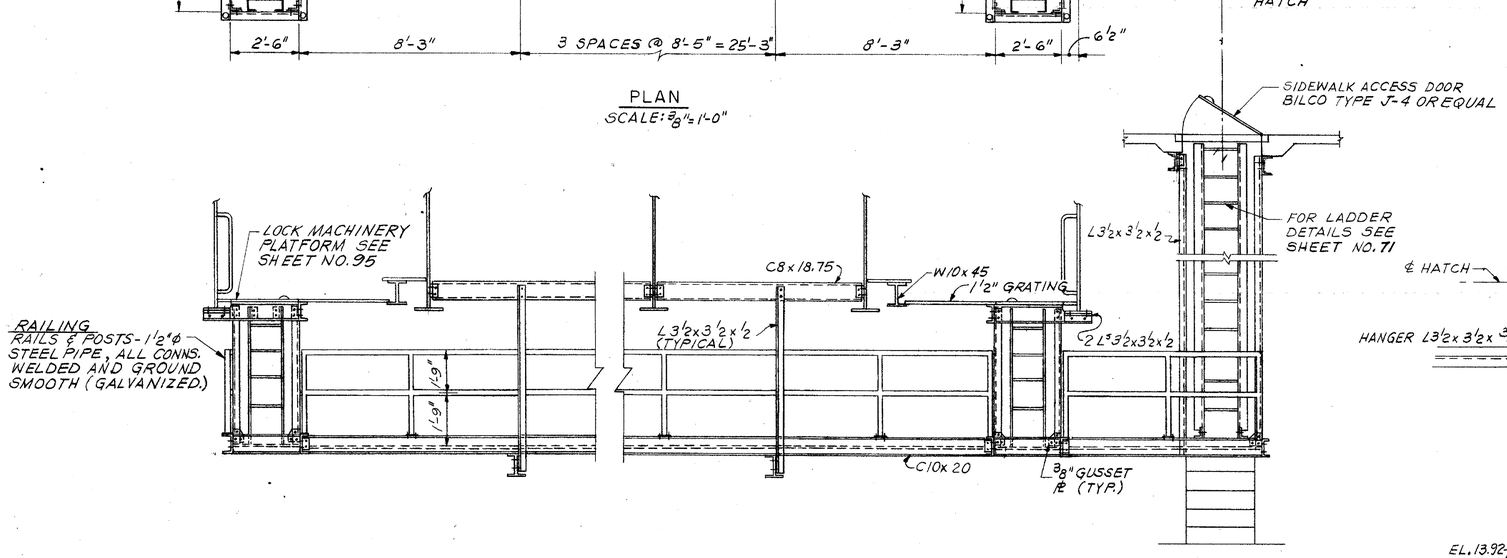

ELEVATION
SCALE: 3/8"=1'-0"

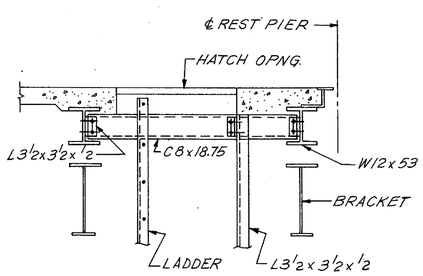

SECTION C-C
SCALE: 1/2"=1'-0"

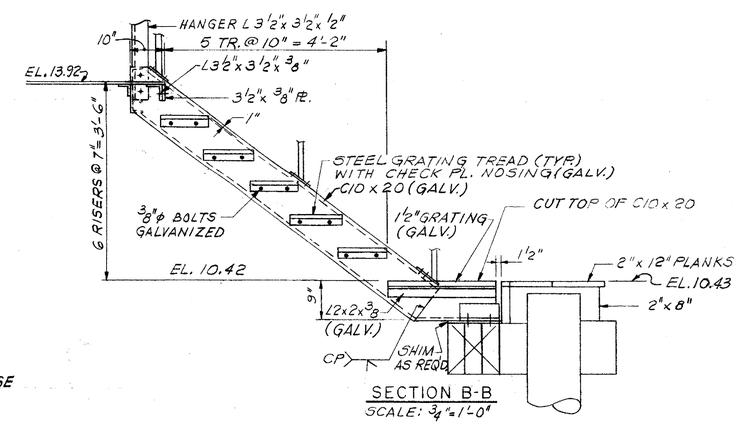

SECTION B-B
SCALE: 3/4"=1'-0"

NOTES:

1. FOR GENERAL NOTES SEE SHEET NO. 56.
2. ALL BOLTS 7/8"ø H.S. UNLESS OTHERWISE NOTED.

HARDESTY & HANOVER CONSULTING ENGINEERS NEW YORK, N.Y.

REVISIONS

PREL. TRACING A.S. DESIGN JD CHKD ERS

CONTRACT	COUNTY	FEDERAL AID PROJECT Nº	SHEET Nº	TOTAL SHEETS
82-073-05	SUSSEX	BRF-1009(3)	101	155

APPROACH SLABS

HARDESTY & HANOVER
CONSULTING ENGINEERS
NEW YORK, N.Y.

REVISIONS

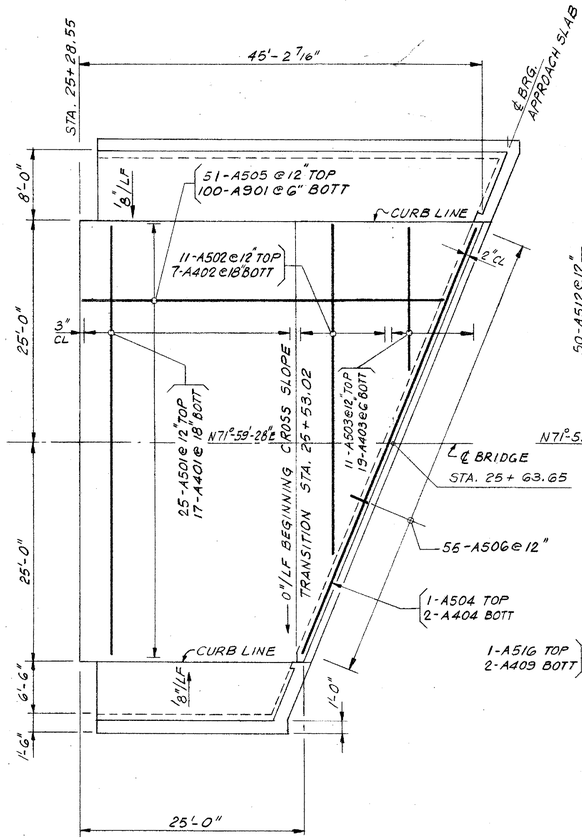

WEST APPROACH
SCALE 1/8" = 1'-0"

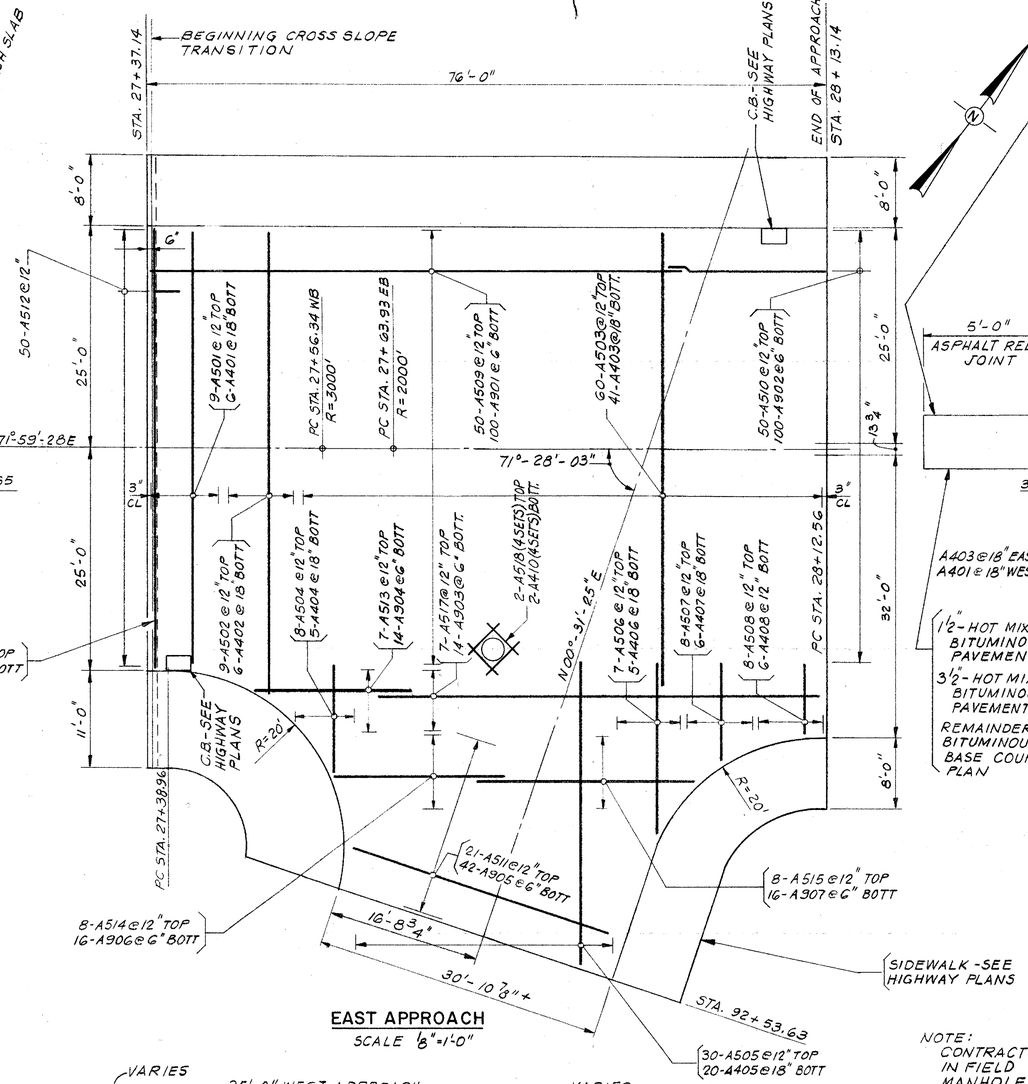

EAST APPROACH
SCALE 1/8" = 1'-0"

SAWCUT AND REMOVE EXISTING PAVEMENT - PAID FOR UNDER REMOVAL OF EXISTING PORTLAND CEMENT CONCRETE PAVEMENT AND SIDEWALK - SEE HIGHWAY PLANS

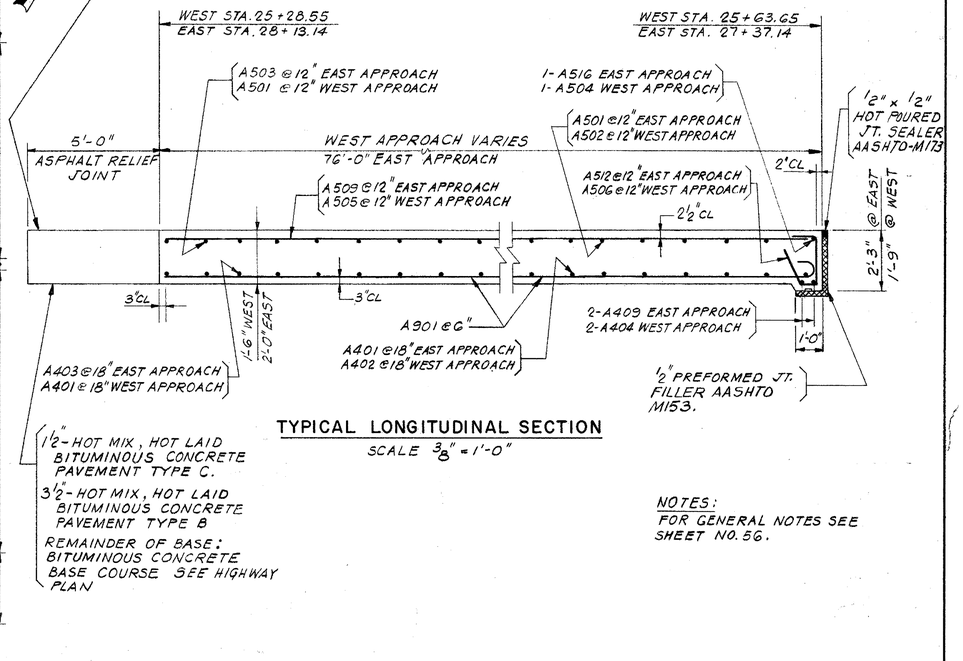

TYPICAL LONGITUDINAL SECTION
SCALE 3/8" = 1'-0"

1 1/2"- HOT MIX, HOT LAID BITUMINOUS CONCRETE PAVEMENT TYPE C.

3 1/2"- HOT MIX, HOT LAID BITUMINOUS CONCRETE PAVEMENT TYPE B

REMAINDER OF BASE: BITUMINOUS CONCRETE BASE COURSE SEE HIGHWAY PLAN

NOTES:
FOR GENERAL NOTES SEE SHEET NO. 56.

NOTE:
CONTRACTOR TO CUT REINFORCING BARS IN FIELD TO CLEAR CATCH BASINS AND MANHOLE.

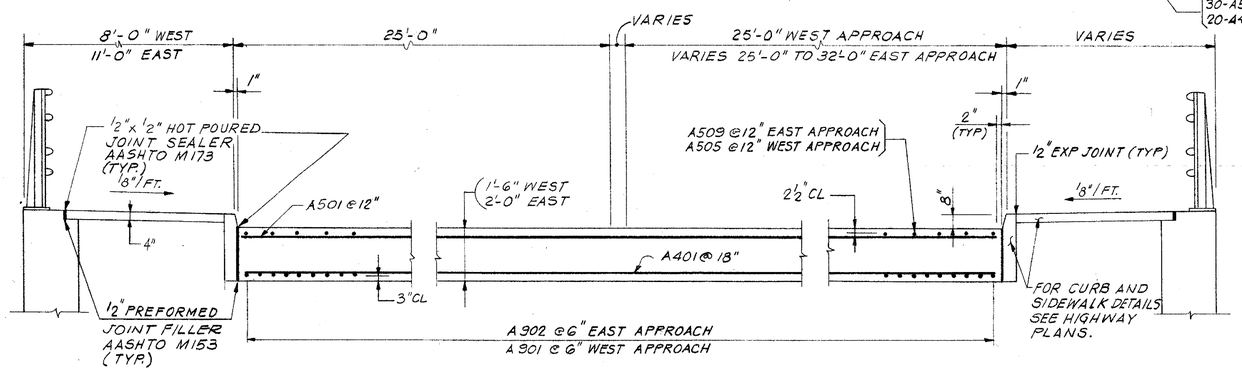

TYPICAL TRANSVERSE SECTION
SCALE 3/8" = 1'-0"

PREL. TRACING A. SOSA DESIGN FR CHKD JD

40389

HARDESTY & HANOVER
CONSULTING ENGINEERS
NEW YORK, N.Y.

REVISIONS

CONTRACT	COUNTY	FEDERAL AID PROJECT Nº	SHEET Nº	TOTAL SHEETS
82-073-05	SUSSEX	BRF-1009(3)	102	155

OPERATING MACHINERY ASSEMBLY

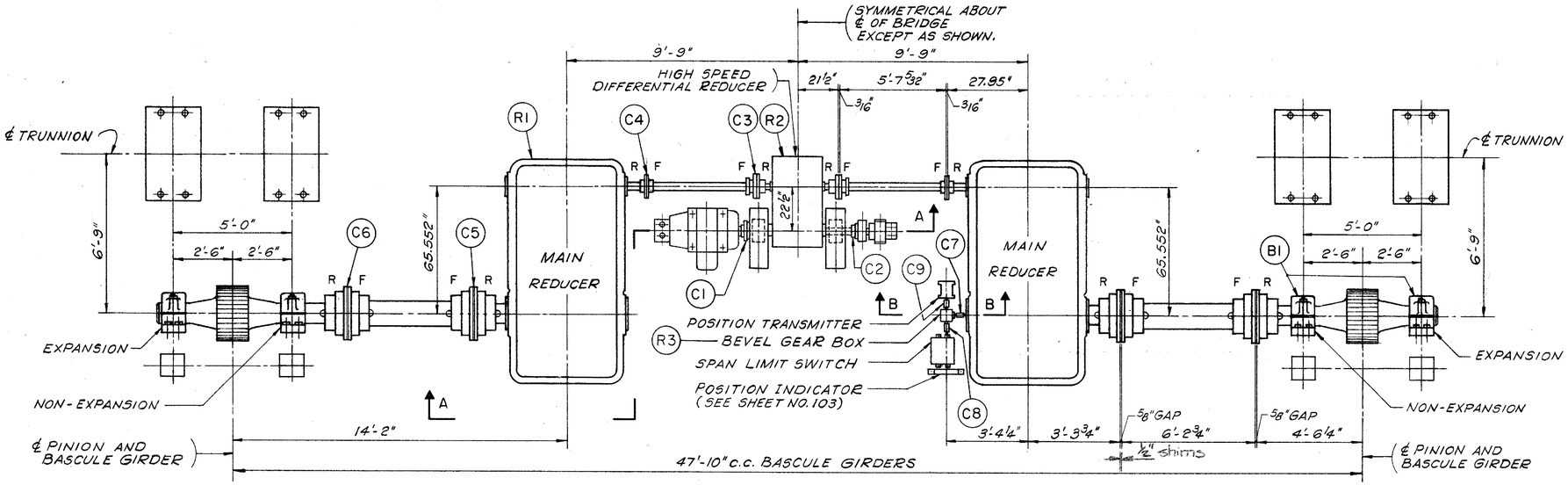

PLAN OF OPERATING MACHINERY

SCALE: 3/8" = 1'-0"

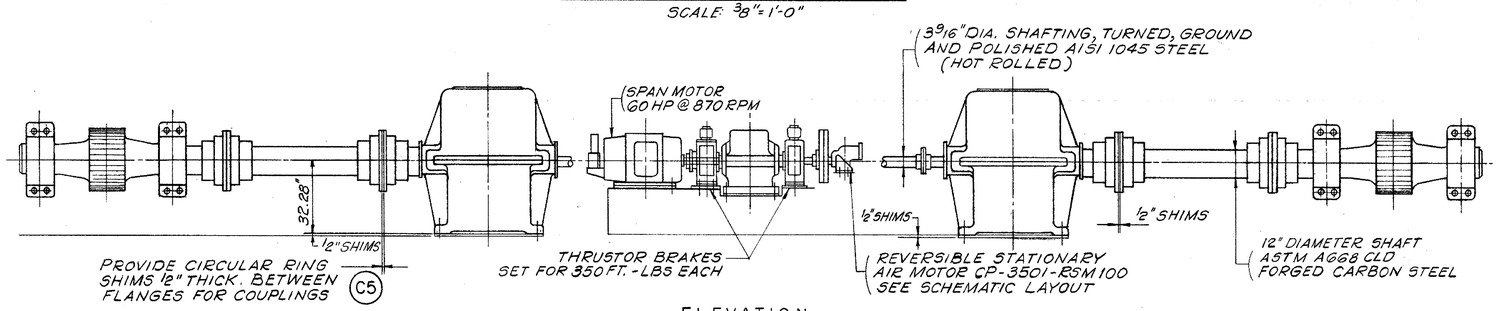

ELEVATION

SCALE: 3/8" = 1'-0"

NOTES:

1. SECTIONS A-A, B-B, SCHEMATIC LAYOUT FOR AIR MOTOR DRIVE ON SHEET NO. 103
2. FOR STRUCTURAL SUPPORTS OF OPERATING MACHINERY EXCEPT PINION BEARINGS SEE SHEET NO. 93
3. FOR STRUCTURAL SUPPORTS OF PINION BEARINGS SEE SHEET NO'S 91 & 92.
4. FOR MACHINERY GALLERY SEE SHEET NO'S 90 & 93. ALL SHIMS SHALL BE STRUCTURAL STEEL ASTM A588 FINISHED TO MATCH MACHINERY SURFACES FURNISHED, PROTECTED WITH LIGHT DUSTING OF INORGANIC ZINC PRIMER AND INCLUDED IN ITEM OF BRIDGE MACHINERY.
5. MANUAL EMERGENCY DRIVE IS PROVIDED BY REMOVING THE AIR MOTOR AND USING SPECIAL ADAPTER FITTED INTO DRIVEN HALF OF COUPLING # C2 WITH KEY. THE OTHER END OF ADAPTER SHOULD HAVE A 2½" SQUARE HOLE TO FIT 2½" SQUARE DRIVE OUT PUT OF WILLIAMS X-4 TORQUE MULTIPLIER # TM-2500.

GENERAL MACHINERY NOTES

DESIGN OF MACHINERY SHALL CONFORM TO THE STANDARD SPECIFICATIONS FOR MOVABLE HIGHWAY BRIDGES OF THE AMERICAN ASSOCIATION OF STATE HIGHWAY AND TRANSPORTATION OFFICIALS, 1978 EDITION, UNLESS OTHERWISE SHOWN ON THE PLAN, ELEVATION AND SECTIONS, OR PROVIDED FOR IN THE SUPPLEMENTAL SPECIFICATIONS.

ALL DIMENSIONS FOR MACHINE-FINISHED SURFACES SHALL BE HELD TO ± 0.01", EXCEPT AS OTHERWISE REQUIRED BY THE DRAWINGS OR SPECIFICATIONS.

DETAIL DIMENSIONS SHOWN ARE FOR THE UNITS SPECIFIED. IF OTHER UNITS ARE APPROVED FOR USE, THE CONTRACTOR SHALL MAKE ALL REVISIONS NECESSARY TO ACCOMMODATE THEM.

ALL HIGH-STRENGTH BOLTS SHALL CONFORM TO ASTM A449 AND SHALL HAVE A HARDENED WASHER UNDER THE HEAD AND THE NUT. HOLES SHALL NOT EXCEED ACTUAL DIAMETER OF BOLT BY MORE THAN 0.01 INCHES.

ANSI STANDARDS: B41-1979 AND B46.1-1978.

SURFACE	FIT	FINISH
MACHINERY BASE ON STEEL	---	250
SHAFT JOURNALS	RC6	8
JOURNAL BUSHING	RC6	16
SOLID BUSHING IN BASE TO 1/4" WALL)	FN1	63
SOLID BUSHING IN BASE OVER 1/4" WALL)	FN2	63
HUBS ON SHAFTS (TO 2" BORE)	FN2	32
HUBS ON SHAFTS (OVER 2" BORE)	FN2	63
HUBS ON MAIN TRUNNIONS	FN2	63
SPLIT BUSHING IN BASE	LC1	125
SLIDING BEARINGS	RC6	32
KEY AND KEYWAYS	LC3	63
MACHINERY PARTS IN FIXED CONTACT	---	125
SHAFTS	---	63
TEETH OF OPEN SPUR GEARS:		
UNDER 1" CIRCULAR PITCH	---	32
1" TO 1-3/4" CIRCULAR PITCH	---	63
OVER 1-3/4" CIRCULAR PITCH	---	125

THE ABOVE FITS FOR CYLINDRICAL PARTS SHALL ALSO APPLY TO THE MAJOR DIMENSIONS OF NONCYLINDRICAL PARTS.

TABLE OF COUPLINGS

MARK	QUANTITY PER BRIDGE	HP PER 100 RPM / TORQUE IN-KIPS	SIZE	TYPE	DRIVING NOMINAL BORE	DRIVING KEY	R-RIGID F-FLEX.	DRIVEN KEY	DRIVEN NOMINAL BORE	MANUFACTURER
C1	1	23.8 / 6.5	90T10	TAPERED GRID	3 3/8	7/8 x 7/8	F	F	5/8 x 5/8	2½ ~~2 3/8~~	THE FALK CORPORATION
C2	1	43.8 / 27.6	2 1/2	**	2½ ~~2 7/16~~	5/8 x 5/8	F	F	3/8 x 3/8	1 1/2	FAST COUPLING
C3	2	140 / 88.2	3	SERIES H ER FLANGED TYPE FLEX-RIGID	3½ ~~4 7/8~~	⅞ x ⅞* ~~1 1/4 x 7/8~~	R	F	7/8 x 7/8 *	3 9/16	PHILADELPHIA GEAR CORPORATION COUPLINGS
C4	2	140 / 88.2	3		3 9/16	7/8 x 7/8 *	F	R	1 x 1 *	3 13/16	
C5	2	4400 / 2800	10	SERIES ERD FLANGED TYPE	12 ~~11 3/8~~	(2) 3x2 *	R	F	(2) 3x2 *	12	
C6	2	4400 / 2800	10	SERIES ERD FLANGED TYPE	12	(2) 3x2 *	F	R	(2) 3x2 *	12	
C7	1	— / 1.0	FC 30	FC WITH XFCBB BOST-BRONZE INSERTS	1 1/2	3/8 x 3/8	–	–	3/8 x 3/8	1 1/2	BOSTON GEAR COUPLINGS
C8	1	— / 1.0	FC 30		1 1/2	3/8 x 3/8	–	–	3/16 x 3/16	3/4	
C9	1	— / 1.0	FC 30		1 1/2	3/8 x 3/8	–	–	WOODRUFF NO. 404	⅝ ~~1/2~~	

TABLE OF GEARING

MARK	RATIO	QUANTITY	DESCRIPTION		MANUFACTURER AND UNIT NO. SHOWN
RACK	8.39:1	2	4½" C.P. 20° STUB INVOLUTE	23 TEETH 108.146" P.R.	
PINION		2		18 TEETH 25.783" P.D.	
R1	70:1	2 (1 RIGHT HAND, 1 LEFT HAND)	MAIN REDUCER, PARALLEL SHAFT HELICAL-SPUR GEAR RATED TO TRANSMIT 2,207 IN-KIPS ON OUTPUT SHAFT AT 62 R.P.M. INPUT SPEED. SERVICE FACTOR = 1.0 SPECIAL.		~~PHILADELPHIA GEAR CORPORATION "M" SERIES NO. 185HP3~~ EARLE GEAR CORP. No. 11T REDUCER
R2	14:1	1	HIGH SPEED DIFFERENTIAL REDUCER, SPECIAL. DOUBLE REDUCTION 60 H.P. AT 870 R.P.M. SERVICE FACTOR = 1.0		~~PHILADELPHIA GEAR CORPORATION HELICAL NO. 3213 TD~~ EARLE GEAR CORP. No. 6 DD REDUCER
R3	1:1.2105 EXACT RATIO	1	INSTRUMENT DRIVE REDUCER, RIGHT ANGLE BEVEL GEAR BOX		BROWNING NO. 18 HBI-LRI2-A FIG. 2

KEYS MARKED (*) SHALL MEET THE REQUIREMENTS OF ASTM A668 CLASS K. ALL OTHERS SHALL BE ASTM A668 CLASS D.

** FCCM CUT-OUT WITH MANUAL SHIFTER MECHANISM AND (2) PM PEDESTALS.

TABLE OF BEARINGS

MARK	QUANTITY PER BRIDGE	SHAFT DIAMETER	DESCRIPTION	MANUFACTURER AND UNIT NO.
B1	4	12"	MAIN PINION BEARING, CAST STEEL PILLOW BLOCK WITH SELF-ALIGNING SPHERICAL ROLLER BEARING B-10 LIFE = 40,000 HOURS, 160,000 LBS AT 10 RPM FOR EACH BEARING. HIGH STRENGTH CAP BOLTS, ADAPTER MOUNTING.	SKF NO. SDAF58064 KA/12

PREL. TRACING AGL DESIGN LN CHKD. LN

40389

CONTRACT	COUNTY	FEDERAL AID PROJECT Nº	SHEET Nº	TOTAL SHEETS
82-073-05	SUSSEX	BRF-1009(3)	103	155

OPERATING MACHINERY DETAILS

HARDESTY & HANOVER CONSULTING ENGINEERS NEW YORK, N.Y.

REVISIONS

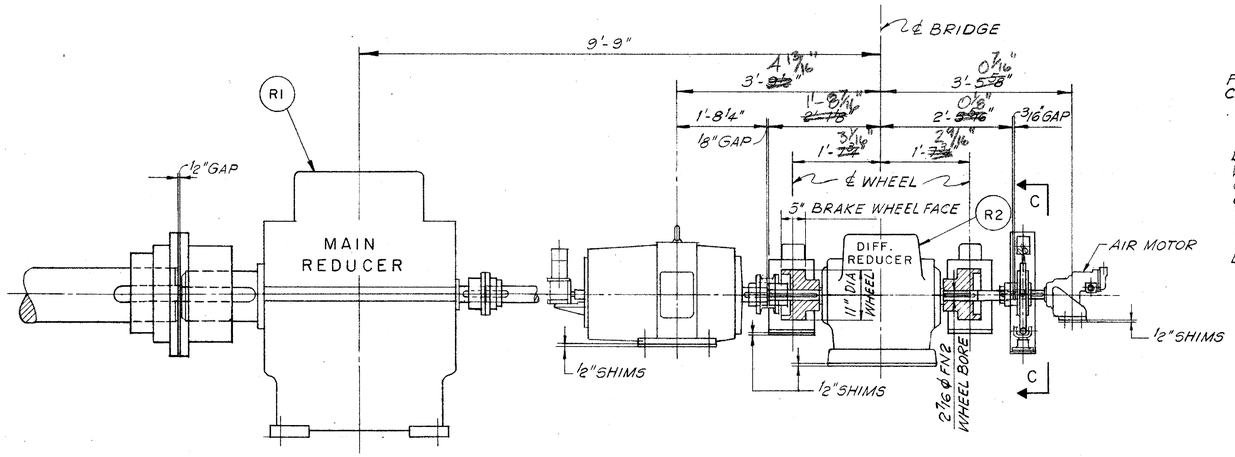

SECTION A-A
SCALE: 3/4" = 1'-0"

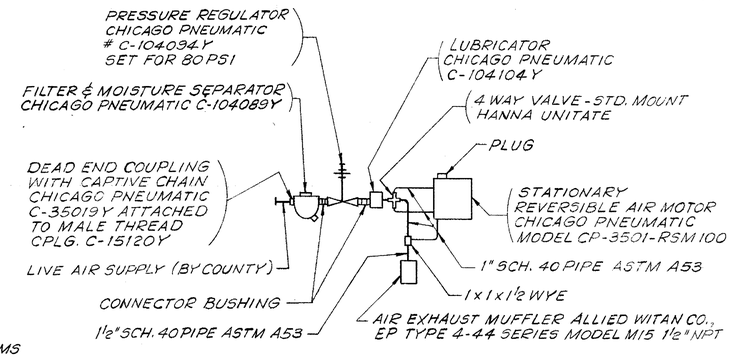

SCHEMATIC LAYOUT FOR AIR MOTOR DRIVE

NOTES:

1. FOR MACHINERY NOTES SEE SHEET NO. 102
2. SECTIONS A-A & B-B TAKEN ON SHEET NO. 102

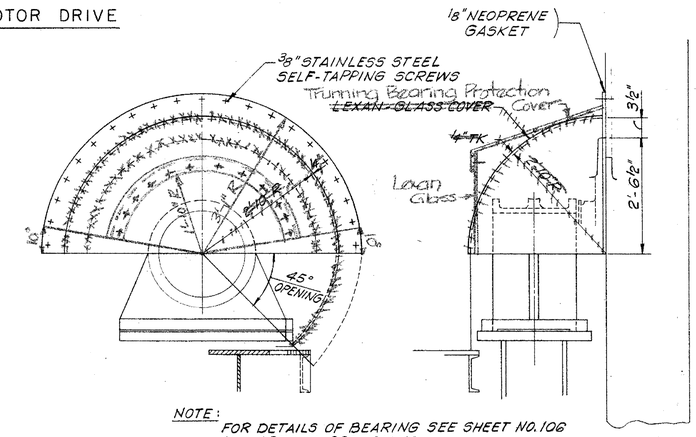

NOTE: FOR DETAILS OF BEARING SEE SHEET NO. 106 AND SPECIAL PROVISIONS.

TRUNNION BEARING PROTECTION COVER
N.T.S.

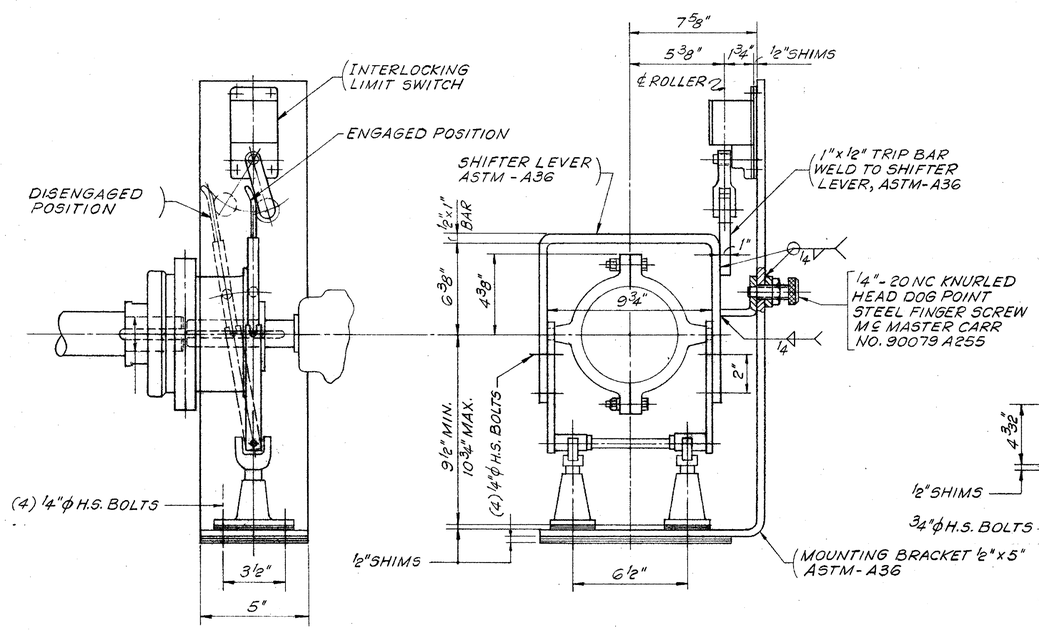

SECTION C-C
SCALE: 3" = 1'-0"

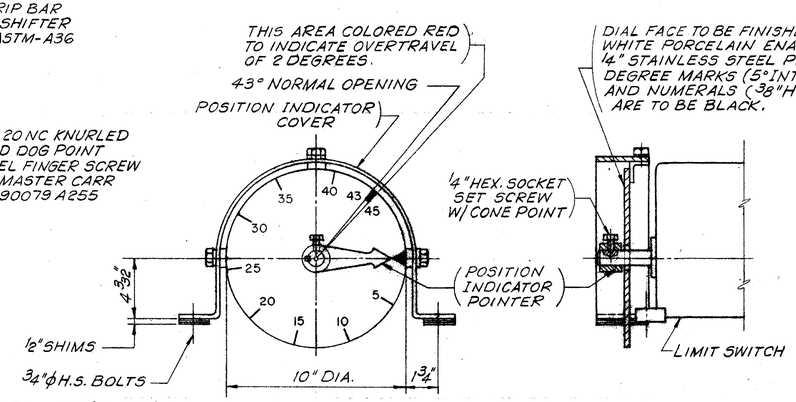

POSITION INDICATOR
SCALE: 3" = 1'-0"

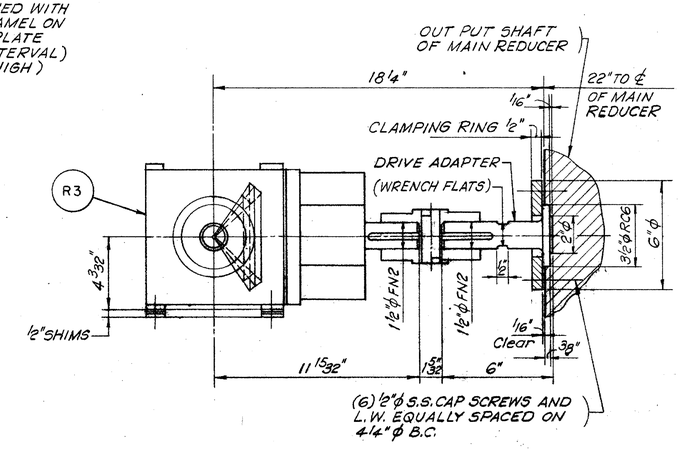

SECTION B-B
SCALE: 3" = 1'-0"

PREL. TRACING A.G. DESIGN L.N. CHKD L.N.

CONTRACT	COUNTY	FEDERAL AID PROJECT Nº	SHEET Nº	TOTAL SHEETS
82-073-05	SUSSEX	BRF-1009(3)	104	155

LOCK MACHINERY ASSEMBLY

HARDESTY & HANOVER
CONSULTING ENGINEERS
NEW YORK, N.Y.

REVISIONS

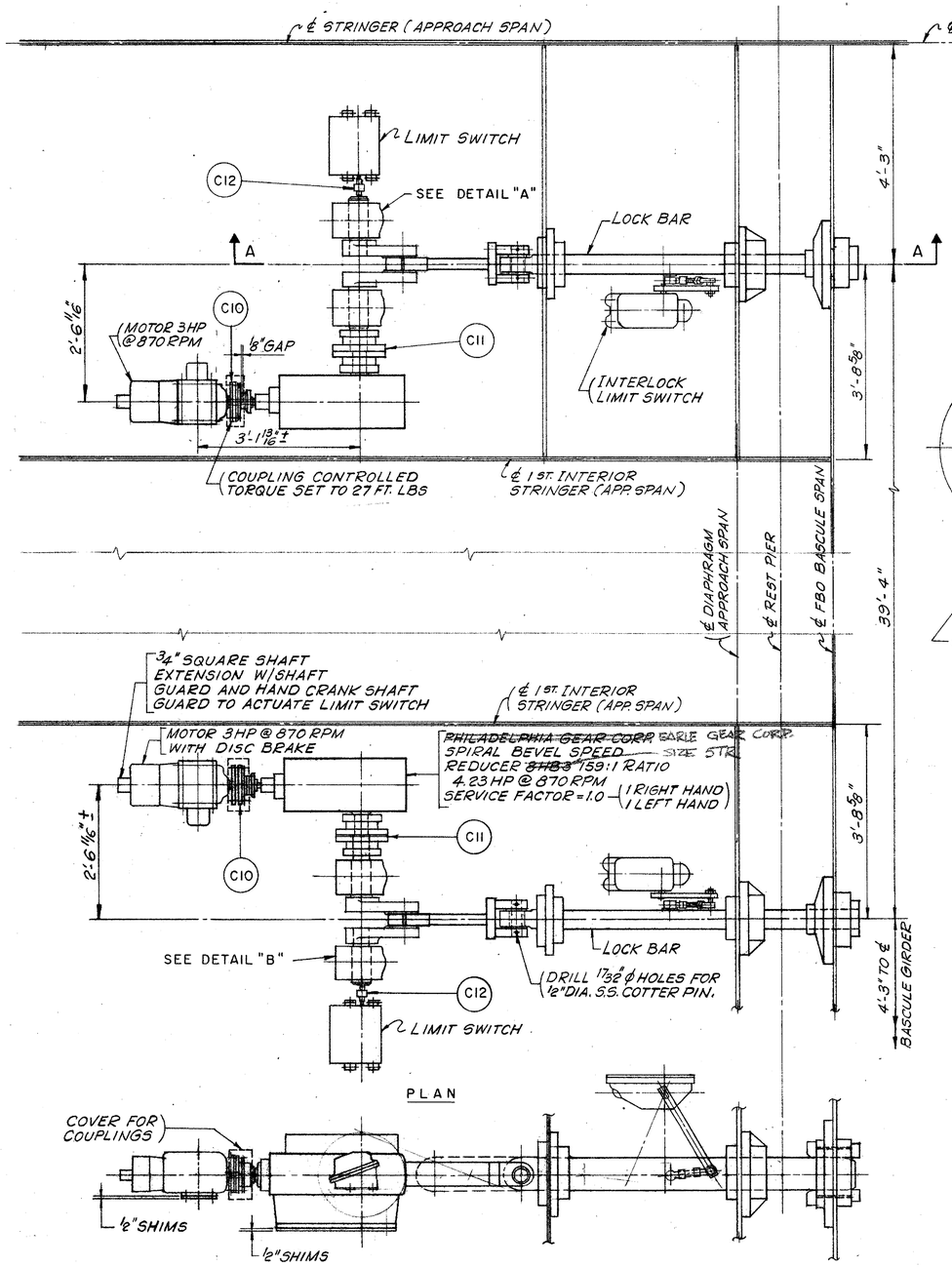

SPAN LOCK ASSEMBLY
SCALE: 3/4" = 1'-0"

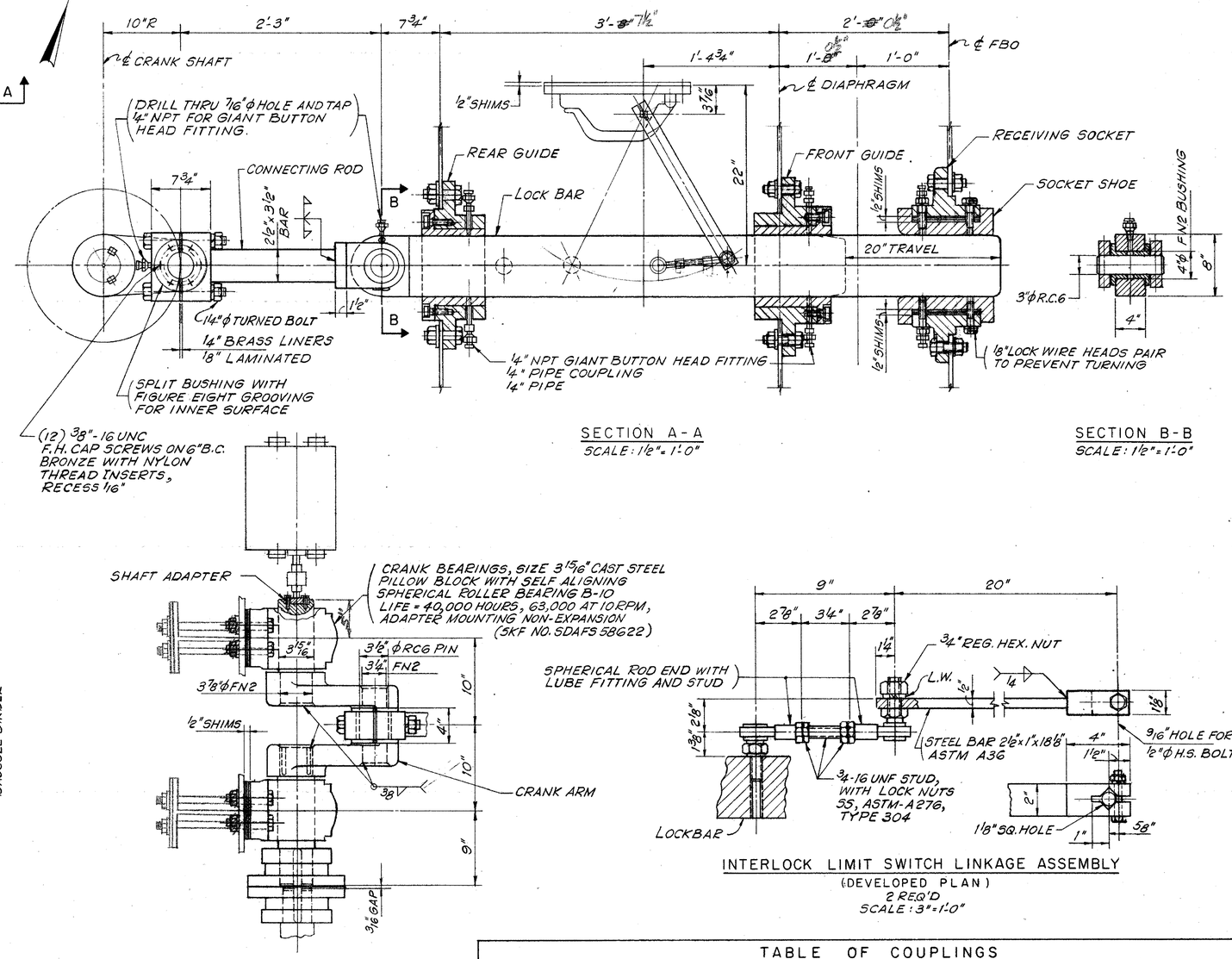

NOTES:
1. FOR MACHINERY NOTES SEE SHEET NO. 102
2. WORK THIS SHEET WITH SHEET NO. 105
3. FOR LOCK MACHINERY SUPPORTS SEE SHEET NO. 95
4. FOR LOCK PLATFORM DETAILS SEE SHEET NO. 99

TABLE OF COUPLINGS

MARK	QUANTITY PER BRIDGE	HP PER 100 RPM / TORQUE KIPS-IN	SIZE	TYPE	DRIVING NOMINAL BORE	DRIVING KEY	R = RIGID F = FLEX		DRIVEN KEY	DRIVEN NOMINAL BORE	MANUFACTURER
C10	2	1.96 / .54	40T 41	CONTROLLED TORQUE	1 3/8	5/16 x 5/16 (2) 120° APART	F	F	1/4 x 1/4	1 1/4	THE FALK CORPORATION
C11	2	205 / 129	3	SERIES H-E FLANGED TYPE	3	3/4 x 3/4	F	F	(2) 1 x 1	3 15/16	PHILADELPHIA GEAR CORPORATION COUPLINGS
C12	2	— / 1.0	FC 20	FC W/ XFC BB BOST BRONZE INSERTS	~~7/16~~ ±	~~5/16 x 5/16~~ ~~1/4 x 1/4~~	–	–	3/16 x 3/16	3/4	BOSTON GEAR COUPLINGS

PREL. TRACING AGL DESIGN LN CHKD. LN

CONTRACT	COUNTY	FEDERAL AID PROJECT Nº	SHEET Nº	TOTAL SHEETS
82-073-05	SUSSEX	BRF-1009(3)	105	155

LOCK MACHINERY DETAILS

HARDESTY & HANOVER CONSULTING ENGINEERS NEW YORK, N.Y.

REVISIONS

PREL. TRACING AGL DESIGN LN CHKD. LN

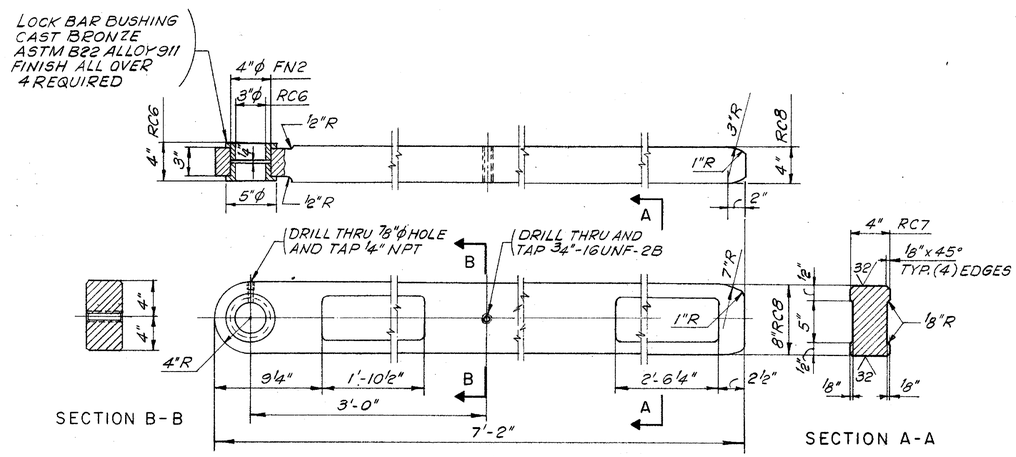

LOCK BAR

FORGED CARBON STEEL ASTM A668-CLASS D
FINISH ALL OVER
(2 REQUIRED)
SCALE: 1 1/2"=1'-0"

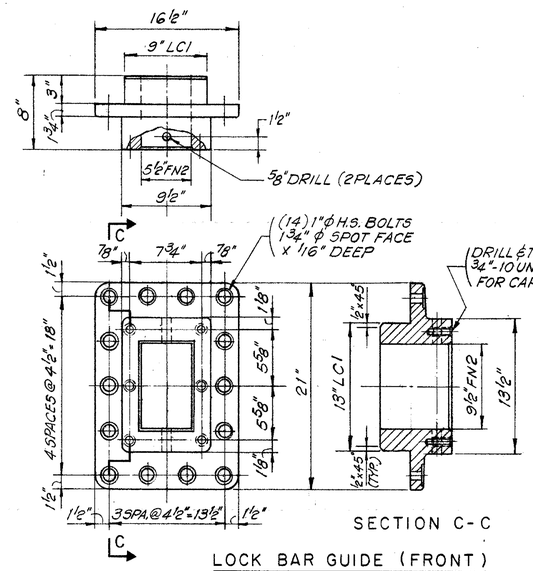

LOCK BAR GUIDE (FRONT)

CAST CARBON STEEL ASTM A27 GR. 70-36
(2 REQUIRED)
SCALE: 1 1/2"=1'-0"

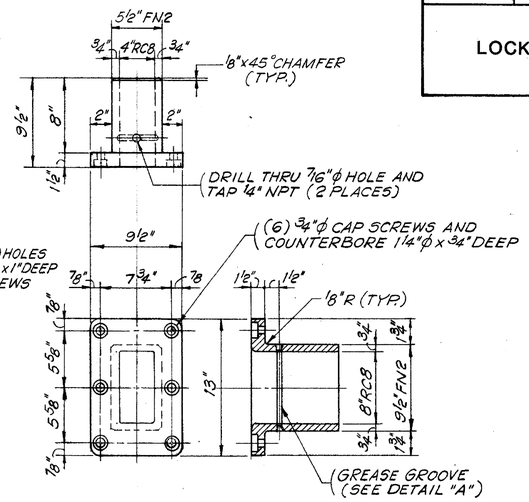

LOCK BAR GUIDE BUSHING (FRONT)

CAST BRONZE ASTM B22 ALLOY C86300
FINISH ALL OVER
(2 REQUIRED)
SCALE: 1 1/2"=1'-0"

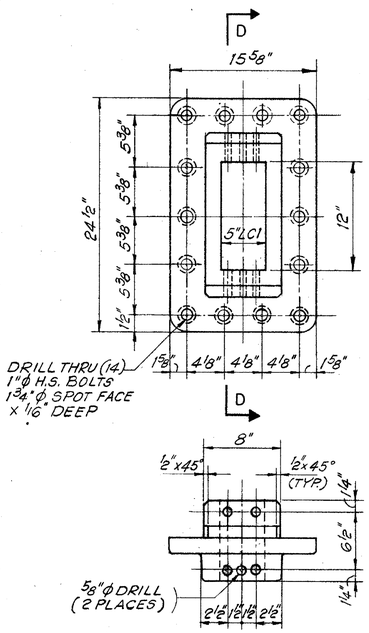

LOCK BAR RECEIVING SOCKET

CAST CARBON STEEL ASTM A27 GR. 70-36
(2 REQUIRED)
SCALE: 1 1/2"=1'-0"

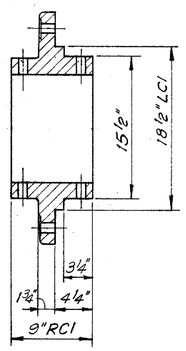

SECTION D-D

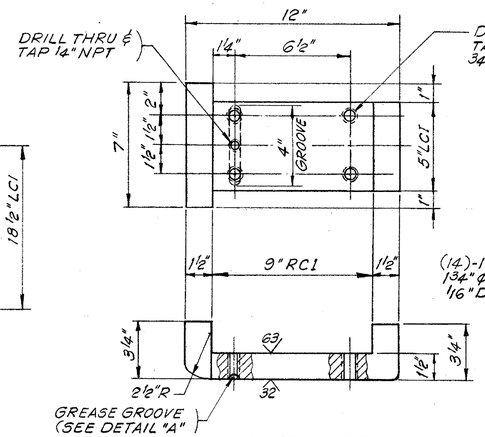

SOCKET SHOE

CAST BRONZE ASTM B22 ALLOY C86300
(4 REQUIRED)
SCALE: 3"=1'-0"

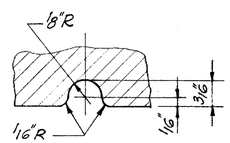

DETAIL "A"

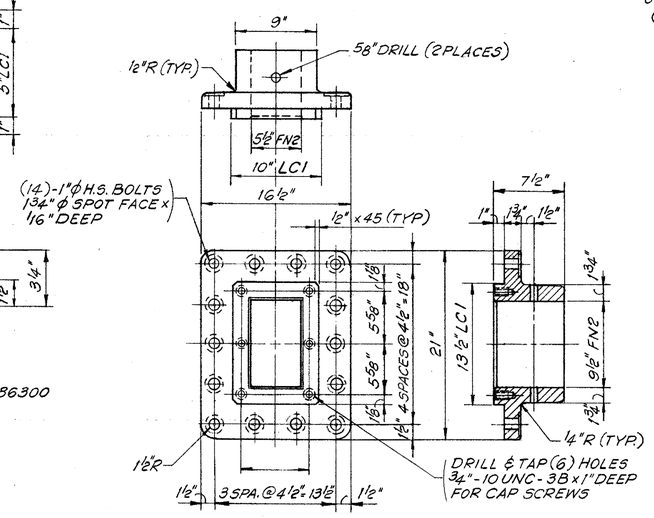

LOCK BAR GUIDE (REAR)

CAST CARBON STEEL ASTM A27 GR 70-36
(2 REQUIRED)
SCALE: 1 1/2"=1'-0"

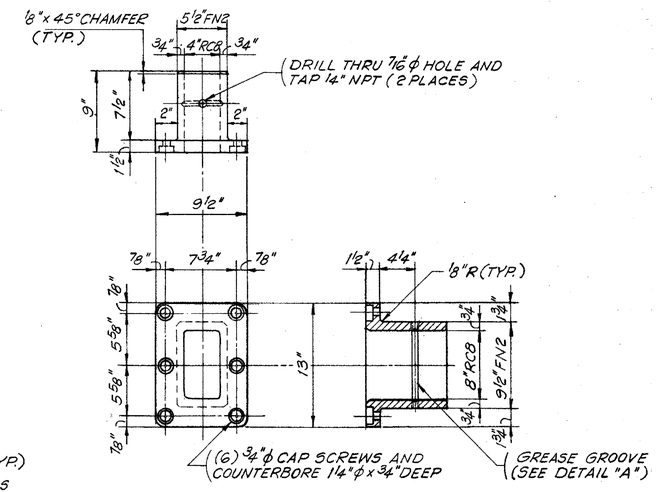

LOCK BAR GUIDE BUSHING (REAR)

CAST BRONZE ASTM B22 ALLOY C86300
FINISH ALL OVER
(2 REQUIRED)
SCALE: 1 1/2"=1'-0"

NOTES:

1. FOR MACHINERY NOTES SEE SHEET NO. 102
2. WORK THIS SHEET WITH SHEET NO. 104

CONTRACT	COUNTY	FEDERAL AID PROJECT Nº	SHEET Nº	TOTAL SHEETS
82-073-05	SUSSEX	BRF-1009(3)	106	155

TRUNNIONS, BEARING, RACK AND PINION DETAILS

HARDESTY & HANOVER CONSULTING ENGINEERS NEW YORK, N.Y.

REVISIONS

01-Revisions Made As Per H.H. Letter Dated 4-25-85 5-29-85 P.F.

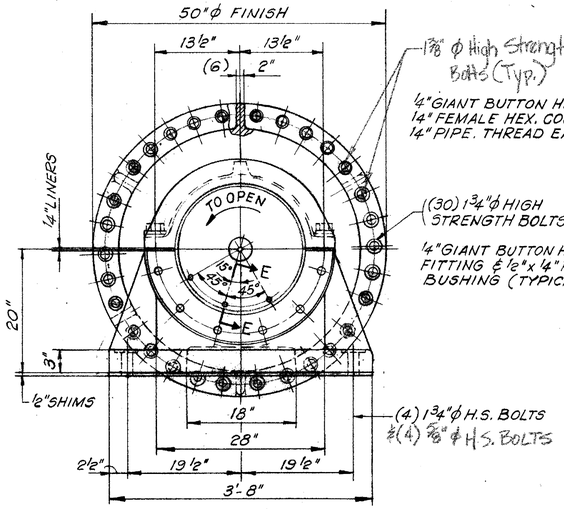

SECTION A-A
SCALE: 1"=1'-0"

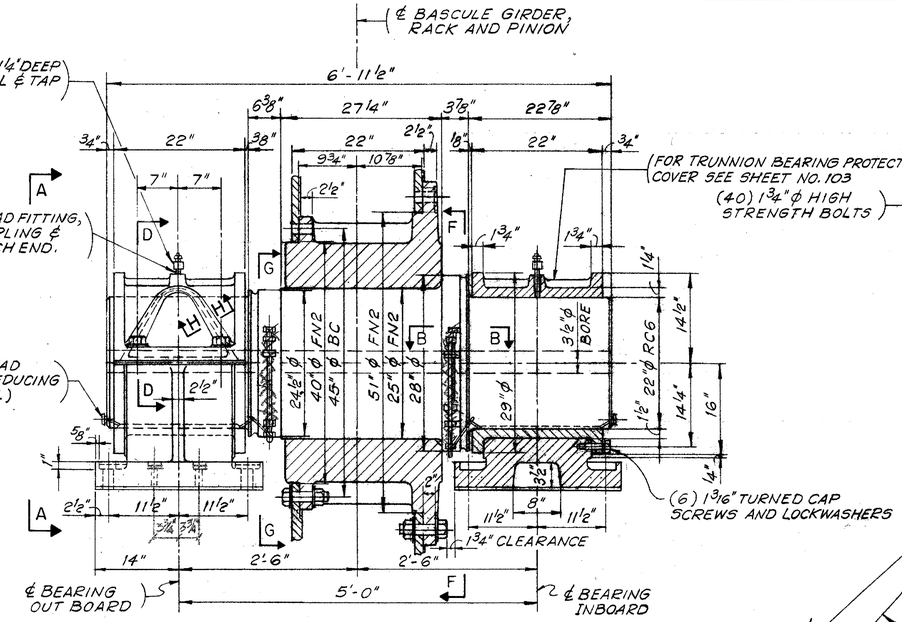

TRUNNION, HUB AND BEARINGS ASSEMBLY
(2 REQUIRED)
SCALE: 1"=1'-0"

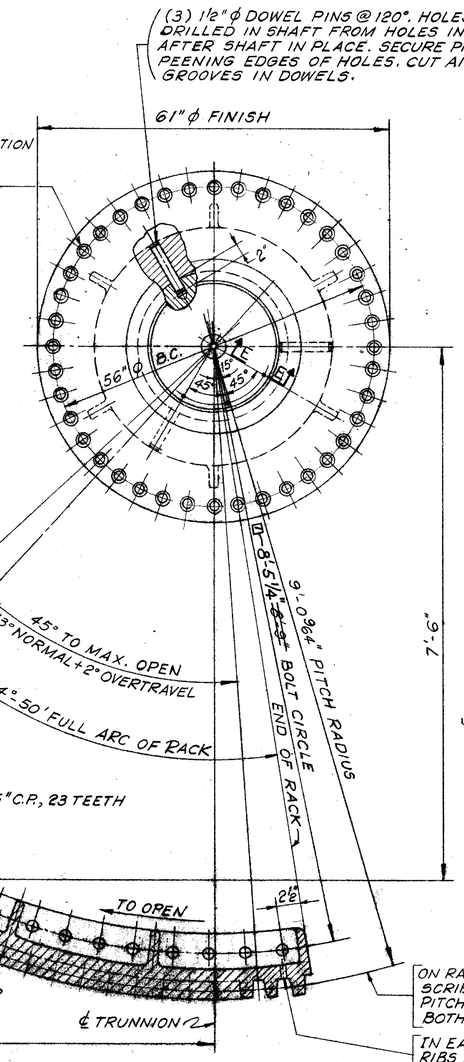

RACK AND PINION ASSEMBLY
(2 REQUIRED)
SCALE: 1"=1'-0"

NOTE:
1. FOR MACHINERY NOTES SEE SHEET NO. 102

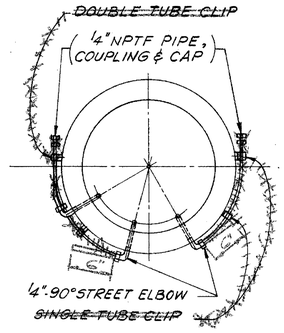

SECTION G-G (AS SHOWN)
SECTION F-F (OPPOSITE HAND)
SCALE: 1"=1'-0"

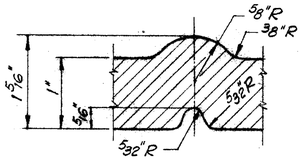

SECTION H-H
SCALE: FULL SIZE

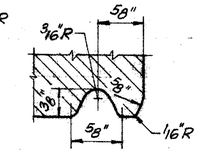

SECTION B-B
SCALE: FULL SIZE

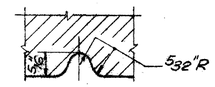

SECTION C C
SCALE: FULL SIZE

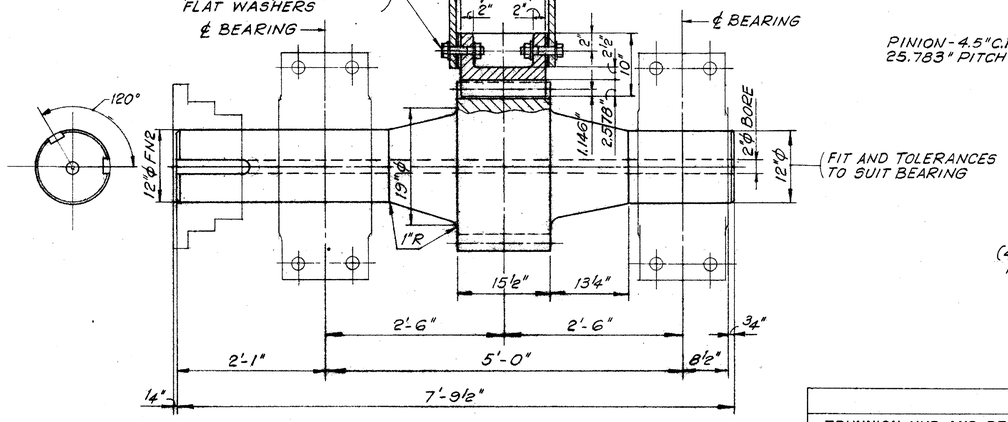

MAIN PINION AND SHAFT

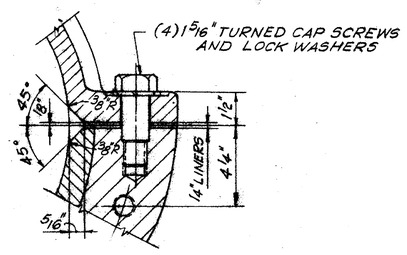

SECTION D-D
SCALE: 3"=1'-0"

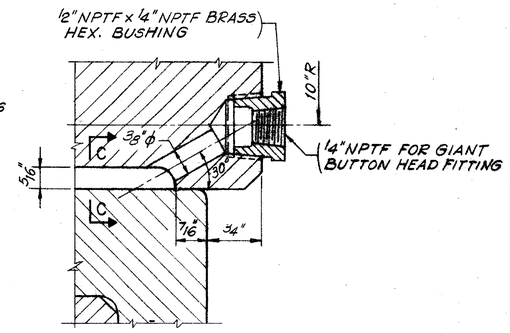

SECTION E-E
SCALE: FULL SIZE

MATERIAL LIST		
RACK AND PINION		
PART	MATERIAL	DESIGNATION
PINION	FORGED CARBON STEEL	ASTM A291, CLASS 3
RACK	CAST STEEL	ASTM A148, GRADE 90-60
HIGH-STRENGTH BOLTS	QUENCHED & TEMP. STEEL	ASTM A449
WASHERS	HARDENED STEEL	ASTM F436
KEYS	FORGED ALLOY STEEL	ASTM A668, CLASS D&K
SHIMS	STRUCTURAL STEEL	ASTM A588

MATERIAL LIST		
TRUNNION HUB AND BEARINGS		
PART	MATERIAL	DESIGNATION
TRUNNIONS	CARBON STEEL FORGING	ASTM A668, CLASS D
HUB	CARBON STEEL CASTING	ASTM A27, GRADE 70-36
BEARING BASE	CARBON STEEL CASTING	ASTM A27, GRADE 70-36
BUSHING	BRONZE CASTING	ASTM B22, ALLOY C91100
CAP	BRONZE CASTING	ASTM B22, ALLOY C91100
DOWEL PINS	CARBON STEEL FORGING	ASTM A668, CLASS D
BASE SHIMS	ROLLED STEEL	ASTM A569, A588
LINERS	COMMERCIAL HIGH BRASS	MIL-S-22499
HIGH-STRENGTH BOLTS	QUENCHED & TEMP. STEEL	ASTM A449
HEX. NUTS FOR H.S. BOLTS	STEEL	ASTM A563, GRADE B
WASHERS	HARDENED STEEL	ASTM F436
TURNED BOLTS & SCREWS	BOLT STEEL	ASTM A307, GRADE A
LUBRICATION PARTS	BRASS	ASTM B43
LUBRICATION FITTINGS	COMMERCIAL	

PREL. TRACING AGL DESIGN LN CHKD LN

CONTRACT	COUNTY	FEDERAL AID PROJECT Nº	SHEET Nº	TOTAL SHEETS
82-073-05	SUSSEX	BRF-1009(3)	107	155

BARRIER GATE DETAILS I

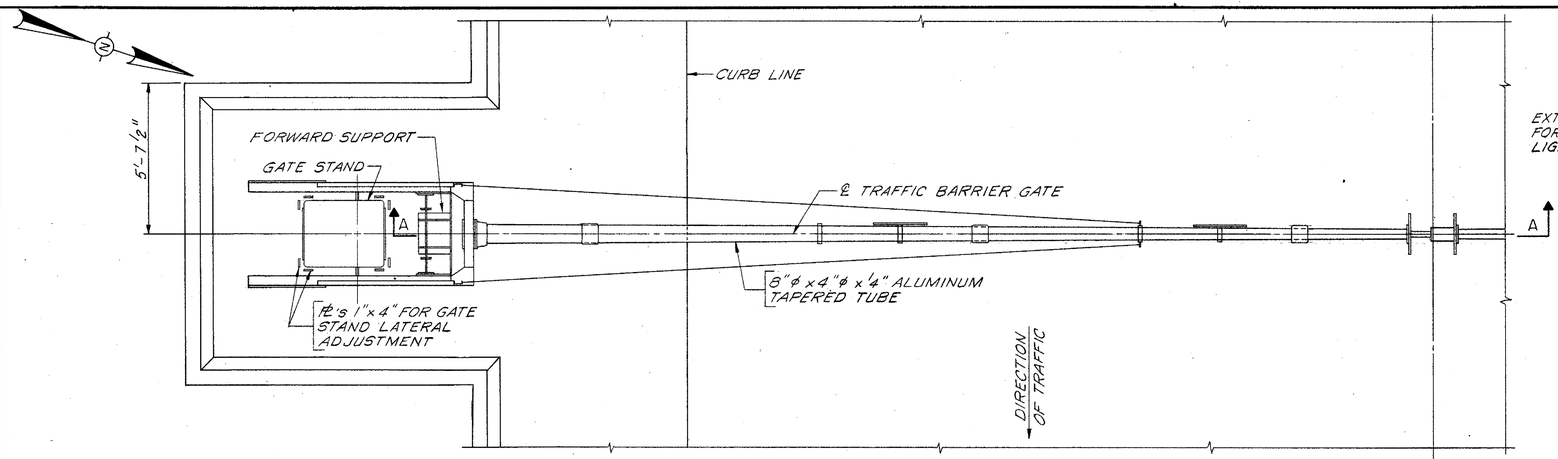

PLAN

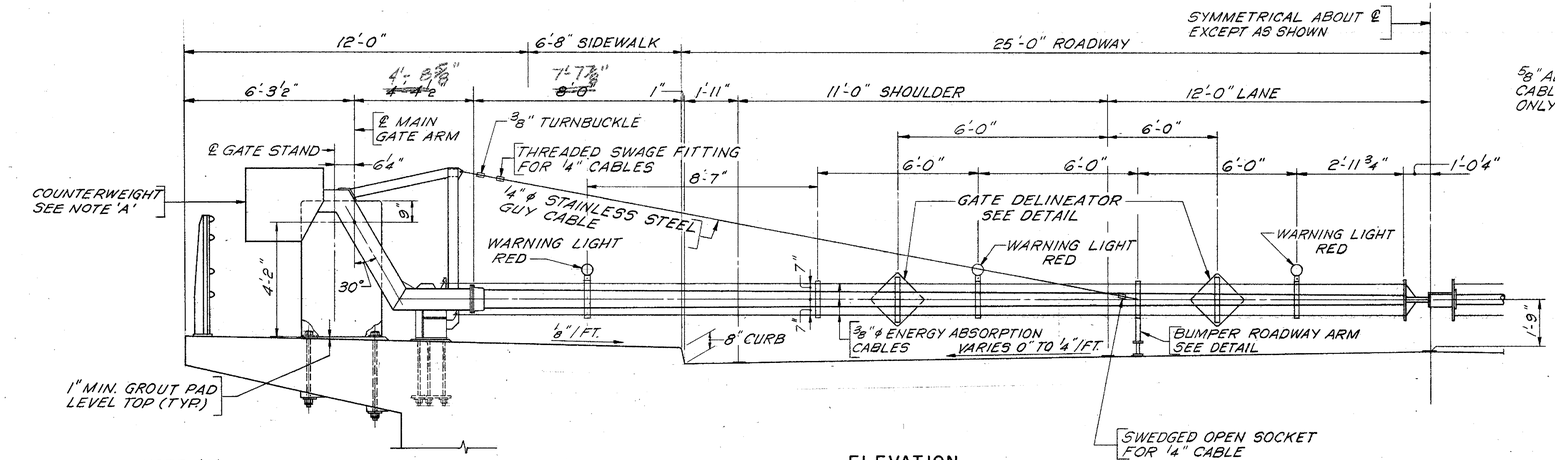

NOTE 'A':
COUNTERWEIGHT POSITION TO BE DETERMINED BY THE MANUFACTURER BASED ON A BALANCE OF THE TRAFFIC GATE IN THE SHOP.

ELEVATION
N.T.S.

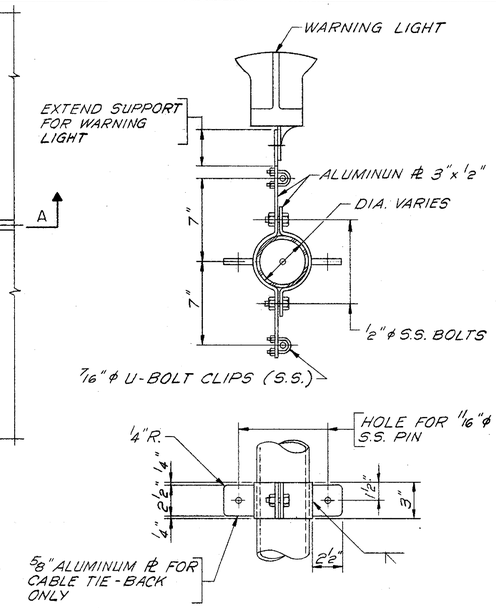

CABLE AND WARNING LIGHT BRACKET DETAIL
SCALE: 2"=1'-0"

NOTES:

1. GATE ARM, STANDARD ALUMINUM POLE, ALLOY 6063-T6 WITH CAST 606-1T6 BASE, ARM, ARM BRACKETS AND ALL ALUMINUM PARTS SHALL BE CLEANED AND PRIMED ONE COAT OF ZINC CHROMATE PRIMER. FINAL FINISH SHALL BE BY GENERAL CONTRACTOR AFTER ERECTION, TEST AND FINAL INSPECTION.
2. GATE ARM CONNECTIONS AT CENTERLINE OF BRIDGE AND AT SIDEWALK SHALL BE STRUCTURAL STEEL ASTM A588, HOT DIPPED GALVANIZED, FASTENERS SHALL BE ASTM A325 UNLESS OTHERWISE NOTED.
3. STAINLESS STEEL FASTENERS SHALL BE ASTM A240, TYPE 304 AND ASTM A320 GRADE B8, STRAIN HARDENED.
4. TURN BUCKLES AND WIRE ROPE HARDWARE SHALL BE STEEL HOT DIPPED GALVANIZED.
5. GUY CABLE SHALL BE PREFORMED 7 X 19 STAINLESS STEEL 18-8, .312D.D. MINIMUM BREAKING STRENGTH 9,000 LBS. FITTINGS SHALL BE STAINLESS STEEL THREADED SWAGE TYPE.
6. ENERGY ABSORPTION CABLES SHALL BE 3/8" Ø - 7 X 19 - ANNEALED STAINLESS STEEL WIRE ROPE WITH STAINLESS STEEL THREADED SWAGE FITTINGS.
7. GATE HOUSING, SIDE ARM TUBES, CABLE ANCHORAGE AND ALL EXPOSED STEEL PARTS EXCEPT FASTENERS SHALL BE HOT DIPPED GALVANIZED. STEEL FASTENERS SHALL BE ZINC OR CAD PLATED.
8. JACK BOLTS SHALL BE HI-TEN STEEL UNF.750-16 WITH CASE HARDENED TIP, FINISH CAD PLATE.
9. ARM REST BUMPER SHALL BE ALUMINUM, 6061-T6 WITH STAINLESS STEEL PIVOT.

NOTE:
FOR ADDITIONAL DETAILS SEE SHEET NO. 108.

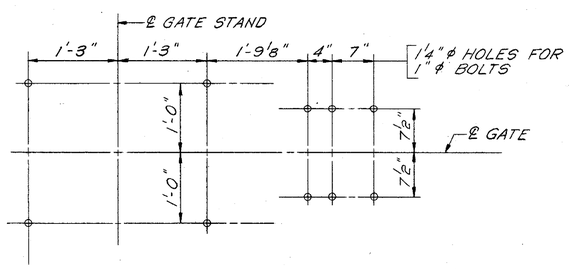

ANCHOR BOLT PLAN
SCALE: 1"=1'-0"

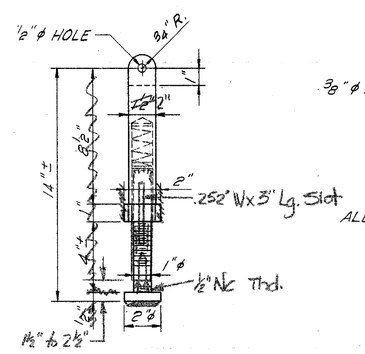

BUMPER ROADWAY ARM
SCALE: 3"=1'-0"

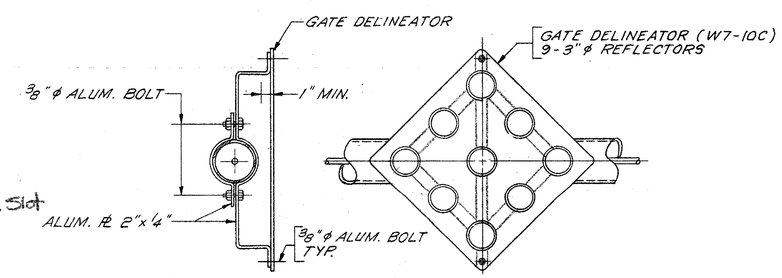

GATE DELINEATOR DETAIL
SCALE: 2"=1'-0"

HARDESTY & HANOVER CONSULTING ENGINEERS NEW YORK, N.Y.

REVISIONS

PREL. TRACING M. POBLETE DESIGN H.E.D. CHKD. H.E.D.

HARDESTY & HANOVER
CONSULTING ENGINEERS
NEW YORK, N.Y.

CONTRACT	COUNTY	FEDERAL AID PROJECT Nº	SHEET Nº	TOTAL SHEETS
82-073-05	SUSSEX	BRF-1009(3)	108	155

BARRIER GATE DETAILS II

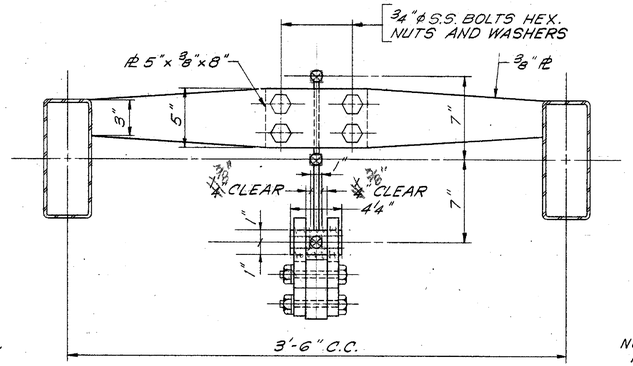

SECTION E-E

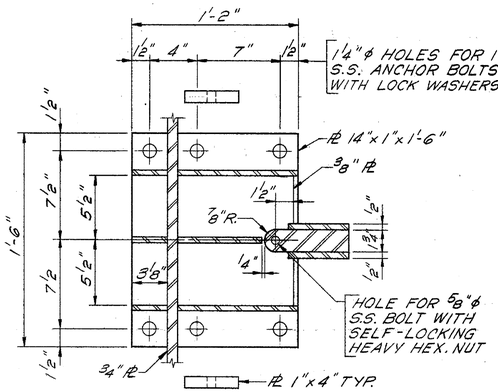

SECTION C-C

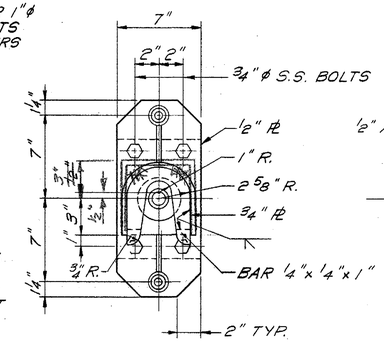

SECTION B-B

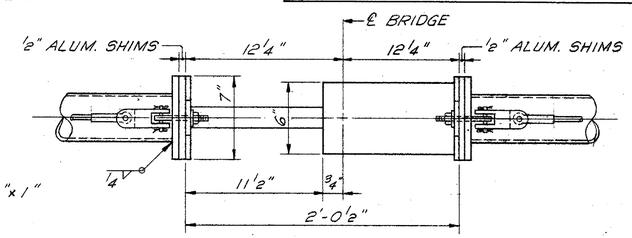

PLAN AT ℄ BRIDGE

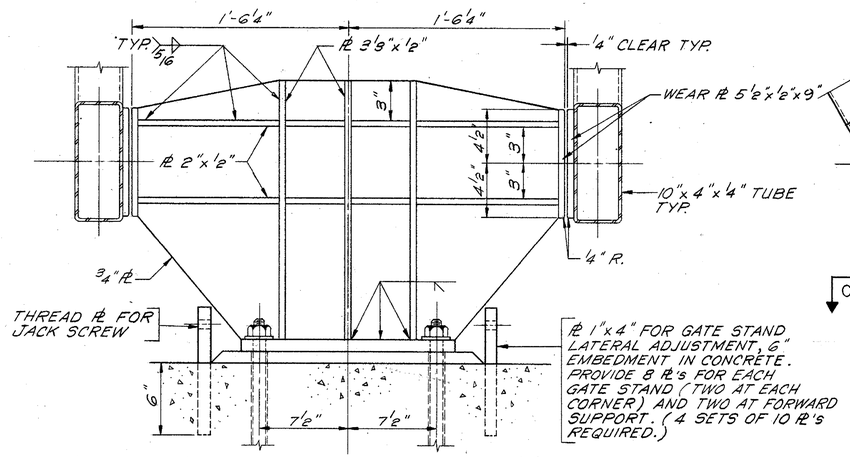

SECTION D-D

NOTE "A"
FILLET WELD 1/8"x 1/8"x 1/2" AFTER FINAL ADJUSTMENTS ARE MADE IN FIELD (TYP).

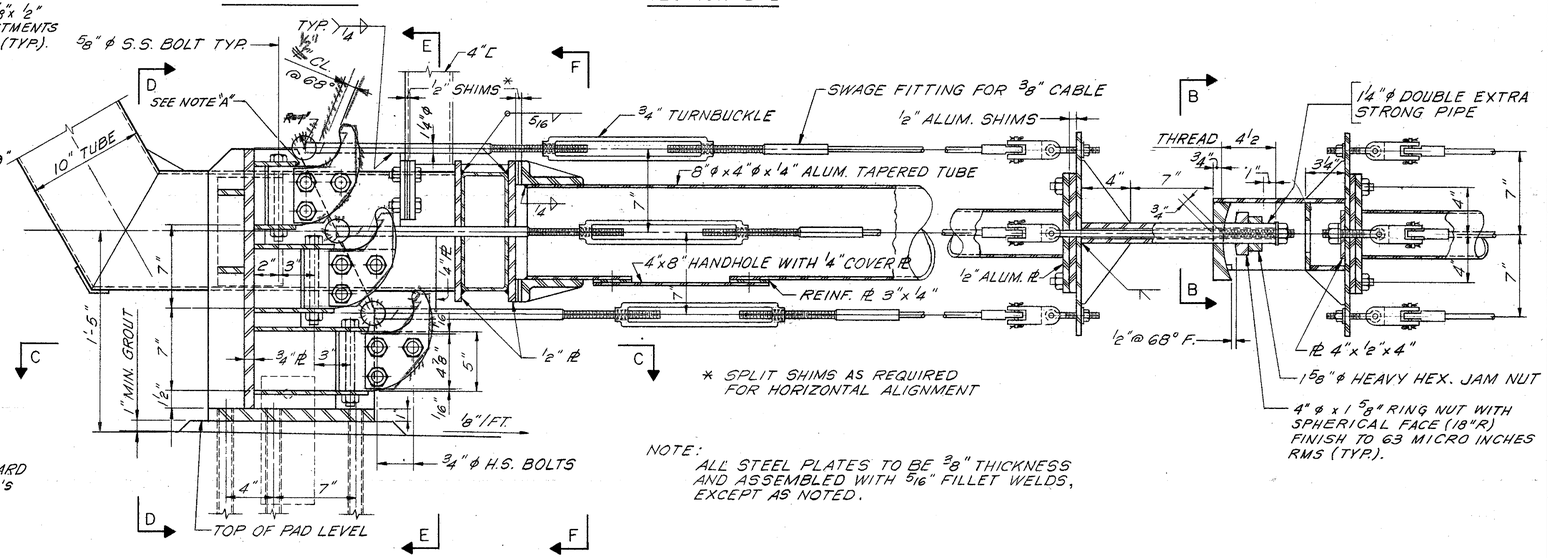

* SPLIT SHIMS AS REQUIRED FOR HORIZONTAL ALIGNMENT

NOTE:
ALL STEEL PLATES TO BE 3/8" THICKNESS AND ASSEMBLED WITH 5/16" FILLET WELDS, EXCEPT AS NOTED.

SECTION A-A

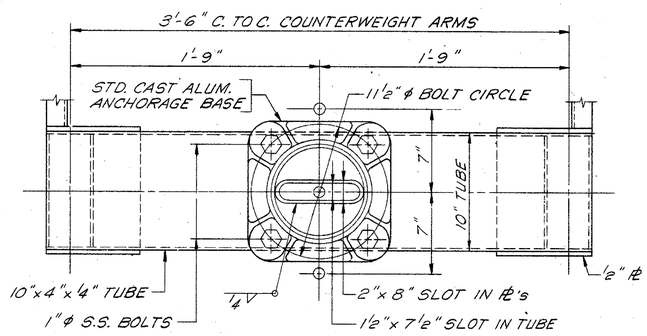

SECTION F-F

NOTES:

1. FOR LOCATION OF SECTION A-A AND NOTES SEE SHEET NO. 107.
2. ALL SECTIONS ON THIS SHEET ARE SHOWN ON A SCALE OF 2"=1'-0"

REVISIONS

PREL. TRACING M. POBLETE DESIGN H.E.D CHKD H.E.D

CONTRACT	COUNTY	FEDERAL AID PROJECT Nº	SHEET Nº	TOTAL SHEETS
82-073-05	SUSSEX	BRF-1009(3)	109	155

ONE LINE WIRING DIAGRAM

HARDESTY & HANOVER
CONSULTING ENGINEERS
NEW YORK, N.Y.

REVISIONS

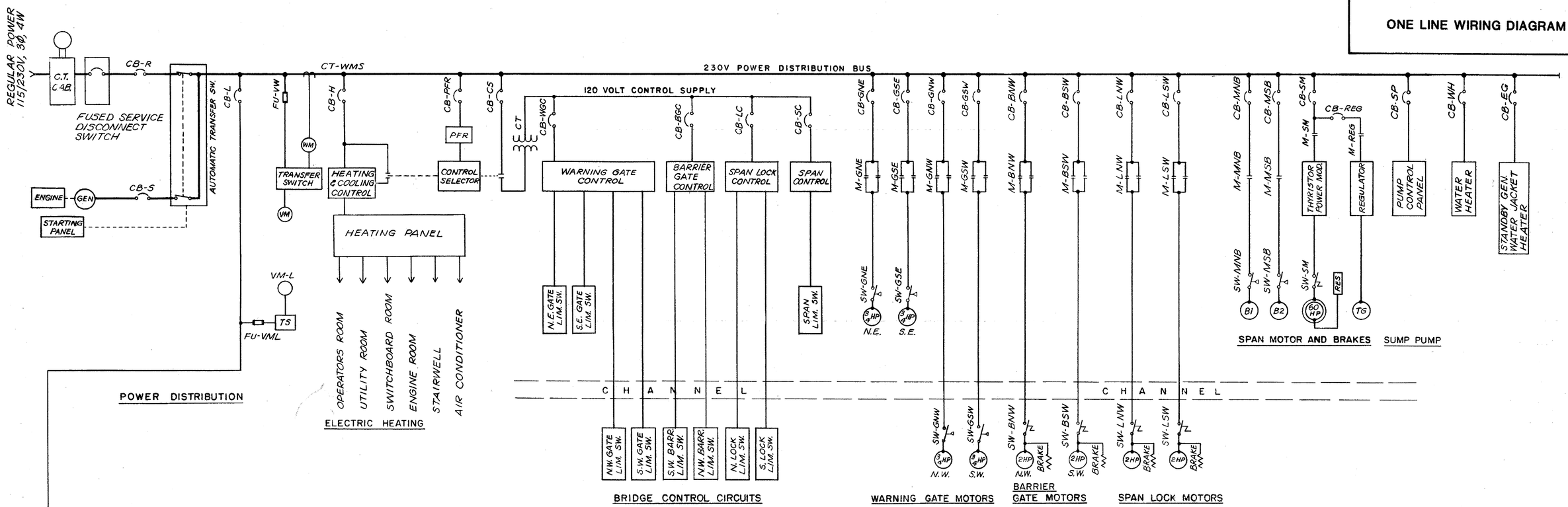

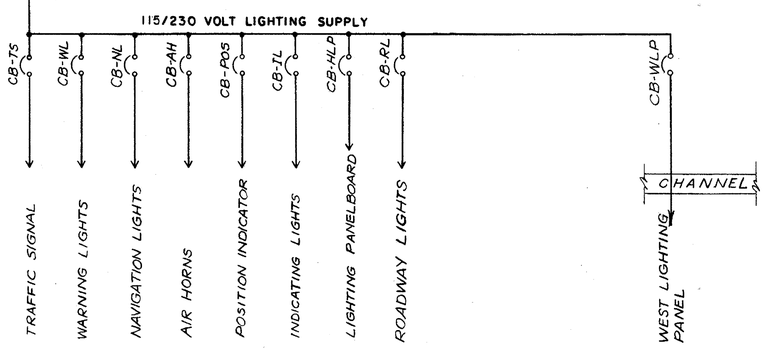

LIST OF SYMBOLS

- COIL OF MAGNETIC CONTACTOR OR RELAY
- THERMAL OVERLOAD RELAY
- MAGNETIC OVERCURRENT RELAY
- CONTACT OF MAGNETIC CONTACTOR OR RELAY. NORMALLY OPEN
- CONTACT OF MAGNETIC CONTACTOR OR RELAY. NORMALLY CLOSED
- LIMIT SWITCH CONTACT. NORMALLY OPEN
- LIMIT SWITCH CONTACT. NORMALLY CLOSED
- TIMER CONTACT. TIMED CLOSING (AFTER ENERGIZING)
- TIMER CONTACT. TIMED OPENING (AFTER ENERGIZING)
- TIMER CONTACT. TIMED CLOSING (AFTER DEENERGIZING)
- TIMER CONTACT. TIMED OPENING (AFTER DEENERGIZING)
- HAND OFF AUTO — SELECTOR SWITCH, HAND - OFF - AUTOMATIC
- AIR CIRCUIT BREAKER
- N.E.C. CARTRIDGE FUSE
- TRANSFORMER WINDING
- DIMMER SWITCH
- THERMOSTAT
- PUSHBUTTON. NORMALLY CLOSED
- PUSHBUTTON. NORMALLY OPEN
- INDICATING LIGHT; R=RED. A=AMBER; G=GREEN. W=WHITE. B=BLUE
- BYPASS SWITCH
- TUMBLER SWITCH. S.P.S.T.
- TUMBLER SWITCH. S.P.D.T.
- ELECTRICAL GROUND
- CURRENT TRANSFORMER. WITH POLARITY MARKINGS

GENERAL NOTES FOR ELECTRICAL WORK

1. EXCEPT WHERE OTHERWISE NOTED, ALL CIRCUITS ARE SHOWN DE-ENERGIZED.
2. LIMIT SWITCH CONTACTS ARE SHOWN FOR BASCULE LEAVES SEATED, EMERGENCY OPERATORS DISENGAGED, SPAN LOCKS DRIVEN, AND GATES RAISED.
3. UNLESS OTHERWISE NOTED, THE MINIMUM SIZE WIRE IN CONDUITS AND MULTICONDUCTOR CABLES SHALL BE NO. 10 AWG.
4. SEPARATE WIRE DESIGNATIONS SHALL BE ASSIGNED FOR EACH BRANCH CIRCUIT NEUTRAL.

PREL. TRACING H.F.B. DESIGN G.T.S. CHKD. G.T.S.

HARDESTY & HANOVER
CONSULTING ENGINEERS
NEW YORK, N.Y.

REVISIONS

CONTRACT	COUNTY	FEDERAL AID PROJECT NO.	SHEET NO.	TOTAL SHEETS
82-073-05	SUSSEX	BRF-1009(3)	110	155

WIRING DIAGRAM POWER DISTRIBUTION & CONTROL AUXILIARIES

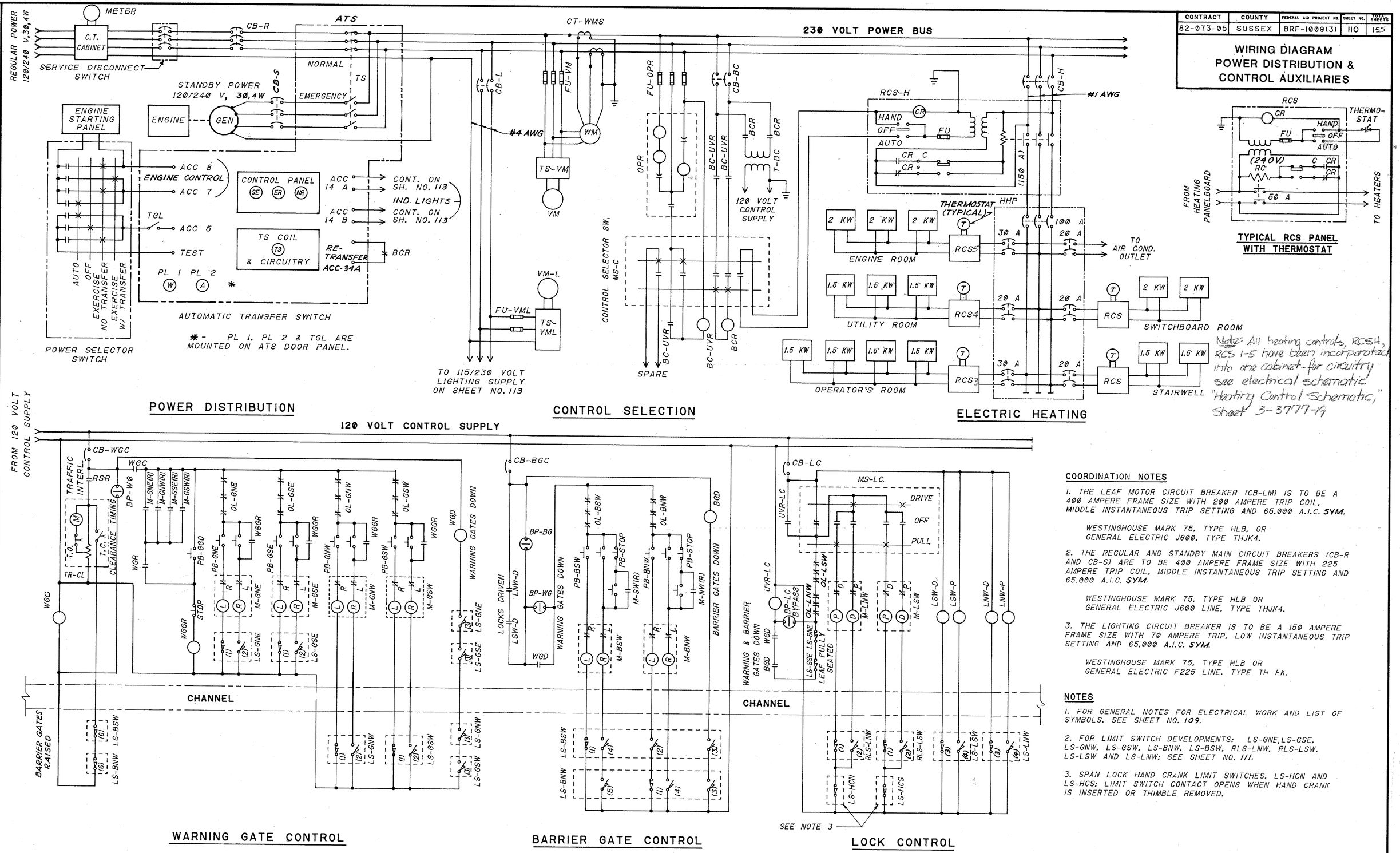

COORDINATION NOTES

1. THE LEAF MOTOR CIRCUIT BREAKER (CB-LM) IS TO BE A 400 AMPERE FRAME SIZE WITH 200 AMPERE TRIP COIL. MIDDLE INSTANTANEOUS TRIP SETTING AND 65,000 A.I.C. **SYM.**

   WESTINGHOUSE MARK 75, TYPE HLB, OR GENERAL ELECTRIC J600, TYPE THJK4.

2. THE REGULAR AND STANDBY MAIN CIRCUIT BREAKERS (CB-R AND CB-S) ARE TO BE 400 AMPERE FRAME SIZE WITH 225 AMPERE TRIP COIL, MIDDLE INSTANTANEOUS TRIP SETTING AND 65,000 A.I.C. **SYM.**

   WESTINGHOUSE MARK 75, TYPE HLB OR GENERAL ELECTRIC J600 LINE, TYPE THJK4.

3. THE LIGHTING CIRCUIT BREAKER IS TO BE A 150 AMPERE FRAME SIZE WITH 70 AMPERE TRIP, LOW INSTANTANEOUS TRIP SETTING AND 65,000 A.I.C. **SYM.**

   WESTINGHOUSE MARK 75, TYPE HLB OR GENERAL ELECTRIC F225 LINE, TYPE TH FK.

NOTES

1. FOR GENERAL NOTES FOR ELECTRICAL WORK AND LIST OF SYMBOLS, SEE SHEET NO. **109**.

2. FOR LIMIT SWITCH DEVELOPMENTS: LS-GNE, LS-GSE, LS-GNW, LS-GSW, LS-BNW, LS-BSW, RLS-LNW, RLS-LSW, LS-LSW AND LS-LNW; SEE SHEET NO. **111**.

3. SPAN LOCK HAND CRANK LIMIT SWITCHES, LS-HCN AND LS-HCS; LIMIT SWITCH CONTACT OPENS WHEN HAND CRANK IS INSERTED OR THIMBLE REMOVED.

CHKD.
DESIGN
PREL. TRACING

HARDESTY & HANOVER
CONSULTING ENGINEERS
NEW YORK, N.Y.

REVISIONS

CONTRACT	COUNTY	FEDERAL AID PROJECT NO.	SHEET NO.	TOTAL SHEETS
82-073-05	SUSSEX	BRF-1009(3)	111	155

WIRING DIAGRAM
LEAF CONTROL

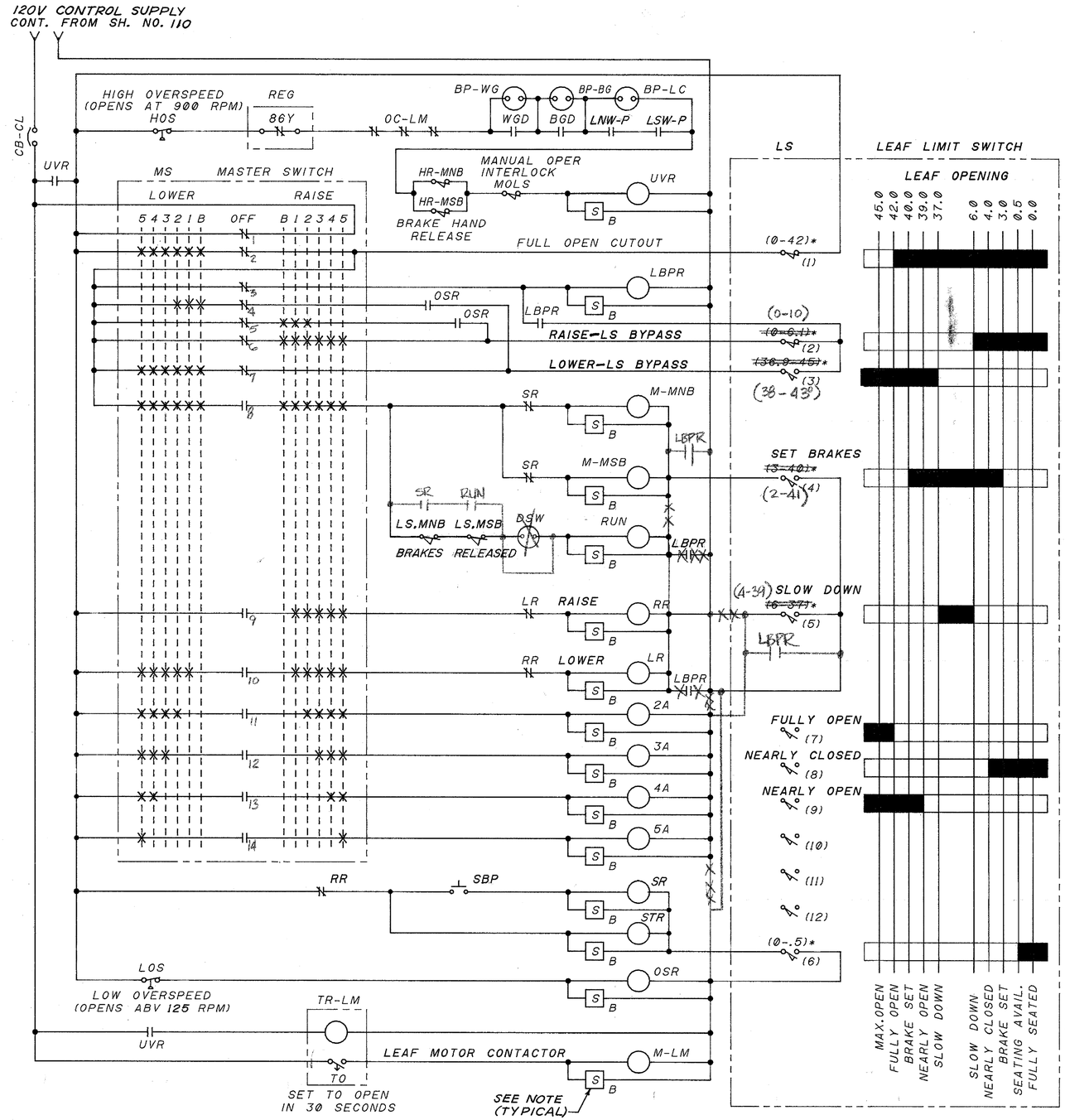

* SETTINGS (IN DEGREES) INDICATE WHEN LIMIT SWITCH IS CLOSED.

LEAF CONTROL

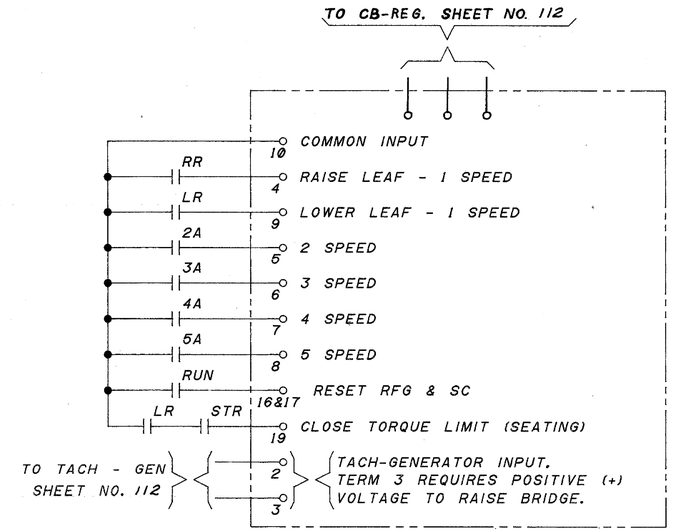

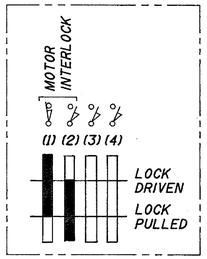

DEVELOPMENT
ROTARY SPAN LOCK LIMIT SWITCH
RLS-LNW, RLS-LSW

THYRISTOR CONTROL FUNCTIONS

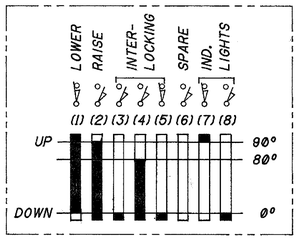

DEVELOPMENT
WARNING GATE LIMIT SWITCHES
LS-GNE, LS-GNW, LS-GSE, LS-GSW

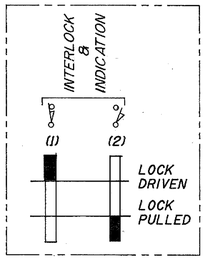

DEVELOPMENT
SPAN LOCK INTERLOCK LIMIT SWITCH
LS-LNW, LS-LSW

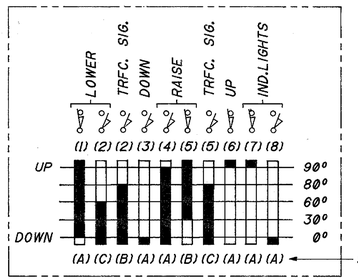

DEVELOPMENT
BARRIER GATE LIMIT SWITCHES
LS-BNW, LS-BSW

BARRIER GATE NOTES

1. SEQUENCE OF OPERATION:
   LOWERING: ON COMING GATES FIRST (BSW)
   OFF GOING GATES LAST (BNW)
   RAISING: OFF GOING GATES FIRST (BNW)
   ON COMING GATES LAST (BSW)

2. LIMIT SWITCH SETTINGS:
   (A) - LS-BNW, LS-BSW
   (B) - LS-BNW
   (C) - LS-BSW

NOTE:
S B - SUPPRESSOR KIT (TYPICAL)
RELAY OR CONTACTOR TO BE FURNISHED WITH MANUFACTURERS SUPPRESSOR KIT

DESIGN ____ CHKD. ____
PRELIMINARY TRACING ____

CONTRACT	COUNTY	FEDERAL AID PROJECT NO.	SHEET NO.	TOTAL SHEETS
82-073-05	SUSSEX	BRF-1009(3)	112	155

WIRING DIAGRAM MOTORS & BRAKES

HARDESTY & HANOVER
CONSULTING ENGINEERS
NEW YORK, N.Y.

REVISIONS

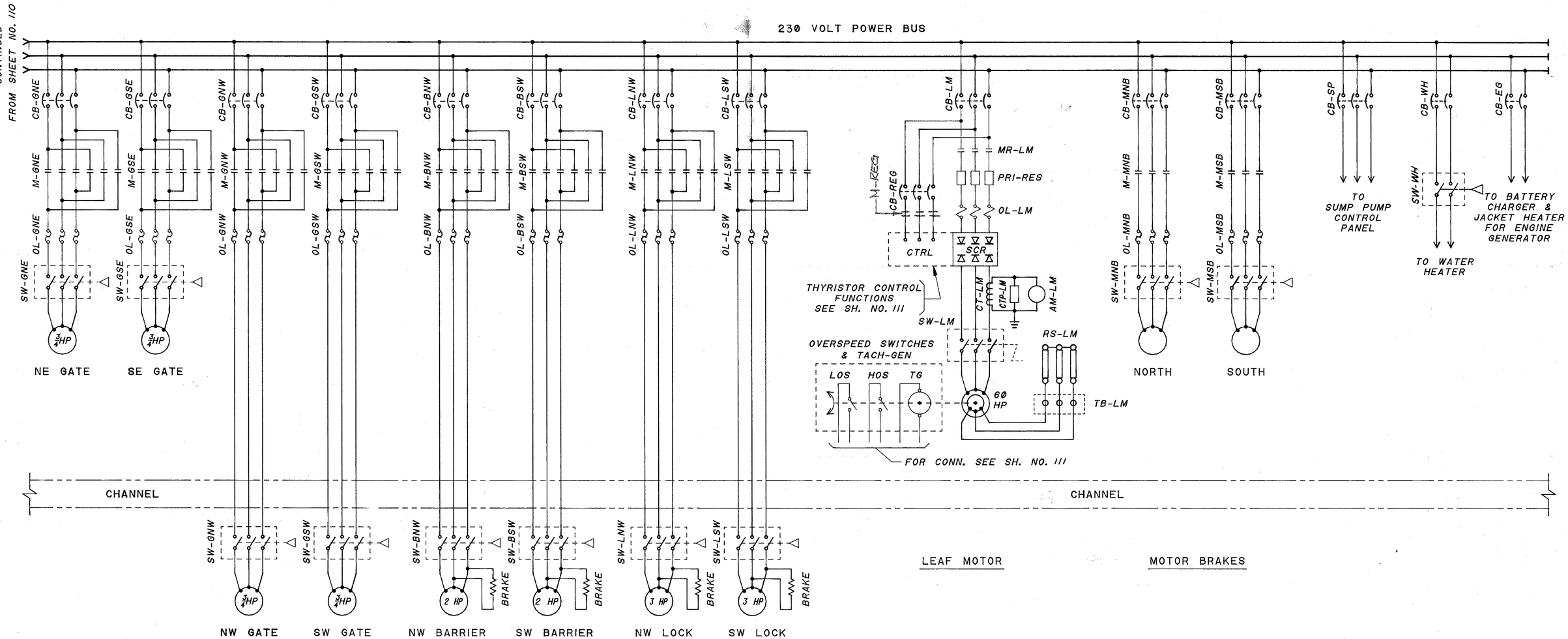

DESIGN ____ CHKD. ____

PREL. TRACING ____

HARDESTY & HANOVER
CONSULTING ENGINEERS
NEW YORK, N.Y.

REVISIONS

CONTRACT	COUNTY	FEDERAL AID PROJECT NO.	SHEET NO.	TOTAL SHEETS
82-073-05	SUSSEX	BRF-1009(3)	113	155

WIRING DIAGRAMS
LIGHTING CIRCUITS

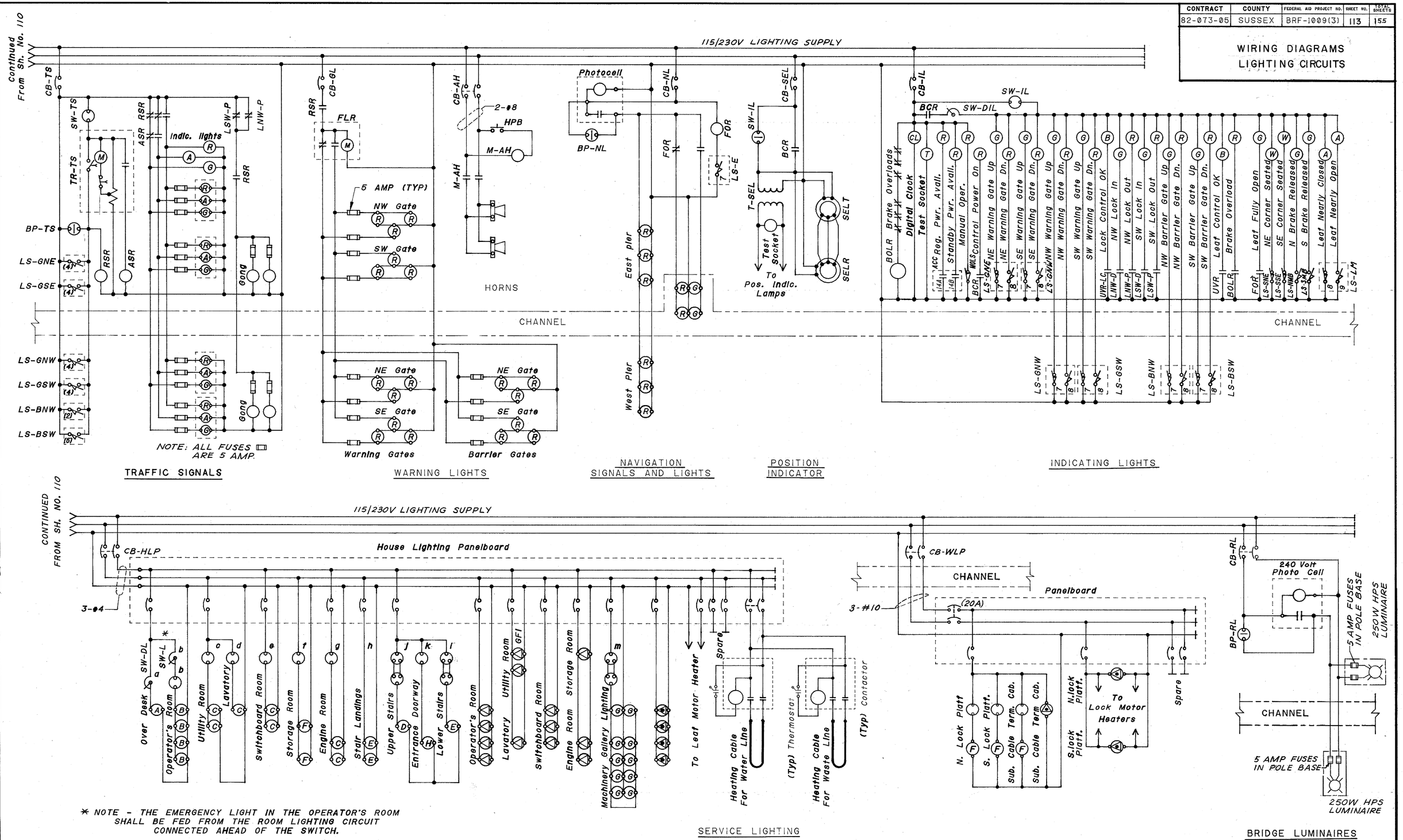

* NOTE - THE EMERGENCY LIGHT IN THE OPERATOR'S ROOM SHALL BE FED FROM THE ROOM LIGHTING CIRCUIT CONNECTED AHEAD OF THE SWITCH.

DESIGN ____ CHKD. ____
PREL. TRACING ____

HARDESTY & HANOVER
CONSULTING ENGINEERS
NEW YORK, N.Y.

REVISIONS

CONTRACT	COUNTY	FEDERAL AID PROJECT Nº	SHEET Nº	TOTAL SHEETS
82-073-05	SUSSEX	BRF-1009(3)	114	155

SCHEDULE OF ELECTRICAL APPARATUS

NOTE:
LOCATION (LOC.) SYMBOLS
SEE SHEET NO. 118
(Reference only - see link controls schematic diagram)

POWER DISTRIBUTION

ITEM	QTY.	DESCRIPTION	FUNCTION	LOC.
CB-R	1	CIRCUIT BREAKER, 3P. 600V. 400A. FRAME*	MAIN BREAKER - REGULAR	PP
MS-P	1	SELECTOR SWITCH, 4-POSITION, 8-STAGE, 600V.	POWER SELECTOR	CD
ATS	1	AUTOMATIC TRANSFER SWITCH,3 PDT, 400A., 240V., ELECT. OPERATED, MECHANICALLY HELD, WITH FULL RELAY PROTECTION	STANDBY POWER TRANSFER	PP
CB-S	1	CIRCUIT BREAKER, 3P. 600V, 400A. FRAME*	MAIN BREAKER - STANDBY	
CB-L	1	CIRCUIT BREAKER, 2P., 70A., 600V., 150A, FRAME	LIGHTING FEEDER	PP
FU-VM	3	N.E.C. CARTRIDGE FUSE, 3A., 600V.	VOLTMETER PROTECTION	PP
TS-VM	1	SELECTOR SWITCH, 10A., 600V.	VOLTMETER TRANSFER	CD
VM	1	A-C VOLTMETER, 0-250 V. SCALE 60 HZ.	READ SUPPLY VOLTAGE	CD
CT-WMS	2	CURRENT TRANSFORMER	WATTMETER SUPPLY	PP
WM	1	WATTMETER, 0-115 KW SCALE, 60 HZ.	READ DRIVE POWER	CD
FU-OPR	3	N.E.C. CARTRIDGE FUSE, 3A., 600V.	RELAY PROTECTION	PP
OPR	1	PHASE FAILURE AND REVERSAL RELAY	REVERSE PHASE PROTECTION	PP
CB-BC	1	CIRCUIT BREAKER, 2P., 40A., 600V., 100A. FRAME	BRIDGE CONTROL POWER	PP
T-BC	1	TRANSFORMER, DRY-TYPE, 2 KVA., 240/120V.	CONTROL SUPPLY	PP
MS-C	1	SELECTOR SWITCH, 2-POSITION, 5-STAGE, 600V.	CONTROL SELECTOR	CD
BC-UVR	1	MAGNETIC AUXILIARY RELAY, 10A. 600V.	BRIDGE CONTROL UV	PP
BCR	1	MAGNETIC AUXILIARY RELAY, 10A., 600V.	ENERGIZE BRIDGE CONTROLS	PP
CB-H	1	CIRCUIT BREAKER, 3P., 100A., 600V., 100A. FRAME	HEATING FEEDER	PP
RCS-H	1	HEATING PANEL BOARD CONTROL 3P., 240V., 150A.	HEATING CONTROL	SW
RCS	5	ZONE HEATING CONTROL 2P., 240V., 50A	ZONE HEATING CONTROL	-

*-TRIP SETTING SEE COORDINATION NOTE, SHEET NO. 110

SPAN MOTORS & BRAKES

ITEM	QTY.	DESCRIPTION	FUNCTION	LOC.
CB-LM	1	CIRCUIT BREAKER, 3P., 600V., 400A. FRAME, 276A. TRIP	LEAF DRIVE MOTOR	LCP
OC-LM	1	MAGNETIC OVERCURRENT RELAY, 3-ELEMENT, AUTO-RESET, INSTANTANEOUS TRIP @ 220% MOTOR F.L.	MOTOR TORQUE LIMIT	LCP
MR-LM	1	MAGNETIC CONTACTOR, 3P., 325A., 600V., WITH AUXILIARY CONTACTS, MECHANICALLY INTERLOCKED	LEAF MOTOR CONTACTOR	LCP
CT-LM	1	CURRENT TRANSFORMER	FOR LEAF MOTOR AMMETER	LCP
CTP-LM	1	THYRITE PROTECTOR	PROTECT CURRENT TRANSFORMER	LCP
AM-LM	1	A-C AMMETER, 60 HZ.,0-300A. SCALE	READ MOTOR CURRENT	CD
SW-LM	1	ENCLOSED DISCONNECT SWITCH, 3PST, 200A., 600V.	"IN SIGHT" DISCONNECT	MG
RS-M	1	RESISTOR BANK, CONT. RATING (25% OF OY PER LEG)	LEAF MOTOR SECONDARY (LEAF MOTOR)	MG
CB-MNB, CB-MSB	2	CIRCUIT BREAKER, 3P., 15A., 600V., 100A. FRAME	LEAF MOTOR BRAKES	LCP
M-MNB, M-MSB	2	MAGNETIC CONTACTOR, 3P., 15A., 600V. WITH 3-ELEMENT THERMAL O.L.'S, MANUAL RESET	RELEASE MOTOR BRAKES	LCP
SW-MNB, SW-MSB	2	ENCLOSED STARTING SWITCH, TUMBLER TYPE, WATERTIGHT, 3PST, 20A., 600V.	"IN SIGHT" DISCONNECT (BRAKES)	MG
CB-REG	1	CIRCUIT BREAKER, 3P., 15A., 100 AMP FRAME	THYRISTOR REGULATOR	LCP
RS-PM	1	PRIMARY RESISTOR CONTROL	LEAF MOTOR CURRENT LIMIT	-
TCU	1	THYRISTOR AND CONTROL UNIT	LEAF MOTOR SPEED CONTROL	-
TG	1	TACH GENERATOR (0-90V. DC)	LEAF MOTOR SPEED CONTROL	-
LOS	1	LEAF MOTOR LOW OVER SPEED SWITCH	LOW OVER SPEED CONTROL	-
HOS	1	LEAF MOTOR HIGH OVER SPEED SWITCH	HIGH OVER SPEED CONTROL	-

LIGHTING

ITEM	QTY.	DESCRIPTION	FUNCTION	LOC.
FU-VML	2	N.E.C. CARTRIDGE FUSE, 3A., 250V.	LIGHTING VOLTMETER	LP
TS-VML	1	SELECTOR SWITCH, 10A., 250V.	VOLTMETER TRANSFER	CD
VM-L	1	A-C VOLTMETER, 0-150V. SCALE 60 HZ.	READ LIGHTING VOLTAGE	CD
CB-TS	1	CIRCUIT BREAKER, 1P., 20A., 120V.	TRAFFIC SIGNALS	LP
SW-TS	1	TUMBLER SWITCH, DPST, 20A., 250V.	OPERATES TRAFFIC SIGNALS	CD
TR-TS	1	TIMING RELAY, MOTOR-DRIVEN, 120V., 60 HZ., SET FOR 4 SECOND TIME DELAY	TRAFFIC SIGNAL TIMER	LP
BP-TS	1	SEALED TUMBLER SWITCH, DPST, 20A., 250V.	TIMER BYPASS	CD
RSR	1	MAGNETIC AUXILIARY RELAY, 8P., 10A., 600V.	"STOP" TRAFFIC SIGNALS	LP
ASR	1	MAGNETIC AUXILIARY RELAY, 8P., 10A., 600V.	YELLOW TRAFFIC LIGHTS	LP
CB-GL	1	CIRCUIT BREAKER, 1P., 20A., 120V.	GATE WARNING LIGHTS	LP
FLR	1	FLASHER, 2-CIRCUIT, 30A., 125V.*	FLASH GATE LIGHTS	LP
CB-AH	1	CIRCUIT BREAKER, 2P., 40A., 600V., 100A. FRAME	AIR HORNS	LP
HPB	1	PUSHBUTTON STATION, 1-BUTTON, HEAVY DUTY	OPERATES AIR HORNS	CD
MAH	1	MAGNETIC CONTACTOR, 2P., 40A., 240V.	OPERATES AIR HORNS	LP
CB-NL	1	CIRCUIT BREAKER, 1P., 20A., 120V.	NAVIGATION LIGHTS AND SIGNALS	LP
BP-NL	1	SEALED TUMBLER SWITCH, DPST, 20A., 250V.	PHOTOCELL PASSBY (NAVIGATION LIGHTS)	CD
FOR	1	MAGNETIC AUXILIARY RELAY 10A., 600V.	LEAF FULLY OPEN INDICATION	LP
CB-SEL	1	CIRCUIT BREAKER, 1P., 20A., 120V.	POSITION INDICATORS	LP
T-SEL	1	TRANSFORMER, DRY-TYPE, 10 115/6V.	POSITION INDIC. DIAL LAMPS	LP
SELT	1	SYNCHRO-TRANSMITTER, 115V., 60 HZ., WATERTIGHT	POSITION TRANSMITTER	MG
SELR	1	SYNCHRO-RECEIVER, HIGH ACCURACY, 115V., 60 HZ.	POSITION RECEIVER	CD
CB-1L	1	CIRCUIT BREAKER, 1P., 20A., 120V.	INDICATING LIGHTS	LP
SW-1L	1	TUMBLER SWITCH, DPST, 20A., 250V.	OPERATES INDICATING LIGHTS	CD
BOLR	1	MAGNETIC RELAY, 1P. (N.C.), 15A., 250V.	INDICATION FOR BRAKE O.L.	LP
CB-HLP	1	CIRCUIT BREAKER, 2P., 50A., 600V.	HOUSE LIGHTING PANEL	LP
CB-RL	1	CIRCUIT BREAKER, 2P., 20A., 250V.	ROADWAY LIGHTS	LP
CB-WLP	1	CIRCUIT BREAKER, 2P., 30A., 600V.	WEST LIGHTING PANEL	LP
BP-RL	1	SEALED TUMBLER SWITCH, DPST, 20A., 250V.	PHOTOCELL BYPASS (ROADWAY LIGHTS)	CD
SW-RL	1	TUMBLER, SWITCH DPST, 20A., 250V.	OPERATES OPERATOR ROOM LIGHTS	CD
SW-DL	1	DIMMER; SUITABLE USE FOR TUNGSTEN HALOGEN LAMP	ADJUST LIGHT OVER DESK	CD
CB-SP	1	CIRCUIT BREAKER, 3P., 20A., 250V.	SUMP PUMP CONTROL	-
CB-WH	1	CIRCUIT BREAKER, 2P., 30A., 250V.	WATER HEATER	-
CB-ES	1	CIRCUIT BREAKER, 2P., 20A., 250V.	GENERATOR BATTERY CHARGER & JACKET HTR.	-
SW-WH	1	ENCLOSED STARTING SWITCH, TUMBLER TYPE, 2PST, 30A, 250V	WATER HEATER DISCONNECT	

SPAN AUXILIARIES

ITEM	QTY.	DESCRIPTION	FUNCTION	LOC.
SW-LNW, SW-LSW	2	ENCLOSED STARTING SWITCH, TUMBLER TYPE WATERTIGHT, 3PST, 30A., 600V., WITH AUX CONTACTS	"IN SIGHT" DISCONNECT (LOCK MOTOR)	LP
UVR-LC	1	MAGNETIC RELAY, 10A., 600V.	LOCK CONTROL UV	AP
CB-LC	1	CIRCUIT BREAKER 1P., 20A., 120V.	LOCK CONTROL	AP
M-LNW, M-LSW	2	REVERSING CONTACTOR, 3P., 15A., 120V WITH THERMAL O.L.'S, MECHANICALLY AND ELECTRICALLY INTERLOCKED	LOCK CONTROL REVERSING	AP
LSW-P, LNW-P	4	MAGNETIC RELAY, 10A., 600V.	LOCKS PULLED	AP
LWW-D, LSW-P			LOCKS DRIVEN	AP
BP-LC	1	SEALED TUMBLER SWITCH, 3PST, 20A., 250V.	LOCK CONTROL BY-PASS	CD
RLS-LNW, RLS-LSW	2	ROTARY LIMIT SWITCH, CAM OPERATED, 4 CIRCUIT REVERSING, WATERTIGHT	LOCK CONTROL	LP
LS-LNW, LS-LSW	2	LIMIT SWITCH LEVER OPERATED, 2 CIRCUIT, WATERTIGHT	LOCK TRAVEL	LP
LS-SSE, LS-SNE	2	LIMIT SWITCH PLUNGER OPERATED, SPRING RETURN, WATERTIGHT, 2 CIRCUIT	LEAF SEATED	MG
MS-LC	1	SELECTOR SWITCH, 3 POSITION, 5 STAGE, 600V.	OPERATE LOCKS	CD

SPAN AUXILIARIES

ITEM	QTY.	DESCRIPTION	FUNCTION	LOC
CB-GNW, CB-GNE, CB-GSW, CB-GSE	4	CIRCUIT BREAKER, 3P., 15A., 600V., 100A. FRAME	GATE MOTORS	AP
SW-GNW, SW-GNE, SW-GSW SW-GSE	4	ENCLOSED STARTING SWITCH, TUMBLER-TYPE, WATERTIGHT, 3PST, 30A., 600V.	"IN SIGHT" DISCONNECT (WARNING GATES)	GS
CB-WGC	1	CIRCUIT BREAKER, 1P., 20A., 120V.	GATE CONTROL	AP
WGC	1	MAGNETIC AUXILIARY RELAY, 10A., 600V.	GATE CONTROL	AP
TR-CL	1	TIME DELAY, MOTOR DRIVEN	CLEARANCE TIMING CONTROL	AP
PB-GNW, PB-GNE, PB-GSW, PB-GSE	4	PUSHBUTTON STATION, 2-BUTTON, HEAVY DUTY	OPERATES GATES	CD
PB-GGO	1	PUSHBUTTON STATION, 2-UNIT, HEAVY DUTY	GROUP RAISING	CD
BP-WG		SEALED TUMBLER SWITCH, 3PST, 20A., 250V.	GATE CONTROL BYPASS	CD
WGGR	1	MAGNETIC AUXILIARY RELAY	GROUP RAISE CONTROL	AP
M-GNW, M-GNE, M-GSW, M-GSE	4	REVERSING CONTACTOR, 3P., 15A., 120V., WITH THERMAL O.L.'S MECHANICALLY AND ELECTRICALLY INTERLOCKED	GATE MOTOR REVERSING	AP
LS-GNW, LS-GNE, LS-GSW, LS-GNE	4	LIMIT SWITCH, CAM OPERATED, 6-CIRCUIT, REVERSING (PART OF GATE MECHANISM)	GATE TRAVEL AND CONTROL	GS
WGD	1	MAGNETIC AUXILIARY RELAY, 10A., 600V.	GATES DOWN	AP
CB-BNW, CB-BSW	2	CIRCUIT BREAKER, 3P., 15A., 600V., 100A. FRAME	BARRIER MOTORS	AP
SW-BNW, SW-BSW	2	ENCLOSED STARTING SWITCH, TUMBLER-TYPE, WATERTIGHT, 3PST, 30 AMP, 600V.	"IN SIGHT" DISCONNECT (BARRIER GATE)	BS
CB-BGC	1	CIRCUIT BREAKER,1P., 20A., 120V.	BARRIER CONTROL	AP
M-BSW, M-BNW	2	REVERSING CONTACTOR, 3P., 15A., 120V., WITH BARRIER MOTOR REVERSING THERMAL O.L.'S MECHANICALLY AND ELECTRICALLY INTERLOCKED	BARRIER MOTOR REVERSING	AP
BGD	1	MAGNETIC AUXILIARY RELAY, 10A., 600V.	BARRIERS DOWN	AP
PB-BSW, PB-BNW	2	PUSHBUTTON UNIT, HEAVY DUTY, 2 STATION	OPERATE BARRIER	CD
PB-GBR	1	PUSHBUTTON UNIT, HEAVY DUTY, 2 STATION	GROUP BARRIERS RAISE	CD
LS-BNW, LS-BSW	2	LIMIT SWITCH, CAM OPERATED, 8 CIRCUIT REVERSING (PART OF BARRIER MECHANISM)	BARRIER TRAVEL & CONTROL	BS
BP-BG	1	SEALED TUMBLER SWITCH, 3PST, 20A., 250V.	BARRIER CONTROL BYPASS	CD
CB-LNW, CB-LSW	2	CIRCUIT BREAKER, 3P., 15A., 600V., 100A., FRAME	LOCK MOTORS	AP

SPAN CONTROL

ITEM	QTY.	DESCRIPTION	FUNCTION	LOC
CB-CL	1	CIRCUIT BREAKER, 1P., 20A., 120V.	LEAF CONTROL	LCP
UVR	1	MAGNETIC CONTACTOR, 10A., 600V.	LEAF CONTROL UV	LCP
MOLS	1	LIMIT SWITCH, LEVER OPERATED, SPRING-RETURN, 2-CIRCUIT, SNAP-ACTION, 600V.,	MANUAL OPERATION	MG
HR-MSB, HR-MNB	2	LIMIT SWITCH, LEVER OPERATED, SPRING-RETURN, 2-CIRCUIT, 600V., WATERTIGHT	BRAKE HAND RELEASE INTLK.	MG
MS-L	1	MASTER SWITCH, 15-STAGE, 6-POINT FORWARD AND REVERSE	OPERATE BASCULE LEAF	CD
LS-L	1	LIMIT SWITCH, ROTARY, CAM OPERATED, 12-CIRCUIT, REVERSING, WATERTIGHT	BASCULE LEAF TRAVEL	MG
RUN	1	MAGNETIC AUXILIARY RELAY, 10A., 600V.	LEAF MOVEMENT	LCP
LBPR	1	MAGNETIC AUXILIARY RELAY, 10A., 600V.	LEAF LIMIT SWITCH BYPASS	LCP
SPB	1	PUSHBUTTON STATION, HEAVY-DUTY, 1-BUTTON	LEAF SEATING	CD
SR	1	MAGNETIC AUXILIARY RELAY, 10A., 600V.	LEAF SEATING	LCP
STR	1	MAGNETIC AUXILIARY RELAY, 10A., 600V.	REDUCE TORQUE	LCP
LR	1	MAGNETIC AUXILIARY RELAY, 10A., 600V.	LOWER LEAF	LCP
RR	1	MAGNETIC AUXILIARY RELAY, 10A., 600V.	RAISE LEAF	LCP
2A, 3A, 4A, 5A	4	MAGNETIC AUXILIARY RELAY, 10A., 600V.	SPEED SELECTION	LCP
OSR	1	MAGNETIC AUXILIARY RELAY, 10A., 600V.	LOW SPEED OVERSPEED	LCP
TR-LM	1	TIMING RELAY MOTOR DRIVEN	LEAF MOTOR POWER OFF	LCP

PREL. TRACING H.F.B. DESIGN G.T.S. CHKD.

4389

HARDESTY & HANOVER
CONSULTING ENGINEERS
NEW YORK, N.Y.

REVISIONS

CONTRACT	COUNTY	FEDERAL AID PROJECT Nº	SHEET Nº	TOTAL SHEETS
82-073-05	SUSSEX	BRF-1009(3)	115	155

CONTROL DESK LAYOUT AND DETAILS

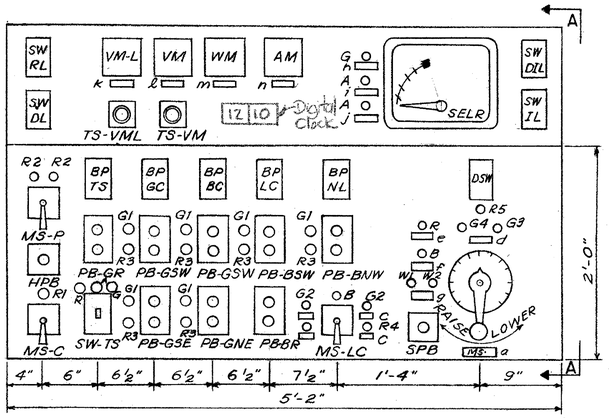

CONTROL DESK LAYOUT
SCALE: 1½"=1'-0"

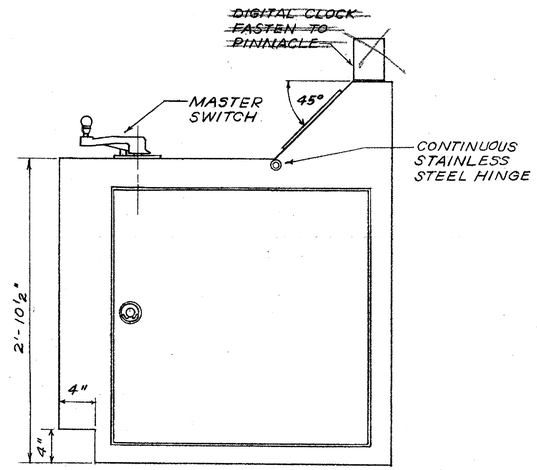

SECTION A-A
SCALE: 1½"=1'-0"

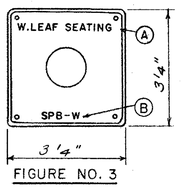

FIGURE NO. 3

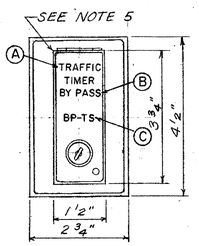

FIGURE NO. 4

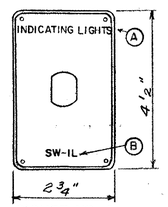

FIGURE NO. 5

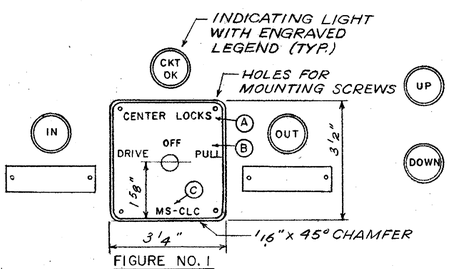

FIGURE NO. 1

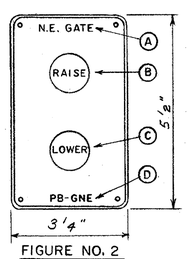

FIGURE NO. 2

TYPICAL ESCUTCHEON PLATE DETAILS
SCALE: ½" = 1'-0"

	ESCUTCHEON PLATE ENGRAVING			
FIG. NO.	A	B	C	D
1	LOCK	DRIVE-OFF-PULL	MS-LC	-
1	POWER SELECTION	SEE NOTE 4	MS-P	
1	BRIDGE CONTROLS	ON-OFF	MS-C	
2	N.E. GATE	RAISE	LOWER	PB-GNE
2	S.E. GATE	RAISE	LOWER	PB-GSE
2	N.W. GATE	RAISE	LOWER	PB-GNW
2	S.W. GATE	RAISE	LOWER	PB-GSW
2	GATES GROUP RAISE	RAISE	STOP	PB-GR
2	N.W. BARRIER	RAISE	LOWER	PB-BNW
2	S.W. BARRIER	RAISE	LOWER	PB-BSW
2	BARRIER GROUP RISE	RAISE	STOP	PB-BR
3	AIR HORNS	HPB	-	-
3	LEAF SEATING	SPB		
4	TRAFFIC TIMER	BYPASS	BP-TS	
4	GATE CONTROL	BYPASS	BP-GC	
4	LOCKS CONTROL	BYPASS	BP-LC	
4	DRIFT SWITCH	E. LEAF	DSW	
4	LIGHTS	BYPASS	BP-RL	
4	NAVIGATION LIGHTS	BYPASS	BP-NL	
4	BARRIER CONTROL	BYPASS	BP-BC	
5	ROOM LIGHTS DIMMER	SW-RL		
5	DESK LIGHT DIMMER	SW-DL		
5	IND. LIGHT DIMMER	SW-DIL		
5	INDICATING LIGHTS	SW-IL		

NAME PLATE ENGRAVING	
DESIGN.	LEGEND
a	LEAF CONTROL MS
* b	S.W. LOCKS
* c	N.W. LOCKS
d	BRAKES RELEASED
e	MANUAL ENGAGED
f	LEAF CONTROL
g	LEAF SEATED
h	LEAF FULLY OPEN
i	LEAF NEARLY CLOSED
k	LIGHTING - VOLTS
l	POWER BUS VOLTS
m	DRIVE KW
n	LEAF MOTOR

* - DENOTES TWO NAMEPLATES REQUIRED

INDICATING LIGHT SCHEDULE			
DESIGN.	COLOR	NO. REQ'D.	LEGEND
R	RED	2	-
R1	RED	1	ON
R2	RED	2	AVAIL.
R3	RED	6	DOWN
R4	RED	2	OUT
R5	RED	1	O.L.
G	GREEN	2	-
G1	GREEN	6	UP
G2	GREEN	2	IN
G3	GREEN	1	E1
G4	GREEN	1	E2
B	BLUE	2	CKT. OK
A	AMBER	3	-
W1	WHITE	1	N.E.
W2	WHITE	1	S.E.

NOTES FOR DESK CONSTRUCTION:

1. THE DESK SHALL BE FABRICATED OF 11 GAUGE SHEET STEEL PROPERLY FORMED AND SUITABLY REINFORCED TO PROVIDE ADEQUATE STRENGTH.
2. THE INCLINED METER PANEL AND DESK TOP SHALL BE 11 GAUGE STAINLESS STEEL WITH A NON-GLARE SATIN FINISH.
3. EACH INDICATING LIGHT ASSEMBLY SHALL BE A PRESS-TO TEST INDICATOR COMPRISING A CANDELABRA BASE SOCKET WITH SCREW TERMINALS, SLIP-ON LENS HOLDER, AND 1-INCH DIAMETER FLAT GLASS LENS WITH COLOR AND LEGEND PER SCHEDULE. IT SHALL BE APPROVED EQUAL TO DIALCO CATALOG NO. 820-2701. FURNISH WITH A 6S6/7 LAMP RATED AT 125 VOLTS.
4. INDICATING LIGHT LEGENDS SHALL BE PHOTONEGATIVE FILM DISCS (TYPE C) FOR RED AND GREEN LENSES AND PHOTOPOSITIVE FILM DISCS (TYPE B) FOR WHITE AND AMBER LENSES.
5. MOUNTING SCREWS FOR NAMEPLATES AND ESCUTCHEON PLATES SHALL BE STAINLESS STEEL.
6. THE HANDLES, DIAL PLATES, AND LATCH PLATES OF THE LEAF MASTER SWITCHES SHALL HAVE A SATIN CHROME PLATE FINISH.

NOTES FOR ESCUTCHEON PLATES:

1. ALL ESCUTCHEON PLATES TO BE 3/16" HOT-POLISHED, BLACK AND WHITE, LAMINATED PHENOLIC COMPOUND WITH 1/32" BLACK SURFACE, 1/32" INTERMEDIATE WHITE LAYER, AND 1/8" BLACK BACK.
2. ALL LEGENDS ON ESCUTCHEON PLATES TO BE ENGRAVED WITH STANDARD GOTHIC CHARACTERS CUT THROUGH BLACK SURFACE INTO INTERMEDIATE WHITE LAYER.
3. FOR DETAILS NOT SHOWN IN FIGURES 2, 3, 4, AND 5 SEE FIGURE NO. 1.
4. #1 - AUTOMATIC
   #2 - OFF
   #3 - EXERCISE NO TRANSFER
   #4 - EXERCISE WITH TRANSFER
5. a. HINGED KEY LOCKABLE BRASS COVER PLATE. UNDERSIDE TO BE PAINTED BRIGHT RED.
   b. COVER PLATE CAN ONLY BE LOCKED WHEN TOGGLE SWITCH IS IN THE OFF POSITION.

PREL. TRACING H.F.B. DESIGN G.T.S. CHKD.

CONTRACT	COUNTY	FEDERAL AID PROJECT Nº	SHEET Nº	TOTAL SHEETS
82-073-05	SUSSEX	BRF-1009(3)	116	155

SCHEMATIC CONDUIT DIAGRAM

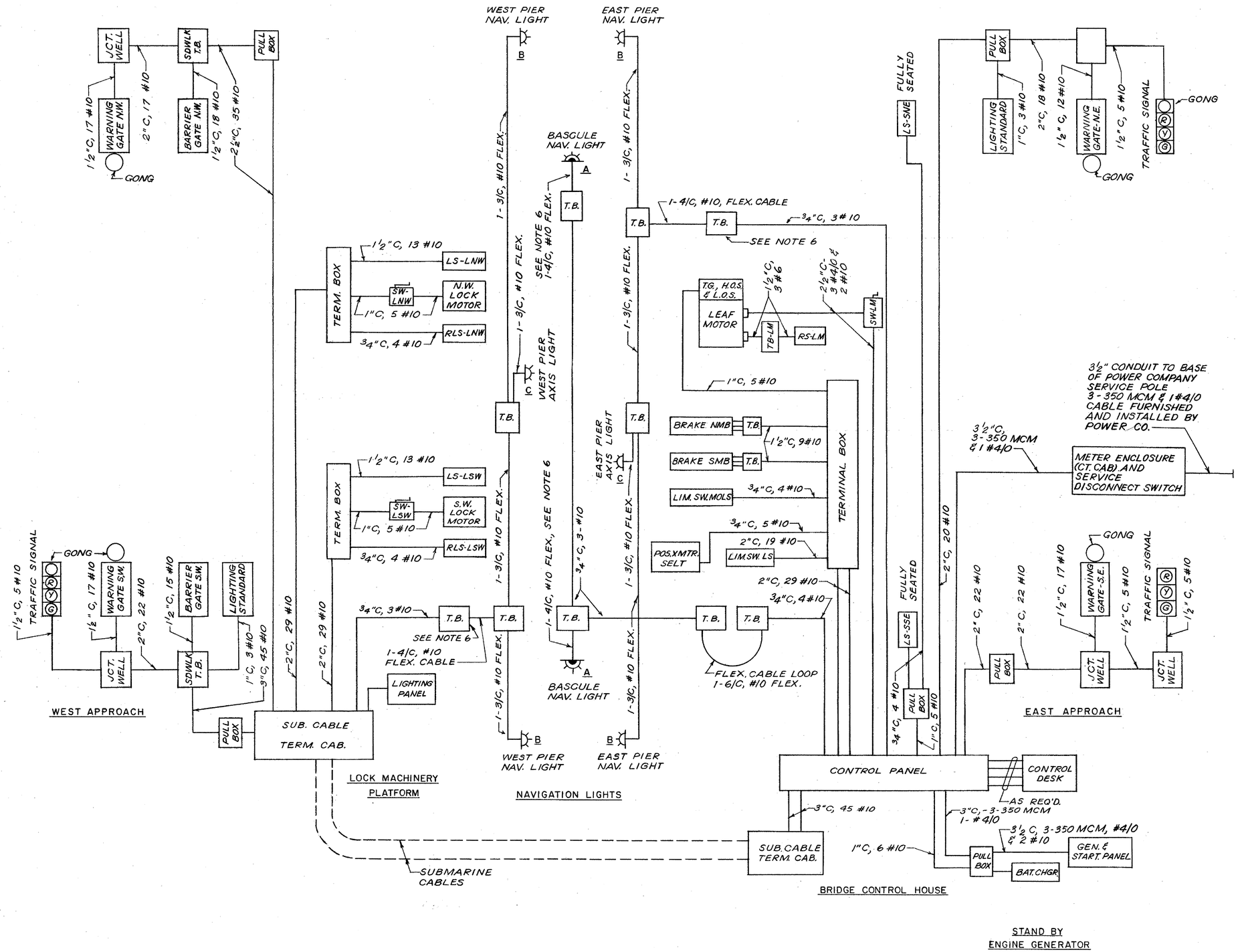

NOTES FOR CONDUIT DIAGRAM

1. THE NUMBER OF WIRES AND SIZES OF CONDUCTORS SHOWN IN CONDUITS AND CABLES ARE BASED ON THE CONTRACT WIRING DIAGRAMS AND ARE THE MINIMUM PERMISSIBLE. THE CONTRACTOR SHALL PROVIDE CONDUCTORS OF SUFFICIENT NUMBER AND SIZE, INCLUDING SPARES, AS MAY BE REQUIRED FOR THE INSTALLATION IN ACCORDANCE WITH THE FINAL WIRING DIAGRAMS ON HIS APPROVED WORKING DRAWINGS.

2. THE SCHEMATIC CONDUIT DIAGRAMS DO NOT PURPORT TO SHOW ALL PULL AND TERMINAL BOXES THAT MAY BE REQUIRED. THE CONTRACTOR SHALL FURNISH AND INSTALL ANY ADDITIONAL BOXES REQUIRED TO CONFORM WITH SPECIFIED REQUIREMENTS GOVERNING THE ALLOWABLE NUMBER OF CONDUIT BENDS BETWEEN BOXES AND CABINETS.

3. THE SCHEMATIC CONDUIT DIAGRAMS SHOW ONLY THE CIRCUITS CONCERNED WITH OPERATION OF THE BRIDGE AND ITS AUXILIARIES. OTHER CIRCUITS REQUIRED TO BE INSTALLED, BUT NOT SHOWN ON THE DIAGRAMS, INCLUDE AT LEAST THE SERVICE LIGHTING, ELECTRIC HEATING, HOUSE AUXILIARY EQUIPMENT, AND INTERCOM TELEPHONE SYSTEM.

4. SECTIONS OF FLEXIBLE CONDUIT REQUIRED FOR CONNECTIONS TO MOTORS AND LIMIT SWITCHES ARE NOT INDICATED.

5. FOR DETAILS OF CONNECTIONS AT LEAF BRAKES, SEE DRAWING NO.

6. PIER NAVIGATION LIGHTS SHALL BE GROUNDED BY MEANS OF BONDING THE THIRD CONDUCTOR OF THE 4/C NO. 10 CABLE TO THE CONDUIT SYSTEM IN TERMINAL BOX MOUNTED ON SUBSTRUCTURE WALL.

REFERENCE SHEET ONLY
For Actual Conduit Schematic
Refer to Tudor Electric
As Built Const. Dwg. No. E83 & E84

LIST OF SYMBOLS

¾"C, 3 #10	- RIGID CONDUIT. THE NUMBER AND SIZES OF CABLES AND SIZE OF CONDUIT ARE NOTED.
4 C - #10 FLEX.	- ONE FLEXIBLE CABLE. THE NUMBER AND SIZE OF CONDUCTORS ARE NOTED.
T.B.	- TERMINAL BOX.
	- DISCONNECT SWITCH.
-A	- 180 DEGREE RED/GREEN BASCULE LEAF NAVIGATION LIGHT.
-B	- 180 DEGREE RED PIER NAVIGATION LIGHT.
-C	- 180 DEGREE AXIS NAVIGATION LIGHT.

HARDESTY & HANOVER CONSULTING ENGINEERS NEW YORK, N.Y.

REVISIONS

PREL. TRACING H. BRAMA DESIGN G.T.S. CHKD. G.T.S.

42389

CONTRACT	COUNTY	FEDERAL AID PROJECT Nº	SHEET Nº	TOTAL SHEETS
82-073-05	SUSSEX	BRF-1009(3)	117	155

SUBMARINE CABLE DETAILS

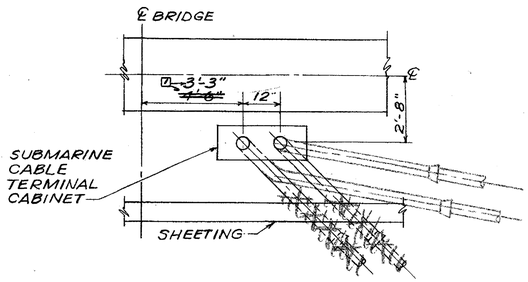

PLAN

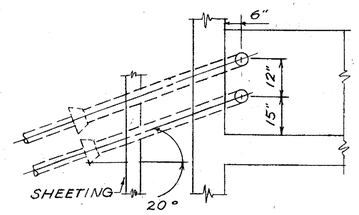

PLAN

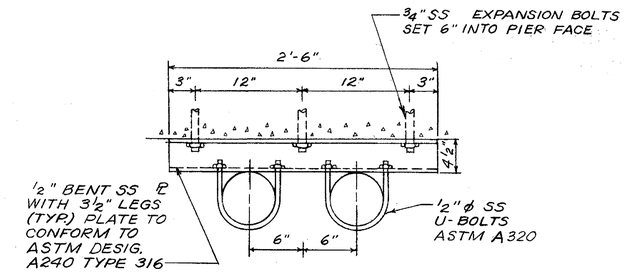

NOTE:
ONE BRACKET REQ'D. EVERY 3'-0".

DETAIL "A"

CONDUIT SUPPORT

SCALE: NONE

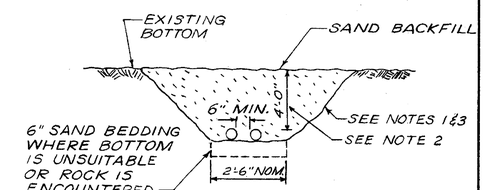

SUBMARINE CABLE TRENCH

SCALE: NONE

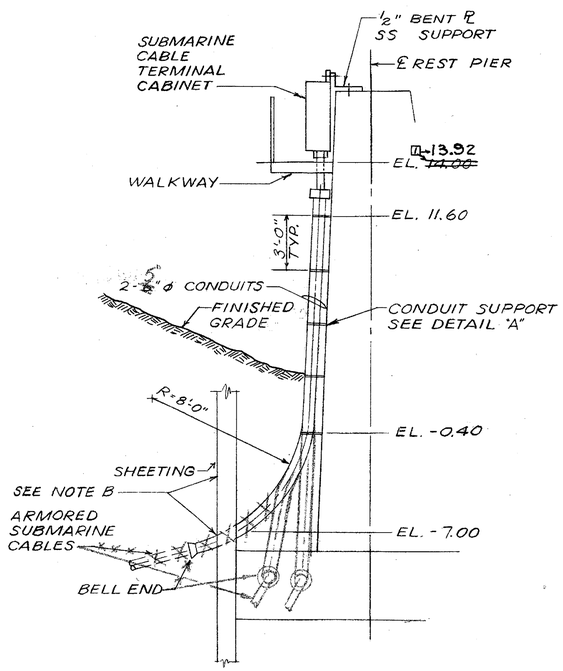

ELEVATION AT

REST PIER

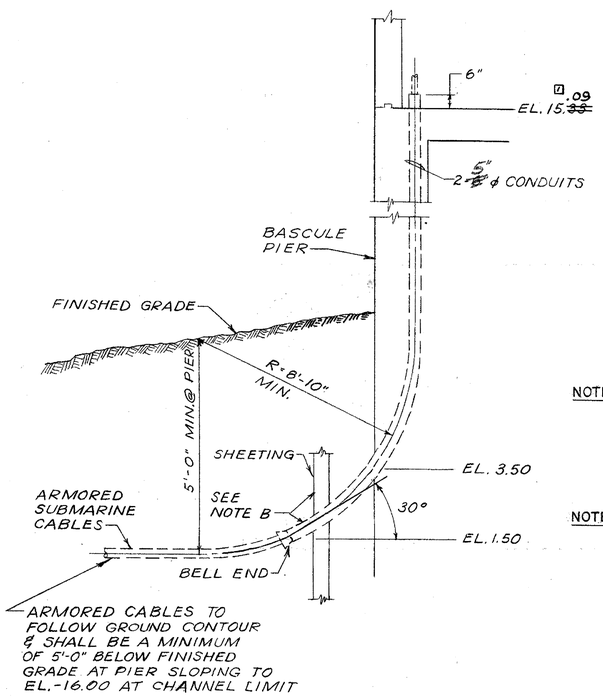

ELEVATION AT

CONTROL HOUSE

SUBMARINE CABLE & CONDUIT DETAILS

SCALE: NONE

NOTES FOR SUBMARINE CABLE INSTALLATION:

1. EXCAVATE TRENCH TO PROVIDE REQUIRED DEPTH AND TO PERMIT THE MATERIAL OF THE TRENCH SIDES TO STAND AT ITS NATURAL SLOPE.
2. ACROSS THE NAVIGABLE CHANNEL THE SUBMARINE CABLES ARE TO BE BURIED NOT LESS THAN 4 FEET BELOW THE EXISTING BOTTOM BUT NOT LESS THAN 16 FEET BELOW M.L.W.
3. AT THE LIMIT OF THE NAVIGABLE CHANNEL ON EACH SIDE, THE CABLE TRENCH SHALL BE SLOPED UPWARD UNTIL IT MEETS THE PIERS AS SHOWN IN "SUBMARINE CABLE & CONDUIT DETAILS".

NOTE A. SUBMARINE CABLE TERMINAL CABINET

1. BENT PLATE MOUNTING STRAPS FOR TERMINAL BLOCKS ARE NOT SHOWN.
2. CONDUIT ENTRANCES ARE NOT SHOWN.

NOTE B. SUBMARINE CABLE & CONDUIT DETAILS

1. INSTALL CONDUITS IN COFFERDAM PRIOR TO POURING CONCRETE. LOCATION AND METHODS OF SECURING CONDUIT IN PLACE TO BE SUBMITTED FOR APPROVAL.
2. EXCAVATE CHANNEL BOTTOM OUTSIDE THE PIER TO PROVIDE ACCESS TO CONDUITS TO INSTALL SUBMARINE CABLES.
3. WHERE SUBMARINE CABLE CONDUITS PASSES THROUGH THE SHEETING, APPROPRIATE SIZE HOLES SHALL BE CUT IN SHEETING.

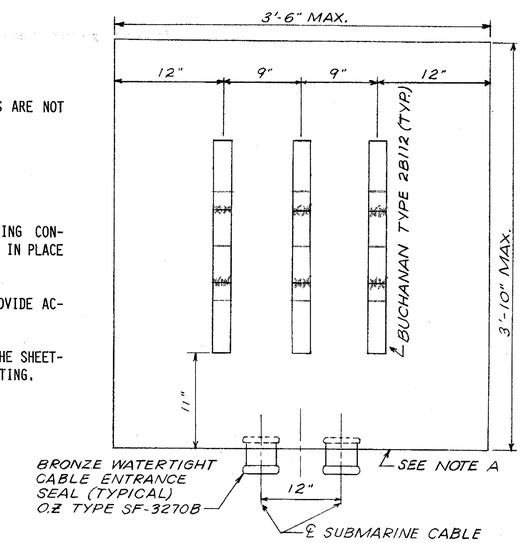

SUBMARINE CABLE TERMINAL CABINET

SCALE: NONE

HARDESTY & HANOVER CONSULTING ENGINEERS NEW YORK, N.Y.

REVISIONS

1 Revised Elev. & Dimension 11-5-84 T.F.F.

PREL. TRACING H.F.B. DESIGN G.T.S. CHKD.

A0389

CONTRACT	COUNTY	FEDERAL AID PROJECT Nº	SHEET Nº	TOTAL SHEETS
82-073-05	SUSSEX	BRF-1009(3)	118	155

ELECTRICAL DETAILS I

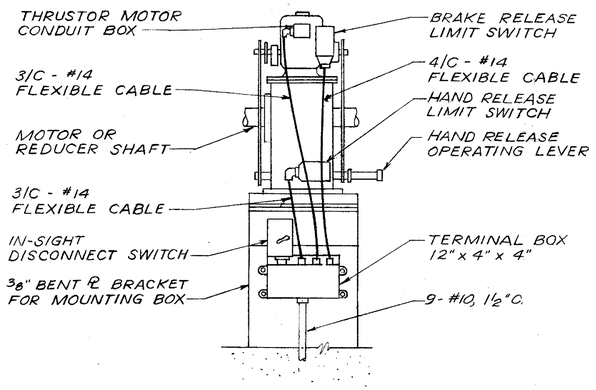

TYPICAL BRAKE DETAILS

SCALE: NONE

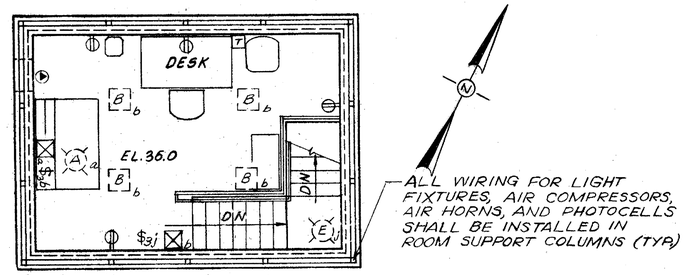

OPERATOR'S ROOM

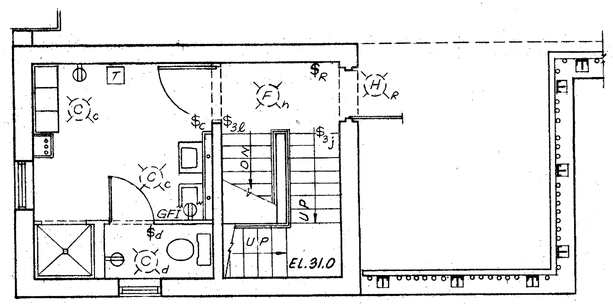

UTILITY ROOM

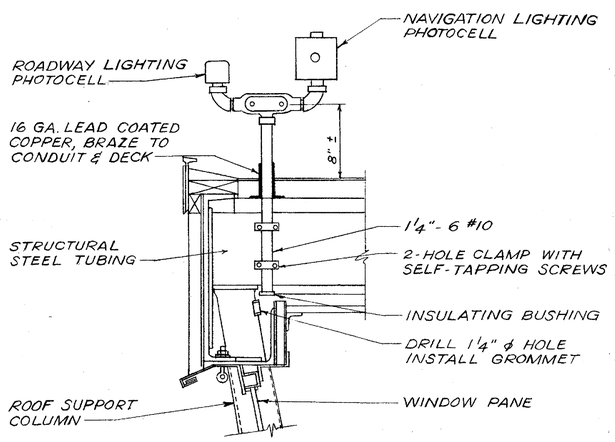

PHOTOCELL MOUNTING DETAIL

SCALE: 1/2" = 1'-0"

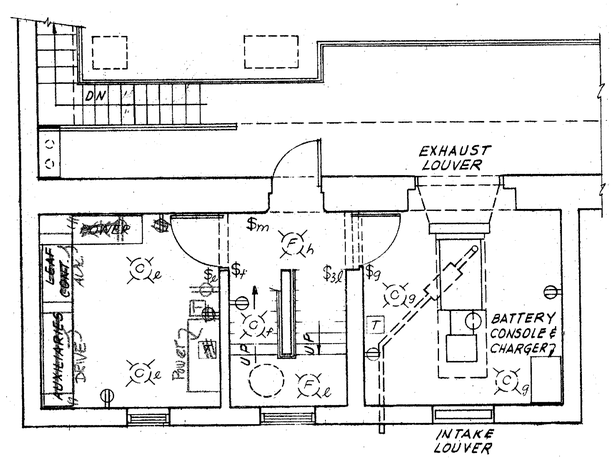

SWITCHBOARD AND ENGINE ROOM

SERVICE LIGHTING

SCALE: NONE

SCHEDULE OF LIGHTING EQUIPMENT

(A) - RECESSED ADJUSTABLE FRAMING PROJECTOR, WITH SHARP EDGE CUTOFF IN ALUMINUM HOUSING. LIGHTOLIER CAT. NO. 7052 OR APPROVED EQUAL. FURNISH WITH 100-WATT TUNGSTEN HALOGEN LAMP.

(B) - RECESSED RECTANGULAR INCANDESCENT FIXTURE WITH FLAT WHITE LENS.
ART METAL CAT. NO. 12-CR5, OR APPROVED EQUAL. FURNISH WITH ONE 150-WATT LAMP.

(C) - SURFACE SQUARE CEILING FIXTURE OF ANODIZED CAST ALUMINUM, 150 WATT WITH PORCELAIN SOCKET, ANODIZED REFLECTOR AND DROP OPAL DIFFUSER. FURNISH WITH 150-WATT LAMP. DEVINE CAT. NO. A 103 ME-AH-C43, OR APPROVED EQUAL.

(D) - WALL MOUNTED FIXTURE WITH CAST ALUMINUM BRACKET AND WHITE SATIN GLOBE.
ART METAL CAT. NO. 9112 OR APPROVED EQUAL. FURNISH WITH 100-WATT LAMP.

(E) - CEILING MOUNTED FIXTURE WITH CAST ALUMINUM BRACKET AND WHITE SATIN GLOBE.
ART METAL CAT. NO. 9312 OR APPROVED EQUAL. FURNISH WITH 100-WATT LAMP.

(F) - VAPORTIGHT MARINE LIGHTING FIXTURE, CAST BRASS, JUNCTION BOX TYPE FOR WALL MOUNTING, 100/150-WATT SIZE, WITH TYPE SV VIBRATION-PROOF LAMPHOLDER.
RUSSELLSTOLL CAT. NO. LVWB 15G-SV OR APPROVED EQUAL.
FURNISH WITH 150-WATT ROUGH SERVICE LAMP.

(G) - VAPORTIGHT MARINE LIGHTING FIXTURE, CAST BRASS, JUNCTION BOX TYPE, 200/300 WATT SIZE, WITH VIBRATION-PROOF LAMPHOLDER AND STANDARD DOME REFLECTOR.
RUSSELLSTOLL CAT. NO. LVJB 30G-SV OR APPROVED EQUAL, EXCEPT WITHOUT GUARD.
FURNISH WITH 150-WATT ROUGH SERVICE LAMP.

(H) - VAPORTIGHT MARINE WALL-MOUNTED BRACKET, ANODIZED CAST ALUMINUM, 200-WATT SIZE, WITH PRISMATIC REFRACTOR, CAST GUARD AND FLUSH-MOUNTED CAST ALUMINUM JUNCTION BOX.
DEVINE LIGHTNG CAT. NO. B270VTG, OR APPROVED EQUAL. FURNISH WITH 200-WATT ROUGH SERVICE LAMP, WITH PHOTO ELECTRIC CELL.

SCHEDULE OF LIGHTING EQUIPMENT

- SINGLE OUTLET, GROUNDING TYPE, "TWIST LOCK" 20 AMPS, 250 VOLTS A-C HUBBEL CAT. 73CM10G, OR APPROVED EQUAL.

- DUPLEX OUTLET, POLARIZED, GROUNDING-TYPE, 15-AMP, 125-VOLTS A-C, FABRICATED OF GRAY MELAMINE.
HUBBELL CAT. NO. 52CM62GY, OR APPROVED EQUAL.

- MARINE DUPLEX OULET, POLARIZED, GROUNDING-TYPE, 3-WIRE, 15 AMP., 125-VOLTS A-C, FABRICATED OF YELLOW MELAMINE.
HUBBELL CAT NO. 52M62, OR APPROVED EQUAL. MOUNT IN CAST BRASS FD BOX AND PROVIDE WITH YELLOW FIBERGLASS WEATHERPROOF LIFT PLATE NO. 52CM21.

- GROUND FAULT INTERRUPTER RECEPTACLE, POLARIZED, GROUNDING-TYPE, HOSPITAL GRADE, 15-AMP, 125-VOLTS A-C. SLATER CAT. NO. SIR-150HG, OR APPROVED EQUAL.

- TUMBLER SWITCH, SPST, 20-AMP., 125-VOLTS, SPECIFICATION GRADE. HUBBELL CAT NO. 1221, OR APPROVED EQUAL.

- TUMBLER SWITCH, SPDT, 20-AMP., 125-VOLTS, SPECIFICATION GRADE. HUBBELL CAT. NO. 1223, OR APPROVED EQUAL.

ELECTRICAL LEGEND

(A)a - LIGHTING FIXTURE (TYPE "A" INDICATED). (LOWER CASE LETTER "A" INDICATES CIRCUIT.)*

$ - TUMBLER SWITCH, SPST.

$3 - TUMBLER SWITCH, SPDT.

- DUPLEX RECEPTACLE.

GFI - DUPLEX RECEPTACLE WITH GROUND FAULT INTERRUPTER.

- SPDT DIMMER SWITCH

- SINGLE OUTLET, TWIST LOCK 20A, 250 VOLTS

T - HEATING THERMOSTAT

✳ - CIRCUIT LOCATION & LIGHTING PANELS
SEE SHEET NO. 113.

LOCATION LEGEND

AP	- AUXILIARY CONTROL PANEL	BRIDGE CONTROL PANEL
LCP	- LEAF CONTROL PANEL	
LP	- LIGHTING CONTROL PANEL	
PP	- POWER PANEL	
BS	- BARRIER STAND	
CD	- CONTROL DESK	
GS	- GATE STAND	
LEAF	- BASCULE LEAF	
LP	- LOCK PLATFORM	
MG	- MACHINE GALLERY	
SW	- SWITCH BOARD ROOM	

HARDESTY & HANOVER CONSULTING ENGINEERS NEW YORK, N.Y.

REVISIONS

PREL. TRACING H.F.B. DESIGN G.T.S. CHKD.

40389

CONTRACT	COUNTY	FEDERAL AID PROJECT Nº	SHEET Nº	TOTAL SHEETS
82-073-05	SUSSEX	BRF-1009(3)	119	155

ELECTRICAL DETAILS II

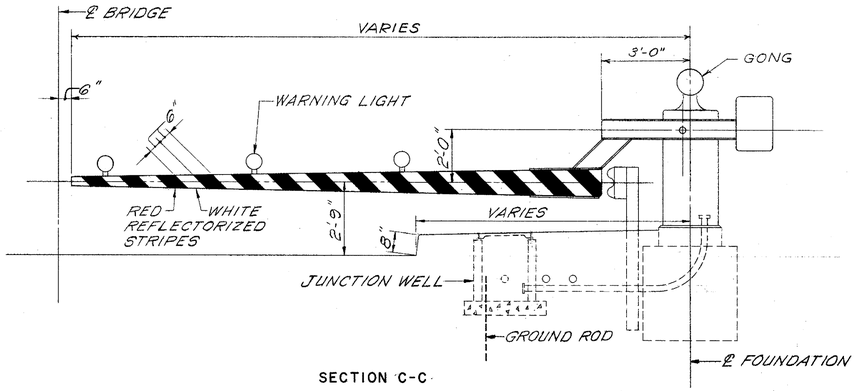

SECTION C-C

TYPICAL DETAIL AT WARNING GATE

SCALE: 3/8" = 1'-0"

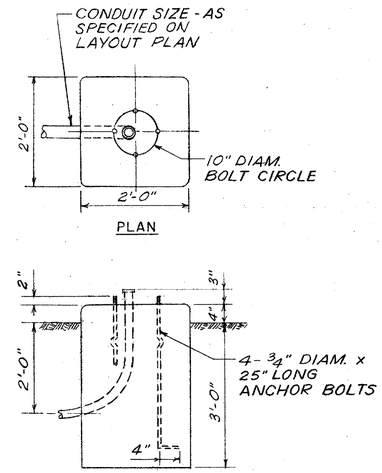

PEDESTAL BASE

SCALE: 3/4" = 1'0"

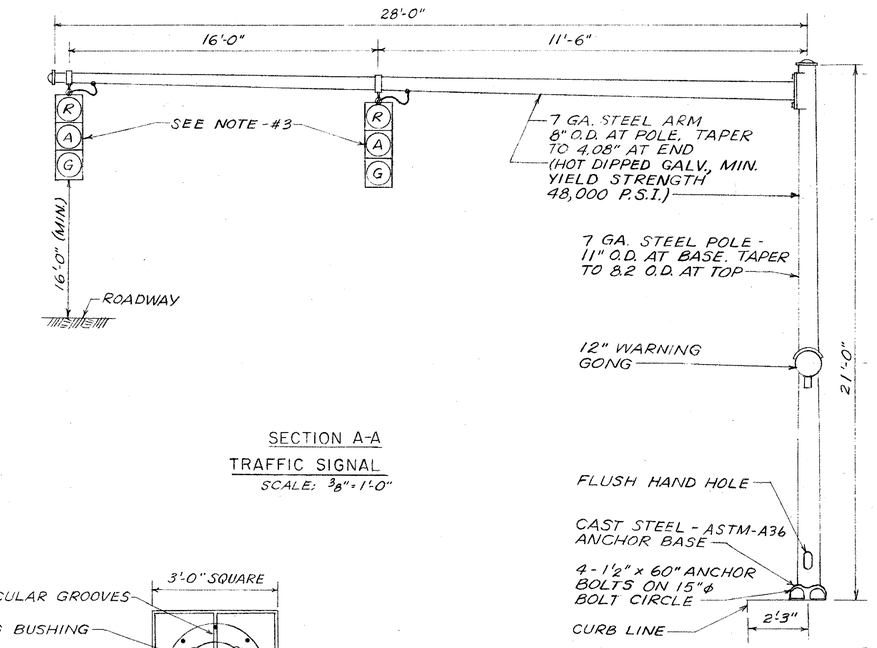

SECTION A-A

TRAFFIC SIGNAL

SCALE: 3/8" = 1'-0"

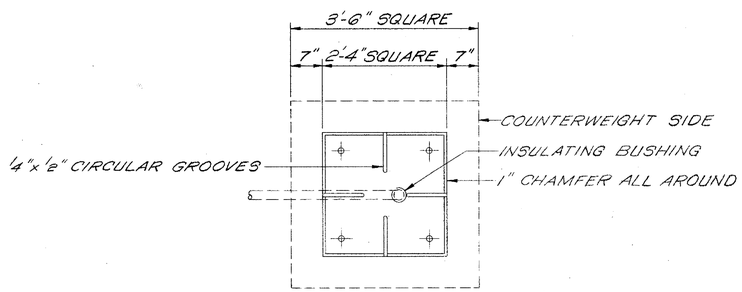

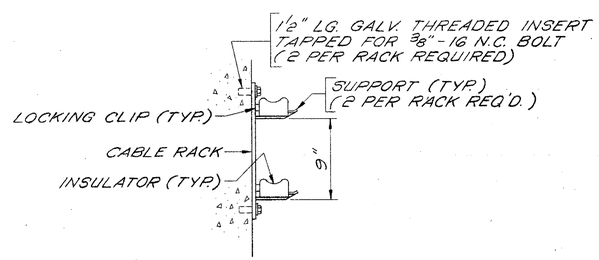

TYPICAL CABLE RACK ASSEMBLY FOR STANDARD JUNCTION WELLS

SCALE: NONE

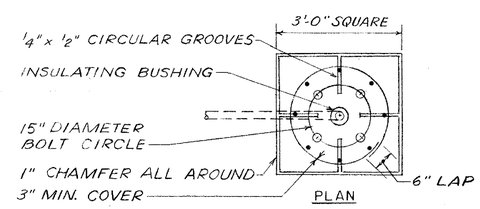

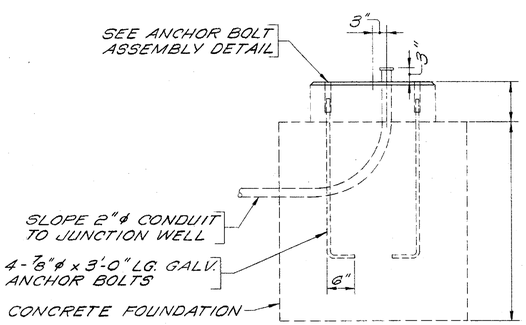

WARNING GATE FOUNDATION DETAILS

SCALE: 3/4" = 1'-0"

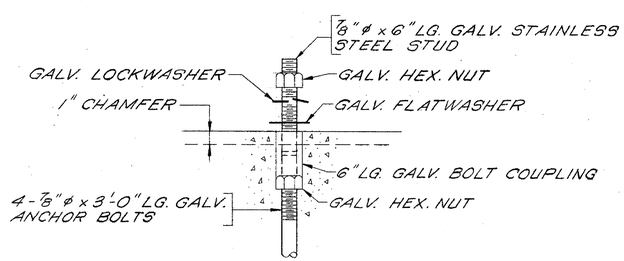

GATE ANCHOR BOLT ASSEMBLY DETAIL

SCALE: NONE

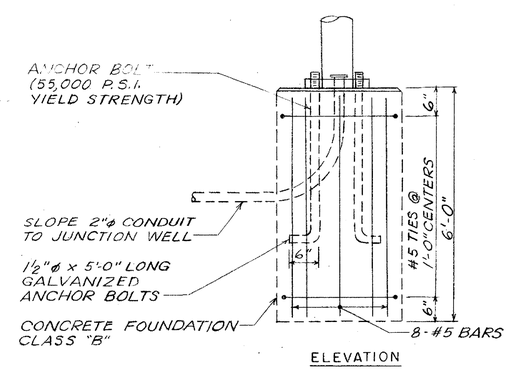

TRAFFIC SIGNAL POLE FOUNDATION DETAILS

SCALE: NONE

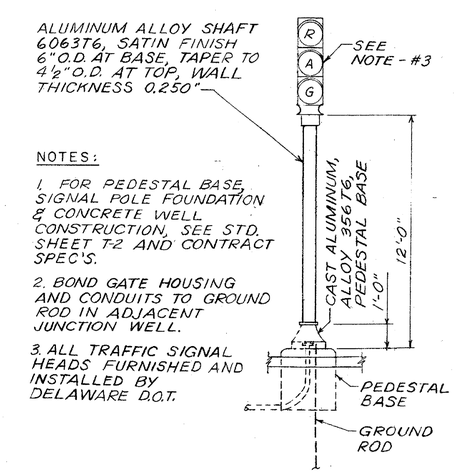

NOTES:

1. FOR PEDESTAL BASE, SIGNAL POLE FOUNDATION & CONCRETE WELL CONSTRUCTION, SEE STD. SHEET T-2 AND CONTRACT SPEC'S.
2. BOND GATE HOUSING AND CONDUITS TO GROUND ROD IN ADJACENT JUNCTION WELL.
3. ALL TRAFFIC SIGNAL HEADS FURNISHED AND INSTALLED BY DELAWARE D.O.T.

SECTION B-B

TYPICAL DETAIL AT TRAFFIC SIGNAL

SCALE: 3/8" = 1'-0"

HARDESTY & HANOVER CONSULTING ENGINEERS NEW YORK, N.Y.

REVISIONS

PREL. TRACING H.E.B. DESIGN G.T.S. CHKD

CONTRACT	COUNTY	FEDERAL AID PROJECT Nº	SHEET Nº	TOTAL SHEETS
82-073-05	SUSSEX	BRF-1009(3)	120	155

ELECTRICAL DETAILS III

HARDESTY & HANOVER
CONSULTING ENGINEERS
NEW YORK, N.Y.

REVISIONS

LEGEND:

- CONCRETE JUNCTION WELL
- SIDEWALK TERMINAL BOX (CAST IRON)
- ROADWAY LIGHTING STANDARD ASSEMBLY
- R.M.C. EXPANSION JOINT
- TRAFFIC LIGHT ASSEMBLY
- MAST ARM TRAFFIC LIGHT ASSEMBLY
- RIGID METALLIC CONDUIT
- UTILITY SERVICE POLE

NAVIGATION LIGHTS:

- 360° RED/GREEN BASCULE LIGHT
- 180° RED AXIS MARKER LIGHT
- 180° RED CHANNEL MARKER LIGHT

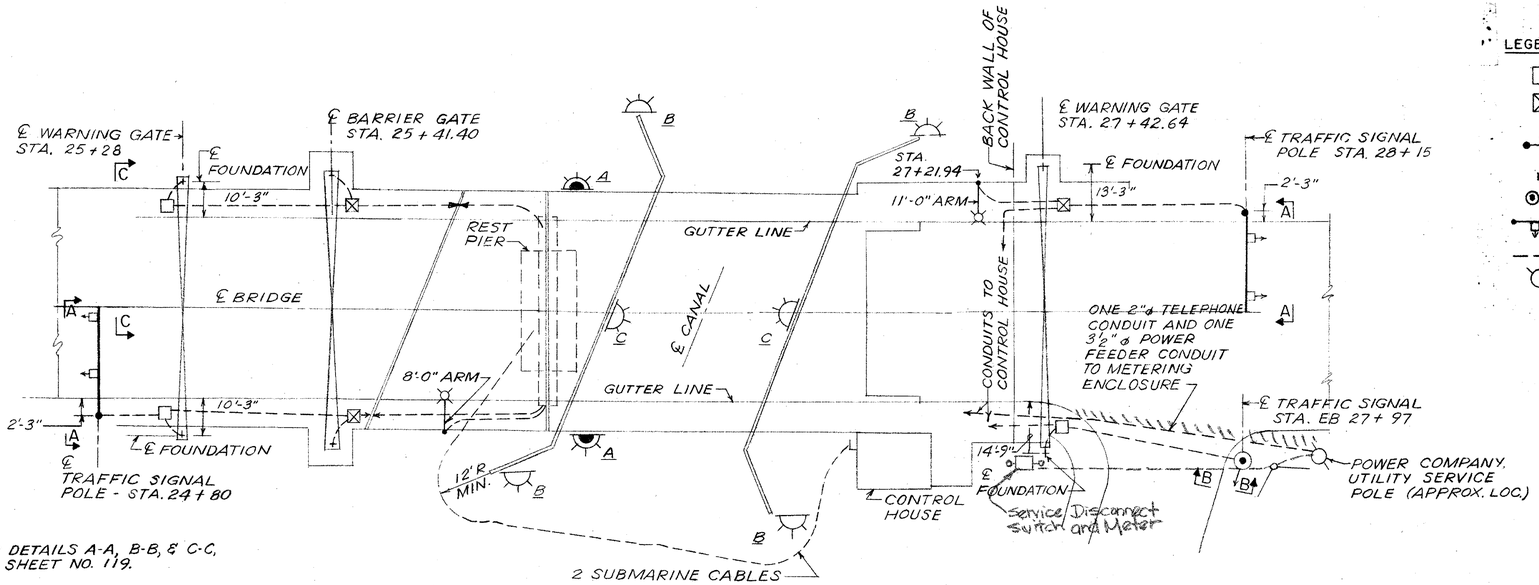

FOR DETAILS A-A, B-B, & C-C, SEE SHEET NO. 119.

PLAN
SCALE: NONE

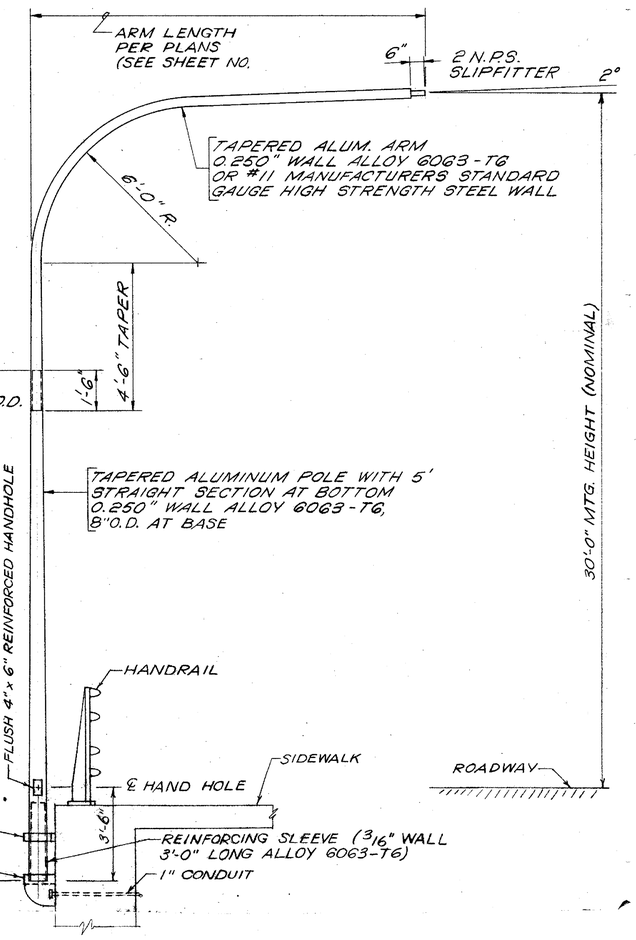

DAVIT ARM LIGHTING STANDARD
SCALE: NONE

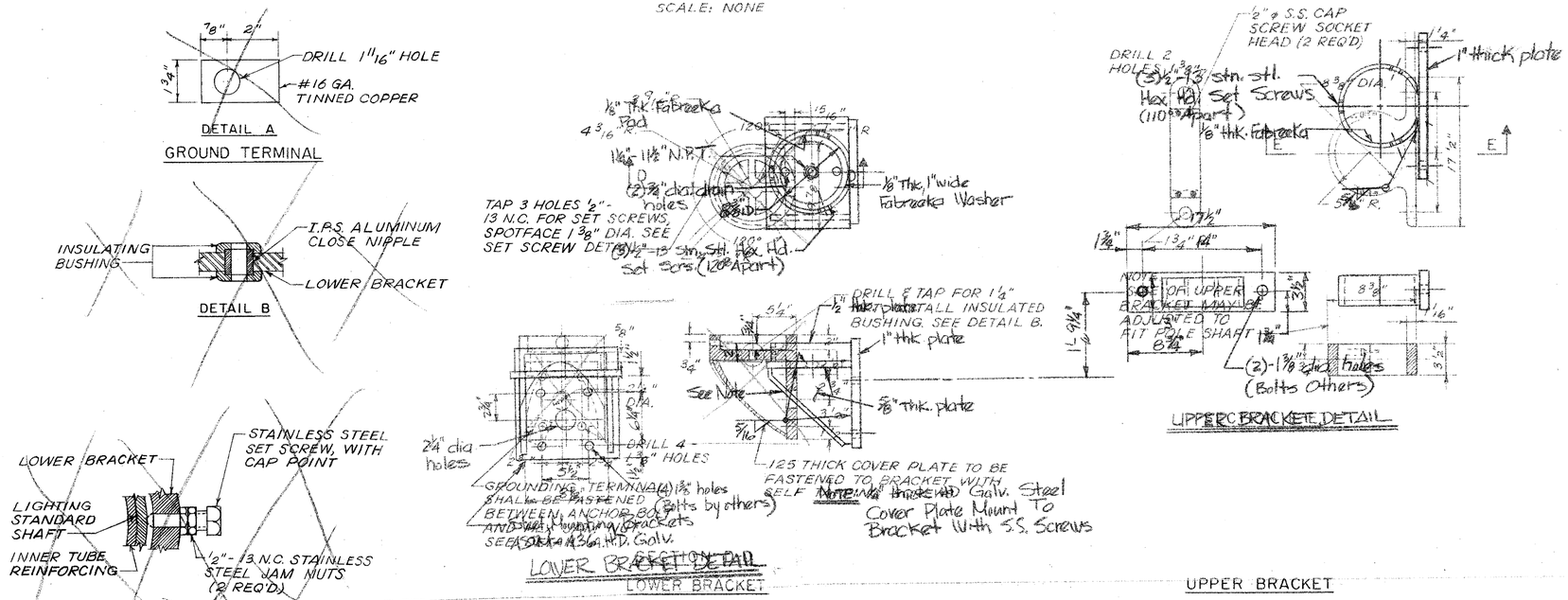

DAVIT ARM LIGHTING STANDARD MOUNTING DETAILS
SCALE: NONE

PREL. TRACING H.F.B. DESIGN G.T.S. CHKD. G.T.S.

HARDESTY & HANOVER
CONSULTING ENGINEERS
NEW YORK, N.Y.

REVISIONS

D Revised Bar Lists 10-30-84 T.F.F.

FG CHKD. LMB DESIGN AV, AS FREL. TRACING

CONTRACT	COUNTY	FEDERAL AID PROJECT Nº	SHEET Nº	TOTAL SHEETS
82-073-05	SUSSEX	BRF-1009(3)	121	155

BAR LIST - WEST ABUTMENT
BAR BENDING DETAILS

ABUTMENT

MARK	SIZE	LENGTH	No. REQD	TYPE	DETAIL DIMENSIONS A	B	C	D	H ~~E~~ ~~D~~ K ~~G~~		REMARKS
		FOOTING									
F401	4	7-0	73	STR							
F402	4	10-0	2	STR							
F403	4	4-6	33	17		1-0	3-6	---			
F404	4	5-8	21	17		1-0	1-2	3-6			
F405	4	4-2	21	17		1-0	3-2	---			
F406	4	8-0	2	17		1-0	7-0	---			
F501	5	14-2	42	STR							
F502	5	20-2	15	STR							
F601	6	38-6	36	STR							
F602	6	8-6	144	STR							
F603	6	8-3	2	STR							
F604	6	12-3	2	16	---	1-6	4-9	6-0	2-3	5-6.75	
F605	6	8-6	2	16	---	---	1-6	7-0	6-6	2-7.5	
F606	6	18-0 TO 21-6	20	STR							2 SETS OF 10
F607	6	21-0 TO 24-6	20	STR							2 SETS OF 10
F608	6	6-6	2	STR							
F609	6	~~10-0~~ 11'-0" ~~7.75~~	2	~~STR~~	1'-0"		10'-0"				D-G=0
F701	7	9-6	45	STR							
F702	7	20-2	15	STR							
F801	8	9-6	45	STR							
F802	8	6-10	70	17		1-4	5-6	---			
F803	8	4-6	14	STR							
F804	8	10-0	4	STR							
F805	8	13-2	2	17		1-4	11-10	---			
		STEM									
A401	4	21-1	5	STR							
A402	4	20-6	6	STR							
A403	4	25-8	11	STR							
A404		----									NOT USED
A405	4	21-10	5	STR							
A406	4	25-2	6	16	---	---	23-8	1-6	1-4.5	0-6.75	
A407	4	6-0	71	17		1-6	4-6	---			
A408	4	7-11	6	17		1-6	6-5	---			
A409	4	7-10	6	16	---	1-6	3-0	3-4	1-3	3-1	
A410	4	8-4	55	STR							
A411	4	21-9	6	16	---	0-8	0-9	20-4	7-7.5	18-10.25	
A412	4	20-4	8	STR							
A413		---									NOT USED
A414	4	25-8	16	STR							
A415		---									NOT USED
A416	4	27-0	6	22	4-0	1-0	22-0		20-4.75	8-3	
A417	4	25-3	6	16	---	---	23-9	1-6	1-4.75	0-6.75	
A418	4	23-4	2	STR							
A419	4	5'-8" ~~23-5~~	8	16	---	---	1-6	4-2	3-10	1-6.75	
A420	4	9-8	8	17		3-3	6-5	---			
A421	4	4-8	55	17		1-6	1-8	1-6			
A422	4	6-2	55	17		3-0	0-8	2-6			
A423	4	~~14-8~~ 13'-0"	2	STR							
A424		---									NOT USED
A425	4	~~13-3~~ 14'-6"	2	STR							
A426	4	28-2	4	STR							
A427	4	7-1	2	STR							
A428	4	9-5	16	STR							
A429	4	9-3	2	16	---	0-8	0-9	7-10	2-11.5	7-3	
A430	4	7-10	2	STR							
A431	4	15-0	2	16	---	---	11-4	3-8	3-4.75	1-4.5	
A432	4	13-6	2	16	---	---	12-0	1-6	1-4.75	0-6.75	
A433	4	7-4	2	STR							
A434	4	~~11-2~~ 8'-3"	2	STR							
A435	4	~~3-8~~ 4'-2"	16	17		1-6	~~0-8~~ 1'-2"	1-6			
A436	4	8-4	6	16	---	---	6-10	1-6	1-4.5	0-6.75	
A437	4	5-0	6	STR							
A438	4	3-0	3	17		1-6	1-6	---			

ABUTMENT (CONT.)

MARK	SIZE	LENGTH	No. REQD	TYPE	DETAIL DIMENSIONS A	B	C	D	H ~~E~~ ~~D~~ K ~~G~~		REMARKS
		STEM (CONT.)									
A501	5	5-10	56	17		1-8	2-6.~~25~~	1-8			
A502	5	11-7	7	T1	0-6	2-8	2-7.5	2-8			E =2-7.5 G= 0-6
A503	5	2-6	28	17		0-10	1-8	---			
A601	6	5-1	55	STR							
A602	6	8-0	15	17		1-8	6-4	---			
A801	8	21-1	6	STR							
A802	8	25-8	6	STR							
A803	8	21-10	6	STR							
A804	8	7-6	3	STR							
A805	8	8-6	2	17		1-4	7-2	---			
A806	8	3-10	5	17		1-4	1-2	1-4			
		WINGWALLS									
W401	4	25-2	24	17		1-6	22-2	1-6			
W402	4	24-2	5	STR							
W403	4	20-8	15	17		1-6	16-2	3-0			
W404	4	18-6	10	17		3-5	11-8	3-5			
W405	4	7-6	13	17		1-6	6-0	---			
W406	4	11-8	20	STR							
W407		---									NOT USED
W408	4	11-0	2	STR							
W409	4	11.8	12	STR							
W410	4	11-10	13	STR							
W411	4	20-4	5	STR							
W501	5	11-0	12	STR							
W701	7	13-10	12	12	0-10	11-0	2-0	---	---	---	J = 0-7
W801	8	13-6 TO 13-3	24	STR							4 SETS OF 6
W802	8	14-11 TO 14-8	24	17		1-6	13-5 TO 13-2	---			4 SETS OF 6
W803	8	14-0	17	17		1-6	12-6	---			
W804	8	13-0	14	STR							
W805	8	~~5-8~~ 5'-2"	29	17		1-6	1-2	2-6			
W806	8	12-9	5	STR							
		PILES									
P301	3	4-1	666	T3	0-6					0-6	0 = 0 - 10.75
P601	6	10-8	370	1	0-8	10-0				-	J = 0 - 6

NOTES:

BAR SIZES ARE IDENTIFIED BY THE FIRST NUMBER OF THE BAR MARK.

ALL DIMENSIONS ARE OUT TO OUT OF BAR EXCEPT "A" AND "G" ON STANDARD 180° AND 135° HOOKS.

ALL BAR LENGTHS ARE IN FEET AND INCHES.

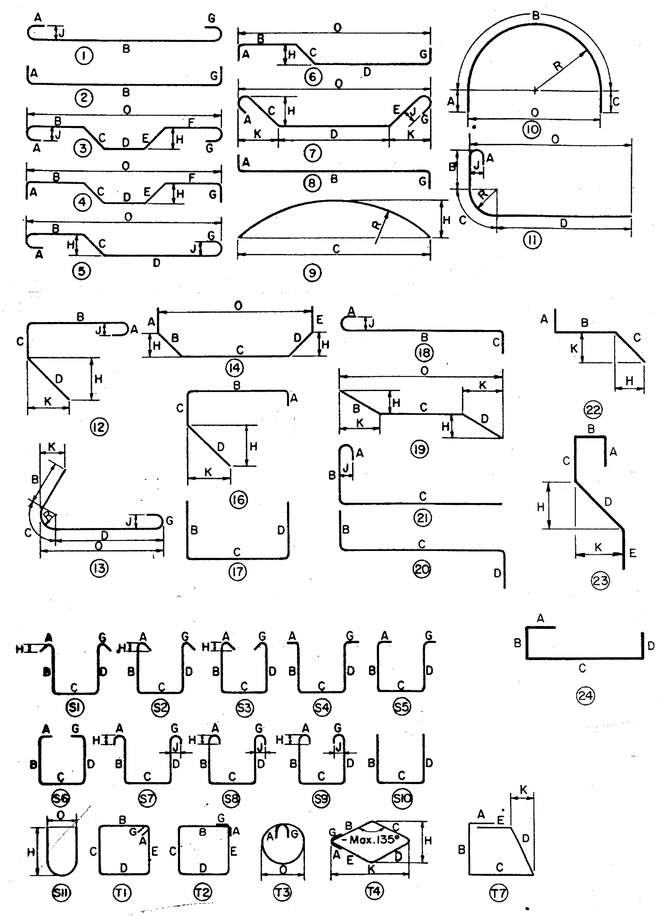

HARDESTY & HANOVER
CONSULTING ENGINEERS
NEW YORK, N.Y.

CONTRACT	COUNTY	FEDERAL AID PROJECT Nº	SHEET Nº	TOTAL SHEETS
82-073-05	SUSSEX	BRF-1009(3)	122	155

BAR LIST
REST PIER, BASCULE PIER

REST PIER

MARK	SIZE	LENGTH	No. REQD	TYPE	DETAIL DIMENSIONS A	B	C	D	E	G	REMARKS
F601	6	14-4	66	STR							
F602	6	32-4	15	STR							
F1001	10	32-4	15	STR							
F1101	11	9-4	68	13		6-6	0-11	1-11		----	R = 0-7.5, K= 0-3
F1102	11	9-7	24	13		6-6	1-2	1-11		----	R = 0-7.5, K= 1-4
P501	5	15-6 TO	56	17		12-6 TO	3-0 TO	----			4 SETS OF 14
		13-2				9-8	3-6				
P502	5	5-5 TO	42	1	0-7	4-3 TO		----		0-7	J = 0-5
		6-6				5-4					3 SETS OF 14
P503	5	3-8	44	STR							
P504	5	30-4	12	17		2-10	27-6	----			
P505		----									NOT USED
P506	5	29-2 TO	14	STR							2 SETS OF 7
		51-8									
P507	5	23-3	~~123~~ [7] 124	14	3-6	16-9	3-0	----	----		H = 8-0
P508	5	25-4	~~64~~ [7] 65	STR							
P509	5	14-2 TO	76	T1	0-6	2-3	4-3 TO	2-5 TO	4-3 TO	0-6	4 SETS OF 19
		28-11					11-6	2-8	11-6		
P510	5	28-7	28	T1	0-6	2-3	11-4	2-8	11-4	0-6	
P511	5	2-0	36	17		1-6	0-6	----			
P512	5	9-4	7	T1	0-6	1-6	2-8	1-6	2-8	0-6	
P513	5	5-6	28	17		1-6	2-6	1-6			
P514	5	4-4	35	17		1-6	1-4	1-6			
P515	5	11-0	2	T1	0-6	1-8	3-4	1-8	3-4	0-6	
P516	5	6-2	8	17		1-6	3-2	1-6			
P517	5	4-6	10	17		1-6	1-6	1-6			
P1101	11	18-9	92	STR							
P1102	11	32-2	12	17		3-7	28-7	----			
P1103	11	23-7	12	1	1-7	22-0					J = 1 - 2.75
C301	3	4-1	399	T3	0-6					0-6	O = 0-10.75
C601	6	20-8	147	1	0-8	20-0				---	J = 0-6

BASCULE PIER

MARK	SIZE	LENGTH	No. REQD	TYPE	DETAIL DIMENSIONS A	B	C	D	E	G	REMARKS
		FOOTING									
F501	5	5-0	6	STR							
F502	5	4-0	6	STR							
F503	5	4-0	14	17		1-0	3-0	---			
F601	6	5-0	~~236~~ [7] 260	STR							
F602	6	6-0	67	19		3-0	3-0	---			H=1-9, K=2-5.5
F801	8	7-0	48	STR							
F901	9	10-6	189	STR							
F902	9	~~14-8 TO~~	10	19		----	~~8-8 TO~~	6-0			2 SETS OF 5
		~~20-2~~ [7]					~~11-2~~ [7]				H ~~=2-8~~, K ~~=5-4.5~~
		11'-6" TO 17'-0"					5'-6" TO 11'-0"				[7] =8-0, =5'-8"
F1001	10	60-0	182	STR							
F1002	10	26-0	182	STR							
F1003	10	~~46-0 TO~~	18	STR						---	2 SETS OF 9
		~~55-8~~ [7] 51'-0" TO 60									
F1004	10	~~22-0 TO~~	18	STR							2 SETS OF 9
		~~31-8~~ [7] 17'-0" TO 20'-0"									
F1005	10	12-0	[7] ~~43~~ 24	STR							
F1101	11	49-4	400	STR							
F1102	11	40-4 TO	52	STR							2 SETS OF 26
		49-3									
F1103	11	14-0	173	2	2-0	12-0					
F1104											NOT USED
F1105	11	12-6	62	STR							
F1106	11	5-6 TO	16	STR							2 SETS OF 8
		11-6									
F1107	11	8-0	32	19		---	3-0	5-0			H=3-6.5, K=3-6.5

BASCULE PIER (CONT.)

MARK	SIZE	LENGTH	No. REQD	TYPE	DETAIL DIMENSIONS A	B	C	D	E	G	REMARKS
		BELOW EL.+7.0									
B511	5	5-6	66	17		1-6	2-6	1-6			
B515	5	7-6	21	STR							
B5020	5	2-11	29	17		1-0	0-11	1-0			
B5021	5	4-5	30	17		1-0	2-5	1-0			
B601	6	20-0	[7] ~~34~~ 134	STR							
B602	6	19-8	54	STR							
B603	6	32-0	54	STR							
B604	6	17-8	54	STR							
B605	6	9-0	64	17		1-6	7-6	---			
B606	6	7-0	54	17		1-6	5-6	---			
B607	6	13-0	5	STR							
B608	6	14-0	60	STR							
B609	6	27-6	17	STR							
B610	6	32-0	15	17		[7] ~~3-8~~ 2'-0"	30-0	---			
B611	6	31-0	32	STR							
B612	6	15-0	32	STR							
B613	6	9-0	48	STR							
B614	6	10-8	118	STR							
B615	6	5-0	[7] ~~261~~ 365	STR							
B616		[7] NOT USED									
B617	6	7-6	3	STR							
B618	6	24-6	39	STR							
B619	6	17-0	61	STR							
B620	6	15-0	3	19		---	7-6 TO	7-6 TO			H=2-6 TO 1-2
[7] 73							11-6	3-6			K=7-1 TO 3-4
B621	6	9-3	3	19		---	1-9 TO	7-6 TO			H=2-6 TO 1-2
							5-9	3-6			K=7-1 TO 3-4
B622	6	7-9 TO	14	STR							
		14-6									
B623	6	10-0 TO	14	STR							
		15-0									
B624											NOT USED
B625	6	8-2	9	1	0-8	7-6					J=0-6
B626	6	8-0	9	STR							
B627	6	6-0	4	STR							
B628	6	8-6	4	17		1-6	7-0	---			
B629	6	5-0	4	17		2-6	2-6	---			
B801	8	15-0	50	STR							
B802	8	8-6	26	17		2-0	4-6	2-0			
B803	8	4-6	24	STR							
B804	8	11-4	10	STR							
B805	8	15-4	12	17		2-0	11-4	2-0			
B806	8	9-0	8	STR							
B807	8	13-0	10	17		2-0	9-0	2-0			
B808	8	7-6	20	17		2-0	3-6	2-0			
B809	8	3-6	20	STR							
B901	9	24-8	[7] ~~63~~ 68	STR							
B902	9	32-6	32	STR							
B903	9	18-6	32	STR							
B904	9	27-6	103	STR							
B905	9	14-8 TO	16	STR							
		18-4									

REVISIONS

[7] - Revised Rebar Lists 10-30-84 TFF

PREL. TRACING ES & VA DESIGN LMB, JMD CHKD BGS

HARDESTY & HANOVER
CONSULTING ENGINEERS
NEW YORK, N.Y.

REVISIONS

☑ Revised Rebar Lists 10-30-84 TFF

PREL. TRACING ES & VA DESIGN JMD, BGS CHKD BGS

CONTRACT	COUNTY	FEDERAL AID PROJECT Nº	SHEET Nº	TOTAL SHEETS
82-073-05	SUSSEX	BRF-1009(3)	123	155

BAR LIST
BASCULE PIER

BASCULE PIER

Mark	Size	Length	No. Reqd	Type	Detail Dimensions A	B	C	D	E	G	Remarks
		BELOW EL.+7.0 (CONT.)									
B906	9	17-0 TO	16	STR							
		20-3									
B907	9	28-0	32	STR							
B908	9	28-2 TO	11	19		---	11-6 TO	16-8 TO			H=5-6 TO 2-1
		27-9					21-6	6-3			K=15-9 TO 5-11
B909	9	20-2 TO	10	19		---	4-6 TO	15-8 TO			H=5-2 TO ~~5-11~~ 2'-1" ☑
		19-9					13-6	6-3			K=14-9.5 TO 5-11
B910	9	22-6 TO	5	STR							
		27-6									
B911	9	12-0 TO	5	STR							
		17-0									
B912	9	☑ ~~22-6~~ 23'-0"	17	14	---	2-6	18-0	2-6	---		H=1-9
B913	9	6-10 TO	27	14	---	2-6	1-10 TO	2-6	---		H=1-9
		16-2					11-2				
B914	9	8-6	7	17		3-0	5-6	----			
B915	9	17-9	2	STR							
B916	9	6-0	~~42~~ 63 ☑	STR							
B917	9	☑ ~~12-3 TO~~	12	14	---	2-6	7-9 TO	2-6	---		H=1-9
		~~16-0~~ ☑	12'-9" TO 16'-6"				11-6				
B918	9	☑ ~~21-8~~ 12'-4"	21 ~~50~~	☑ ~~STR~~ 19		3'-0" ☑	9'-4"	---			☑ H=2'-10", K=1'-0"
B919	9	8-9 TO	7	STR							
		15-3									
B920	9	27-6	6	STR							
B1101	11	21-0	67	STR							
B1102	11	24-8	92	STR							
B1103	11	29-0	10	STR							
B1104	11	☑ ~~36-0~~ 34'-0"	38	STR							
B1105	11	18-6	38	STR							
B1106	11	15-0	30	2	2-0	13-0				---	
B1107	11	☑ ~~23-3~~ 24'-7"	43	19		----	☑ ~~14-6~~ 15'-4"	9-3			☑ ~~H=K=6-6.5~~ H=6'-10" ☑ K=6'-2"
B1108	11	13-0	23	STR							
B1109	11	15-0 TO	34	STR							2 SETS OF 17
		21-6									
B1110	11	16-3 TO	15 ~~16~~ ☑	17		2-0	14-3 TO	---			
		☑ ~~8-9~~ 10'-7"					☑ ~~6-9~~ 8'-7"				
B1111	11	15-0	23	STR							
B1112											NOT USED
B1113	11	16-10	14	17		2-0	14-10	---			
B1114											NOT USED
B1115	11	☑ ~~15-8 TO~~	15 ~~6~~ ☑	19		---	☑ ~~14-0 TO~~	9-3			~~H=K=6-6.5~~ ☑
		~~23-3~~ ☑	17'-2" TO 24'-0"				~~8-6~~ ☑	14'-10" TO 8'-0"			H=6'-10" K=6'-2"
B1116	11	18-7 TO	19	STR							
		21-0									
B1117	11	21-0	19	STR							
B1118	11	☑ ~~32-0~~ 30'-0"	38	STR							

BASCULE PIER (CONT.)

Mark	Size	Length	No. Reqd	Type	Detail Dimensions A	B	C	D	E	G	Remarks
		ABOVE EL.+7.0									
B401	4	4-0	☑ ~~40~~ 42	STR							
B402	4	3-4	6	17		2-6	0-10	---			
B403	4	3-0	6	19		1-6	1-6	---			H=0-11, K=1-2
B508	5	5-0	64	STR							
B520	5	4-0	~~124~~	STR							
			☑ 131								
B615	6	5-0	36	STR							
B630	6	13-6	69	STR							
B631	6	19-9	☑ ~~34~~ 30	STR							
B632	6	31-0	☑ ~~34~~ 30	STR							
B633	6	17-9	☑ ~~34~~ 30	STR							
B634	6	8-0	40	17		2-6	5-6	---			
B635	6	9-6	40	17		2-6	7-0	---			
B636	6	11-6	9	STR							
B637	6	18-9	28	STR							
B638	6	10-9	114	STR							
B639	6	10-6	15	STR							
B640	6	10-3	16	STR							
B641	6	7-9	48	STR							
B642	6	16-0	24	STR							
B643	6	13-6	48	STR							
B644	6	15-9	63	19		---	1-4	14-5			H=3-6, K=14-0
B645	6	18-6	29	STR							
B646	6	14-6	29	STR							
B647	6	6-6	11	STR							
B648	6	7-6	51	STR							
B649	6	7-0	11	STR							
B650	6	9-9	29 ~~21~~ ☑	STR							
B651	6	22-6	12 ~~16~~ ☑	STR							
B652	6	5-3	6	STR							
B653	6	9-0	44	STR							
B654	6	6-10	7 ~~4~~ ☑	T2	1-0	1-3	1-2	1-3	1-2	1-0	
B655	6	3-3	4	STR							
B656	6	30-0	12	STR							
B657	6	24-6	6	STR							
B658	6	14-0	11	STR							
B659	6	16 ~~15~~-0 ☑	18	17		2-6	13 ~~12~~-6 ☑	---			
B683	6	4-6	11	STR							
B692	6	6-0	13	17		1-0	5-0	---			
B830	8	☑ 15-~~3~~ 6	53	STR							
B831	8	10-6	6	STR							
B832	8	18-3	16	STR							
B833	8	31-0	4	STR							
B834	8	19-9	4	STR							
B835	8	17-9	4	STR							
B930	9	9-3	51	1	1-3	8-0					J=1-~~3~~0 ☑
B931											NOT USED
B932	9	8-3	11	1	1-3	7-0					J=1-~~3~~0 ☑
B933											NOT USED
B934											NOT USED
B935											NOT USED

BASCULE PIER (CONT.)

Mark	Size	Length	No. Reqd	Type	Detail Dimensions A	B	C	D	E	G	Remarks
		ABOVE EL.+7.0 (CONT.)									
B936	9	12-0	6	19		---	7-0	5-0			H=K=3-6.5
B937	9	11-0	26	STR							
B938	9	5-6 TO	6	STR							2 SETS OF 3
		10-6									
B939	9	12-3 TO	14	7	1-3		5-0	6-0 TO			H=K=3-6.5, J=1-~~3~~0
		17-3						11-0			2 SETS OF 7 ☑
B1030	10	34-6	20	STR							
B1031	10	18-6	20	STR							
B1032	10	☑ ~~30-3~~ 28'-6"	34	STR							
B1033	10	22-6	34	STR							
B1034											NOT USED
B1035	10	~~3-8~~ 10'-5"	~~10~~ 11	~~17~~ 21	1'-5"	7-2	1-10	---			J= 1'-1"
B1036		☑	☑	☑							NOT USED ☑
B1037	10	~~11-8~~ 12'-5"	44	~~17~~ 21	1'-5"	9-2	1-10	---			J= 1'-1"
B1038	10	6-4	7	17		4-6	1-10	---			
B1039	10	18-6	10	STR							
B1130	11	21-1	63	S8	1-7	16-0	3-6	---			J=1-~~3~~0 ☑

HARDESTY & HANOVER
CONSULTING ENGINEERS
NEW YORK, N.Y.

REVISIONS
15 Revised Bar Lists 11-5-94 T.E.F.

PREL. TRACING ES & VA DESIGN BGS CHKD. JMD

CONTRACT	COUNTY	FEDERAL AID PROJECT Nº	SHEET Nº	TOTAL SHEETS
82-073-05	SUSSEX	BRF-1009(3)	124	155

BAR LIST
BASCULE PIER

BASCULE PIER

MARK	SIZE	LENGTH	No. REQD	TYPE	DETAIL DIMENSIONS A	B	C	D	E	G	REMARKS
		STAIRS									
B404	4	5-~~54~~	4	T1	0-5	0-8	1-7	0-8	1-7	0-5	
B406	4	1-7	~~134~~ 152	17		0-9	0-10				
B446	4	2-6	23	STR							
B447	4	15-10	9	19		1-6	12-10	1-6			H=0-11, K=1-2
B448	4	3-9	22	STR							
B449	4	4-2	8	STR							
B450	4	1-9	14	STR							
B451											NOT USED
B452	4	6-~~62~~	32	1	0-~~56~~	5-2				0-~~54~~	J=0-~~54~~
B453	4	3-3	14	STR							
B454	4	~~7-910~~-11	16	19		1-6	7-11	1-6			H=0-11, K=1-2
B455	4	7-11	12	17		2-6 TO	0-5	2-6 TO			4 SETS OF 3
		AVG.				5-0		5-0			
B456	4	5-7	16	T1	0-4	0-4	1-3 TO	0-4	1-3 TO	0-4	4 SETS OF 4
		AVG.					3-0		3-0		
B508	5	5-0	13	STR							
B5022	5	4-6	39	STR							
B5023	5	14-3	15	19		1-6	12-9				H=0-11, K=1-2
B5024	5	6-0	10	STR							
B5025	5	4-7	23	17		1-0	3-7				
B5026	5	3-9	~~101~~ 12	STR							
B5027	5	6-9	5	T1	0-5	0-8	1-11 TO	0-8	1-11 TO	0-5	1 SET
		AVG.					2-8		2-8		
B5028	5	6-0	4	16~~5~~		1-6	2-3	1-3	1-0		
B5029	5	6-5	3	17		2-0	2-5	2-0			
B5034	5	6-9	4	T1	0-5	0-8	1-11 TO	0-8	1-11 TO	0-5	1 SET
							2-8		2-8		
B5035	5	8-2	4	17		0-7	7-0	0-7			
B5036	5	8-6	2	19		1-6	7-0				H=1-5.5, K=0-4
B5037	5	7-2	4	17		0-7	6-0	0-7			
B5038	5	6-6	2	19		1-6	5-0				H=1-5.5, K=0-6
B6001	6	12-4	8	12	0-8	5-6	0-8	5-6			H=K=4-5 J=0-6
B6002	6	10-4	3	17		1-6	7-4	1-6			
B6003	6	9-0	2	17		1-6	6-0	1-6			
		MACHINERY PLATFORM									
B509	5	5-6	17	17		2-0	1-6	2-0			
B5022	5	4-6	8	STR							
B5035~~39~~	5	2-~~30~~	24	STR							
B5036~~40~~	5	11-0	6	STR							
B662	6	10-2	8	S8	0-8	6-6	3-0	---		---	J=0-6
B680	6	15-3	72	1	1-0	14-3				---	J=0-6
B681	6	10-0	4	1	1-0	8-0				1-0	J=0-6
B682	6	3-9	4	1	1-0	2-9				---	J=0-6
B683	6	4-6	8	STR							
B684	6	16-3	4	1	1-0	15-3				---	J=0-6
B685	6	19-6	8	STR							
B686	6	38-6	26	STR							
B687	6	15-3	4	STR							
B688	6	8-0	4	STR							
B689	6	2-9	4	STR							
B690	6	37-0	4	STR							
B691	6	7-2	38	S4	1-0	2-3	0-8	2-3		1-0	

BASCULE PIER (CONT.)

MARK	SIZE	LENGTH	No. REQD	TYPE	DETAIL DIMENSIONS A	B	C	D	E	G	REMARKS
		ABOVE EL.+15.0									
B430	4	5-5	51	17		2-0	0-5	3-0			
B431	4	5-4	51	STR							
B432	4	3-10	~~68~~ 67	17		1-3	1-4	1-3			
B433	4	6-0	10	STR							
B434	4	8-0	8	17		5-3	2-9	---			
B435	4	4-0	8	STR							
B501	5	13-6	14	STR							
B502	5	3-6	~~85~~ 86	17		1-0	1-6	1-0			
B503	5	5-3	14	STR							
B504	5	25-0	~~12~~ 15	STR							
B505	5	10-0	68	STR							
B506	5	22-6	10	STR							
B507	5	24-0	12	17		1-6	22-6	---			
B508	5	5-0	20	STR							
B510	5	5-8	52	16	---	2-0	1-8	2-0			H=K=1-6
~~B511~~	~~5~~	~~5-6~~	~~66~~	~~17~~		~~1-6~~	~~2-6~~	~~1-6~~			
B512	5	~~4-4~~ 3'-6"	8	STR							
B513	5	10-9	24	17		1-6	9-3	---			
B514	5	26-6	3	STR							
~~B515~~	~~5~~	~~7-6~~	~~15~~	~~STR~~							
B516	5	8-4	3	T2	0-10	1-8	1-8	1-8	1-8	0-10	
B518	5	12-9	9	17		2-6	10-3	---			
B519	5	9-9	14	STR							
B5030	5	6-1	~~67~~ 69	17		1-6	3-1	1-6			
B5031	5	4-3	44	17		1-6	1-3	1-6			
B5032	5	5-5	44	17		1-6	2-5	1-6			
B5033	5	8-8	11	T2	0-5	1-4.5	2-6.5	1-4.5	2-6.5	0-5	
B660	6	36-0	9	STR							
B661	6	30-2	9	STR							
B663	6	18-0	17	STR							
B664											NOT USED
B665	6	5-1	~~5~~ 6	17		2-3	2-10				
B666	6	7-1	~~5~~ 6	17		4-3	2-10				
B667											NOT USED
B668	6	26-0	8	STR							
B669											NOT USED
B670	6	5-10	~~8~~ 7	STR							
B671	6	26-6	~~8~~ 10	STR							
B672	6	7-10	~~8~~ 7	STR							
B673	6	9-6	4	STR							
B674	6	10-6	~~44~~ 39	STR							
B836	8	36-0	2	STR							
B837	8	30-0	2	STR							
B526	5	3-8	9	19			1-10	1-10			H=1-4 K=1-4
B527	5	6-6	9	23	1-0	0-7	1-1	1-10	2-0		H=1-4 K=1-4

BASCULE PIER (CONT.)

MARK	SIZE	LENGTH	No. REQD	TYPE	DETAIL DIMENSIONS A	B	C	D	E	G	REMARKS
		WINGWALL									
B436	4	8-6	~~283~~ 30	STR							
B517	5	5-8 TO 19-8	52	S9	0-7	1-0 TO 2-6	2-6 TO 13-6	1-0 TO 2-6		0-7	2 SETS OF 26 J=0-5
B675	6	12-~~5~~ 2 TO 12-~~11~~ 8	10	S8	0-8	9-~~5~~ 6 TO 10-~~5~~ 0	2-0	---		---	J=0-6
B940	9	28-8	4	17		2-6	26-2	---			
B941	9	17-6	2	STR							
B942	9	30-10	4	19			2-6	28-4			H=10-10.5 K=26-2
B943	9	27-4	6	2	1-2	26-2				---	
B944	9	23-9 TO 9-3	18	STR							2 SETS OF 9
		PILES									
P301	3	3-9	2223	T3	0-6					0-6	0=0-10.75
P601	6	20-8	819	1	0-8	20-0					J=0-6

HARDESTY & HANOVER
CONSULTING ENGINEERS
NEW YORK, N.Y.

CONTRACT	COUNTY	FEDERAL AID PROJECT Nº	SHEET Nº	TOTAL SHEETS
82-073-05	SUSSEX	BRF-1009(3)	125	155

BAR LIST
BASCULE PIER

BASCULE PIER

MARK	SIZE	LENGTH	No. REQD	TYPE	DETAIL DIMENSIONS A	B	C	D	E	G	REMARKS
		CONTROL HOUSE (ABOVE EL.+15.0)									
B401	4		53	STR							
B404	4	5-6	5	T1	0-5	0-8	1-8	0-8	1-8	0-5	
B405	4	5	5	T1	0-5	0-11	1-0	0-11	1-0	0-5	
B406	4	1-7	17			0-9	0-10				
B407	4	4-1	12	T1	0-5	0-5.5	1-2	0-5.5	1-2	0-5	
B408	4	13-0	STR								
B409	4	8-4	STR								
B410	4	13-0	10	STR							
B411	4	7-	6	17		3-5	0-3	3-5			
B412	4	4-4	STR								
B413	4	5-9	10	17		0-4	5-5				
B414	4		STR								
B415	4	4-9	4	19		2-0	2-9				K=H=1-5
B416	4	4-10	T1		0-5	0-8	1-4	0-8	1-4	0-5	
B417	4	2-5	64	17		1-0	0-5	1-0			
B418	4	5-0	5	T1	0-5	0-4	1-9	0-4	1-9	0-5	
B419	4	9-8	STR								
B420	4	5-4	STR								
B421	4	7-10	STR			FOR 6" THICKWALL AT SWITCH ROOM					
B422	4	9-2	24	STR							
B423	4	9-5	6	STR							
B424	4	4-0	6	17		1-10	0-3	1-10			
B425	4	4-8	20	T2	0-5	0-8	1-3	0-8	1-3	0-5	
B510	5		18	16	0-6	2-	1-8	2-0			K=H=1-5
B520	5	4-0	STR								
B521	5	5-0	STR								
B522	5	4-8	17			2-0	0-8	2-0			
B523	5	7-	STR								
B524	5	10-0	9	STR							
B525	5	15-3	2	STR							
B526	5	3-8	9	19			1-10	1-10			H=K=1-4
B527	5	6-	9	23	1-0	0-7	1-1	1-10	2-0		H=K=1-
B528	5	13-0	STR								
B529	5	10-9	STR								
B530	5	14-4	6	STR							
B531	5		9	17		1-6					
B532	5		9	STR							
B533	5	19-7	3	24	2-0	1-7	14-6	1-6			
B534	5	16-8	3	17		1-6	13-8	1-6			
B535	5	3-4	4	STR							
B536	5	7-3	STR								
B537	5	9-0	STR								
B538	5	21-0	11	STR							
B539	5	22-6	12	17		1-6	21-0				
B540	5	5-6	STR								
B541	5	7-0	6	17		1-6	5-6				
B542	5	12-10	8	STR							
B543	5	14-4	17			1-6	12-10				
B544	5	13-9	16	17		1-6	12-3				
B545	5	10-11	4	17		5-10	1-7	3-6			
B546	5	12-8	8	17		6-0	1-8	5-0			
B547	5	4-8	8	17		1-6	1-8	1-6			
B548	5	7-8	10	17		0-8	6-4	0-8			
B549	5	9-8	8	17		0-8	8-4	0-8			

BASCULE PIER (CONT.)

MARK	SIZE	LENGTH	No. REQD	TYPE	DETAIL DIMENSIONS A	B	C	D	E	G	REMARKS
		CONTROL HOUSE (ABOVE EL.+15.0 CONT.)									
B550	5	16-8	17			1-6	13-8	1-6			
B551	5	4-2	8	17		3-6	0-8				
B552	5	4-1	12	16	0-6	1-2	0-11	1-6			K=H=1-0
B553	5	14-10	74	1	0-7	13-8				0-7	J=0-5
B554	5	6-1	14	1	0-7	4-11				0-7	J=0-5
B555	5		12	1	0-7					0-7	J=0-5
B556	5	12-4	36	1	0-7	11-2				0-7	J=0-5
B557	5	9-4	17			0-10	7-8	0-10			
B558	5	5-	17			0-10		0-10			
B559	5	12-0	8	19		1-6	9-0	1-6		H=1-0	K=1-1
B560	5	8-0	STR								
B561	5	5-7	6	1	0-7	4-5				0-7	J=0-5
B562	5	5-7	6	1	0-7	5-0					J=0-5
B563	5	4-10	4	1	0-7	3-8				0-7	J=0-5
B564	5	9-0	4	19		1-6	7-6				H=1-0, K=1-0
B565	5	10-5	14	STR							
B566	5	13-9	6	17		1-6	12-3				
B567	5	12-3	14	STR							
B568	5	10-5	17			0-8	9-9				
B569	5	5-6	3	17		1-6	4-0				
B570	5	3-6.75	17			1-6	0-6.75	1-6			
B571	5	6-6.75	17				0-6.75				
B572	5	6-6	24	STR							
B573	5	5-8	12	16	0-10	1-7	1-3	1-6	0-6		K=H=1-1
B574	5	4-1.5	19	17		1-6	1-1.5	1-6			
B575	5	5-8	5	17		3-0	0-8	2-0			
B576	5	10-7	STR								
B577	5	9-	STR								
B578	5	3-0	12	17		1-6	1-6				
B579	5	9-10	7	T1	0-6	1-8	2-9	1-8	2-9	0-6	
B580	5	6-1	23	17		1-6	3-1	1-6			
B581	5	5-3	23	17		0-10	3-7	0-10			
B582	5		23	17		1-6	4-	1-6			
B583	5	5-9	23	17		0-10	4-1	0-10			
B584	5	13-6	6	STR							
B585	5	15-2	6	17		0-10	13-6	0-10			
B586	5	6-	23	1	0-7	5-				0-7	J=0-5
B587	5	6-	23	17		0-5	5-	0-5			
B589	5	11-	24	17		0-	10-	0-			
B590	5		5	24	1-4	0-8		1-6			
B591	5	13-8	STR								
B592	5	6-2	4	17		1-6	4-8				
B593	5	7-4	4	17		1-6	5-10				
B594	5	4-8	10	STR							
B595	5	5-10	4	STR							
B596	5	6-8	6	17		0-8	6-0				
B597	5	18-8	26	STR							
B598	5	21-8	17			1-6	18-8	1-6			
B599	5	11-6	3	17		1-6	10-0				
B5001	5	2-3	2	STR							
B5002	5	3-9	2	17		1-6	2-3				
B5003	5	6-0	STR								
B5004	5	4-2	17			0-8	2-10	0-8			
B5005	5	11-	6	17		0-8	11-2				

BASCULE PIER (CONT.)

MARK	SIZE	LENGTH	No. REQD	TYPE	DETAIL DIMENSIONS A	B	C	D	E	G	REMARKS
		CONTROL HOUSE (ABOVE EL.+15.0 CONT.)									
B5006	5	9-4	3	17		0-8	8-0	0-8			
B5007	5	11-4	8	17		1-6	9-2	0-8			
B5008	5	9-10	8	17		0-8	9-2				
B5009	5	8-8.5	4	17		5-8	0-6.5	2-6			
B5010	5	5-4	2	1	0-7	4-2				0-7	
B5011	5	4-10	12	17		0-8	4-2				
B5012	5	8-6	7	19		1-0	7-				K&H=0-9
B5013	5	9-8	4	19		1-6	6-8	1-6			K=1-1, H=0-11
B5014	5	6-6	8	1	0-7	5-11					J=0-5
B5015	5	10-10	22	1	0-7	9-8				0-7	J=0-5
B5016	5	6-10	12	1	0-7	5-8				0-7	J=0-5
B5017	5	19-10	20	1	0-7	18-8				0-7	J=0-5
B5018	5	15-10	16	1	0-7	14-8				0-7	J=0-5
B5019	5	11-2	12	1	0-7	10-0				0-7	J=0-5
B5020	5	21-0	7	17		0-10	18-8	1-6			
B5021	5	3-10	8	24	0-10	0-8	0-10	1-6			
B613	6	9-2	4	STR							
B693	6	10-6	26	STR							
B694	6	16-6	12			1-6	13-6	1-6			
B695	6	15-0	12	17		1-6	13-6				
B934	9	16-0	6	1	1-3	13-6				1-3	J=0- -11.75
B935	9	16-6	4	17		1-6	13-6	1-6			

REVISIONS
0-REVISED REBAR LISTS 11-5-84 TSF

PRELIM. TRACING ES & VA DESIGN BGS CHKD JMD

HARDESTY & HANOVER
CONSULTING ENGINEERS
NEW YORK, N.Y.

REVISIONS

CONTRACT	COUNTY	FEDERAL AID PROJECT Nº	SHEET Nº	TOTAL SHEETS
82-073-05	SUSSEX	BRF-1009(3)	126	155

BAR LIST - APPROACH SPAN DECK DECK OVER COUNTERWEIGHT AND APPROACH SLAB

APPROACH SPAN

Mark	Size	Length	No. Reqd	Type	Detail Dimensions A	B	C	D	H	K	Remarks
~~H~~											
S501	5	51-0	53	STR							
S502											NOT USED
S503	5	52-2	53	1	0-7	51-0					G=0-7, J=0-5
S504											NOT USED
S505	5	6-6 TO	36	STR							
		51-0									
S506	5	7-1 TO	36	1	0-7	6-6 TO					G=0, J=0-5
		51-7				51-0					
S507	5	6-6	4	STR							
S508	5	7-1	4	1	0-7	6-6					G=0, J=0-5
S509	5	4-6	51	1	0-7	3-11					G=0, J=0-5
S510	5	18-6	8	STR							
S511	5	19-1	4	1	0-7	18-6					G=0, J=0-5
S512	5	28-0	6	STR							
S513	5	5-11	48	16	1-5	1-0	2-0	1-6	1-1	1-1	
S514	5	5-1	48	16	1-5	1-1	1-1	1-6	1-1	1-1	
S515											NOT USED
S516	5	27-3 TO	52	STR							
		47-10									
S517	5	27-10 TO	52	1	0-7	27-3 TO					G=0, J=0-5
		48-5				47-10					
S518	5	3-1	76	19		0-11	1-3	0-11	0-10	0-3	0=1-9
S519	5	2-3	76	19		0-6	1-3	0-6	0-6	0-1	0=1-5
S520	5	7-8	140	STR							
S521	5	24-3	1	STR							
S522	5	24-10	2	1	0-7	24-3					G=0, J=0-5
S523	5	24-3 TO	14	STR							
		27-1									
S524	5	24-10 TO	14	1	0-7	24-3 TO					G=0, J=0-5
		27-8				27-1					
S525	5	4-8	16	16	1-0	0-8	2-0	1-0	0-8.5	0-8.5	
S526	5	50-5	1	STR							
S527	5	51-0	2	1	0-7	50-5					G=0, J=0-5
S528	5	49-10 TO	3	STR							
		50-3									
S529	5	50-5 TO	3	1	0-7	49-10 TO					G=0, J=0-5
		50-10				50-3					
S530	5	48-11 TO	5	STR							
		49-8									
S531	5	49-6 TO	5	1	0-7	48-11 TO					G=0,J=0-5
		50-3				49-8					
S532	5	1-11	8	STR							
S533	5	2-5	8	STR							
S534	5	2-0	10	STR							
S535	5	5-0	16	STR							
S536	5	7-8 TO	6	STR							2 SETS OF 3
		8-3									
S537	5	7-0	8	STR							
S538	5	6-4	4	STR							
S539	5	8-3	20	STR							
S540	5	47-10 TO	6	STR							
		48-9									
S541	5	48-5 TO	6	1	0-7	47-10 TO					G=0,J=0-5
		49-4				48-9					

DECK OVER COUNTERWEIGHT

Mark	Size	Length	No. Reqd	Type	Detail Dimensions A	B	C	D	H	K	Remarks
D501	5	54-0	39	STR							
D502											NOT USED
D503	5	45-2	48	STR							
D504											NOT USED
D505	5	42-2	104	STR							
D506											NOT USED
D507	5	18-7	10	STR							
D508	5	55-2	39	1	0-7	54-0					G=0-7, J=0-5
D509											NOT USED
D510	5	46-4	48	1	0-7	45-2					G=0-7, J=0-5
D511											NOT USED
D512	5	4-2	60	16	1-5	0-9	1-0	1-0	0-8.5	0-8.5	
D513	5	3-5	43	16	1-0	0-5	1-0	0-9	0-6	0-6	
D514	5	9-2	237	1	0-7	8-7					G=0-0, J=0-5
D515	5	8-6	4	STR							
D516	5	9-9	89	1	0-7	8-7					G=0-7, J=0-5
D517	5	23-9	6	STR							
D518	5	21-0	12	STR							
D519	5	3-3	40	17		1-0	1-1	1-0			
D520	5	2-10	40	19		0-10	1-2	0-10	0-9	0-2	0=1-6
D521	5	41-8	34	STR							
D522											NOT USED
D523	5	3-8	48	16	---	1-1	1-2	1-5	1-1	1-1	
D524	5	3-6	18	19		1-0	1-6	1-0	0-9	0-9	0=3-0
D525	5	5-9	18	T7	0-6	1-0	1-6	1-3		0-9	F=1-6
D526	5	20-9	6	STR							
D527	5	17-8	6	STR							
D528											NOT USED
D529	5	4-2	12	STR							
D530	5	7-8	6	STR							
D531	5	2-9	12	17		1-0	0-5	1-0			
D532	5	5-0	16	STR							
D533	5	6-4	4	STR							
D534	5	4-7	6	STR							
D535	5	5-0	24	STR							

APPROACH SLAB

Mark	Size	Length	No. Reqd	Type	Detail Dimensions A	B	C	D	E	G	Remarks
		WEST									
A401	4	49-8	17	STR							
A402	4	49-8 TO	7	STR							
		24-10									
A403	4	24-8 TO	19	STR							
		2-0									
A404	4	53-7	2	STR							
A501	5	49-8	25	STR							
A502	5	49-8 TO	11	STR							
		24-10									
A503	5	24-8 TO	11	STR							
		2-0									
A504	5	53-7	1	STR							
A505	5	44-9 TO	51	STR							
		24-7									
A506	5	4-6	55	16	1-5	1-5	0-8	1-0			H=0-10.5, K=0-6
A901	9	46-0 TO	100	1	1-3	44-9 TO				---	J=0-11.75
		25-10				24-7					

APPROACH SLAB (CONT.)

Mark	Size	Length	No. Reqd	Type	Detail Dimensions A	B	C	DE	E	G	Remarks
		EAST									
A401	4	49-8	6	STR							
A402	4	50-8 TO	6	STR							
		55-2									
A403	4	50-0	41	STR							
A404	4	6-6 TO	5	STR							
		11-11									
A405	4	27-3 TO	20	STR							
		36-11									
A406	4	17-6 TO	5	STR							
		38-1									
A407	4	9-6 TO	6	STR							
		17-6									
A408	4	9-2	6	STR							
A409	4	49-8	2	STR							
A410	4	4-10	8	STR							
A501	5	49-8	9	STR							
A502	5	50-8 TO	9	STR							
		55-2									
A503	5	50-0	60	STR							
A504	5	7-0 TO	8	STR							
		12-5									
A505	5	27-9 TO	30	STR							
		37-5									
A506	5	17-8 TO	7	STR							
		38-7									
A507	5	9-8 TO	8	STR							
		17-8									
A508	5	9-8	8	STR							
A509	5	60-0	50	STR							
A510	5	17-5	50	STR							
A511	5	30-7	22	STR							
A512	5	5-0	50	16	1-5	1-11	0-8	1-0			H=0-10.5, K=0-6
A513	5	19-4 TO	7	STR							
		29-6									
A514	5	20-0	8								
A515	5	9-4 TO	8	STR							
		39-4									
A516	5	49-8	1	STR							
A517	5	40-0	7	STR							
A518	5	4-10	8	STR							
A901	9	60-0	100	1	1-3	58-9				---	J=0-11.75
A902	9	20-11	100	STR							
A903	9	50-0	14	STR							
A904	9	21-9 TO	14	STR							
		11-7									
A905	9	30-7	21	STR							
A906	9	20-0	16	STR							
A907	9	9-4 TO	16	STR							
		41-7									

PREL. TRACING ES & VA DESIGN FG & NC CHKD LMB

40399

HARDESTY & HANOVER
CONSULTING ENGINEERS
NEW YORK, N.Y.

REVISIONS

1) Revisions In Elev. & Plan Note 11-14-66

CONTRACT	COUNTY	FEDERAL AID PROJECT Nº	SHEET Nº	TOTAL SHEETS
82-073-05	SUSSEX	BRF-1009(3)	127	155

TEMPORARY BRIDGE
GENERAL PLAN AND ELEVATION

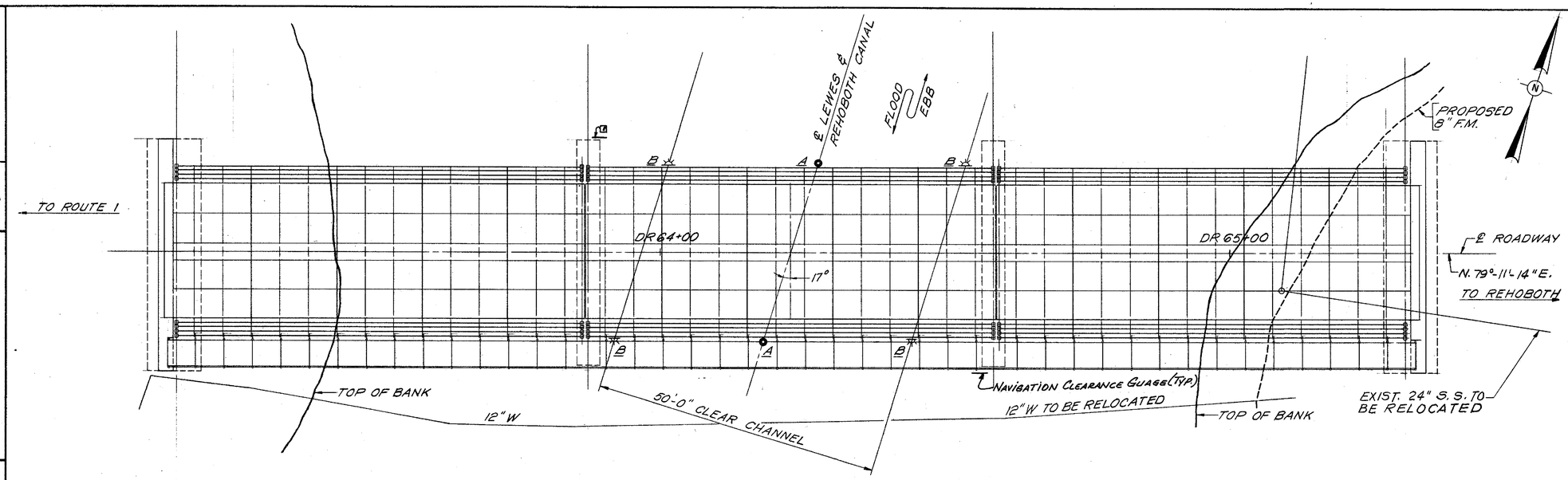

PLAN

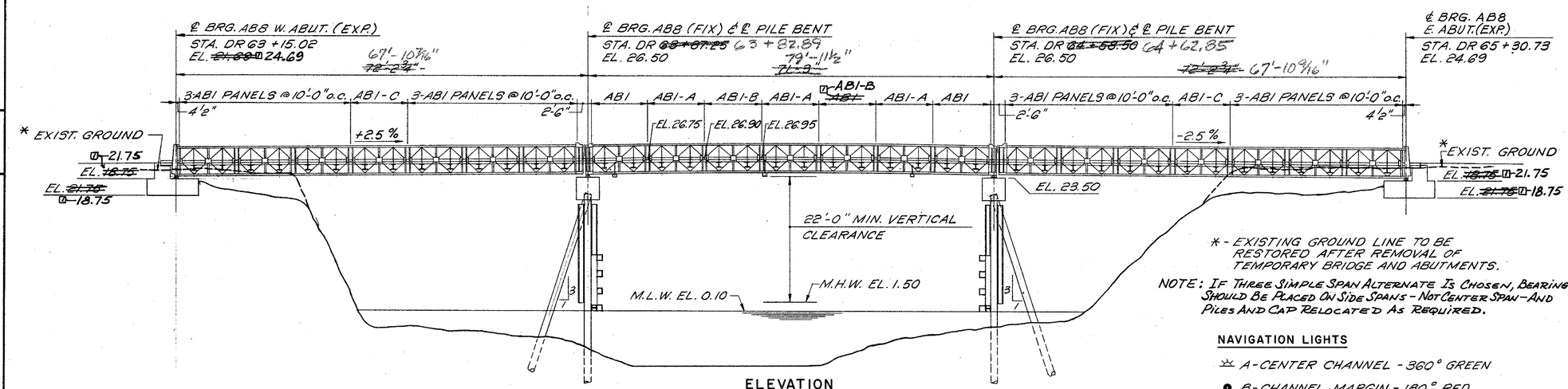

* - EXISTING GROUND LINE TO BE RESTORED AFTER REMOVAL OF TEMPORARY BRIDGE AND ABUTMENTS.

NOTE: IF THREE SIMPLE SPAN ALTERNATE IS CHOSEN, BEARINGS SHOULD BE PLACED ON SIDE SPANS - NOT CENTER SPAN - AND PILES AND CAP RELOCATED AS REQUIRED.

NAVIGATION LIGHTS

✡ A - CENTER CHANNEL - 360° GREEN

● B - CHANNEL MARGIN - 180° RED

ELEVATION

THREE SIMPLE SPAN - QUADRUPLE SINGLE CONSTRUCTION
SCALE: 1" = 1'-0"

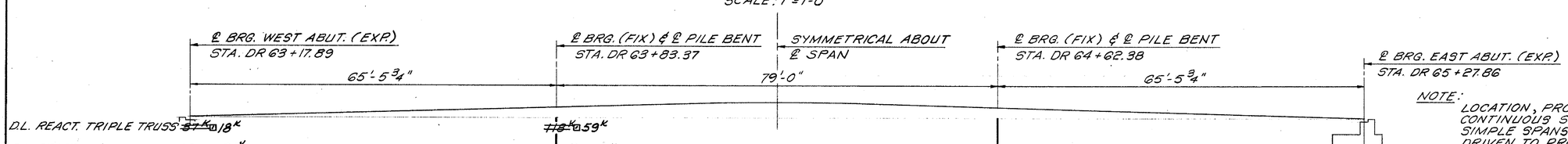

ELEVATION

ALTERNATE - THREE CONTINUOUS SPANS - TRIPLE SINGLE CONSTRUCTION
SCALE: 1" = 1'-0"

NOTES:

1. FOR GENERAL NOTES SEE SHEET NO. 56
2. DESIGNATION OF STRUCTURAL UNITS ARE IN ACCORDANCE WITH ACROW PANEL BRIDGING TECHNICAL HANDBOOK EXCEPT AS NOTED.
3. TRUSS PANEL DESIGNATION AB1-A IS A CAMBER TRUSS PANEL WITH TOP CHORD PIN HOLES 9MM OUTSIDE CENTERLINE STANDARD PIN HOLES ON EACH END OF TRUSS PANEL OR 18MM GREATER C:C PIN HOLES THAN ON STANDARD TRUSS PANEL. TRUSS PANEL DESIGNATION AB1-B IS A CAMBER TRUSS PANEL WITH TOP CHORD PIN HOLE 9MM OUTSIDE CENTERLINE STANDARD PIN HOLE ON ONE END OF PANEL ONLY. FOR ERECTION THE LONGER SIDE IS TO BE TOWARD THE MID-SPAN. TRUSS PANEL AB1-C IS A CAMBER TRUSS PANEL WITH TOP CHORD PIN HOLE 5.5MM OUTSIDE CENTERLINE STANDARD PIN HOLE.
4. ELEVATIONS NOTED ON THE PLANS ARE AFTER DEAD LOAD DEFLECTIONS AND ARE SYMMETRICAL ABOUT MID-SPAN AT THE CENTER SPAN.
5. FABRICATION, TRANSPORTATION, AND CONSTRUCTION OF BRIDGE COMPONENT SHALL MEET THE SPECIFICATIONS OF THE ACROW CORP. OR APPROVED EQUAL.
6. THE CONTRACTOR SHALL PROVIDE ALL TOOLS AND EQUIPMENT NECESSARY FOR ERECTION AND DISMANTLING OF ACROW PANEL SUPERSTRUCTURE WHICH SHALL BE REMOVED IN ITS ENTIRETY AFTER COMPLETION OF THE REHOBOTH AVENUE BRIDGE AND UPON APPROVAL OF THE DELAWARE DEPARTMENT OF TRANSPORTATION. THE BRIDGE SHALL BE SALVAGED AS PER THE SPECIAL PROVISIONS.
7. THE ABUTMENTS AND PIER BENTS SHALL BE REMOVED AND DISPOSED OF BY THE CONTRACTOR, EXCEPT THE PILES MAY BE CUT-OFF AT 16 FT. BELOW M.L.W.
8. ALL BOLTED CONNECTIONS SHALL HAVE LOCKING WASHERS.
9. ALL ROADWAY GRATING TO BE A588 - 5" OPEN STEEL GRID FLOOR GRUELICH TYPE DL GALVANIZE OR APPROVED EQUAL AND SHALL BE BOLTED TO FLOORBEAMS IN CONFORMANCE WITH MANUFACTURER'S REQUIREMENTS.

NAVIGATION LIGHTS FOR TEMPORARY BRIDGE

THE CONTRACTOR SHALL BE RESPONSIBLE FOR THE FOLLOWING:

1. PROCUREMENT, INSTALLATION AND WIRING OF NAVIGATION LIGHTS AND PHOTO ELECTRIC CONTROL UNIT. THE EQUIPMENT AND WORK SHALL CONFORM TO THE REQUIREMENTS OF ELECTRICAL WORK IN THE SPECIAL PROVISIONS.
2. MAINTENANCE AND SERVICE OF NAVIGATION LIGHTS AND APPURTENANCES DURING BRIDGE LIFE.
3. OBTAINING ELECTRICAL SERVICE FROM THE POWER COMPANY.
4. AT END OF BRIDGE LIFE, REMOVE AND DELIVER NAVIGATIONAL LIGHTS AND ELECTRICAL SERVICE EQUIPMENT TO SOUTH DISTRICT'S GRAVEL HILL MAINTENANCE YARD. THE COST OF THE ABOVE SHALL BE INCLUDED IN PAYMENT OF "TEMPORARY BRIDGE (ACROW OR APPROVED EQUAL)".

NOTE:
LOCATION, PROFILE AND SUBSTRUCTURE FOR THREE CONTINUOUS SPANS ARE TO BE THE SAME AS FOR THE THREE SIMPLE SPANS SHOWN EXCEPT THAT THE PILES ARE TO BE DRIVEN TO PRODUCE AN ALLOWABLE BEARING VALUE (MIN.) EQUAL TO 45^T AND TO A PENETRATION (MIN.) TO ELEVATION -80 FT. FINISH.

DESIGN M. POBLETE B.S. CHKD. J.D.
PREL. TRACING

CONTRACT	COUNTY	FEDERAL AID PROJECT Nº	SHEET Nº	TOTAL SHEETS
82-073-05	SUSSEX	BRF-1009(3)	128	155

TEMPORARY BRIDGE PLAN AND ELEVATION

HARDESTY & HANOVER
CONSULTING ENGINEERS
NEW YORK, N.Y.

REVISIONS

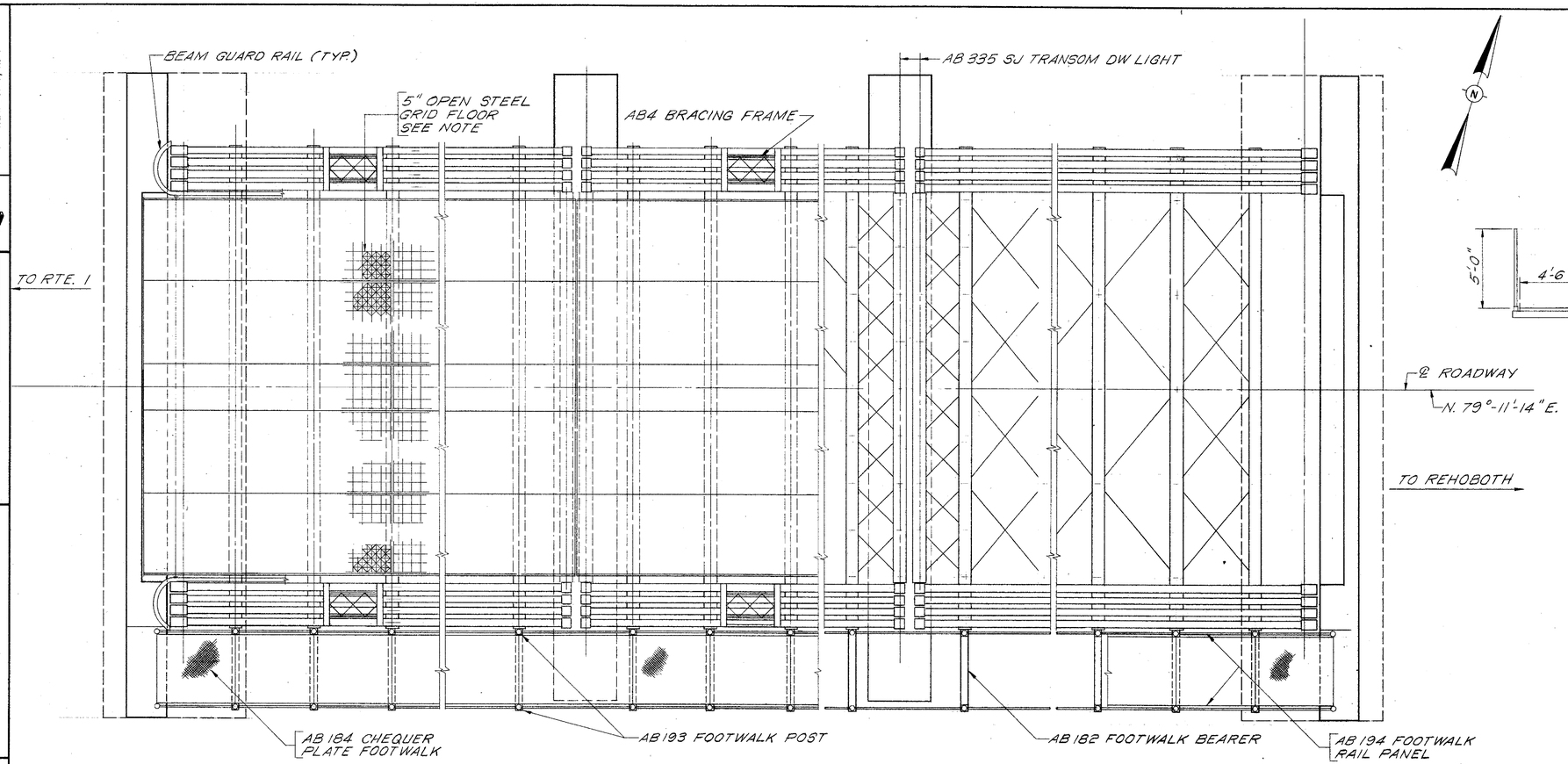

PLAN
SCALE: 1/4" = 1'-0"

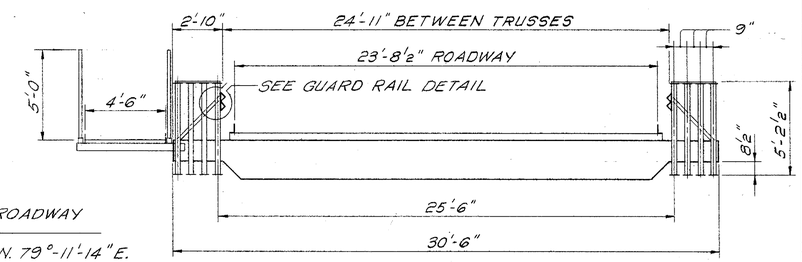

TYPICAL SECTION
(LOOKING WEST)
SCALE: 1/4" = 1'-0"

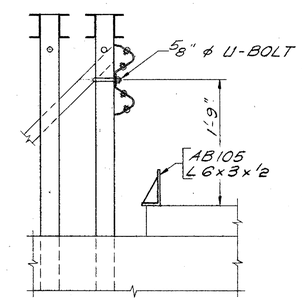

GUARD RAIL DETAIL
SCALE: 1" = 1'-0"

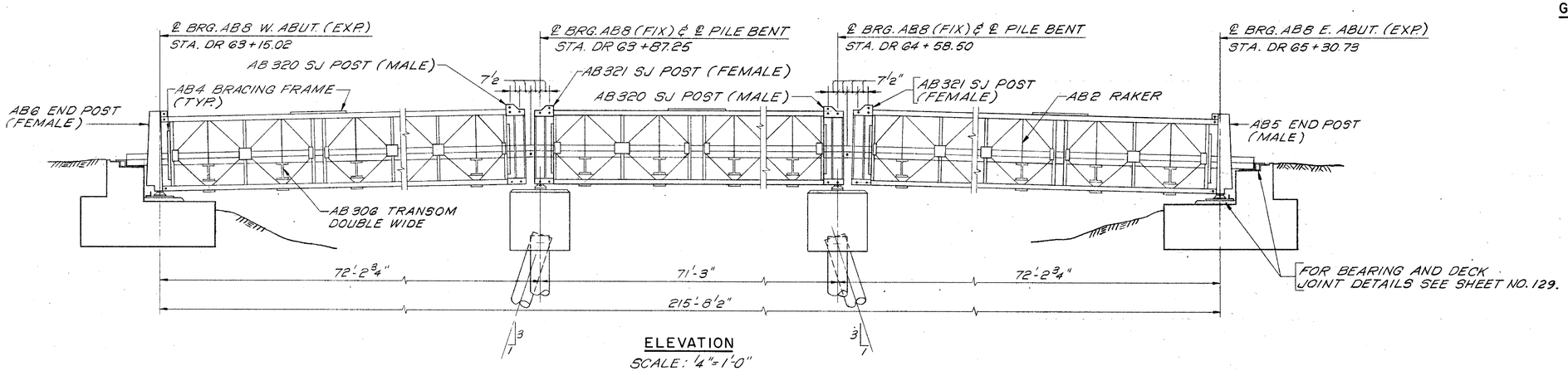

ELEVATION
SCALE: 1/4" = 1'-0"

PREL. TRACING M. POBLETE DESIGN BGS CHKD. JD

CONTRACT	COUNTY	FEDERAL AID PROJECT Nº	SHEET Nº	TOTAL SHEETS
82-073-05	SUSSEX	BRF-1009(3)	129	155

TEMPORARY BRIDGE ABUTMENTS

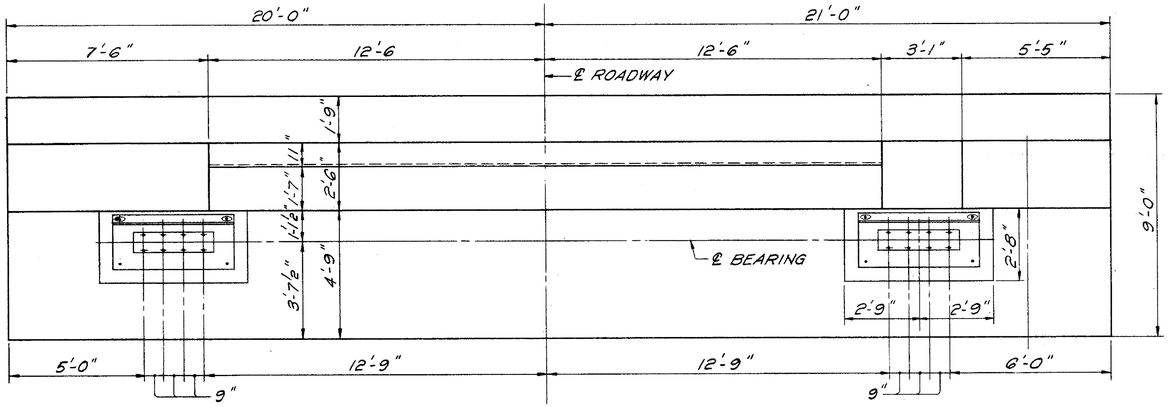

PLAN

SCALE: ⅜"=1'-0"

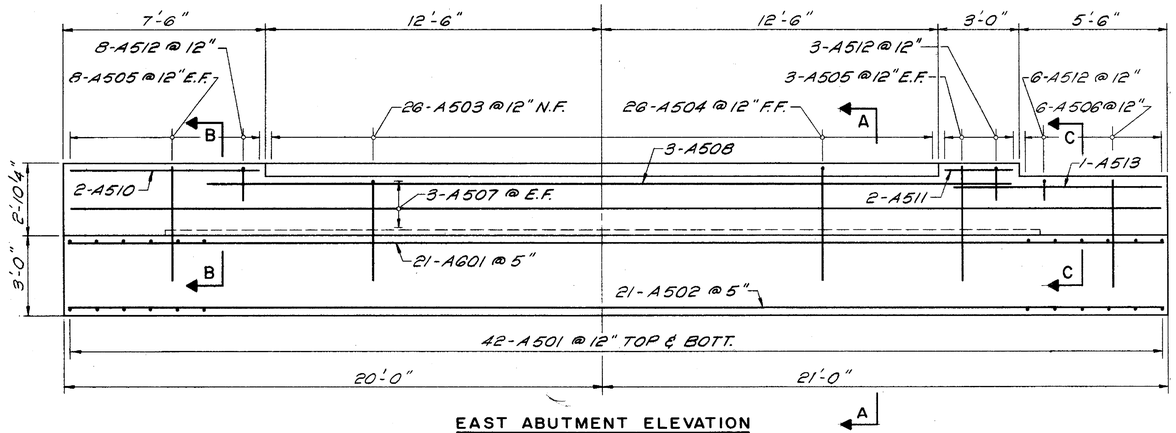

EAST ABUTMENT ELEVATION

SCALE: ⅜"=1'-0"

NOTE:
EAST ABUTMENT SHOWN,
WEST ABUTMENT SIMILAR
EXCEPT OPPOSITE HAND

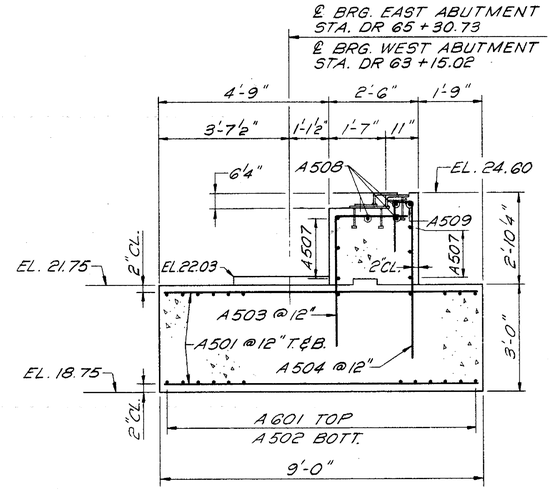

SECTION A-A

SCALE: ½"=1'-0"

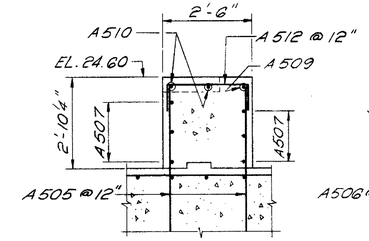

SECTION B-B

SCALE: ½"=1'-0"

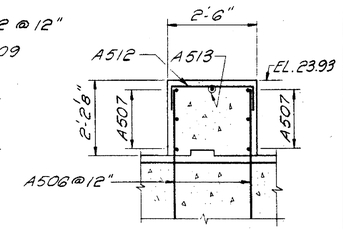

SECTION C-C

SCALE: ½"=1'-0"

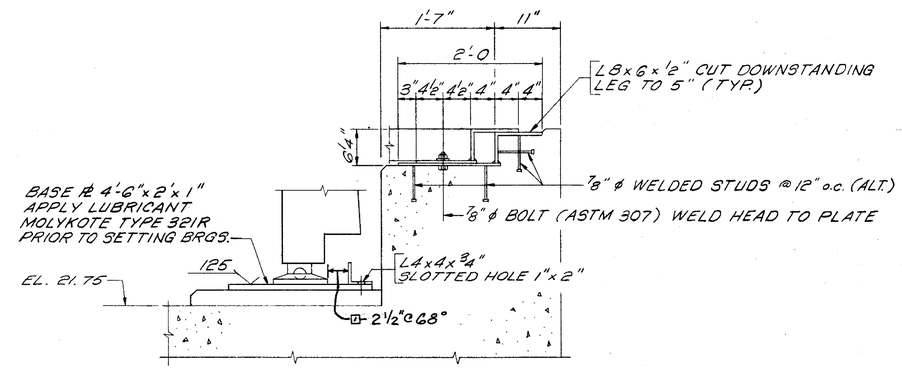

BEARING AND DECK JOINT DETAILS

SCALE: 1"=1'-0"

NOTE:
ALL PLATES ½" THICK WITH
5/16" FILLET WELDS EXCEPT
AS NOTED.

NOTE:
CHAMFER ALL CORNERS ¾" (TYP.)
FOR BAR BENDING DETAILS SEE SHEET NO. 121

ABUTMENT

Mark	Size	Length	No. Reqd	Type	Detail Dimensions A	B	C	D			Remarks
A501	5	8-6	84	STR							
A502	5	40-6	21	STR							
A503	5	6-6	26	17		2-3	4-3	---			
A504	5	6-9	26	17		1-6	0-7	4-8			
A505	5	4-9	22	STR							
A506	5	4-0	12	STR							
A507	5	40-6	6	STR							
A508	5	30-8	3	STR							
A509	5	35-2	1	STR							
A510	5	7-2	2	STR							
A511	5	2-8	2	STR							
A512	5	4-7	17	17		1-2	2-3	1-2			
A513	5	8-2	1	STR							
A601	5	40-6	21	STR							

QUANTITY IS FOR EAST ABUTMENT ONLY.
WEST ABUTMENT REINFORCEMENT IS IDENTICAL.

PILE BENT

Mark	Size	Length	No. Reqd	Type	Detail Dimensions A	B	C	D	E	G	Remarks
		CAP									
P501	5	13-6	62	T1	0-6	2-9	3-6	2-9	3-6	0-6	
P502	5	11-6	28	T1	0-6	2-9	2-6	2-9	2-6	0-6	
P503	5	3-10	20	17		2-10	1-0	---			
P504	5	7-4	6	17		2-0	3-4	2-0			
P505	5	6-4	6	17		2-0	3-4	1-0			
P801	8	41-10	6	1	1-2	39-6				1-2	J= 0 - 10
P802	8	39-6	6	STR							
P803	8	2-4	9	STR							
P1001	10	42-10	8	1	1-8	39-6				1-8	J = 1 - 3.25
		PILE									
C301	3	4-2	30	T3	0-6					0-6	O = 1 - 0
C801	8	7-6	80	1	1-6	6-6				---	J = 0 - 6

QUANTITY IS FOR ONE PILE BENT ONLY
(TWO PILE BENTS REQUIRED)

HARDESTY & HANOVER
CONSULTING ENGINEERS
NEW YORK, N.Y.

REVISIONS
13 Added Dimension to Beam Edge at Det. 2-22-94

PREL. TRACING M.P. DESIGN L.M.B. CHKD. L.M.B.

CONTRACT	COUNTY	FEDERAL AID PROJECT Nº	SHEET Nº	TOTAL SHEETS
82-073-05	SUSSEX	BRF-1009(3)	130	155

TEMPORARY BRIDGE PILE BENTS

HARDESTY & HANOVER CONSULTING ENGINEERS NEW YORK, N.Y.

REVISIONS

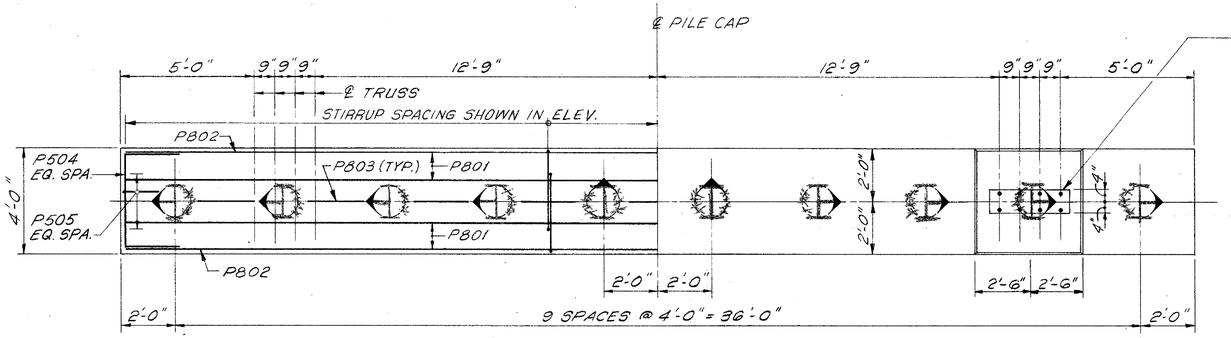

SECTION A-A
SCALE: 3/8" = 1'-0"

PILE LEGEND:

○ - C.I.P. PILE BATTERED 1 ON 6 IN DIRECTION INDICATED.

⬭ - C.I.P. PILE BATTERED 1 ON 3 IN DIRECTION INDICATED.

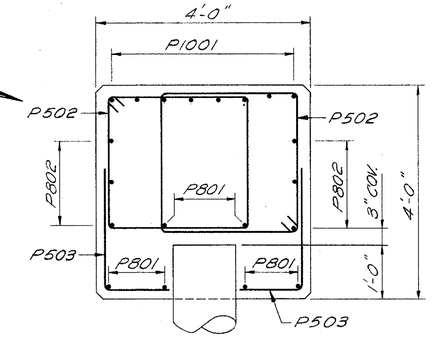

SECTION B-B
SCALE: 3/4" = 1'-0"

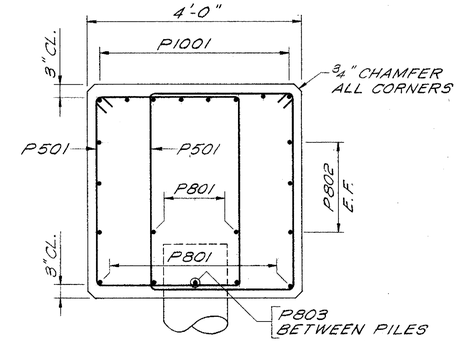

SECTION C-C
SCALE: 3/4" = 1'-0"

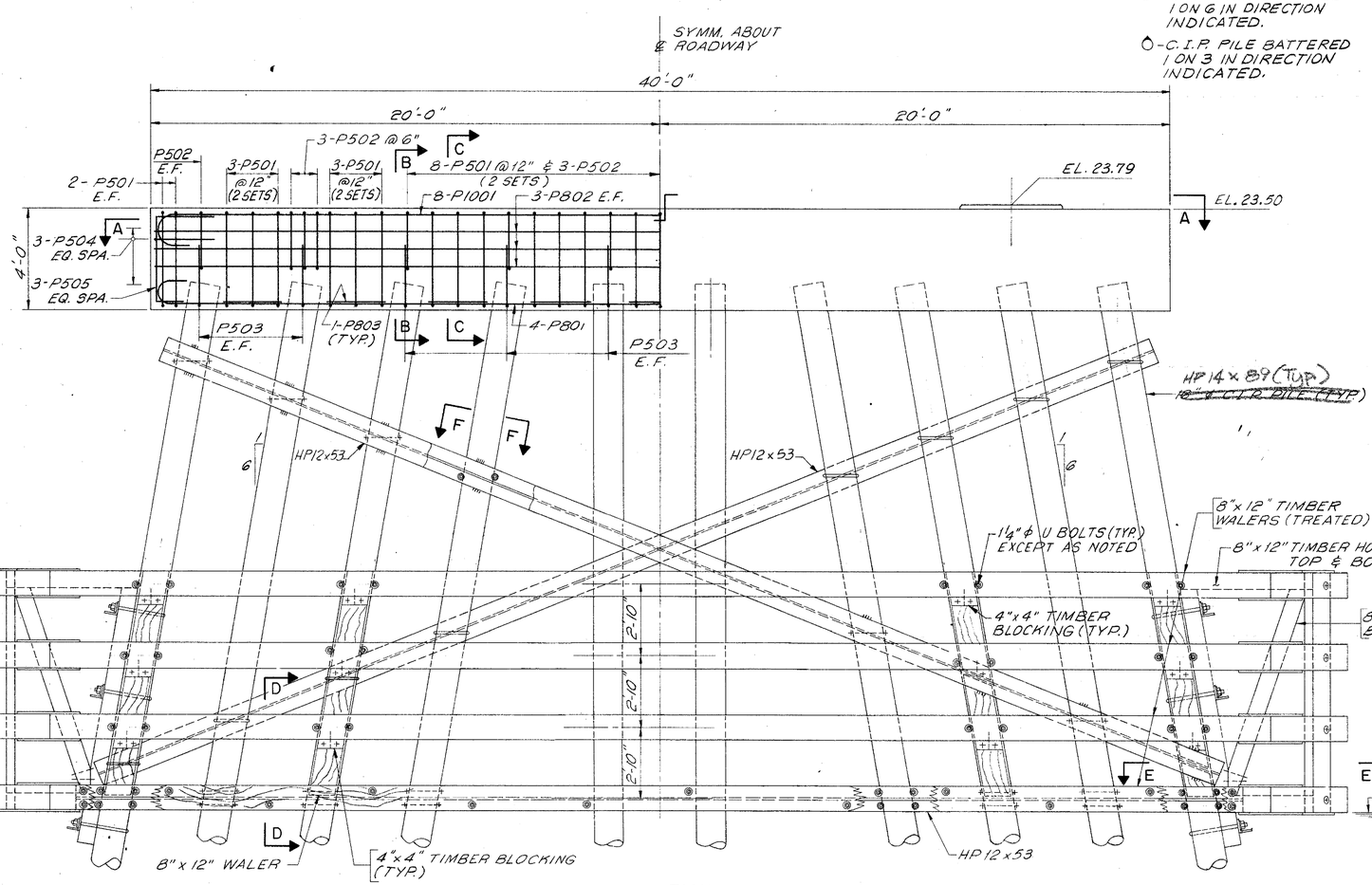

ELEVATION
SCALE: 3/8" = 1'-0"

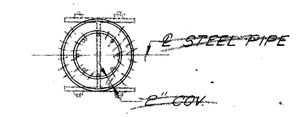

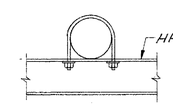

SECTION F-F
SCALE: 1/2" = 1'-0"

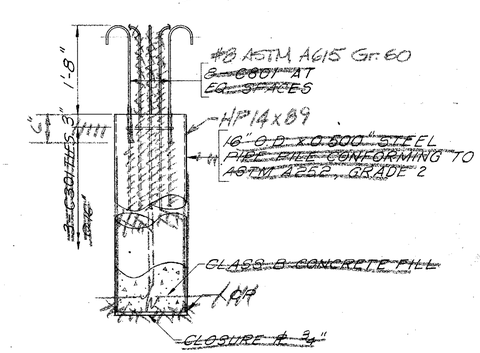

~~16" ϕ CAST-IN-PLACE CONCRETE PILE~~ HP 14 x 89
SCALE: 3/4" = 1'-0"

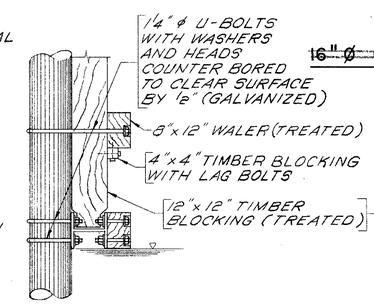

SECTION D-D
SCALE: 1/2" = 1'-0"

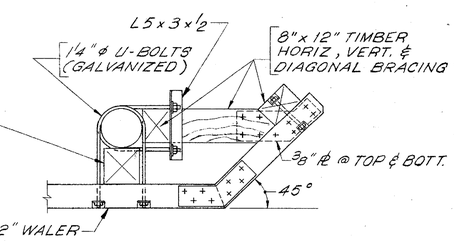

SECTION E-E
SCALE: 1/2" = 1'-0"

NOTE:
FOR BAR LIST SEE SHEET NO. 129

NOTES:
1. FOR GENERAL NOTES SEE SHEET NO. 56.
2. FOR FENDER SYSTEM NOTES SEE SHEET NO. 57.

PREL. TRACING M. POBLETE DESIGN BGS CHKD. JD

4/2/99

CONTRACT	COUNTY	FEDERAL AID PROJECT Nº	SHEET Nº	TOTAL SHEETS
82-073-05	SUSSEX	BRF-1009(3)	13.1	155

DEMOLITION OF EXISTING BRIDGE

HARDESTY & HANOVER
CONSULTING ENGINEERS
NEW YORK, N.Y.

REVISIONS

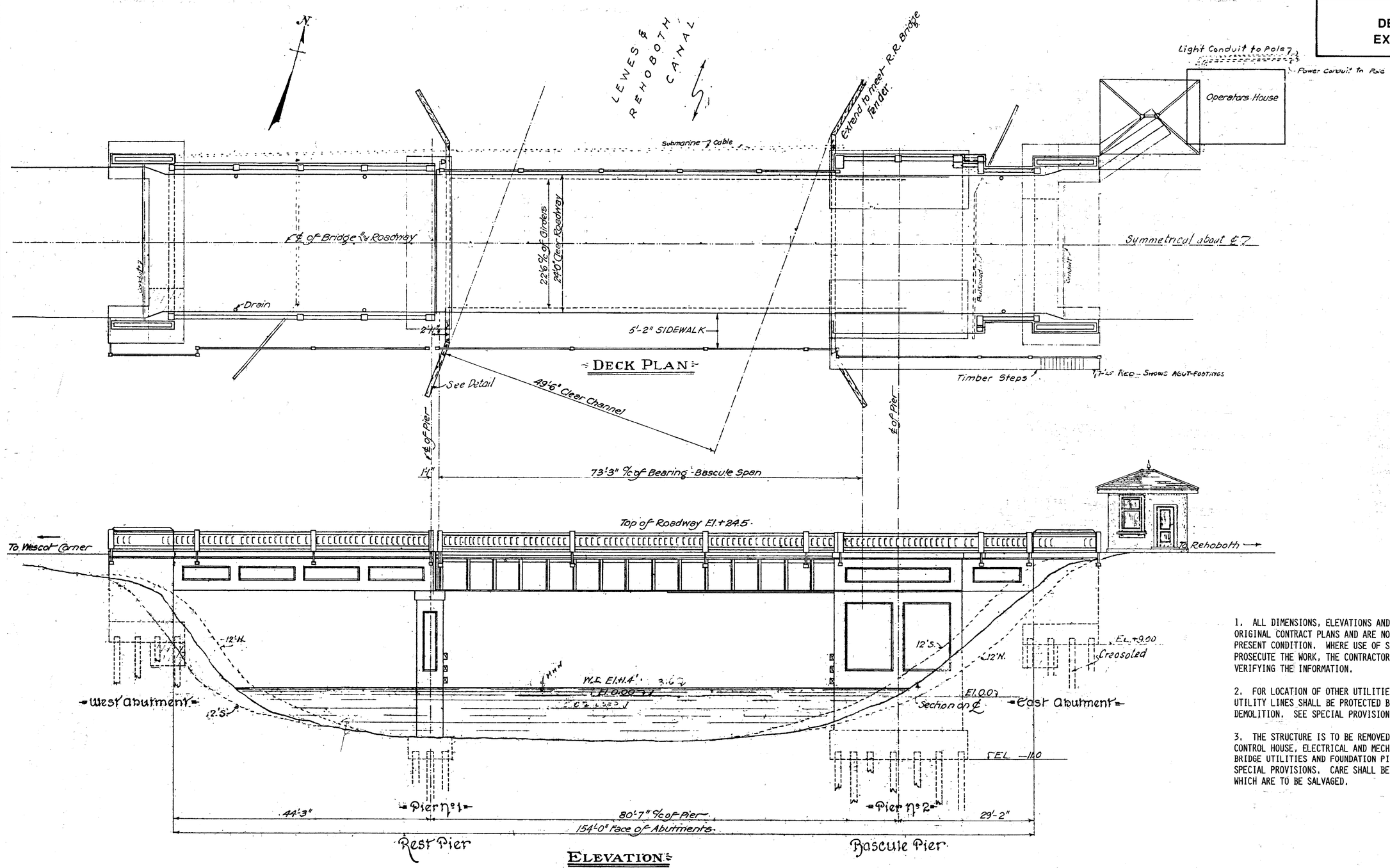

1. ALL DIMENSIONS, ELEVATIONS AND UTILITIES ARE AS GIVEN ON THE ORIGINAL CONTRACT PLANS AND ARE NOT GUARANTEED TO REPRESENT THE PRESENT CONDITION. WHERE USE OF SUCH INFORMATION IS NECESSARY TO PROSECUTE THE WORK, THE CONTRACTOR SHALL BE RESPONSIBLE FOR VERIFYING THE INFORMATION.

2. FOR LOCATION OF OTHER UTILITIES SEE SHEET NO. 54. ALL UTILITY LINES SHALL BE PROTECTED BY THE CONTRACTOR DURING DEMOLITION. SEE SPECIAL PROVISIONS.

3. THE STRUCTURE IS TO BE REMOVED IN ITS ENTIRETY INCLUDING, CONTROL HOUSE, ELECTRICAL AND MECHANICAL SYSTEMS, FENDER SYSTEM, BRIDGE UTILITIES AND FOUNDATION PILES EXCEPT AS SPECIFIED IN THE SPECIAL PROVISIONS. CARE SHALL BE TAKEN TO PROTECT THOSE ITEMS WHICH ARE TO BE SALVAGED.

PREL. TRACING S.O.D. DESIGN S.O.D. CHKD. L.M.B.

DELAWARE DIVISION OF HIGHWAYS

BUREAU OF TRAFFIC

BEAR DELAWARE

PERMIT NO.	CONTRACT NO.	FED. AID NO.	SHEET NO.	TOTAL
	82-073-05	BRF-1009 (3)	133	155

SIGNAL PLAN
REHOBOTH AVE. AND STATE ST.

PREL. TRACING	DATE	DESIGN	DATE
		DGF	7-20-84

REVISION

△ – Addendum #2, 9-26-84

1 – Delete signalization of intersection 1/29/85 JMSJr.

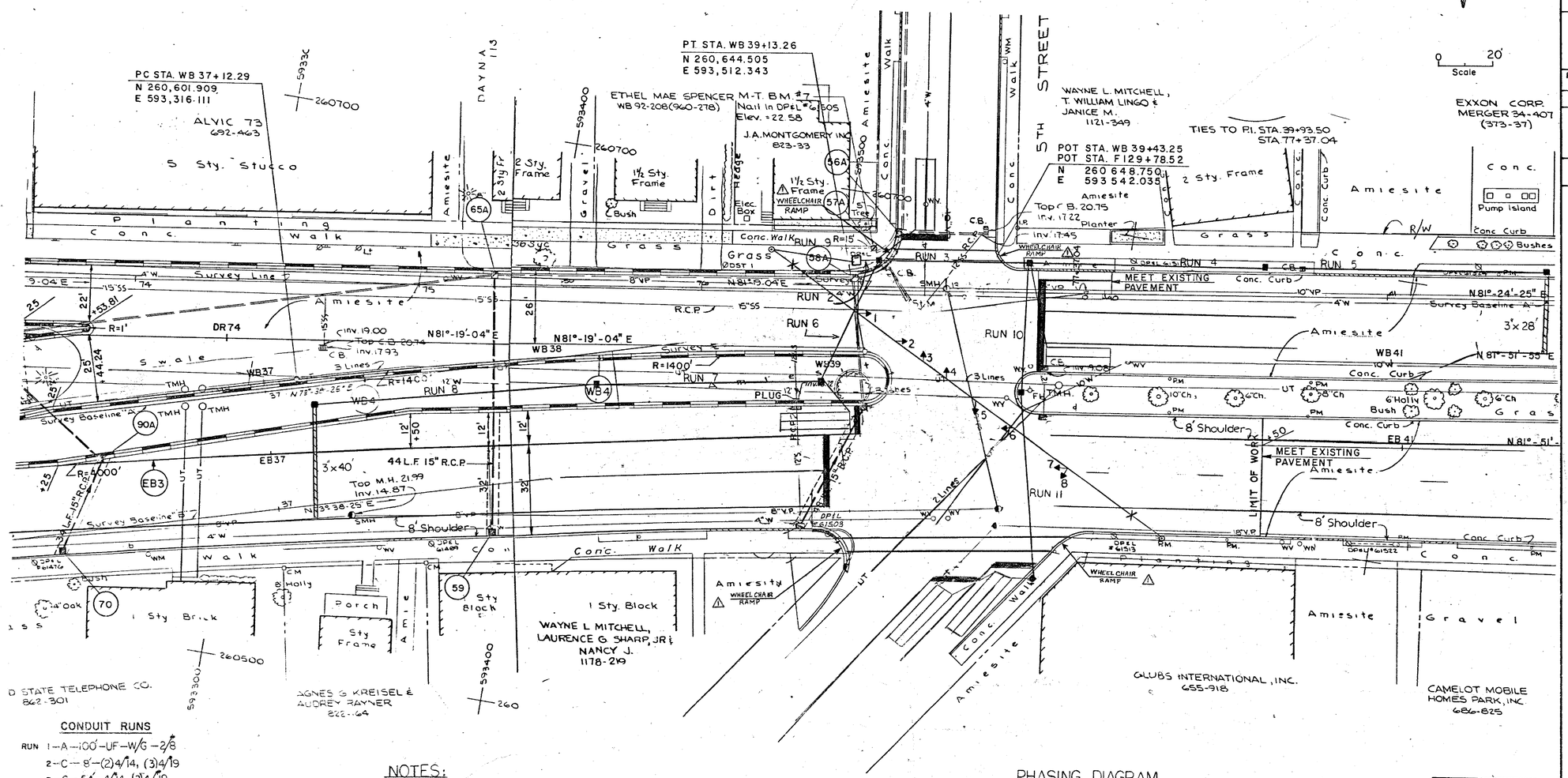

CONDUIT RUNS

RUN
1 – A – 100' – UF – W/G – 2/#8
2 – C – 8' – (2)4/14, (3)4/19
3 – C – 54' – 4/14, (2)4/19
4 – A – 83' – 4/14
5 – A – 100' – 4/14,
6 – C – 48' – 4/14, 4/19
7 – A – 80' – 4/14
8 – A – 100' – 4/14
9 – C – 30' – 16/#14, 9/#16
10 – C – 46' – 4/19
11 – C – 66' – 4/19

NOTES:

1 – ALL POLE BASES TYPE #2, WITH 28' POLES
2 – ALL JUNCTION WELLS TYPE #1
3 – ALL LOOP DETECTORS TYPE #3, 6'x25'

1

DELETE SIGNALIZATION OF THIS INTERSECTION

PHASING DIAGRAM

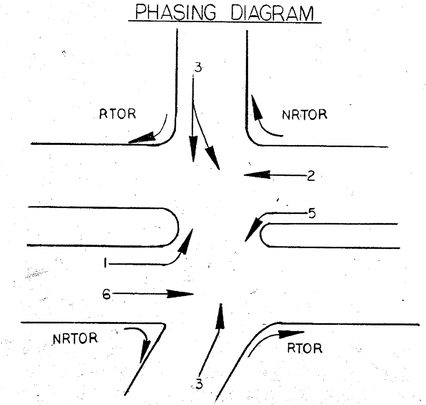

LEGEND

- POLE BASE TYPE (#1-6)
- EXISTING STEEL POLE BASE
- EXISTING ALUMINUM POLE BASE
- PEDESTAL BASE
- EXISTING PEDESTAL BASE
- WOOD POLE
- EXISTING WOOD POLES
- EXISTING D.P.&L. AND D.S.T. POLES
- CABINET BASE
- EXISTING CABINET BASE
- RIGHT-OF-WAY OR PROPERTY LINE
- GALVANIZED CONDUIT
- EXISTING GALV. CONDUIT
- NON-METALLIC CONDUIT
- EXISTING NON-METALLIC CONDUIT
- LP # — LOOP DETECTOR TYPE (#1-7)
- EXISTING LOOP DETECTOR
- JUNCTION WELL TYPE (#1-4)
- EXISTING JUNCTION WELL
- —x— SPAN WIRE
- —xx— EXISTING SPAN WIRE
- —c— OVERHEAD CABLE
- —cc— EXISTING OVERHEAD CABLE
- SIGNAL HEAD
- EXISTING SIGNAL HEAD
- PEDESTRIAN SIGNAL HEAD
- EXISTING PED. SIGNAL HEAD
- MAST ARM
- (R) REMOVE
- (A) ABANDON
- (RB) REMOVE EXISTING CONCRETE BASE 6" BELOW GROUND LEVEL AND COVER.
- LUMINAIRE (WATTAGE)
- EXISTING LUMINAIRE (WATTAGE)
- A — 1 1/2" GALVANIZED CONDUIT
- B — 2" GALVANIZED CONDUIT
- C — 2 1/2" GALVANIZED CONDUIT
- D — 3" NON-METALLIC CONDUIT
- E — 4" NON-METALLIC CONDUIT

SIGNAL HEAD DIAGRAM

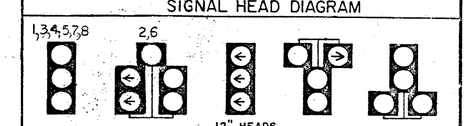

RECOMMENDED 8/29 1984 [signature]

RECOMMENDED 8/29 1984 [signature]

RECOMMENDED _____ 19__ _____

APPROVED F. H. W. A. _____ DATE _____

APPROVED for INSTL. CHIEF TRAFFIC ENGINEER _____ DATE _____