31

Addendum △1 P.D.S. - 5/26/81

CONTRACT	COUNTY	STATE	B.P.R. REG. NO.	FEDERAL AID PROJECT NUMBER	FISCAL YEAR	SHEET NUMBER	TOTAL SHEETS
80-023-02	SUSSEX	DEL.	2	RS-1047(2)		1	87

ROUTE 18 - SAVANNAH ROAD BRIDGE

SURVEY BOOKS 4871 Thru 4881

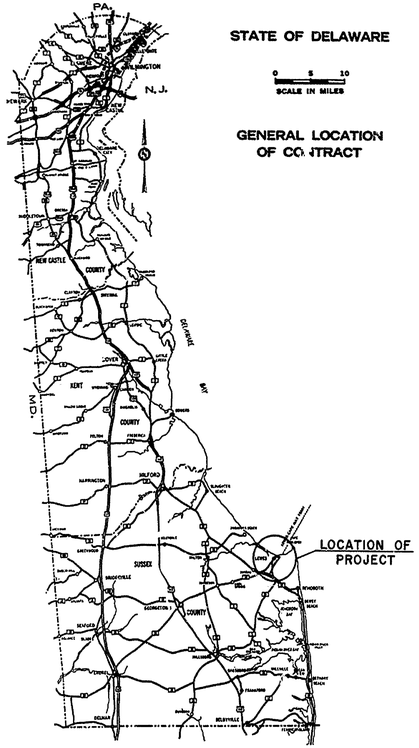

STATE OF DELAWARE

0 5 10
SCALE IN MILES

GENERAL LOCATION OF CONTRACT

DESIGN DESIGNATION

FEDERAL CLASS	
A.D.T.	AADT (6512) SUMMER (11,670)
D.H.V.	652 Summer 1170
DESIGN SPEED	30 M.P.H.
MIN. STOPPING SIGHT DISTANCE	200 FT.
MAX. S.E.	N.A. FT./FT.
MAX. DEGREE CURVE	
MAX. % GRADE	6.0 %

THE STATE OF DELAWARE

DEPARTMENT OF TRANSPORTATION

DIVISION OF HIGHWAYS

CONSTRUCTION PLAN FOR:

CONTRACT NUMBER 80-023-02

FEDERAL AID PROJECT NUMBER RS-1047(2)

BEGIN PROJECT: STATION NO. SR 18, 8+90 **END:** STATION NO. SR 18, 17+20

LENGTH: SR 18, 830' FEET = SR 18, 0.157 MILES

PLANS

INDEX OF SHEETS

1	TITLE SHEET
2 & 3	QUANTITY SHEETS
4 & 5	TYPICAL SECTION SHEETS
6 & 7	CONSTRUCTION DETAIL SHEETS
8	CONSTRUCTION SEQUENCE & MAINTENANCE OF TRAFFIC
9 - 11	PLANS & PROFILE SHEETS
12 & 13	GRADING SHEETS
14 - 65	BRIDGE SHEETS ~~& 23 Rte. 1 BRIDGE REF. SHEETS~~ △1
66-67	RELOCATION CITY ELECTRICAL FACILITIES; TRAFFIC
68-87	STANDARD SHEETS (C-1,C-2,C-5,D-1/D-2,D-3,D-7,D-14.2,D-15,D-16, E-1,G-2-8,G-3-5,G-4-6,G-5,G-7-1,M-4,M-5,S-3,T-1-1,T-2

UTILITIES

DIAMOND STATE TELEPHONE CO.
DELMARVA POWER & LIGHT CO., INC.
CITY OF LEWES (WATER, SEWER & POWER)
GENERAL CATV.

△1 23 Rte. 1 Reference sheets available at Department.

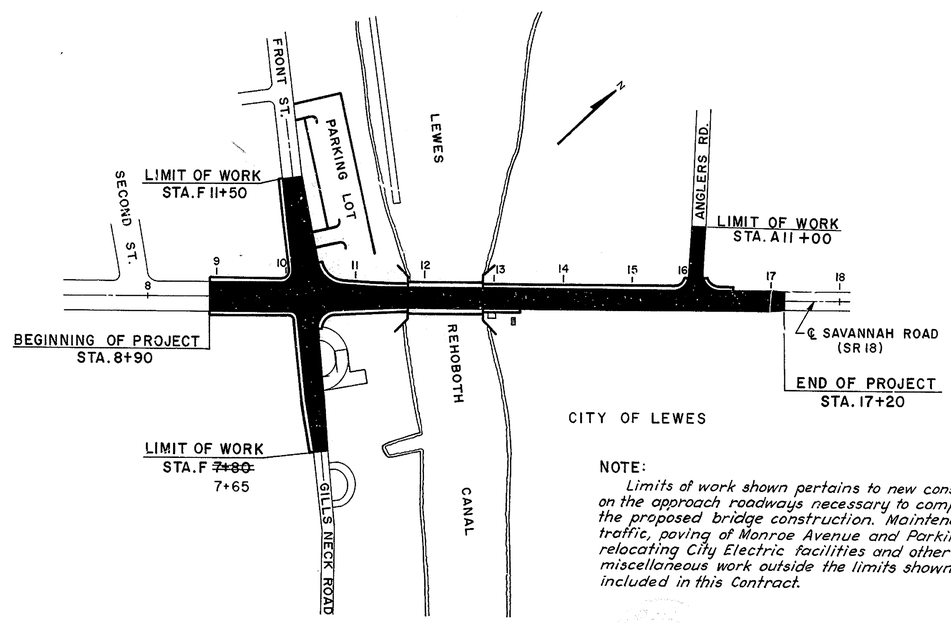

NOTE:
Limits of work shown pertains to new construction on the approach roadways necessary to complete the proposed bridge construction. Maintenance of traffic, paving of Monroe Avenue and Parking Lot, relocating City Electric facilities and other miscellaneous work outside the limits shown are included in this Contract.

ROUTE 18 - SAVANNAH ROAD

SCALE: 1" = 100'

AS BUILT
OCT. 1983

CONVENTIONAL SIGNS

PROPOSED CENTER LINE	WOODED AREA
NEW RIGHT OF WAY LINE	TELEPHONE OR UTILITY POLE
PROPERTY LINE	EXISTING CULVERT OR PIPE
CONCRETE ROAD	RAILROAD
MACADAM OR ASPHALT ROAD	GUARD RAIL

SCALES

TITLE SHEET	1" = 100'	FEET
CONSTRUCTION PLAN	1" = 20'	FEET
VERTICAL PROFILE	1" = 10'	FEET

DELAWARE STATE HIGHWAY DEPARTMENT

RECOMMENDED

RECOMMENDED 12/8 1980 Perry E. Draper
REVIEW ENGINEER

RECOMMENDED 12/8 1980 Jack J. Schmh
CHIEF OF DESIGN

RECOMMENDED

RECOMMENDED 12/8 1980 Gary B. Rumenood
DEPUTY DIRECTOR OF HIGHWAYS

APPROVED

APPROVED 12/9 1980 R D Bennett
DIRECTOR OF HIGHWAYS

DEPARTMENT OF TRANSPORTATION
FEDERAL HIGHWAY ADMINISTRATION

APPROVED _____ 19 ___

_____
DIVISION ENGINEER

Addendum △1 P.D.S.-5/26/81

CONTRACT	COUNTY	STATE	B.P.R. REG. NO.	FEDERAL AID PROJECT NUMBER	FISCAL YEAR	SHEET NUMBER	TOTAL SHEETS
80-023-02	SUSSEX	DEL.	2			2	87

HIGHWAY QUANTITIES

SECT. NO.	ITEM	UNIT	SAVANNAH ROAD	GILLS NECK ROAD	FRONT STREET	PARKING LOT	ANGLERS ROAD	MONROE AVENUE	PROPOSAL TOTAL
S.P.	Maintenance of Traffic	L.S.							Lump Sum
201	Clearing and Grubbing	L.S.							Lump Sum
202	* Excavation & Embankment	C.Y.	320	45	80	190	30		~~665~~ 666
203	* Channel Excavation	C.Y.	2153						~~2153~~ 0
208	Excavation and Backfill for Pipe Trenches	C.Y.	526	90	20	80			525.5 ~~716~~
209	Borrow Type F (+30% Adj. Factor)	C.Y.	5934	750	150		10		~~6844~~ 6,925.7
209	Borrow Type B (+30% Adj. Factor)	C.Y.	720						2,504.5 ~~720~~
209	Borrow Type C (+30% Adj. Factor)	C.Y.	3,020						2,262.6 ~~3,020~~
209	Borrow Type G (+30% Adj. Factor)	C.Y.	120	10	5	5	15		165.4 ~~155~~
S.P.	Furnishing Borrow Type C for Pipe and Utility Trench Backfill (+30% Adj. Factor)	C.Y.	300	70	10	50			439.7 ~~430~~
302	Select Borrow Base (+35% Adj. Factor)	C.Y.	620	200	180	300	60	100	~~1460~~ 2,722.0
S.P.	Borrow Type G (Select Borrow - Temporary Roadway Material)	C.Y.							75 ~~100~~
210	Removal of Structures and Obstructions	L.S.							Lump Sum
309	Bituminous Concrete Base Course	Ton	645	180	195		90		~~1,110~~ 1,125.34
401	Hot-Mix, Hot-Laid Bituminous Concrete Pavement, Type C	Ton	185	60	55	150	25	130	698.6 ~~605~~
401	Hot-Mix, Hot-Laid Bituminous Concrete Pavement, Type B	Ton	190	55	55		25	185	423.82 ~~510~~
402	Hot-Mix, Bituminous Concrete AND/OR ASPHALT COLD PATCH (TRM)	Ton							42.44 ~~10~~
615	15" Reinforced Concrete Pipe, Class III	L.F.	262	228	28	92			~~610~~ 556
615	18" Reinforced Concrete Pipe, Class III	L.F.	50						~~50~~ 29.7
615	24" Reinforced Concrete Pipe, Class III	L.F.	110						~~110~~ 147.2
620	15" Reinforced Concrete Pipe, Flared End Sections	Ea.				1			1
620	24" Reinforced Concrete Pipe, Flared End Sections	Ea.	1						1
705	Portland Cement Concrete Curb, Type 1	L.F.	300			545			~~845~~ 775.91
707	Integral Portland Cement Concrete Curb and Gutter, Type 3	L.F.	940	360	210				1,692.63 ~~1,510~~
708	Portland Cement Concrete Sidewalk, 4" Thick	S.F.	4,140	535	250	345			~~5,270~~ 7,343.63
708	Portland Cement Concrete Sidewalk, 6" Thick	S.F.		575					~~575~~ 1,308.63
724	Crown Vetch Seeding, and Mulching	S.Y.	1,560						~~1,560~~ 3,812.40
711	Catch Basin, Type A	Ea.				3			3
711	Catch Basin, Type B	Ea.	3	2					~~5~~ 11
711	Catch Basin, Type J	Ea.	9	4	2				~~15~~ 11
712	Manhole, Standard	Ea.	6	1					~~7~~ 4
713	Adjusting and Repairing Existing Catch Basins and Manholes	Ea.	10	2		2	2		2.4 ~~16~~
715	Galvanized Steel Beam Guard Rail (Steel Post)	L.F.	610			192			798 ~~802~~
716	Twisted End Anchorage	Ea.	2						2
722	Topsoil (4 In. Depth)	S.Y.	700						~~700~~ 637.94
723	Topsoiling (4 In. Depth)	S.Y.	100	320	120	330	20		~~890~~ 0
724	Permanent Seeding Suburban Development	S.Y.	800	320	120	330	20		~~1,590~~ 1,135.40
726	Mulching	S.Y.	800	320	120	330	20		~~1,590~~ 1,135.40
735	Calcium Chloride for Dust Control	Ton	1	0.3	0.3	0.2	0.7		~~2.5~~ 0
733	Riprap, Plain, 4 Ft. Thick	S.Y.	535						~~535~~ 337.92
738	Flagman	Hrs.	500						~~500~~ 451.5
725	Erosion Control, Excavation and Embankment	C.Y.							0 ~~100~~
725	Erosion Control, Excelsior Blanket, Net, or Jute Mesh	S.Y.	1,500						0 ~~1,500~~
725	Erosion Control, Seeding I	Ac.	0.5						~~0.5~~ 0
204	Muck Excavation	C.Y.	620						1,117 620

* Estimated Fixed Quantity Item. SEE SUBSECTION 109.06 OF THE STANDARD SPECIFICATIONS

HIGHWAY QUANTITIES

SECT. NO.	ITEM	UNIT	SAVANNAH ROAD	GILLS NECK ROAD	FRONT STREET	PARKING LOT	ANGLERS ROAD	MONROE AVENUE	PROPOSAL TOTAL
725	Erosion Control, Sodding	S.Y.							~~100~~ 0
739	Field Office	L.S.							Lump Sum
S.P.	Relocating Fire Hydrants	Ea.	1	1					~~2~~ 0
S.P.	Adjust Water Valve Boxes	Ea.	5	8	1		2		16 ~~22~~
734	Longitudinal Ditching	L.F.	300						~~300~~ 0
734	Lateral Ditching	L.F.	50						~~50~~ 0
736	Removal of Existing Portland Cement Concrete Pavement, Curb, Sidewalk, etc.	S.Y.	2,950	635	600				3,185 ~~4,185~~
△1 618	** 15" Corrugated Aluminum Pipe, Gage 12	L.F.				36			44.4 ~~36~~
△1 618	** 18" Corrugated Aluminum Pipe, Gage 12	L.F.	206						205 ~~206~~
△1 620	** 15" Corrugated Aluminum Pipe, Flared End Sections	Ea.				2			2
~~620~~	~~18" Corrugated Aluminum Pipe, Flared End Sections~~	~~Ea.~~							
S.P.	Traffic Stripes	L.F.				830			645.1 ~~830~~
S.P.	Baled Hay or Straw	Bale	90						58 ~~90~~
S.P.	Temporary Barricades, Type III	Ea./Day	4800						~~4,800~~ 6,770
S.P.	Barricade Warning Lights, Type B	Ea./Day	16,200						~~16,200~~ 14,2[illegible]
S.P.	Warning Signs	S.F./Day	192,000						~~192,000~~ 167,566.5
S.P.	Relocating City Electrical Facilities	L.S. (5)							Lump Sum
S.P.	Initial Expense	L.S.							Lump Sum
S.P.	TRAINEE (2)	HR.							2080 [illegible]
S.P.	1½" GALV. CONDUIT UNDER NEW PAVEMENT OR IN SODDED TRENCH	L.F.	80						51 ~~80~~
S.P.	2½" GALV. CONDUIT UNDER EXISTING PAVEMENT	L.F.	150						5 ~~150~~
S.P.	2½" GALV. CONDUIT UNDER NEW PAVEMENT OR IN SODDED TRENCH	L.F.	25						[illegible] ~~25~~
S.P.	CONDUIT JUNCTION WELL, TYPE 1	EA.	4						5 ~~4~~
S.P.	POLE BASE, TYPE 3	EA.	2						1 ~~2~~
S.P.	POLE BASE, TYPE 4	EA.	1						1
S.P.	SMALL CABINET BASE	EA.	1						1
S.P.	Asphalt Cement	Tons	19	7	7	9	4	17	~~63~~ 0
S.P.	Barricade Warning Lights, Type A	Ea/Day	7,900						~~7,900~~ 7,99[illegible]
S.P.	Barricade Warning Lights, Type C	Ea/Day	5,400						~~5,400~~ 0

(5) See "Speciality Items" of the Special Provisions.

△1 ** Aluminized corrugated steel pipe (16 gage) may be submitted as an alternate for corrugated aluminum pipe. If the alternate is selected, a 7" wide neoprene band is required with the Flared End Sections (Aluminized not available) price to be incidental to the Flared End Sections.

HARDESTY & HANOVER CONSULTING ENGINEERS NEW YORK, N. Y.

CONTRACT	COUNTY	STATE	U.P.R. REG. NO.	FEDERAL AID PROJECT NUMBER	FISCAL YEAR	SHEET NUMBER	TOTAL SHEETS
80-023-02	SUSSEX	DEL.	2			3	87

△1 Addendum #1 P.D.S. 5-21-81

BRIDGE QUANTITIES

SECT. NO.	ITEM	UNIT		PROPOSAL TOTAL
S.P.	Removal of Existing Bascule Bridge at Lewes	L.S.		Lump Sum
S.P.	Relocating Existing Bascule Leaves - Rehoboth Beach to Lewes	L.S.	(S)	Lump Sum
207	Excavation and Backfill for Structures-Piers	C.Y.		~~2,672~~ 2941.57
207	Excavation and Backfill for Structures Ret. Walls	C.Y.		~~360~~ 287.70
601	*Timber Structures, Treated	MFBM		9.832 ~~8.1~~
602	*Portland Cement Concrete Masonry - Tremie Seals	C.Y.		1,080
602	*Portland Cement Concrete Masonry - Pier Footings	C.Y.		440
602	*Portland Cement Concrete Masonry - Pier Above Footings	C.Y.		1,355
602	*Portland Cement Concrete Masonry - Retaining Walls	C.Y.		152.69 ~~178~~
602	Portland Cement Concrete Masonry - Counterweight Blocks	C.Y.		5.0
602	*Portland Cement Concrete Masonry - Approach Slab	C.Y.		160
602	*Portland Cement Concrete Masonry - Superstructure	C.Y.		105
602	Balancing Bascule Leaves	L.S.		Lump Sum
602	Protective Coating for Concrete Masonry-Bridge	S.Y.		~~955~~ 940.51
△1 602	Superficial Waterproofing	S.Y.		~~630~~ 702.6
605	*Bar Reinforcement	Lb.		~~257,300~~ 265,428.97
605A	*Bar Reinforcement, Epoxy Coated	Lb.		12,500
606	*Steel Structures, Computed Net Weight	Lb.	(SS) (S)	150,740
606	Roadway Grating	S.F.	(SS) (S)	~~2270~~ 2,274.25
606	Sidewalk Grating	S.F.	(SS) (S)	~~740~~ 731.71
606	Cleaning and Painting Bascule Bridge	L.S.		Lump Sum
607	Metal Bridge Railing - Piers	L.F.		228
607	Metal Bridge Railing - Bascule Span	L.F.		150
621	Timber Piles, Treated	L.F.		~~4,300~~ 3,963.5
621	Timber Piles, Untreated	L.F.		~~16,800~~ 11,769.56
622	Timber Test Piles, Untreated	L.F.		~~320~~ 499.8
621	Pile Load Test, Timber Pile	Ea.		2
624	Cast-in-Place Concrete Piles, 12-inch Diameter (7 Gage Min.)	L.F.		514.75 ~~900~~
624	Steel Shell Test Piles, 12-inch Diameter (7 Ga. MIN)	L.F.		55
S.P.	Pedestrian Railing on Retaining Wall	L.F.		~~147~~ 237.1
720	Chain Link Fence on Retaining Wall	L.F.		~~70~~ 0
602	Preformed Elastic Joint Sealer	L.F.		91
S.P.	Control House	L.S.	(S)	Lump Sum
S.P.	Operating and Locking Machinery	L.S.	(S)	Lump Sum
△1 ~~S.P.~~	~~Machinery Replacement Parts~~	~~Lbs.~~		~~1,200~~
S.P.	Standby Engine Generator	L.S.	(S)	Lump Sum
S.P.	Electrical Work	L.S.	(S)	Lump Sum
S.P.	Bridge Operation	L.S.		Lump Sum
S.P.	Tread Plates	L.S.	(S)	Lump Sum
606	Replacing Deteriorated Rivets	Ea.		~~800~~ 336
626	Steel Sheet Piles	L.S.	(SS)	Lump Sum
626	Steel Sheet Piles (PZ 27)	S.F.	(SS)	~~2000~~ 1,991.95

* ESTIMATED FIXED QUANTITY ITEM. SEE SUBSECTION 109.06 OF THE STANDARD SPECIFICATIONS

(SS) See "Structural Steel" of the Special Provisions

(S) See "Speciality Items" of the Special Provisions

BRIDGE QUANTITIES

SECT. NO.	ITEM	UNIT		PROPOSAL TOTAL

HARDESTY & HANOVER
CONSULTING ENGINEERS
NEW YORK, N. Y.

AS BUILT SHOWN IN RED H+H 10/83

CONTRACT	COUNTY	STATE	B.P.R. REG. NO.	FEDERAL AID PROJECT NUMBER	FISCAL YEAR	SHEET NUMBER	TOTAL SHEETS
80 023-02	SUSSEX	DEL.	2			4	87

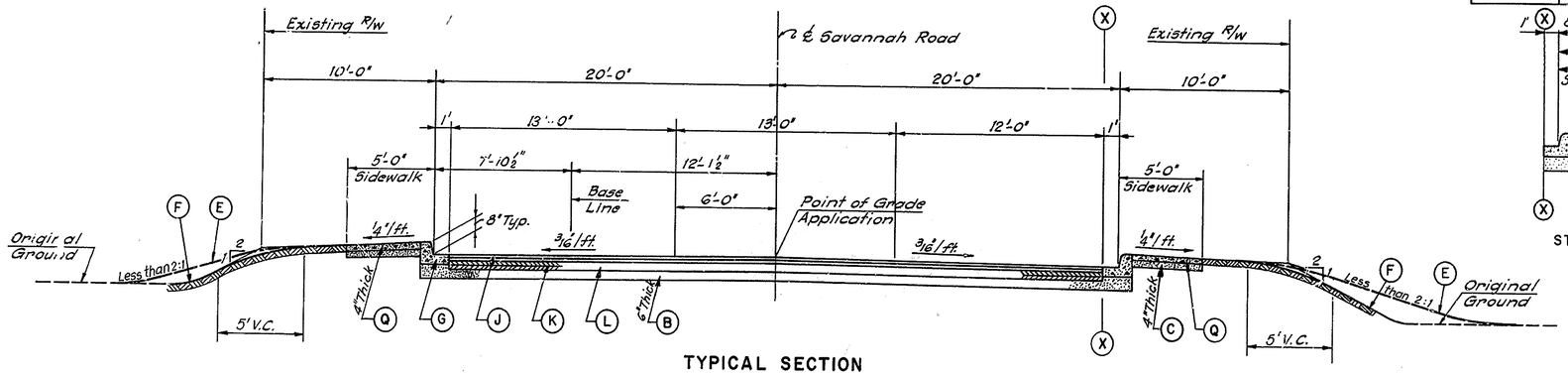

TYPICAL SECTION

STA. 8+90 TO STA. 10+05 (±)

STA. 10+05(±) TO STA. 10+40 (±)

(Pavement depth as shown above, Pavement section width and cross slope varies due to intersection.)

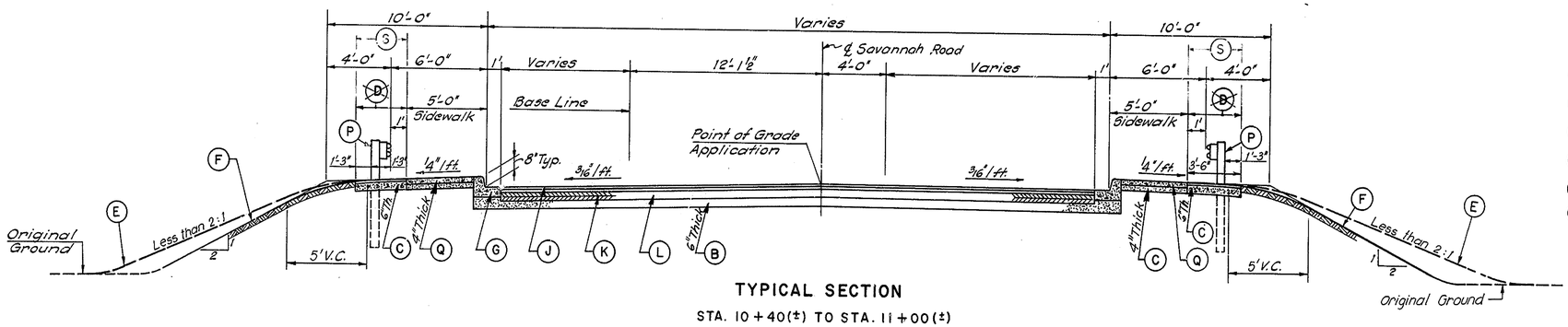

TYPICAL SECTION

STA. 10+40(±) TO STA. 11+00(±)

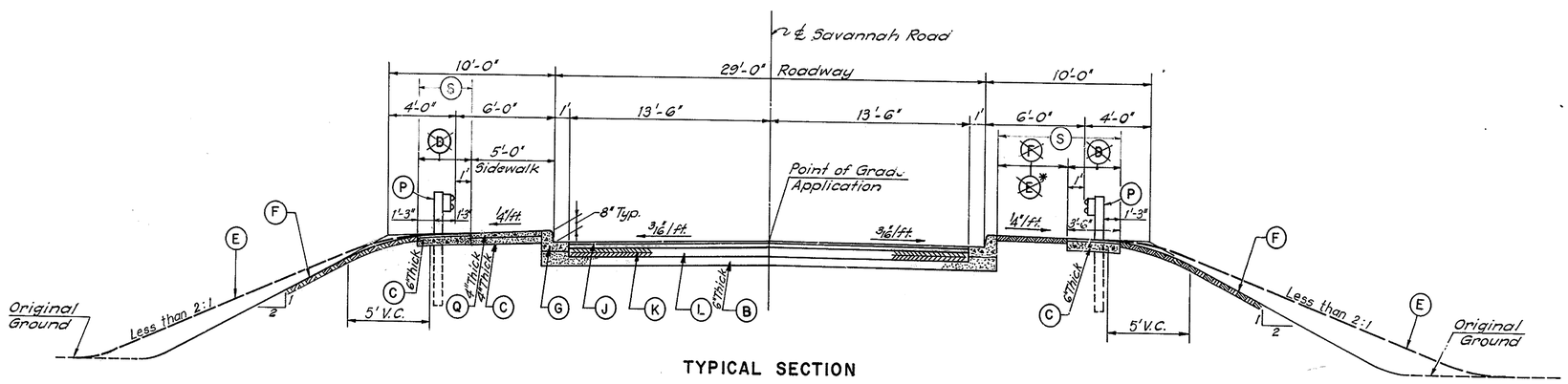

TYPICAL SECTION

STA. 13+60(±) TO STA. 17+20

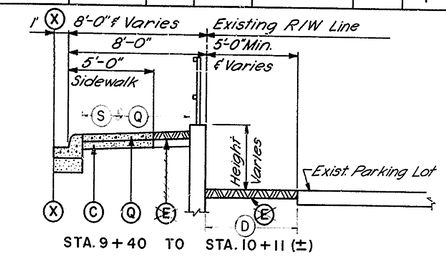

STA. 9+40 TO STA. 10+11 (±)

SECTION SYMBOLS

- (B) Select Borrow Base
- (C) Select Borrow, Type G
- (D) 2" Hot Mix, Hot Laid Bituminous Conc. Pave., Type C
- (E)* 4" Topsoiling, Seed and Mulch
- (F) Crown Vetch, Seed and Mulch
- (G) Integral Curb and Gutter, Type 3.
- (J) 3" Hot Mix, Hot Laid Bituminous Conc. Pavement 1¼" Type C; 1¾" Type B
- (K) Tack Coat
- (L) 6" Bituminous Concrete Base Course
- (P) Deep Beam Guard Rail (Steel Posts)
- (Q) Sidewalk
- (R) Jute Mesh
- (S) 4" Hot Mix Hot Laid Bituminous Pave., Type C

* Note: Use 4" Topsoiling, Seed and Mulch when slopes are less than 2:1 or as directed by the Engineer.

HARDESTY & HANOVER
CONSULTING ENGINEERS
NEW YORK, N. Y.

TYPICAL SECTIONS - SAVANNAH ROAD

SCALE: ¼" = 1'-0"

AS BUILT SHOWN IN RED H+H 10/82

CONTRACT	COUNTY	STATE	B.P.R. REG. NO.	FEDERAL AID PROJECT NUMBER	FISCAL YEAR	SHEET NUMBER	TOTAL SHEETS
80-023-02	SUSSEX	DEL.	2			5	87

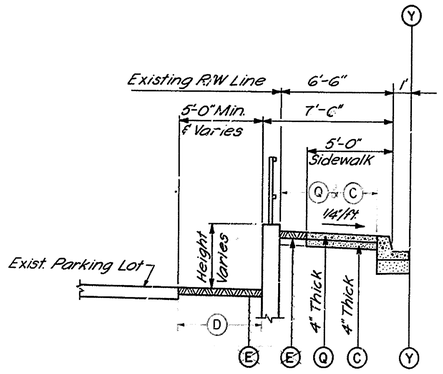

STA. F8+86.5 TO STA. F9+62 (±)

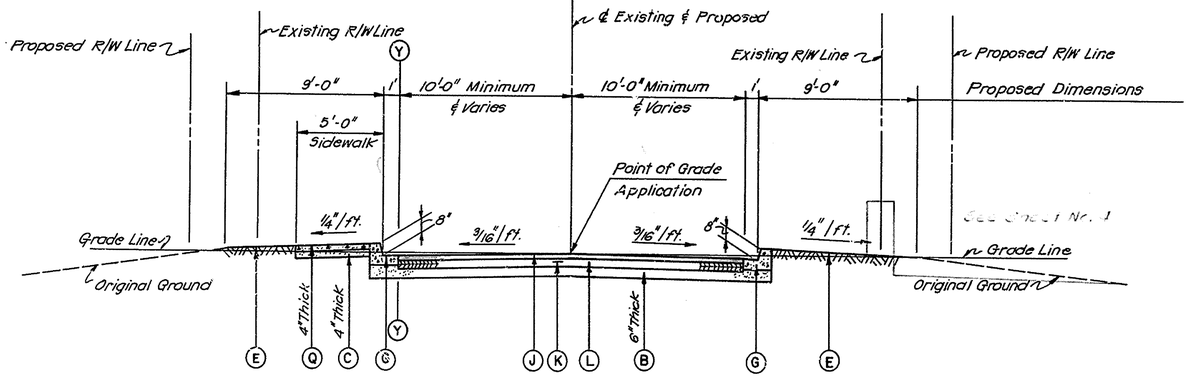

TYPICAL SECTION GILLS NECK ROAD

General Notes:

All work under this contract shall be governed by these specifications entitled "Delaware Department of Highways and Transportation, Standard Specifications for Road and Bridge Construction" Dated January 1, 1974, "Supplemental Specifications" thereto dated January 1, 1980 and the Special Provisions Thereto.

Contractor shall remove and reset all house lamps, Street and Traffic Signs as directed by the Engineer.

All Underground utilities, drains, and sewers shown on the plans are from the best available information. The contractor shall protect such utilities at all times during construction. He shall notify "Miss Utility" 48 hours prior to excavating across or adjacent to any underground utility. Conflicts of utilities with proposed construction shall be coordinated by the Contractor with the Engineer.

The contractor shall notify the property owners prior to removing any trees or shrubbery in the way of construction. It will be the property owners responsibility to remove trees or shrubbery he wishes to save. All other trees, stumps, and/or shrubbery shall be removed as indicated or directed.

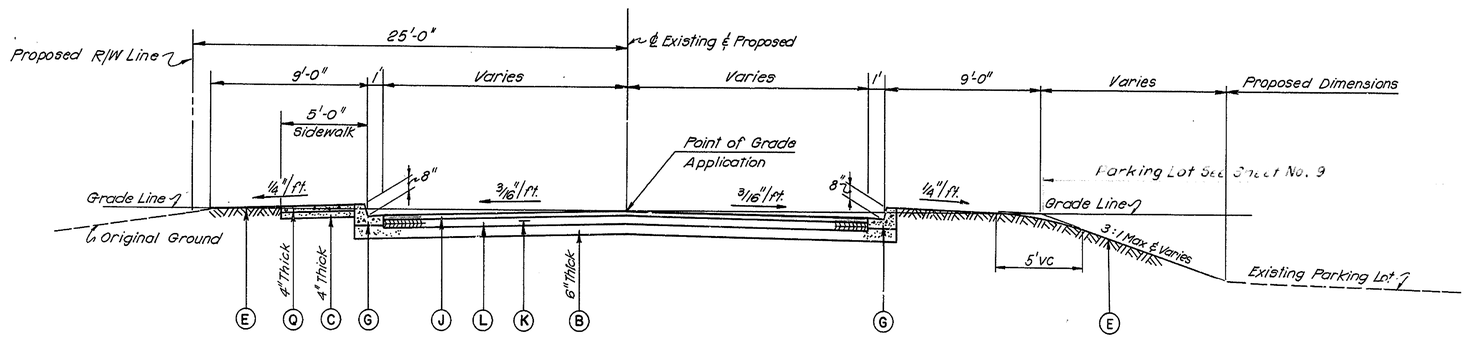

TYPICAL SECTION FRONT STREET

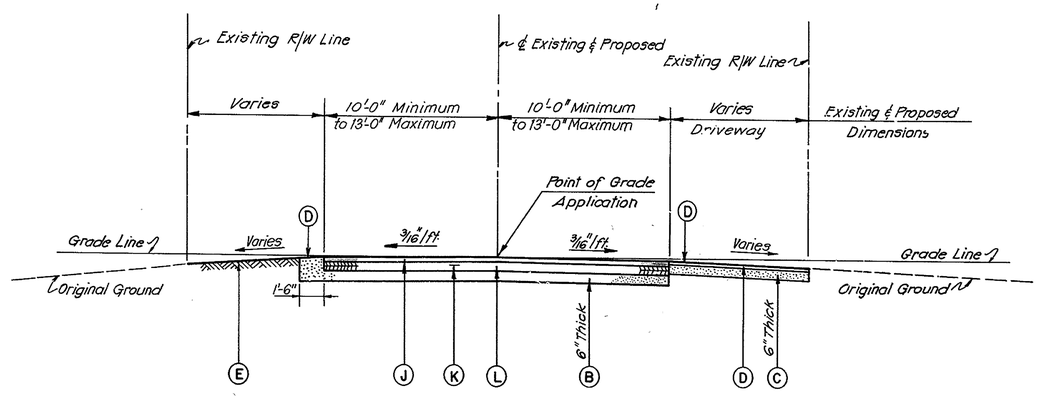

TYPICAL SECTION ANGLERS ROAD

NOTE:

For Description of Section Symbols See Sheet No. 4.

TYPICAL SECTIONS

SCALE: 1/4" = 1'-0"

HARDESTY & HANOVER
CONSULTING ENGINEERS
NEW YORK, N.Y.

AS BUILT SHOWN IN RED H+H 10/83

CONTRACT	COUNTY	STATE	B.P.R. REG. NO.	FEDERAL AID PROJECT NUMBER	FISCAL YEAR	SHEET NUMBER	TOTAL SHEETS
80-093-02	SUSSEX	DEL.	2			6	87

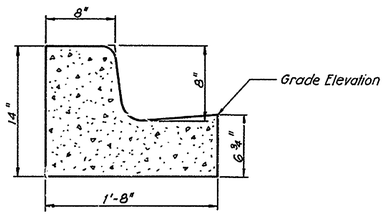

SPOT ELEVATIONS
SCALE: 1½" = 1'

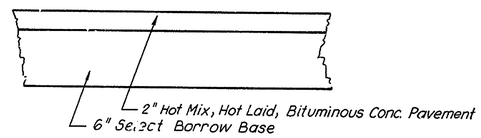

TYPICAL SECTION
PARKING LOT
SCALE: 1½" = 1'

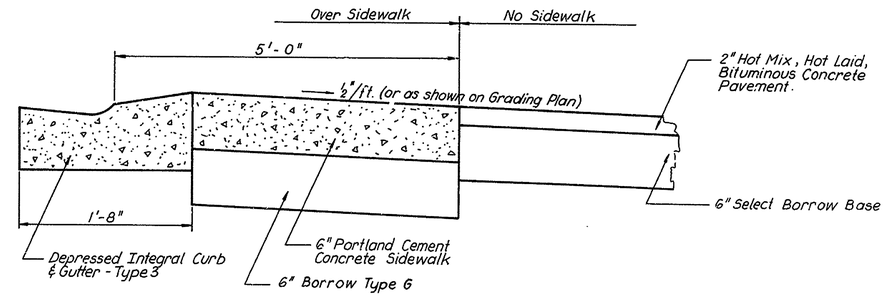

TYPICAL SECTION
DRIVEWAYS
NO SCALE

EARTHWORK SUMMARIES
ESTIMATE QUANTITIES

ITEM	SAVANNAH ROAD	GILLS NECK ROAD	FRONT STREET	ANGLERS ROAD	PARKING LOT	IF AND WHERE	TOTAL
EXCAVATION C.Y. FROM X-SECTION	320	45	80	30	190		665
Less Stripping in Cuts	–	–	–	–			–
TOTAL EXCAVATION (PAY QUANTITY) Cu. YDS.	320	45	80	30	190		665
MUCK EXCAVATION C.Y.	600	–	–	–	–		600
EMBANKMENT C.Y. FROM X-SECTIONS	6,700	570	250	20	110		7,650
Plus Stripping in Fills C.Y	390	50	20	15	–		475
Embankment C.Y.	7,090	620	270	35	110		8,125
Less Borrow Type "C" C.Y.	2,320	–	–	–	–		2,320
Total Embankment Required C.Y.	4,770	620	270	35	110		5,805
Less Available Excavation C.Y.	320	45	80	30	190		665
Borrow Required C.Y.	4,450	575	190	5	-80		5,140
TOTAL BORROW (PLUS 30% ADJUSTMENT FACTOR) C.Y.	5,790	748	250	7	**-108		6,690
BORROW TYPE B (PLUS 30% ADJUSTMENT FACTOR) C.Y.	720	–	–	–	–		720
BORROW TYPE C (PLUS 30% ADJUSTMENT FACTOR) C.Y.	3,020	–	–	–	–		3,020
Stripping in Cut Cu. YDS.	–	–	–	–	–		–
Stripping in Fill Cu. YDS.	390	50	20	15	–		475
TOTAL STRIPPING	390	50	20	15	–		475
4" TOPSOILING S.Y.	0 ~~100~~	0 ~~320~~	0 ~~120~~	0 ~~20~~	0 ~~330~~		0 ~~890~~
CROWN VETCH SEEDING AND MULCHING S.Y.	1,560	–	–	–	–		1,560
PERMANENT SEEDING SUBURBAN DEVELOPMENT S.Y.	800	320	120	20	330		1,590
MULCHING S.Y.	800	320	120	20	330		1,590
CHANNEL EXCAVATION C.Y.	2,860	–	–	–	–		2,860

** Deduct from Front Street Borrow

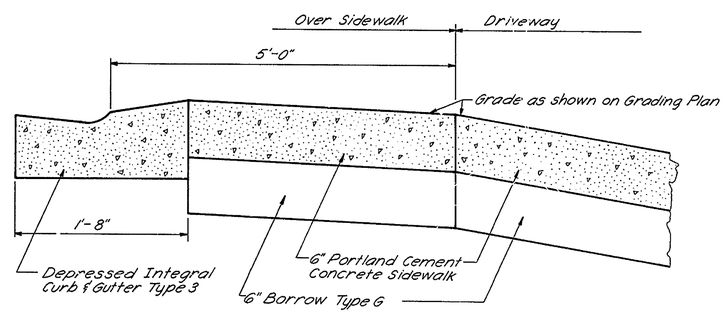

TYPICAL SECTION
DRIVEWAY — MOTEL
NO SCALE

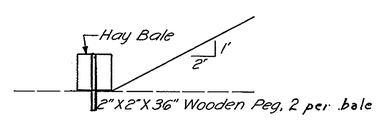

TOE OF SLOPE
HAY BALE PROTECTION
SCALE: ¼" = 1'-0"

CONSTRUCTION DETAILS

HARDESTY & HANOVER
CONSULTING ENGINEERS
NEW YORK, N.Y.

AS BUILT SHOWN IN RED H+H 10/63

CONTRACT	COUNTY	STATE	B.P.R. REG. NO.	FEDERAL AID PROJECT NUMBER	FISCAL YEAR	SHEET NUMBER	TOTAL SHEETS
80-023-02	SUSSEX	DEL.	2			7	87

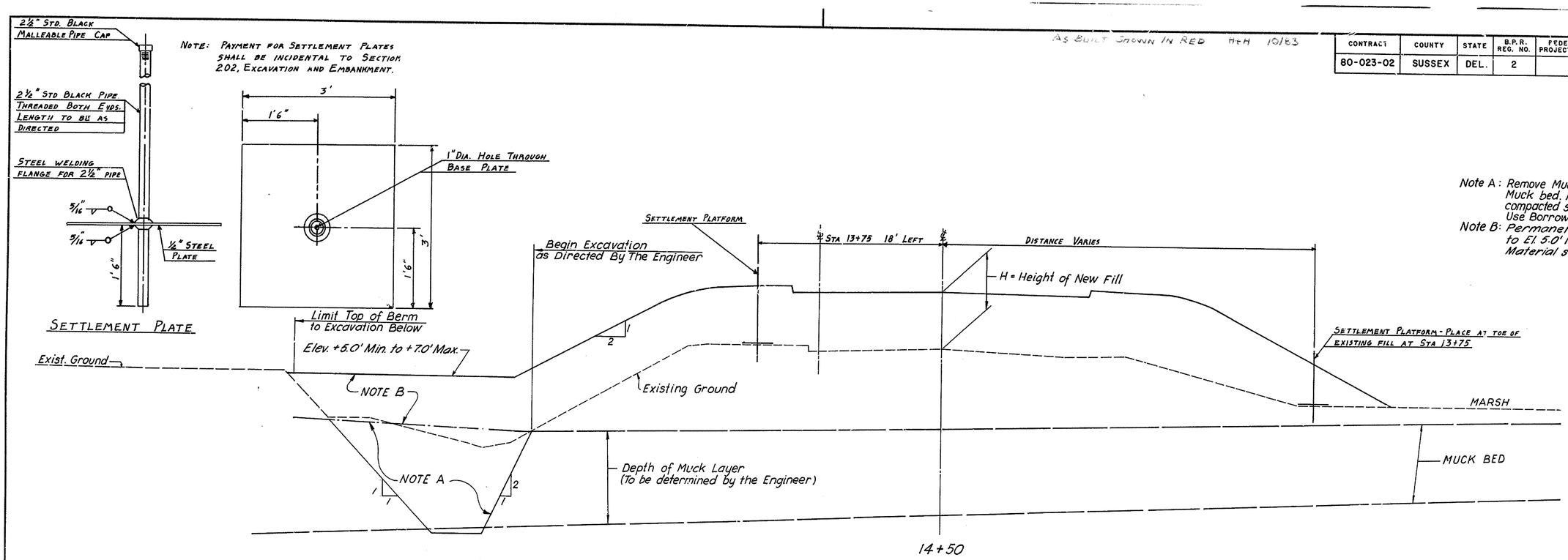

SAVANNAH ROAD
TYPICAL EMBANKMENT SECTION
(Showing Muck Excavation, Borrow Type B Backfill and Riprap Ditch Protection.)

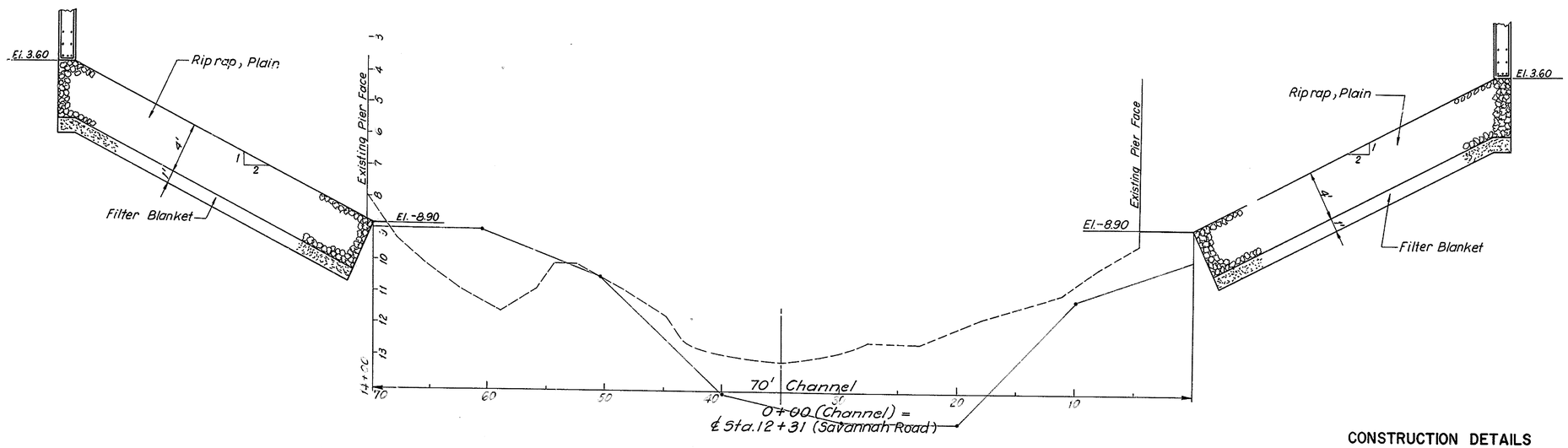

SAVANNAH ROAD
TYPICAL CHANNEL SECTION
(Showing Riprap Channel Embankment Protection)

CONSTRUCTION DETAILS
Scale: 1" = 5'

HARDESTY & HANOVER
CONSULTING ENGINEERS
NEW YORK, N. Y.

CONTRACT	COUNTY	STATE	B.P.R. REG. NO.	FEDERAL AID PROJECT NUMBER	FISCAL YEAR	SHEET NUMBER	TOTAL SHEETS
80-023-02	SUSSEX	DEL.	2			8	87

AS BUILT SHOWN IN RED HFH 10/82

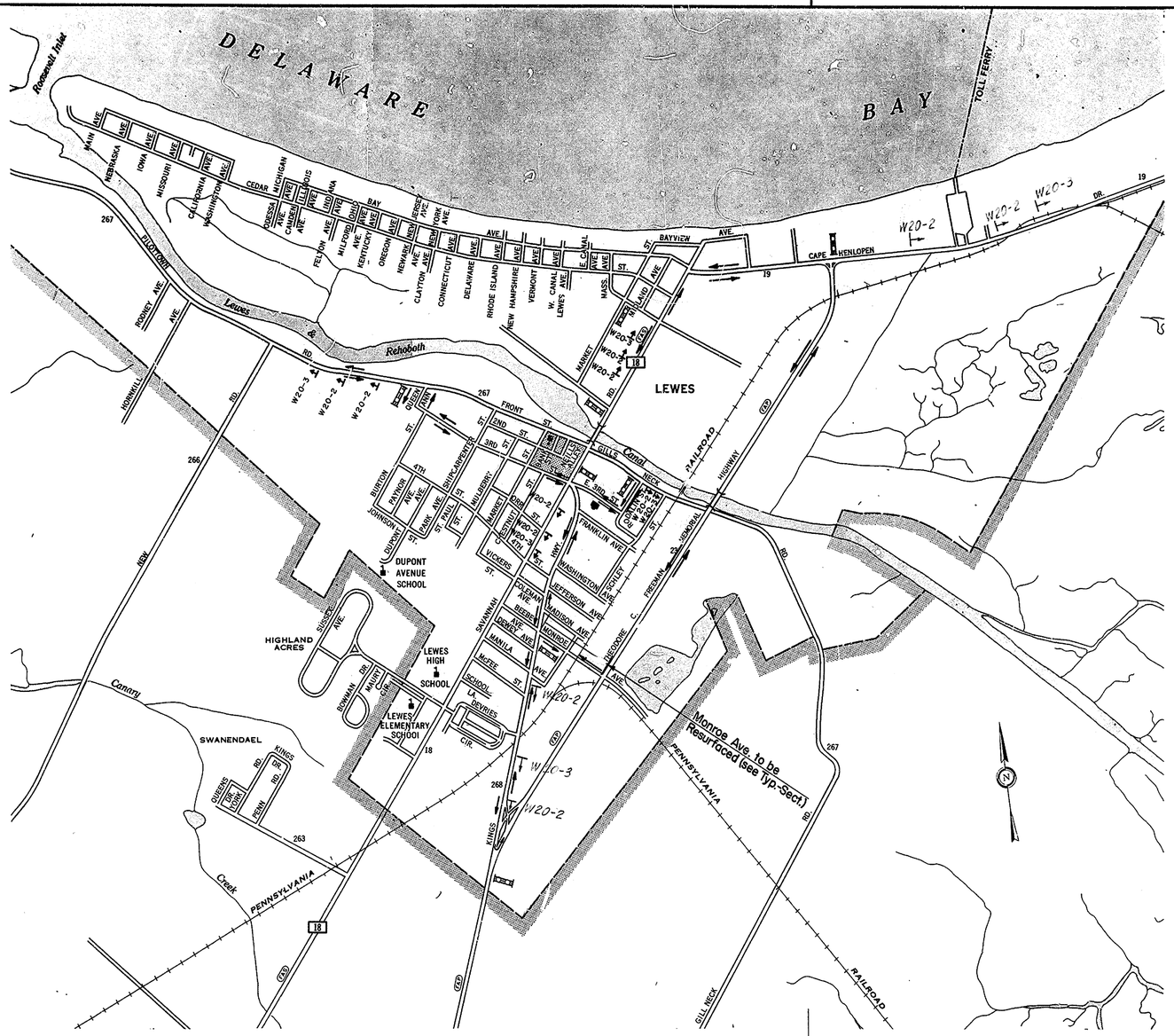

SEQUENCE OF CONSTRUCTION AND MAINTENANCE OF VEHICULAR TRAFFIC

1. During the construction of the proposed Savannah Road bridge and roadway approaches detour all passenger traffic from existing Savannah Road Bridge to the Freeman Memorial Highway by way of Kings Highway and Monroe Avenues in Lewes proper and by way of Cape Henlopen Drive on the Delaware Bay side. Truck traffic shall be detoured via Kings Highway to the intersection of Kings Highway and Freeman Memorial Highway and then along Freeman Memorial Highway in Lewes proper. On the Delaware Bay side, truck traffic shall be via Cape Henlopen Drive.
2. Monroe Avenue shall be resurfaced between Kings Highway and Theodore C. Freeman Memorial Highway.
3. During the construction of the intersection at Savannah Road, Front Street and Gills Neck Road detour local traffic on Front Street by way of Queen Anne Road and Third Streets to Savannah Road and Kings Highway.

   Traffic on Gills Neck Road shall be detoured via Rodalin and Third Streets to Savannah Road or Kings Highway.

   Upon completion of construction of the intersection, it is to be opened to traffic as set forth in the Special Provisions.
4. Anglers Road is to be constructed one-half at a time under traffic.
5. Maintenance of navigation on the canal is covered under the Special Provisions.

Note:

The Contractor shall make provisions to maintain access, at all times, for emergency equipment, fire protection service, delivery vehicles and residents to adjacent private property on those streets closed to through traffic.

The Contractor shall cooperate with the Lewes Police Department in all respects during the life of this project.

Traffic control devices for street and highway construction and maintenance operations shall conform to the standards as shown in the "MANUAL ON UNIFORM TRAFFIC CONTROL DEVICES FOR STREETS AND HIGHWAYS", U.S. Department of Transportation-Federal Highway Administration. Also "DELAWARE TRAFFIC CONTROLS FOR STREET AND HIGHWAY CONSTRUCTION AND MAINTENANCE OPERATIONS".

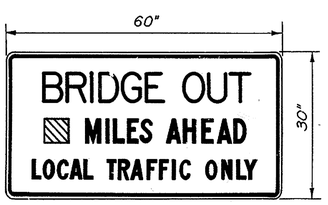

R11-3

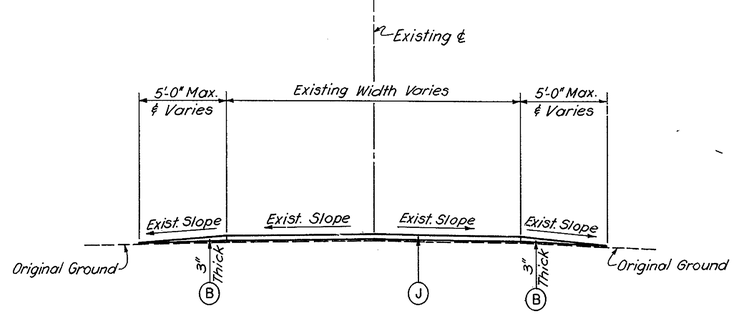

TYPICAL SECTION MONROE AVENUE
(KINGS HIGHWAY TO FREEMAN MEMORIAL HIGHWAY)

LEGEND

- Traffic Flow
- Barricade, Type III with R11-3 & M4-9 Signs
- W20 2, W20-3

HARDESTY & HANOVER
CONSULTING ENGINEERS
NEW YORK, N.Y.

CONTRACT	COUNTY	STATE	B.P.R. REG. NO	FEDERAL AID PROJECT NUMBER	FISCAL YEAR	SHEET NUMBER	TOTAL SHEETS
80-023-02	SUSSEX	DEL.	2			9	87

REVISIONS: Added wall revised entrances, revised construction limits and easements, relocated catch basin in southwest corner 10-1-81 RTC
2. Revised 24" RCP outfall, replaced Retaining wall I with wingwall, deleted portion of sidewalk 11-29-81 RTC.

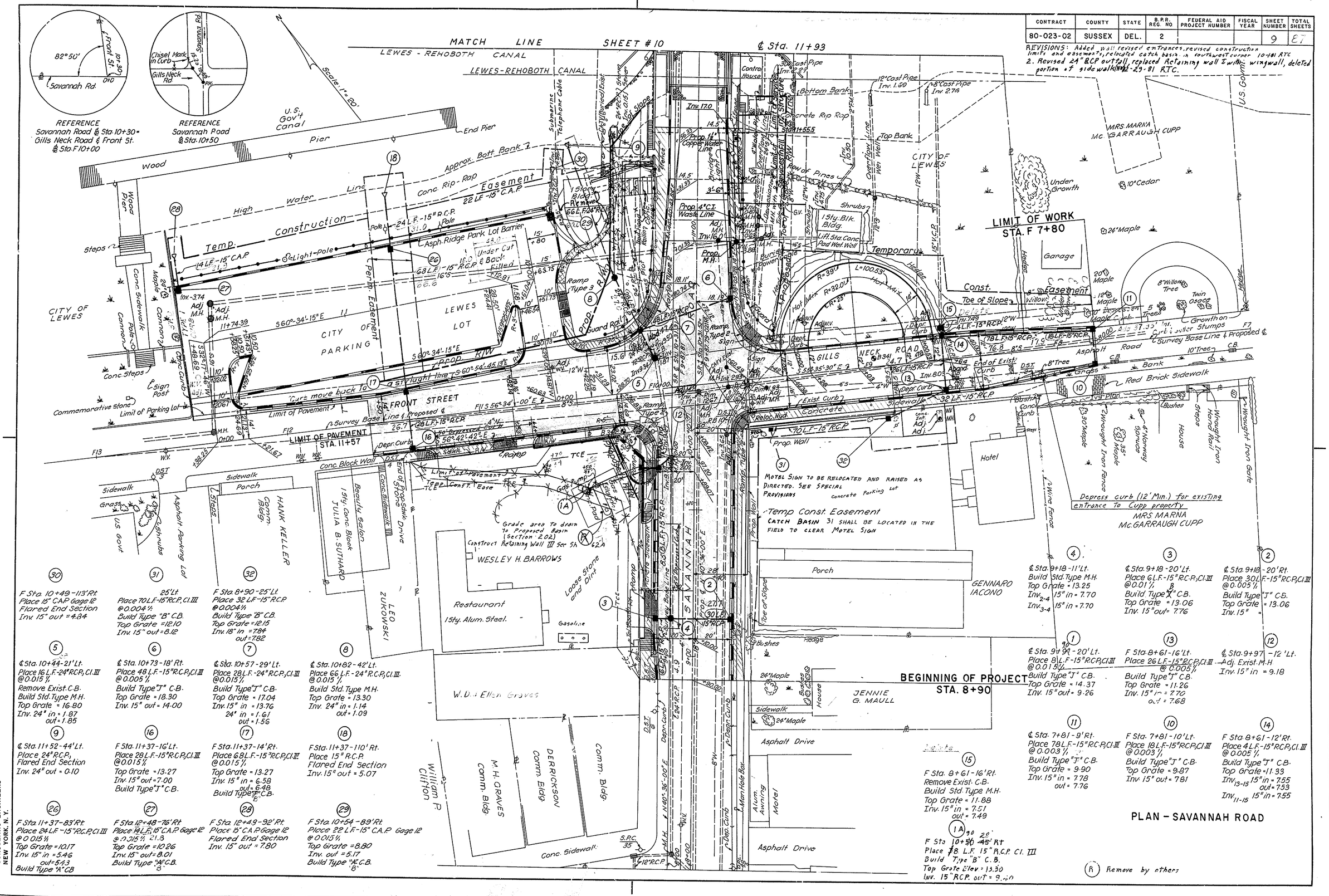

PLAN - SAVANNAH ROAD

HARDESTY & HANOVER CONSULTING ENGINEERS NEW YORK, N. Y.

CONTRACT	COUNTY	STATE	B.P.R. REG. NO.	FEDERAL AID PROJECT NUMBER	FISCAL YEAR	SHEET NUMBER	TOTAL SHEETS
80-023-02	SUSSEX	DEL.	2			10	87

Revisions: Addendum No 1 △ Revision To Raley Property R/W - change R; Fee Take to const. case. State of Del. property added. 5-19-81 RTC

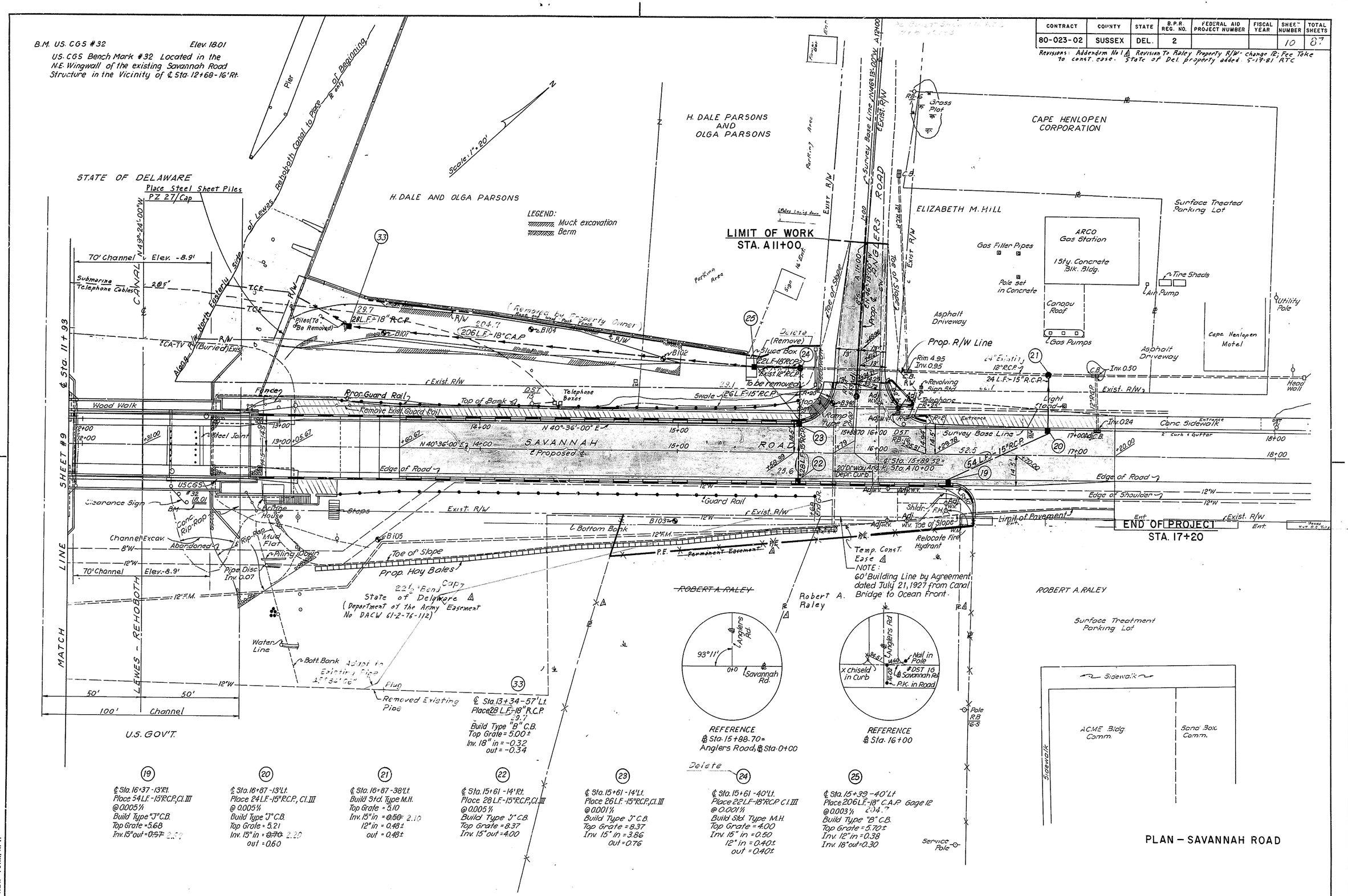

HARDESTY & HANOVER
CONSULTING ENGINEERS
NEW YORK, N. Y.

CONTRACT	COUNTY	STATE	B.P.R. REG. NO.	FEDERAL AID PROJECT NUMBER	FISCAL YEAR	SHEET NUMBER	TOTAL SHEETS
80-023-02	SUSSEX	DEL.	2			11	87

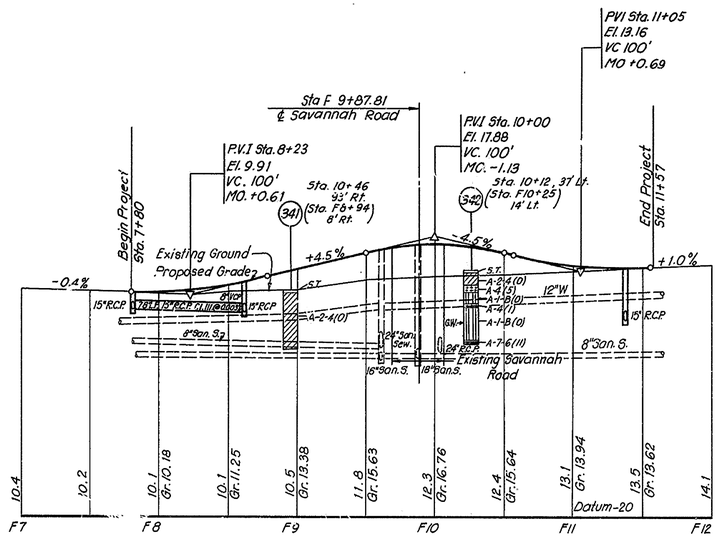

PROFILE - GILLS NECK ROAD & FRONT STREET

Scale: Horiz. 1"=50'
Vert. 1"=10'

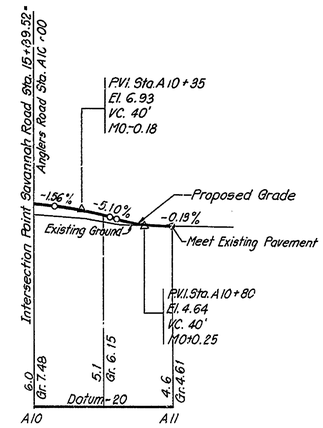

PROFILE ANGLERS ROAD

Scale: Horiz. 1"=50'
Vert. 1"=10'

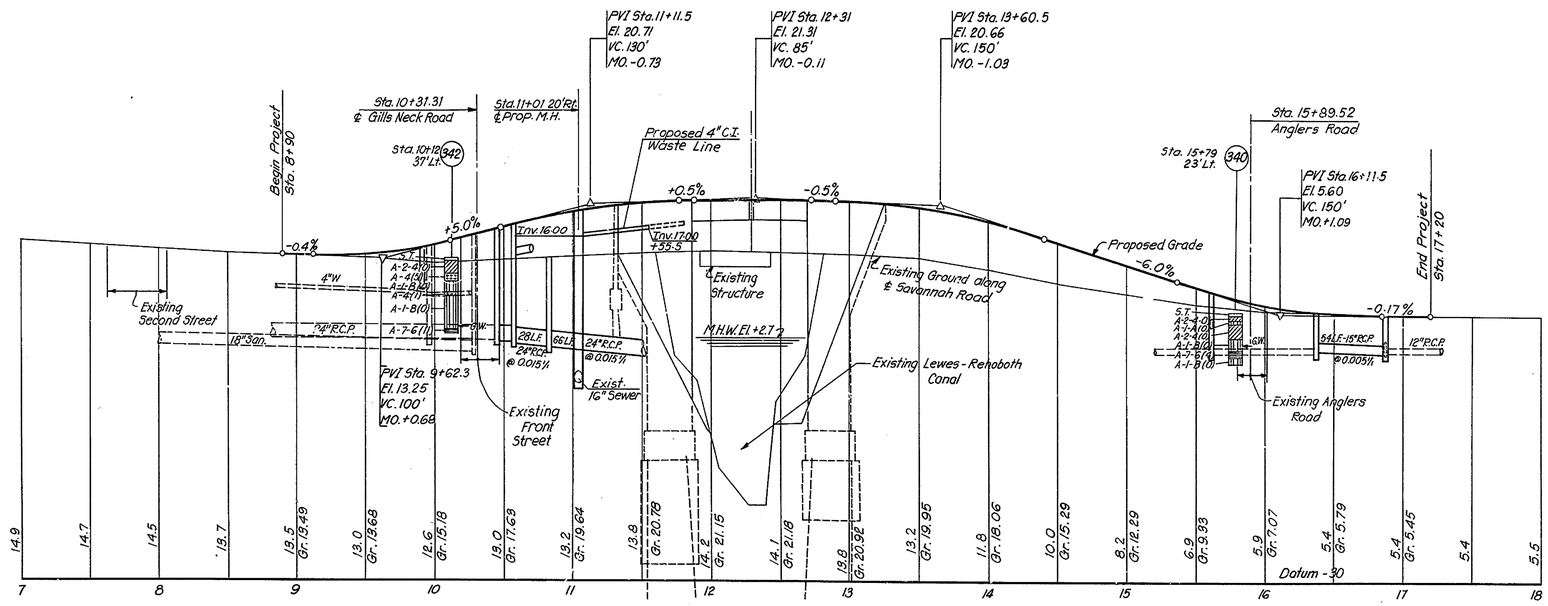

PROFILE - SAVANNAH ROAD

Scale: Horiz. 1"=50'
Vert. 1"=10'

HARDESTY & HANOVER
CONSULTING ENGINEERS
NEW YORK, N. Y.

AS BUILT SHOWN IN RED AT TIMES

CONTRACT	COUNTY	STATE	B.P.R. REG NO	FEDERAL AID PROJECT NUMBER	FISCAL YEAR	SHEET NUMBER	TOTAL SHEETS
80-023-02	SUSSEX	DEL.	2			12	87

REVISIONS: 1. Revised entrances, construction limits and easements and added wall on Barros Property 10-1-81 RTC
2 Replaced Retaining Wall I with wing wall, deleted portion of sidewalk in N.W. quadrant. 12-29-81 RTC.

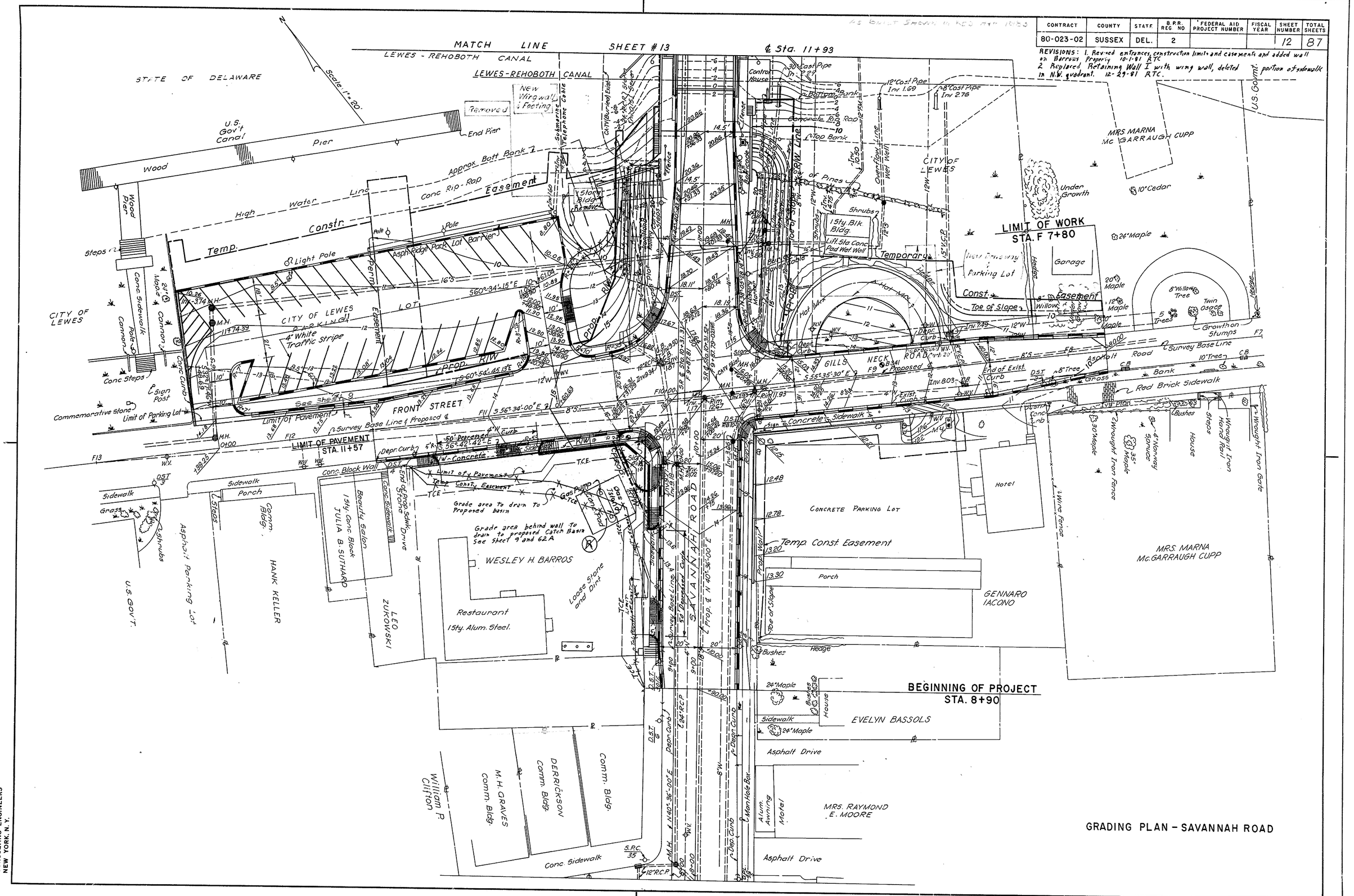

GRADING PLAN - SAVANNAH ROAD

HARDESTY & HANOVER
CONSULTING ENGINEERS
NEW YORK, N. Y.

CONTRACT	COUNTY	STATE	B.P.R. REG. NO.	FEDERAL AID PROJECT NUMBER	FISCAL YEAR	SHEET NUMBER	TOTAL SHEETS
80-023-02	SUSSEX	DEL.	2			13	87

Revisions: Addendum No.1 △1 Revision to Raley Property R/W - change R; Fee Take to Const. Ease. State of Del. prop. added 5-19-81 RTC

AS BUILT SHOWN IN RED HH 10/83

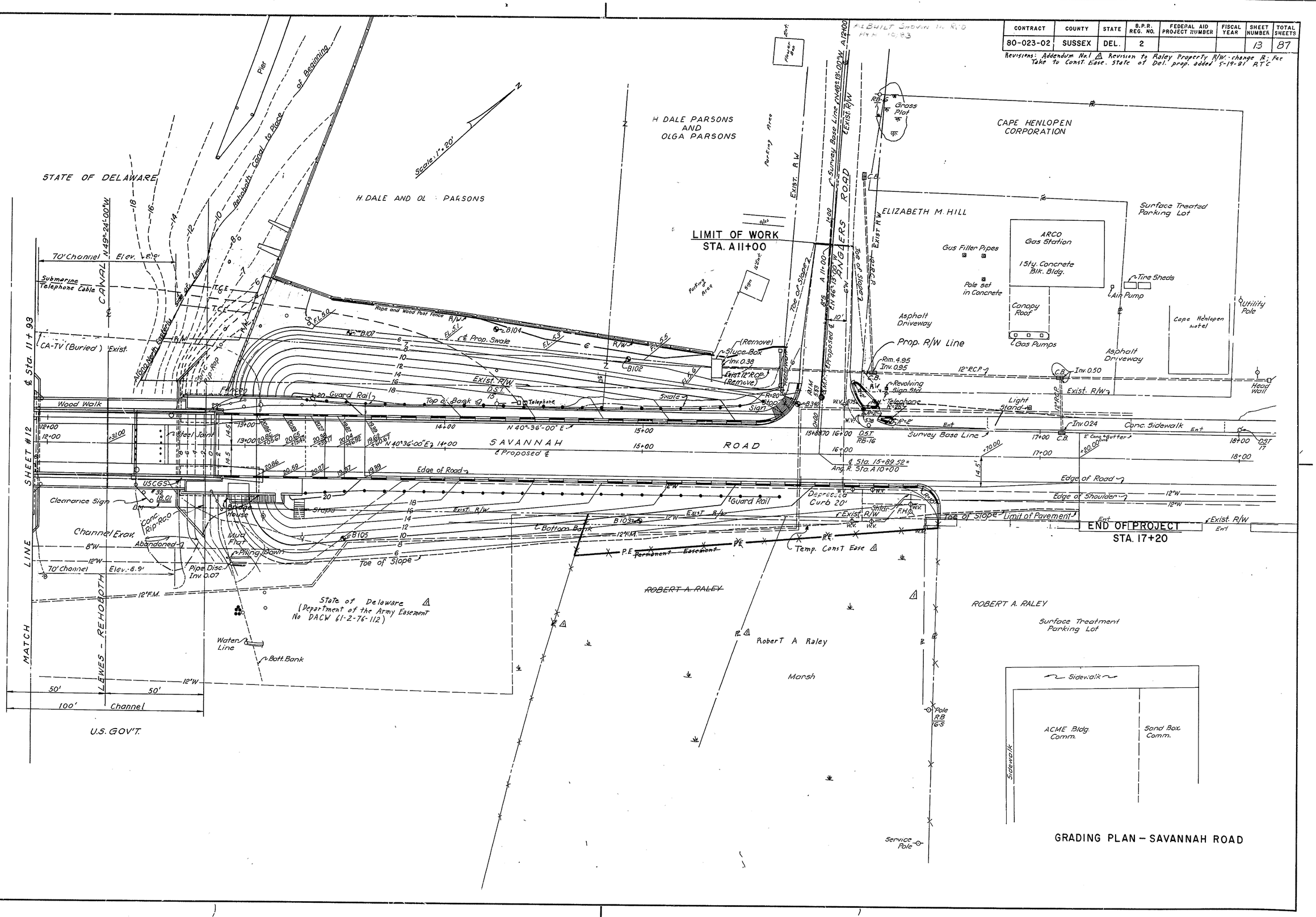

GRADING PLAN – SAVANNAH ROAD

HARDESTY & HANOVER CONSULTING ENGINEERS NEW YORK, N. Y.

COUNTY	CONTRACT	P.B.A. RES. NO.	STATE	FED. AID PROJECT NO.	SHEET NO.	TOTAL SHEETS
SUSSEX	80-023-02	2	DEL		14	87

NO.	REVISIONS	BY	DATE
1	Addendum #1	PDB	5-21-81
2	Replaced Retaining Wall N.W. with wing wall	RTC	12-28-81
1	Add 1 Waler & Space Evenly	FHG	4-23-82

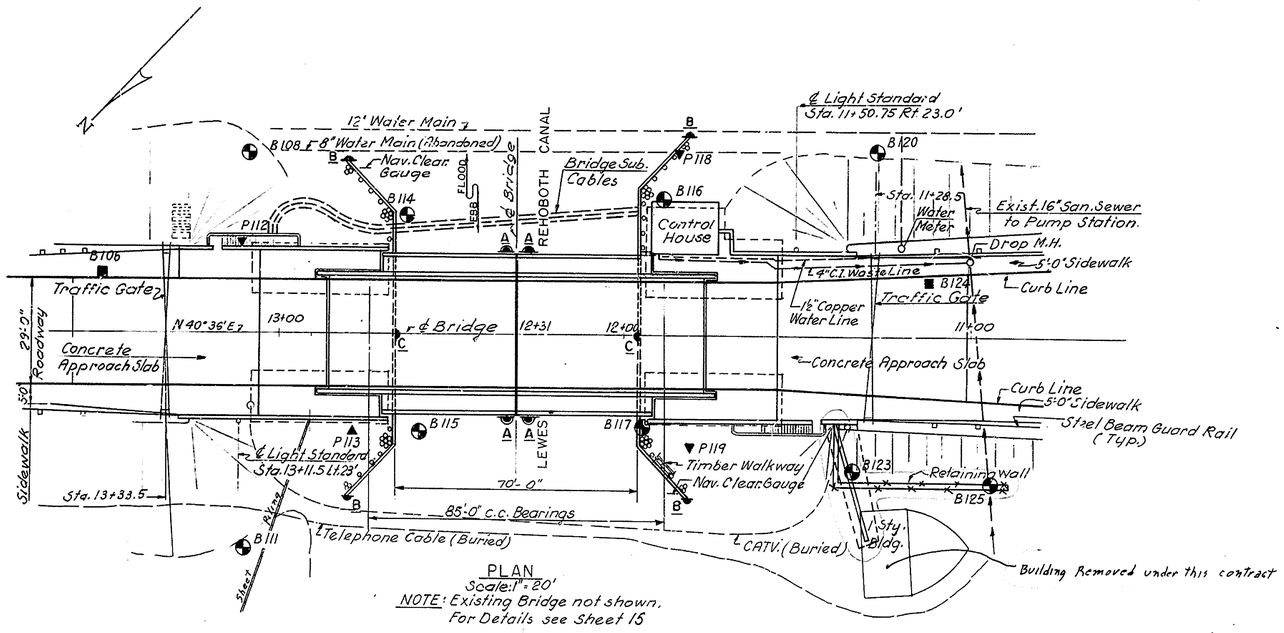

PLAN
Scale: 1" = 20'
NOTE: Existing Bridge not shown, For Details see Sheet 15

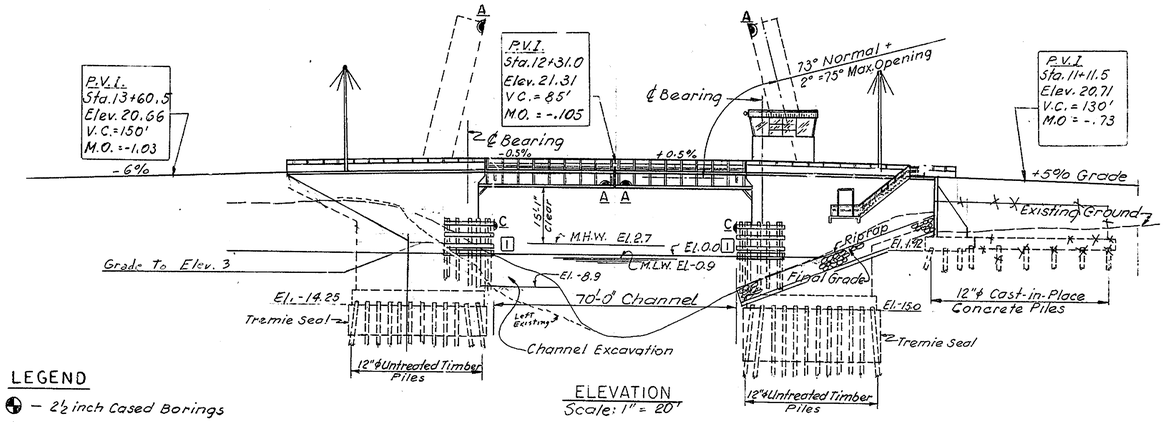

ELEVATION
Scale: 1" = 20'

LEGEND

- 2½ inch Cased Borings
- 2 inch Cone Penetrometer Sounding
- 4 inch Cased Hole with undisturbed Sampling. For Detail of Borings see Sheets No. 63, 64, 65.
- A — Bascule Span Light 180° red - span closed 180° green - span open
- B — Pier Light, 180° red
- C — Axis Light, 180° red

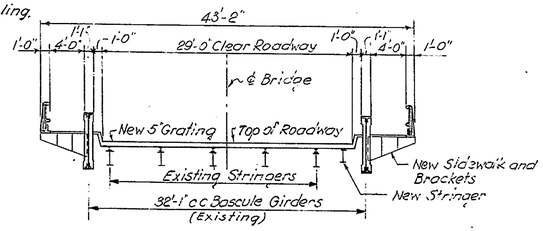

TYPICAL CROSS SECTION OF DECK
Scale: ⅛" = 1'-0"

GENERAL NOTES:

1. DESIGN SPECIFICATIONS TO BE 1977 AASHTO STANDARD SPECIFICATIONS FOR HIGHWAY BRIDGES, 1978 & 1979 INTERIM SPECIFICATIONS.
2. MATERIALS, FABRICATION AND CONSTRUCTION TO CONFORM WITH THE 1974 STATE OF DELAWARE STATE HIGHWAY DEPARTMENT STANDARD SPECIFICATIONS AND THE JAN. 1980 SUPPLEMENTAL SPECIFICATIONS.
3. DESIGN LOADING TO BE HS 20-44.
4. PILE CAPACITIES: 12"ø UNTREATED TIMBER PILES SHALL BE DRIVEN TO PRODUCE AN ALLOW. BEARING VALUE (MIN.) EQUAL TO 25 TONS AND TO A PENETRATION (MIN.) EQUAL TO ELEV. -54.0 FT. EXCEPT FOR NORTH FOOTING OF WEST PIER WHICH SHALL HAVE A PENETRATION (MIN.) EQUAL TO ELEV. 60.0 FT. MAX. PENETRATION SHALL BE ELEV. -70.0 FT. UNLESS OTHERWISE ORDERED BY THE ENGINEER.

   12"ø C.I.P. CONCRETE PILES SHALL BE DRIVEN TO PRODUCE AN ALLOW. BEARING VALUE (MIN) EQUAL TO 35 TONS AND TO A PENETRATION (MIN.) EQUAL TO ELEV. -40.0 FT.

   12"ø TREATED TIMBER PILES SHALL BE DRIVEN TO PRODUCE AN ALLOWABLE BEARING VALUE (MIN.) OF 15 TONS AND TO A PENETRATION (MIN.) EQUAL TO ELEV. -40.0 FT.
5. ALLOWABLE DESIGN STRESSES:
   CONCRETE CLASS B F_c=1,200 P.S.I. EXCEPT DECK; CONCRETE (CLASS A); F_c=1,600 P.S.I. DECK ONLY.
   REINFORCEMENT (ASTM A615 GRADE 40) F_T (TENSILE) = 20,000 P.S.I.
   STRUCTURAL STEEL (ASTM A588) F_T (TENSILE) = 27,000 P.S.I.
   TIMBER: STRESS GRADE 1,600 #f
6. ELEVATIONS REFER TO U.S.C. & G.S. DATUM.

GENERAL NOTES (CONT'D.):

7. EXCEPT AS SPECIFICALLY SHOWN ON THE DRAWINGS, NO FIELD WELDING WILL BE PERMITTED WITHOUT APPROVAL OF THE ENGINEER.

QUANTITIES

	ITEM	UNIT	QUANTITY
	REMOVAL OF EXIST...G BASCULE BRIDGE AT LEWES	L.S.	Lump Sum
	RELOCATING EXISTING BASCULE LEAVES - REHOBOTH BEACH TO LEWES	L.S.	Lump Sum
	EXCAVATION AND BACKFILL FOR STRUCTURES - PIERS	C.Y.	2,672
	EXCAVATION AND BACKFILL FOR STRUCTURES - RETAINING WALLS	C.Y.	360
*	TIMBER STRUCTURES, TREATED	MFBM	8.1
*	PORTLAND CEMENT CONCRETE MASONRY - TREMIE SEALS	C.Y.	1,080
*	PORTLAND CEMENT CONCRETE MASONRY - PIER FOOTINGS	C.Y.	440
*	PORTLAND CEMENT CONCRETE MASONRY - PIER ABOVE FOOTINGS	C.Y.	1,355
*	PORTLAND CEMENT CONCRETE MASONRY - RETAINING WALLS	C.Y.	178
	PORTLAND CEMENT CONCRETE MASONRY - COUNTERWEIGHT BLOCKS	C.Y.	50
*	PORTLAND CEMENT CONCRETE MASONRY - APPROACH SLAB	C.Y.	160
*	PORTLAND CEMENT CONCRETE MASONRY - SUPERSTRUCTURE	C.Y.	105
	BALANCING BASCULE LEAVES	L.S.	Lump Sum
	PROTECTIVE COATING FOR P.C. CONCRETE MASONRY - BRIDGE	S.Y	955
	SUPERFICIAL WATERPROOFING	S.Y.	630
*	BAR REINFORCEMENT	LB	257,300
*	BAR REINFORCEMENT, EPOXY COATED	LB.	12,300
*	STEEL STRUCTURES, COMPUTED NET WEIGHT	LB.	150,740
	ROADWAY GRATING	S.F.	2,270
	SIDEWALK GRATING	S.F.	740
	CLEANING AND PAINTING BASCULE BRIDGE	L.S.	Lump Sum
	METAL BRIDGE RAILING - PIERS	L.F.	228
	METAL BRIDGE RAILING - BASCULE SPAN	L.F.	150
	TIMBER PILES, TREATED	L.F.	4,300
	TIMBER PILES, UNTREATED	L.F.	16,800
		L.F.	
	TIMBER TEST PILES, UNTREATED	L.F.	320
	PILE LOAD TEST, TIMBER PILE	EA.	2
	CAST-IN-PLACE CONCRETE PILES, 12-INCH DIAMETER	L.F.	900
	STEEL SHELL TEST PILES, 12-INCH DIAMETER	L.F.	55
	PEDESTRIAN RAILING ON RETAINING WALL	L.F.	147
	CHAIN LINK FENCE ON RETAINING WALL	L.F.	70
	PREFORMED ELASTIC JOINT SEALER	L.F.	91
	CONTROL HOUSE	L.S.	Lump Sum
	OPERATING AND LOCKING MACHINERY	L.S.	Lump Sum
1	~~MACHINERY REPLACEMENT PARTS~~	~~LBS.~~	~~1,200~~
	STANDBY ENGINE GENERATOR	L.S.	Lump Sum
	ELECTRICAL WORK	L.S.	Lump Sum
	BRIDGE OPERATION	L.S.	Lump Sum
	TREAD PLATES	L.S.	Lump Sum
	REPLACING DETERIORATED RIVETS	EA.	800

* ESTIMATED FIXED QUANTITY ITEM.

** THE CONTRACTOR MAY USE GRADE 60 REINFORCEMENT IN LIEU OF GRADE 40. DETAILING DIMENSIONS FOR HOOKS & BENDS SHALL BE IN ACCORDANCE WITH THE "MANUAL OF STANDARD PRACTICE FOR DETAILING REINFORCED CONCRETE STRUCTURES (ACI 315-74)" FOR GRADE 60.

DELAWARE
DEPARTMENT OF TRANSPORTATION
DIVISION OF HIGHWAYS

SAVANNAH ROAD BRIDGE
OVER LEWES & REHOBOTH CANAL

GENERAL PLAN AND ELEVATION

D. H. E.D.	SCALE	APPROVED BY:
T. J. N.	AS NOTED	BRIDGE ENGINEER
C. C. G.		

COUNTY	CONTRACT	P.R.A. REG. NO.	STATE	FED. AID PROJECT NO.	SHEET NO.	TOTAL SHEETS
SUSSEX	80-023-02	2	DEL		15	87

NO.	REVISIONS	BY	DATE
1	Addendum #1 - Changed note regarding removal of U.S.C.&G.S. Monument	RDS	5-21-81

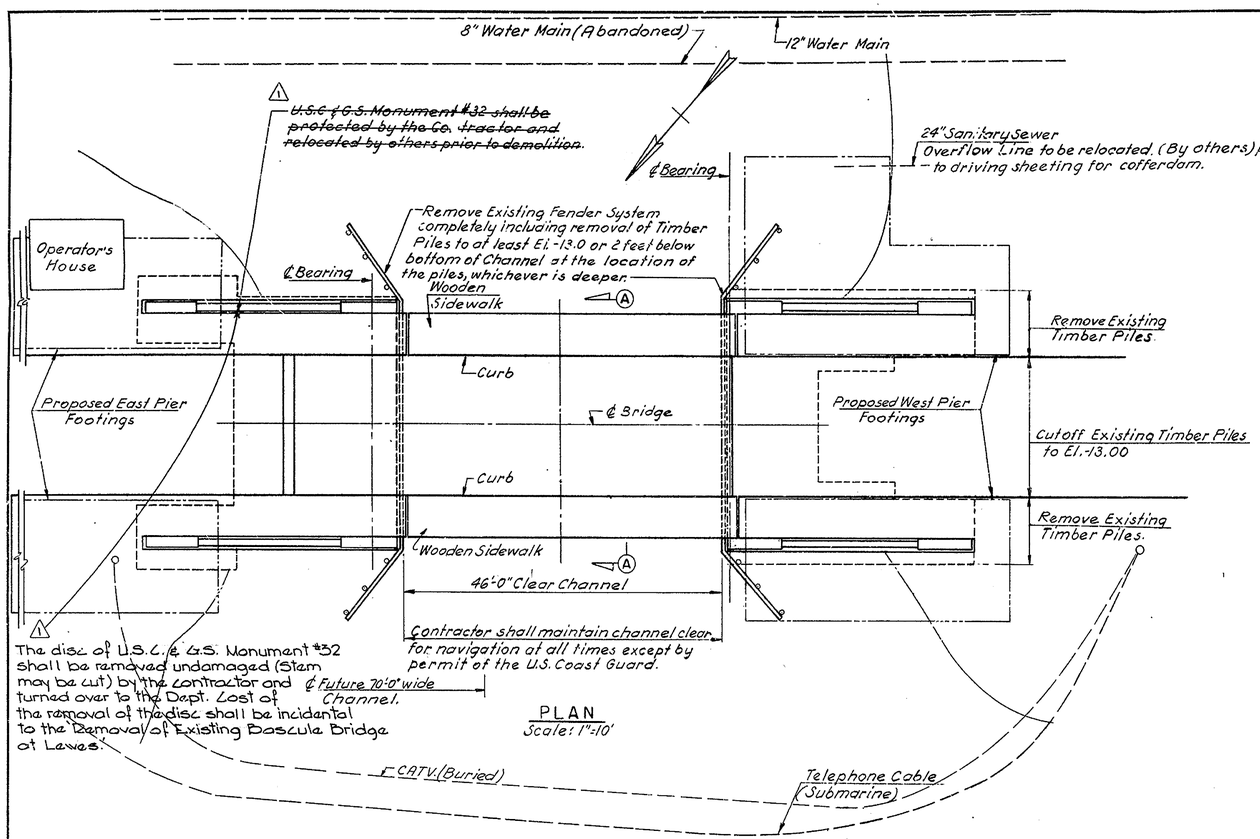

PLAN
Scale: 1" = 10'

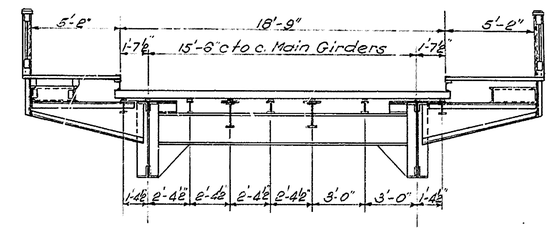

SECTION A-A
Scale: ¼" = 1'-0"

LIST OF SALVAGE MATERIALS - RTE 1 BRIDGE
2 Complete gates (all machinery and arms)
2 Leaf limit switches (plunger type)
1 Leaf alignment switch
3 Limit switches (rotary type)
4 Electric hydraulic leaf breaks (include drums)
2 Electric air horns complete with motors and outside air horns
1 Desk control cabinet complete
1 Complete motor control cabinet and all switch gear
All steel rail and wooden posts
All navigational lights except on fenders
All steel deck grating (in sections)
See Special Provisions

LIST OF SALVAGE MATERIALS:

The following items shall be salvaged and delivered to the State as directed by the Engineer:
One (1) whole Bridge House.
Two (2) Complete Gates (all machinery and arms).
All Steel deck grating (in section as installed.)
All Navigational Lights.
Motor and Brake Combined.
One (1) Small Sump Pump
One (1) Electric Horn (Complete)
All Guard Rails and Posts.
One (1) Small Oil Burner Stove.
These items are to be salvaged from the Savannah Road Bridge. See Special Provisions for delivery place.

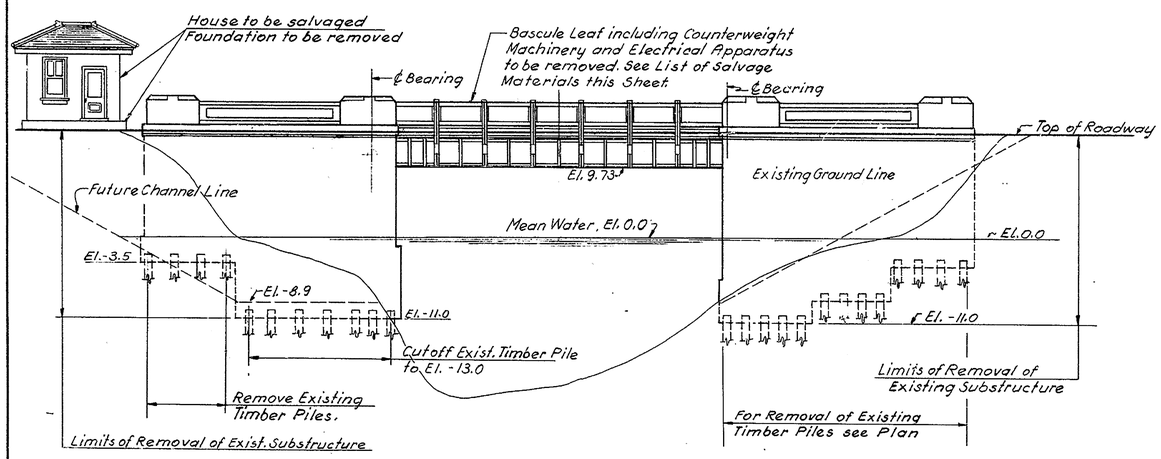

NORTH ELEVATION
Scale: 1" = 10'

NOTE:
Dimensions and Elevations shown are approximate.

NOTES:
1. Navigation Lights are to be maintained and temporary Channel Lighting shall be provided by the Contractor during demolition in accordance with the U.S. Coast Guard.
2. All Utility Lines shall be protected by the Contractor during demolition.

DELAWARE
DEPARTMENT OF TRANSPORTATION
DIVISION OF HIGHWAYS

SAVANNAH ROAD BRIDGE
OVER LEWES & REHOBOTH CANAL

DEMOLITION OF EXISTING BRIDGE

D. C. G.	SCALE	APPROVED BY:
T. J. N.	AS NOTED	H. C. McDowell
C. H. E. D.		BRIDGE ENGINEER

COUNTY	CONTRACT	P.R.A. REV. NO.	STATE	FED. AID PROJECT NO.	SHEET NO.	TOTAL SHEETS
SUSSEX	80-023-02	2	DEL		16	87

NO.	REVISIONS	BY	DATE
1	Add 1 Waler & Space Evenly	FHG	4-23-82

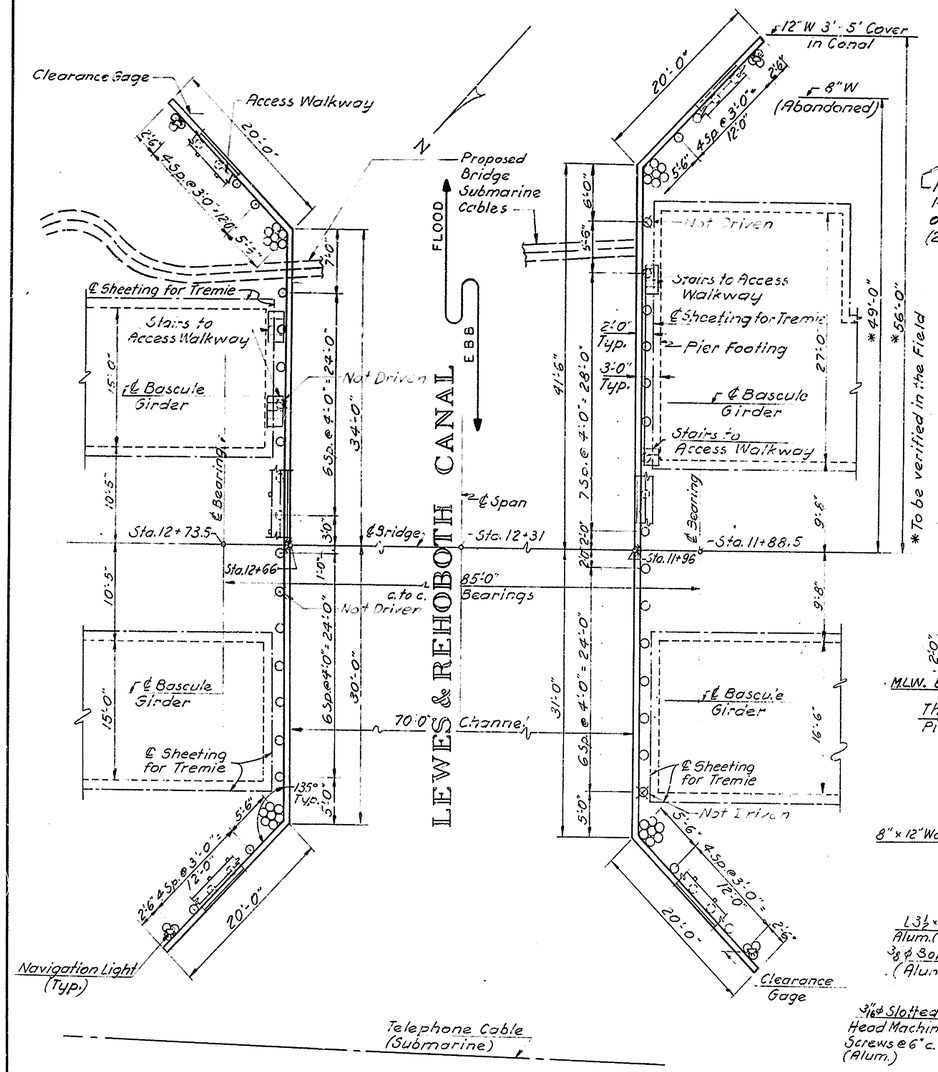

PLAN OF FENDERS
Scale: 1/8" = 1'-0"

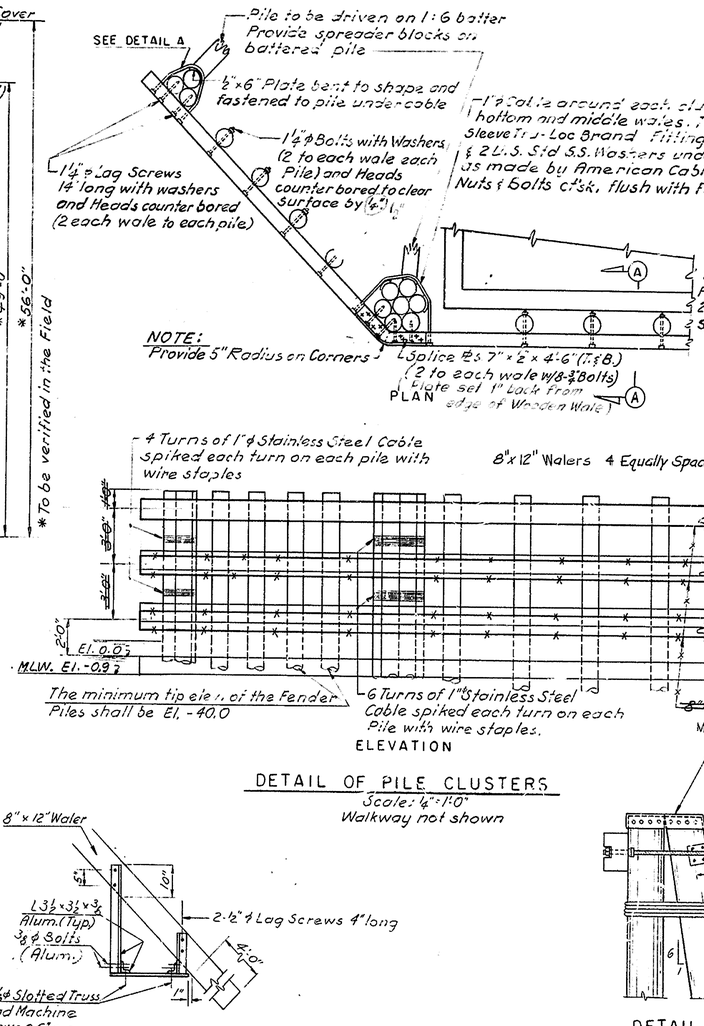

DETAIL OF PILE CLUSTERS
Scale: 1/4" = 1'-0"
Walkway not shown

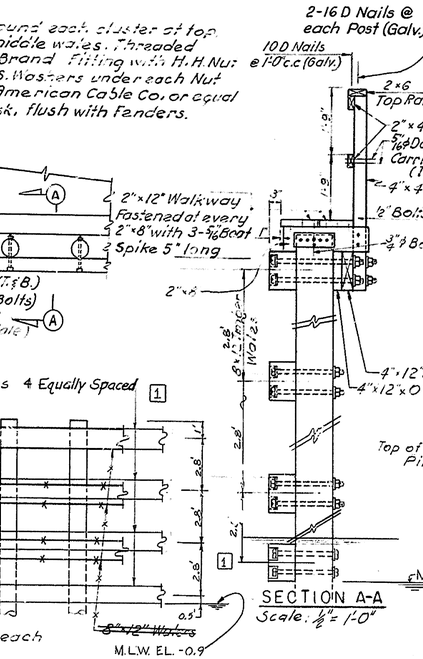

SECTION A-A
Scale: 1/2" = 1'-0"

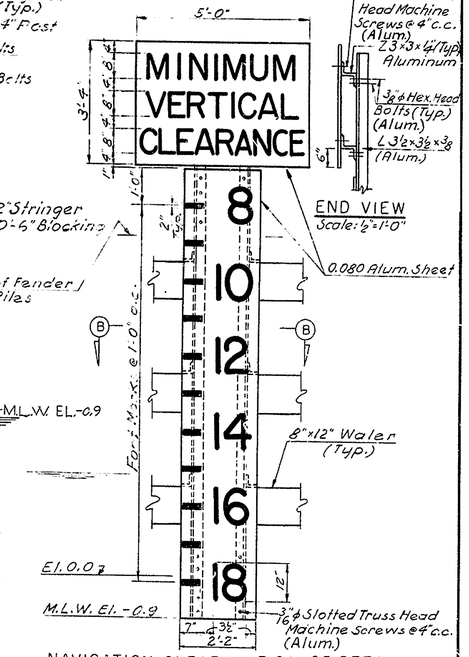

NAVIGATION CLEARANCE GAUGE DETAIL
Scale: 1/2" = 1'-0"

Note:
See Special Provisions for Gauge Facing Material.

SECTION B-B
Scale: 1/2" = 1'-0"

NOTE:
Section Typical at Each 8"x12" Waler.

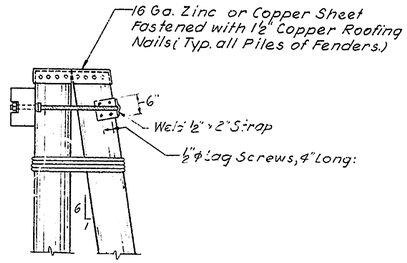

DETAIL A
Scale: 1/2" = 1'-0"

NOTES:
1. For General Notes see Sheet No. 14.
2. All Hardware including bolts, lag screws, boat spikes, washers, nails, splice plates and wood screws shall be galvanized except as otherwise noted. Washers shall be galvanized Cast Iron O.G. except as noted.
3. All Timber shall be S4S except for walers which shall be S2S with finished sides vertical.
4. SPACING OF TIMBER FENDER PILES ALONG FACE OF PIER MAY BE VARIED AS REQUIRED TO CLEAR FOUNDATION PILES.

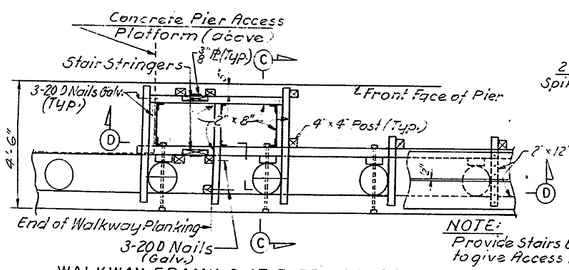

WALKWAY FRAMING AT PIER ACCESS PLATFORM
Scale: 3/8" = 1'-0"
S.W. Pier shown
S.E. Pier similar

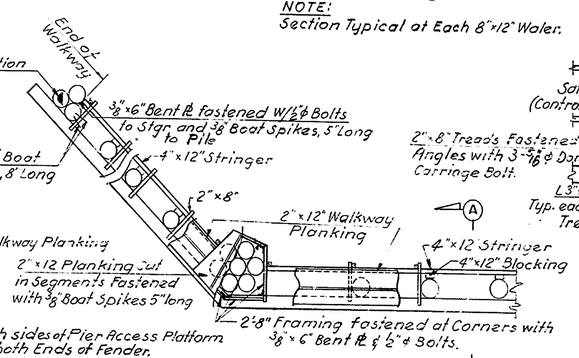

NOTE:
Provide Stairs both sides of Pier Access Platform to give Access to both Ends of Fender.

TYPICAL WALKWAY DETAIL
Scale: 1/4" = 1'-0"

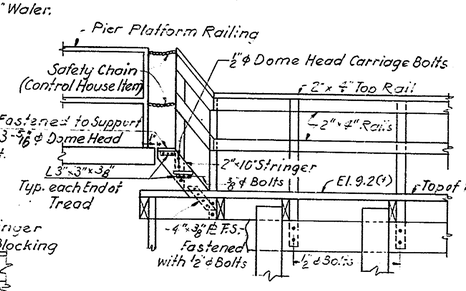

SECTION D-D
Scale: 3/8" = 1'-0"

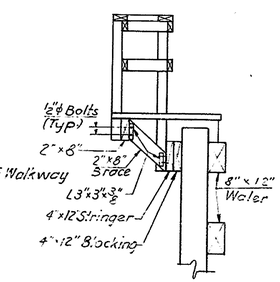

SECTION C-C
Scale: 3/8" = 1'-0"

DELAWARE
DEPARTMENT OF TRANSPORTATION
DIVISION OF HIGHWAYS

SAVANNAH ROAD BRIDGE
OVER LEWES & REHOBOTH CANAL

FENDERS

D.H.E.D., D.D.H.	SCALE	APPROVED BY:
T. J.N.	AS NOTED	N. C. Wyndell
C.H.E.D.		BRIDGE ENGINEER

COUNTY	CONTRACT	P.R.A. REG. NO.	STATE	FED. AID PROJECT NO.	SHEET NO.	TOTAL SHEETS
SUSSEX	80-023-02	2	DEL		17	87

NO.	REVISIONS	BY	DATE

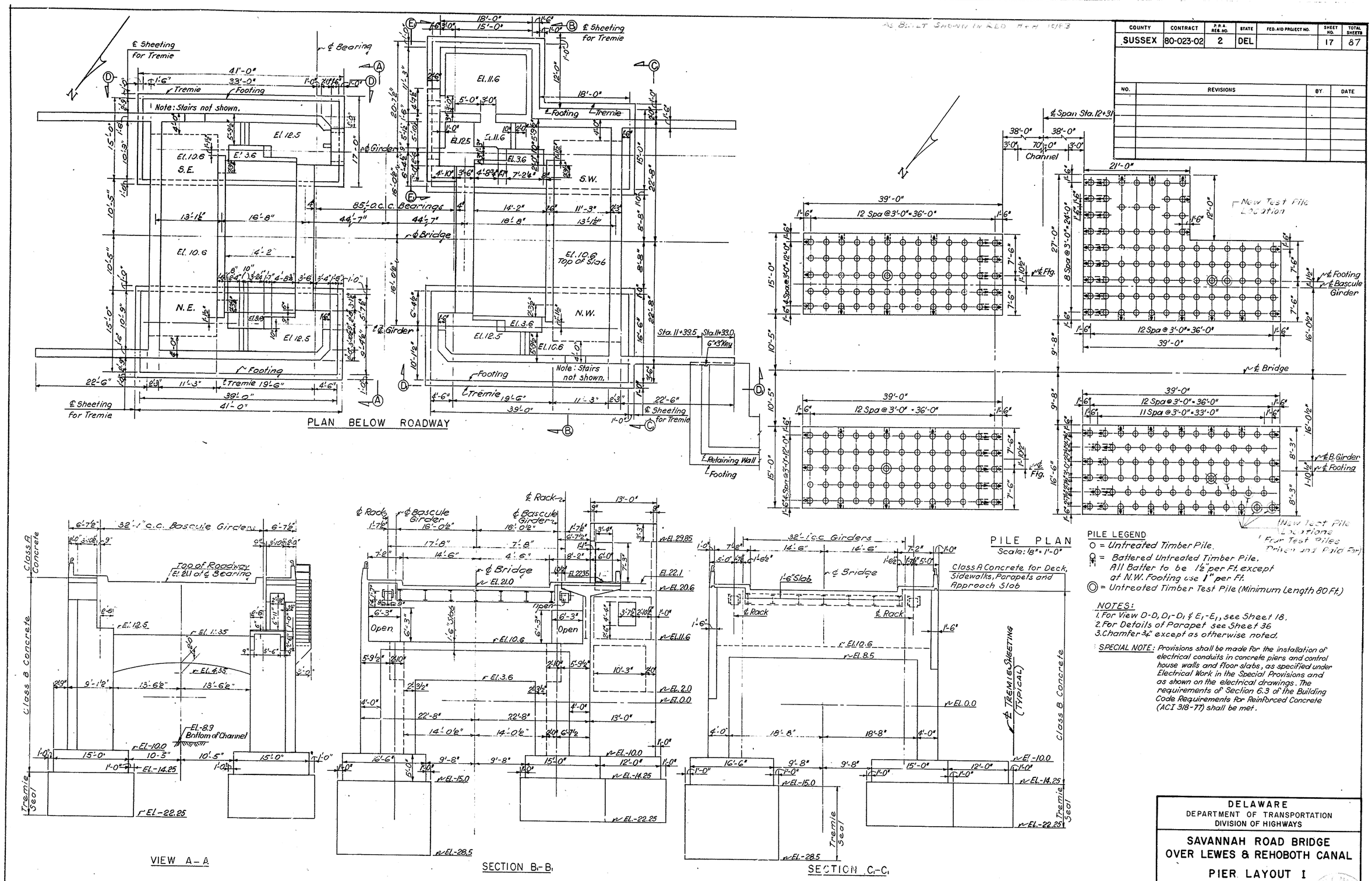

DELAWARE
DEPARTMENT OF TRANSPORTATION
DIVISION OF HIGHWAYS

SAVANNAH ROAD BRIDGE OVER LEWES & REHOBOTH CANAL

PIER LAYOUT I

D. A. N.	SCALE	APPROVED BY:
T. B. M. & E. A.	1/8" = 1'-0"	BRIDGE ENGINEER
C. A. N.		

COUNTY	CONTRACT	P.R.A. REF. NO.	STATE	FED. AID PROJECT NO.	SHEET NO.	TOTAL SHEETS
SUSSEX	80-023-02	2	DEL		18	87

NO.	REVISIONS	BY	DATE

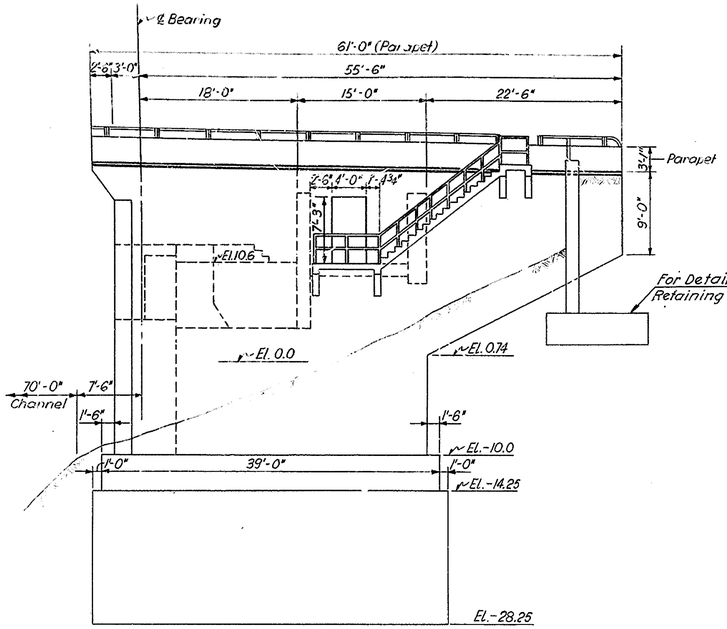

VIEW D₁-D₁
Scale: ⅛"=1'-0"

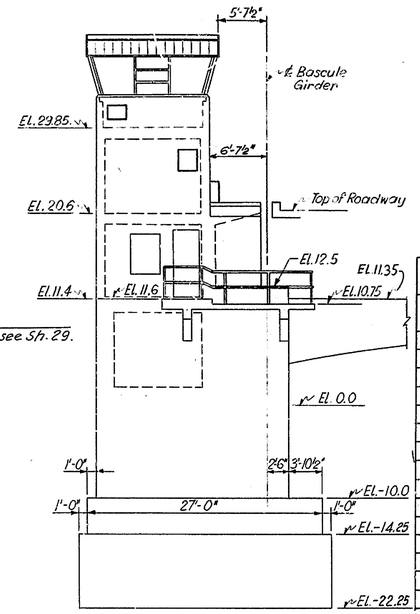

VIEW E₁-E₁
Scale: ⅛"=1'-0"

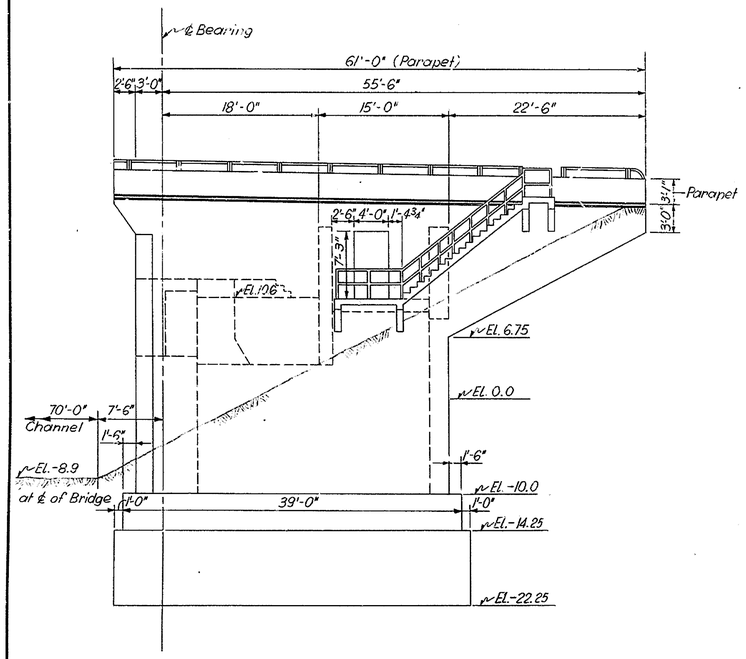

VIEW D-D
Scale: ⅛"=1'-0"

WEST PIER - CONTROL HOUSE

MARK	LENGTH	NO. REQD	TYPE	DETAIL DIMENSIONS A	B	C	D	E	G	REMARKS
H401	5'- 0"	34	STR.							
H402	4'- 8"	20	T1	0'- 5"	1'- 2"	0'- 9"	1'- 2"	0'- 9"	0'- 5"	
H403	5'- 4"	19	T5	0'- 5"	1'- 6"	0'- 5"	0'- 8"	1'- 0"	0'- 5"	F=0'-11", H=0'-6"
H404	3'- 2"	8	T1	0'- 5"	0'- 5"	0'- 9"	0'- 5"	0'- 9"	0'- 5"	
H405	3'- 6"	18	T1	0'- 5"	0'- 5"	0'-11"	0'- 5"	0'-11"	0'- 5"	
H406	4'- 3"	4	17		0'- 9"	3'- 6"	-			
H407	1'- 9"	36	17		0'- 9"	1'- 0"	-			
H408	4'- 0"	2	STR.							
H409	5'- 5"	26	17		0'- 9"	3'-11"	0'- 9"			
H410	5'- 2"	7	17		0'- 9"	3'- 8"	0'- 9"			
H411	3'- 8"	3	STR.							
H412	4'- 5"	29	STR.							
H413	8'- 4"	5	STR.							
H414	5'- 9"	6	17		0'- 9"	5'- 0"	-			
H415	5'- 9"	9	STR.							
H416	7'- 3"	12	STR.							
H417	5'- 3"	4	17		0'- 9"	4'- 6"				
H418	3'- 0"	3	T1	0'- 5"	0'- 6"	0'- 7"	0'- 6"	0'- 7"	0'- 5"	
H419	2'- 6"	24	STR.							
H420	4'- 6"	11	T1	0'- 5"	1'- 2"	0'- 8"	1'- 2"	0'- 8"	0'- 5"	
H421	3'- 6"	14	T1	0'- 5"	0'- 8"	0'- 8"	0'- 8"	0'- 8"	0'- 5"	
H422	3'-10"	4	T1	0'- 5"	0'- 6"	1'- 0"	0'- 6"	1'- 0"	0'- 5"	
H501	9'- 7"	44	1	0'- 7"	8'- 5"				0'- 7"	
H502	8'- 5"	1	STR.							
H503	5'- 7"	2	1	0'- 7"	4'- 5"				0'- 7"	
H504	13'- 8"	40	1	0'- 7"	12'- 6"				0'- 7"	
H505	14'- 8"	32	1	0'- 7"	13'- 6"				0'- 7"	
H506	11'- 8"	14	1	0'- 7"	10'- 6"				0'- 7"	
H507	18'- 8"	18	1	0'- 7"	17'- 6"				0'- 7"	
H508	14'- 2"	16	1	0'- 7"	13'- 0"				0'- 7"	
H509	6'- 2"	8	1	0'- 7"	5'- 0"				0'- 7"	
H510	5'- 5"	10	1	0'- 7"	4'- 3"				0'- 7"	
H511	5'- 2"	10	1	0'- 7"	4'- 0"				0'- 7"	
H512	9'- 1"	8	1	0'- 7"	8'- 6"				0	
H601	18'- 8"	9	17		2'- 0"	14'- 8"	2'- 0"			
H602	13'- 9"	50	STR.							
H603	21'- 4"	22	17		2'- 0"	17'- 4"	2'- 0"			
H604	8'- 6"	6	STR.							
H605	24'- 4"	4	17			3'- 5"	17'- 6"	3'- 5"		
H606	22'- 0"	4	17			2'-10"	16'- 4"	2'-10"		
H607	12'- 8"	34	STR.							
H608	12'- 3"	32	STR.							
H609	9'- 1"	32	STR.							
H610	5'- 5"	60	STR.							
H611	21'- 6"	6	17		2'- 0"	17'- 6"	2'- 0"			
H612	21'- 8"	20	17		2'- 0"	17'- 8"	2'- 0"			
H613	20'- 4"	16	17		2'- 0"	16'- 4"	2'- 0"			
H614	20'-10"	10	17		2'- 0"	16'-10"	2'- 0"			
H615	11'- 4"	18	STR.							
H616	11'- 2"	20	2	0'-10"	9'- 6"				0'-10"	
H617	5'- 0"	6	17		0'- 6"	4'- 6"	-			
H618	8'- 6"	12	17		0'- 6"	8'- 0"	-			
H619	6'-10"	8	STR.							
H620	4'- 4"	18	17		0'- 6"	3'- 4"	0'- 6"			
H621	16'- 6"	4	17		3'- 6"	13'- 0"	-			
H622	9'-10"	21	STR.							
H623	9'- 8"	6		0'- 8"	8'- 0"					
H624	5'- 7"	10								
H625	4'- 8"	24	17		2'- 0"	0'- 8"	2'- 0"			
H626	8'- 3"	13	STR.							
H513	17'- 6"	24	STR.							
H514	13'- 0"	36	STR.							
H515	13'- 1"	6	1	0'- 7"	12'- 6"				0	

WEST PIER - CONTROL HOUSE (CONT'D)

MARK	LENGTH	NO. REQD	TYPE	DETAIL DIMENSIONS A	B	C	D	E	G	REMARKS
H627	3'- 3"	9	STR.							
H628	15'- 2"	4	17		2'-10"	12'- 4"				
H629	20'- 7"	1	17		2'- 0"	17'- 8"	0'-11"			
H630	19'- 6"	1	17		2'- 0"	16'-10"	0'- 8"			
H801	20'- 6"	29	STR.							
H802	12'-10"	36	STR.							
H803	14'- 0"	32	STR.							
H804	15'- 1"	14	1	1'- 1"	14'- 0"				-	
H805	17'- 6"	10	STR.							
H806	11'-10"	6	STR.							
H807	9'- 4"	3	STR.							
H808	4'- 6"	12	STR.							
H809	5'- 4"	9	STR.							
H810	6'- 0"	4	STR.							
H811	20'- 1"	4	STR.							
H901	8'-11"	4	2	0'- 5"	8'- 6"				-	
H902	13'- 9"	4	STR.							
H903	21'- 8"	2	17		2'- 0"	17'- 8"	2'- 0"			
H904	20'- 4"	2	17		2'- 0"	16'- 4"	2'- 0"			
H1101	15'- 8"	41	STR.							
H1102	16'- 2"	8	1	1'-10"	12'- 6"				1'-10"	
H1103	21'- 2"	6	1	1'-10"	17'- 6"				1'-10"	

BAR TYPES

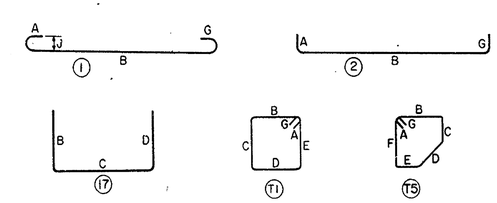

NOTE:
Piles not shown - see Sheet No. 17.

DELAWARE
DEPARTMENT OF TRANSPORTATION
DIVISION OF HIGHWAYS

SAVANNAH ROAD BRIDGE
OVER LEWES & REHOBOTH CANAL
PIER LAYOUT II

D. A. N.	SCALE	APPROVED BY
T. B.M.&E.A.	⅛" = 1'-0"	
C. A. N.		BRIDGE ENGINEER

ROBERT C. McDOWELL REGISTERED PROFESSIONAL ENGINEER NO. 3069 DELAWARE

COUNTY	CONTRACT	P.R.A. REG. NO.	STATE	FED. AID PROJECT NO.	SHEET NO.	TOTAL SHEETS
SUSSEX	80-023-02	2	DEL		19	87

NO.	REVISIONS	BY.	DATE

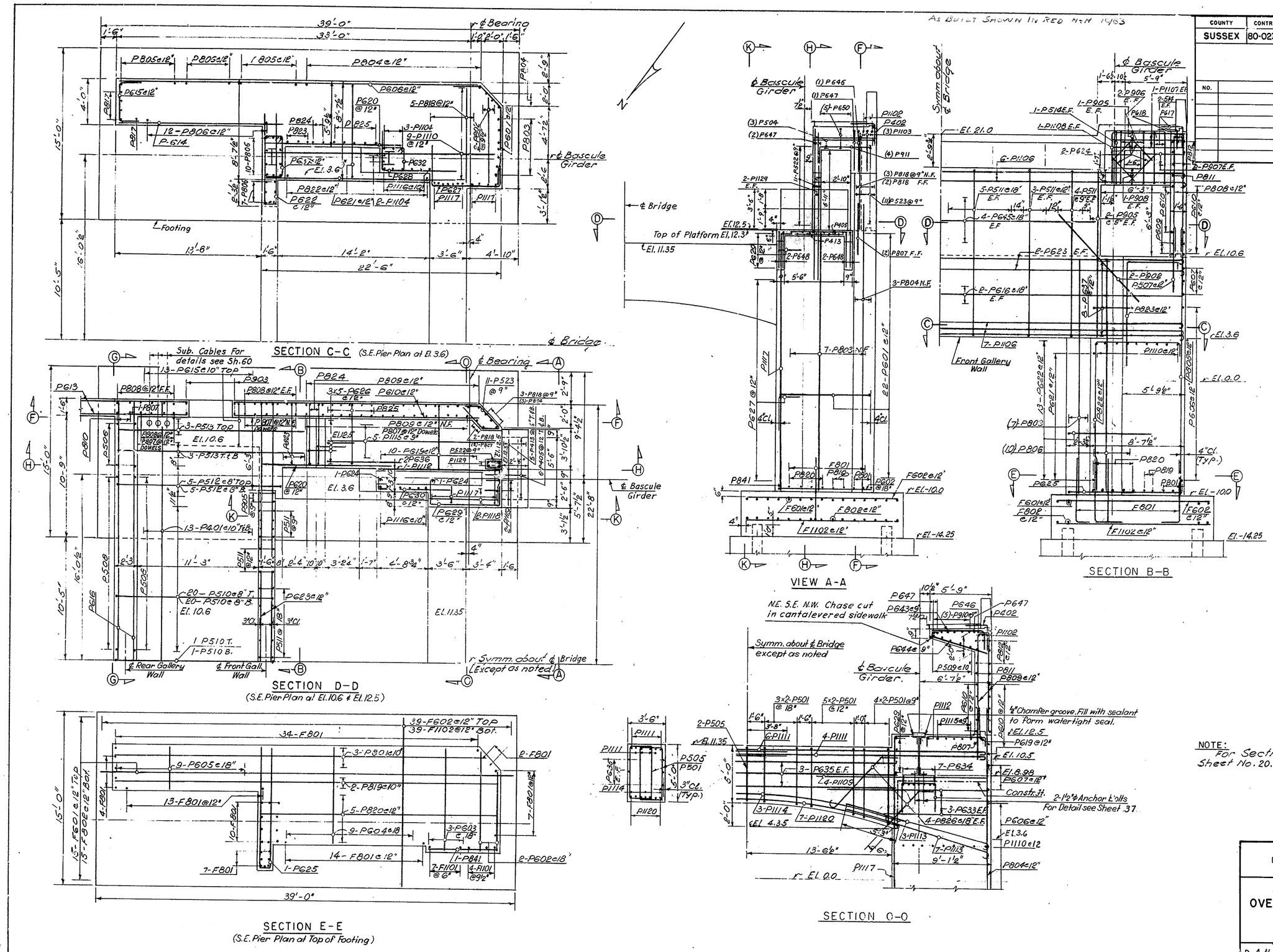

NOTE:
For Sections F-F; G-G; H-H & K-K see Sheet No. 20.

DELAWARE
DEPARTMENT OF TRANSPORTATION
DIVISION OF HIGHWAYS

SAVANNAH ROAD BRIDGE
OVER LEWES & REHOBOTH CANAL
EAST PIER DETAILS I

D. A. N.	SCALE	APPROVED BY:
T. B.M. & E.A.	¼" = 1'-0"	[signature]
C. A. N.		BRIDGE ENGINEER

ROBERT C. McDOWELL REGISTERED NO. 3669 DELAWARE PROFESSIONAL ENGINEER

COUNTY	CONTRACT	F.P.A. REG. NO.	STATE	FED. AID PROJECT NO.	SHEET NO.	TOTAL SHEETS
SUSSEX	30-023-02	2	DEL		20	87

NO.	REVISIONS	BY	DATE

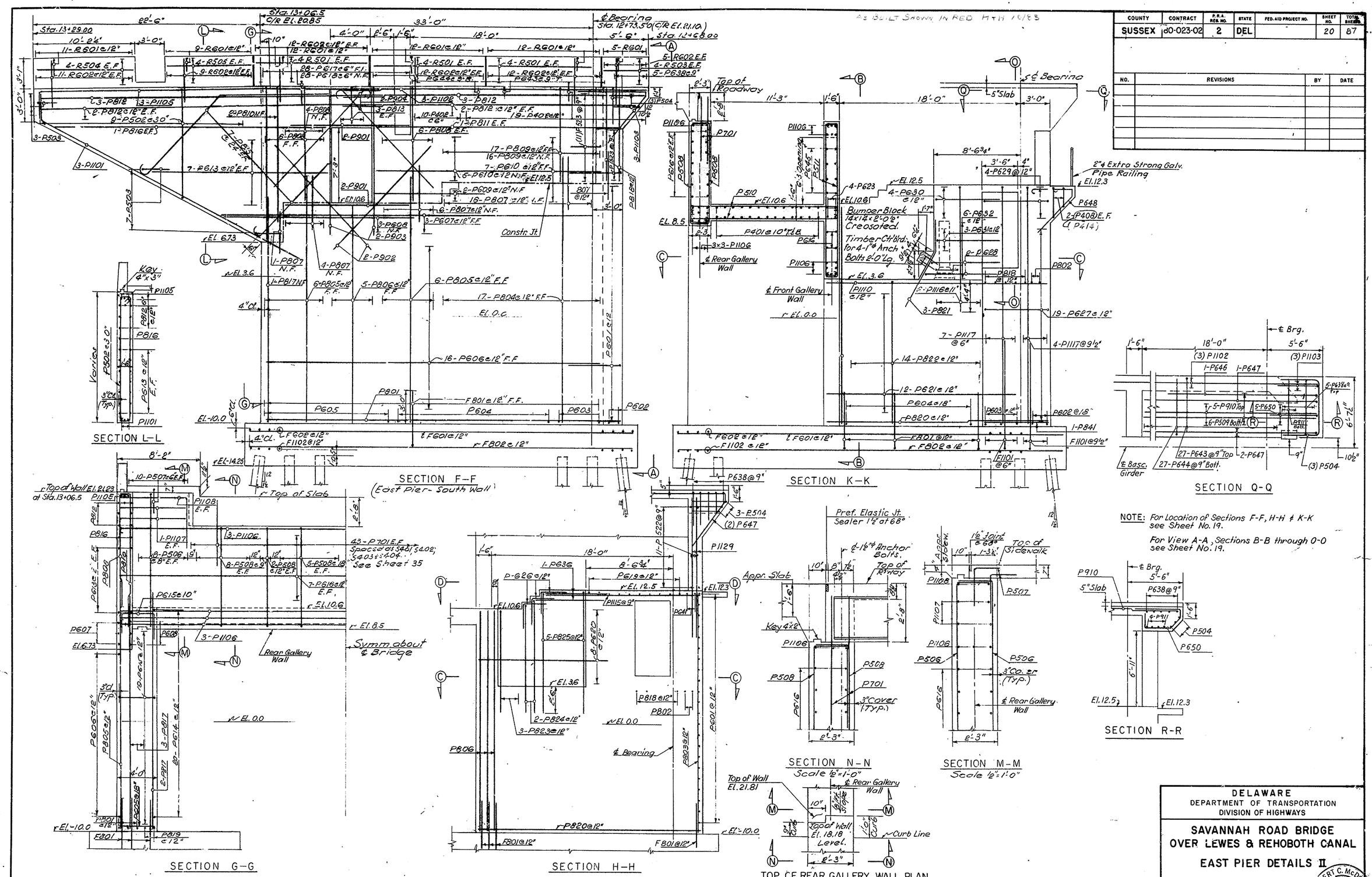

DELAWARE
DEPARTMENT OF TRANSPORTATION
DIVISION OF HIGHWAYS

SAVANNAH ROAD BRIDGE OVER LEWES & REHOBOTH CANAL

EAST PIER DETAILS II

D. A. N.
T. B. M. & E. A.
C. A. N.

SCALE 1/4" = 1'-0" AND AS NOTED

APPROVED BY: H. C. McDonald
BRIDGE ENGINEER

HUBERT C. McDONALD REGISTERED PROFESSIONAL ENGINEER NO. 3069

COUNTY	CONTRACT	P.R.A. REG. NO.	STATE	FED. AID PROJECT NO.	SHEET NO.	TOTAL SHEETS
SUSSEX	80-023-02	2	DEL		21	87

NO.	REVISIONS	BY	DATE

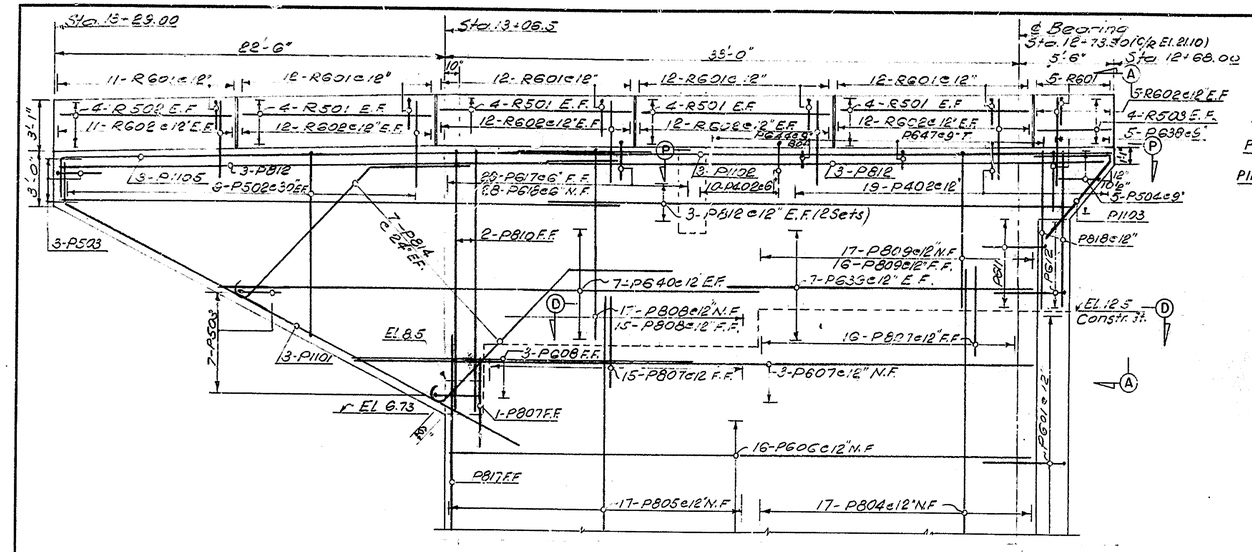

EAST PIER — NORTH WALL - ELEVATION

(Reinf. not shown - similar to South wall)

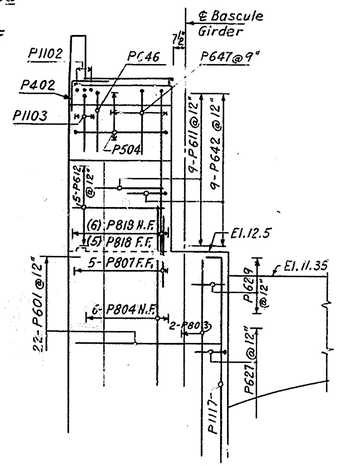

VIEW A-A

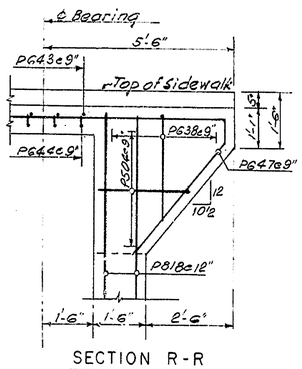

SECTION R-R

Scale 1½" = 1'-0"

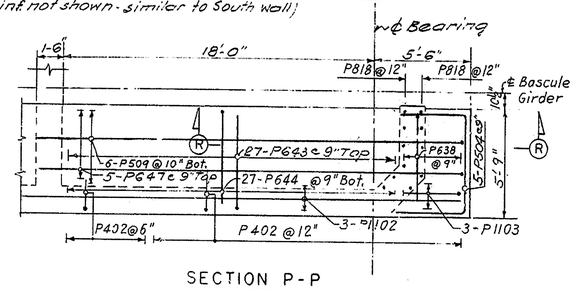

SECTION P-P

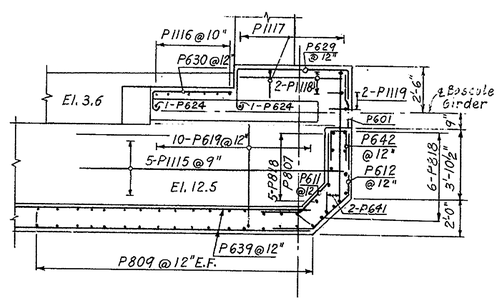

SECTION D-D

EAST PIER - PARAPETS

	MARK	LENGTH	NO. REQD	TYPE	DETAIL DIMENSIONS A	B	C	D	H	K	REMARKS
	R501	11'-2"	56	STR							
	R502	10'-0"	8	STR							
	R503	4'-3"	16	STR							
	R504	9'-10"	8	STR							
	R505	8'-4"	8	STR							
*	R601	2'-9"	125	16		1'-1"	0'-7"	1'-1"	5/8"	1'-1"	
**	R602	4'-9"	250	STR							

* Epoxy Coated

* 125-Bars at S.W. side Epoxy Coated

BAR TYPES

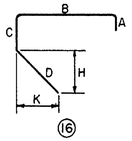

DELAWARE
DEPARTMENT OF TRANSPORTATION
DIVISION OF HIGHWAYS

SAVANNAH ROAD BRIDGE
OVER LEWES & REHOBOTH CANAL

EAST PIER DETAILS II

D. A. N.	SCALE	APPROVED BY:
T. B. M. & E.A.	¼" = 1'-0"	
C. A. N.		BRIDGE ENGINEER

ROBERT C. McDONALD REGISTERED PROFESSIONAL ENGINEER NO. 3069

COUNTY	CONTRACT	P.R.A. REG. NO.	STATE	FED. AID PROJECT NO.	SHEET NO.	TOTAL SHEETS
SUSSEX	80-023-02	2	DEL		22	87

NO.	REVISIONS	BY	DATE

EAST PIER

MARK	LENGTH	NO. REQD	TYPE	DETAIL DIMENSIONS A	B	C	D	E	G	REMARKS
F601	38'-4"	30	STR							
F602	12'-4"	78	STR							
F801	7'-3"	182	17		6'-6"	1'-3"				
F802	38'-4"	30	STR							
F1101	11'-9"	22	17		10'-0"	1'-9"				
F1102	14'-4"	78	STR							
P401	44'-10"	26	STR							
P402	3'-4"	58	20		1'-6"	1'-10"				
P403	7'-9"	12	STR							
P404	19'-0"	12	STR							
P405	4'-0"	51	STR							
P406	4'-7"	43	2	0'-7"	4'-0"					
P407	1'-9"	51	17	-	0'-9"	1'-0"				
P408	2'-3" TO 31'-8"	30	17		0'-5"	1'-5" TO 2'-10"	0'-5"			10 SETS OF 3
P409	[illegible]	10	STR							
P411	2'-3" TO 2'-6"	2	17		0'-5"	1'-5" TO 2'-10"	0'-5"			4 SETS OF 2
P501	14'-10" TO 17'-10"	48	17	0'-9"	2'-0"	4'-6" TO 6'-5"	2'-0"	4'-6" TO 6'-5"	0'-6"	2 SETS OF 12
P502	8'-2" TO 29'-0"	18	T1	0'-6"	1'-0"	2'-7" TO 13'-0"	1'-0"	2'-7" TO 13'-0"	0'-6"	
P503	5'-0"	20	17		2'-0"	1'-0"	2'-0"			
P504	8'-9" TO 13'-0"	8	17		1'-0" TO 3'-3"	5'-3"	2'-6" TO 4'-2"			
P505	14'-0"	2	T1	0'-6"	2'-0"	4'-[illegible]	2'-0"	4'-6"	0'-6"	
P506	16'-2"	32	T1	0'-6"	1'-9"	12'-3"	1'-[illegible]			
P507	3'-6"	40	17	-	1'-9"	1'-9				
P508	13'-0"	60	T1	0'-6"	1'-9"	9'-1"	1'-[illegible]			
P509	22'-0"	12	STR							
P510	15'-8"	82	1	0'-7"	14'-6"				0'-7"	
P511	17'-1"	48	S3	0'-6"	1'-0"	14'-1"	1'-0"		0'-6"	
P512	16'-4"	20	1	0'-7"	15'-2"				0'-7"	
P513	19'-6"	18	STR							
P514	7'-0"	12	S3	0'-6"	1'-0"	4'-0"	1'-0"		0'-6"	
P522	4'-4"	11	T1	0'-6"	1'-3"	0'-6"	1'-3"	0'-6"	0'-6"	
P523	7'-6"	11	T4	-	1'-4"	2'-5"	1'-4"	2'-5"	-	
P601	11'-1"	44	14	2'-0"	2'-7"	6'-6"				H=1'-2"
P602	6'-5" TO 8'-5"	4	STR							
P603	8'-5"	6	STR							
P604	8'-0"	18	STR							
P605	3'-4"	18	STR							
P606	33'-6"	32	STR							
P607	34'-0" TO 37'-9"	6	STR							
P608	19'-0"	6	STR							
P609	11'-0"	2	STR							
P610	22'-8"	12	STR							
P611	6'-9"	18	14	2'-0"	1'-9"	3'-[illegible]				
P612	8'-0"	5	14	2'-0"	2'-7"	3'-[illegible]				
P613	25'-0" TO 13'-0"	14	STR							2 SETS OF 7
P614	15'-9"	40	STR							
P615	7'-4"	64	17	-	2'-0"	3'-4"	2'-0"			
P616	44'-10"	18	STR							
P617	5'-0"	56	17		2'-6"	2'-6"				

EAST PIER (CONT'D)

MARK	LENGTH	NO. REQD	TYPE	DETAIL DIMENSIONS A	B	C	D	E	G	REMARKS
P618	4'-4"	56	17		2'-2"	2'-2"				
P619	7'-8"	20	17		1'-3"	5'-3"	1'-3"			
P620	12'-9"	16	STR							
P621	19'-0"	24	STR							
P622	17'-0"	26	17		8'-0"	1'-0"	8'-0"			
P623	46'-2"	4	1	0'-8"	44'-10"				0'-8"	
P624	3'-0"	20	STR							
P625	21'-6"	2	17		10'-3"	1'-0"	10'-3"			
P626	5'-4"	30	17		2'-8"	2'-8"	-			
P627	11'-9"	38	17		3'-6"	6'-2"	2'-1"			
P628	10'-6"	4	17		4'-0"	6'-6"				
P629	11'-0"	8	S2	0'-7"	2'-0"	6'-4"	2'-1"			
P630	7'-11"	8	12	0'-7"	0'-10"	6'-6"	-			J=0'-6"
P631	9'-6"	6	17		3'-6"	6'-0"	-			
P632	9'-8"	12	T1	0'-7"	2'-0"	2'-3"	2'-0"	2'-3"	0'-7"	
P633	10'-0" TO 15'-0"	12	STR							4 SETS OF 3 BARS
P634	7'-0"	28	17		2'-0"	3'-0"	2'-0"			
P635	29'-0"	6	STR							
P636	7'-0"	4	STR							
P637	12'-2"	16	T1	0'-7"	1'-10"	3'-8"	1'-10"	3'-8"	0'-7"	
P638	11'-2" TO 6'-5"	10	17		0'-7" TO 3'-2"	5'-3"	0'-7" TO 3'-2"			2 SETS OF 5
P639	18'-3"	14	STR							
P640	37'-6" TO 24'-9"	14	STR							2 SETS OF 7
P641	7'-6" TO 9'-6"	4	17		1'-3"	3'-0" TO 7'-0"	1'-3"			
P642	5'-0"	18	17		2'-0"	1'-0"	2'-0"			
P643	7'-1"	54	17		2'-1"	5'-0"				
P644	7'-7"	54	12		2'-0"	0'-4"	5'-3"			
P645	29'-4"	8	STR							
P646	28'-9"	2	16		24'-6"	0'-9"	3'-6"			H=2'-8";K=2'-4"
P647	29'-9"	8	16		24'-6"	0'-9"	4'-6"			H=3'-5";K=3'-0"
P648	10'-3"	10	12	0'-8"	4'-0"	0'-9"	4'-10"			J=0'-6";H=3'-1"
P649	9'-9"	4	12	0'-8"	4'-0"	0'-3"	4'-10"			
P650	8'-9"	5	T5	-	5'-0"	0'-9"	1'-5"	1'-7"	-	F=1'-9" H=1'-0"
P701	6'-0"	86	STR							
P801	33'-4" TO 35'-4"	6	STR							
P802	7'-3" TO 8'-4"	4	STR							
P803	22'-0"	9	STR							
P804	26'-6"	46	STR							
P805	24'-6"	28	STR							
P806	20'-0"	63	STR							
P807	6'-0"	66	STR							
P808	11'-6"	54	2	1'-0"	10'-6"					
P809	9'-6"	66	2	1'-0"	8'-6"					
P810	15'-0"	4	2	1'-0"	14'-0"					
P811	24'-6"	2	STR							
P812	32'-3"	32	STR							
P813	4'-5"	6	2	1'-2"	3'-3"					
P814	17'-1"	14	7	1'-1"	-	10'-0"	6'-0"			2 SETS OF 6
P815	10'-10" TO 22'-1"	14	7	1'-1"	-	9'-6" TO 10'-0"	0'-3" TO 11'-0"			2 SETS OF 6
P816	27'-0"	2	STR							
P817	22'-0"	10	STR							
P818	8'-9"	26	STR							
P819	35'-4"	4	STR							

EAST PIER (CONT'D)

MARK	LENGTH	NO. REQD	TYPE	DETAIL DIMENSIONS A	B	C	D	E	G	REMARKS
P820	21'-10"	10	STR							
P821	9'-0"	6	14	3'-0"	6'-0"					H=5'-0"
P822	23'-8"	28	16	2'-8"	8'-0"	13'-0"				
P823	17'-6"	6	16	2'-8"	5'-3"	9'-6"				
P824	18'-2"	4	16	2'-8"	5'-3"	10'-3"				
P825	19'-5"	10	16	2'-8"	5'-3"	11'-6"				
P826	8'-3" TO 11'-0"	16	7	1'-1"	-	3'-6" TO 6'-3"	3'-8"			
P841	6'-2"	2	STR							
P901	11'-7"	4	STR							
P902	13'-6"	6	STR							
P903	14'-6"	4	2	1'-0"	13'-6"					
P904	13'-9"	4	1	1'-3"	12'-6"					
P905	17'-9"	8	S3	0'-10"	1'-0"	14'-1"	1'-0"		0'-10"	
P906	6'-0"	8	2	1'-0"	4'-0"				1'-0"	
P907	3'-8"	8	STR							
P908	2'-10"	4	2	1'-0"	0'-10"				1'-0"	
P909	3'-1"	4	2	1'-0"	1'-1"				1'-0"	
P910	24'-0"	5	STR							
P911	6'-8"	4	2	1'-5"	5'-3"				-	
P1101	31'-0"	6	12			2'-6"	28'-6"			H=12'-9", K=26'-2"
P1102	34'-0"	6	STR							
P1103	13'-0"	6	16	-	6'-6"	0'-9"	5'-9"			H=4'-4"
P1104	11'-6"	10	STR							K=3'-9"
P1105	36'-6"	6	17	-	2'-6"	34'-0"	-			
P1106	48'-6"	25	1	1'-10"	44'-10"				1'-10"	
P1107	6'-8"	16	STR							
P1108	12'-2"	8	17		5'-6"	6'-8"				
P1109	16'-3"	8	STR						1'-9"	
P1110	22'-0"	18	STR							
P1111	27'-11"	20	1	1'-10"	26'-1"					
P1112	11'-1"	2	STR							
P1113	16'-4"	20	11	1'-10"	9'-3"	5'-3"				R=47'-6"
P1114	28'-0"	3	9		28'-0"	27'-1"				H=2'-0" R=47'-7"
P1115	16'-0"	10	STR							
P1116	13'-3"	12	17		12'-10"	0'-5"	-			
P1117	23'-6"	22	17		22'-0"	1'-6"	-			
P1118	6'-4"	4	STR				-			
P1119	5'-8"	4	17		4'-4"	1'-4"	-			
P1120	27'-3"	7	9		27'-8"	27'-1"				H=2'-0" R=47'-0"
P1129	13'-3"	4	STR							

BAR TYPES

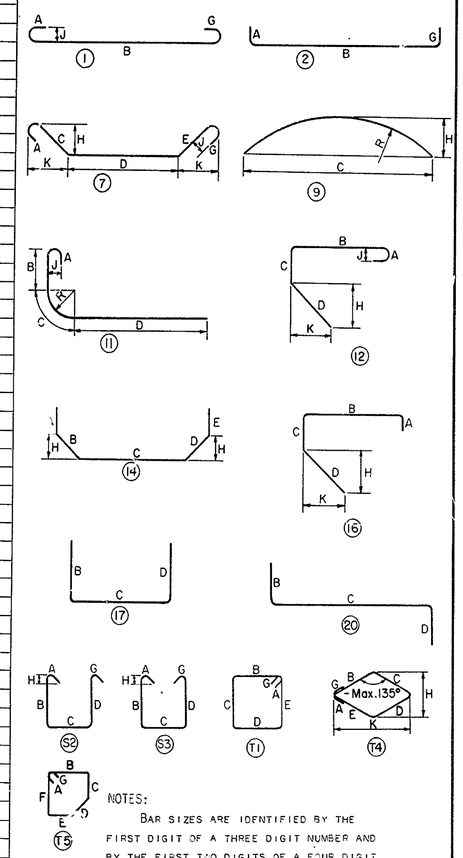

NOTES:

BAR SIZES ARE IDENTIFIED BY THE FIRST DIGIT OF A THREE DIGIT NUMBER AND BY THE FIRST TWO DIGITS OF A FOUR DIGIT NUMBER.

ALL DIMENSIONS ARE OUT TO OUT OF BAR EXCEPT "A" AND "G" ON STANDARD 180° AND 135° HOOKS.

DELAWARE
DEPARTMENT OF TRANSPORTATION
DIVISION OF HIGHWAYS

SAVANNAH ROAD BRIDGE OVER LEWES & REHOBOTH CANAL

EAST PIER BAR LISTS

D. A. N.	SCALE	APPROVED BY:
T. —	NO SCALE	
C. A. N.		BRIDGE ENGINEER

ROBERT C. McDOWELL
R. GISTEK
PROFESSIONAL ENGINEER

COUNTY	CONTRACT	P.R.A. REG. NO.	STATE	FED. AID PROJECT NO	SHEET NO.	TOTAL SHEETS
SUSSEX	80-023-02	2	DEL		23	87

NO.	REVISIONS	BY	DATE

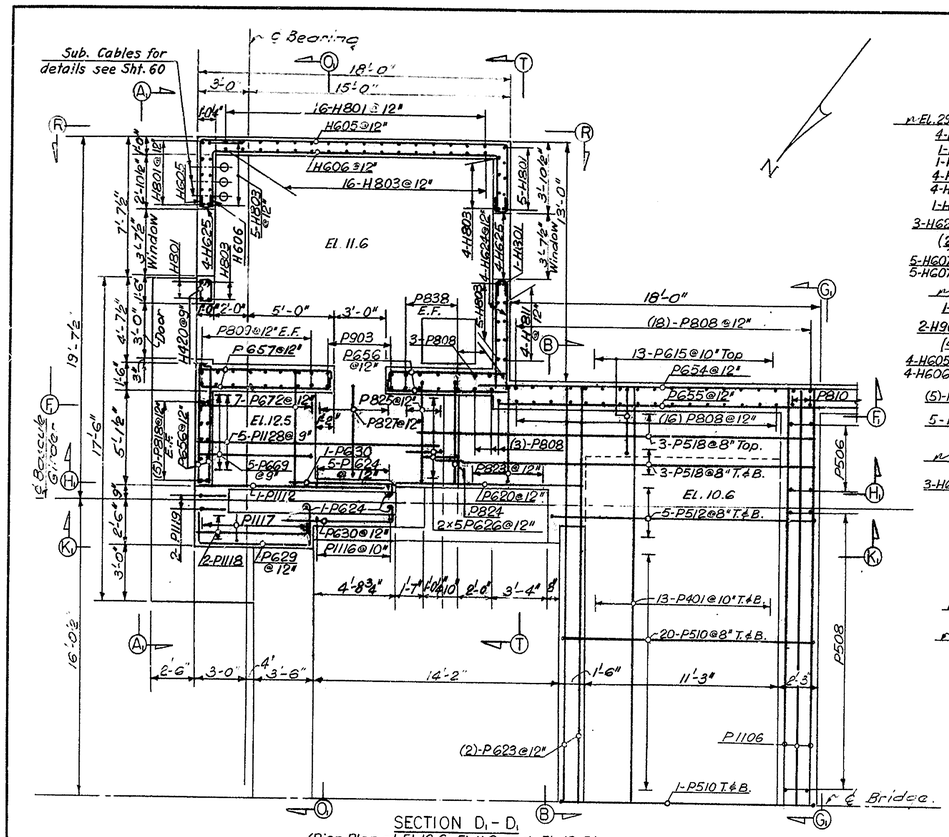

SECTION D_1 - D_1
(Pier Plan at El. 10.6, El. 11.6 and El. 12.5)

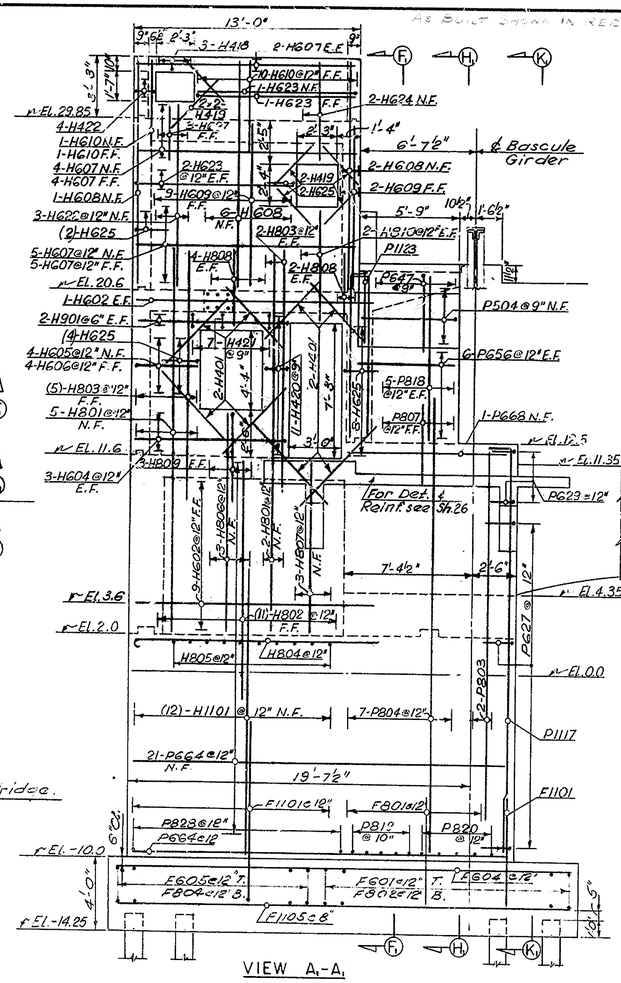

VIEW A_1 - A_1

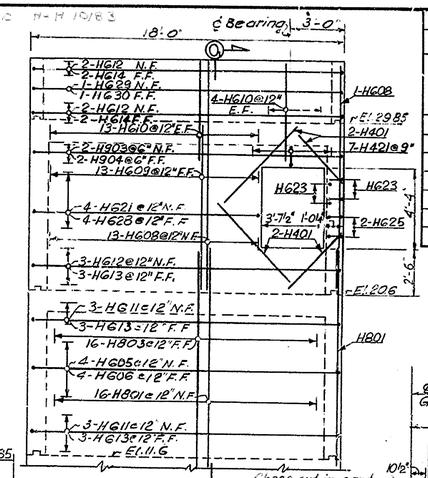

VIEW R - R

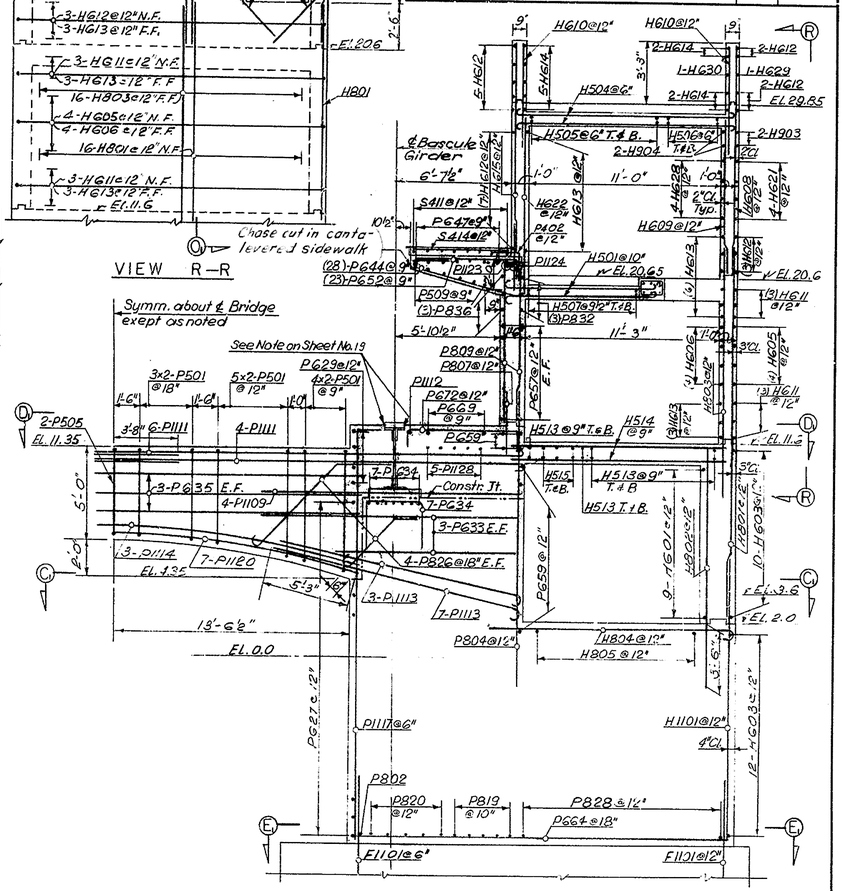

SECTION O_1 - O_1

NOTE: For Sections F_1-F_1 & G_1-G_1 see Sheet No. 24
For Section B-B (oppos. Hand) see Sheet No. 19
For Sections H_1-H_1 & K_1-K_1 see Sheet No. 26
For additional Details see Sheet No. 19

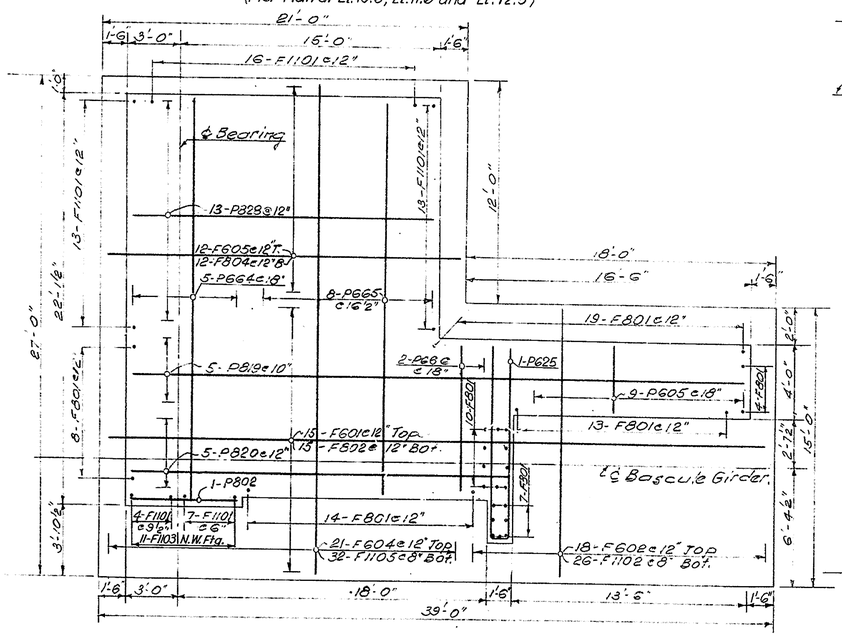

SECTION E_1 - E_1
(Pier Plan at Top of Footing)

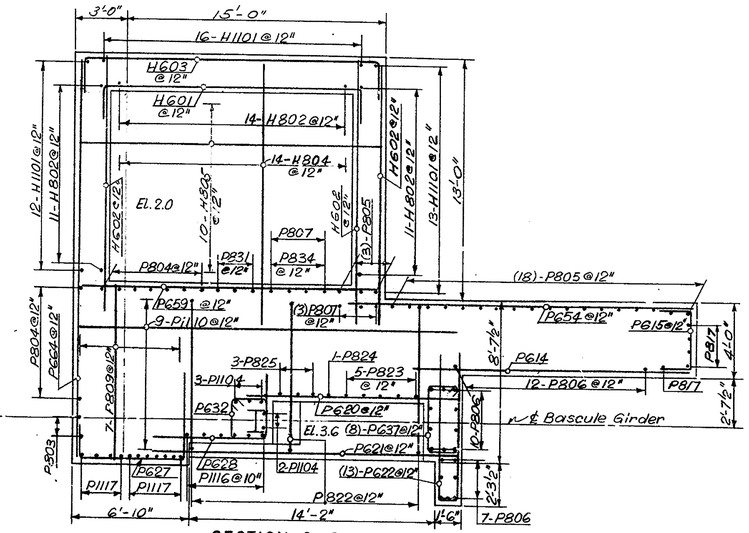

SECTION C_1 - C_1
(Pier Plan at El. 3.6)

DELAWARE
DEPARTMENT OF TRANSPORTATION
DIVISION OF HIGHWAYS

SAVANNAH ROAD BRIDGE OVER LEWES & REHOBOTH CANAL

WEST PIER DETAILS I

D. A. N.	SCALE	APPROVED BY
T. B.M. & E.A.	1/4" = 1'-0"	
C. A. N.		

ROBERT C. McDONALD REGISTERED PROFESSIONAL ENGINEER NO. 3069 — BRIDGE ENGINEER

As Built Shown In Red H+H 10/83

COUNTY	CONTRACT	P.R.A. REG. NO.	STATE	FED. AID PROJECT NO.	SHEET NO.	TOTAL SHEETS
SUSSEX	80-023-02	2	DEL		24	87

NO.	REVISIONS	BY	DATE

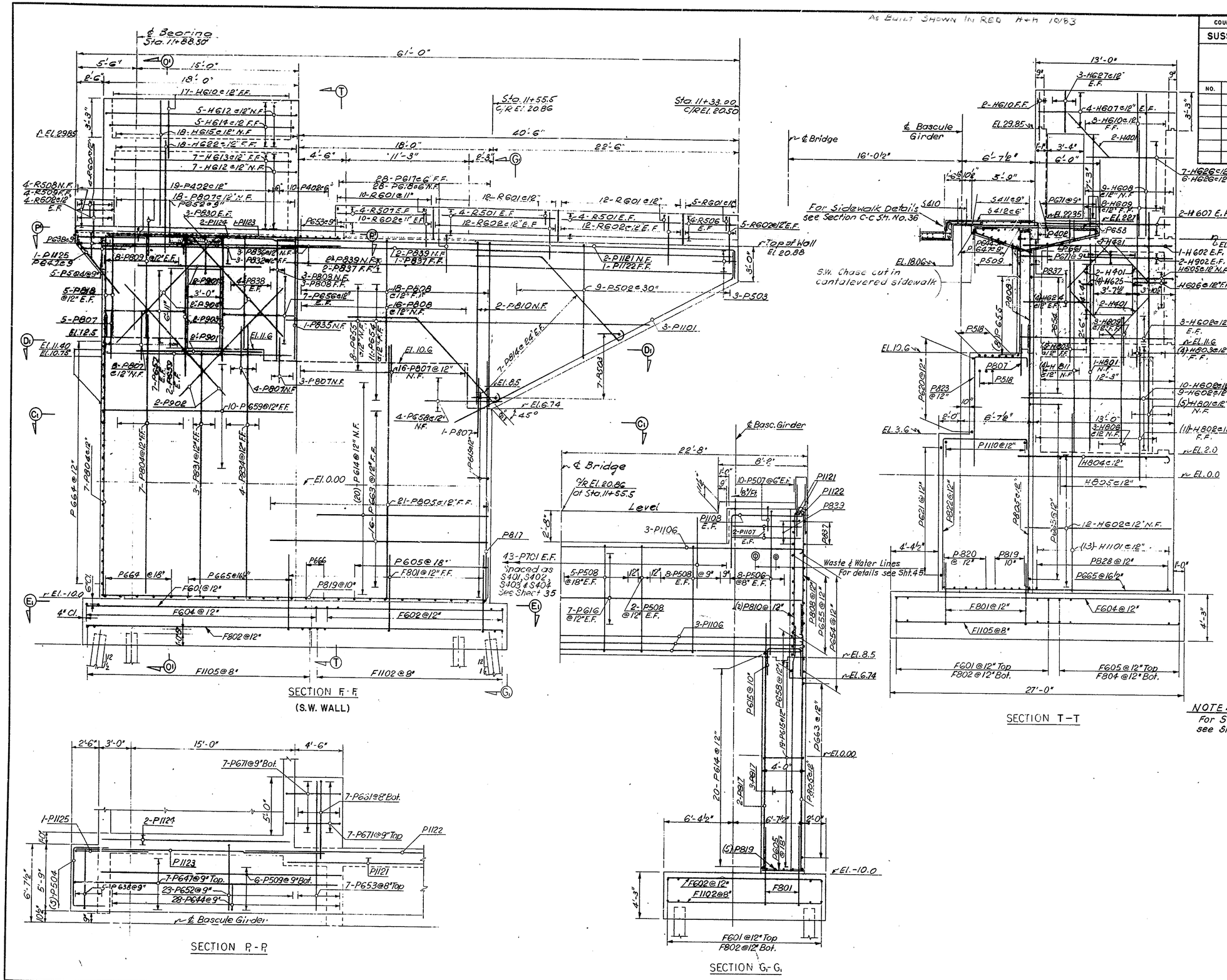

SECTION F-F
(S.W. WALL)

SECTION T-T

NOTE:
For Sections O-O, D1-D1, C1-C1 and E1-E1 see Sheet 23.

SECTION R1-R1

SECTION G1-G1

DELAWARE
DEPARTMENT OF TRANSPORTATION
DIVISION OF HIGHWAYS

SAVANNAH ROAD BRIDGE
OVER LEWES & REHOBOTH CANAL

WEST PIER DETAILS II

D. A. N.	SCALE	APPROVED BY:
T. B.M./E.A.	¼" = 1'-0"	
C. A. N.		

ROBERT C. McDONALD REGISTERED PROFESSIONAL ENGINEER NO. 3069 STATE OF DELAWARE
BRIDGE ENGINEER

EN 12932

COUNTY	CONTRACT	P.R.A. REG. NO.	STATE	FED. AID PROJECT NO.	SHEET NO.	TOTAL SHEETS
SUSSEX	80-023-02	2	DEL		25	87

NO.	REVISIONS	BY	DATE

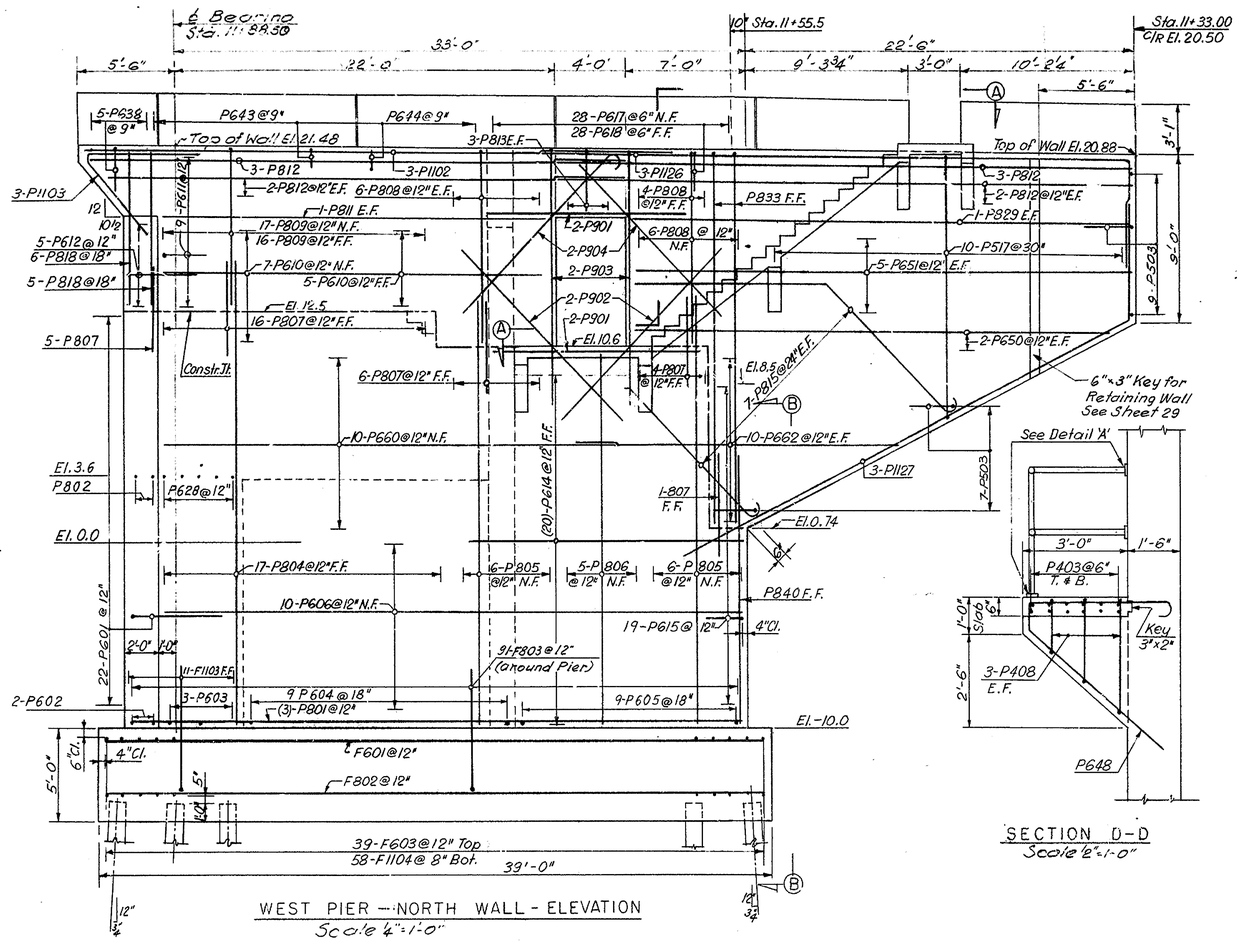

WEST PIER — NORTH WALL - ELEVATION
Scale 1/4"=1'-0"

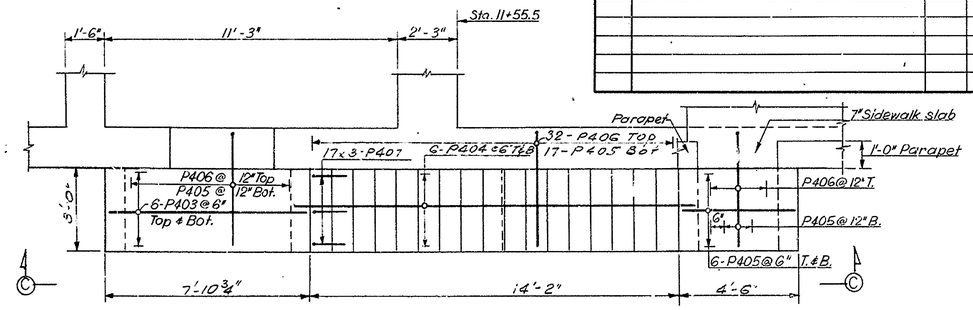

VIEW A-A
Scale 3/8"=1'-0"

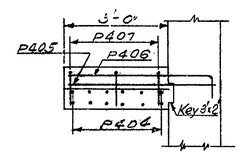

SECTION E-E
Scale 1/2"=1'-0"

SECTION D-D
Scale 1/2"=1'-0"

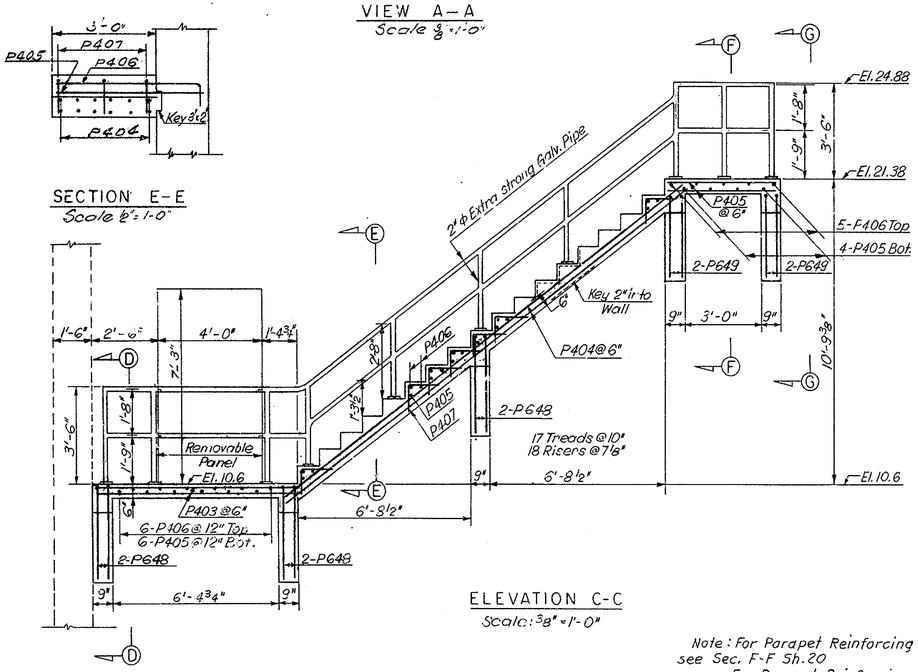

ELEVATION C-C
Scale: 3/8"=1'-0"

Note: For Parapet Reinforcing see Sec. F-F Sh. 20
For Parapet Reinforcing Bar List see Sh. 26.

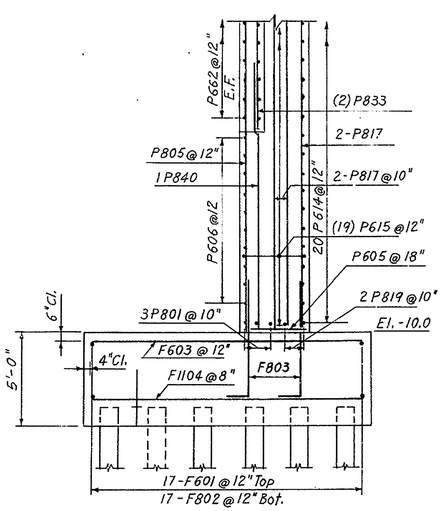

SECTION B-B
Scale: 1/4"=1'-0"

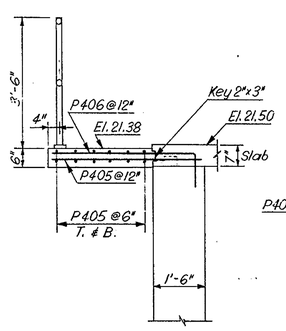

SECTION F-F
Scale: 1/2"=1'-0"

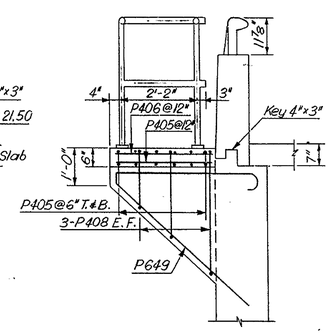

SECTION G-G
Scale: 1/2"=1'-0"

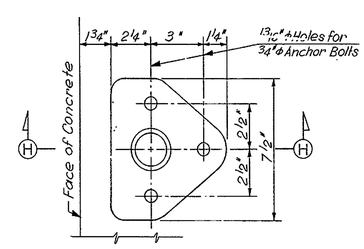

DETAIL 'A'
Scale: 3"=1'-0"

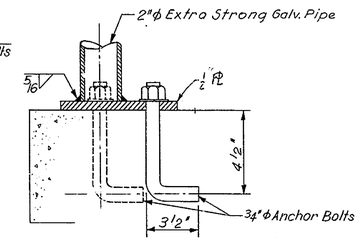

SECTION H-H
Scale: 3"=1'-0"

DELAWARE
DEPARTMENT OF TRANSPORTATION
DIVISION OF HIGHWAYS

SAVANNAH ROAD BRIDGE
OVER LEWES & REHOBOTH CANAL

WEST PIER DETAILS III

D. A. N.	SCALE	APPROVED BY
T. B.M. & E.A.	AS NOTED	[signature]
C. A. N.		BRIDGE ENGINEER

12932

COUNTY	CONTRACT	P.R.A. REG. NO.	STATE	FED. AID PROJECT NO.	SHEET NO.	TOTAL SHEETS
SUSSEX	80-023-02	2	DEL		26	87

NO.	REVISIONS	BY	DATE

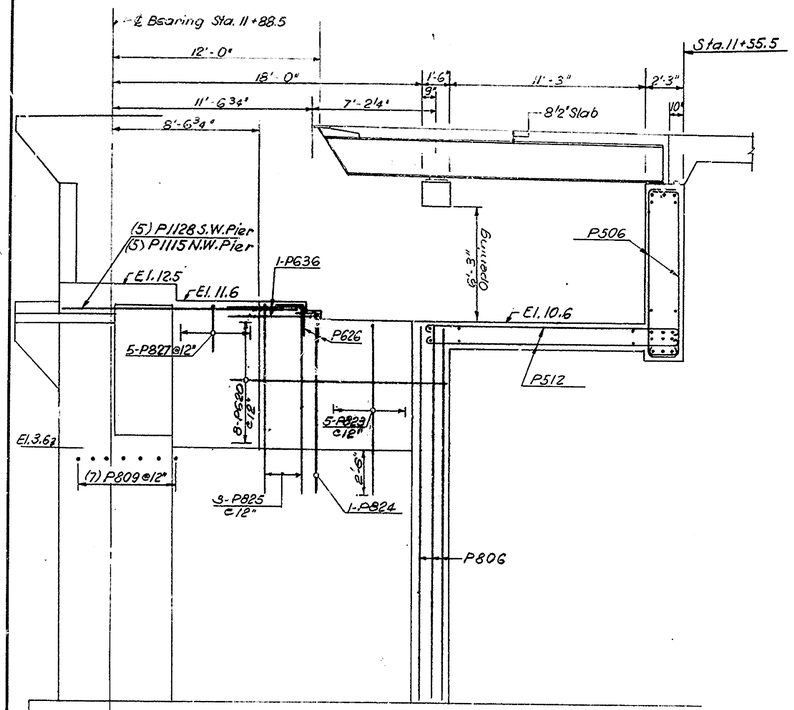

SECTION H_1-H_1
Scale: 1/4"=1'-0"

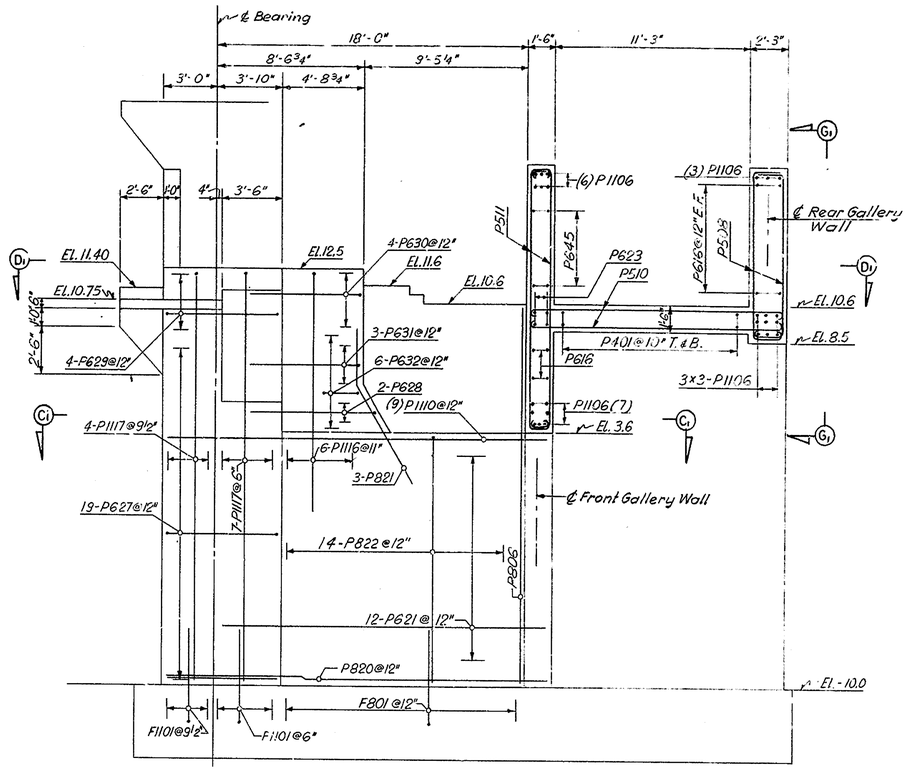

SECTION K_1-K_1
Scale: 1/4"=1'-0"

MARK	LENGTH	No. REQD	TYPE	DETAIL DIMENSIONS A	B	C	D	K	H	REMARKS
WEST PIER - PARAPETS										
R501	11'-2"	40	STR.							
R503	4'-3"	8	STR.							
R504	9'-10"	8	STR.							
R505	8'-4"	8	STR.							
R506	4'-6"	8	STR.							
R507	7'-9"	8	STR.							
R508	4'-9"	4	17		3'-2"	1'-7"	-			
R509	4'-1"	4	17		2'-6"	1'-7"	-			
R510	9'-10"	4	17		4'-2"	5'-8"	-			
R511	8'-6"	4	17		3'-6"	5'-0"	-			
R601	2'-9"	117	16	-	1'-1"	0'-7"	1'-1"	1'-1"	5/8"	
R602	4'-9"	234	STR.							

BAR TYPES

NOTE:
For Location of Section H_1-H_1, K_1-K_1 see Sheet 23.
For Section G_1-G_1 see Sheet 24.
For Section D_1-D_1 see Sheet 23.

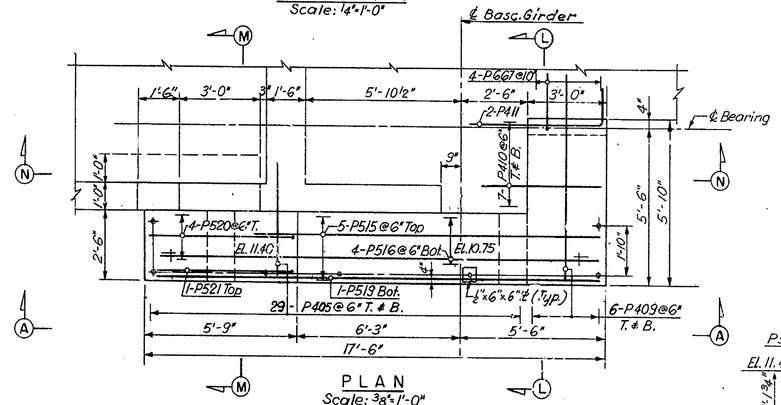

PLAN
Scale: 3/8"=1'-0"

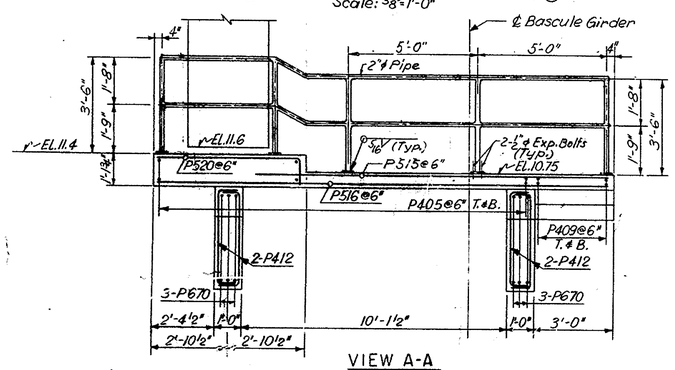

VIEW A-A
Scale: 3/8"=1'-0"

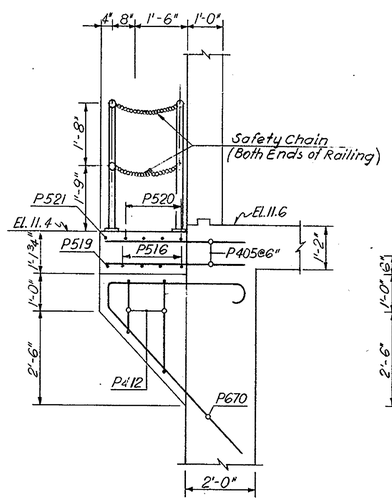

SECTION M-M
Scale: 1/2"=1'-0"

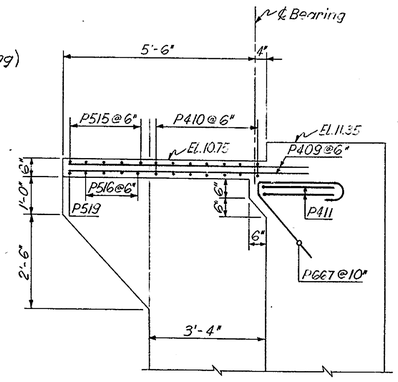

SECTION L-L
Scale: 1/2"=1'-0"

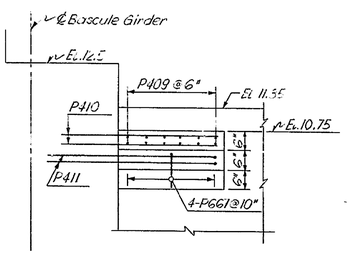

SECTION N-N
Scale: 1/2"=1'-0"

DELAWARE
DEPARTMENT OF TRANSPORTATION
DIVISION OF HIGHWAYS

SAVANNAH ROAD BRIDGE
OVER LEWES & REHOBOTH CANAL

WEST PIER DETAILS IV

D. A. N.	SCALE	APPROVED BY:
T. B.M.&E.A.	AS NOTED	R. C. McDowell
C. A. N.		BRIDGE ENGINEER

ROBERT C. McDOWELL REGISTERED PROFESSIONAL ENGINEER No. 3056 DELAWARE

COUNTY	CONTRACT	P.R.A. REG. NO.	STATE	FED. AID PROJECT NO.	SHEET NO.	TOTAL SHEETS
SUSSEX	80-023-02	2	DEL		27	87

NO.	REVISIONS	BY	DATE

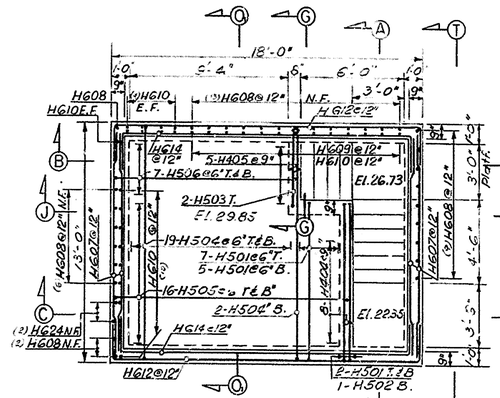

SECTION D-D
(House Floor Plan at El. 29.85)
Scale: 1/4" = 1'-0"

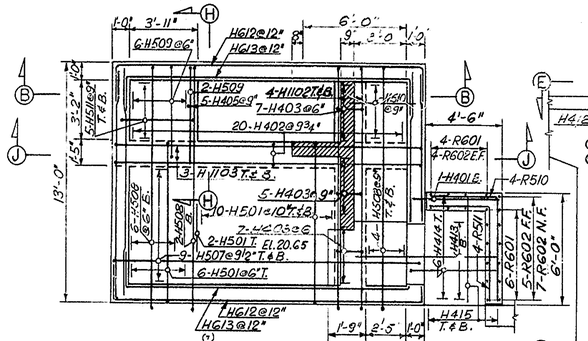

SECTION E-E
(House Floor Plan at El. 20.65)
Scale: 1/4" = 1'-0"

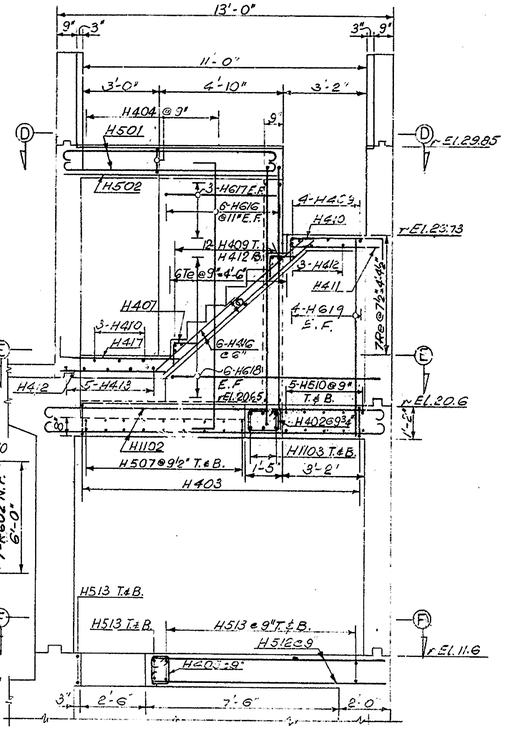

SECTION A-A
Scale 3/8" = 1'-0"

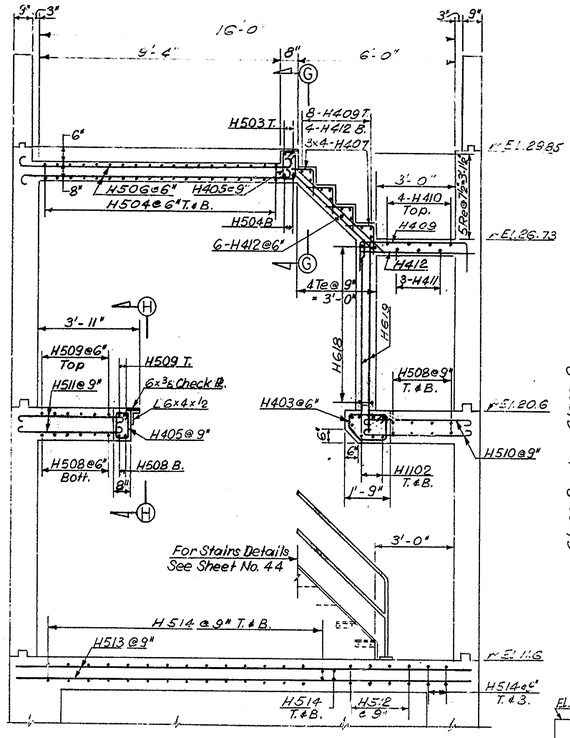

SECTION B-B
Scale 3/8" = 1'-0"

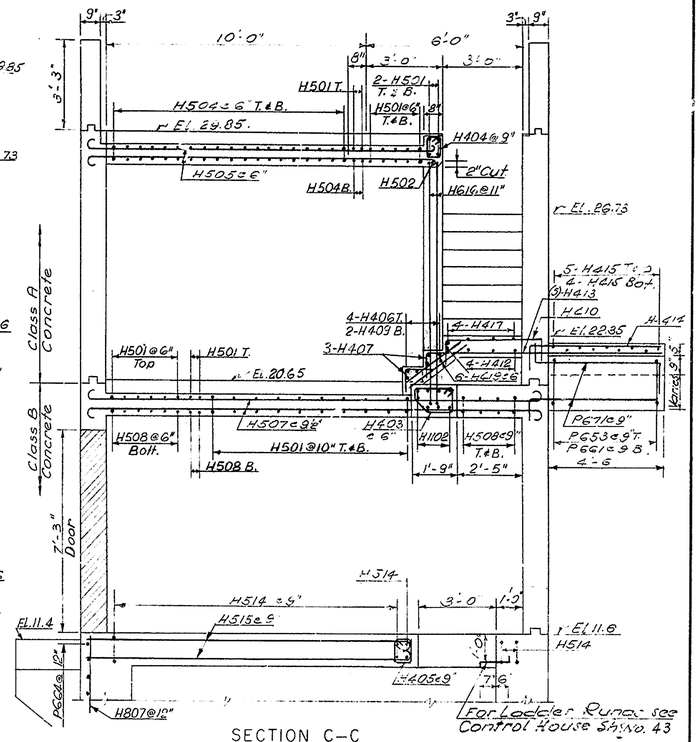

SECTION C-C
Scale 3/8" = 1'-0"

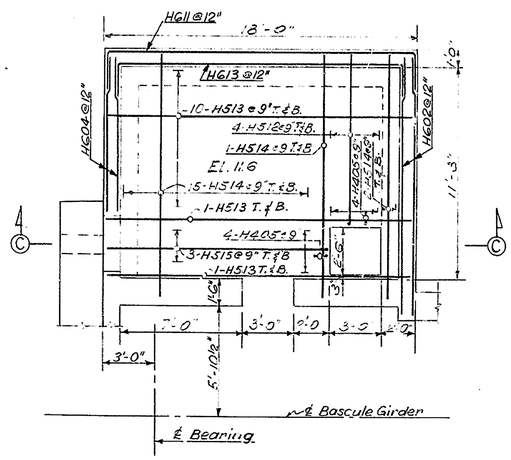

SECTION F-F
(House Floor Plan at El. 11.6)
Scale: 1/4" = 1'-0"

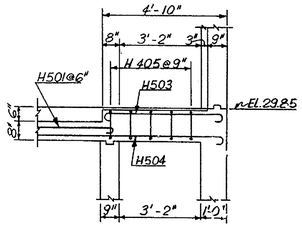

SECTION G-G
Scale: 3/8" = 1'-0"

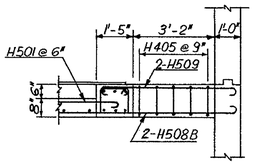

SECTION H-H
Scale: 3/8" = 1'-0"

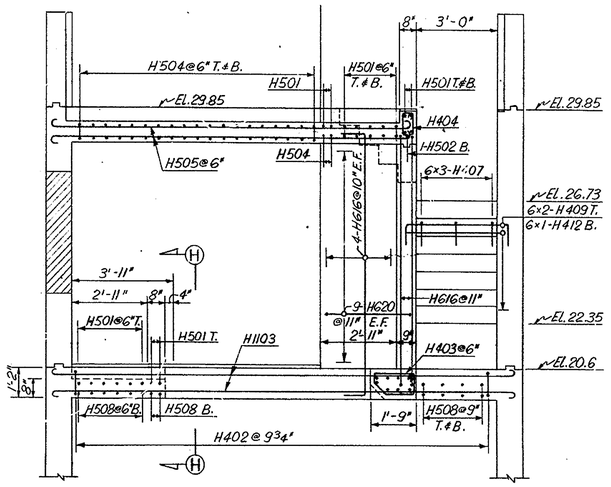

SECTION J-J
Scale: 3/8" = 1'-0"

NOTES:

1. For Section O-O see Sheet No. 23
2. For Section T-T see Sheet No. 24
3. For Control House Reinforcement see Sh. No. 18
4. Floor Slabs shall be placed after concrete in Wall Sections have taken initial set or a minimum of four (4) hours whichever is greater.

DELAWARE
DEPARTMENT OF TRANSPORTATION
DIVISION OF HIGHWAYS

SAVANNAH ROAD BRIDGE
OVER LEWES & REHOBOTH CANAL
WEST PIER DETAILS

D. A. N.	SCALE	APPROVED BY:
T. B.M. & E.A.	AS NOTED	N. C. McDowell
C. A. N.		BRIDGE ENGINEER

ROBERT C. McDOWELL REGISTERED PROFESSIONAL ENGINEER NO. 3069 STATE OF DELAWARE

COUNTY	CONTRACT	P.R.A. REG. NO.	STATE	FED. AID PROJECT NO.	SHEET NO.	TOTAL SHEETS
SUSSEX	80-023-02	2	DEL		28	87

NO.	REVISIONS	BY	DATE

WEST PIER

Mark	Length	No. Reqd	Type	A	B	C	D	E	G	Remarks
F601	38'-4"	32	STR							
F602	14'-4"	18	STR							
F603	15'-10"	39	STR							
F604	26'-4"	21	STR							
F605	20'-4"	12	STR							
F801	7'-9"	75	17		6'-6"	1'-3"	–			
F802	38'-4"	32	STR							
F803	7'-9"	91	17		6'-6"	1'-3"	–			
F804	20'-4"	12	STR							
F1101	11'-9"	53	17		10'-0"	1'-9"	–			
F1102	14'-4"	26	STR							
F1103	10'-7"	11	17		8'-10"	1'-9"	–			
F1104	15'-10"	58	STR							
F1105	26'-4"	32	STR							
P401	44'-10"	26	STR							
P402	3'-4"	58	20		1'-6"	1'-10"				
P403	7'-9"	12	STR							
P404	19'-0"	12	STR							
P405	4'-0"	97	STR							
P406	4'-7"	43	2	0'-7"	4'-0"				–	
P407	1'-9"	51	17		0'-9"	1'-0"	–			
P408	1'-8"	30	17		0'-5"	0'-10"	0'-5"			10 Sets of 3
	TO 3'-8"					TO 2'-10"				
P409	7'-3"	12	STR							
P410	4'-6"	14	STR							
P411	7'-0"	2	17		2'-0"	5'-0"	–			
P412	2'-9"	8	17		0'-8"	1'-5"	0'-8"			2 Sets of 4
	TO 3'-10"					TO 2'-6"				
P501	17'-10"	48	T1	0'-6"	2'-0"	6'-5"	2'-0"	6'-5"	0'-6"	2 Sets of 24
	TO 14'-0"					TO 4'-6"		TO 4'-6"		
P502	8'-2"	9	T1	0'-6"	1'-0"	13'-0"	1'-0"	13'-0"	0'-6"	
	TO 29'-0"					TO 2'-7"		TO 2'-7"		
P503	5'-0"	26	17		2'-0"	1'-0"	2'-0"			
P504	13'-0"	10	17		3'-3"	5'-3"	4'-6"			
	TO 8'-9"				TO 1'-8"		TO 2'-6"			
P505	14'-0"	2	T1	0'-6"	2'-0"	4'-6"	2'-0"	4'-6"	0'-6"	
P506	16'-2"	32	T1	0'-6"	1'-9"	12'-3"	1'-8"			
P507	3'-6"	40	17		1'-9"	1'-9"	–			
P508	13'-0"	60	T1	0'-6"	1'-9"	9'-1"	1'-8"			
P509	22'-0"	12	STR							
P510	15'-8"	82	1	0'-7"	14'-6"				0'-7"	
P511	17'-1"	48	S3	0'-6"	1'-0"	14'-1"	1'-0"		0'-6"	
P512	16'-4"	20	1	0'-7"	15'-2"					
P513	19'-6"	9	STR							
P514	7'-0"	12	S3	0'-6"	1'-0"	4'-0"	1'-0"			
P515	13'-6"	5	STR							
P516	17'-0"	4	STR							
P517	41'-4"	10	T1	0'-6"	1'-0"	19'-2"	1'-0"	19'-2"	0'-6"	
	TO 20'-2"					TO 8'-7"		TO 8'-7"		
P518	23'-3"	9	STR							
P519	15'-0"	1	STR							
P520	6'-2"	4	17		0'-9"	5'-5"				
P521	5'-2"	1	17		0'-9"	4'-5"				
P601	11'-1"	22	14	2'-0"	2'-6"	6'-7"				H=1-2
P602	6'-5"	2	STR							
	TO 8'-5"									|
P603	8'-5"	3	STR							

WEST PIER (CONT'D)

Mark	Length	No. Reqd	Type	A	B	C	D	E	G	Remarks
P604	8'-0"	9	STR							
P605	3'-4"	18	STR							
P606	33'-6"	10	STR							
P610	22'-6"	12	STR							
P611	6'-9"	9	14	2'-0"	1'-9"	3'-0"				
P612	8'-0"	5	14	2'-0"	2'-7"	3'-5"				
P614	15'-9"	40	STR							
P615	7'-4"	64	17		2'-0"	3'-4"	2'-0"			
P616	44-10"	18	STR							
P617	5'-0"	56	17		2'-6"	2'-6"	–			
P618	4'-4"	56	17		2'-2"	2'-2"	–			
P619	7'-9"	10	17		1'-3"	5'-3"	1'-3"			
P620	12'-9"	16	STR							
P621	19'-0"	24	STR							
P622	17'-0"	26	17		8'-0"	1'-0"	8'-0"			
P623	46'-2"	4	1	0'-8"	44'-10"				0'-8"	
P624	3'-0"	27	STR							
P625	21'-6"	2	17		10'-3"	1'-0"	10'-3"			
P626	5'-4"	25	17		2'-8"	2'-3"	–			
P627	11'-9"	38	17		3'-6"	6'-2"	2'-1"			
P628	10'-6"	4	17		4' 0"	6'-6"	–			
P629	11'-0"	8	S2	0'-7"	2'-0"	6'-4"	2'-1"			
P630	7'-11"	8	12	0'-7"	0'-10"	6'-6"				J=0'-6"
P631	9'-6"	6	17		3'-6"	6'-0"				
P632	9'-8"	12	T1	0'-7"	2'-0"	2'-3"	2'-0"	2'-3"	0'-7"	
P633	10'-0"	12	STR							
	TO 15'-0"									
P634	7'-0"	28	17		2'-0"	3'-0"	2'-0"			
P635	29'-1"	6	STR							
P636	7'-0"	4	STR							
P637	12'-2"	16	T1	0'-7"	1'-10"	3'-8"	1'-10"	3'-8"	0'-7"	
P638	6'-5"	10	17		0'-7"	5'-3"	0'-7"			2 Sets of 5
	TO 11'-7"				TO 3'-2"		TO 3'-2"			
P641	7'-6"	2	17		1'-3"	5'-0"	1'-3"			
	TO 9'-6"					TO 7'-0"				
P642	5'-0"	9	17		2'-0"	1'-0"	2'-0"			
P643	7'-1"	27	17		2'-1"	5'-0"	–			
P644	7'-7"	55	12	–	2'-0"	0'-4"	5'-3"			
P645	29'-4"	8	STR							
P646	28'-9"	1	16	–	24'-6"	0'-9"	3'-6"			H=2'-8",K=2'-4"
P647	29'-9"	12	16	–	24'-6"	0'-9"	4'-6"			H=3'-5",K=3'-0"
P648	10'-3"	6	12	0'-8"	4'-0"	0'-9"	4'-10"			J=0'-6",H=3'-1"
P649	9'-9"	4	12	0'-8"	4'-0"	0'-3"	4'-10"			
P650	25'-0"	4	STR							2 Sets of 2
	TO 27'-0"									
P651	29'-0"	10	STR							
P652	7'-7"	23	17		2'-1"	5'-6"				
P653	11'-3"	7	STR							
P654	20'-0"	11	STR							
	TO 39'-0"									
P655	24'-6"	8	STR							
	TO 37'-6"									
P656	7'-3"	26	17		1'-0"	6'-3"				
P657	8'-4"	14	17		1'-0"	7'-4"				
P658	6'-0"	4	STR							
	TO 10'-0"									
P659	17'-6"	14	STR							
P660	26'-0"	10	STR							
P661	9'-3"	7	12	–	2'-0"	0'-3"	7'-0"			
P662	10'-0"	20	STR							2 Sets of 10
	TO 27'-0"									| |
P663	20'-0"	16	STR							

WEST PIER (CONT'D)

Mark	Length	No. Reqd	Type	A	B	C	D	E	G	Remarks
P664	21'-5"	26	STR							
P665	20'-11"	8	STR							
P666	8'-0"	2	STR							
P667	6'-0"	4	12	0'-8"	2'-6"	0'-4"	2'-6"			J=0'-6"
P668	9'-5"	1	STR							
P669	9'-1"	5	17		2'-9"	6'-4"	–			
P670	10'-10"	6	12	0'-8"	4'-0"	0'-8"	5'-6"			J=0'-6"
P671	6'-3"	14	8	0'-10"	5'-0"				0'-5"	2 Sets of 7
	TO 7'-2"								TO 1'-4"	
P672	8'-10"	7	17		1'-3"	6'-4"	1'-3"			
P701	6'-0"	82	STR							
P801	33'-4"	3	STR							
	TO 35'-4"									
P802	7'-3"	2	STR							
	TO 8'-4"									
P803	22'-0"	4	STR							
P804	26'-6"	37	STR							
P805	24'-6"	33	STR							
P806	20'-0"	63	STR							
P807	6'-0"	87	STR							
P808	11'-6"	62	2	1'-0"	10'-6"				–	
P809	9'-6"	56	2	1'-0"	8'-6"				–	
P810	15'-0"	2	2	1'-0"	14'-0"				–	
P811	24'-6"	2	STR							
P812	32'-3"	14	STR							
P813	4'-5"	6	2	1'-2"	3'-3"					
P814	17'-1"	14	7	1'-1"	–	10'-0"	6'-0"	–	–	2 Sets of 7
P815	10'-10"	14	7	1'-1"	–	9'-6"	0'-3"	–	–	2 Sets of 7
	TO 22'-1"					TO 10'-0"	TO 11'-[illegible]"			
P817	22'-0"	9	STR							
P818	8'-6"	26	STR							
P819	35'-4"	7	STR							
P820	21'-10"	10	STR							
P821	9'-0"	6	14	3'-0"	6'-0"	–	–			H=5'-0"
P822	23'-8"	28	16	2'-8"	8'-0"	13'-0"	–			
P823	17'-5"	8	16	2'-8"	5'-3"	9'-6"	–			
P824	18'-2"	3	16	2'-8"	5'-3"	10'-3"	–			
P825	19'-5"	8	16	2'-8"	5'-3"	11'-6"	–			
P826	8'-3"	16	7	1'-1"	–	3'-6"	3'-8"			
	TO 11'-0"					TO 6'-3"				
P827	10'-3"	5	17		2'-6"	5'-3"	2'-6"			
P828	17'-4"	13	STR							
P829	29'-0"	2	STR							
P830	3'-5"	6	17		1'-0"	2'-5"	1'-0"		–	
P831	21'-3"	3	STR							
P832	17'-6"	3	STR							
P833	21'-0"	2	2	1'-0"	20'-0"				–	
P834	24'-2"	4	STR							
P835	12'-1"	1	2	1'-7"	10'-6"				–	
P836	19'-6"	3	STR							
P837	44'-0"	3	STR							
P838	10' 6"	8	2	1'-0"	9'-6"				–	
P839	41'-0"	4	STR							
P840	14'-6"	1	STR							
P841	6'-2"	2	STR							
P901	11'-7"	8	STR							
P902	13'-6"	10	STR							
P903	14'-6"	8	2	1'-0"	13'-6"				–	
P904	13'-9"	8	1	1'-3"	12'-6"				–	
P905	17'-9"	8	S3	0'-10"	1'-0"	14'-1"	1'-0"		0'-10"	|
P906	6'-0"	8	2	1'-0"	4'-0"				1'-0"	

NOTES:

Bar sizes are identified by the first digit of a three digit number and by the first two digits of a four digit number.

All dimensions are out to out of bar except "A" and "G" on standard 180° and 135° hooks.

WEST PIER (CONT'D)

Mark	Length	No. Reqd	Type	A	B	C	D	E	G	Remarks
P907	3'-8"	8	STR							
P908	2'-10"	4	2	1'-0"	0'-10"				1'-0"	
P909	3'-1"	4	2	1'-0"	1'-1"				1'-0"	
P1101	31'-0"	3	12	–	–	2'-6"	28'-6"			H=12'-9",K=26'-2"
P1102	34'-0"	3	STR							
P1103	13'-0"	3	16	–	6'-6"	0'-9"	5'-9"			H=4'-4",K=3'-9"
P1104	11'-6"	10	STR							
P1106	48'-6"	25	1	1'-10"	44'-10"				1'-10"	
P1107	6'-8"	16	STR							
P1108	12'-2"	8	17		5'-6"	6'-8"	–			
P1109	16'-3"	8	STR							
P1110	22'-0"	18	STR							
P1111	27'-11"	20	1	1'-10"	26'-1"				–	
P1112	11'-1"	2	STR							
P1113	16'-4"	20	11	1'-10"	9'-3"	5'-3"				R=47'-6"
P1114	28'-0"	3	9		28'-0"	27'-1"				R=47'-6",H=2'-0"
P1115	16'-0"	5	STR							
P1116	13'-3"	12	17		12'-10"	0'-5"	–			
P1117	23'-6"	22	17		22'-0"	1'-6"	–			
P1118	6'-4"	4	STR							
P1119	5'-8"	4	17		4'-4"	1'-4"	–			
P1120	27'-8"	7	9		27'-8"	27'-1"				H=2'-0",R=47'-0"
P1121	43'-6"	2	17		2'-6"	41'-0"	–			
P1122	48'-3"	1	17		2'-6"	45'-9"	–			
P1123	22'-3"	1	STR							
P1124	17'-6"	2	STR							
P1125	13'-0"	1	16	–	6'-6"	0'-9"	5'-9"			H=4'-4", K=3'-9"
P1126	40'-1"	3	17		6'-1"	34'-0"	–			
P1127	34'-7"	3	12	–	–	6'-1"	28'-6"			
P1128	13'-9"	5	STR							

BAR TYPES

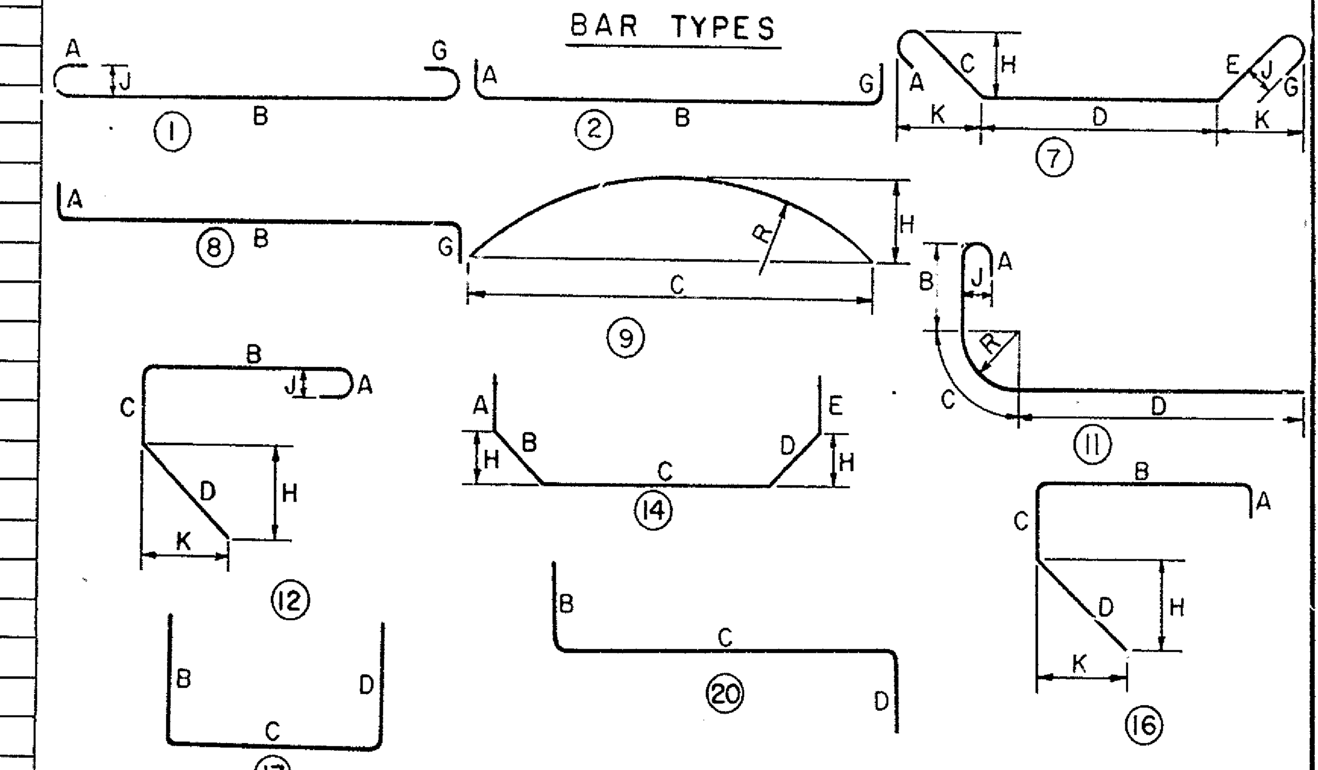

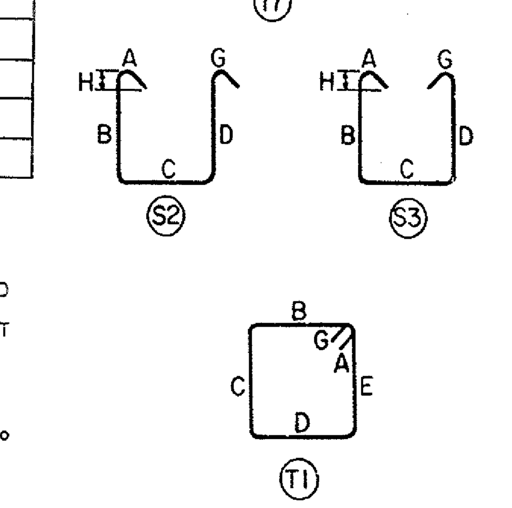

DELAWARE
DEPARTMENT OF TRANSPORTATION
DIVISION OF HIGHWAYS

SAVANNAH ROAD BRIDGE
OVER LEWES & REHOBOTH CANAL

WEST PIER BAR LISTS

D. A. N.	SCALE	APPROVED BY
T. —	NO SCALE	R. C. McDonnell (signature)
C. A. N.		BRIDGE ENGINEER

ROBERT C. McDONNELL REGISTERED NO. 3069 DELAWARE PROFESSIONAL ENGINEER

EN 12932

COUNTY	CONTRACT	P.R.A. REG. NO.	STATE	FED. AID PROJECT NO.	SHEET NO.	TOTAL SHEETS
SUSSEX	80-023-02	2	DEL		29	87

NO.	REVISIONS	BY	DATE
1	Retainting Wall Revision	C.H.H.	12/28/81

1 See Sheet No. 29-B For The Details Of The Retaining Wall.

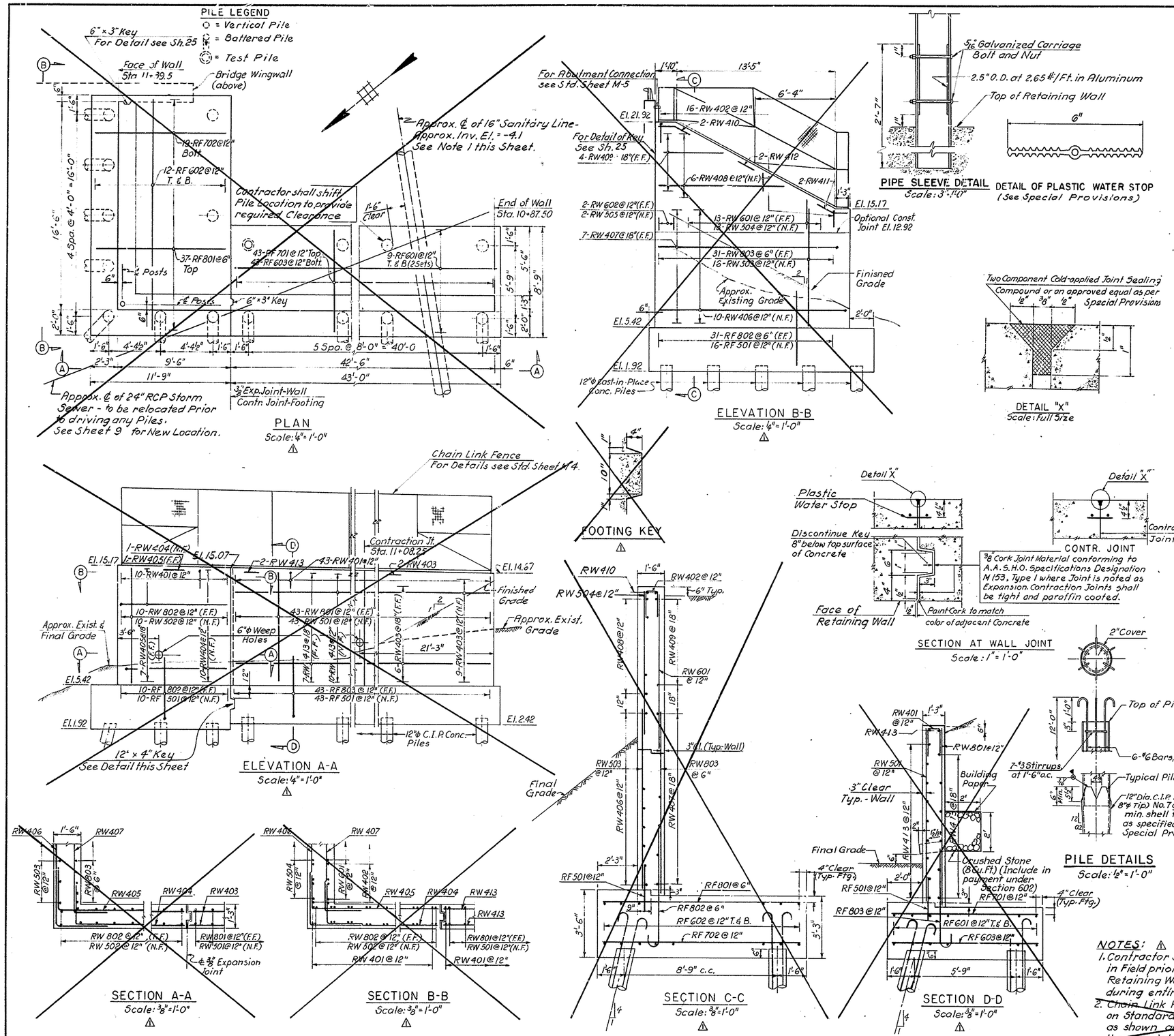

RETAINING WALLS

MARK	LENGTH	NO. REQD	TYPE	DETAIL DIMENSIONS A	B	C	D	H	K	J
RW401	3'-3"	53	17		1'-3"	0'-9"	1'-3"			
RW402	3'-6"	16	17		1'-3"	1'-0"	1'-3"			
RW403	20'-3"	17	STR							
RW404	9'-10"	11	2	2'-0"	7'-10"					
RW405	10'-9"	8	2	2'-0"	8'-9"					
RW406	19'-0"	10	2	3'-0"	16'-0"					
RW407	17'-3"	7	2	2'-0"	15'-3"					
RW408	3'-8" TO 13'-7"	6	STR							
RW409	3'-8" TO 12'-8"	4	STR							
RW410	2'-10"	2	19			1'-7"	1'-3"	6-3/4"	1'-1"	
RW411	2'-3"	2	19		1'-3"	1'-0"		6-3/4"	1'-1"	
RW412	14'-6"	2	STR							
RW413	21'-3"	19	STR							
RF501	3'-2"	69	STR							
RW501	9'-0" TO 9'-5"	43	STR							
RW502	9'-5" TO 9'-6"	10	STR							
RW503	9'-0"	16	STR							
RW504	2'-6" TO 6'-6"	13	STR							
RW505	8'-6"	2	STR							
RF601	22'-1"	18	STR							
RF602	18'-4"	24	STR							
RF603	8'-0"	43	STR							
RW601	2'-6" TO 6'-6"	13	STR							
RW602	8'-6"	2	STR							
RF701	8'-0"	43	STR							
RF702	11'-0"	19	STR							
RF801	11'-0"	37	STR							
RF802	6'-11"	41	1	0'-9"	6'-2"					0'-8"
RF803	6'-5"	43	1	0'-9"	5'-8"					0'-8"
RW801	9'-3" TO 9'-8"	43	STR							
RW802	9'-8" TO 9'-9"	10	STR							
RW803	9'-6"	31	STR							

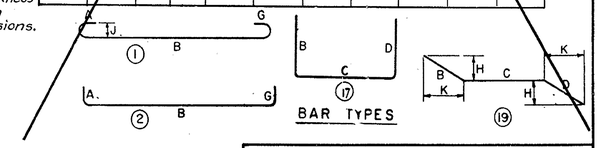

NOTES: 1

1. Contractor shall locate 16" Sanitary Pipe in Field prior to any Pile driving for Retaining Wall and shall protect Pipe during entire course of Construction.
2. ~~Chain~~ Link Fence details shall be ~~as shown~~ on Standard ~~Dwg's M-4 and M-5~~ except as shown ~~above~~ and as modified in ~~the~~ Special Provisions.

DELAWARE
DEPARTMENT OF TRANSPORTATION
DIVISION OF HIGHWAYS

SAVANNAH ROAD BRIDGE
OVER LEWES & REHOBOTH CANAL

RETAINING WALL I

D. D.D.H.	SCALE	APPROVED BY:
T. N.M.	AS NOTED	R. C. McHenry
C. C.G.		BRIDGE ENGINEER

ROBERT C. McHENRY REGISTERED PROFESSIONAL ENGINEER NO. 3065

COUNTY	CONTRACT	F.H.W.A. REG. NO.	STATE	FED. AID PROJECT NO.	SHEET NO.	TOTAL SHEETS
Sussex	8002300	3	DEL.		29A	87

SAVANNAH ROAD

NO.	REVISIONS	BY	DATE

AS BUILT SHOWN IN RED H.H. 10/83

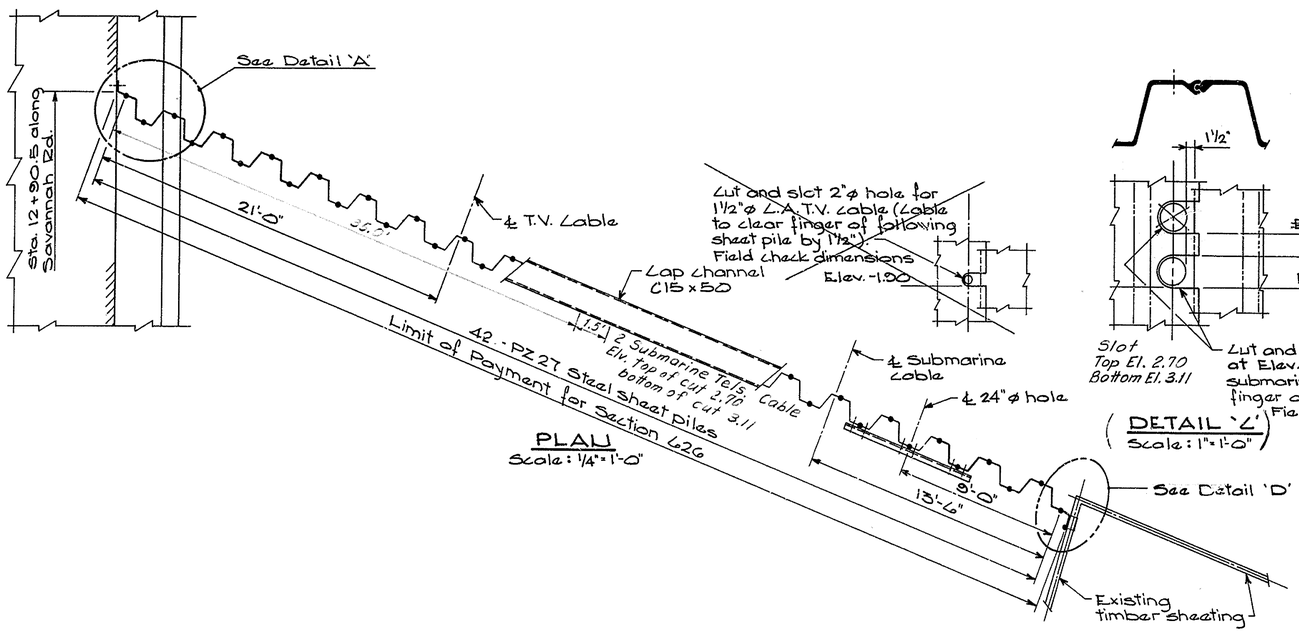

PLAN
Scale: 1/4" = 1'-0"

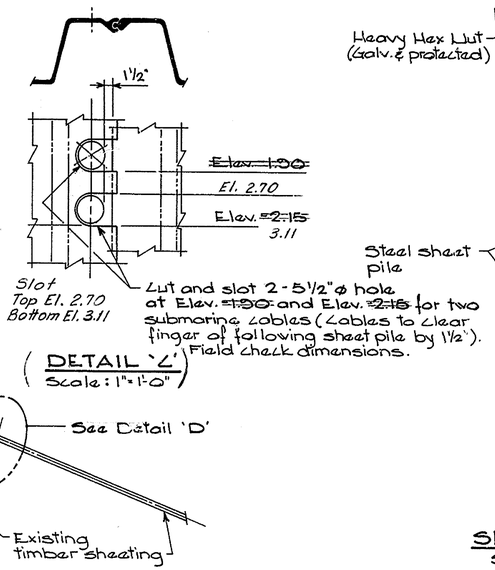

DETAIL 'C'
Scale: 1" = 1'-0"

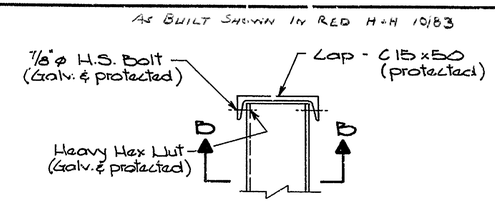

LAP DETAIL

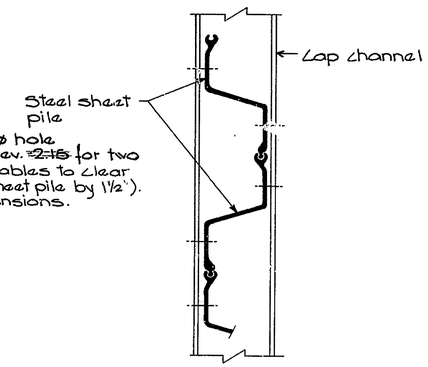

SECTION B-B
Scale: 1" = 1'-0"

Notes:

1. Steel sheet piles shall be A.S.T.M. 690 (Protected).
2. Structural shape (channels) shall be A-588 and protected.
3. All hardware to be galvanized and protected.
4. All cutting or drilling on structural shapes and sheeting shall be done in the shop prior to the application of the coating. All coating shall be applied in the shop.
5. Use riprap stone and coarse aggregate for foundation stabilization to form a filter blanket behind sheeting for all openings. Cost of stone, coarse aggregate and excavation required for setting utilities through sheeting shall be incidental to the steel sheeting.
6. See Special Provisions Section 626 for Utility installations.
7. It shall be the responsibility of the contractors to relocate the utility cables to permit the pile driving and to place the cables in the precut slots prior to driving the next sheet pile.

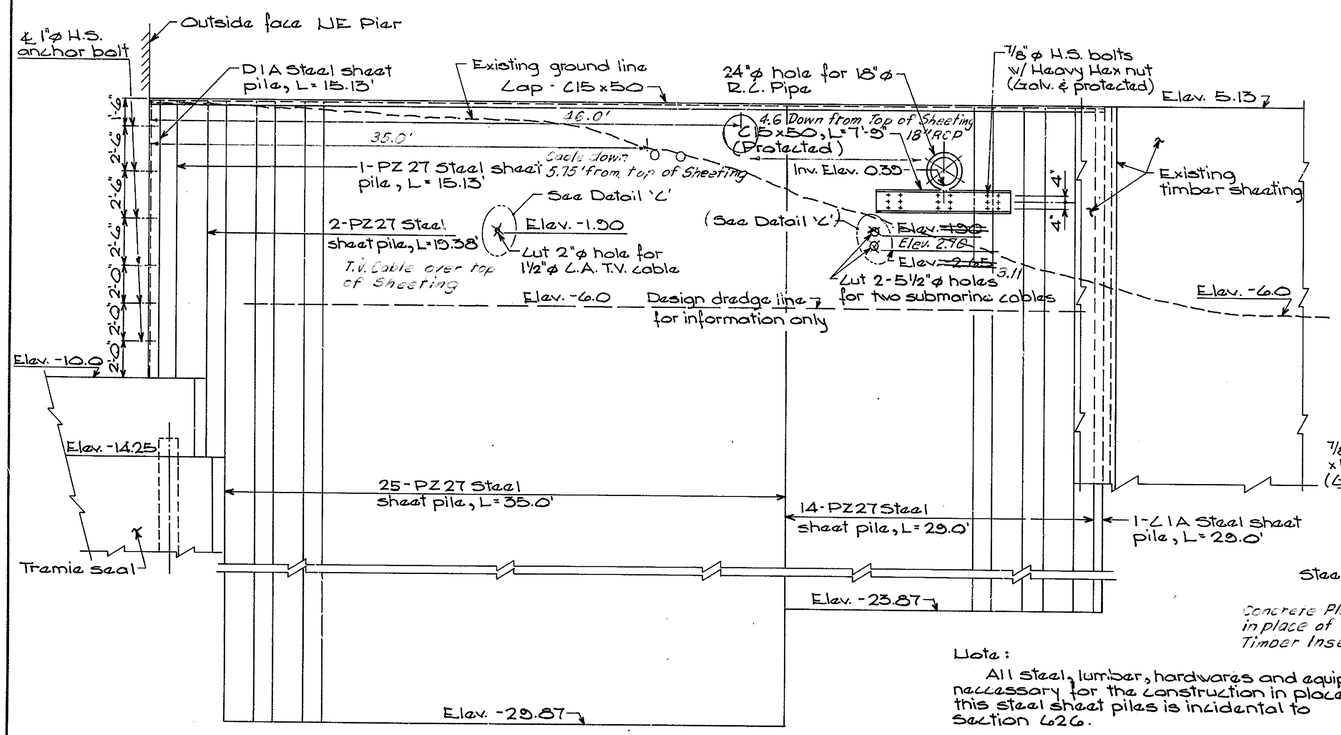

ELEVATION
Scale: 1/4" = 1'-0"

Note:

All steel, lumber, hardware and equipment necessary for the construction in place of this steel sheet piles is incidental to Section 626.

* Treated lumber, cut to fit in field.

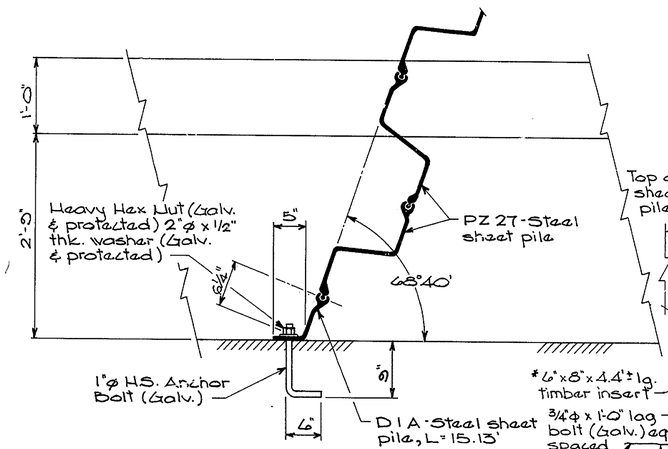

DETAIL 'A'
Scale: 1" = 1'-0"

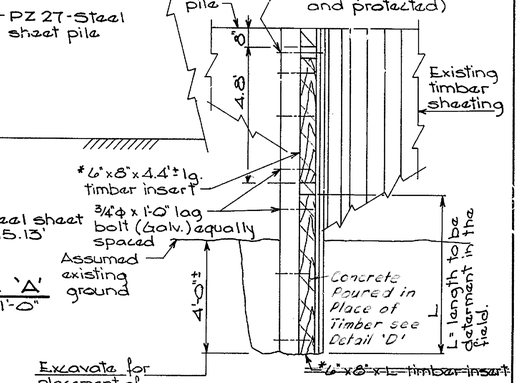

SECTION E-E
Scale: 3/8" = 1'-0"

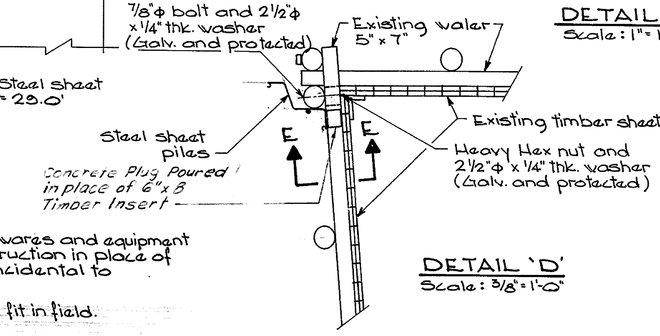

DETAIL 'D'
Scale: 3/8" = 1'-0"

DELAWARE
DEPARTMENT OF TRANSPORTATION
DIVISION OF HIGHWAYS

STEEL SHEET PILING PLAN, ELEVATION and DETAILS

D.L.H./S.U.	SCALE	APPROVED BY:
T. H.D.	As shown	
C.		BRIDGE ENGINEER

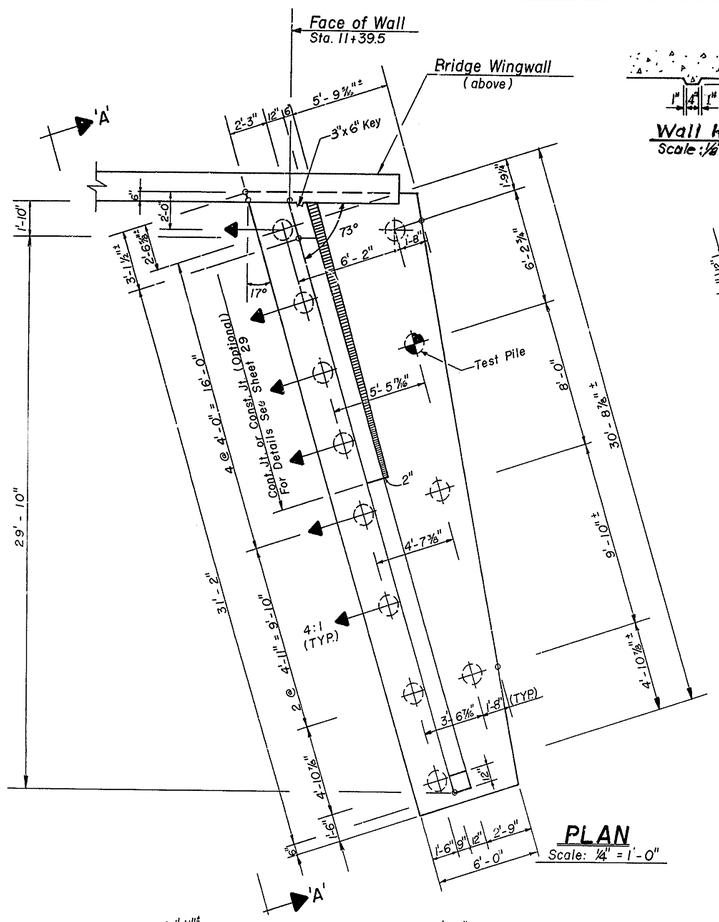

PLAN

Scale: 1/4" = 1'-0"

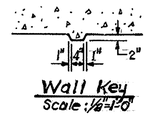

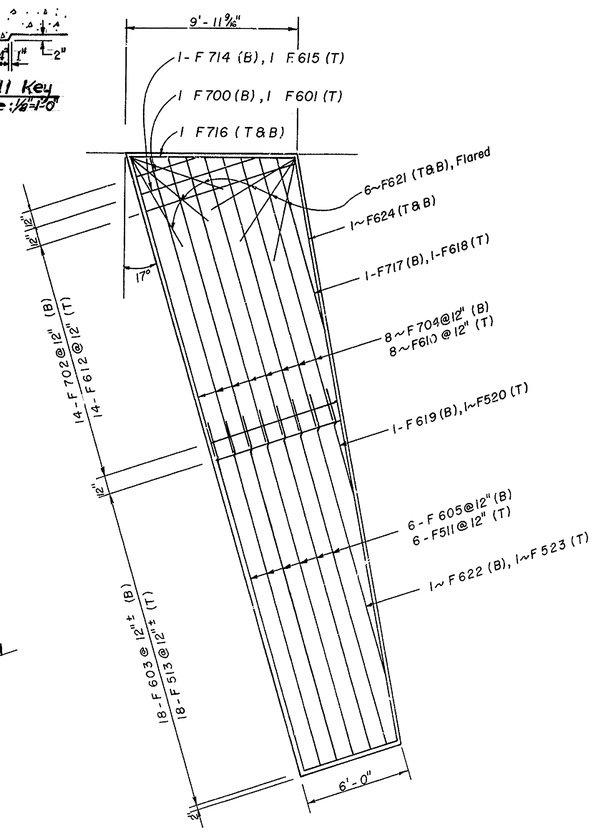

PLAN FOOTING REINFORCEMENT

Scale: 1/4" = 1'-0"

New Sheet Added, 12-29-81 – R.T.C.

NOTES:

1. 12" Φ C.I.P. Concrete Piles shall be Driven to Develop a Minimum Safe Bearing Capacity of 35 Tons.
2. Indicates 12" Φ Cast-in-Place Plumb Pile.
3. Indicates 12" Φ Cast-in-Place Test Pile.
4. Indicates Cast-in-Place Battered Piles 4:1.
5. Estimated Length of 12" Φ Cast-in-Place Pile 45 feet.
6. Estimated Lengh of 12" Φ Cast-in-Place Test Pile 55 feet.
7. For Pile Detail, Contraction or Construction Wall Joint Details See Sheet № 29.
8. For General Notes See Sheet № 14.

COUNTY	CONTRACT	P.R.S. REG. NO.	STATE	FED. AID PROJECT NO.	SHEET NO.	TOTAL SHEETS
SUSSEX	80-023-02	2	DEL.		29-B	37

NO.	REVISIONS	BY	DATE

ESTIMATED QUANTITIES

	SECTION	ITEM	UNIT	PROPOSAL
	207	Excavation and Backfill for Structures	C.Y.	65
	209	Borrow Type 'F' (+30% Adj. Factor)	C.Y.	40
*	602	Portland Cement Concrete Masonry	C.Y.	38
*	605	Bar Reinforcement	Lbs.	3646
	624	Cast-In-Place Conc. Pile (12" Dia. 7 Ga.)	L.F.	495
	624	Steel Shell Test Pile (12" Dia. 7 Ga.)	L.F.	55

* Fixed Quantity Items – See Section № 109.06 Of Standard Specifications.

REINFORCING BAR LIST

STRAIGHT BARS				BENT BARS			
MARK	SIZE	NUMBER	LENGTH	MARK	SIZE	NUMBER	LENGTH
F700	7	1	3'-9"	F708	7	27	8'-5"
F601	6	1	3'-9"	F809	8	4	8'-7"
F702	7	14	7'-9" to 9'-1"				
F603	6	18	5'-8" to 7'-7"				
F704	7	8	15'-0" to 17'-0"				
F605	6	6	19'-6"				
F606	6	8	4'-0"				
F507	5	24	3'-3"				
F610	6	8	15'-0" to 17'-0"				
F511	5	8	19'-6"				
F612	6	14	7'-9" to 9'-1"				
F513	5	18	5'-8" to 7'-7"				
F714	7	1	7'-0"				
F615	6	1	7'-0"				
F716	7	2	9'-7"				
F717	7	1	9'-10"				
F618	6	1	9'-10"				
F619	6	1	6'-0"				
F520	5	1	6'-0"				
F621	6	12	5'-6"				
F622	6	1	15'-9"				
F523	5	1	15'-9"				
F624	6	2	32'-0"				
W501	5	2	16'-3"	W508	5	2	3'-3"
W502	5	14	9'-9" to 15'-10"				
W503	5	8	6'-0" to 9'-4"				
W504	5	9 x 2	3'-6" to 7'-2"				
W605	6	8	6'-0" to 9'-4"				
W706	7	2	13'-0"				
W607	6	14	6'-9" to 13'-0"				
W509	5	2	15'-2"				
W510	5	2	18'-10"				
W511	5	20	15'-4"				
W512	5	5 x 2	4'-4" to 13'-0"				
W513	5	4	17'-1"				
W514	5	7 x 2	1'-9" to 14'-6"				
W515	5	2	3'-6"				

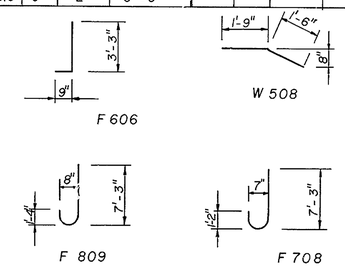

NOTE: All dimensions are out to out.

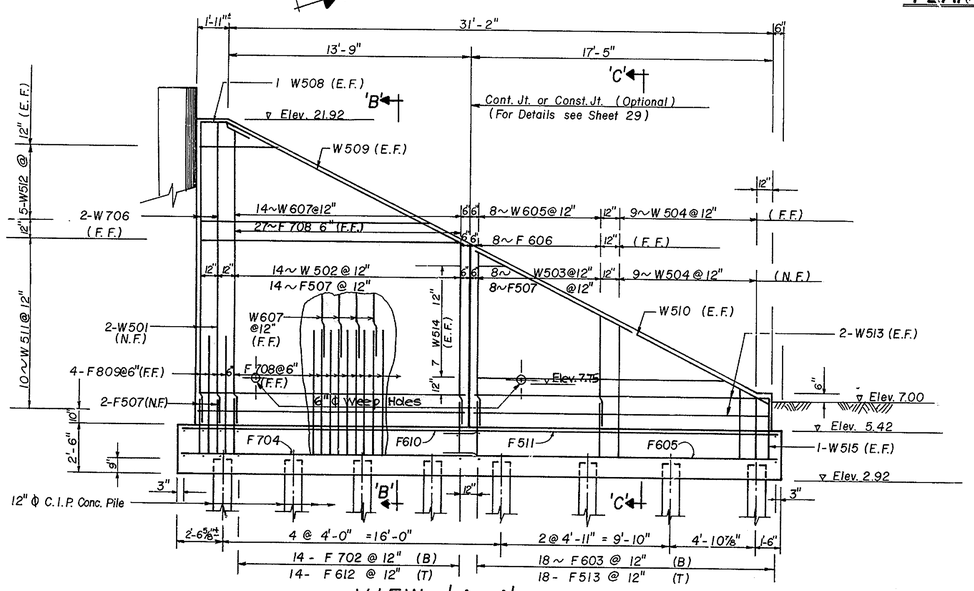

VIEW 'A-A'

Scale: 1/4" = 1'-0"

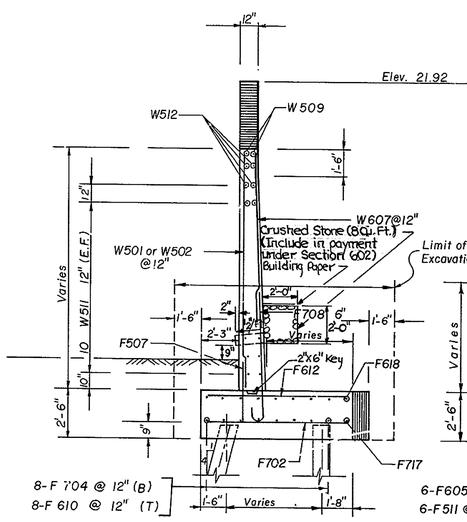

SECTION 'B-B'

Scale: 1/4" = 1'-0"

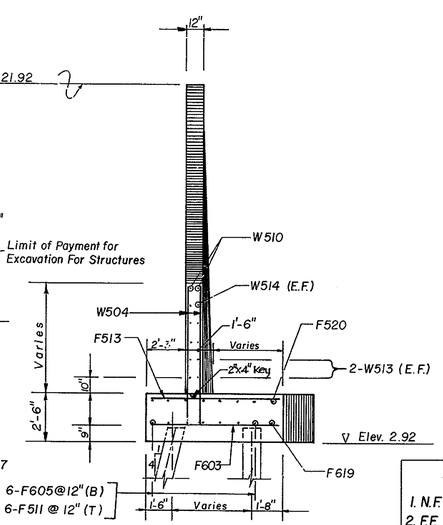

SECTION 'C-C'

Scale: 1/4" = 1'-0"

LEGEND

1. N.F. = Near Face
2. F.F. = Fill Face
3. T. = Top Bar
4. B = Bottom Bar
5. E.F. = Each Face

DELAWARE
DEPARTMENT OF TRANSPORTATION
DIVISION OF HIGHWAYS

SAVANNAH ROAD BRIDGE OVER LEWES and REHOBOTH CANAL~RETAINING WALL I

D. A.C.S.J.	SCALE	APPROVED BY:
T. D.E.S.	as shown	
C.C.H.		BRIDGE ENGINEER

AS BUILT SHOWN IN RED M&H 10183

COUNTY	CONTRACT	P.R.A. REG. NO.	STATE	FED. AID PROJECT NO.	SHEET NO.	TOTAL SHEETS
SUSSEX	80-023-02	2	DEL		30	87

NO.	REVISIONS	BY	DATE

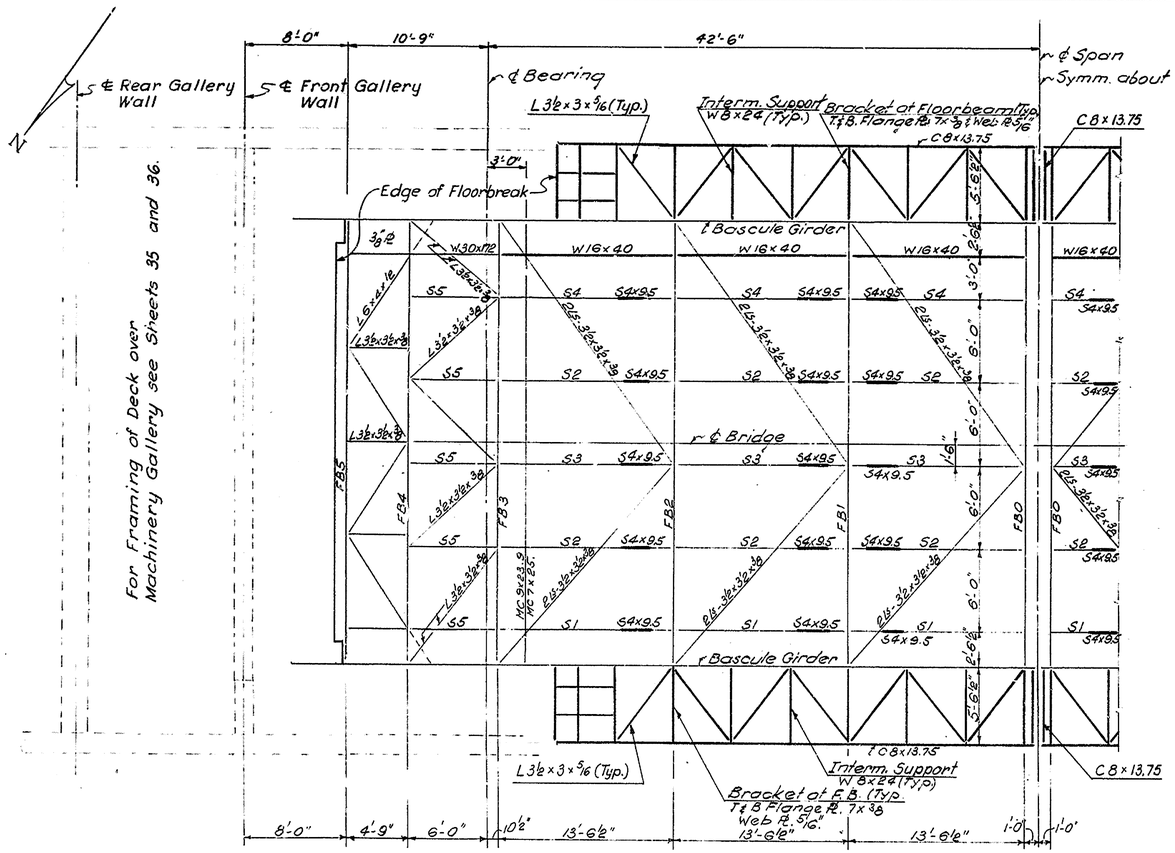

FRAMING PLAN

EXISTING STRINGERS	
S1	18 WF 47
S2	18 WF 50
S3	18 WF 47
S4	18 WF 47
S5	18 WF 47

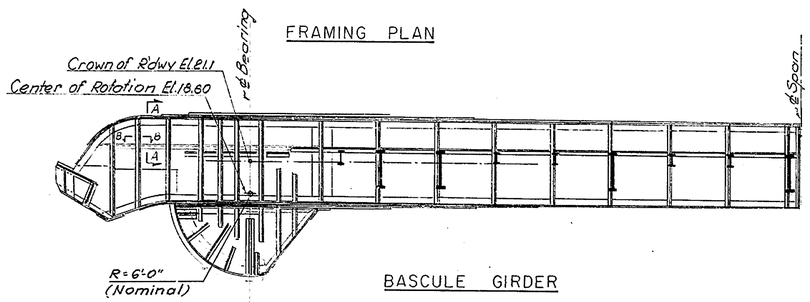

BASCULE GIRDER

NOTE: Remove deteriorated existing Rivets in Segmental Girder as directed by the Engineer, and replace with High Strength (A325) Bolts. Where other deteriorated Rivets are found they shall be replaced with H.S. Bolts as directed by the Engineer.

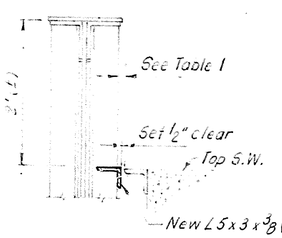

SECTION A-A

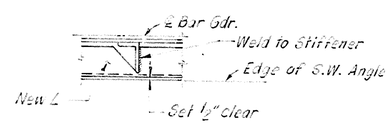

SECTION B-B

SKETCH SHOWING SIDEWALK SHELF ANGLE ON BASCULE GIRDER

N.T.S.

TABLE 1	Rear	Front
Northeast	11½"	-½"
Southeast	13½"	1½"
Southwest	1"	1"
Northwest	13½"	21½"

BALANCE OF SPAN

		ITEM	TOTAL WEIGHT LBS.	NORTH GIRDER WEIGHT LBS.	NORTH GIRDER HORIZ. MOM'T.	NORTH GIRDER VERT. MOM'T.	SOUTH GIRDER WEIGHT LBS.	SOUTH GIRDER HORIZ. MOM'T.	SOUTH GIRDER VERT. MOM'T.
WEST LEAF	FORWARD	EXISTING (EXCL. CTWT)	236,500	120,300	910,790	128,260	116,200	890,530	122,520
		MATERIAL REMOVED							
		ROADWAY GRATING	18,800	10,285	236,390	25,790	8,515	195,770	21,360
		STRUCTURAL STEEL	17,190	8,310	192,050	17,380	8,880	203,500	19,710
		CONC. RDWY SLAB, SDWK	2,250	210	350	550	2,040	3,700	5,490
		WOOD	2,150	155	3,530	490	1,995	45,280	6,370
		TOTAL REMOVED	40,390	18,960	432,320	44,210	21,430	448,250	52,930
		MATERIAL ADDED							
		ROADWAY GRATING	19,950	9,975	219,690	23,760	9,975	219,690	23,760
		STRUCTURAL STEEL	15,250	5,875	135,410	14,890	9,375	215,450	23,260
		SIDEWALK GRATING	1,830	915	22,680	3,250	915	22,680	3,250
		CONC. RDWY SLAB, CURB	2,455	170	250	380	2,285	3,430	5,450
		CONC. FILL @ FB'S	2,920	1,460	45,280	3,610	1,460	45,280	3,610
		SDWK RAILING	1,300	650	15,450	3,260	650	15,450	3,260
		TOTAL ADDED	43,705	19,045	438,760	49,150	24,660	521,980	62,590
		NET CHANGE	+3,315	+85	+6,440	+4,940	+3,230	+73,730	+9,660
	BACK	MATERIAL REMOVED							
		STRUCTURAL STEEL	155	15	150	30	140	1,490	320
		CONC. RDWY SLAB, SDWK	5,875	570	2,930	1,520	5,305	29,220	14,920
		TOTAL REMOVED	6,030	585	3,080	1,550	5,445	30,710	15,240
		MATERIAL ADDED							
		STRUCTURAL STEEL	250	20	240	50	230	2,520	520
		CONC. RDWY SLAB, CURB	7,220	470	2,220	1,020	6,750	32,930	14,540
		TOTAL ADDED	7,470	490	2,460	1,070	6,980	35,450	15,060
		NET CHANGE	+1,440	-95	-620	-480	+1,535	+4,740	-180
		FINAL (EXCL. CTWT)	241,255	120,290	917,850	132,720	120,965	959,520	132,360
		COUNTERWEIGHT	213,450	107,830	909,090	126,460	105,620	890,410	123,910
		BALANCE BLOCKS REQ'D.	8,640	4,725	39,000	7,900	3,915	32,270	6,530
EAST LEAF	FORWARD	EXISTING (EXCL. CTWT)	221,550	112,960	849,560	140,320	108,590	818,110	133,190
		MATERIAL REMOVED							
		ROADWAY GRATING	18,800	10,285	236,390	25,790	8,515	195,770	21,360
		STRUCTURAL STEEL	17,335	8,605	200,030	17,850	8,730	202,600	19,260
		LOCK BAR SOCKETS	290	145	6,040	100	145	6,040	100
		CONC. RDWY SLAB, SDWK	2,250	210	360	550	2,040	3,700	5,490
		WOOD	2,150	155	3,530	490	1,995	45,280	6,370
		TOTAL REMOVED	40,825	19,400	446,350	44,780	21,425	453,390	52,580
		MATERIAL ADDED							
		ROADWAY GRATING	19,950	9,975	219,690	23,760	9,975	219,690	23,760
		STRUCTURAL STEEL	15,510	6,020	141,510	14,980	9,490	220,900	23,290
		SIDEWALK GRATING	1,830	915	22,680	3,250	915	22,680	3,250
		LOCK BAR SOCKETS	400	200	8,340	140	200	8,340	140
		CONC. RDWY SLAB, CURB	2,455	170	250	380	2,285	3,430	5,450
		CONC. FILL @ FB'S	2,920	1,460	45,280	3,610	1,460	45,280	3,610
		SDWK RAILING	1,300	650	15,450	3,250	650	15,450	3,250
		TOTAL ADDED	44,365	19,390	453,200	49,370	24,975	535,770	62,750
		NET CHANGE	+3,540	-10	+6,850	+4,590	+3,550	+82,380	+10,170
	BACK	MATERIAL REMOVED							
		STRUCTURAL STEEL	155	15	150	30	140	1,530	330
		CONC. RDWY SLAB, SDWK	5,875	570	2,930	1,520	5,305	29,230	14,920
		TOTAL REMOVED	6,030	585	3,080	1,550	5,445	30,760	15,250
		MATERIAL ADDED							
		STRUCTURAL STEEL	250	20	240	50	230	2,520	520
		CONC. RDWY SLAB, CURB	7,220	470	2,220	1,020	6,750	32,930	14,540
		TOTAL ADDED	7,470	490	2,460	1,070	6,980	35,450	15,060
		NET CHANGE	+1,440	-95	-620	-480	+1,535	+4,690	-190
		FINAL (EXCL. CTWT)	226,530	112,855	857,030	144,430	113,675	895,900	143,170
		COUNTERWEIGHT	199,790	101,680	847,050	137,230	98,110	817,280	132,490
		BALANCE BLOCKS REQ'D	10,080	4,860	40,600	9,990	5,220	43,400	10,600

Notes:

1. Moments are taken about ℄ of Rotation
2. Existing values are from shop drawing of the original construction.
3. There are no balance blocks in the counterweights of the existing bridge.
4. Balance of span weights are approximate. Weights and moments of detailed balance shall be determined by the Contractor based on approved shop drawings.

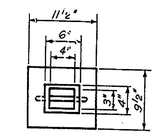

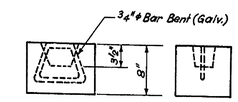

CONCRETE BALANCE BLOCKS

Scale: 1" = 1'-0"

DELAWARE
DEPARTMENT OF TRANSPORTATION
DIVISION OF HIGHWAYS

SAVANNAH ROAD BRIDGE
OVER LEWES & REHOBOTH CANAL
BASCULE SPAN FRAMING PLAN AND BALANCE

D. D.D.H.	SCALE	APPROVED BY
T. E.A.	3/16" = 1'-0"	N. C. Wheatley
C. C.G.	& AS NOTED	BRIDGE ENGINEER

ROBERT C. McDONALD REGISTERED PROFESSIONAL ENGINEER NO. 3048 STATE OF DELAWARE

COUNTY	CONTRACT	F.P.R.A. REG. NO.	STATE	FED. AID PROJECT NO.	SHEET NO.	TOTAL SHEETS
SUSSEX	80-023-02	2	DEL		31	87

NO.	REVISIONS	BY	DATE

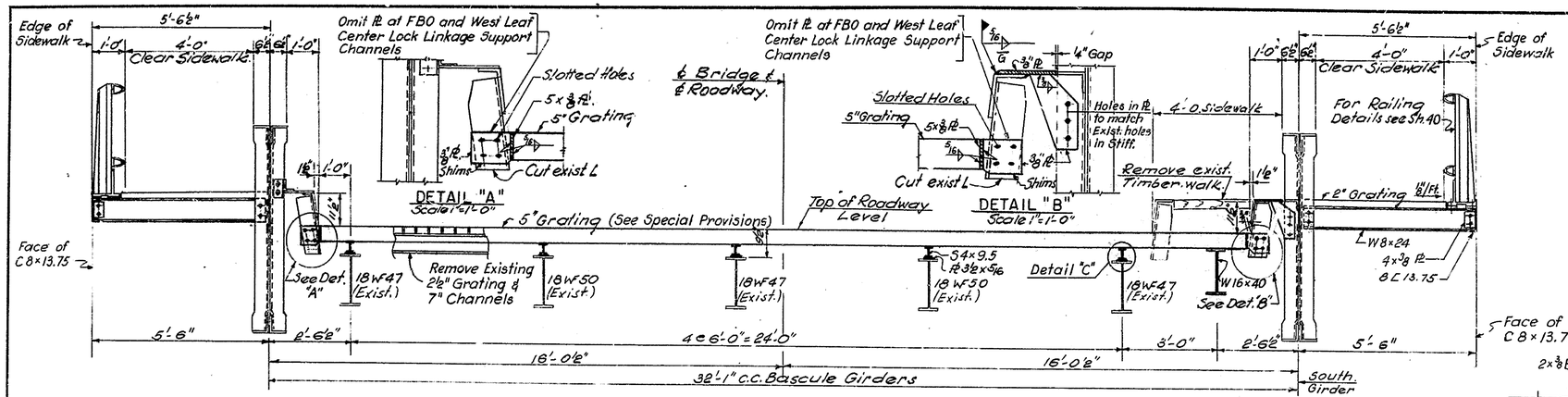

TYPICAL CROSS SECTION OF DECK

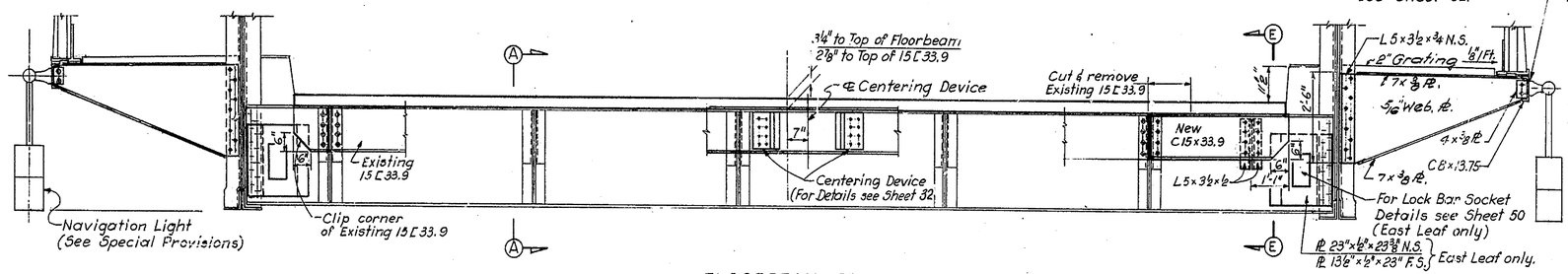

FLOORBEAM FBO

East Shown - West Similar

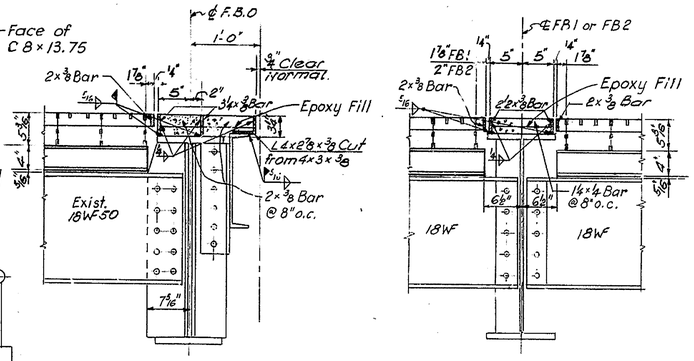

SECTION A-A

Scale 1"=1'-0"

SECTION B-B

Scale 1"=1'-0"

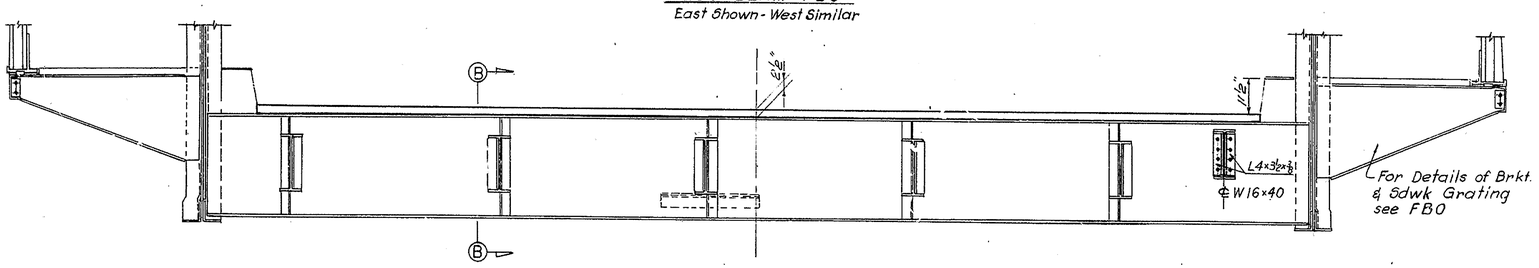

FLOORBEAM FB1 & FB2

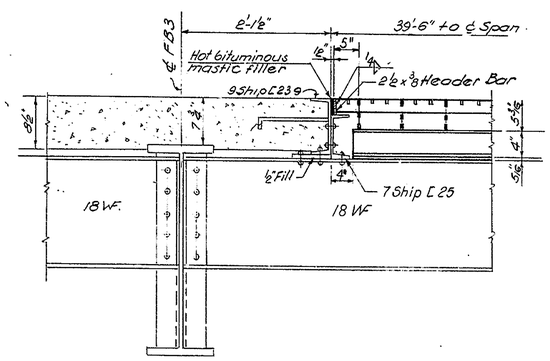

SECTION C-C

Scale 1½"=1'-0"

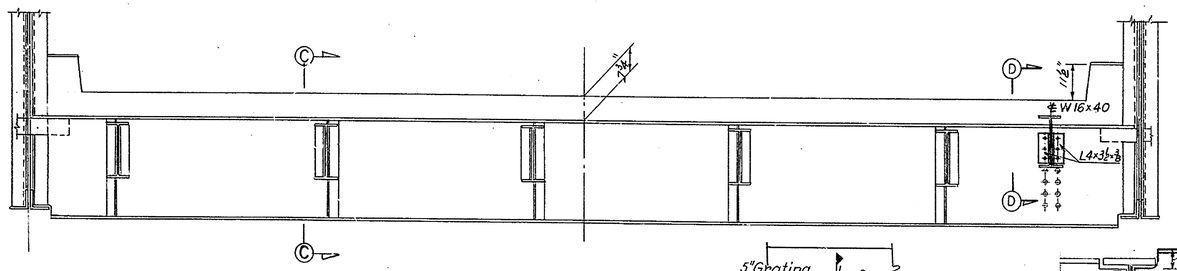

FLOORBEAM FB3

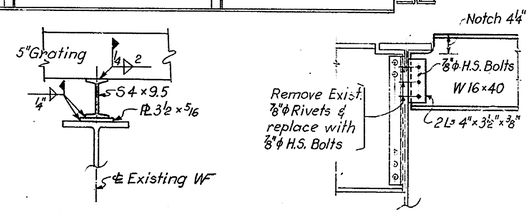

DETAIL "C"

Scale: 1½"=1'-0"

SECTION D-D

Scale: ¾"=1'-0"

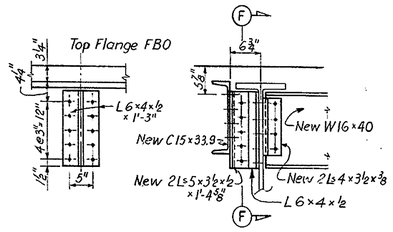

SECTION F-F

Scale: ¾"=1'-0"

SECTION E-E

Scale: ¾"=1'-0"

DELAWARE
DEPARTMENT OF TRANSPORTATION
DIVISION OF HIGHWAYS

SAVANNAH ROAD BRIDGE OVER LEWES & REHOBOTH CANAL

BASCULE SPAN DECK SECTIONS

D. A.N., D.D.H.	SCALE	APPROVED BY:
T. E.A., N.M.	1/2" = 1'-0"	R. C. Wright
C. D.D.H.	& As Noted	BRIDGE ENGINEER

ROBERT C. McDONELL REGISTERED PROFESSIONAL ENGINEER

31

COUNTY	CONTRACT	P.R.A. REB. NO.	STATE	FED. AID PROJECT NO.	SHEET NO.	TOTAL SHEETS
SUSSEX	80-023-02	2	DEL		32	8

NO.	REVISIONS	BY	DATE

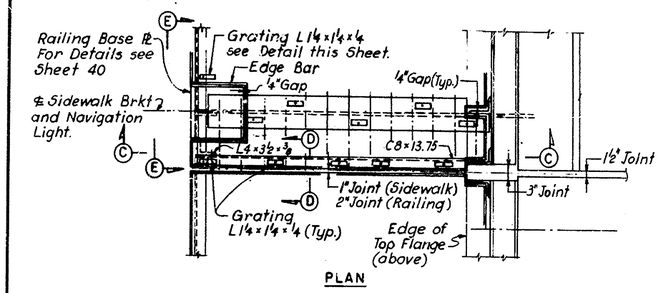

PLAN

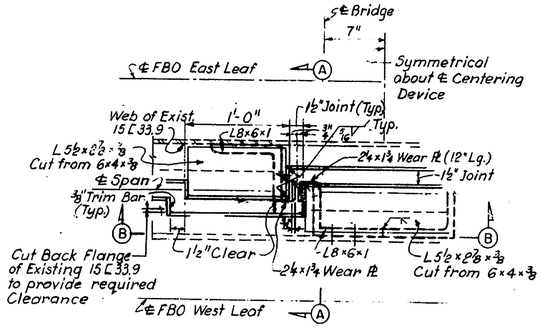

PLAN OF CENTERING DEVICE

Scale: 1½" = 1'-0"

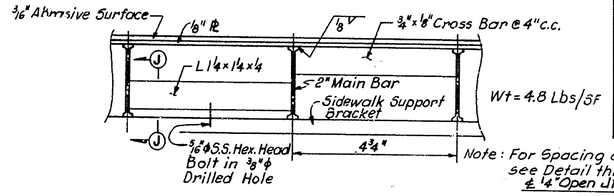

2" SIDEWALK GRATING

Half Size

Note: For Spacing of Welds see Detail this Sheet.

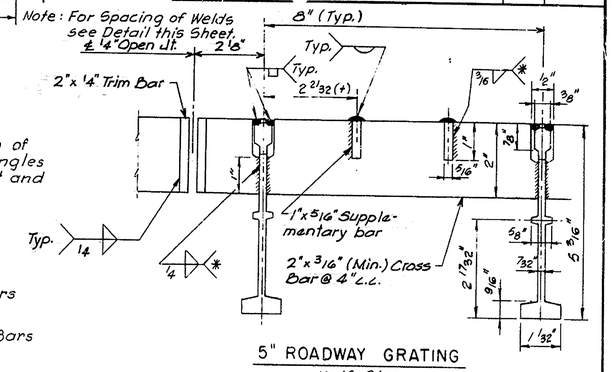

5" ROADWAY GRATING

Half Size

* Special Welding (Typical) See Special Provisions

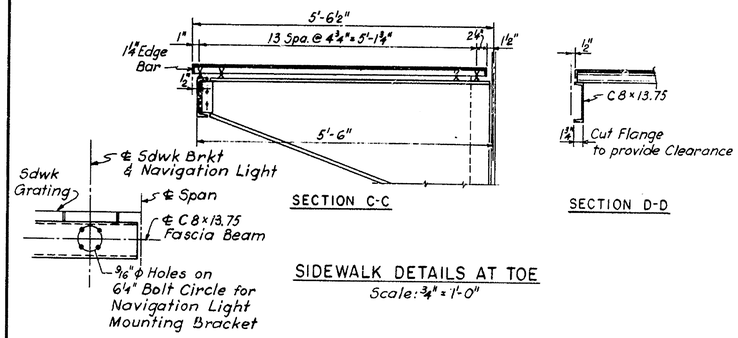

SECTION C-C

SECTION D-D

SIDEWALK DETAILS AT TOE

Scale: ¾" = 1'-0"

SECTION E-E

Scale: ¾" = 1'-0"

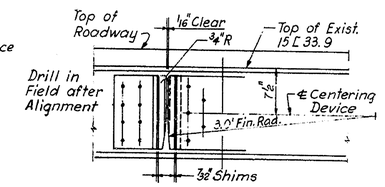

SECTION B-B

Scale: 1" = 1'-0"

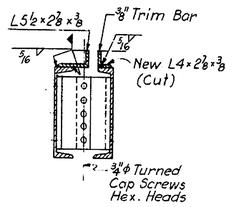

SECTION A-A

Scale: 1" = 1'-0"

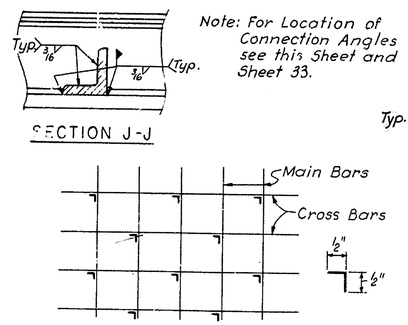

SPACING OF WELDS

⅛" PLATE TO GRID

No Scale

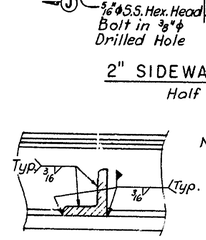

SECTION J-J

Note: For Location of Connection Angles see this Sheet and Sheet 33.

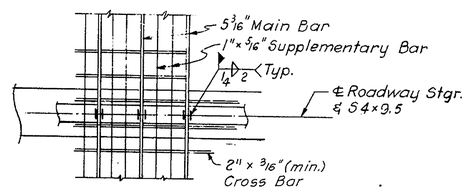

5" ROADWAY GRATING CONNECTION DETAIL

Scale: 1" = 1'-0"

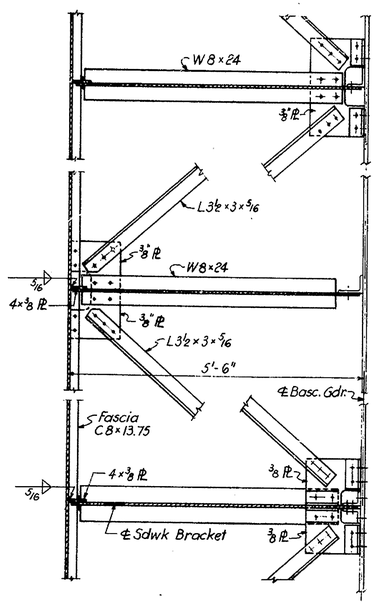

TYPICAL SIDEWALK BRACING DETAILS

Scale: ¾" = 1'-0"

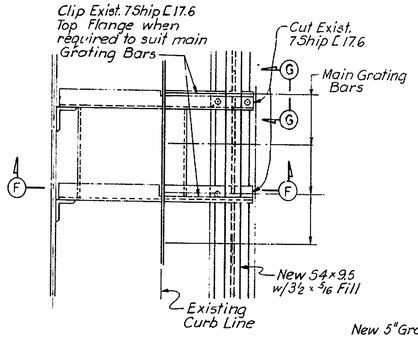

PLAN

NORTH SIDE

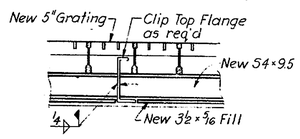

SECTION G-G

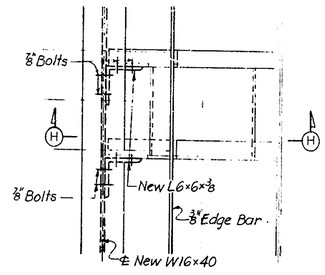

PLAN

SOUTH SIDE

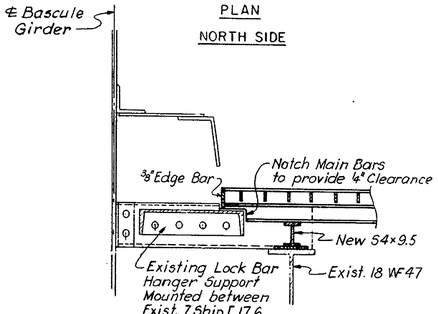

SECTION F-F

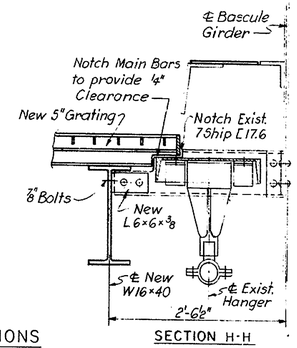

SECTION H-H

LOCK BAR SUPPORT MODIFICATIONS

Scale: 1" = 1'-0"

(West Leaf only)

DELAWARE
DEPARTMENT OF TRANSPORTATION
DIVISION OF HIGHWAYS

SAVANNAH ROAD BRIDGE
OVER LEWES & REHOBOTH CANAL

BASCULE SPAN DECK DETAILS

D. D.D.H.	SCALE	APPROVED BY
T. N.M.	As Noted	R. C. McDowell
C. D.D.H.		BRIDGE ENGINEER

ROBERT C. McDOWELL REGISTERED PROFESSIONAL ENGINEER NO. 3069

COUNTY	CONTRACT	P.R.A. REG. NO.	STATE	FED. AID PROJECT NO.	SHEET NO.	TOTAL SHEETS
SUSSEX	80-023-02	2	DEL		33	87

NO.	REVISIONS	BY	DATE

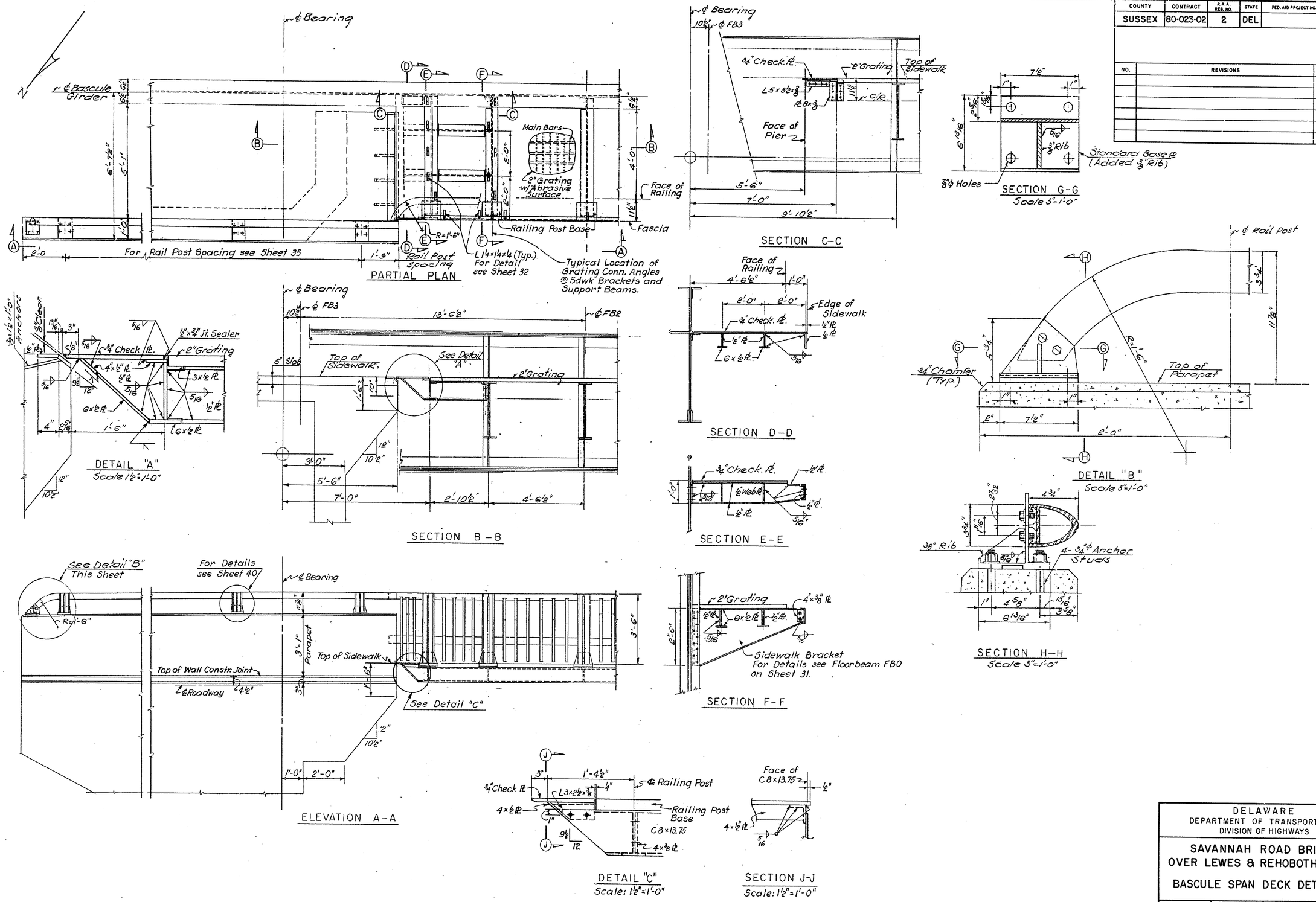

DELAWARE
DEPARTMENT OF TRANSPORTATION
DIVISION OF HIGHWAYS

SAVANNAH ROAD BRIDGE
OVER LEWES & REHOBOTH CANAL

BASCULE SPAN DECK DETAILS II

D. A.N. T. E.A., N.M. C. D.D.H.	SCALE 1½" = 1'-0" & As Noted	APPROVED BY: R. C. McDowell BRIDGE ENGINEER

COUNTY	CONTRACT	P.R.A. REG. NO.	STATE	FED. AID PROJECT NO.	SHEET NO.	TOTAL SHEETS
SUSSEX	80-023-02	2	DEL		34	87

NO.	REVISIONS	BY	DATE

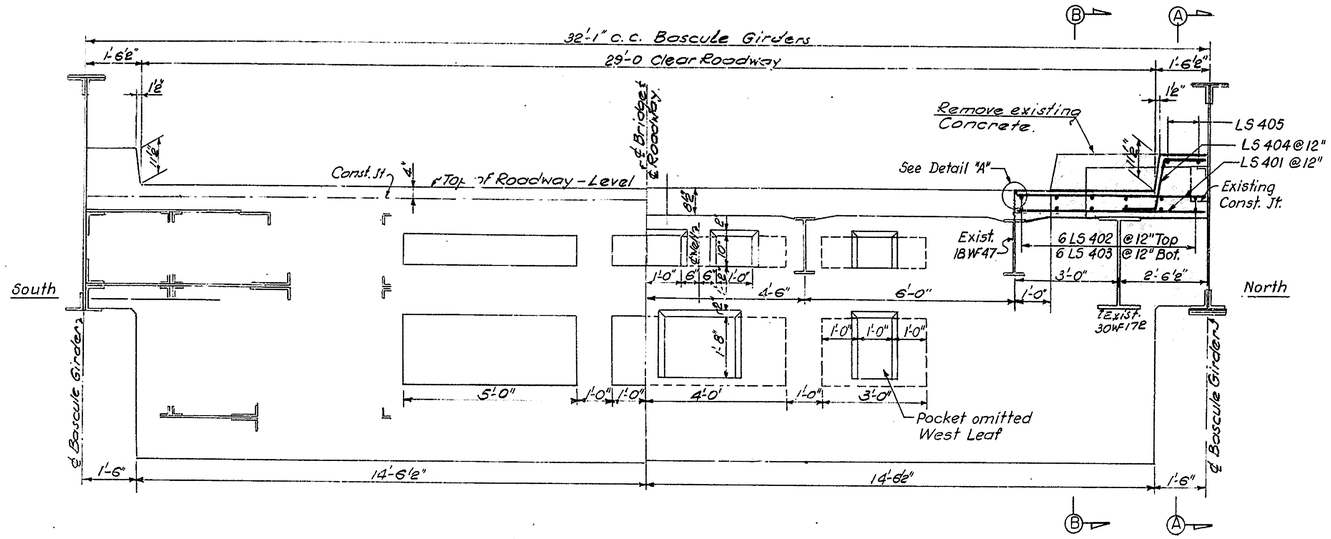

HALF SECTION

HALF ELEVATION

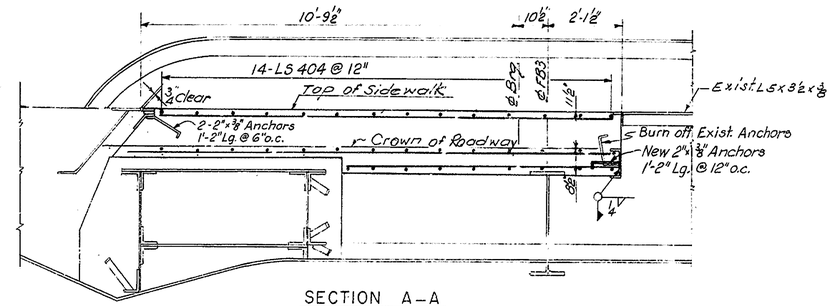

SECTION A–A

COUNTERWEIGHTS

East Leaf Shown
West Leaf Similar

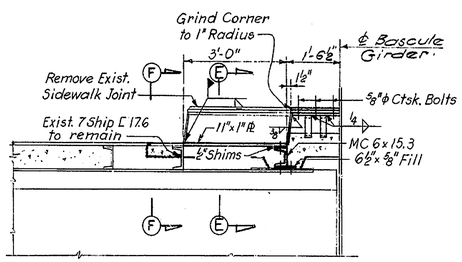

SECTION D–D

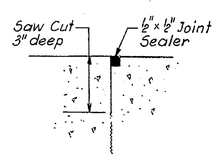

DETAIL "A"
Scale: 3" = 1'-0"

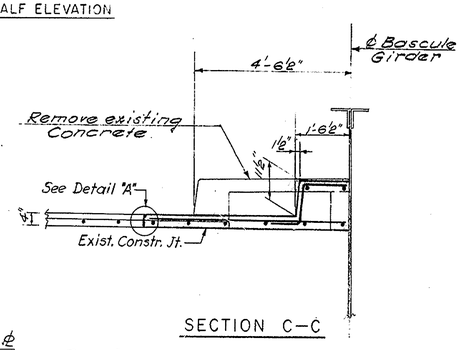

SECTION C–C

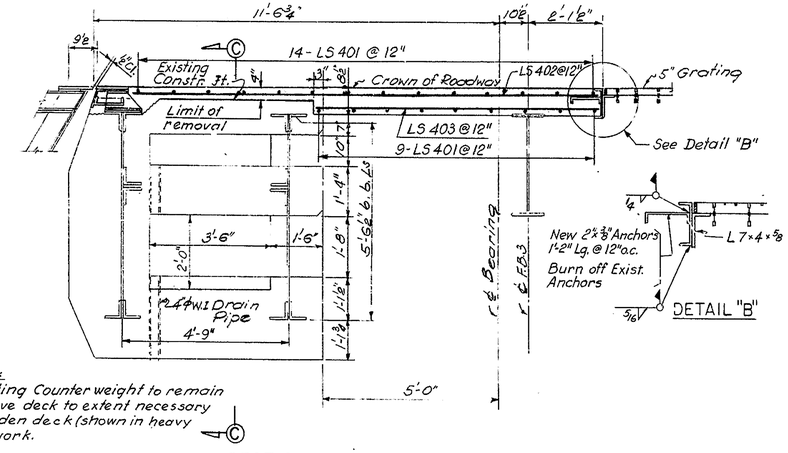

DETAIL "B"

Note:
Existing Counter weight to remain
Remove deck to extent necessary to widen deck (shown in heavy line work.

SECTION B–B

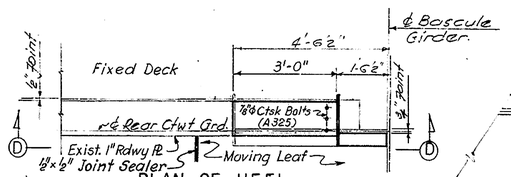

PLAN OF HEEL
FLOORBREAK–ROADWAY

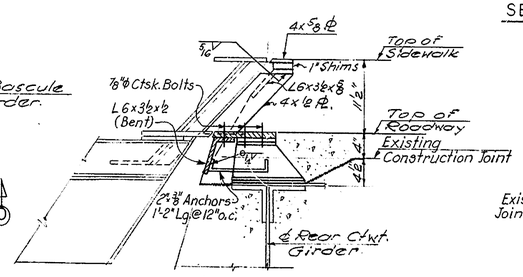

SECTION E–E
Scale: 1" = 1'-0"

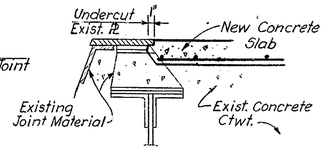

SECTION F–F
Scale: 1" = 1'-0"

NOTE:
Shape of Counterweight is approximate.

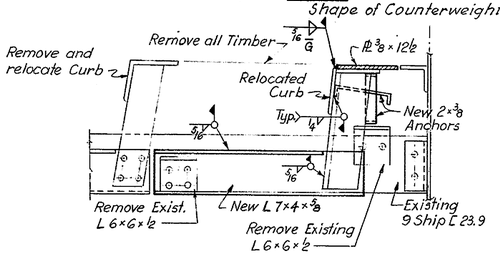

SECTION G–G
Scale: 1" = 1'-0"

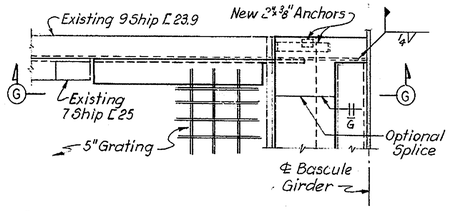

PLAN OF ROADWAY & CURB JOINT AT FB3
Scale: 1" = 1'-0"

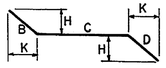

BAR TYPE (19)

BASCULE SPAN DECK REINFORCEMENT

	MARK	LENGTH	NO. REQD	TYPE	DETAIL DIMENSIONS B	C	D	H	K
**	LS401	5'-6"	33	STR					
*	LS402	13'-6"	6	STR					
	LS403	8'-1"	6	STR					
*	LS404	4'-2"	14	19	1'-4"	1'-5½"	1'-4"	1'-4"	0'-2"
*	LS405	13'-0"	2	STR					

* Epoxy Coated
** 14-Top Bars Epoxy Coated

DELAWARE
DEPARTMENT OF TRANSPORTATION
DIVISION OF HIGHWAYS

SAVANNAH ROAD BRIDGE
OVER LEWES & REHOBOTH CANAL

BASCULE SPAN DECK DETAILS

D. D.D.H.
T. E.A., N.M.
C. D.D.H.

SCALE
1" = 1'-0"
& As Shown

APPROVED BY:
BRIDGE ENGINEER

ROBERT McD. MILLER, REGISTERED PROFESSIONAL ENGINEER, NO. 2699, STATE OF DELAWARE

COUNTY	CONTRACT	F.R.A. REG. NO.	STATE	FED. AID PROJECT NO.	SHEET NO.	TOTAL SHEETS
SUSSEX	80-023-02	2	DEL		35	87

NO.	REVISIONS	BY	DATE

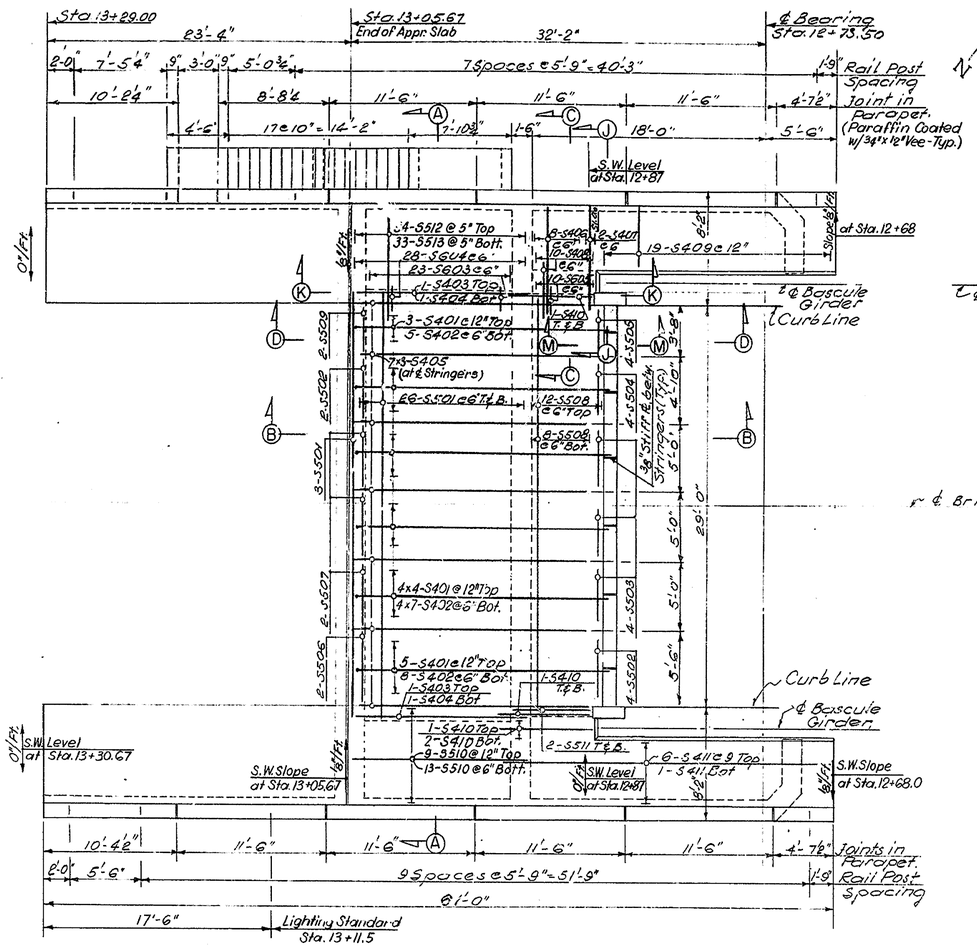

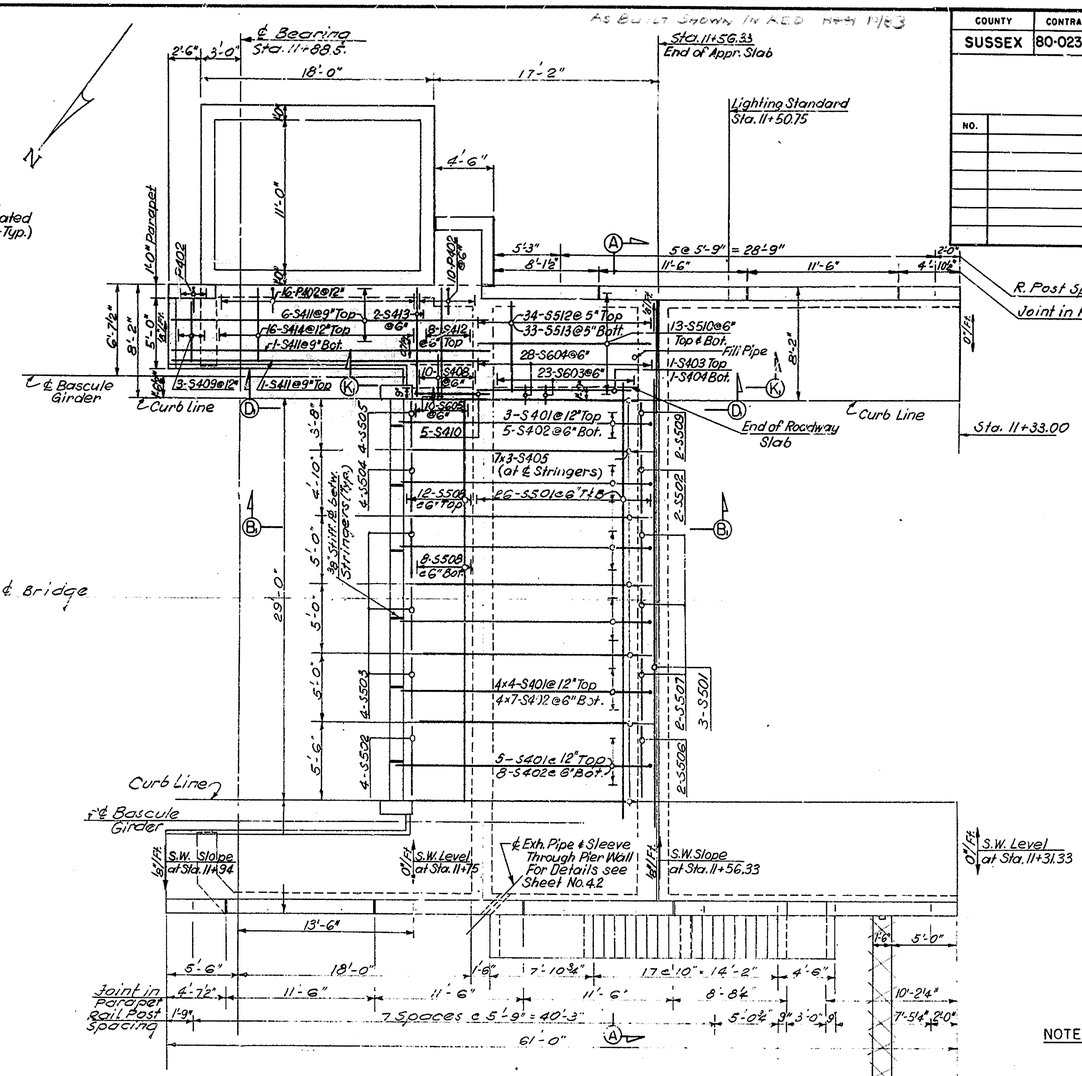

NOTE: For Section A-A through K-K see Sheet No. 36.

Sections B_1-B_1, D_1-D_1, K_1-K_1 are the same as B-B, D-D, K-K except opposite hand.

Sidewalk Slab Reinforcing Bars in North and South Sidewalks of East Pier and North Sidewalk of West Pier are identical.

PLAN OF PIERS AT ROADWAY LEVEL

Scale: 3/16" = 1'-0"

EAST PIER - DECK OVER MACHINERY GALLERY

Mark	Length	No. Reqd	Type	Detail Dimensions A	B	C	D	H	J	Remarks
* S401	22'-0"	24	20		2'-4"	19'-9"	0			
S402	20'-11"	41	20		2'-1"	18'-10"	0			
S403	16'-2"	2	20		2'-4"	13'-10"	0			
S404	14'-10"	2	20		2'-1"	12'-9"	0			
* S405	18'-4"	21	STR							
* S406	10'-1"	16	5		6'-9"	1'-4"	2'-0"	1'-4"		
* S407	9'-9"	4	5		6'-9"	1'-0"	2'-0"	1'-0"		
S408	4'-4"	20	13		0'-6"	0'-3"	3'-7"			R=0'-2"
* S409	4'-6"	38	STR							
S410	6'-3"	10	STR							
* S411	24'-7"	14	STR							
** S501	30'-9"	55	STR							
S502	4'-8"	6	STR							
S503	4'-2"	12	STR							
S504	4'-0"	4	STR							
S505	2'-10"	4	STR							
S506	5'-4"	2	STR							
S507	4'-10"	6	STR							
* S508	30'-3"	20	STR							
S509	3'-6"	2	STR							
*** S510	13'-8"	44	STR							
* S511	6'-0"	8	STR							
* S512	10'-1"	68	5	0	6'-9"	1'-4"	2'-0"	1'-4"	-	
S513	7'-5"	66	1	0'-8"	6'-9"				0'-6"	
S603	2'-9"	46	19			1'-0"	1'-9"	1'-4"		Curb X=1'-2"
* S604	3'-1"	56	12		1'-4"	0'-8"	1'-1"	0'-2"		Curb X=1'-1"
* S605	2'-10"	20	12		1'-4"	0'-5"	1'-1"	0'-2"		Curb X=1'-1"

* Epoxy Coated
** 26-Top Bars Epoxy Coated
*** 18-Top Bars Epoxy Coated

WEST PIER - DECK OVER MACHINERY GALLERY

Mark	Length	No. Reqd	Type	Detail Dimensions A	B	C	D	H	J	Remarks
* S401	22'-0"	24	20		2'-4"	19'-8"	-			
S402	20'-11"	44	20		2'-1"	18'-10"	-			
S403	16'-2"	2	20		2'-4"	13'-10"	-			
S404	14'-10"	2	20		2'-1"	12'-9"	-			
* S405	18'-4"	21	STR							
* S406	10'-1"	8	5		6'-9"	1'-4"	2'-0"	1'-4"		
* S407	9'-9"	2	5		6'-9"	1'-0"	2'-0"	1'-0"		
S408	4'-4"	20	13		0'-6"	0'-3"	3'-7"			R=0'-2"
* S409	4'-6"	22	STR							
S410	6'-3"	10	STR							
* S411	24'-7"	15	STR							
* S412	11'-1"	8	5		7'-9"	1'-4"	2'-0"	1'-4"		
S413	10'-9"	2	5		7'-9"	1'-0"	2'-0"	1'-0"		
S414	5'-6"	16	STR							
** S501	30'-9"	55	STR							
S502	4'-8"	6	STR							
S503	4'-2"	12	STR							
S504	4'-0"	4	STR							
S505	2'-10"	4	STR							
S506	5'-4"	2	STR							
S507	4'-10"	6	STR							
* S508	30'-3"	20	STR							
S509	3'-6"	2	STR							
*** S510	13'-8"	44	STR							
* S511	6'-0"	8	STR							
* S512	10'-1"	68	5	-	6'-9"	1'-4"	2'-0"	1'-4"	-	
S513	7'-5"	66	1	0'-8"	6'-9"				0'-6"	
S603	2'-9"	46	19			1'-0"	1'-9"	1'-4"		
* S604	3'-1"	56	12		1'-4"	0'-8"	1'-1"	0'-2"		
* S605	2'-10"	20	12		1'-4"	0'-5"	1'-1"	0'-2"		

* Epoxy Coated
** 26-Top Bars Epoxy Coated
*** 18-Top Bars Epoxy Coated

BAR TYPES

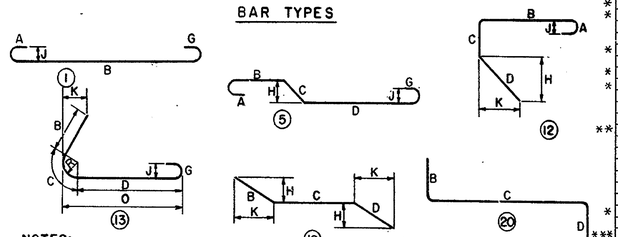

NOTES:

BAR SIZES ARE IDENTIFIED BY THE FIRST DIGIT OF A THREE DIGIT NUMBER AND BY THE FIRST TWO DIGITS OF A FOUR DIGIT NUMBER.

ALL DIMENSIONS ARE OUT TO OUT OF BAR EXCEPT "A" AND "G" ON STANDARD 180° AND 135° HOOKS.

DELAWARE
DEPARTMENT OF TRANSPORTATION
DIVISION OF HIGHWAYS

SAVANNAH ROAD BRIDGE OVER LEWES & REHOBOTH CANAL DECK OVER MACHINERY GALLERY

D. A. N.
T. B.M.&E.A.
C. A. N.

SCALE 3/16" = 1'-0"

APPROVED: R. C. McCullough
BRIDGE ENGINEER

HERBERT C. McCULLOUGH REGISTERED PROFESSIONAL ENGINEER NO. 3269 STATE OF DELAWARE

COUNTY	CONTRACT	P.R.A. REG. NO.	STATE	FED. AID PROJECT NO.	SHEET NO.	TOTAL SHEETS
SUSSEX	80-023-02	2	DEL		36	87

NO.	REVISIONS	BY.	DATE

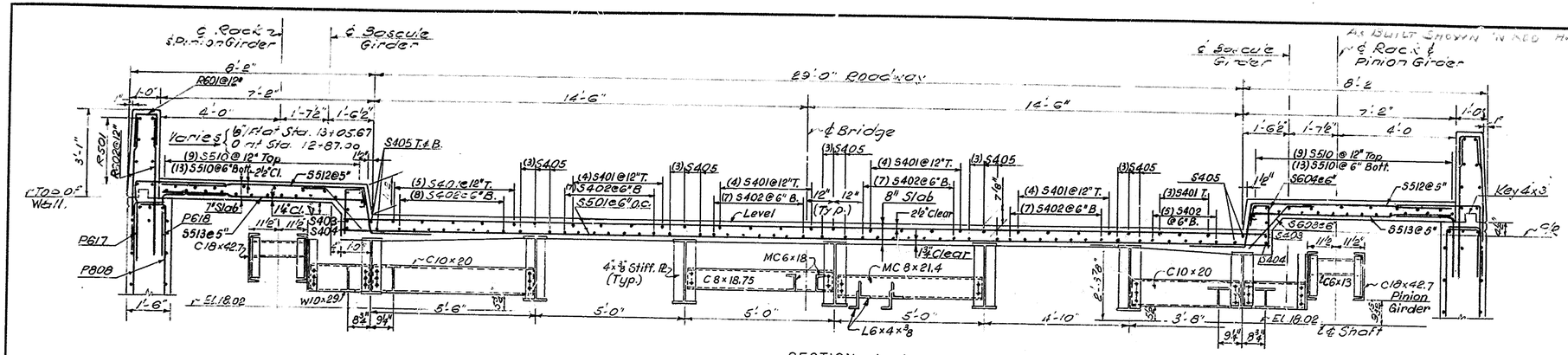

SECTION A–A

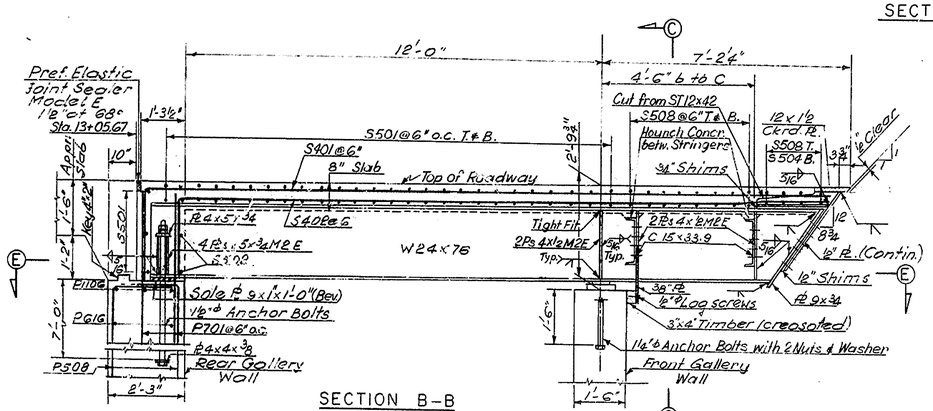

SECTION B–B

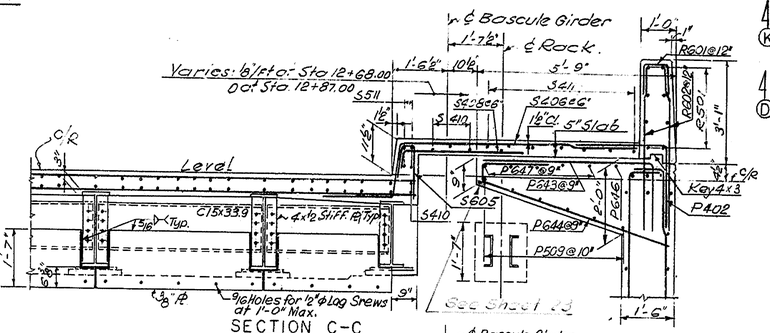

SECTION C–C

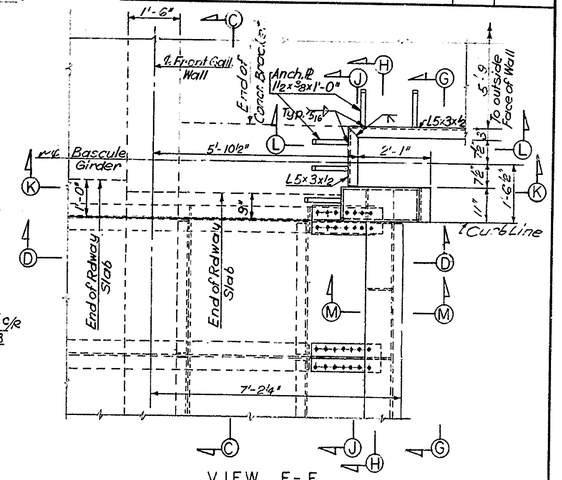

VIEW F–F

(Plan Top of Rd'way at S.E. Girder Slot)

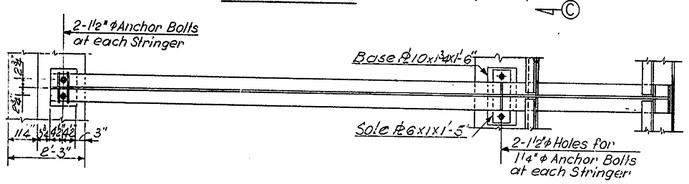

SECTION E–E

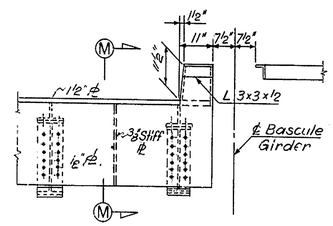

SECTION G–G

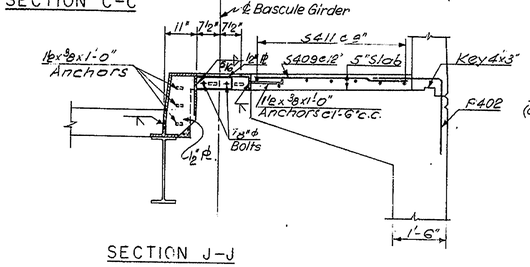

SECTION J–J

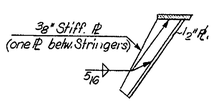

SECTION M–M

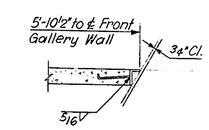

SECTION L–L

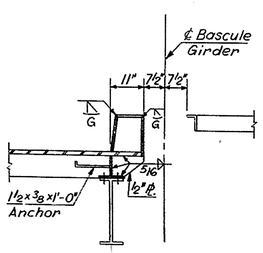

SECTION H–H

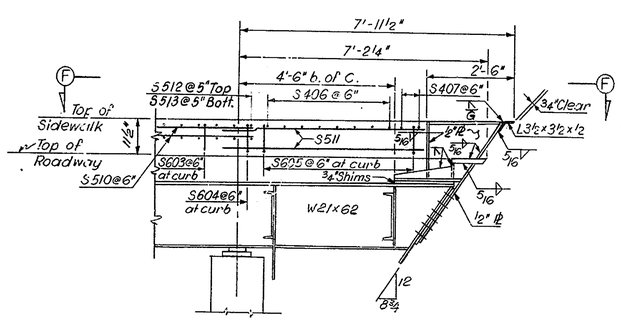

SECTION D–D

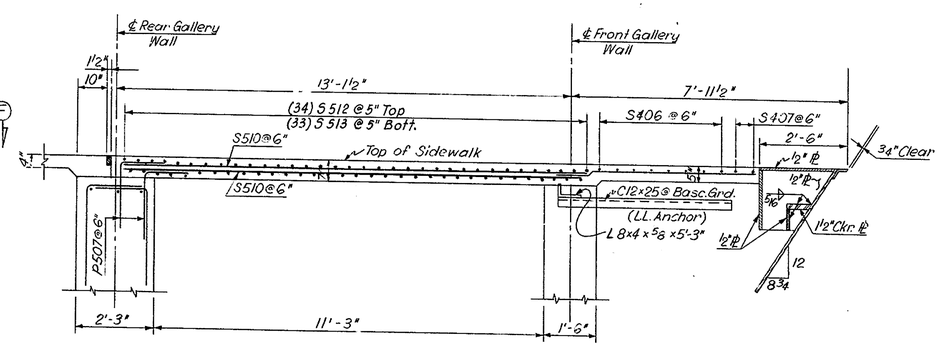

SECTION K–K

NOTES:

1. For Location of Section A-A through K-K see Sheet No. 35
2. Details shown on View F-F are the same for all four ends of Girder Slot.
3. For Location and Details of Machinery Supports not shown see Sheets 38 and 39

DELAWARE
DEPARTMENT OF TRANSPORTATION
DIVISION OF HIGHWAYS

SAVANNAH ROAD BRIDGE OVER LEWES & REHOBOTH CANAL DECK OVER MACHINERY GALLERY

D. A. N.	SCALE	APPROVED BY:	NO. 3069
T. B.M. & E.A.	1/2" = 1'-0"	A. I. McDowell	
C. A. N.		BRIDGE ENGINEER	

ROBERT C. McDOWELL REGISTERED PROFESSIONAL ENGINEER STATE OF DELAWARE

COUNTY	CONTRACT	F.R.A. REG. NO.	STATE	FED. AID PROJECT NO.	SHEET NO.	TOTAL SHEETS
SUSSEX	80-023-02	2	DEL		37	87

NO.	REVISIONS	BY	DATE

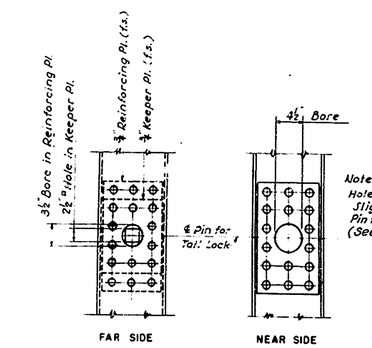

DETAIL OF PIN PLATES
Scale 1"=1'-0"

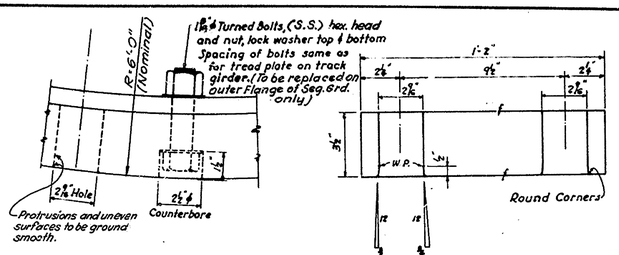

RECONDITIONING
TREAD PLATE ON SEGMENTAL GIRDER
Scale 3"=1'-0"

Note:
Holes for pin to have Class G Tight Fit. Slight negative allowance, matchmark Pin to be reused from existing assembly (See special Provisions for Machinery)

NOTE:
Existing tread plates to remain in Place. Turned bolt replacement and grinding uneven surface smooth to be performed under Item of Tread Plates.

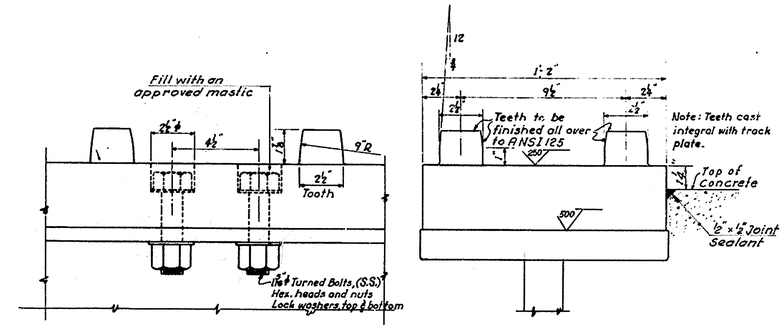

TREAD PLATE ON TRACK GIRDER
Scale 3"=1'-0"

NOTE:
Dimensions shown are to be verified and matched with existing tread plates on segmental Girders.

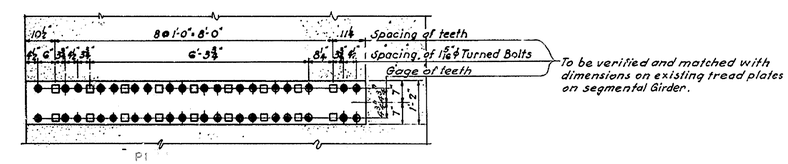

PLAN OF TREAD PLATE
Scale: ½"=1'-0"

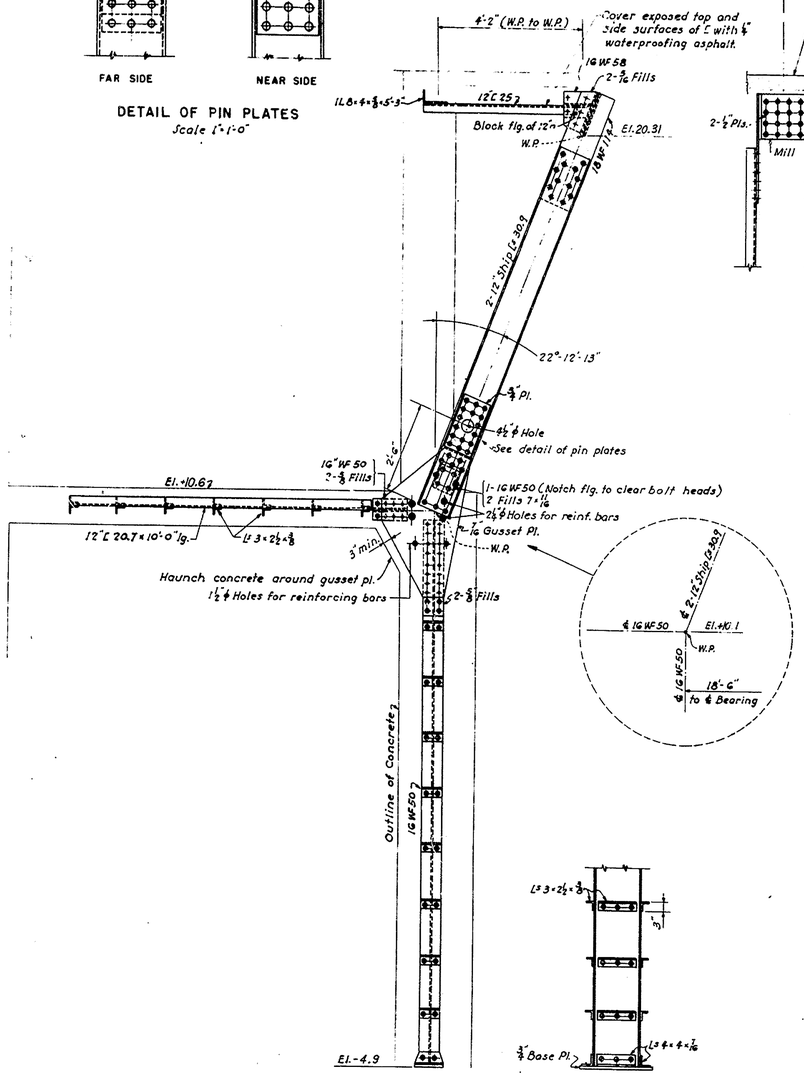

LIVE LOAD ANCHORAGE
Scale ½"=1'-0"

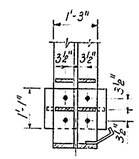

SECTION E-E

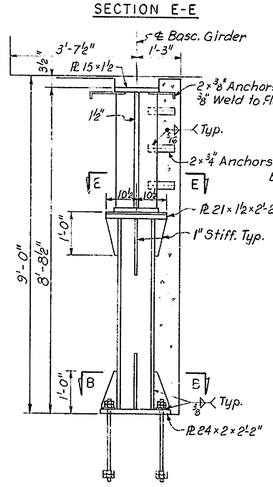

SECTION C-C

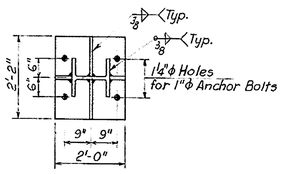

SECTION B-B

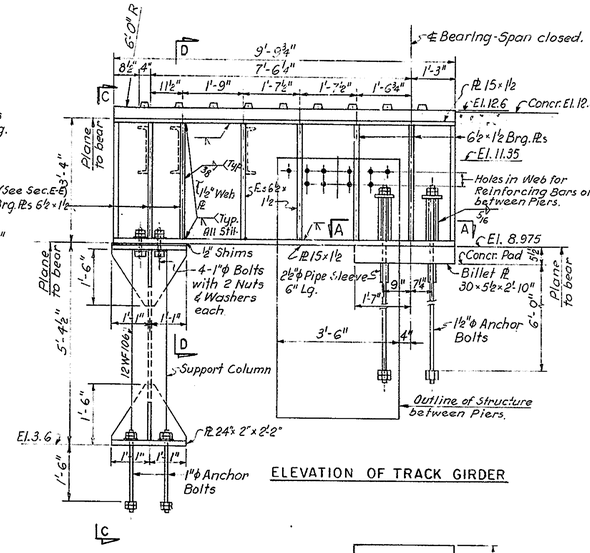

ELEVATION OF TRACK GIRDER

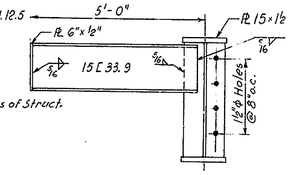

SECTION D-D

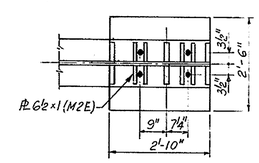

SECTION A-A

TRACK GIRDER
Scale: ½"=1'-0"

DELAWARE
DEPARTMENT OF TRANSPORTATION
DIVISION OF HIGHWAYS

SAVANNAH ROAD BRIDGE
OVER LEWES & REHOBOTH CANAL
LIVE LOAD ANCHORAGE
AND TRACK GIRDER

D. A. N.	SCALE	APPROVED BY
T. C. R.	AS NOTED	R. C. McDonnell
C. A. N.		BRIDGE ENGINEER

ROBERT C. McDONNELL REGISTERED PROFESSIONAL ENGINEER NO. 3068 STATE OF DELAWARE

COUNTY	CONTRACT	P.R.A. REG. NO.	STATE	FED. AID PROJECT NO.	SHEET NO	TOTAL SHEETS
SUSSEX	80-023-02	2	DEL		38	87

NO.	REVISIONS	BY	DATE

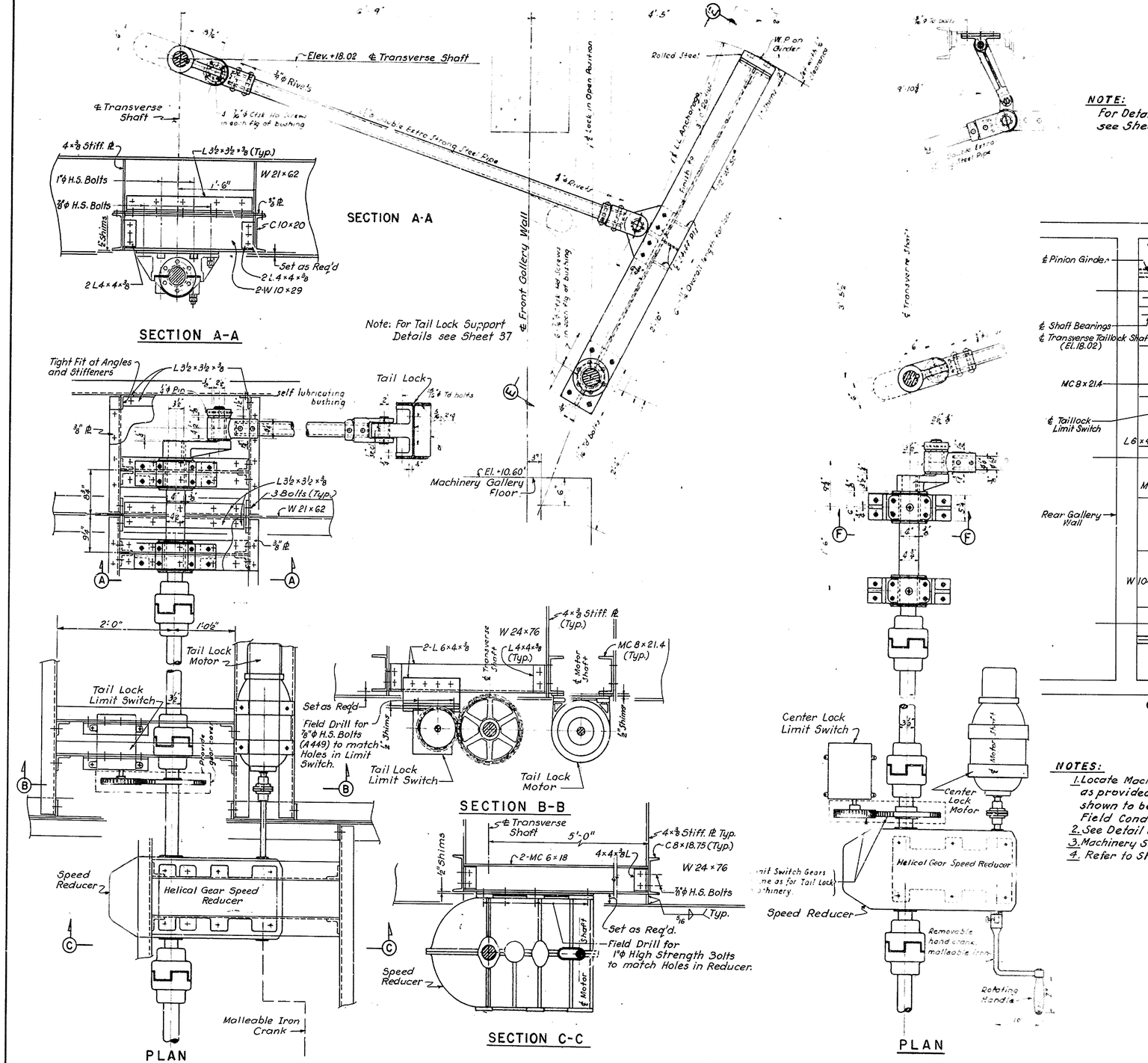

TAIL LOCK MACHINERY SUPPORTS

Provide movable or collapsible platform for cranking tail lock.

CENTER LOCK MACHINERY SUPPORTS

NOTE:
For Details of Modifications of 7 Ship [17.6, see Sheet 32.

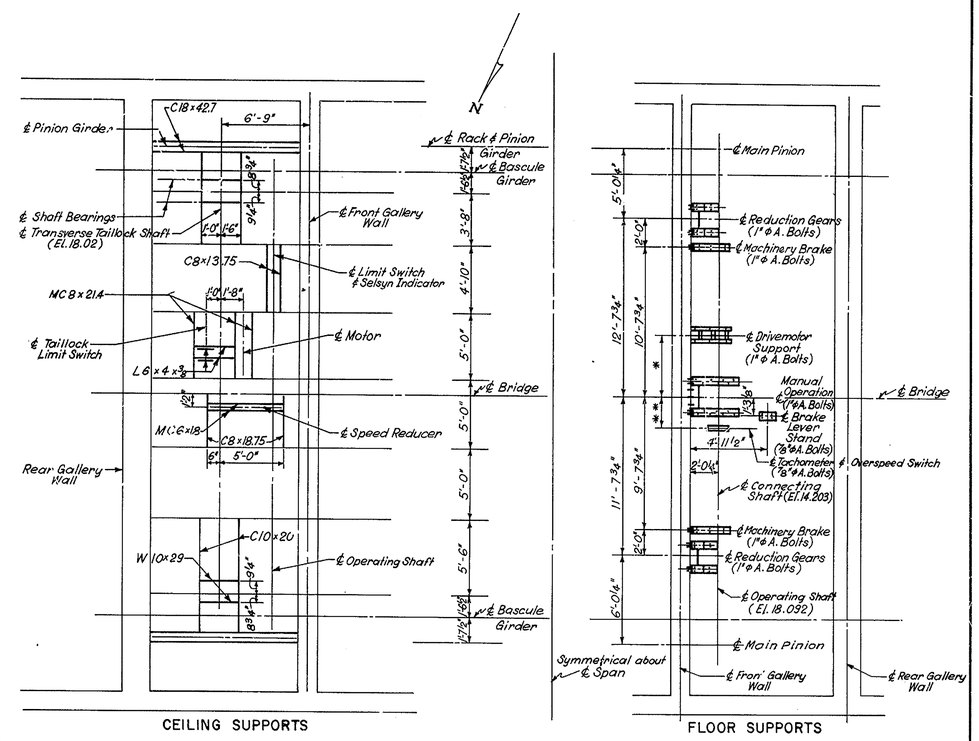

LOCATION PLAN OF MACHINERY SUPPORTS

Scale: 3/16" = 1'-0"

NOTES:
1. Locate Machinery Supports relative to Machinery as provided by existing Supports. Dimensions shown to be verified and adjusted for Exact Field Conditions.
2. See Detail of each Support for Layout of Anchor Bolts.
3. Machinery Supports to be same as existing except as shown.
4. Refer to Sheet 46 for Machinery Layout.

* To be determined after Drive Motor is Selected and Approved.

** To be determined after Tachometer and Overspeed Switch is Selected & Approved.

DELAWARE
DEPARTMENT OF TRANSPORTATION
DIVISION OF HIGHWAYS

SAVANNAH ROAD BRIDGE
OVER LEWES & REHOBOTH CANAL

MACHINERY SUPPORTS

D. D.D.H. T. C.R. C. D.D.H.	SCALE 1" = 1'-0" AND AS NOTED	APPROVED BY R.C. McDonald BRIDGE ENGINEER

ROBERT C. McDONALD — REGISTERED PROFESSIONAL ENGINEER — NO. 3068 — DELAWARE

COUNTY	CONTRACT	P.R.A. REG. NO.	STATE	FED. AID PROJECT NO.	SHEET NO.	TOTAL SHEETS
SUSSEX	80-023-02	2	DEL		39	87

NO.	REVISIONS	BY	DATE

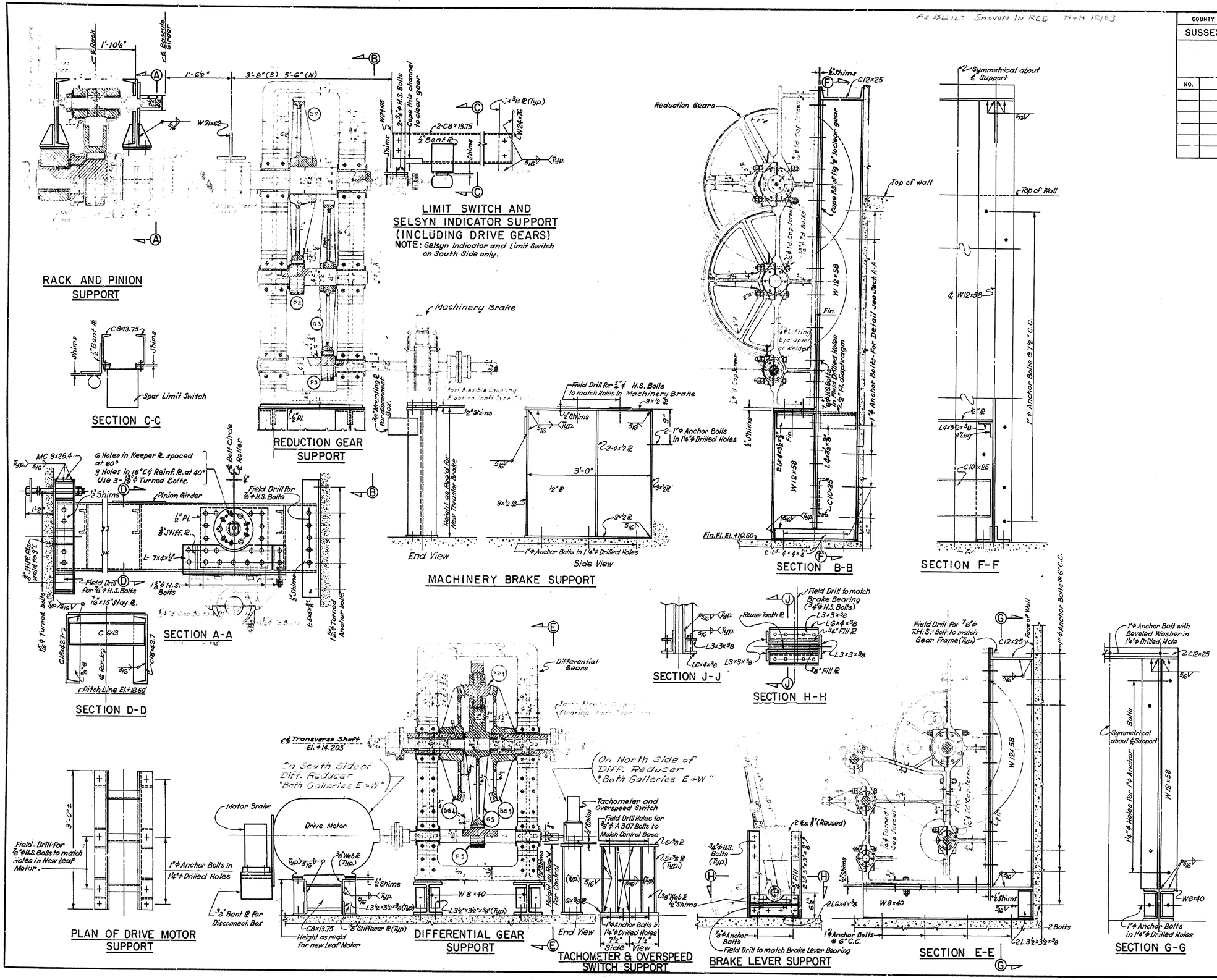

NOTES:

1. All Bolts to connect Support Members shall be 7/8"φ H.S. (A325) Bolts except as shown otherwise.
2. See Mechanical and Electrical Drawings and special Provisions for Details of Machinery and Electrical Equipment and their Connection to Supports.
3. Machinery Supports shall be same as existing except as shown.
4. Bolts and Shims for Support of Machinery and Electrical components to be paid for under respective Machinery and Electrical Items of Work.
5. All surfaces providing support for Machinery and Electrical Components shall be finished after fabrication to equal the finish of the mating surface.

DELAWARE
DEPARTMENT OF TRANSPORTATION
DIVISION OF HIGHWAYS

SAVANNAH ROAD BRIDGE
OVER LEWES & REHOBOTH CANAL
MACHINERY SUPPORTS II

D.D.D.H. T.B.M.&C.R. C.D.D.H.	SCALE 1" = 1'-0"	APPROVED BY: R. C. McDowell BRIDGE ENGINEER

12932

COUNTY	CONTRACT	P.R.A. REG. NO.	STATE	FED. AID PROJECT NO.	SHEET NO.	TOTAL SHEETS
SUSSEX	80-023-02	2	DEL		40	87

NO.	REVISIONS	BY	DATE

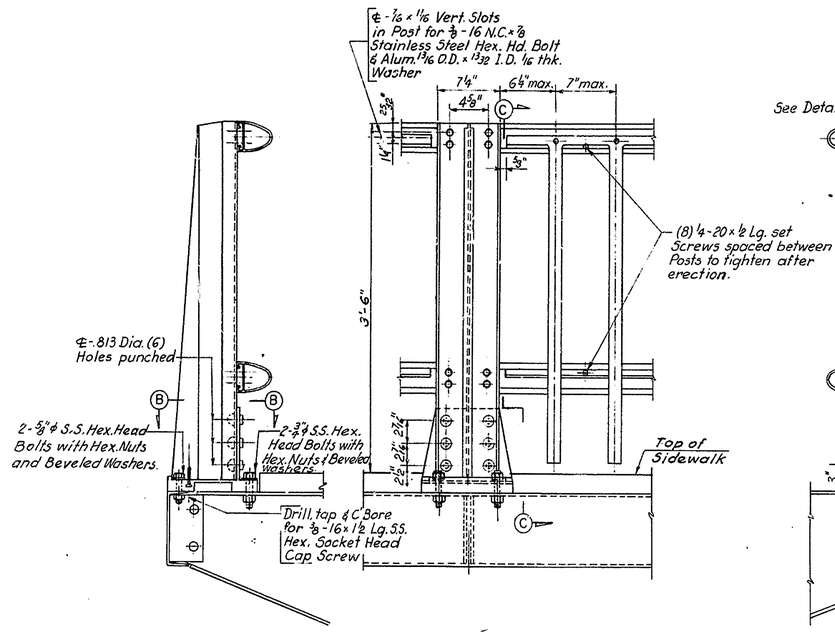

TYPICAL RAILING SECTION
Scale: 1 1/2" = 1'-0"

ELEVATION
Scale: 1/2" = 1'-0"

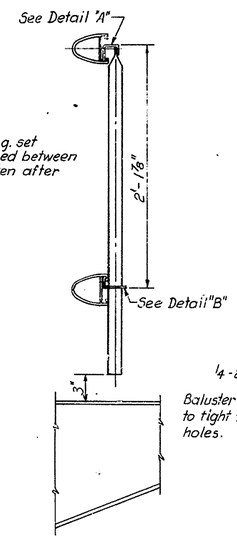

SECTION C-C
Scale: 1/2" = 1'-0"

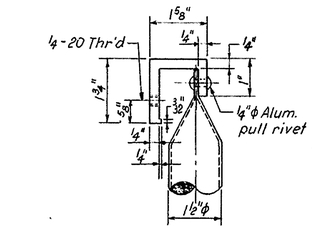

DETAIL "A"
Scale: 6" = 1'-0"

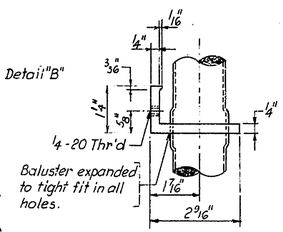

DETAIL "B"
Scale: 6" = 1'-0"

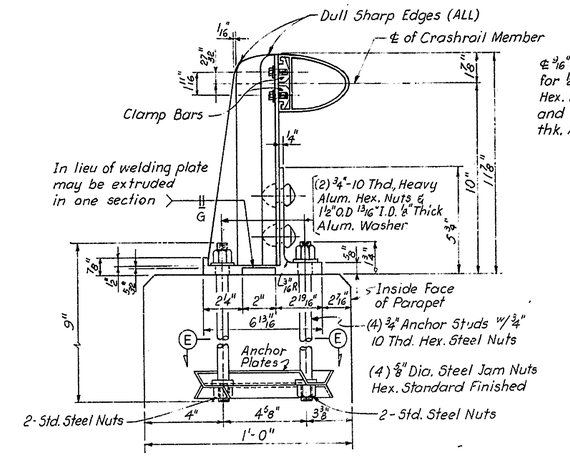

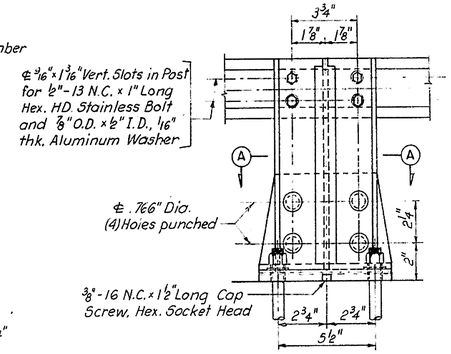

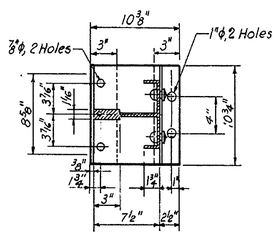

SECTION B-B
Scale: 1 1/2" = 1'-0"

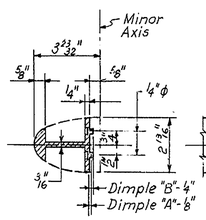

SPLICE BAR
Scale: 3" = 1'-0"

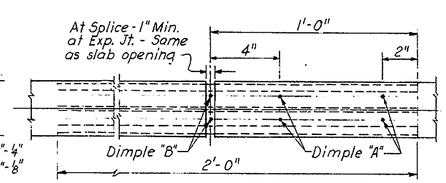

SPLICE DETAIL
Scale: 3" = 1'-0"

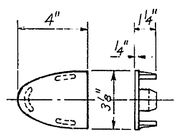

RAIL CAP DETAILS
Scale: 3" = 1'-0"

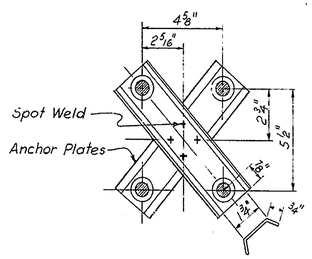

SECTION E-E

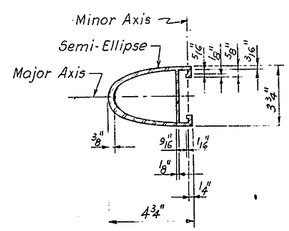

CRASHRAIL MEMBER
Scale: 3" = 1'-0"

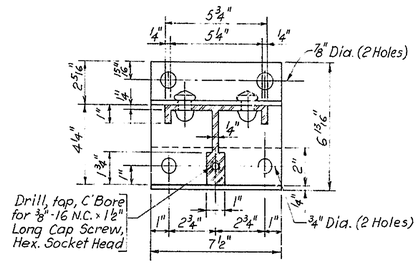

SECTION A-A

RAILING DETAILS ON PIER

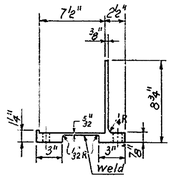

POST BASE ELEVATION
Scale: 1 1/2" = 1'-0"

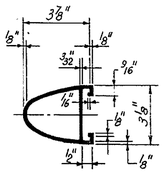

TYPICAL RAIL SECTION
Scale: 3" = 1'-0"

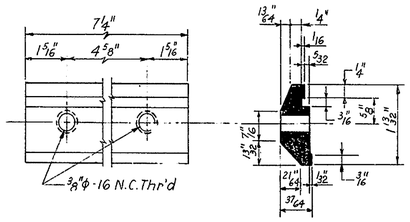

CLAMP BAR DETAILS
No Scale

RAILING DETAILS ON BRIDGE

NOTES:

POSTS AND BALUSTERS TO BE SET VERTICAL. SEE SETTING OF POSTS DETAILS. FOR SPACING OF POSTS SEE PLANS.
RAILS SHALL BE CONTINUOUS OVER FOUR POSTS (MINIMUM) WITHOUT SPLICES.
SPLICES TO BE LOCATED 2'-0" FROM ℄ OF POST.
COAT BOTTOM OF POST BASES THOROUGHLY WITH AN APPROVED CAULKING COMPOUND OR AN APPROVED ZINC CHROMATE PAINT.

MATERIAL NOTES:

POSTS, POST BASES	ASTM	B-221 ALLOY 6061 - T6
SPLICES, CLAMP BARS	ASTM	B-221 ALLOY 6061 - T6
BALUSTERS & BALUSTER FRAMES	ASTM	B-221 ALLOY 6061 - T6 OR 6351-T6
RAILS	ASTM	B-221 ALLOY 6061 - T6 OR 6351-T5
RIVETS	ASTM	B-316, B-211 ALLOY 6061-T6 OR 6053-T6
ALUMINIUM NUTS	ASTM	B-221 ALLOY 6061 - T6 OR ALLOY 6262-T9
ALUMINUM WASHERS	ASTM	B-209 ALLOY ALCLAD 2024-T3
RAIL CAPS	ASTM	B-26, B-108 ALLOY A-356F
STAINLESS STEEL CAP AND SET SCREWS	ASTM	A-193 GRADE B8
STAINLESS STEEL ANCHOR BOLTS	ASTM	A-276 TYPE 430 (THREADS ROLLED, NOT CUT)
ANCHOR CHANNEL BARS	ASTM	A-36 OR A7
EMBEDDED STEEL NUTS	ASTM	A-307
FILLER ALLOY FOR WELDS	5556	OR 5356
SHIMS (IF REQUIRED)	ASTM	B-209, ALLOY 1100-O

NOTES:
1. For Details of Railing at End of Concrete Parapets, see Sheet 33.
2. The Contractor shall provide Spare Baluster Clamps in the amount of 10% of those required for the railing.

DELAWARE
DEPARTMENT OF TRANSPORTATION
DIVISION OF HIGHWAYS

SAVANNAH ROAD BRIDGE
OVER LEWES & REHOBOTH CANAL

RAILING DETAILS

D. H.E.D.	SCALE	APPROVED BY
T. J. N.	AS NOTED	R. C. McDowell
C. H.E.D.		BRIDGE ENGINEER

ROBERT C. McDOWELL
DIST. OF DELAWARE
NO. 3093
PROFESSIONAL ENGINEER

COUNTY	CONTRACT	P.R.A. REG. NO	STATE	FED. AID PROJECT NO.	SHEET NO.	TOTAL SHEETS
SUSSEX	80-023-02	2	DEL		41	87

NO.	REVISIONS	BY	DATE

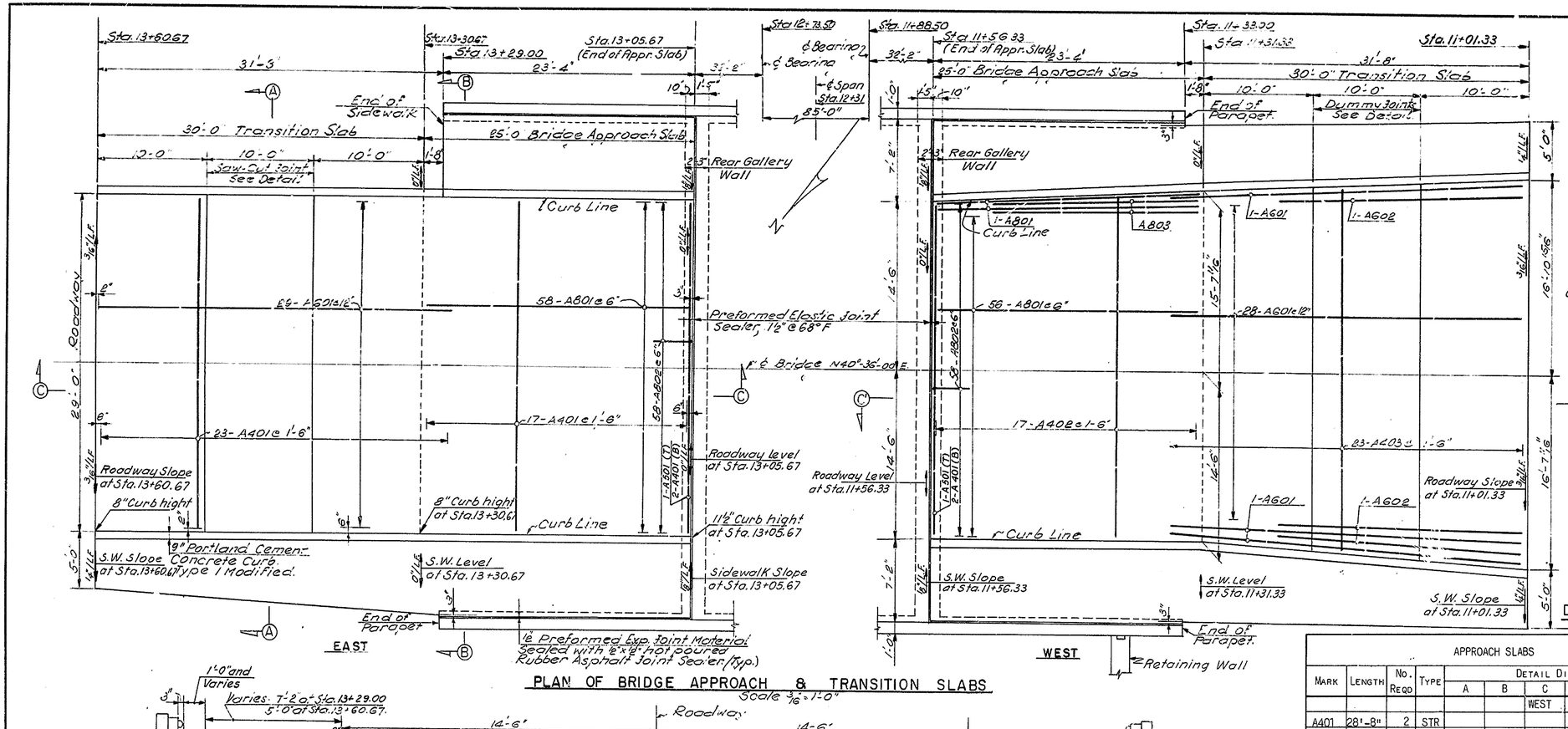

PLAN OF BRIDGE APPROACH & TRANSITION SLABS

Scale 3/16" = 1'-0"

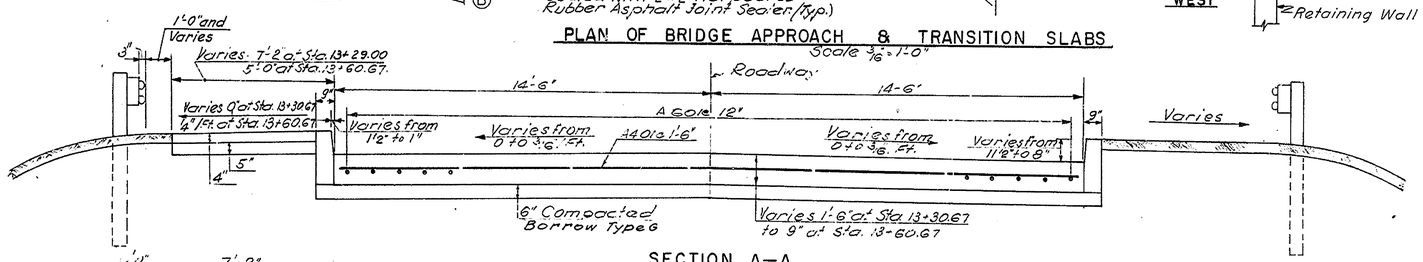

SECTION A–A

Scale 3/16" = 1'-0"

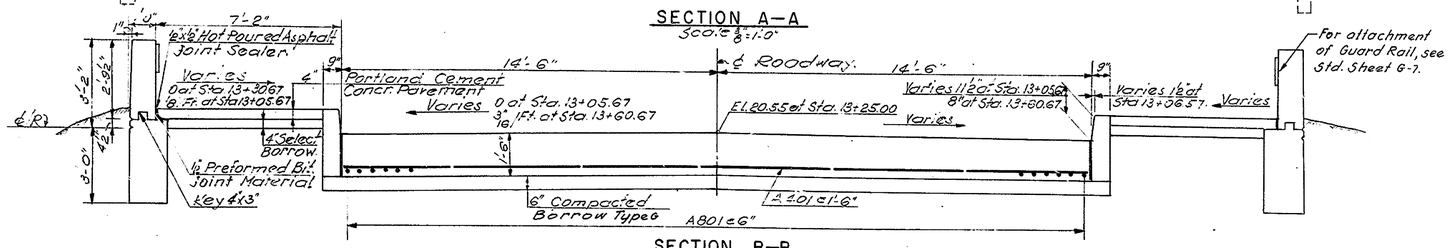

SECTION B–B

Scale 3/8" = 1'-0"

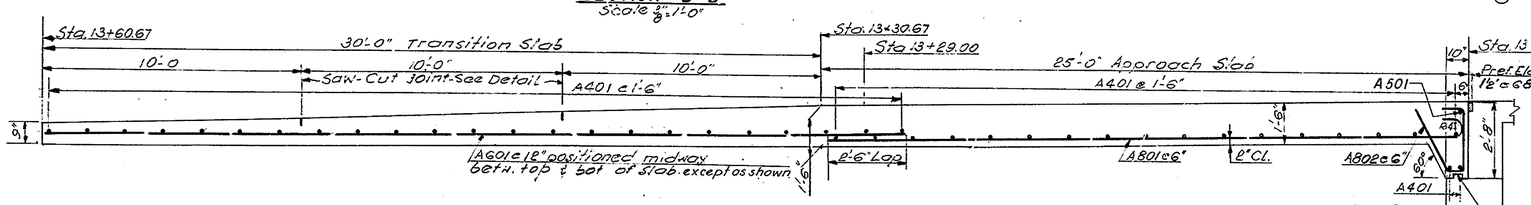

SECTION C–C

Scale 3/8" = 1'-0"

NOTE: Section C-C shown
Section C'-C' similar

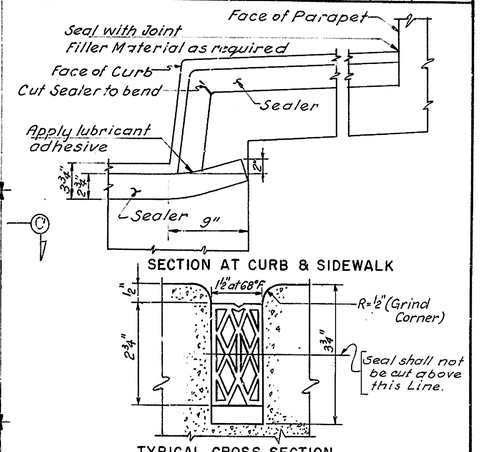

DETAIL OF PREFORMED ELASTIC JOINT SEALER

APPROACH SLABS

MARK	LENGTH	No. REQD	TYPE	DETAIL DIMENSIONS A	B	C	D	E	G	REMARKS
						WEST				
A401	28'-8"	2	STR							
A402	28'-8"	17	STR							
	29'-9"									
A403	29'-9"	23	STR							
	33'-2"									
A601	32'-3"	31	STR							
A602	22'-3"	3	STR							
A801	25'-7"	58	1	1'-1"	24'-6"					J=10"
* A802	5'-3"	58	12	-	2'-3"	0'-8"	2'-4"			H= 2'-0"; K=1'-2"
A803	20'-6"	2	STR							
A501	28'-8"	1	STR							
						EAST				
A401	28'-8"	42	STR							
* A501	28'-8"	1	STR							
A601	33'-0"	29	STR							
A801	25'-7"	58	1	1'-1"	24'-6"					J=10"
A802	5'-3"	58	12	-	2'-3"	0'-8"	2'-4"			H= 2'-0"; K=1'-2"

* Epoxy Coated

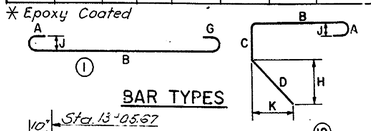

BAR TYPES

NOTES:

1. BAR SIZES ARE IDENTIFIED BY THE FIRST DIGIT OF A THREE DIGIT NUMBER AND BY THE FIRST TWO DIGITS OF A FOUR DIGIT NUMBER.
2. ALL DIMENSIONS ARE CUT TO OUT OF BAR EXCEPT "A" AND "G" ON STANDARD 180° AND 135° HOOKS.

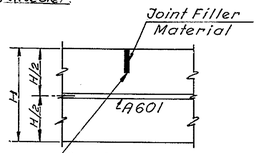

DETAIL OF SAW-CUT JOINT

DELAWARE
DEPARTMENT OF TRANSPORTATION
DIVISION OF HIGHWAYS

SAVANNAH ROAD BRIDGE
OVER LEWES & REHOBOTH CANAL

APPROACH SLABS

D. A.N.	SCALE	APPROVED BY:
T. J.N.	AS NOTED	R. C. McDowell
C. C.G.		BRIDGE ENGINEER

ROBERT C. McDOWELL — STATE OF DELAWARE — No. 3299

COUNTY	CONTRACT	P.R.A. REG. NO.	STATE	FED. AID PROJECT NO.	SHEET NO.	TOTAL SHEETS
SUSSEX	80-023-02	2	DEL		42	87

NO.	REVISIONS	BY	DATE

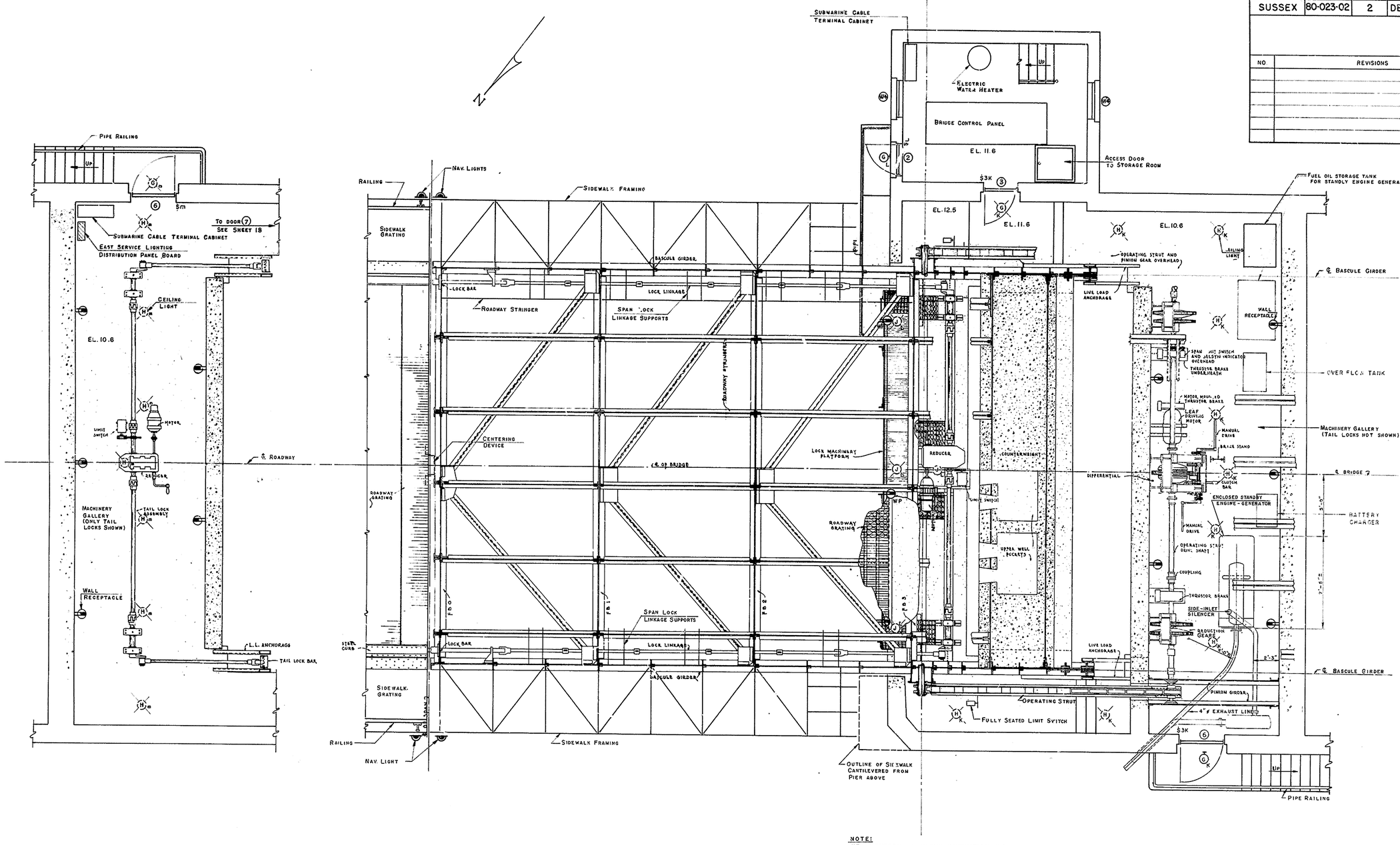

NOTE:
NEW MEMBERS ARE SHOWN SCHEMATICALLY BY SOLID LINES.

DELAWARE
DEPARTMENT OF TRANSPORTATION
DIVISION OF HIGHWAYS

SAVANNAH ROAD BRIDGE
OVER LEWES & REHOBOTH CANAL
GENERAL ARRANGEMENT
OF BRIDGE EQUIPMENT

D. C.R. T. J.N. C. H.E.D.	SCALE 1/4" = 1'-0"	APPROVED BY: R.C. McDowell BRIDGE ENGINEER

12932

COUNTY	CONTRACT	P.R.A. REG. NO.	STATE	FED. AID PROJECT NO.	SHEET NO.	TOTAL SHEETS
SUSSEX	80-023-02	2	DEL		43	87

NO.	REVISIONS	BY	DATE

All wiring for Light Fixture, Air Compressors Air Horns and Photocells shall be installed in Room Support Columns (Typical)

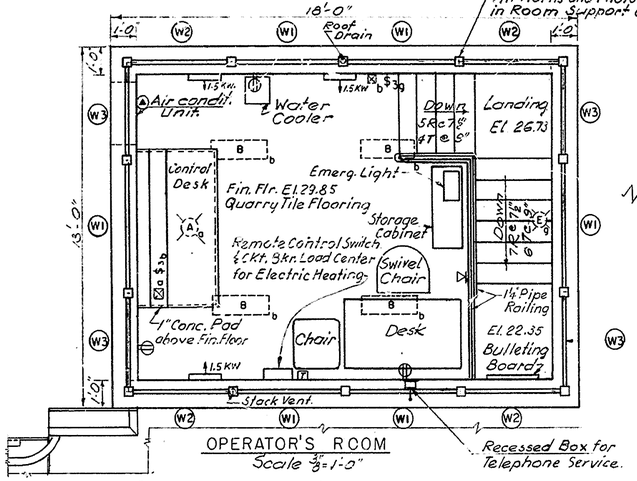

OPERATOR'S ROOM
Scale 3/8" = 1'-0"

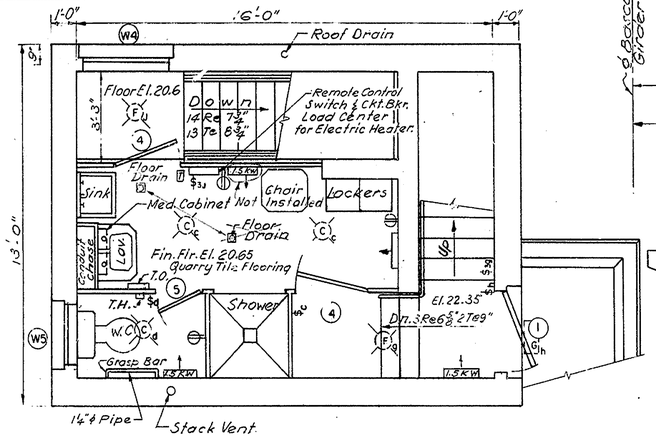

UTILITY ROOM
Scale 3/8" = 1'-0"

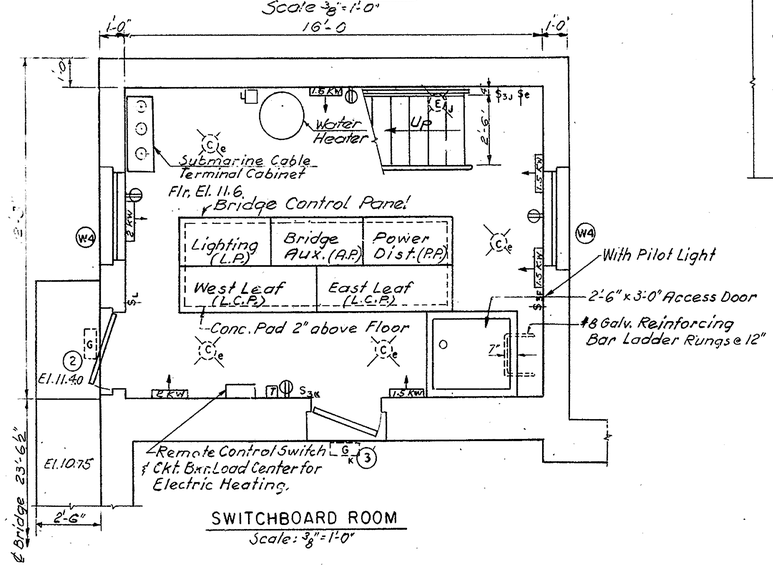

SWITCHBOARD ROOM
Scale: 3/8" = 1'-0"

LEGEND

- B (A) – Light Fixture Type as indicated
- – Duplex receptacle
- – Single outlet Twistlock receptacle, 3-wire, 20a., 250V. (for A/c)
- – Wall-Mtd. Sound Powered Telephone
- – Disc. Sw.
- $ – Tumbler Switch, SPST
- $3 – Tumbler Switch, SPDT
- – Dimmer Switch.
- 1.5 KW – Electric Heater (Rating as shown)
- T – Thermostat for Electric Heating

NOTE: Electric Heaters in Operator's Room to be Semi-recessed. All other Heaters to be surface mounted.

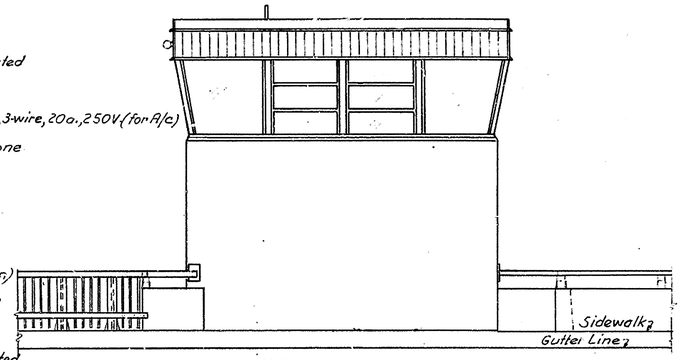

NORTH ELEVATION
Scale: 1/4" = 1'-0"

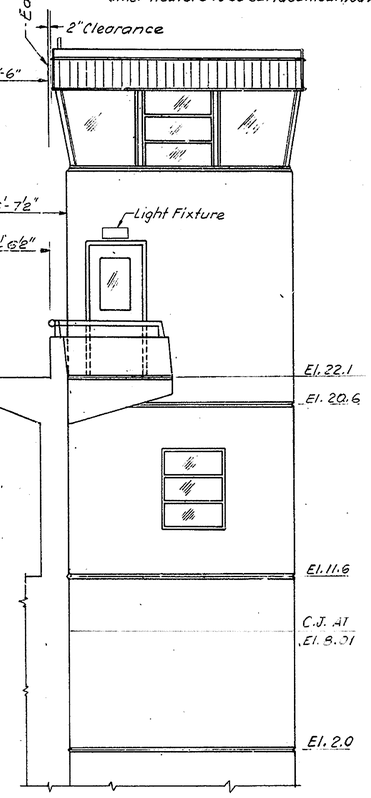

WEST ELEVATION
Scale: 1/4" = 1'-0"

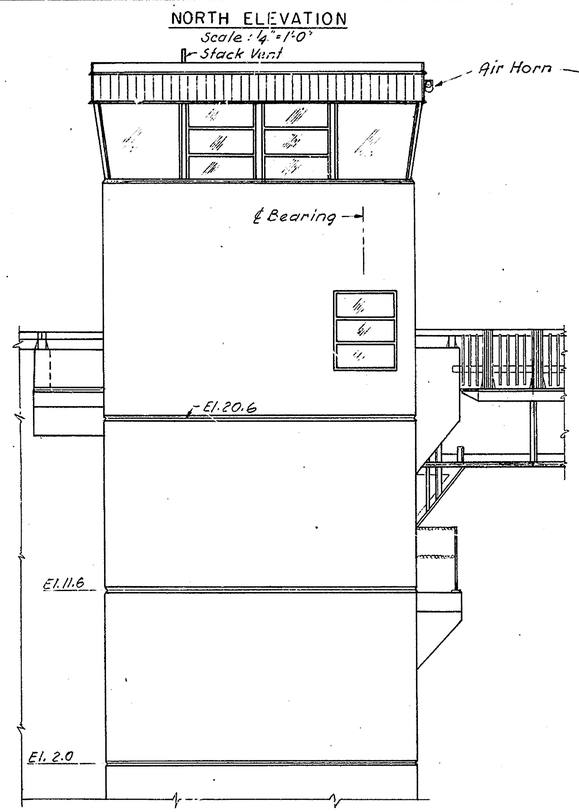

SOUTH ELEVATION
Scale: 1/4" = 1'-0"

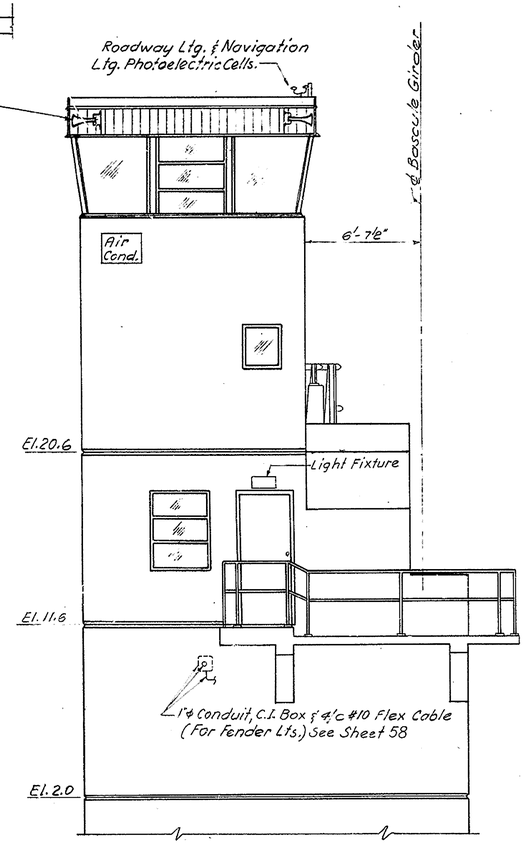

EAST ELEVATION
Scale: 1/4" = 1'-0"

"WINDOW" SCHEDULE					
MARK	TYPE	SIZE (W x H)	No. REQ'D.	DESCRIPTION	
W1	AWNING	4'-0" x 4'-0"	6	ANODIZED ALUM., 1/2" TINTED, POLISHED, INSULATING GLASS	
W2	FIXED	SIZED TO FIT	4	ANODIZED ALUM., 1" TINTED, POLISHED, INSULATING GLASS	
W3	FIXED	SIZED TO FIT	4	ANODIZED ALUM., 1" TINTED, POLISHED, INSULATING GLASS	
W4	AWNING	3'-4" x 4'-0"	3	ANODIZED ALUM., 1/2" TINTED, POLISHED, INSULATING GLASS	
W5	AWNING	1'-11" x 2'-0"	1	ANODIZED ALUM., 1/2" TINTED, OPAQUE, INSULATING GLASS	

AWNING TYPE

DOOR SCHEDULE					
MARK	TYPE	SIZE	No. REQ'D.	DESCRIPTION	SADDLE
1	A	3'-0" x 7'-0" x 1-3/4"	1	FLUSH STAINLESS STEEL	CAST BRONZE
2	B	2'-8" x 7'-0" x 1-3/4"	1	FLUSH STAINLESS STEEL	CAST BRONZE
3	B	2'-8" x 6'-8" x 1-3/4"	1	FLUSH STAINLESS STEEL	CAST BRONZE
4	A	2'-6" x 6'-8" x 1-3/4"	2	FLUSH ALUMINUM	NONE
5	C	2'-0" x 6'-8" x 1-3/4"	1	FLUSH ALUMINUM	NONE
6	B	3'-8" x 7'-0" x 1-3/4"	2	FLUSH STAINLESS STEEL	CAST BRONZE
7	B	2'-6" x 6'-8" x 1-3/4"	1	FLUSH STAINLESS STEEL	CAST BRONZE

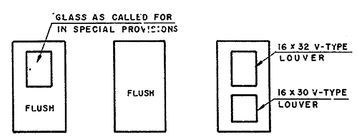

TYPE A TYPE B TYPE C

Note: See Sheet 42 for Location of Doors 6 & 7.

DELAWARE
DEPARTMENT OF TRANSPORTATION
DIVISION OF HIGHWAYS

SAVANNAH ROAD BRIDGE OVER LEWES & REHOBOTH CANAL CONTROL HOUSE PLANS AND ELEVATIONS

D. H.E.D.	SCALE:	APPROVED BY:
T. J.N.	AS NOTED	R. C. McDowell
C. H.E.D.		BRIDGE ENGINEER

R. BRENT C. McDOWELL — REGISTERED PROFESSIONAL ENGINEER — No. 3047

COUNTY	CONTRACT	P.R.A. REG. NO.	STATE	FED. AID PROJECT NO.	SHEET NO.	TOTAL SHEETS
SUSSEX	80-023-02	2	DEL		44	87

NO.	REVISIONS	BY	DATE

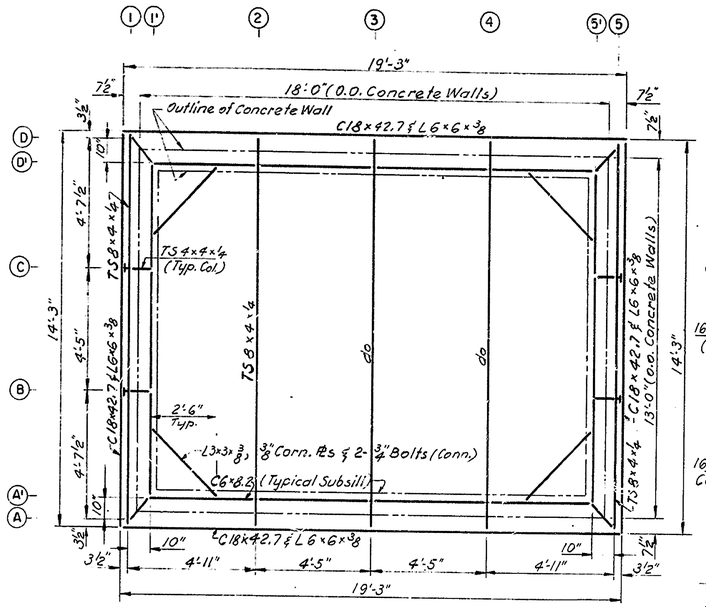

FRAMING PLAN
Scale: 3/8"=1'-0"

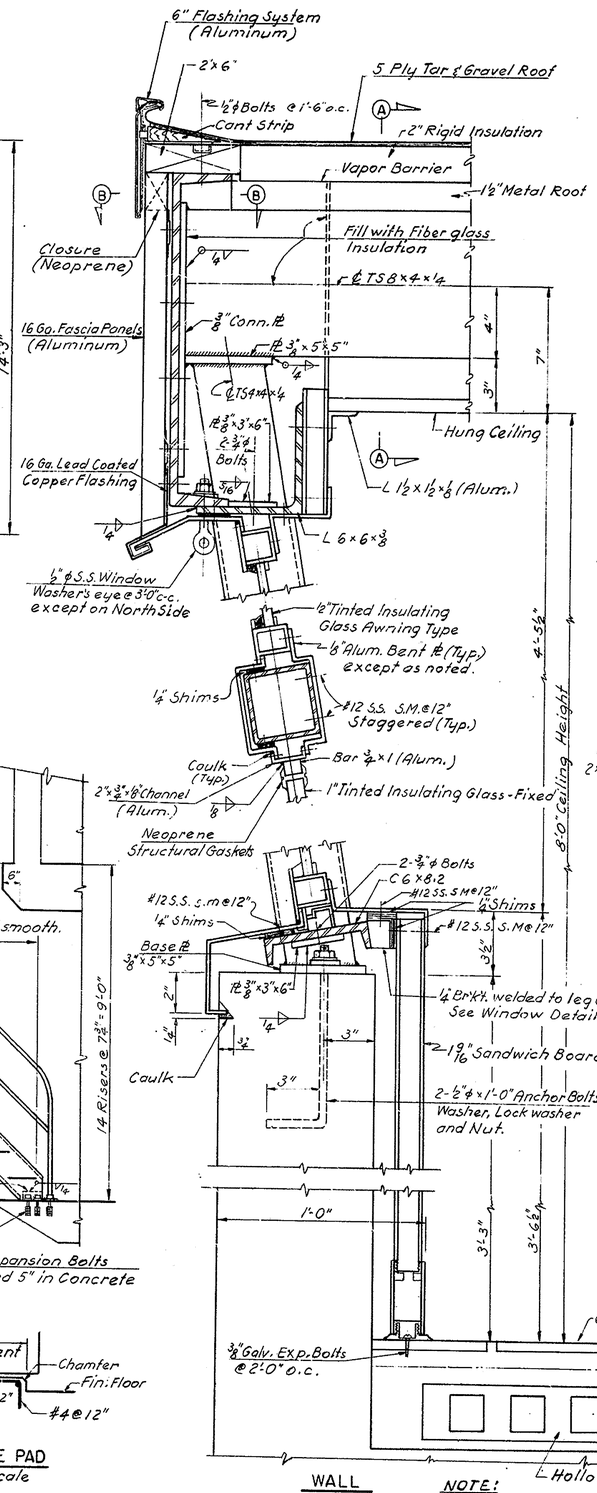

WALL
TYPICAL SECTION
Scale: 3"=1'-0"

NOTE:
Section through awning type Window-shown, Fixed Window-Similar except as shown in Fixed Window Details.

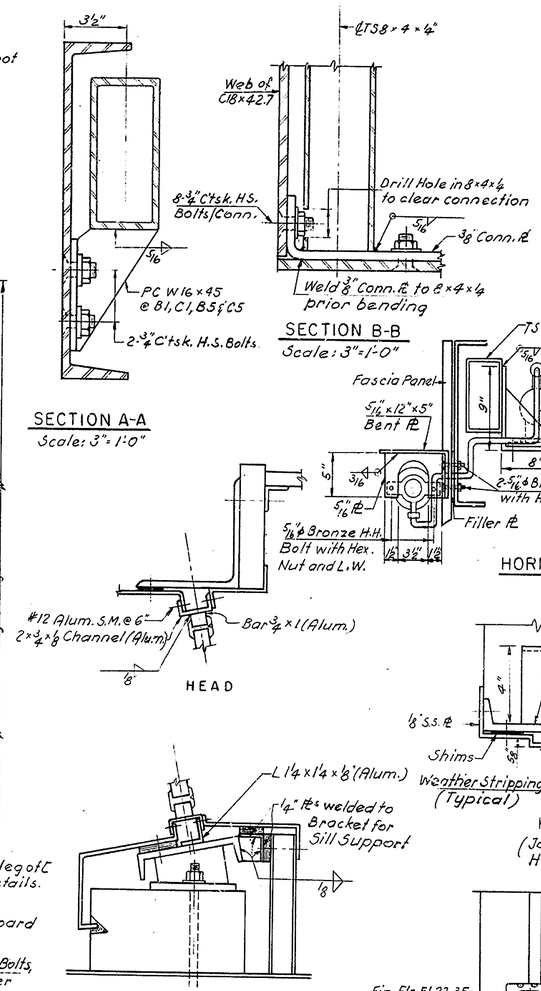

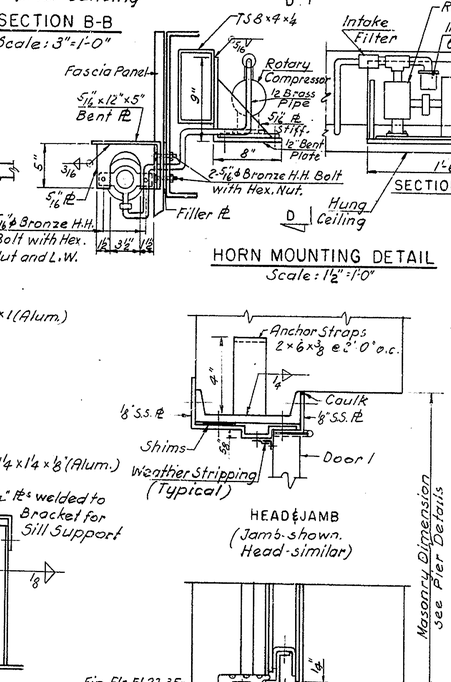

NOTE:
Air Horn will be cast bronze with 4" ϕ diaphragm, 292 cps. Cunningham Size 2B which will operate from a Cunningham Direct Operating Air Whistle Unit, No. 1-NEA

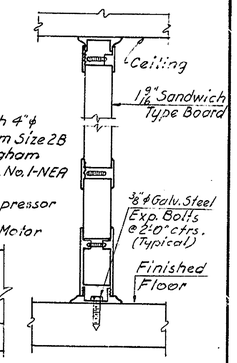

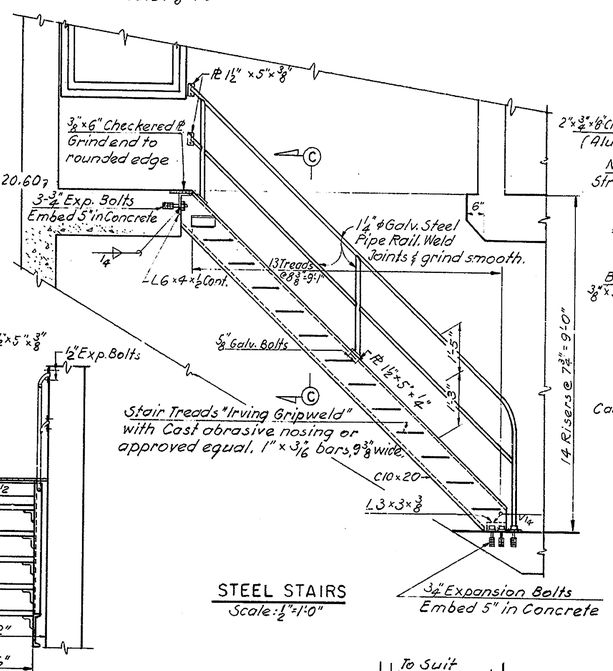

STEEL STAIRS
Scale: 1/2"=1'-0"

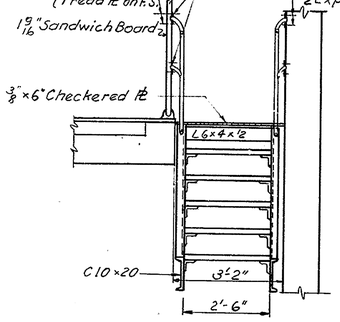

SECTION C-C
Scale: 1/2"=1'-0"

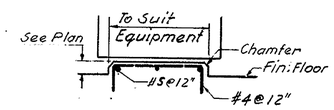

CONCRETE PAD
Not to Scale

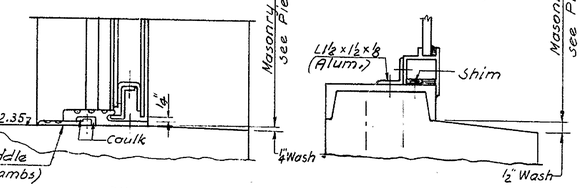

DELAWARE
DEPARTMENT OF TRANSPORTATION
DIVISION OF HIGHWAYS

SAVANNAH ROAD BRIDGE
OVER LEWES & REHOBOTH CANAL
CONTROL HOUSE-DETAILS I

D. H.E.D.	SCALE	APPROVED BY:
T. J.N.	AS NOTED	R.C. McDowell
C. H.E.D.		NO. 3[illegible] BRIDGE ENGINEER

ROBERT C. McDOWELL REGISTERED PROFESSIONAL ENGINEER

AS BUILT SHOWN IN RED WRH 10/83

COUNTY	CONTRACT	P.R.A. REG. NO.	STATE	FED. AID PROJECT NO.	SHEET NO.	TOTAL SHEETS
SUSSEX	80-023-02	2	DEL		45	87

NO.	REVISIONS	BY	DATE

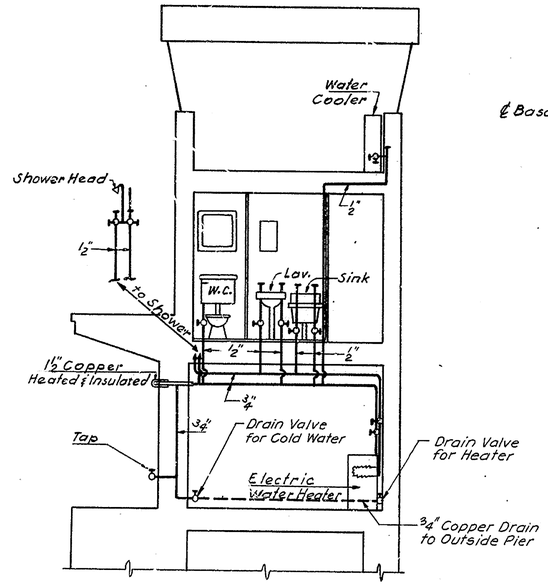

WATER PIPING DIAGRAM
Scale: 1/4"=1'-0"

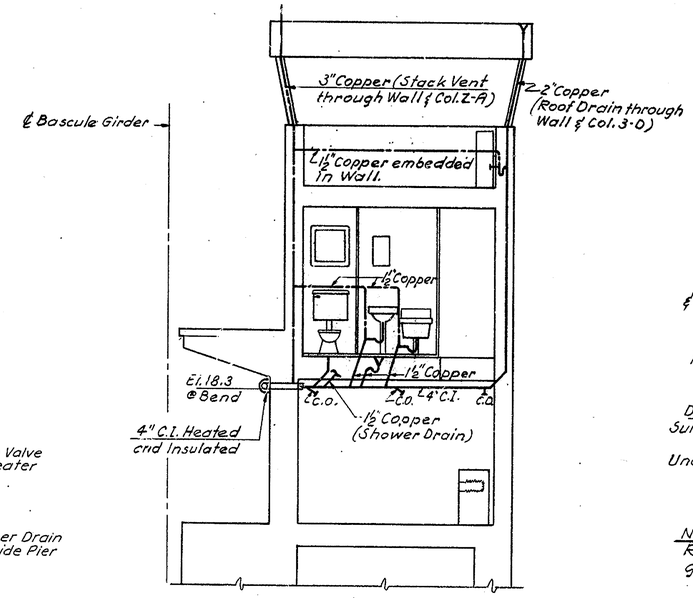

WASTE PIPING DIAGRAM
Scale: 1/4"=1'-0"

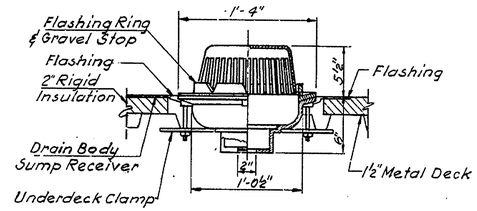

ROOF DRAIN
Scale: 1 1/2"=1'-0"

NOTE:
Roof Drain to be J.R. Smith Fig. 1010R-U.D.C, galvanized Cast Iron, or approved equal.

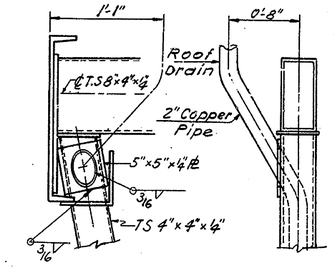

ROOF DRAIN DETAILS THROUGH COLUMN
Scale: 1 1/2"=1'-0"

NOTE:
Hole in Column and Plate shall be cut to suit. Detail is similar for Stack Vent.

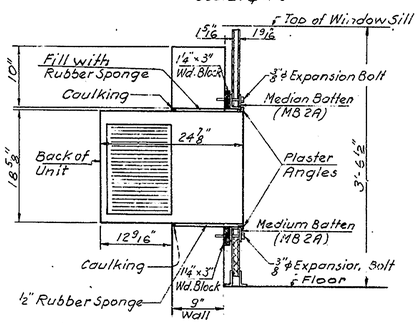

INSTALLATION OF AIR CONDITIONER CASING
Scale: 1"=1'-0"

LEGEND:
——— = Vent
——— = Drain

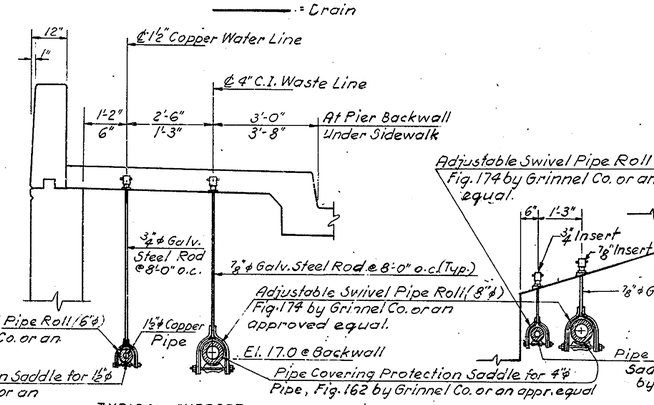

TYPICAL SUPPORT
Scale: 1/2"=1'-0"

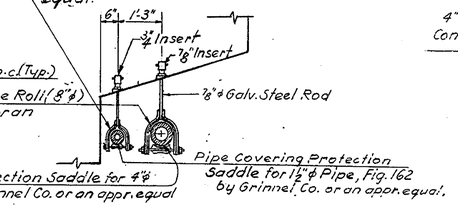

TYPICAL SUPPORT UNDER CANTILEVERED SIDEWALK
Scale: 1/2"=1'-0"

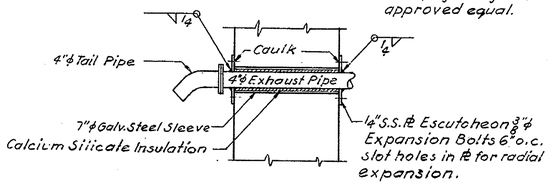

EXHAUST PIPE DETAIL AT NORTHWEST PIER WALL
No Scale

NOTE:
Pipe extends through Wall at 45°± skew.

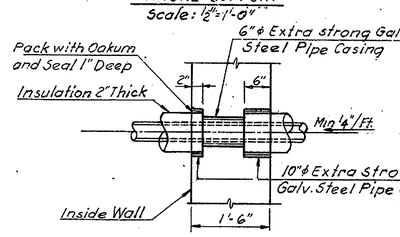

SECTION AT CONTROL HOUSE WALL
Scale: 3/4"=1'-0"

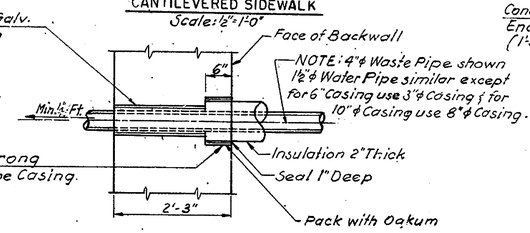

SECTION AT PIER BACKWALL
Scale: 3/4"=1'-0"

WASTE LINE AND WATER LINE DETAILS

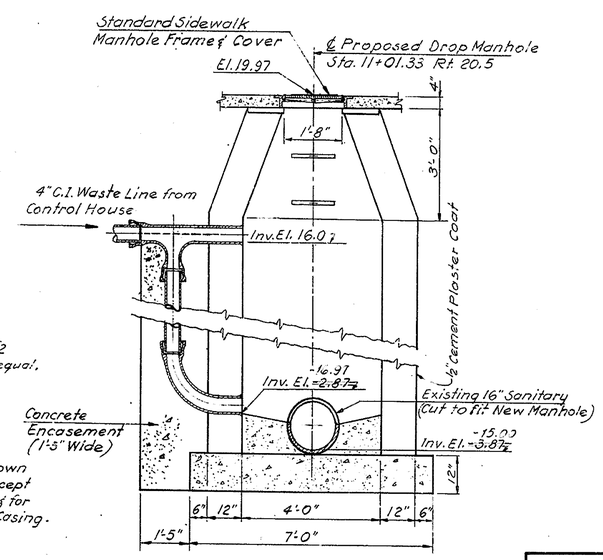

DROP MANHOLE
Scale: 1/2"=1'-0"

NOTE:
For Details not shown see Standard Sheets D-1 & D-14.

STANDARD MANHOLE SEE APPROVED DRAWINGS BY CITY OF LEWES & SHERMAN PLUMBING

DELAWARE
DEPARTMENT OF TRANSPORTATION
DIVISION OF HIGHWAYS

SAVANNAH ROAD BRIDGE
OVER LEWES & REHOBOTH CANAL

CONTROL HOUSE - DETAILS II

D. H.E.D.&C.G. T. J. N. C.C.G.&H.E.D.	SCALE AS NOTED	APPROVED BY R. C. McDonnell BRIDGE ENGINEER

REGISTERED PROFESSIONAL ENGINEER R. C. McDONNELL NO. 3040 DELAWARE

COUNTY	CONTRACT	P.R.A. REG. NO.	STATE	FED. AID PROJECT NO.	SHEET NO.	TOTAL SHEETS
SUSSEX	80-023-02	2	DEL		46	87

NO.	REVISIONS	BY	DATE

AS BUILT SHOWN IN RED N.B.R. 10/12

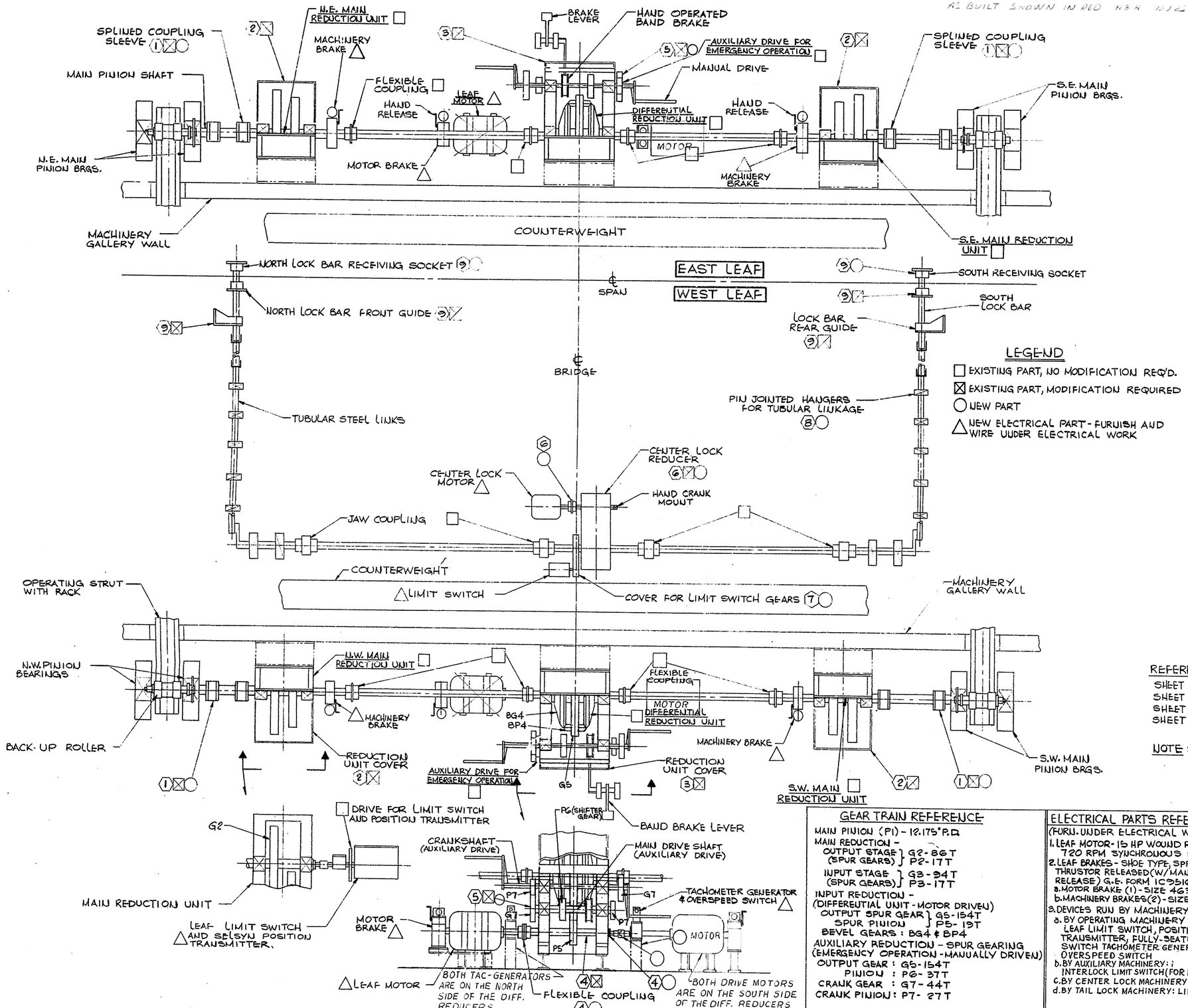

LEGEND

- □ EXISTING PART, NO MODIFICATION REQ'D.
- ⊠ EXISTING PART, MODIFICATION REQUIRED
- ○ NEW PART
- △ NEW ELECTRICAL PART - FURNISH AND WIRE UNDER ELECTRICAL WORK

WORK REQUIRED FOR OPERATING MACHINERY	SEE SHEET
(1) SPLINED COUPLING SLEEVES ON MAIN PINION CONNECTING SHAFT: PROVIDE BOLT-ON END RETAINERS.	47
(2) MAIN REDUCTION UNIT COVERS: DIVIDE INTO TWO PARTS FOR EASIER REMOVAL & ADD ACCESS DOORS.	49
(3) DIFFERENTIAL REDUCTION UNIT COVERS: ADD ACCESS DOORS.	49
(4) DIFFERENTIAL REDUCTION UNIT INPUT SHAFT: MODIFY TO MOUNT ADAPTER AND COUPLING FOR DRIVING TACHOMETER-GENERATOR. REPLACE MOTOR COUPLING.	48
(5) AUXILIARY DRIVE: PROVIDE FOR OPTIONAL AIR MOTOR CRANKING BY ADAPTER FASTENED TO GEAR G7 ON AUXILIARY MAIN DRIVE SHAFT. PROVIDE PULLER HOLES FOR REMOVAL OF HAND CRANKS ON CRANKSHAFT DURING AIR MOTOR CRANKING.	47
WORK REQUIRED FOR LOCKING MACHINERY	
(6) CENTER LOCK: PROVIDE GEAR REDUCER WITH NEW MOTOR COUPLING AND OIL LEVEL GAUGE.	48
(7) CENTER LOCK: PROVIDE COVER FOR LIMIT SWITCH DRIVE GEARS.	48
(8) CENTER LOCK: IN LOCK BAR LINKAGE AND SUPPORTING HANGERS RE-BUSH ALL SELF-LUBRICATING PIN JOINTS WITH NEW LUBRITE BUSHINGS.	—
(9) CENTER LOCK: INSTALL NEW RECEIVING SOCKETS WITH ADJUSTABLE SHOES. PROVIDE EXISTING LOCK BAR GUIDES WITH ADDITIONAL GREASE FITTINGS.	50
(10) TAIL LOCKS: PROVIDE GEAR REDUCER WITH NEW MOTOR COUPLING AND OIL LEVEL GAUGE.	48
(11) TAIL LOCKS: IN CLEVIS BRACKET ON LOCKING STRUT, RE-BUSH SELF-LUBRICATING PIN JOINT.	—
FOR OTHER REQUIREMENTS SEE THE SPECIAL PROVISIONS	

REFERENCE DWGS

SHEET 47 - OPERATING MACHINERY, DETAILS I
SHEET 48 - OPERATING MACHINERY, DETAILS II
SHEET 49 - OPERATING MACHINERY, COVER MODIFICATIONS
SHEET 50 - CENTER LOCKS, DETAILS

NOTE: THIS DWG. SHOWS THE OPERATING MACHINERY AND THE CENTER LOCKS. THE TAIL LOCKS ARE NOT SHOWN

GEAR TRAIN REFERENCE

MAIN PINION (PI) - 12.175" P.D.
MAIN REDUCTION -
OUTPUT STAGE (SPUR GEARS) } G2 - 86T, P2 - 17T
INPUT STAGE (SPUR GEARS) } G3 - 94T, P3 - 17T
INPUT REDUCTION - (DIFFERENTIAL UNIT - MOTOR DRIVEN)
OUTPUT SPUR GEAR } G5 - 154T
SPUR PINION } P5 - 19T
BEVEL GEARS : BG4 & BP4
AUXILIARY REDUCTION - SPUR GEARING (EMERGENCY OPERATION - MANUALLY DRIVEN)
OUTPUT GEAR : G5 - 154T
PINION : PG - 37T
CRANK GEAR : G7 - 44T
CRANK PINION : P7 - 27T

ELECTRICAL PARTS REFERENCE

(FURN. UNDER ELECTRICAL WORK)
1. LEAF MOTOR - 15 HP WOUND ROTOR, 720 RPM SYNCHRONOUS SPEED
2. LEAF BRAKES - SHOE TYPE, SPRING SET, THRUSTOR RELEASED (W/ MANUAL RELEASE) G.E. FORM IC9516
   a. MOTOR BRAKE (1) - SIZE 463
   b. MACHINERY BRAKES (2) - SIZE 464
3. DEVICES RUN BY MACHINERY
   a. BY OPERATING MACHINERY: LEAF LIMIT SWITCH, POSITION TRANSMITTER, FULLY-SEATED LIMIT SWITCH TACHOMETER GENERATOR AND OVERSPEED SWITCH
   b. BY AUXILIARY MACHINERY: INTERLOCK LIMIT SWITCH (FOR MANUAL OPERATION)
   c. BY CENTER LOCK MACHINERY: LIMIT SWITCH
   d. BY TAIL LOCK MACHINERY: LIMIT SWITCH.

DELAWARE
DEPARTMENT OF TRANSPORTATION
DIVISION OF HIGHWAYS

SAVANNAH ROAD BRIDGE OVER LEWES & REHOBOTH CANAL
SCHEMATIC ARRANGEMENT OF MACHINERY

D. W.C.F.	SCALE	APPROVED BY:
T. C.R.	NONE	R.C. McDowell
C. I. S.		BRIDGE ENGINEER

ALBERT C. McDOWELL REGISTERED PROFESSIONAL ENGINEER NO. 2050

12932

COUNTY	CONTRACT	P.R.A. REF. NO.	STATE	FED. AID PROJECT NO.	SHEET NO.	TOTAL SHEETS
SUSSEX	80-023-02	2	DEL		47	87

NO.	REVISIONS	BY	DATE

NOTE

1. HAND CRANK LEVERS TO BE REMOVED WHEN AIR MOTOR ADAPTER IS ATTACHED TO HUB OF GEAR G7
2. BORE IN CRANK LEVERS TO BE MACHINED TO PROVIDE AN RC1 FIT (ANSI B4.1) WITH CRANKSHAFT TO FACILITATE REMOVAL OF LEVERS
3. ADAPTER TO BE STORED AWAY WHILE NOT IN USE AND SET SCREWS INSTALLED AS INDICATED

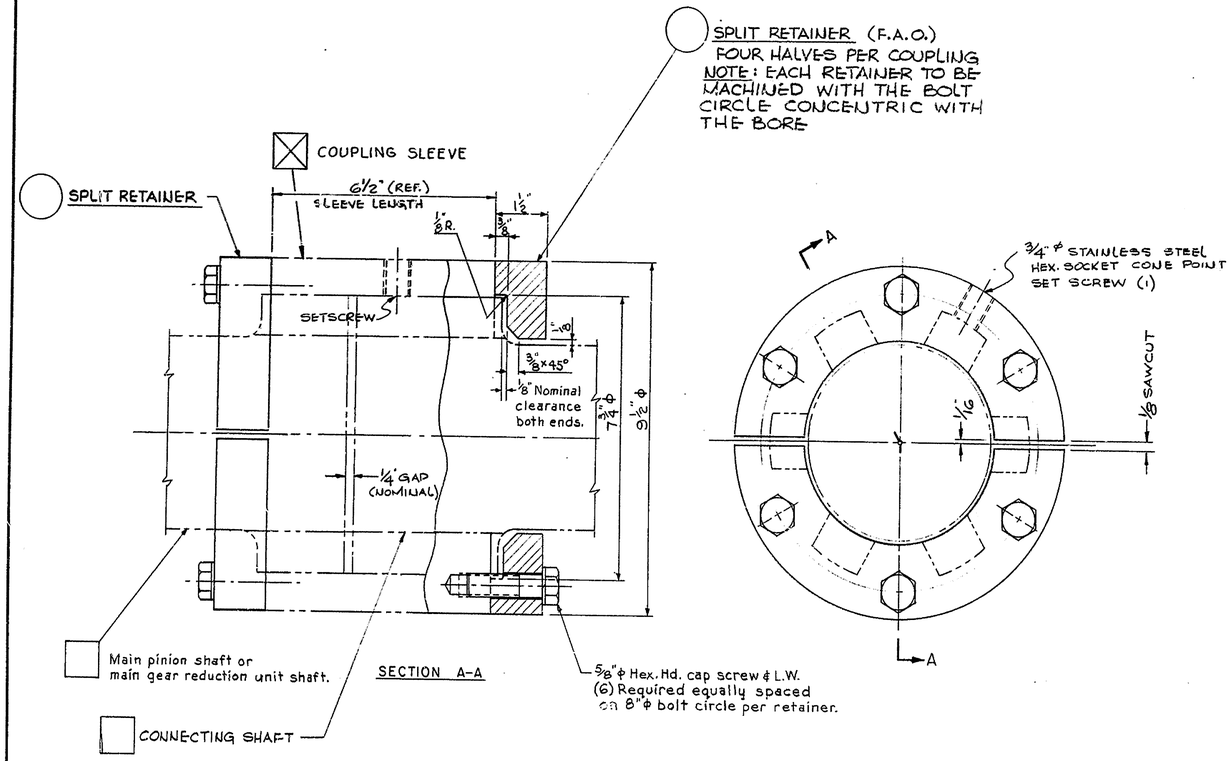

MODIFICATION OF SPLINED MAIN PINION CONNECTING SHAFT COUPLINGS
(4) Couplings per leaf
Scale: 6" = 1'-0"

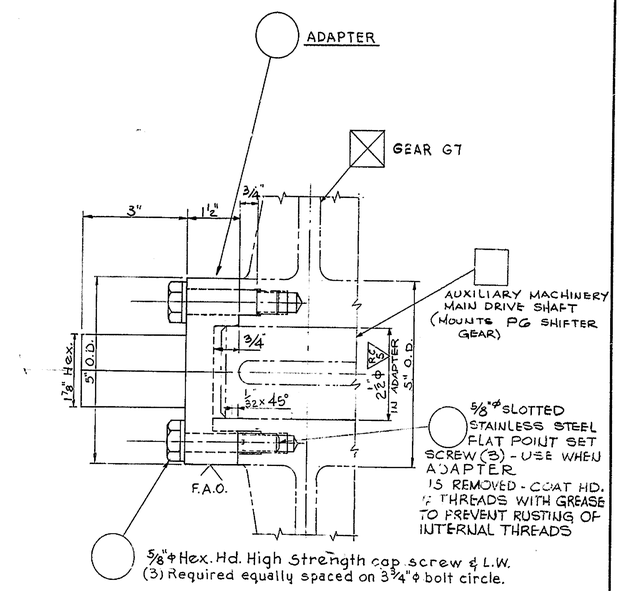

PROVISION FOR ATTACHMENT OF AIR MOTOR TO AUXILIARY MACHINERY FOR EMERGENCY OPERATION
(1) ASS'Y. REQ'D. PER LEAF
Scale: 6" = 1'-0"

ADAPTER - CARBON STEEL BAR OR PLATE ASTM A-675 GRADE 80

RETAINER - CARBON STEEL BAR OR PLATE ASTM A-675 GRADE 80
CAP SCREW - BOLT STEEL ASTM A-307 GRADE A

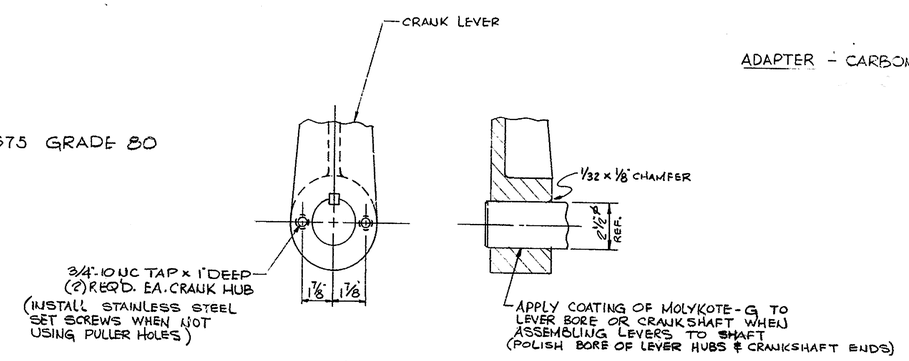

DETAIL OF PULLER HOLES IN CRANK LEVER HUB
(2) CRANK LEVERS PER LEAF

REFERENCE:
FOR LEGEND AND SCHEMATIC ARRANGEMENT OF MACHINERY SEE SHEET 46.

DELAWARE
DEPARTMENT OF TRANSPORTATION
DIVISION OF HIGHWAYS

SAVANNAH ROAD BRIDGE OVER LEWES & REHOBOTH CANAL OPERATING MACHINERY DETAILS I

D.P.J.C., W.C.F.	SCALE	APPROVED BY:
T.C.R.	As Noted	R.C. Wakefield
C.W.C.F.		BRIDGE ENGINEER

EN 12932

COUNTY	CONTRACT	R.R.A. REG. NO.	STATE	FED. AID PROJECT NO.	SHEET NO.	TOTAL SHEETS
SUSSEX	80-023-02	2	DEL		48	87

NO.	REVISIONS	BY	DATE

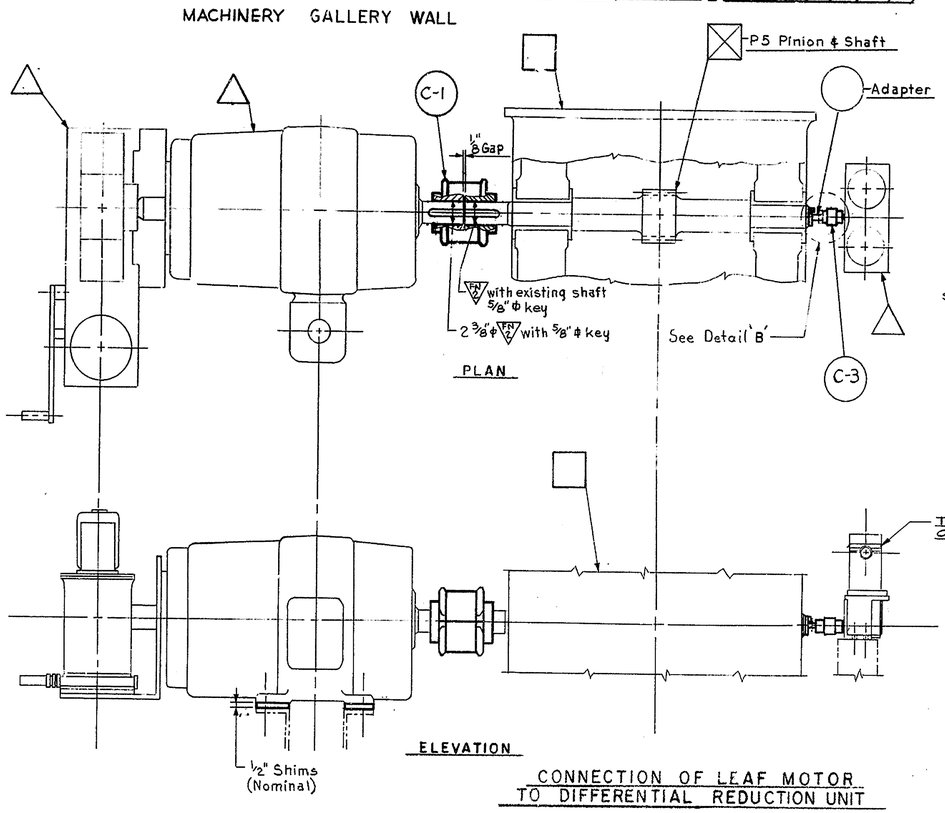

CONNECTION OF LEAF MOTOR TO DIFFERENTIAL REDUCTION UNIT

(2) REQ'D.
Scale: 1 1/2" = 1'-0"

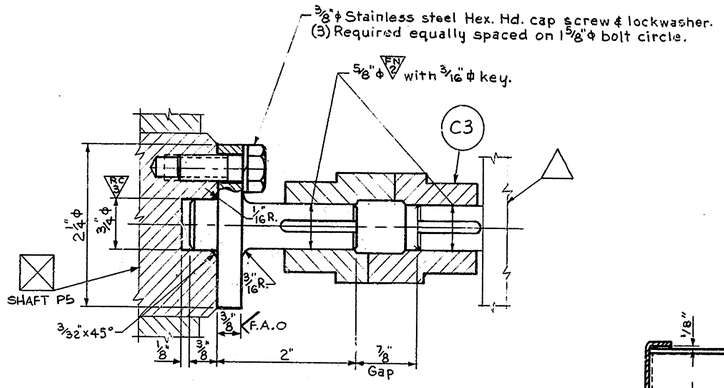

DETAIL 'B' - Full Size
PINION SHAFT ADAPTER FOR DRIVING TACH. GENERATOR
ADAPTER - CARBON STEEL ASTM A-675 GRADE 80
SCREWS - S.S. ASTM A-320 GRADE B8

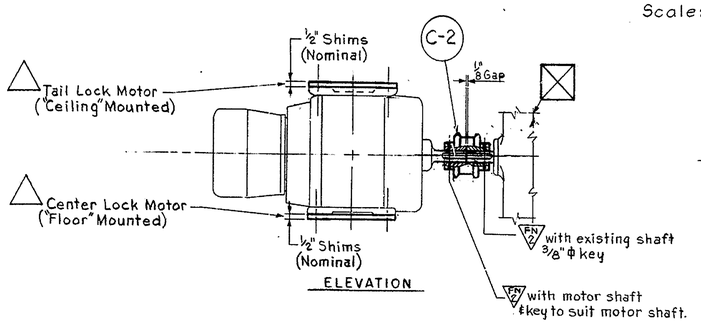

CONNECTION OF MOTOR TO REDUCER
FOR TAIL LOCK AND CENTER LOCK
Scale: 1 1/2" = 1'-0"

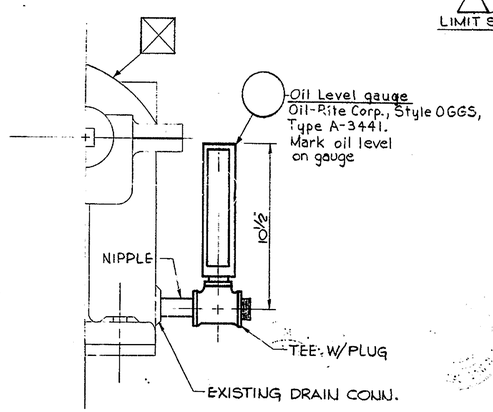

INSTALLATION OF OIL LEVEL GAUGE
FOR TAIL LOCK AND CENTER LOCK REDUCERS
No Scale

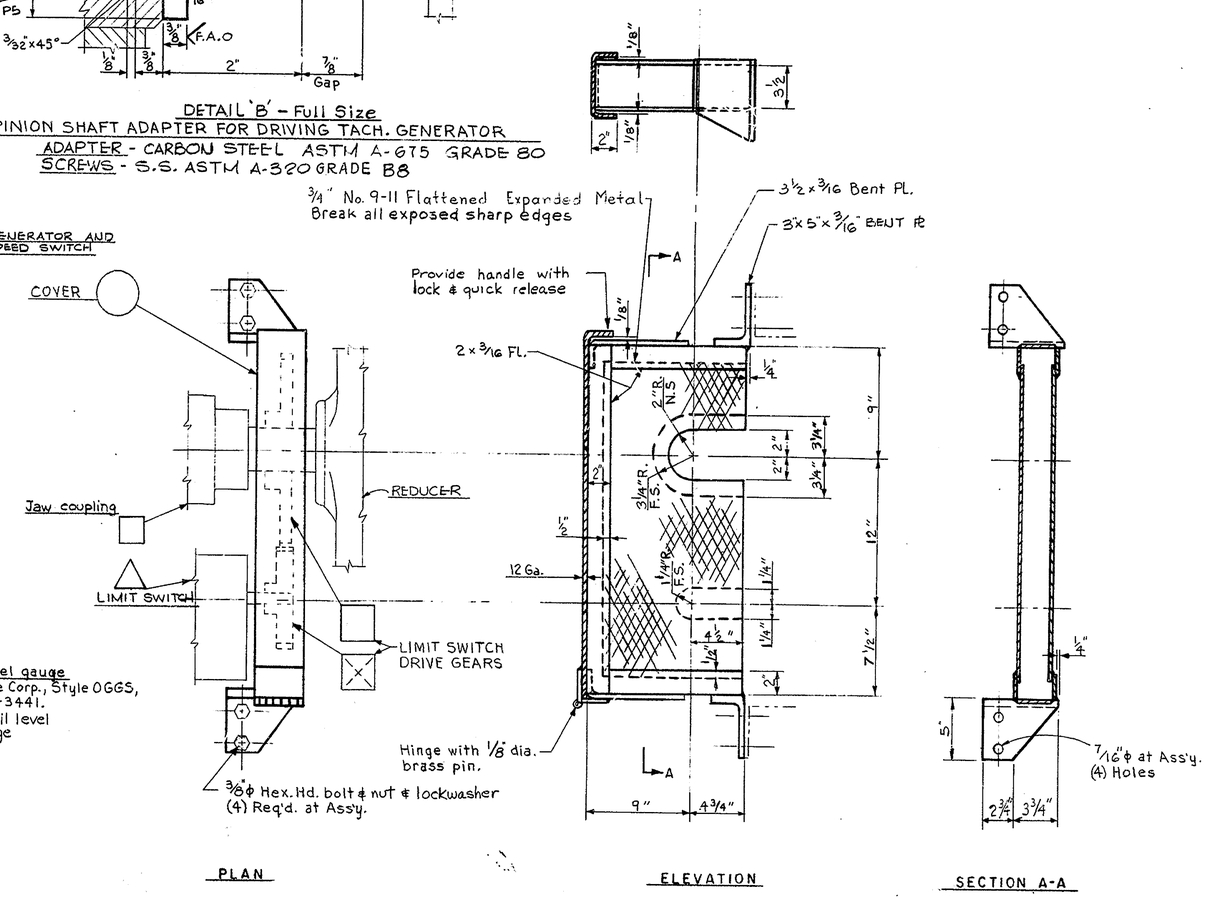

COVER FOR LIMIT SWITCH GEARS
AT CENTER LOCK
STEEL WELDMENT
Scale: 2" = 1'-0"
BOLTS ASTM A-307 GRADE A
WELDMENT - S.S. ASTM A-240 TYPE 304 L

REFERENCE:
For legend and schematic arrangement of machinery, See Sheet 46.

SCHEDULE OF COUPLINGS

UNIT	MK.	DESCRIPTION	QTY. REQD. ON BRIDGE
Leaf Motor Coupling	C-1	Falk Corp., Steelflex, with Horizontal Split Cover, Type T10, Size 80	2
Tail Lock Motor Coupling	C-2	Falk Corp., Steelflex, with Horizonal Split Cover, Type T10, Size 50	2
Center Lock Motor Coupling			1
Coupling for Tachometer Generator and Overspeed Switch	C-3	Boston Gear Divison, No. FCBB15	2

NOTE:
Addresses of Coupling Manufacturies are given below:
Boston Gear Unit of Incom International Inc.
14 Hayward St. Quincy, Mass. 02171.
Falk Corp. Div. Sunstrand Corp.
Box 492 Milwaukee, Wis. 53201

DELAWARE
DEPARTMENT OF TRANSPORTATION
DIVISION OF HIGHWAYS

SAVANNAH ROAD BRIDGE
OVER LEWES & REHOBOTH CANAL
OPERATING MACHINERY
DETAILS II

D. R.W.K., W.C.F. T. C. R. C. W.C.F.	SCALE As Noted	APPROVED BY [signature] BRIDGE ENGINEER

ROBERT C. McDOWELL NO. 3055 DELAWARE PROFESSIONAL ENGINEER

12932

COUNTY	CONTRACT	P.R.A. REG. NO.	STATE	FED. AID PROJECT NO.	SHEET NO.	TOTAL SHEETS
SUSSEX	80-023-02	2	DEL		49	87

NO.	REVISIONS	BY	DATE

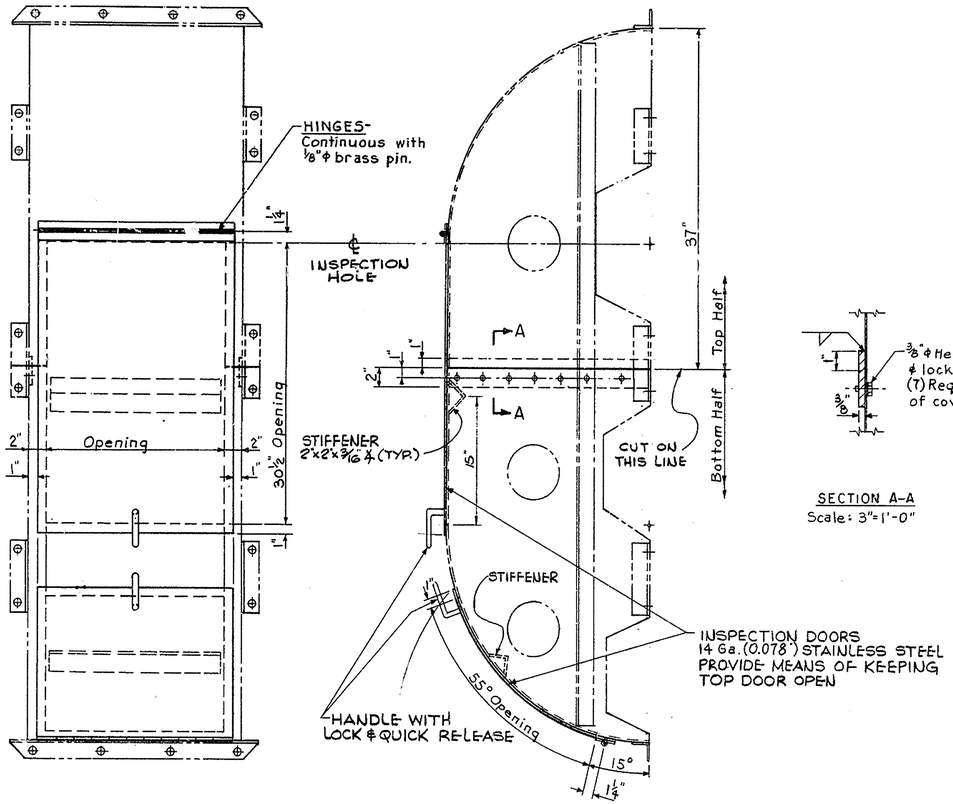

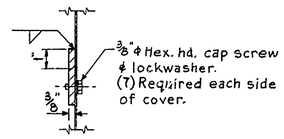

SECTION A-A
Scale: 3"=1'-0"

☒ MODIFICATION OF MAIN REDUCTION UNIT COVER
CUT COVER IN (2) PIECES AS SHOWN
(2) REQUIRED PER LEAF
Scale: 1 1/2" = 1'-0"
ADD INSPECTION DOORS

NOTE:
After erection, the two parts of the cover shall be removable.

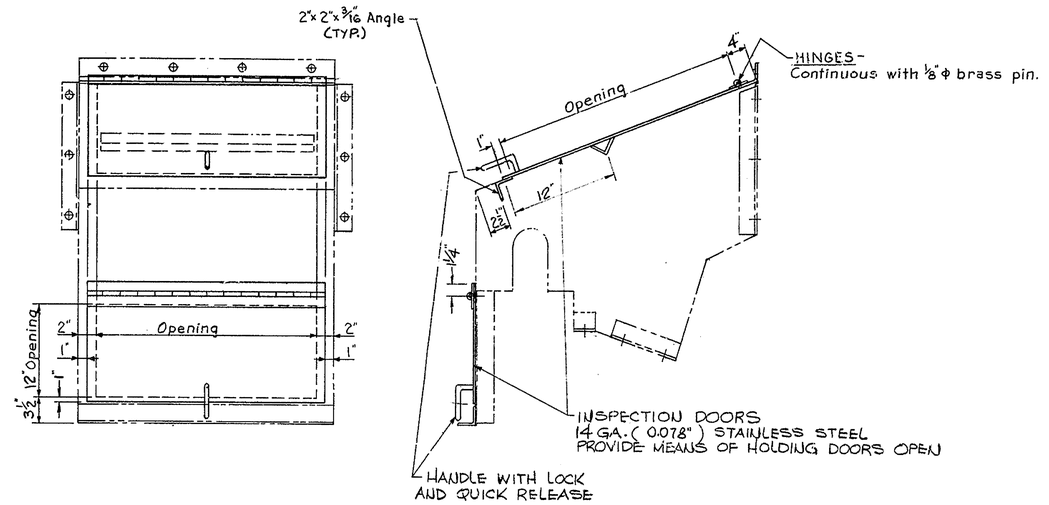

☒ MODIFICATION OF DIFFERENTIAL REDUCTION UNIT COVER
ADD INSPECTION DOORS AS SHOWN
(1) REQUIRED PER LEAF
Scale: 1 1/2" = 1'-0"

INSPECTION DOORS— STAINLESS STEEL ASTM A-240 TYPE 304 L
SCREWS ———— STAINLESS STEEL ASTM A-320 GRADE B8
PLATES & ANGLES — CARBON STEEL ASTM A-36

REFERENCE:
For legend and schematic arrangement of machinery See sheet 46.

DELAWARE
DEPARTMENT OF TRANSPORTATION
DIVISION OF HIGHWAYS

SAVANNAH ROAD BRIDGE
OVER LEWES & REHOBOTH CANAL
OPERATING MACHINERY
COVER MODIFICATIONS

D. P.J.C. T. C.R. C. W.C.F.	SCALE AS NOTED	APPROVED BY NO. 3069 BRIDGE ENGINEER

THOMAS C. McDOWELL REGISTERED PROFESSIONAL ENGINEER DELAWARE

EN 12932

COUNTY	CONTRACT	P.R.A. REG. NO.	STATE	FED. AID PROJECT NO.	SHEET NO.	TOTAL SHEETS
SUSSEX	80-023-02	2	DEL		50	87

NO.	REVISIONS	BY	DATE

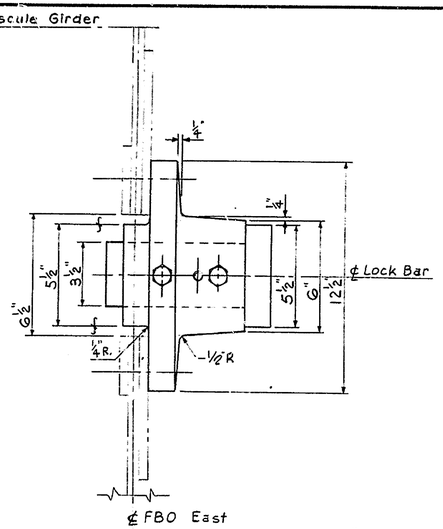

PLAN

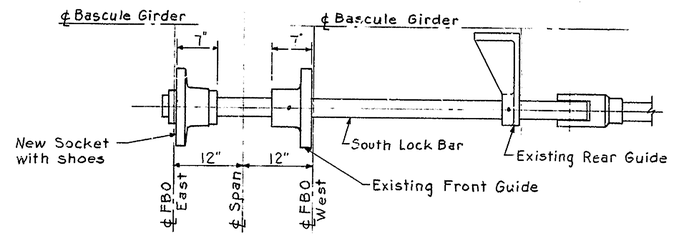

CENTER LOCK ARRANGEMENT
South Lock Shown
(North Lock Opp. Hand)
Not to Scale

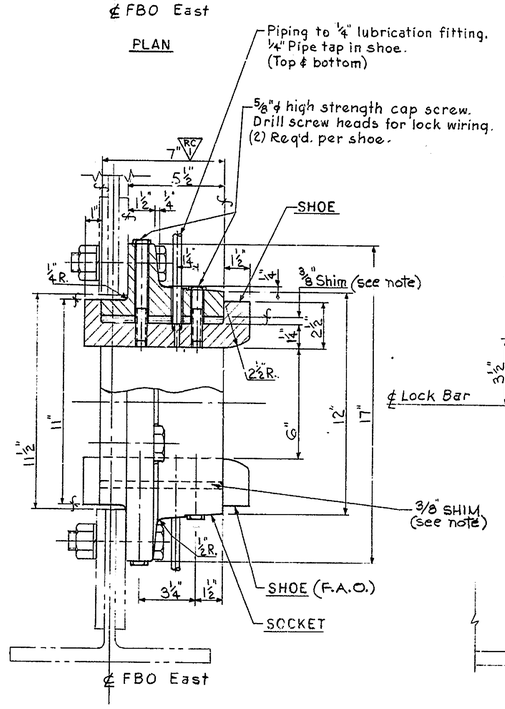

ELEVATION

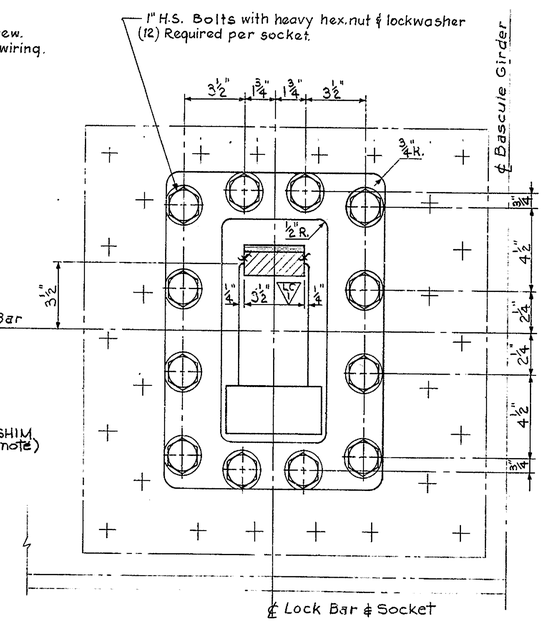

ELEVATION

CENTER LOCK RECEIVING SOCKET AND SHOES
(2) Required
Scale: 3"=1'-0"

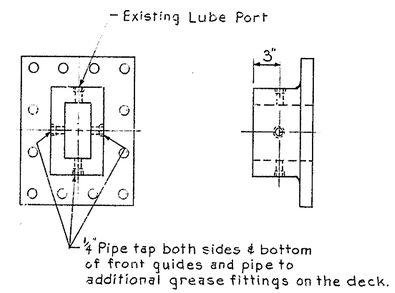

MODIFICATION OF EXISTING FRONT GUIDES
Scale: 1½"=1'-0"

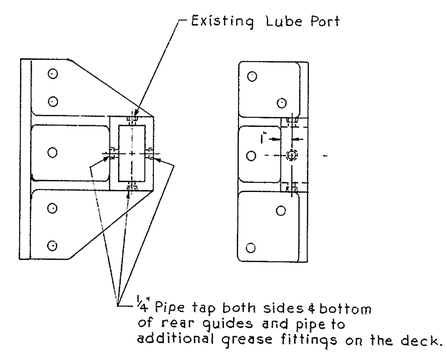

MODIFICATION OF EXISTING REAR GUIDES
Scale: 1½"=1'-0"

REFERENCE:
For legend and schematic arrangement of machinery, See sheet 46.

Shim note:
Shims shall consist of one (1) ⅜" thk. cold fin. steel shim with a set of hard brass shims of sufficient thicknesses to secure 1/64" variations of the shim allowance

SOCKET - CAST CARBON STEEL ASTM A-27 GRADE 70/36
SHOE - MANGANESE BRONZE ASTM B-22 ALLOY C86300 (WEAR SURFACES TO BE 180-200 BHN)
BOLTS - ASTM A449
SHOE CAP SCREW ASTM A449

DELAWARE
DEPARTMENT OF TRANSPORTATION
DIVISION OF HIGHWAYS

SAVANNAH ROAD BRIDGE
OVER LEWES & REHOBOTH CANAL
CENTER LOCK DETAILS

D. P.J.C. T. C.R. C. W.C.F.	SCALE As Noted	APPROVED BY: R.C. McDowell BRIDGE ENGINEER

ROBERT C. McDOWELL REGISTERED PROFESSIONAL ENGINEER NO. 3059

DIETZGEN 12932

COUNTY	CONTRACT	F.A.A. REF. NO.	STATE	FED. AID PROJECT NO.	SHEET NO.	TOTAL SHEETS
SUSSEX	80-023-02	2	DEL		51	87

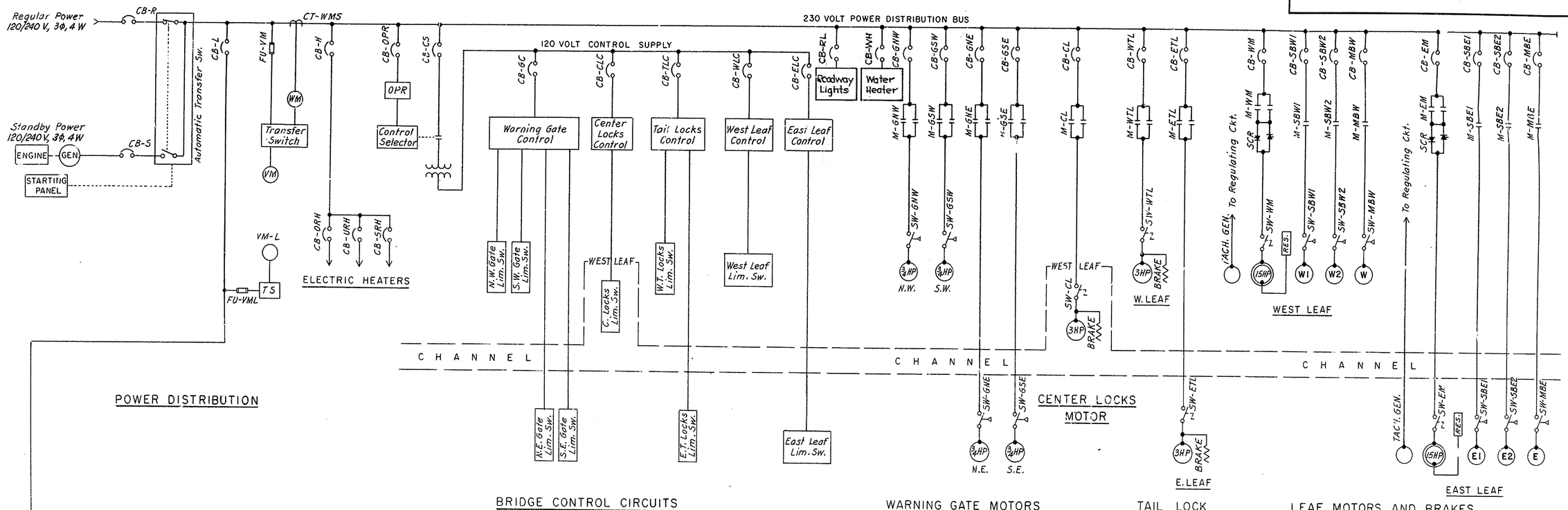

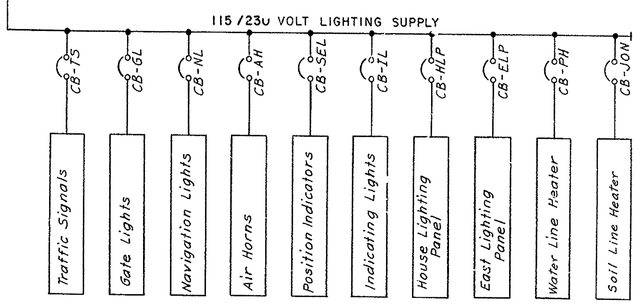

BRIDGE LIGHTING CIRCUITS

LIST OF SYMBOLS

- Coil of Magnetic Contactor or Relay
- Thermal Overload Relay
- Magnetic Overcurrent Relay
- Contact of Magnetic Contactor or Relay, Normally Open
- Contact of Magnetic Contactor or Relay, Normally Closed
- Limit Switch Contact, Normally Open
- Limit Switch Contact, Normally Closed
- T.C.O. – Timer Contact, Timed Closing (After Energizing)
- T.O.O. – Timer Contact, Timed Opening (After Energizing)
- T.C.C. – Timer Contact, Timed Closing (After Deenergizing)
- T.O.C. – Timer Contact, Timed Opening (After Deenergizing)
- Air Circuit Breaker
- N.E.C. Cartridge Fuse
- Transformer Winding
- Resistor, Fixed
- Resistor, Adjustable
- Rheostat
- Rectifier
- Capacitor
- Pushbutton, Normally Open
- R – Indicating Light: R=Red, G=Green, A=Amber, W=White, B=Blue
- Bypass Switch
- Tumbler Switch, S.P.S.T.
- Tumbler Switch, S.P.D.T.

GENERAL NOTES FOR ELECTRICAL WORK

1. Except where otherwise noted all circuits are shown deenergized.
2. Limit switch contacts are shown for bascule leaves seated, emergency operators disengaged, span locks driven and gates raised.
3. Unless otherwise noted, the minimum size wire in conduits and multiconductor cables shall be No. 10 AWG.
4. Seperate wire designations shall be assigned for each branch circuit neutral.

NO.	REVISIONS	BY	DATE

DELAWARE
DEPARTMENT OF TRANSPORTATION
DIVISION OF HIGHWAYS

SAVANNAH ROAD BRIDGE OVER LEWES & REHOBOTH CANAL

ONE - LINE WIRING DIAGRAM

D. H.B.H.	SCALE	APPROVED BY:
T. K.A.S.	NONE	R.C. McDowell
C. H.B.H.		BRIDGE ENGINEER

H. G. McDOWELL REGISTERED PROFESSIONAL ENGINEER NO. 3009 DELAWARE

COUNTY	CONTRACT	P.R.A. REG. NO.	STATE	FED. AID PROJECT NO.	SHEET NO.	TOTAL SHEETS
SUSSEX	80-023-02	2	DEL		52	87

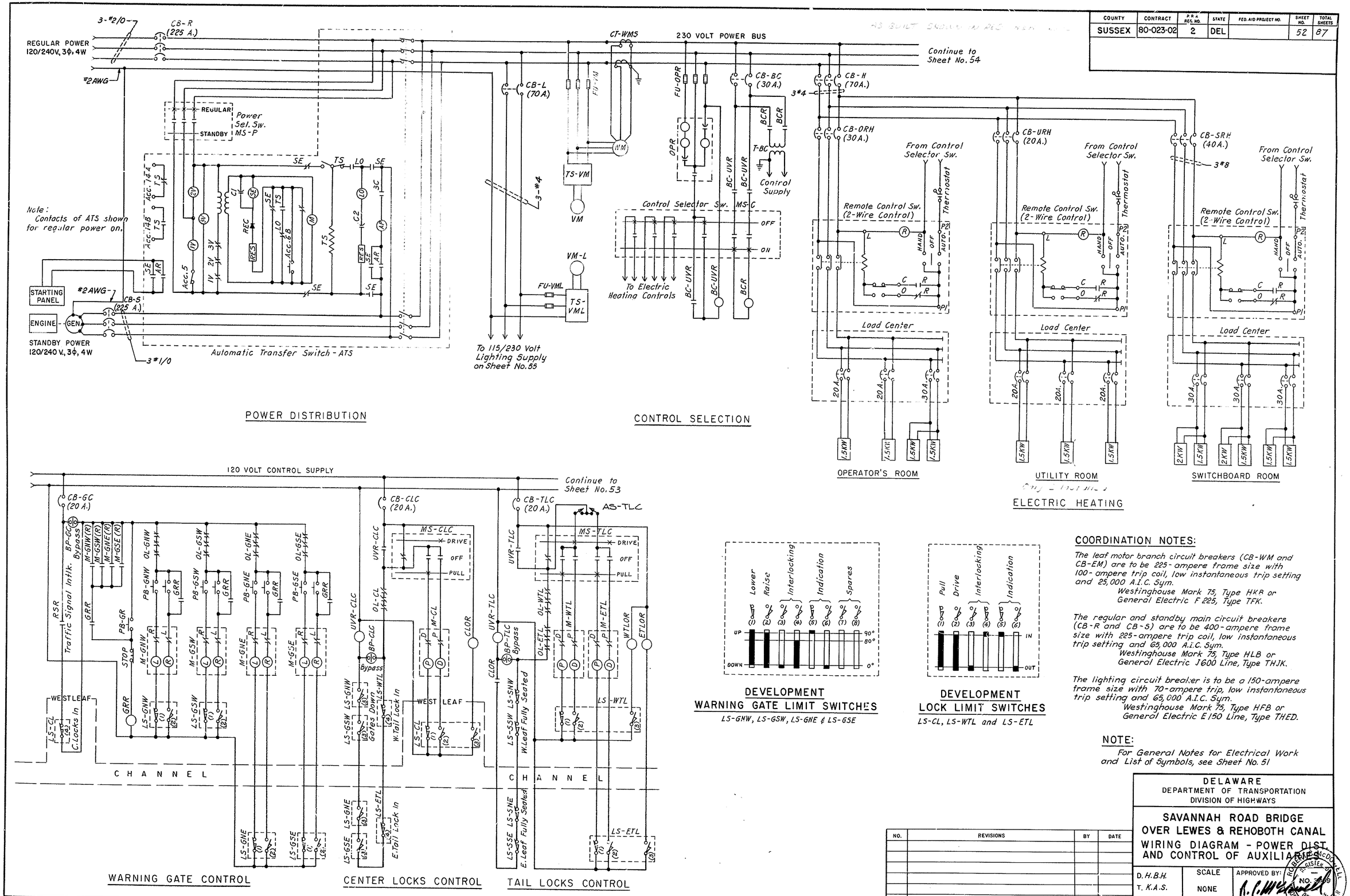

COORDINATION NOTES:

The leaf motor branch circuit breakers (CB-WM and CB-EM) are to be 225-ampere frame size with 100-ampere trip coil, low instantaneous trip setting and 25,000 A.I.C. Sym.
Westinghouse Mark 75, Type HKR or
General Electric F 225, Type TFK.

The regular and standby main circuit breakers (CB-R and CB-S) are to be 400-ampere frame size with 225-ampere trip coil, low instantaneous trip setting and 65,000 A.I.C. Sym.
Westinghouse Mark 75, Type HLB or
General Electric J600 Line, Type THJK.

The lighting circuit breaker is to be a 150-ampere frame size with 70-ampere trip, low instantaneous trip setting and 65,000 A.I.C. Sym.
Westinghouse Mark 75, Type HFB or
General Electric E150 Line, Type THED.

NOTE:

For General Notes for Electrical Work and List of Symbols, see Sheet No. 51

NO.	REVISIONS	BY	DATE

DELAWARE
DEPARTMENT OF TRANSPORTATION
DIVISION OF HIGHWAYS

SAVANNAH ROAD BRIDGE
OVER LEWES & REHOBOTH CANAL
WIRING DIAGRAM - POWER DIST. AND CONTROL OF AUXILIARIES

D. H.B.H.
T. K.A.S.
C. H.B.H.

SCALE: NONE

APPROVED BY: R. C. McCord Roll
REGISTERED PROFESSIONAL ENGINEER NO. 5
STATE OF DELAWARE
BRIDGE ENGINEER

12932

COUNTY	CONTRACT	P.R.A. REG. NO.	STATE	FED. AID PROJECT NO.	SHEET NO.	TOTAL SHEETS
SUSSEX	80-023-02	2	DEL		53	87

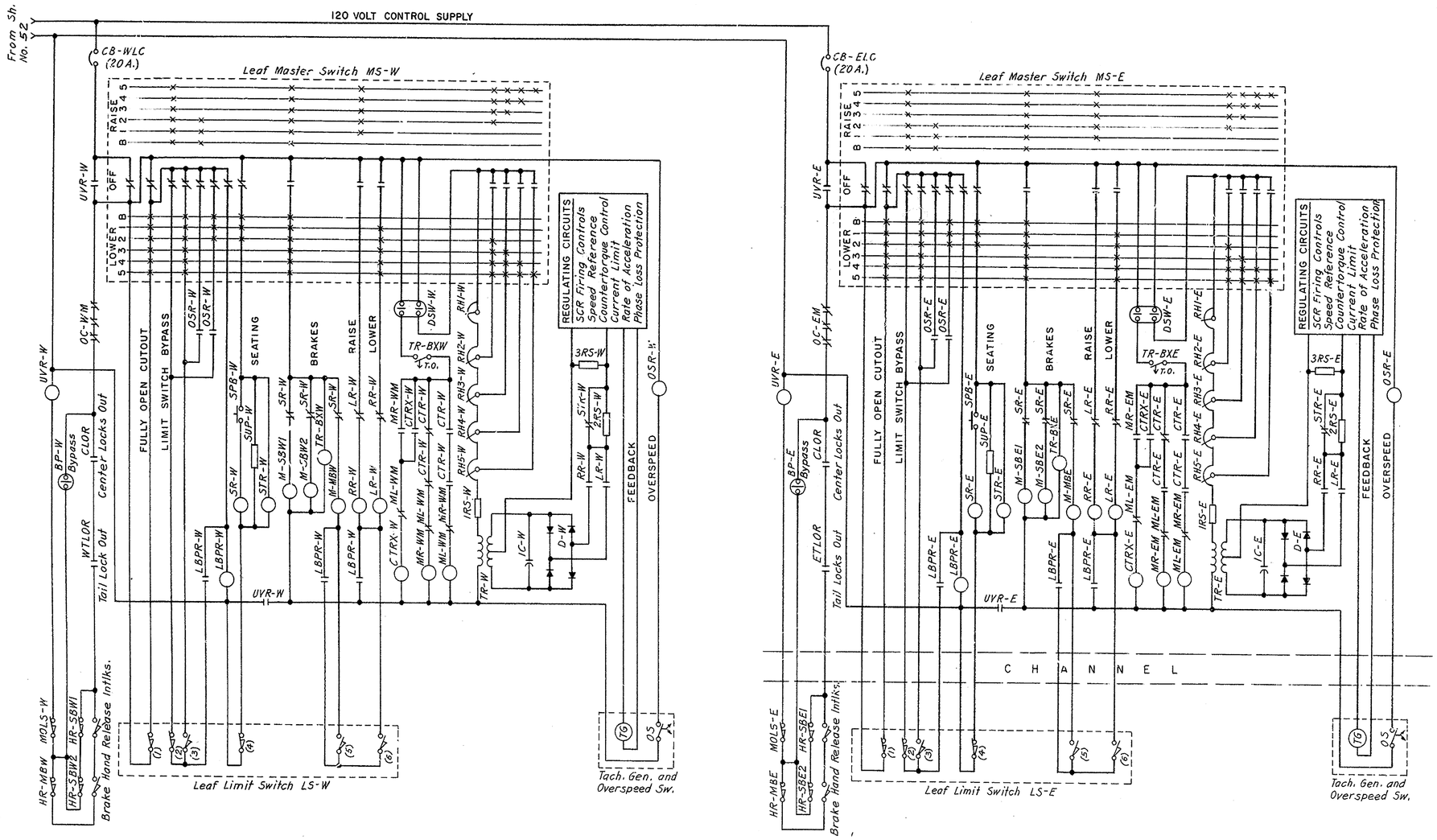

WEST LEAF

EAST LEAF

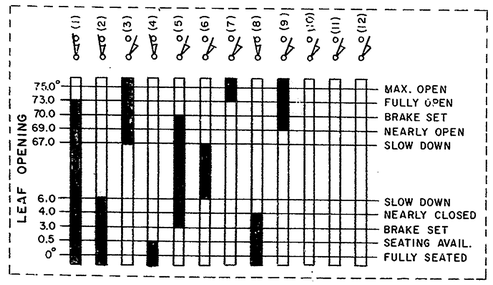

DEVELOPMENT
LEAF LIMIT SWITCHES

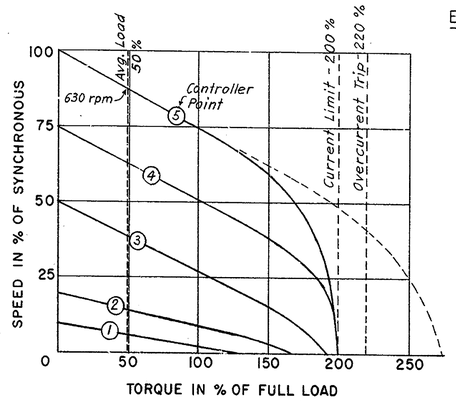

LEAF DRIVE SPEED - TORQUE CHARACTERISTICS

NOTE:
For General Notes for Electrical Work and List of Symbols, see Sheet No. 51

NO.	REVISIONS	BY	DATE

DELAWARE
DEPARTMENT OF TRANSPORTATION
DIVISION OF HIGHWAYS

SAVANNAH ROAD BRIDGE
OVER LEWES & REHOBOTH CANAL
WIRING DIAGRAM
LEAF CONTROLS

D. H.B.H.
T. K.A.S.
C. H.B.H.

SCALE NONE

APPROVED BY: R. C. McDowell
BRIDGE ENGINEER

ROBERT C. McDOWELL
REGISTERED
No. 3069
DELAWARE
PROFESSIONAL ENGINEER

COUNTY	CONTRACT	P.R.A. REB. NO.	STATE	FED. AID PROJECT NO.	SHEET NO.	TOTAL SHEETS
SUSSEX	80-023-02	2	DEL		54	87

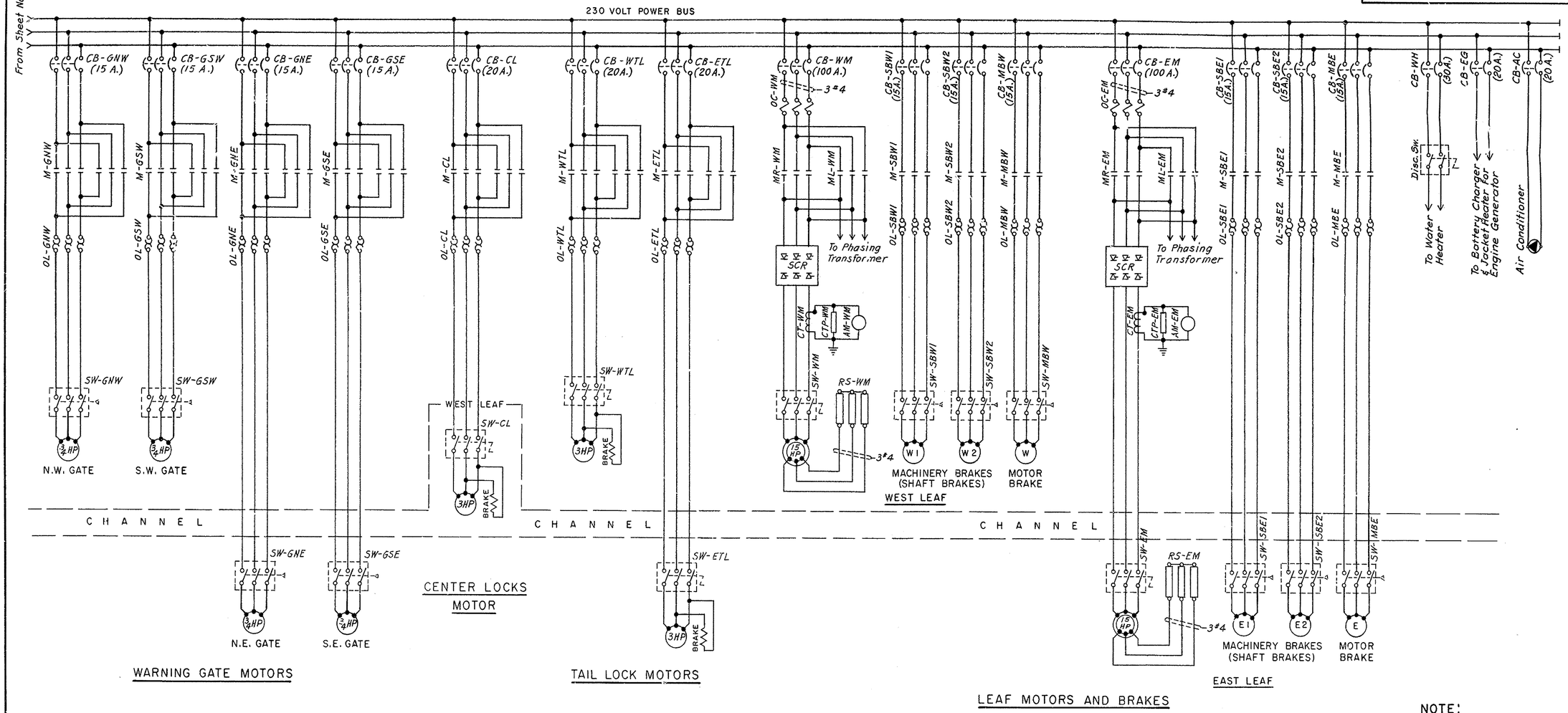

NOTE:

For General Notes for Electrical Work and List of Symbols, see Sheet No. 51.

NO.	REVISIONS	BY	DATE

DELAWARE
DEPARTMENT OF TRANSPORTATION
DIVISION OF HIGHWAYS

SAVANNAH ROAD BRIDGE OVER LEWES & REHOBOTH CANAL

WIRING DIAGRAM MOTORS AND BRAKES

D.H.B.H.	SCALE	APPROVED BY:
T.K.A.S.	NONE	R. C. McDowell
C.H.B.H.		BRIDGE ENGINEER

ROBERT C. McDOWELL REGISTERED PROFESSIONAL ENGINEER NO. 3089 STATE OF DELAWARE

EN 12932

COUNTY	CONTRACT	P.R.A. REG. NO.	STATE	FED. AID PROJECT NO.	SHEET NO.	TOTAL SHEETS
SUSSEX	80-023-02	2	DEL		55	87

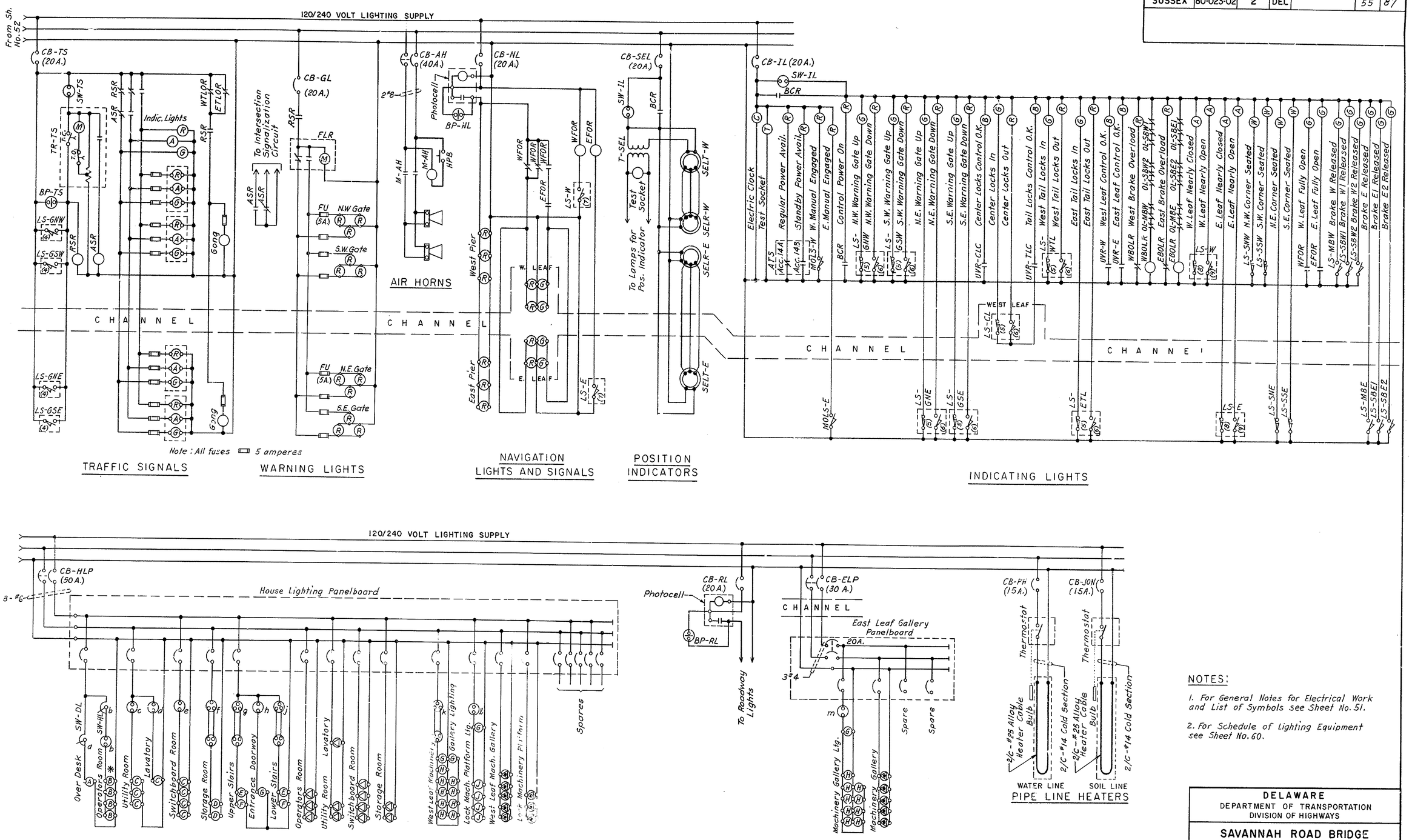

* - The emergency light in the operator's room shall be fed from the room lighting circuit, connected ahead of the switch.

SERVICE LIGHTING

NOTES:

1. For General Notes for Electrical Work and List of Symbols see Sheet No. 51.
2. For Schedule of Lighting Equipment see Sheet No. 60.

NO.	REVISIONS	BY	DATE

DELAWARE
DEPARTMENT OF TRANSPORTATION
DIVISION OF HIGHWAYS

SAVANNAH ROAD BRIDGE
OVER LEWES & REHOBOTH CANAL
WIRING DIAGRAM
LIGHTING CIRCUITS

D. H.B.H.
T. K.A.S.
C. H.B.H.

SCALE: NONE

APPROVED BY: [signature]
BRIDGE ENGINEER

ROBERT C. McDOWELL REGISTERED PROFESSIONAL ENGINEER NO. 2059 DELAWARE

COUNTY	CONTRACT	P.R.A. REG. NO.	STATE	FED. AID PROJECT NO.	SHEET NO.	TOTAL SHEETS
SUSSEX	80-023-02	2	DEL		56	87

POWER DISTRIBUTION

ITEM	NO. REQ'D.	DESCRIPTION	FUNCTION (OR NAMEPLATE)	LOCATION
CB-R	1	Air circuit breaker, 3P, 225A., 600V., 400A. frame	Main breaker - regular	PP
MS-P	1	Selector switch, 4-position, 3-stage, 600V.	Power selection	CD
ATS	1	Automatic transfer switch, 3PDT, 150A., 240V.,	Standby Power transfer	PP
		elect. operated, mechanically held, with full		
		relay protection		
CB-S	1	Air circuit breaker, 3P, 225A., 600V., 400A. frame	Main breaker - standby	PP
CB-L	1	Circuit breaker, 2P, 70A., 600V, 150A. frame	Lighting feeder	PP
FU-VM	3	N.E.C. Cartridge fuse, 3A., 600V.	Voltmeter protection	PP
TS-VM	1	Selector switch, 10A., 600V.	Voltmeter transfer	CD
VM	1	A-C Voltmeter, 0-250V. scale, 60 Hz.	Read supply voltage	CD
CT-WMS	2	Current transformer	Wattmeter supply	PP
WM	1	Wattmeter, 0-75 KW scale, 60 Hz.	Read drive power	CD
FU-OPR	3	N.E.C. Cartridge fuse, 3A., 600V.	Relay protection	PP
OPR	1	Phase failure and reversal relay	Reverse phase protection	PP
CB-BC	1	Circuit breaker, 2P, 40A., 600V., 100A. frame	Bridge control power	PP
T-BC	1	Transformer, dry-type, 2 KVA., 240/120V.	Control supply	PP
MS-C	1	Selector switch, 2-position, 6-stage, 600V.	Control selection	CD
BC-UVR	1	Magnetic auxiliary relay, 6P, 12A., 575V.	Bridge control UV	PP
BCR	1	Magnetic auxiliary relay, 6P, 12A., 575V.	Energize bridge controls	PP
CB-H	1	Circuit breaker, 3P, 70A., 600V., 100A. frame	Heating feeder	PP
CB-ORH	1	Circuit breaker, 3P, 30A., 600V., 100A. frame	Operators room heaters	PP
CB-URH	1	Circuit breaker, 3P, 20A., 600V., 100A. frame	Utility room heaters	PP
CB-SRH	1	Circuit breaker, 3P, 40A., 600V., 100A. frame	Switchboard room heaters	PP
CB-WH	1	Circuit breaker, 2P, 30A., 250V.	Domestic water heater	PP
CB-EG	1	Circuit breaker, 2P, 20A., 250V.	Jacket water heater	PP
CB-AC	1	Circuit breaker, 2P, 20A., 250V.	Air conditioner	PP

LIGHTING

ITEM	NO. REQ'D.	DESCRIPTION	FUNCTION (OR NAMEPLATE)	LOCATION
FU-VML	2	N.E.C. Cartridge fuse, 3A., 250V.	Lighting voltmeter	LP
TS-VML	1	Selector switch, 10A., 250V.	Voltmeter transfer	CD
VM-L	1	A-C voltmeter, 0-150V. scale 60 Hz.	Read lighting voltage	CD
CB-TS	1	Circuit breaker, 1P, 20A., 120V.	Traffic signals	LP
SW-TS	1	Tumbler switch, DPST, 20A., 250V.	Operates traffic signals	CD
TR-TS	1	Timing relay, motor-driven, 120V., 60 Hz., set	Traffic signal timer	LP
		for 4 second time delay		
BP-TS	1	Sealed tumbler switch, DPST, 20A., 250V.	Timer bypass	CD
RSR	1	Magnetic auxiliary relay, 6P, 12A., 575V.	"Stop" traffic signals	LP
ASR	1	Magnetic auxiliary relay, 6P, 12A., 575V.	Yellow traffic lights	LP
CB-GL	1	Circuit breaker, 1P, 20A., 120V.	Gate warning lights	LP
FLR	1	Flasher, 2-circuit, 30A., 125V. *	Flash gate lights	LP
CB-AH	1	Circuit breaker, 2P, 40A., 600V., 100A. frame	Air horns	LP
HPB	1	Pushbutton station, 1-button, heavy duty	Operates air horns	CD
MAH	1	Magnetic contactor, 2P, 40A., 240V.	Operates air horns	LP
CB-NL	1	Circuit breaker, 1P, 20A., 120V.	Navigation lights & signals	LP
BP-NL	1	Sealed tumbler switch, DPST, 20A., 250V.	Photocell bypass (Nav. Lts.)	CD
WFOR, EFOR	2	Magnetic auxiliary relay, 6P, 12A., 575V.	Leaf fully open indication	LP
CB-SEL	1	Circuit breaker, 1P, 20A., 120V.	Position indicatiors	LP
T-SEL	1	Transformer, dry-type, 1φ, 115/6V.	Position indic. dial lamps	LP
SELT-W, SELT-E	2	Synchro-transmitter, 115V., 60 Hz., watertight	Position transmitters	MG
SELR-W, SELR-E	2	Synchro-receiver, high accuracy, 115V., 60 Hz.	Position receivers	CD
CB-IL	1	Circuit breaker, 1P, 20A., 120V.	Indicating lights	LP
SW-IL	1	Tumbler switch, DPST, 20A., 250V.	Operates indicating lights	CD
WBOLR, EBOLR	2	Magnetic relay, 1P (N.C.), 15A., 250V.	Indication for brake O.L.	LP
CB-HLP	1	Circuit breaker, 2P, 50A., 600V.	House Lighting Panel	LP
CB-RL	1	Circuit breaker, 1P, 20A., 250V.	Roadway lights	LP
CB-ELP	1	Circuit breaker, 2P, 30A., 600V.	East leaf lighting panel	LP
CB-PH	1	Circuit breaker, 1P, 15A., 250V.	Water line heating cable	LP
CB-JON	1	Circuit breaker, 1P, 15A., 250V.	Soil line heating cable	LP
BP-RL	1	Sealed tumbler switch, DPST, 20A., 250V.	Photocell bypass (Rdwy. Lts.)	CD
SW-RL	1	Tumbler switch, DPST, 20A., 250V.	Operates operators room lts.	CD
SW-DL	1	Dimmer; suitable use for Tungsten Halogen lamp	Adjusts light over desk	CD

SPAN MOTORS AND BRAKES

W.LEAF	E.LEAF	NO. REQ'D.	DESCRIPTION	FUNCTION (OR NAMEPLATE)	LOCATION
CB-WM	CB-EM	2	Circuit breaker, 3P, 100A., 100A. frame	Leaf drive motor	LCP
OC-WM	OC-EM	2	Magnetic overcurrent relay, 3-element, auto-	Motor torque limit	LCP
			reset, instantaneous trip @ 220% motor F.L.		
MR-WM	MR-EM	4	Magnetic contactor, 3P, 100A., 600V., with	Leaf motor contactors	LCP
ML-WM	ML-EM		auxiliary contacts, mechanically interlocked		
CT-WM	CT-EM	2	Current transformer	For leaf motor ammeter	LCP
CTP-WM	CTP-EM	2	Thyrite protector	Protect current transform.	LCP
AM-WM	AM-EM	2	A-C ammeter, 60 Hz., 0-100A. scale	Read motor current	CD
SW-WM	SW-EM	2	Enclosed disconnect switch, 3PST, 100A., 600V.	"In sight" disconnect	MG
RS-WM	RS-EM	2	Resistor bank, cont. rating (25% of OYper leg)	Leaf motor secondary	MG
CB-MBW	CB-MBE	2	Circuit breaker, 3P, 15A., 600V., 100A. frame	Leaf motor brakes	LCP
CB-SBW1	CB-SBE1	4	Circuit breaker, 3P, 15A., 600V., 100A. frame	Shaft brakes	LCP
CB-SBW2	CB-SBE2				
M-MBW	M-MBE	2	Magnetic contactor, 3P, 15A., 600V. with	Release motor brakes	LCP
			3-element thermal O.L.'s, manual reset		
M-SBW-1	M-SBE-1	4	Magnetic contactor, 3P, 15A., 600V. with	Release shaft brakes	LCP
M-SBW-2	M-SBE-2		3-element thermal O.L.'s, manual reset		
SW-MBW	S-MBE	2	Enclosed starting switch, tumbler type,	"In sight" disconnect	MG
			watertight, 3PST, 20A., 600V.		
SW-SBW1	SW-SBE1	4	Enclosed starting switch, tumbler type,	"In sight" disconnect	MG
SW-SBW2	SW-SBE2		watertight, 3PST, 20A., 600V.		

SPAN CONTROL

W.LEAF	E.LEAF	NO. REQ'D.	DESCRIPTION	FUNCTION (OR NAMEPLATE)	LOCATION
CB-WLC	CB-ELC	2	Circuit breaker, 1P, 20A., 120V.	Leaf control	LCP
UVR-W	UVR-E	2	Magnetic contactor, 2P, 15A., 600V.	Leaf control UV	LCP
MOLS-W	MOLS-E	2	Limit switch, lever operated, spring-return,	Manual operation interlock	MG
			2-circuit, snap-action, 575V.		
HR-MBW	HR-MBE	2	Limit switch, lever operated, spring-return,	Brake hand release intlk.	MG
			2-circuit, 600V., watertight		
HR-SBW1	HR-SBE1	4	Limit switch, lever operated, spring-return,	Shaft brake hand release intlk.	MG
HR-SBW2	HR-SBE2		2-circuit, 600V, watertight		
BP-W	BP-E	2	Sealed tumbler switch, DPST, 20A., 250V.	Leaf control bypass	CD
MS-W	MS-E	2	Master switch, 15-stage, 6-point forward	Operate bascule leaf	CD
			and reverse		
LS-W	LS-E	2	Limit switch, rotary, cam operated, 12-circuit,	Bascule leaf travel	MG
			reversing, watertight		
OSR-W	OSR-E	2	Magnetic auxiliary relay, 6P, 12A., 575V.	Overspeed protection	LCP
LBPR-W	LBPR-E	2	Magnetic auxiliary relay, 6P, 12A., 575V.	Leaf limit switch bypass	LCP
SPB-W	SPB-E	2	Pushbutton station, heavy-duty, 1-button	Bascule leaf seating	CD
SR-W	SR-E	2	Magnetic auxiliary relay, 6P, 12A., 575V.	Bascule leaf seating	LCP
STR-W	STR-E	2	KMR Relay	Adjust seating torque	LCP
SUP-W	SUP-E	2	Suppressor	Suppressor for KMR relay	LCP
TR-BXW	TR-BXE	2	Time delay relay, motor driven, 230V., 60 Hz.	Leaf control timing	LCP
RR-W	RR-E	2	KMR Relay	Raise control	LCP
LR-W	LR-E	2	KMR Relay	Lower control	LCP
DSW-W	DSW-E	2	Sealed tumbler switch, DPST, 20A., 250V.	Drift test switch	CD
CTRX-W	CTRX-E	2	Magnetic auxiliary relay, 6P, 12A., 575V.	Counter torque control	LCP
RH1-W	RH1-E	2	Rheostat	Leaf acceleration	LCP
RH2-W	RH2-E	2	Rheostat	Leaf acceleration	LCP
RH3-W	RH3-E	2	Rheostat	Leaf acceleration	LCP
RH4-W	RH4-E	2	Rheostat	Leaf acceleration	LCP
RH5-W	RH5-E	2	Rheostat	Leaf acceleration	LCP
1RS-W	1RS-E	2	Resistor	Leaf acceleration	LCP
2RS-W	2RS-E	2	Resistor	Seating torque adjustment	LCP
3RS-W	3RS-E	2	Resistor	Regulation control	LCP
TR-W	TR-E	2	Transformer	Regulation control	LCP
1C-W	1C-E	2	Capacitor	Regulation control	LCP
D-W	D-E	2	Diodes	Regulation control	LCP
LS-MBW	LS-MBE	2	Limit switch, lever-operated, spring-return,	Indicate brake released	MG
			2-circuit, 600V., watertight		
LS-SBW1	LS-SBE1	4	Limit switch, lever-operated, spring-return,	Indicate brake released	MG
LS-SBW2	LS-SBE2		2-circuit, 600V., watertight		

SPAN AUXILIARIES

ITEM	NO. REQ'D.	DESCRIPTION	FUNCTION (OR NAMEPLATE)	LOCATION
CB-GNW, CB-GNE	4	Circuit breaker, 3P, 15A., 600V., 100A. frame	Gate motors	AP
CB-GSW, CB-GSE				
SW-GNW, SW-GNE	4	Enclosed starting switch, tumbler-type,	"In sight" disconnect	GS
SW-GSW, SW-GSE		watertight, 3PST, 20A., 600V.		
CB-GC	1	Circuit breaker, 1P, 20A., 120V.	Gate control	AP
PB-GNW, PB-GNE	4	Pushbutton station, 2-button, heavy duty	Operates gates	CD
PB-GSW, PB-GSE				
PB-GR	1	Pushbutton station, 2-unit, heavy duty	Group raising	CD
BP-GC	1	Sealed tumbler switch, DPST, 20A., 250V.	Gate control bypass	CD
GRR	1	Magnetic auxiliary relay, 6P, 12A., 575V.	Group raise control	AP
M-GNW, M-GNE	4	Reversing contactor, 3P, 15A., 120V., with thermal	Gate motor reversing	AP
M-GSW, M-GSE		O.L.'s mechanically and electrically interlocked		
LS-GNW, LS-GNE	4	Limit switch, cam operated, 6-circuit, reversing	Gate travel and control	GS
LS-GSW, LS-GSE		(part of gate mechanism)		
CB-CL	1	Circuit breaker, 3P, 20A., 600V., 100A. frame	Center locks motor	AP
SW-CL	1	Enclosed disconnect switch, 3PST, 30A., 600V.,	"In sight" disconnect	LEAF
		waterproof enclosure Type WDS		
CB-CLC	1	Circuit breaker, 1P, 20A., 120V.	Center locks control	AP
UVR-CLC	1	Magnetic auxilary relay, 6P, 12A., 575V.	Center locks control UV	AP
BP-CLC	1	Sealed tumbler switch, DPST, 20A., 250V.	Center locks control bypass	CD
MS-CLC	1	Selector switch, 3-position, 3-stage, 600V.	Operates center locks	CD
M-CL	1	Reversing contactor, 2P, 15A., 120V., with thermal	Center locks motor reversing	AP
		O.L.'s mechanically and electrically interlocked		
LS-CL	1	Limit switch, rotary, cam operated, 6-circuit	Center locks travel & control	LEAF
		reversing		
CLOR	1	Magnetic auxiliary relay, 6P, 12A., 575V.	Center locks out relay	AP
CB-WTL, CB-ETL	2	Circuit breaker, 3P, 20A., 600V., 100A. frame	Tail lock motors	AP
SW-WTL, SW-ETL	2	Enclosed disconnect switch, 3PST, 30A, 600V.	"In sight" disconnect	MG
		in waterproof enclosure Type WDS		
CB-TLC	1	Circuit breaker, 1P, 20A., 120V.	Tail locks control	AP
UVR-TLC	1	Magnetic auxiliary relay, 6P, 12A., 575V.	Tail locks control UV	AP
BP-TLC	1	Sealed tumbler switch, DPST, 20A., 250V.	Tail locks control bypass	CD
MS-TLC	1	Selector switch, 3-position, 5-stage, 600V.	Operate tail locks	CD
M-WTL, M-ETL	2	Reversing contactor, 2P, 15A., 120V., with thermal	Tail locks motor reversing	AP
		O.L.'s mechanically and electricaly interlocked		
LS-WTL, LS-ETL	2	Limit switch, rotary, cam operated, 6-circuit	Tail locks travel & control	MG
		reversing		
WTLOR, ETLOR	2	Magnetic auxiliary relay, 6P, 12A., 575V.	Tail locks out relay	AP
LS-SNW, LS-SNE	4	Limit switch, plunger-operated, spring-return,	Leaf fully seated	MG
LS-SSW, LS-SSE		2-circuit, watertight		
AS-TLC	2	Sealed tumber switch, SPST, 20A, 250V.	Tail lock individual control	MG

* - Furnished by the Department and installed under this contract.

LOCATION LEGEND

PP - Power Panel
AP - Auxiliary Control Panel
LP - Lighting Control Panel
LCP - Leaf Control Panel
} Bridge Control Panel
CD - Control Desk
MG - Machinery Gallery
GS - Gate Stand
LEAF - Bascule Leaf

NO.	REVISIONS	BY	DATE

DELAWARE
DEPARTMENT OF TRANSPORTATION
DIVISION OF HIGHWAYS

SAVANNAH ROAD BRIDGE
OVER LEWES & REHOBOTH CANAL
SCHEDULE OF
ELECTRICAL APPARATUS

D. P.P.P.
T. K.A.S.
C. H.B.H.

SCALE
NONE

APPROVED BY: R. C. McDowell
BRIDGE ENGINEER

12154

COUNTY	CONTRACT	P.R.A. REF. NO.	STATE	FED. AID PROJECT NO.	SHEET NO.	TOTAL SHEETS
SUSSEX	80-023-02	2	DEL		57	87

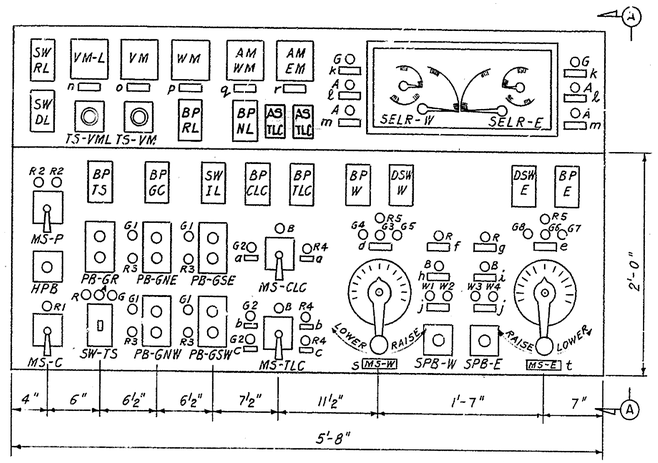

CONTROL DESK LAYOUT

Scale: 1½" = 1'-0"

Note:
Silencing pushbutton for Standby Plant shutdown alarm, shall be installed within desk.

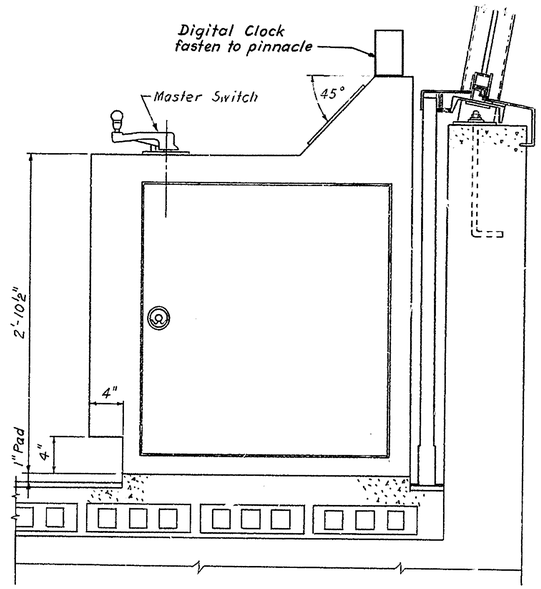

SECTION A-A

Scale: 1½" = 1'-0"

NOTES FOR DESK CONSTRUCTION

1. The desk shall be fabricated of 11 gauge sheet steel properly formed and suitably reinforced to provide adequate strength.
2. The inclined meter panel and desk top shall be 11 gauge stainless steel with a non-glare, satin finish.
3. Each indicating light assembly shall be a press-to-test indicator comprising a candelabra base socket with screw terminals, slip-on lens holder, and 1-inch diameter flat glass lens with color and legend per schedule. It shall be approved equal to Dialco catalog No. 820-2701. Furnish with A 656/7 lamp rated at 125 Volts.
4. Indicating light legends shall be photonegative film discs (Type C) for red and green lenses and photopositive film discs (Type B) for white and amber lenses.
5. Mounting screws for nameplates and escutcheon plates shall be stainless steel.
6. The handles, dial plates and latch plates of the leaf master switches shall have a satin-chrome plate finish.

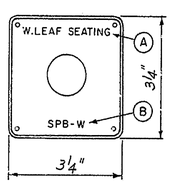

FIGURE NO.3

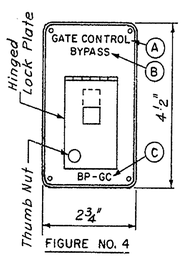

FIGURE NO. 4

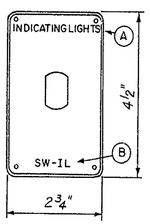

FIGURE NO.5

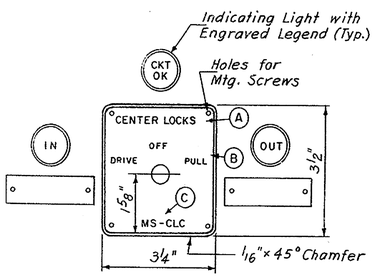

FIGURE NO. 1

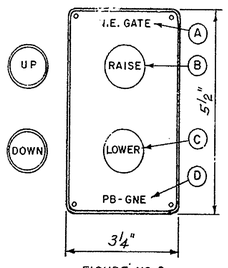

FIGURE NO. 2

TYPICAL ESCUTCHEON PLATE DETAILS

ESCUTCHEON PLATE ENGRAVING				
FIG. NO.	A	B	C	D
1	Center Locks	Drive-Off-Pull	MS-CLC	—
1	Tail Locks	Drive-Off-Pull	MS-TLC	—
1	Power Selection	See Note A	MS-P	—
1	Bridge Controls	On-Off	MS-C	—
2	N.E. Gate	Raise	Lower	PB-GNE
2	S.E. Gate	Raise	Lower	PB-GSE
2	N.W. Gate	Raise	Lower	PB-GNW
2	S.W. Gate	Raise	Lower	PB-GSW
2	Gates Group Raise	Raise	Stop	PB-GR
3	Air Horns	HPB	—	—
3	W. Leaf Seating	SPB-W	—	—
3	E. Leaf Seating	SPB-E	—	—
4	Traffic Timer	Bypass	BP-TS	—
4	Gate Control	Bypass	BP-GC	—
4	Center Locks Control	Bypass	BP-CLC	—
4	Tail Locks Control	Bypass	BP-TLC	—
4	W. Leaf Control	Bypass	BP-W	—
4	E. Leaf Control	Bypass	BP-E	—
4	Drift Switch	W. Leaf	DSW-W	—
4	Drift Switch	E. Leaf	DSW-E	—
4	Roadway Lights	Bypass	BP-RL	—
4	Navigation Lights	Bypass	BP-NL	—
5	Indicating Lights	SW-IL	—	—
5	Room Lights	SW-RL	—	—
5	Desk Light Dimmer	SW-DL	—	—

NAME PLATE ENGRAVING	
DESIGN.	LEGEND
* a	Center Locks
* b	E. Tail Locks
* c	W. Tail Locks
d	West Brakes Released
e	East Brakes Released
f	West Manual Engaged
g	East Manual Engaged
h	West Leaf Control
i	East Leaf Control
* j	Leaf Seated
* k	Leaf Fully Open
* l	Leaf Nearly Open
* m	Leaf Nearly Closed
n	Lighting Volts
o	Power Bus Volts
p	Drive KW
q	West Leaf Motor
r	East Leaf Motor
s	West Leaf MS-W
t	East Leaf MS-E

* - Denotes two nameplates required

INDICATING LIGHT SCHEDULE			
DESIGN.	COLOR	NO. REQ'D.	LEGEND
R	Red	3	—
R1	Red	1	ON
R2	Red	2	AVAIL
R3	Red	4	DOWN
R4	Red	3	OUT
R5	Red	2	O.L.
G	Green	3	—
G1	Green	4	UP
G2	Green	3	IN
G3	Green	1	W
G4	Green	1	W1
G5	Green	1	W2
G6	Green	1	E
G7	Green	1	E1
G8	Green	1	E2
B	Blue	4	CKT. OK
A	Amber	5	—
W1	White	1	N.E.
W2	White	1	S.E.
W3	White	1	N.W.
W4	White	1	S.W.

NOTES FOR ESCUTCHEON PLATES:

1. All escutcheon plates to be 3/16" hot-polished, black and white, laminated phenolic compound with 1/32" black surface, 1/32" intermediate white layer and 1/8" black back.
2. All legends on escutcheon plates to be engraved with standard gothic characters, cut through black surface into intermediate white layer.
3. For details not shown in Figures 2, 3, 4 and 5 see Figure No. 1.

Note A: #1 - Automatic
#2 - Off
#3 - Exercise No Transfer
#4 - Exercise With Transfer

NO.	REVISIONS	BY	DATE

DELAWARE
DEPARTMENT OF TRANSPORTATION
DIVISION OF HIGHWAYS

SAVANNAH ROAD BRIDGE
OVER LEWES & REHOBOTH CANAL
CONTROL DESK
LAYOUT AND DETAILS

D.H.B.H.	SCALE	APPROVED BY
T.K.A.S.	AS NOTED	R.C.W. Edwards
C.H.B.H.		BRIDGE ENGINEER

ROBERT C. McDOWELL REGISTERED PROFESSIONAL ENGINEER NO. 3032

COUNTY	CONTRACT	P.R.A. REG. NO.	STATE	FED. AID PROJECT NO.	SHEET NO.	TOTAL SHEETS
SUSSEX	80-023-02	2	DEL		58	87

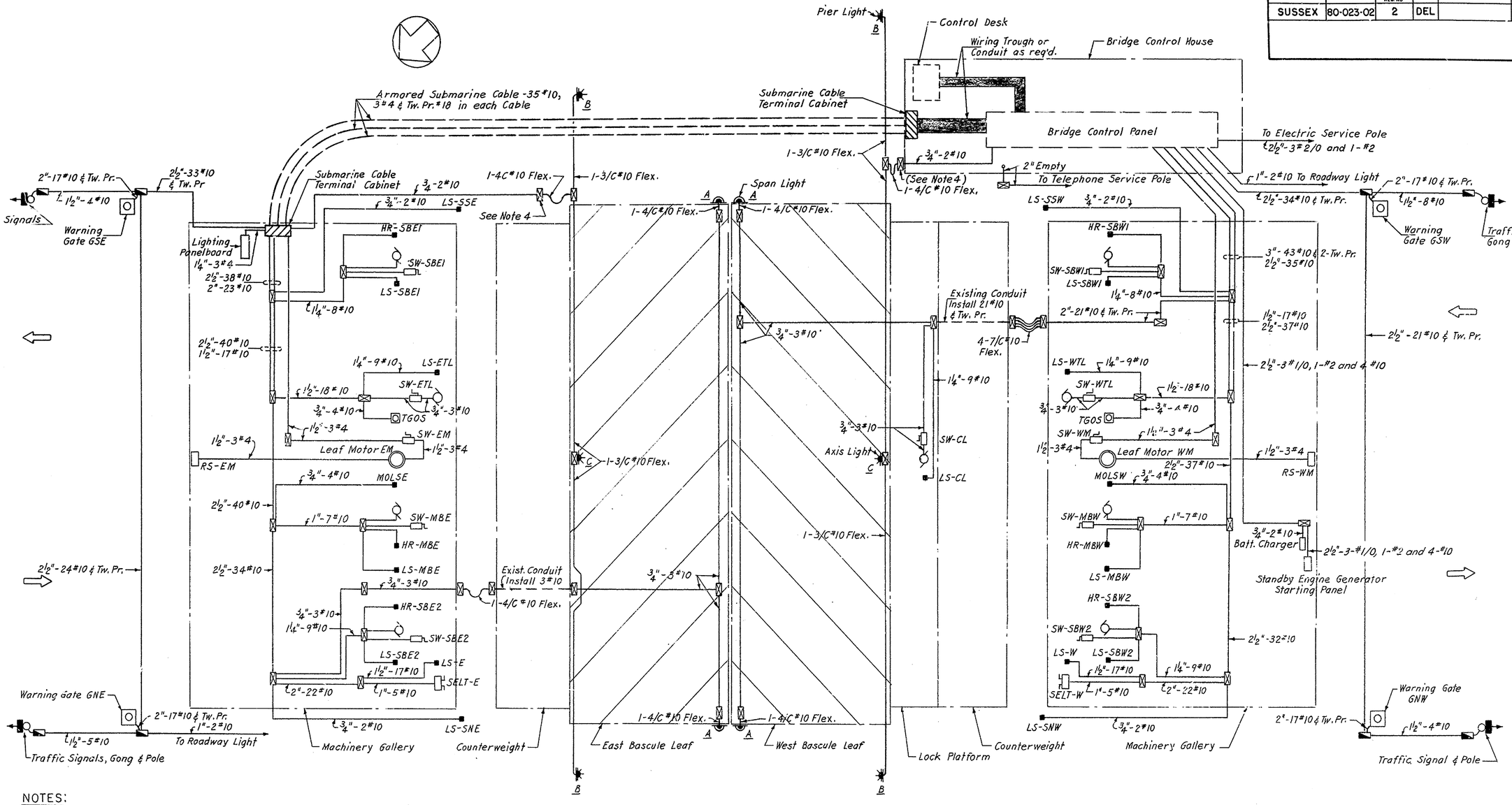

NOTES:

1. The number of wires and sizes of conductors shown in conduits and cables are based on the Contract wiring diagrams, including spares, and are the minimum permissible. The Contractor shall provide conductors of sufficient number and size as may be required for the installation in accordance with the final wiring diagrams on his approved working drawings.

2. The Schematic Conduit Diagram does not purport to show all pull or terminal boxes that may be required. The Contractor shall furnish and install any additional boxes required for proper installation of cables.

3. The Schematic Conduit Diagram shows only the circuits concerned with operation of the bridge and its auxiliaries. Circuits not shown include at least the bridge service lighting, pipe line heaters, engine alarm system, house auxiliary equipment and service telephone system. All conduit runs are diagramatic. Actual installation and location shall be approved by the Engineer.

4. Pier light housing shall be grounded by means of bonding the 3rd. conductor of 4/C#10 cable to conduit system in pullbox mounted on substructure wall.

5. Span light housing shall be grounded by means of bonding the 4th. conductor of 4/C#10 cable to conduit system in adjacent pullbox.

6. Provide grounding rods in junction well adjacent to each warning gate.

REFERENCE NOTES:

1. For Connections at Leaf Brakes, see Sheet 60.
2. For Legend for Navigation Lights, see Sheet 59.

LEGEND

- H.D. Galv. C.I. Pullbox or Terminal Box
- Junction Well off Structure
- Disconnect Switch
- Limit Switch

NO.	REVISIONS	BY	DATE

DELAWARE
DEPARTMENT OF TRANSPORTATION
DIVISION OF HIGHWAYS

SAVANNAH ROAD BRIDGE
OVER LEWES & REHOBOTH CANAL
SCHEMATIC CONDUIT DIAGRAM

	SCALE	APPROVED BY
D. P.P.P.	NONE	R. C. McDowell
T. K.A.S.		BRIDGE ENGINEER
C. H.B.H.		

COUNTY	CONTRACT	P.R.A. REG. NO.	STATE	FED. AID PROJECT NO.	SHEET NO.	TOTAL SHEETS
SUSSEX	30-023-02	2	DEL		59	87

LEGEND FOR NAVIGATION LIGHTS

A - Bascule Span Light : 180° Red - Span Closed, 180° Green - Span Open

B - Pier Light, 180° Red

C - Axis Light, 180° Red

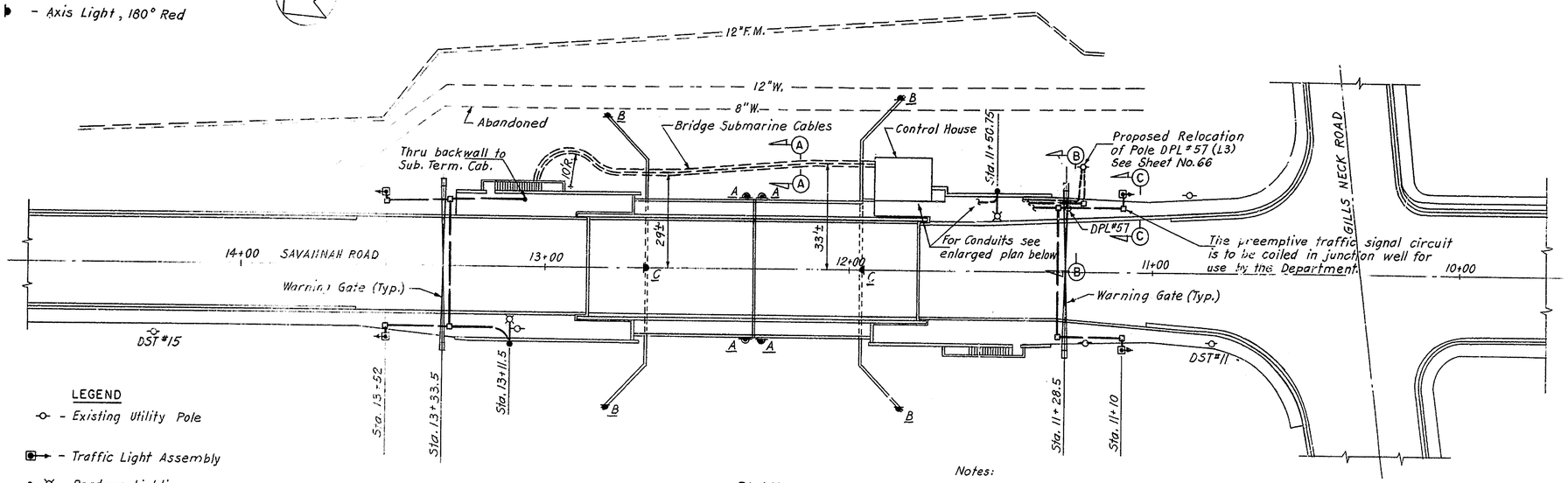

LEGEND

- Existing Utility Pole
- Traffic Light Assembly
- Roadway Lighting Standard Assembly
- Concrete Junction Well
- Rigid Metallic Conduit

PLAN

Scale: 1" = 20'-0"

Notes:

1. For existing submarine cables north of bascule span see Sheet 66.
2. For overhead utility cables at bridge see Sheet 66.

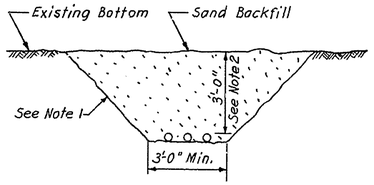

SECTION A-A

Not to Scale

NOTES FOR SUBMARINE CABLES

1. Excavate to provide required depth and permit the material of trench sides to stand at its natural slope.
2. Across channel the submarine cables are to be buried at least 3 feet below the existing bottom but not higher than El. -11.9.

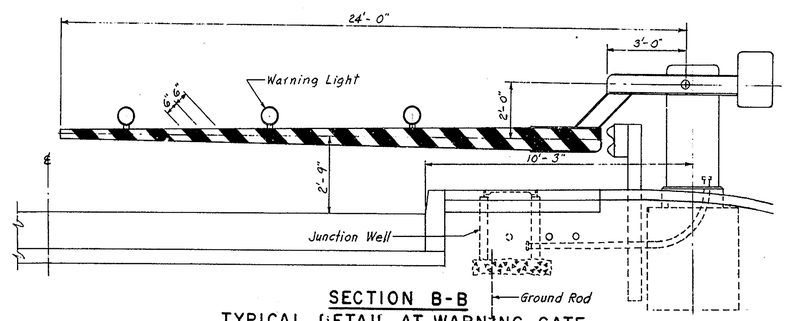

SECTION B-B

TYPICAL DETAIL AT WARNING GATE

Scale: 3/8" = 1'-0"

Notes:

1. For Pedestal base & Concrete well construction, see Std. Sheet T-2 and Contract Spec's.
2. Bond gate housing and conduits to ground rod in adjacent junction well.

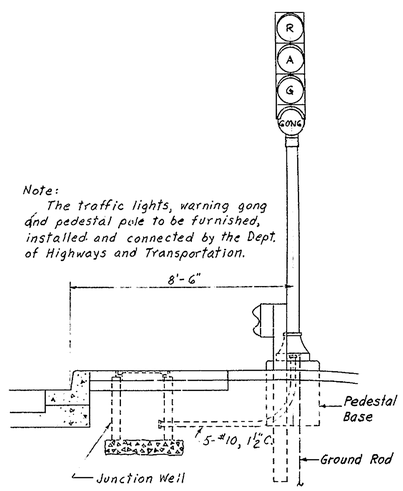

Note:

The traffic lights, warning gong and pedestal pole to be furnished, installed and connected by the Dept. of Highways and Transportation.

SECTION C-C

TYPICAL DETAIL AT TRAFFIC SIGNAL

Scale: 3/8" = 1'-0"

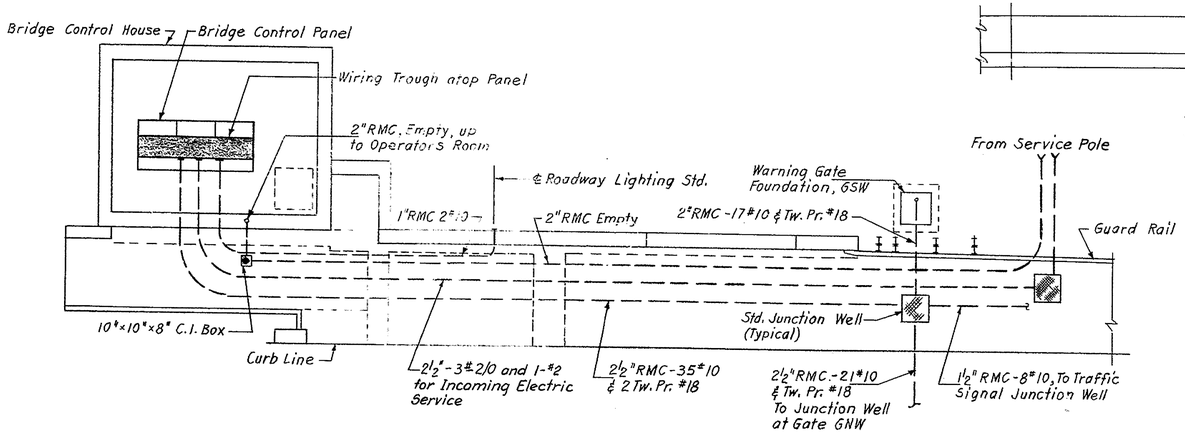

PLAN OF CONDUITS AT HOUSE

Scale: 3/16" = 1'-0"

NO.	REVISIONS	BY	DATE

DELAWARE
DEPARTMENT OF TRANSPORTATION
DIVISION OF HIGHWAYS

SAVANNAH ROAD BRIDGE
OVER LEWES & REHOBOTH CANAL

ELECTRICAL PLAN AND DETAILS

D. H.B.H.
T. K.A.S.
C. H.B.H.

SCALE: AS NOTED

APPROVED BY: R. C. Widdowson
BRIDGE ENGINEER

REGISTERED PROFESSIONAL ENGINEER NO. 3069

COUNTY	CONTRACT	P R A REG. NO.	STATE	FED. AID PROJECT NO.	SHEET NO.	TOTAL SHEETS
SUSSEX	80-023-02	2	DEL		60	87

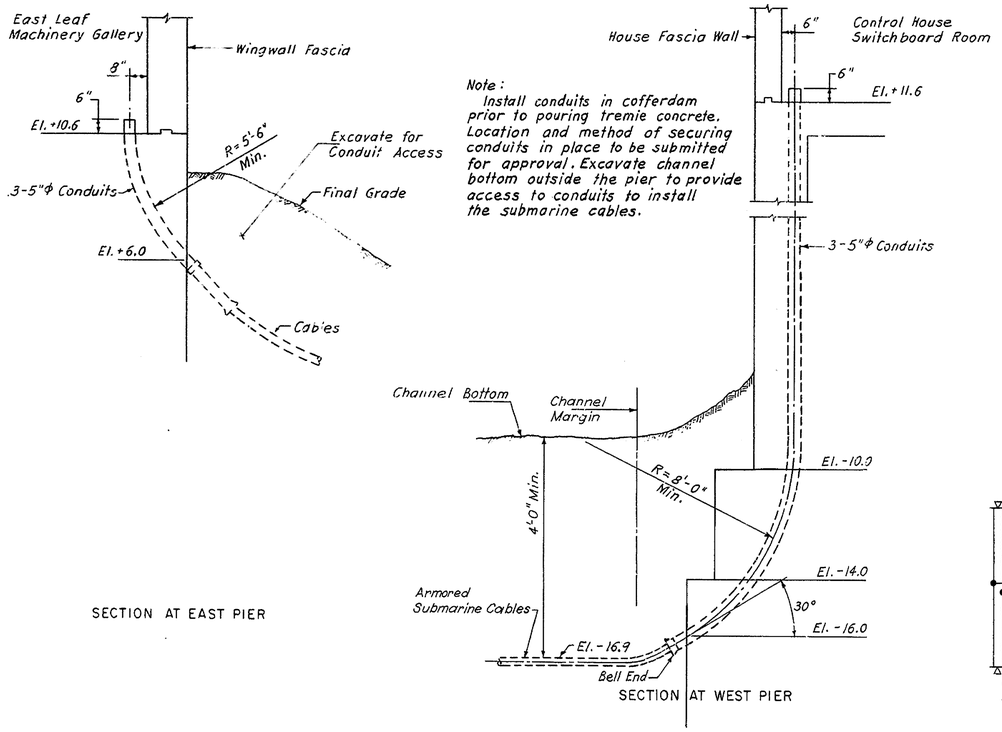

DETAILS OF CONDUITS FOR SUBMARINE CABLE TERMINATION

Scale: 3/8" = 1'-0"

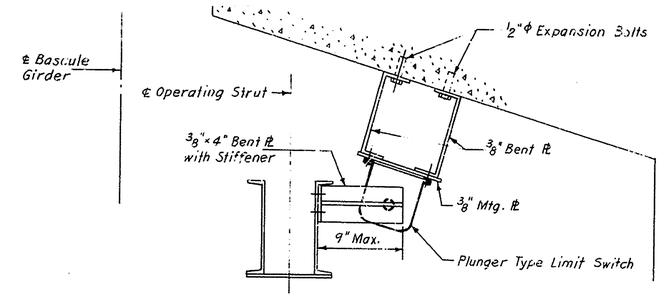

TYPICAL INSTALLATION OF FULLY SEATED LIMIT SWITCH

Scale: 1 1/2" = 1'-0"

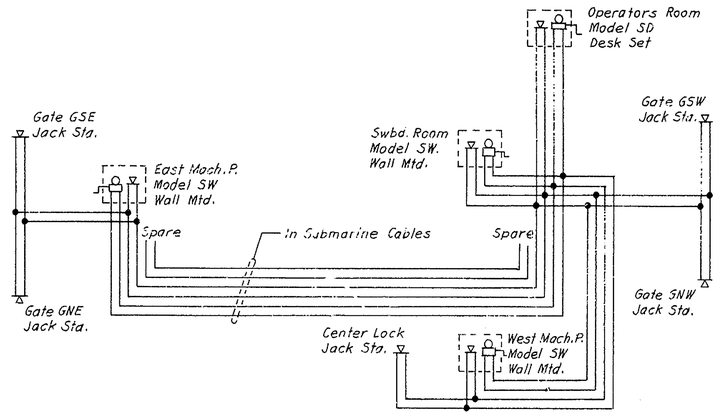

WIRING DIAGRAM - SERVICE TELEPHONE SYSTEM

Not to Scale

SCHEDULE OF LIGHTING EQUIPMENT

(A) - Recessed adjustable framing projector, with sharp edge cutoff in aluminum housing. Lightolier Cat. No. P38J91 or approved equal. Furnish with 75-watt Tungsten halogen lamp.

(B) - Recessed rectangular incandescent fixture with flat white lens. Art Metal Cat. No. 12-CR5, or approved equal. Furnish with one 150-watt lamp.

(C) - Surface square ceiling fixture of anodized cast aluminum, 150 watt with porcelain socket, anodized reflector and drop opal diffuser. Furnish with 150-watt lamp. Devine Cat. No. A 103 ME-AH-C43, or approved equal.

(D) - Vaportight fixture, cast brass junction box type for ceiling mounting, with globe and porcelain enameled dome reflector. Russell & Stoll Cat. No. 6213 or approved equal. Furnish with 150-watt lamp.

(E) - Wall mounted fixture with cast aluminum bracket and white satin globe. Art Metal Cat. No. 9112 or approved equal. Furnish with 100-watt lamp.

(F) - Ceiling mounted fixture with cast aluminum bracket and white satin globe. Art Metal Cat. No. 9312 or approved equal. Furnish with 100-watt lamp.

(G) - Outdoor wall mounted fixture with cast aluminum hood, prismatic reflector, tamper proof protection and special corrosion protection. Furnish with 150-watt lamp. Holophane Cat. No. 400-TP-CR or approved equal.

(H) - Same as D above with Type SV, vibration-proof lampholder and heat resisting globe. Russell & Stoll Cat. No. 6211-SV or approved equal. Furnish with 100-watt rough service lamp.

(J) - Vaportight fixture cast aluminum for mounting on 1 1/4" rigid conduit with type SV vibration proof lampholder porcelain enameled angle reflector & heat resisting globe. Russell & Stoll Cat. No. F 21854-SV or approved equal. Furnish with 100-watt rough service lamp.

- Duplex outlet, polarized, grounding type, 15 amp., 125 Volt, a.c. Hubbell Cat. No. 5262, or approved equal.

- Marine duplex outlet, polarized, grounding type, 3-wire, 15 amp., 125 Volt a.c. yellow melamine. Russell & Stoll Cat. No. 52CM62, or approved equal. Mount in cast brass FD box and provide with two yellow fiberglass weatherproof lift plate No. 52CM21 or approved equal.

SW-DL or - Dimmer switch, 120 Volts, 60 Hertz, 1000 watt, 3-way control within recessed box and flush mounted cover plate. (SW-HL similar) Slata Electric Inc. Model No. RDCP-3-1000.

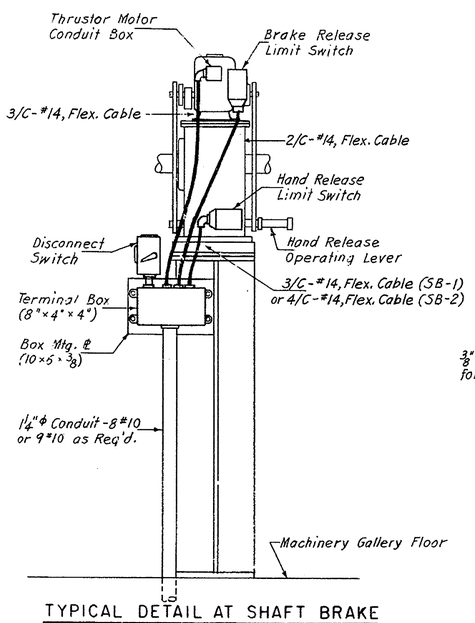

TYPICAL DETAIL AT SHAFT BRAKE

Scale: 1 1/2" = 1'-0"

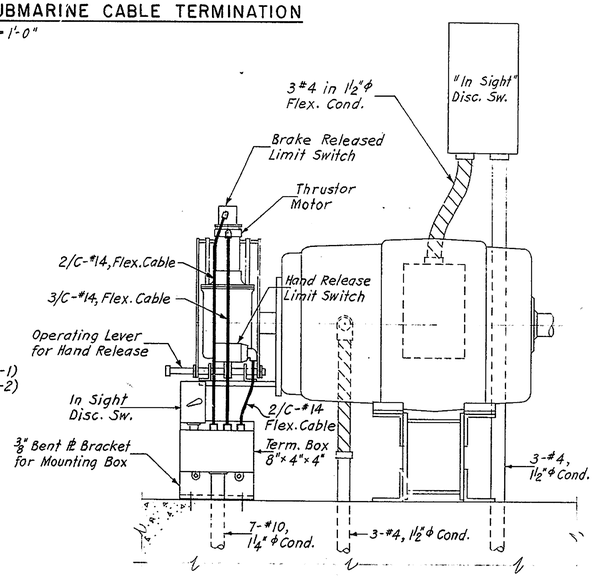

TYPICAL DETAIL AT LEAF MOTOR AND BRAKE

Scale: 1 1/2" = 1'-0"

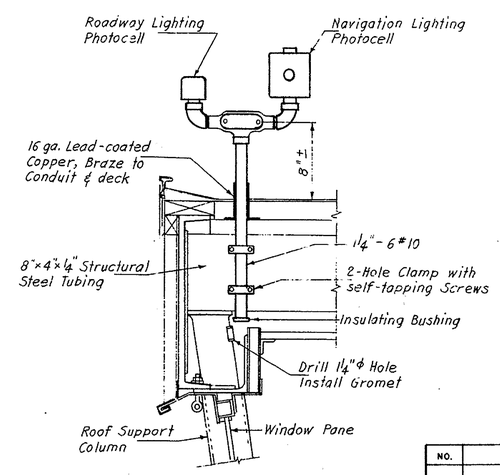

PHOTOCELL MOUNTING DETAIL

Scale: 1 1/2" = 1'-0"

NO.	REVISIONS	BY	DATE

DELAWARE
DEPARTMENT OF TRANSPORTATION
DIVISION OF HIGHWAYS

SAVANNAH ROAD BRIDGE
OVER LEWES & REHOBOTH CANAL

DETAILS OF ELECTRICAL WORK

D. P.P.P.	SCALE	APPROVED BY
T. K.A.S.	AS NOTED	R.C. Wetzel, BRIDGE ENGINEER
C. H.B.H.		NO. 3059

COUNTY	CONTRACT	P & A REG NO	STATE	FED AID PROJECT NO	SHEET Nº	TOTAL SHEETS
SUSSEX	80-023-02	2	DEL.		61	87

NO.	REVISIONS	BY	DATE

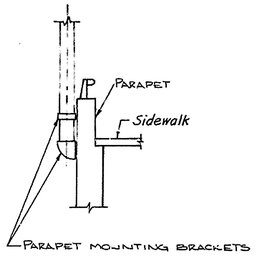

PARAPET

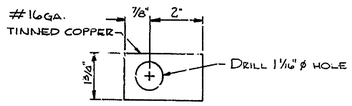

DETAIL A

GROUND TERMINAL

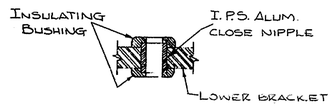

DETAIL B

LOWER BRACKET

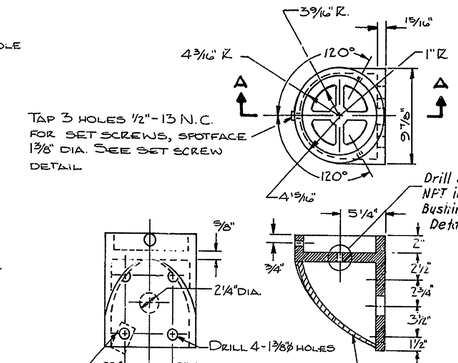

SECTION A-A

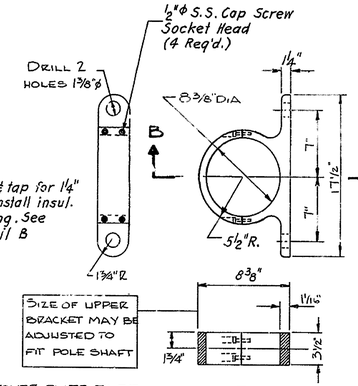

SECTION B-B

UPPER BRACKET

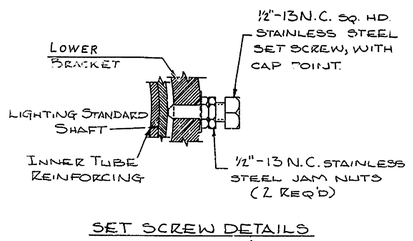

SET SCREW DETAILS

BRACKETS FOR PARAPET MOUNTING

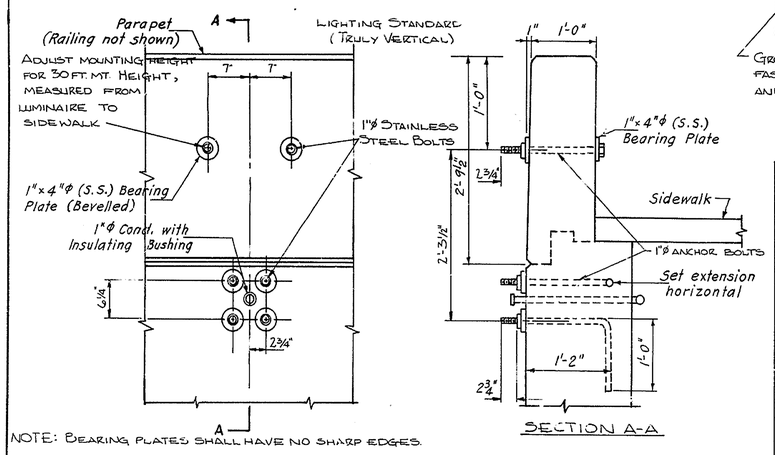

NOTE: Bearing plates shall have no sharp edges.

SECTION A-A

PARAPET LIGHTING STANDARD MOUNTING

(No Scale)

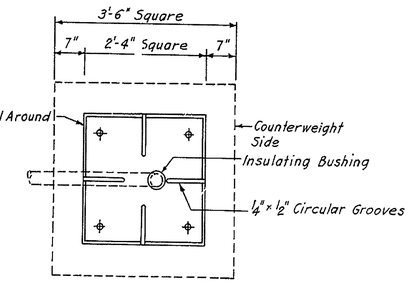

PLAN

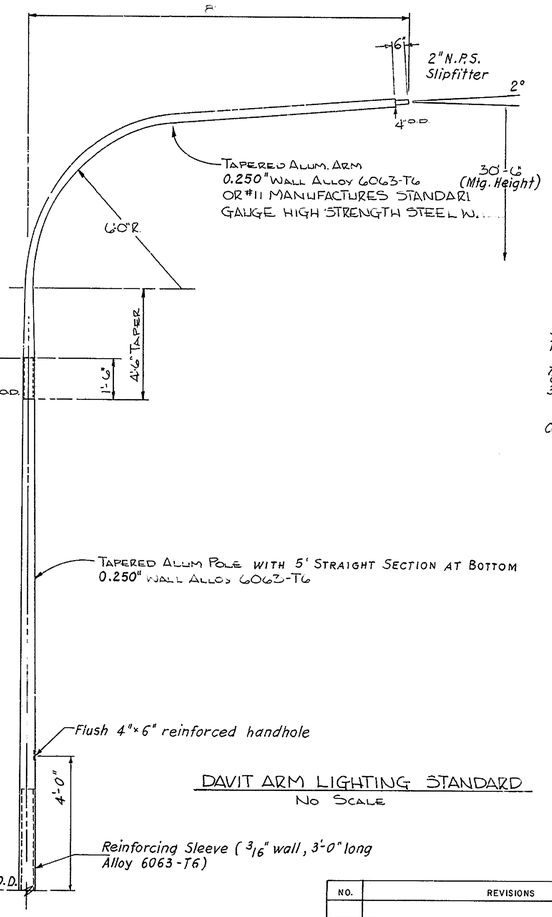

DAVIT ARM LIGHTING STANDARD

No Scale

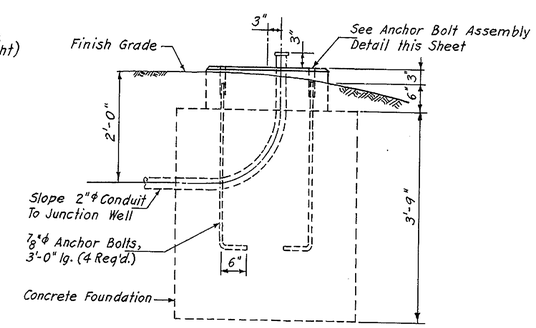

ELEVATION

WARNING GATE FOUNDATION DETAILS

Scale: 3/4" = 1'-0"

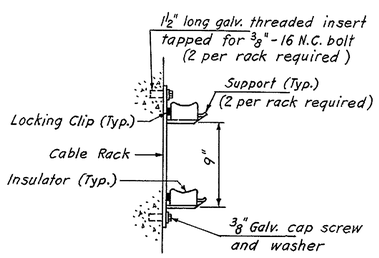

TYPICAL CABLE RACK ASSEMBLY FOR STANDARD JUNCTION WELLS

Scale: 1 1/2" = 1'-0"

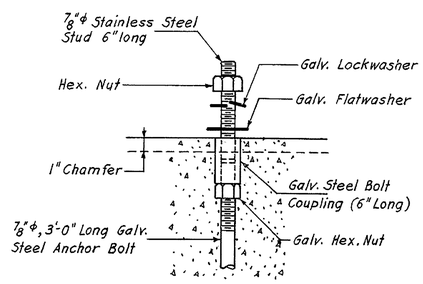

GATE ANCHOR BOLT ASSEMBLY DETAIL

No Scale

NO.	REVISIONS	BY	DATE

DELAWARE
DEPARTMENT OF TRANSPORTATION
DIVISION OF HIGHWAYS

SAVANNAH ROAD BRIDGE
OVER LEWES & REHOBOTH CANAL

DETAILS OF ELECTRICAL [illegible]

D. P.P.P.	SCALE	APPROVED BY
T. K.A.S.	AS NOTED	
C. H.B.H.		BRIDGE ENGINEER

NO. 3069

COUNTY	CONTRACT	PR A REG NO	STATE	FED AID PROJECT NO.	SHEET NO.	TOTAL SHEETS
SUSSEX	80-023-02	2	DEL		62	87

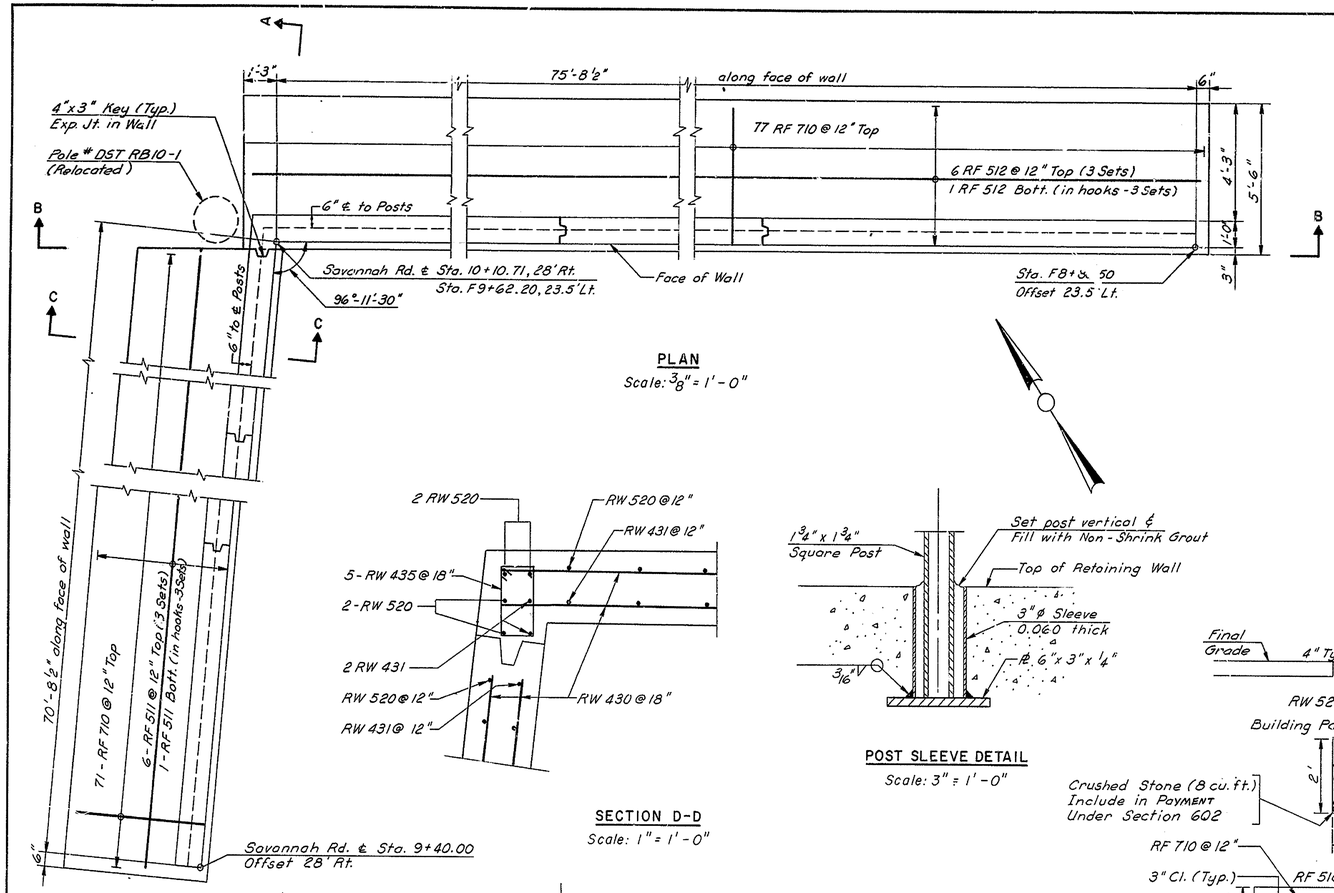

PLAN
Scale: 3/8" = 1'-0"

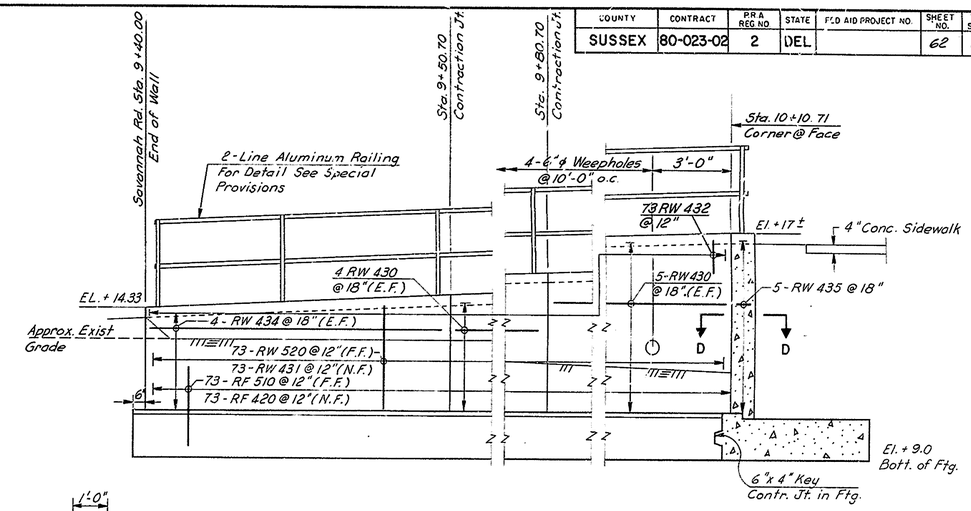

ELEVATION A-A
Scale: 3/8" = 1'-0"

SECTION D-D
Scale: 1" = 1'-0"

POST SLEEVE DETAIL
Scale: 3" = 1'-0"

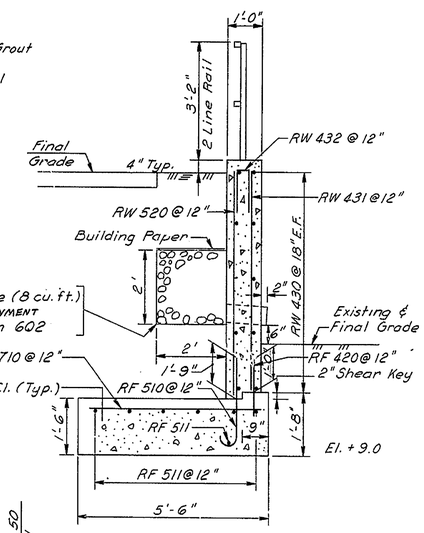

SECTION C-C
Scale: ½" = 1'-0"

RETAINING WALL										
MARK	LENGTH	NO. REQD.		DETAIL DIMENSIONS						
				A	B	C	D	E	G	J
RW 430	29'-6"	36	STR							
RW 431	2'-7" to 6'-1"	150	STR							
RW 432	3'-0"	153	17		1'-3"	0'-6"	1'-3"			
RW 433	16'-2"	6	STR							
RW 434	10'-2"	8	STR							
RW 435	3'-2½"	5	T1	0'-4½"	0'-6"	0'-11"	0'-6"	0'-11"	0'-4½"	
RW 520	2'-9" to 6'-3"	156	STR							
RF 420	1'-8"	153	STR							
RF 510	4'-0"	153	1	0'-7"	3'-0"					0'-5"
RF 511	26'-9"	21	STR							
RF 512	28'-9"	21	STR							
RF 710	5'-0"	148	STR							

FOOTING KEY

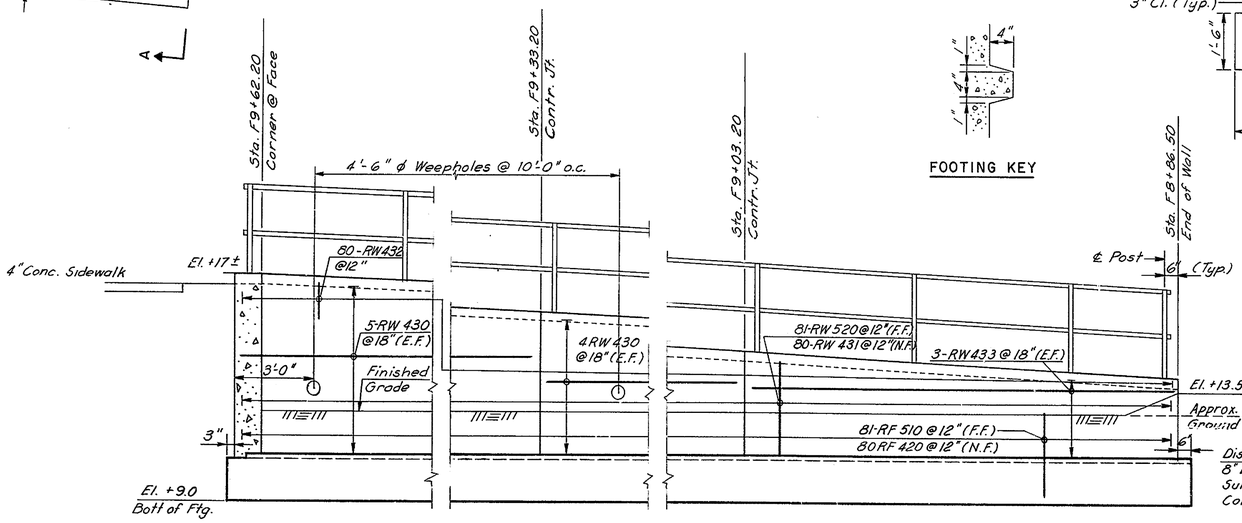

ELEVATION B-B
Scale: 3/8" = 1'-0"

3/8" Cork Joint Material conforming to AASHTO Specifications Designation M153, Type I where Joint is noted as Expansion, Contraction Joints shall be tight and paraffin coated

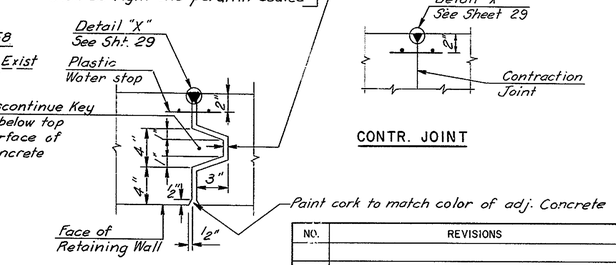

SECTION AT WALL JOINT

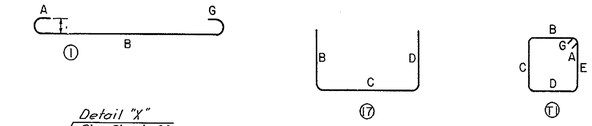

BAR TYPES

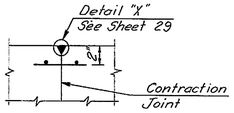

CONTR. JOINT

NO.	REVISIONS	BY	DATE

DELAWARE
DEPARTMENT OF TRANSPORTATION
DIVISION OF HIGHWAYS

SAVANNAH ROAD BRIDGE
OVER LEWES & REHOBOTH CANAL

RETAINING WALL II

D. J.F.P.
T. M.P.
C. J.F.P.

SCALE
AS NOTED

APPROVED BY R.C. McDowell
BRIDGE ENGINEER

ROBERT C. McDOWELL
REGISTERED PROFESSIONAL ENGINEER
NO. 3064

COUNTY	CONTRACT	P.R.A. REG. NO.	STATE	FED. AID PROJECT NO.	SHEET NO.	TOTAL SHEETS
SUSSEX	80-023-02	2	DEL	RS-1047 (2)	G2A	87

ROUTE 18 – SAVANNAH RD. BRIDGE

NO.	REVISIONS	BY	DATE

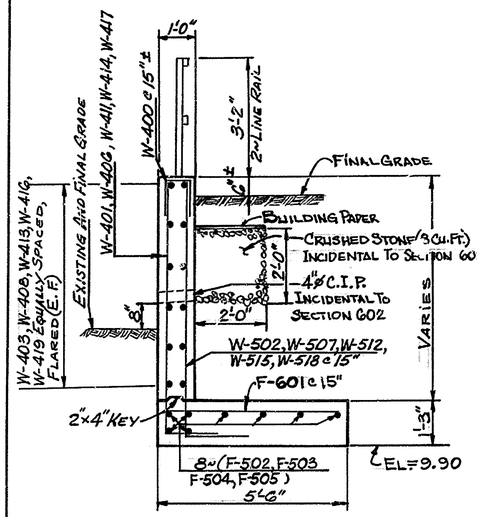

TYPICAL SECTION
SCALE: 1/2" = 1'-0"

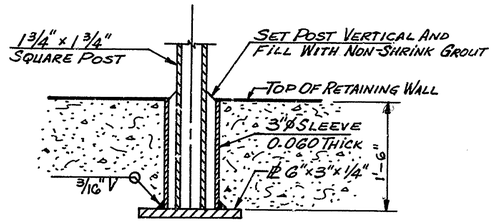

POST SLEEVE DETAIL
SCALE: 3" = 1'-0"

3/8" CORK JOINT MATERIAL CONFORMING TO A.A.S.H.T.O. SPECIFICATIONS DESIGNATION M153, TYPE I WHERE JOINT IS NOTED AS EXPANSION. CONTRACTION JOINTS SHALL BE TIGHT AND PARAFFIN COATED

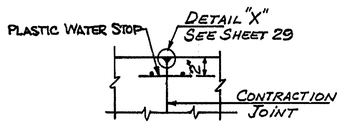

CONTR. JOINT

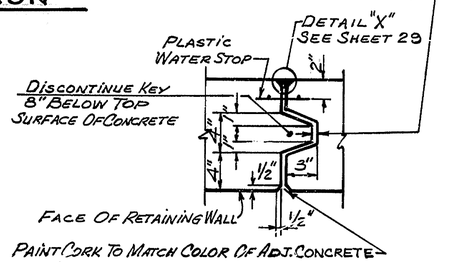

SECTION AT WALL JOINT
SCALE: 1 1/2" = 1'-0"

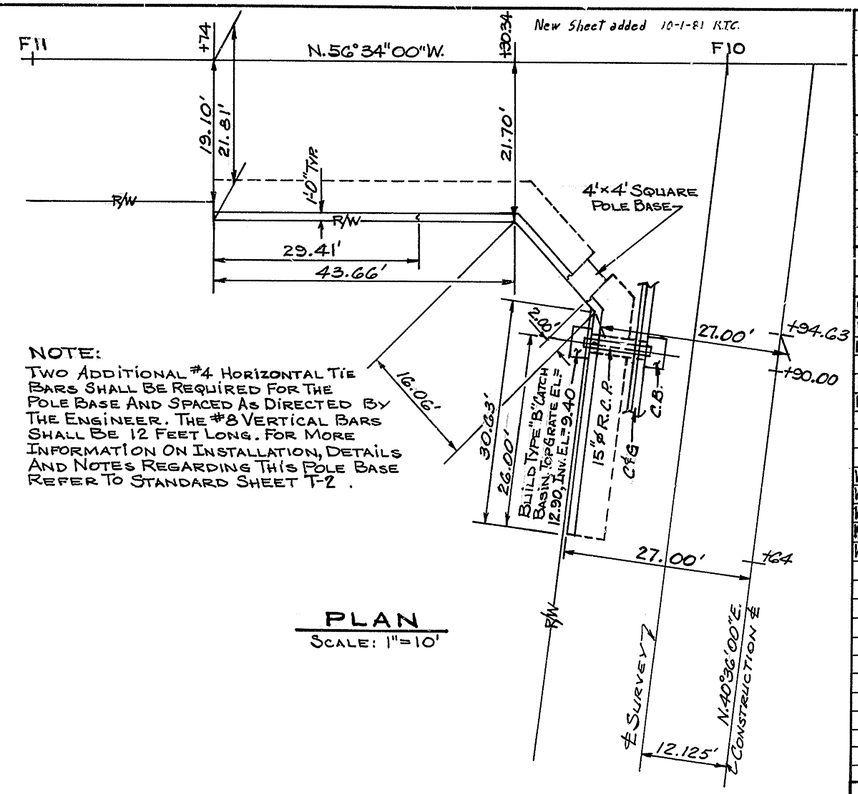

NOTE:
TWO ADDITIONAL #4 HORIZONTAL TIE BARS SHALL BE REQUIRED FOR THE POLE BASE AND SPACED AS DIRECTED BY THE ENGINEER. THE #8 VERTICAL BARS SHALL BE 12 FEET LONG. FOR MORE INFORMATION ON INSTALLATION, DETAILS AND NOTES REGARDING THIS POLE BASE REFER TO STANDARD SHEET T-2.

PLAN
SCALE: 1" = 10'

REINFORCING BAR LIST

STRAIGHT BARS				BENT BARS			
MARK	SIZE	NUMBER	LENGTH	MARK	SIZE	NUMBER	LENGTH
F-601	6	71	5'-2"				
F-502	5	8	24'-4"				
				F-503	5	8	4'-11"
F-504	5	8	13'-6"				
F-505	5	8	45'-0"				
W-403	4	8	25'-8"	W-400	4	71	3'-2"
W-408	4	10	6'-3"	W-401	4	20	5'-10" to 7'-2"
W-413	4	12	11'-6"	W-502	5	20	5'-10" to 7'-2"
W-416	4	12	13'-11"	W-404	4	1	5'-1"
W-419	4	10	29'-1"	W-505	5	1	5'-1"
				W-406	4	5	7'-1" to 7'-6"
				W-507	5	5	7'-1" to 7'-6"
				W-409	4	1	5'-2"
				W-510	5	1	5'-2"
				W-411	4	8	7'-9" to 8'-3"
				W-512	5	8	7'-9" to 8'-3"
				W-414	4	12	7'-9" to 8'-3"
				W-415	4	12	7'-9" to 8'-3"
				W-417	4	24	6'-7" to 7'-9"
				W-518	5	24	6'-7" to 7'-9"

BENDING DIAGRAM

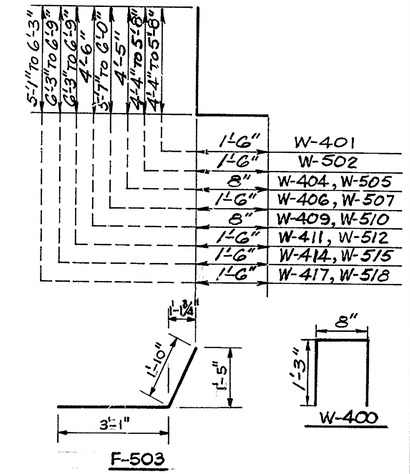

NOTE: NOT TO SCALE AND ALL DIMENSIONS ARE OUT TO OUT.

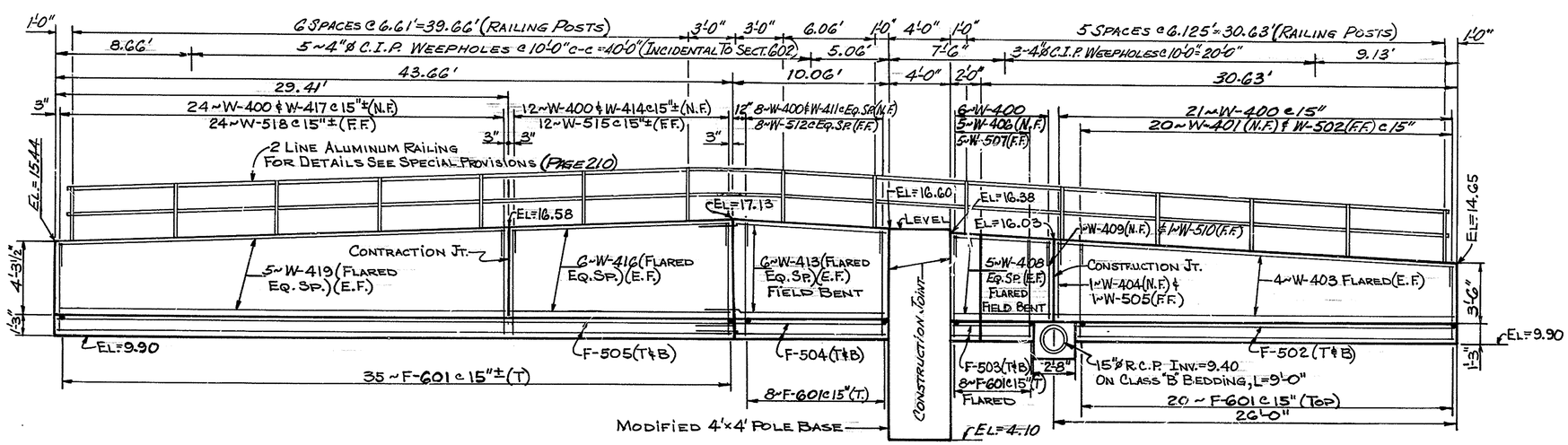

ELEVATION SHOWING REINFORCEMENT AND RAILING
SCALE: 1/4" = 1'-0"

DELAWARE
DEPARTMENT OF TRANSPORTATION
DIVISION OF HIGHWAYS

RETAINING WALL III

D.A.C.S.J.	SCALE	APPROVED BY:
T.T.F.F.	AS SHOWN	
C.C.H.		BRIDGE ENGINEER

COUNTY	CONTRACT	P.R.A. REG. NO.	STATE	FED. AID PROJECT NO.	SHEET NO.	TOTAL SHEETS
SUSSEX	80-023-02	2	DEL		63	87

NO.	REVISIONS	BY	DATE

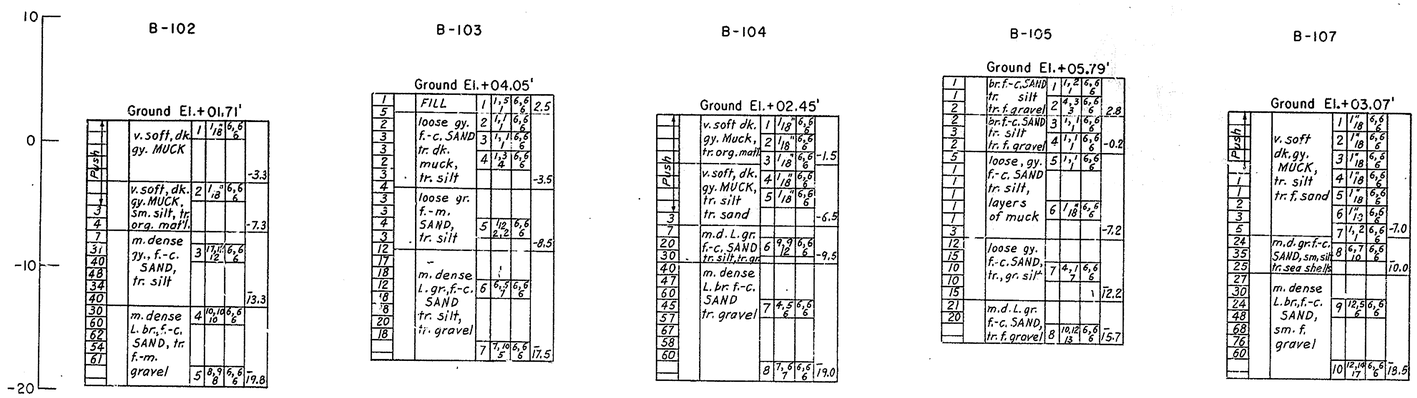

BORING LEGEND

(a)	(b)	(c)	(d)	(e)	(f)
25			3, 12	6, 6	
33	GRAVEL		6, 11	6, 5	
11	sm. sand				
21	tr. clay				
30					

(a) Hammer blows to drive casing one (1) foot
(b) Description
(c) Sampler number
(d) Blows on Sampler Spoon
(e) Penetration of Sampler Spoon in inches
(f) Elevation in feet

BORING NOTES

1. Borings made 1972
2. Location : See boring table
3. Description : Casing - $2\frac{1}{2}$"
   Hammer Wt. 300#
   Drop 18"
4. Vertical Boring Scale : 1"=6'

Sampler - $1\frac{3}{8}$" I.D.
Hammer Wt. - 140#
Drop 30"
Undisturbed Samples :
Sampler - 3" I.D.
Casing - 4"

BORING TABLE

BORING	STA. ℄	OFFSET	SIZE
B-102	14+93	31' LT.	$2\frac{1}{2}$"
B-103	14+99	45' RT.	$2\frac{1}{2}$"
B-104	14+25	45' LT.	$2\frac{1}{2}$"
B-105	13+50	56' RT.	$2\frac{1}{2}$"
B-107	13+52	42' LT.	$2\frac{1}{2}$"

NOTE: ℄ Sta. based on Contract ℄.

DELAWARE
DEPARTMENT OF TRANSPORTATION
DIVISION OF HIGHWAYS

SAVANNAH ROAD BRIDGE OVER LEWES & REHOBOTH CANAL

BORING LOGS I

D. —	SCALE	APPROVED BY:
T. K.S.	NO SCALE	R.C. McDowell
C. N.N.S.		BRIDGE ENGINEER

NO. 3066

COUNTY	CONTRACT	P.R.A. REG. NO.	STATE	FED. AID PROJECT NO.	SHEET NO.	TOTAL SHEETS
SUSSEX	80-023-02	2	DEL		64	87

NO.	REVISIONS	BY	DATE

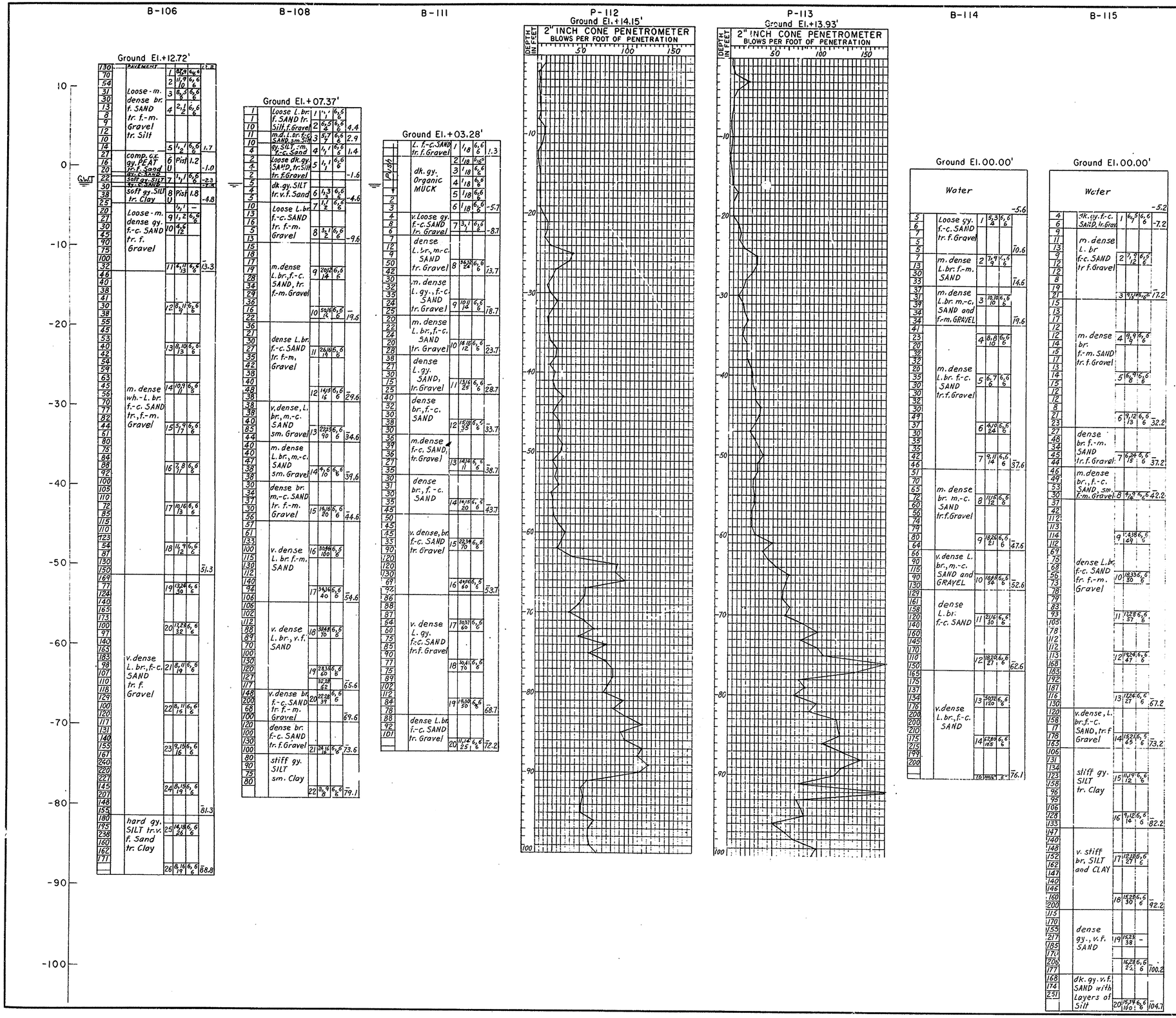

BORING LEGEND

(a)	(b)	(c)	(d)	(e)	(f)
25	GRAVEL sm. Sand tr. Clay	3, 2	6, 6		
33		6, 11	6, 6		
11					
21					
30					

(a) Hammer blows to drive casing one (1) foot
(b) Description
(c) Sample number
(d) Blows on Sample Spoon
(e) Penetration of Sample Spoon in inches
(f) Elevation in feet.

BORING NOTES

1. Borings made 1972
2. Location: see boring table
3. Description: Casing 2½"
   Hammer Wt. 300#
   Drop 18"
4. Vertical Boring Scale: 1"=6'

Sampler - 1⅜" I.D.
Hammer wt. - 140 #
Drop 30"
Undisturbed Samples
Sampler 3" I.D.
Casing 4"

BORING AND PENETROMETER TABLE

BORING	STA. ℄	OFFSET	SIZE
B-106	13+51	27' Rt.	2½"
B-108	13+08	60' Rt.	2½"
B-111	13+09.9	47 Lt.	2½"
P-112	13+10	34 Rt.	2"
P-113	12+78	13 Lt.	2"
B-114	12+63	43 Rt.	2½"
B-115	12+59	15 Lt.	2½"

NOTE: ℄ Sta. based on Contract ℄.

DELAWARE
DEPARTMENT OF TRANSPORTATION
DIVISION OF HIGHWAYS

SAVANNAH ROAD BRIDGE OVER LEWES & REHOBOTH CANAL

BORING LOGS II

D. —	SCALE	APPROVED BY:
T. K.S.	NO SCALE	A.C.McDowell
C. N.N.S.		BRIDGE ENGINEER

R.C.L.R.T.C. McDOWELL REGISTERED PROFESSIONAL ENGINEER NO. 3069

COUNTY	CONTRACT	P.R.A. PER. NO.	STATE	FED. AID PROJECT NO.	SHEET NO.	TOTAL SHEETS
SUSSEX	80-023-02	2	DEL		65	87

NO.	REVISIONS	BY	DATE

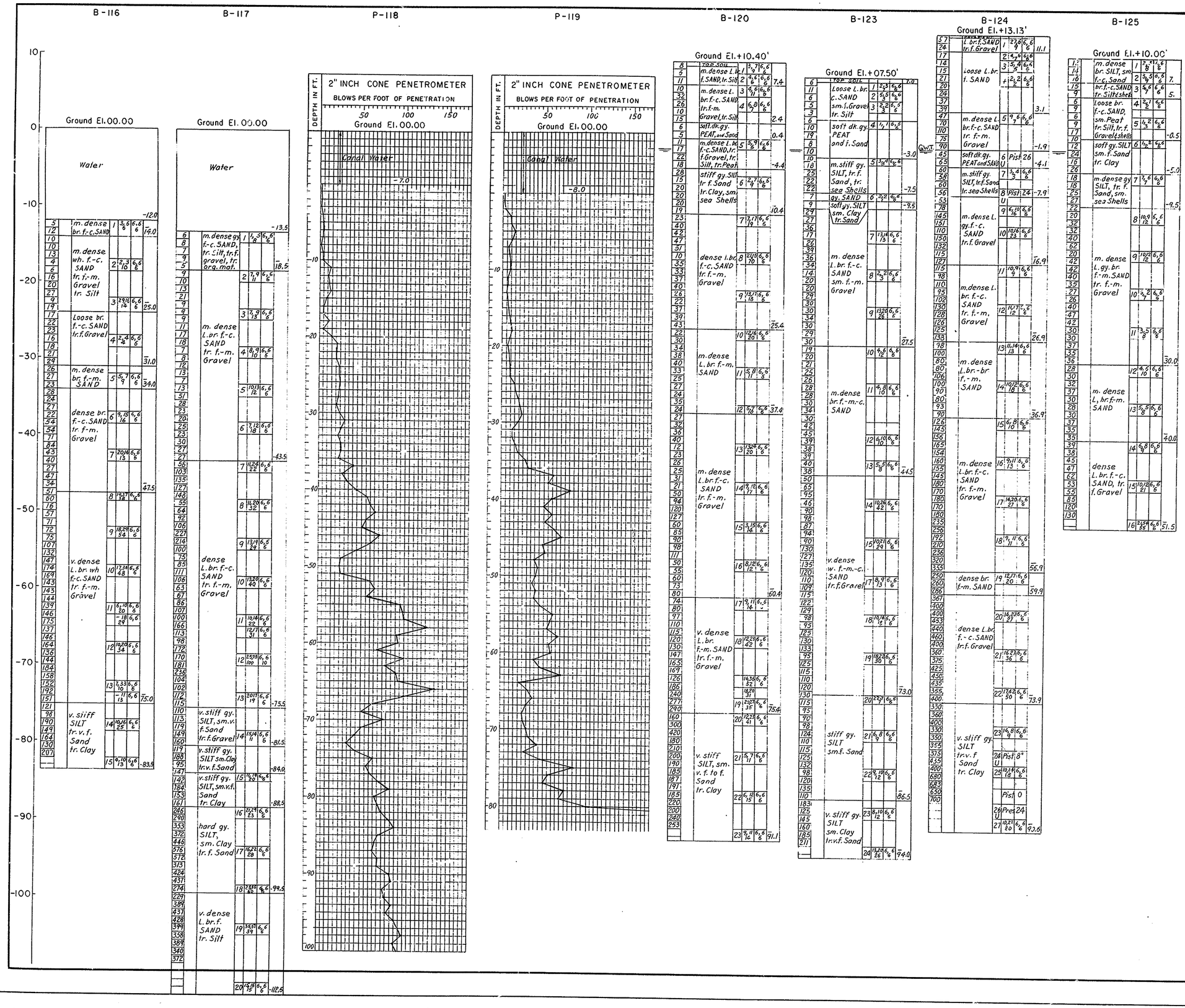

BORING LEGEND

(a)	(b)	(c)	(d)	(e)	(f)
25	GRAVEL sm. Sand tr. Clay		3, 12	6, 6	
33			6, 11	6, 6	
11					
21					
30					

(a) Hammer blows to drive casing one (1) foot.
(b) Description
(c) Sampler number
(d) Blows on Sampler Spoon
(e) Penetration of Sampler Spoon in inches
(f) Elevation in feet.

BORING NOTES

1. Borings made 1972.
2. Location: See boring table
3. Description: Casing - 2½" Hammer Wt. 300 # Drop 18"
4. Vertical Boring Scale: 1" = 6'

Sampler - 1⅜" I.D.
Hammer Wt. - 140 #
Drop 30"
Undisturbed Samples:
Sampler - 3" I.D.
Casing - 4"

BORING AND PENETROMETER TABLE

BORING	STA. ℄	OFFSET	SIZE
B-116	11 + 89	48' Rt.	2½"
B-117	11 + 95.5	13' Lt.	2½"
P-118	11 + 86	59' Rt.	2"
P-119	11 + 81	20' Lt.	2"
B-120	11 + 27.5	61' Rt.	2½"
B-123	11 + 34	25' Lt.	2½"
B-124	11 + 12	25' Rt.	4"
B-125	10 + 94	28' Lt.	2½"

NOTE: ℄ Sta. based on Contract ℄.

DELAWARE
DEPARTMENT OF TRANSPORTATION
DIVISION OF HIGHWAYS

SAVANNAH ROAD BRIDGE OVER LEWES & REHOBOTH CANAL

BORING LOGS III

D. —	SCALE	APPROVED BY
T. K.S.	NO SCALE	R. C. McDonald
C. N.N.S.		BRIDGE ENGINEER

ROBERT C. McDONALD REGISTERED PROFESSIONAL ENGINEER NO. 3065

12932

New Sheet - Added 8-20-81, R.T.C.

COUNTY	CONTRACT	P.R.A. REG. NO.	STATE	FED. AID PROJECT NO.	SHEET NO.	TOTAL SHEETS
SUSSEX	80-023-02	2	DEL		66A	87

NO.	REVISIONS	BY	DATE
1	Revised location of poles L4A & L8A and guys	RTC	

Note "A"

Provide new double crossarm, insulators and other hardware on Pole DST-15 for termination of new overhead primary feeder. Connect to existing 4160/2400 volt circuit at top of Pole DST-15.

Note "B"

Install S & C 400-Ampere Load-Buster, In-Line Switch in Span 3 at Pole L2, and terminate on double crossarms. Connect to existing 4160/2400 volt circuit relocated from former Pole L2.

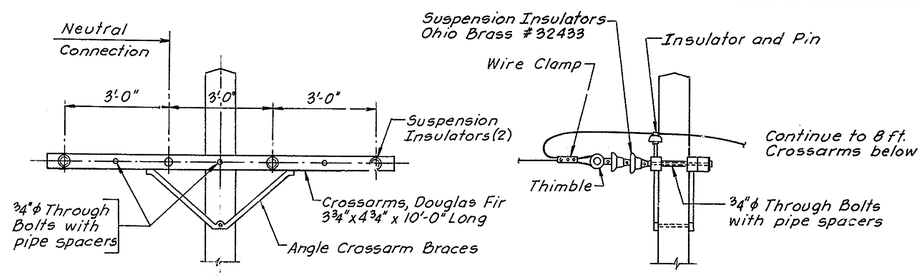

TYPICAL TERMINATION DETAILS FOR AERIAL CROSSING OF CANAL

Poles L4A AND L8A
Scale: 1/2" = 1'-0"

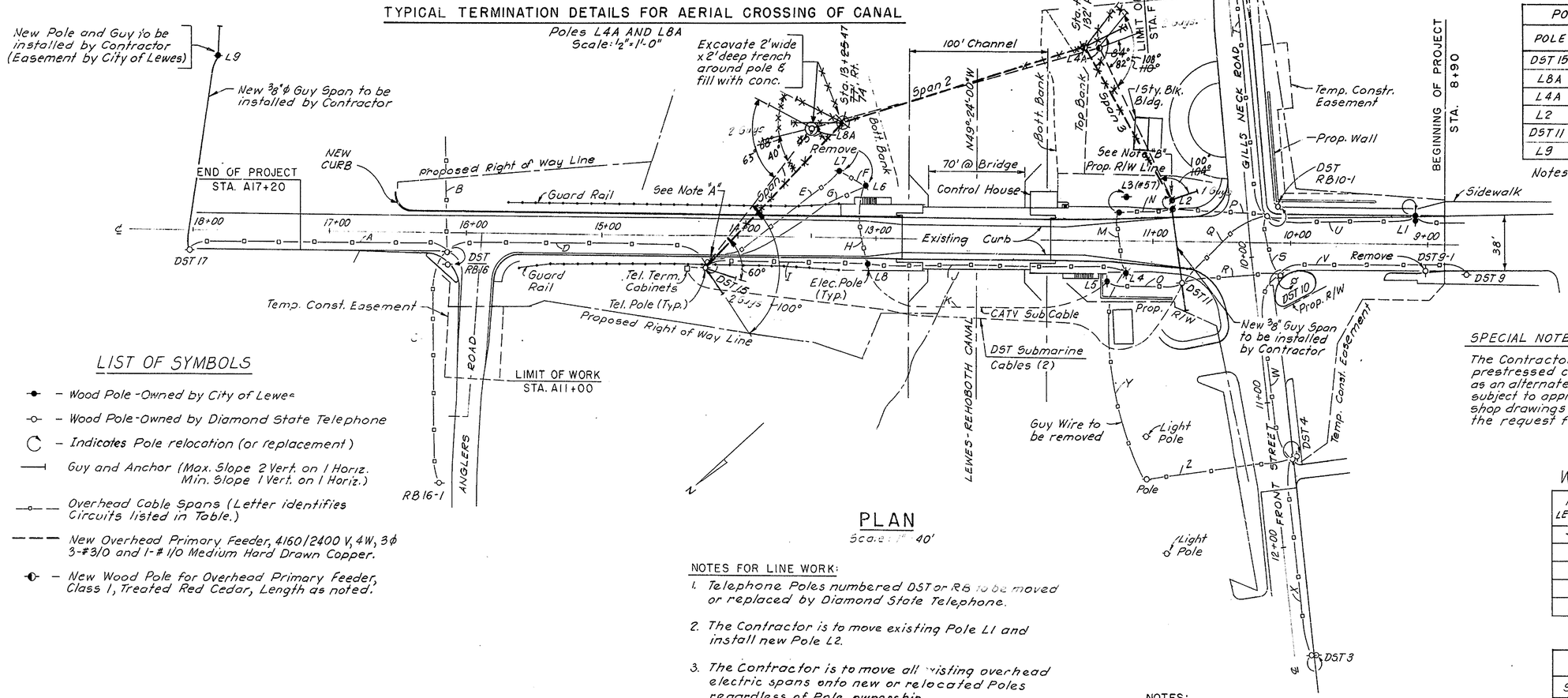

PLAN
Scale: 1" = 40'

POLE ANCHORAGE REQUIREMENTS				
POLE	ϕ GUY WIRE	NO.	TENSION/ GUY WIRE	SCREW ANCHOR
DST 15	3/8"	2	3,750 Lbs.	15" x 8'
L8A	~~3/8"~~ 7/16"	2	~~2,500~~ 3,000 Lbs.	15" x 8'
L4A	~~7/16"~~ 1/2"	2	~~3,000~~ 5,000 Lbs.	15" x 8'
L2	3/8"	1	1,700 Lbs.	10" x 8'
DST 11	3/8"	1	3,000 Lbs.	15" x 8'
L9	3/8"	1	1,250 Lbs.	10" x 8'

Notes: 1. Tension in Guy Wire based on Slope of 2 Vert. on 1 Horiz.

2. Screw Anchor lengths given are minimum. Soil engagement shall be extended by adding pipe lengths as required to develop required anchorage.

LIST OF SYMBOLS

- Wood Pole - Owned by City of Lewes
- Wood Pole - Owned by Diamond State Telephone
- Indicates Pole relocation (or replacement)
- Guy and Anchor (Max. Slope 2 Vert. on 1 Horiz. Min. Slope 1 Vert. on 1 Horiz.)
- Overhead Cable Spans (Letter identifies Circuits listed in Table.)
- New Overhead Primary Feeder, 4160/2400 V, 4W, 3ϕ 3-#3/0 and 1-#1/0 Medium Hard Drawn Copper.
- New Wood Pole for Overhead Primary Feeder, Class 1, Treated Red Cedar, Length as noted.

TABLE OF SPANS

SPAN	A	B	C	D	E	F	G	H	I	J	K	L	M	N	O	P	Q	R	S	T	U	V	W	X		Z	
4160/2400 VOLT 4 WIRE 3 PHASE	1	1	1	1	REMOVE				1	1			1	1		1			1	1	1		1	1			
240/120 VOLT 3 WIRE SINGLE PHASE SERVICE																					1			1			
6.6 AMP. 2 WIRE SERIES STREET LIGHTING	1		1	1					1												1					1	
TELEPHONE MULTICONDUCTOR CABLE	2	1	1	2								2						2	1	1		2		1			
120 VOLT 2 WIRE CHRISTMAS LIGHTING																			1	1	1	1	1	1			
TELEVISION CABLE (CATV)	1	1	1	1					1		1				1		1				1		1				
GUY WIRE																1											

NOTES FOR LINE WORK:

1. Telephone Poles numbered DST or RB to be moved or replaced by Diamond State Telephone.
2. The Contractor is to move existing Pole L1 and install new Pole L2.
3. The Contractor is to move all existing overhead electric spans onto new or relocated Poles regardless of Pole ownership.
4. The Contractor shall remove Spans E, F, G and H plus Poles L6 and L7 after the existing Bridge has been closed and is no longer required to operate.
5. The Contractor is to remove Spans I, J, M and N plus Poles L3, L4, L5 and L8 before start of Bridge Construction by the Contractor.
6. The Contractor is to install Span N and new Pole L3 near the end of construction to provide electric service for the new bridge.
7. The new overhead primary feeder for the 4160/2400 volt circuit across the canal is to be installed, connected and placed in operation prior to the removal of existing Spans I, J, M & N.
8. Vertical clearance of the Span 2 wires above the navigable channel under Heavy Loading Condition shall be not less than 68 feet above M.H.W.

NOTES:

1. For locations of existing utility poles see Sheets No. 9 and 10.
2. For exact relocation of DST pole RB10-1 see Sheet No. 62.
3. For locations of gates and traffic signals on bridge approaches see Sheet No. 59.
4. Transformers for bridge electric service are to be installed on relocated pole L3 by City of Lewes.
5. Guy Wire shall shall be zinc-coated, 7-wire strand meeting ASTM-475, utilities grade.
6. Screw Anchors shall be installed and tested to meet the breaking strength of the attached guy wire.
7. Concrete for Pole L8A shall be Class C Concrete per Section 812 of the 1980 Supplemental Specifications.

SPECIAL NOTE (ALTERNATE CONCRETE POLES):

The Contractor may elect to provide precast, prestressed concrete poles for L4A and L8A as an alternate to the timber poles specified, subject to approval of design calculations and shop drawings which shall be submitted with the request for use of the alternate.

WOOD POLE SETTINGS

POLE LENGTH	DEPTH OF HOLE	POLE NUMBERS
~~70'~~	~~9'-0"~~	~~L4, L8~~
45'	6'-6"	L2, L3
35'	6'-0"	L9
95'	19'-0"	L4A
95'	15'-0"	L8A

CABLE SAG AT 60°F		
SPAN	LENGTH IN FT.	SAG IN FT.
1	~~140~~ 125	9'-~~6"~~10"
2	~~185~~ 215	9'-~~7"~~6"
3	~~120~~ 115	9'-~~6"~~10"

40' 20' 10' 0' 40' 80'
1" = 40'

DELAWARE
DEPARTMENT OF TRANSPORTATION
DIVISION OF HIGHWAYS

SAVANNAH ROAD BRIDGE
OVER LEWES & REHOBOTH CANAL

RELOCATION OF CITY ELECTRIC FACILITIES

D. W.B.B.
T. R.B.
C. H.B.H.

SCALE AS NOTED

APPROVED BY:

BRIDGE ENGINEER

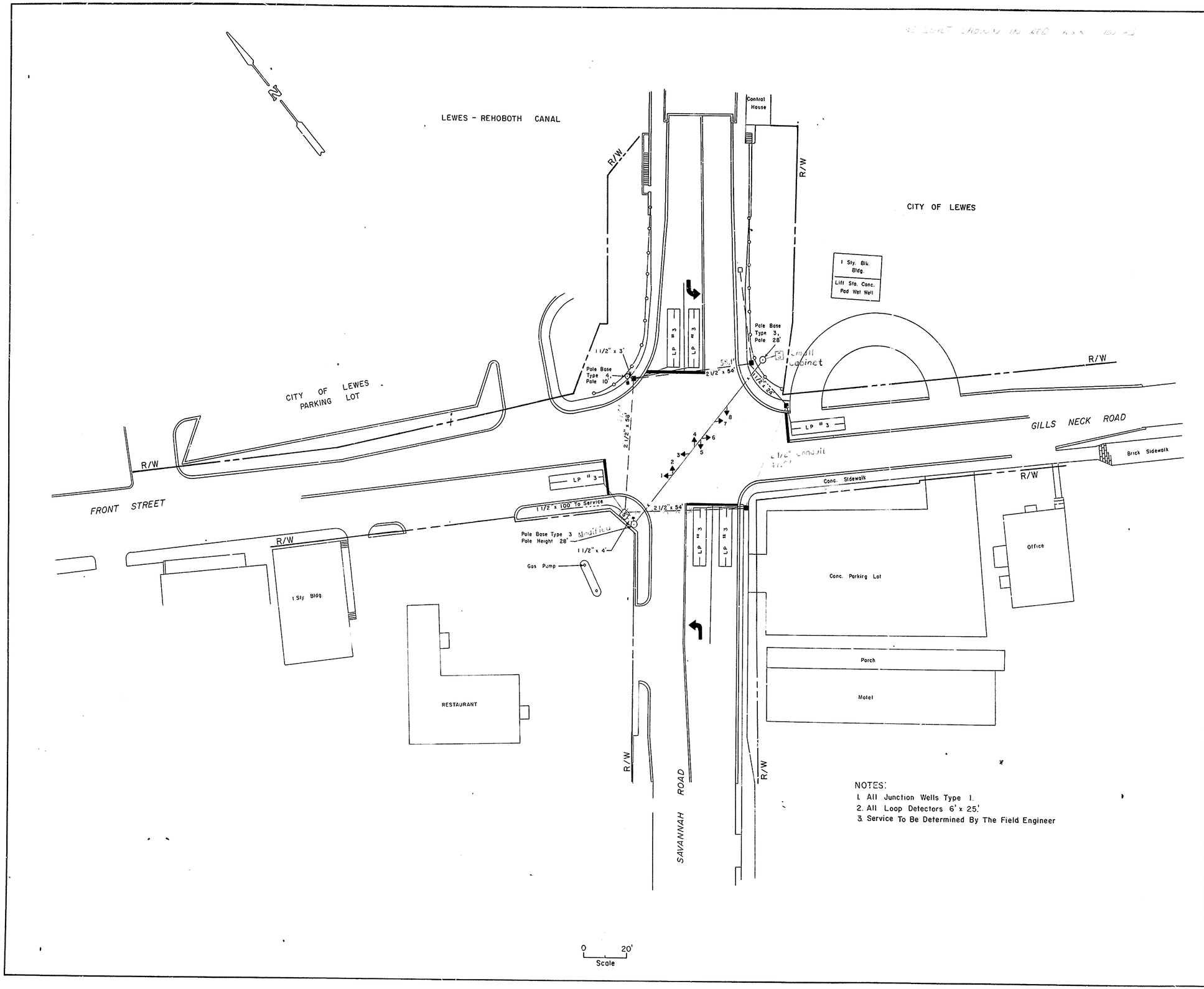

NOTES:
1. All Junction Wells Type 1.
2. All Loop Detectors 6' x 25'.
3. Service To Be Determined By The Field Engineer

DELAWARE DIVISION OF HIGHWAYS

BUREAU OF TRAFFIC

BEAR DELAWARE

PERMIT NO	CONTRACT NO.	FED. AID NO.	SHEET NO.	TOTAL
	80-023-02	RS-1047(1)	67	87

SIGNAL PLAN
SAVANNAH ROAD

PREL. TRACING	DATE	DESIGN	DATE
J.R.L.	8-3-81	R.S.P.	8-3-81

REVISION

Revised plan sheet due to addition of wall 10-1-81 RTC

LEGEND

- POLE BASE
- EXISTING STEEL POLE BASE
- EXISTING ALUMINUM POLE BASE
- EXISTING PEDESTAL BASE
- WOOD POLE (D. H. & T.)
- EXISTING WOOD POLES (D. H. & T.)
- EXISTING D. P. & L AND D. S. T. POLES
- LARGE CABINET BASE
- SMALL CABINET BASE.
- EXISTING CABINET BASE
- 2 1/2" GALV. CONDUIT
- 1 1/2" GALV. CONDUIT
- EXISTING GALV. CONDUIT
- 3" NON-METALLIC CONDUIT
- EXISTING NON-METALLIC CONDUIT
- LP # — LOOP DETECTOR TYPE (#1-5)
- EXISTING LOOP DETECTOR
- JUNCTION WELL TYPE (#1-4)
- EXISTING JUNCTION WELL
- —x— SPAN WIRE
- —xx— EXISTING SPAN WIRE
- —xxx— EXISTING OVERHEAD CABLE
- SIGNAL HEAD
- EXISTING SIGNAL HEAD
- PEDESTRIAN SIGNAL HEAD
- EXISTING PED. SIGNAL HEAD
- MAST ARM
- (R) REMOVE
- (A) ABANDON
- (RB) REMOVE EXISTING CONCRETE BASE 6" BELOW GROUND LEVEL AND COVER.

SIGNAL HEAD DIAGRAM

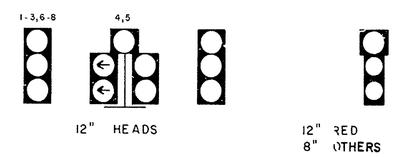

RECOMMENDED _____ 19__ _____

RECOMMENDED _____ 19__ _____

RECOMMENDED _____ 19__ _____

APPROVED _____ 19__ _____

APPROVED F. H. W. A. DATE

APPROVED for INSTL. CHIEF, TRAFFIC ENG. DATE