CONTRACT	COUNTY		SHEET
85-091-13	New Castle	IR-95-2(74)	5	23

I-95 Bridge Locations

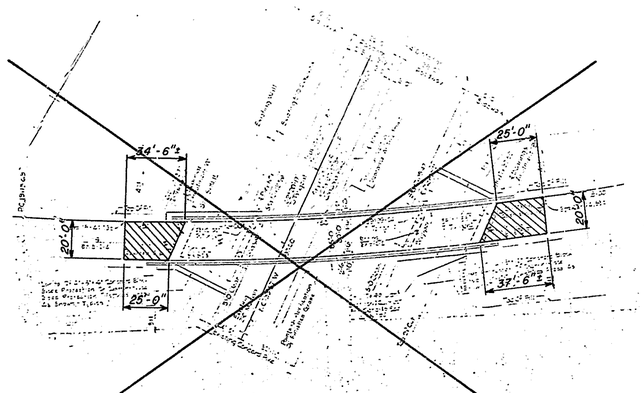

Bridge 762 - Ramp 'F' I-95 over Concord Pike

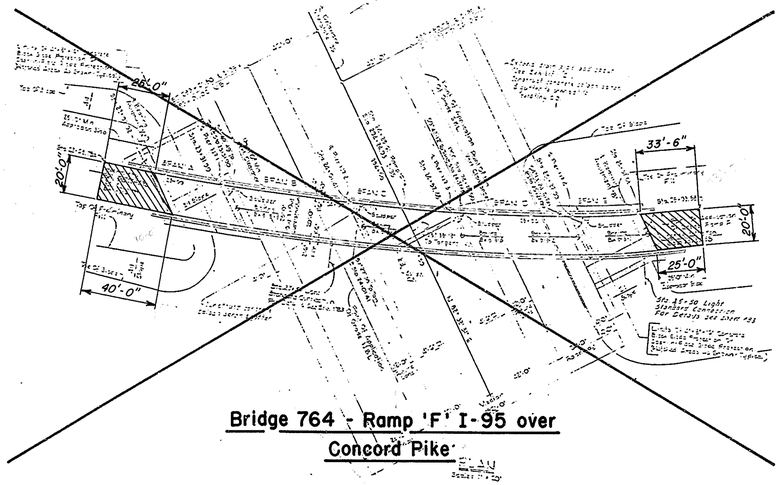

Bridge 764 - Ramp 'F' I-95 over Concord Pike

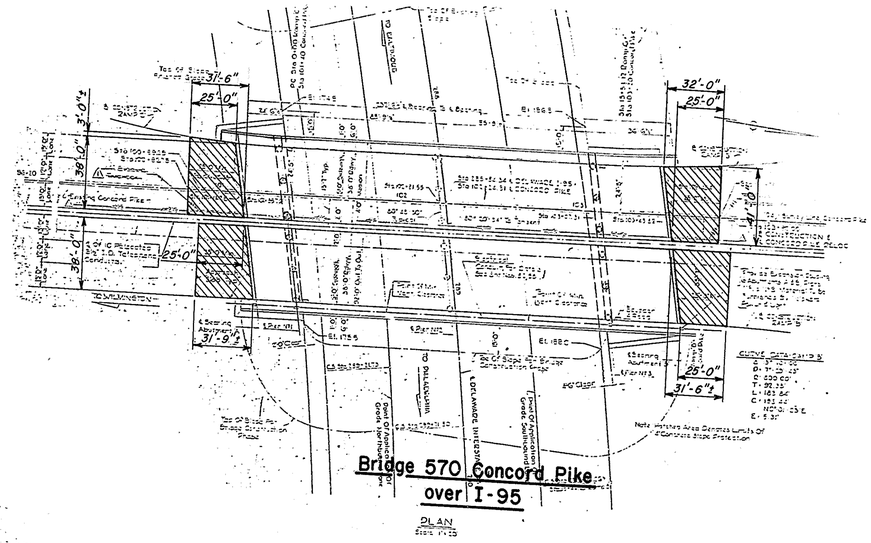

Bridge 570 Concord Pike over I-95

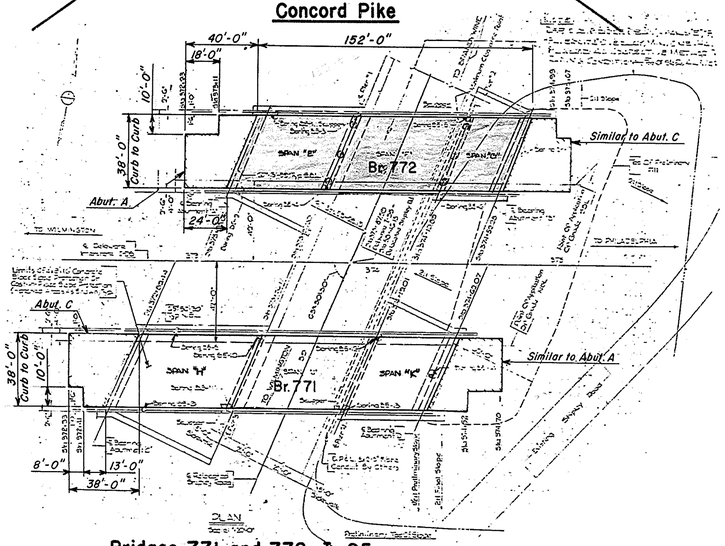

Bridges 771 and 772 I-95 over Shipley Road

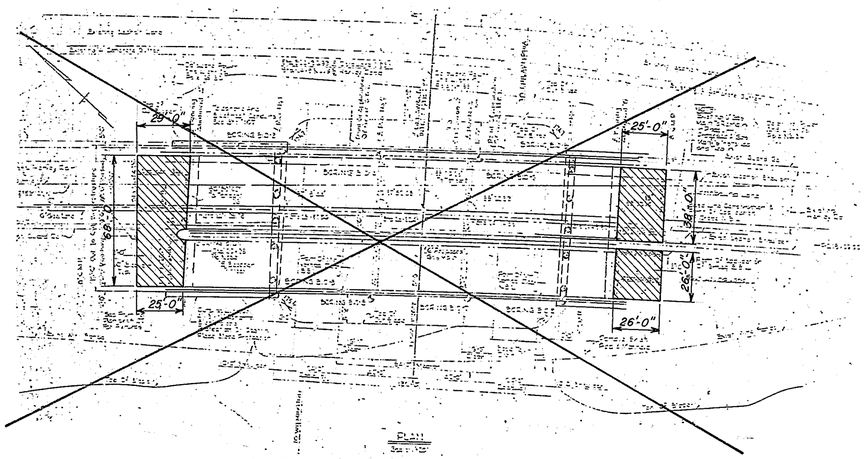

Bridge 785 Harvey Road over I-95

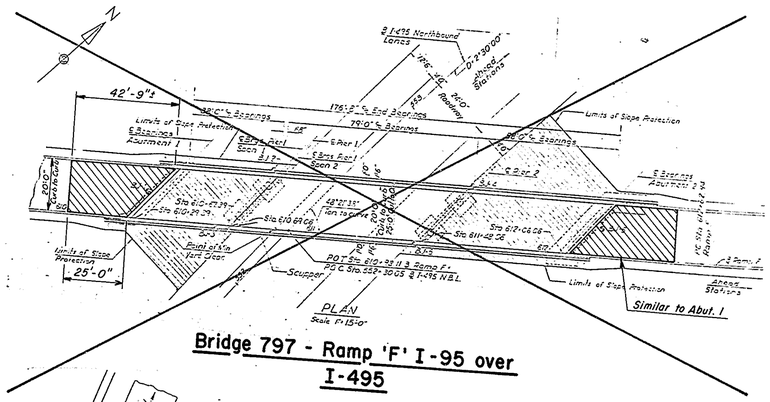

Bridge 797 - Ramp 'F' I-95 over I-495

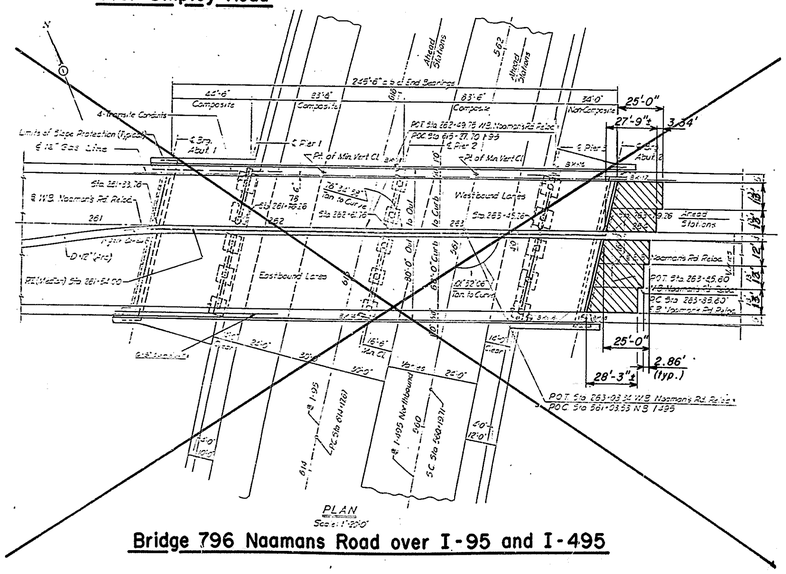

Bridge 796 Naamans Road over I-95 and I-495

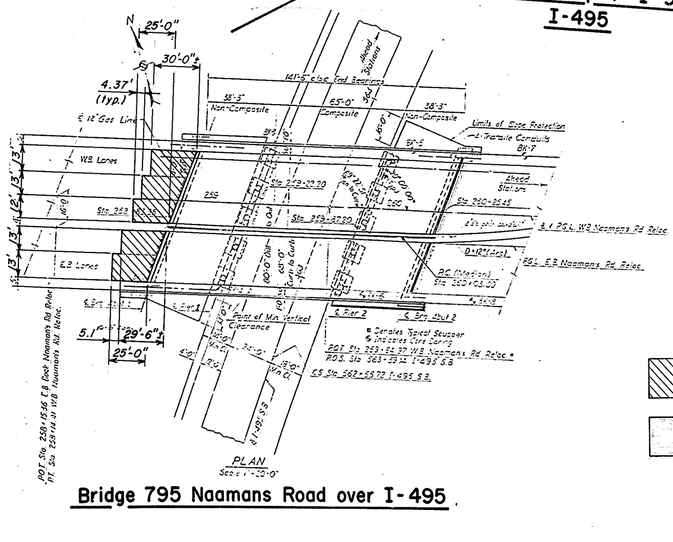

Bridge 795 Naamans Road over I-495

Area to be modified - Approach slab
REMOVE HOT-MIX, PLACE P.C.C. MASONRY.

Area to be modified - Deck slab
LATEX CONCRETE OVERLAY

REVISIONS

DESIGN H.D. CHKD M.T.C.

PAEL TRACING

CONTRACT	COUNTY	FEDERAL AID PROJECT NO	SHEET NO	TOTAL SHEETS
85-091-13 85-091-14	New Castle	IR-95-2(74) IR-495-3(51)	8	23

Approach Slab Sections (Existing)

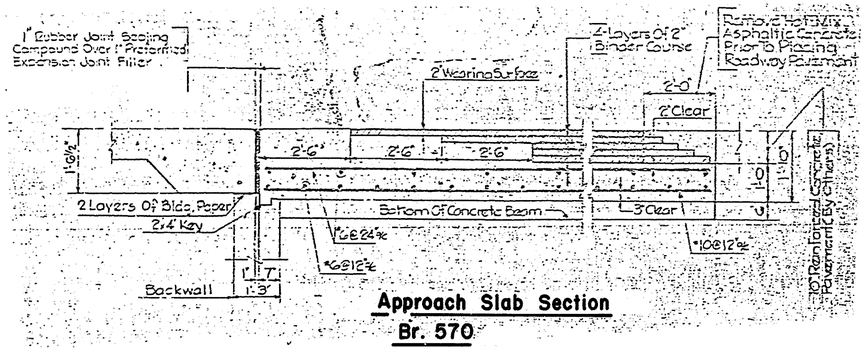

Approach Slab Section
Br. 570

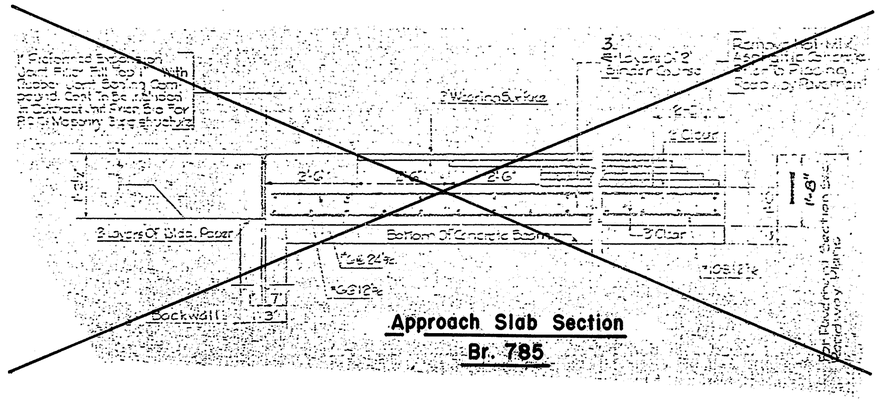

Approach Slab Section
Br. 785

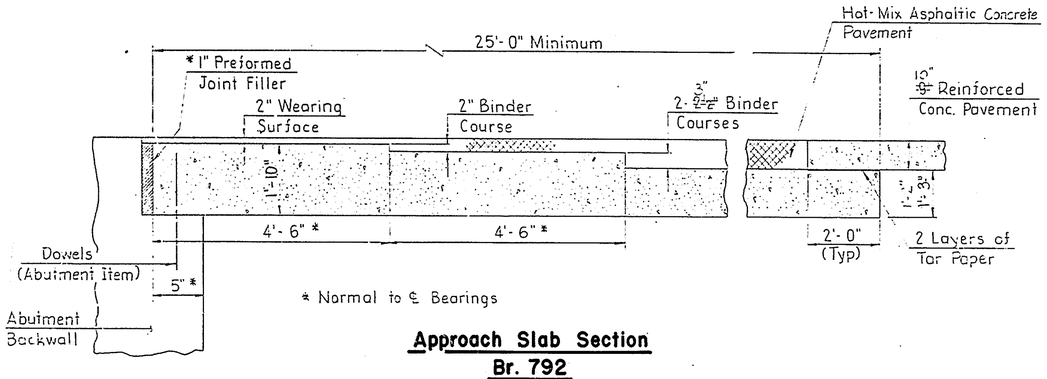

Approach Slab Section
Br. 792

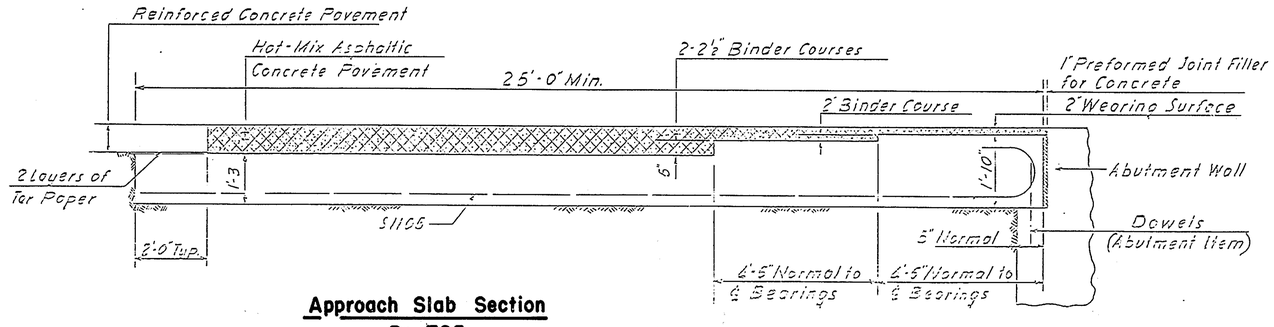

Approach Slab Section
Br. 795

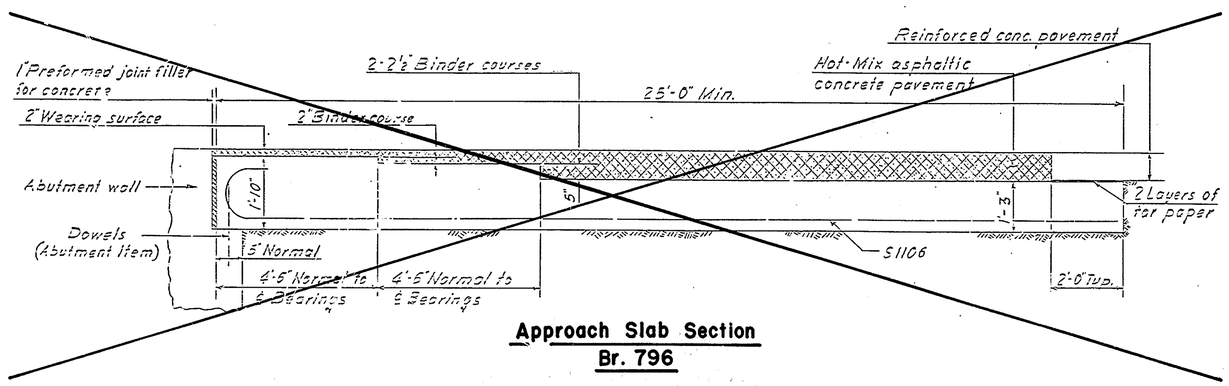

Approach Slab Section
Br. 796

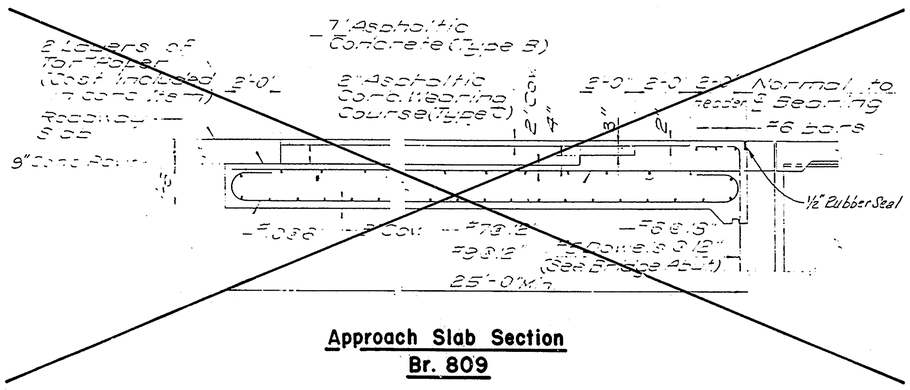

Approach Slab Section
Br. 809

REVISIONS

CHKD.

DESIGN

PREL. TRACING

45303

CONTRACT	COUNTY	FEDERAL AID PROJECT Nº	SHEET Nº	TOTAL SHEETS
85-091-13	New Castle	IR-95-2(74)	9.	23

PIER CAPS
Waterproofing

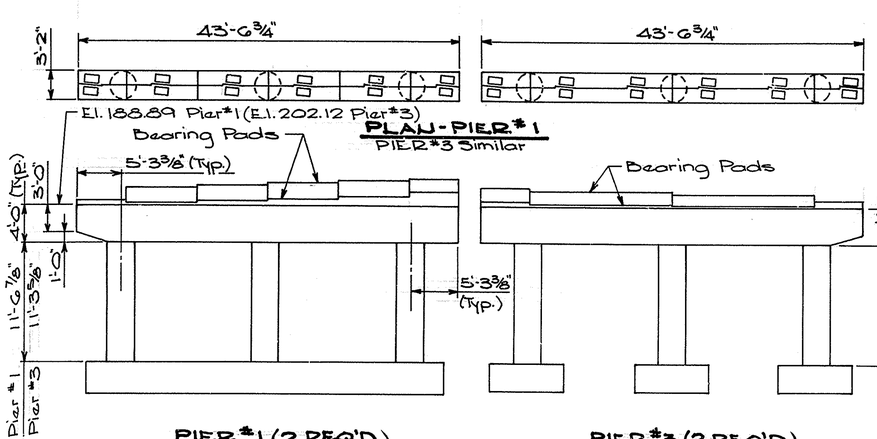

PLAN - PIER*1
PIER*3 Similar

PIER*1 (2 REQ'D.)

PIER*3 (2 REQ'D.)

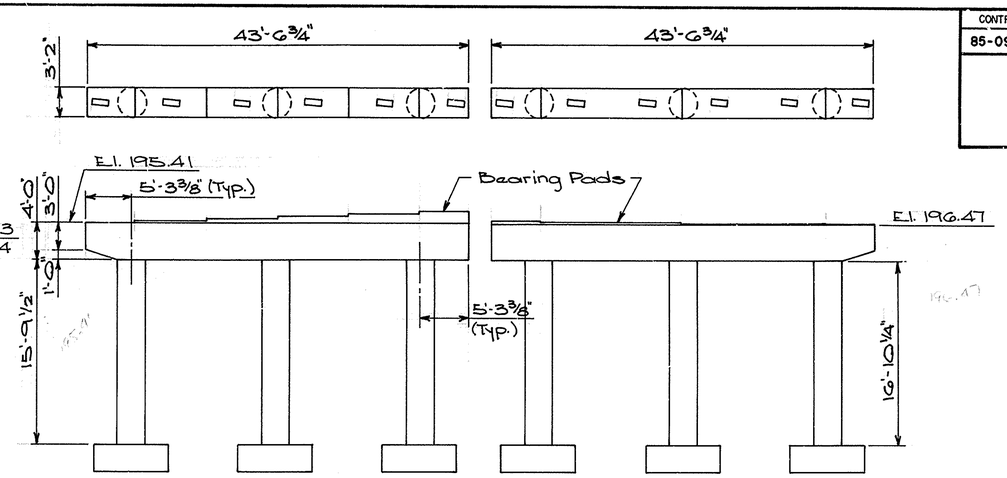

PIER*2

BRIDGE 570 - CONCORD PIKE

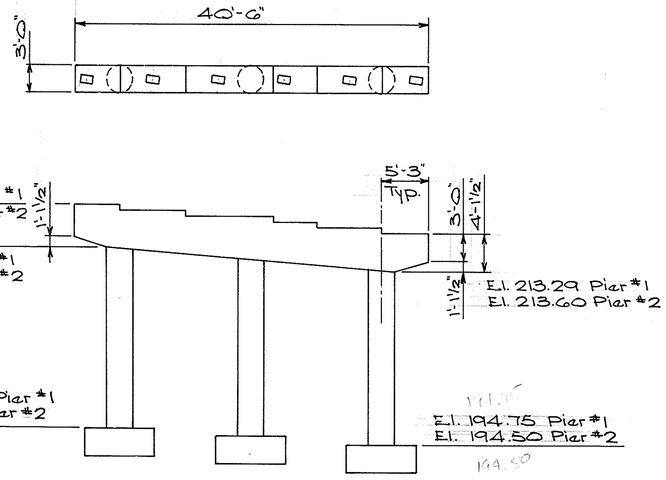

PIER*1
Pier*2 similar

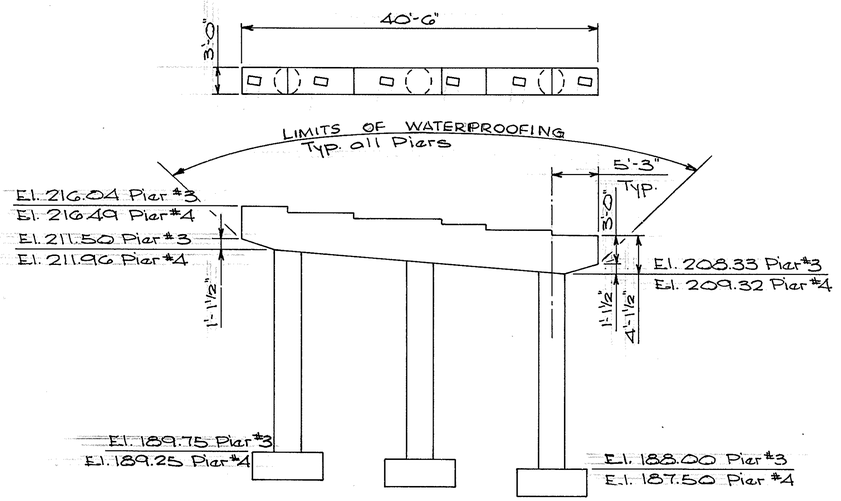

PIER*3
Pier*4 Similar

BRIDGE 766 & 767 - TALLEY RD.

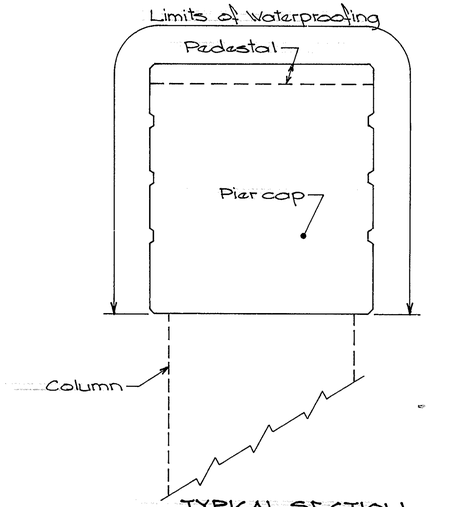

TYPICAL SECTION
LIMITS OF WATERPROOFING
PIER CAPS
U.T.S.

Note:
Elevations shown are for information only. They were lifted from the as built plans.

REVISIONS

DESIGN

CHKD.

PREL. TRACING

COUNTY	CONTRACT	P. R. A. PROJ. NO.	STATE	FED. AID PROJECT NO.	FINISH. PROJ.	SHEET NO.	TOTAL SHEETS
N.C.	65-08-005	2	DEL.	I-95-2(18)16		44	80

CURVE DATA - RAMP 'C'
Δ = 78°-09'-24"
D = 11°-56'-12"
R = 480.00'
T = 389.78'
L = 654.76'
C = 605.17'
S 32°-30'-45" W
E = 138.33'

CURVE DATA - RAMP 'G'
Δ = 24°-49'-00"
D = 8°-57'-09"
R = 640.00'
T = 140.81'
L = 277.20'
C = 275.04'
S 19°-58'-27" E
E = 15.31'

CURVE DATA - RAMP 'B'
Δ = 13°-10'-00"
D = 7°-09'-45"
R = 800.00'
T = 92.33'
L = 183.84'
C = 183.44'
N 0°-01'-03" E
E = 5.31'

CURVE DATA
℄ N.B.L. & S.B.L. OF I-95
Δ = 41°-33'-38"
Δc = 31°-03'-38"
Dc = 3°-00'-00"
Ls = 350.00'
Θs = 5°-15'-00"
P = 2.67'
K = 174.95'
Xc = 349.71'
Yc = 10.68'
LT = 233.44'
ST = 116.76'
LC = 349.87'
Ts = 900.70'
Es = 135.74'
Lc = 1035.35'
R = 1909.86'

ESTIMATED QUANTITIES

ITEM No.	ITEM	UNIT	QUANTITY
3A	Rock Excavation Structures And Trenches	C.Y.	350
4	Excavation For Structures	C.Y.	240
11	Hot Mix Asphaltic Concrete	Tons	224
* 18	P.C.C. Masonry - Footings - Highway Bridge	C.Y.	400
* 18	P.C.C. Masonry - Above Footings - Highway Bridge	C.Y.	250
* 18	P.C.C. Masonry - Superstructure - Highway Bridge	C.Y.	725
* 18	P.C.C. Masonry - Approach Slabs	C.Y.	220
18	P.C.C. Masonry - Sub-Foundation Concrete	C.Y.	20
	Sub-Foundation Backfill	C.Y.	20
* 20	Bar Reinforcement - Highway Bridge & Other Structures	lbs.	304,700
21	Wire Mesh Reinforcement	Square	78
22	Structural Steel - Highway Bridge (628,700 lbs.)	L.S.	Lump Sum
	Steel 'H' Piles (10BP57)	L.F.	1,320
	Steel 'H' Test Piles (10BP57)	L.F.	50
	Metal Railing - Highway Bridge	L.F.	120
	Chain Link Protective Fence	L.F.	340
	Bridge Drainage System - Highway Bridge	L.S.	Lump Sum
	Concrete Slope Protection	S.Y.	680

* Fixed Quantity item

Note:
For Profile Grade Elevations For Concord Pike See Sheet No. 16, For Northbound Lane And Southbound Delaware I-95 See Sheet No. 9

GENERAL NOTES

Specifications: Delaware State Highway Department Standard Specifications Dated 1935 For Materials & Construction. A.A.S.H.O. Standard Specifications For Highway Bridges Dated 1961 For Design, With Interim Specifications 1961 To 1964 Included. All Welding Shall Conform To The Current Specifications For "Welded Highway And Railway Bridge By The American Welding Society."

Bar Reinforcement: The General Details Of Fabrication, Bending & Placement Of Reinforcing Steel Shall Conform To The Requirements Of The 1961 Standard Specifications For Highway Bridges Of The A.A.S.H.O. Unless Otherwise Noted All Dowels Shall Have 24 Bar Diameter Embedment & All Splices 24 Diameter Lap. Unless Otherwise Noted All Reinforcing Shall Have 2" Min. Clear Cover, Except Deck Slabs Which Shall Have 2" Cover On Top & 1" Cover On Bottom & Footings Which Shall Have 3" Min. Clear Cover. All Bar Reinforcement To Be Intermediate Grade A.S.T.M. A15, Deformations A.S.T.M. A305. The Contractor Shall Check All Bar Lists For Number, Length & Dimensions Before Ordering Bars. Placing Reinforcing Dowels Into Position During Or After Pouring Of Concrete Is Absolutley Prohibited.

Portland Cement Concrete Masonry: Exposed Edges Of Concrete Shall Be Chamfered ¾" & Inside Corners Filleted ¾" Unless Otherwise Noted. All Chamfer Strips Shall Be Dressed Lumber. Pad Elevations Are Finished Elevs. Pads Shall Be Poured Integrally With Piers Or Abutments & Shall Be Not Less Then ⅛" Or More Then ¼" Above Finished Elevations. Pads Shall Be Dressed Down By Tooling Or Grinding To True Level Surfaces At The Finished Elevations. Minimum Ultimate Compressive Strength Of Concrete At The Age Of 28 Days Shall Be 3000 P.S.I.

Concrete Forms: All Concrete Forms Used For This Structure Shall Be Removed.

Loading: Live Load HS 20-44

Datum: USC & GS BM Concord Standard Reference Disk Stamped "Concord 1958" Set In 10"x10" Conc. Mon. 48'± Lt. Sta 100+25 ℄ Concord Pike. Elev 186.935

Note: Hatched Area Denotes Limits Of 4" Concrete Slope Protection

PLAN
Scale: 1" = 20'

ELEVATION
Scale: 1" = 20'

LIMITS OF EXCAVATION

DELAWARE
STATE HIGHWAY DEPARTMENT
INTERSTATE ROUTE 95
UNDERPASS AT CONCORD PIKE
PLAN & ELEVATION

D. J.M.D.
T. J.M.D.
C. H.B.H.

SCALE AS NOTED

APPROVED BY: Norman Cleaver
BRIDGE ENGINEER

COUNTY	CONTRACT	FED. NO.	STATE	FED. AID PROJECT NO.	FISCAL YEAR	SHEET NO.	TOTAL SHEETS
N.C.	95-08-003	2	DEL.	I-95-2(19)16		45	80

BAR SCHEDULE

MARK	Nº	SIZE	TYPE	LENGTH	A	B	REMARKS
A501	95	15	I	16'-10"			
A502	20	1	Str.	8'-6"			
A503	8		Str.	17'-6"			
A504	4		Str.	12'-10"			
A505	16		II	8'-3"	3'-1"	2'-7"	
A506	36		II	9'-3"	3'-1"	3'-4"	
A507	31		II	10'-5"	3'-1"	3'-8"	
A508	16		II	9'-1"	3'-1"	3'-0"	
A509	48		Str.	52'-6"			
A510	30		↓	3'-0"			
A511-A516	12			3'-6"-6'-5"			Vary 2 Ea by 7"
A517-A524	16			6'-10"-7'-5"			Vary 2 Ea by 1"
A525	10			13'-2"			
A526-A528	6			7'-4"-11'-4"			Vary 2 Ea. by 2"
A529-A535	14			6'-4"-5'-10"			Vary 2 Ea by 1"
A536-A539	8			5'-2"-5'-6"			Vary 2 Ea by 7"
A540	10			10'-8"			
A541-A542	4		Str.	6'-6"-8'-9"			Vary 2 Ea by 2'-3"
A543	94		III	4'-8"	3'-7"	0'-10"	
A544	94		Str.	3'-3"			
A545	15		↓	2'-1"			
A546	6			2'-1"			
A547	3			7'-8"			
A548	3			7'-0"			
A549	4			5'-8"			
A550-A555	4		↓	2'-10"-6'-4"	"		Vary 1 Ea by 2"
A554-A557	4		Str.	3'-6"-8'-10"			Vary 1 Ea by 2"
A558	25		II	1'-8"	8"	6"	
A559	8		III	33'-0"	31'-6"	1'-6"	
A560	8		Str.	14'-0"			
A561	2		IV	16'-2"	3'-2"	7'-0"	
A562	2	1	IV	12'-6"	2'-0"	4'-6"	
A563	15	5	Str.	5'-8"			
A564	94	5	Str.	4'-6"			
A701	28	7	Str.	6'-0"			
A702	12	7	Str.	52'-10"			

BENDING DETAILS

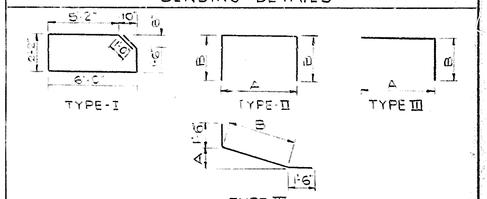

Note All Bar Dimensions Are Out To Out

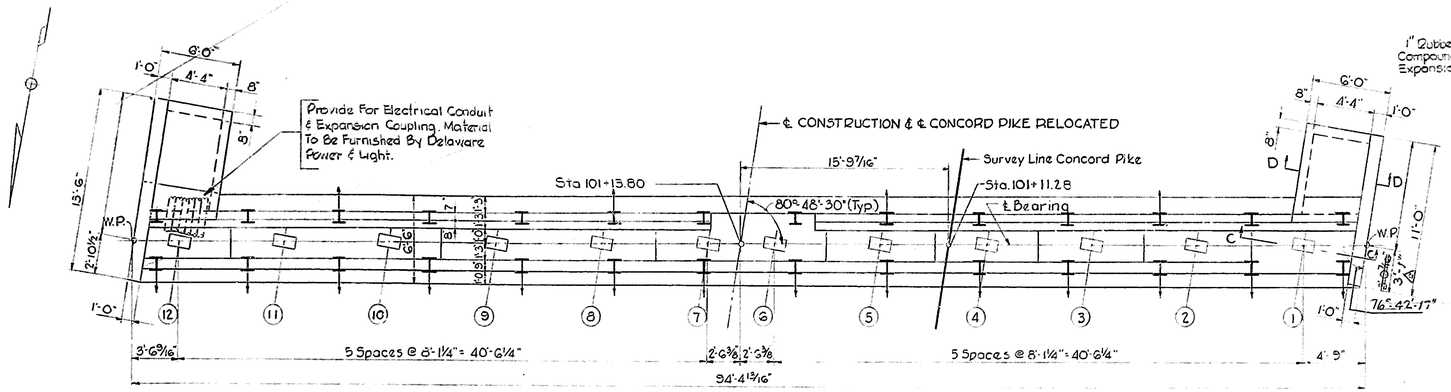

PLAN

Scale: 3/16" = 1'-0"

NOTE:

Provide screens for:

Beam # 7	1-3/4"
Beam # 8	1-3/4"
Beam # 10	1-1/4"

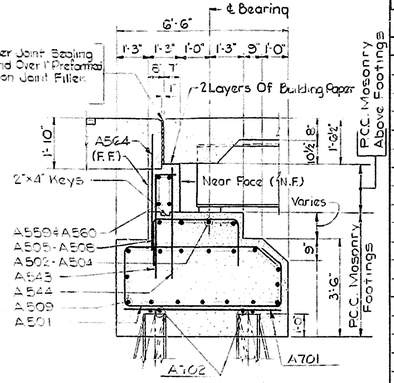

SECTION THRU ABUTMENT

Scale: 3/8" = 1'-0"

NOTE:

Top Of Backwall To Follow Grade Of Roadway

Provide 6" Opening in Backwall For 3½" I.D. Telephone Conduit (By Others) And 14" Sleeve (This Contract) Opening To be Bricked Up.

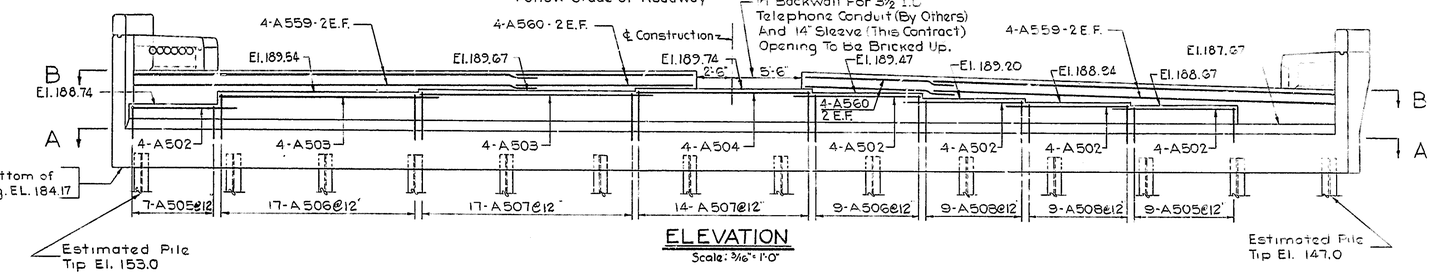

ELEVATION

Scale: 3/16" = 1'-0"

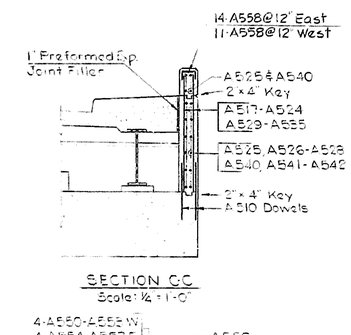

SECTION CC

Scale: ½" = 1'-0"

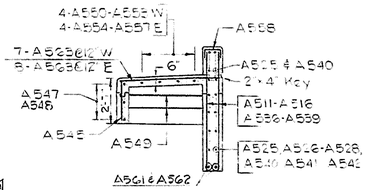

SECTION D-D

Scale: ¼" = 1'-0"

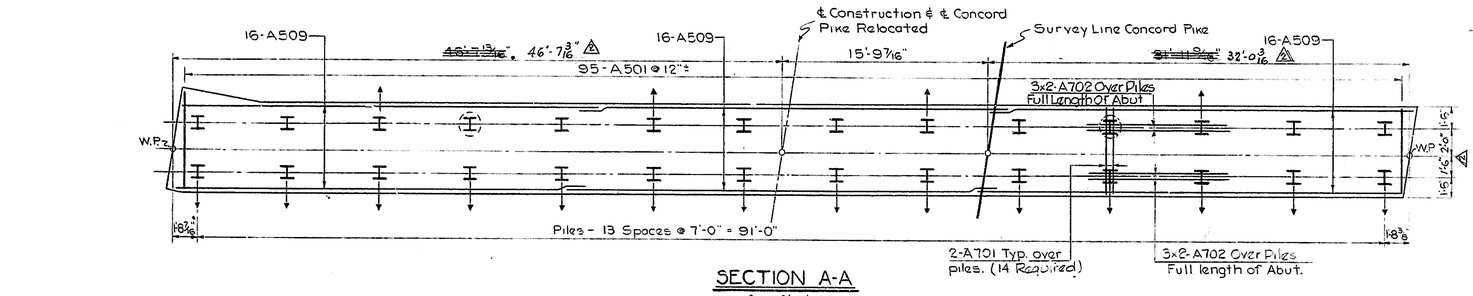

SECTION A-A

Scale: 3/16" = 1'-0"

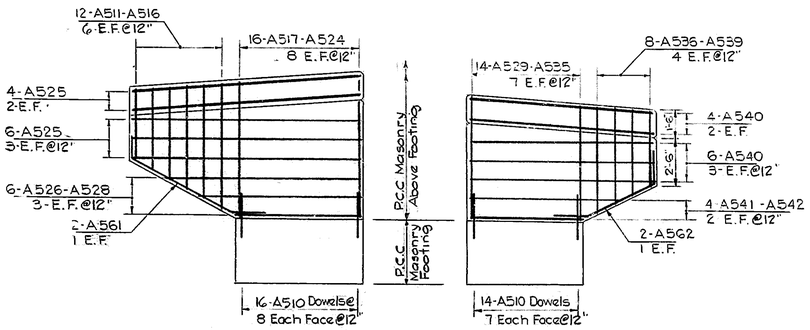

END POST ELEVATION

Scale ¼" = 1'-0"

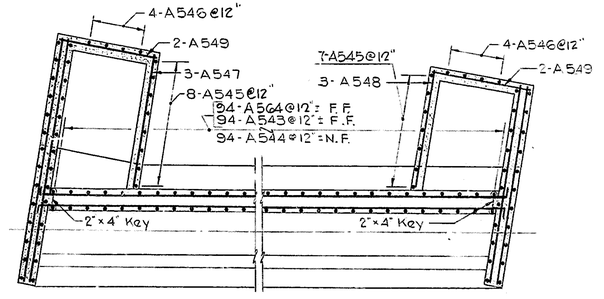

SECTION B-B

Scale: ¼" = 1'-0"

NOTES:

1. For General Notes See Sheet #44
2. H Indicates Plumb Piles
3. H Indicates 3:12 Batter Piles.
4. ⊕ Indicates Test Piles.
5. All Piles Shall Be Steel H Piles 10BP57 Design Capacity 75 Tons (See Special Provisions)
6. W.P Denotes Working Point
7. F.F Denotes Far Face
8. N.F Denotes Near Face
9. E.F Denotes Each Face
10. W - Denotes West
11. E - Denotes East

DELAWARE
STATE HIGHWAY DEPARTMENT

INTERSTATE ROUTE 95

UNDERPASS AT CONCORD PIKE

ABUTMENT "A"

D. J.M.D.	SCALE AS NOTED	APPROVED BY: Johnnie N. Leasure
T. J.M.D.		BRIDGE ENGINEER
C. H.B.H.		

REVISIONS

Rev: Add angle at wing & ℄ bearing, per phone call from R.K. & K. 9-21-66

Rev 2- Rev. Dimen. on Sect. A-A & Plan 3-1-67 A.W.R.

H-E

COUNTY	CONTRACT	R.R.A. PROJ. NO.	STATE	FED. AID PROJECT NO.	FISCAL YEAR	SHEET NO.	TOTAL SHEETS
N.C.	95-08-005	2	DEL.	I-95-2(19)16		46	80

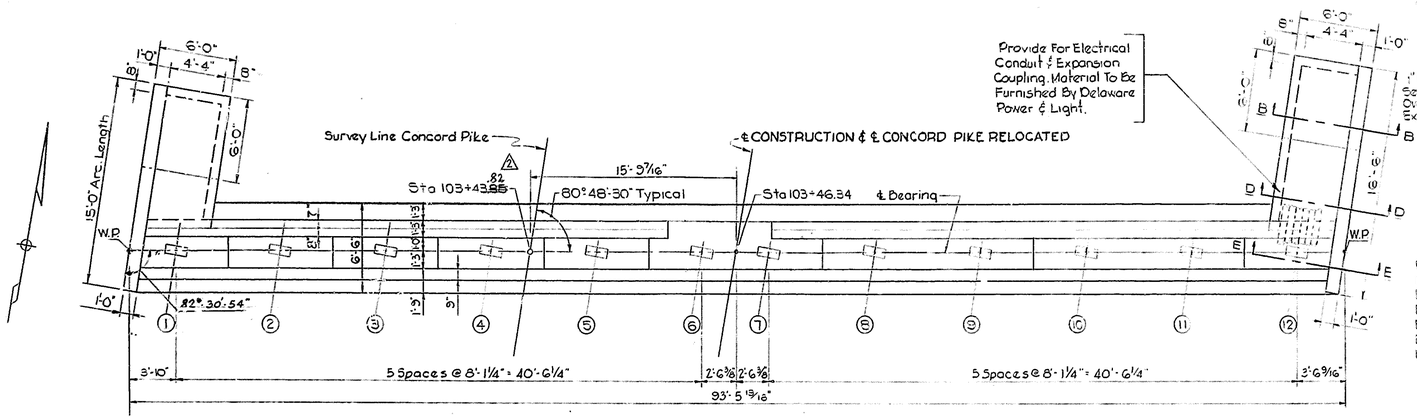

PLAN
Scale: 3/16" = 1'-0"

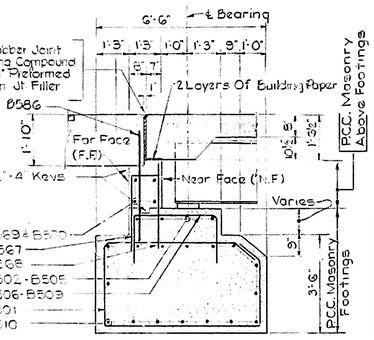

SECTION THRU ABUTMENT
Scale: 3/8" = 1'-0"

NOTE:
Top Of Backwall To Follow Grade Of Roadway

Provide 8" Opening In Backwall For 3½ I.D. Telephone Conduit (By Others) And 14" Sleeve (This Contract) Opening To Be Bricked Up.

NOTE:
Provide shims for:
Beam # 7 + ¾"
Beam # 8 + ⅞"
Beam # 10 + ¾"

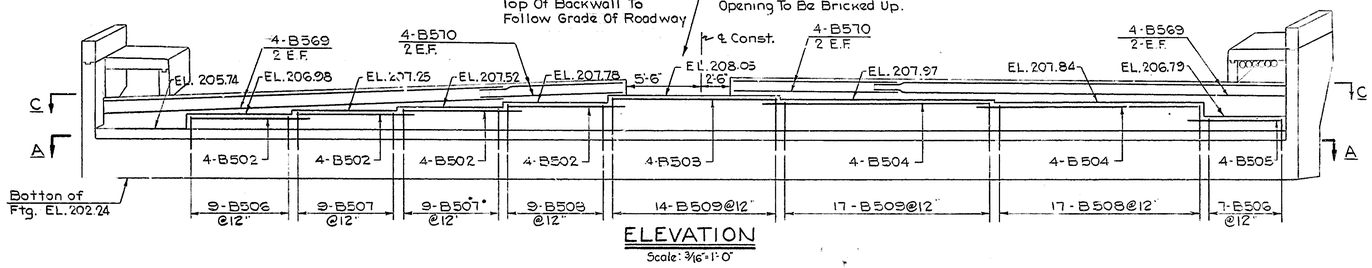

ELEVATION
Scale: 3/16" = 1'-0"

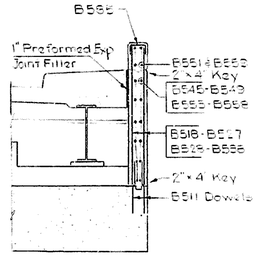

SECTION E-E
Scale ½" = 1'-0"

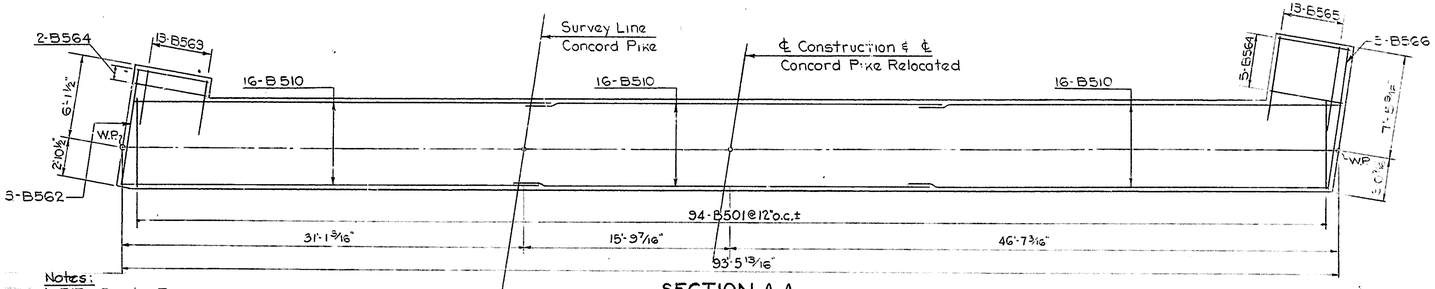

SECTION A-A
Scale: 3/16" = 1'-0"

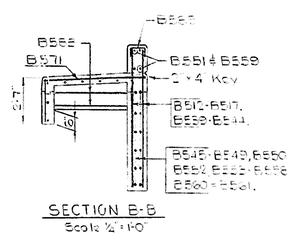

SECTION B-B
Scale ½" = 1'-0"

Notes:
1- E.F. - Denotes Each Face
2- N.F. - Denotes Near Face
3- F.F. - Denotes For Face
4- W.P - Denotes Working Point
5- W - Denotes West
6- E - Denotes East

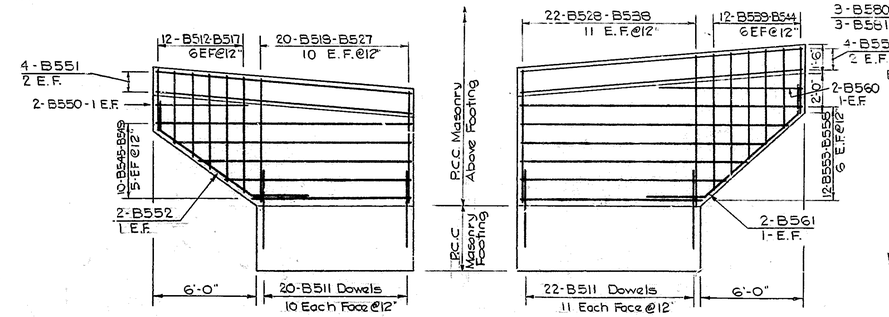

END POST ELEVATION
Scale: ¼" = 1'-0"

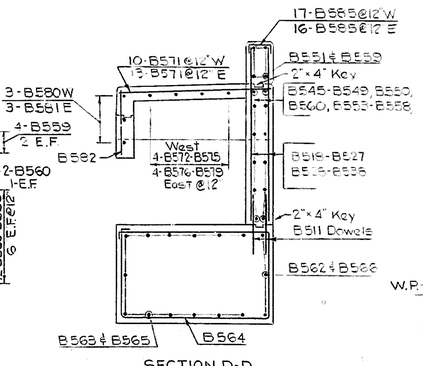

SECTION D-D
Scale: 3/8" = 1'-0"

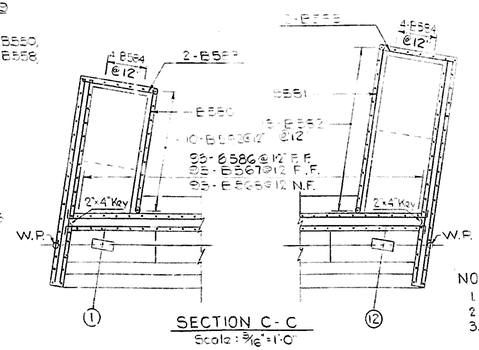

SECTION C-C
Scale: 3/16" = 1'-0"

NOTES
1. For General Notes See Sheet "44
2. Max. Soil Pressure is 1.5 Tons Per Sq. Ft.
3. Reinforcing Steel Shall Not Be Fabricated Until Bottom Of Footing Elevation Has Been Verified By The Director.

BAR SCHEDULE

MARK	No.	SIZE	TYPE	LENGTH	A	B	REMARKS
B501	94	5	I	18'-6"			
B502	16	4	Str.	9'-6"			
B503	4			12'-10"			
B504	8			17'-6"			
B505	4		Str.	8'-0"			
B506	16		II	7'-9"	3'-1"	2'-4"	
B507	18		II	8'-11"	3'-1"	2'-11"	
B508	26		II	9'-5"	3'-1"	3'-2"	
B509	31		II	9'-11"	3'-1"	3'-5"	
B510	48		Str.	32'-6"			
B511	42			3'-0"			
B512-B517	12			3'-0"-5'-11"			Vary 2 Ea. by 7"
B518-B527	20			6'-6"-5'-9"			Vary 2 Ea. by 1"
B528-B538	22			7'-8"-8'-10"			Vary 2 Ea. by 1"
B539-B544	12			6'-11"-8'-2"			Vary 2 Ea. by 9"
B545-B549	10			9'-4-10-8			Vary 2 Ea. by 1'-4"
B550	2			5'-6"			
B551	4		Str.	14'-8"			
B552	2		V	13'-1"	3'-7"	6'-6"	
B553-B558	12		Str.	10'-8"-16'-2"			Vary 2 Ea. by 1'-4"
B559	4		Str.	16'-2"			
B560	2			8'-6"			
B561	2		V	15'-1	4'-9"	7'-4"	
B562	3		Str.	8'-8"			
B563	13		Str.	3'-0"			
B564	7		IV	18'-0"			
B565	13		Str.	4'-6"			
B566	5		Str.	10'-2"			
B567	98		III	4'-8"	3'-7"	0'-10"	
B568	98		Str.	3'-9"			
B569	8		III	3'-3"	3'-0"	1'-6"	
B570	8		Str.	12'-6"			
B571	23		I	5'-6"			
B572-B575	4			3'-2			Vary 1" Ea. by 3"
B576-B579	4			1'-10-4"			Vary 1" Ea. by 3"
B580	3			3'-2"			
B581	3			12'-6"			
B582	3			2'-2"			
B583	4			5'-6"			
B584	2		Str.	7'-6"			
B585	2		II	7'-6"	3'-1"	2'-4"	
B586	93	5	Str.	4'-0"	3'-0"	1'-0"	

BENDING DETAILS

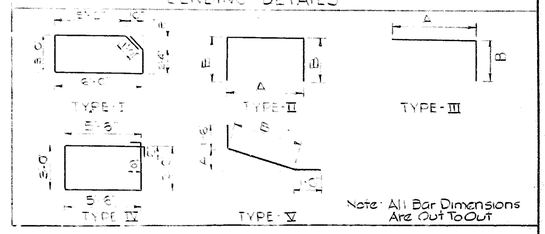

DELAWARE
STATE HIGHWAY DEPARTMENT

INTERSTATE ROUTE 95

UNDERPASS AT CONCORD PIKE

ABUTMENT "B"

D. J.M.D.	SCALE	APPROVED BY:
T. J.M.D.	AS NOTED	BRIDGE ENGINEER
C. H.B.H.		

Rev. 2-5th. 10:00 - 43.82 A.W.R.
Rev. 2-3rd. 3-1-61 A.W.R.

COUNTY	CONTRACT	FED. AID NO.	STATE	FED. AID PROJECT NO.	FISCAL YEAR	SHEET NO.	TOTAL SHEETS
N.C.	95-08-005	8	DEL.	I-95-2(12)16		47	80

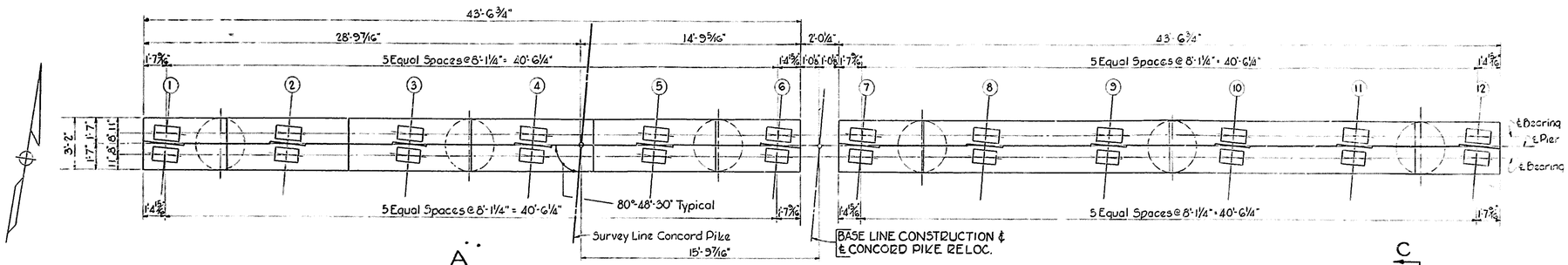

PLAN - PIER Nº 1 AS SHOWN

PIER Nº 3 Similar

Scale: 1/4"=1'-0"

NOTE: Pads Not Shown. See Sheet No. 49

NOTE: For Reinforcing In Pads See Sheet Nº 25 For Sections A-A & C-C See Sheet Nº 49

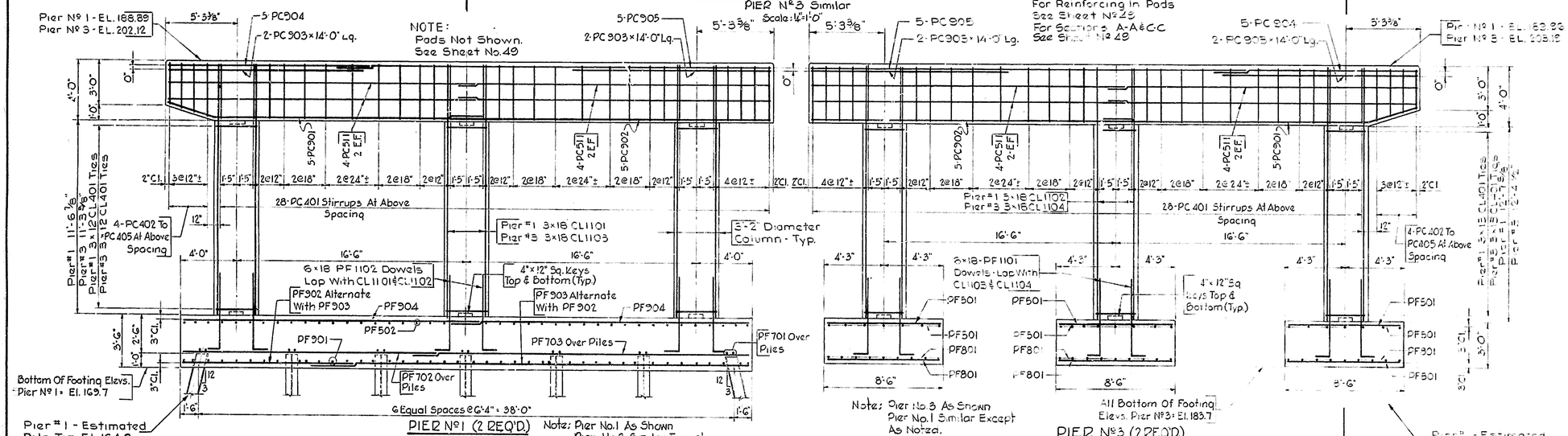

PIER Nº 1 (2 REQ'D.)

Note: Pier No.1 As Shown Pier No.3 Similar Except As Noted.

Note: Pier No.3 As Shown Pier No.1 Similar Except As Noted.

PIER Nº 3 (2 REQ'D.)

All Bottom Of Footing Elevs. Pier Nº 3 = El. 183.7

ELEVATIONS

Scale: 1/4"=1'-0"

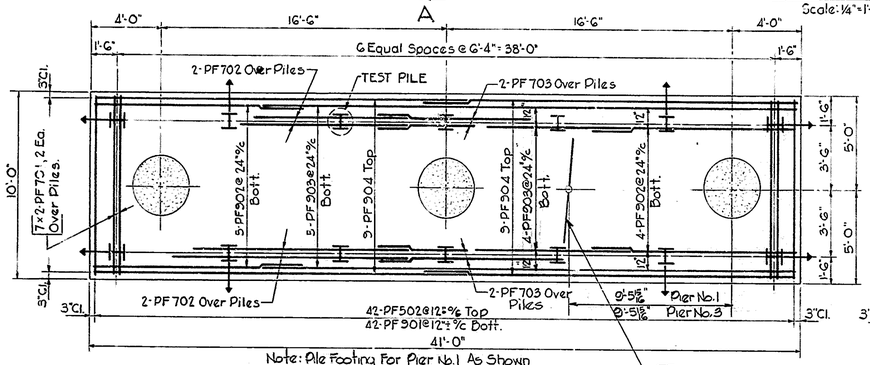

Note: Pile Footing For Pier No.1 As Shown Spread Footing For Pier No.3

PIER Nº 1 - FOOTING PLAN

(2 REQ'D.)

Scale: 1/4"=1'-0"

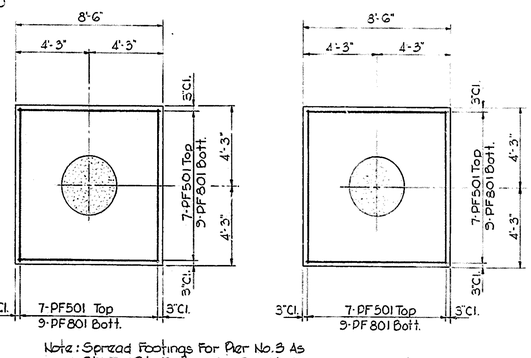

Note: Spread Footings For Pier No.3 As Shown, Pile Footing For Pier No.1

PIER Nº 3 - FOOTING PLAN

(2 REQ'D.)

Scale: 1/4"=1'-0"

NOTES:

1. For General Notes See Sheet Nº 44
2. Column Reinforcing Steel Shall Not be Fabricated Until Bottom Of Footing Elevation Has Been Verified By The Director.
3. H Indicates Plumb Piles.
4. H→ Indicates 3:12 Batter Piles.
5. (H) Indicates Test Pile.
6. All Piles Shall Be Steel H Piles 10BP57 Design Capacity Of 75 Tons (See Special Provisions)
7. Pier Nº 3 Maximum Rock Pressure Is 3.5 Tons/Sq. Ft.
8. For Masonry Plate Elevations And Shim Thickness See Sheet Nº 48
9. Footings Bearing On Rock Shall Have A Minimum Of 6" Depth Into Rock.
10. E.F. Denotes Each Face

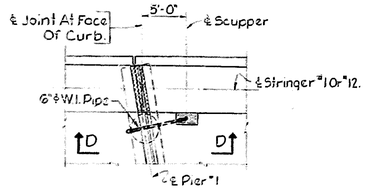

PLAN AT PIER-1

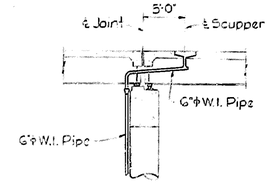

SECTION D-D

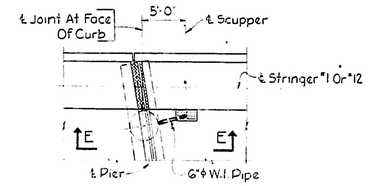

PLAN AT PIER-3

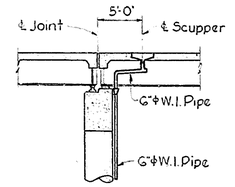

SECTION E-E DRAINAGE DETAILS

Scale: 1/8"=1'-0"

Note: For Drainage Details Not Shown See Sh. Nº 55

DELAWARE STATE HIGHWAY DEPARTMENT		
INTERSTATE ROUTE 95		
UNDERPASS AT CONCORD PIKE		
PIERS 1 AND 3		
D. J.M.D.	SCALE AS NOTED	APPROVED BY:
T. J.M.D.		
C. H.B.H.		BRIDGE ENGINEER

COUNTY	CONTRACT	F. A. PROJ. NO.	STATE	FED. AID PROJECT NO.	FISCAL YEAR	SHEET NO.	TOTAL SHEETS
N.C.	25-06-005	2	DEL.	I-95-2(19)16		48	80

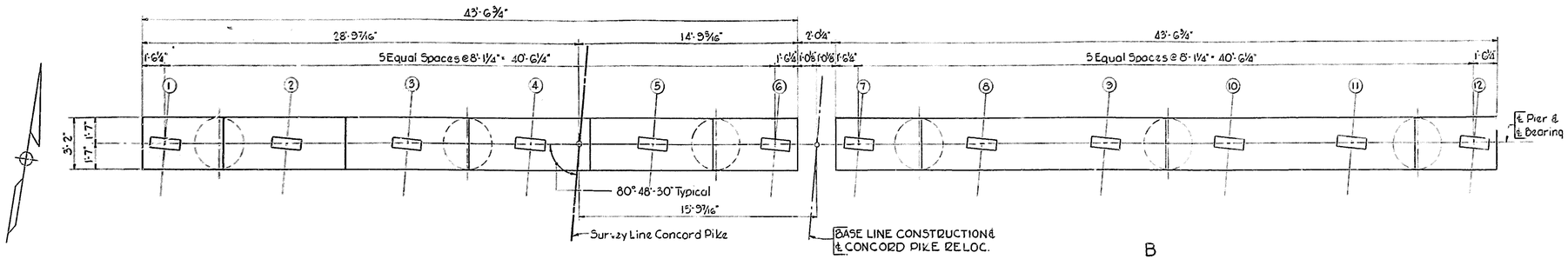

PLAN - PIER Nº2

Scale: ⅛" = 1'-0"

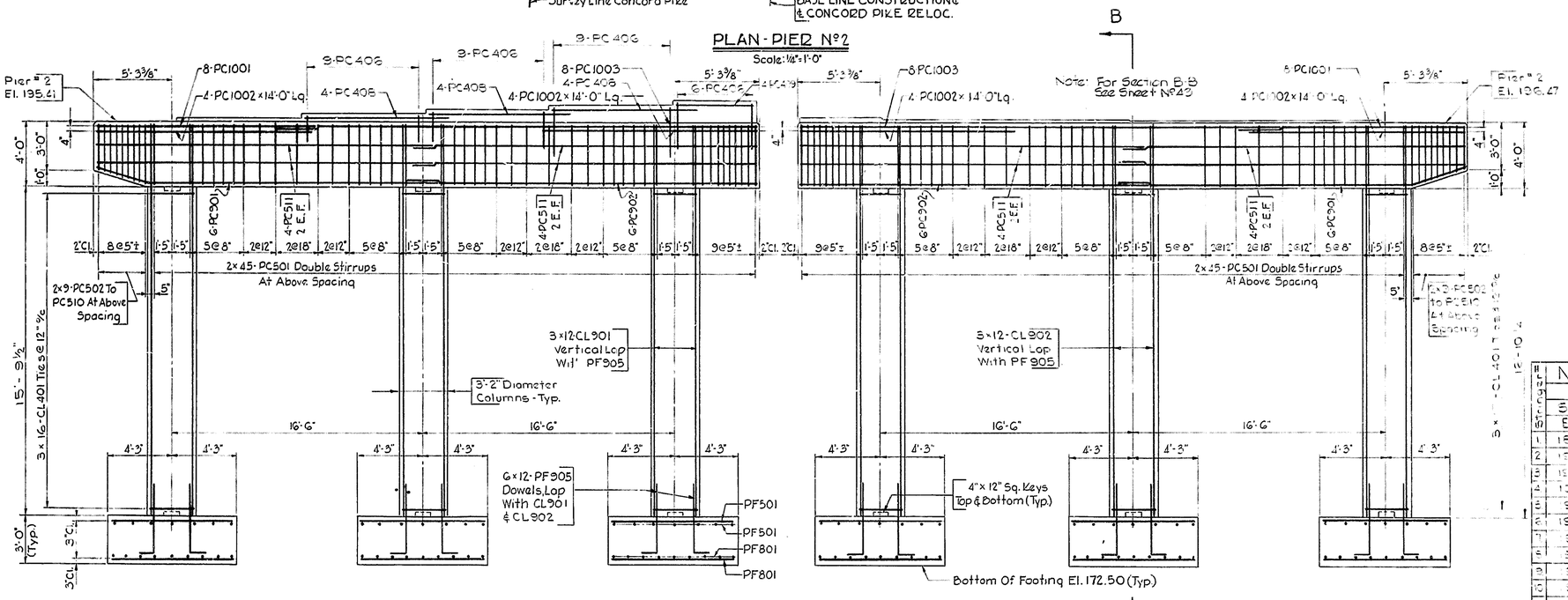

ELEVATION

Scale: ¼" = 1'-0"

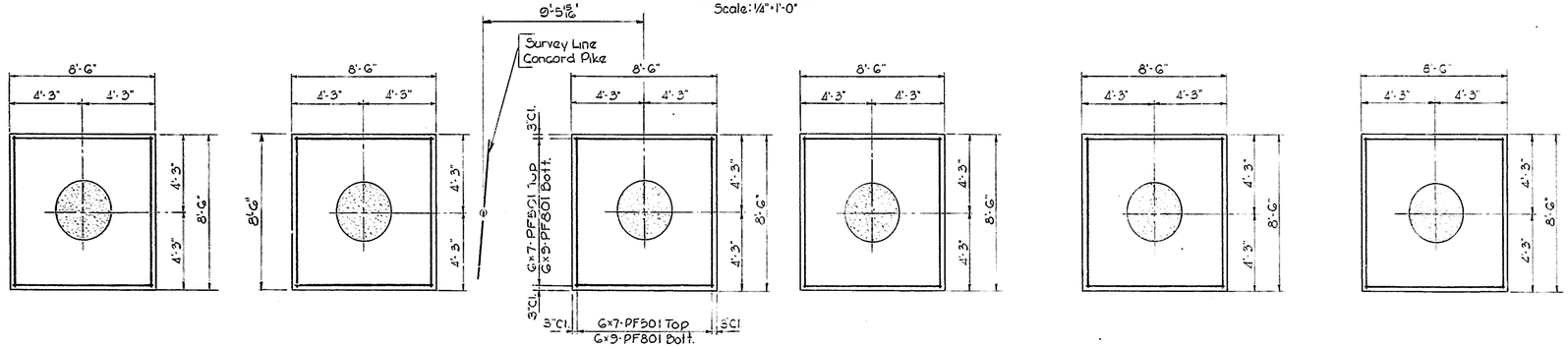

FOOTING PLAN

Scale: ½" = 1'-0"

MASONRY PLATE ELEVATIONS

Str.	PIER #1		PIER #2				PIER #3			
	SPAN A		SPAN B		SPANS B & C		SPAN C		SPAN D	
	Elev.	Shim	Elev.	Shim	Elev.	Shim	Elev.	Shim	Elev.	Shim
1	189.58		188.80		195.41		202.12		202.93	
2	190.52		189.10		195.72		202.38		204.21	
3	190.79		189.42		195.99		202.65		204.47	
4	191.00		189.39		196.25		202.92		204.74	
5	191.32		189.63		196.52		203.18		205.01	
6	191.59		190.03		196.79		203.45		205.28	
7	191.85		190.30		196.93		203.52		205.34	
8	191.94	¼"	190.10	¾"	196.72	⅛"	203.38	⅛"	205.21	¾"
9	191.92		189.9		196.74		203.38		205.21	
10	191.99	¼"	190.08	¾"	196.80	¾"	203.25	⅛"	205.07	⅛"
11	192.39		190.08		196.39		203.25		205.07	
12	192.39		189.88		196.47		203.19		204.03	

NOTES:

1. For General Notes See Sheet Nº44
2. Column Reinforcing Steel Shall Not Be Fabricated Until Bottom Of Footing Elevation Has Been Verified By The Director.
3. Pier #2 Maximum Rock Pressure Is 45 Tons/Sq. Ft. Footings Bearing On Rock Shall Have A Minimum Of 6" Depth Into Rock.
4. E.F. Denotes Each Face

DELAWARE
STATE HIGHWAY DEPARTMENT

INTERSTATE ROUTE 95

UNDERPASS AT CONCORD PIKE

PIER 2

D. J.M.D.	SCALE AS NOTED	APPROVED: Johnnie Pierson, Jr.
T. J.M.D.		BRIDGE ENGINEER
C. H.B.H.		

K&E PRINTED IN U.S.A. 72363

COUNTY	CONTRACT	F.A.P. NO.	STATE	FED. AID PROJECT NO.	FISCAL YEARS	SHEET NO.	TOTAL SHEETS
N.C.	65-08-005	2	DEL.	I-85-2(19)16		49	80

BAR SCHEDULE

MARK	PIER-1	PIER-2	PIER-3	SIZE	TYPE	LENGTH	A	B	C	REMARKS
PF901	84			#9	Str.	9'-6				
PF902	18			#9	Str.	13'-3"				
PF903	18			#9	Str.	29'-9"				
PF904	36			#9	Str.	21'-6"				
PF905		72		#9	I	6'-0"	5'-0"	1'-0"		
PF801		108	108	#8	Str.	8'-0"				
PF1101			108		I	6'-6"	5'-6"	1'-0"		
PF1102	108				I	6'-0"	5'-0"	1'-0"		
PF701	28			#7	Str.	9'-6"				
PF702	8			#7	Str.	18'-3"				
PF703	8			#7	Str.	24'-9"				
PF501		84	84	#5	Str.	8'-0				
PF502	84			#5	Str.	9'-6"				
CL1101	54			#11	Str.	15'-4"				
CL1102	54			#11	Str.	16'-6"				
CL1103			54	#11	Str.	15'-2"				
CL1104			54	#11	Str.	16'-2"				
CL901		36		#9	Str.	19'-7				
CL902		36		#9	Str.	20'-8				
CL401	75	90	75	#4	II	9'-11"	2'-10"	1'-0"		
PC1001		16		#10	Str.	14'-8"				
PC1002		16		#10	Str.	14'-0"				
PC1003		16		#10	Str.	31'-4"				
PC901	10	12	10	#9	V	22'-10"	19'-2"	3'-8"	1'-0"	
PC902	10	12	10	#9	Str.	22'-9"				
PC903	8		8	#9	Str.	14'-0"				
PC904	10		10	#9	Str.	14'-8"				
PC905	10		10	#9	Str.	31'-4"				
PC501		180		#5	III	11'-6"	3'-8"	1'-7"		
PC502 To PC510		36		#5	III	9'-6" To 11'-2"	3'-8" To 3'-6"	1'-7"		Vary 4 Ea. By 1¼"
PC511	16	16	16	#5	Str.	22'-2				
PC401	56		56	#4	III	14'-0"	3'-8"	2'-10"		
PC402 To PC405	8		8	#4	III	12'-0" To 13'-6"	3'-8" To 3'-5"	2'-10"		Vary 2 Ea. By 3"
PC406		33		#4	IV	7'-0"	2'-8"	2'-2"		
PC407	30		30	#4	IV	4'-6"	1'-2"	1'-8"		
PC408	27	12	27	#4	Str.	9'-3"				
PC409	9	4	9	#4	Str.	5'-0"				
PC410	64		15	#4	IV	6'-2"	1'-2"	2'-6"		
PC411	27		58	#4	IV	7'-8"	1'-2	3'-3"		
PC412	6		24	#4	IV	9'-0"	1'-2"	3'-11"		
PC413	6		6	#4	Str.	17'-3"				

BAR TYPES

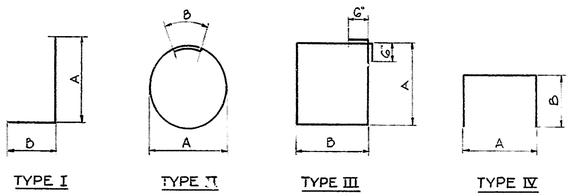

Note: All Bar Dimensions Are Out To Out

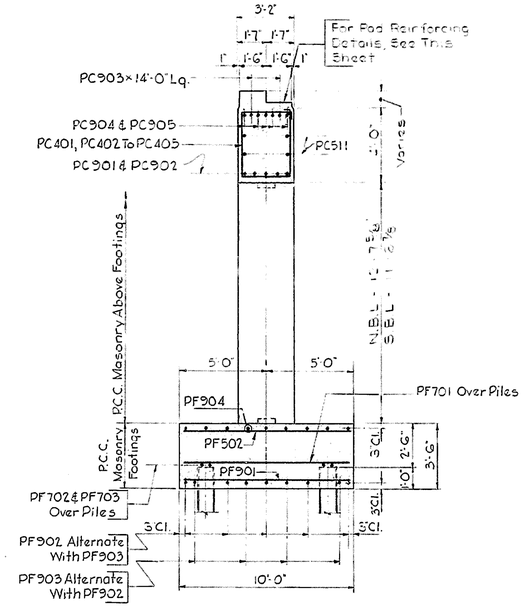

SECTION A-A
Scale: ¼" = 1'-0"

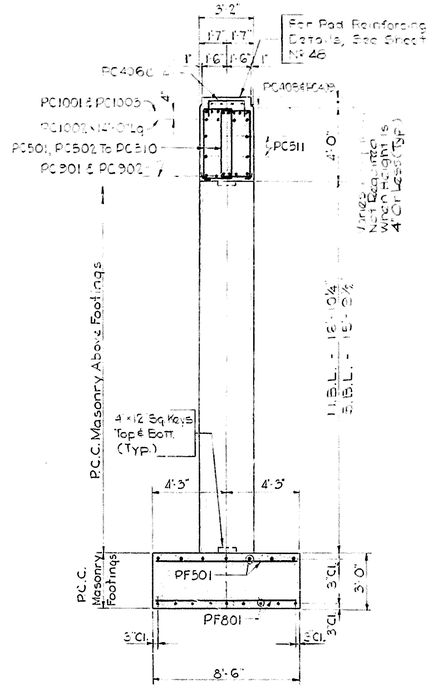

SECTION B-B
Scale: ¼" = 1'-0"

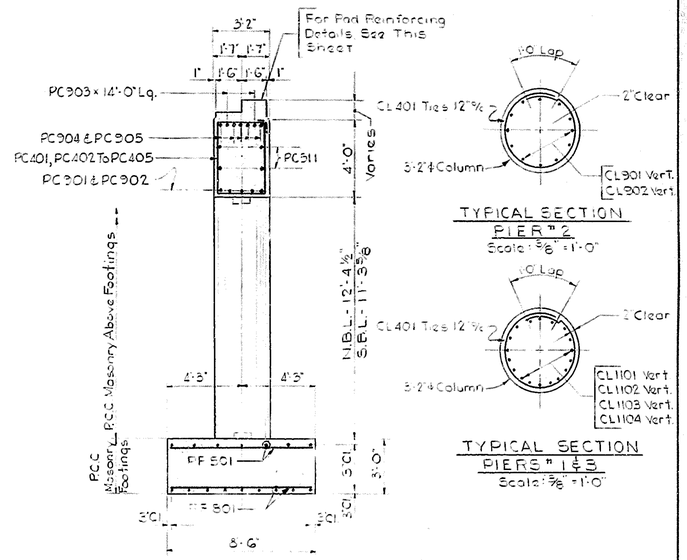

SECTION C-C
Scale: ¼" = 1'-0"

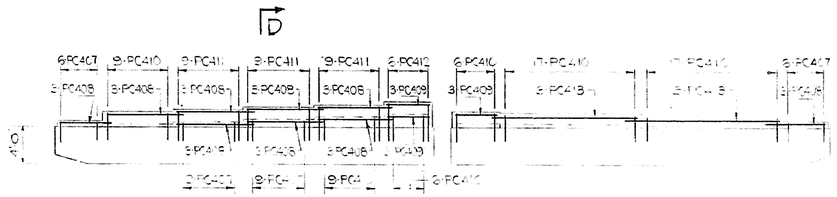

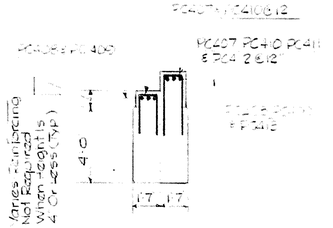

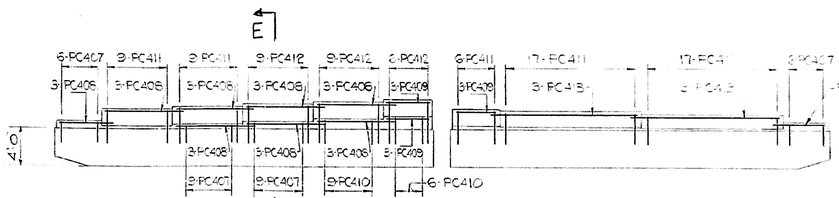

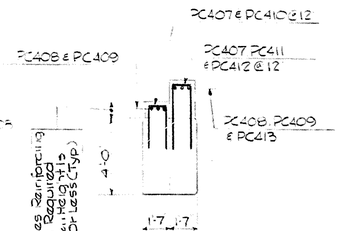

DELAWARE
STATE HIGHWAY DEPARTMENT

INTERSTATE ROUTE 95

UNDERPASS AT CONCORD PIKE

PIER SECTIONS

D. J.M.D.	SCALE AS NOTED	APPROVED: Dominic Pearson, P.E. BRIDGE ENGINEER
T. J.M.D.		
C. H.B.H.		

K-E 6972

D C B A 1 5 10 A B C D

COUNTY	CONTRACT	F.A.P. or S.P.R. NO.	STATE	FED. AID PROJECT NO.	FISCAL YEAR	SHEET NO.	TOTAL SHEETS
N.C.	95-05-005	2	DEL.	I-95-2(19)16		50	80

NOTE:
For Cover Plates In Spans B & C, See Sheet No. 51

℄ Pier №1 — ℄ Bearing Pier №2 — ℄ Pier №3

Bearings Type-S — ℄ Bearings — ℄ Bearing Abutment A — Bearing Type-L — Bearing Type L — ℄ Bearings Bearings Type S — ℄ Bearing Abutment B

Typical

5'-6" — 8' — 8' — 5'-6"

℄ Scupper — ℄ Scupper

Splice — Splice

1	36WF135	36WF182	36WF230	36WF182	36WF135
2	27WF84	do.	do.	do.	24WF68·Cov.R. ¾"×7"×30'-0"
3	do.	do.	do.	do.	do.
4	Sta.101+11.28 do.	Sta.101+35.79 do.	do. Sta.102+21.55	do.	Sta.103+07.31 do. Sta.103+43.82
5	do.	do.	do.	Survey Line Concord Pike	24WF68·Cov.R. ¾"×7"×30'-0"
6	do.	do.	do.	do.	24WF68·Cov.R. ⅝"×7"×28'-0"
7	do.	do.	do.	do.	24WF68·Cov.R. ⅝"×7"×28'-0"
8	do.	do.	do.	do.	24WF68·Cov.R. ¾"×7"×30'-0"
9	do.	do.	do.	do.	do.
10	do.	do.	do.	do.	do.
11	27WF84	do.	do.	do.	24WF68·Cov.R. ¾"×7"×30'-0"
12	36WF135	36WF182	36WF230	36WF182	36WF135

2-15[33.9 Scupper Supports — 2-15[33.9 Scupper Supports — 2-15[33.9 Scupper Supports Typical

℄ 12" Gas Line — 12"G — 12"G — 12"G — 12"G

℄ 5"×3½"×⅜ — ℄ 5"×3½"×⅜ To Support 3½" I.D. Conduit

℄ CONSTRUCTION ℄ CONCORD PIKE RELOCATED

℄ 10 Relocated 3½" I.D. Telephone Conduits

30° 26' 30" (Typ.)

5 Spaces @ 8'-0" = 40'-0" — 5 Spaces @ 8'-0" = 40'-0"

15'-7" — 35'-0"

5' Equal Spaces @ 8'-1¼" = 40'-6¼"

8⅛" 8⅛" — 3'-0" — 8⅛" 8⅛" — 3'-0"

23'-10" c. To c. Brg. SPAN 'A' Non-Composite

85'-1" c. To c. Brg. SPAN 'B' Composite Diaphragms - 18 [42.7# Placed @ ⅛ Points

85'-1" c. To c. Brg. SPAN 'C' Composite Diaphragms - 18 [42.7# Placed At ⅛ Points

85'-10" c. To c. Brg. SPAN 'D' Composite Diaphragms - 12 [25.0# Placed At Midspan

Electrical Conduit In Sidewalk See TYPICAL CROSS SECTION. Provide Expansion Jointing @ Abuts. A & B, Pier №2 & E.B. D.P. & L. To Furnish Material.

FRAMING PLAN
Scale: 1" = 10'

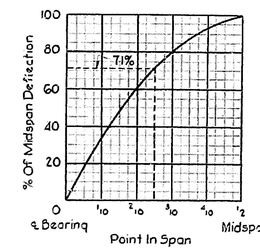

Notes:
1. Δ-1 Deflection At Midspan Due To Weight Of Stringer.
2. Δ-2 Deflection At Midspan Due To Weight Of Concrete Roadway Slab, Haunch & Diaphragms.
3. Δ-3 Deflection At Midspan Due To Weight Of Sidewalk, Parapet & Railing.
4. Camber Not Required Where Total D.L. Deflection Is Less Than 1".
5. Fabricate Said Beams With Mill Camber Up.
6. Percentage Of Deflection At Any Point In Span May Be Determined From Curve.

DEFLECTION SCHEDULE

SPAN	STRINGER №s	Δ-1	Δ-2	Δ-3	CAMBER
A	1 & 12	0"	1/16"	0"	0
	2,3,4,5,8,9,10,11	0"	1/16"	1/16"	0
	6 & 7	0"	1/16"	1/16"	0
B & C	For Deflection Schedule & Stud Spacing, See Sheet №50				
D	1 & 12	0"	1/8"	0"	0
	2,3,4,5,8,9,10,11	1/16"	3/8"	1/16"	0
	6 & 7	1/16"	3/8"	1/16"	0

Survey Line Concord Pike — 15'-7" — ℄ CONSTRUCTION & ℄ CONCORD PIKE RELOC.

92'-0" Out To Out Of Superstructure

6'-0" — 38'-0" Roadway — 4'-0" — 38'-0" Roadway — 6'-0"

1'-0" — 5'-0" Sidewalk — 8 Spaces @ 12" Top Bars (Typical) — 10 Spaces @ 8" Bott. Bars (Typical) — 8" — 2'-0" — 2'-0" — 1'-0" — 5'-0" Sidewalk — 1'-0"

* Parapet Height 2'-6" In Spans B & C. See Sheet №57 For Details

Metal Railing For Spans A & D See Details Sheet №57

Transverse Steel To Be #5 @ 5" C. Top & Bottom.

1" — 1" — 1"

3'-4" — 1'-2" — 8'-1" — 1'-6"

½"/Ft. — 2" Clear — ¼"/Ft. — *4 @ 12" — 1" Open Joint — Point Of Application Of Grade N.B. Lane — ℄ 10 Relocated 3½" I.D. Telephone Conduits — 4" Typ. — 4" Typ. — 6" Constant Slab Thickness — ¼"/Ft. — 9 @ 12" @ ℄ Bearing (Typical) — 9 @ 12" Typ. — 1" — Protective Fence For Spans B & C For Details See Sheet №57 — 2"×4" Key (Typical) — NOT TO SCALE — ½"/Ft. — *4 @ 12" — *4 @ 12"

Point Of Application Of Grade S.B. Lane — 3⅜"×3½"×4'-2½" Galv. PL (Typ.) — 3¼" Galv. Studs

3¼" ϕ Galv. Bolts — 8"×4"×⅜" PL — DETAIL "A" — L 5"×3½"×⅜" Galv. — For Diaphragm Size & Spacing See Framing Plan

5"×½" PL (Typical) Spans 'B' & 'C' — 1" Clear — ¾" ϕ Erection Bolts (Typ.) Bolts & Nuts To Remain In Place.

5 Spaces @ 8'-0" = 40'-0" — 5 Spaces @ 8'-0" = 40'-0"

4"×⅜" PL (Typical) Span 'D'

3'-6" — 3'-6"

1-6 — 2'-6" — 2'-6" — 1-6

5'-0"

℄ 12" Gas Line For Pipe Hanger And Diaphragm Details See This Sheet.

6 — 4'-2½" Revised 4/24/67 V.D.H. — 7

2-13/16" ϕ Holes & ¾" ϕ Galv. Bolts

1 — 12

TYPICAL CROSS SECTION
Scale: ¼" = 1'-0"

Note: All Longitudinal Bars In Roadway Slab To Be #5 Spaced As Shown. All Longitudinal Bars In Parapets, Safety Curb, Sidewalk & Median To Be #4 Spaced As Shown.

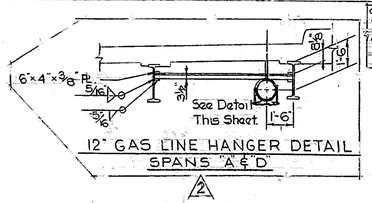

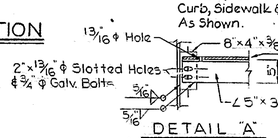

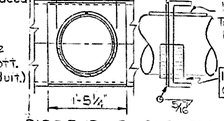

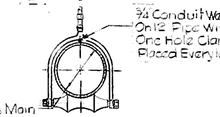

NOTE: Place Pipe Hangers Between Channel Diaphragms To Support 12" ϕ Gas Main

NOTES
STRUCTURAL STEEL:
Unless Otherwise Provided For On The Plans Or In The Specifications, Details Of The Steel Work In General Shall Conform To The Requirements Of The 1961 Standard Specs. For Highway Bridges Of The A.A.S.H.O.

To Avoid Oversight, Requirements Concerning Rivet Sizes, Bolt Sizes, Open Holes, Reaming, Punching, Shims, Painting, Etc. Shall Be Clearly Shown Or Noted On The Shop Drawings.

All Dimensions Shown On The Plans Are For The Structure At A Normal Temperature Of +68°F. The Temperature Range For Movement Is -10°F To +120°F.

All Expansion Joints Are To Be Detailed To Provide For Vertical, Longitudinal, & Transverse Adjustment In Order To Obtain Proper Alignment & Openings Under Normal Temperature Conditions.

All Structural Shapes, Plates, & Bars Shall Be Of Steel Conforming To The Requirements Of A.S.T.M. Designation A-36.

All Welding Shall Be Done In Accordance With The Requirements Of The Current "Standard Specifications For Welded Highway & Railway Bridges" Of The American Welding Society, Unless Otherwise Specified. The Shop Drawings Shall Clearly Show The Nature, Dimensions, & Locations Of Each Weld.

DELAWARE
STATE HIGHWAY DEPARTMENT

INTERSTATE ROUTE 95

UNDERPASS AT CONCORD PIKE

FRAMING PLAN

D. J.M.D.	SCALE	APPROVED:
T. J.M.D.	AS NOTED	BRIDGE ENGINEER
C. H.B.H.		

Δ 6"×6"×.375" Channel Diaphragm 8-23-67 A.W.R.

Δ Delete 12" Gas Line. Delete 12" Gas Line Hanger Details. Delete Gas Line Diaphragm 4-24-67 A.W.R.

M&E MORRISON & NUNN 69791

COUNTY	CONTRACT	F.A.P. REG. NO.	STATE	FED. AID PROJECT NO.	FISCAL YEAR	SHEET NO.	TOTAL SHEETS
N.C.	65-08-005	2	DEL.	I-95-7(19)16		51	80

SPAN "B"

SPAN "C"

STUD SPACING

4½" 8'-6" | 6" 8'-6" | 10" 8'-6" | 16" 8'-6" | 16" 8'-6" | 16" 8'-6" | 10" 8'-6" | 8" 8'-6"

℄ SYMMETRICAL ABOUT ℄

14½" × 1 11/16" × 27'-0" C.PL.

36 WF 182 — Splice — 36 WF 230

10" × 15/16" × 50'-1" C PL.

3'-0" | 50'-1" | 21'-0" | 26'-0"

FASCIA STRINGERS

Scale: 1/8" = 1'-0"

STUD SPACING

5½" 8'-6" | 7" 8'-6" | 11" 8'-6" | 15" 8'-6" | 20" 8'-6" | 24" 8'-6" | 24" 8'-6" | 20" 8'-6"

℄ SYMMETRICAL ABOUT ℄

14½" × 1⅛" × 27'-0" C.PL.

36 WF 182 — Splice — 36 WF 230

10" × 1 1/16" × 50'-1" C.PL.

3'-0" | 50'-1" | 21'-0" | 26'-0"

MEDIAN STRINGERS

Scale: 1/8" = 1'-0"

STUD SPACING

5" 8'-6" | 6" 8'-6" | 9½" 8'-6" | 12" 8'-6" | 15" 8'-6" | 22" 8'-6" | 22" 8'-6" | 18" 8'-6"

℄ SYMMETRICAL ABOUT ℄

14½" × 1⅛" × 24'-0" C.PL.

36 WF 182 — Splice — 36 WF 230

10" × 1 1/16" × 50'-1" C.PL.

10'-0" | 50'-1" | 21'-0" | 25'-0"

INTERIOR STRINGERS

Scale: 1/8" = 1'-0"

℄ BRG. PIER Nº 1

2- Bearing Stiffeners 5½" × ½" Plates (12 Req'd)

L

℄ PIER Nº 2

2- Bearing Stiffeners 7½" × ¾" Plates (12 Req'd.)

Splice

		0.1L	0.2L	0.3L	0.4L	0.5L	0.6L	0.7L	0.8L	0.9L
BEAMS 1 & 12	Δ-1	1/8"	3/16"	1/4"	5/16"	5/16"	1/4"	3/16"	1/8"	1/16"
	Δ-2	7/16"	13/16"	1 1/16"	1 3/16"	1 1/8"	1"	3/4"	7/16"	3/16"
	Δ-3	3/16"	3/8"	1/2"	9/16"	1/2"	7/16"	1/4"	1/8"	0"
	Camber	3/4"	1 3/8"	1 13/16"	2 1/16"	1 15/16"	1 11/16"	1 3/16"	11/16"	1/4"
BEAMS 6 & 7	Δ-1	1/8"	3/16"	1/4"	5/16"	1/4"	1/4"	3/16"	1/8"	1/16"
	Δ-2	1/4"	1/2"	11/16"	3/4"	3/4"	5/8"	7/16"	1/4"	1/16"
	Δ-3	1/16"	1/8"	3/16"	3/16"	3/16"	1/8"	1/16"	1/16"	0"
	Camber	7/16"	13/16"	1 1/8	1 1/4	1 3/16"	1"	11/16"	7/16"	1/8
BEAMS 2,3,4,5 8,9,10,11	Δ-1	1/8"	1/4"	3/8"	3/8"	3/8"	5/16"	1/4"	1/8"	1/16"
	Δ-2	3/8"	3/4"	1"	1 1/16"	1"	7/8"	5/8"	3/8"	1/8"
	Δ-3	1/16"	1/8"	3/16"	3/16"	3/16"	1/8"	1/16"	1/16"	0"
	Camber	9/16"	1 1/8"	1 9/16"	1 5/8"	1 5/8"	1 5/16"	15/16"	9/16"	3/16"

DEFLECTION SCHEDULE

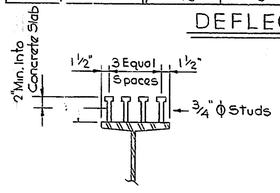

STUD DETAIL

SPANS "B" & "C" & FASCIA - SPAN "D"

Scale: 1"=1'-0"

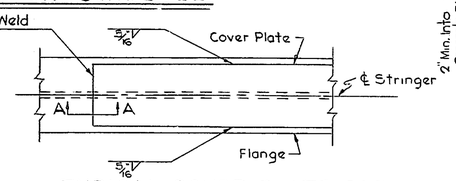

TYPICAL COVER PLATE DETAIL

No Scale

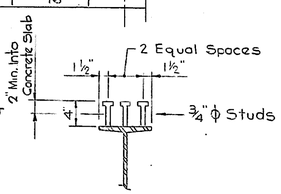

STUD DETAIL

SPAN "D" STRINGERS Nº 2 THRU 11

Scale: 1"=1'-0"

SPAN "D"

STUD SPACING

7" 5'-7" | 8" 5'-7" | 10" 5'-7" | 12½" 5'-7" | 16½" | 12½" 5'-7" | 10" 5'-7" | 8" 5'-7" | 6" 5'-7"

36 WF 135

FASCIA STRINGERS

Scale: ¼" = 1'-0"

STUD SPACING

3½" 5'-7" | 4" 5'-7" | 5½" 5'-7" | 6½" 5'-7" | 9" | 6½" 5'-7" | 5½" 5'-7" | 4" 5'-7" | 3½" 5'-7"

24 WF 68

℄ Brg. — ℄ Brg.

MEDIAN STRINGERS

Scale: ¼" = 1'-0"

STUD SPACING

3" 5'-7" | 4" 5'-7" | 5" 5'-7" | 6" 5'-7" | 8½" | 6" 5'-7" | 5" 5'-7" | 4" 5'-7" | 3" 5'-7"

24 WF 68

INTERIOR STRINGERS

Scale: ¼" = 1'-0"

NOTE:

1. For Deflection Schedule And Cover Plates, See Sheet Nº 50
2. For End Span Bearing Stiffeners, See Sheet Nº 51

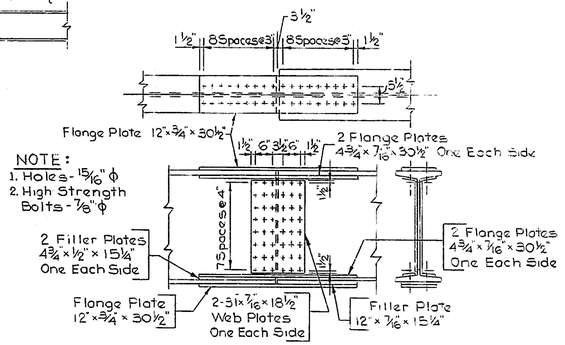

SPLICE DETAIL

Scale: ½" = 1'-0"

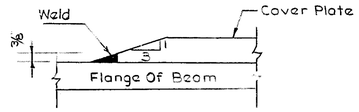

SECTION A-A

No Scale

DELAWARE
STATE HIGHWAY DEPARTMENT

INTERSTATE ROUTE 95

UNDERPASS AT CONCORD PIKE
STEEL DETAILS

D. C.W.S.	SCALE	APPROVED BY:
T. C.W.S.	AS NOTED	Johnnie R. Pearson
C. H.B.H.		BRIDGE ENGINEER

COUNTY	CONTRACT	P. R. A. REQ. NO.	STATE	FED. AID PROJECT NO.	FISCAL YEAR	SHEET NO.	TOTAL SHEETS
N.C.	65-08-005	2	DEL.	I-95-2(19)16		52	80

SPAN 'A' SPAN 'B' SPAN 'C' SPAN 'D'

℄ Pier No 1 ℄ Pier No 2 ℄ Pier No 3 ℄ Bearing Abut. B

℄ Bearing Abut. A

4-A402@12"% (Sidewalk)
23-A403@12"% (Sidewalk)
23-A404@12"% (Parapet)
1-A409 (Sidewalk)
4-A408 (Parapet)
1-A505 (Top)
1-A505 (Bot) (Deck Slab)
2-A506 (Deck Slab)
6-A406@12"% (Sidewalk)
2-A801 Between Stringers (5 Req'd)
2-A802 (Top)
2-A803 (Bot)
64-A504@5" (Top)
64-A506@5" (Bot)
2-A802 (Top)
2-A602 (Bot)
PANEL-A
7-A401@12"% Between Stringers (5 Required)
2-A410
7-A501@12"% Between Stringers (5 Required)
7-A401@12"% Between Stringers (5 Required)
2-A802 (Top)
2-A602 (Bot)
64-A504@5"% (Top)
64-A507@5"% (Bot)
2-A801 Between Stringers (5 Req'd)
2-A802 (Top)
2-A602 (Bot)
27-A407@12"% (Median)
87-A407@12"o/c (Median)
3-A406 (Median)
3-B401 (Median)
3-B401 (Median)
3-B401 (Median)
3-D401 (Median)
3-A406 (Median)
27-A407@12"% (Median)
64-A502@5"% (Top)
64-A509@5"% (Bot.)
2-A801 Between Stringers (5 Req'd)
2-A801 Between Stringers (5 Req'd)
207-A502@5"% (Top)
207-A509@5"% (Bot.)
2-A801 Between Stringers (5 Req'd)
32-A502@5"% (Top)
32-A509@5"% (Bot.)
2-A801 Between Stringers (5 Req'd)
2-A405
2-A801 (Top)
2-A602 (Bot)
7-A401@12"% Between Stringers (5-Required)
47-B501 Type S6-B501 Bott. Deck Slab) See Typ. Cross Section Sh. No. 53 For Spacing
47-B501 Type S6-B501 Bott. Deck Slab) See Typ. Cross Section Sh. No. 53 For Spacing
47-B501 Type S6-B501 Bott. Deck Slab) See Typ. Cross Section Sh. No. 53 For Spacing
2-A801 (Top)
2-A602 (Bot.)
2-A801 (Top)
2-A602 (Bot)
2-A801 (Top)
2-A602 (Bot)
2-A801 (Top)
2-A602 (Bot)
2-A801 (Top)
2-A602 (Bot)
PANEL-B
PANEL-C (4-REQUIRED)
PANEL-C
PANEL-C
PANEL-D (2-REQUIRED)
7-A401@12"% Between Stringers (5-Required)
7-A401@12"% Between Stringers (5-Required)
7-A401@12"% Between Stringers (5 Required)
7-A401@12"% Between Stringers (5 Required)
7-A501@12"% Between Stringers (5-Required)
7-A501@12"% Between Stringers (5 Required)
2-A405
64-A502@5"% (Top)
64-A508@5"% (Bot.)
207-A502@5"% (Top)
207-A508@5"% (Bot.)
92-A502@5"% (Top)
92-A508@5"% (Bot)
2-A405
6-A406@12"% (Sidewalk)
4-A408 (Parapet)
2-A506 (Deck Slab)
7-B401@12"% (Sidewalk)
7-B401@12"% (Sidewalk)
7-B401@12"% (Sidewalk)
6-D401@12"% (Sidewalk)
2-D502 (Deck Slab)
4-A408 (Parapet)
1-A409 (Sidewalk)
23-A403@12"% (Sidewalk)
23-A404@12"% (Parapet)
6-B402 (Parapet)
6-B402 (Parapet)
6-B402 (Parapet)
6-B402 (Parapet)
87-A403@12"% (Sidewalk)
87-B403@12"% (Parapet)
1-D403
4-D402 (Parapet)
4-D402 (Parapet)
34-A403@12"% (Sidewalk)
34-A404@12"% (Parapet)
4-A402@12"% (Sidewalk)
4-A402@12"% (Sidewalk)

Cut Or Bend Slab Reinf. To Fit Scupper
4-S601@4' (Bott.) 4 Req'd.
2-S601@5" (Top) 4 Req'd.
6-S601@5"% (Bott.) 3 Each Side Of Scupper (4 Req'd.)

℄ Stringers (Typ)

46-A503 Top & S5-A503 Bott (Deck Slab) See Sect. Sheet No 55 For Spacing

46-A503 Top & S5-A503 Bott (Deck Slab) See Sect. Sheet No 55 For Spacing

46-B501 Top, S5-B501 Bott. (Deck Slab) See Sect. Sheet No 53 For Spacing

5'-0" 38'-0" 40 Median 38'-0" 5'-0" 1'-0"

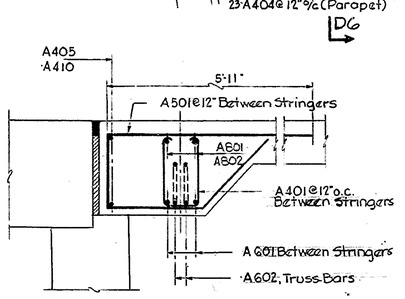

SECTION D1-D1
Scale 3/4"=1'-0"

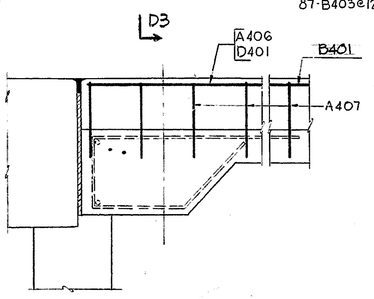

SECTION D2-D2
Scale 3/4"=1'-0"

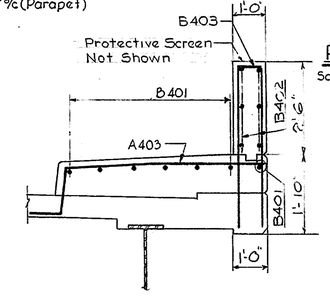

PLAN
Scale: 1/8"=1'-0"

SECTION D3-D3
Scale 1/2"=1'-0"

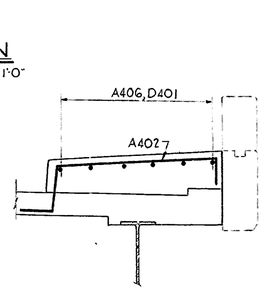

SECTION D4-D4
Scale 1/2"=1'-0"

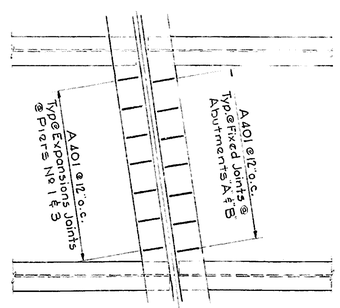

PLAN OF TYPICAL CONCRETE BEAMS
Scale: 3/8"=1'-0"

Note: For Sections D5-D5, D6-D6, See Sheet No 52
For Bar Schedule and Approach Slab Details See Sheet No 53

DELAWARE
STATE HIGHWAY DEPARTMENT

INTERSTATE ROUTE 95

UNDERPASS AT CONCORD PIKE
DECK SLAB REINFORCING DETAILS

D. J.M.D.	SCALE	APPROVED BY:
T. J.M.D.	AS NOTED	BRIDGE ENGINEER
C. H.B.H.		

COUNTY	CONTRACT	R.P. & MISC. NO.	STATE	FED. AID PROJECT NO.	FISCAL YEAR	SHEET NO.	TOTAL SHEETS
N.C.	65-08-005	2	DEL.	I-95-2(19)16		53	80

BAR SCHEDULE

MARK	Nº	SIZE	TYPE	LENGTH	A	B	REMARKS
A401	320	#4	I	3'-10"	8"	1'-2"	
A402	16		II	7'-1"			
A403	462		III	7'-8"			
A404	114		IV	6'-8"	3'-0"		
A405	12		Str.	23'-3"			
A406	18		Str.	25'-4"			
A407	480		V	6'-4"	1'-4"	1'-5"	
A408	16		Str.	10'-4"			
A409	2		Str.	21'-0"			
A410	4	#4	Str.	23'-9"			
A501	140	#5	VI	10'-5"			
A502	2152		Str.	23'-9"			
A503	302			25'-4"			
A504	128			24'-3"			
A505	2			25'-6"			
A506	68	#5	Str.	21'-0"			
A507	64	#5	Str	27'-6"			
A508	1076	#5	Str	20'-6"			
A509	1076	#5	Str	27'-3"			
AG01	120	#6	VII	9'-1"	6"	7'-9"	
AG02	32	#6	VIII	24'-3½"	2'-3"	22'-10"	
AG03	16	#6	VIII	24'-8½"	3'-0"	23'-3"	
AB01	16	#8	Str.	28'-9"			
AB02	32	#8	Str.	24'-3"			
B401	120	#4	Str.	30'-0"			
B402	144	#4	Str.	19'-11"			
B403	348	#4	IV	8'-8"	4'-0"		
B501	1236	#5	Str.	30'-0"			
D401	18	#4	Str.	37'-5"			
D402	16	#4	Str.	16'-3"			
D403	2	#4	Str.	33'-0"			
D501	202	#5	Str.	37'-5			
D502	4	#5	Str.	34'-5			
SG01	48	#6	Str.	7'-0"			

BAR TYPES

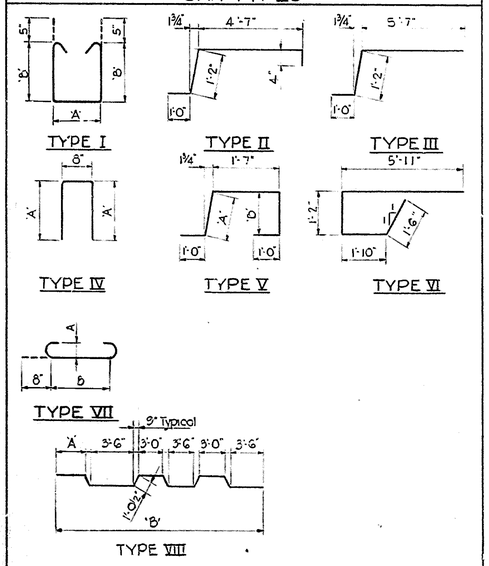

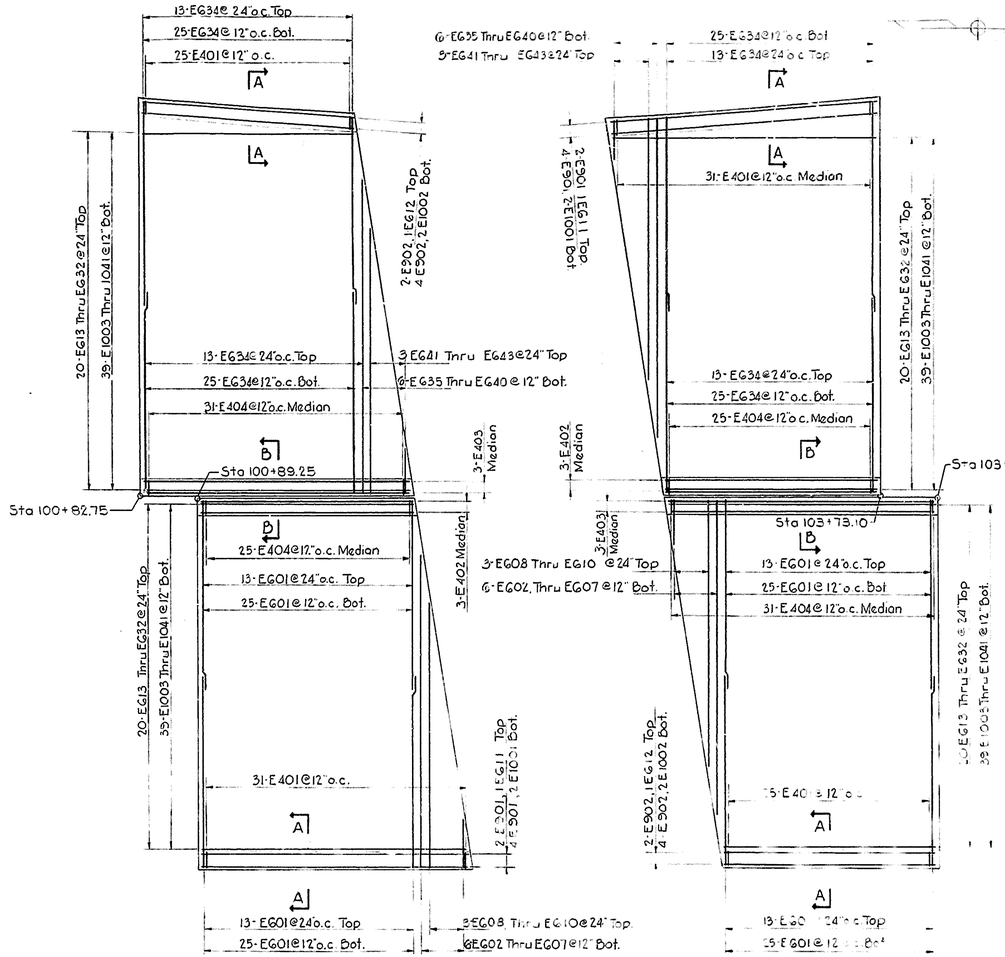

DETAIL - APPROACH SLABS

Scale: 1/8"=1'-0"

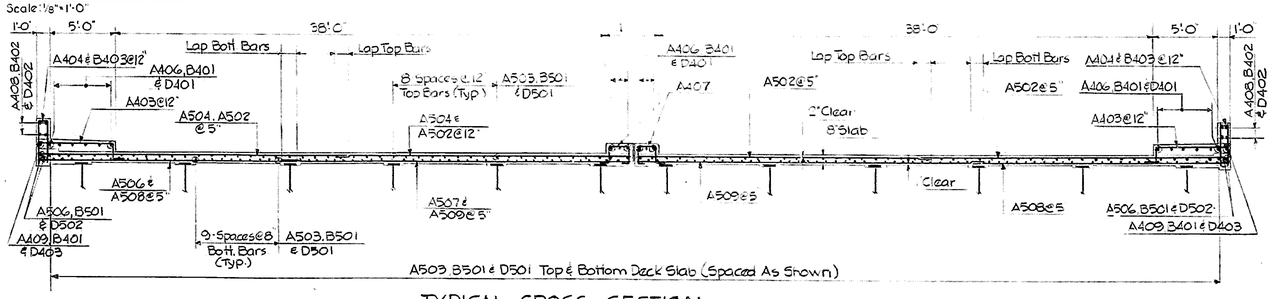

TYPICAL CROSS SECTION

Scale 3/16"=1'-0"

BAR SCHEDULE

MARK	Nº	SIZE	TYPE	LENGTH	A	B	REMARKS
E401	112	#4	I	4'-6"	1'-1"	1'-6"	
E402	6		Str.	24'-6"			
E403	6		Str.	31'-0"			
E404	112	#4	V	7'-11"	2'-2"	2'-2"	
EG01	152	#6	Str.	20'-6"			
EG02 - EG07	12			3'-0" To 33'-10"			Vary 2 Ea. By 6"-2'
EG08 - EG10	6			3'-0" To 27'-8"			Vary 2 Ea. By 12"-4'
EG11	2			31'-0"			
EG12	2			24'-6"			
EG13 - EG32	80			24'-4" To 31'-0"			Vary 4 Ea. By 4"-8"
EG34	152			22'-0"			
EG35 - EG40	12			4'-0" To 34'-10"			Vary 2 Ea. By 6"-2'
EG41 - EG43	6	#6	Str.	4'-0" To 28'-6"			Vary 2 Ea. By 12"-4'
E901	12	#9	Str.	30'-5"			
E902	12	#9	Str.	23'-11"			
E1001	4	#10	Str.	31'-0"			
E1002	4	#10	Str.	24'-6"			
E1003 - E1041	156	#10	Str.	24'-4" To 31'-0"			Vary 4 Ea. By 2"-8"

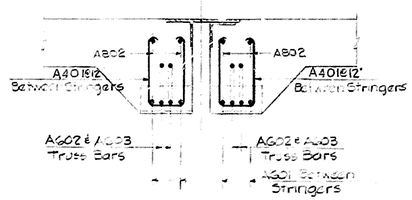

SECTION D5-D5

Scale 3/4"=1'-0"

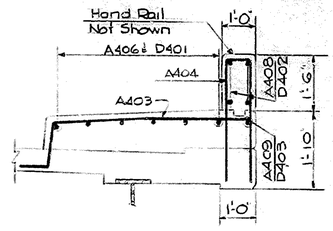

SECTION D6-D6

Scale 1½"=1'-0"

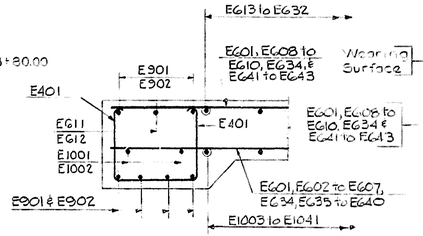

SECTION A-A

Scale: 3/4"=1'-0"

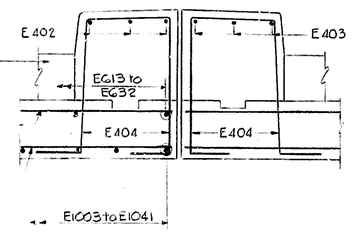

SECTION B-B

Scale: 3/4"=1'-0"

DELAWARE
STATE HIGHWAY DEPARTMENT

INTERSTATE ROUTE 95

UNDERPASS AT CONCORD PIKE

APPROACH SLABS

D. J.M.D.	SCALE	APPROVED BY:
T. J.M.D.	AS NOTED	BRIDGE ENGINEER
C. H.B.H.		

COUNTY	CONTRACT	F. A. P. NO.	STATE	FED. AID PROJECT NO.	FISCAL YEAR	SHEET NO.	TOTAL SHEETS NO.
N.C.	65-08-005	2	DEL.	I-95-2(15)16		54	80

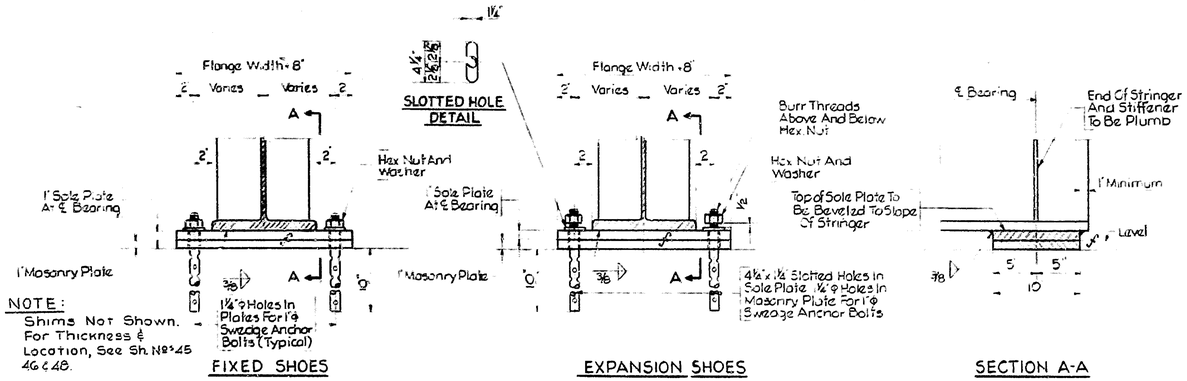

NOTE:
Shims Not Shown. For Thickness & Location, See Sh. Nos 45 & 46.

FIXED SHOES | EXPANSION SHOES | SECTION A-A

BEARING DETAILS SPANS 20' TO 50' TYPE-S

Scale 1½"=1'-0"

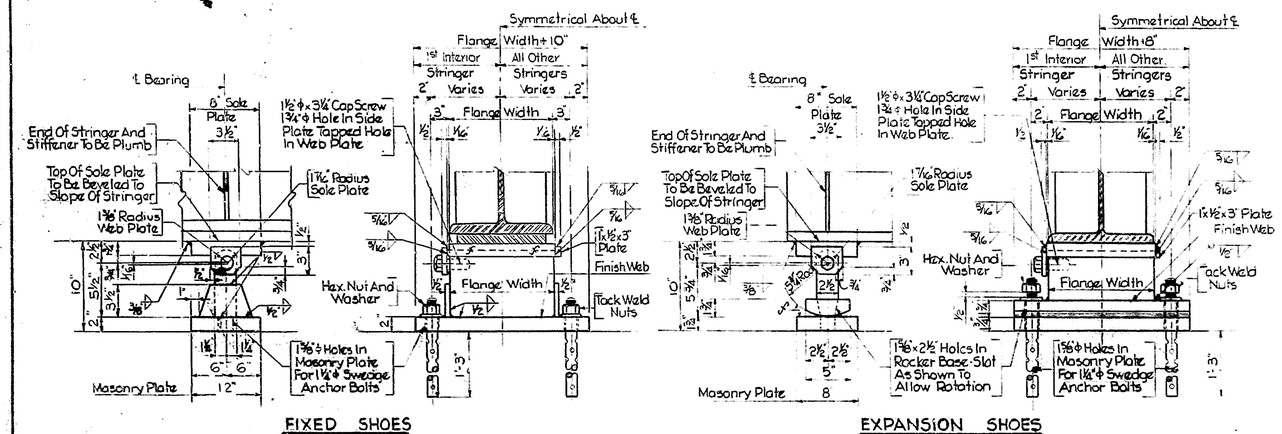

FIXED SHOES | EXPANSION SHOES

NOTE:
Shims Not Shown.
For Thickness & Location, See Sh. No 48

BEARING DETAILS SPANS 80' TO 95' TYPE-L

Scale 1½"=1'-0"

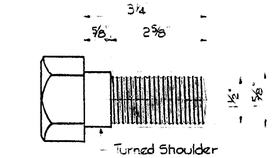

CAP SCREW DETAIL
No Scale

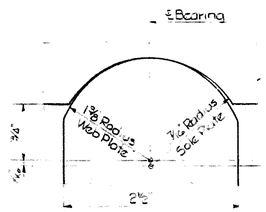

DETAIL AT WEB AND SOLE PLATE
Full Size

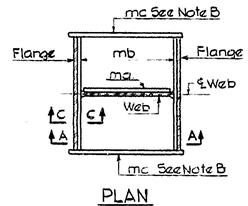

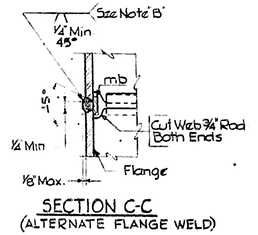

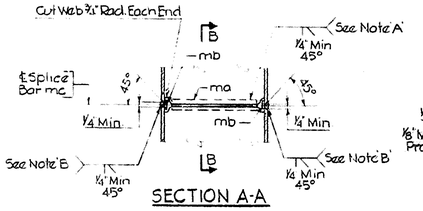

NOTE-A- End of weld to be smooth and flush with web cut.

NOTE-B- Bar mc to be tack welded to flange at splice to back up end of flange weld. Remove mc after weld is completed. End of weld must be smooth and flush with edge of flange. Grind weld smooth with edge of flange if pile is unsupported in weld area such as: air, water or soft mud.

MATERIAL REQUIRED FOR 10BP57
1 - Bar - ma - 1"x 7/16" x 7½"
2 - Bars - mb - 1"x 7/16" x 10"
2 - Bars - mc - 3"x ⅜" x 11"

PILE SPLICE DETAILS

No Scale

DELAWARE
STATE HIGHWAY DEPARTMENT

INTERSTATE ROUTE - 95
UNDERPASS AT CONCORD PIKE
BEARING DETAILS & PILE SPLICE DETAILS

D. R.R. ____
T. R.R. ____
C. H.B.H

SCALE AS NOTED

APPROVED BY:
BRIDGE ENGINEER

COUNTY	CONTRACT	F.A.P. NO.	STATE	FED. AID PROJECT NO.	FISCAL YEAR	SHEET NO.	TOTAL SHEETS
NE	38-95	2	DEL	I-95-1(10)NHS		55	80

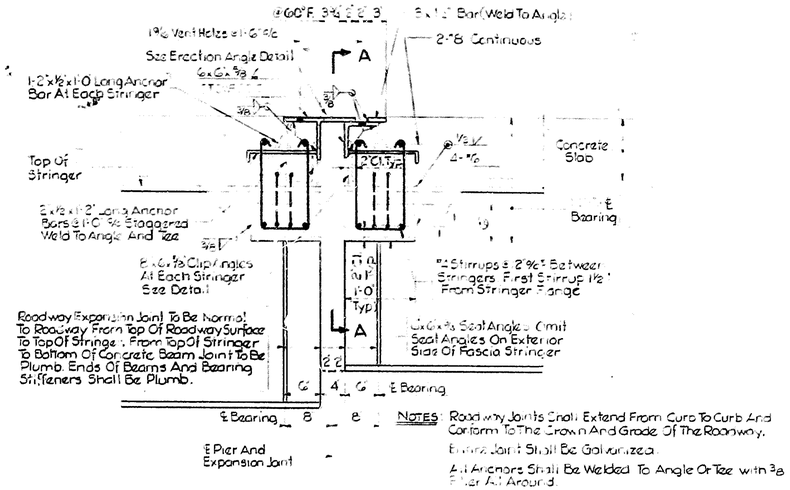

NOTES:
- Roadway Joints Shall Extend From Curb To Curb And Conform To The Crown And Grade Of The Roadway.
- Entire Joint Shall Be Galvanized.
- All Anchors Shall Be Welded To Angle Or Tee with ⅜ø Fillet All Around.
- Erection Angles Not Shown See Detail On This Sheet.
- Slab Reinforcing Not Shown See Sheet № 52

TYPICAL NORMAL SECTION THRU ROADWAY - EXPANSION JOINT AT PIERS 1 & 3

Scale 1"=1'-0"

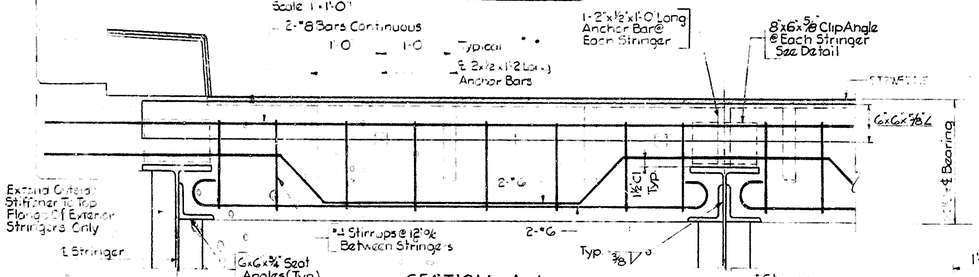

SECTION A-A

Scale 1"=1'-0"

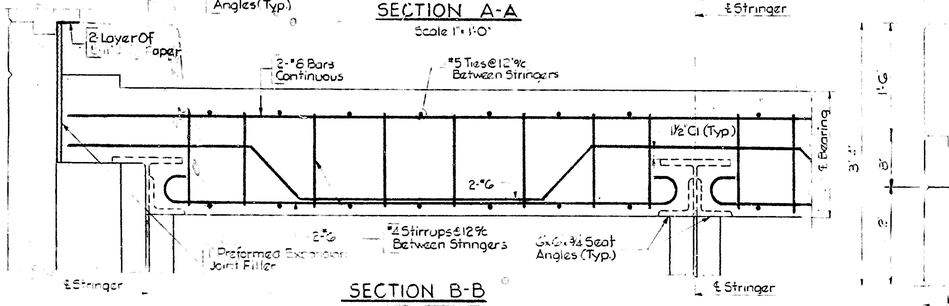

SECTION B-B

Scale 1"=1'-0"

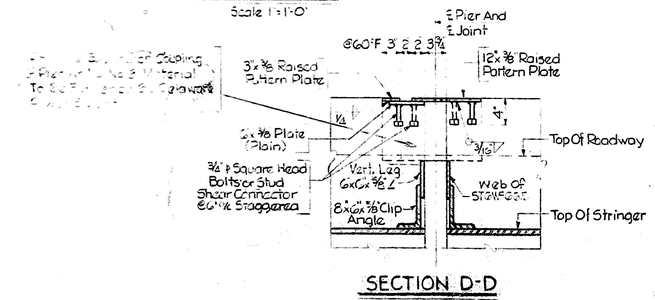

SECTION D-D

Scale 1"=1'-0"

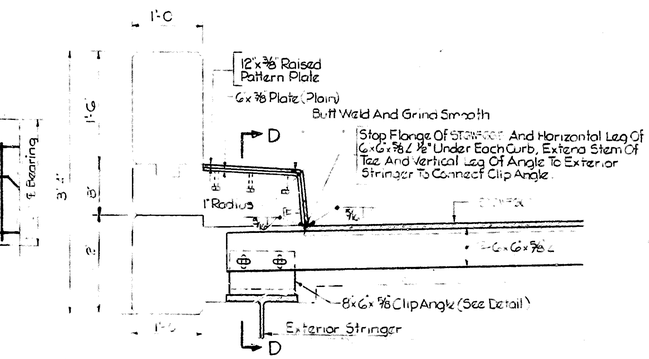

TYPICAL NORMAL SECTION THRU SIDEWALK - EXPANSION JT.

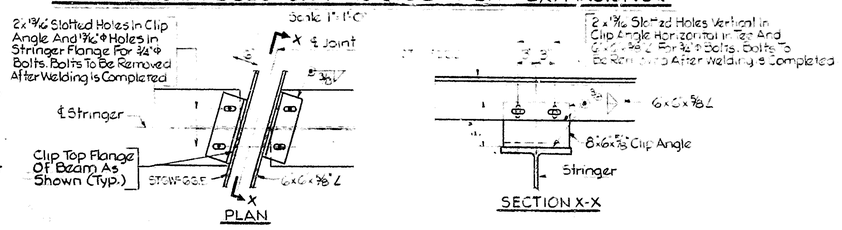

CLIP ANGLE DETAILS

Scale 1"=1'-0"

SCHEDULE OF END BEARING STIFFENER AND CONNECTING PLATES

BEAM FLANGE WIDTH	END BEARING STIFFENERS	DIAPHRAGM CONNECTING PLS
9"	⅜ x 4"	⅜ x 4"
10"	⅜" x 4½"	⅜" x 4½"
12"	⅜" x 5"	⅜" x 5"
14"	½" x 5"	⅜" x 5"
16½"	x 7½"	⅜" x 5"

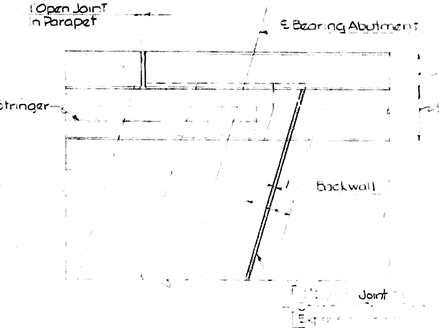

PLAN OF FIXED JOINT AT ABUTMENT

Scale ½"=1'-0"

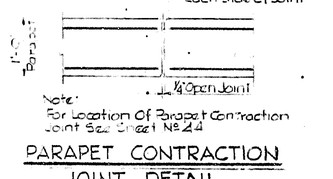

Note: For Location Of Parapet Contraction Joint See Sheet № 24

PARAPET CONTRACTION JOINT DETAIL

No Scale

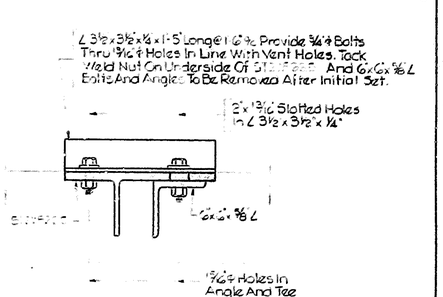

ERECTION ANGLE DETAIL

Scale 1½"=1'-0"

DELAWARE
STATE HIGHWAY DEPARTMENT

INTERSTATE ROUTE - 95

UNDERPASS AT CONCORD PIKE EXPANSION AND FIXED JOINTS

D. R.R.	SCALE AS NOTED	APPROVED BY: Edward Lawson BRIDGE ENGINEER
T. R.R.		
C. H.B.H.		

COUNTY	CONTRACT	F.A.P. NO.	STATE	FED. AID PROJECT NO.	FISCAL YEAR	SHEET NO.	TOTAL SHEETS
N.C.	GS-08-005	2	DEL.	I-95-2(15)16		56	80

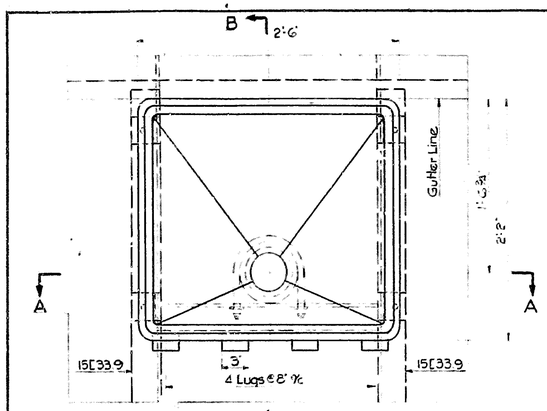

PLAN
Scale 1½"=1'-0"

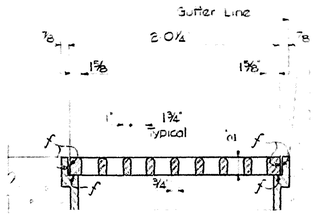

SECTION C-C
Scale 1½"=1'-0"

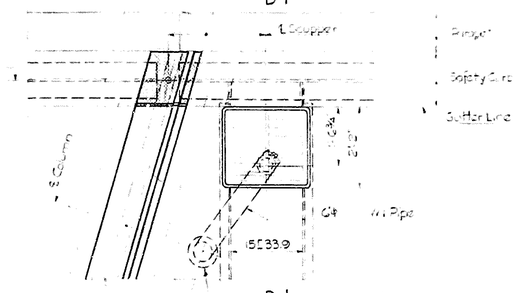

PLAN
Scale ½"=1'-0"

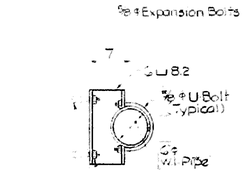

BRACKET "A"
Scale 1"=1'-0"

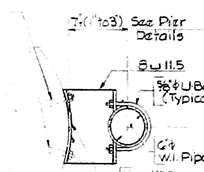

BRACKET "B"
Scale 1"=1'-0"

NOTE: Space Brackets At 6'-0 9/16

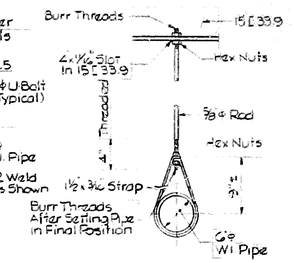

TYPICAL PIPE HANGER
Scale 1"=1'-0"

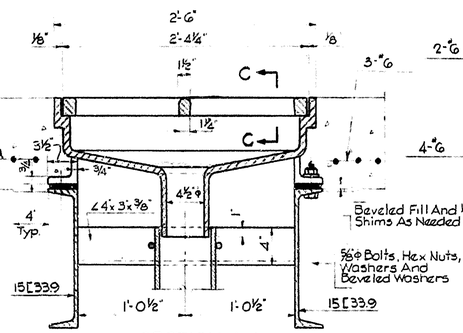

SECTION A-A
Scale 1½"=1'-0"

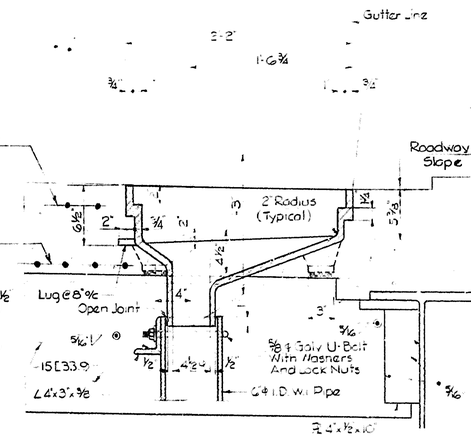

SECTION B-B
Scale 1½"=1'-0"

DRAINAGE DETAILS

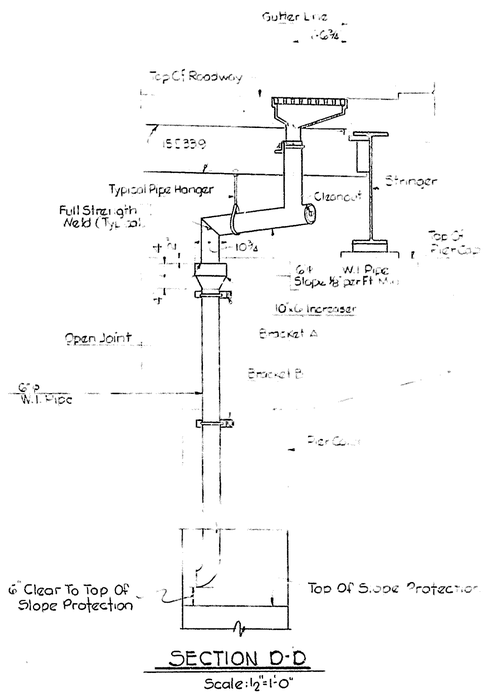

SECTION D-D
Scale: ½"=1'-0"

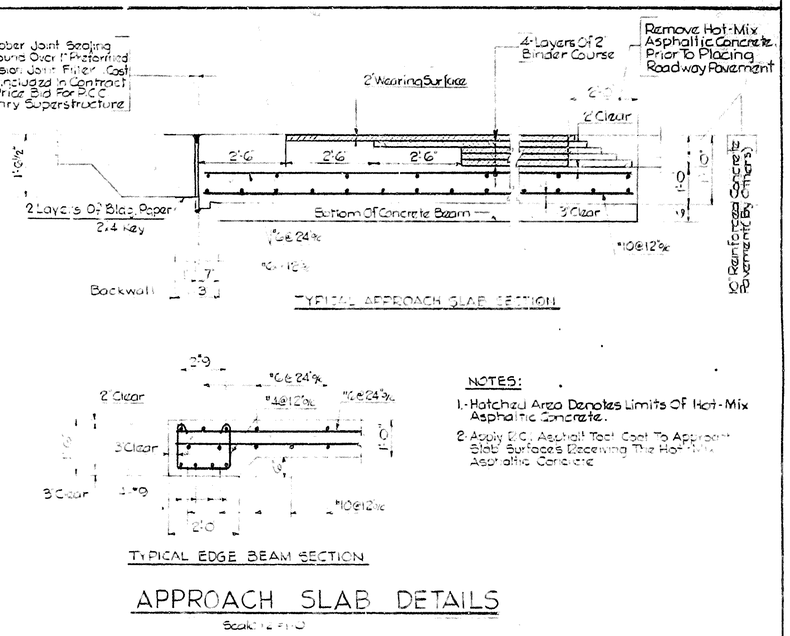

NOTES:

1. Hatching Area Denotes Limits Of Hot-Mix Asphaltic Concrete.
2. Apply P.C. Asphalt Tack Coat To Approach Slab Surfaces Receiving The Hot-Mix Asphaltic Concrete

APPROACH SLAB DETAILS

Scale: ½"=1'-0"

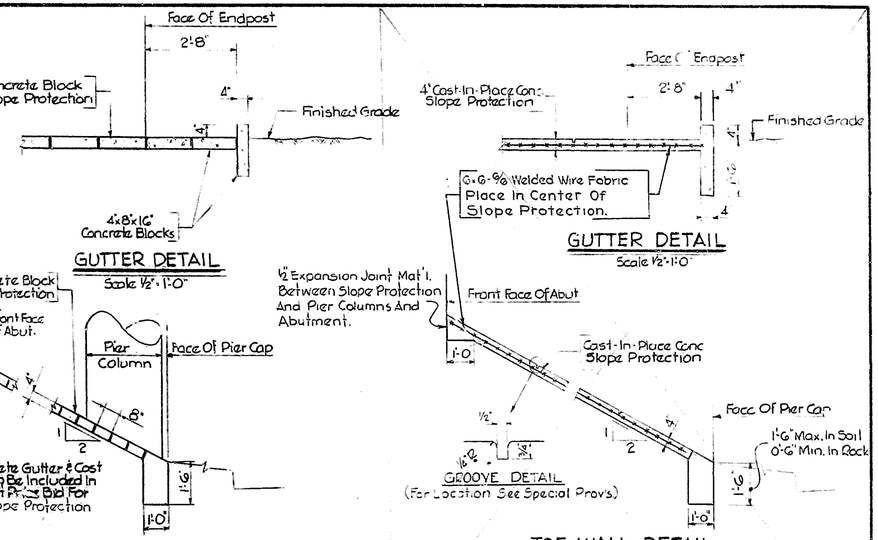

SLOPE PROTECTION DETAILS

DELAWARE
STATE HIGHWAY DEPARTMENT

INTERSTATE ROUTE - 95

UNDERPASS AT CONCORD PIKE
MISCELLANEOUS DETAILS

D. R.R. T. R.R. C. H.B.H.	SCALE AS NOTED	APPROVED BY: Lonnie A. Pearson, Jr. BRIDGE ENGINEER

D C B A 5 10 A B C D

N.C.	65-08-005	I-95-2(19)16	57	80

GENERAL NOTES

1. Railing Shall Be Continuous From End Post To End Post Of Bridge. Each Joint In Rail Length Shall Be Spliced As Detailed. Panel Lengths Of Rail Shall Be Attached To A Minimum Of Four Posts.
2. Anchor Bolt Threads To Be Rolled & Not Cut.
3. At The Contractor's Option Metal Rail May Be Either Aluminum Or Galvanized Steel.

GALVANIZED STEEL RAILS

Materials And Galvanizing Are To Conform To The Following Spec's. Rail Post & Post Base: A.S.T.M.-A36 Grade Structural Steel-Galv. To A.S.T.M. A-123. Rail & Expansion Bar: A.S.T.M. A36 Grade Structural Steel-Galvanized To A.S.T.M. A-123. Rail End Cap: Steel A-245 Grade C-Galvanized To A.S.T.M. A-123. Nuts & Washers For Top End Of Anchor Assembly For Steel Rail Shall Be Type 430 Stainless Steel. The Cut Ends Of Galvanized Steel Railing After Grinding Smooth; Shall Be Given Two Coats Of Zinc Paint Meeting The Requirements Of Federal Specification MIL-P26915 USAF Type I.

ALUMINUM RAILS

Aluminum Rails Will Be In Accordance With Specifications.

Notes:
1. Chain Link Fence Fabric Shall Be Continuous Across Parapet Contraction Joints Except As Noted And Shall Be Woven From 6061-T94 Wire 0.148 in. Dia. Having A 1" Diamond Mesh. Where Radius Of Curvature Of Parapet Wall Is Less Than 400' The Top Bottom And Brace Rails Shall Be Curved To The Alignment Of The Parapet.
2. All Posts And Rails 2" O.D. x ⅛ Wall Thickness.
3. All Posts Shall Be Plumb.
4. Aluminum Chain Link Fence Or Galvanized Steel.

DELAWARE
STATE HIGHWAY DEPARTMENT
INTERSTATE ROUTE 95
UNDERPASS AT CONCORD PIKE
RAILING DETAILS

D. J.P.T.	SCALE AS NOTED	APPROVED BY: [signature] BRIDGE ENGINEER
T. J.P.T.		
C. H.B.H.		

COUNTY	CONTRACT	P. R. & REG. NO.	STATE	FED. AID PROJECT NO.	FISCAL YEAR	SHEET NO.	TOTAL SHEETS
N.C.	65.08.005	2	DEL.	I-95-2(19)16		58	80

BORING B-2-1

Surface Elev. 216.2

212.2	Vari-colored brown moist very dense (Decomposed rock)	2	37
203.2		3	139
201.2	Rotary cored 5' 32" Recovery	4	100/0
199.2	Rotary cored 3' 12" Recovery	5	100/5
196.2			
195.2	**		

*Dark brown moist stiff topsoil
**Brown and gray (Decomposed Rock)
Water level 5' upon completion
2½" Casing
2"-M Coring I 3/8" diameter

ELEV. AT 190 FT.

Rock coring from elev. 204.2 to 195.2, cored very hard. Classification granite gneiss, broken and seamy

BORING B-2-2

Surface Elev. 210.9

205.3	Brown moist dense sand (Decomposed rock)	2	55
205.3		3	100/0
200.8	Rotary cored 4.5' 28" Recovery		
195.8	Rotary cored 5' 51" Recovery		

*Dark brown moist stiff loam, topsoil
Water level 7.5' upon completion
Water level 12.7' - 9/12/63
2½" Casing
2"-M Caring, I 3/3" diameter

Rock coring from elev. 205.3 to 195.8 cored very hard. Classification granite gneiss, broken and seamy

BORING B-2-3

Surface Elev. 212.1

205.6	Vari-colored moist very dense (Decomposed rock)	2	92
206.9	Vari-colored (Decomposed rock)	3	100/1
200.9	Rotary cored 5' 60" Recovery		

*Reddish brown moist stiff topsoil
Water level 5' upon completion
2½" Casing
2"-M Coring I 3/8" diameter

Rock coring from elev. 205.1 to 201.1. Cored very hard. Classification granite gneiss, appeared solid

BORING B-2-4

Surface Elev. 197.5

193.6	Reddish brown moist medium (Decomposed rock)	2	22
189.6		3	10
186.5		4	100/0
181.5	Rotary cored 5' 36" Recovery		
176.5	Rotary cored 5' 53" Recovery		
171.5	Rotary cored 4.5' 60" Recovery		
167.6	Rotary cored 4.3' 52" Recovery		
164.6	Rotary cored 3' 29" Recovery		

Water level 10' - 9/3/63
Water level 10' - 9/4/63

2½" Casing
2"-M Coring I 3/8" diameter

Rock coring from elev. 186.5 to 164.6. Cored very hard Classification granite gneiss, appeared solid

BORING B-2-5

Surface Elev. 199.3

195.9	Red and brown moist hard silty clay	2	121
192.9		3	15
189.4	Brown and green silty clay	4	100/3
189.2		5	100/1
184.4	Rotary cored 4.3' 54" Recovery		
179.4	Rotary cored 5' 58" Recovery		
174.4	Rotary cored 5' 60" Recovery		
171.9	Rotary cored 2.5' 30" Recovery		
167.4	Rotary cored 4.5' 44" Recovery		
162.4	Rotary cored 5' 60" Recovery		
157.4	Rotary cored 5' 65" Recovery		

Water level 12' - 9/4/62
4" Casing to Elev. 189.2
From Elev. 189.2 to Elev. 171.9 - NX Coring 2⅛" diameter
From Elev. 171.9 to Elev. 157.4 - 2"-M Coring, I 3/3" diameter

Rock coring from elev. 189.2 to elev. 157.4. Classification granite gneiss, broken and seamy

BORING B-2-6

Surface Elev. 199.7

195.7	Grayish brown moist medium silty clay (Decomposed rock)	2	17
191.7	Reddish brown moist very stiff sandy clay (Decomposed rock)	3	39
190.7	Rotary cored 5' 60" Recovery		
185.7			

Water level 10' - 9/4/63
Water level 11.1' - 9/5/63

2½" Casing
2"-M Coring I 3/3" diameter

*Light brown moist very soft sandy clay and gravel

Rock coring from elev. 190.7 to 185.7. Classification granite gneiss, appeared solid

BORING B-2-7

Surface Elev. 193.9

ELEV. AT 190 FT.

189.9	Brown moist hard silty clay	2	32
186.9		3	33
185.9	Brown moist hard silty clay	4	22
181.9	Light brown moist very stiff silty clay	5	14
178.9		6	6
177.9		7	16
173.9	Light brown moist soft to hard fine sandy clay	8	23
169.9		9	25
161.9		10	17
159.9		11	**
158.9		12	28
157.9		13	44
153.9		14	195/6
149.9			
149.4			

*Topsoil
**Undisturbed sample-taken 12" Recovery
Water level 21' upon completion
Water level 17' - 9/6/63
To elev. 157.9 - 4" Casing
From elev. 157.9 to Elev. 149.4 - 2½" Casing

BORING B-2-8

Surface Elev. 193.5

189.5	Brownish gray moist medium silty clay	2	9
185.5	Light brown moist stiff silty clay	3	29
183.5		4	18
177.5	Brownish gray moist medium silty clay	5	8
173.5		6	5
169.5		7	7
165.5		8	**
164.1	Reddish brown wet very dense (Decomposed rock)	9	100/3
163.3		10	100/0
158.5	Rotary cored 5.3' 50" Recovery		

Water level 20' - 9/4/63
Water level 13' - 9/5/63
4" Casing
NX Coring, 2⅛" diameter

*Dark brown moist medium clayey topsoil, trace of cinders

Rock coring from elev. 163.8 to 158.5. Classification granite gneiss, seamy

**Undisturbed sample, no recovery

BORING B-2-9

Surface Elev. 192.1

188.1	Brown dry hard silty clay and gravel	2	37
185.1		3	16
184.1	Light brown moist medium to stiff sandy clay and gravel to silty clay	4	9
180.1		5	6
177.1		6	9
176.1	Brown moist stiff to hard sandy clay (Decomposed rock)	7	33
172.1		8	24
164.1			
163.1			

*Brown dry medium sandy clay, topsoil
Water level 19.5' upon completion
Water level 22' at 24 hrs.
2½" Casing

BORING B-2-10

Surface Elev. 191.3

190.3	Brownish gray moist stiff clayey silt (Decomposed Rock)	2	13
187.3		3	6
183.3		4	**
182.3		5	6
180.3	Brownish gray moist medium clayey silt (Decomposed rock)	6	5
176.3		7	***
175.3		8	6
173.3	Grayish brown moist very stiff clayey silt (Decomposed rock)	9	20
168.3		10	13
164.3		11	23
160.3		12	24
157.3	Brown wet very stiff (Decomposed rock)	13	28
152.3		14	43
145.3		15	43
148.3			
147.3			

*Dark brown moist soft loam, topsoil
Water level 17.5' upon completion
Water level 22' at 24 hrs.
** Undisturbed sample taken at elev. 182.3, 14" recovery
*** Undisturbed sample taken at elev. 175.3, 2' recovery
4" Casing to elev. 173.3
From elev. 173.3 to elev. 147.3 - 2½" casing

LEGEND

CASING BLOWS | ELEVATION | VISUAL CLASSIFICATION | SAMPLE NO. | BLOWS/FT.

NOTES:

1. Number in blows per foot column indicate the number of blows to drive the standard 2" OD; 1⅜" ID sampler 12" using a 140 lb weight falling freely 30" unless otherwise noted.
2. Scale 1" = 6'
3. All boring performed using a 6" Flight Auger

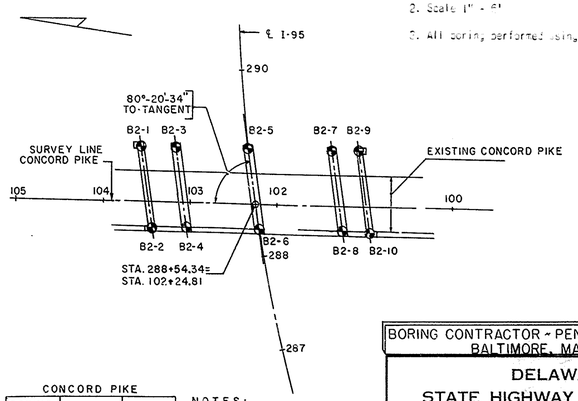

CONCORD PIKE

BORING NO.	STATION	OFFSET
B2-1	103+61	60' R
B2-2	103+47	30' L
B2-3	103+18	61' R
B2-4	103+04	30' L
B2-5	102+32	61' R
B2-6	102+17	30' L
B2-7	101+45	60' R
B2-8	101+30	30' L
B2-9	101+12	60' R
B2-10	100+98	31' L

NOTES:

1. BORINGS ARE NUMBERED AND INDICATED THUS: ⊕
2. ALL BORINGS ARE REFERENCED TO ℄ SURVEY LINE CONCORD PIKE.

(SCALE: 1"=80')

BORING CONTRACTOR - PENNIMAN & BROWNE, INC. BALTIMORE, MARYLAND

DELAWARE
STATE HIGHWAY DEPARTMENT

INTERSTATE ROUTE 95

UNDERPASS AT CONCORD PIKE
BORING LOGS

D. P&B	SCALE	APPROVED BY:
T. P&B	AS NOTED	Johnnie Pearson, Jr.
C. P&B		BRIDGE ENGINEER