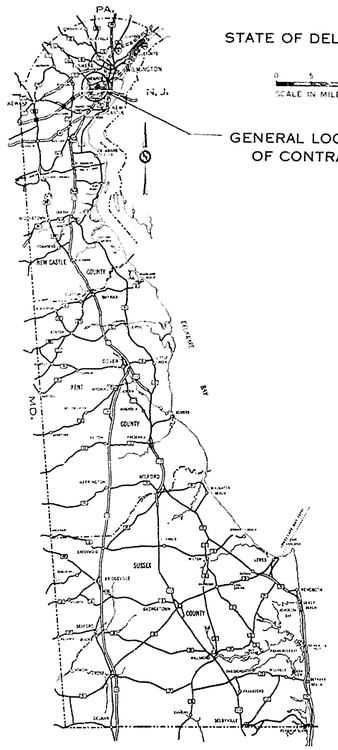

THE STATE OF DELAWARE

DEPARTMENT OF TRANSPORTATION

DELAWARE TURNPIKE ADMINISTRATION

CONSTRUCTION PLAN FOR:

CONTRACT NUMBER 7248

DELAWARE TURNPIKE WIDENING AND IMPROVEMENT PROGRAM

MODIFICATIONS TO STRUCTURES NOS. 675, 677 AND 678

BEGIN PROJECT: STATION NO. 112+35 WBL (112+60 EBL) **END:** STATION NO. 141+00 WBL (123+40 EBL)

LENGTH: 2865 FEET = 0.543 MILES

LENGTH: 873.25 METERS = 0.873 KILOMETERS

CONTRACT	COUNTY	STATE	F.H.W.A. REG. NO	FEDERAL AID PROJECT NUMBER	FISCAL YEAR	SHEET NUMBER	TOTAL SHEETS
7248	NEW CASTLE	DEL.	2			1	31

DELAWARE TURNPIKE WIDENING AND IMPROVEMENT PROGRAM
MODIFICATIONS TO STRUCTURES NOS. 675, 677 AND 678

SURVEY BOOKS

INDEX OF SHEETS

1 TITLE SHEET
TYPICAL SECTION SHEETS
2-3 QUANTITY SHEETS
PLANS & PROFILE SHEETS
4-21 BRIDGE SHEETS
STANDARD SHEETS
22-31 MAINTENANCE OF TRAFFIC SHEETS

INFORMATIONAL DRAWINGS

CONTRACT I-1(21)-1
SHEETS 27, 30-32 & 39-42 OF 66.

CONTRACT I-1(21)-2
SHEETS 26, 29-32 & 35-41 OF 58.

CONTRACT F.A.I.-1-(6)
SHEETS 5 & 7

UTILITIES

DELMARVA POWER & LIGHT COMPANY (ELECTRIC)
DELMARVA POWER & LIGHT COMPANY (GAS)
DIAMOND STATE TELEPHONE COMPANY
DEPARTMENT OF PUBLIC WORKS AND SERVICES-NEW CASTLE COUNTY
DELAWARE TURNPIKE ADMINISTRATION

THE UNDERGROUND UTILITY LOCATIONS HAVE BEEN COMPILED FROM FIELD SURVEYS AND UTILITY COMPANY RECORDS.

PRIOR TO CONSTRUCTION, CONTACT MISS UTILITY FOR VERIFICATION.

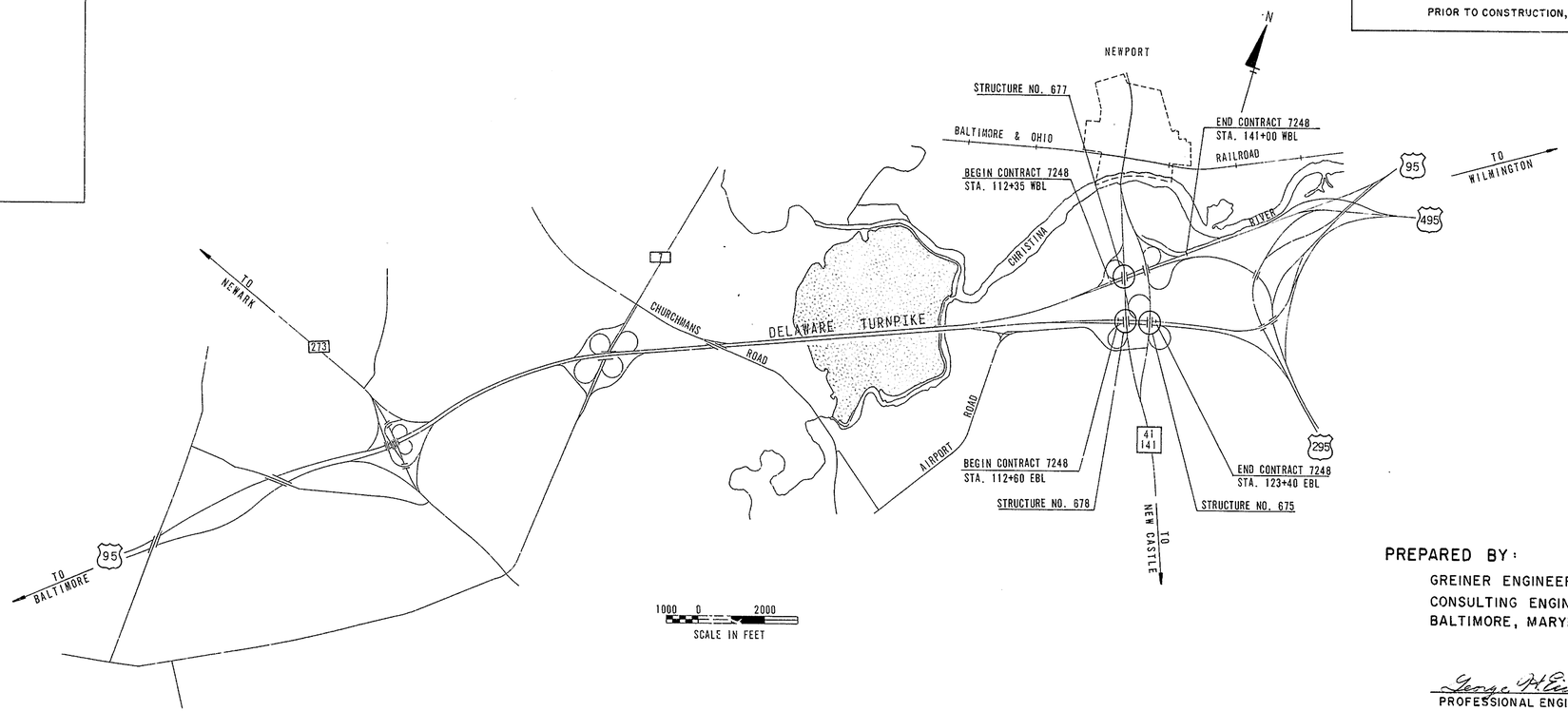

PREPARED BY:

GREINER ENGINEERING SCIENCES, INC.
CONSULTING ENGINEERS
BALTIMORE, MARYLAND

George P. Eichler No. 4421
PROFESSIONAL ENGINEER

SCALES	
TITLE SHEET	1" = 2,000 FEET 609.6 METERS
CONSTRUCTION	1" = _____ FEET _____ METERS
VERTICAL PROFILE	1" = _____ FEET _____ METERS

RECOMMENDED

Bruce C. Furman
TURNPIKE ENGINEER

RECOMMENDED Feb. 9 1982

BRUCE C. FURMAN REGISTERED NO. 2972 DELAWARE PROFESSIONAL ENGINEER
SEAL

APPROVED

DIRECTOR OF TRANSPORTATION

APPROVED Feb 12 1982

SEAL

COUNTY	CONTRACT	F.B.A. REG. NO.	STATE	FED. AID PROJECT NO.	SHEET NO.	TOTAL SHEETS
NEW CASTLE	7248	2	DEL		2	31

DELAWARE TURNPIKE WIDENING AND IMPROVEMENT PROGRAM
MODIFICATIONS TO STRUCTURES NOS. 675, 677 & 678

NO.	REVISIONS	BY	DATE

GENERAL NOTES

1. DESIGN SPECIFICATIONS: DESIGN CRITERIA ARE BASED ON THE 1977 STANDARD SPECIFICATIONS FOR HIGHWAY BRIDGES OF THE AMERICAN ASSOCIATION OF STATE HIGHWAY AND TRANSPORTATION OFFICIALS AND THE AASHTO INTERIM SPECIFICATIONS FOR BRIDGES DATED 1978, 1979, 1980 AND 1981.

2. DESIGN LIVE LOAD: HS20-44 AND MILITARY LOADING.

3. CONSTRUCTION SPECIFICATIONS: MATERIAL AND WORKMANSHIP SHALL CONFORM TO THE DELAWARE DEPARTMENT OF HIGHWAYS AND TRANSPORTATION STANDARD SPECIFICATIONS DATED JANUARY 1, 1974, AND THE SUPPLEMENTAL SPECIFICATIONS DATED JANUARY 1, 1980, UNLESS OTHERWISE NOTED ON THE PLANS AND/OR AS MODIFIED BY THE SPECIAL PROVISIONS.

4. ELEVATIONS: ELEVATIONS ARE BASED ON U.S.C. & G.S. DATUM, 1929, MEAN SEA LEVEL AT SANDY HOOK +0.00.

5. BORINGS: THE SUBSOIL DATA AND INTERPRETATIONS DO NOT FORM A PART OF THIS CONTRACT, AND ARE MADE AVAILABLE TO THE BIDDERS FOR THEIR INFORMATION ONLY. SOIL SAMPLES TAKEN AT THE SITE IN 1980 MAY BE EXAMINED BY ARRANGEMENT WITH EDWARD H. RICHARDSON & ASSOCIATES, INC., NEWARK, DELAWARE.

   CONTRACTOR SHALL MAKE HIS OWN INTERPRETATION AND JUDGEMENT OF THE BORING RESULTS AND SHALL ASSUME FULL RESPONSIBILITY FOR SAME.

6. DESIGN UNIT STRESSES:

CONCRETE:	f'c = 3,000 PSI AT 28 DAYS fc = 1,200 PSI
REINFORCING STEEL:	fs = 20,000 PSI
STRUCTURAL STEEL:	fs = 20,000 PSI

7. EXISTING PLANS: PLANS OF EXISTING BRIDGES MAY BE EXAMINED AT THE DELAWARE TURNPIKE MAINTENANCE BUILDING. PLANS CONTAIN THE FOLLOWING DRAWINGS:

NEW BRIDGE NUMBER	FORMER BRIDGE NUMBER	STATE OF DELAWARE CONTRACT NUMBER
675	6-3	I-1(21)-1 CHRISTINA RIVER INTERCHANGE SHEETS 27-32 AND 39-43
677	6-4	I-1(21)-2 CHRISTINA RIVER INTERCHANGE SHEETS 27-32 AND 39-43
678	6-2	I-1(21)-2 CHRISTINA RIVER INTERCHANGE SHEETS 26-41

8. EXCAVATION AND BACKFILL FOR STRUCTURES: THE DEPTH OF EXCAVATION MEASURED FOR PAYMENT SHALL BE THE VERTICAL DISTANCE FROM THE BOTTOM OF THE NEW CONCRETE FOOTING, FROM THE BOTTOM OF THE EXISTING CONCRETE FOOTING, OR FROM THE TOP OF THE EXISTING CONCRETE FOOTING, WHICHEVER IS APPLICABLE, TO THE GROUND LINE EXISTING AT THE TIME OF EXCAVATION EXCEPT AS MODIFIED BY THE SPECIAL PROVISION ENTITLED "SLOPE PROTECTION." THE HORIZONTAL LIMITS OF EXCAVATION FOR PAYMENT SHALL BE 1'-6" BEYOND THE FACE OF NEW OR EXISTING CONCRETE FOOTINGS, AS APPLICABLE. SEE PLANS.

   THIS ITEM SHALL INCLUDE THE REMOVAL AND DISPOSAL OF ALL MATERIAL--SUCH AS, BUT NOT LIMITED TO, ROADWAY OR SHOULDER PAVING, EXISTING CONCRETE FORMS, ETC.--WITHIN THE LIMITS DESCRIBED ABOVE.

   ANY EXCAVATION OUTSIDE OF THE ABOVE PRESCRIBED LIMITS REQUIRED BY THE CONTRACTOR TO COMPLETE THE MODIFICATIONS TO THESE STRUCTURES AS SHOWN ON THE PLANS AND/OR DESCRIBED IN THE SPECIAL PROVISIONS WILL NOT BE MEASURED OR PAID FOR AS STRUCTURE EXCAVATION, BUT WILL BE CONSIDERED AS INCIDENTAL WORK TO OTHER PAY ITEMS.

9. PILES: ALL PILES SHALL BE CAST-IN-PLACE CONCRETE PILES DRIVEN TO DEVELOP A MINIMUM BEARING CAPACITY OF 35 TONS. SEE SPECIAL PROVISIONS.

10. CONCRETE: ALL CONCRETE IN THE SUPERSTRUCTURE AND SUBSTRUCTURE ABOVE FOOTINGS SHALL CONFORM TO CLASS A MIX OF SECTION 812 OF THE SPECIFICATIONS. CONCRETE IN THE FOOTINGS SHALL CONFORM TO CLASS B MIX OF SECTION 812 OF THE SPECIFICATIONS.

    MINIMUM COMPRESSIVE STRENGTH IN 28 DAYS:

CLASS A MIX	4,000 PSI
CLASS B MIX	3,000 PSI

    ALL EXPOSED EDGES SHALL BE CHAMFERED 3/4 X 3/4 INCHES UNLESS OTHERWISE NOTED.

11. REINFORCING BARS: ALL REINFORCING STEEL BARS SHALL MEET THE REQUIREMENTS FOR DEFORMED BILLET-STEEL BARS FOR CONCRETE REINFORCEMENT IN ACCORDANCE WITH AASHTO M 31 (ASTM A 615), GRADE 40 OR GRADE 60.

    THE CLEAR DISTANCE BETWEEN REINFORCING STEEL BARS AND THE FACE OF CONCRETE SHALL BE AS FOLLOWS, UNLESS OTHERWISE SHOWN ON THE PLANS:

FOOTINGS	3 INCHES (UNFORMED)
BOTTOM OF SLABS	1 INCH
TOP OF SLABS	2 INCHES
TIES	1 1/2 INCHES
ALL OTHER LOCATIONS	2 INCHES

    LENGTH OF LAP FOR REINFORCING BARS AND LENGTH OF BAR PROJECTION AT CONSTRUCTION JOINTS SHALL BE IN ACCORDANCE WITH AASHTO SPECIFICATIONS FOR HIGHWAY BRIDGES, 1977, AND AASHTO INTERIM SPECIFICATIONS FOR BRIDGES DATED 1978, 1979, 1980 AND 1981, UNLESS OTHERWISE SHOWN ON THE PLANS.

12. REINFORCING BAR LEGEND: LETTERS INDICATE BAR LOCATION.

    (P) PIER FOOTINGS AND SUBSTRUCTURE
    (S) BRIDGE SUPERSTRUCTURE

    FIRST NUMBER(S) INDICATES BAR SIZE.
    LAST TWO NUMBERS INDICATE SEQUENCE OF BARS.

13. STRUCTURAL STEEL: ALL STRUCTURAL STEEL SHALL MEET THE FOLLOWING SPECIFICATION REQUIREMENTS:

STRUCTURAL STEEL, INCLUDING LONGITUDINAL BEAMS, STIFFENERS, CROSS-FRAMES AND DIAPHRAGMS, CONNECTION PLATES, PIN PLATES AND SHIMS, ALL SPLICE MATERIAL, LONGITUDINAL STRENGTHENING ANGLES, EXPANSION DAMS, DRAINAGE SUPPORTS AND BEARINGS	AASHTO M 183 (ASTM A 36)
HIGH STRENGTH BOLTS, INCLUDING SUITABLE NUTS AND PLAIN HARDENED WASHERS	AASHTO M 164 (ASTM A 325)
SHEAR CONNECTORS	AASHTO M 183 (ASTM A 36)
PINS	AASHTO M 102 (ASTM A 668, CLASS F)
ANCHOR BOLTS AND HOOK BOLTS	AASHTO M 183 (ASTM A 36)
DRAIN PIPE (DOWNSPOUTS)	ASTM A 53, ANY TYPE, STANDARD WEIGHT OR ASTM A 120 STD. WT.

    ALL DIMENSIONS SHOWN ON THESE DRAWINGS ARE FOR STRUCTURES AT A NORMAL TEMPERATURE OF + 68°F.

    SHOP DRAWINGS SHALL SHOW CLEARLY THE DIMENSIONS AND LOCATIONS OF ALL WELDS, BOLT SIZES, OPEN HOLES, PAINTING, ETC., IN ADDITION TO THE SIZE AND DIMENSIONS OF SHAPES, CHANNELS, ANGLES, PLATES AND BARS.

    THE STRUCTURAL STEEL FABRICATOR SHALL BE CERTIFIED UNDER THE AISC QUALITY CERTIFICATION PROGRAM-CATEGORY I. EVIDENCE OF CERTIFICATION SHALL BE SUBMITTED TO THE ENGINEER FOR HIS APPROVAL BEFORE BEGINNING ANY WORK.

    ANCHOR BOLTS SHALL BE CAST-IN-PLACE OR HOLES MAY BE DRILLED AND THE BOLTS SET IN PORTLAND CEMENT GROUT. TO PREVENT RUST, THE THREADS OF THE ANCHOR BOLTS SHALL BE THOROUGHLY COATED WITH AN APPROVED TYPE OF HEAVY GREASE AND SECURELY WRAPPED IN BURLAP IMMEDIATELY AFTER THE CONCRETE OR GROUT HAS ATTAINED ITS INITIAL SET. PAYMENT FOR THESE RUST PREVENTATIVE MEASURES SHALL BE INCLUDED IN THE PRICE BID FOR ITEM NO. 606.

    ALL BEARING STIFFENERS SHALL BE VERTICAL UNDER FULL DEAD LOAD.

    SHOULD OTHER THAN STANDARD SIZE BOLT HOLES BE DRILLED AND/OR REAMED IN EITHER NEW OR EXISTING STRUCTURAL STEEL, THE ENGINEER SHALL BE NOTIFIED IMMEDIATELY.

14. WELDING: ALL WELDING SHALL CONFORM TO THE AMERICAN WELDING SOCIETY SPECIFICATIONS AWS D1.1-81 "STRUCTURAL WELDING CODE-STEEL" AND AWS D1.4-79 "STRUCTURAL WELDING CODE-REINFORCING STEEL."

    ELECTROSLAG AND ELECTROGAS WELDING PROCESSES SHALL NOT BE USED.

15. DECK SLAB: STAY-IN-PLACE FORMS WILL NOT BE PERMITTED.

    SHOP DRAWINGS FOR DECK FORMS SHALL BE SUBMITTED TO THE ENGINEER FOR REVIEW.

16. PAINTING: SEE SPECIAL PROVISIONS.

17. CONCRETE SAFETY BARRIERS: PERMANENT PORTLAND CEMENT CONCRETE SAFETY BARRIERS ADJACENT TO PIERS AND EXTENDING 6 FEET EAST AND WEST OF THE BRIDGE PIER COLUMNS SHALL BE CONSTRUCTED AS PART OF THIS CONTRACT.

18. UTILITIES: THE CONTRACTOR SHALL MAINTAIN ALL UTILITIES LOCATED ON THE STRUCTURE IN FULL SERVICE DURING THE MODIFICATIONS TO THESE BRIDGES. THE CONTRACTOR SHALL MODIFY EXISTING UTILITIES AND APPURTENANCES AS SHOWN ON THE PLANS TO THE SATISFACTION OF THE ENGINEER AND THE UTILITY COMPANY INVOLVED.

    THE FOLLOWING UTILITIES ARE LOCATED ON THE EXISTING STRUCTURES:

TELEPHONE DUCTS AND CABLES	DIAMOND STATE TELEPHONE COMPANY
8" LINE GAS LINE	DELAWARE POWER AND LIGHT COMPANY
ELECTRIC SERVICE TO SIGNS FOR TURNPIKE	DELAWARE TURNPIKE ADMINISTRATION

19. MAINTENANCE OF TRAFFIC: TRAFFIC SHALL BE MAINTAINED ON THE DELAWARE TURNPIKE AND ON STATE ROUTE 141 (BASIN ROAD) IN ACCORDANCE WITH "CONSTRUCTION SEQUENCE AND MAINTENANCE OF TRAFFIC" PLANS, SHEETS 22 TO 31.

20. TEMPORARY STRUCTURAL WORK: SEE SPECIAL PROVISIONS.

21. VERIFICATION OF DIMENSIONS AND ELEVATIONS: IT SHALL BE THE CONTRACTOR'S RESPONSIBILITY TO VERIFY ALL DIMENSIONS AND ELEVATIONS SHOWN ON THE PLANS OF THE EXISTING STRUCTURES PRIOR TO THE FABRICATION OF ANY STRUCTURAL STEEL UNITS AND THE CONTRACTOR SHALL MAKE ANY REQUIRED ADJUSTMENTS TO BEAM LENGTHS, DIMENSIONS BETWEEN BEAMS, BEARING PAD ELEVATIONS, REINFORCING BAR SCHEDULES, ETC. AS REQUIRED AND APPROVED BY THE ENGINEER.

22. CONSTRUCTION DETAILS: IN REMOVING EXISTING MATERIAL, THE CONTRACTOR SHALL EXERCISE CARE TO PREVENT DAMAGE TO THOSE PORTIONS OF THE STRUCTURE WHICH WILL REMAIN IN PLACE. ANY PORTION OF THE STRUCTURE DAMAGED BY THE CONTRACTOR'S OPERATION SHALL BE REPAIRED OR REPLACED BY THE CONTRACTOR AT HIS OWN EXPENSE TO THE SATISFACTION OF THE ENGINEER.

    ADEQUATE TEMPORARY BRACING AND SHORING SHALL BE PROVIDED AND USED BY THE CONTRACTOR AS REQUIRED DURING CONSTRUCTION.

    AN EPOXY BONDING COMPOUND SHALL BE APPLIED TO ALL EXISTING CONCRETE AND NEW HARDENED CONCRETE SURFACES TO COME IN CONTACT WITH SUBSEQUENTLY POURED CONCRETE. THE SURFACES TO BE JOINED SHALL BE PREPARED IN ACCORDANCE WITH THE SPECIFICATIONS AND SPECIAL PROVISIONS.

PROPOSAL QUANTITIES FOR STRUCTURES

SECTION NO.	207		401		602			604	605	606	607	608	624	S.P.	S.P.	S.P.	S.P.	S.P.	S.P.	S.P.	S.P.	S.P.
DESCRIPTION	EXCAVATION AND BACKFILL FOR STRUCTURES		HOT MIX, HOT LAID BITUMINOUS CONCRETE PAVEMENT (TYPE D)		PORTLAND CEMENT CONCRETE MASONRY *			MEMBRANE WATER-PROOFING	BAR REINFORCE-MENT *	STEEL STRUCTURES	METAL BRIDGE RAILING	REMOVAL OF EXISTING MASONRY	CAST-IN-PLACE CONCRETE PILES	CONSTRUCTION ENGINEERING	REMOVAL OF EXISTING STRUCTURAL STEEL	MODIFICATIONS TO BRIDGE DRAINAGE SYSTEM	CLEANING & PAINTING EXISTING STRUCTURAL STEEL	SLOPE PROTECTION	PERMANENT P.C.C. SAFETY BARRIERS	UTILITIES ON STRUCTURES	TEMPORARY STRUCTURAL WORK	INITIAL EXPENSE
					PIER FOOTINGS	PIERS ABOVE FOOTINGS	SUPER-STRUCTURE															
UNIT	C.Y.		TONS		C.Y.	C.Y.	C.Y.	S.Y.	LBS.	L.S.	L.S.	C.Y.	L.F.	L.S.	L.S.	L.S.	L.S.	L.S.	C.Y.	L.S.	L.S.	L.S.
BRIDGE NO. 675	198		11		71	39	35	79	32,860	L.S. (12,400 LBS.)	L.S.	84	765	L.S.	L.S.	L.S.	L.S.	L.S.	33	L.S.	L.S.	L.S.
BRIDGE NO. 677	128		11		49	41	35	15	25,500	L.S. (86,200 LBS.)	L.S.	80	670	L.S.	L.S.	L.S.	L.S.	L.S.	26	L.S.	L.S.	L.S.
BRIDGE NO. 678	106		10		41	26	36	44	19,960	L.S. (6,700 LSB.)	L.S.	68	460	L.S.	L.S.	L.S.	L.S.	L.S.	33	L.S.	L.S.	L.S.
TOTAL	432		32		161	106	106	138	78,320	L.S. (105,300 LBS.)	L.S.	232	1,895	L.S.	L.S.	L.S.	L.S.	L.S.	92	L.S.	L.S.	L.S.

* FIXED QUANTITY ITEMS

DELAWARE
DEPARTMENT OF TRANSPORTATION
DIVISION OF HIGHWAYS

MODIFICATIONS TO BRIDGE NOS. 675, 677 & 678
DELAWARE ROUTE 141 OVER TURNPIKE
GENERAL NOTES AND QUANTITIES

D. W.H.P. T. A.J.S. C. W.H.P.	SCALE NONE	APPROVED BY: BRIDGE ENGINEER

COUNTY	CONTRACT	P.R.A. REG. NO.	STATE	FED. AID PROJECT NO.	SHEET NO.	TOTAL SHEETS
NEW CASTLE	7248	2	DEL.		3	31

DELAWARE TURNPIKE WIDENING AND IMPROVEMENT PROGRAM
MODIFICATIONS TO STRUCTURES NOS. 675, 677 & 678

PREL. TRACING _____ DESIGN _____ CHKD. _____

REVISIONS

MAINTENANCE OF TRAFFIC
QUANTITY SUMMARY

SECTION NO.	202	303	401	401	S.P.	722	724	S.P.	S.P.	S.P.	S.P.	S.P.	S.P.	S.P.	S.P.	S.P.	S.P.	S.P.	S.P.	S.P.	738	S.P.	S.P.	S.P.	S.P.	S.P.	S.P.		
DESCRIPTION	EXCAVATION AND EMBANKMENT	CRUSHER RUN BASE COURSE	3 1/2" HOT-MIX, HOT LAID BITUMINOUS CONCRETE PAVEMENT TYPE "B"	2" HOT-MIX, HOT LAID BITUMINOUS CONCRETE PAVEMENT TYPE "C"	ASPHALT CEMENT	TOP SOIL	PERMANENT ROADSIDE SEEDING AND MULCHING	6" YELLOW TEMPORARY EDGE PAVEMENT MARKING TAPE	6" WHITE TEMPORARY EDGE PAVEMENT MARKING TAPE	6" WHITE TEMPORARY LANE PAVEMENT MARKING TAPE	PORTABLE P.C.C. SAFETY BARRIER LONG HAUL	PORTABLE P.C.C. SAFETY BARRIER SHORT HAUL	CRASH CUSHION FURNISH AND PLACE	CRASH CUSHION SHORT HAUL	BARRICADE WARNING LIGHTS TYPE B	BARRICADE WARNING LIGHTS TYPE C	BARRICADE WARNING LIGHTS TYPE A	WARNING SIGNS (STATIONARY)	WARNING SIGNS (TEMPORARY)	FLAGMAN	ARROW BOARDS	TEMPORARY BARRICADES TYPE II	TRUCK MOUNTED ATTENUATOR (TMA)	6" WHITE TEMPORARY LANE PAVEMENT MARKING PAINT	PAVEMENT MARKING REMOVAL	MAINTENANCE OF TRAFFIC		
UNITS	C.Y.	TONS	TONS	TONS	TONS	S.Y.	S.Y.	L.F.	L.F.	L.F.	L.F.	L.F.	BBLS.	BBLS.	EA./DAY	EA./DAY	EA./DAY	EA.	EA./SET-UP	HOURS	EA./DAY	EA./SET-UP	EA./DAY	L.F.	L.F.	L.S.		
STAGE I WESTBOUND LANES I-95 & I-295 UNDER BASIN ROAD	435	239	167	96	12	170	170	-	-	-	-	-	-	-	24	128	1336	16	8	-	21	64	-	-	-	-		
STAGE II	-	-	-	-	-	-	-	1886	5643	-	492	-	5	-	2046	4092		-	-	1286	-	-	-	3375	6888	-		
STAGE I EASTBOUND LANES I-95 & I-295 UNDER BASIN ROAD	-	-	-	-	-	-	-	-	-	-	4320	-	10	-	5208	20632	794	8	-	3264	-	-	-	-	-	-		
STAGE I SOUTHBOUND BASIN ROAD OVER STRUCTURES NOS. 677 & 678	-	-	-	-	-	-	-	-	2040	650	1176	-	8	-	1116	2604	496	8	2	699	186	-	-	-	1870	-		
STAGE II	-	-	-	-	-	-	-	-	1350	540	-	1140	-	8	1116	2604		-	1	350	93	-	-	-	-	-		
STAGE III	-	-	-	-	-	-	-	-	1350	-	216	1176	-	5	372	1736		-	-	233	62	-	-	-	-	-		
STAGE I NORTHBOUND BASIN ROAD OVER STRUCTURE NO. 675	-	-	-	-	-	-	-	-	780	-	660	-	5	-	558	1395	558	8	1	350	-	-	-	-	-	-		
STAGE II	-	-	-	-	-	-	-	-	970	750	-	612	-	5	558	1302		-	1	350	93	-	-	-	700	-		
STAGE III	-	-	-	-	-	-	-	-	1920	-	840	660	-	5	558	1860		-	-	350	93	-	-	-	-	-		
CONTINGENCY	-	-	-	-	-	-	-	-	-	-	-	-	-	-	-	-	-	-	-	-	-	-	40	-	-	-		
TOTALS	435	239	167	96	12	170	170	1886	14053	1940	7704	3588	28	23	11556	36553	3184	40	13	6882	548	64	40	3375	9458	L.S.		

COUNTY	CONTRACT	P.R.A. REG. NO.	STATE	FED. AID PROJECT NO	SHEET NO.	TOTAL SHEETS
NEW CASTLE	7248	2	DEL.		4	31

DELAWARE TURNPIKE WIDENING AND IMPROVEMENT PROGRAM
MODIFICATIONS TO STRUCTURES NOS. 675, 677 & 678

NO.	REVISIONS	BY	DATE

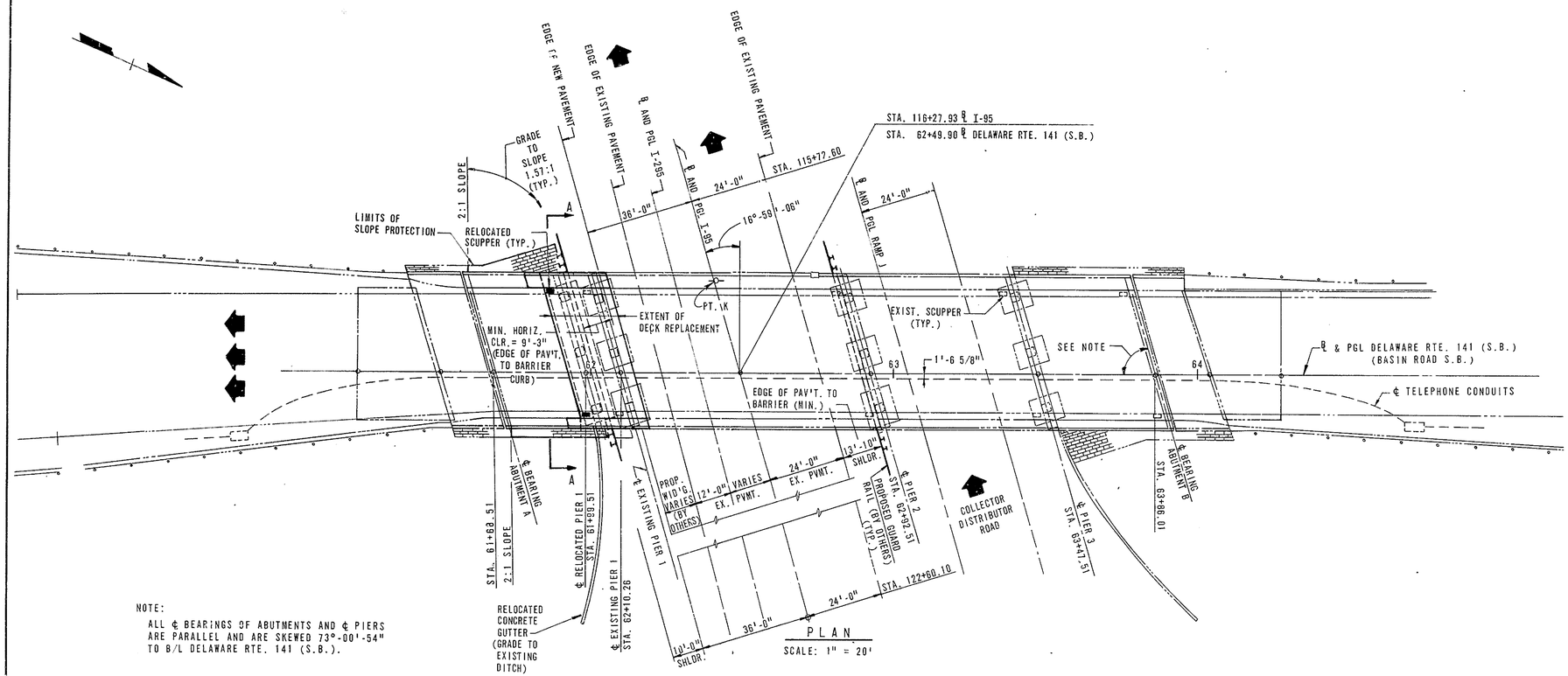

NOTE:
ALL ℄ BEARINGS OF ABUTMENTS AND ℄ PIERS ARE PARALLEL AND ARE SKEWED 73°-00'-54" TO B/L DELAWARE RTE. 141 (S.B.).

PLAN
SCALE: 1" = 20'

SUGGESTED CONSTRUCTION SEQUENCE

1. CONSTRUCT PERMANENT P.C.C. SAFETY BARRIER AT PIER 2.
2. REMOVE SLOPE PAVING AND EMBANKMENT BETWEEN ABUTMENT A AND PIER 1 AS REQUIRED.
3. CONSTRUCT RELOCATED PIER 1.
4. MODIFY BRACING SYSTEM IN SPAN 2 AND INSTALL THE ANGLES IN SPAN 2.
5. REMOVE PORTION OF SUPERSTRUCTURE CONCRETE, KEEPING TWO LANES OF TRAFFIC IN SERVICE ON THE BRIDGE AT ALL TIMES.
6. MODIFY STRUCTURAL STEEL AND INSTALL NEW BEARINGS IN SPAN 1, RELOCATED PIER 1. REMOVE PORTION OF LONGITUDINAL BEAMS IN FORMER SPAN 1.
7. MODIFY STRUCTURAL STEEL, SPLICE NEW LONGITUDINAL BEAMS IN SPAN 2 AND INSTALL NEW BEARINGS IN SPAN 2, RELOCATED PIER 1. COMPLETE STRUCTURAL STEEL WORK IN SPANS 1 AND 2.
8. RECONSTRUCT SUPERSTRUCTURE CONCRETE AND BITUMINOUS WEARING SURFACE, INCLUDING BRIDGE DRAINAGE AND BRIDGE RAILING.
9. REPEAT STEPS 4 THRU 8 FOR REMAINDER OF BRIDGE.
10. REMOVE EXISTING PIER 1 AND CONSTRUCT PERMANENT P.C.C. SAFETY BARRIER AT PIER 1.
11. COMPLETE SLOPE PROTECTION WORK.

NOTE:
1. FOR GENERAL NOTES, SEE SHEET NO. 2.

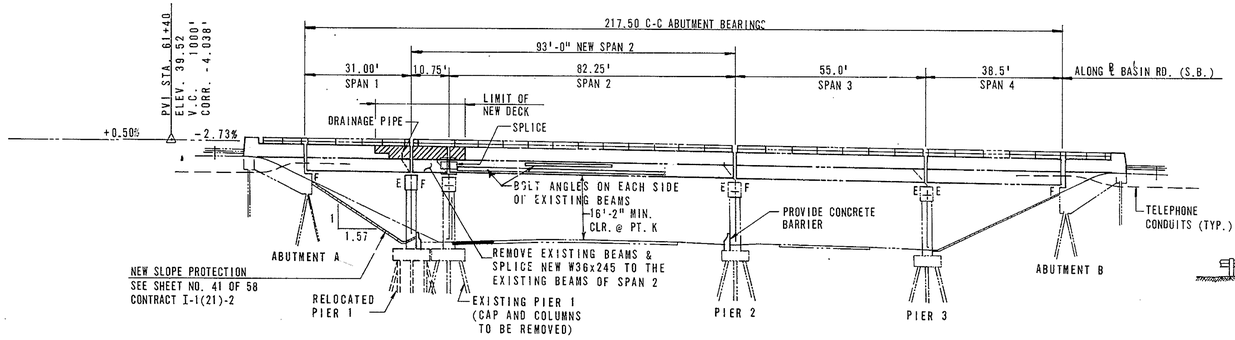

ELEVATION
SCALE: 1" = 20'

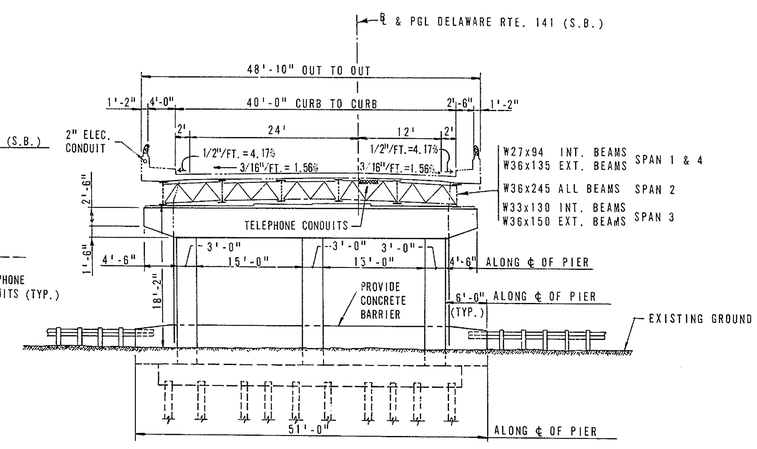

SECTION A-A
SCALE: 1" = 10'

DELAWARE
DEPARTMENT OF TRANSPORTATION
DIVISION OF HIGHWAYS

MODIFICATIONS TO BRIDGE NO. 677
DELAWARE ROUTE 141 OVER W.B. TURNPIKE
PLAN AND ELEVATION

D. A.A.A.	SCALE	APPROVED BY:
T. O.A.B.	AS SHOWN	
C. W.H.P.		BRIDGE ENGINEER

COUNTY	CONTRACT	P. R. A. REG. NO.	STATE	FED. AID PROJECT NO.	SHEET NO.	TOTAL SHEETS
NEW CASTLE	7248	2	DEL.		5	31

DELAWARE TURNPIKE WIDENING AND IMPROVEMENT PROGRAM
MODIFICATIONS TO STRUCTURES NOS. 675, 677 & 678

NO.	REVISIONS	BY	DATE

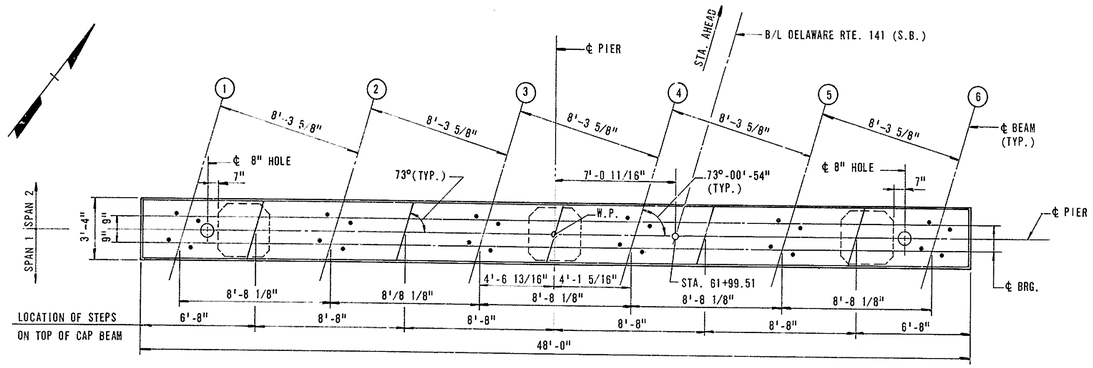

PLAN
SCALE: 1/4" = 1'-0"

BRIDGE SEAT ELEVATIONS						
BEAM	1	2	3	4	5	6
ELEVATION	30.225	30.351	30.448	30.544	30.463	30.247

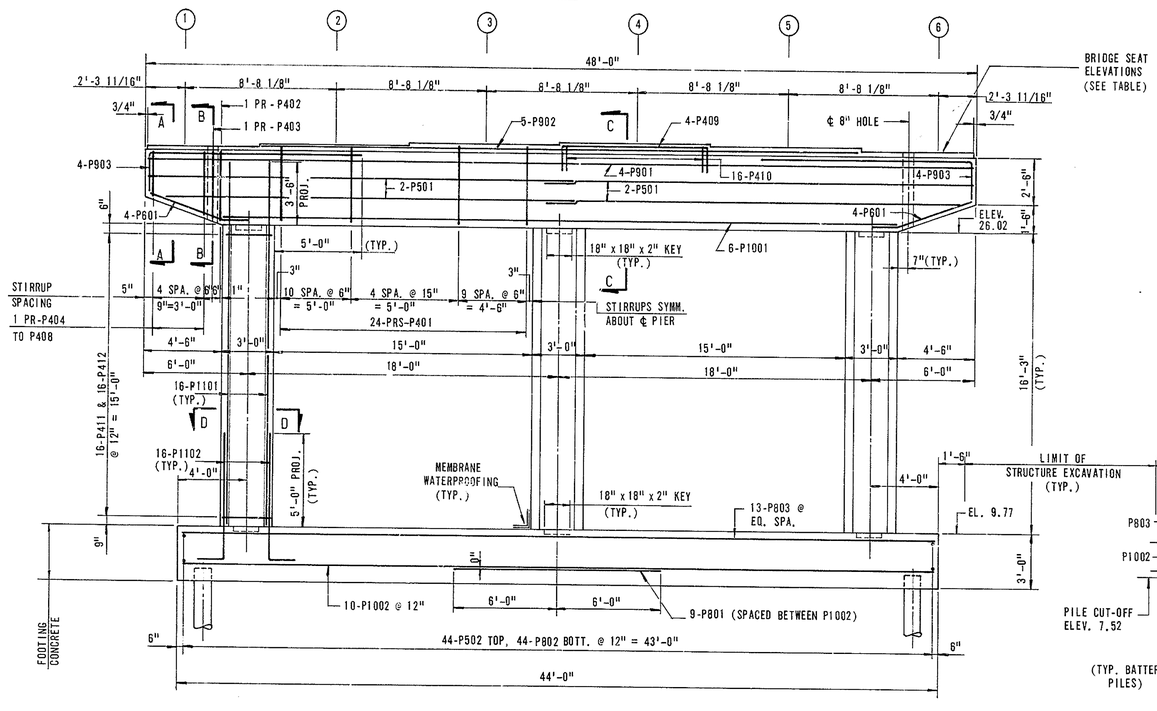

ELEVATION
SCALE: 1/4" = 1'-0"

NOTE 'A':
THE TOP, SIDES AND VERTICAL ENDS OF BOTH THE NEW PIER CAP AND ALL REMAINING EXISTING PIER CAPS SHALL BE GIVEN AN EPOXY PROTECTIVE COATING.

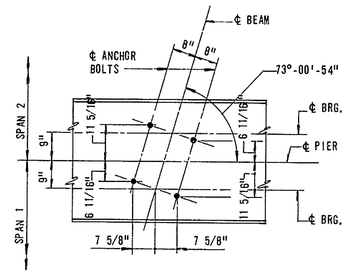

TYPICAL ANCHOR BOLT PLAN
NO SCALE

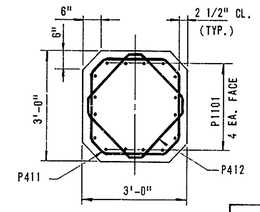

SECTION D-D
SCALE: 1/2" = 1'-0"

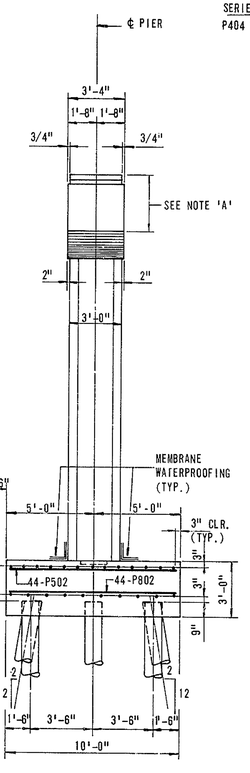

END ELEVATION
SCALE: 1/4" = 1'-0"

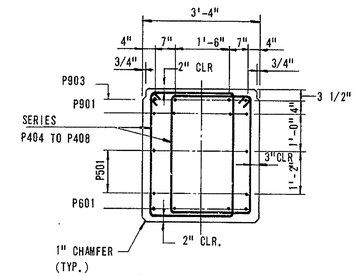

SECTION A-A
SCALE: 1/2" = 1'-0"

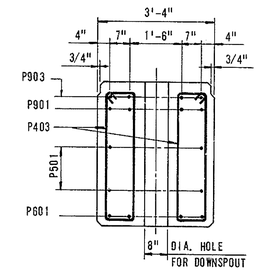

SECTION B-B
SCALE: 1/2" = 1'-0"

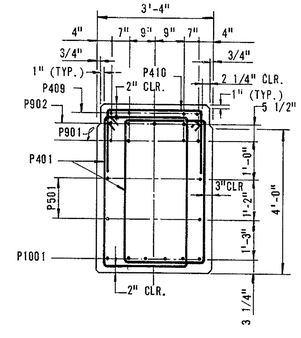

SECTION C-C
SCALE: 1/2" = 1'-0"

REINFORCING SCHEDULE - PIER 1

LOCATION	MARK	NO. REQ'D.	TYPE	LENGTH	A	B	C	D	E
CAP	P401	96	4	13'-4 1/2"	2'-3 1/4"	4'-0"	5"		
CAP	P402	4	4	13'-0 1/2"	2'-3 1/4"	3'-10"	5"		
CAP	P403	4	4	9'-10"	10"	3'-8"	5"		
CAP	P404 TO P408	4 EACH	4	10'-4 1/2" TO 12'-4 1/2" V.B.6" (4 EA.)	2'-3 1/4"	2'-6" TO 3'-6" V.B..3"	5"		
CAP	P409	4	2	11'-2"	1'-6"	8'-2"			
CAP	P410	16	2	5'-10"	1'-6"	2'-10"			
COLUMN	P411	48	5	10'-4"	1'-10"	6 1/2"	5"	4 1/2"	4 1/2"
COLUMN	P412	48	6	9'-0"	1'-4 1/2"	8"	5"	11 1/2"	11 1/2"
CAP	P501	8	STR.	24'-7"					
FTG.	P502	44	STR.	9'-6"					
CAP	P601	8	3	6'-6"	2'-0"	4'-6"	4'-3"	1'-6"	
FTG.	P801	9	STR.	12'-0"					
FTG.	P802	44	STR.	9'-6"					
FTG.	P803	13	STR.	43'-6"					
CAP	P901	4	STR.	47'-6"					
CAP	P902	5	STR.	34'-4"					
CAP	P903	8	1	14'-4 1/2"	2'-1 1/2"	12'-3"			
CAP	P1001	6	STR.	39'-0"					
FTG.	P1002	10	STR.	43'-6"					
COLUMN	P1101	48	STR.	19'-9"					
FTG.	P1102	48	1	9'-1 1/2"	2'-1 1/2"	7'-0"			

BENDING DIAGRAMS

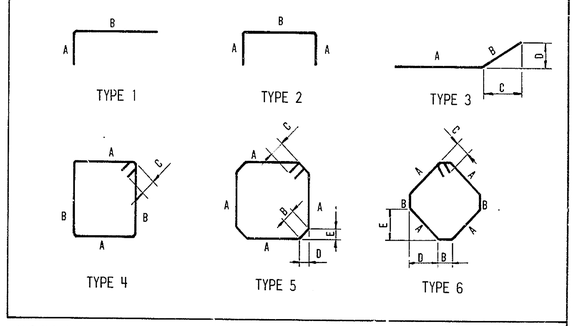

NOTES:
1. FOR FOOTING PLAN, SEE SHEET NO. 6.

DELAWARE
DEPARTMENT OF TRANSPORTATION
DIVISION OF HIGHWAYS

MODIFICATIONS TO BRIDGE NO. 677
DELAWARE ROUTE 141 OVER W.B. TURNPIKE
PIER 1

D. A.A.A.	SCALE	APPROVED BY:
T. O.A.B.	AS SHOWN	
C. W.H.P.		BRIDGE ENGINEER

COUNTY	CONTRACT	P. R. A. REG. NO.	STATE	FED. AID PROJECT NO.	SHEET NO.	TOTAL SHEETS
NEW CASTLE	7248	2	DEL.		6	31

DELAWARE TURNPIKE WIDENING AND IMPROVEMENT PROGRAM
MODIFICATIONS TO STRUCTURES NOS. 675, 677 & 678

NO.	REVISIONS	BY	DATE

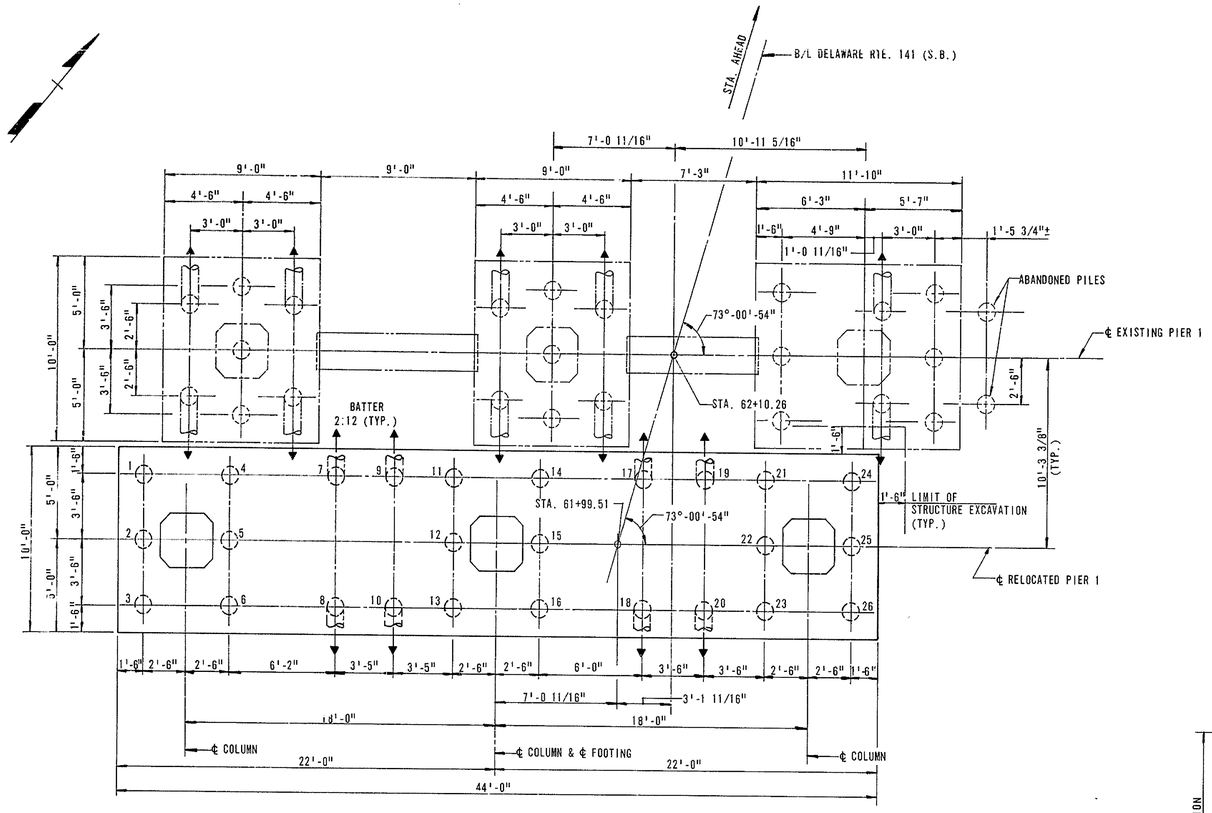

FOOTING PLAN

SCALE: 1/4" = 1'-0"

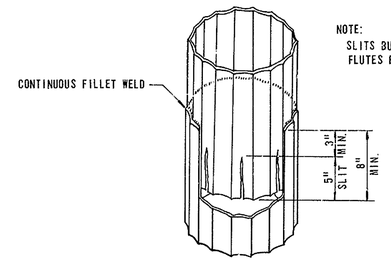

NOTE:
SLITS BURNED IN ALTERNATE FLUTES FOR 7 GAGE PILING.

TYPICAL PILE SPLICE DETAIL

NO SCALE

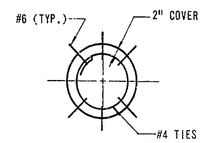

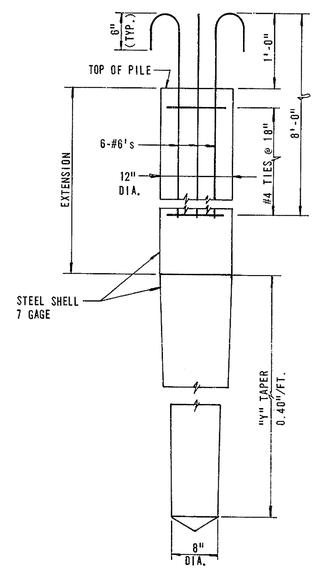

CAST-IN-PLACE CONCRETE PILE

NO SCALE

NOTE:
CONCRETE FOR PILES SHALL BE CLASS B MIX.

ESTIMATED PILE TIP ELEVATION

BRIDGE NO.	ELEVATION
677	-18.0±
675	-30.0±
678	-32.0±

PILE LOADS

PILE NUMBER	LOAD KIP	PILE NUMBER	LOAD KIP	PILE NUMBER	LOAD KIP
1	50	10	55	19	53
2	50	11	44	20	47
3	50	12	44	21	46
4	48	13	44	22	46
5	48	14	43	23	46
6	48	15	43	24	46
7	56	16	43	25	46
8	57	17	53	26	46
9	55	18	49		

DELAWARE
DEPARTMENT OF TRANSPORTATION
DIVISION OF HIGHWAYS

MODIFICATIONS TO BRIDGE NO. 677
DELAWARE ROUTE 141 OVER W.B. TURNPIKE
FOOTING PLAN & PILES

D. A.A.A.	SCALE	APPROVED BY:
T. O.A.B.	AS SHOWN	
C. W.H.P.		BRIDGE ENGINEER

COUNTY	CONTRACT	P. R. A. REG. NO.	STATE	FED. AID PROJECT NO.	SHEET NO.	TOTAL SHEETS
NEW CASTLE	7248	2	DEL.		7	31

DELAWARE TURNPIKE WIDENING AND IMPROVEMENT PROGRAM
MODIFICATIONS TO STRUCTURES NOS. 675, 677 & 678

NO.	REVISIONS	BY	DATE

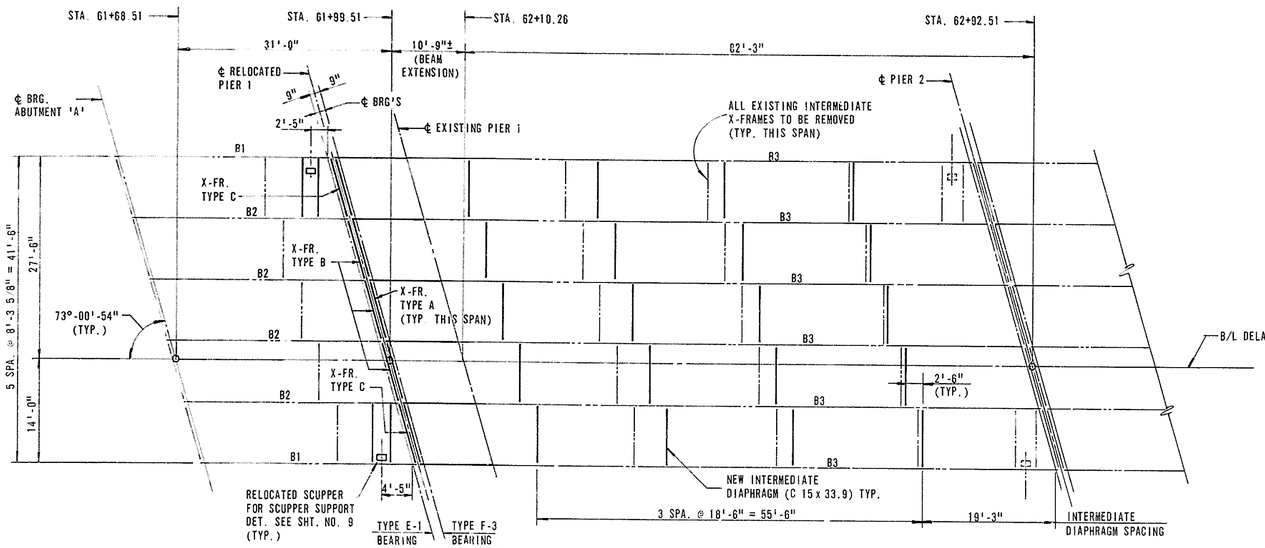

FRAMING PLAN
SCALE: 1" = 10'-0"

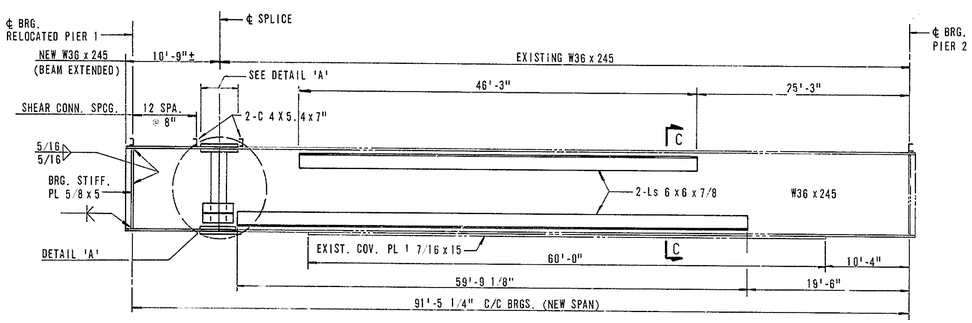

BEAM - B3
NO SCALE

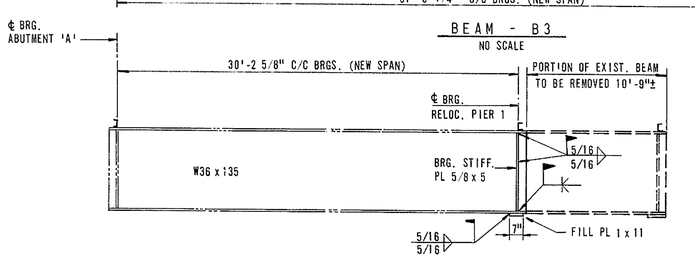

BEAM - B1
NO SCALE

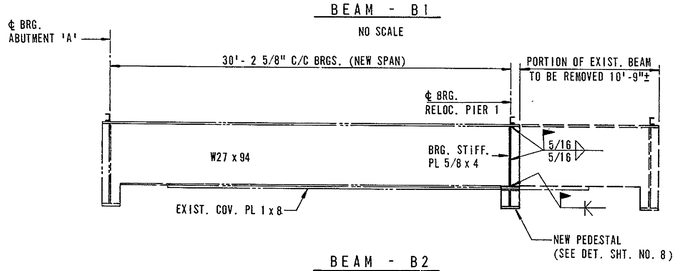

BEAM - B2
NO SCALE

BEAM ELEVATIONS

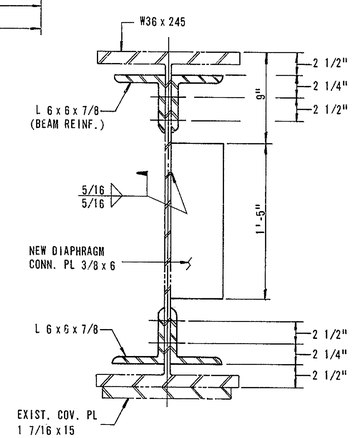

SECTION C-C
SCALE: 1 1/2" = 1'-0"

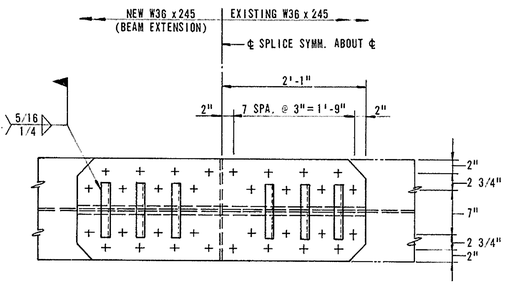

PLAN - TOP FLANGE SPLICE
SCALE: 1" = 1'-0"

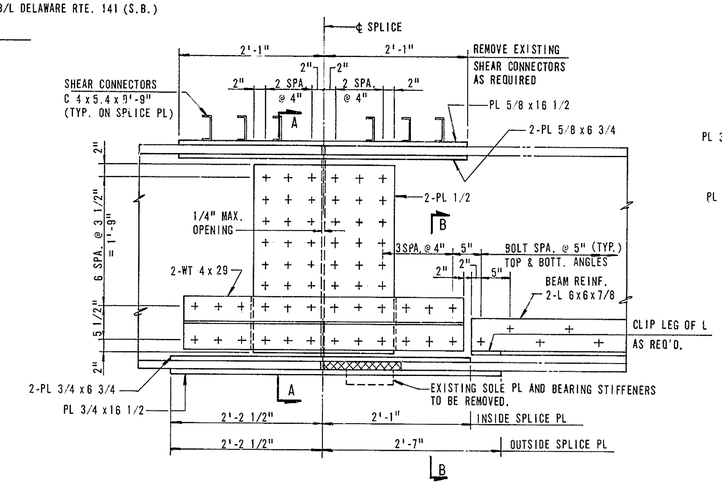

DETAIL 'A'
SCALE: 1" = 1'-0"

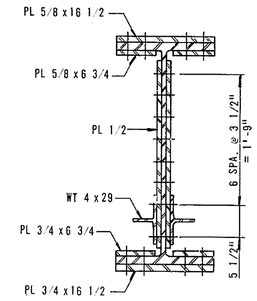

SECTION A-A
SCALE: 1" = 1'-0"

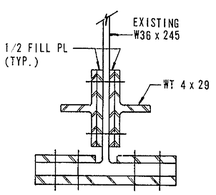

SECTION B-B
SCALE: 1 1/2" = 1'-0"

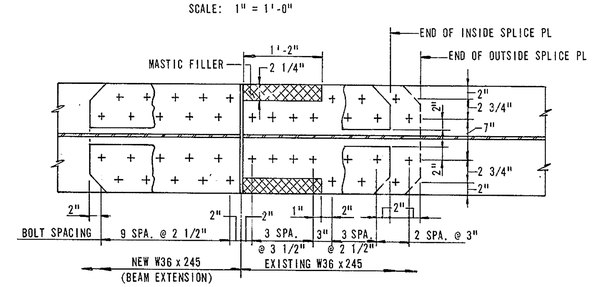

PLAN - BOTTOM FLANGE SPLICE
SCALE: 1" = 1'-0"

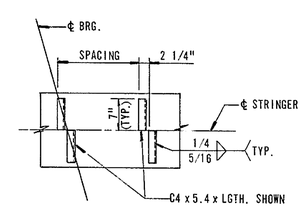

SHEAR CONN. DETAIL
NO SCALE

NOTES:

1. BEAM SPLICES SHALL BE MADE WITH 1" DIAMETER H.S. (ASTM A 325) BOLTS.
2. BEAM REINFORCING ANGLE (L 6 x 6) TO BEAM CONNECTION SHALL BE MADE WITH 7/8" DIAMETER H.S. (ASTM A 325) BOLTS.

DELAWARE
DEPARTMENT OF TRANSPORTATION
DIVISION OF HIGHWAYS

MODIFICATIONS TO BRIDGE NO. 677
DELAWARE ROUTE 141 OVER W.B. TURNPIKE
FRAMING PLAN & DETAILS

D. A.A.A.	SCALE	APPROVED BY:
T. O.A.B.	AS SHOWN	
C. W.H.P.		BRIDGE ENGINEER

COUNTY	CONTRACT	F. R. A. REG. NO.	STATE	FED. AID PROJECT NO.	SHEET NO.	TOTAL SHEETS
NEW CASTLE	7248	2	DEL.		8	31

DELAWARE TURNPIKE WIDENING AND IMPROVEMENT PROGRAM
MODIFICATIONS TO STRUCTURES NOS. 675, 677 & 678

NO.	REVISIONS	BY	DATE

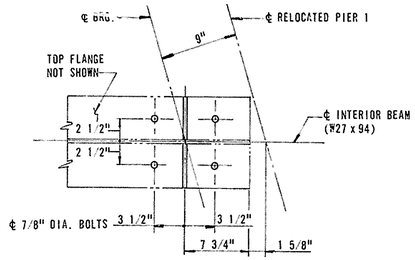

PLAN

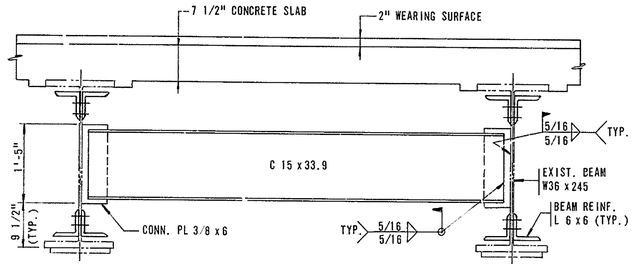

INTERMEDIATE DIAPHRAGM

SCALE: 3/4" = 1'-0"

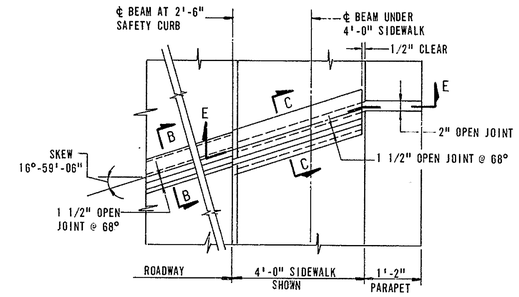

PARTIAL EXPANSION JOINT PLAN

SCALE: 1/2" = 1'-0"

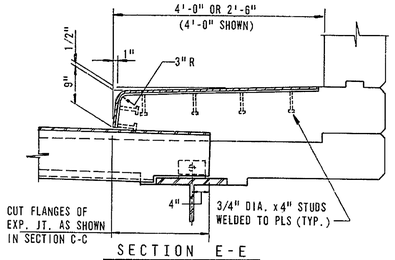

SECTION E-E

SCALE: 3/4" = 1'-0"

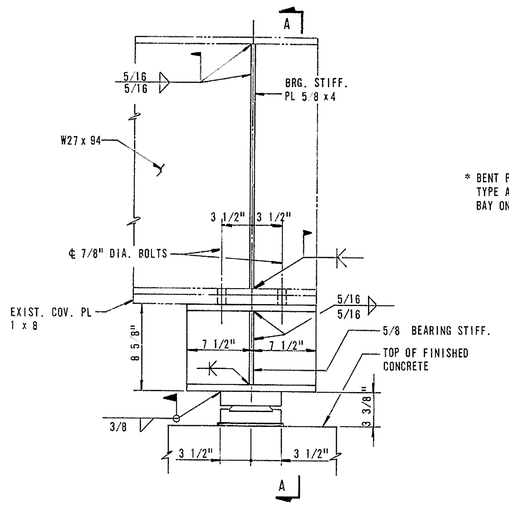

ELEVATION

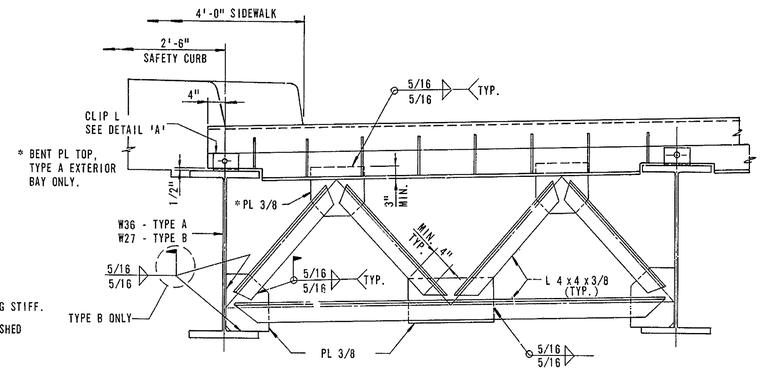

END CROSS FRAME - TYPE A & B

TYPE A - BEAMS W36 (SPAN 2) - SHOWN
TYPE B - BEAMS W27 (SPAN 1) - SIMILAR
SCALE: 3/4" = 1'-0"

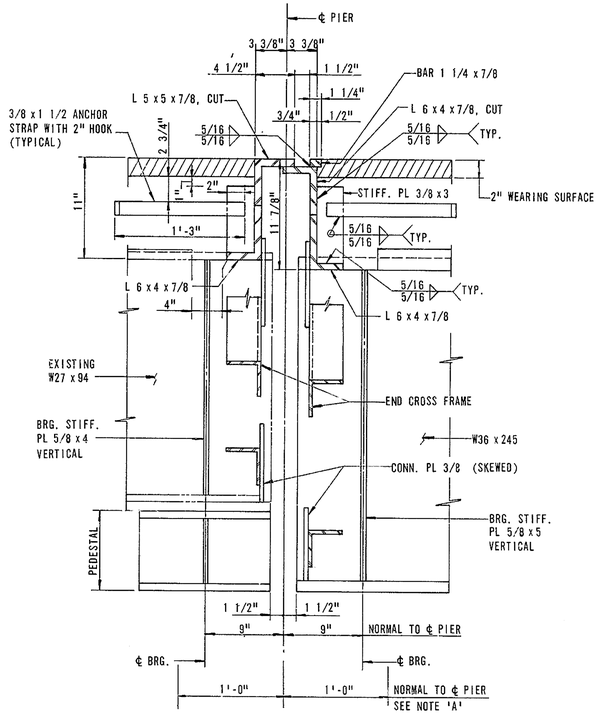

SECTION B-B

SCALE: 1 1/2" = 1'-0"

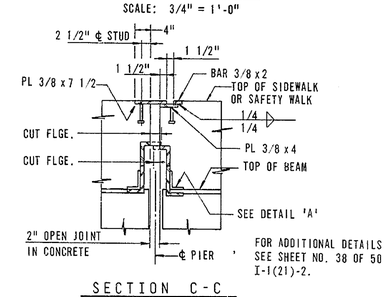

FOR ADDITIONAL DETAILS SEE SHEET NO. 38 OF 50 I-1(21)-2.

SECTION C-C

SCALE: 3/4" = 1'-0"

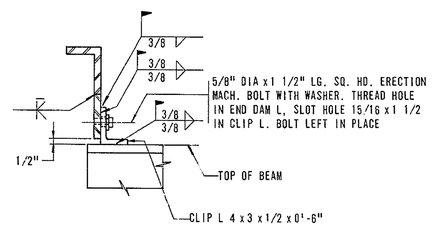

DETAIL 'A'

SCALE: 1 1/2" = 1'-0"

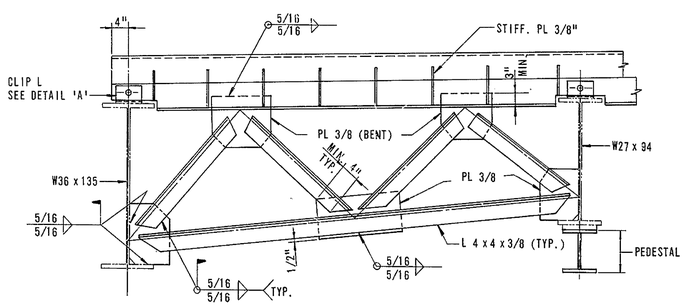

END CROSS FRAME - TYPE C

SCALE: 3/4" = 1'-0"

NOTE: ALL 7/8" DIAMETER BOLTS SHALL BE H.S. ASTM A 325.

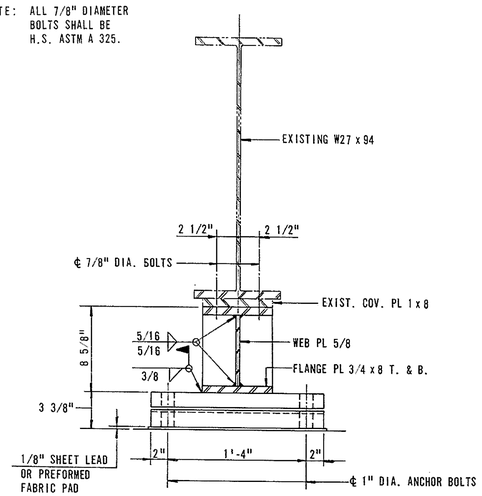

SECTION A-A

PEDESTAL DETAILS

SCALE: 1 1/2" = 1'-0"

NOTE 'A'

ALL NEW AND EXISTING STRUCTURAL STEEL WITHIN THESE LIMITS SHALL BE CLEANED AND GIVEN ONE SHOP OR PRIME COAT OF FX-498, OR APPROVED EQUAL. SEE SPECIAL PROVISIONS.

DELAWARE
DEPARTMENT OF TRANSPORTATION
DIVISION OF HIGHWAYS

MODIFICATIONS TO BRIDGE NO. 677
DELAWARE ROUTE 141 OVER W.B. TURNPIKE
STEEL DETAILS

D. A.A.A.	SCALE	APPROVED BY:
T. O.A.B.	AS SHOWN	
C. W.H.P.		BRIDGE ENGINEER

COUNTY	CONTRACT	F. H. A. REG. NO.	STATE	FED. AID PROJECT NO.	SHEET NO.	TOTAL SHEETS
NEW CASTLE	7248	2	DEL.		9	31

DELAWARE TURNPIKE WIDENING AND IMPROVEMENT PROGRAM
MODIFICATIONS TO STRUCTURES NOS. 675, 677 & 678

NO.	REVISIONS	BY	DATE

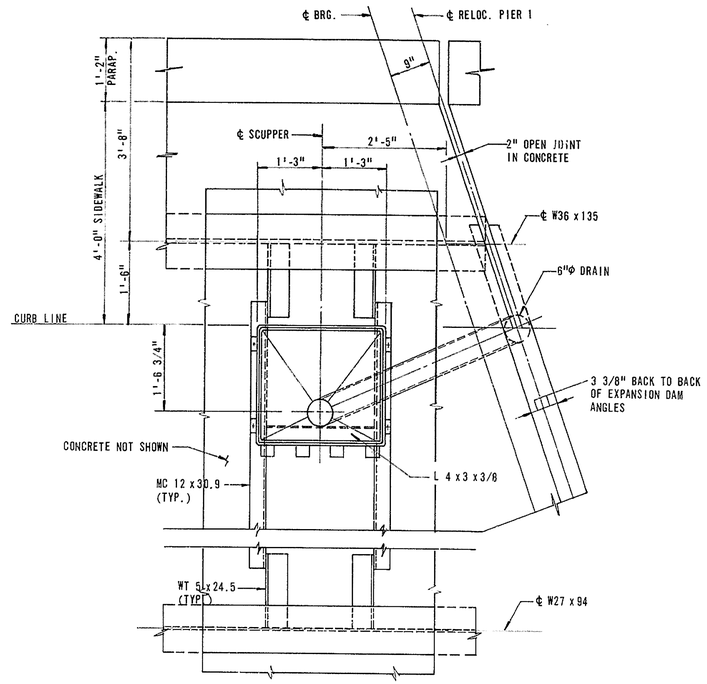

SCUPPER PLAN
SCALE: 3/4" = 1'-0"

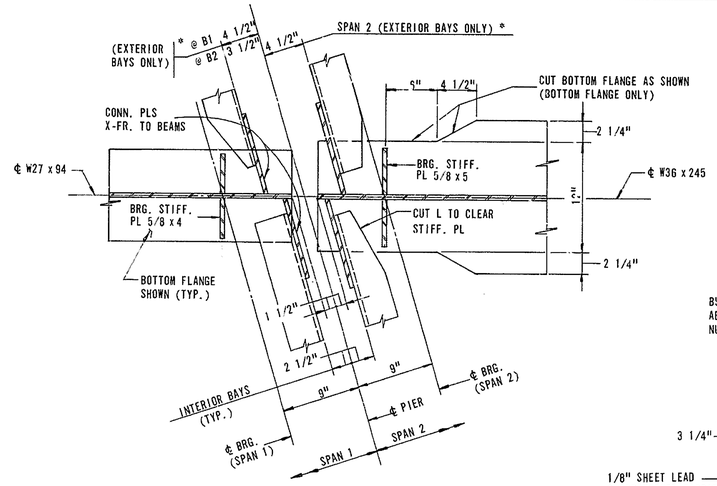

* SLOPE END X-FR. 11/16" PER FOOT TO CLEAR 6" DIA. BRIDGE DRAINS.

END OF BEAM DETAIL
SCALE: 1 1/2" = 1'-0"

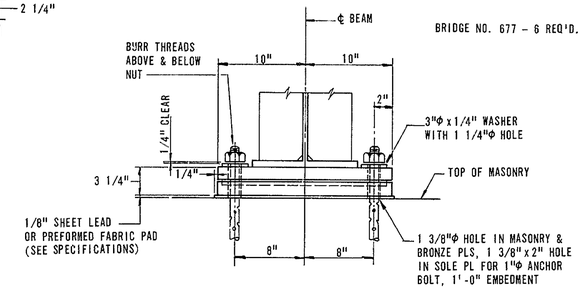

BRIDGE NO. 677 - 6 REQ'D.

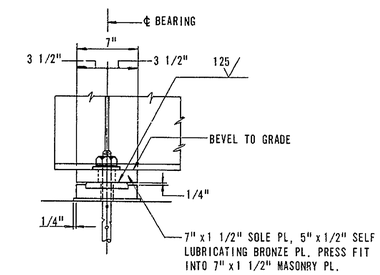

EXPANSION SHOES TYPE E1
SCALE: 1 1/2" = 1'-0"
(PEDESTALS AND FILL PLS. NOT SHOWN)

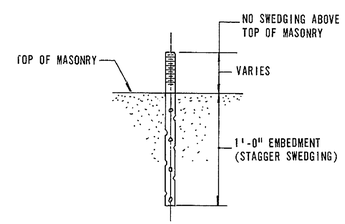

ANCHOR BOLT DETAIL
SCALE: 1 1/2" = 1'-0"

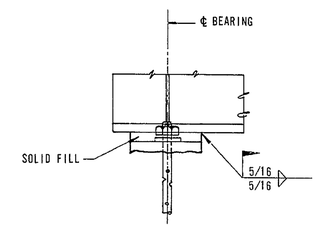

SOLID FILL
SCALE: 1 1/2" = 1'-0"

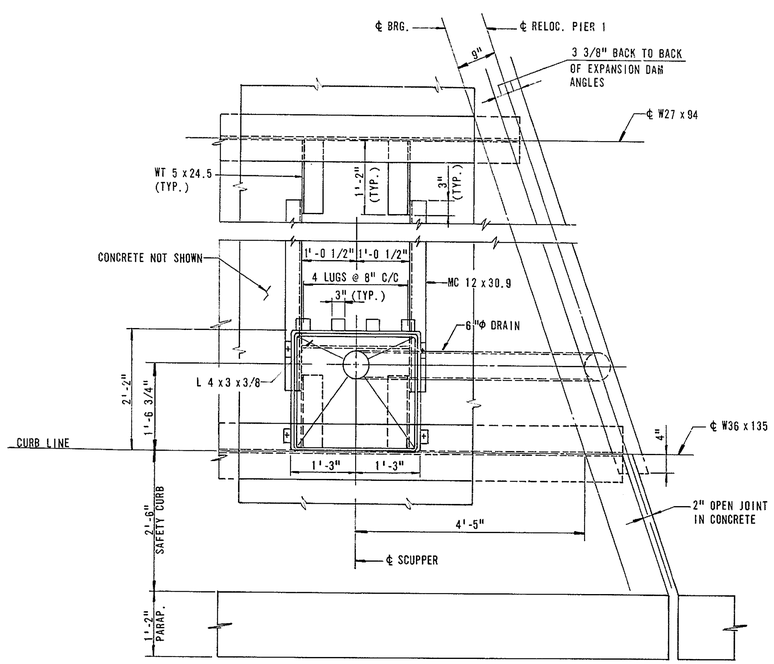

NOTE:
FOR SCUPPER AND DRAIN DETAILS, SEE CONTRACT I-1(21)-2, SHEET NO. 40 OF 58.

SCUPPER PLAN
SCALE: 3/4" = 1'-0"

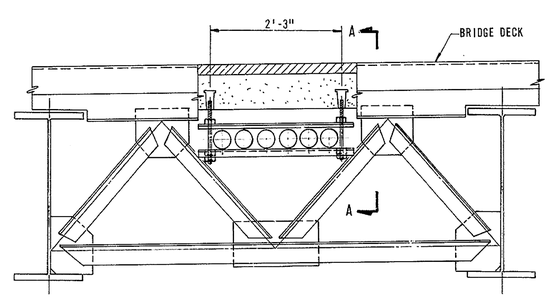

SECTION THRU TELEPHONE CONDUITS AT END X-FRAMES
SCALE: 3/4" = 1'-0"

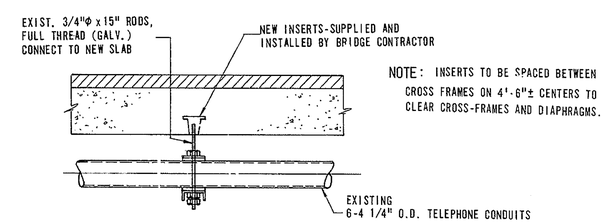

NOTE: INSERTS TO BE SPACED BETWEEN CROSS FRAMES ON 4'-6"± CENTERS TO CLEAR CROSS-FRAMES AND DIAPHRAGMS.

SECTION A-A
SCALE: 1" = 1'-0"

DELAWARE
DEPARTMENT OF TRANSPORTATION
DIVISION OF HIGHWAYS

MODIFICATIONS TO BRIDGE NO. 677
DELAWARE ROUTE 141 OVER W.B. TURNPIKE
SCUPPER DETAILS & BEARINGS

D. A.A.A.	SCALE	APPROVED BY:
T. O.A.B.	AS SHOWN	
C. W.H.P.		BRIDGE ENGINEER

COUNTY	CONTRACT	P. R. A. REG. NO.	STATE	FED. AID PROJECT NO.	SHEET NO.	TOTAL SHEETS
NEW CASTLE	7248	2	DEL.		10	31

DELAWARE TURNPIKE WIDENING AND IMPROVEMENT PROGRAM
MODIFICATIONS TO STRUCTURES NOS. 675, 677 & 678

NO.	REVISIONS	BY	DATE

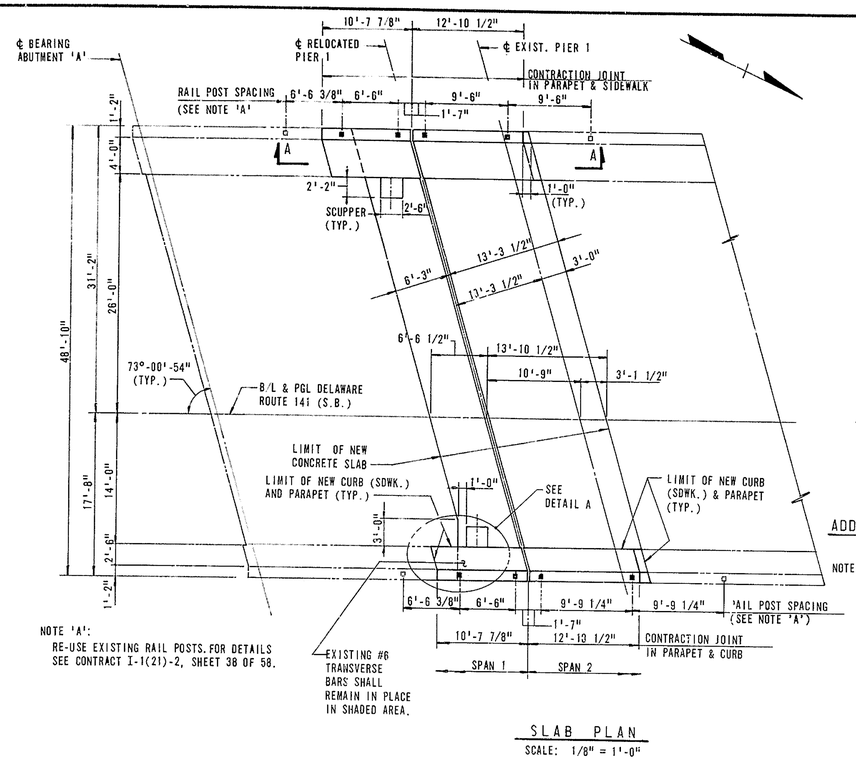

NOTE 'A':
RE-USE EXISTING RAIL POSTS. FOR DETAILS SEE CONTRACT I-1(21)-2, SHEET 38 OF 58.

SLAB PLAN
SCALE: 1/8" = 1'-0"

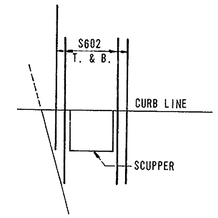

WEST SCUPPER

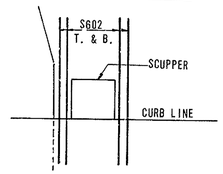

EAST SCUPPER

ADDITIONAL BARS AT SCUPPERS
SCALE: 1/4" = 1'-0"

NOTE: RESPACE OR CUT OTHER #5 AND #6 BARS AS REQUIRED TO CLEAR SCUPPER.

NOTE:
NEW CONCRETE DECK SHALL CONFORM TO AND MATCH EXISTING DECK ELEVATIONS.

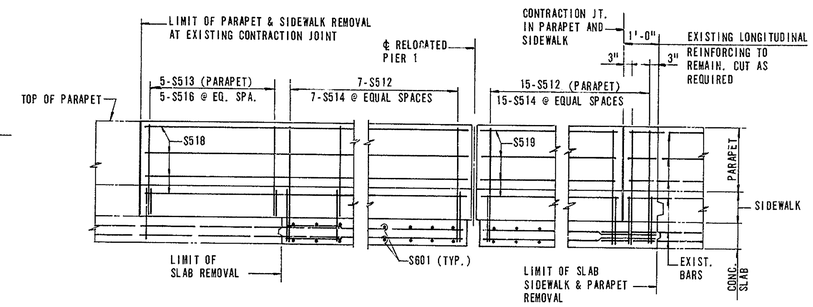

SECTION A-A
SCALE: 1/2" = 1'-0"

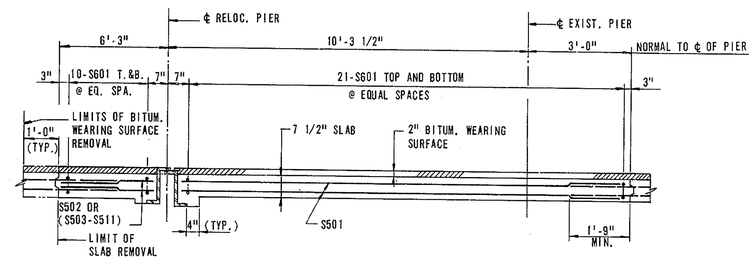

LONGITUDINAL SECTION THRU SLAB
SCALE: 1/2" = 1'-0"

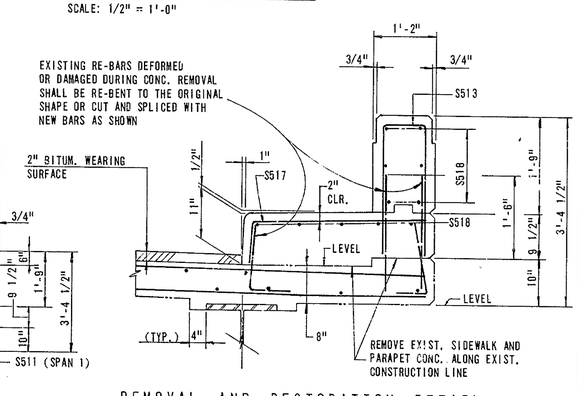

REMOVAL AND RESTORATION DETAIL OF SIDEWALK AND PARAPET
SCALE: 3/4" = 1'-0"

REINFORCING SCHEDULE SPANS 1 & 2				
LOCATION	MARK	NO. REQ'D	TYPE	LENGTH
SLAB SPAN 2	S501	76	STR.	13'-5"
SLAB SPAN 1	S502	66	STR.	6'-1"
SLAB SPAN 1 (TOP)	S503 TO S505	1 EA.	STR.	6'-4" TO 7'-0" V.B. 4"
SLAB SPAN 1 (BOT.)	S506 TO S510	1 EA.	STR.	6'-2" TO 7'-6" V.B. 4"
SLAB SPAN 1 (BOT.)	S511	2	STR.	7'-9"
SLAB & PAR.	S512	46	1	6'-8 1/2"
SDWK./CURB & PAR.	S513	8	1	5'-4 1/2"
SLAB & SDWK.	S514	22	3	8'-2"
SLAB & CURB	S515	24	3	6'-8"
SIDEWALK	S516	5	2	5'-4"
CURB	S517	3	2	3'-10"
SDWK/CURB/PAR.S-1	S518	24	STR.	10'-3"
SDWK/CURB/PAR.S-2	S519	24	STR.	12'-5"
EXTRA	S520	2	STR.	18'-0" (SEE NOTE B)
SLAB SPANS 1 & 2	S601	62	STR.	54'-6" (SEE NOTE B)
SCUPPERS	S602	16	STR.	8'-0"
EXTRA	S603	1	STR.	18'-0" (SEE NOTE B)

BENDING DIAGRAMS

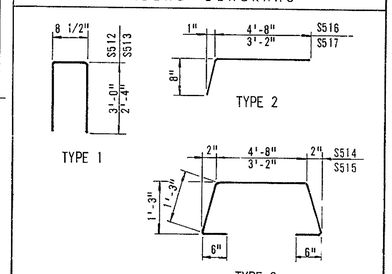

NOTE B:
S601 BARS SHALL BE CUT IN FIELD AS REQUIRED BY CONSTRUCTION SEQUENCE. BAR LENGTH SHOWN PROVIDES FOR TWO (2'-0") LAP SPLICES.

EXTRA BARS TO BE USED TO SPLICE DAMAGED EXISTING BARS AS REQUIRED

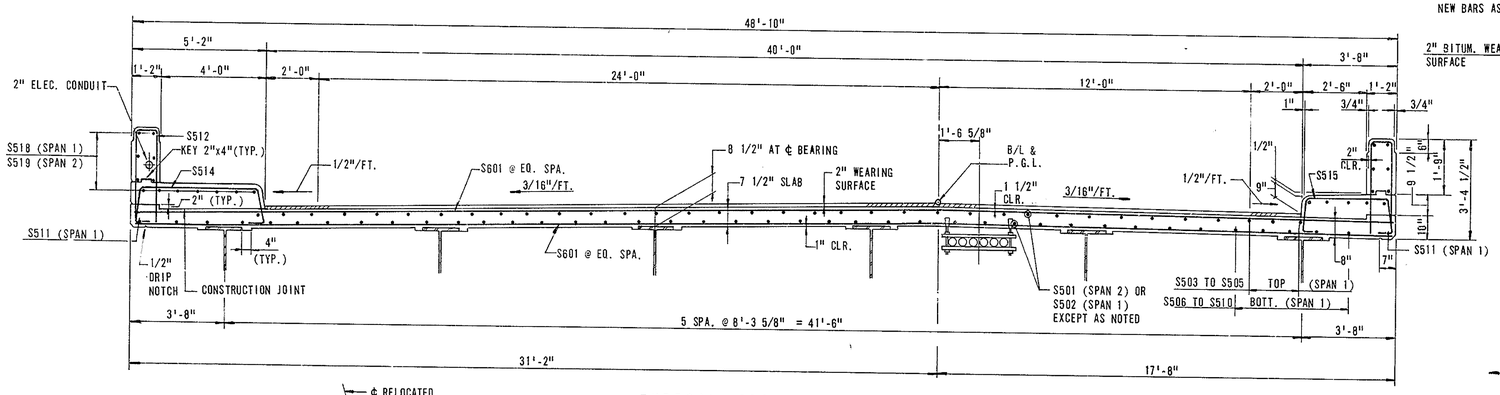

TYPICAL CROSS SECTION
SCALE: 3/8" = 1'-0"

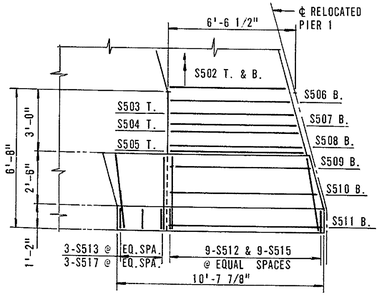

DETAIL A
NO SCALE

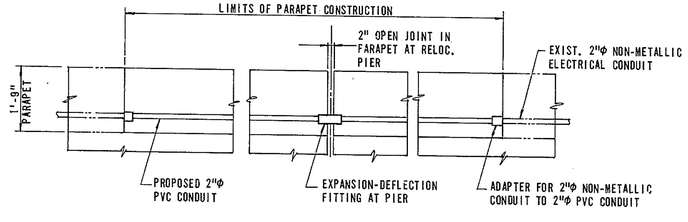

ELECTRICAL CONDUIT DETAIL
SCALE: 1/2" = 1'-0"

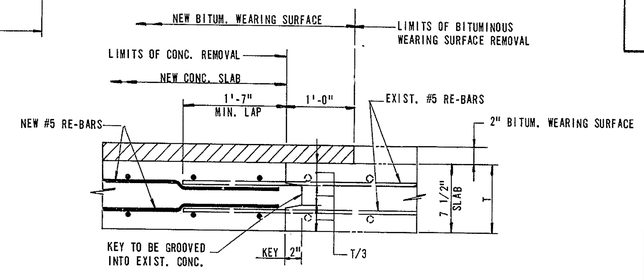

CONSTRUCTION JOINT DETAIL - SLAB
NO SCALE

NOTE:
FOR PARAPET CONTRACTION JOINT, SEE DETAIL SHEET NO. 19.

DELAWARE
DEPARTMENT OF TRANSPORTATION
DIVISION OF HIGHWAYS

MODIFICATIONS TO BRIDGE NO. 677
DELAWARE ROUTE 141 OVER W.B. TURNPIKE
DECK DETAILS

D. A.A.A.	SCALE	APPROVED BY:
T. O.A.B.	AS SHOWN	
C. W.H.P.		BRIDGE ENGINEER

COUNTY	CONTRACT	P.R.A. REG. NO	STATE	FED. AID PROJECT NO.	SHEET NO	TOTAL SHEETS
NEW CASTLE	7248	2	DEL		11	31

DELAWARE TURNPIKE WIDENING AND IMPROVEMENT PROGRAM
MODIFICATIONS TO STRUCTURES NOS. 675, 677 & 678

NO.	REVISIONS	BY	DATE

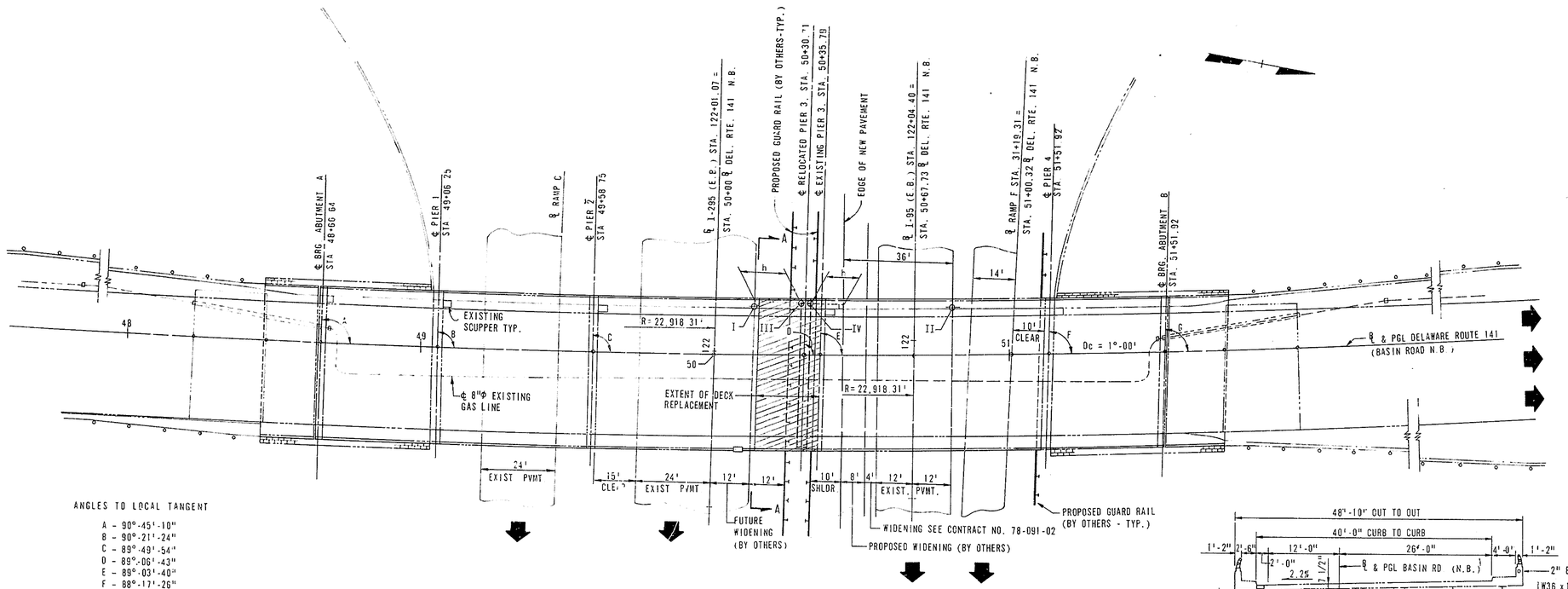

ANGLES TO LOCAL TANGENT

A - 90°-45'-10"
B - 90°-21'-24"
C - 89°-49'-54"
D - 89°-06'-43"
E - 89°-03'-40"
F - 88°-17'-26"
G - 87°-53'-59"

PLAN
SCALE 1" = 20'

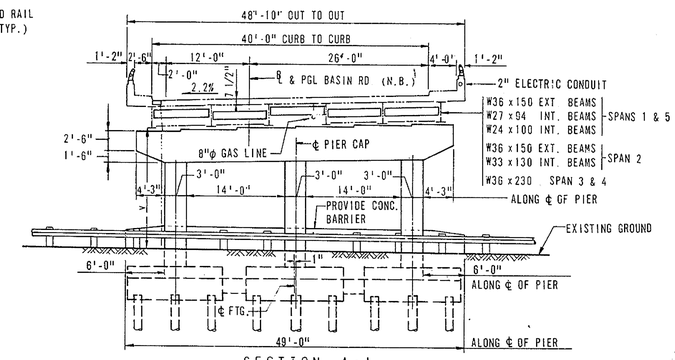

SECTION A-A
SCALE 1" = 10'

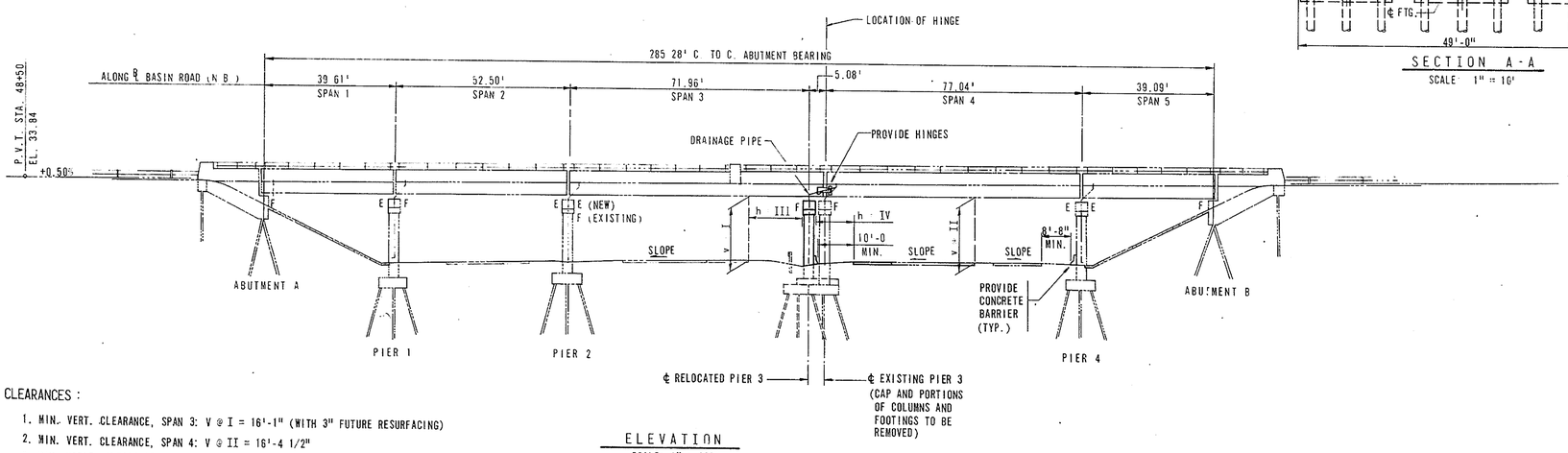

ELEVATION
SCALE: 1" = 20'

CLEARANCES :

1. MIN. VERT. CLEARANCE, SPAN 3: V @ I = 16'-1" (WITH 3" FUTURE RESURFACING)
2. MIN. VERT. CLEARANCE, SPAN 4: V @ II = 16'-4 1/2"
3. MIN. HORIZ. CLEARANCE, SPAN 3: h @ III = 16'-9"
4. MIN. HORIZ. CLEARANCE, SPAN 4: h @ IV = 11'-3"

SUGGESTED CONSTRUCTION SEQUENCE

1. CONSTRUCT RELOCATED PIER 3.
2. REMOVE PORTION OF SUPERSTRUCTURE CONCRETE, KEEPING TWO LANES OF TRAFFIC IN SERVICE ON THE BRIDGE AT ALL TIMES.
3. MODIFY STRUCTURAL STEEL AND INSTALL FIXED BEARINGS IN SPAN 3, RELOCATED PIER 3.
4. MODIFY STRUCTURAL STEEL IN SPANS 3 AND 4 AND INSTALL HINGES.
5. REMOVE ALL BEARINGS FROM EXISTING PIER 3. MODIFY STRUCTURAL STEEL AND INSTALL EXPANSION BEARINGS AT PIER 2, SPAN 3.
6. RECONSTRUCT SUPERSTRUCTURE CONCRETE AND BITUMINOUS WEARING SURFACE, INCLUDING BRIDGE DRAINAGE AND BRIDGE RAILING.
7. REPEAT STEPS 2 THRU 6 FOR REMAINDER OF BRIDGE.
8. REMOVE EXISTING PIER 3 AS NOTED.
9. CONSTRUCT PERMANENT P.C.C. SAFETY BARRIERS.

NOTE:

1. FOR GENERAL NOTES, SEE SHEET NO. 2.

DELAWARE
DEPARTMENT OF TRANSPORTATION
DIVISION OF HIGHWAYS

MODIFICATIONS TO BRIDGE NO. 675
DELAWARE ROUTE 141 OVER E.B. TURNPIKE
PLAN AND ELEVATION

D F.R.R. T L.F.C. C W.H.P.	SCALE AS SHOWN	APPROVED BY BRIDGE ENGINEER

COUNTY	CONTRACT	F. R. A. REG. NO.	STATE	FED. AID PROJECT NO.	SHEET NO.	TOTAL SHEETS
NEW CASTLE	7248	2	DEL.		12	31

DELAWARE TURNPIKE WIDENING AND IMPROVEMENT PROGRAM
MODIFICATIONS TO STRUCTURES NOS. 675, 677 & 678

NO.	REVISIONS	BY	DATE

BRIDGE SEAT ELEVATIONS						
BEAM	1	2	3	4	5	6
ELEVATION	30.231	30.453	30.635	30.817	30.998	31.180

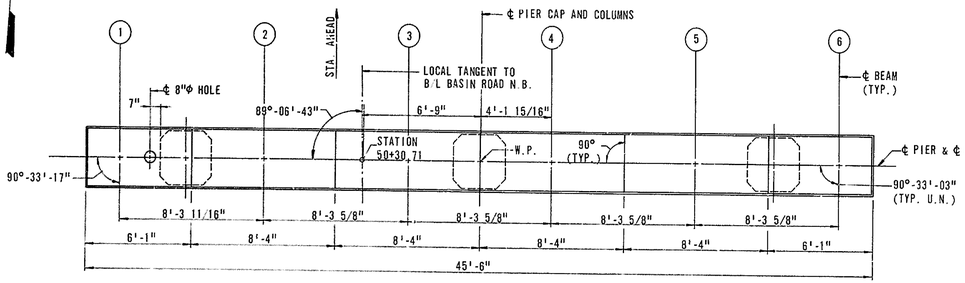

PLAN
SCALE: 1/4" = 1'-0"

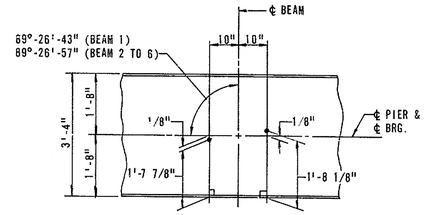

TYPICAL ANCHOR BOLT PLAN
SCALE: 1/2" = 1'-0"

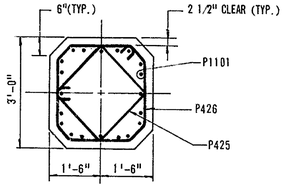

SECTION C-C
SCALE: 1/2" = 1'-0"

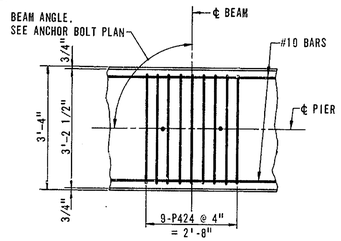

GRILLAGE UNDER BEARING SHOES-TYP. DETAIL
SCALE: 1/2" = 1'-0"

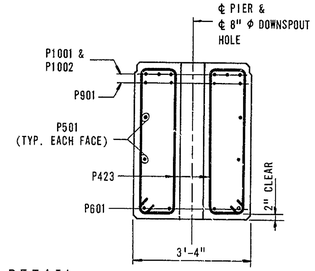

SECTION A-A
SCALE: 1/2" = 1'-0"

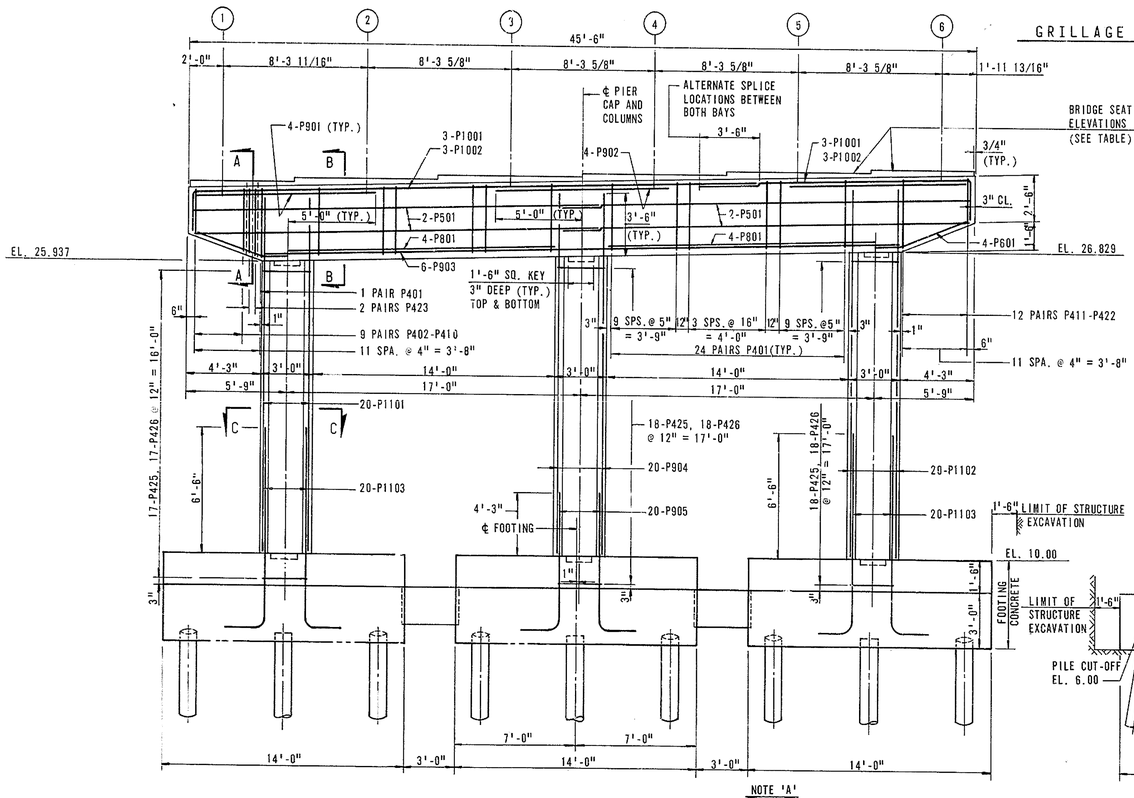

ELEVATION
SCALE: 1/4" = 1'-0"

NOTE 'A'
THE TOP, SIDES AND VERTICAL ENDS OF BOTH THE NEW PIER CAP AND ALL REMAINING EXISTING PIER CAPS SHALL BE GIVEN AN EPOXY PROTECTIVE COATING.

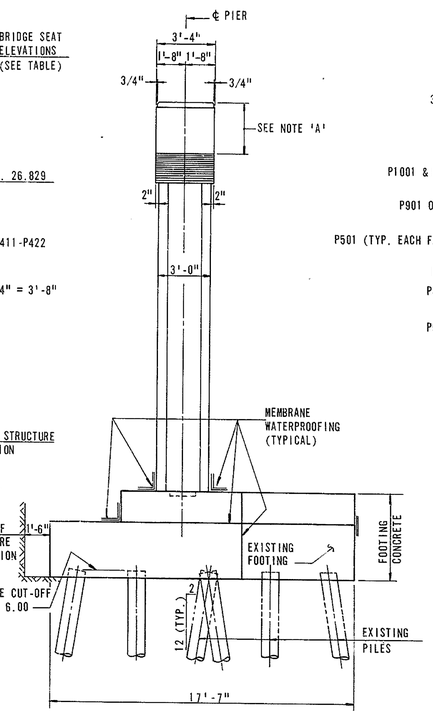

END ELEVATION
SCALE: 1/4" = 1'-0"

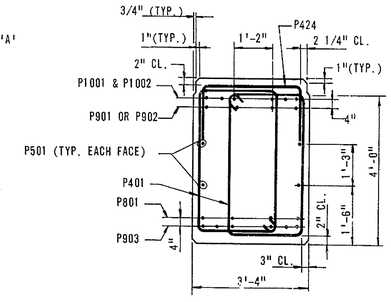

SECTION B-B
SCALE: 1/2" = 1'-0"

NOTES:

1. FOR FOOTING DETAIL, SEE SHEET NO. 13.
2. ALL SHOES TYPE F4 THIS PIER, SEE SHEET NO. 17.

REINFORCING SCHEDULE - PIER 3

LOCATION	MARK	NO. REQ'D.	TYPE	LENGTH	A	B	C	D	E
CAP	P401	98	4	12'-10"	2'-1"	3'-11"	0'-5"		
CAP	P402 TO P410	18	4	10'-0" TO 12'-0" V.B.3"(2 EA.)	2'-1"	2'-6" TO 3'-6" V.B. 1 1/2"	0'-5"		
CAP	P411 TO P422	24	4	10'-0" TO 12'-8" TO V.B.3"(2 EA.)	2'-1"	2'-6" TO 3'-10 1/2" V.B. 1 1/2"	0'-5"		
CAP	P423	4	4	10'-0"	0'-11"	3'-8"	0'-5"		
CAP	P424	54	2	5'-10"	1'-6"	2'-10"			
COLUMN	P425	53	4	8'-2"	1'-10"	1'-10"	0'-5"		
COLUMN	P426	53	5	10'-4"	1'-10"	0'-6 1/2"	0'-5"	0'-4 1/2"	0'-4 1/2"
FOOTING	P427	8	4	6'-10"	1'-6"	1'-6"	0'-5"		
CAP	P501	8	STR.	23'-5"					
FOOTING	P502	21	STR.	13'-6"					
FOOTING	P503	42	STR.	7'-6"					
FOOTING	P504	60	STR.	3'-3"					
FOOTING	P505	18	2	15'-10"	1'-2"	13'-6"			
FOOTING	P506	9	2	11'-10"	1'-2"	9'-6"			
FOOTING	P507	24	1	4'-2"	1'-2"	3'-0"			
FOOTING	P508	12	STR.	4'-11"					
FOOTING	P509	6	2	8'-11"	1' 2"	6'-7"			
FOOTING	P510	12	2	15'-5"	1'-2"	13'-1"			
FOOTING	P511	12	1	7'-9"	1'-2"	6'-7"			
CAP	P601	8	3	5'-9"	4'-3"	1'-6"	0'-6"	1'-5"	
FOOTING	P602	12	STR.	11'-0"					
FOOTING	P603	6	STR.	19'-0"					
CAP	P801	8	STR.	15'-6"					
CAP	P901	8	STR.	10'-6"					
CAP	P902	4	STR.	10'-0"					
CAP	P903	6	STR.	37'-0"					
COLUMN	P904	20	STR.	19'-8"					
FOOTING	P905	20	1	9'-7"	1'-7"	8'-0"			
FOOTING	P906	30	STR.	13'-6"					
FOOTING	P907	16	STR.	2'-0"					
CAP	P1001	6	1	35'-0"	2'-3"	32'-9"			
CAP	P1002	6	1	18'-0"	2'-3"	15'-9"			
FOOTING	P1003	18	STR.	10'-7"					
FOOTING	P1004	27	STR.	7'-7"					
COLUMN	P1101	20	STR.	19'-3"					
COLUMN	P1102	20	STR.	20'-2"					
FOOTING	P1103	40	1	12'-4"	2'-1"	10'-3"			

BENDING DIAGRAMS

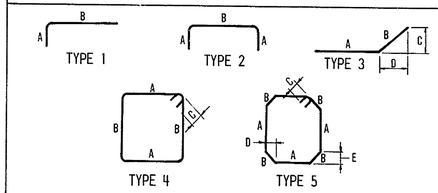

DELAWARE
DEPARTMENT OF TRANSPORTATION
DIVISION OF HIGHWAYS

MODIFICATIONS TO BRIDGE NO. 675
DELAWARE ROUTE 141 OVER E.B. TURNPIKE
PIER 3

D. F.R.R.
T. L.F.C.
C. W.H.P.

SCALE
AS SHOWN

APPROVED BY:

BRIDGE ENGINEER

COUNTY	CONTRACT	P. B. A. REG. NO.	STATE	FED. AID PROJECT NO.	SHEET NO.	TOTAL SHEETS
NEW CASTLE	7248	2	DEL		13	31

DELAWARE TURNPIKE WIDENING AND IMPROVEMENT PROGRAM
MODIFICATIONS TO STRUCTURES NOS. 675, 677 & 678

NO.	REVISIONS	BY	DATE

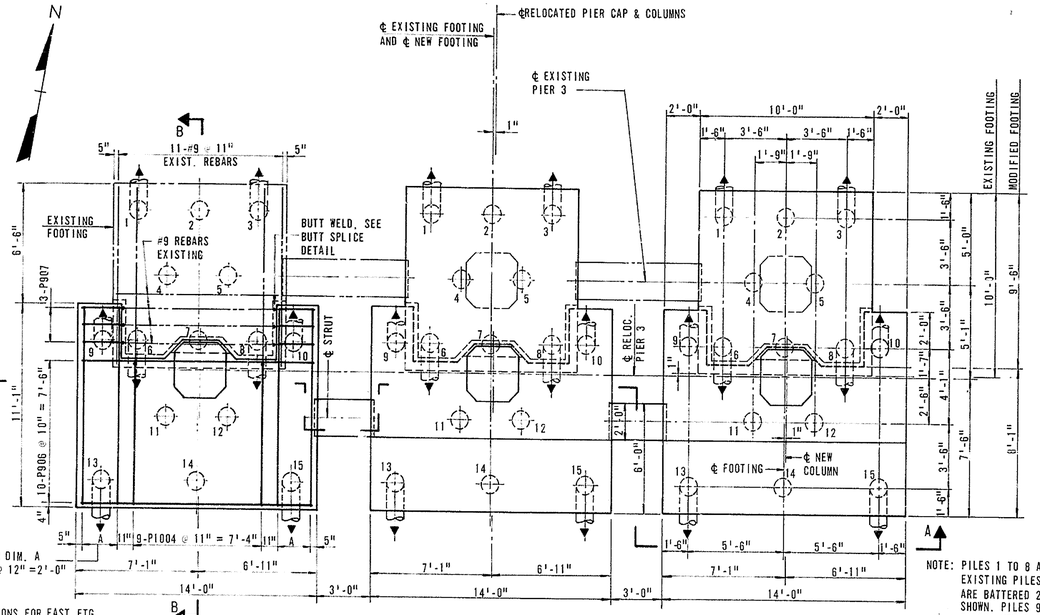

BOTTOM REINFORCING

NOTE: PILES 1 TO 8 ARE EXISTING. EXISTING PILES 1, 3, 6 & 8 ARE BATTERED 2:12 IN DIRECTION SHOWN. PILES 9 TO 15 ARE NEW PILES. NEW PILES 9, 10, 13 & 15 ARE BATTERED 2:12 IN DIRECTION SHOWN.

PLAN

SCALE: 1/4" = 1'-0"

PILE LOADS					
PILE NUMBER	LOAD KIPS	PILE NUMBER	LOAD KIPS	PILE NUMBER	LOAD KIPS
1	44	6	39	11	58
2	29	7	47	12	59
3	43	8	41	13	58
4	37	9	57	14	68
5	39	10	57	15	62

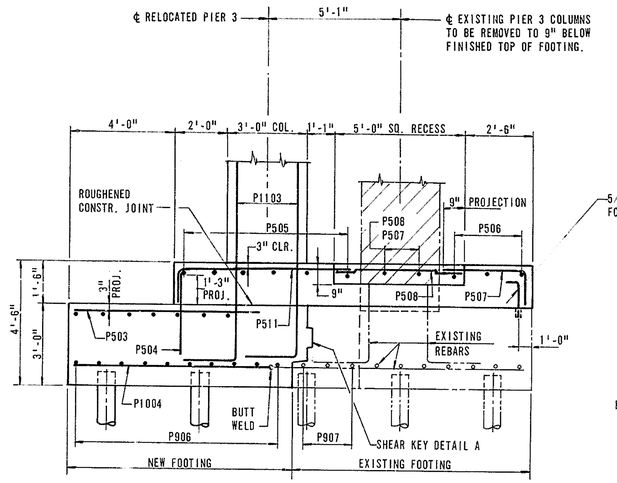

SECTION B-B

FOR REINFORCING NOT SHOWN, SEE SECTIONS A-A & D-D

SCALE: 3/8" = 1'-0"

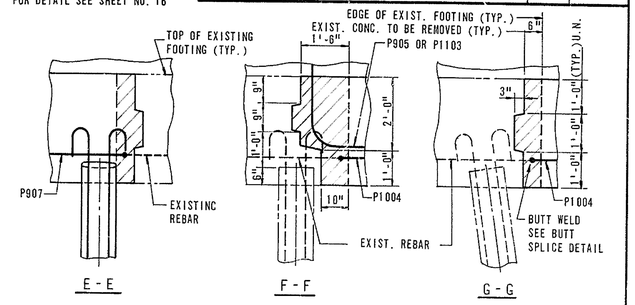

SECTIONS

SCALE: 1/2" = 1'-0"

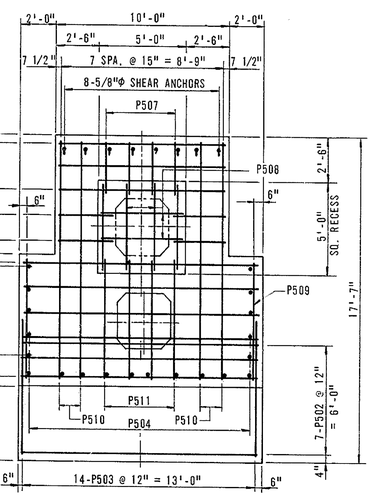

SECTION D-D

TOP LAYER OF REINFORCING

SCALE: 1/4" = 1'-0"

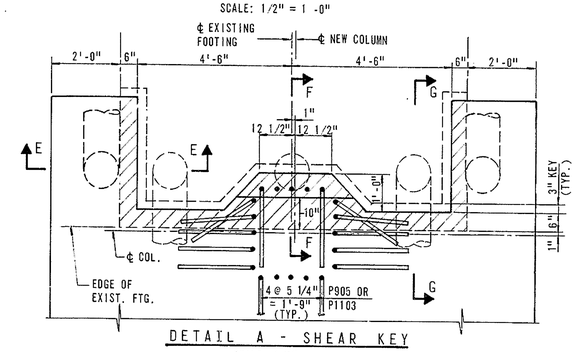

DETAIL A - SHEAR KEY

SCALE: 1/2" = 1'-0"

NOTES:

1. FOR PILE DETAILS, SEE SHEET NO. 6.
2. FOR REINFORCING SCHEDULE, SEE SHEET NO. 12.

SECTION A-A

REINFORCING SIMILAR FOR EAST, CENTER AND WEST FOOTING, UNLESS NOTED.
FOR REINFORCING NOT SHOWN, SEE SECTIONS B-B & D-D

SCALE: 1/4" = 1'-0"

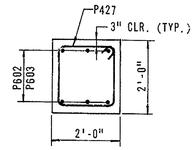

SECTION C-C

SCALE: 1/2" = 1'-0"

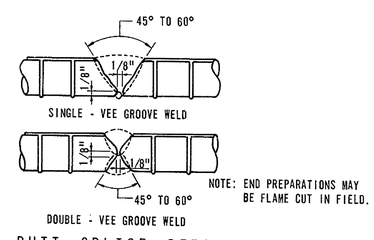

BUTT SPLICE DETAIL

NO SCALE

DELAWARE
DEPARTMENT OF TRANSPORTATION
DIVISION OF HIGHWAYS

MODIFICATIONS TO BRIDGE NO. 675
DELAWARE ROUTE 141 OVER E.B. TURNPIKE
FOOTING PLAN

D. A.A.A.	SCALE	APPROVED BY:
T. A.J.S.	AS SHOWN	
C. F.R.R.		BRIDGE ENGINEER

COUNTY	CONTRACT	F.B.A. REG. NO.	STATE	FED. AID PROJECT NO.	SHEET NO	TOTAL SHEETS
NEW CASTLE	7248	2	DEL		14	31

DELAWARE TURNPIKE WIDENING AND IMPROVEMENT PROGRAM
MODIFICATIONS TO STRUCTURES NOS. 675, 677 & 678

NO.	REVISIONS	BY	DATE

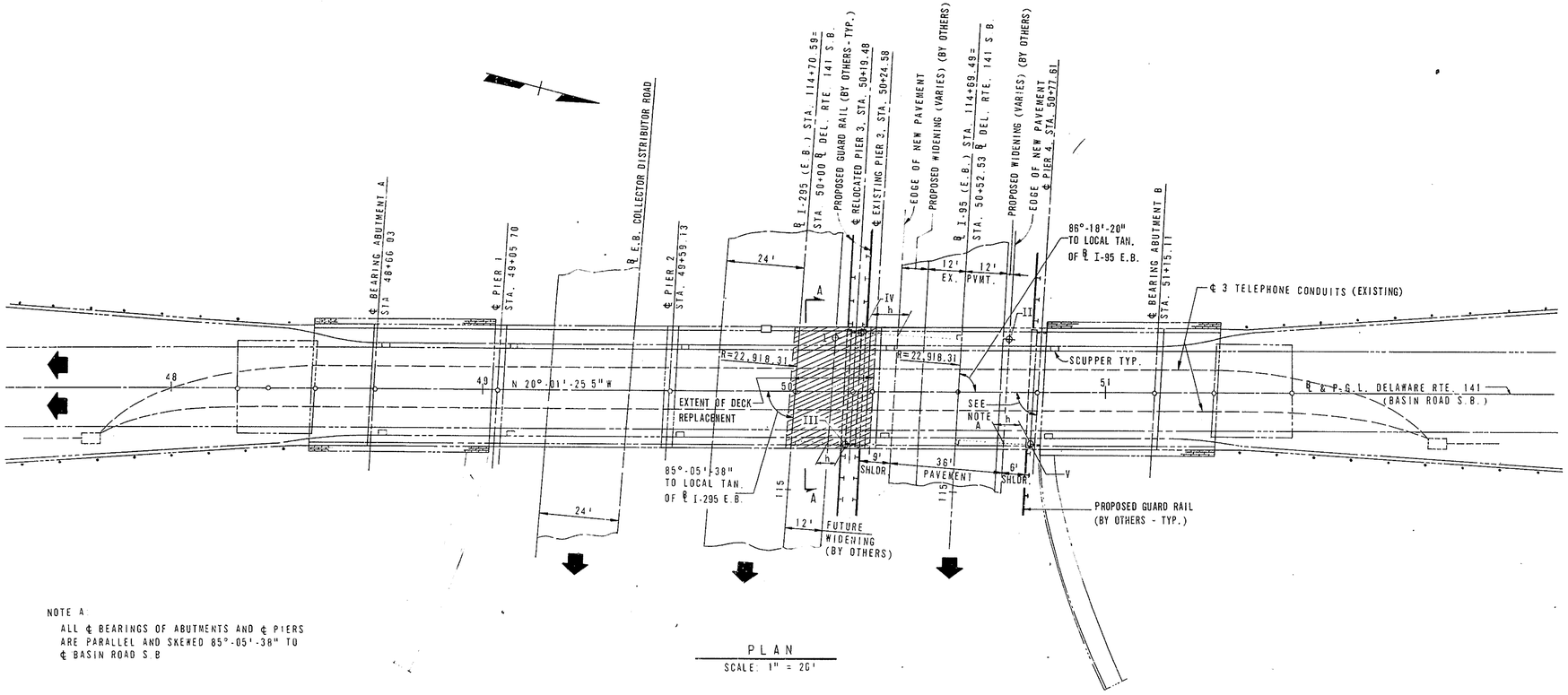

NOTE A
ALL ℄ BEARINGS OF ABUTMENTS AND ℄ PIERS ARE PARALLEL AND SKEWED 85°-05'-38" TO ℄ BASIN ROAD S.B.

PLAN
SCALE: 1" = 20'

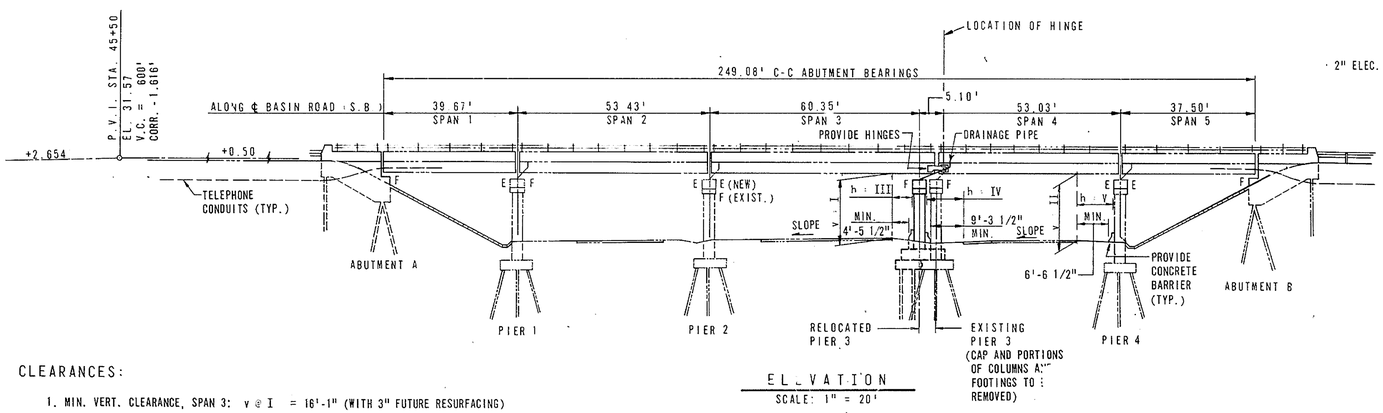

ELEVATION
SCALE: 1" = 20'

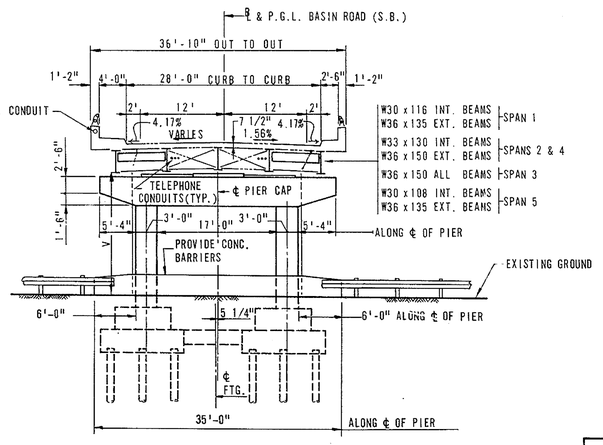

SECTION A-A
SCALE 1" = 10'

CLEARANCES:

1. MIN. VERT. CLEARANCE, SPAN 3: v @ I = 16'-1" (WITH 3" FUTURE RESURFACING)
2. MIN. VERT. CLEARANCE, SPAN 4: v @ II = 16'-3 1/2" (WITH 3" FUTURE RESURFACING)
3. MIN. HORIZ. CLEARANCE, SPAN 3: n @ III = 5'-8 1/2" (AT RELOCATED PIER 3)
4. MIN. HORIZ. CLEARANCE, SPAN 4: n @ IV = 10'-7 1/2" (AT RELOCATED PIER 3)
5. MIN. HORIZ. CLEARANCE, SPAN 4: n @ V = 7'-10"

SUGGESTED CONSTRUCTION SEQUENCE

1. CONSTRUCT PERMANENT P.C.C. SAFETY BARRIER AT PIER 4.
2. CONSTRUCT RELOCATED PIER 3.
3. REMOVE PORTION OF SUPERSTRUCTURE CONCRETE, KEEPING ONE LANE OF TRAFFIC IN SERVICE ON THE BRIDGE AT ALL TIMES.
4. MODIFY STRUCTURAL STEEL AND INSTALL FIXED BEARINGS IN SPAN 3, RELOCATED PIER 3.
5. MODIFY STRUCTURAL STEEL IN SPANS 3 AND 4 AND INSTALL HINGES.
6. REMOVE ALL BEARINGS FROM EXISTING PIER 3. MODIFY STRUCTURAL STEEL AND INSTALL EXPANSION BEARINGS AT PIER 2, SPAN 3.
7. RECONSTRUCT SUPERSTRUCTURE CONCRETE AND BITUMINOUS WEARING SURFACE, INCLUDING BRIDGE DRAINAGE AND BRIDGE RAILING.
8. REPEAT STEPS 3 THRU 7 FOR REMAINDER OF BRIDGE.
9. REMOVE EXISTING PIER 3 AS NOTED.
10. CONSTRUCT PERMANENT P.C.C. SAFETY BARRIERS AT PIER 3.

NOTE:

1. FOR GENERAL NOTES, SEE SHEET NO. 2.

DELAWARE
DEPARTMENT OF TRANSPORTATION
DIVISION OF HIGHWAYS

MODIFICATIONS TO BRIDGE NO. 678
DELAWARE ROUTE 141 OVER E.B. TURNPIKE
PLAN AND ELEVATION

		SCALE	APPROVED BY
D	F.R.R.	AS SHOWN	
T	L.F.C.		
C.	W.H.P.		BRIDGE ENGINEER

COUNTY	CONTRACT	F.R.A. REG. NO.	STATE	FED. AID PROJECT NO.	SHEET NO.	TOTAL SHEETS
NEW CASTLE	7248	2	DEL		15	31

DELAWARE TURNPIKE WIDENING AND IMPROVEMENT PROGRAM
MODIFICATIONS TO STRUCTURES NOS. 675, 677 & 678

NO.	REVISIONS	BY	DATE

BRIDGE SEAT ELEVATIONS					
BEAM	1	2	3	4	5
ELEVATION	29.490	29.630	29.742	29.647	29.477

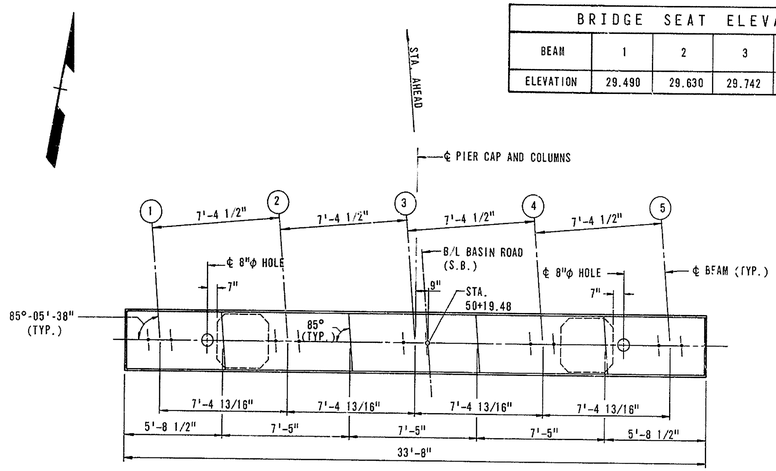

PLAN
SCALE: 1/4" = 1'-0"

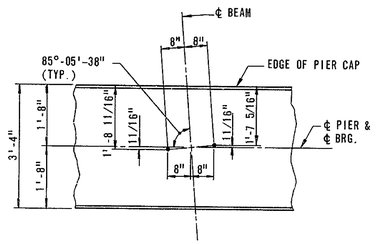

TYPICAL ANCHOR BOLT PLAN
SCALE: 1/2" = 1'-0"

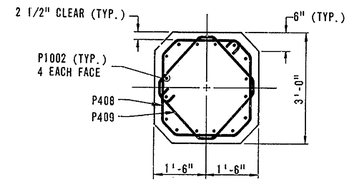

SECTION C-C
SCALE: 1/2" = 1'-0"

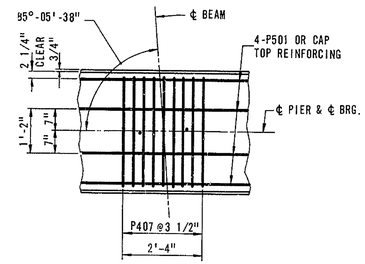

GRILLAGE UNDER BEARING SHOES - TYPICAL DETAIL
SCALE: 1/2" = 1'-0"

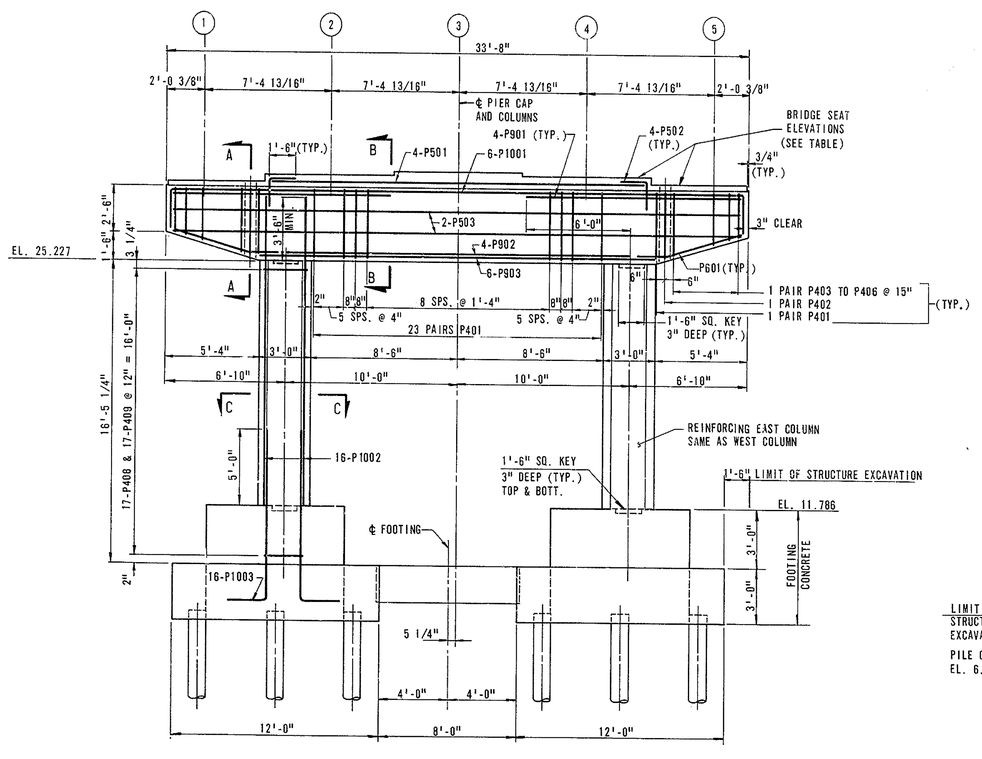

ELEVATION
SCALE: 1/4" = 1'-0"

NOTE 'A'

THE TOP, SIDES AND VERTICAL ENDS OF BOTH THE NEW PIER CAP AND ALL REMAINING EXISTING PIER CAPS SHALL BE GIVEN AN EPOXY PROTECTIVE COATING.

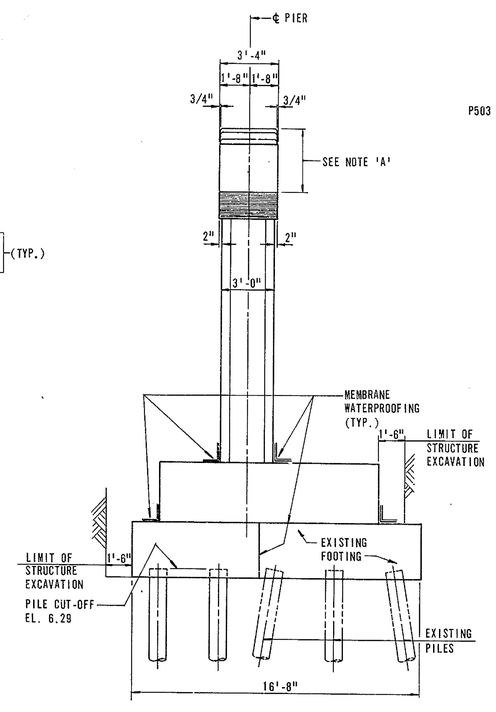

END ELEVATION
SCALE: 1/4" = 1'-0"

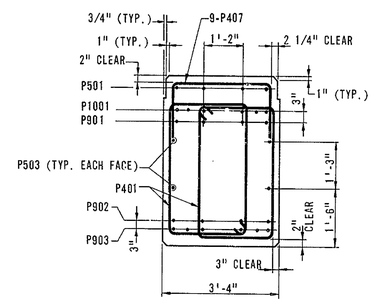

SECTION B-B
SCALE: 1/2" = 1'-0"

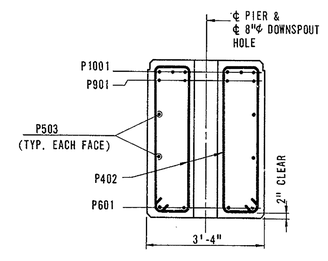

SECTION A-A
SCALE: 1/2" = 1'-0"

NOTES:

1. FOR FOOTING DETAIL, SEE SHEET NO. 16.
2. ALL SHOES TYPE F3 THIS PIER. SEE SHEET NO. 17.

REINFORCING SCHEDULE - PIER 3

LOCATION	MARK	NO. REQ'D	TYPE	LENGTH	A	B	C	D	E
CAP	P401	50	5	12'-10"	2'-1"	3'-11"	0'-5"		
CAP	P402	4	5	10'-2"	0'-11"	3'-9"	0'-5"		
CAP	P403	4	5	12'-2"	2'-1"	3'-7"	0'-5"		
CAP	P404	4	5	11'-6"	2'-1"	3'-3"	0'-5"		
CAP	P405	4	5	10'-8"	2'-1"	2'-10"	0'-5"		
CAP	P406	4	5	10'-0"	2'-1"	2'-6"	0'-5"		
CAP	P407	45	2	5'-10"	1'-6"	2'-10"			
COLUMN	P408	34	6	10'-4"	1'-10"	0'-6 1/2"	0'-5"	0'-4 1/2"	0'-4 1/2"
COLUMN	P409	34	7	9'-0"	1'-4 1/2"	0'-8"	0'-5"	0'-11 1/2"	0'-11 1/2"
FTG.	P410	10	5	6'-10"	1'-6"	1'-6"	0'-5"		
CAP	P501	4	STR.	21'-11"					
CAP	P502	8	1	3'-0"	1'-6"	1'-6"			
CAP	P503	4	STR.	33'-0"					
FTG.	P504	24	STR.	4'-0"					
FTG.	P505	26	STR.	6'-9"					
FTG.	P506	16	STR.	11'-6"					
FTG.	P507	8	2	17'-7"	2'-9"	12'-1"			
FTG.	P508	4	1	7'-6"	2'-9"	4'-9"	(FURNISH	STRAIGHT)	
FTG.	P509	4	1	11'-0"	2'-9"	8'-3"			
FTG.	P510	14	2	13'-0"	2'-9"	7'-6"			
FTG.	P511	8	1	4'-0"	2'-9"	1'-3"			
FTG.	P512	4	STR.	7'-6"					
FTG.	P513	8	2	21'-2"	6'-10"	7'-6"			
CAP	P601	8	3	7'-3"	2'-0"	5'-3"	5'-1"	1'-6"	
FTG.	P602	12	STR.	10'-2"					
FTG.	P603	6	STR.	8'-0"					
CAP	P901	8	STR.	12'-7"					
CAP	P902	4	STR.	20'-0"					
CAP	P903	6	STR.	23'-0"					
FTG.	P904	22	STR.	11'-6"					
CAP	P1001	6	2	37'-8"	2'-3"	33'-2"			
COLUMN	P1002	32	STR.	17'-0"					
FTG.	P1003	32	1	12'-1"	1'-10"	10'-3"			
FTG.	P1004	18	STR.	6'-9"					
FTG.	P1005	8	4	9'-9"	6'-11"	0'-11 1/2"	1'-0 3/4"		

BENDING DIAGRAMS

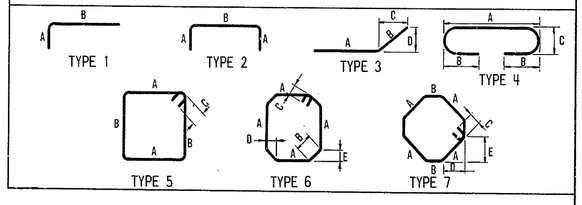

DELAWARE
DEPARTMENT OF TRANSPORTATION
DIVISION OF HIGHWAYS

MODIFICATIONS TO BRIDGE NO. 678
DELAWARE ROUTE 141 OVER E.B. TURNPIKE
PIER 3

D. F.R.R.	SCALE	APPROVED BY:
T. L.F.C.	AS SHOWN	
C. W.H.P.		BRIDGE ENGINEER

COUNTY	CONTRACT	F. R. A. REG. NO.	STATE	FED. AID PROJECT NO.	SHEET NO.	TOTAL SHEETS
NEW CASTLE	7248	2	DEL.		18	31

DELAWARE TURNPIKE WIDENING AND IMPROVEMENT PROGRAM
MODIFICATIONS TO STRUCTURES NOS. 675, 677 & 678

NO.	REVISIONS	BY	DATE

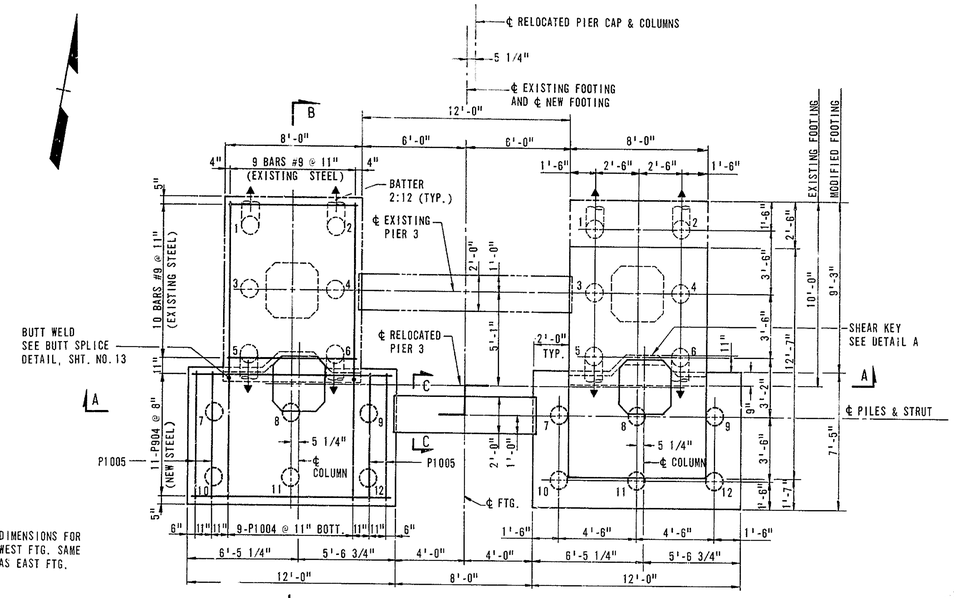

NOTE: DIMENSIONS FOR WEST FTG. SAME AS EAST FTG.

BOTTOM REINFORCING SHOWN.

NOTE: PILES 1 TO 6 ARE EXISTING. EXISTING PILES 1, 2, 5 & 6. ARE BATTERED 2:12 IN DIRECTION SHOWN.

PILES 7 TO 12 ARE NEW PLUMB PILES.

PLAN
SCALE: 1/4" = 1'-0"

PILE LOADS			
PILE NO.	LOAD (K)	PILE NO.	LOAD (K)
1	37	7	34
2	38	8	40
3	27	9	45
4	33	10	39
5	28	11	45
6	34	12	51

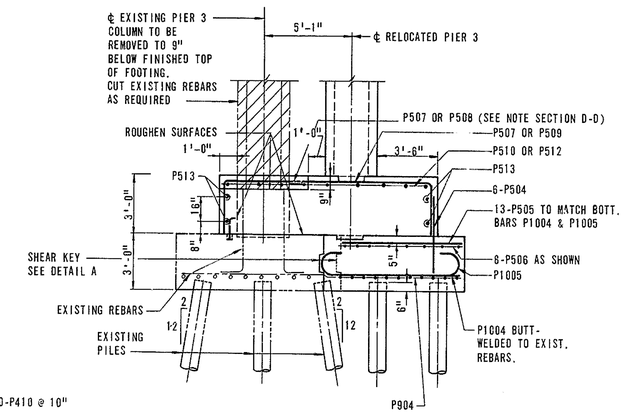

SECTION B-B
FOR REINFORCING NOT SHOWN, SEE SECTIONS A-A, E-E & D-D
SCALE: 1/4" = 1'-0"

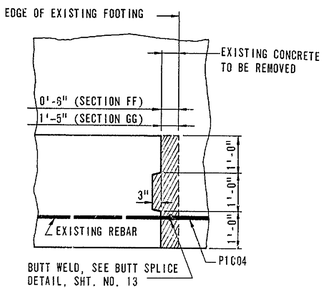

SECTIONS F-F & G-G
SCALE: 1/2" = 1'-0"

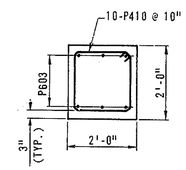

SECTION C-C
SCALE: 1/2" = 1'-0"

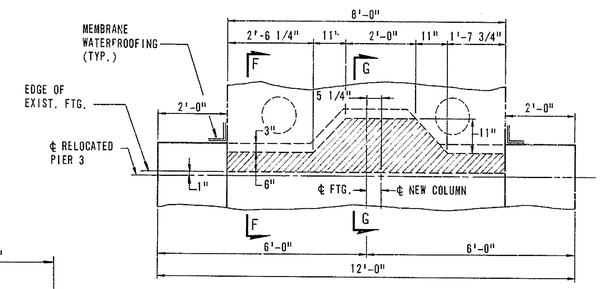

DETAIL A - SHEAR KEY
SCALE: 1/2" = 1'-0"

NOTES:

1. FOR PILE DETAILS, SEE SHEET NO. 6.
2. FOR REINFORCING SCHEDULE, SEE SHEET NO. 15.

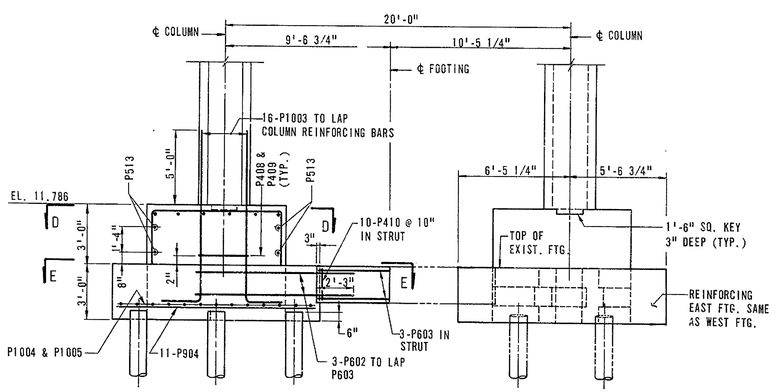

SECTION A-A
FOR REINFORCING NOT SHOWN, SEE SECTIONS B-B D-D & E-E
SCALE: 1/4" = 1'-0"

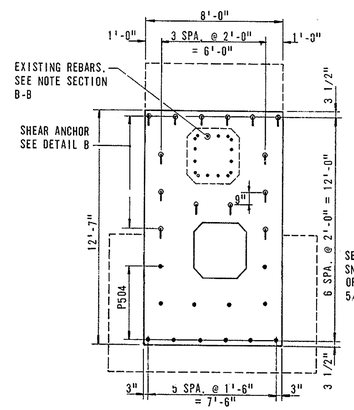

SECTION E-E
PLAN OF SHEAR ANCHORS AND DOWELS
SCALE: 1/4" = 1'-0"

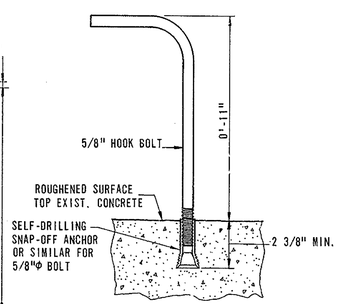

DETAIL B
SHEAR ANCHOR
SCALE: 3" = 1'-0"

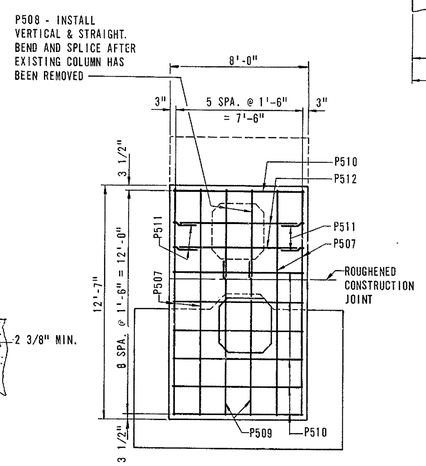

SECTION D-D
TOP LAYER OF REINFORCING
SCALE: 1/4" = 1'-0"

DELAWARE
DEPARTMENT OF TRANSPORTATION
DIVISION OF HIGHWAYS

MODIFICATIONS TO BRIDGE NO. 678
DELAWARE ROUTE 141 OVER E.B. TURNPIKE
FOOTING PLAN

D. F.R.R.	SCALE	APPROVED BY:
T. L.F.C.	AS SHOWN	
C. W.H.P.		BRIDGE ENGINEER

COUNTY	CONTRACT	P. R. A. REG. NO.	STATE	FED. AID PROJECT NO.	SHEET NO.	TOTAL SHEETS
NEW CASTLE	7248	2	DEL.		17	31

DELAWARE TURNPIKE WIDENING AND IMPROVEMENT PROGRAM
MODIFICATIONS TO STRUCTURES NOS. 675, 677 & 678

NO.	REVISIONS	BY	DATE

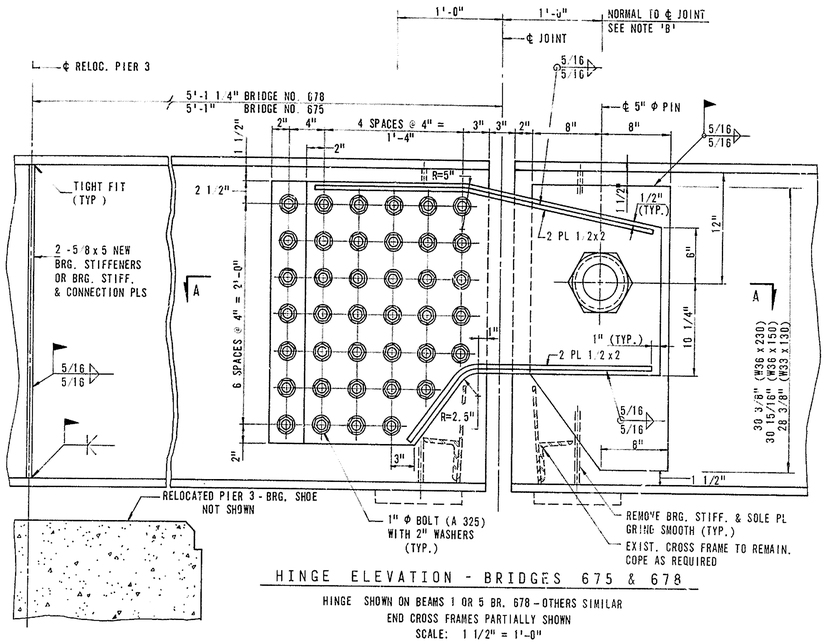

HINGE ELEVATION - BRIDGES 675 & 678

HINGE SHOWN ON BEAMS 1 OR 5 BR. 678 - OTHERS SIMILAR
END CROSS FRAMES PARTIALLY SHOWN
SCALE: 1 1/2" = 1'-0"

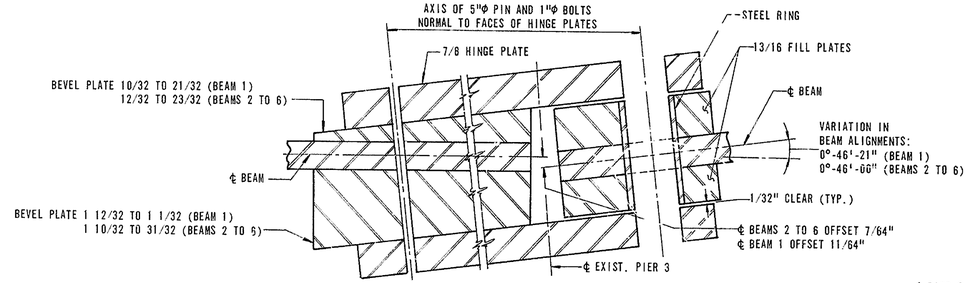

HINGE BRIDGE 675 - DETAIL B - BEAM OFFSETS

NO SCALE

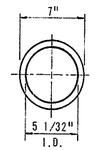

STEEL RING

DETAIL A

NO SCALE

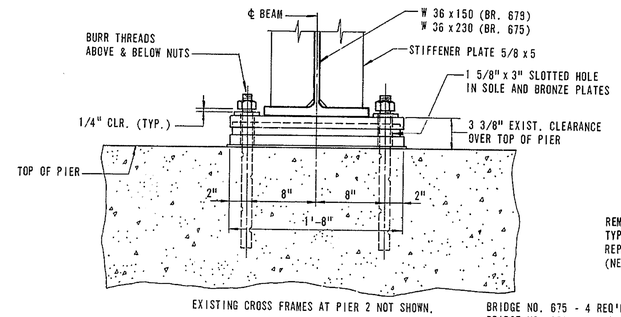

END ELEVATION

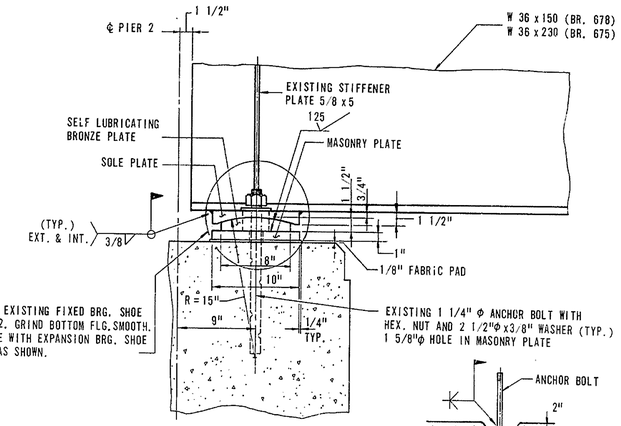

SIDE ELEVATION

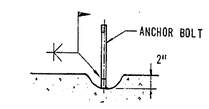

NO SCALE

WHERE REQUIRED, REPAIR ANCHOR BOLTS BY CHIPPING AWAY CONCRETE AS SHOWN, WELD EXTENSIONS ON BOLTS AND RESTORE BEARING AREAS TO EXISTING SURFACE USING NON-SHRINK GROUT.

REPLACEMENT OF INTERIOR BEAMS BRG. SHOES

BRIDGES 675 & 678 - SPAN 3 AT PIER 2

(SEE NOTE A FOR EXTERIOR BEAMS)

SCALE: 1 1/2" = 1'-0"

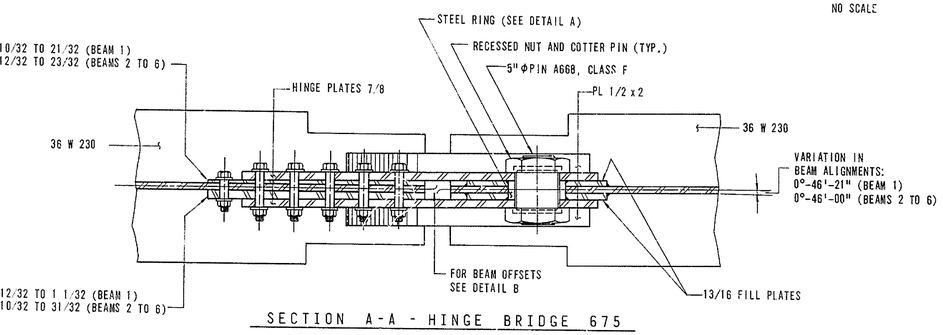

SECTION A-A - HINGE BRIDGE 675

FOR DETAILS NOT SHOWN, SEE SECTION A-A BRIDGE 678, OR ELEVATION

SCALE: 1 1/2" = 1'-0"

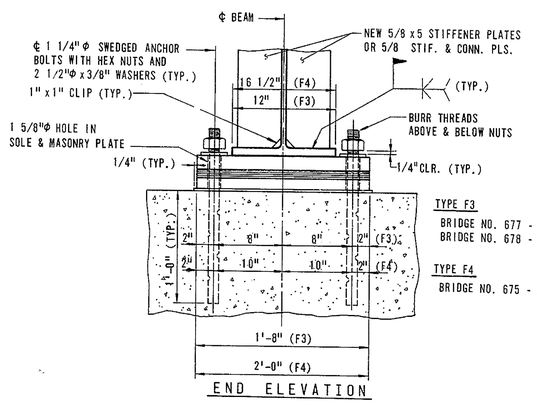

END ELEVATION

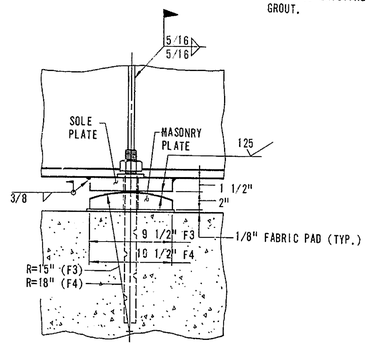

SIDE ELEVATION

BEARING SHOES TYPE F3 & F4

(TYPE F3 SHOWN)

SCALE: 1 1/2" = 1'-0"

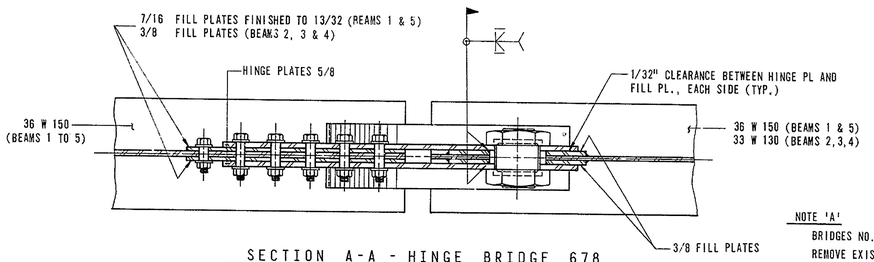

SECTION A-A - HINGE BRIDGE 678

FOR DETAILS NOT SHOWN, SEE SECTION A-A BRIDGE 675, OR ELEVATION

SCALE: 1 1/2" = 1'-0"

NOTE 'A'

BRIDGES NO. 675 & NO. 678 EXTERIOR BEAMS.

REMOVE EXISTING FIXED BEARING SHOES TYPE F2 AND FILL PLATES FROM SPAN 3 AT PIER 2. GRIND BOTTOM FLG. SMOOTH. INSTALL SOLE PLATE AND TYPE E2 EXPANSION BEARING SALVAGED FROM PIER 3. ADJUST TO PROPER ELEVATION BY USING ADDITIONAL FABRIC PADS OR STEEL SHIMS.

NOTE 'B'

ALL NEW AND EXISTING STRUCTURAL STEEL WITHIN THESE LIMITS SHALL BE CLEANED AND GIVEN ONE SHOP OR PRIME COAT OF FX-498, OR APPROVED EQUAL. SEE SPECIAL PROVISIONS.

NOTE:

1. FOR ANCHOR BOLT DETAIL, SEE SHEET NO. 9.

DELAWARE
DEPARTMENT OF TRANSPORTATION
DIVISION OF HIGHWAYS

MODIFICATIONS TO BRIDGES NO. 675 & 678
DELAWARE ROUTE 141 OVER E.B. TURNPIKE
HINGE AND BEARING DETAILS

D.A.A.A. & F.R.R. T. L.F.C. C. W.H.P.	SCALE AS SHOWN	APPROVED BY: BRIDGE ENGINEER

COUNTY	CONTRACT	P. R. A. REG. NO.	STATE	FED. AID PROJECT NO.	SHEET NO.	TOTAL SHEETS
NEW CASTLE	7248	2	DEL.		18	31

DELAWARE TURNPIKE WIDENING AND IMPROVEMENT PROGRAM
MODIFICATIONS TO STRUCTURES NOS. 675, 677 & 678

NO.	REVISIONS	BY	DATE

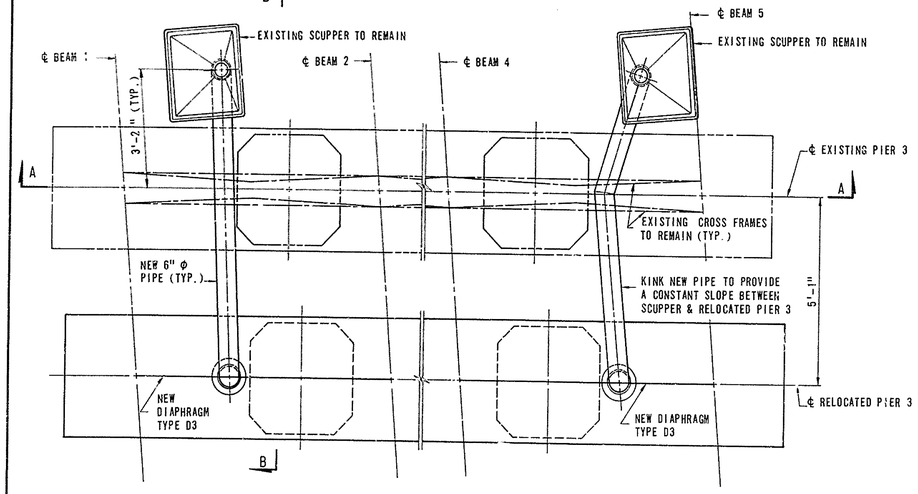

PLAN

DRAINAGE MODIFICATION BRIDGE NO. 678

SCALE: 1" = 2'-0"

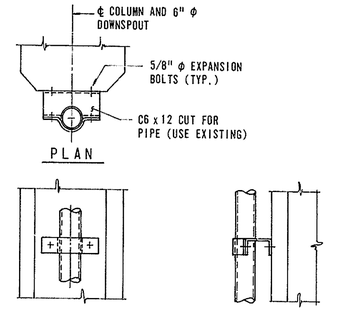

EXISTING DOWNSPOUT AND CONNECTION TO COLUMN

NOT TO SCALE

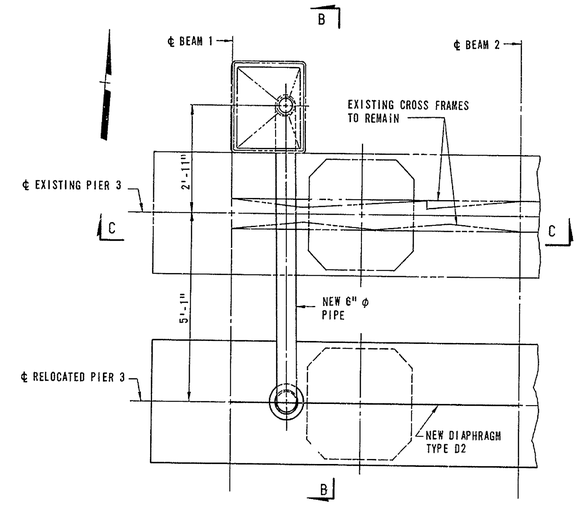

PLAN

DRAINAGE MODIFICATION BRIDGE NO. 675

SCALE: 1" = 2'-0"

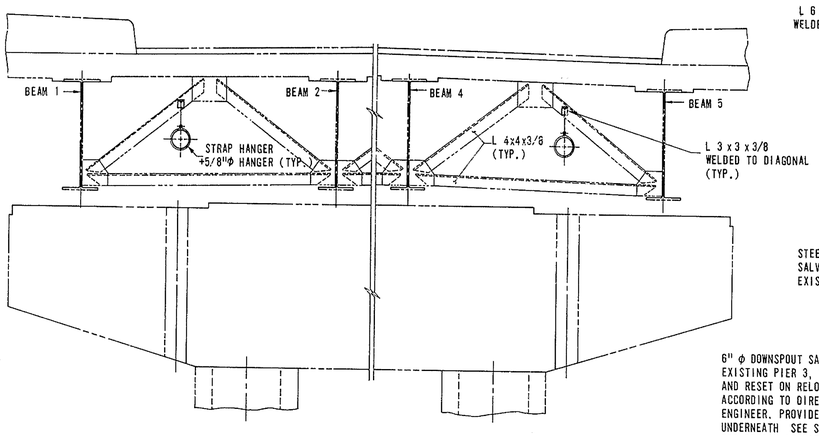

SECTION A-A

SCALE: 1" = 2'-0"

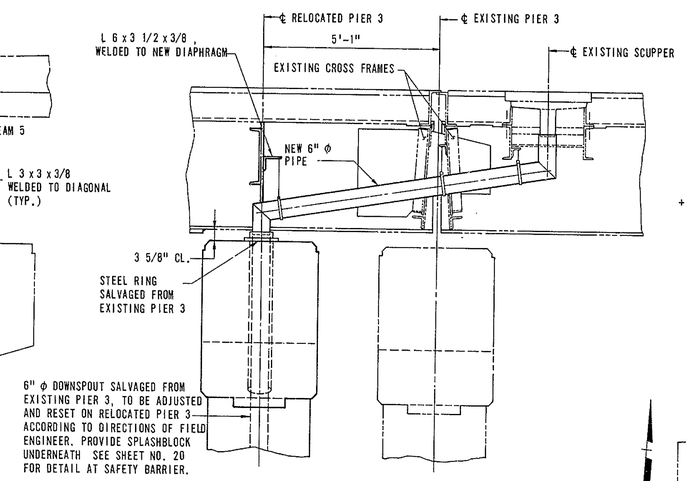

SECTION B-B

SECTION SHOWN BR. NO. 678-SIMILAR FOR BR. NO. 675

SCALE: 1" = 2'-0"

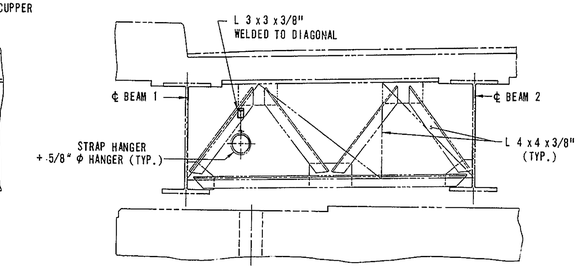

SECTION C-C

SCALE: 1" = 2'-0"

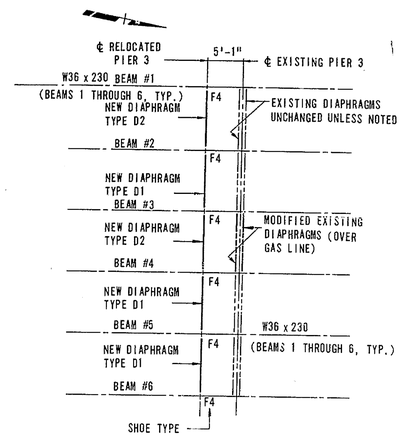

BRIDGE NO. 675

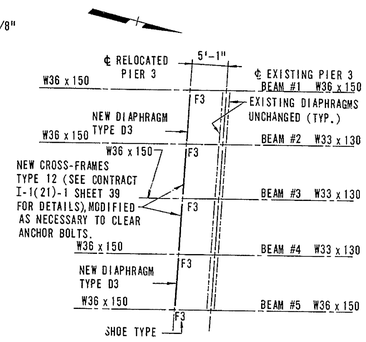

BRIDGE NO. 678

PARTIAL FRAMING PLAN AT PIER 3

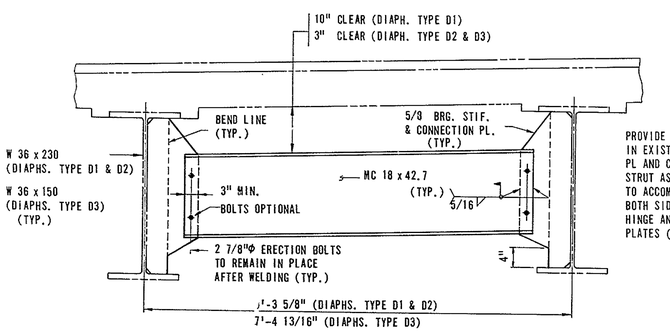

NEW DIAPHRAGMS TYPE D1 & D2(BR. NO. 675); TYPE D3 (BR. NO. 678)

SCALE: 3/4" = 1'-0"

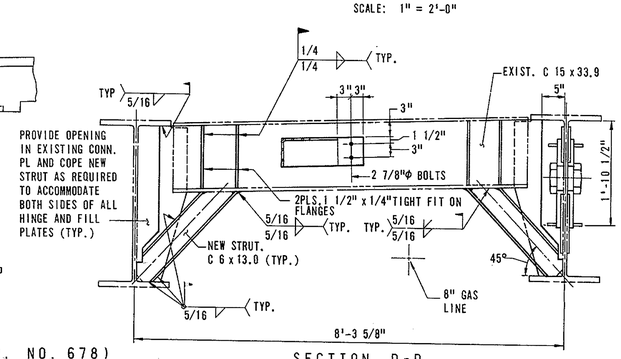

SECTION D-D

SCALE: 3/4" = 1'-0"

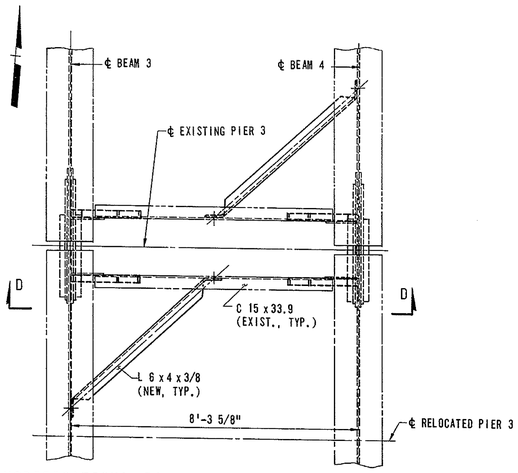

MODIFICATIONS TO DIAPHRAGMS OVER GAS LINE - BRIDGE NO. 675 - EXISTING PIER 3

SCALE: 1" = 2'-0"

DELAWARE
DEPARTMENT OF TRANSPORTATION
DIVISION OF HIGHWAYS

MODIFICATIONS TO BRIDGES NO. 675 & 678
DELAWARE ROUTE 141 OVER E.B. TURNPIKE
DRAINAGE AND DIAPHRAGMS

D. F.R.R.	SCALE	APPROVED BY:
T. L.F.C.	AS SHOWN	
C. W.H.P.		BRIDGE ENGINEER

COUNTY	CONTRACT	F.P.A. REG. NO	STATE	FED. AID PROJECT NO.	SHEET NO.	TOTAL SHEETS
NEW CASTLE	7248	2	DEL.		19	31

DELAWARE TURNPIKE WIDENING AND IMPROVEMENT PROGRAM
MODIFICATIONS TO STRUCTURES NOS. 675, 677 & 678

NO.	REVISIONS	BY	DATE

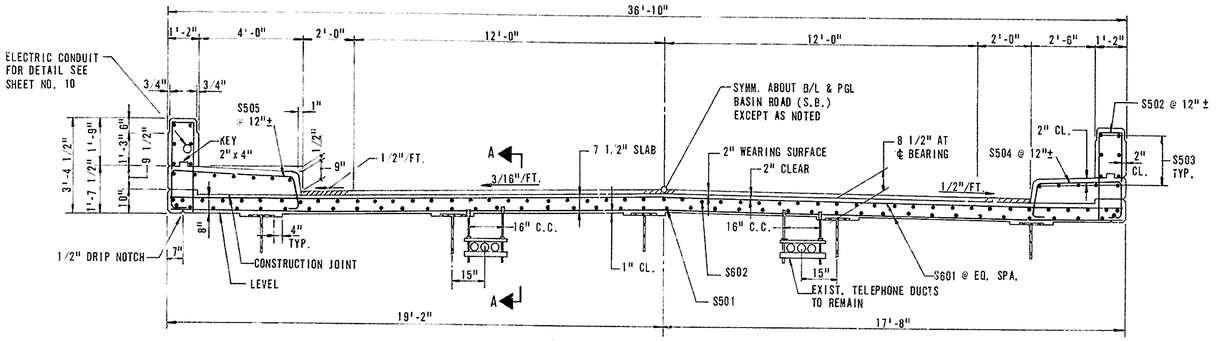

MODIFIED CROSS SECTION - BRIDGE NO. 678

SCALE: 3/8" = 1'-0"

NOTE:
NEW CONCRETE DECK SHALL CONFORM TO AND MATCH EXISTING DECK ELEVATIONS.

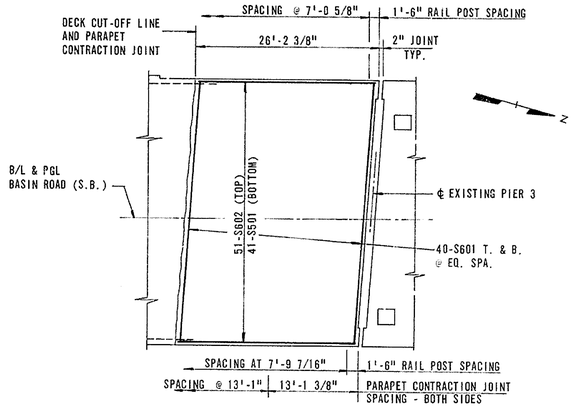

DECK PLAN - BRIDGE NO. 678

SCALE: 1" = 10'-0"

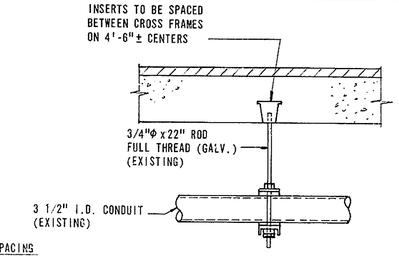

SECTION A-A

SCALE: 1" = 1'-0"

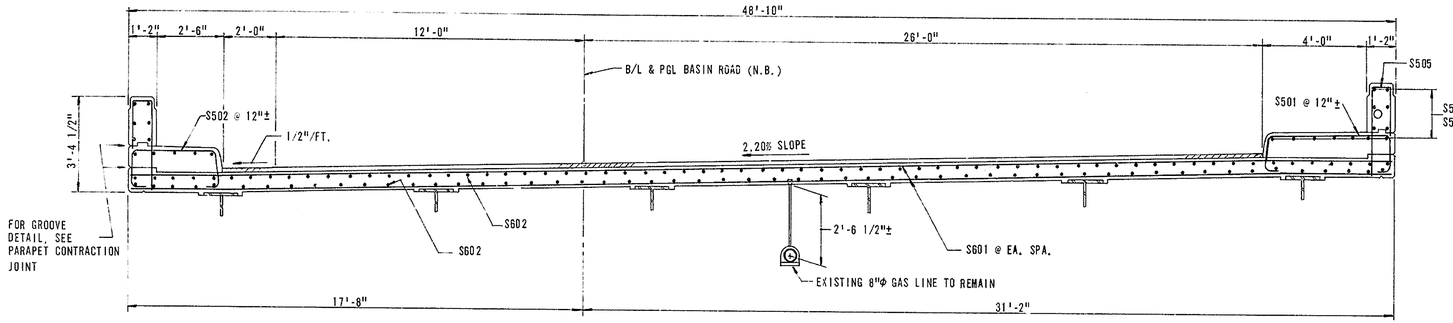

MODIFIED CROSS SECTION - BRIDGE NO. 675

SCALE: 3/8" = 1'-0"

NOTE: FOR PARAPET AND SLAB DIMENSIONS NOT SHOWN AND FOR REINFORCEMENT CLEARANCES, SEE BRIDGE NO. 678 ABOVE.

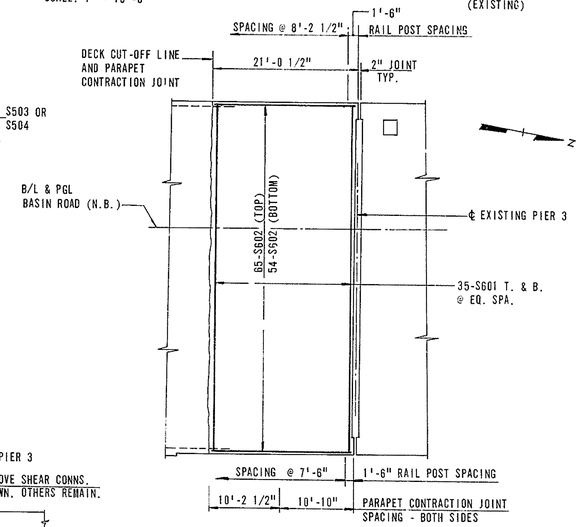

DECK PLAN - BRIDGE NO. 675

SCALE: 1" = 10'-0"

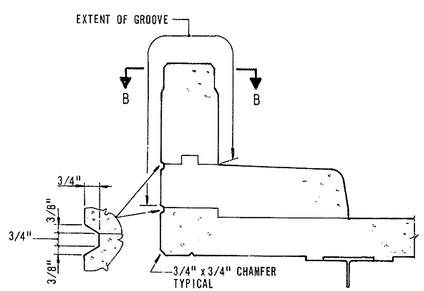

PARAPET CONTRACTION JOINT

SCALE: 3/4" = 1'-0"

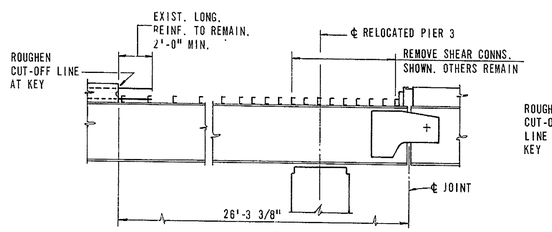

DECK REMOVAL DETAIL - BRIDGE NO. 678

SCALE: 1/4" = 1'-0"

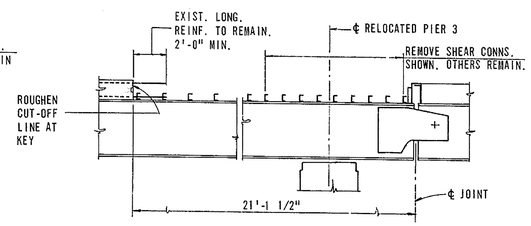

DECK REMOVAL DETAIL - BRIDGE NO. 675

SCALE: 1/4" = 1'-0"

NOTE:

1. EXISTING ROADWAY AND SIDEWALK/CURB EXPANSION DAMS AT EXISTING PIER 3 TO REMAIN IN PLACE. SEE SHEET 39 OF 66, CONTRACT I-1(21)1.

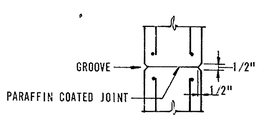

SECTION B-B

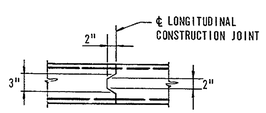

SLAB CONSTRUCTION JOINT

SCALE: 3/4" = 1'-0"

BRIDGE NO. 678

REINFORCING SCHEDULE

LOCATION	MARK	NO. REQ'D	TYPE	LENGTH
SLAB	S501	41	STR.	25'-10"
SLAB/PAR.	S502	56	1	6'-8 1/2"
SDWK./PAR.	S503	48	STR.	12'-9"
SLAB/CURB.	S504	28	2	6'-8"
SLAB/SDWY.	S505	28	2	8'-2"
EXTRA	S506	1	STR.	18'-0" *
SLAB	S601	80	STR.	38'-8" *
SLAB	S602	51	STR.	25'-10"

BENDING DIAGRAMS

* SEE NOTE 'A'

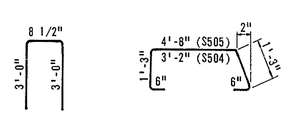

BRIDGE NO. 675

REINFORCING SCHEDULE

LOCATION	MARK	NO. REQ'D	TYPE	LENGTH
SLAB/SDWK.	S501	23	2	8'-2"
SLAB/CURB	S502	23	2	6'-8"
SDWK./PAR.	S503	24	STR.	9'-10"
SDWK./PAR.	S504	24	STR.	10'-6"
SLAB/PAR.	S505	46	1	6'-8 1/2"
EXTRA	S506	1	STR.	18'-0" *
SLAB	S601	70	STR.	52'-9" *
SLAB	S602	119	STR.	20'-8"

BENDING DIAGRAMS

* SEE NOTE 'A'

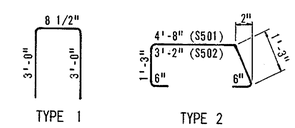

NOTE 'A'

S601 BARS SHALL BE CUT IN FIELD AS REQUIRED BY CONSTRUCTION SEQUENCE. BAR LENGTHS SHOWN PROVIDE FOR ONE 2'-0" LAP SPLICE (BRIDGE NO. 678) AND FOR TWO 2'-0" LAP SPLICES (BRIDGE NO. 675).

EXTRA BARS TO BE USED TO SPLICE DAMAGED EXISTING BARS AS REQUIRED.

DELAWARE
DEPARTMENT OF TRANSPORTATION
DIVISION OF HIGHWAYS

MODIFICATIONS TO BRIDGES NO. 675 & 678
DELAWARE ROUTE 141 OVER E.B. TURNPIKE
DECK DETAILS

D. F.R.R.	SCALE	APPROVED BY:
T. A.J.S.	AS SHOWN	
C. W.H.P.		BRIDGE ENGINEER

COUNTY	CONTRACT	F. B. A. REG. NO.	STATE	FED. AID PROJECT NO.	SHEET NO.	TOTAL SHEETS
NEW CASTLE	7248	2	DEL.		20	31

DELAWARE TURNPIKE WIDENING AND IMPROVEMENT PROGRAM
MODIFICATIONS TO STRUCTURES NOS. 675, 677 & 678

NO.	REVISIONS	BY	DATE

NOTE "A": BLOCK OUT BARRIER HORIZONTALLY FROM 3" VERTICAL FACE AT END OF BARRIER AND TAPER TO NOTHING 5'-0" FROM END FOR GUARD RAIL CONNECTION TO SAFETY BARRIER. SEE STD. SHEET NO. G-7-1, "GUARD RAIL TO BARRIER CONNECTION DETAILS".

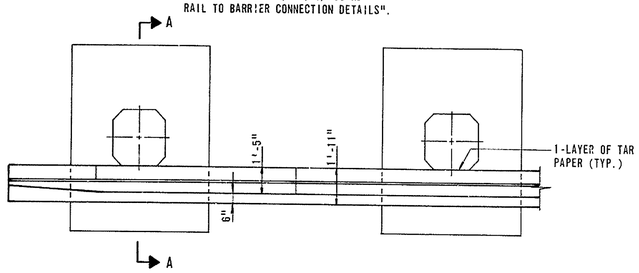

PLAN

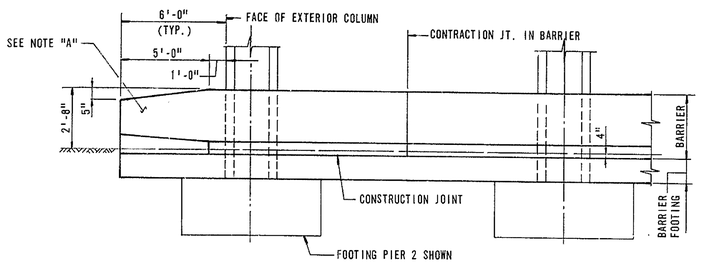

ELEVATION

PIERS 1 AND 2 BRIDGE NO. 677

SCALE: 1/4" = 1'-0"

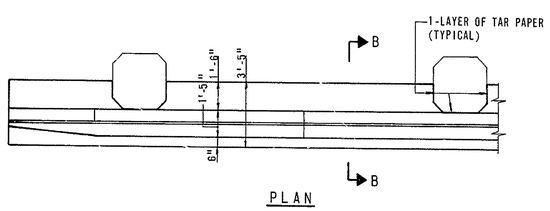

PLAN

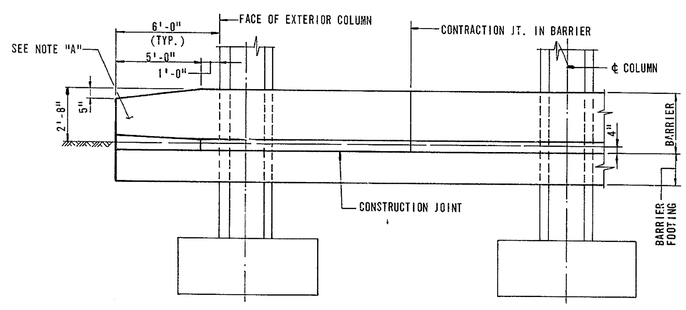

ELEVATION

PIER 4 BRIDGE NO. 678 SHOWN

PIERS 3 AND 4 BRIDGE NO. 675

NO SCALE

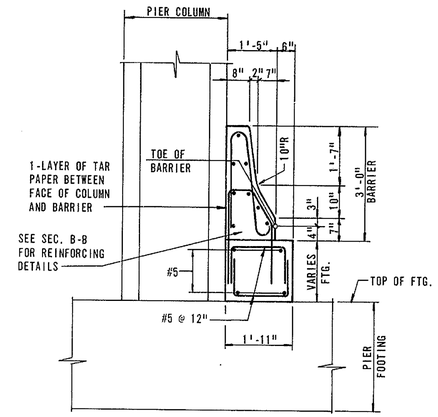

SECTION A-A

SCALE: 1/2" = 1'-0"

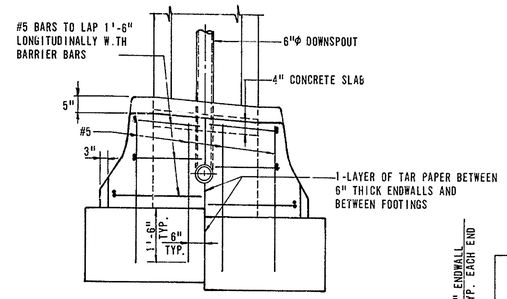

SECTION D-D

SCALE: 1/2" = 1'-0"

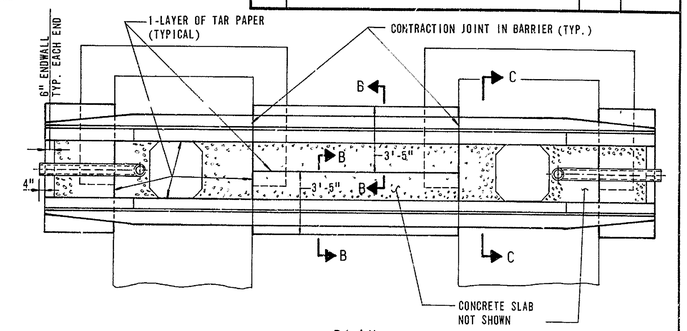

PLAN

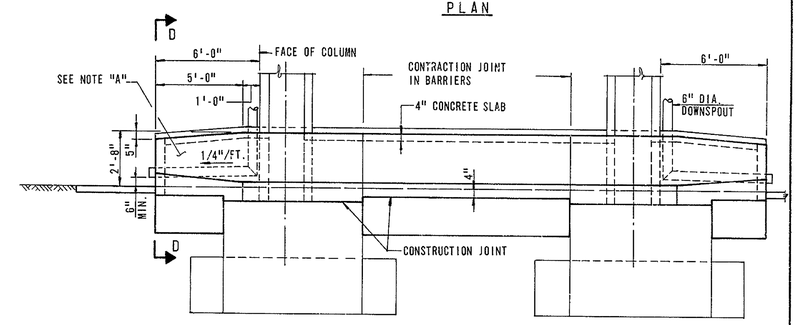

ELEVATION

PIER 3 BRIDGE NO. 678

SCALE: 1/4" = 1'-0"

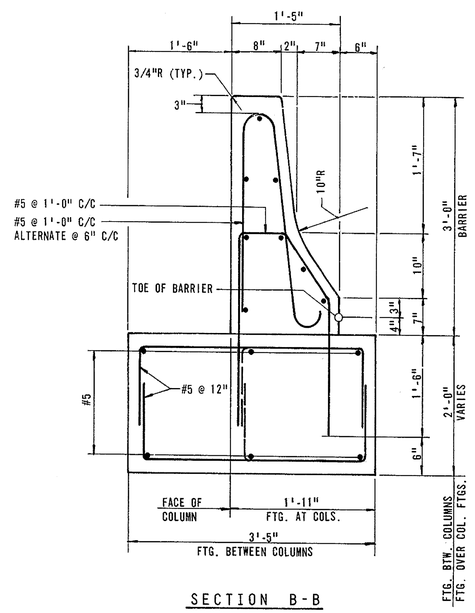

SECTION B-B

SCALE: 1" = 1'-0"

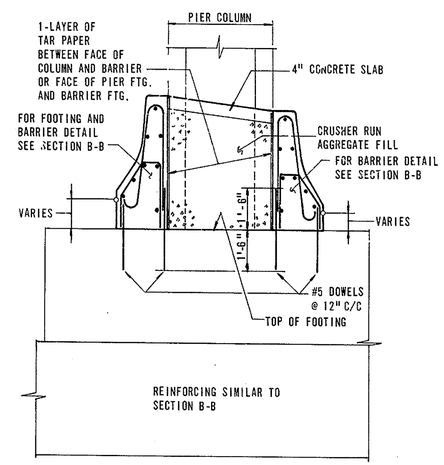

SECTION C-C

SCALE: 1/2" = 1'-0"

NOTE:

THE CONTRACTOR SHALL REMOVE EXISTING GUARD RAIL AND POSTS AS REQUIRED TO CONSTRUCT PERMANENT P.C.C. SAFETY BARRIERS. WHERE REMOVED, THE EXISTING GUARD RAIL SHALL BE ATTACHED TO THE NEW CONCRETE BARRIERS. THIS WORK WILL BE CONSIDERED INCIDENTAL TO THE WORK UNDER "PERMANENT P.C.C. SAFETY BARRIERS" AND WILL NOT BE PAID FOR AS A SEPARATE ITEM.

DELAWARE
DEPARTMENT OF TRANSPORTATION
DIVISION OF HIGHWAYS

MODIFICATIONS TO BRIDGE NOS. 675, 677 & 678
DELAWARE ROUTE 141 OVER E.B. TURNPIKE
SAFETY BARRIER DETAILS

D. A.A./F.R.R.	SCALE	APPROVED BY:
T. A.J.S.	AS SHOWN	
C. W.H.P.		BRIDGE ENGINEER

COUNTY	CONTRACT	P. R. A. REG. NO.	STATE	FED. AID PROJECT NO.	SHEET NO.	TOTAL SHEETS
NEW CASTLE	7248	2	DEL.		21	31

DELAWARE TURNPIKE WIDENING AND IMPROVEMENT PROGRAM
MODIFICATIONS TO STRUCTURES NOS. 675, 677 & 678

NO.	REVISIONS	BY	DATE

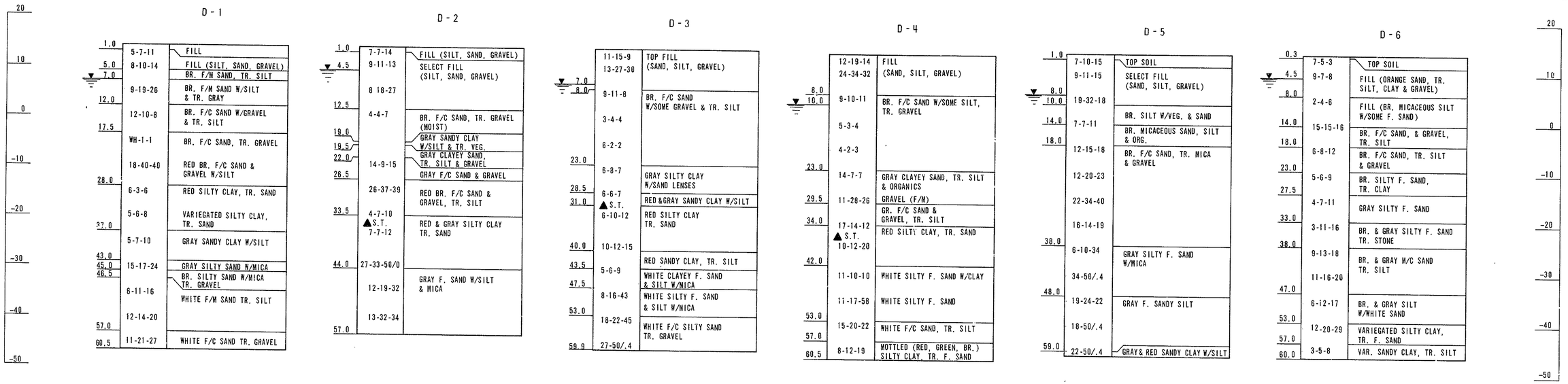

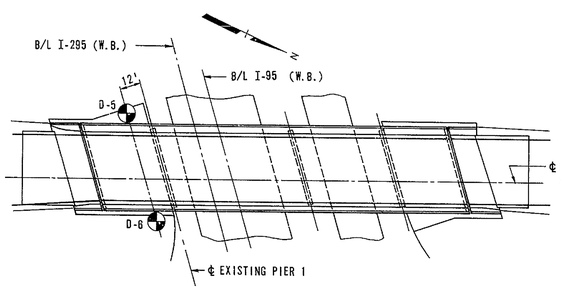

BRIDGE NO. 677

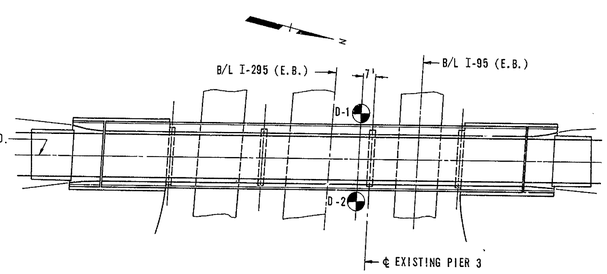

BRIDGE NO. 678

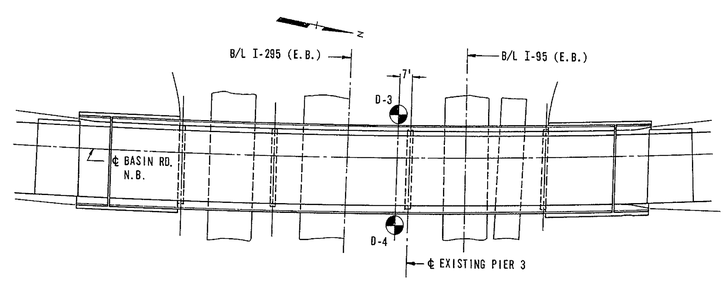

BRIDGE NO. 675

LEGEND

A	B	C	D

A = WATER LEVEL.

B = DEPTH IN FEET AT CHANGE IN SOIL STRATA.

C = STANDARD PENETRATION RESISTANCE IN BLOWS PER SIX INCHES OF DRIVING. ▲-INDICATES UNDISTURBED SAMPLE.

D = DESCRIPTION OF PRINCIPAL SOIL STRATA.

BORING LOCATION PLANS

SCALE: NONE

NOTES:

1. FOR GENERAL NOTES, SEE SHEET NO. 2.
2. INFORMATION ON BORING DATA AVAILABLE FOR THE ORIGINAL CONSTRUCTION OF THESE BRIDGES MAY BE EXAMINED AT THE DELAWARE TURNPIKE MAINTENANCE BUILDING. PLANS ARE ENTITLED:
   DELAWARE STATE HIGHWAY DEPARTMENT
   INTERSTATE ROUTE F.A.I.-1-(6)
   CHRISTINA RIVER INTERCHANGE
   INFORMATION DRAWINGS
   BORINGS
   (SEE SHEETS "S" AND "T" FOR STRUCTURE BORINGS AND GEOLOGICAL SECTIONS).
3. ⊕ - LOCATION OF BORINGS TAKEN IN 1980.

FOR INFORMATION ONLY

DELAWARE
DEPARTMENT OF TRANSPORTATION
DIVISION OF HIGHWAYS

MODIFICATIONS TO BRIDGES
DELAWARE ROUTE 141 OVER TURNPIKE
SOIL BORING PLAN AND LOGS

D. J.F.P.	SCALE	APPROVED BY
T. L.F.C.	NONE	
C. J.F.P.		BRIDGE ENGINEER

COUNTY	CONTRACT	F.E.A. REG. NO.	STATE	FED. AID PROJECT NO.	SHEET NO.	TOTAL SHEETS
NEW CASTLE	7248	2	DEL		22	31

DELAWARE TURNPIKE WIDENING AND IMPROVEMENT PROGRAM
MODIFCATIONS TO STRUCTURES NOS. 675, 677 & 678

PREL. TRACING _____ DESIGN _____ CHKD. _____

REVISIONS

GENERAL NOTES

1. ALL SIGNS, LIGHTS, BARRICADES AND TRAFFIC CONTROL DEVICES SHALL BE AS CALLED FOR IN THE MANUAL TITLED "DELAWARE TRAFFIC CONTROLS FOR STREETS AND HIGHWAY CONSTRUCTION AND MAINTENANCE OPERATIONS" (AS REVISED MAY 1977). PARTICULAR REFERENCE IS MADE TO CASES XVI AND XVII IN THE MANUAL.

2. PRIOR TO THE BEGINNING OF ANY WORK IN A PARTICULAR LOCATION, THE CONTRACTOR SHALL FIRST PLACE TRAFFIC PROTECTION DEVICES IN THE IMMEDIATE VICINITY OF THAT LOCATION, AS SHOWN ON THE PLANS, SO AS TO EFFECTIVELY CLOSE THAT AREA TO THE PASSAGE OF UNAUTHORIZED VEHICLES AND TO PROTECT THE WORK AND PERSONNEL UNTIL THE AREA IS READY FOR PUBLIC USE.

3. LOCATIONS AND LENGTHS OF PORTABLE P.C.C. SAFETY BARRIERS, CRASH CUSHIONS, TEMPORARY LINE STRIPING, ETC., AS SHOWN ON THE CONSTRUCTION SEQUENCE AND MAINTENANCE OF TRAFFIC PLANS, ARE FOR WORK AT THE STRUCTURES ONLY. TRAFFIC CONTROLS FOR THE CONSTRUCTION OF THE WIDENED ROADWAYS, EXTRA STRENGTH SHOULDERS, ETC., REQUIRED FOR MAINTENANCE OF TRAFFIC LANES SHALL BE IN ACCORDANCE WITH THE "MANUAL".

4. WHERE AREAS OF THE EXISTING LEFT SHOULDERS OR MEDIAN ARE SHOWN TO BE USED FOR MAINTENANCE OF TRAFFIC, THE WIDENED ROADWAY SECTION WILL BE CONSTRUCTED.

5. WHERE THE EXISTING RIGHT SHOULDER IS SHOWN TO BE USED FOR MAINTENANCE OF TRAFFIC, THE EXTRA STRENGTH SHOULDER SECTION WILL BE CONSTRUCTED.

6. LENGTHS OF PORTABLE P.C.C. SAFETY BARRIER, LENGTHS OF LANE SHIFTS, ETC., ARE MINIMUMS ONLY.

7. TEMPORARY LANE LINES SHALL BE 6 INCHES WIDE, SOLID WHITE LINES.

LEGEND

- TRAFFIC LANE
- PORTLAND CEMENT CONCRETE SAFETY BARRIER
- CRASH CUSHION ARRANGEMENT A
- CRASH CUSHION ARRANGEMENT B
- LATEX CONCRETE SURFACE COURSE
- PORTLAND CEMENT CONCRETE
- PROPOSED SUBSTRUCTURE
- EXTRA STRENGTH SHOULDER

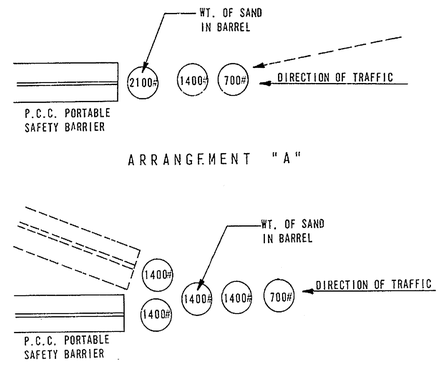

CRASH CUSHION LAYOUT

NOT TO SCALE

CONSTRUCTION ITEMS	STRUCTURES		
	NO. 675	NO. 677	NO. 678
	TIME ALLOWED CALENDAR DAYS	TIME ALLOWED CALENDAR DAYS	TIME ALLOWED CALENDAR DAYS
NEW PIER	118	118	118
STAGE I	93	62	93
STAGE II	93	62	93
STAGE III	93	62	–
REMOVAL OF EXISTING PIER	30	30	30
TOTAL DAYS	427	334	334

1. WORK ON ALL STRUCTURES IS TO PROCEED CONCURRENTLY.

2. ONCE WORK HAS STARTED ON STAGE I WITH THE REMOVAL OF THE ROADWAY DECK ON THE BASIN ROAD, RTE. 141 STRUCTURES, IT WILL CONTINUE WITHOUT INTERRUPTION THROUGH THAT STAGE, AND WILL BE COMPLETED WITHIN THE CALENDAR DAYS ALLOWED AS SHOWN IN THE TABULATION.

3. SPECIAL LIQUIDATED DAMAGES WILL BE ASSESSED OR A BONUS PAID BASED ON THE TIMES ALLOWED FOR COMPLETING STAGES I, II AND III FOR EACH STRUCTURE AS CALLED FOR IN THE SPECIAL PROVISIONS. ALL WORK ON THE PROJECT MUST ALSO BE COMPLETED WITHIN 427 CALENDAR DAYS.

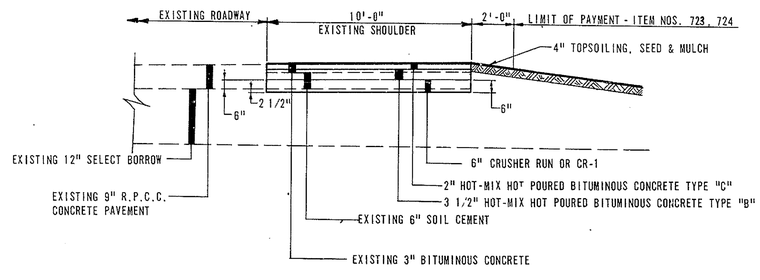

EXTRA STRENGTH SHOULDER

NOT TO SCALE

NOTE :

REMOVE EXISTING 9" SHOULDER MATERIAL, REBUILD AS SHOWN.

COUNTY	CONTRACT	P.R.A. REG. NO.	STATE	FED. AID PROJECT NO.	SHEET NO.	TOTAL SHEETS
NEW CASTLE	7248	2	DEL.		23	31

DELAWARE TURNPIKE WIDENING AND IMPROVEMENT PROGRAM
MODIFICATIONS TO STRUCTURES NOS. 675, 677 & 678

PF'L TR 'NG _____ DESIGN _____ CHKD. _____

REVISIONS

W.B. I-95 AND I-295
UNDER BASIN ROAD - RTE. 141

STAGE I

CONSTRUCTION SEQUENCE AND MAINTENANCE OF TRAFFIC

N

1. THE ADVISORY SAFE SPEED SHALL BE 45 MPH THROUGH THE CONSTRUCTION AREA AND SHALL BE SO POSTED.

2. CONSTRUCT PERMANENT PORTLAND CEMENT CONCRETE SAFETY BARRIER ADJACENT TO PIER 2, PLACING APPROPRIATE TEMPORARY BARRICADES AND/OR SAFETY BARRIER AS REQUIRED FOR PROTECTION DURING CONSTRUCTION. CONSTRUCT EXTRA STRENGTH SHOULDER.

3. PLACE TEMPORARY WHITE DIAGONAL AND EDGE PAVEMENT MARKING BETWEEN STATION 132+00 AND 141+00 AS SHOWN ON PLANS, WHICH SHALL BE MAINTAINED IN PLACE UNTIL ALL CONSTRUCTION IS COMPLETE.

4. PLACE TEMPORARY SIGNS AND BARRICADES AS SHOWN ON THE PLANS FOR CHANNELING ALL I-95 TRAFFIC ONTO THE COLLECTOR DISTRIBUTOR ROAD AND ALL I-295 TRAFFIC INTO ONE LANE FOR NIGHTTIME CONSTRUCTION. PLACE ARROW BOARD WHERE REQUIRED DIRECTING I-295 TRAFFIC TO MOVE RIGHT.

5. BARRICADES, ARROW BOARD, ETC., ARE TO BE PLACED AFTER 10:00 P.M. AND REMOVED BY 6:00 A.M. REMOVE "MERGE RIGHT SIGNS" FROM I-295 AND LEAVE "BRIDGE CONSTRUCTION AHEAD" SIGNS IN PLACE AT THE END OF EACH NIGHTTIME OPERATION.

6. WORK TO BE PERFORMED AT NIGHT WILL CONSIST OF PLACING AND REMOVING A PROTECTIVE SHIELD BENEATH THE STRUCTURE AND, DEPENDING UPON THE TYPE OF SHIELD PROVIDED, THE DRILLING AND GRINDING OF BOLT HOLES AND CLEANING AND PAINE COATING THE EXTERIOR BEAMS AS SHOWN ON THE PLANS OR IN THE SPECIAL PROVISIONS, AND INSTALLING STIFFENING ANGLES INCLUDING PERMANENT BOLTING, AND PAINTING FINAL FIELD COAT ON EXTERIOR BEAMS.

7. THE ALLOWABLE CONSTRUCTION TIME FOR THE STRUCTURAL WORK, WHICH WILL BE PERFORMED DURING INTERMITTENT NIGHTTIME PERIODS, IS 21 CALENDAR DAYS.

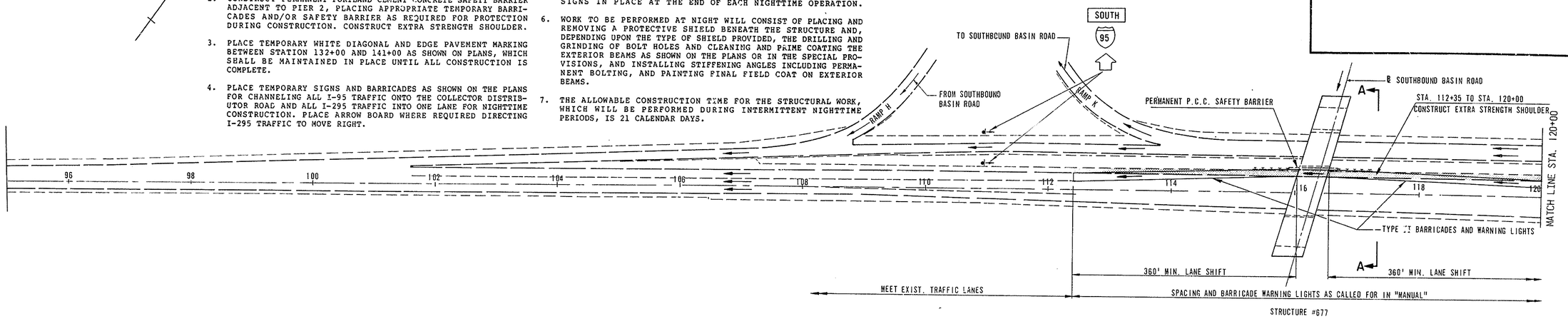

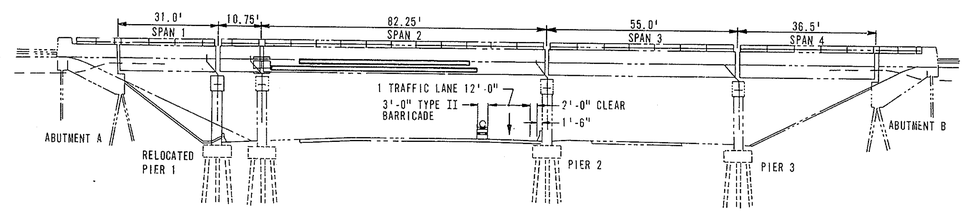

SECTION A A

STRUCTURE #677

NOTE:

1. KEEP SIGNS FOR THROUGH I-95 AND PAVEMENT MARKING FOR I-95 LANE DROP IN PLACE THROUGH STAGE II.

2. SUBSTITUTE LEGEND "MERGE RIGHT" FOR "MERGE LEFT" AS SHOWN IN CASE XVI IN MANUAL, AND ATTACH SIGN "45 MPH" TO POST SUPPORTING FIRST "MERGE RIGHT" SIGN.

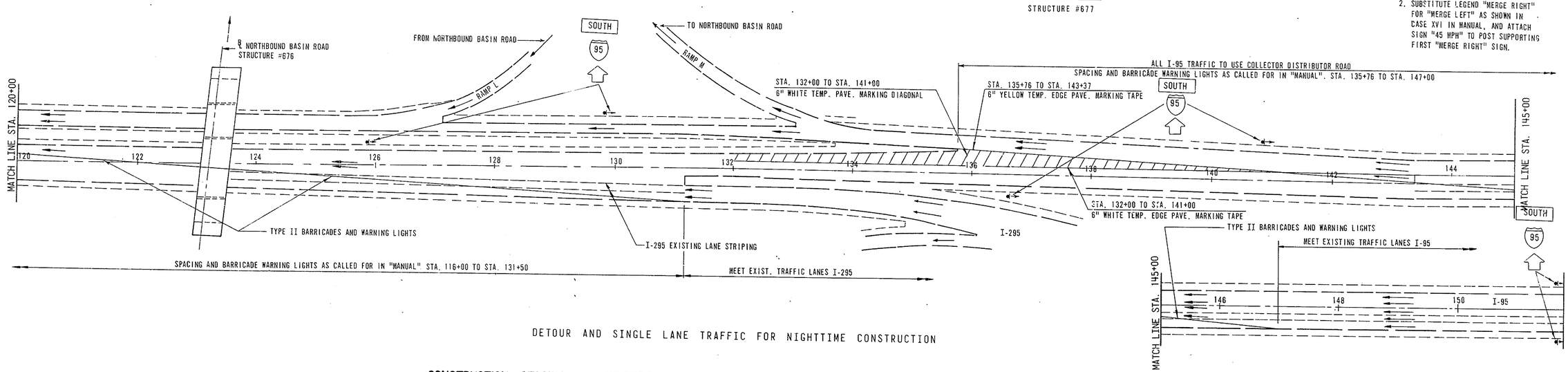

DETOUR AND SINGLE LANE TRAFFIC FOR NIGHTTIME CONSTRUCTION

CONSTRUCTION STAGING — WESTBOUND LANES I-95 AND I-295 UNDER BASIN ROAD — ROUTE 141

STAGE I

SCALE: 1" = 80'

COUNTY	CONTRACT	P.E.A. REG. NO.	STATE	FED. AID PROJECT NO.	SHEET NO.	TOTAL SHEETS
NEW CASTLE	7248	2	DEL		24	31

DELAWARE TURNPIKE WIDENING AND IMPROVEMENT PROGRAM
MODIFICATIONS TO STRUCTURES NOS. 675, 677 & 678

PREL. TRACING _____ DESIGN _____ CHKD. _____

REVISIONS

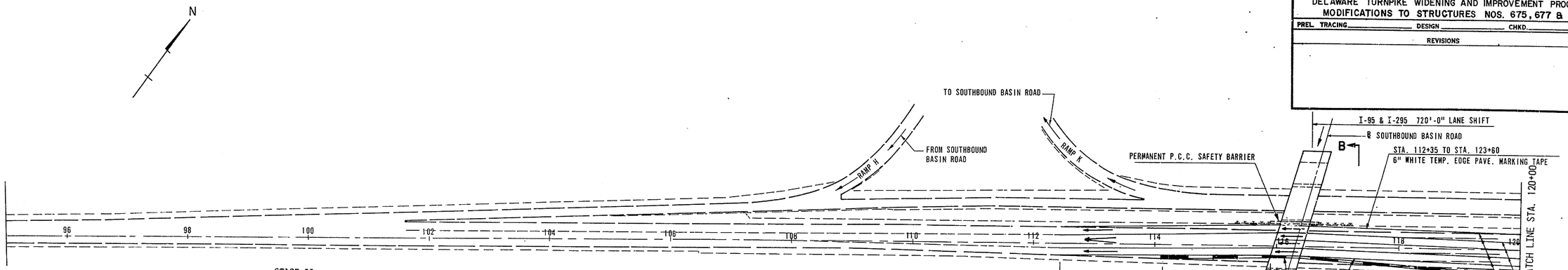

STAGE II

CONSTRUCTION SEQUENCE AND MAINTENANCE OF TRAFFIC

1. PLACE TEMPORARY PORTLAND CEMENT CONCRETE SAFETY BARRIER AND CRASH CUSHION AS SHOWN ON THE PLANS AND IN ACCORDANCE WITH DETAILS SHOWN ON STANDARD DRAWINGS G8 AND G9.
2. PLACE ADDITIONAL WHITE TEMPORARY PAVEMENT MARKING AND SIGNS FOR THROUGH I-95 ON COLLECTOR DISTRIBUTOR ROAD AND I-95 LANE DROP AND KEEP IN PLACE THE WHITE AND DIAGONAL LINES PLACED UNDER STAGE I.
3. MAINTAIN TWO 12'-0" LANES FOR I-295 TRAFFIC AND TWO 12'-0" LANES FOR I-95 TRAFFIC AS SHOWN.
4. BUILD NEW PIER. BREAK OUT ROUTE 141 ROADWAY. PLACE NEW STEEL. MAKE ALL SPLICE CONNECTIONS WITHIN THE WORK AREA AS SHOWN. COMPLETE THE PERMANENT BOLTING OF THE STIFFENING ANGLES ON THE WEB OF THE EXISTING BEAMS. PERFORM THIS WORK USING PROTECTIVE SHIELDS PLACED BENEATH THE STRUCTURE.
5. ALL STIFFENING ANGLES HAVE TO BE PERMANENTLY BOLTED BEFORE THE OVERHEAD RTE. 141 TRAFFIC LANE CAN BE REOPENED. THEN RECONSTRUCTION WORK CAN BEGIN ON THE ADJACENT LANE.
6. WHEN ALL STIFFENING ANGLES HAVE BEEN PERMANENTLY BOLTED AND THE LOAD TRANSFERRED TO THE NEW PIER, THE ORIGINAL PIER CAN BE DEMOLISHED.
7. REMOVE THE TEMPORARY SAFETY BARRIER AND PLACE I-95 AND I-295 TRAFFIC BACK IN THEIR ORIGINAL LANES.
8. THE ALLOWABLE CONSTRUCTION TIME BETWEEN THE INITIATION OF STAGE II AND COMPLETION OF STAGE II IS 334 CALENDAR DAYS.

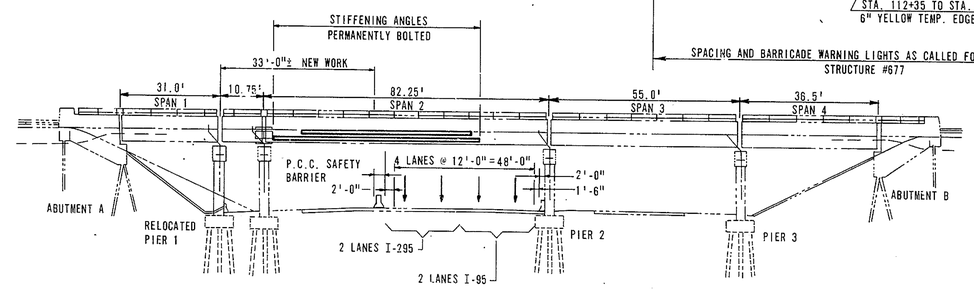

SECTION B-B

STRUCTURE #677

NOTE:

1. KEEP SIGNS FOR THROUGH I-95 AND PAVEMENT MARKING FOR I-95 LANE DROP IN PLACE THROUGH STAGE II.
2. SUBSTITUTE LEGEND "MERGE RIGHT" FOR "MERGE LEFT" AS SHOWN IN CASE XVI IN MANUAL, AND ATTACH SIGN "45 MPH" TO POST SUPPORTING FIRST "MERGE RIGHT" SIGN.

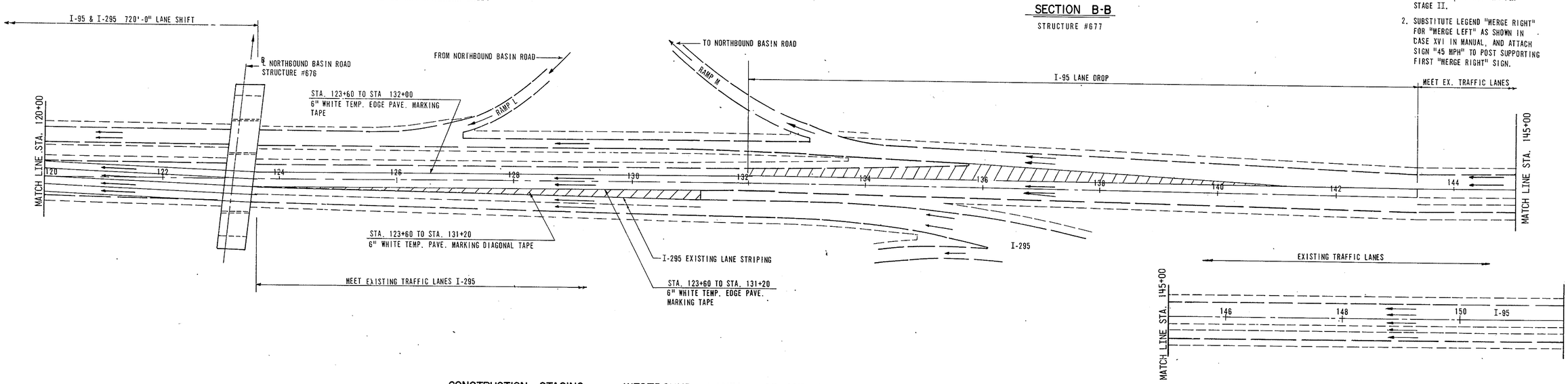

CONSTRUCTION STAGING — WESTBOUND LANES I-95 AND I-295 UNDER BASIN ROAD – ROUTE 141

STAGE II

SCALE: 1" = 80'

COUNTY	CONTRACT	F.R.A. REG. NO.	STATE	FED. AID PROJECT NO.	SHEET NO.	TOTAL SHEETS
NEW CASTLE	7248	2	DEL		25	31

DELAWARE TURNPIKE WIDENING AND IMPROVEMENT PROGRAM
MODIFICATIONS TO STRUCTURES NOS. 675, 677 & 678

PREL. TRACING _____ DESIGN _____ CHKD. _____

REVISIONS

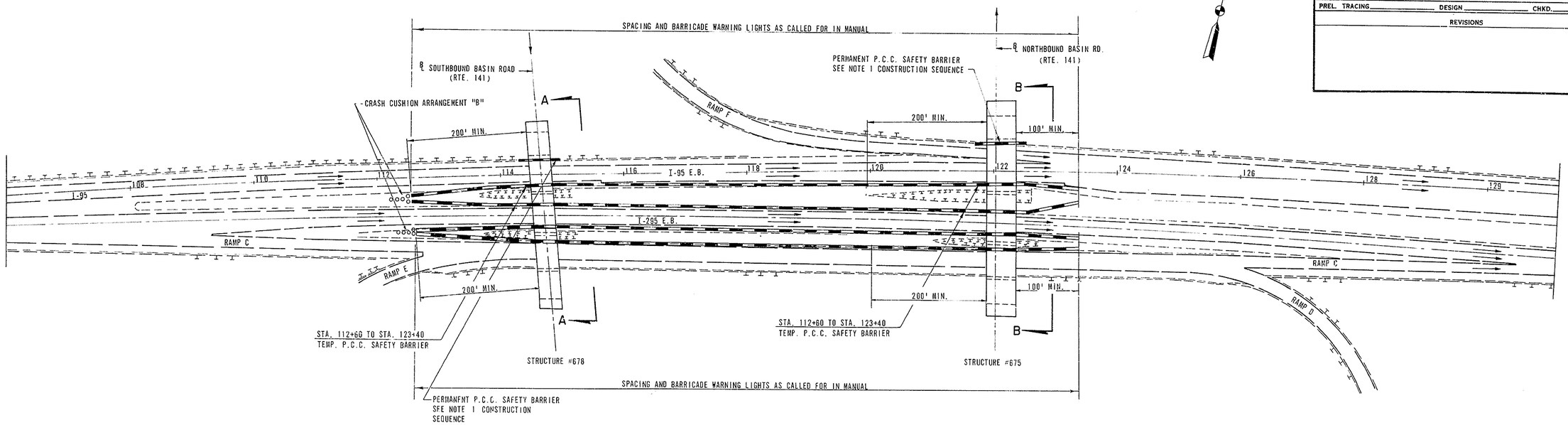

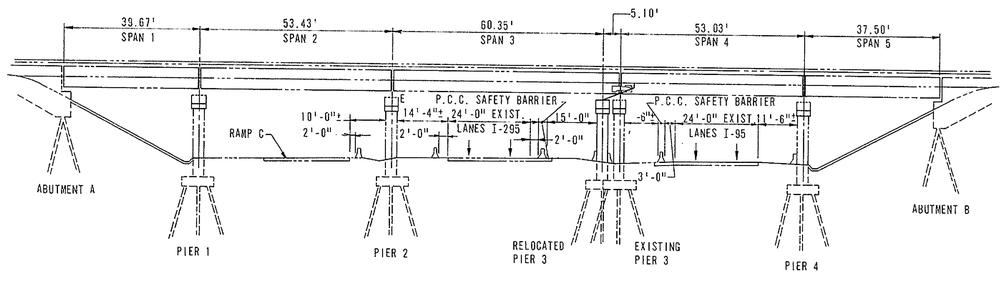

STRUCTURE #678 SECTION A-A

NOT TO SCALE

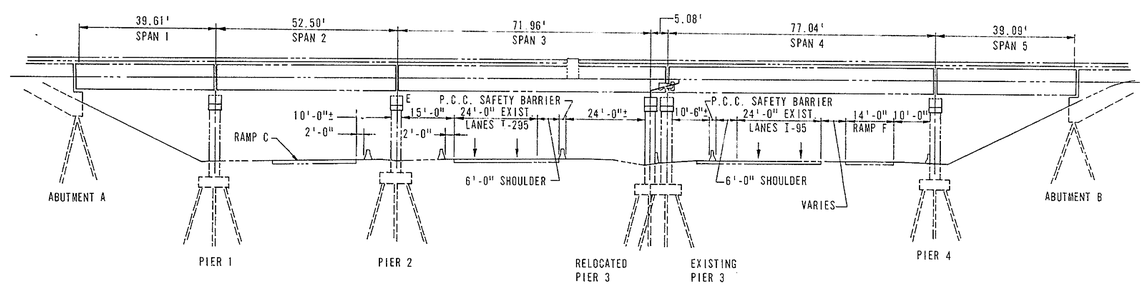

STRUCTURE #675 SECTION B-B

NOT TO SCALE

CONSTRUCTION STAGING — EASTBOUND LANES I-95 AND I-295 UNDER BASIN ROAD – ROUTE 141

SCALE: 1" = 80'

E.B. I-95 AND I-295
UNDER BASIN ROAD - RTE. 141

CONSTRUCTION SEQUENCE AND MAINTENANCE OF TRAFFIC

1. INSTALL PERMANENT PORTLAND CEMENT CONCRETE SAFETY BARRIER ADJACENT TO PIER 4 OF STRUCTURE 678. DURING THE CONSTRUCTION OF THE PERMANENT SAFETY BARRIER, TEMPORARY PROTECTIVE BARRIERS MUST BE PROVIDED.

2. PLACE TEMPORARY PORTLAND CEMENT CONCRETE SAFETY BARRIERS AND CRASH CUSHIONS AS SHOWN ON THE PLANS AND IN ACCORDANCE WITH DETAILS SHOWN ON STANDARD DRAWINGS G8 AND G9. LEAVE THE BARRIERS IN PLACE UNTIL ALL PIER AND OVERHEAD CONSTRUCTION IS COMPLETE.

3. MAINTAIN TWO 12'-0" LANES OF TRAFFIC FOR BOTH I-95 AND I-295 AND RAMP C IN THE EXISTING LANES AS SHOWN.

4. WHEN ALL CONSTRUCTION IS COMPLETE, WHICH INCLUDES THE INSTALLATION OF PERMANENT PORTLAND CEMENT CONCRETE SAFETY BARRIERS AT THE RELOCATED PIERS OF STRUCTURES NO. 678 AND NO. 675 (NOT SHOWN ON THESE DRAWINGS), REMOVE EXISTING PIER 3 AND THEN THE TEMPORARY SAFETY BARRIERS.

5. THE ALLOWABLE CONSTRUCTION TIME IS 427 CALENDAR DAYS.

COUNTY	CONTRACT	F. R. A. REG. NO.	STATE	FED. AID PROJECT NO.	SHEET NO.	TOTAL SHEETS
NEW CASTLE	7248	2	DEL.		26	31

DELAWARE TURNPIKE WIDENING AND IMPROVEMENT PROGRAM
MODIFICATIONS TO STRUCTURES NOS. 675, 677 & 678

PREL. TRACING _____ DESIGN _____ CHKD. _____

REVISIONS

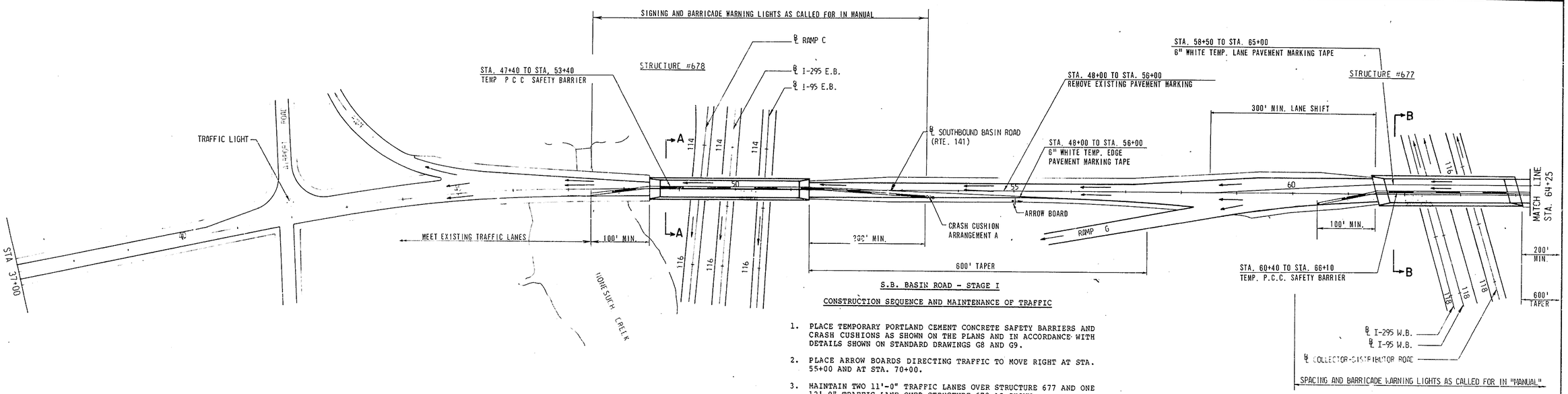

S.B. BASIN ROAD - STAGE I

CONSTRUCTION SEQUENCE AND MAINTENANCE OF TRAFFIC

1. PLACE TEMPORARY PORTLAND CEMENT CONCRETE SAFETY BARRIERS AND CRASH CUSHIONS AS SHOWN ON THE PLANS AND IN ACCORDANCE WITH DETAILS SHOWN ON STANDARD DRAWINGS G8 AND G9.
2. PLACE ARROW BOARDS DIRECTING TRAFFIC TO MOVE RIGHT AT STA. 55+00 AND AT STA. 70+00.
3. MAINTAIN TWO 11'-0" TRAFFIC LANES OVER STRUCTURE 677 AND ONE 12'-0" TRAFFIC LANE OVER STRUCTURE 678 AS SHOWN.
4. THE ADVISORY SAFE SPEED SHALL BE 30 MPH THROUGH THE CONSTRUCTION AREA AND SHALL BE SO POSTED.
5. INSTALL TEMPORARY SIGNS IN ADVANCE OF STRUCTURE 677 CALLING FOR I-95 E.B. TRAFFIC TO USE LEFT LANE.
6. INSTALL TEMPORARY SIGNS ON RAMP K FOR ONCOMING TRAFFIC FROM I-95 W.B. TO USE RIGHT LANE.
7. INSTALL TEMPORARY SUPPORT BEAMS AS REQUIRED. CUT ROADWAY DECKS AND COMPLETE STRUCTURAL ALTERATIONS INCLUDING FINAL BOLTING ON STRUCTURE 677 AS CALLED FOR ON DRAWINGS. ALL STIFFENING ANGLES HAVE TO BE FULLY BOLTED IN PLACE BEFORE TRAFFIC CAN BE RUN OVER THE NEW CONSTRUCTION AND THE NEXT WORK AREA OPENED UP.
8. THE ALLOWABLE CONSTRUCTION TIME BETWEEN INITIATION OF STAGE I AND COMPLETION OF STAGE I IS 93 CALENDAR DAYS.

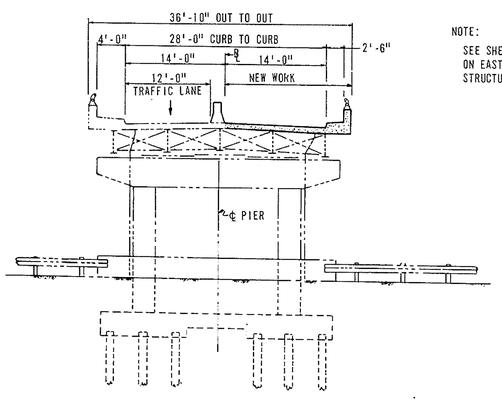

SECTION A-A
STRUCTURE #678
NOT TO SCALE

NOTE:

SEE SHEET NO. 25 FOR MAINTENANCE OF TRAFFIC ON EASTBOUND LANES OF I-95 AND I-295 UNDER STRUCTURE #678.

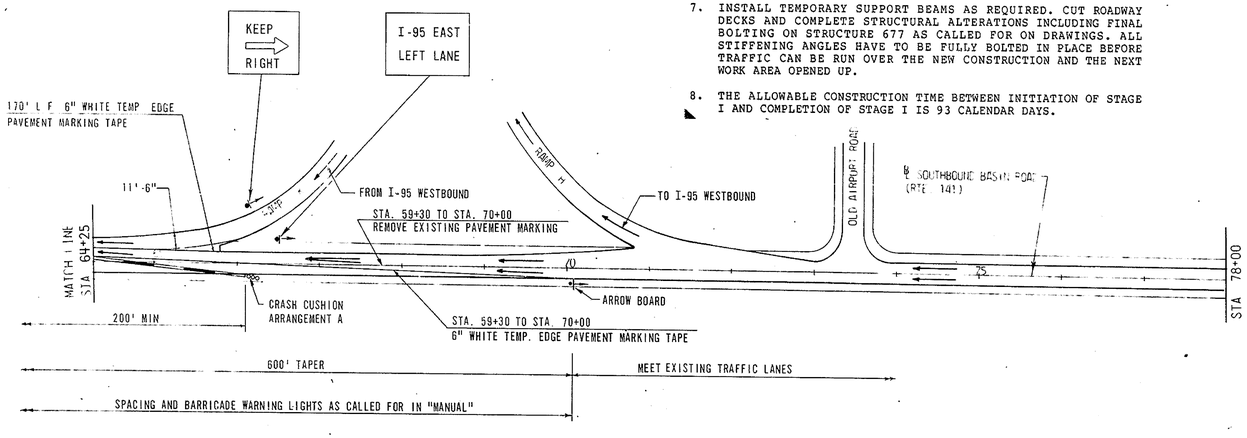

NOTE:

SEE SHEET NO. 23 FOR MAINTENANCE OF TRAFFIC ON WESTBOUND LANES OF I-95 AND I-295 UNDER STRUCTURE #677.

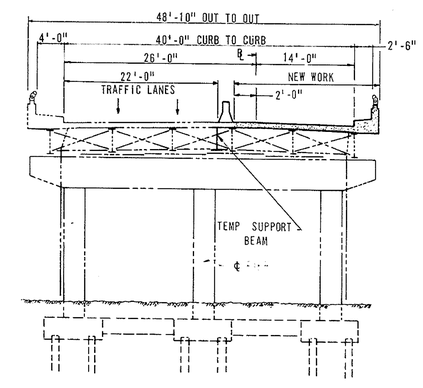

SECTION B-B
STRUCTURE #677
NOT TO SCALE

CONSTRUCTION STAGING — SOUTHBOUND BASIN ROAD — ROUTE 141 OVER STRUCTURES 678 AND 677

STAGE I

NOT TO SCALE

COUNTY	CONTRACT	F.A.P. RDS. NO.	STATE	FED. AID PROJECT NO.	SHEET NO.	TOTAL SHEETS
NEW CASTLE	7248	2	DEL		27	31

DELAWARE TURNPIKE WIDENING AND IMPROVEMENT PROGRAM
MODIFICATIONS TO STRUCTURES NOS. 675, 677 & 678

PREL. TRACING _____ DESIGN _____ CHKD. _____

REVISIONS

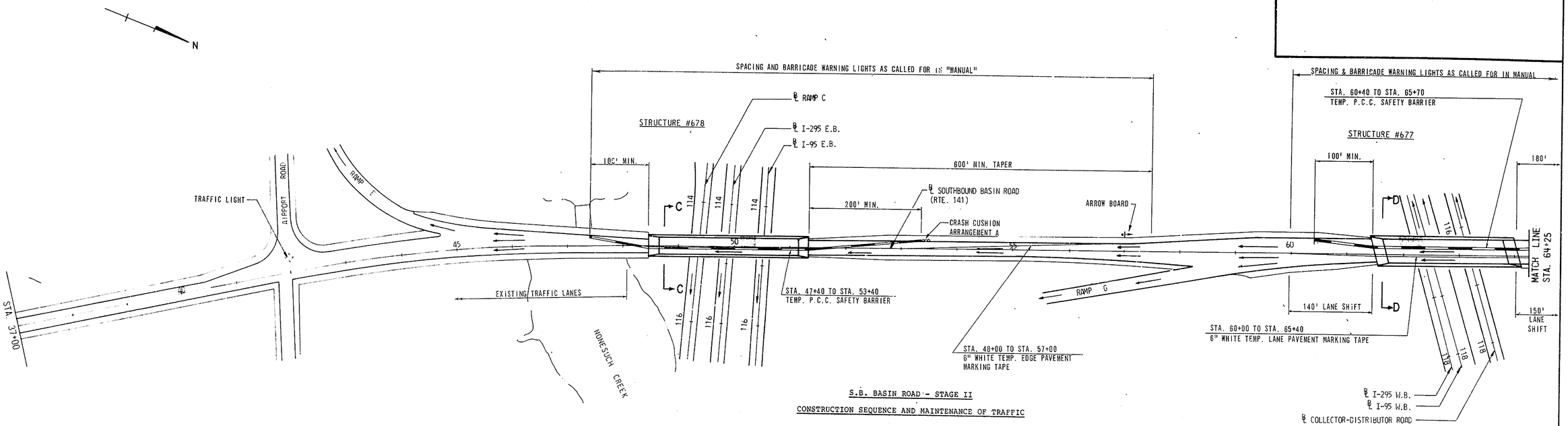

S.B. BASIN ROAD - STAGE II

CONSTRUCTION SEQUENCE AND MAINTENANCE OF TRAFFIC

1. PLACE TEMPORARY PORTLAND CEMENT CONCRETE SAFETY BARRIERS AND CRASH CUSHIONS AS SHOWN ON THE PLANS AND IN ACCORDANCE WITH DETAILS SHOWN ON STANDARD DRAWINGS G8 AND G9.
2. PLACE ARROW BOARD DIRECTING TRAFFIC TO MOVE LEFT AT STA. 57+00.
3. MAINTAIN TWO 12'-0" TRAFFIC LANES OVER STRUCTURE 677 AND ONE 12'-0" TRAFFIC LANE OVER STRUCTURE 678 AS SHOWN.
4. KEEP POSTED SPEED SIGNS AND GUIDANCE SIGN FOR E.B. I-95 INSTALLED UNDER STAGE I IN PLACE. REPLACE "KEEP RIGHT" SIGN ON RAMP K WITH "STOP" SIGN.
5. PERFORM SUCH STRUCTURAL WORK INCLUDING FINAL BOLTING ON STRUCTURE 677 AS IS CALLED FOR ON PLANS.
6. THE ALLOWABLE CONSTRUCTION TIME BETWEEN THE INITIATION OF STAGE II AND COMPLETION OF STAGE II IS 93 CALENDAR DAYS.

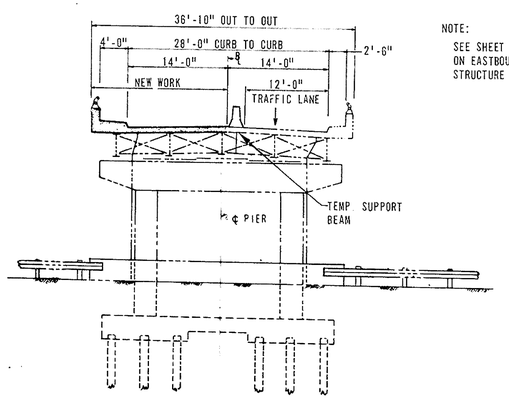

SECTION C-C
STRUCTURE #678
NOT TO SCALE

NOTE:
SEE SHEET NO. 25 FOR MAINTENANCE OF TRAFFIC ON EASTBOUND LANES OF I-95 AND I-295 UNDER STRUCTURE #678.

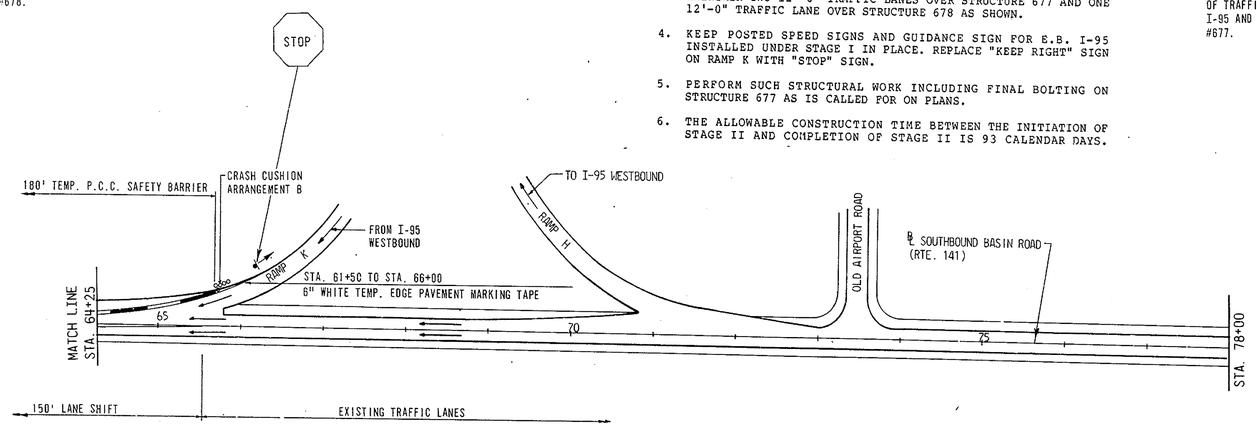

NOTE:
SEE SHEET NO. 23 FOR MAINTENANCE OF TRAFFIC ON WESTBOUND LANES OF I-95 AND I-295 UNDER STRUCTURE #677.

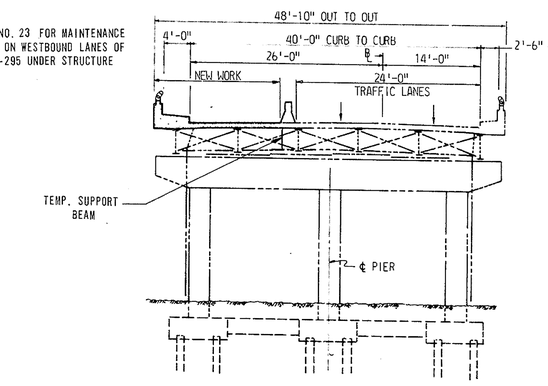

SECTION D-D
STRUCTURE #677
NOT TO SCALE

CONSTRUCTION STAGING — SOUTHBOUND BASIN ROAD — ROUTE 141 OVER STRUCTURES 678 AND 677

STAGE II

NOT TO SCALE

COUNTY	CONTRACT	F.A.S. REG. NO.	STATE	FED. AID PROJECT NO.	SHEET NO.	TOTAL SHEETS
NEW CASTLE	7248	2	DEL		28	31

DELAWARE TURNPIKE WIDENING AND IMPROVEMENT PROGRAM
MODIFICATIONS TO STRUCTURES NOS. 675, 677 & 678

PREL. TRACING _____ DESIGN _____ CHKD. _____

REVISIONS

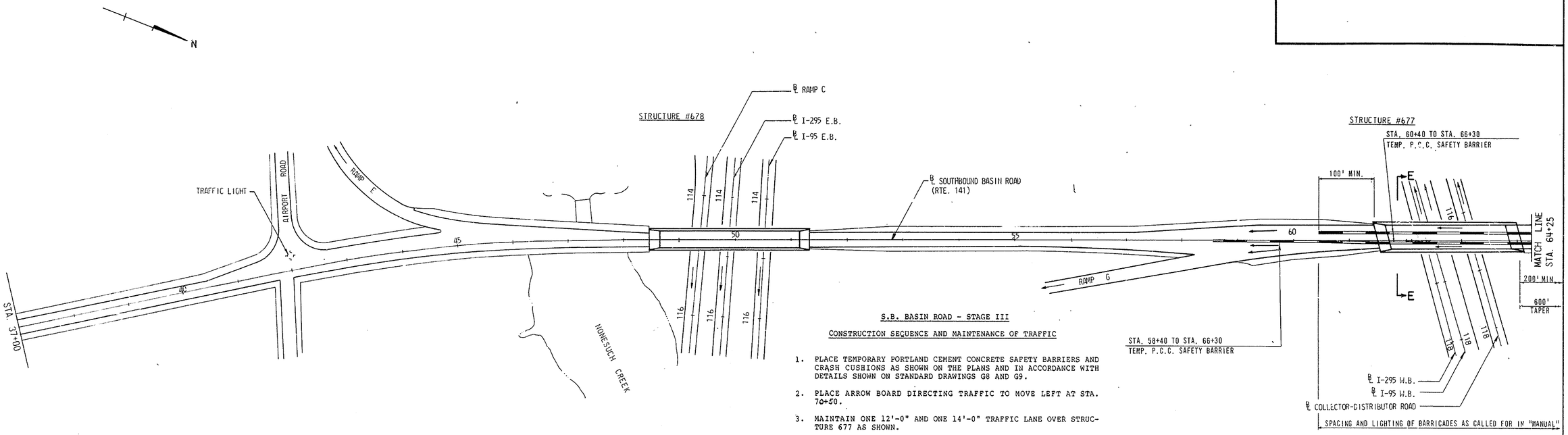

S.B. BASIN ROAD - STAGE III

CONSTRUCTION SEQUENCE AND MAINTENANCE OF TRAFFIC

1. PLACE TEMPORARY PORTLAND CEMENT CONCRETE SAFETY BARRIERS AND CRASH CUSHIONS AS SHOWN ON THE PLANS AND IN ACCORDANCE WITH DETAILS SHOWN ON STANDARD DRAWINGS G8 AND G9.
2. PLACE ARROW BOARD DIRECTING TRAFFIC TO MOVE LEFT AT STA. 70+50.
3. MAINTAIN ONE 12'-0" AND ONE 14'-0" TRAFFIC LANE OVER STRUCTURE 677 AS SHOWN.
4. KEEP POSTED SPEED SIGNS AND GUIDANCE SIGNS INSTALLED UNDER STAGE I IN PLACE.
5. COMPLETE STRUCTURAL WORK INCLUDING FINAL BOLTING AS CALLED FOR ON DRAWINGS FOR STRUCTURE 677.
6. REMOVE TEMPORARY SAFETY BARRIERS AND ROADWAY SIGNS, PAINT PERMANENT LANE MARKING AND PLACE TRAFFIC BACK IN ORIGINAL ROADWAY LANES.
7. THE ALLOWABLE CONSTRUCTION TIME BETWEEN THE INITIATION OF STAGE III AND COMPLETION OF STAGE III IS 62 CALENDAR DAYS.
8. WHEN FINAL RESURFACING HAS BEEN COMPLETED ON BOTH BRIDGE DECKS, PAINT PERMANENT PAVEMENT STRIPING. PAYMENT FOR THIS WORK IS TO BE INCLUDED UNDER SECTION MAINTENANCE OF TRAFFIC.

NOTE:
SEE SHEET NO. 23 FOR MAINTENANCE OF TRAFFIC ON WESTBOUND LANES OF I-95 AND I-295 UNDER STRUCTURE #677.

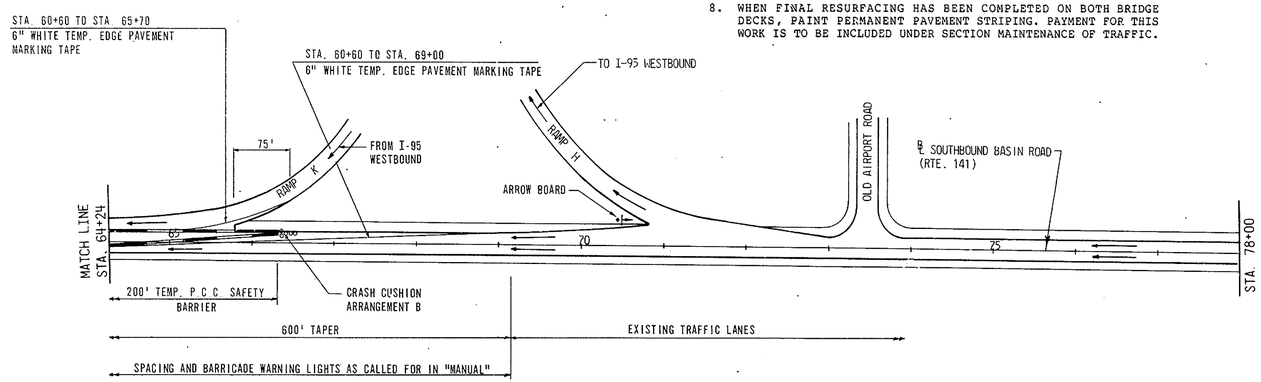

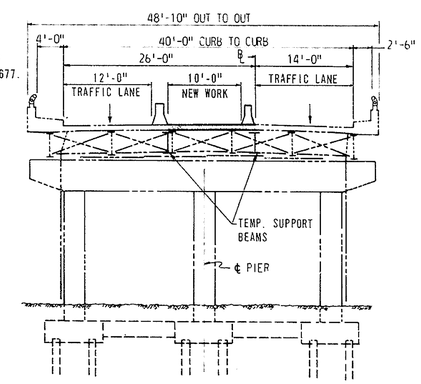

SECTION E-E
STRUCTURE #677
NOT TO SCALE

CONSTRUCTION STAGING — SOUTHBOUND BASIN ROAD — ROUTE 141 OVER STRUCTURES 678 AND 677

STAGE III
NOT TO SCALE

COUNTY	CONTRACT	F. R. A. REG. NO.	STATE	FED. AID PROJECT NO.	SHEET NO.	TOTAL SHEETS
NEW CASTLE	7248	2	DEL		29	31

DELAWARE TURNPIKE WIDENING AND IMPROVEMENT PROGRAM
MODIFICATIONS TO STRUCTURES NOS. 675, 677 & 678

PREL. TRACING _____ DESIGN _____ CHKD. _____

REVISIONS

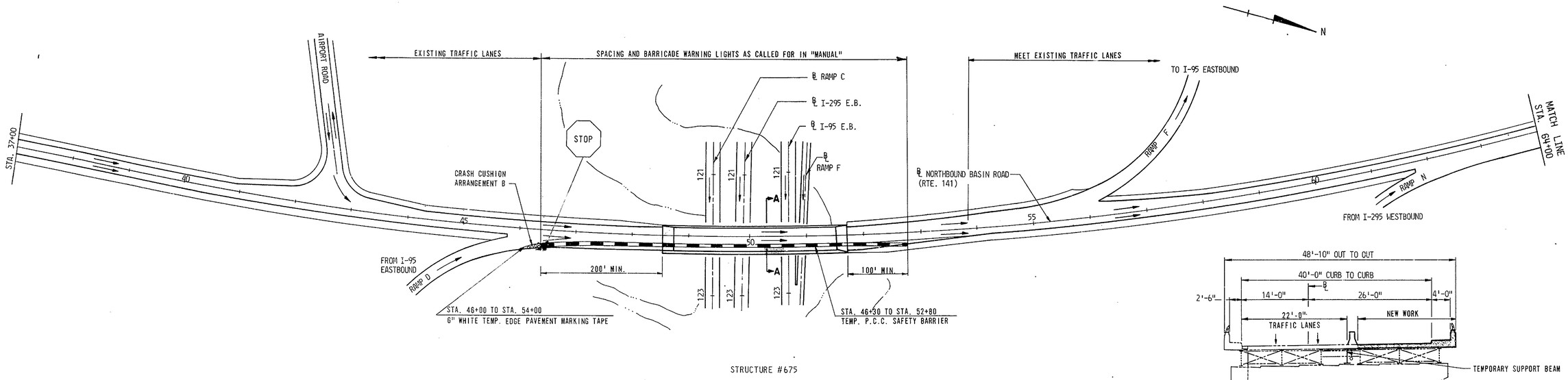

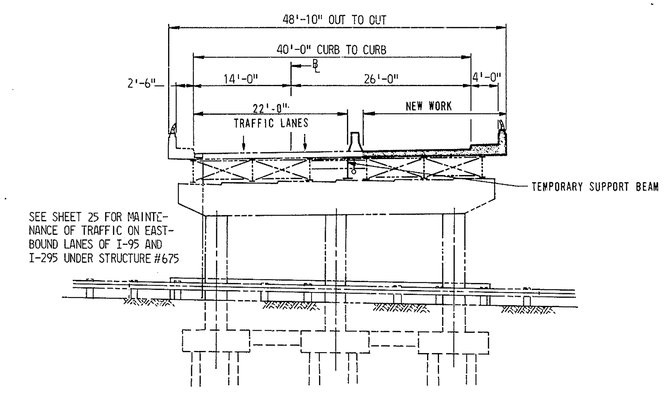

SECTION A-A

STRUCTURE #675
NOT TO SCALE

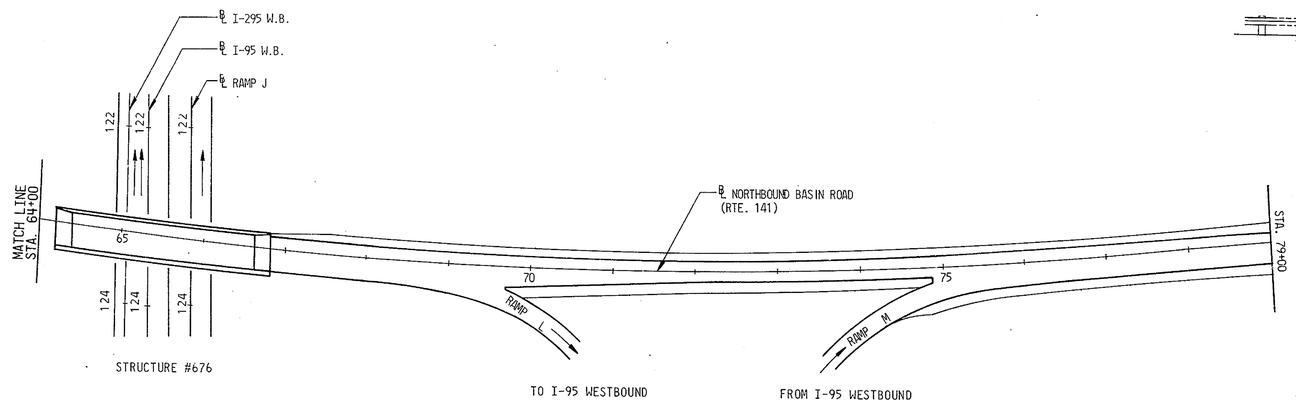

CONSTRUCTION STAGING - NORTHBOUND BASIN ROAD - ROUTE 141 OVER STRUCTURE 675

STAGE I

NOT TO SCALE

N.B. BASIN ROAD - STAGE I

CONSTRUCTION SEQUENCE AND MAINTENANCE OF TRAFFIC

1. PLACE TEMPORARY PORTLAND CEMENT CONCRETE SAFETY BARRIERS AND CRASH CUSHIONS AS SHOWN ON THE PLANS AND IN ACCORDANCE WITH DETAILS SHOWN ON STANDARD DRAWINGS G8 AND G9.
2. MAINTAIN TWO 11'-0" TRAFFIC LANES OVER STRUCTURE NO. 675 AS SHOWN.
3. THE ADVISORY SAFE SPEED SHALL BE 30 MPH THROUGH THE CON-STRUCTION AREA AND SHALL BE SO POSTED.
4. INSTALL TEMPORARY SIGNS ON RAMP D FOR ONCOMING TRAFFIC FROM I-295 E.B. TO STOP.
5. INSTALL TEMPORARY SUPPORT BEAM AS REQUIRED. CUT ROADWAY DECK AND COMPLETE STRUCTURAL ALTERATIONS AS CALLED FOR ON DRAWINGS.
6. THE ALLOWABLE CONSTRUCTION TIME BETWEEN INITIATION OF STAGE I AND COMPLETION OF STAGE I IS 93 CALENDAR DAYS.

COUNTY	CONTRACT	F.R.A. REG. NO.	STATE	FED. AID PROJECT NO.	SHEET NO.	TOTAL SHEETS
NEW CASTLE	7248	2	DEL.		30	31

DELAWARE TURNPIKE WIDENING AND IMPROVEMENT PROGRAM
MODIFICATIONS TO STRUCTURES NOS. 675, 677 & 678

PREL. TRACING_____ DESIGN_____ CHKD._____

REVISIONS

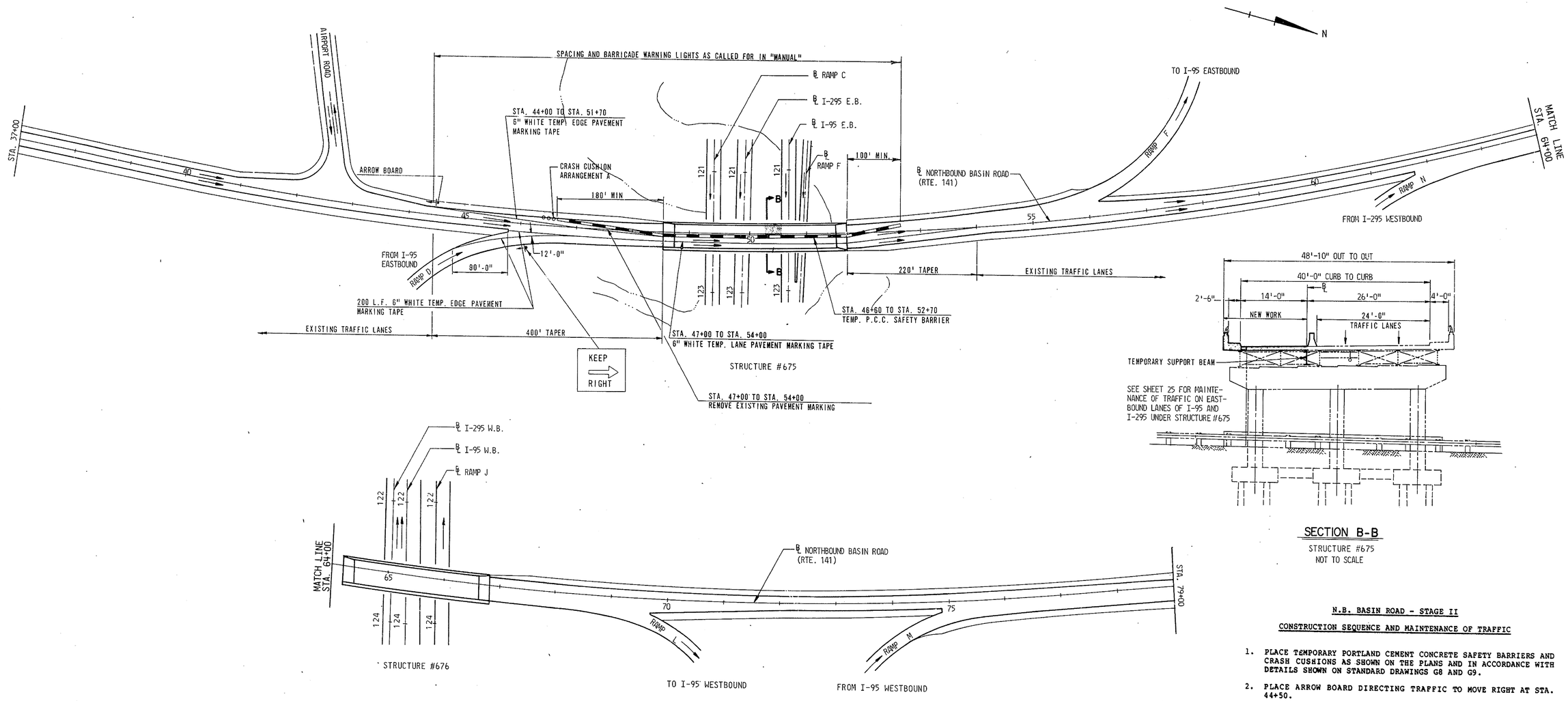

CONSTRUCTION STAGING - NORTHBOUND BASIN ROAD - ROUTE 141 OVER STRUCTURE 675

STAGE II

NOT TO SCALE

SECTION B-B

STRUCTURE #675
NOT TO SCALE

N.B. BASIN ROAD - STAGE II

CONSTRUCTION SEQUENCE AND MAINTENANCE OF TRAFFIC

1. PLACE TEMPORARY PORTLAND CEMENT CONCRETE SAFETY BARRIERS AND CRASH CUSHIONS AS SHOWN ON THE PLANS AND IN ACCORDANCE WITH DETAILS SHOWN ON STANDARD DRAWINGS G8 AND G9.
2. PLACE ARROW BOARD DIRECTING TRAFFIC TO MOVE RIGHT AT STA. 44+50.
3. MAINTAIN TWO 12'-0" TRAFFIC LANES OVER STRUCTURE NO. 675 AS SHOWN.
4. KEEP POSTED SPEED SIGNS IN PLACE AND REPLACE MERGING SIGN ON RAMP D WITH SIGN TO KEEP RIGHT AND USE RIGHT LANE.
5. PERFORM SUCH STRUCTURAL WORK AS IS CALLED FOR ON THE PLAN DRAWINGS.
6. THE ALLOWABLE CONSTRUCTION TIME BETWEEN THE INITIATION OF STAGE II AND COMPLETION OF STAGE II IS 93 CALENDAR DAYS.

COUNTY	CONTRACT	P.R.A. REG. NO.	STATE	FED. AID PROJECT NO.	SHEET NO.	TOTAL SHEETS
NEW CASTLE	7248	2	DEL.		31	31

DELAWARE TURNPIKE WIDENING AND IMPROVEMENT PROGRAM
MODIFICATIONS TO STRUCTURES NOS. 675, 677 & 678

PREL. TRACING _____ DESIGN _____ CHKD. _____

REVISIONS

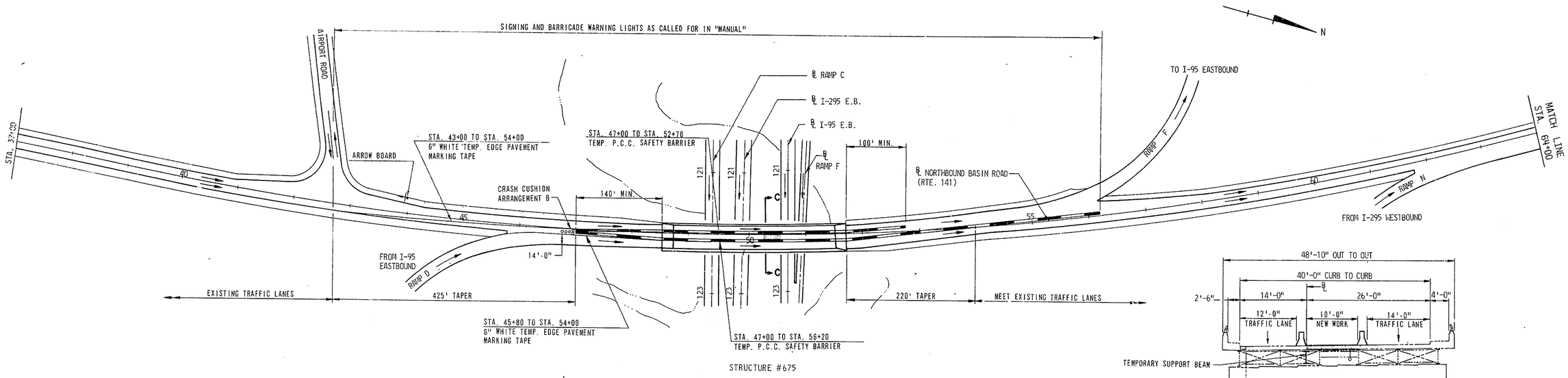

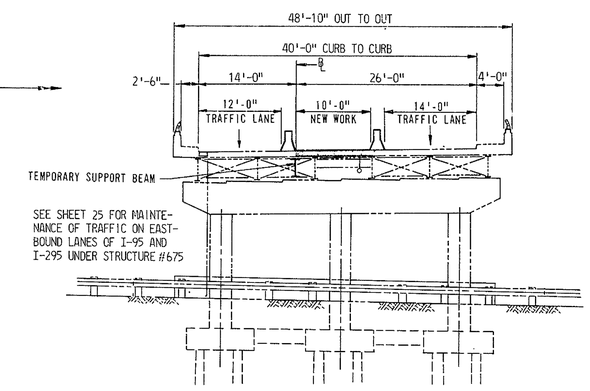

SECTION C-C

STRUCTURE #675

NOT TO SCALE

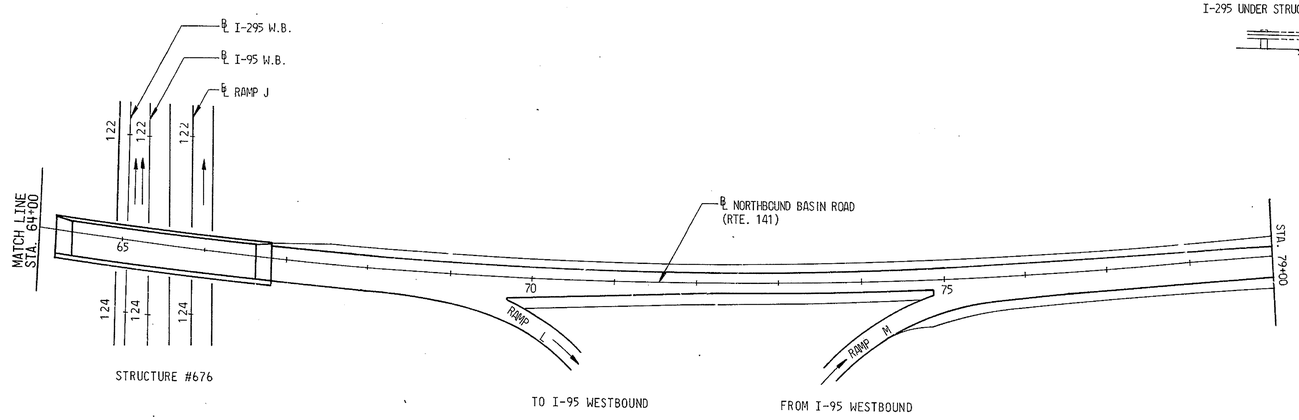

CONSTRUCTION STAGING - NORTHBOUND BASIN ROAD - ROUTE 141 OVER STRUCTURE 675

STAGE III

NOT TO SCALE

N.B. BASIN ROAD - STAGE III

CONSTRUCTION SEQUENCE AND MAINTENANCE OF TRAFFIC

1. PLACE TEMPORARY PORTLAND CEMENT CONCRETE SAFETY BARRIERS AND CRASH CUSHIONS AS SHOWN ON THE PLANS AND IN ACCORDANCE WITH DETAILS SHOWN ON STANDARD DRAWINGS G8 AND G9.
2. PLACE ARROW BOARD DIRECTING TRAFFIC TO MOVE LEFT AT STA. 44+00.
3. MAINTAIN ONE 12'-0" AND ONE 14'-0" TRAFFIC LANE OVER STRUCTURE NO. 675 AS SHOWN.
4. KEEP POSTED SPEED SIGNS AND GUIDANCE SIGNS FOR RAMP D IN PLACE.
5. COMPLETE STRUCTURAL WORK AS CALLED FOR ON DRAWINGS FOR STRUCTURE NO. 675.
6. REMOVE TEMPORARY SAFETY BARRIERS AND ROADWAY SIGNS, PAINT PERMANENT LANE MARKINGS AND PLACE TRAFFIC BACK IN ORIGINAL ROADWAY LANES.
7. THE ALLOWABLE CONSTRUCTION TIME BETWEEN THE INITIATION OF STAGE III AND COMPLETION OF STAGE III IS 93 CALENDAR DAYS.
8. WHEN FINAL RESURFACING HAS BEEN COMPLETED ON THE BRIDGE DECK, PAINT PERMANENT PAVEMENT STRIPING, PAYMENT FOR THIS WORK IS TO BE INCLUDED UNDER SECTION MAINTENANCE OF TRAFFIC.

COUNTY	CONTRACT	F.A.I. RTE. NO.	STATE	FED. AID PROJECT NO.	PUBLICITY PAGE	SHEET NO.	TOTAL SHEETS
NEW CASTLE	-	2	DEL.			S	

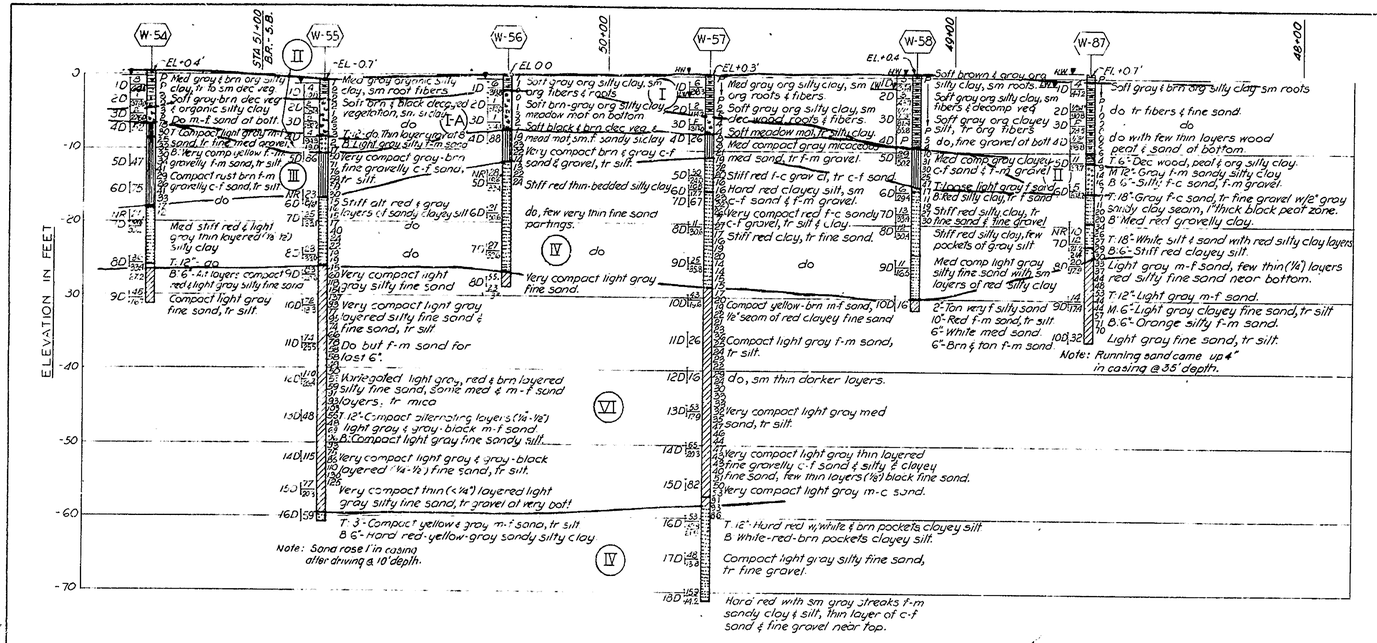

SECTION S1-S1
STRUCTURE 6-2
SCALES: HORIZONTAL-1"=20'
VERTICAL - 1"=10'
SEE SECTIONS K1-K1 & L3-L3

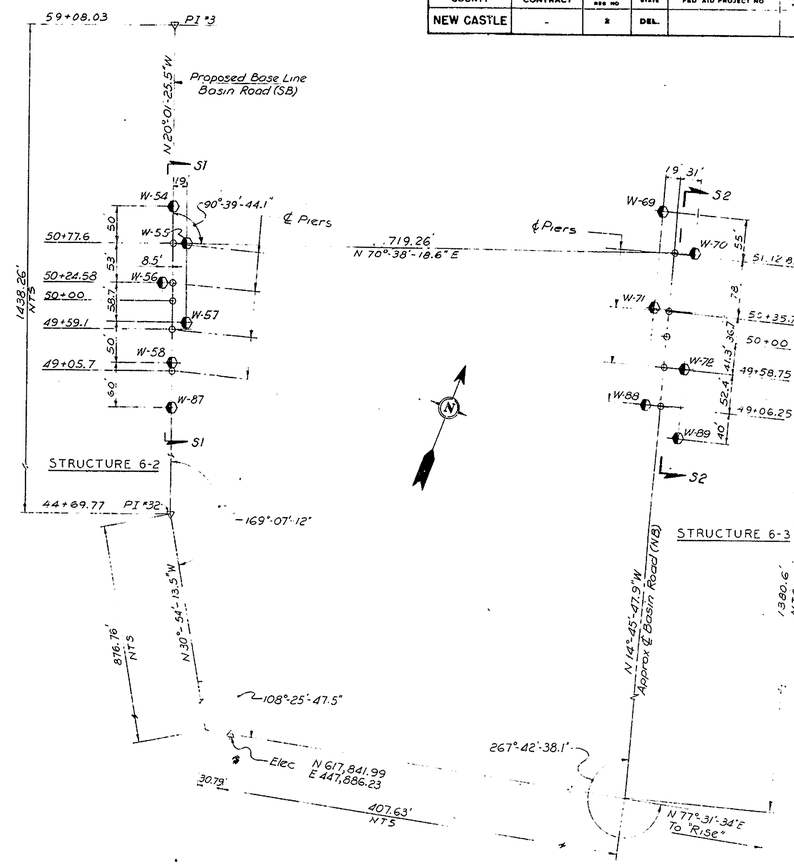

LOCATION PLAN
SCALE: 1"=100'

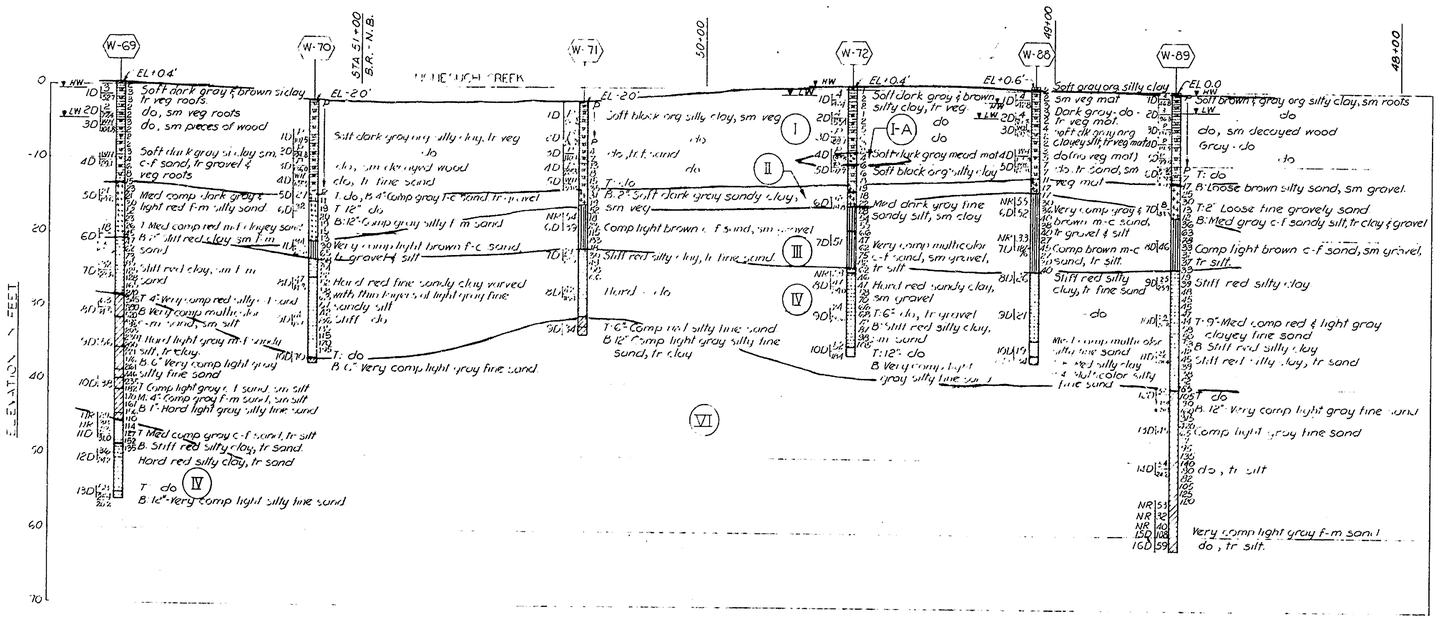

SECTION S2-S2
STRUCTURE 6-3
SCALES: HORIZONTAL-1"=20'
VERTICAL - 1"=10'
SEE SECTIONS K3-K3 & L3-L3

NOTE:

For Notes and Legends see Sheet B.B.
For Plan see Sheet D.

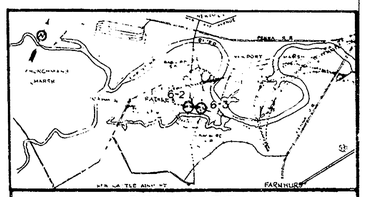

DELAWARE
STATE HIGHWAY DEPARTMENT

INTERSTATE ROUTE F.A.I.-1-(6)
CHRISTINA RIVER INTERCHANGE

BORINGS AND GEOLOGICAL SECTIONS
STRUCTURES 6-2 & 6-3

J. E. GREINER CO.
MORAN, PROCTOR, MUESER & RUTLEDGE
CONSULTING ENGINEERS

DESIGNED: W.S.N. CHECKED: W.A.S. DATE: 5-1-59
DRAWN: P.F. IN CHARGE: W.H.V. SCALE: AS SHOWN

William H. Vernon

BENCH MARKS
HORIZONTAL CONTROL
DRAINAGE

COUNTY	CONTRACT	P & A REG NO	STATE	FED. AID PROJECT NO.	FISCAL YEAR	SHEET NO	TOTAL SHEETS
NEW CASTLE		2	DEL.			T	

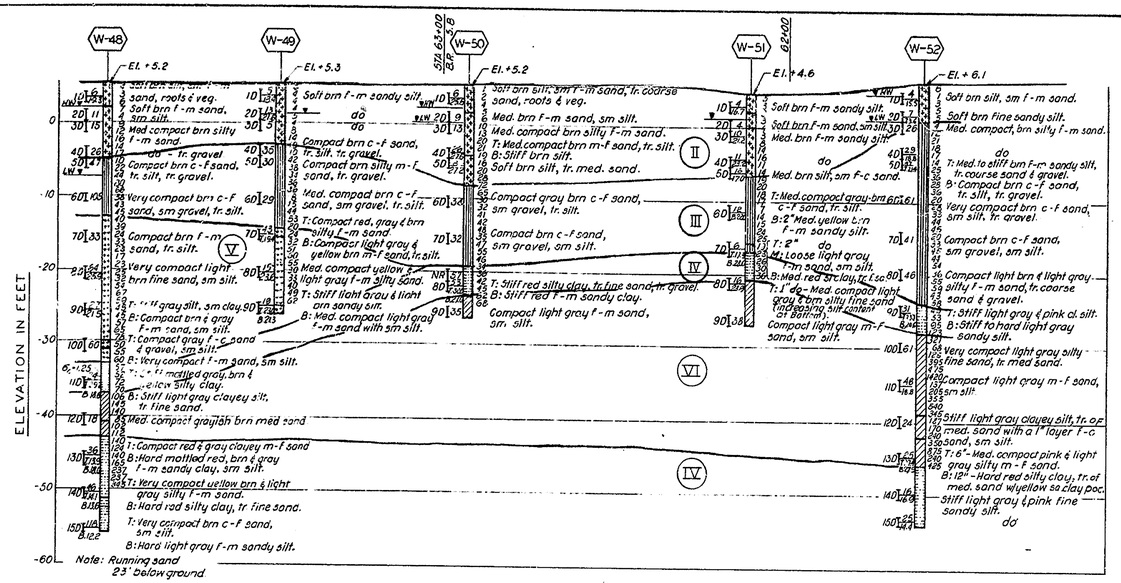

SECTION T1-T1
STRUCTURE 6-4
SCALES: HORIZONTAL - 1"=20'
VERTICAL - 1"=10'
SEE SECTION K1-K1 & L2-L2

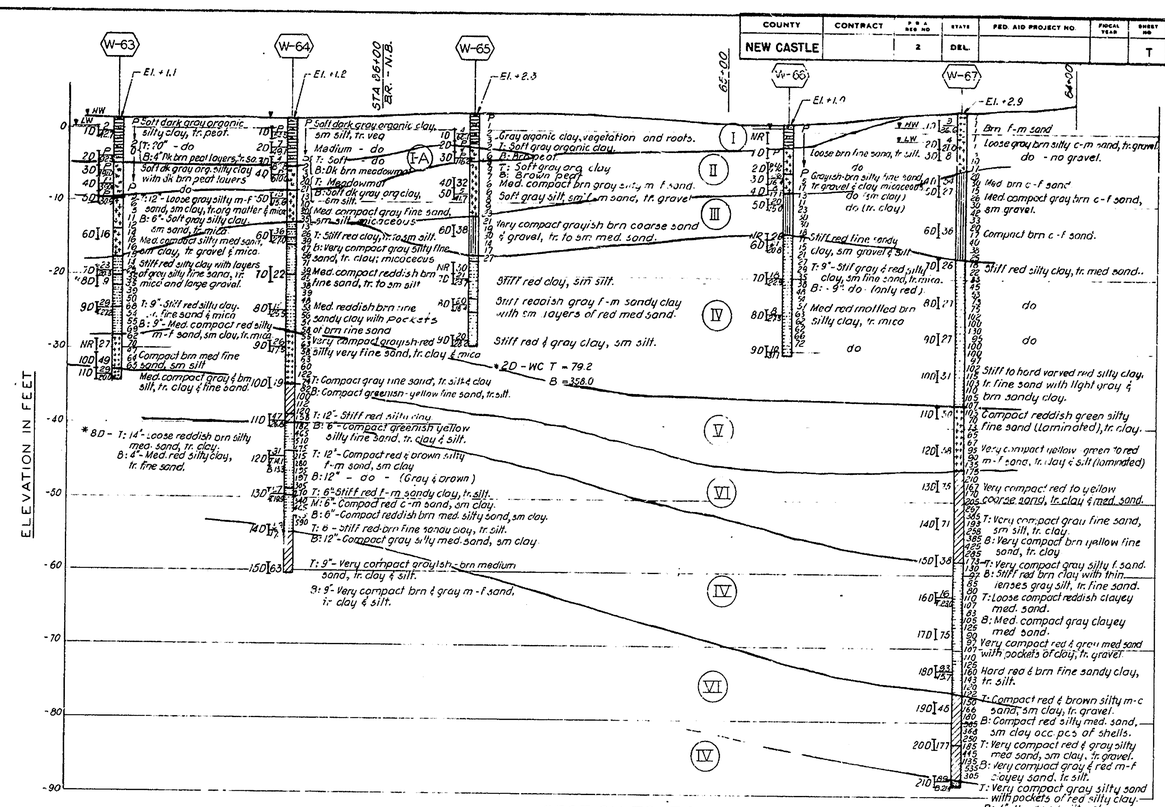

SECTION T2-T2
STRUCTURE 6-5
SCALES: HORIZONTAL - 1"=20'
VERTICAL - 1"=10'
SEE SECTION K2-K2 & L2-L2

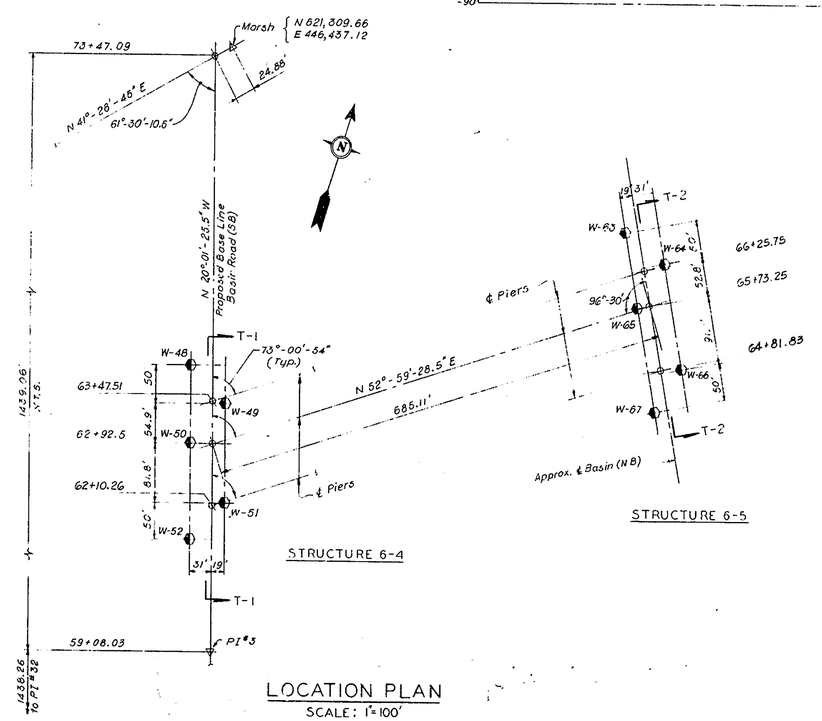

LOCATION PLAN
SCALE: 1"=100'

NOTE:
For Notes and Legends see Sheet BB
For Plan see Sheet C

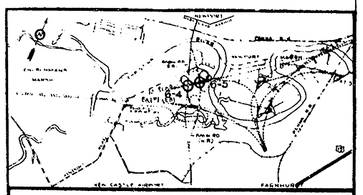

DELAWARE
STATE HIGHWAY DEPARTMENT

INTERSTATE ROUTE F.A.I.-1-(6)
CHRISTINA RIVER INTERCHANGE

BORINGS AND GEOLOGICAL SECTIONS
STRUCTURES 6-4 & 6-5

J. E. GREINER CO.
MORAN, PROCTOR, MUESER & RUTLEDGE
CONSULTING ENGINEERS

DESIGNED: WSN CHECKED: DJD DATE: 5-1-59
DRAWN: R.B. IN CHARGE: WHM SCALE: AS SHOWN

William A Muesser

BENCH MARKS
EARTHWORK
DRAINAGE

M