METRIC	CONTRACT	COUNTY	M.R. NO.	F.H.W.A. REG. NO.	FEDERAL AID PROJECT NUMBER	SHEET NUMBER	TOTAL SHEETS
	98-074-03	NEW CASTLE	N6	3	EIM-N006(2)	1	45

THE STATE OF DELAWARE

DEPARTMENT OF TRANSPORTATION

SPECIFICATION AND CONSTRUCTION PLANS FOR:

REHABILITATION OF BRIDGES NO. 1-675, 1-676, 1-677 & 1-678, SR-141 OVER I-95

CONTRACT NUMBER 98-074-03
FEDERAL AID PROJECT NUMBER EIM-N006(2)

ROADWAY LENGTH 61 METERS = 0.061 KILOMETERS
STRUCTURE LENGTH 345 METERS = 0.345 KILOMETERS
TOTAL LENGTH 406 METERS = 0.406 KILOMETERS

STATE OF DELAWARE

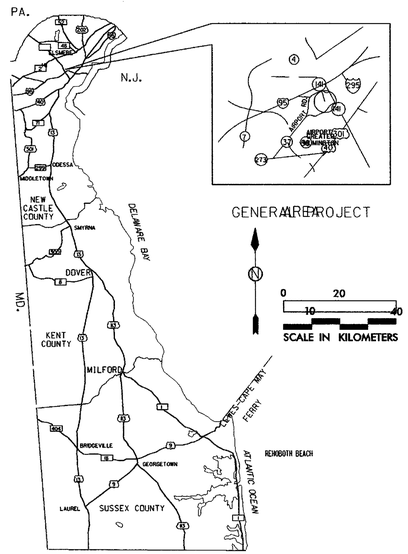

GENERAL LOCATION OF CONTRACT

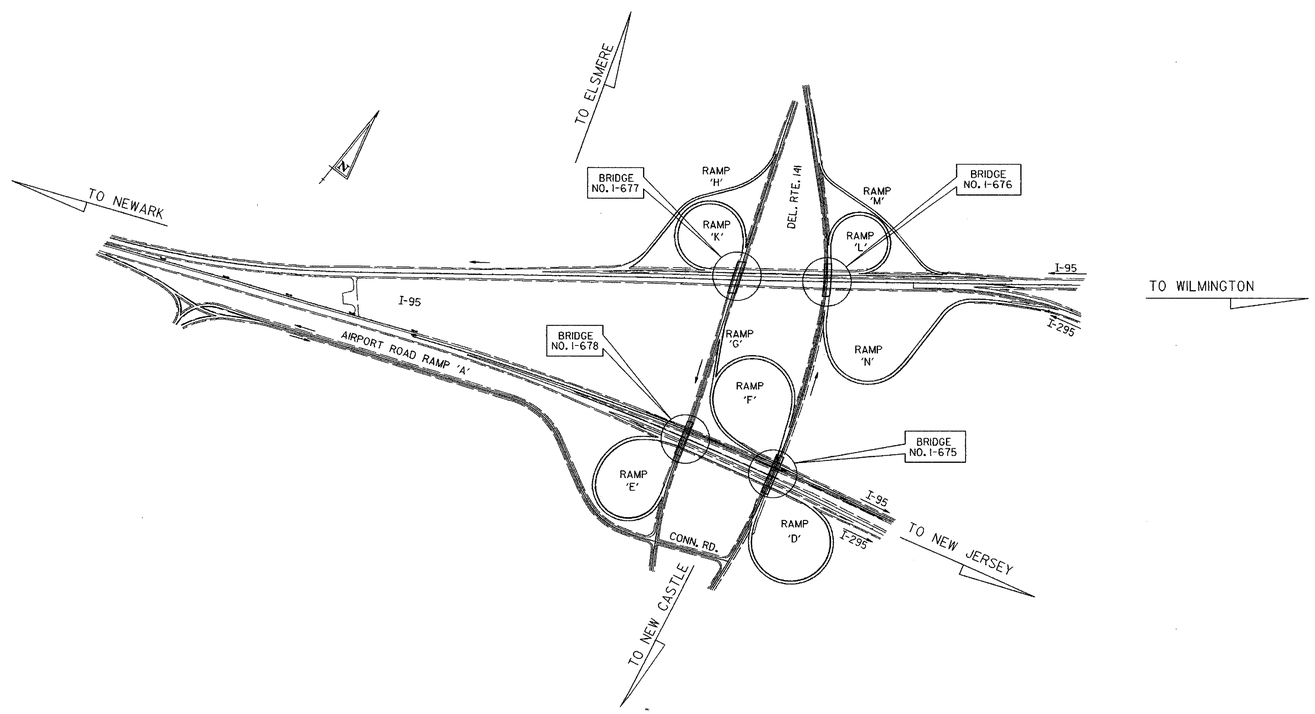

DESIGN DESIGNATION

FUNCTIONAL CLASS URBAN ARTERIAL (DEL. 141)
DESIGN SPEED 80 km/h (DEL. 141)
TYPE OF CONSTRUCTION 3R
% TRUCKS 7 (PEAK) 12 (AADT)
A.D.T. CURRENT 26,800
DIRECTION DISTRIBUTION % 55
A.D.T. PROJECTED
CLEAR ZONE (S)
D.H.V. PROJECTED 8%

INDEX OF SHEETS

SHEET NO.	TITLE
1	TITLE SHEET AND INDEX SHEETS
2	GENERAL NOTES AND SYMBOLS LEGEND
3	PROJECT NOTES
4	PLAN AND ELEVATION - BRIDGE NO. I-675
5	PLAN AND ELEVATION - BRIDGE NO. I-676
6	PLAN AND ELEVATION - BRIDGE NO. I-677
7	PLAN AND ELEVATION - BRIDGE NO. I-678
8	TYPICAL SECTIONS
9	SEQUENCE OF CONSTRUCTION - BRIDGES NO. I-675, I-676 & I-677, I
10	SEQUENCE OF CONSTRUCTION - BRIDGES NO. I-675, I-676 & I-677, II
11	SEQUENCE OF CONSTRUCTION - BRIDGE NO. I-678
12	REMOVAL AT ABUTMENTS - BRIDGES NO. I-675 AND I-676
13	REMOVAL AT ABUTMENTS - BRIDGES NO. I-677 AND I-678
14	REMOVAL AT ABUTMENTS - SECTIONS AND DETAILS
15	RECONSTRUCTION AT ABUTMENTS - BRIDGES NO. I-675 AND I-676
16	RECONSTRUCTION AT ABUTMENTS - BRIDGES NO. I-677 AND I-678
17	RECONSTRUCTION AT ABUTMENTS - SECTIONS AND DETAILS
18	ABUTMENT REPAIRS
19	PIER REPAIRS
20	SUBSTRUCTURE REPAIR DETAILS
21	STRUCTURAL STEEL REPAIR DETAILS
22	BEARING REPLACEMENT - FRAMING PLAN
23	BEARING REPLACEMENT - JACKING DETAILS
24	BEARING DETAILS
25	DECK REPAIRS AND MODIFICATIONS
26	ROADWAY AND SIDEWALK JOINT REPLACEMENT AT ABUTMENTS
27	ROADWAY AND SIDEWALK JOINT REPLACEMENT AT PIERS AND HINGES
28	SLOPE PROTECTION REPLACEMENT
29	MISCELLANEOUS DETAILS
30	REINFORCING STEEL - DECK PARAPETS
31	UTILITY PLAN
32	MAINTENANCE OF TRAFFIC - NOTES
33 - 35	MAINTENANCE OF TRAFFIC - STAGE I
36 - 39	MAINTENANCE OF TRAFFIC - STAGE II
40 - 42	MAINTENANCE OF TRAFFIC - STAGE III
43	MAINTENANCE OF TRAFFIC - SIGN DETAILS
44 - 45	QUANTITY SHEETS

UTILITIES

ARTESIAN WATER	W
DELDOT ELECTRIC	
CONNECTIV GAS	
B.A.D. TELEPHONE	

KCI TECHNOLOGIES
ENGINEERS AND PLANNERS
10 NORTH PARK DRIVE
HUNT VALLEY, MD. 21030-1888
(410) 316-7800

DATE 9/20/99 19

DEPARTMENT OF TRANSPORTATION

RECOMMENDED — Gerard Mulderrig, ACTING PROJECT ENGINEER — APPROVED SEPT. 20 19 99 — SEAL

RECOMMENDED — Salvador F. Palalay, STORMWATER ENGINEER — APPROVED Sep 20 19 99 — SEAL

RECOMMENDED — BRIDGE ENGINEER — APPROVED 9. 20. 19 99 — SEAL

RECOMMENDED — Raymond D. Richt, DESIGN ENGINEER — APPROVED 9/20 19 99 — SEAL

APPROVED — CHIEF ENGINEER — APPROVED SEPT. 20, 19 99 — SEAL

M:\ 1988\ 0188305.3A\ STITLE.DGN

9/17/99 7:16:44 PM G:\PLOTTING\PS7\OCF\MYLAR_HP.pcf Raisa Gerchikova Division: STRUCTURES m:\1988\0188305.3a\stitle.prt

METRIC	CONTRACT	COUNTY	FEDERAL AID PROJECT No	SHEET No	TOTAL SHEETS
	98-074-03	NEW CASTLE	EIM-N006(2)	2	45
S DWG. 1 OF 29	REHABILITATION OF BRIDGES NO. 1-675, 1-676, 1-677 & 1-678, SR-141 OVER I-95				
	GENERAL NOTES & SYMBOLS LEGEND				

GENERAL NOTES

1. THIS CONTRACT IS TO BE CONSTRUCTED IN ACCORDANCE WITH DELAWARE DEPARTMENT OF TRANSPORTATION STANDARD SPECIFICATIONS FOR ROAD AND BRIDGE CONSTRUCTION DATED JANUARY 1998, AND THE DELAWARE DEPARTMENT OF TRANSPORTATION "STANDARD CONSTRUCTION DETAILS", DATED 1997. REFERENCE IN THE STANDARD SPECIFICATIONS TO "STANDARD DRAWINGS" OR "STANDARD SHEETS" SHALL BE IGNORED. FOR DETAILS OF GUARDRAIL, BRIDGE RAIL, CONCRETE SAFETY BARRIER, CURBS, ENTRANCES, EROSION CONTROL MEASURES, P.C.C. PAVEMENT, TRAFFIC SIGNAL FACILITIES, AND RELATED ITEMS, THE CONTRACTOR IS REFERRED TO THE "STANDARD CONSTRUCTION DETAILS", DATED 1997, IF DETAILS ARE NOT INCLUDED IN THE PLANS.

2. MAINTENANCE OF TRAFFIC - ALL WORK SHALL BE PERFORMED IN A MANNER THAT WILL INSURE THE LEAST PRACTICABLE OBSTRUCTION TO TRAFFIC CONSISTENT WITH SAFETY AND SHALL COMPLY WITH THE DEPARTMENT MANUAL ENTITLED "TRAFFIC CONTROLS FOR STREETS AND HIGHWAY CONSTRUCTION, MAINTENANCE, UTILITY AND EMERGENCY OPERATIONS". THE MOST CURRENT VERSION OF THIS MANUAL IN EFFECT AT THE TIME OF ADVERTISEMENT FOR BIDS SHALL BE USED. HEREINAFTER, THIS MANUAL SHALL BE REFERRED TO AS THE "TRAFFIC CONTROL MANUAL".

3. ALL UTILITIES PLOTTED ON THE PLAN SHEETS ARE FROM THE BEST AVAILABLE INFORMATION. THE CONTRACTOR, PRIOR TO LAYING A RUN OF DRAINAGE PIPE OR OTHER INVOLVED CONSTRUCTION, SHALL EXCAVATE WITHIN THE ALIGNMENT AT POINTS OF POSSIBLE CONFLICT TO DETERMINE IF A CONFLICT EXISTS. ANY CONFLICTS SHALL BE COORDINATED BY THE CONTRACTOR WITH THE ENGINEER AND THE UTILITY INVOLVED. THE ENGINEER SHALL DETERMINE THE SOLUTION. EXCAVATING AND BACKFILLING OF THE TEST HOLES SHALL BE MEASURED AND PAID FOR IN ACCORDANCE WITH ITEM "208000, EXCAVATION AND BACKFILL FOR PIPE TRENCHES", BUT ONLY TO THE ACTUAL DEPTH EXCAVATED.

4. THE CONTRACTOR SHALL GIVE TWO (2) WEEKS NOTICE TO THE PROPERTY OWNER WHEN ANY FIXTURE, SHRUB OR OTHER OBJECT MUST BE REMOVED FROM THE RIGHT OF WAY OR EASEMENT AREA. IF THE OWNER HAS NOT ATTEMPTED TO SALVAGE THIS PROPERTY, THE CONTRACTOR SHALL REMOVE IT WITHOUT OBLIGATION. COMPENSATION SHALL BE INCIDENTAL TO THE CONTRACT.

5. THE ENDS OF ALL CURBS SHALL BE DEPRESSED AT A RATIO OF TWELVE TO ONE (12:1) UNLESS OTHERWISE DIRECTED BY THE ENGINEER.

6. THE CONTRACTOR SHALL PROVIDE AND INSTALL PVC SLEEVES (100 mm INSIDE DIAMETER MINIMUM, 150 mm INSIDE DIAMETER MAXIMUM) IN PROPOSED CONCRETE SIDEWALKS, ISLANDS, AND MEDIANS FOR FUTURE TRAFFIC SIGN POSTS AS DIRECTED BY THE ENGINEER. THE LOWER END OF THE SLEEVE SHALL SIT ON THE TOP OF THE SUBBASE. THE COST SHALL BE INCIDENTAL TO THE CONTRACT.

7. ALL DIMENSIONS SHOWN IN THESE PLANS ARE IN MILLIMETERS UNLESS SPECIFIED OR DENOTED OTHERWISE. ALL OTHER MEASUREMENTS SHOWN IN THESE PLANS ARE IN METRIC UNLESS DENOTED OR SPECIFIED OTHERWISE.

CONSTRUCTION

- PAVING (REFER TO PLANS)
- PAVING (REFER TO PLANS)
- PAVING (REFER TO PLANS)
- P.C.C. SIDEWALK
- P.C.C. SIDEWALK
- BUTT JOINT
- PAVEMENT PATCH
- RIPRAP
- CATCH BASIN
- CB — CATCH BASIN IDENTIFIER
- MANHOLE
- MH — MANHOLE IDENTIFIER
- DRAINAGE PIPE & FLOW ARROW
- P — PIPE IDENTIFIER
- FLARED END SECTION
- FE — FLARED END SECTION IDENTIFIER
- JUNCTION BOX
- JB — JUNCTION BOX IDENTIFIER
- CJB — CONVERT TO JB IDENTIFIER
- UNDERDRAIN
- UD — UNDERDRAIN IDENTIFIER
- UNDERDRAIN OUTLET STRUCTURE
- DITCH
- BFS — BIOFILTRATION SWALE
- INTEGRAL CURB AND GUTTER TYPE 1
- CURB TYPE 1
- PARKWAY CURB TYPE 1
- INTEGRAL CURB AND GUTTER TYPE 2
- INTEGRAL CURB AND GUTTER TYPE 3
- CURB (BY OTHERS)
- C — CURB IDENTIFIER
- CR — CURB ACCESS RAMP IDENTIFIER WITH TYPE NUMBER
- CONCRETE SAFETY BARRIER
- B — BARRIER IDENTIFIER
- STEEL BEAM GUARDRAIL
- GUARDRAIL END SECTION
- GR — GUARDRAIL IDENTIFIER
- METAL FENCE
- WOOD FENCE
- R/W MONUMENT
- M — R/W MONUMENT IDENTIFIER
- RL/C — RELOCATE BY CONTRACTOR
- A/C — ADJUST BY CONTRACTOR
- RM/C — REMOVE BY CONTRACTOR
- RL/O — RELOCATE BY OTHERS
- A/O — ADJUST BY OTHERS
- RM/O — REMOVE BY OTHERS

SIGNING, STRIPING AND CONDUITS

- PAVE — CONDUITS UNDER PAVEMENT
- SOD — CONDUITS IN TRENCH
- CONDUIT JUNCTION WELL
- PAVEMENT MARKINGS
- LANE STRIPING
- NO TURN ON RED — TRAFFIC SIGN AND POST (BY STATE FORCES)

RIGHT OF WAY

- RW — PROPOSED RIGHT-OF-WAY
- RW&DA — PROPOSED RIGHT OF WAY AND DENIAL OF ACCESS
- DA — PROPOSED DENIAL OF ACCESS
- PE — PROPOSED PERMANENT EASEMENT
- TCE — PROPOSED TEMPORARY CONSTRUCTION EASEMENT
- HISTORIC R/W CENTERLINE OR BASELINE
- PROPOSED RIGHT OF WAY BASELINE
- EXISTING RIGHT-OF-WAY LINE
- EXISTING PROPERTY LINE

PROPOSED LANDSCAPING

- CONIFEROUS TREE
- SHRUB
- DECIDUOUS TREE

CONSTRUCTION PHASING

- STONE CHECK DAM
- DRAINAGE INLET FILTER
- PERIMETER DIKE SWALE
- TEMPORARY SWALE
- ED — EARTH DIKE
- SAND BAG DIVERSION
- EROSION CONTROL FABRIC
- ST — SEDIMENT TRAP
- ST — SEDIMENT TRAP IDENTIFIER
- TRAFFIC CONTROL PLASTIC DRUMS
- ROAD CONSTRUCTION 1000 FT — CONSTRUCTION WARNING SIGNS
- EXISTING CONTOURS
- PROPOSED CONTOURS
- CRASH CUSHION (SAND BARRELS)
- T — TURBIDITY CURTAIN
- PST — PORTABLE SEDIMENT TANK
- SF — SILT FENCE
- RSF — REINFORCED SILT FENCE
- SF — SILT FENCE IDENTIFIER
- SW — STILLING WELL
- SP — SUMP PIT
- DWB — DEWATERING BASIN
- ST — SEDIMENT TRAP PIPE OUTLET
- TSD — TEMPORARY SLOPE DRAIN
- SBD — SAND BAG DIKE
- TYPE 3 BARRICADE
- PHASE — TRAFFIC FLOW ARROW
- PORTABLE CONCRETE SAFETY BARRIER
- STABILIZED CONSTRUCTION ENTRANCE

MISCELLANEOUS SYMBOLS

- LOC — LIMIT OF CONSTRUCTION
- CZ — CLEAR ZONE
- CONSTRUCTION BASELINE

EXISTING DETAIL

- SURVEY TRAVERSE POINT
- POINT OF INTERSECTION - TANGENTS
- POINT OF TANGENCY & CURVATURE
- T.P. — SURVEY TIE POINT LOCATION
- B.M. — BENCH MARK LOCATION
- A-6(4) A-2(4) — SOIL BORING LOG - PROFILE VIEW
- SOIL BORING LOCATION - PLAN VIEW
- GnB2 GnB3 — SOIL TYPE AND BOUNDARY LINE
- MARSH OR WETLANDS
- SMALL BUSH OR ORNAMENTAL SHRUB
- CONIFEROUS TREE - 150 mm AND LARGER
- DECIDUOUS TREE - 150 mm AND LARGER
- HEDGEROW OR THICKET
- WOODS LINE
- TREE STUMP
- UTILITY TEST HOLE LOCATION
- GAS MANHOLE
- SANITARY SEWER MANHOLE
- TELEPHONE MANHOLE
- ELECTRIC MANHOLE
- F.H. — FIRE HYDRANT
- TELEPHONE BOOTH
- UTILITY POLE GUY WIRE ANCHOR
- G.V. — GAS VALVE
- W.V. — WATER VALVE
- WOOD POLE
- W.M. — WATER METER
- VENT — SANITARY SEWER VENT
- S.V. — SANITARY SEWER SURFACE FIXTURE
- TELEPHONE TEST POINT
- G.M. — GAS METER
- POLE MOUNTED LUMINAIRE
- LAMP — RESIDENTIAL STREET LAMP AND POST
- (TYPE LABEL) — CURB
- (TYPE LABEL) — INTEGRAL CURB & GUTTER
- FLEXIBLE PAVEMENT EDGE
- RIGID PAVEMENT EDGE
- STEEL BEAM GUARD RAIL
- WOOD POST AND CABLE GUARD RAIL
- C.B. — STORM DRAINAGE SURFACE INLET
- STORM DRAINAGE MANHOLE
- J.B. — STORM DRAINAGE JUNCTION BOX
- (SIZE/TYPE LABEL) — EXISTING DRAINAGE PIPE AND FLOW ARROW
- DRAINAGE PIPE HEADWALL
- EROSION CONTROL STONE
- STREAM, DITCH OR POND BOUNDARY
- FLOW — STREAM FLOW DIRECTION ARROW
- TRAFFIC CONTROL SIGN POST
- TRAFFIC SIGNAL SUPPORT BASE
- TRAFFIC SIGNAL CONTROL BOX AND/OR BASE
- J.W. — TRAFFIC SIGNAL CONDUIT JUNCTION WELL
- ELECTRIC TRANSFORMER
- CABLE TELEVISION DISTRIBUTION BOX
- C.M. — CONCRETE MONUMENT OR PROPERTY MARKER
- I.P. — PROPERTY LINE MARKER
- STONE PILLAR - CONC. BLOCK OR POURED
- STRAND OR WOVEN WIRE FENCE
- WOODEN FENCE
- LUMINAIRE SUPPORT POLE AND/OR BASE
- G.P. — SERVICE STATION FUEL PUMP
- WELL — WELL HEAD
- S.D.F. — SEPTIC DRAIN FIELD
- STONE WALL
- BLOCK WALL
- RAILROAD TRACKS
- WL — WETLANDS

REVISIONS

PREL. TRACING ____ DESIGN ____ CHKD. ____

M: 1988 0188305.3A SGNOTES.DGN

9/17/99 7:56:44 PM G:\PLOTTING\PS7\OCF\MYLAR_HP.cdf Raisa Gerchikova Division: STRUCTURES m:\1988\0188305.3a\sgnotes.prf

METRIC		CONTRACT	COUNTY	FEDERAL AID PROJECT No	SHEET No	TOTAL SHEETS
S	DWG. 2 OF 29	98-074-03	NEW CASTLE	EIM-N006(2)	3	45

REHABILITATION OF BRIDGES NO. 1-675, 1-676, 1-677 & 1-678, SR-141 OVER I-95

PROJECT NOTES

PROJECT NOTES

1. LOCATION AND DESCRIPTION:

   BRIDGES NO. 1-675, 1-676, 1-677 AND 1-678 ARE LOCATED ON THE NORTHBOUND AND SOUTHBOUND ROADWAYS OF SR-141 OVER THE NORTHBOUND AND SOUTHBOUND ROADWAYS OF I-95 IN NEW CASTLE COUNTY, DELAWARE. THE WORK CONSISTS OF REMOVAL OF EXISTING BRIDGE SIDEWALKS AND PARAPETS, PLACEMENT OF NEW BRIDGE PARAPETS, REPLACEMENT OF EXISTING ROADWAY JOINTS AT PIERS AND ABUTMENTS, REPLACEMENT OF DETERIORATED STRUCTURAL STEEL MEMBERS IN CROSS FRAMES AT PIERS AND ABUTMENTS WITH NEW STRUCTURAL STEEL MEMBERS, REHABILITATION OF SUBSTRUCTURE UNITS, REHABILITATION OF BRIDGE DECKS, CLEANING AND PAINTING OF EXISTING STRUCTURAL STEEL, REPLACEMENT OF BRIDGE BEARINGS, REPLACEMENT OF CONCRETE BLOCK SLOPE PROTECTION WITH RIPRAP SLOPE PROTECTION, AND ELECTRICAL MODIFICATIONS ALL AS INDICATED ON THE PLANS AND/OR AS DIRECTED BY THE ENGINEERS.

2. PORTLAND CEMENT CONCRETE:
   ALL CONCRETE FOR SUBSTRUCTURE REPAIRS SHALL BE CLASS A (f'c = 30 MPa).
   ALL CONCRETE FOR APPROACH SLABS, NEW PARAPETS, AND SUPERSTRUCTURE REPAIRS SHALL BE CLASS D (f'c = 30 MPa).

3. CONCRETE DECK OVERLAY (BRIDGES 1-675, 1-676, 1-677 AND 1-678):
   DESIGNATED AREAS OF THE BRIDGE DECK SLAB SHALL HAVE A CONCRETE OVERLAY.
   THE FOLLOWING ALTERNATES ARE PROVIDED FOR THE CONCRETE DECK OVERLAY:
   ALTERNATE 1- MICRO SILICA MODIFIED CONCRETE OVERLAY (f'c = 30 MPa).
   ALTERNATE 2 - LATEX CONCRETE OVERLAY (f'c = 30 MPa).
   THE CONTRACTOR SHALL BID ON ONLY ONE ALTERNATE.

4. GROOVES IN THE OVERLAY SHALL BE PRODUCED IN ACCORDANCE WITH SUBSECTION 602.20 OF THE SPECIFICATIONS.

5. MIX REQUIREMENTS SHALL CONFORM TO SECTION 812 OF THE SPECIFICATIONS. ALL EXPOSED EDGES SHALL BE CHAMFERED 20 mm UNLESS OTHERWISE NOTED.

6. REINFORCING STEEL:
   ALL NEW REINFORCING BARS SHALL CONFORM TO AASHTO M31M (ASTM A 615M) GRADE 400 MPa AND BE EPOXY COATED AS INDICATED. MINIMUM COVER FOR ANY REBAR SHALL BE 50 mm UNLESS NOTED OTHERWISE. MINIMUM LAP LENGTH FOR REBARS SHALL BE IN ACCORDANCE WITH THE LATEST AASHTO SPECIFICATIONS.

7. DURING MILLING OF THE EXISTING BRIDGE DECK, THE CONTRACTOR SHALL EXERCISE CARE SO AS NOT TO DAMAGE ANY EXISTING REINFORCING BARS. REINFORCING BARS EXPOSED DURING MILLING SHALL BE CLEANED, EPOXY COATED AND INCORPORATED IN THE NEW CONSTRUCTION.

8. MILLING OF THE EXISTING CONCRETE DECK SLAB SHALL BE PERFORMED IN SUCH A MANNER THAT UNDERLYING SOUND CONCRETE WILL BE PREPARED TO RECEIVE ANY REQUIRED SUBSEQUENT TREATMENT. SOUND CONCRETE DAMAGED AS A RESULT OF THE CONTRACTOR'S OPERATIONS SHALL BE REPAIRED AT THE CONTRACTOR'S EXPENSE.

9. THE EXISTING CONCRETE DECK SLAB SHALL BE MILLED 25 mm OR TO THE TOP OF THE EXISTING DECK REINFORCING STEEL, WHICHEVER IS LESS. THE CONCRETE IN AREAS INACCESSIBLE TO MACHINE MILLING AND FINISHING SHALL BE REMOVED BY HAND CHIPPING. AFTER THE EXPOSED SURFACES OF THE DECK ARE CLEANED THE ENGINEER SHALL INSPECT THE AREAS FOR SOUNDNESS OF CONCRETE. IF ANY PART OR PARTS OF THE EXPOSED DECK SLAB ARE FOUND TO BE DETERIORATED OR UNSOUND, THEY SHALL BE REMOVED TO SOUND CONCRETE. REMOVAL OF DETERIORATED CONCRETE AND REPAIR OF DETERIORATED DECK AREAS BELOW THE MILLED SURFACE SHALL BE IN ACCORDANCE WITH THE SPECIAL PROVISIONS FOR "DECK-REPAIR." PAYMENT FOR HAND CHIPPING AND FINISHING SHALL BE INCIDENTAL TO ITEM "760001 - PAVEMENT MILLING, CONCRETE." SAW CUTTING OF CONCRETE DECK SLAB REQUIRED FOR MILLING OPERATION FOR PHASED CONSTRUCTION SHALL BE INCIDENTAL TO PAY ITEM "760001 - PAVEMENT MILLING, CONCRETE." ALL REMOVED MATERIALS SHALL BECOME THE CONTRACTOR'S RESPONSIBILTY AND SHALL BE DISPOSED OF ON SPOIL AREAS APPROVED BY THE ENGINEER.

10. MILLING OPERATIONS FOR THE REMOVAL OF THE EXISTING HOT-MIX ASPHALT OVERLAY AND FOR THE REMOVAL OF THE TOP 25mm OF THE EXISTING CONCRETE DECK SHALL BE COMPLETED IN TWO SEPARATE OPERATIONS.

11. OVERLAY SHALL BE CONSTRUCTED TO THE ORIGINAL FINISHED ROADWAY ELEVATIONS. THE CONTRACTOR SHALL REFER TO THE PLANS FOR THE BRIDGES IN CONTRACTS NO. 1-(21)-1 AND 1-(21)-2.

12. DURING REMOVAL OF PORTIONS OF THE EXISTING STRUCTURE, THE CONTRACTOR SHALL EXERCISE CARE SO AS NOT TO DAMAGE EXISTING REINFORCING STEEL WHICH IS TO BE INCORPORATED INTO THE NEW CONSTRUCTION, AS SHOWN ON THE PLANS. EXISTING REINFORCING STEEL WHICH IS TO BE CUT SHALL BE MECHANICALLY CUT. COST OF CUTTING EXISTING REINFORCING STEEL FOR REUSE IN THE CONSTRUCTION SHALL BE INCIDENTAL TO PERTINENT CONCRETE REPAIR PAY ITEM, UNLESS NOTED OTHERWISE.

13. STRUCTURAL STEEL:

    UNLESS OTHERWISE NOTED ALL STRUCTURAL STEEL SHALL CONFORM TO AASHTO M270M GRADE 250. ALL NEW STRUCTURAL STEEL SHALL BE PAID FOR UNDER ITEM "605584 - STEEL STRUCTURE REPAIR". UNLESS OTHERWISE NOTED, ALL NEW STRUCTURAL STEEL SHALL BE PAINTED WITH A URETHANE PAINT SYSTEM IN ACCORDANCE WITH SUBSECTIONS 605.35 TO 605.37 OF THE SPECIFICATIONS. THE FINAL FINISH COAT SHALL MATCH THE EXISTING COLOR AS CLOSELY AS POSSIBLE.

14. ALL EXISTING CONCRETE THAT WILL BE IN CONTACT WITH NEW CONCRETE SHALL BE COATED WITH AN APPROVED EPOXY BONDING AGENT IN CONFORMANCE WITH THE MANUFACTURER'S RECOMMENDATIONS. BONDING AGENT SHALL CONFORM TO ASTM C881. COST SHALL BE INCIDENTAL TO THE PERTINENT CONCRETE PAY ITEM.

15. EXISTING STRUCTURE SHOWN IN LONG DASHED LINES. ALL DIMENSIONS AFFECTED BY THE GEOMETRICS, AND/OR LOCATION OF THE EXISTING STRUCTURE SHALL BE CHECKED IN THE FIELD BY THE CONTRACTOR BEFORE ANY CONSTRUCTION IS PERFORMED AND BEFORE ANY REINFORCING STEEL, ETC. IS ORDERED OR FABRICATED. IT SHALL BE THE RESPONSIBILITY OF THE CONTRACTOR TO SUPPLY THE ENGINEER WITH ALL FIELD DIMENSIONS REQUIRED TO CHECK DETAIL DRAWINGS. THE (±) MARKS SHOWN WITH DIMENSIONS AND STATIONS DO NOT INDICATE ANY DEGREE OF PRECISION. THESE MARKS (±) INDICATE EXISTING DIMENSIONS AND STATIONS THAT MAY VARY AND DO REQUIRE FIELD VERIFICATION BY THE CONTRACTOR. ANY DISCREPANCIES FOUND SHALL BE REPORTED TO AND RESOLVED WITH THE ENGINEER PRIOR TO PROCEEDING WITH THE WORK.

16. WHENEVER POSSIBLE ALL EXPOSED EXISTING REINFORCING STEEL SHALL BE THOROUGHLY CLEANED, EPOXY COATED (AS NOTED) AND INCORPORATED IN THE FINISHED STRUCTURE. COST OF CLEANING AND EPOXY COATING (AS NOTED) EXISTING REINFORCING STEEL SHALL BE INCIDENTAL TO THE PERTINENT CONCRETE CONSTRUCTION PAY ITEM UNLESS OTHERWISE NOTED.

17. ALL STRUCTURAL STEEL WITHIN 1.00 m OF STRINGER ENDS AND HINGES AND ALL BEARINGS SHALL BE CLEANED AND PAINTED/RECOATED. TOTAL AREA FOR STRIPPING, CLEANING AND PAINTING IS 1221 SQUARE METERS. AREA FOR STRIPPING, CLEANING AND PAINTING AS SPECIFIED ON THE PLANS IS 541 SQUARE METERS AND AREA FOR SPOT CLEANING AND PAINTING IS 680 SQUARE METERS. CLEANING AND PAINTING WILL BE PERMITTED BETWEEN THE HOURS OF 9:00 P.M. AND 5:00 A.M. ONLY.

18. FOR THE CONTRACTOR'S INFORMATION, THE LEAD PAINT WAS REMOVED FROM BRIDGES 1-676 AND 1-677 OVER SOUTHBOUND 1-95 WHEN THE BRIDGES WERE PAINTED IN 1993. BRIDGES 1-675 AND 1-678 OVER NORTHBOUND 1-95 WERE PAINTED IN 1991, BUT THERE IS STILL LEAD PAINT ON THESE BRIDGES. THE CONTRACTOR IS TO USE PAY ITEM "605532-CLEANING EXISTING STEEL STRUCTURES (NON-HAZARDOUS (BASE)" FOR BRIDGES 1-676 AND 1-677. THE CONTRACTOR IS TO USE PAY ITEM "605629 - CLEANING EXISTING STEEL STRUCTURES, HAZARDOUS (S.M.)" FOR BRIDGES 1-675 AND 1-678.

19. TRASH, RUBBISH, AND DEBRIS SHALL BE REMOVED AND SHALL BE INCIDENTAL TO PAY ITEM "605532 - CLEANING EXISTING STEEL STRUCTURES (NON-HAZARDOUS BASE)".

20. BEFORE ANY STRIPPING IS TO OCCUR, ALL STEEL IS TO RECEIVE A WATER BLASTING WITH JETTED WATER AND THEN CHLORIDE AND SULFATE TESTS ARE TO BE DONE AFTER THE WATER BLASTING AS PER THE REQUIREMENTS OF PAY ITEM "605622 - CLEANING OF STEEL STRUCTURE BY PRESSURE WASHING." IF THE CHLORIDES AND SULFATES STILL EXIST, WATER BLASTING SHALL CONTINUE UNTIL THE CHLORIDES AND SULFATES HAVE BEEN REMOVED. IF ALL THE CHLORIDES AND SULFATES HAVE BEEN REMOVED OR ARE WITHIN ACCEPTABLE TESTING LIMITS (DOWN TO 30 PPM AND 25 PPM RESPECTIVELY), THEN THE CONTRACTOR CAN PROCEED WITH STRIPPING AND CLEANING THE STEEL.

21. CONTAINMENT SYSTEMS SHALL BE REQUIRED FOR ANY BLASTING AND PLANS THEREOF SHALL BE SUBMITTED FOR APPROVAL.

22. THE PAINT SYSTEM USED SHALL BE APPLIED IN A THREE (3) COAT SYSTEM APPLICATION IN THE STRIPPED AND CLEANED AREAS. THE COLOR OF THE FINISHED PAINT SHALL MATCH THE EXISTING PAINT COLOR AS CLOSELY AS POSSIBLE. COLOR SHALL BE SUBMITTED FOR APPROVAL. PAINT SYSTEM SHALL BE IN ACCORDANCE WITH SPECIFICATIONS AND PAY ITEM "605006 - PAINTING, MOISTURE-CURED URETHANE SYSTEM."

23. ALL EXISTING BEARINGS SHALL BE BRUSH PAINTED AFTER POWER TOOL CLEANING. ALL PITTED AREAS OF THE STRUCTURAL STEEL SHALL BE BRUSH PAINTED AND THE REST OF THE STRUCTURAL STEEL SHALL BE SPRAYED. CLEANING OF BEARING AREAS SHALL BE INCLUDED UNDER THE PERTINENT ITEM - "605629 CLEANING EXISTING STEEL STRUCTURES, HAZARDOUS (S.M.)." OR "605532 - CLEANING EXISTING STEEL STRUCTURES (NON-HAZARDOUS BASE)". SEE NOTE 18.

24. AREAS OF EXISTING BRIDGE ABUTMENTS, AS INDICATED ON THE PLANS, SHALL RECEIVE TREATMENT OF THE WATERPROOFING MATERIAL, SEE SPECIAL PROVISION "602546 - WATERPROOFING P.C.C. MASONRY."

25. ALL AREAS DISTURBED BY THE CONTRACTOR'S OPERATIONS OUTSIDE THE LIMITS OF CONSTRUCTION SHALL BE GRADED BACK TO THE ORIGINAL EXISTING GRADE, SEEDED AND MULCHED. PAYMENT SHALL BE INCIDENTAL TO THE CONTRACT.

26. THE CONTRACTOR SHALL FURNISH AND ERECT TEMPORARY PROTECTIVE SHIELDS TO PREVENT ANY MATERIAL AND DEBRIS FROM ENTERING THE AREAS UNDER THE BRIDGE AND ADJACENT ROADWAYS DURING THE REHABILITATION WORK. MINIMUM 4.73m VERTICAL CLEARANCES OVER I-95 AND THE EXISTING ROADWAY ENVELOPES MUST BE MAINTAINED ON I-95, EXCEPT AS APPROVED BY THE ENGINEER. NO PORTION OF ANY TEMPORARY PROTECTIVE SHIELDS (INCLUDING CONNECTION DEVICES) SHALL ENCROACH ON THE MINIMUM VERTICAL CLEARANCES. COST FOR TEMPORARY PROTECTIVE SHIELDS SHALL BE INCLUDED IN PAY ITEM "601522 - TEMPORARY PROTECTIVE SHIELD."

27. FIELD WELDING SHALL BE PERFORMED BY WELDERS QUALIFIED IN ACCORDANCE WITH A.W.S. D1.1, AS MODIFIED BY AASHTO "STANDARD SPECIFICATIONS FOR WELDING STRUCTURAL STEEL HIGHWAY BRIDGES."

28. THE CONTRACTOR SHALL MAINTAIN AND BE RESPONSIBLE FOR ALL STREET SIGNS AND TRAFFIC CONTROL DEVICES AND SHALL REPLACE ANY SIGNS REMOVED OR DAMAGED DURING CONSTRUCTION AT THE DISCRETION OF THE ENGINEER. PAYMENT SHALL BE INCIDENTAL TO VARIOUS PERTINENT ITEMS FOR MAINTENANCE OF TRAFFIC.

29. ANY DAMAGE DONE TO THE EXISTING FACILITIES NOT DESIGNATED FOR REPAIR UNDER THE CONTRACT (UTILITIES, GUARDRAIL, DECK, ROADWAY, SIDEWALK, CURB, ESTABLISHED LANDSCAPING, ETC.) SHALL BE REPAIRED OR REPLACED AT THE CONTRACTOR'S EXPENSE.

30. IF THE CONTRACTOR WORKS AT NIGHT, HE/SHE IS RESPONSIBLE FOR ALL THE NECESSARY LIGHTING. PAYMENT SHALL BE INCIDENTAL TO THE CONTRACT UNLESS OTHERWISE NOTED. PAY ITEM "746591 - FURNISH AND MAINTAIN PORTABLE LIGHT ASSEMBLY" IS PROVIDED FOR NIGHT WORK FOR CLEANING AND PAINTING STEEL STRINGERS AND TO LIGHT UP THE CONSTRUCTION AREA FOR BETTER VISIBILITY AT NIGHT TIME TO THE TRAVELERS ON SR-141.

31. ALL CONSTRUCTION SHALL BE ACCOMPLISHED WITHIN THE EXISTING RIGHT OF WAY.

32. THE CONTRACTOR SHALL SUBMIT, TO THE ENGINEER FOR REVIEW AND APPROVAL, HIS/HER WORK SCHEDULE PRIOR TO COMMENCING ANY WORK. THE CONTRACTOR SHALL NOT VARY FROM THE APPROVED CONSTRUCTION SEQUENCE WITHOUT THE APPROVAL OF THE ENGINEER.

33. PLANS OF THE EXISTING BRIDGES, CONTRACTS 1-(21)-1, 1-(21)-2, 7248, 7511, AND 86-061-16, ARE AVAILABLE FROM THE PRECONSTRUCTION DESIGN SECTION OF THE DELAWARE DEPARTMENT OF TRANSPORTATION. NO RESPONSIBILITY FOR THEIR ACCURACY OR COMPLETENESS IS ASSUMED BY THE DEPARTMENT. DIMENSIONS, DETAILS, ETC., AS SHOWN THEREON MAY NOT BE AS BUILT.

34. NOTIFY D.A.R.T. FIRST STATE (302-577-3278, EXT. 3461, MR. MICHAEL ELLER) TWO WEEKS IN ADVANCE FOR PARTIAL BRIDGE CLOSURE OR ANY RESTRICTIONS.

35. THE CONTRACTOR'S PROPOSED DISPOSAL AREAS MUST BE APPROVED BY DELDOT PRIOR TO USE.

36. ALL EXISTING BRIDGE RAILING SHALL BE REMOVED, SALVAGED, AND DELIVERED BY THE CONTRACTOR TO DELDOT'S MAINTENANCE YARD AT I-95 AND CHAPMAN ROAD. COST OF REMOVAL AND SALVAGE OF BRIDGE RAIL SHALL BE INCIDENTAL TO PAY ITEM "211002 - REMOVAL OF STRUCTURES AND OBSTRUCTIONS (GUARDRAIL)".

37. THE EROSION POTENTIAL FOR THIS PROJECT HAS BEEN DETERMINED TO BE "INSIGNIFICANT" AND THERE IS NO SITE REVIEWER NEEDED.

38. THERE ARE SIGN STRUCTURES MOUNTED TO BRIDGES 1-675 AND 1-678 WHICH MUST BE REMOVED FOR CONSTRUCTION. THE CONTRACTOR SHALL ADVISE DELDOT WHEN THE SIGN STRUCTURES ARE REMOVED SO THAT DELDOT CAN REPAIR THEM. COST OF REMOVAL AND RE-INSTALLATION OF BRIDGE MOUNTED SIGNS SHALL BE INCIDENTAL TO PAY ITEM "602604 - PRECAST CONCRETE PARAPETS".

39. ALL MAINTENANCE OF TRAFFIC AND ASSOCIATED ABOVE-DECK CONSTRUCTION SHALL BE COMPLETED IN ONE CONSTRUCTION SEASON. ONE CONSTRUCTION SEASON IS CONSIDERED TO BE FROM MARCH TO NOVEMBER OF ONE CALENDAR YEAR.

REVISIONS

PREL. TRACING _____ DESIGN _____ CHK'D. _____

METRIC	CONTRACT	COUNTY	FEDERAL AID PROJECT No	SHEET No	TOTAL SHEETS
S DWG. 3 OF 29	98-074-03	NEW CASTLE	EIM-N006(2)	4	45

REHABILITATION OF BRIDGES
NO. 1-675, 1-676, 1-677 & 1-678,
SR-141 OVER I-95

PLAN & ELEVATION – BRIDGE NO. 1-675

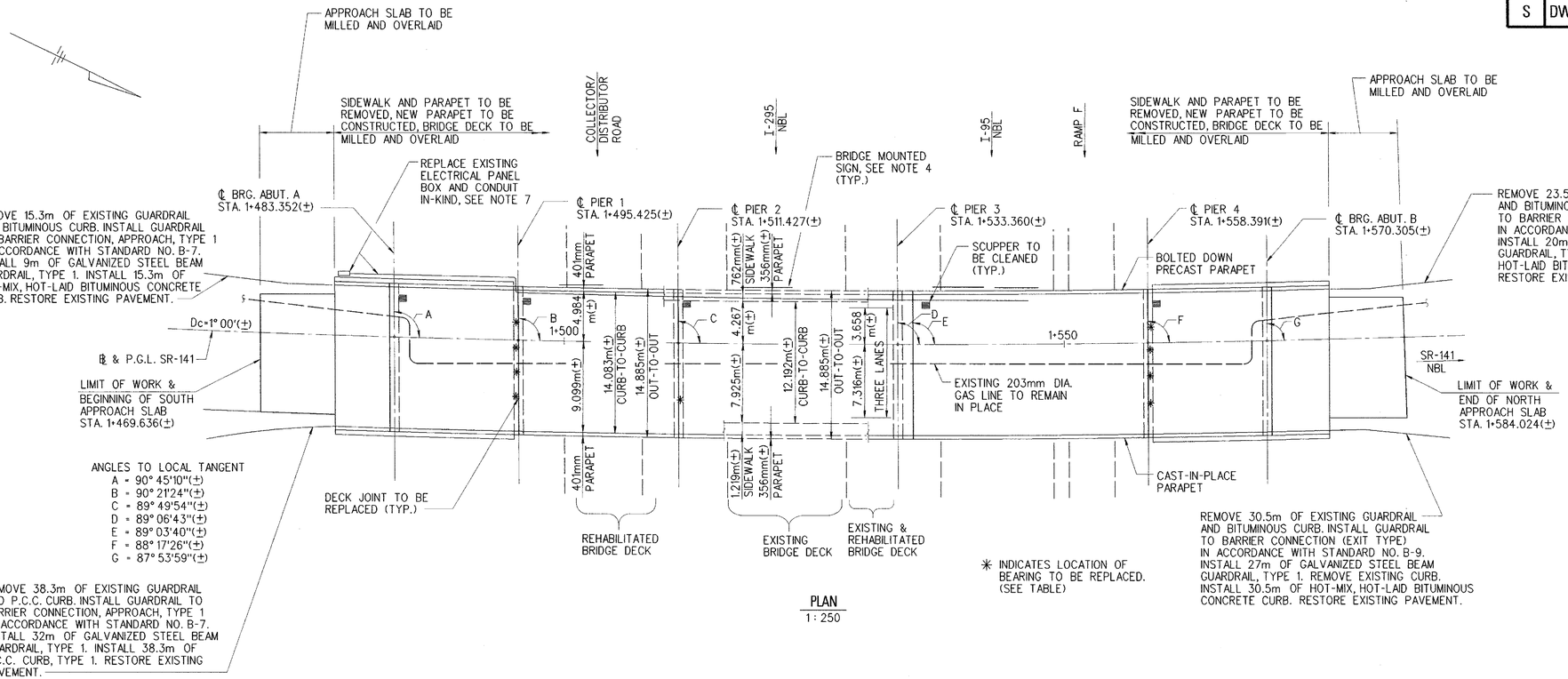

✳ INDICATES LOCATION OF BEARING TO BE REPLACED. (SEE TABLE)

PLAN
1 : 250

BEARING REPLACEMENT

LOCATION	SPAN	BEAM
PIER 1	1	2,3,4,5
PIER 2	3	5
PIER 4	5	2,3,4,5

REPAIR REFERENCES

REPAIR	DWG. NO.
ABUTMENT REPAIRS	S-17
PIER REPAIRS	S-18
STRUCTURAL STEEL REPAIRS	S-21
BEARING REPLACEMENT	S-22
DECK REPAIRS AND MODIFICATIONS	S-24
DECK JOINT REPLACEMENT	S-25, 26
SLOPE PROTECTION REPLACEMENT	S-27

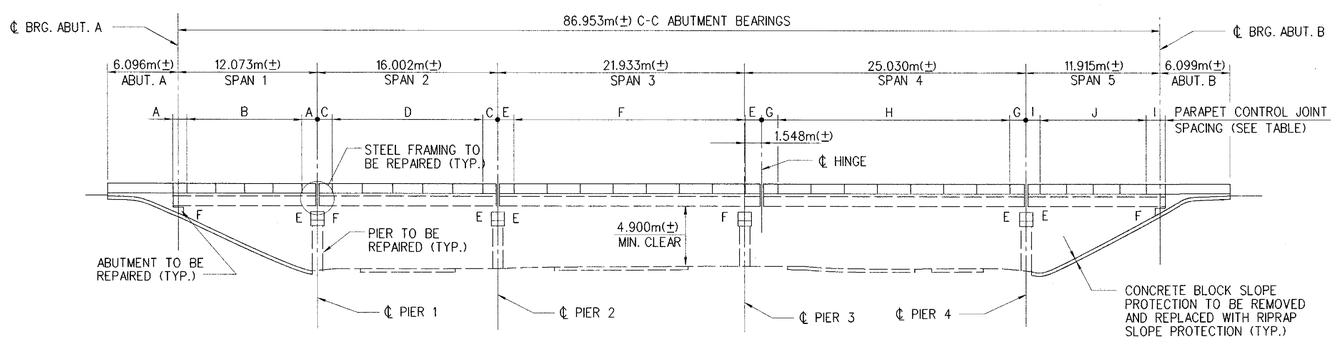

ELEVATION
1 : 250

NOTE:

"F" INDICATES FIXED BEARING LOCATION.
"E" INDICATES EXPANSION BEARING LOCATION.

CAST-IN-PLACE PARAPET INFORMATION

LOCATION	CONTROL JOINT SPACING	LONGITUDINAL BAR MARK
A	1 SP. @ 1.230m(±)	B1650E
B	4 SP. @ 2.480m = 9.920m	B1651E
C	1 SP. @ 1.330m(±)	B1652E
D	5 SP. @ 2.670m = 13.350m	B1653E
E	1 SP. @ 1.450m(±)	B1654E
F	7 SP. @ 2.940m = 20.580m	B1655E
G	1 SP. @ 1.450m(±)	B1654E
H	7 SP. @ 2.940m = 20.580m	B1655E
I	1 SP. @ 1.230m(±)	B1650E
J	4 SP. @ 2.440m = 9.760m	B1656E

NOTE: FOR PARAPET CONTROL JOINT DETAILS AND LOCATION OF LONGITUDINAL BARS, SEE DWG. S-24.

BOLTED DOWN PARAPET INFORMATION

LOCATION	PARAPET LENGTH
SPAN 1	5 PIECES @ 2.455m(±)=12.280m
SPAN 2	5 PIECES @ 2.650m(±)=15.91m
SPAN 3	8 PIECES @ 2.920m(±)=23.38m
SPAN 4	8 PIECES @ 2.920m(±)=23.38m
SPAN 5	5 PIECES @ 2.420m(±)=12.12m

NOTES:

1. FOR GENERAL NOTES AND PROJECT NOTES, SEE DWGS. S-2 AND 3.
2. FOR SEQUENCE OF CONSTRUCTION, SEE DWGS. S-8 AND 9.
3. FOR MAINTENANCE OF TRAFFIC, SEE DWGS. MT-1 THRU 12.
4. THE FOUR SIGNS MOUNTED ALONG THE WEST SIDE OF THE BRIDGE SHALL BE REMOVED PRIOR TO REMOVAL OF THE EXISTING PARAPET, REPAIRED BY DELDOT AND RE-INSTALLED TO THE NEW PARAPET BY THE CONTRACTOR. FOR DETAILS, SEE DWG. S-28. THE SCHEDULING OF THE SIGN REMOVAL SHALL BE COORDINATED WITH AND APPROVED BY THE ENGINEER PRIOR TO REMOVAL.
5. FOR EROSION AND SEDIMENT CONTROL, A TEMPORARY DRAIN PIPE SHALL BE CONNECTED TO THE SCUPPER OUTLET PIPE AT ABUTMENT A TO DIRECT STORMWATER FROM THE WORK AREA DURING THE SLOPE PROTECTION REPLACEMENT WORK. COSTS FOR FURNISHING, INSTALLING, MAINTAINING, AND REMOVING THE TEMPORARY DRAIN PIPE SHALL BE INCIDENTAL TO PAY ITEM "758000 - REMOVAL OF P.C.C. PAVEMENT, CURBS, SIDEWALKS, ETC.".
6. FOR PAVEMENT RESTORATION DETAILS, SEE DWG. S-28.
7. THE ELECTRICAL BOX AND ELECTRICAL CONDUIT FOR SIGN ILLUMINATION SHALL BE REMOVED AND REPLACED IN-KIND. COST FOR REMOVING THE EXISTING PANEL BOX AND CONDUIT SHALL BE INCIDENTAL TO PAY ITEM "602580 - PARTIAL REMOVAL OF P.C.C. MASONRY". COST OF FURNISHING AND INSTALLATION OF NEW BOX AND CONDUIT SHALL BE INCIDENTAL TO PAY ITEM "745506 - GALVANIZED CONDUIT IN/ON STRUCTURE, 50mm". FOR DETAILS, SEE UTILITY PLAN, DWG. E-1. PRIOR TO STARTING WORK CONTACT BILL THATCHER, MANAGER EXPRESSWAYS OPERATIONS, AT (302) 368-6866.

REVISIONS

CHKD. ____ DESIGN ____ PREL. TRACING ____

M:\ 1988\ 0188305.3A\ sgpe675.dgn

9/17/99 7:55:28 PM G:\PLOTTING\PS7\OCF\MYLAR_HP.dgf Raisa Gerchikova Division: STRUCTURES m:\1988\0188305.3a\sgpe675.prt

METRIC	CONTRACT	COUNTY	FEDERAL AID PROJECT No	SHEET No	TOTAL SHEETS
	98-074-03	NEW CASTLE	EIM-N006(2)	5	45
S DWG. 4 OF 29					

REHABILITATION OF BRIDGES
NO. 1-675, 1-676, 1-677 & 1-678,
SR-141 OVER I-95

PLAN & ELEVATION – BRIDGE NO. 1-676

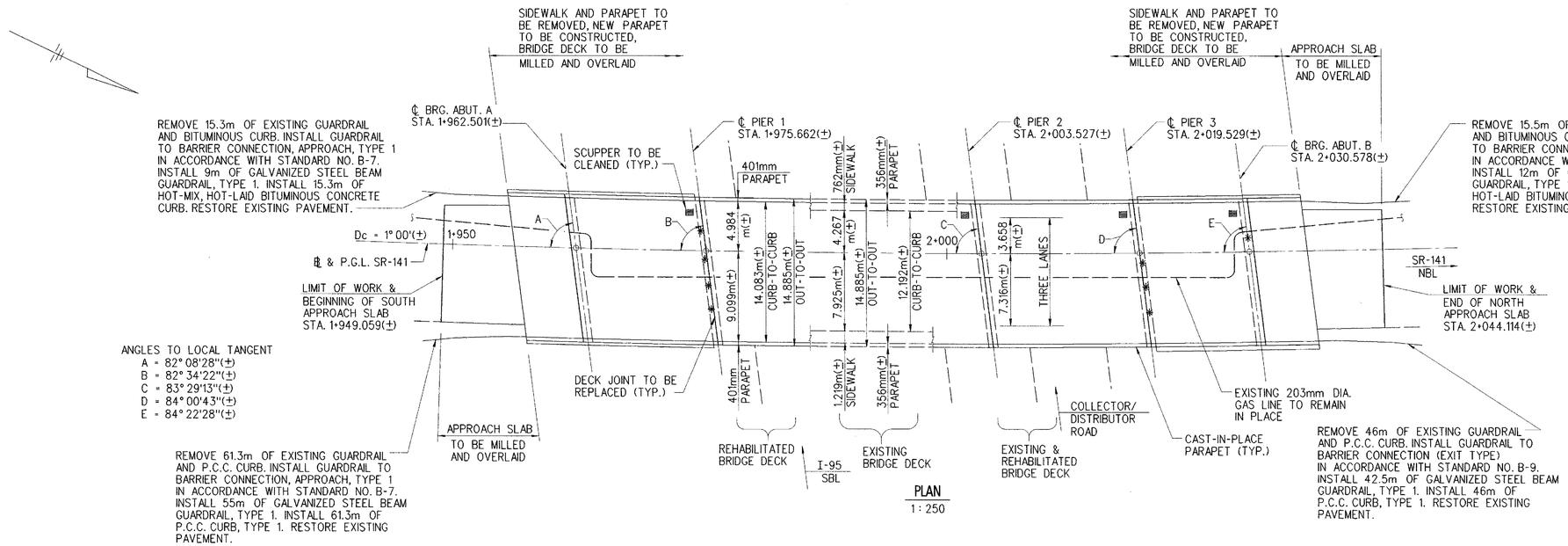

PLAN
1 : 250

✳ INDICATES LOCATION OF BEARING TO BE REPLACED. (SEE TABLE)

BEARING REPLACEMENT

LOCATION	SPAN	BEAM
PIER 1	1	2,3,4,5
PIER 3	4	3,4,5
ABUT. B	4	2

REPAIR REFERENCES

REPAIR	DWG. NO.
ABUTMENT REPAIRS	S-17
PIER REPAIRS	S-18
STRUCTURAL STEEL REPAIRS	S-21
BEARING REPLACEMENT	S-22
DECK REPAIRS AND MODIFICATIONS	S-24
DECK JOINT REPLACEMENT	S-25, 26
SLOPE PROTECTION REPLACEMENT	S-27

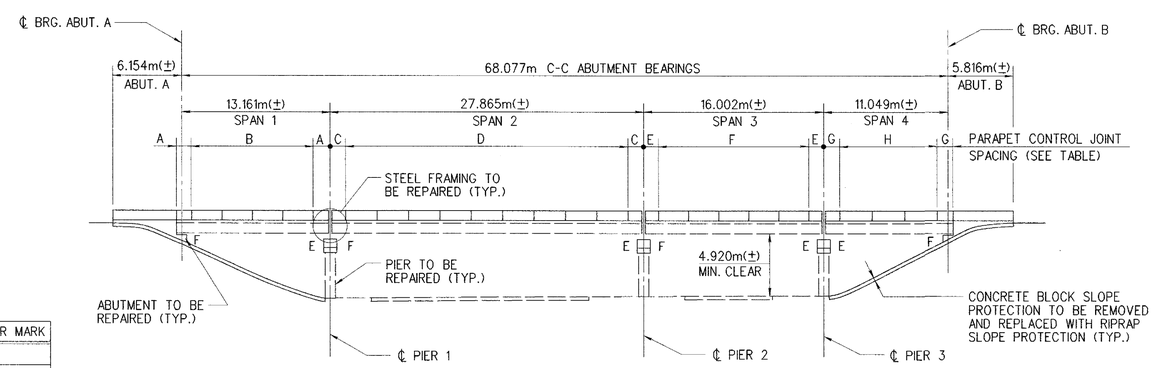

ELEVATION
1 : 250

NOTE:
"F" INDICATES FIXED BEARING LOCATION.
"E" INDICATES EXPANSION BEARING LOCATION.

CAST-IN-PLACE PARAPET INFORMATION

LOCATION	CONTROL JOINT SPACING	LONGITUDINAL BAR MARK
A	1 SP. @ 1.350m(±)	B1657E
B	4 SP. @ 2.690m = 10.760m	B1658E
C	1 SP. @ 1.380m(±)	B1659E
D	9 SP. @ 2.790m = 25.110m	B1660E
E	1 SP. @ 1.330m(±)	B1652E
F	5 SP. @ 2.670m = 13.350m	B1653E
G	1 SP. @ 1.420m(±)	B1661E
H	3 SP. @ 2.840m = 8.520m	B1662E

NOTE: FOR PARAPET CONTROL JOINT DETAILS AND LOCATION OF LONGITUDINAL BARS, SEE DWG. S-24.

NOTES:

1. FOR GENERAL NOTES AND PROJECT NOTES, SEE DWGS. S-2 AND 3.
2. FOR SEQUENCE OF CONSTRUCTION, SEE DWGS. S-8 AND 9.
3. FOR MAINTENANCE OF TRAFFIC, SEE DWGS. MT-1 THRU 12.
4. FOR EROSION AND SEDIMENT CONTROL, A TEMPORARY DRAIN PIPE SHALL BE CONNECTED TO THE SCUPPER OUTLET PIPE AT ABUTMENT A TO DIRECT STORMWATER FROM THE WORK AREA DURING THE SLOPE PROTECTION REPLACEMENT WORK. COSTS FOR FURNISHING, INSTALLING, MAINTAINING, AND REMOVING THE TEMPORARY DRAIN PIPE SHALL BE INCIDENTAL TO PAY ITEM "758000 - REMOVAL OF P.C.C. PAVEMENT, CURBS, SIDEWALKS, ETC.".
5. FOR PAVEMENT RESTORATION DETAILS, SEE DWG. S-28.

REVISIONS

PREL. TRACING ____ DESIGN ____ CHKD. ____

M:\ 1988\ 0188305.3A\ sgpe6-5.dgn

9/17/99 7:54:47 PM G:\PLOTTING\PS7\OCF\MYLAR_HP.cfg Raisa Gerchikova Division: STRUCTURES m:\1988\0188305.3a\sgpe6-5.prt

METRIC	CONTRACT	COUNTY	FEDERAL AID PROJECT No	SHEET No	TOTAL SHEETS
	98-074-03	NEW CASTLE	EIM-NO06(2)	6	45
S DWG. 5 OF 29					

REHABILITATION OF BRIDGES
NO. 1-675, 1-676, 1-677 & 1-678,
SR-141 OVER I-95

PLAN & ELEVATION - BRIDGE NO. 1-677

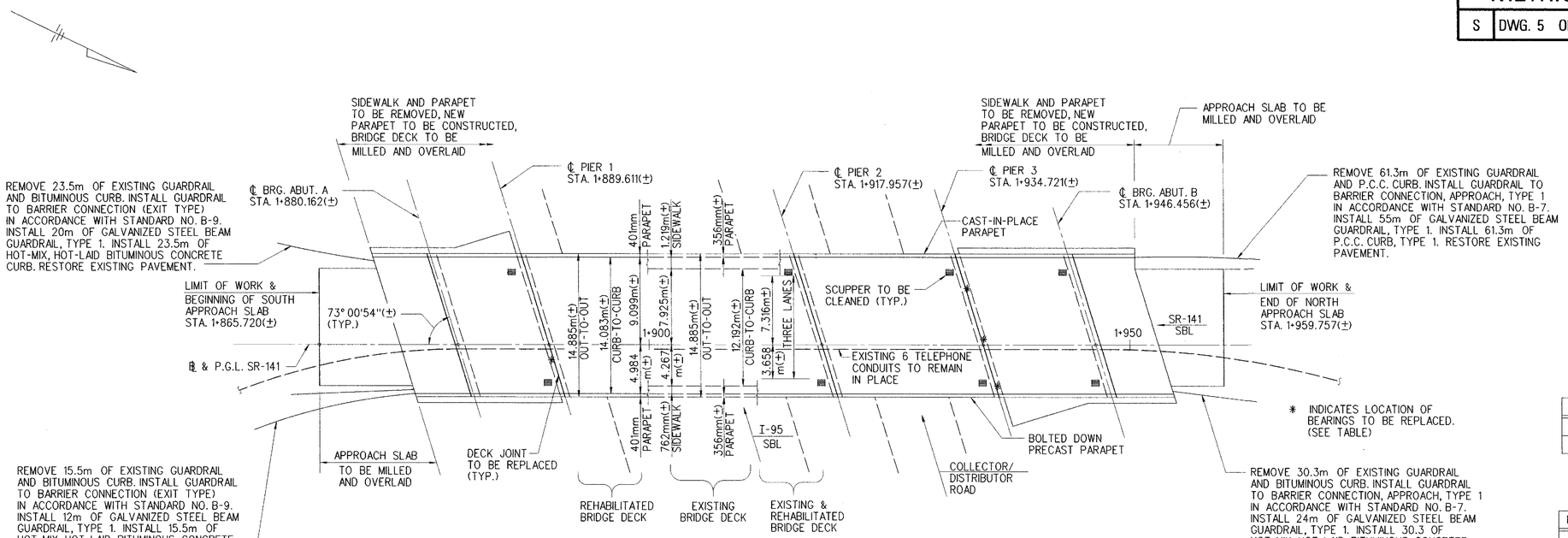

PLAN
1 : 250

BEARING REPLACEMENT

LOCATION	SPAN	BEAM
PIER 1	1	5
PIER 3	4	2,4,6

REPAIR REFERENCES

REPAIR	DWG. NO.
ABUTMENT REPAIRS	S-17
PIER REPAIRS	S-18
STRUCTURAL STEEL REPAIRS	S-21
BEARING REPLACEMENT	S-22
DECK REPAIRS AND MODIFICATIONS	S-24
DECK JOINT REPLACEMENT	S-25, 26
SLOPE PROTECTION REPLACEMENT	S-27

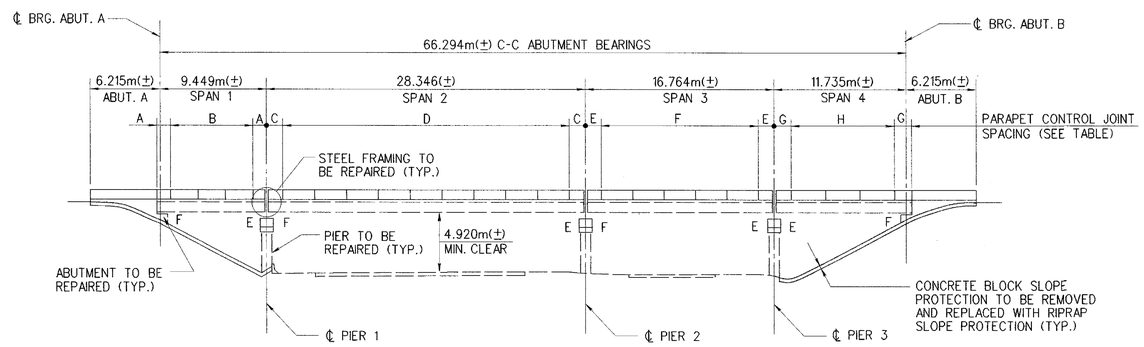

ELEVATION
1 : 250

NOTE:

"F" INDICATES FIXED BEARING LOCATION.
"E" INDICATES EXPANSION BEARING LOCATION.

CAST-IN-PLACE PARAPET INFORMATION

LOCATION	CONTROL JOINT SPACING	LONGITUDINAL BAR MARK
A	1 SP. @ 1.220m(±)	B1663E
B	3 SP. @ 2.440m = 7.320m	B1656E
C	1 SP. @ 1.440m(±)	B1664E
D	9 SP. @ 2.830m = 25.470m	B1662E
E	1 SP. @ 1.410m(±)	B1661E
F	5 SP. @ 2.790m = 13.950m	B1660E
G	1 SP. @ 1.520m(±)	B1665E
H	3 SP. @ 3.000m = 9.000m	B1666E

NOTE: FOR PARAPET CONTROL JOINT DETAILS AND LOCATION OF LONGITUDINAL BARS, SEE DWG. S-24.

BOLTED DOWN PARAPET INFORMATION

LOCATION	PARAPET LENGTH
SPAN 1	4 PIECES @ 2.415m=9.660m
SPAN 2	10 PIECES @ 2.825m(±)=28.250m
SPAN 3	6 PIECES @ 2.780m(±)=16.670m
SPAN 4	4 PIECES @ 2.985m=11.940m

NOTES:

1. FOR GENERAL NOTES AND PROJECT NOTES, SEE DWGS. S-2 AND 3.
2. FOR SEQUENCE OF CONSTRUCTION, SEE DWGS. S-8 AND 9.
3. FOR MAINTENANCE OF TRAFFIC, SEE DWGS. MT-1 THRU 12.
4. FOR EROSION AND SEDIMENT CONTROL, A TEMPORARY DRAIN PIPE SHALL BE CONNECTED TO THE SCUPPER OUTLET PIPE AT ABUTMENT A TO DIRECT STORMWATER FROM THE WORK AREA DURING THE SLOPE PROTECTION REPLACEMENT WORK. COSTS FOR FURNISHING, INSTALLING, MAINTAINING, AND REMOVING THE TEMPORARY DRAIN PIPE SHALL BE INCIDENTAL TO PAY ITEM "758000 - REMOVAL OF P.C.C. PAVEMENT, CURBS, SIDEWALKS, ETC.".
5. FOR PAVEMENT RESTORATION DETAILS, SEE DWG. S-28.

REVISIONS

PREL. TRACING ____ DESIGN ____ CHKD. ____

M:\ 1988\ 0188305.3A\ sgpe677.dgn

9/17/99 7:54:17 PM G:\PLOTTING\PS7\OCF\MYLAR_HP.qcf Raisa Gerchikova Division: STRUCTURES m:\1988\0188305.3a\sgpe677.prt

METRIC				
S	DWG. 6 OF 29			

CONTRACT	COUNTY	FEDERAL AID PROJECT No	SHEET No	TOTAL SHEETS
98-074-03	NEW CASTLE	EIM-N006(2)	7	45

REHABILITATION OF BRIDGES
NO. 1-675, 1-676, 1-677 & 1-678,
SR-141 OVER I-95

PLAN & ELEVATION - BRIDGE NO. 1-678

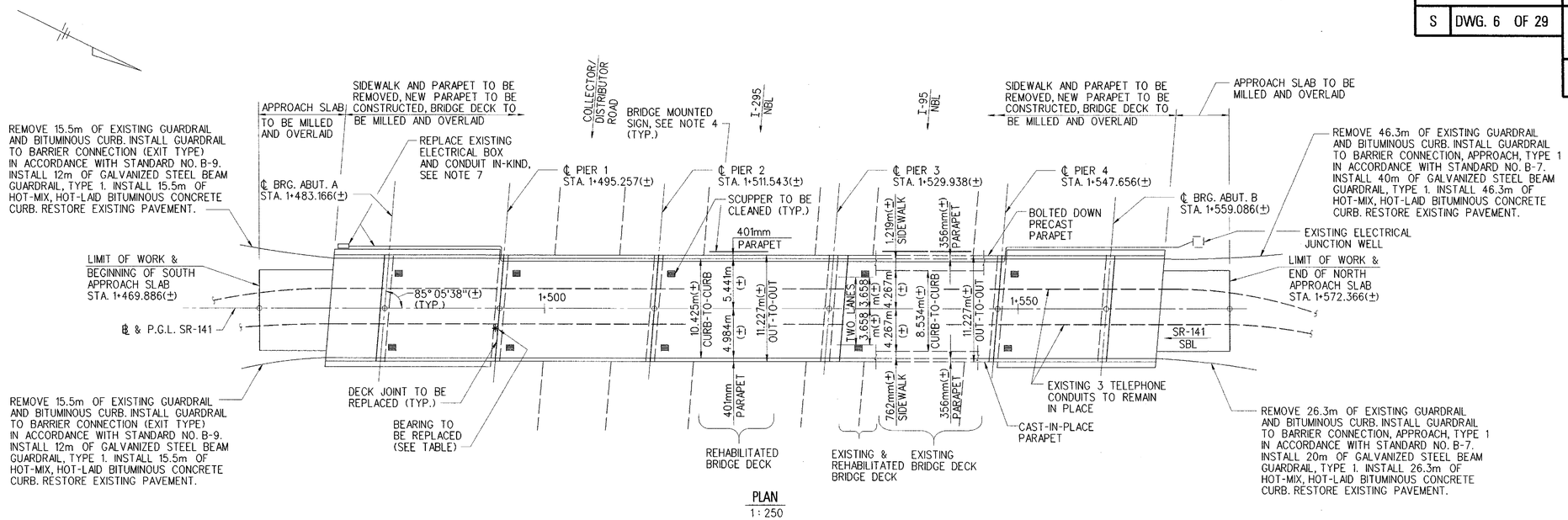

PLAN
1 : 250

BEARING REPLACEMENT

LOCATION	SPAN	BEAM
PIER 1	1	4

REPAIR REFERENCES

REPAIR	DWG. NO.
ABUTMENT REPAIRS	S-17
PIER REPAIRS	S-18
STRUCTURAL STEEL REPAIRS	S-21
BEARING REPLACEMENT	S-22
DECK REPAIRS AND MODIFICATIONS	S-24
DECK JOINT REPLACEMENT	S-25, 26
SLOPE PROTECTION REPLACEMENT	S-27

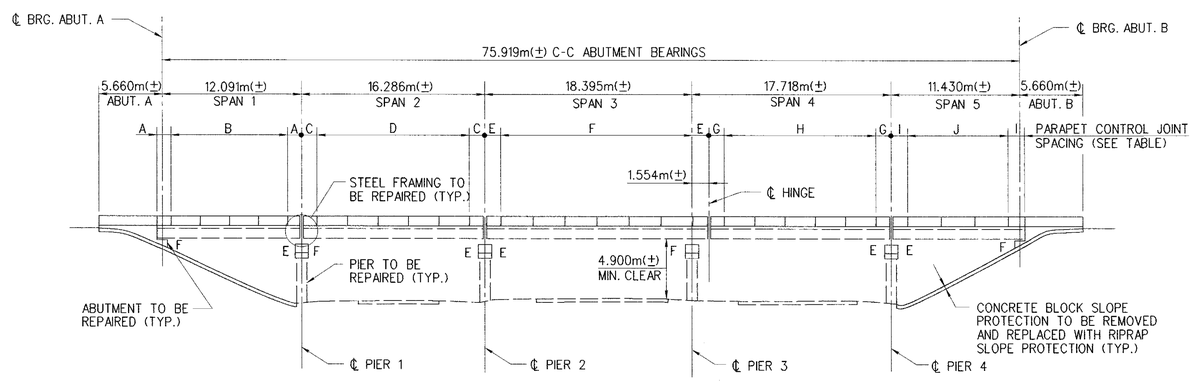

ELEVATION
1 : 250

NOTE:

"F" INDICATES FIXED BEARING LOCATION.
"E" INDICATES EXPANSION BEARING LOCATION.

CAST-IN-PLACE PARAPET INFORMATION

LOCATION	CONTROL JOINT SPACING	LONGITUDINAL BAR MARK
A	1 SP. @ 1.240m(±)	B1650E
B	4 SP. @ 2.480m = 9.920m	B1651E
C	1 SP. @ 1.370m(±)	B1659E
D	5 SP. @ 2.710m = 13.550m	B1667E
E	1 SP. @ 1.430m(±)	B1664E
F	6 SP. @ 2.850m = 17.100m	B1668E
G	1 SP. @ 1.360m(±)	B1657E
H	5 SP. @ 2.690m = 13.450m	B1658E
I	1 SP. @ 1.470m(±)	B1669E
J	3 SP. @ 2.930m = 8.790m	B1655E

NOTE: FOR PARAPET CONTROL JOINT DETAILS AND LOCATION OF LONGITUDINAL BARS, SEE DWG. S-24.

BOLTED DOWN PARAPET INFORMATION

LOCATION	PARAPET LENGTH
SPAN 1	5 PIECES @ 2.460m=12.300m
SPAN 2	6 PIECES @ 2.700(±)=16.190m
SPAN 3	7 PIECES @ 2.840m(±)=19.860m
SPAN 4	4 PIECES @ 2.910m(±)=11.630m

NOTES:

1. FOR GENERAL NOTES AND PROJECT NOTES, SEE DWGS. S-2 AND 3.
2. FOR SEQUENCE OF CONSTRUCTION, SEE DWG. S-10.
3. FOR MAINTENANCE OF TRAFFIC, SEE DWGS. MT-1 THRU 12.
4. THE FOUR SIGNS MOUNTED ALONG THE WEST SIDE OF THE BRIDGE SHALL BE REMOVED PRIOR TO REMOVAL OF THE EXISTING PARAPET, REPAIRED BY DELDOT AND RE-INSTALLED TO THE NEW PARAPET BY THE CONTRACTOR. FOR DETAILS, SEE DWG. S-28. THE SCHEDULING OF THE SIGN REMOVAL SHALL BE COORDINATED WITH AND APPROVED BY THE ENGINEER PRIOR TO REMOVAL.
5. FOR EROSION AND SEDIMENT CONTROL, A TEMPORARY DRAIN PIPE SHALL BE CONNECTED TO THE SCUPPER OUTLET PIPE AT ABUTMENT A TO DIRECT STORMWATER FROM THE WORK AREA DURING THE SLOPE PROTECTION REPLACEMENT WORK. COSTS FOR FURNISHING, INSTALLING, MAINTAINING, AND REMOVING THE TEMPORARY DRAIN PIPE SHALL BE INCIDENTAL TO PAY ITEM "758000 - REMOVAL OF P.C.C. PAVEMENT, CURBS, SIDEWALKS, ETC.".
6. FOR PAVEMENT RESTORATION DETAILS, SEE DWG. S-28.
7. THE ELECTRICAL BOX AND ELECTRICAL CONDUIT FOR SIGN ILLUMINATION SHALL BE REMOVED AND REPLACED IN-KIND. COST FOR REMOVING THE EXISTING BOX AND CONDUIT SHALL BE INCIDENTAL TO PAY ITEM "602580 - PARTIAL REMOVAL OF P.C.C. MASONRY." COST OF FURNISHING AND INSTALLATION OF NEW BOX AND CONDUIT SHALL BE INCIDENTAL TO PAY ITEM "745506 - GALVANIZED CONDUIT IN/ON STRUCTURE, 50mm." FOR DETAILS, SEE UTILITY PLAN, DWG. E-1. PRIOR TO STARTING WORK CONTACT BILL THATCHER, MANAGER EXPRESSWAYS OPERATIONS, AT (302) 368-6866.

REVISIONS

CHKD. _____ DESIGN _____ PRELI. TRACING _____

M:\ 1988\ 0188305.3A\ sgpe6-2.dgn

9/17/99 7:53:27 PM G:\PLOTTING\PS7\OCF\MYLAR_HP.cfg Raisa Gerchikova Division: STRUCTURES m:\1988\0188305.3a\sgpe6-2.prt

METRIC	CONTRACT	COUNTY	FEDERAL AID PROJECT No	SHEET No	TOTAL SHEETS
S DWG. 7 OF 29	98-074-03	NEW CASTLE	EIM-N006(2)	8	45

REHABILITATION OF BRIDGES
NO. 1-675, 1-676, 1-677 & 1-678,
SR-141 OVER I-95

TYPICAL SECTIONS

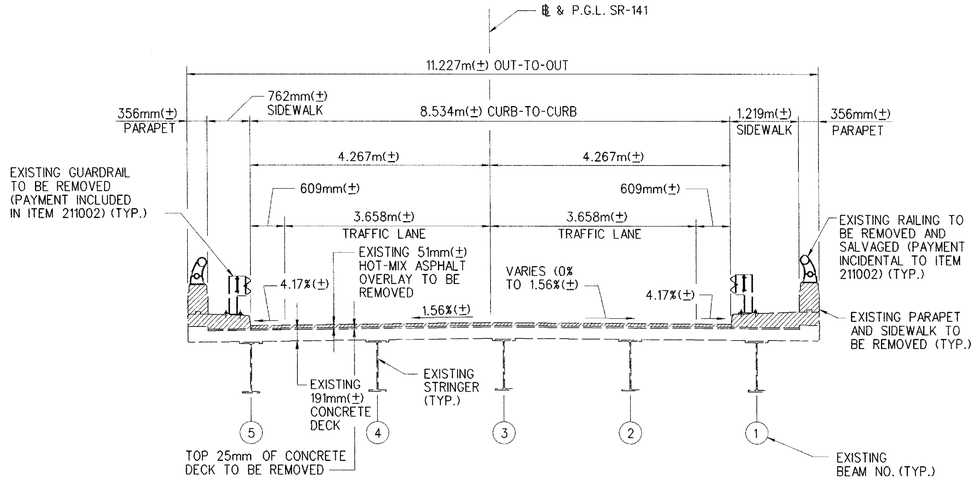

TYPICAL SECTION – EXISTING CONDITIONS & REMOVAL

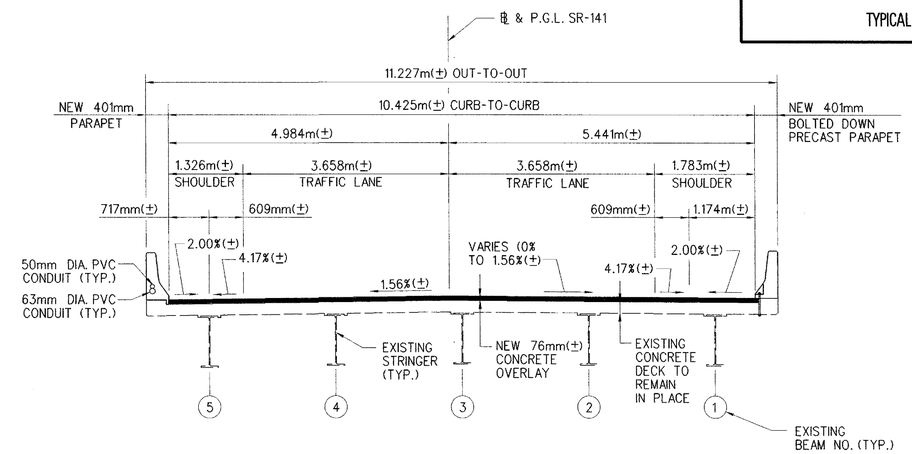

TYPICAL SECTION – REHABILITATED

BRIDGE NO. 1-678
(LOOKING SOUTH)
1 : 50

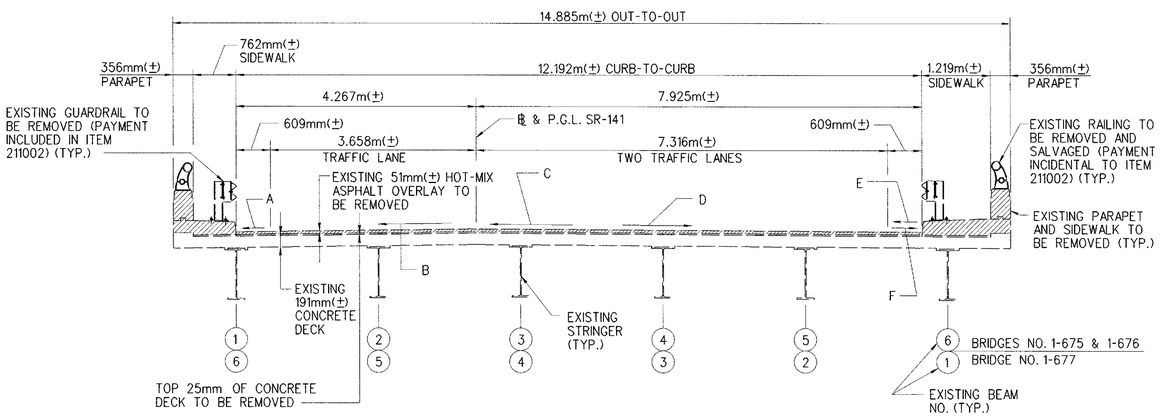

TYPICAL SECTION – EXISTING CONDITIONS & REMOVAL

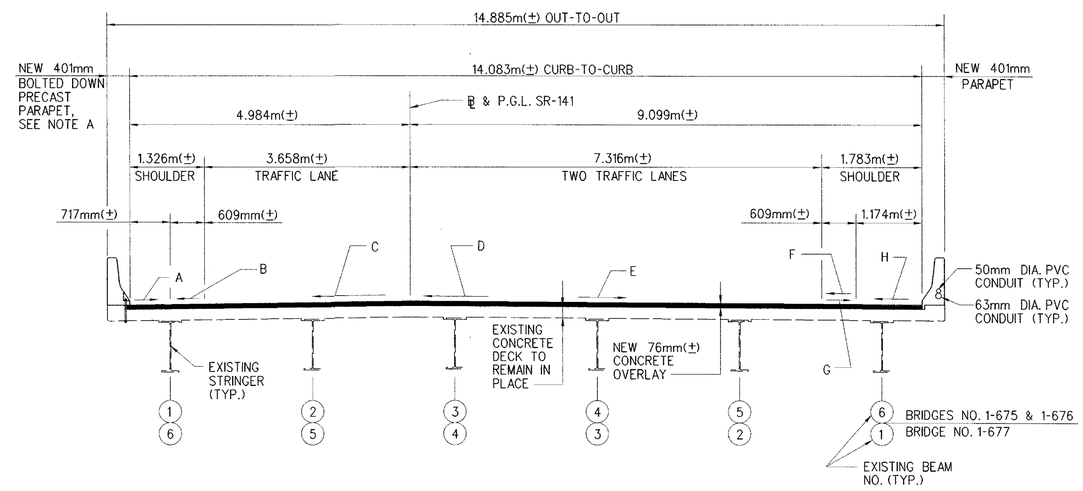

TYPICAL SECTION – REHABILITATED

BRIDGES NO. 1-675 & 1-676
(LOOKING NORTH)
BRIDGE NO. 1-677
(LOOKING SOUTH)
1 : 50

NOTES:

1. THE TYPICAL DEPTH FOR MILLING SHALL BE 76mm, WHICH INCLUDES 51mm OF HOT-MIX ASPHALT OVERLAY AND THE TOP 25mm OF THE CONCRETE DECK, PERFORMED AS TWO SEPARATE OPERATIONS.
2. MILLING SHALL BE CONTROLLED TO MAINTAIN THE ORIGINAL CROSS SLOPES AT THE DEPTH OF THE MILLING BELOW THE AS-BUILT FINISHED DECK SURFACE. THE CONTRACTOR SHALL REFER TO THE AS-BUILT PLANS FOR THE BRIDGES AND ESTABLISH CONTROLS FOR USE DURING THE MILLING OPERATIONS.
3. THE THICKNESS OF THE OVERLAY SHALL BE CONTROLLED TO REPRODUCE THE AS-BUILT CROSS SLOPES AND FINISHED DECK SURFACES. THE THICKNESS OF THE OVERLAY IN THE ORIGINAL SIDEWALK AREAS SHALL VARY AS REQUIRED TO PROVIDE DRAINAGE TOWARDS THE ORIGINAL GUTTER LINE AND SCUPPERS.
4. IN THE VICINITY OF THE SCUPPERS THE OVERLAY SHALL BE FINISHED TO PROVIDE DRAINAGE TOWARDS THE SCUPPERS.
5. ALL AS-BUILT DIMENSIONS AND CROSS SLOPES SHALL BE VERIFIED BY THE CONTRACTOR PRIOR TO BEGINNING WORK.
6. COST OF NEW 50mm AND 63mm DIAMETER CONDUIT TO BE INCIDENTAL TO PAY ITEM "602013 - P.C.C. MASONRY SUPERSTRUCTURE, CLASS D."

SUPERELEVATIONS (%)

	EXISTING						REHABILITATED							
BRIDGE NO.	A	B	C	D	E	F	A	B	C	D	E	F	G	H
1-675	4.17	2.20	2.20	-	2.20	-	2.00	4.17	2.20	2.20	-	2.20	-	2.00
1-676	4.17	2.20	2.20	-	2.20	-	2.00	4.17	2.20	2.20	-	2.20	-	2.00
1-677	4.17	1.56	-	1.56	-	4.17	2.00	4.17	1.56	-	1.56	-	4.17	2.00

NOTE A:

PARAPET ON THIS SIDE OF BRIDGE NO. 1-676 ONLY TO BE CAST-IN-PLACE.

REVISIONS

CHKD.

DESIGN

PREL. TRACING

M:\ 1988\ 0188305.3A\ stysec1.dgn

9/17/99 7:51:32 PM G:\PLOTTING\PS7\GCP\MYLAR_HP.gcf Raisa Gerchikova Division: STRUCTURES m:\1988\0188305.3a\stysec1.prf

METRIC	CONTRACT	COUNTY	FEDERAL AID PROJECT No	SHEET No	TOTAL SHEETS
	98-074-03	NEW CASTLE	EIM-N006(2)	9	45
S DWG. 8 OF 29	REHABILITATION OF BRIDGES NO. 1-675, 1-676, 1-677 & 1-678, SR-141 OVER I-95				
	SEQUENCE OF CONSTRUCTION – BRIDGES NO. 1-675, 1-676 AND 1-677, I				

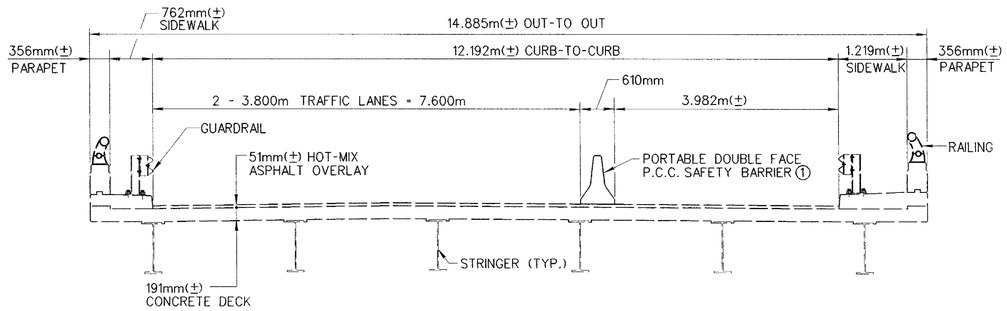

EXISTING DECK
1:50

NOTES:

- WHILE MAINTAINING TRAFFIC INSTALL PORTABLE DOUBLE FACE P.C.C. SAFETY BARRIER ①.
- DIRECT TRAFFIC INTO AND MAINTAIN IN 2 LANES AS SHOWN.

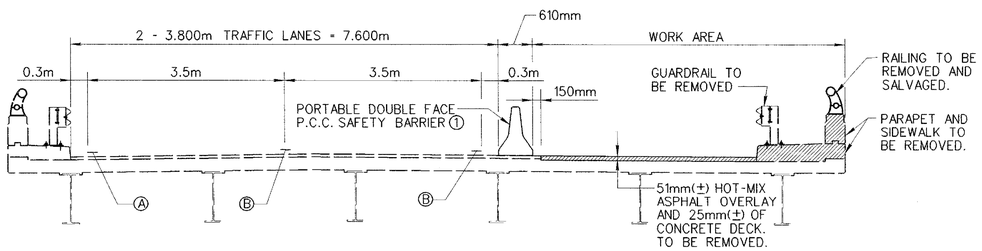

STAGE I – REMOVAL
1:50

NOTES:

WHILE MAINTAINING TRAFFIC IN 2 LANES COMPLETE THE FOLLOWING WORK WITHIN THE WORK AREA:

- INSTALLATION OF TEMPORARY PROTECTIVE SHIELD.
- REMOVAL OF EXISTING BRIDGE GUARDRAIL.
- REMOVAL AND SALVAGE OF EXISTING RAILING.
- REMOVAL OF EXISTING PARAPET AND SIDEWALK ON BRIDGE AND ABUTMENTS.
- REMOVAL OF EXISTING HOT-MIX ASPHALT OVERLAY AND TOP 25 mm OF CONCRETE DECK.
- REMOVAL OF HOT-MIX ASPHALT AND CONCRETE ON APPROACH SLABS.

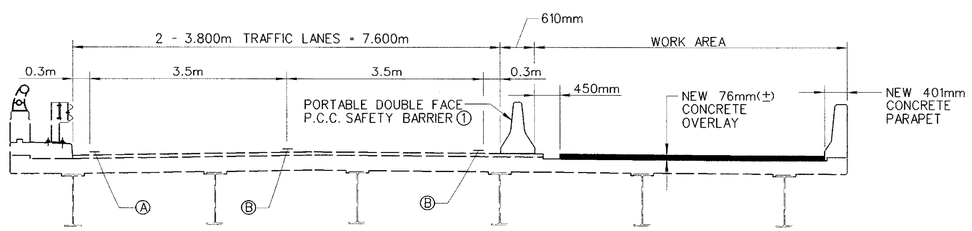

STAGE I – CONSTRUCTION
1:50

NOTES:

WHILE MAINTAINING TRAFFIC IN 2 LANES COMPLETE THE FOLLOWING WORK WITHIN THE WORK AREA:

- REPLACEMENT OF DECK JOINTS AT THE PIERS, ABUTMENTS AND HINGE.
- PLACEMENT OF NEW CONCRETE PARAPET.
- PLACEMENT OF NEW CONCRETE OVERLAY.
- PLACEMENT OF CONCRETE ON APPROACH SLABS.
- REPLACEMENT OF DESIGNATED BEARINGS.
- CLEAN SCUPPERS AND PIPING.

PAVEMENT MARKING LEGEND

Ⓐ 100mm YELLOW TEMPORARY PAVEMENT MARKING TAPE.

Ⓑ 100mm WHITE TEMPORARY PAVEMENT MARKING TAPE.

NOTES:

1. THE REPAIRS TO THE STEEL FRAMING, CONCRETE PIERS AND ABUTMENTS, AND SLOPE PROTECTION MAY BE COMPLETED DURING ANY STAGE OF CONSTRUCTION WITH THE APPROVAL OF THE ENGINEER.
2. REFER TO MAINTENANCE OF TRAFFIC DWGS. MT-1 THRU 12.
3. DECK SECTION IS SHOWN LOOKING NORTH FOR BRIDGES NO. 1-675 AND NO. 1-676, AND LOOKING SOUTH FOR BRIDGE NO. 1-677.

REVISIONS

CHKD.

DESIGN

PREL. TRACING

M:\ 1988\ 0188305.3A\ ssequ002.dgn

9/17/99 7:50:23 PM G:\PLOTTING\PS7\OGF\MYLAR_HP.pcf Raisa Gerchikova Division: STRUCTURES m:\1988\0188305.3a\ssequ002.prt

METRIC	CONTRACT	COUNTY	FEDERAL AID PROJECT No	SHEET No	TOTAL SHEETS
	98-074-03	NEW CASTLE	EIM-N006(2)	10	45
S DWG. 9 OF 29	REHABILITATION OF BRIDGES NO. 1-675, 1-676, 1-677 & 1-678, SR-141 OVER I-95				
	SEQUENCE OF CONSTRUCTION – BRIDGES NO. 1-675, 1-676 AND 1-677, II				

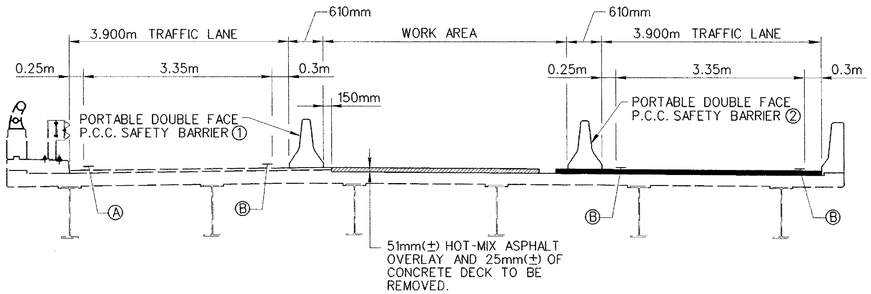

STAGE II – REMOVAL

1:50

NOTES:

INSTALL PORTABLE DOUBLE FACE P.C.C. SAFETY BARRIER ②, RELOCATE PORTABLE DOUBLE FACE P.C.C. SAFETY BARRIER ① AND DIRECT TRAFFIC INTO TWO LANES. WHILE MAINTAINING TRAFFIC COMPLETE THE FOLLOWING WORK WITHIN THE WORK AREA:

- REMOVAL OF EXISTING HOT-MIX ASPHALT OVERLAY AND TOP 25 mm OF CONCRETE DECK.
- REMOVAL OF HOT-MIX ASPHALT AND CONCRETE ON APPROACH SLABS.

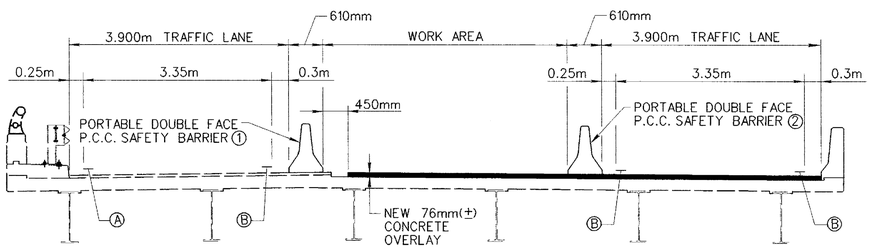

STAGE II – CONSTRUCTION

1:50

NOTES:

WHILE MAINTAINING TRAFFIC IN 2 LANES COMPLETE THE FOLLOWING WORK WITHIN THE WORK AREA:

- REPLACEMENT OF DECK JOINTS AT THE PIERS, ABUTMENTS AND HINGE.
- PLACEMENT OF NEW CONCRETE OVERLAY.
- PLACEMENT OF CONCRETE ON APPROACH SLABS.
- REPLACEMENT OF DESIGNATED BEARINGS.

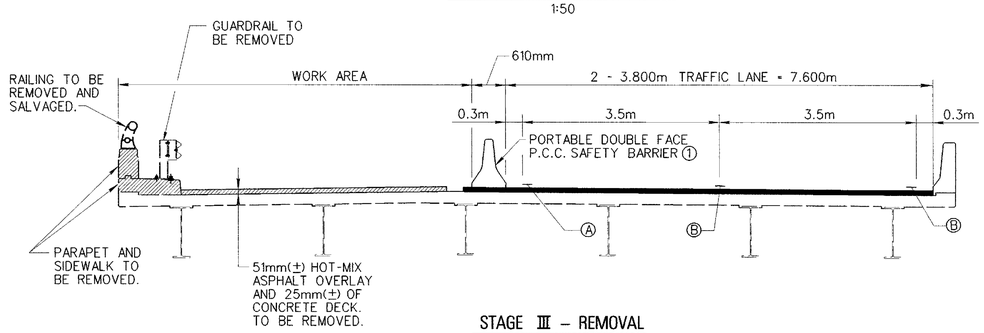

STAGE III – REMOVAL

1:50

NOTES:

REMOVE PORTABLE DOUBLE FACE P.C.C. SAFETY BARRIER ②, RELOCATE PORTABLE DOUBLE FACE P.C.C. SAFETY BARRIER ①, AND DIRECT TRAFFIC INTO TWO LANES. WHILE MAINTAINING TRAFFIC COMPLETE THE FOLLOWING WORK WITHIN THE WORK AREA:

- REMOVAL OF BRIDGE MOUNTED SIGN STRUCTURES (BRIDGE NO. 1-675 ONLY).
- INSTALLATION OF TEMPORARY PROTECTIVE SHIELD.
- REMOVAL OF EXISTING BRIDGE GUARDRAIL.
- REMOVAL AND SALVAGE OF EXISTING RAILING.
- REMOVAL OF EXISTING PARAPET AND SIDEWALK ON BRIDGE AND ABUTMENTS.
- REMOVAL OF EXISTING HOT-MIX ASPHALT OVERLAY AND TOP 25 mm OF CONCRETE DECK.
- REMOVAL OF HOT-MIX ASPHALT AND CONCRETE ON APPROACH SLABS.

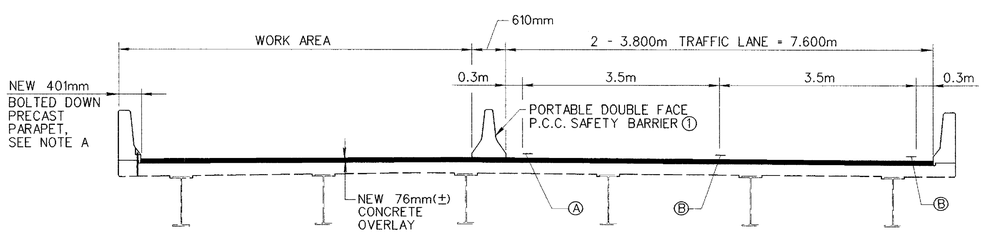

STAGE III – CONSTRUCTION

1:50

NOTES:

WHILE MAINTAINING TRAFFIC IN 2 LANES COMPLETE THE FOLLOWING WORK WITHIN THE WORK AREA:

- REPLACEMENT OF DECK JOINTS AT THE PIERS, ABUTMENTS AND HINGE.
- PLACEMENT OF NEW CONCRETE PARAPET FOR BRIDGE NO. 1-676 AND NEW BOLTED DOWN PRECAST PARAPET FOR BRIDGES NO. 1-675 AND NO. 1-677
- PLACEMENT OF NEW CONCRETE OVERLAY.
- PLACEMENT OF BRIDGE MOUNTED SIGN STRUCTURES (BRIDGE NO. 1-675 ONLY).
- PLACEMENT OF CONCRETE ON APPROACH SLABS.
- REPLACEMENT OF DESIGNATED BEARINGS.
- CLEAN SCUPPERS AND PIPING.

AFTER COMPLETION OF THE WORK REMOVE PORTABLE DOUBLE FACE P.C.C. SAFETY BARRIER ① AND OPEN THE BRIDGE TO THREE LANES OF TRAFFIC.

NOTES:

1. THE REPAIRS TO THE STEEL FRAMING, CONCRETE PIERS, ABUTMENTS, AND SLOPE PROTECTION MAY BE COMPLETED DURING ANY STAGE OF CONSTRUCTION WITH THE APPROVAL OF THE ENGINEER.
2. REFER TO MAINTENANCE OF TRAFFIC DWGS. MT-1 THRU 12.
3. DECK SECTION IS SHOWN LOOKING NORTH FOR BRIDGES NO. 1-675 AND NO. 1-676, AND LOOKING SOUTH FOR BRIDGE NO. 1-677.

PAVEMENT MARKING LEGEND

Ⓐ 100mm YELLOW TEMPORARY PAVEMENT MARKING TAPE.

Ⓑ 100mm WHITE TEMPORARY PAVEMENT MARKING TAPE.

NOTE A:

PARAPET ON THIS SIDE OF BRIDGE 1-676 ONLY TO BE CAST-IN-PLACE.

REVISIONS

CHKD.

DESIGN

PREL. TRACING

M:\ 1988\ 0188305.3A\ ssequ003.dgn

9/17/99 7:49:27 PM G:\PLOTTING\PS7\OCF\MYLAR_HP.pcf Raisa Gerchikova Division: STRUCTURES m:\1988\0188305.3a\ssequ003.prf

METRIC	CONTRACT	COUNTY	FEDERAL AID PROJECT No	SHEET No	TOTAL SHEETS
	98-074-03	NEW CASTLE	EIM-N006(2)	11	45
S DWG. 10 OF 29	REHABILITATION OF BRIDGES NO. 1-675, 1-676, 1-677 & 1-678, SR-141 OVER I-95				

SEQUENCE OF CONSTRUCTION – BRIDGE NO. 1-678

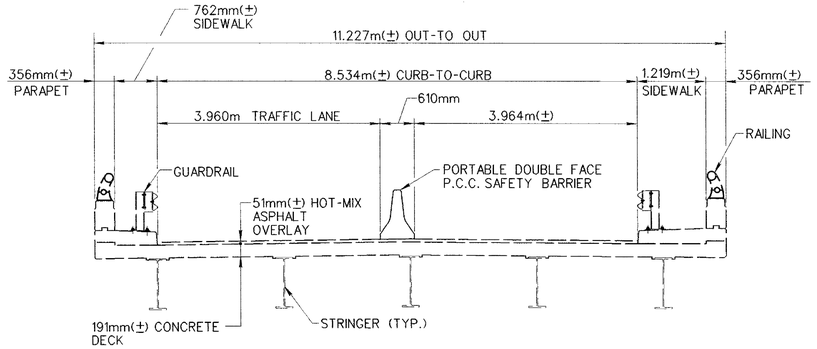

EXISTING DECK

1:50

NOTES:

- DIRECT TRAFFIC INTO A SINGLE LANE AND INSTALL THE PORTABLE DOUBLE FACE P.C.C. SAFETY BARRIER.
- DIRECT TRAFFIC INTO AND MAINTAIN IN A SINGLE LANE, AS SHOWN.

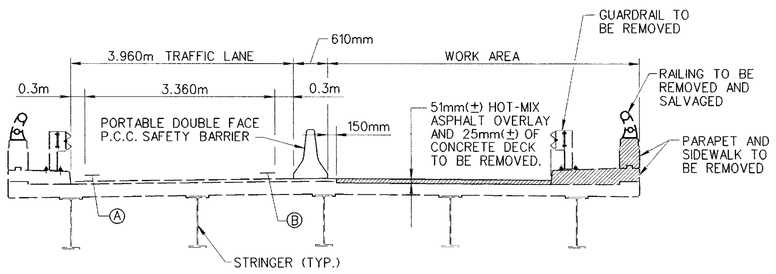

STAGE I – REMOVAL

1:50

NOTES:

WHILE MAINTAINING TRAFFIC IN A SINGLE LANE COMPLETE THE FOLLOWING WORK WITHIN THE WORK AREA:

REMOVAL:

- REMOVAL OF BRIDGE MOUNTED SIGN STRUCTURES.
- INSTALLATION OF TEMPORARY PROTECTIVE SHIELD.
- REMOVAL OF EXISTING BRIDGE GUARDRAIL.
- REMOVAL AND SALVAGE OF EXISTING RAILING.
- REMOVAL OF EXISTING PARAPET AND SIDEWALK ON BRIDGE AND ABUTMENTS.
- REMOVAL OF EXISTING HOT-MIX ASPHALT OVERLAY AND TOP 25mm OF CONCRETE DECK.
- REMOVAL OF HOT-MIX ASPHALT AND CONCRETE ON APPROACH SLABS.

CONSTRUCTION:

- REPLACEMENT OF DECK JOINTS AT THE PIERS, ABUTMENTS AND HINGE.
- PLACEMENT OF NEW BOLTED DOWN PRECAST CONCRETE PARAPET.
- PLACEMENT OF NEW CONCRETE OVERLAY.
- PLACEMENT OF NEW CONCRETE ON APPROACH SLABS.
- REPLACEMENT OF DESIGNATED BEARINGS.
- CLEAN SCUPPERS AND PIPING.
- PLACEMENT OF BRIDGE MOUNTED SIGN STRUCTURES.

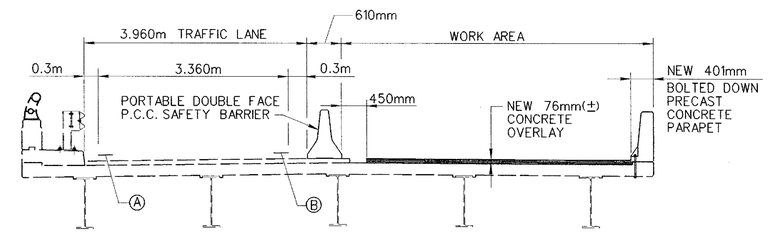

STAGE I– CONSTRUCTION

1:50

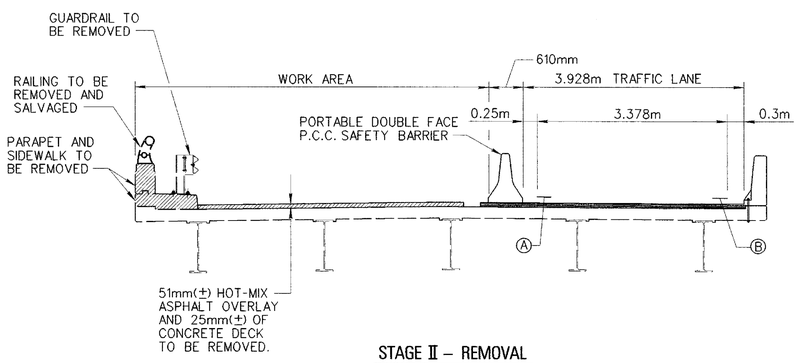

STAGE II – REMOVAL

1:50

NOTES:

RELOCATE THE PORTABLE DOUBLE FACE P.C.C. SAFETY BARRIER AND DIRECT TRAFFIC INTO A SINGLE TRAFFIC LANE. WHILE MAINTAINING TRAFFIC COMPLETE THE FOLLOWING WORK WITHIN THE WORK AREA:

REMOVAL:

- INSTALLATION OF PROTECTIVE SHIELD.
- REMOVAL OF EXISTING BRIDGE GUARDRAIL.
- REMOVAL AND SALVAGE OF EXISTING RAILING.
- REMOVAL OF EXISTING PARAPET AND SIDEWALK ON BRIDGE AND ABUTMENTS.
- REMOVAL OF EXISTING HOT-MIX ASPHALT OVERLAY AND TOP 25mm OF CONCRETE DECK.
- REMOVAL OF HOT-MIX ASPHALT AND CONCRETE ON APPROACH SLABS.

CONSTRUCTION:

- REPLACEMENT OF DECK JOINTS AT THE PIERS, ABUTMENTS AND HINGE.
- PLACEMENT OF NEW CONCRETE PARAPET.
- PLACEMENT OF NEW CONCRETE OVERLAY.
- PLACEMENT OF NEW CONCRETE ON APPROACH SLABS.
- REPLACEMENT OF DESIGNATED BEARINGS.
- CLEAN SCUPPERS AND PIPING.

AFTER COMPLETION OF THE WORK REMOVE THE PORTABLE DOUBLE FACE P.C.C. SAFETY BARRIER AND OPEN THE BRIDGE TO TWO LANES OF TRAFFIC.

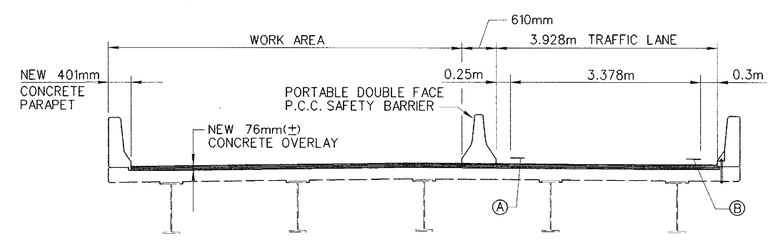

STAGE II– CONSTRUCTION

1:50

PAVEMENT MARKING LEGEND

Ⓐ 100mm YELLOW TEMPORARY PAVEMENT MARKING TAPE.

Ⓑ 100mm WHITE TEMPORARY PAVEMENT MARKING TAPE.

NOTES:

1. THE REPAIRS TO THE STEEL FRAMING, CONCRETE PIERS, ABUTMENTS, AND SLOPE PROTECTION MAY BE COMPLETED DURING ANY STAGE OF CONSTRUCTION WITH THE APPROVAL OF THE ENGINEER.
2. REFER TO MAINTENANCE OF TRAFFIC DWGS. MT-1 THRU 12.
3. DECK SECTION IS SHOWN LOOKING SOUTH.

REVISIONS

CHKD.

DESIGN

PREL. TRACING

M:\ 1988\ 0188305.3A\ssequ001.dgn

9/17/99 7:48:33 PM G:\PLOTTING\PS7\OCF\MYLAR_HP.cfl Raisa Gerchikova Division: STRUCTURES m:\1988\0188305.3a\sequ001.prt

METRIC				
S	DWG. 11 OF 29			

CONTRACT	COUNTY	FEDERAL AID PROJECT No	SHEET No	TOTAL SHEETS
98-074-03	NEW CASTLE	EIM-N006(2)	12	45

REHABILITATION OF BRIDGES
NO. 1-675, 1-676, 1-677 & 1-678,
SR-141 OVER I-95

REMOVAL AT ABUTMENTS
BRIDGES NO. 1-675 AND 1-676

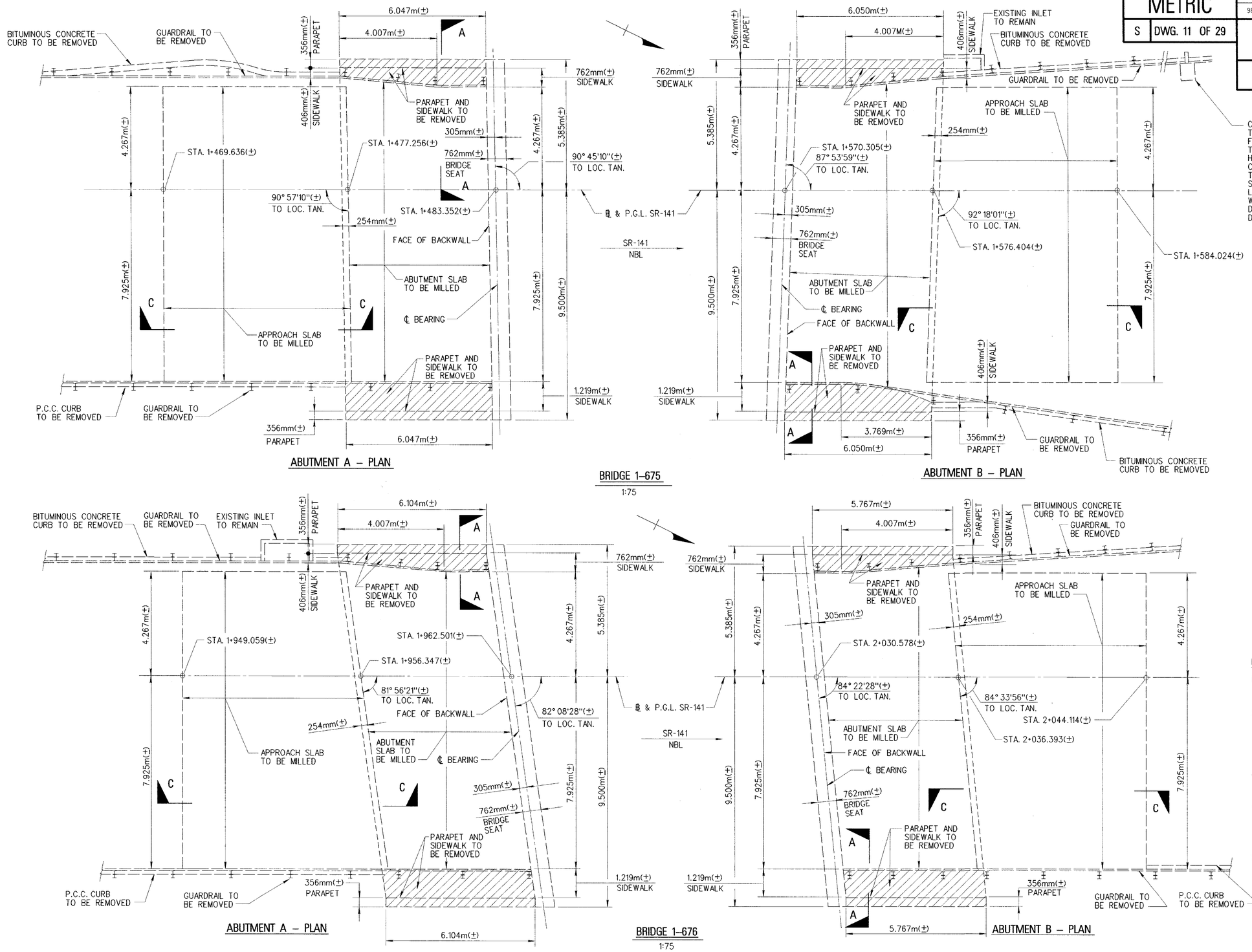

NOTES:

1. THE COST OF PARAPET AND SIDEWALK REMOVAL SHALL BE INCLUDED IN THE PAY ITEM "602580 - PARTIAL REMOVAL OF P.C.C. MASONRY".
2. THE COST OF MILLING THE ABUTMENT AND APPROACH SLABS INCLUDING THE EXISTING HOT-MIX PAVEMENT SHALL BE INCLUDED IN THE RESPECTIVE PAY ITEMS "760001 - PAVEMENT-MILLING, CONCRETE" AND "760006 - PAVEMENT MILLING, HOT-MIX, 50mm DEPTH".
3. SEE DECK REPAIRS AND MODIFICATIONS TABLE ON DWG. S-24 FOR ESTIMATED QUANTITIES FOR THE ABOVE PAY ITEMS.
4. THE COST OF THE 300mm DIAMETER CORRUGATED PIPE AT INTAKE BASIN, INCLUDING TEMPORARY MORTAR PLUG, TO BE INCIDENTAL TO THE COST OF THE INTAKE BASIN; PAY ITEM "708041 - DRAINAGE INLET, TYPE 2."
5. FOR SECTIONS A-A AND C-C, SEE DWG. S-13.

REVISIONS

PREL. TRACING ____ DESIGN ____ CHKD. ____

M:\ 1988\ 0188305.3A/ SPLAN01.DGN

9/17/99 7:47:50 PM G:\PLOTTING\PS7\QCF\MYLAR_HP.qcf Raisa Gerchikova Division: STRUCTURES m:\1988\0188305.3a\splan01.prt

METRIC				
S	DWG. 12 OF 29	CONTRACT	COUNTY	FEDERAL AID PROJECT No	SHEET No	TOTAL SHEETS
		98-074-03	NEW CASTLE	EIM-N006(2)	13	45

REHABILITATION OF BRIDGES
NO. 1-675, 1-676, 1-677 & 1-678,
SR-141 OVER I-95

REMOVAL AT ABUTMENTS
BRIDGES 1-677 AND 1-678

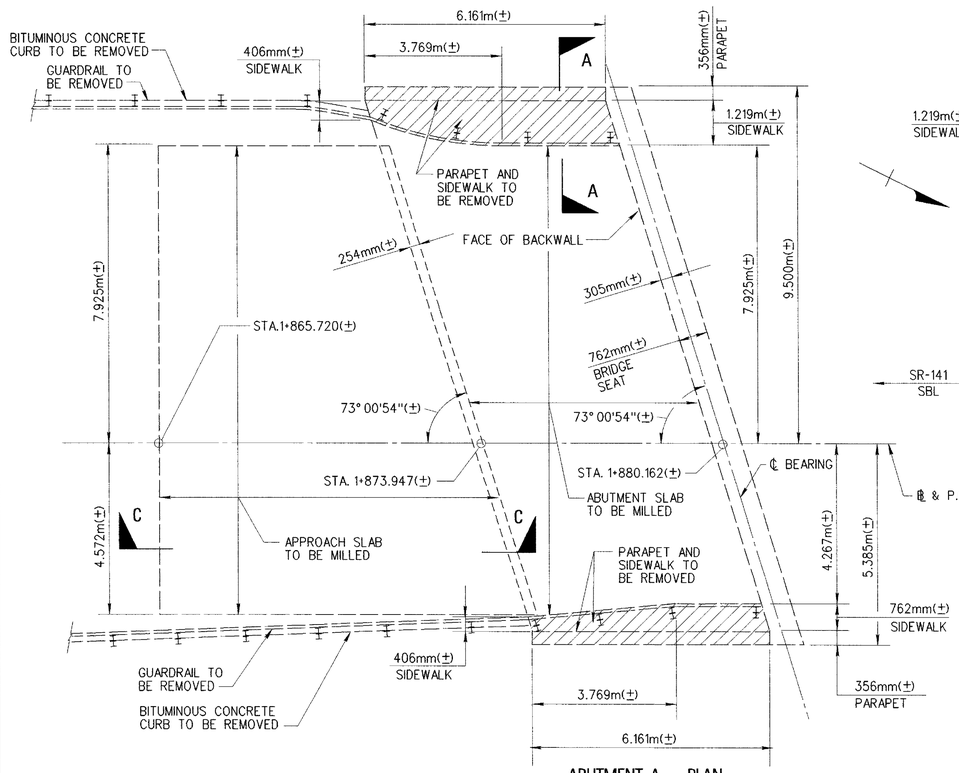

ABUTMENT A – PLAN

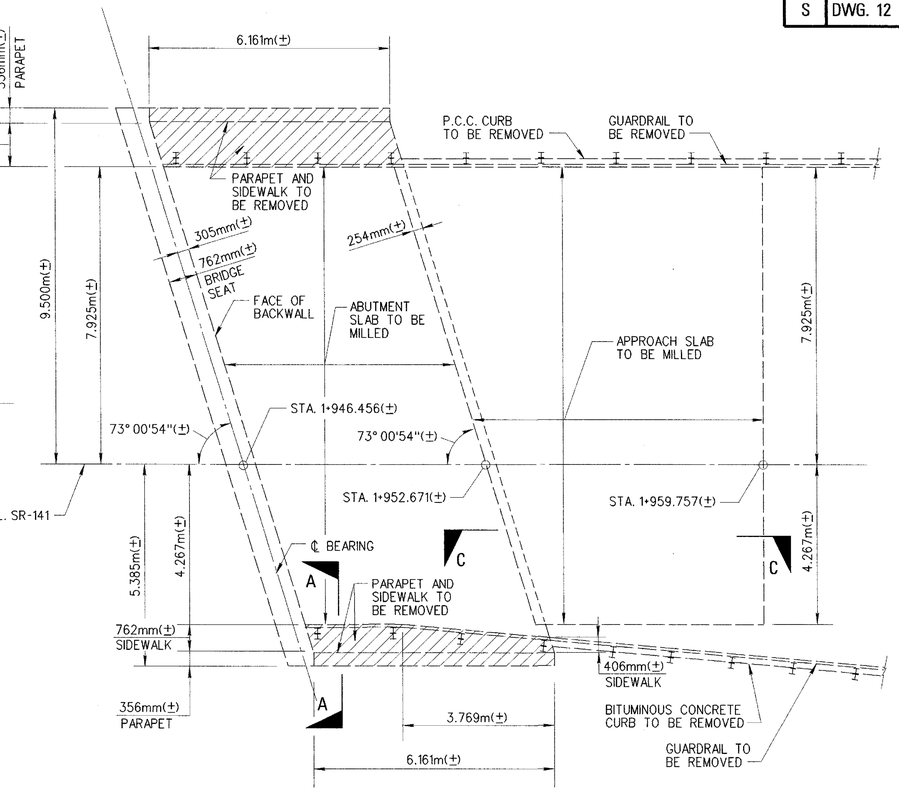

ABUTMENT B – PLAN

BRIDGE 1-677
1:75

NOTES:

1. THE COST OF PARAPET AND SIDEWALK REMOVAL SHALL BE INCLUDED IN THE PAY ITEM "602580 - PARTIAL REMOVAL OF P.C.C. MASONRY".
2. THE COST OF MILLING THE ABUTMENT AND APPROACH SLABS INCLUDING THE EXISTING HOT-MIX PAVEMENT SHALL BE INCLUDED IN THE RESPECTIVE PAY ITEMS "760001 - PAVEMENT-MILLING, CONCRETE" AND "760006 - PAVEMENT-MILLING, HOT-MIX, 50mm DEPTH".
3. SEE DECK REPAIRS AND MODIFICATIONS TABLE ON DWG. S-24 FOR ESTIMATED QUANTITIES FOR THE ABOVE PAY ITEMS.
4. FOR SECTIONS A-A AND C-C, SEE DWG. S-13.

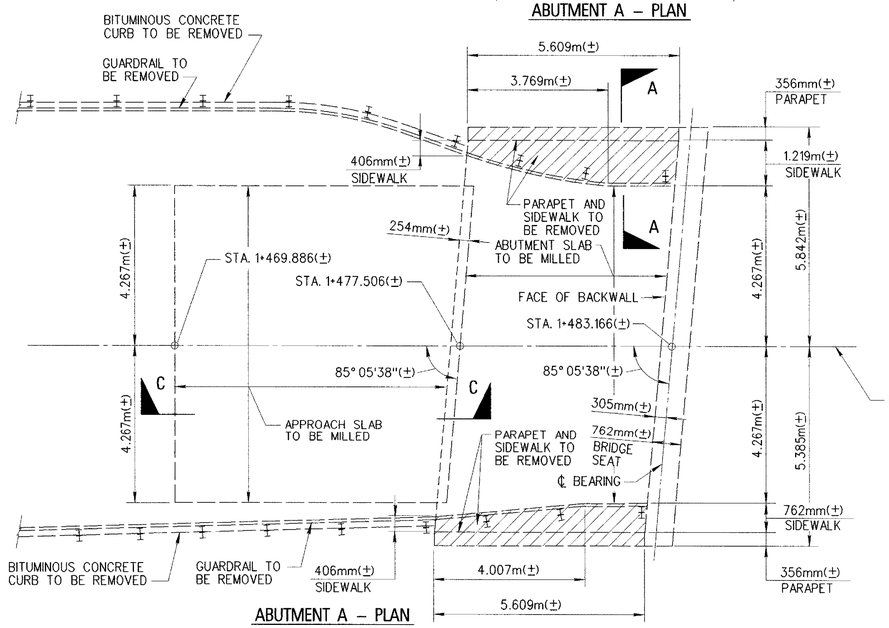

ABUTMENT A – PLAN

BRIDGE 1-678
1:75

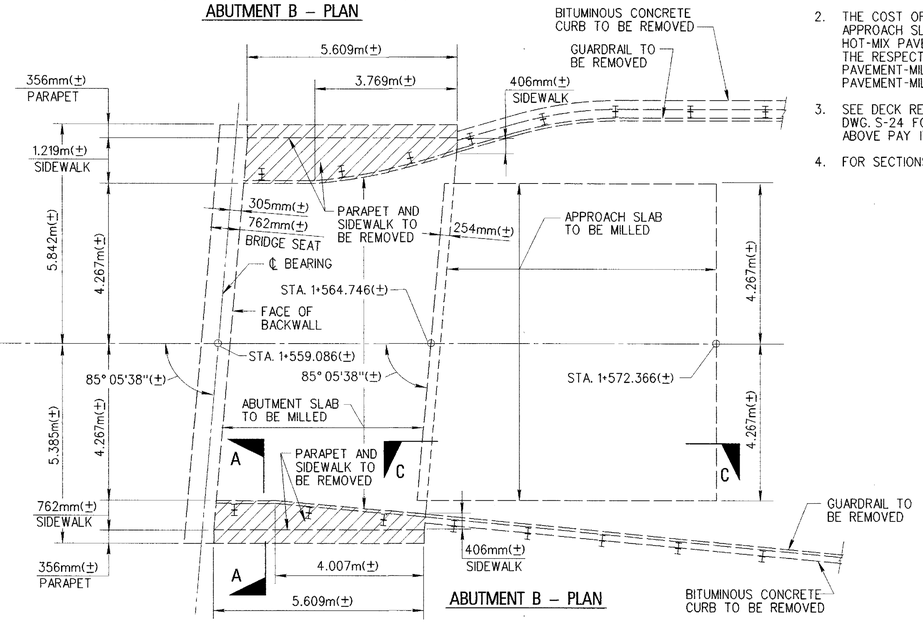

ABUTMENT B – PLAN

REVISIONS

CHKD.

DESIGN

PREL. TRACING

M:\ 1988\ 0188305.3A\ SPLAN02.DGN

9/17/99 7:47:14 PM G:\PLOTTING\PS7\OCF\MYLAR_HP.cdf Raisa Gerchikova Division: STRUCTURES m:\1988\0188305.3a\splan02.prt

METRIC	CONTRACT	COUNTY	FEDERAL AID PROJECT No	SHEET No	TOTAL SHEETS
	98-074-03	NEW CASTLE	EIM-N006(2)	14	45
S DWG. 13 OF 29	REHABILITATION OF BRIDGES NO. 1-675, 1-676, 1-677 & 1-678, SR-141 OVER I-95				
	REMOVAL AT ABUTMENTS SECTIONS AND DETAILS				

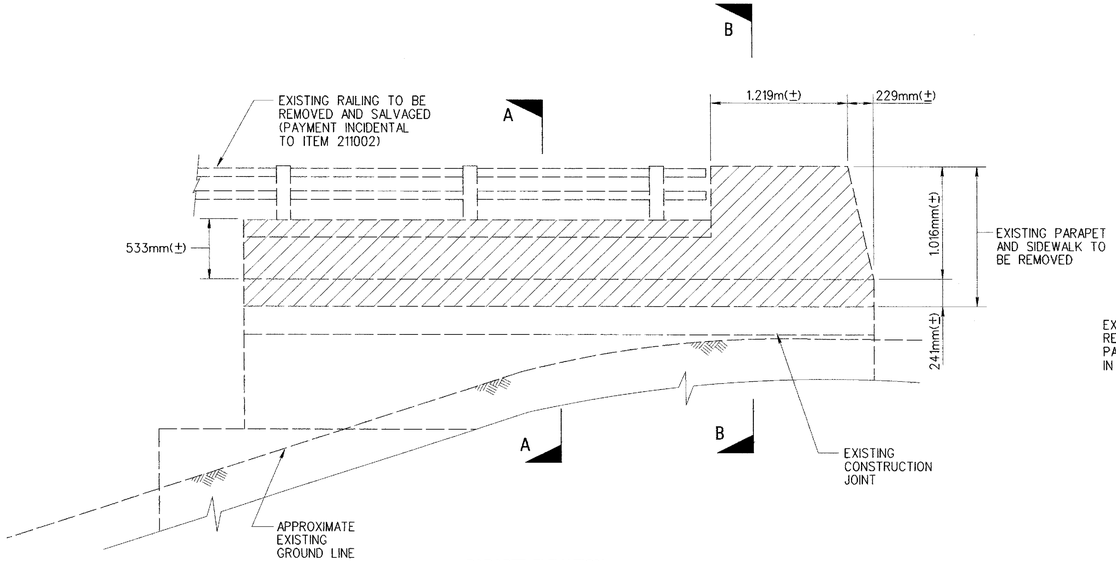

PARAPET ELEVATION
1:25

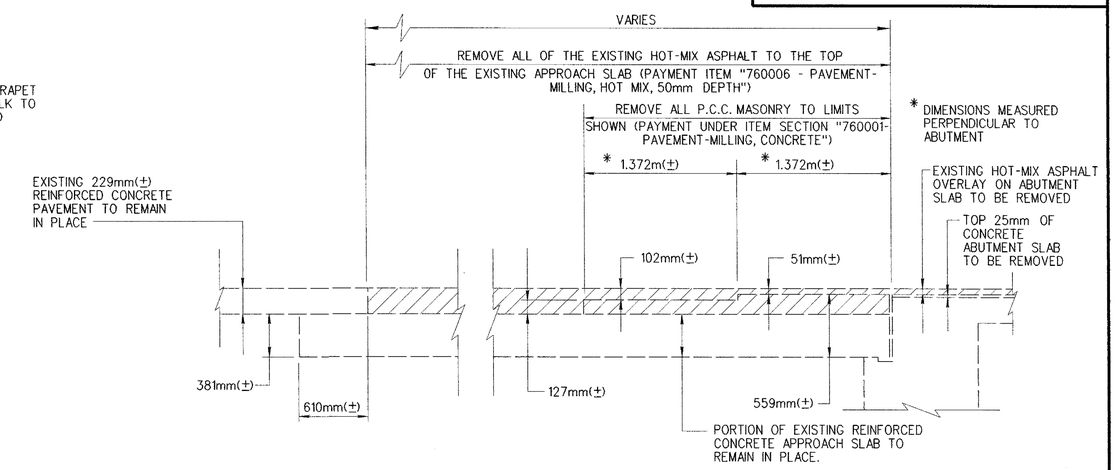

SECTION C-C
1:25

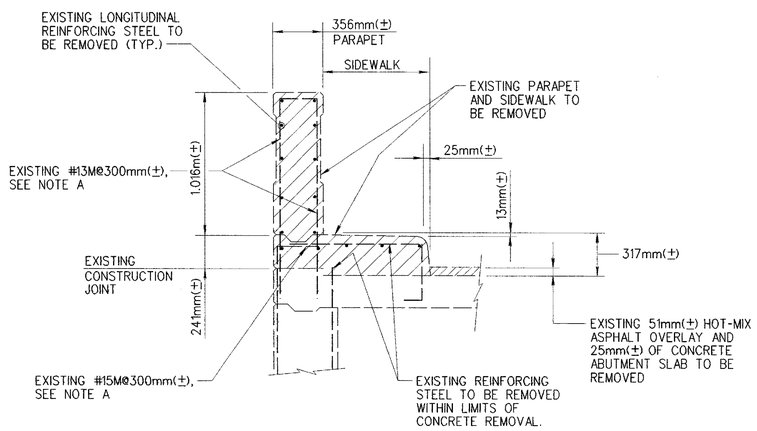

SECTION B-B
1:20

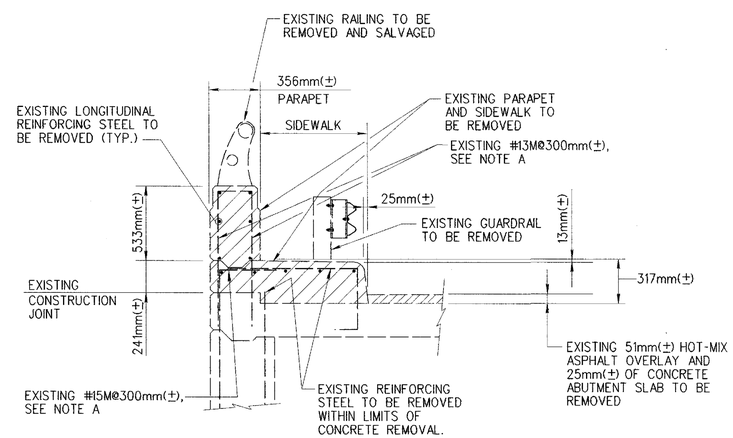

SECTION A-A
1:20

NOTE:

1. FOR LOCATION OF SECTION C-C, SEE DWG. S-11 AND S-12.

NOTE A:

AS INDICATED, EXISTING TRANSVERSE REINFORCING STEEL SHALL BE CLEANED, MODIFIED, EPOXY COATED AND INCLUDED IN NEW PARAPET EXCEPT WHERE BOLTED DOWN PRECAST PARAPET IS SPECIFIED ON BRIDGES 1-675, 1-677 AND 1-678. AT THOSE LOCATIONS THE EXISTING REINFORCING STEEL SHALL BE REMOVED WITHIN LIMITS OF CONCRETE REMOVAL.

REVISIONS

CHKD.

DESIGN

PREL. TRACING

M:\ 1988\ 0188305.3A\ SSECT01.DGN

9/17/99 7:46:27 PM G:\PLOTTING\PS7\QCF\MYLAR_HP.qcf Raisa Gerchikova Division: STRUCTURES m:\1988\0188305.3a\sect01.prt

METRIC	CONTRACT	COUNTY	FEDERAL AID PROJECT No	SHEET No.	TOTAL SHEETS
	98-074-03	NEW CASTLE	EIM-N006(2)	15	45
S DWG. 14 OF 29	REHABILITATION OF BRIDGES NO. 1-675, 1-676, 1-677 & 1-678, SR-141 OVER I-95				
	RECONSTRUCTION AT ABUTMENTS BRIDGES NO. 1-675 AND 1-676				

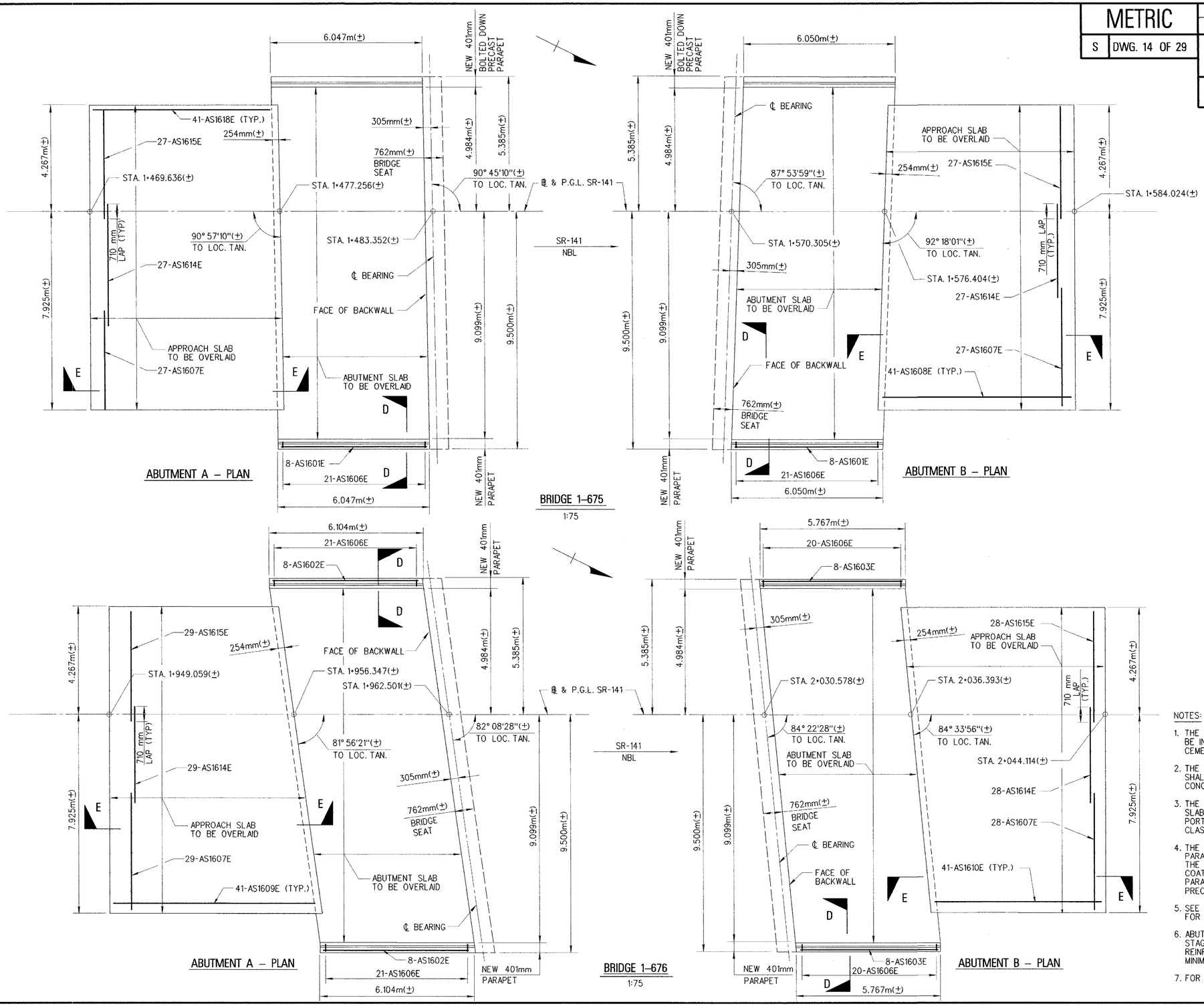

NOTES:

1. THE COST OF THE NEW CAST-IN-PLACE PARAPETS SHALL BE INCLUDED IN THE PAY ITEM "602013 - PORTLAND CEMENT CONCRETE MASONRY, SUPERSTRUCTURE, CLASS D".
2. THE COST OF THE NEW PRECAST BOLTED DOWN PARAPETS SHALL BE INCLUDED IN THE PAY ITEM "602604 - PRECAST CONCRETE PARAPET".
3. THE COST OF OVERLAYING THE ABUTMENT AND APPROACH SLABS SHALL BE INCLUDED IN THE PAY ITEM "602014 - PORTLAND CEMENT CONCRETE MASONRY, APPROACH SLAB, CLASS D".
4. THE COST OF REINFORCING STEEL FOR CAST-IN-PLACE PARAPETS AND APPROACH SLABS SHALL BE INCLUDED IN THE PAY ITEM "604000 - BAR REINFORCEMENT, EPOXY COATED". COST OF REINFORCING STEEL FOR PRECAST PARAPETS SHALL BE INCLUDED IN THE PAY ITEM "602604-PRECAST CONCRETE PARAPET."
5. SEE DECK REPAIRS AND MODIFICATIONS TABLE ON DWG. S-24 FOR ESTIMATED QUANTITIES FOR THE ABOVE PAY ITEMS.
6. ABUTMENT AND APPROACH SLABS TO BE OVERLAID IN STAGES AS SHOWN ON DWGS. S-8 THRU 10. TRANSVERSE REINFORCING STEEL SHALL BE STRAIGHTENED TO ACHIEVE MINIMUM LAP LENGTH.
7. FOR SECTIONS D-D AND E-E, SEE DWG. S-16.

REVISIONS

DESIGN ____ CHKD. ____

PREL. TRACING ____

M:\ 1988\ 0188305.3A\ SPLAN03.DGN

9/17/99 7:45:44 PM G:\PLOTTING\PS7\QCF\MYLAR_HP.qcf Raisa Gerchikova Division: STRUCTURES m:\1988\0188305.3a\splan03.prt

METRIC	CONTRACT	COUNTY	FEDERAL AID PROJECT No	SHEET No	TOTAL SHEETS
	98-074-03	NEW CASTLE	EIM-N006(2)	16	45
S DWG. 15 OF 29	REHABILITATION OF BRIDGES NO. 1-675, 1-676, 1-677 & 1-678, SR-141 OVER I-95				
	RECONSTRUCTION AT ABUTMENTS BRIDGES NO. 1-677 AND 1-678				

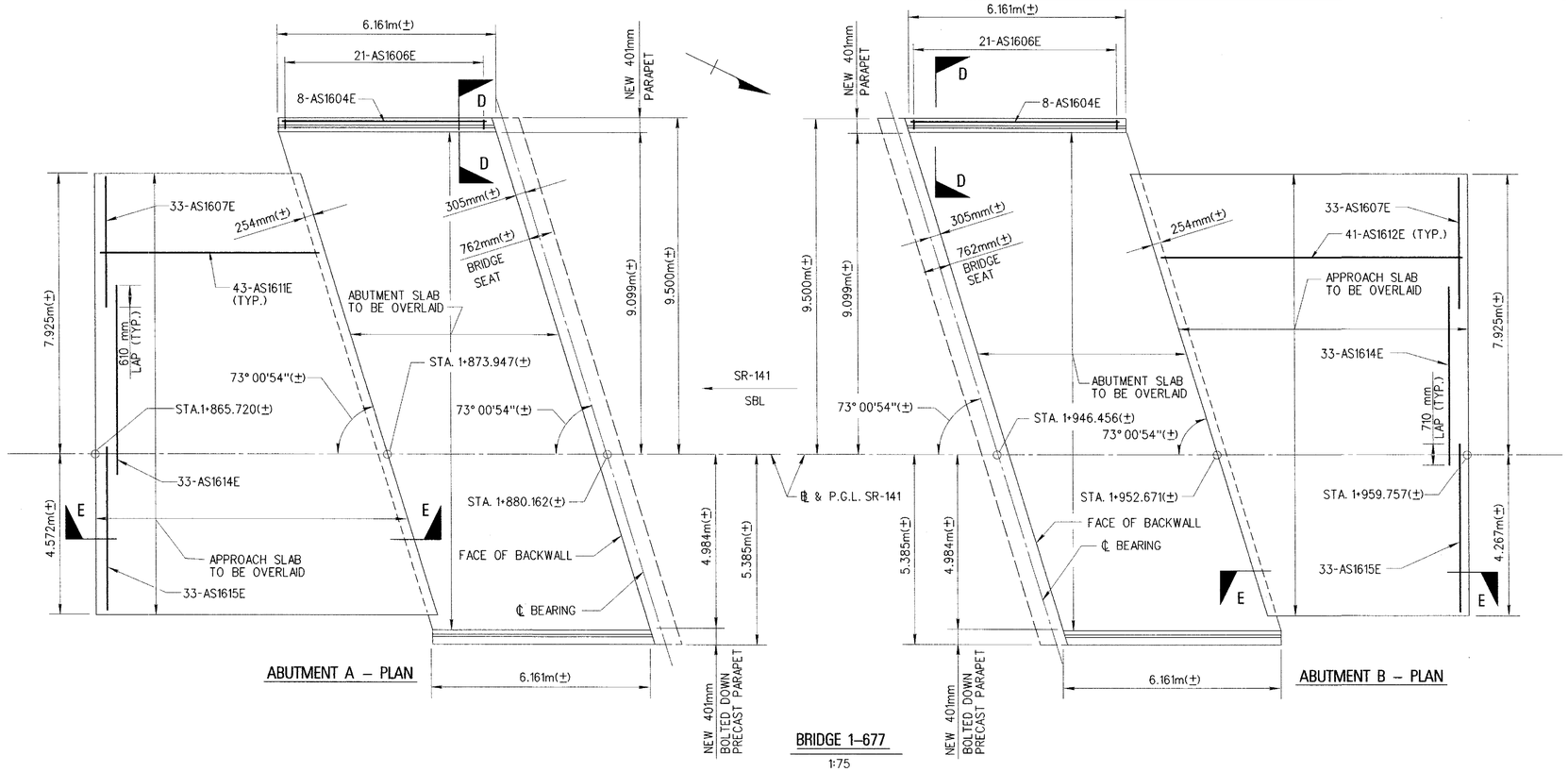

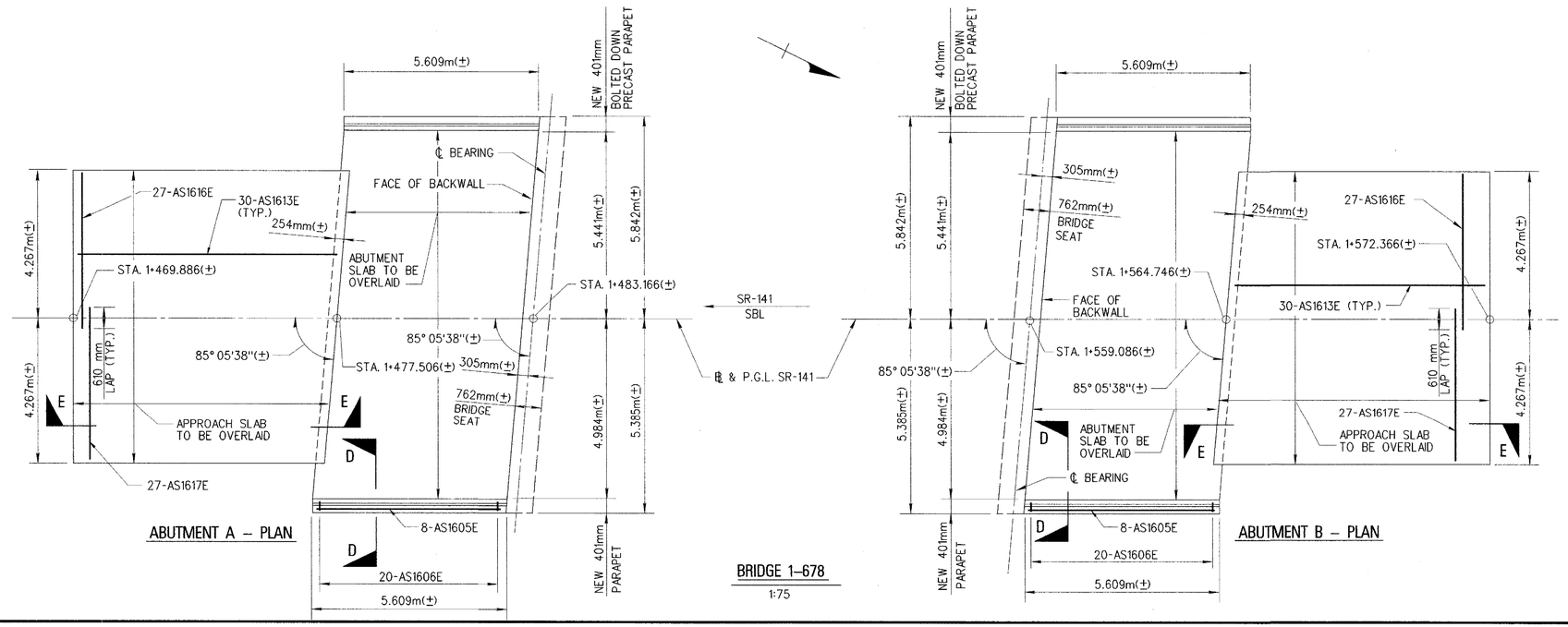

NOTES:

1. THE COST OF THE NEW CAST-IN-PLACE PARAPETS SHALL BE INCLUDED IN THE PAY ITEM "602013 - PORTLAND CEMENT CONCRETE MASONRY, SUPERSTRUCTURE, CLASS D".
2. THE COST OF THE NEW PRECAST BOLTED DOWN PARAPETS SHALL BE INCLUDED IN THE PAY ITEM "602604 - PRECAST CONCRETE PARAPET".
3. THE COST OF OVERLAYING THE ABUTMENT AND APPROACH SLABS SHALL BE INCLUDED IN THE PAY ITEM "602014 - PORTLAND CEMENT CONCRETE MASONRY, APPROACH SLAB, CLASS D".
4. THE COST OF REINFORCING STEEL FOR CAST-IN-PLACE PARAPETS AND APPROACH SLABS SHALL BE INCLUDED IN THE PAY ITEM "604000 - BAR REINFORCEMENT, EPOXY COATED". COST OF REINFORCING STEEL FOR PRECAST PARAPETS SHALL BE INCLUDED IN THE PAY ITEM "602604- PRECAST CONCRETE PARAPET."
5. SEE DECK REPAIRS AND MODIFICATIONS TABLE ON DWG. S-24 FOR ESTIMATED QUANTITIES FOR THE ABOVE PAY ITEMS.
6. ABUTMENT AND APPROACH SLABS TO BE OVERLAID IN STAGES AS SHOWN ON DWGS. S-8 THRU 10. TRANSVERSE REINFORCING STEEL SHALL BE STRAIGHTENED TO ACHIEVE MINIMUM LAP LENGTH.
7. FOR SECTIONS D-D AND E-E, SEE DWG. S-16.

REVISIONS

CHKD.

DESIGN

PREL. TRACING

M:\ 1988\ 0188305.3A\ SPLAN04.DGN

9/17/99 7:44:40 PM G:\PLOTTING\PS7\OCF\MYLAR_HP.cfg Raisa Gerchikova Division: STRUCTURES m:\1988\0188305.3a\splan04.prt

METRIC	CONTRACT	COUNTY	FEDERAL AID PROJECT No	SHEET No	TOTAL SHEETS
S DWG. 16 OF 29	98-074-03	NEW CASTLE	EIM-N006(2)	17	45

REHABILITATION OF BRIDGES
NO. 1-675, 1-676, 1-677 & 1-678,
SR-141 OVER I-95

RECONSTRUCTION AT ABUTMENTS
SECTIONS AND DETAILS

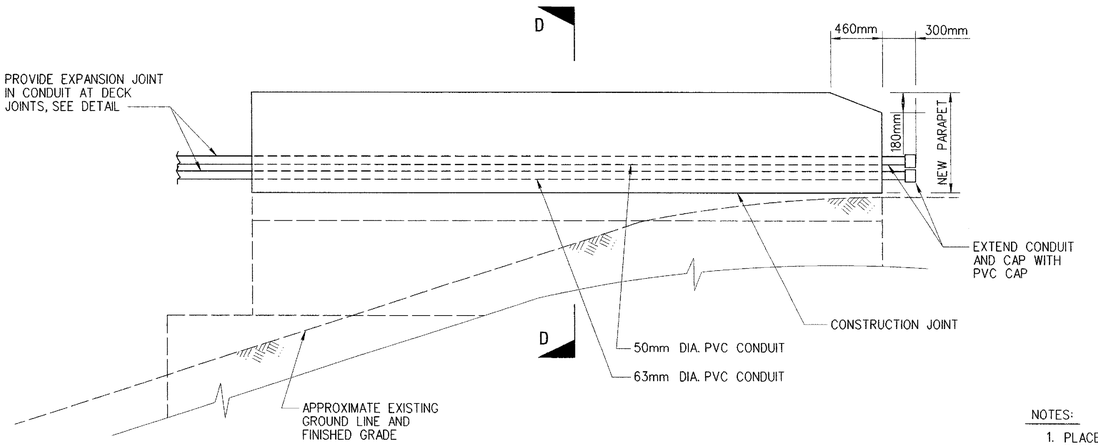

PARAPET ELEVATION
1:25

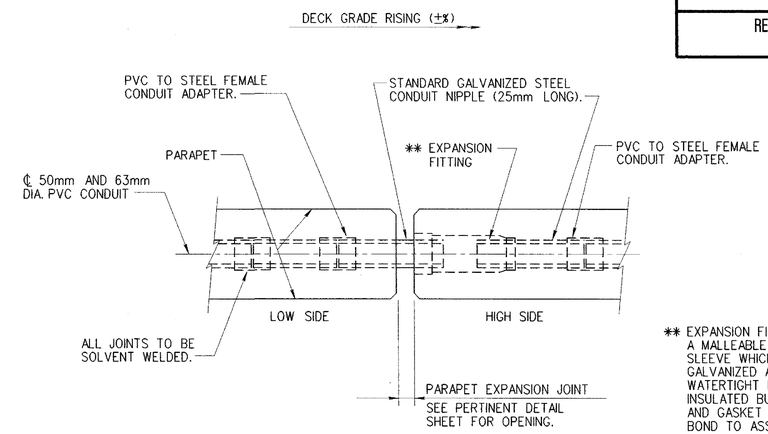

** EXPANSION FITTINGS SHALL CONSIST OF A MALLEABLE IRON HEAD AND STEEL SLEEVE WHICH SHALL BE HOT-DIPPED GALVANIZED AND ASSEMBLED WITH A WATERTIGHT PACKING GLAND, AN INSULATED BUSHING, PRESSURE RING AND GASKET AND A TINNED-COPPER BOND TO ASSURE CONTINUITY OF GROUND. THE FITTING SHALL PROVIDE 102mm OF MOVEMENT.

CONDUIT EXPANSION JOINT DETAIL
NOT TO SCALE

NOTES:

1. PLACE EXPANSION JOINT IN CONDUITS AT EVERY EXPANSION JOINT IN BRIDGE DECK.
2. #10 GALVANIZED PULL WIRE TO BE PROVIDED FOR FULL LENGTH OF CONDUIT AND LEFT IN PLACE.
3. ALL CONDUIT AND CONDUIT EXPANSION JOINTS MUST BE U.L. APPROVED FOR ENCASEMENT IN CONCRETE.
4. FITTINGS TO BE PVC, EXCEPT FOR EXPANSION JOINT.
5. CONDUITS SHALL CONFORM TO SECTION 745.
6. CONDUITS SHALL NOT BE PLACED IN PRECAST BOLTED DOWN PARAPETS ON BRIDGES NO. 1-675, 1-677, AND 1-678.

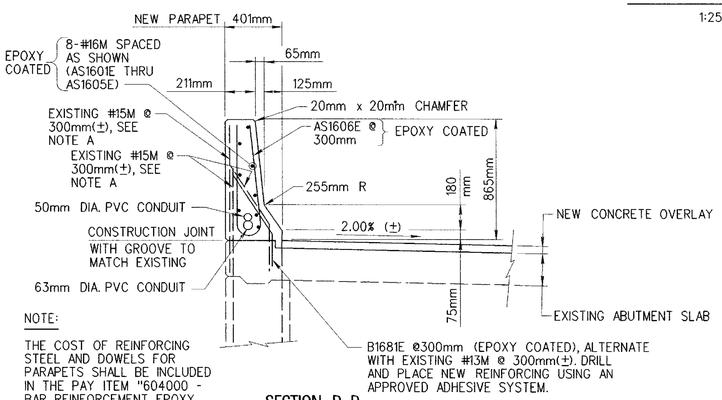

NOTE:

THE COST OF REINFORCING STEEL AND DOWELS FOR PARAPETS SHALL BE INCLUDED IN THE PAY ITEM "604000 - BAR REINFORCEMENT, EPOXY COATED".

SECTION D-D
1:20

NOTE A:

INDICATED EXISTING REINFORCING STEEL SHALL BE CLEANED, EPOXY COATED AND INCLUDED IN NEW PARAPET EXCEPT WHERE BOLTED DOWN PRECAST PARAPET IS SPECIFIED FOR BRIDGES NO. 1-675, 1-677, AND 1-678. AT THESE LOCATIONS A 26mm DIA. EXPANSION ANCHOR IN A CORED HOLE SHALL BE USED. THE ANCHOR SHALL HAVE A MINIMUM ULTIMATE LOAD OF 107kn.

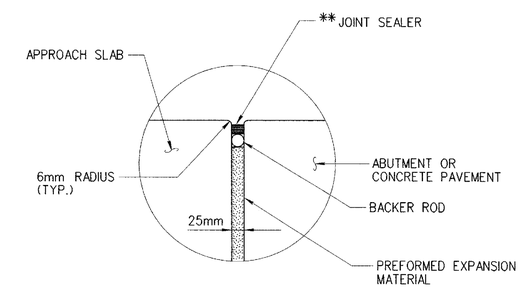

DETAIL "A"
NOT TO SCALE

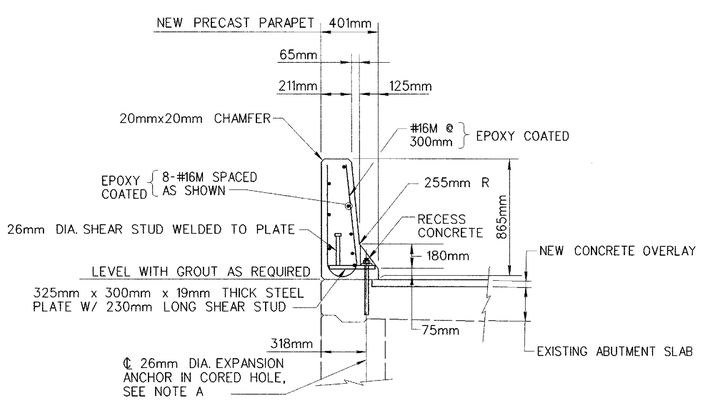

PRECAST BOLTED PARAPET DETAIL
1:20

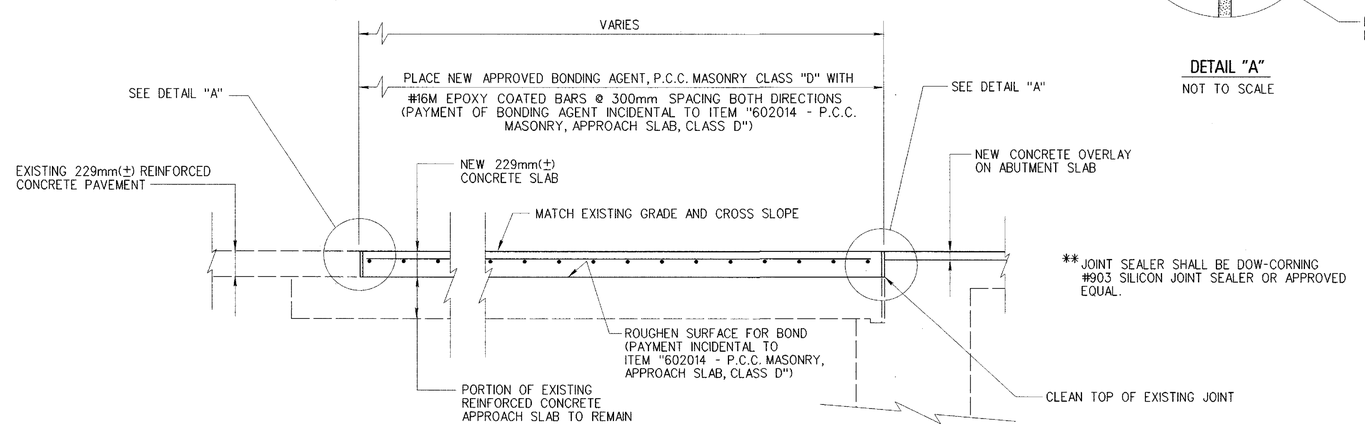

** JOINT SEALER SHALL BE DOW-CORNING #903 SILICON JOINT SEALER OR APPROVED EQUAL.

SECTION E-E
1:25

REVISIONS

CHKD.

DESIGN

PREL. TRACING

M:\ 1988\ 0188305.3A\ SSECT02.DGN

9/17/99 7:43:50 PM G:\PLOTTING\PS7\OCF\MYLAR_HP.cdf Raisa Gerchikova Division: STRUCTURES m:\1988\0188305.3a\sect02.prt

METRIC	CONTRACT	COUNTY	FEDERAL AID PROJECT No	SHEET No	TOTAL SHEETS
	98-074-03	NEW CASTLE	EIM-N006(2)	18	45
S DWG. 17 OF 29	REHABILITATION OF BRIDGES NO. 1-675, 1-676, 1-677 & 1-678, SR-141 OVER I-95				
	ABUTMENT REPAIRS				

NOTE:

CROSS FRAMES BETWEEN STRINGERS ARE NOT SHOWN.

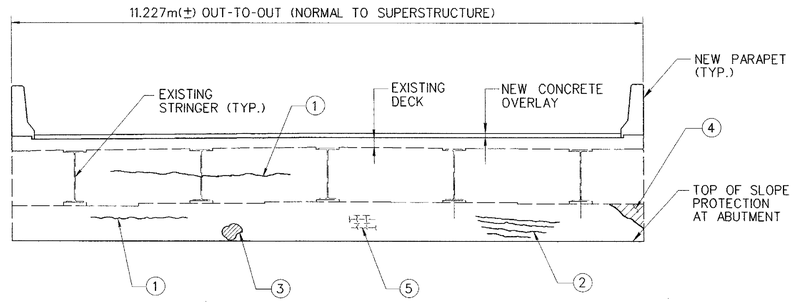

ABUTMENT ELEVATION – BRIDGE NO. 1-678

1:50

REPAIR KEY		
	EXISTING CONDITION	REPAIR METHOD
1	CRACK	A
2	CRACK WITH CONCRETE DELAMINATION	B
3	SURFACE SPALL	B
4	SURFACE SPALL WITH EXPOSED CORRODED REINFORCING STEEL	B
5	MAP CRACKING	B

NOTE:

CROSS FRAMES BETWEEN STRINGERS ARE NOT SHOWN.

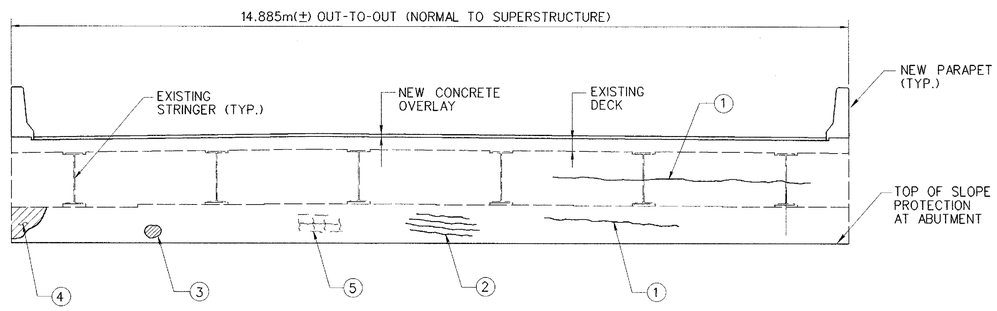

ABUTMENT ELEVATION – BRIDGES NO. 1-675, 1-676 & 1-677

1:50

ESTIMATED QUANTITIES OF ABUTMENT REPAIRS & WATERPROOFING

LOCATION		TYPE A REPAIR	TYPE B REPAIR		WATERPROOFING
		ITEM 602611 REPAIR OF CONCRETE STRUCTURES BY EPOXY INJECTION (m)	ITEM 602586 REHABILITATION OF CONCRETE STRUCTURE (m^3)	ITEM 603500 REPAIRING BAR REINFORCEMENT (kg)	ITEM 602546 WATERPROOFING FOR P.C.C. MASONRY (m^2)
BRIDGE NO. 1-675	ABUTMENT A	21	0.2	1.2	41
	ABUTMENT B	14	0.3	0	41
BRIDGE NO. 1-676	ABUTMENT A	18	0.2	0	46
	ABUTMENT B	0	0.3	0	46
BRIDGE NO. 1-677	ABUTMENT A	11	2.0	3.8	40
	ABUTMENT B	0	1.8	3.8	40
BRIDGE NO. 1-678	ABUTMENT A	0	2.1	6.3	33
	ABUTMENT B	0	1.5	3.8	33

NOTES FOR REPAIR WORK:

1. PIER REPAIR QUANTITIES SHOWN IN THE TABLE WERE DETERMINED DURING A FIELD INSPECTION COMPLETED IN OCTOBER, 1997. THE QUANTITIES FOR TYPE A AND TYPE B REPAIRS HAVE BEEN INCREASED FROM THE FIELD VALUES BY 25%. THESE QUANTITIES ARE PROVIDED ONLY TO CLARIFY THE WORK TO BE PERFORMED. PAYMENT FOR SPECIFIC ITEMS OF WORK WILL BE BASED ON ACTUAL QUANTITIES REQUIRED TO COMPLETE THE REPAIRS.
2. BEFORE ANY REPAIR WORK IS COMMENCED, THE ENGINEER AND CONTRACTOR SHALL INSPECT THE EXISTING STRUCTURE. THE ENGINEER WILL DESIGNATE THE LOCATION, TYPE AND LIMITS OF THE REPAIRS.
3. FOR DETAILS OF REPAIR METHODS A AND B, SEE DWG. S-19.
4. REINFORCING STEEL DAMAGED DURING REPAIR OPERATIONS SHALL BE REPAIRED AT THE CONTRACTOR'S SOLE EXPENSE.
5. ALL SAW CUTS FOR REPAIR METHOD B SHALL BE MADE VERTICAL AND HORIZONTAL OR PARALLEL AND PERPENDICULAR TO THE NEAR EDGE OF THE STRUCTURE.

AREAS OF ABUTMENTS TO RECEIVE PROTECTIVE TREATMENT
THE SURFACES TO BE TREATED SHALL INCLUDE THE FRONT FACE OF BRIDGE ABUTMENTS DOWN TO THE EXISTING FINISHED GRADE, BRIDGE SEATS (BETWEEN AND AROUND THE BEARING AREAS) AND EXPOSED VERTICAL SURFACE OF BACKWALLS. SEE SPECIAL PROVISION "602546 - WATERPROOFING FOR P.C.C. MASONRY."

NOTE:

LOCATION AND EXTENT OF DETERIORATION SHOWN DOES NOT ACCURATELY REFLECT ACTUAL FIELD CONDITIONS. DETERIORATION SHOWN IS TO ILLUSTRATE TYPE OF DETERIORATION ONLY.

REVISIONS

CHKD.

DESIGN

PREL. TRACING

M:\ 1988\ 0188305.3A\ SABUT.DGN

9/17/99 7:41:21 PM G:\PLOTTING\PS7\GCF\MYLAR_HP.cfg Raisa Gerchikova Division: STRUCTURES m:\1988\0188305.3a\sabut.prt

METRIC	CONTRACT	COUNTY	FEDERAL AID PROJECT No	SHEET No	TOTAL SHEETS
	98-074-03	NEW CASTLE	EIM-N006(2)	19	45
S DWG. 18 OF 29	REHABILITATION OF BRIDGES NO. 1-675, 1-676, 1-677 & 1-678, SR-141 OVER I-95				
	PIER REPAIRS				

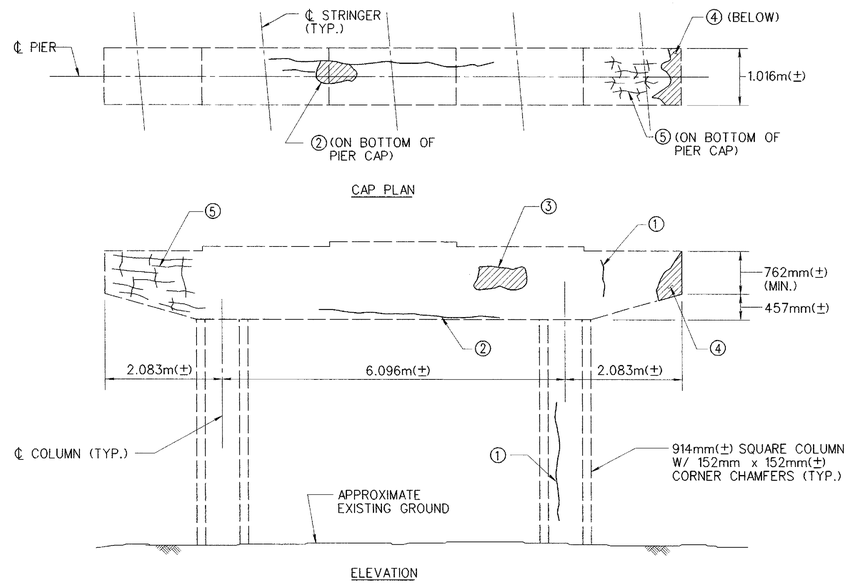

EXISTING PIERS – BRIDGE NO. 1-678

1 : 50

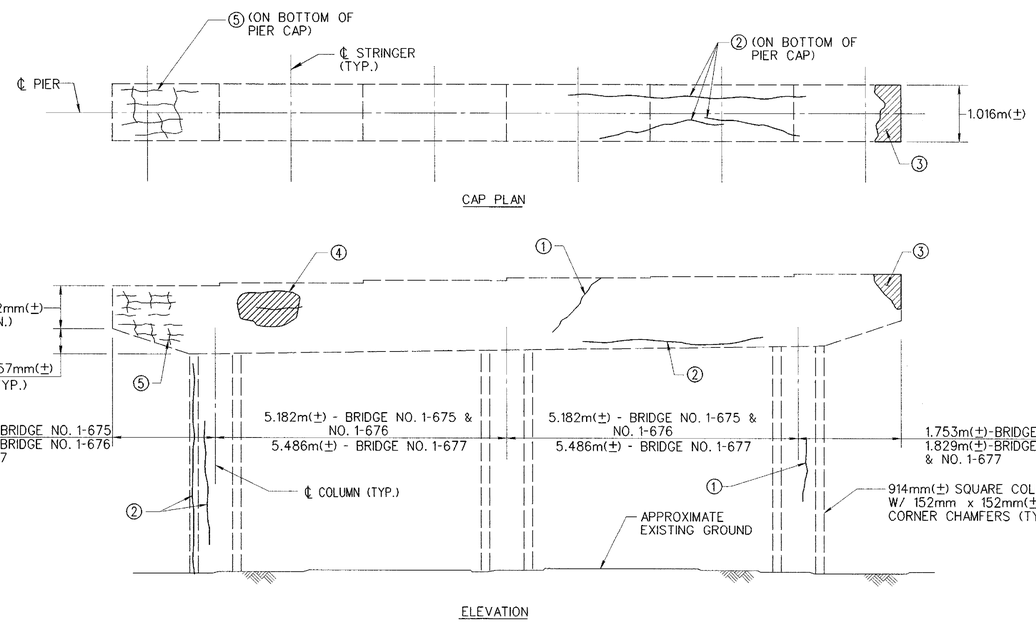

EXISTING PIERS – BRIDGES NO. 1-675, 1-676 & 1-677

1 : 50

REPAIR KEY	
EXISTING CONDITION	REPAIR METHOD
① CRACK	Ⓐ
② CRACK WITH CONCRETE DELAMINATION	Ⓑ
③ SURFACE SPALL	Ⓑ
④ SURFACE SPALL WITH EXPOSED CORRODED REINFORCING STEEL	Ⓑ
⑤ MAP CRACKING	Ⓑ

ESTIMATED QUANTITIES OF PIER REPAIRS

LOCATION		TYPE Ⓐ REPAIR	TYPE Ⓑ REPAIR		WATERPROOFING
		ITEM 602611 REPAIR OF CONCRETE STRUCTURES BY EPOXY INJECTION (m)	ITEM 602586 REHABILITATION OF CONCRETE STRUCTURE (m^2)	ITEM 603500 REPAIRING BAR REINFORCEMENT (kg)	ITEM 602546 WATERPROOFING FOR P.C.C. MASONRY (m^2)
BRIDGE NO. 1-675	PIER 1	0	1.8	4	93
	PIER 2	7	0.6	0	93
	PIER 3	5	0.2	0	93
	PIER 4	10	1.6	4	93
BRIDGE NO. 1-676	PIER 1	4	0.6	1.2	93
	PIER 2	4	0.4	1.2	93
	PIER 3	1	1.3	2.5	93
BRIDGE NO. 1-677	PIER 1	10	0.8	0	96
	PIER 2	4	1.1	0	96
	PIER 3	4	1.8	0	96
BRIDGE NO. 1-678	PIER 1	1	2.6	1.2	66
	PIER 2	3	3.5	2.5	66
	PIER 3	5	0.0	0	66
	PIER 4	2	2.8	2.5	66

AREAS OF PIERS TO RECIEVE PROTECTIVE TREATMENT
THE SURFACES TO BE TREATED SHALL INCLUDE THE TOP OF THE PIER CAP (BETWEEN AND AROUND THE BEARING AREAS), ALL VERTICAL FACES OF THE PIER CAP, AND ALL FACES OF THE COLUMNS DOWN TO THE GROUND LINE. SEE SPECIAL PROVISION "602546 - WATERPROOFING FOR P.C.C. MASONRY".

NOTES FOR REPAIR WORK:

1. PIER REPAIR QUANTITIES SHOWN IN THE TABLE WERE DETERMINED DURING A FIELD INSPECTION COMPLETED IN OCTOBER, 1997. THE QUANTITIES FOR TYPE Ⓐ AND TYPE Ⓑ REPAIRS HAVE BEEN INCREASED FROM THE FIELD VALUES BY 25%. THESE QUANTITIES ARE PROVIDED ONLY TO CLARIFY THE WORK TO BE PERFORMED. PAYMENT FOR SPECIFIC ITEMS OF WORK WILL BE BASED ON ACTUAL QUANTITIES REQUIRED TO COMPLETE THE REPAIRS.
2. BEFORE ANY REPAIR WORK IS COMMENCED, THE ENGINEER AND CONTRACTOR SHALL INSPECT THE EXISTING STRUCTURE. THE ENGINEER WILL DESIGNATE THE LOCATION, TYPE AND LIMITS OF THE REPAIRS.
3. FOR DETAILS OF REPAIR METHODS Ⓐ AND Ⓑ, SEE DWG. S-19.
4. REINFORCING STEEL DAMAGED DURING REPAIR OPERATIONS SHALL BE REPAIRED AT THE CONTRACTOR'S SOLE EXPENSE.
5. ALL SAW CUTS FOR REPAIR METHOD Ⓑ SHALL BE MADE VERTICAL AND HORIZONTAL OR PARALLEL AND PERPENDICULAR TO THE NEAR EDGE OF THE STRUCTURE.

NOTE:

LOCATION AND EXTENT OF DETERIORATION SHOWN DOES NOT ACCURATELY REFLECT ACTUAL FIELD CONDITIONS. DETERIORATION SHOWN IS TO ILLUSTRATE TYPE OF DETERIORATION ONLY.

REVISIONS

PREL. TRACING ____ DESIGN ____ CHKD. ____

M:\ 1988\ 0188305.3A\ SPIER.DGN

9/17/99 7:40:45 PM G:\PLOTTING\PS7\OCF\MYLAR_HP.pdf Raisa Gerchikova Division: STRUCTURES m:\1988\0188305.3a\spier.prt

METRIC	CONTRACT	COUNTY	FEDERAL AID PROJECT No	SHEET No	TOTAL SHEETS
	98-074-03	NEW CASTLE	EIM-N006(2)	20	45
S DWG. 19 OF 29	REHABILITATION OF BRIDGES NO. 1-675, 1-676, 1-677 & 1-678, SR-141 OVER I-95				
	SUBSTRUCTURE REPAIR DETAILS				

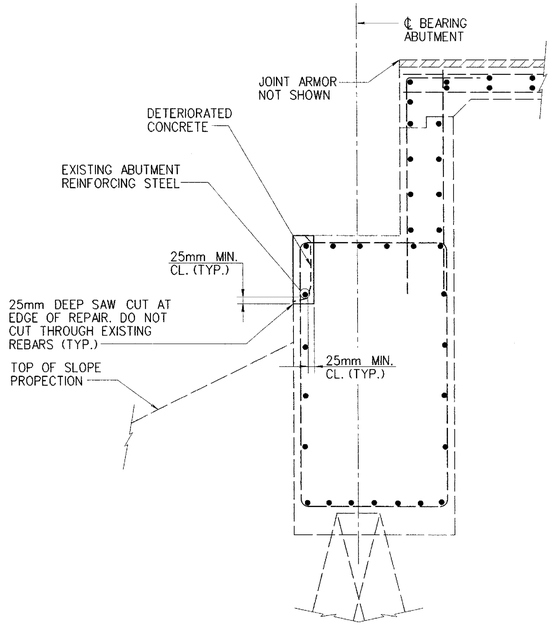

REPAIR Ⓑ FOR ABUTMENT

1:20

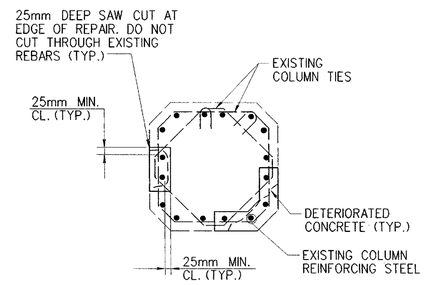

REPAIR Ⓑ FOR PIER COLUMN

1:20

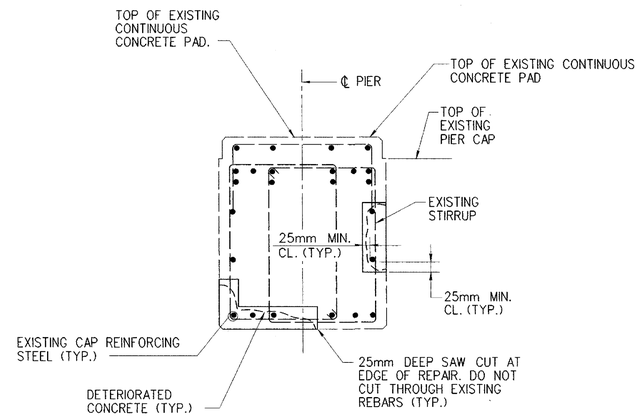

REPAIR Ⓑ FOR PIER CAP

1:20

NOTE:

THE CONTRACTOR WILL NOT BE PERMITTED TO WORK ON ANY TWO ADJACENT PIERS SIMULTANEOUSLY.

THE CONTRACTOR WILL NOT BE PERMITTED TO WORK ON ANY TWO COLUMNS OF THE SAME PIER SIMULTANEOUSLY.

REPAIR Ⓐ FOR PIER CAPS, COLUMNS AND ABUTMENTS:

1. PRIOR TO THE START OF THIS WORK, THE ENGINEER AND CONTRACTOR SHALL INSPECT THE STRUCTURE. THE ENGINEER WILL DESIGNATE THE LOCATION AND LIMITS OF THE WORK.
2. CRACKS SHALL BE SEALED BY EPOXY INJECTION. THE WORK SHALL BE PERFORMED IN ACCORDANCE WITH SPECIAL PROVISION 602611 - REPAIR OF CONCRETE STRUCTURES BY EPOXY INJECTION.
3. ALL COSTS ASSOCIATED WITH THE ABOVE WORK SHALL BE INCLUDED IN THE PAY ITEM "602611 - REPAIR OF CONCRETE STRUCTURES BY EPOXY INJECTION".

REPAIR Ⓑ FOR PIER COLUMN:

1. PRIOR TO START OF REMOVAL OF CONCRETE, THE ENGINEER AND CONTRACTOR SHALL INSPECT THE DETERIORATED CONCRETE AREA. THE ENGINEER WILL INDICATE THE LIMIT OF REMOVAL.
2. THIS WORK SHALL BE PERFORMED IN ACCORDANCE WITH SECTION 602 OF THE SPECIFICATIONS.
3. THE CONTRACTOR SHALL FIELD MEASURE THE EXISTING PIER PRIOR TO BEGINNING ANY WORK AND WILL BE PERMITTED TO WORK ON ONLY ONE COLUMN AT A TIME.
4. THE DETERIORATED CONCRETE SHALL BE REMOVED TO A MINIMUM OF 25 mm BEHIND THE EXISTING VERTICAL REINFORCING STEEL OR TO SOUND CONCRETE, WHICHEVER IS GREATER. CONCRETE MAY BE REMOVED BY MEANS OF APPROVED HAND HELD PNEUMATIC CHIPPING HAMMER NOT EXCEEDING 14kg. REINFORCING STEEL DAMAGED BY THE CONTRACTOR IN THE REMOVAL OPERATIONS SHALL BE REPAIRED BY THE CONTRACTOR AT THE CONTRACTOR'S EXPENSE.
5. THE REMAINING SURFACES SHALL BE THOROUGHLY CLEANED OF ALL DUST, DIRT, PAINT, RUST, SCALE, OIL, GREASE, ORGANIC MATERIAL, LOOSE OR DETERIORATED MASONRY OR FOREIGN MATTER OF ANY KIND. ABRASIVE GRIT BLASTING WITH NON-SILICA/LOW DUSTING GRIT MAY BE REQUIRED, IF NECESSARY, TO ADEQUATELY CLEAN THE SURFACES.
6. ALL EXISTING COLUMN REINFORCING STEEL SHALL BE CLEANED BY ABRASIVE GRIT BLASTING WITH NON-SILICA/LOW DUSTING GRIT AND INCORPORATED INTO THE NEW CONSTRUCTION. ALL EXISTING CONCRETE AND REINFORCING STEEL SHALL BE COATED WITH AN APPROVED EPOXY BONDING AGENT.
7. REINFORCING BARS THAT HAVE LOST 20% OR MORE OF THEIR ORIGINAL CROSS-SECTIONAL AREA SHALL BE THOROUGHLY CLEANED BY ABRASIVE GRIT BLASTING WITH NON-SILICA/LOW DUSTING GRIT AND NEW BARS OF THE SAME DIAMETER SHALL BE PROVIDED AND PLACED SO AS TO HAVE THE MINIMUM REQUIRED LAP AT EACH END OF THE NEW BARS. WHERE THE REQUIRED LAP IS NOT AVAILABLE, THE BARS SHALL BE CUT AND NEW BARS WELDED IN PLACE. THE ENGINEER SHALL BE THE SOLE JUDGE AS TO WHICH BARS ARE IN NEED OF REPAIR.
8. CLASS A CONCRETE (f'c = 30 MPa) SHALL BE PLACED IN FORMS. THE CONTRACTOR SHALL USE ONLY PEA GRAVEL FOR COARSE AGGREGATE FOR REPAIR CONCRETE.
9. 4X4-W2.1xW2.1 EPOXY COATED WELDED WIRE FABRIC SHALL BE PLACED AROUND THE VERTICAL COLUMN REINFORCING AND ATTACHED TO IT. AN APPROVED NON-SHRINK MORTAR (f'c = 35 MPa MIN.) WILL BE HAND PACKED INTO THE TOP 300mm OF THE REPAIR AREA TO THE ORIGINAL CONFIGURATION OF THE COLUMN AND HAND TROWELED TO A SMOOTH FINISH.
10. MAXIMUM CONCRETE POUR HEIGHT SHALL BE LIMITED TO 1.800 m. THE NEXT CONCRETE POUR SHALL BE CONTINGENT UPON THE PREVIOUS CONCRETE POUR ATTAINING A STRENGTH OF AT LEAST 20 MPa.
11. THE CONTRACTOR SHALL SUBMIT SHOP DRAWINGS DETAILING THE PIER COLUMN REPAIR TO THE ENGINEER FOR REVIEW AND APPROVAL.
12. THIS WORK WILL BE MEASURED AND PAID FOR AT THE CONTRACT UNIT PRICE BID PER CUBIC METER FOR PAY ITEM "602586 - REHABILITATION OF CONCRETE STRUCTURES" FOR WHICH PRICE AND PAYMENT SHALL CONSTITUTE FULL COMPENSATION FOR REMOVAL OF ALL DETERIORATED CONCRETE AS DIRECTED BY THE ENGINEER, FOR FURNISHING AND PLACING CLASS A CONCRETE AND APPROVED NON-SHRINK MORTAR, FOR FURNISHING AND PLACING WELDED WIRE FABRIC, FOR PREPARING EXISTING CONCRETE AND BAR REINFORCEMENT, FORSAW CUTTING, REMOVAL AND DISPOSAL OF EXISTING MATERIALS AND FOR ALL OTHER LABOR, FORMS, EQUIPMENT, TOOLS AND INCIDENTALS NECESSARY TO COMPLETE THE WORK.
13. THIS IS A SUGGESTED METHOD OF REPAIR. THE CONTRACTOR HAS THE OPTION TO USE HIS/HER OWN METHOD OF REPAIR SUBJECT TO THE PRIOR APPROVAL OF THE ENGINEER. SHOP DRAWINGS AND CALCULATIONS PREPARED AND STAMPED BY A PROFESSIONAL ENGINEER REGISTERED IN THE STATE OF DELAWARE SHALL BE SUBMITTED TO THE ENGINEER FOR REVIEW AND APPROVAL. NO ADDITIONAL COMPENSATION WILL BE ALLOWED FOR THIS OPTION.

REPAIR Ⓑ FOR PIER CAPS AND ABUTMENTS:

1. PRIOR TO START OF REMOVAL OF CONCRETE, THE ENGINEER AND CONTRACTOR SHALL INSPECT THE DETERIORATED CONCRETE AREA. THE ENGINEER WILL INDICATE THE LIMIT OF REMOVAL.
2. THIS WORK SHALL BE PERFORMED IN ACCORDANCE WITH SECTION 602 OF THE SPECIFICATIONS.
3. SAW CUT 25 mm DEEP AT THE EDGE OF THE REPAIR. REMOVE LOOSE DETERIORATED CONCRETE TO SOUND CONCRETE. THE DETERIORATED CONCRETE SHALL BE REMOVED TO A MINIMUM OF 25 mm BEHIND OR BELOW THE EXISTING REINFORCING OR TO SOUND CONCRETE, WHICHEVER IS GREATER. PRIOR TO REMOVAL OF CONCRETE ADEQUATE TEMPORARY SUPPORTS FOR THE BRIDGE STRINGERS SHALL BE PROVIDED FOR THE REPAIR OF PIER CAP IN THE AREA IMMEDIATELY BENEATH CONCRETE BEARING PADS.
4. BLAST CLEAN CONCRETE AND REINFORCING STEEL WITH AN ABRASIVE NON-SILICA/LOW DUSTING GRIT.
5. REINFORCING BARS THAT HAVE LOST 20% OR MORE OF THEIR ORIGINAL CROSS-SECTIONAL AREA SHALL BE THOROUGHLY CLEANED BY ABRASIVE GRIT BLASTING WITH NON-SILICA/LOW DUSTING GRIT, AND NEW BARS OF THE SAME DIAMETER SHALL BE PROVIDED AND PLACED SO AS TO HAVE THE MINIMUM REQUIRED LAP AT EACH END OF THE NEW BARS. WHERE THE REQUIRED LAP IS NOT AVAILABLE, THE BARS SHALL BE CUT AND NEW BARS WELDED IN PLACE. THE ENGINEER SHALL BE THE SOLE JUDGE AS TO WHICH BARS ARE IN NEED OF REPAIR.
6. INSTALL FORMS.
7. APPLY BONDING COMPOUND TO REINFORCING STEEL AND TO DAMP CONCRETE SURFACE.
8. INSTALL CLASS A CONCRETE (f'c = 30 MPa) OR NON-SHRINK MORTAR AT THE CONTRACTOR'S OPTION AND SUBJECT TO THE APPROVAL OF THE ENGINEER. THE CONTRACTOR SHALL USE ONLY PEA GRAVEL FOR COARSE AGGREGATE FOR REPAIR CONCRETE IF CONCRETE OPTION IS SELECTED.
9. THE TYPE OF THE REPAIR MATERIAL TO BE USED AT EACH DETERIORATED AREA SHALL BE DETERMINED BASED ON THE SIZE AND THE ACCESSIBILITY OF THE REPAIR AREA.
10. THIS WORK WILL BE MEASURED AND PAID FOR AT THE CONTRACT UNIT PRICE BID PER CUBIC METER FOR PAY ITEM "602586 - REHABILITATION OF CONCRETE STRUCTURE" FOR WHICH PRICE AND PAYMENT SHALL CONSTITUTE FULL COMPENSATION FOR SAW CUTTING, FOR REMOVAL OF CONCRETE AS INDICATED ON THE PLANS AND/OR AS DIRECTED BY THE ENGINEER, FOR DISPOSAL OF REMOVED MATERIALS, FOR CLEANING, CUTTING AND BENDING BAR REINFORCEMENT, FOR FURNISHING AND PLACING CLASS A CONCRETE OR NON-SHRINK MORTAR, FOR PREPARING EXISTING CONCRETE AND BAR REINFORCEMENT AND FOR ALL OTHER LABOR, FORMS, EQUIPMENT, TOOLS AND INCIDENTALS NECESSARY TO COMPLETE THE WORK. COST FOR REMOVAL OF EXISTING REBAR AND FOR FURNISHING AND INSTALLING NEW REBAR NECESSARY TO COMPLETE THE WORK SHALL BE INCLUDED IN PAY ITEM "603500 - REPAIRING BAR REINFORCEMENT."
11. THIS IS A SUGGESTED METHOD OF REPAIR. THE CONTRACTOR HAS THE OPTION TO USE HIS/HER OWN METHOD OF REPAIR SUBJECT TO THE PRIOR APPROVAL OFTHE ENGINEER. SHOP DRAWINGS AND CALCULATIONS PREPARED AND STAMPED BY A PROFESSIONAL ENGINEER REGISTERED IN THE STATE OF DELAWARE SHALL BE SUBMITTED TO THE ENGINEER FOR REVIEW AND APPROVAL. NO ADDITIONAL COMPENSATION WILL BE ALLOWED FOR THIS OPTION.

NOTES:

1. FOR GENERAL NOTES AND PROJECT NOTES, SEE DWGS. S-2 AND 3.
2. FOR TYPES OF ABUTMENT DETERIORATION AND ABUTMENT REPAIR METHODS, SEE DWG. S-17.
3. FOR TYPES OF PIER DETERIORATION AND PIER REPAIR METHODS, SEE DWG. S-18.

REVISIONS

PREL. TRACING ____ DESIGN ____ CHKD. ____

9/17/99 7:39:59 PM G:\PLOTTING\PS7\OGF\MYLAR_HP.pdf Raisa Gerchikova Division:STRUCTURES m:\1988\0188305.3a\ssubdet.prt

METRIC	CONTRACT	COUNTY	FEDERAL AID PROJECT No.	SHEET No.	TOTAL SHEETS
	98-074-03	NEW CASTLE	EIM-N006(2)	21	45
S DWG. 20 OF 29	REHABILITATION OF BRIDGES NO. 1-675, 1-676, 1-677 & 1-678, SR-141 OVER I-95				
	STRUCTURAL STEEL REPAIR DETAILS				

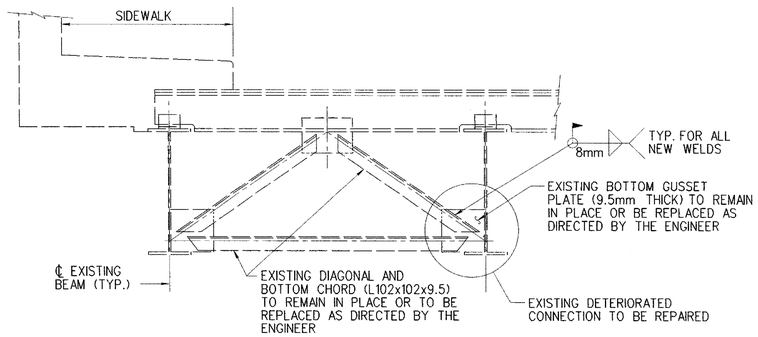

TYPES 10 & 13

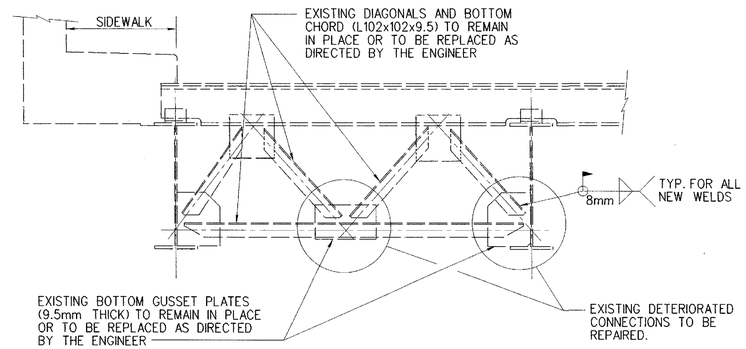

TYPES 11 & 14

END CROSS FRAME REPAIR DETAILS

1:20

ESTIMATED QUANTITIES OF STRUCTURAL STEEL REPAIRS

LOCATION \ REPAIR	ITEM 605584 STEEL STRUCTURE REPAIR (kg)	ITEM 605592 WELDING REPAIR (m)	ITEM 605006 PAINTING, MOISTURE-CURED URETHANE SYSTEM (m^2)	ITEM 605622 CLEANING OF STEEL STRUCTURE BY PRESSURE WASHING (LS)	ITEM 605629 CLEANING EXISTING STEEL STRUCTURES, HAZARDOUS (m^2)	ITEM 605532 CLEANING EXISTING STEEL STRUCTURES, NON-HAZARDOUS (LS)
BRIDGE NO. I-675						
ABUTMENT A	38	11	34	($34m^2$)	34	0
PIER 1	9	3	68	($68m^2$)	68	0
PIER 2	19	5	71	($71m^2$)	71	0
PIER 3 AND HINGE	0	0	101	($101m^2$)	101	0
PIER 4	74	23	70	($70m^2$)	70	0
ABUTMENT B	0	0	34	($34m^2$)	34	0
BRIDGE NO. I-676						
ABUTMENT A	166	23	34	($34m^2$)	0	($34m^2$)
PIER 1	91	28	72	($72m^2$)	0	($72m^2$)
PIER 2	73	21	73	($73m^2$)	0	($73m^2$)
PIER 3	18	5	69	($69m^2$)	0	($69m^2$)
ABUTMENT B	38	11	34	($34m^2$)	0	($34m^2$)
BRIDGE NO. I-677						
ABUTMENT A	26	8	35	($35m^2$)	0	($35m^2$)
PIER 1	0	0	74	($74m^2$)	0	($74m^2$)
PIER 2	171	50	75	($75m^2$)	0	($75m^2$)
PIER 3	18	5	70	($70m^2$)	0	($70m^2$)
ABUTMENT B	360	38	34	($34m^2$)	0	($34m^2$)
BRIDGE NO. I-678						
ABUTMENT A	70	19	25	($25m^2$)	25	0
PIER 1	105	29	51	($51m^2$)	51	0
PIER 2	113	31	51	($51m^2$)	51	0
PIER 3 AND HINGE	53	15	71	($71m^2$)	71	0
PIER 4	139	39	50	($50m^2$)	50	0
ABUTMENT B	70	19	25	($25m^2$)	25	0

NOTES FOR END CROSS FRAME AND END DIAPHRAGM REPAIR:

1. THIS WORK SHALL BE PERFORMED DURING NIGHT TIME BETWEEN THE HOURS OF 9:00 P.M. AND 5:00 A.M. ONLY. AS AN ALTERNATIVE, THE WORK MAY BE PERFORMED DURING THE DAY AS LONG AS THE WORK IS LIMITED TO THE CROSS FRAMES OR END FRAMES LOCATED BENEATH THE WORK AREAS NOTED IN THE STAGED CONSTRUCTION WHERE TRAFFIC HAS BEEN REMOVED.

2. THE ENGINEER AND THE CONTRACTOR SHALL INSPECT ALL END CROSS FRAMES AND END DIAPHRAGMS FOR BROKEN WELDS OR SIGNS OF PACKED RUST AT THE GUSSET OR CONNECTION PLATES PRIOR TO BEGINNING THIS WORK. THE ENGINEER WILL DESIGNATE THE CONNECTION LOCATION AND THE EXTENT OF THE REPAIR FOR EACH END CROSS FRAME AND END DIAPHRAGM.

3. THE REPAIR WORK SHALL INCLUDE, BUT NOT BE LIMITED TO, REPLACEMENT OF EXISTING DETERIORATED STEEL COMPONENTS, PREPARATION OF THE NEW OR REUSABLE COMPONENTS FOR WELDING, CUTTING, GRINDING AND WELDING OF THE STEEL COMPONENTS AS REQUIRED TO JOIN MEMBERS BACK TO EXISTING CROSS FRAME AND DIAPHRAGM CONFIGURATIONS.

4. THE REPAIR WORK SHALL BE PERFORMED ON A ONE-FRAME-AT-A-TIME BASIS.

5. THE SIZES OF NEW STEEL COMPONENTS SHALL MATCH THE EXISTING ONES BEING REPLACED. REFER TO THE PLANS FOR THE EXISTING BRIDGE FOR CROSS FRAMES TYPES AND MEMBER SIZES.

6. THE CONTRACTOR SHALL CLEAN ALL LEAD PAINT FROM THE STRUCTURAL STEEL TO BE REPAIRED ON BRIDGES NO. I-675 AND I-678 PRIOR TO BEGINNING REPAIRS.

7. ALL ERECTION BOLTS, IF REQUIRED TO FACILITATE THE REPAIR, SHALL BE 20 mm DIA. UNPAINTED ASTM A 307, GRADE A, GALVANIZED STEEL.

8. ALL STRUCTURAL STEEL SHALL MEET THE REQUIREMENTS OF ASTM A 709M, GRADE 250.

9. FIELD FLAME CUTTING SHALL BE PERFORMED WITH AN OXY-ACETYLENE TORCH, MAKING MAXIMUM USE OF STRAIGHT EDGES TO CONTROL THE ALIGNMENT AND SMOOTHNESS OF THE CUT.

10. THE SHOP DRAWINGS SHALL SHOW ALL PROPOSED REPAIR LOCATIONS, THE PROPOSED REPAIR METHOD AND THE SIZES OF NEW STEEL COMPONENTS AT EACH REPAIR LOCATION. THE SHOP DRAWINGS SHALL BE SUBMITTED TO THE ENGINEER FOR REVIEW AND APPROVAL AND MUST BE APPROVED BY THE ENGINEER PRIOR TO STARTING THE WORK.

11. EXPOSED SURFACES OF ALL END FRAMES SHALL BE CLEANED AND PAINTED/RECOATED AFTER THE DESIGNATED REPAIRS TO THE DETERIORATED END CROSS FRAMES AND END DIAPHRAGMS ARE COMPLETE.

12. THE COST ASSOCIATED WITH REMOVAL AND DISPOSAL OF EXISTING DETERIORATED STEEL COMPONENTS, FURNISHING AND ERECTING NEW STEEL COMPONENTS (INCLUDING WELDED OR BOLTED CONNECTIONS), AND ALL OTHER LABOR, EQUIPMENT, TOOLS AND INCIDENTALS NECESSARY TO COMPLETE THE WORK SHALL BE INCLUDED IN THE PAY ITEM "605584 - STEEL STRUCTURE REPAIR."

13. THE COST OF RECONNECTING EXISTING LOOSE MEMBERS, INCLUDING PREPARATION OF STEEL SURFACES FOR WELDING, FURNISHING AND PLACING WELDS, SHALL BE INCLUDED IN THE PAY ITEM "605592 - WELDING REPAIR."

14. THE COST OF CLEANING THE EXISTING AND NEW STEEL COMPONENTS SHALL BE INCLUDED IN PAY ITEMS "605622 - CLEANING OF STEEL STRUCTURE BY PRESSURE WASHING," "605629 - CLEANING EXISTING STEEL STRUCTURES, HAZARDOUS" AND "605532 - CLEANING EXISTING STEEL STRUCTURES, NON-HAZARDOUS" AS APPLICABLE. COST OF PAINTING THE EXISTING AND NEW STEEL COMPONENTS SHALL BE INCLUDED IN PAY ITEM "605006 - PAINTING, MOISTURE-CURED URETHANE SYSTEM."

13. STEEL STRUCTURE AND WELDING REPAIR QUANTITIES SHOWN IN THE TABLE WERE DETERMINED DURING A FIELD INSPECTION COMPLETED IN OCTOBER, 1997. THE QUANTITIES FOR THESE REPAIRS HAVE BEEN INCREASED FROM THE FIELD VALUES BY 25%. THESE QUANTITIES ARE PROVIDED ONLY TO CLARIFY THE WORK TO BE PERFORMED. PAYMENT FOR SPECIFIC ITEMS OF WORK WILL BE BASED ON ACTUAL QUANTITIES REQUIRED TO COMPLETE THE REPAIRS.

REVISIONS

PREL. TRACING ____ DESIGN ____ CHKD. ____

METRIC	CONTRACT	COUNTY	FEDERAL AID PROJECT No	SHEET No	TOTAL SHEETS
	98-074-03	NEW CASTLE	EIM-N006(2)	22	45
S DWG. 21 OF 29	REHABILITATION OF BRIDGES NO. 1-675, 1-676, 1-677 & 1-678, SR-141 OVER I-95				
	BEARING REPLACEMENT – FRAMING PLAN				

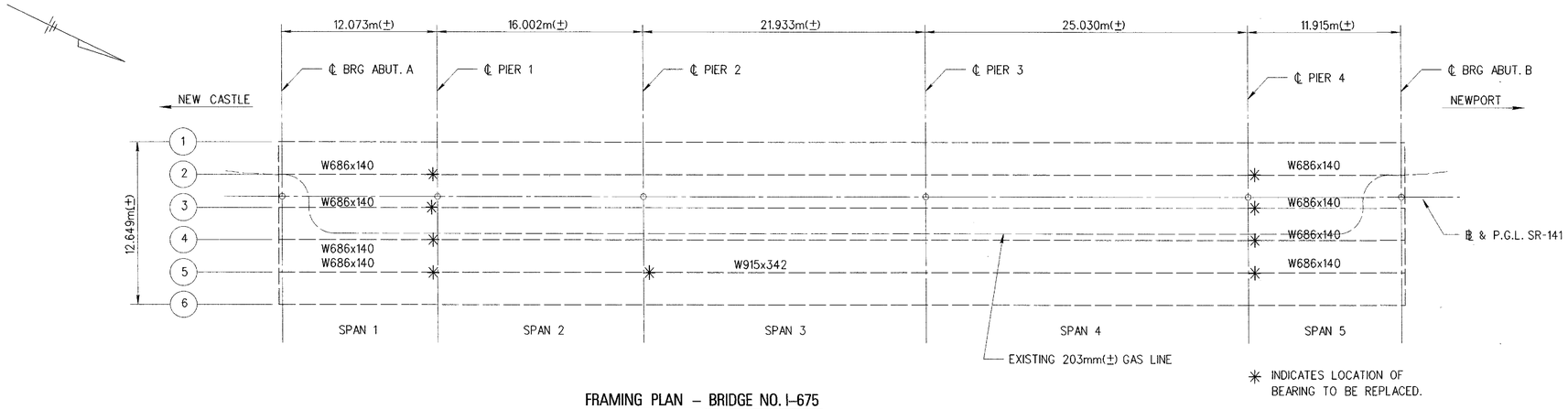

FRAMING PLAN – BRIDGE NO. I-675

SCALE: 1 : 200

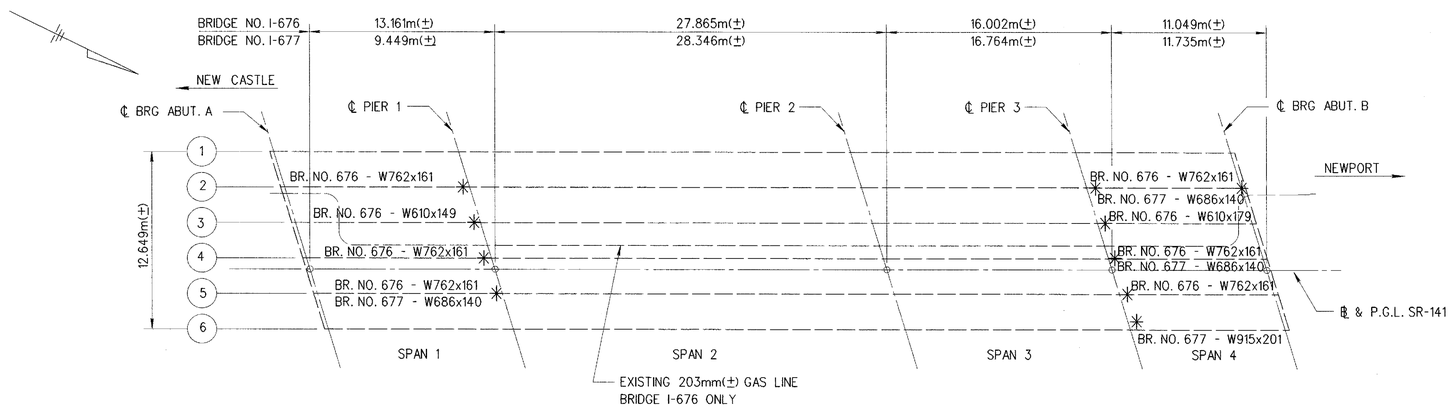

FRAMING PLAN – BRIDGES NO. I-676 & I-677

SCALE: 1 : 200

BEARING REPLACEMENT SCHEDULE

BRIDGE NO.	LOCATION		STRINGER NO.	BEARING TYPE	ITEM 605649 REPLACING BRIDGE BEARING, TYPE A (EA)	ITEM 605650 REPLACING BRIDGE BEARING, TYPE B (EA)
	PIER NO.	SPAN NO.				
I-675	1	1	2-5	E1	4	0
	2	3	5	F2	0	1
	4	5	2-5	E1	4	0
I-676	1	1	2-5	E1	4	0
	3	4	3-5	E1	3	0
	ABUT. B	4	2	F1	1	0
I-677	1	1	5	E1	1	0
	3	4	2, 4, 6	E1	3	0
I-678	1	1	4	E1	1	0

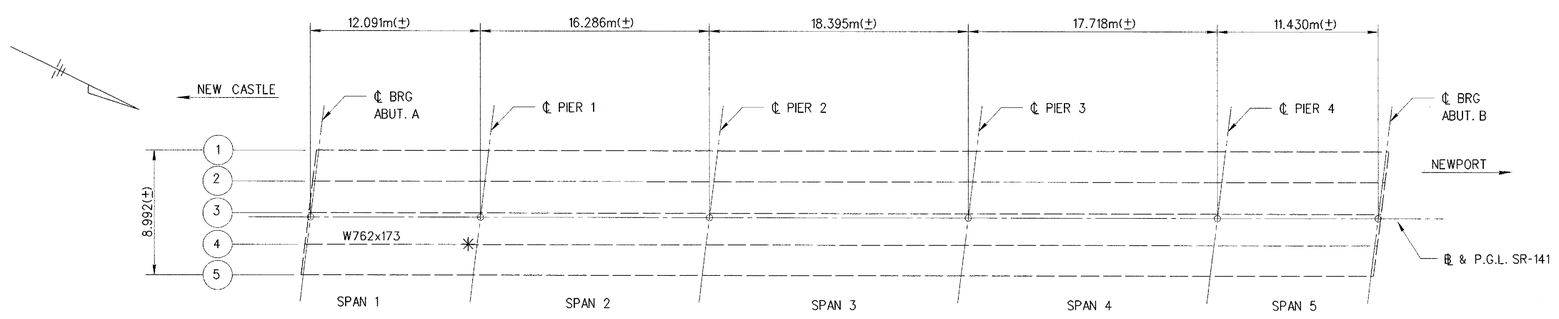

FRAMING PLAN – BRIDGE NO. I-678

SCALE: 1 : 200

MEMBER SIZES

METRIC	ENGLISH
W686x140	W27x94
W915x342	W36x230
W762x161	W30x108
W915x201	W36x135
W762x173	W30x116
W610x149	W24x100
W610x179	W24x120

REVISIONS

CHKD

DESIGN

PREL. TRACING

M:\ 1988\ 0188305.3A\ SFRAMPL.dgn

9/17/99 7:36:34 PM G:\PLOTTING\PS7\OCP\MYLAR_HP.cet Raisa Gerchikova Division:STRUCTURES m:\1988\0188305.3a\sframpl.prt

METRIC	CONTRACT	COUNTY	FEDERAL AID PROJECT No	SHEET No	TOTAL SHEETS
	98-074-03	NEW CASTLE	EIM-N006(2)	23	45
S DWG. 22 OF 29	REHABILITATION OF BRIDGES NO. 1-675, 1-676, 1-677 & 1-678, SR-141 OVER I-95				

BEARING REPLACEMENT – JACKING DETAILS

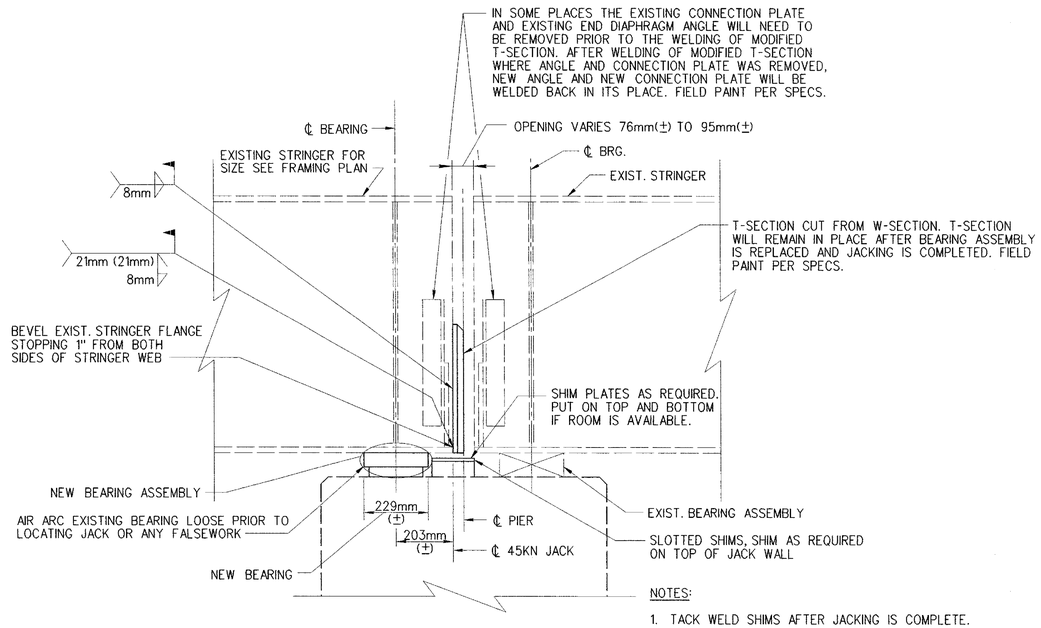

NOTES:

1. TACK WELD SHIMS AFTER JACKING IS COMPLETE.
2. DO NOT MAKE ANY WELDS TO JACK OR TO EXISTING BRIDGE

TYPICAL SECTION

1 : 10

JACKING PROCEDURE

STEP 1: AIR-ARC EXISTING BEARING LOOSE AT SPECIFIED LOCATIONS.
STEP 2: REMOVE, AS REQUIRED, END DIAPHRAGM ANGLE AND CONNECTION PLATE.
STEP 3: WELD MODIFIED T-SECTION TO END OF STRINGER WHERE BEARING IS BEING REPLACED.
STEP 4: WELD NEW CONNECTION PLATE INTO PLACE. REPLACE PREVIOUSLY REMOVED EXISTING ANGLE WITH NEW ANGLE CUTTING TO REQUIRED LENGTH AND WELDING INTO PLACE.
STEP 5: LOCATE 45KN JACK UNDER MODIFIED T-SECTION. JACK BRIDGE UP RAISING BEARING UP 3mm ABOVE ITS AS-BUILT ELEVATION. SHIM TIGHT AS INDICATED. RELEASE JACK.
STEP 6: REMOVE EXISTING BEARING. INSTALL NEW BEARING.
STEP 7: JACK STRINGER UP TO REMOVE SHIMS. RELEASE JACK AND REMOVE.
STEP 8: PAINT T-SECTION AND END OF BEAM.

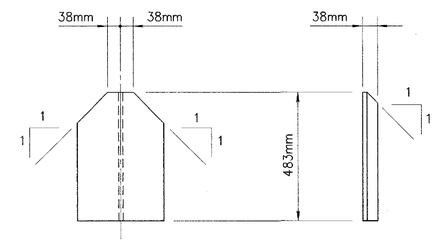

NOTE:

T-SECTION SHALL BE FABRICATED FROM A W-SECTION EQUAL IN SIZE TO STRINGER BEING JACKED.

MODIFIED T-SECTION

1 : 10

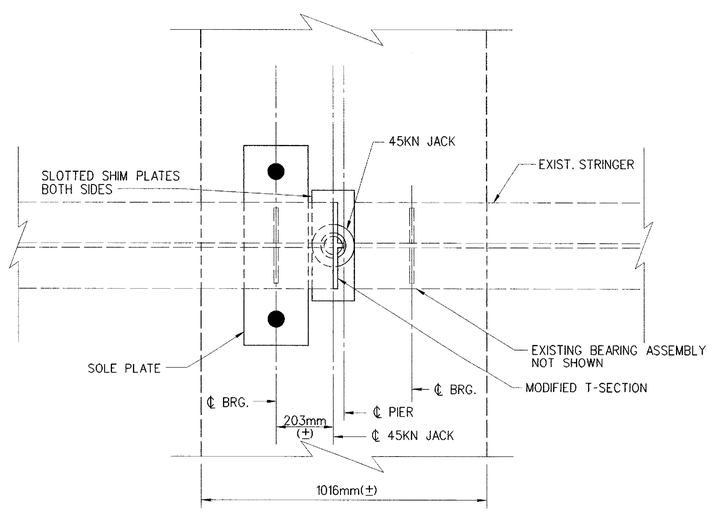

TYPICAL PLAN

1 : 10

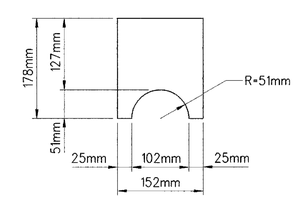

SLOTTED SHIM PLATES

1 : 5

REVISIONS

CHKD. ____ DESIGN ____ PREL. TRACING ____

M:\ 1988\ 0188305.3A\ SDETS04.DGN

9/17/99 7:36:01 PM G:\PLOTTING\PS7\OCP\MYLAR_HP.pet Raisa Gerchikova Division: STRUCTURES m:\1988\0188305.3a\sdets04.prt

METRIC	CONTRACT	COUNTY	FEDERAL AID PROJECT No	SHEET No	TOTAL SHEETS
	98-074-03	NEW CASTLE	EIM-N006(2)	24	45
S DWG. 23 OF 29	REHABILITATION OF BRIDGES NO. 1-675, 1-676, 1-677 & 1-678, SR-141 OVER I-95				
	BEARING DETAILS				

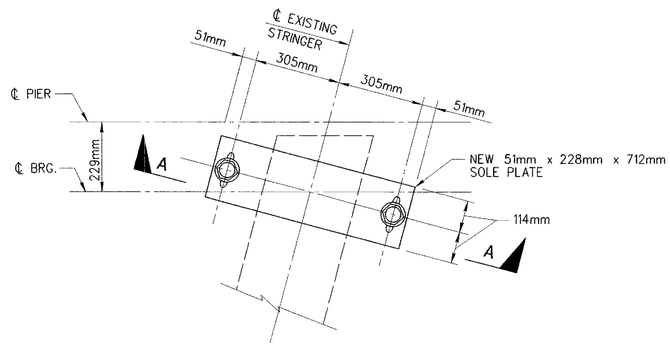

PLAN – E1 TYPE BEARING
SCALE: 1 : 10

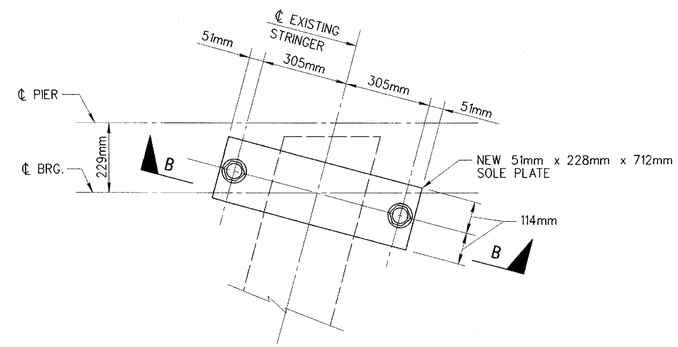

PLAN – F1 TYPE BEARING
SCALE: 1 : 10

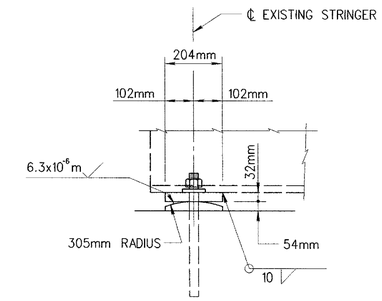

SIDEVIEW – F2 TYPE BEARING
SCALE: 1 : 10

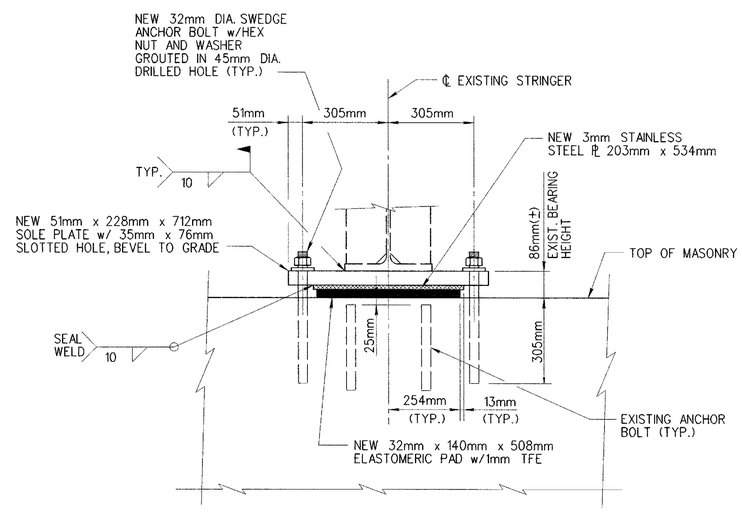

SECTION A–A
SCALE: 1 = 10

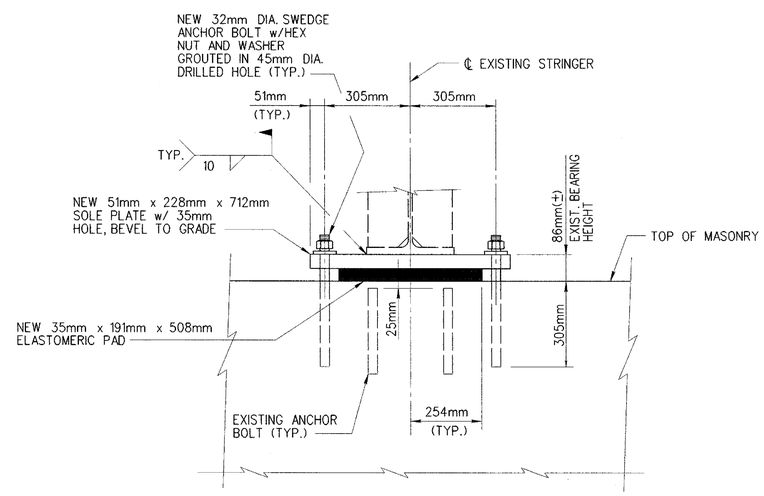

SECTION B–B
SCALE: 1 : 10

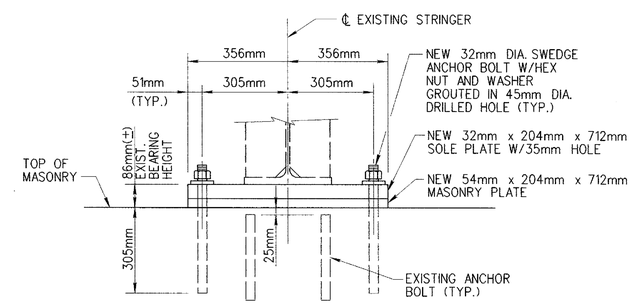

ELEVATION – F2 TYPE BEARING
SCALE: 1 : 10

REVISIONS

CHKD.

DESIGN

PREL. TRACING

M:\ 1988\ 0188305.3A\ SBEARING.dgn

9/17/99 7:35:01 PM G:\PLOTTING\PS7\QCP\MYLAR_HP.qcf Raisa Gerchikova Division: STRUCTURES m:\1988\0188305.3a\sbearing.prf

METRIC					
S	DWG. 23A OF 29	CONTRACT	COUNTY	FEDERAL AID PROJECT No	SHEET No	TOTAL SHEETS
		98-074-03	NEW CASTLE	EIM-N006(2)	24A	45

REHABILITATION OF BRIDGES
NO. I-675, I-676, I-677 & I-678,
SR-141 OVER I-95

EXISTING BEARINGS MODIFICATION DETAILS

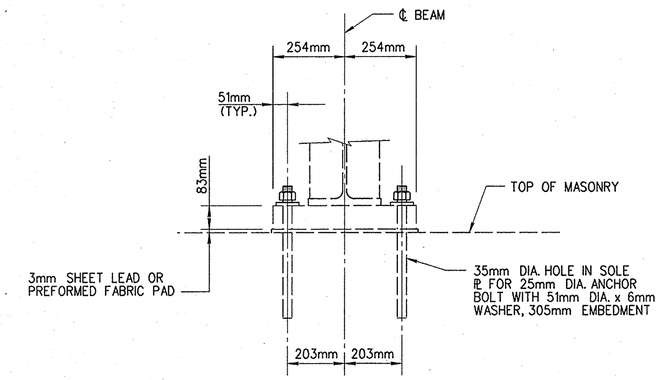

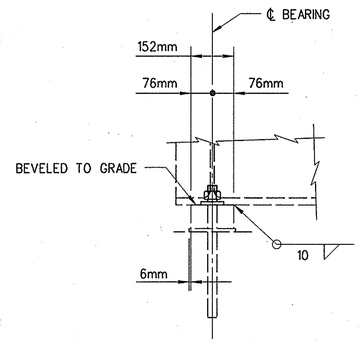

NOTE:

ALL EXISTING BEARING DIMENSIONS ARE ±

EXISTING TYPE F1 BEARING

SCALE: 1 = 10

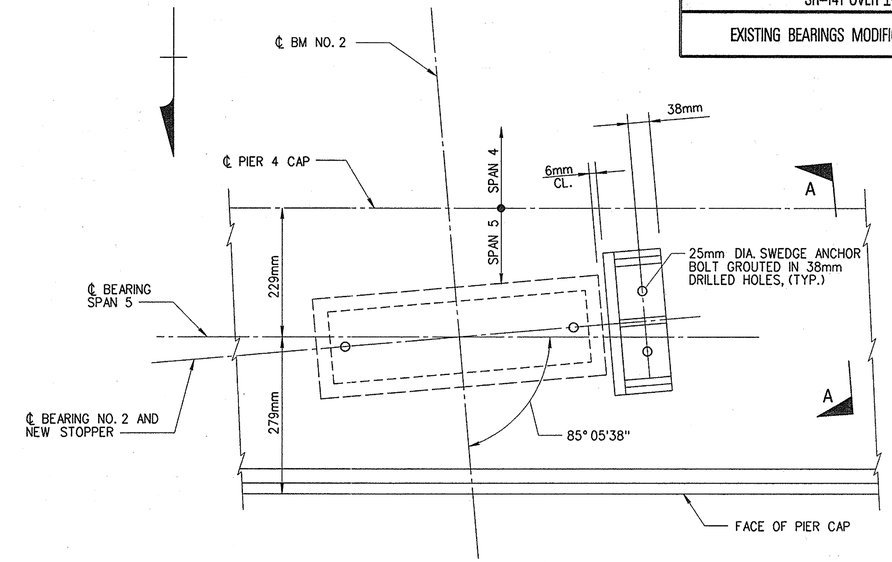

PLAN

SCALE: 1 = 50

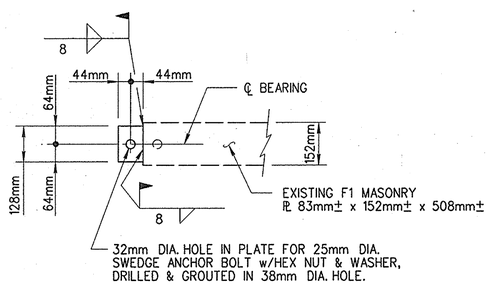

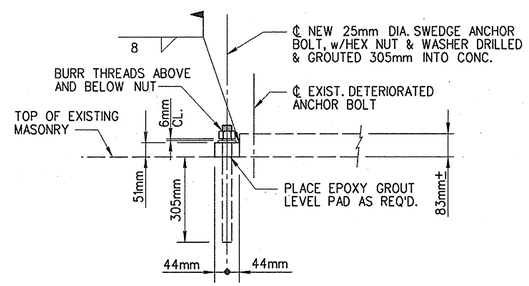

NOTES:

1. DETAIL TO BE USED WHERE AN EXISTING ANCHOR BOLT HAS LOST MORE THAN 30% OF ITS ORIGINAL CROSS SECTION.
2. ALL STEEL SHALL BE ASTM A36M (250 MPa) GALVANIZED IN ACCORDANCE WITH AASHTO M111.
3. TO AID INSTALLATION, EXISTING DIAPHRAGM ANGLES MAY BE CAREFULLY REMOVED, REINSTALLED, OR REPLACED IN-KIND.

F1 BEARING MODIFICATIONS FOR NEW ANCHOR BOLTS AT ABUTMENTS OF BRS. NO. I-675 & I-678

SCALE: 1 = 10

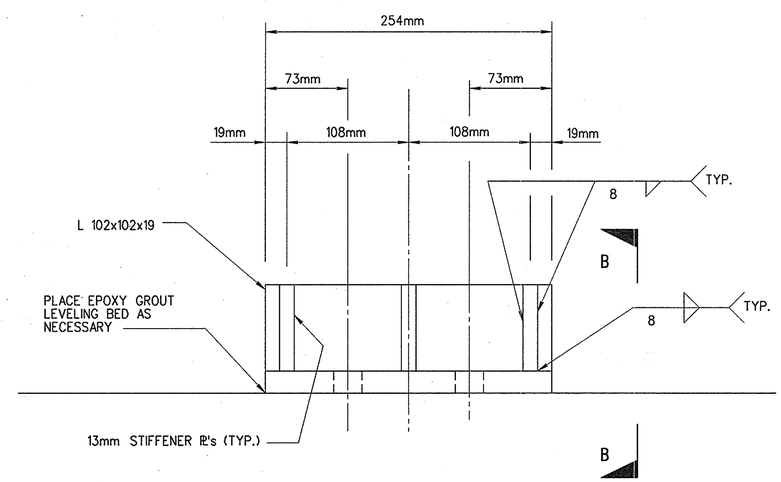

VIEW A-A

SCALE: 1 = 25

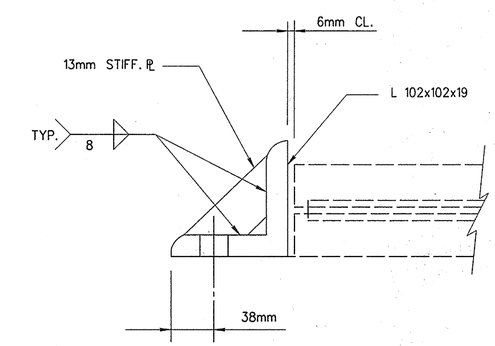

VIEW B-B

SCALE: 1 = 25

NOTES:

1. ALL STEEL SHALL BE ASTM A36M (250 MPa) GALVANIZED IN ACCORDANCE WITH AASHTO M111.
2. EXISTING BEAM NOT SHOWN FOR CLARITY.
3. TO AID INSTALLATION, EXISTING DIAPHRAGM ANGLES MAY BE CAREFULLY REMOVED, REINSTALLED, OR REPLACED IN-KIND.

BEARING STOPPER DETAILS – BRIDGE NO. I-678

SCALE AS SHOWN

REVISIONS

6/23/00 - REVISED F1 BEARING ANCHOR BOLT NUT CLEARANCE

DESIGN _____ CHKD. _____

PRELIM. TRACING _____

M:\ 1988\ 0188305.3A\ SRETROFIT.dgn

METRIC	CONTRACT	COUNTY	FEDERAL AID PROJECT No	SHEET No	TOTAL SHEETS
	98-074-03	NEW CASTLE	EIM-N006(2)	25	45
S DWG. 24 OF 29	REHABILITATION OF BRIDGES NO. 1-675, 1-676, 1-677 & 1-678, SR-141 OVER I-95				
	DECK REPAIRS & MODIFICATIONS				

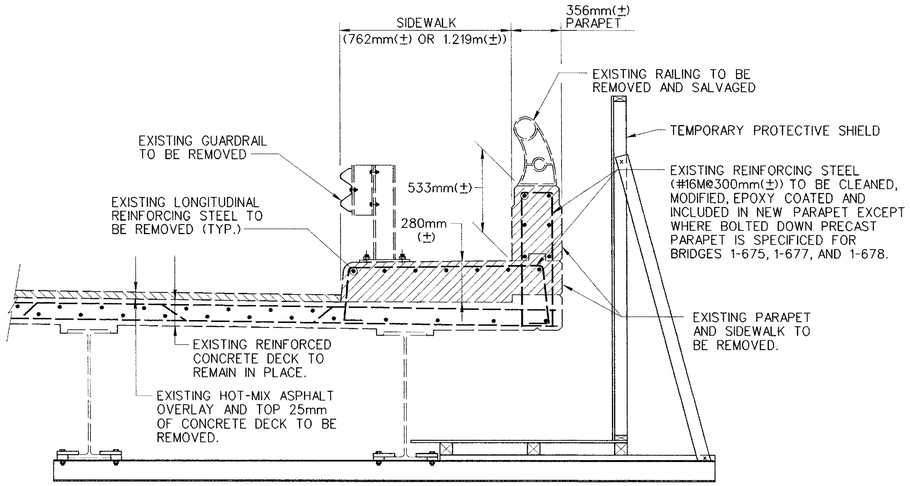

SIDEWALK AND PARAPET REMOVAL

1 : 20

ESTIMATED QUANTITIES FOR DECK REPAIRS AND MODIFICATIONS

ITEM	DESCRIPTION	UNITS	BRIDGE NO. 1-675	BRIDGE NO. 1-676	BRIDGE NO. 1-677	BRIDGE NO. 1-678
601522	TEMPORARY PROTECTIVE SHIELD	m^2	680	532	517	594
602013	P.C.C. MASONRY, SUPERSTRUCTURE, CLASS D	m^3	27	43	21.5	23.5
602014	P.C.C. MASONRY, APPROACH SLAB, CLASS D	m^3	43	42	43	30
602543	FURNISHING LATEX CONCRETE	m^3	106	86	84	70
602544	CONSTRUCTING LATEX CONCRETE OVERLAY	m^2	1396	1127	1109	910
602574	DECK REPAIR, 6mm TO 25mm DEPTH	m^2	10	8	10	8
602575	DECK REPAIR, 25mm TO 75mm DEPTH	m^2	10	8	10	8
602576	DECK REPAIR, 76mm TO < FULL DEPTH	m^2	5	4	5	4
602577	DECK REPAIR, FULL DEPTH	m^2	5	4	5	4
602580	PARTIAL REMOVAL OF P.C.C. MASONRY	m^3	116	94	92	102
602583	FURNISHING MICRO-SILICA MODIFIED CONCRETE	m^3	106	86	84	70
602584	CONSTRUCTING MICRO-SILICA MODIFIED CONCRETE OVERLAY	m^2	1396	1127	1109	910
602604	PRECAST CONCRETE PARAPET	m	99	0	79	87
603500	REPAIRING BAR REINFORCEMENT FOR DECK REPAIRS	kg	25	20	50	40
604000	BAR REINFORCEMENT, EPOXY COATED	kg	4340	5725	4155	3415
605582	CLEANING BRIDGE SCUPPER	EA	5	4	8	10
760001	PAVEMENT - MILLING, CONCRETE (25mm DEPTH)	m^2	1611	1380	1385	1027
760006	PAVEMENT - MILLING, HOT-MIX, 50mm DEPTH	m^2	1909	1659	1658	1231

NOTES FOR REPAIR WORK:

1. DECK REPAIR QUANTITIES SHOWN IN THE TABLE WERE DETERMINED FROM EXISTING BRIDGE PLANS AND INFORMATION COLLECTED DURING A FIELD INSPECTION COMPLETED IN OCTOBER, 1997. THE QUANTITIES ARE APPROXIMATE AND ARE PROVIDED ONLY TO CLARIFY THE WORK TO BE PERFORMED. PAYMENT FOR SPECIFIC ITEMS OF WORK WILL BE BASED ON ACTUAL QUANTITIES REQUIRED TO COMPLETE THE REPAIRS.
2. BEFORE ANY REPAIR WORK IS COMMENCED, THE ENGINEER AND CONTRACTOR SHALL INSPECT THE EXISTING STRUCTURE. THE ENGINEER WILL DESIGNATE THE LOCATION, TYPE AND LIMITS OF THE REPAIRS.
3. FOR CONSTRUCTION METHODS OF DECK REPAIR AT VARIOUS DEPTHS, SEE SPECIAL PROVISIONS.
4. REINFORCING STEEL DAMAGED DURING REPAIR OPERATIONS SHALL BE REPAIRED AT THE CONTRACTOR'S SOLE EXPENSE.
5. ALL SAW CUTS FOR REPAIR SHALL BE MADE VERTICAL AND HORIZONTAL OR PARALLEL AND PERPENDICULAR TO THE NEAR EDGE OF THE STRUCTURE.
6. A TEMPORARY PROTECTIVE SHIELD SHALL BE INSTALLED PRIOR TO REMOVING PARAPET.
7. MINIMUM 4.73m VERTICAL CLEARANCES MUST BE MAINTAINED OVER I-95.
8. THE COST OF THE NEW CAST-IN-PLACE PARAPETS SHALL BE INCLUDED IN THE PAY ITEM "602013-PORTLAND CEMENT CONCRETE MASONRY SUPERSTRUCTURE, CLASS D".

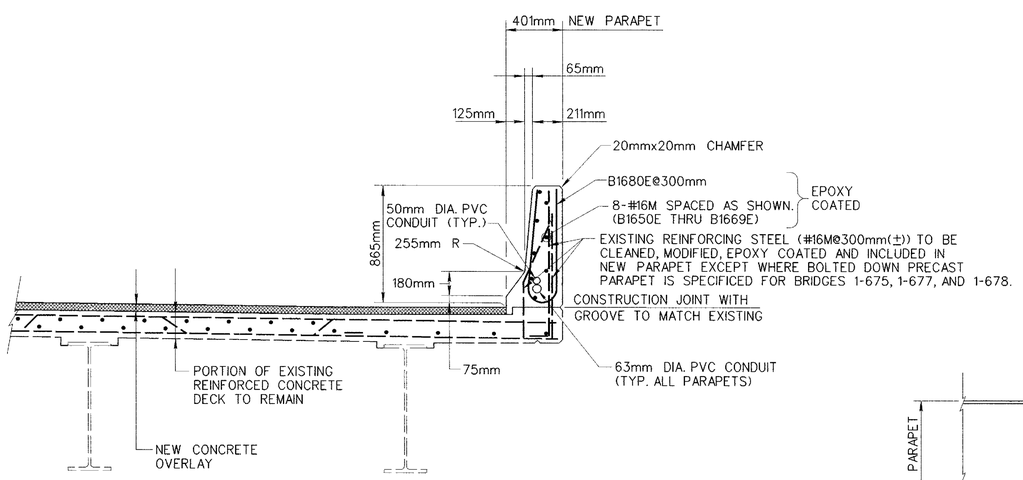

NEW PARAPET

1 : 20

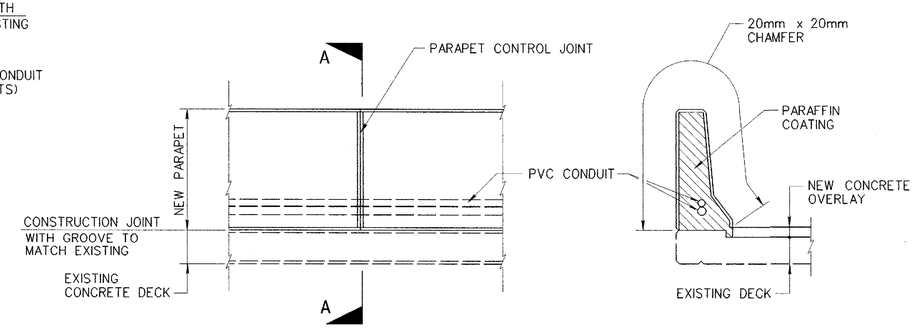

ELEVATION

SECTION A–A

PARAPET CONTROL JOINT DETAILS

1 : 20

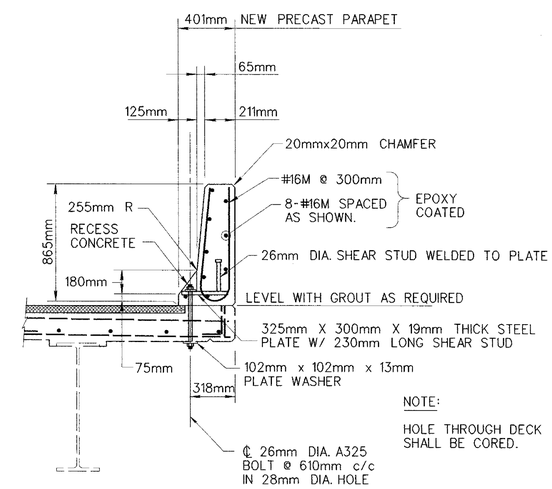

NOTE:

HOLE THROUGH DECK SHALL BE CORED.

PRECAST BOLTED PARAPET DETAIL

SCALE 1:20

NOTES:

1. PLACE PARAFFIN COATING ON VERTICAL SURFACE OF PARAPET AT CONTROL JOINT LOCATION (SHOWN HATCHED). JOINTS SHALL BE FORMED BY PLACING ALTERNATE SECTIONS OF PARAPET.
2. THERE SHALL BE A 40 HOUR DELAY BETWEEN PLACEMENTS OF ADJACENT PARAPET SECTIONS.
3. NO REINFORCING STEEL SHALL PASS THROUGH CONTROL JOINT.
4. CONDUIT SHALL NOT BE PLACED IN PRECAST BOLTED DOWN PARAPET ON BRIDGES NO. 1-675, 1-677, AND 1-678.
5. FOR LOCATION OF CONTROL JOINTS, SEE DWGS. S-3, 4, 5 AND 6.

REVISIONS

CHKD.

DESIGN

PREL. TRACING

M:\ 1988\ 0188305.3A\ SDETS03.DGN

9/17/99 7:34:19 PM G:\PLOTTING\PS7\OCF\MYLAR_HP.pcf Raisa Gerchikova Division: STRUCTURES M:\1988\0188305.3a\sdets03.prf

METRIC	CONTRACT	COUNTY	FEDERAL AID PROJECT No	SHEET No	TOTAL SHEETS
	98-074-03	NEW CASTLE	EIM-N006(2)	26	45
S DWG. 25 OF 29	REHABILITATION OF BRIDGES NO. 1-675, 1-676, 1-677 & 1-678, SR-141 OVER I-95				
	ROADWAY AND SIDEWALK JOINT REPLACEMENT AT ABUTMENTS				

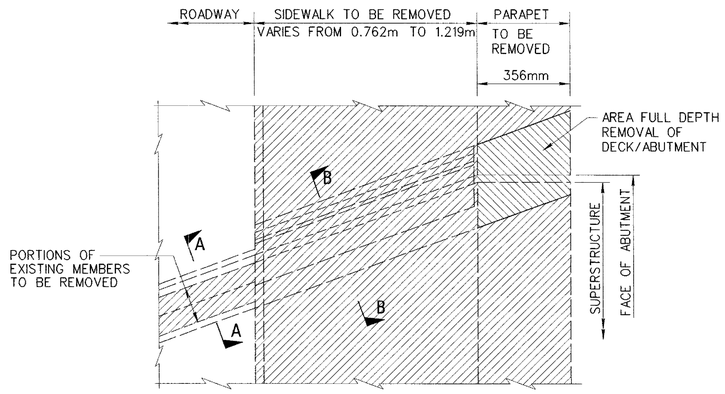

PLAN OF EXISTING JOINT AT ABUTMENTS
1 : 10

NOTE:
WEARING SURFACE REMOVAL NOT SHOWN.

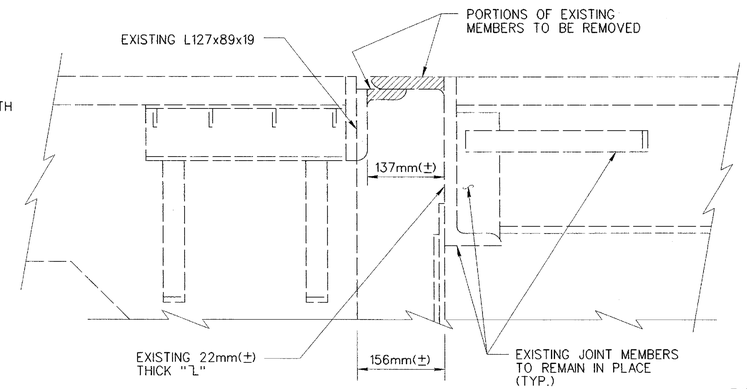

SECTION A–A
1 : 5

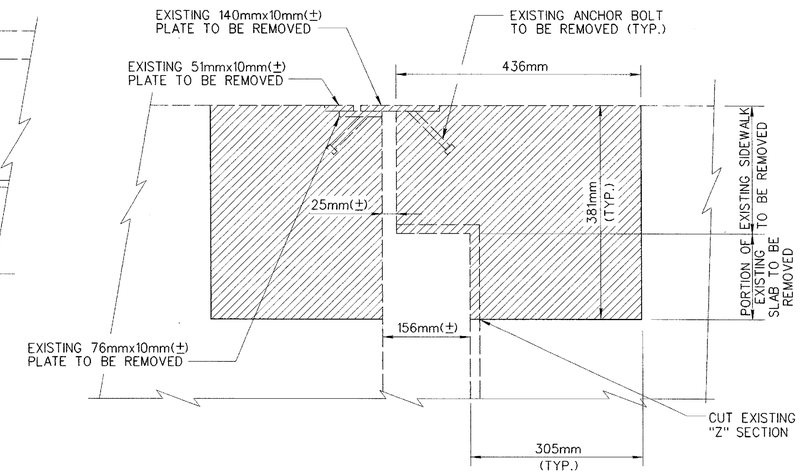

SECTION B–B
1 : 5

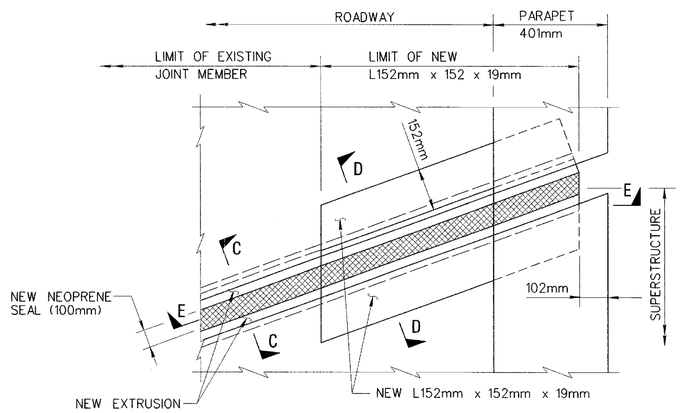

PLAN OF NEW JOINT AT ABUTMENTS
1 : 10

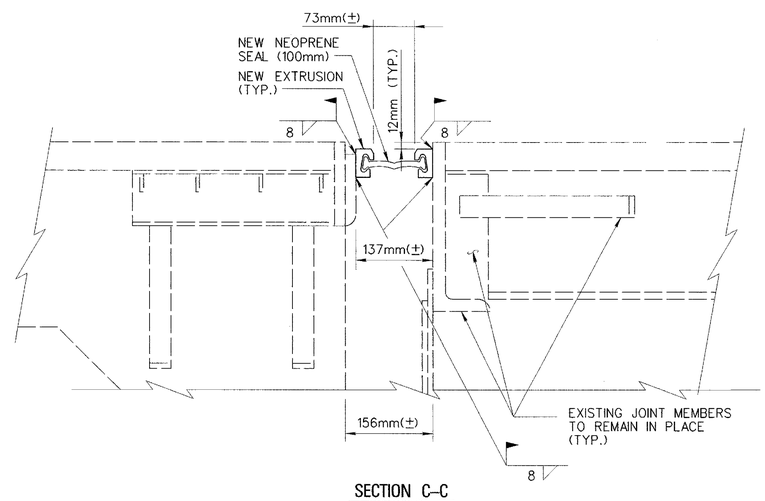

SECTION C–C
1 : 5

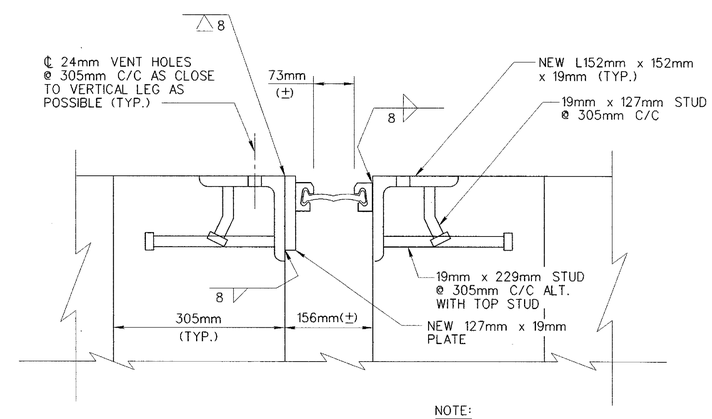

SECTION D–D
1 : 5

NOTE:
EXISTING REINFORCING STEEL NOT SHOWN, BUT SHALL BE CLEANED, EPOXY COATED, AND INCORPORATED INTO FINISHED STRUCTURE.

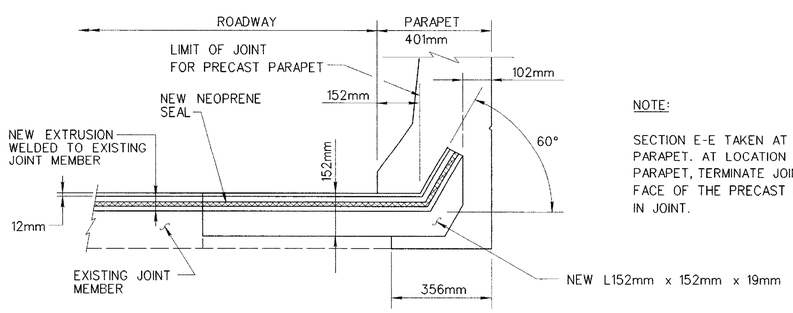

SECTION E–E
1 : 10

NOTE:
SECTION E-E TAKEN AT LOCATION OF CAST-IN-PLACE PARAPET. AT LOCATION OF PERMANENT PRECAST PARAPET, TERMINATE JOINT 152mm FROM THE INTERIOR FACE OF THE PRECAST PARAPET AND ELIMINATE BEND IN JOINT.

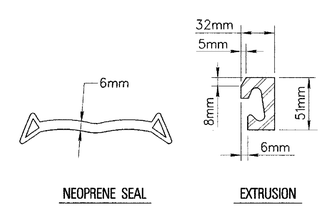

JOINT DETAILS
NOT TO SCALE

LUMP SUM BREAK DOWN FOR JOINT MODIFICATIONS/REPLACEMENT

ITEM	DESCRIPTION	ESTIMATED QUANTITY (m)
605595	REMOVE AND REPLACE EXPANSION JOINTS FOR BRIDGE NO. I-675	88
605595	REMOVE AND REPLACE EXPANSION JOINTS FOR BRIDGE NO. I-676	74
605595	REMOVE AND REPLACE EXPANSION JOINTS FOR BRIDGE NO. I-677	77
605595	REMOVE AND REPLACE EXPANSION JOINTS FOR BRIDGE NO. I-678	66

REVISIONS
CHKD.
DESIGN
PREL. TRACING

M:\ 1988\ 0188305.3A\ SJOINT02.DGN

9/17/99 7:33:37 PM G:\PLOTTING\PS7\QCF\MYLAR_HP.qcf Raisa Gerchikova Division: STRUCTURES m:\1988\0188305.3a\sjoint02.prt

METRIC	CONTRACT	COUNTY	FEDERAL AID PROJECT No	SHEET No	TOTAL SHEETS
	98-074-03	NEW CASTLE	EIM-N006(2)	27	45
S DWG. 26 OF 29	REHABILITATION OF BRIDGES NO. 1-675, 1-676, 1-677 & 1-678, SR-141 OVER I-95				
	ROADWAY AND SIDEWALK JOINT REPLACEMENT AT PIERS AND HINGES				

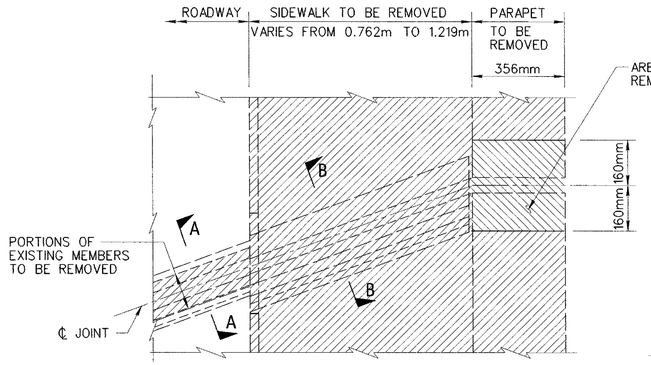

PLAN OF EXISTING JOINT AT PIERS AND AT HINGES
1 : 10

NOTE:
WEARING SURFACE REMOVAL NOT SHOWN.

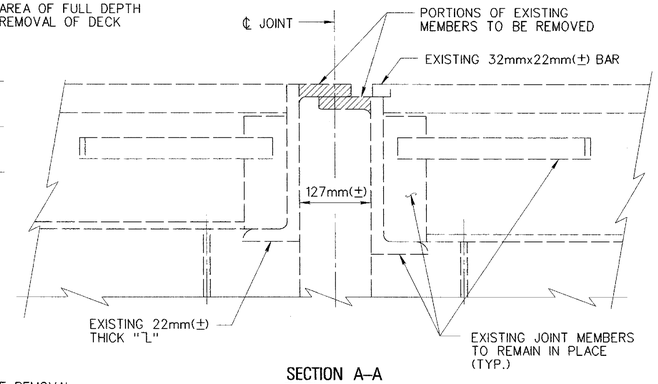

SECTION A–A
1 : 5

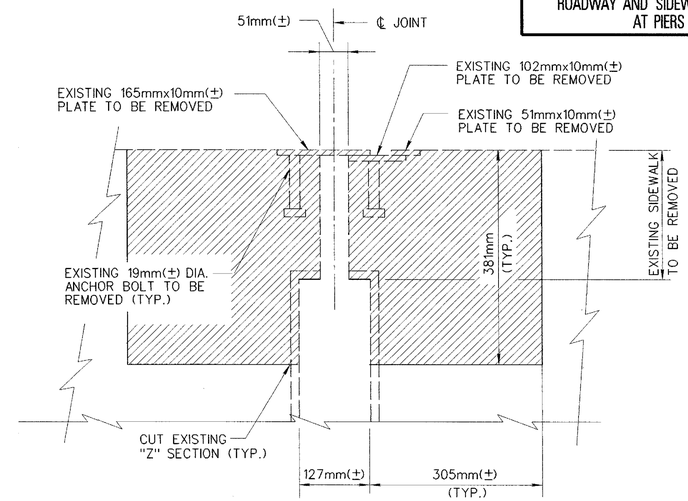

SECTION B–B
1 : 5

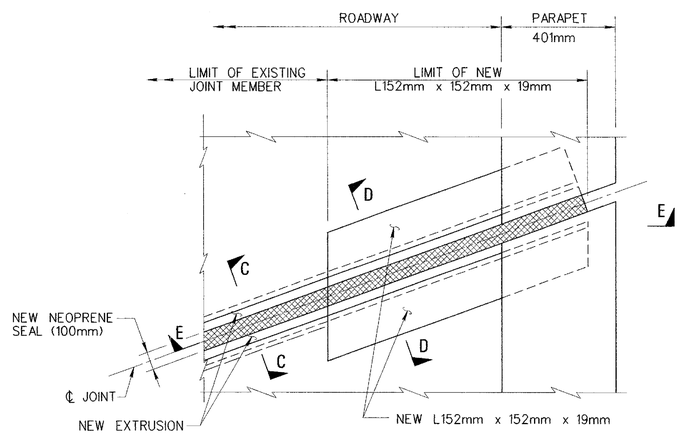

PLAN OF NEW JOINT AT PIERS AND AT HINGES
1 : 10

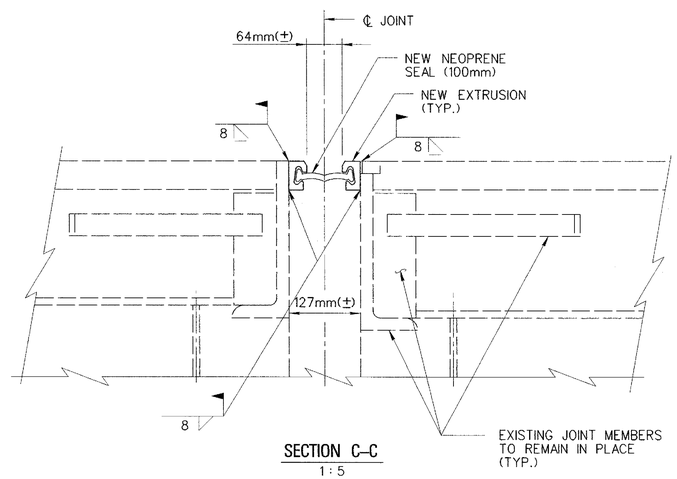

SECTION C–C
1 : 5

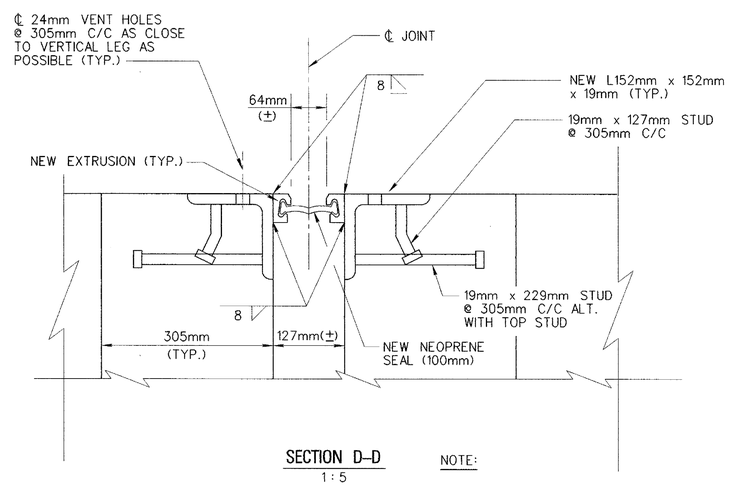

SECTION D–D
1 : 5

NOTE:
EXISTING REINFORCING STEEL NOT SHOWN, BUT SHALL BE CLEANED, EPOXY COATED, AND INCORPORATED INTO FINISHED STRUCTURE.

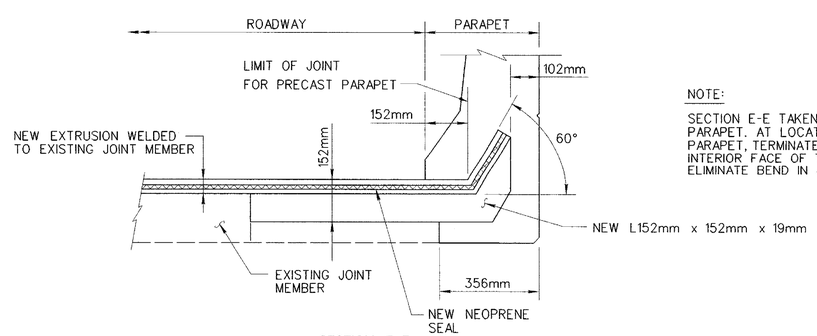

SECTION E–E
1 : 10

NOTE:
SECTION E-E TAKEN AT LOCATION OF CAST-IN-PLACE PARAPET. AT LOCATION OF PERMANENT PRECAST PARAPET, TERMINATE JOINT 152mm FROM THE INTERIOR FACE OF THE PRECAST PARAPET AND ELIMINATE BEND IN JOINT.

REVISIONS

PREL. TRACING ____ DESIGN ____ CHKD. ____

M:\ 1988\ 0188305.3A\ SJOINT01.DGN

9/17/99 7:32:38 PM G:\PLOTTING\PS7\CGF\MYLAR_HP.cdf Raisa Gerchikova Division: STRUCTURES m:\1988\0188305.3a\sjoint01.prt

METRIC	CONTRACT	COUNTY	FEDERAL AID PROJECT No	SHEET No	TOTAL SHEETS
	98-074-03	NEW CASTLE	EIM-N006(2)	28	45
S DWG. 27 OF 29	REHABILITATION OF BRIDGES NO. 1-675, 1-676, 1-677 & 1-678, SR-141 OVER I-95				
	SLOPE PROTECTION REPLACEMENT				

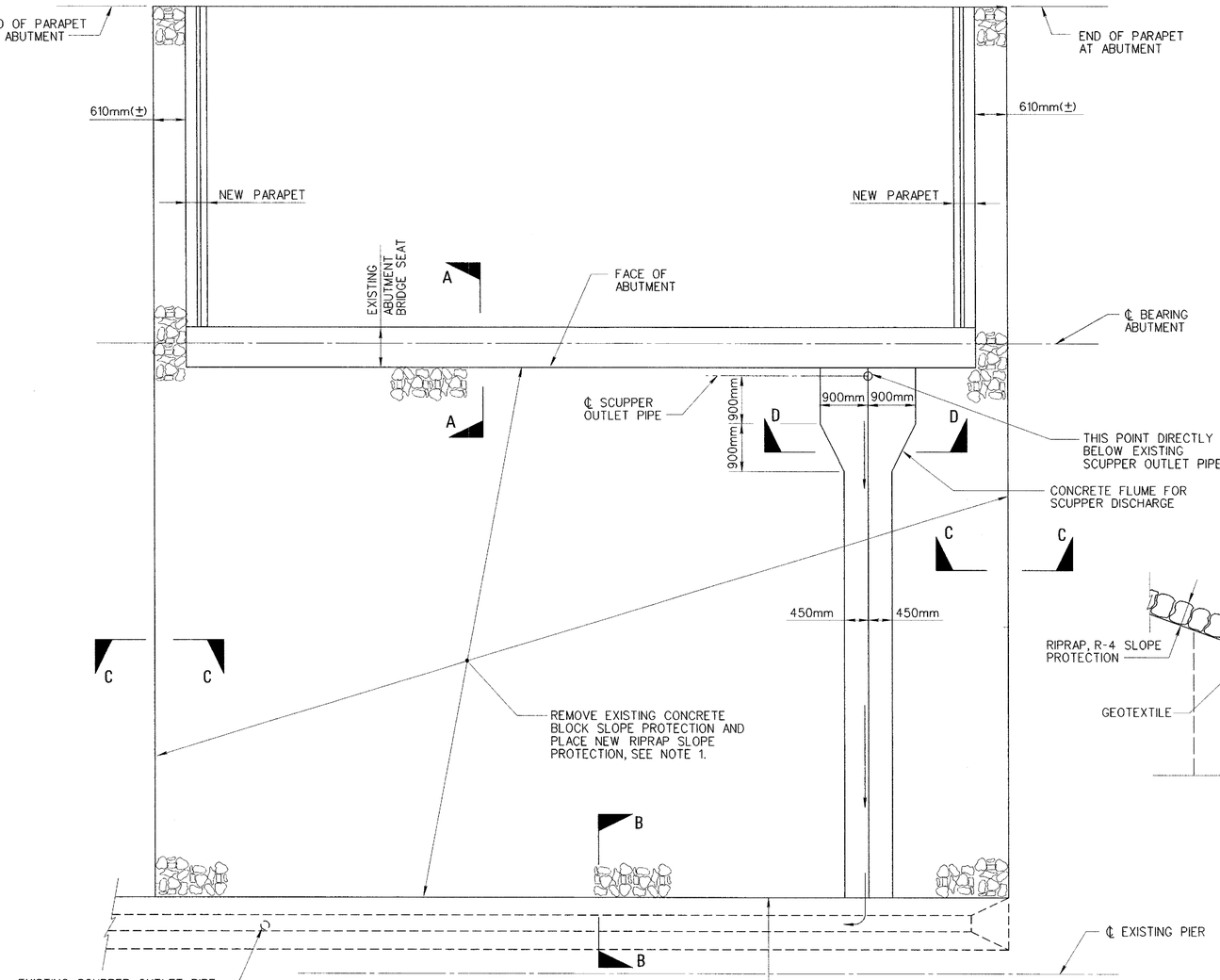

TYPICAL SLOPE PROTECTION PLAN AT ABUTMENT

1 : 50

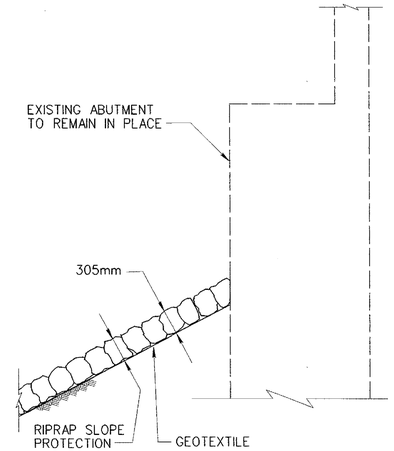

SECTION A–A

1:25

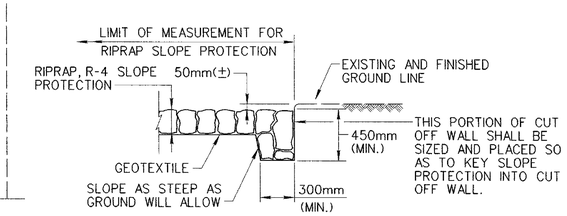

SECTION C–C

1:25

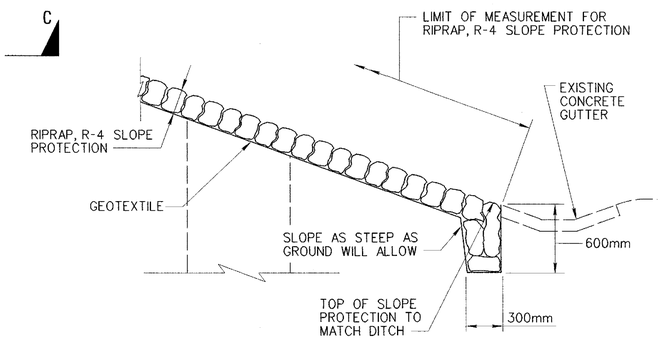

SECTION B–B

1:25

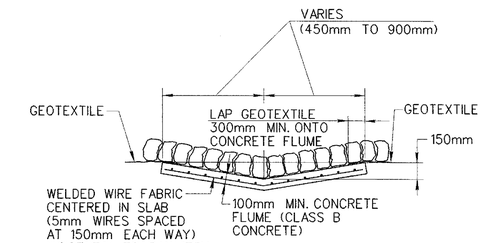

SECTION D–D

1:25

ESTIMATED QUANTITIES FOR SLOPE PROTECTION REPLACEMENT

LOCATION		ITEM 758000 REMOVAL OF EXISTING P.C.C. PAVEMENT, CURB, SIDEWALK, ETC. (m^2)	ITEM 602002 P.C.C. MASONRY, CLASS B (m^3)	ITEM 713003 GEOTEXTILES, RIPRAP (m^2)	ITEM 712020 RIPRAP, R-4 (t)
BRIDGE NO. 1-675	ABUTMENT A	193	1.2	190	106
	ABUTMENT B	191	—	201	105
BRIDGE NO. 1-676	ABUTMENT A	230	—	241	127
	ABUTMENT B	186	1.2	183	102
BRIDGE NO. 1-677	ABUTMENT A	218	—	229	120
	ABUTMENT B	194	2.4	179	106
BRIDGE NO. 1-678	ABUTMENT A	153	2.4	135	85
	ABUTMENT B	141	—	148	77

NOTES:

1. THE CONTRACTOR AND ENGINEER SHALL MEASURE AND DETERMINE THE AREA OF THE EXISTING CONCRETE BLOCK SLOPE PROTECTION PRIOR TO BEGINNING REMOVAL OPERATIONS. THIS AREA WILL BE THE BASIS FOR PAYMENT FOR THE SLOPE PROTECTION REPLACEMENT WORK.
2. REMOVAL OF THE EXISTING CONCRETE BLOCK SLOPE PROTECTION SHALL BE COMPLETED IN ACCORDANCE WITH SECTION 758 OF THE SPECIFICATIONS, AND WILL BE PAID FOR UNDER ITEM "758000 - REMOVAL OF EXISTING PORTLAND CEMENT CONCRETE PAVEMENT, CURB, SIDEWALK, ETC."
3. WITH THE APPROVAL OF THE ENGINEER, RUBBLE FROM THE EXISTING SLOPE PROTECTION MAY BE USED TO FILL UNDERMINED AREAS AND TO LEVEL THE SUBGRADE.
4. ALL WORK FOR THE RIPRAP SLOPE PROTECTION SHALL BE COMPLETED IN ACCORDANCE WITH SECTION 712 OF THE SPECIFICATIONS. STONE SHALL BE GRADATION R-4. GEOTEXTILE SHALL BE IN ACCORDANCE WITH SECTION 827.06 OF THE SPECIFICATIONS. CONCRETE FOR FLUMES SHALL BE CLASS B. ALL CONCRETE WORK SHALL BE COMPLETED IN ACCORDANCE WITH SECTION 602 OF THE SPECIFICATIONS.

REVISIONS

CHKD.

DESIGN

PREL. TRACING

M:\ 1988\ 0188305.3A\SLOPE.DGN

9/17/99 7:29:23 PM G:\PLOTTING\PS7\GCF\MYLAR_HP.cfl Raisa Gerchikova Division: STRUCTURES m:\1988\0188305.3a\slope.prf

METRIC	CONTRACT	COUNTY	FEDERAL AID PROJECT No	SHEET No	TOTAL SHEETS
	98-074-03	NEW CASTLE	EIM-N006(2)	29	45
S DWG. 28 OF 29	REHABILITATION OF BRIDGES NO. 1-675, 1-676, 1-677 & 1-678, SR-141 OVER I-95				
	MISCELLANEOUS DETAILS				

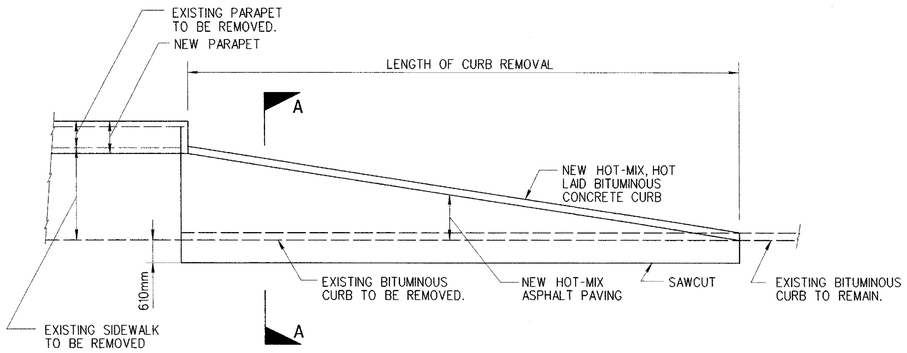

PAVEMENT RESTORATION DETAIL 'A'

HOT-MIX ASPHALT CURB ADJACENT TO HOT-MIX ASPHALT PAVEMENT
NOT TO SCALE

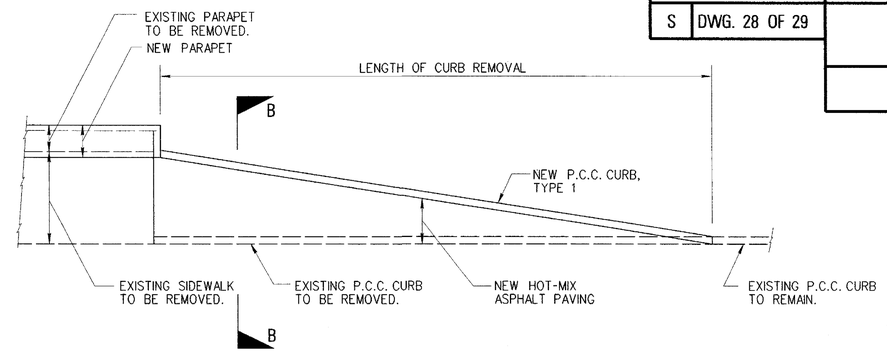

PAVEMENT RESTORATION DETAIL 'B'

P.C.C. CURB ADJACENT TO P.C.C. PAVEMENT
NOT TO SCALE

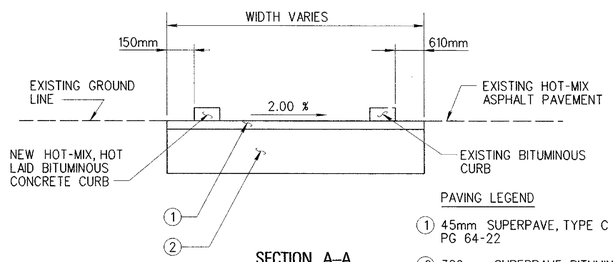

SECTION A–A

NOT TO SCALE

PAVING LEGEND

1. 45mm SUPERPAVE, TYPE C HOT-MIX 160 GYRATIONS, PG 64-22
2. 320mm SUPERPAVE, BITUMINOUS CONCRETE BASE COURSE, 160 GYRATIONS, PG 64-22

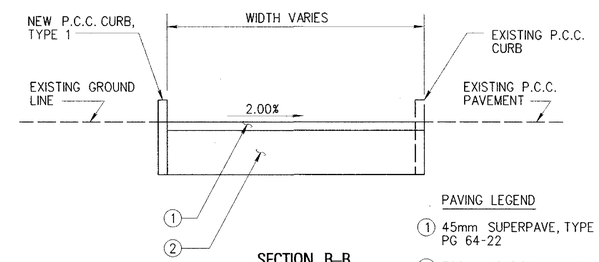

SECTION B–B

NOT TO SCALE

PAVING LEGEND

1. 45mm SUPERPAVE, TYPE C HOT-MIX 160 GYRATIONS, PG 64-22
2. 320mm SUPERPAVE, BITUMINOUS CONCRETE BASE COURSE, 160 GYRATIONS, PG 64-22

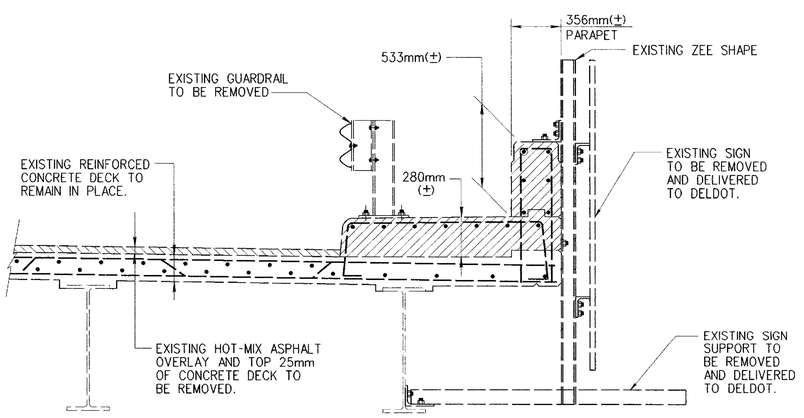

EXISTING BRIDGE MOUNTED SIGN REMOVAL

1 : 20

NOTES:

1. BOLTS AND ADHESIVE ANCHORS SHALL BE NEW AND SHALL MATCH THE TYPE, SIZE, AND LOCATION OF THE EXISTING PIECES WHICH THEY REPLACE.
2. DUE TO AN INCREASE IN THE HEIGHT OF THE PARAPET, NEW HOLES SHALL BE FIELD DRILLED IN THE ZEE SHAPE.
3. EXISTING BRIDGE RAIL NOT SHOWN FOR CLARITY.
4. COST OF REMOVAL AND REINSTALLATION OF BRIDGE MOUNTED SIGNS SHALL BE INCIDENTAL TO PAY ITEM "602604 - PRECAST CONCRETE PARAPETS".

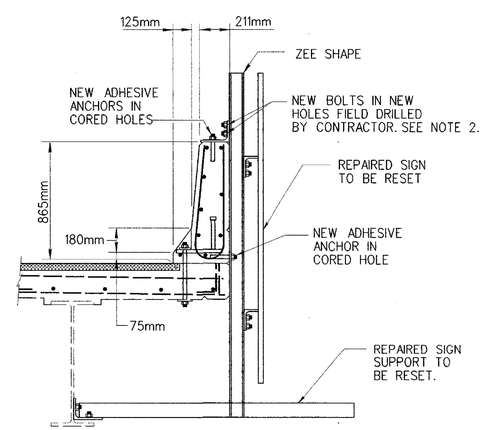

REPAIRED BRIDGE MOUNTED SIGN INSTALLATION

1 : 20

REVISIONS

CHKD.

DESIGN

PREL. TRACING

M:\8\8305.3A\SDETS06.DGN

9/17/99 7:31:33 PM G:\PLOTTING\PS7\QCF\MYLAR_HP.qcf Raisa Gerchikova Division: STRUCTURES m:\1988\018830S.3a\sdets06.prt

(1) MARK NUMBER WITH SUFFIX 'E' DENOTES EPOXY COATED REINFORCING STEEL.

(2) MARK 'LOCATION PREFIXES' ARE AS FOLLOWS: AS = APPROACH SLAB, B = PARAPET

SPECIFICATIONS					BENDING DIMENSIONS											
QTY.	SIZE	LENGTH	MARK	TYPE	A	B	C	D	E	F/R	G	H	J	K	O	REMARKS
16	16	5945	AS1601E	STR.												
16	16	6000	AS1602E	STR.												
16	16	5665	AS1603E	STR.												
16	16	6060	AS1604E	STR.												
16	16	5505	AS1605E	STR.												
206	16	1655	AS1606E	H1		655	345	655		110		100				
177	16	4240	AS1607E	2	710	3530										BEND LEG A DOWN TO SPLICE TO ADACENT BAR
41	16	VARIES 7350 TO 7835	AS1608E	STR.												
41	16	VARIES 6580 TO 8310	AS1609E	STR.												
41	16	VARIES 8025 TO 6855	AS1610E	STR.												
43	16	VARIES 5705 TO 9520	AS1611E	STR.												
41	16	VARIES 9405 TO 5680	AS1612E	STR.												
60	16	VARIES 7885 TO 7150	AS1613E	STR.		2 SETS - 30 PER SET										
177	16	4410	AS1614E	2	710	3700										BEND LEG A DOWN TO SPLICE TO ADACENT BAR
177	16	4860	AS1615E	STR.												
54	16	4125	AS1616E	2	610	3515										BEND LEG A DOWN TO SPLICE TO ADACENT BAR
54	16	4920	AS1617E	STR.												
41	16	VARIES 7450 TO 7650	AS1618E	STR.												
48	16	1130	B1650E	STR.												
64	16	2380	B1651E	STR.												
48	16	1230	B1652E	STR.												
120	16	2570	B1653E	STR.												
32	16	1350	B1654E	STR.												
136	16	2840	B1655E	STR.												
56	16	2340	B1656E	STR.												
48	16	1250	B1657E	STR.												
104	16	2590	B1658E	STR.												
48	16	1270	B1659E	STR.												
184	16	2690	B1660E	STR.												
48	16	1310	B1661E	STR.												
120	16	2730	B1662E	STR.												
16	16	1120	B1663E	STR.												
32	16	1330	B1664E	STR.												
16	16	1420	B1665E	STR.												
24	16	2900	B1666E	STR.												
40	16	2610	B1667E	STR.												
48	16	2750	B1668E	STR.												
16	16	1370	B1669E	STR.												
1363	16	1655	B1680E	H1		655	345	655		110		100				
186	16	750	B1681E	16			250	500				300	400			

REVISIONS

PREL. TRACING _____ DESIGN _____ CHKD. _____

METRIC

S | DWG. 29 OF 29

CONTRACT	COUNTY	FEDERAL AID PROJECT No	SHEET No	TOTAL SHEETS
98-074-03	NEW CASTLE	EIM-N006(2)	30	45

REHABILITATION OF BRIDGES NO. 1-675, 1-676, 1-677 & 1-678, SR-141 OVER I-95

REINFORCING STEEL – DECK PARAPETS

NOTES:

1. STANDARD BAR BENDS INCLUDE ONLY TYPES 1-32, S1-S12, AND T1-T16.
2. ALL DIMENSIONS ARE OUT-TO-OUT OF BAR EXCEPT "A" AND "G" ON STANDARD 180 °AND 135 °HOOKS.
3. "J" DIMENSIONS ON 180 °HOOKS TO BE SHOWN ONLY WHERE NECESSARY TO RESTRICT HOOK SIZE, OTHERWISE STANDARD HOOKS ARE TO BE USED.
4. WHERE "J" IS NOT SHOWN, "J" WILL BE KEPT EQUAL TO OR LESS THAN "H" ON TRUSS BARS. WHERE "J" CAN EXCEED "H", IT SHOULD BE SHOWN.
5. "H" DIMENSIONS STIRRUPS TO BE SHOWN WHERE NECESSARY TO FIT WITHIN CONCRETE.
6. UNLESS OTHERWISE NOTED, DIAMETER "D" IS THE SAME FOR ALL BENDS AND HOOKS ON A BAR.
7. WHERE SLOPE DIFFERS FROM 45 DIMENSIONS, "H" AND "K" MUST BE SHOWN.
8. WHERE BARS ARE TO BE BENT MORE ACCURATELY THAN STANDARD BENDING TOLERANCES, BENDING DIMENSIONS WHICH REQUIRE CLOSER FABRICATION SHOULD HAVE LIMITS INDICATED.
9. FIGURES IN CIRCLES SHOW TYPES.
10. FOR RECOMMENDED DIAMETER "D", OF BENDS, HOOKS, ETC., SEE 'CRSI' OR 'ACI' TABLES.
11. TYPE S1-S12, T1-T16 APPLY TO BAR SIZES #3 THROUGH #6.

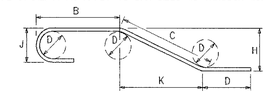

STANDARD BAR BENDS

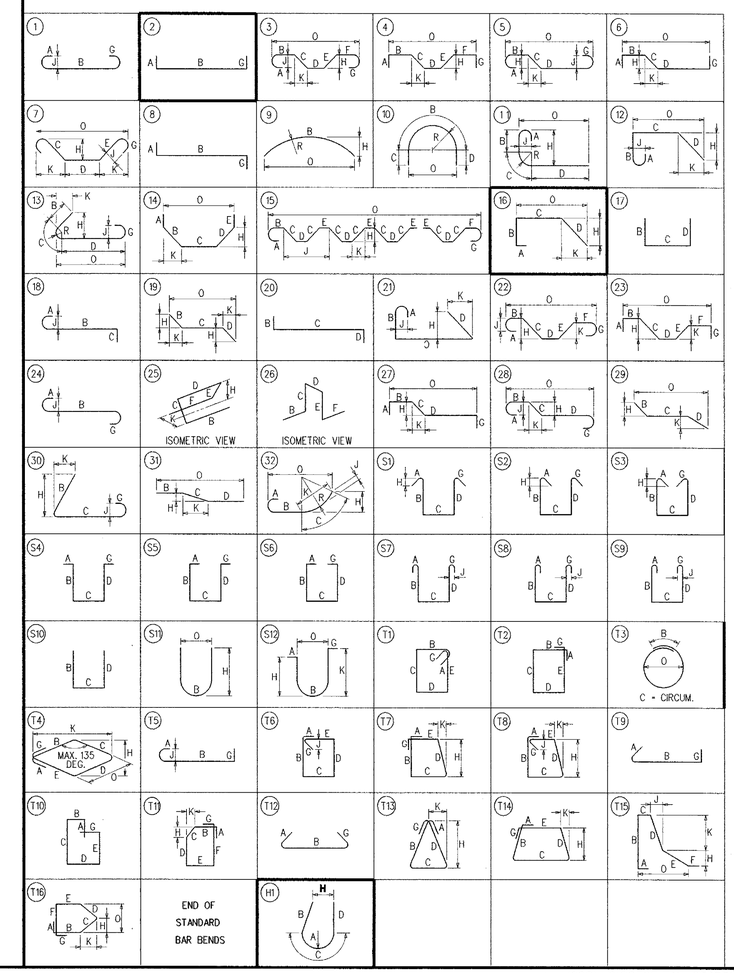

M:\ 1988\ 0188305.3A\ SBARSHT1.DGN

9/17/99 7:28:05 PM G:\PLOTTING\PS7\OCF\MYLAR_HP.pcf Raisa Gerchikova Division: STRUCTURES m:\1988\0188305.3a\sbarsht1.prf

METRIC	CONTRACT	COUNTY	FEDERAL AID PROJECT No	SHEET No	TOTAL SHEETS
	98-074-03	NEW CASTLE	EIM-N006(2)	31	45
S DWG. 1 OF 29	REHABILITATION OF BRIDGES NO. 1-675, 1-676, 1-677 & 1-678, SR-141 OVER I-95				
	UTILITY PLAN				

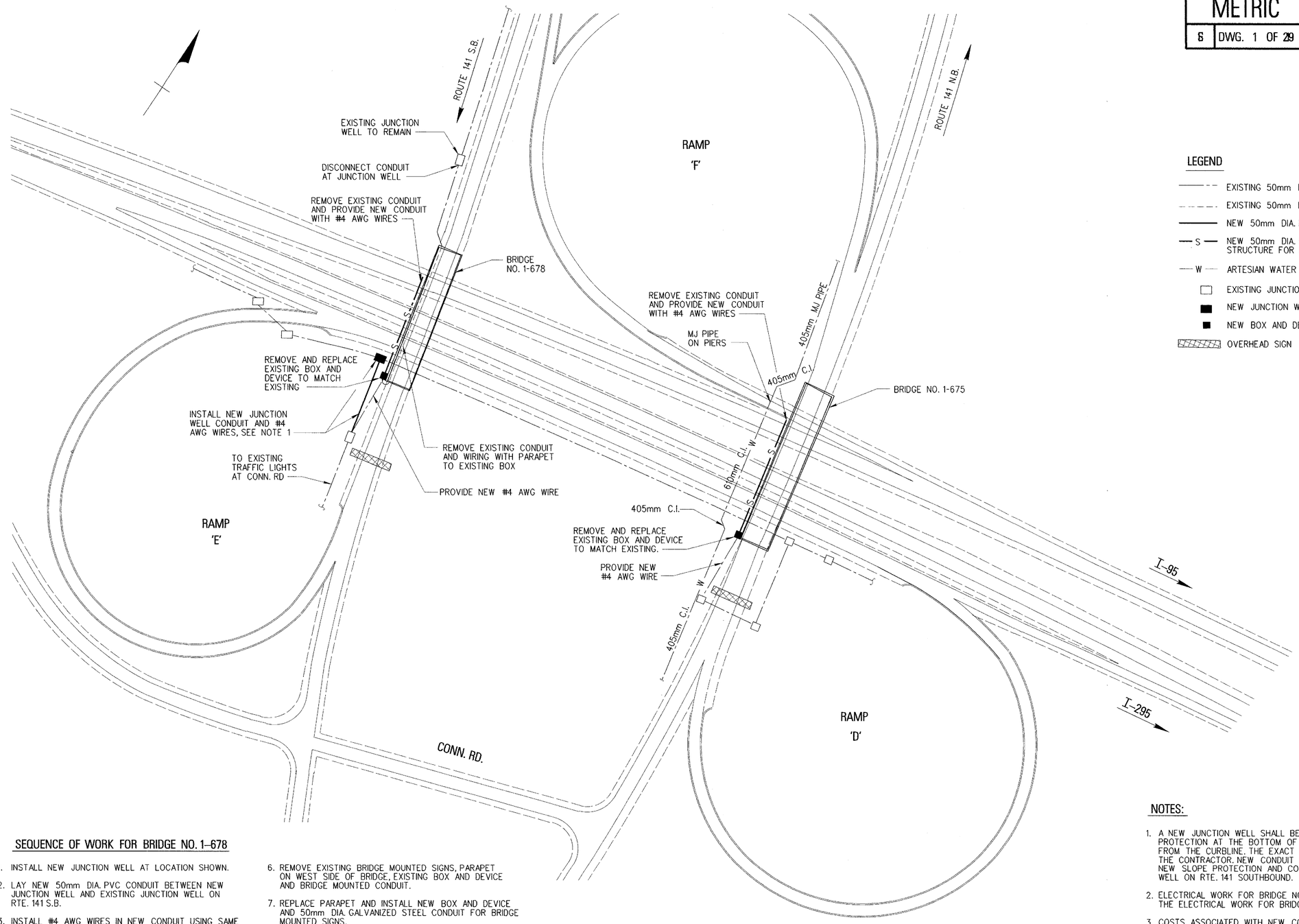

LEGEND

- EXISTING 50mm DIA. CONDUIT UNDERGROUND
- EXISTING 50mm DIA. CONDUIT IN PARAPET
- NEW 50mm DIA. PVC CONDUIT UNDERGROUND
- —S— NEW 50mm DIA. GALVANIZED STEEL CONDUIT ON BRIDGE STRUCTURE FOR BRIDGE MOUNTED SIGNS
- —W— ARTESIAN WATER LINE
- EXISTING JUNCTION WELL
- NEW JUNCTION WELL
- NEW BOX AND DEVICE
- OVERHEAD SIGN

SEQUENCE OF WORK FOR BRIDGE NO. 1-678

1. INSTALL NEW JUNCTION WELL AT LOCATION SHOWN.
2. LAY NEW 50mm DIA. PVC CONDUIT BETWEEN NEW JUNCTION WELL AND EXISTING JUNCTION WELL ON RTE. 141 S.B.
3. INSTALL #4 AWG WIRES IN NEW CONDUIT USING SAME NUMBER AS EXISTING.
4. MAKE ELECTRICAL CONNECTION TO EXISTING SYSTEM. NEW CONNECTION SHOULD SERVICE EXISTING TRAFFIC LIGHTS AT INTERSECTION OF RTE 141 S.B. AND CONN. RD.
5. DISCONNECT EXISTING CONDUIT ON RTE 141 S.B. AT FIRST JUNCTION WELL NORTH OF BRIDGE.
6. REMOVE EXISTING BRIDGE MOUNTED SIGNS, PARAPET ON WEST SIDE OF BRIDGE, EXISTING BOX AND DEVICE AND BRIDGE MOUNTED CONDUIT.
7. REPLACE PARAPET AND INSTALL NEW BOX AND DEVICE AND 50mm DIA. GALVANIZED STEEL CONDUIT FOR BRIDGE MOUNTED SIGNS.
8. INSTALL BRIDGE MOUNTED SIGNS.
9. INSTALL #4 AWG WIRES IN NEW CONDUIT USING THE SAME NUMBER AS EXISTING AND MAKE ELECTRICAL CONNECTION TO EXISTING SYSTEM.

UTILITY PLAN
NOT TO SCALE

NOTES:

1. A NEW JUNCTION WELL SHALL BE INSTALLED WEST OF THE NEW SLOPE PROTECTION AT THE BOTTOM OF THE SLOPE APPROXIMATELY 1.5m FROM THE CURBLINE. THE EXACT LOCATION SHALL BE DETERMINED BY THE CONTRACTOR. NEW CONDUIT SHALL BE LAID PARALLEL TO THE NEW SLOPE PROTECTION AND CONNECTED TO THE EXISTING JUNCTION WELL ON RTE. 141 SOUTHBOUND.
2. ELECTRICAL WORK FOR BRIDGE NO. 1-675 MAY BE DONE BEFORE OR AFTER THE ELECTRICAL WORK FOR BRIDGE NO. 1-678.
3. COSTS ASSOCIATED WITH NEW CONDUITS, JUNCTION WELL AND WIRING TO BE PAID FOR UNDER THEIR RESPECTIVE PAY ITEMS. DISCONNECTING CONDUIT AT JUNCTION WELL, REMOVAL OF WIRING IN PARAPET AND REMOVAL OF EXISTING BOXES AND CONDUIT TO BE INCIDENTAL TO PAY ITEM "602580 - PARTIAL REMOVAL OF P.C.C. MASONRY."

REVISIONS

PREL. TRACING ____ DESIGN ____ CHK'D. ____

M:\1988\0188305.3A\UTILITY.DGN

9/17/99 8:16:09 PM G:\PLOTTING\PS7\OCF\MYLAR_HP.cfg Raisa Gerchikova Division: STRUCTURES m:\1988\0188305.3a\utility.prt

METRIC		CONTRACT	COUNTY	FEDERAL AID PROJECT No	SHEET No	TOTAL SHEETS
		98-074-03	NEW CASTLE	EIM-N006(2)	32	45
MT	DWG. 1 OF 12	REHABILITATION OF BRIDGES NO. 1-675, 1-676, 1-677 & 1-678, SR-141 OVER I-95				
		MAINTENANCE OF TRAFFIC – NOTES				

GENERAL NOTES

1. ALL TRAFFIC CONTROL DEVICES AND PRACTICES SHALL CONFORM WITH THE GUIDELINES OF THE MANUAL ON UNIFORM TRAFFIC CONTROL DEVICES (LATEST REVISION) AND THE DELAWARE DEPARTMENT OF TRANSPORTATION "TRAFFIC CONTROL STANDARDS FOR STREETS AND HIGHWAY CONSTRUCTION, MAINTENANCE, UTILITY AND EMERGENCY OPERATIONS" (LATEST EDITION).

2. THE MAINTENANCE OF TRAFFIC PLAN DEPICTS THE MINIMUM TRAFFIC CONTROLS REQUIRED DURING CONSTRUCTION. ADDITIONAL DEVICES OR THE ADJUSTMENT OF THE LOCATION OF DEVICES SHALL BE INCORPORATED AS DIRECTED BY THE ENGINEER.

3. THE CONTRACTOR SHALL HAVE AN ATSSA CERTIFIED WORK SITE SUPERVISOR ON SITE AT ALL TIMES OF ACTIVE WORK. AN EMERGENCY TELEPHONE NUMBER FOR THE WORK SITE SUPERVISOR SHALL BE PROVIDED TO THE ENGINEER. THE CONTRACTOR SHALL PROVIDE THE NAME AND TELEPHONE NUMBER OF THE WORK SITE SUPERVISOR TO THE ENGINEER AT LEAST TWO WEEKS PRIOR TO INSTALLING THE CONSTRUCTION TRAFFIC CONTROL DEVICES. THE ATSSA CERTIFIED WORK SITE SUPERVISOR SHALL NOT BE THE PROJECT SUPERINTENDENT, FOREMAN, EQUIPMENT OPERATOR, WORKER OR OTHER PERSON THAT WILL BE PERFORMING OTHER WORK OR HAVE OTHER RESPONSIBILITIES ON THE PROJECT.

4. ALL WORKERS SHALL WEAR A RETRO-RELECTORIZED SAFETY VEST DURING NIGHT WORK OPERATIONS.

5. MESSAGE BOARDS ON S.R. 141 AND I-95/I-295 SHALL BE LOCATED AND DISPLAY MESSAGES AS DIRECTED BY THE ENGINEER. MESSAGE BOARDS SHALL BE INSTALLED AND OPERATIONAL FIVE DAYS PRIOR TO THE START OF CONSTRUCTION, FIVE DAYS PRIOR TO CHANGING CONSTRUCTION STAGES, AND OTHER TIMES AS DIRECTED BY THE ENGINEER.

6. TEMPORARY LANE OR SHOULDER CLOSURES ON ALL ROADS ARE LIMITED TO 9:00 AM TO 3:00 PM AND 6:00 PM TO 6:00 AM. DAILY.

7. AS NOTED IN THE STRUCTURE DRAWINGS, EXISTING GUIDE SIGNS MOUNTED TO BRIDGE I-675 AND BRIDGE I-678 WILL NEED TO BE REMOVED DURING CONSTRUCTION OPERATIONS ON THE WEST PARAPETS OF THESE BRIDGES. THE CONTRACTOR SHALL NOT REMOVE THE EXISTING GUIDE SIGNS FROM BOTH BRIDGES AT THE SAME TIME.

8. ALL VEHICLES, EQUIPMENT AND WORKERS WITHIN 30 FEET OF A TRAVEL LANE ARE RESTRICTED TO ONE SIDE OF THE ROADWAY.

9. IN THE EVENT THAT ADJACENT CONSTRUCTION PROJECTS OCCUR SIMULTANEOUSLY WITH THIS PROJECT, COORDINATION OF THE MAINTENANCE OF TRAFFIC PLANS FOR EACH PROJECT WILL BE REQUIRED. SPECIFICALLY, THE LOCATION OF OVERLAPPING ADVANCE WARNING SIGNS WILL NEED TO BE ADJUSTED.

10. SHEETING ON ALL ORANGE AND BLACK SIGNS SHALL BE RETRO-REFLECTIVE FLORESCENT ORANGE (DIAMOND GRADE). TYPE B' WARNING LIGHTS SHALL BE OMITTED FROM SIGNS MEETING THIS RETRO-REFLECTIVITY REQUIREMENT. HOWEVER, ALL TEMPORARY "STOP AHEAD" SIGNS SHALL INCLUDE AN AMBER TYPE B' WARNING LIGHT.

11. ALL TRAFFIC CONTROL DEVICES SHALL BE NEW OR REFURBISHED TO "LIKE NEW" CONDITION.

12. COVER EXISTING CONFLICTING PAVEMENT MARKINGS WITH BLACK OUT TAPE. INSTALL TEMPORARY PAVEMENT MARKING TAPE AS INDICATED ON THE PLANS. TEMPORARY PAVEMENT MARKINGS, INCLUDING THE BLACK OUT TAPE, SHALL BE INSPECTED DAILY BY THE ATSSA CERTIFIED WORK SITE SUPERVISOR AND RESTORED AS NECESSARY TO THE SATISFACTION OF THE ENGINEER.

SEQUENCE OF CONSTRUCTION

STAGE I

1. INSTALL MESSAGE BOARDS.

2. INSTALL ADVANCE WARNING SIGNS INCLUDING MODIFICATIONS TO EXISTING OVERHEAD GUIDE SIGNS ON S.R. 141.

3. INSTALL PORTABLE P.C.C. SAFETY BARRIER WITH CRASH CUSHIONS. INSTALL PLASTIC DRUMS. INSTALL TEMPORARY PAVEMENT MARKINGS AND TIE TO EXISTING PAVEMENT MARKINGS. SPECIAL ATTENTION MUST BE GIVEN TO DELINEATING A SMOOTH PATH FOR TRAFFIC TO AND FROM THE RAMPS ON S.R. 141. INSTALL BLACK OUT TAPE ON CONFLICTING PAVEMENT MARKINGS.

4. COMPLETE CONSTRUCTION ON THE RIGHT SIDE OF BRIDGES I-675, I-676, I-677 AND I-678 AS SHOWN ON THE PLANS.

STAGE II

1. INSTALL MESSAGE BOARDS.

2. INSTALL ADVANCE WARNING SIGNS INCLUDING MODIFICATIONS TO EXISTING OVERHEAD GUIDE SIGNS ON S.R. 141 AND DETOUR SIGNS FOR THE CLOSURE OF RAMP L'.

3. RELOCATE PORTABLE P.C.C. SAFETY BARRIER, INSTALL NEW PORTABLE P.C.C. SAFETY BARRIER, AND CRASH CUSHIONS. INSTALL TEMPORARY PAVEMENT MARKINGS AND TIE TO EXISTING PAVEMENT MARKINGS. SPECIAL ATTENTION MUST BE GIVEN TO DELINEATING A SMOOTH PATH FOR TRAFFIC TO AND FROM THE RAMPS ON S.R. 141. INSTALL BLACK OUT TAPE ON CONFLICTING PAVEMENT MARKINGS.

4. COMPLETE CONSTRUCTION ON THE CENTER OF BRIDGES I-675, I-676, AND I-677 AND THE LEFT SIDE OF BRIDGE I-678 AS SHOWN ON THE PLANS.

STAGE III

1. INSTALL MESSAGE BOARDS.

2. INSTALL ADVANCE WARNING SIGNS INCLUDING MODIFICATIONS TO EXISTING OVERHEAD GUIDE SIGNS ON S.R. 141.

3. RELOCATE PORTABLE P.C.C. SAFETY BARRIER AND CRASH CUSHIONS. INSTALL TEMPORARY PAVEMENT MARKINGS AND TIE TO EXISTING PAVEMENT MARKINGS. SPECIAL ATTENTION MUST BE GIVEN TO DELINEATING A SMOOTH PATH FOR TRAFFIC TO AND FROM THE RAMPS ON S.R. 141. INSTALL BLACK OUT TAPE ON CONFLICTING PAVEMENT MARKINGS.

4. COMPLETE CONSTRUCTION ON THE LEFT SIDE OF BRIDGES I-675, I-676, AND I-677 AS SHOWN ON THE PLANS.

5. REMOVE BLACK OUT TAPE FROM EXISTING PAVEMENT MARKINGS AND REMOVE TEMPORARY PAVEMENT MARKINGS. INSTALL PERMANENT PAVEMENT MARKINGS ON EDGE LINES AND LANE LINES ON THE FOUR BRIDGES AND IN THE AREA OF CURB REPLACEMENT AND PAVEMENT RESTORATION IN THE SAME LOCATION AS THE EXISTING PAVEMENT MARKINGS.

OTHER CONSTRUCTION

1. CONSTRUCTION ON THE ABUTMENTS, PIERS, STEEL MEMBERS AND SLOPE PROTECTION MAY TAKE PLACE AT ANY TIME UPON APPROVAL BY THE ENGINEER.

2. CLOSURE OF SHOULDERS ON I-95, I-295 AND THE COLLECTOR-DISTRIBUTOR ROADS ARE RESTRICTED TO THE TIMES NOTED IN THE GENERAL NOTES. INSTALL TRAFFIC CONTROL DEVICES IN ACCORDANCE WITH CASE 27 FROM THE DELAWARE DEPARTMENT OF TRANSPORTATION "TRAFFIC CONTROL STANDARDS FOR STREETS AND HIGHWAY CONSTRUCTION, MAINTENANCE, UTILITY AND EMERGENCY OPERATIONS".

3. CLOSURE OF LANES ON I-95, I-295 AND THE COLLECTOR-DISTRIBUTOR ROADS ARE RESTRICTED TO THE TIMES NOTED IN THE GENERAL NOTES. INSTALL TRAFFIC CONTROL DEVICES IN ACCORDANCE WITH CASE 26 MODIFIED (FOR LEFT OR RIGHT LANE CLOSURES) AND CASE 25 (FOR CENTER LANE CLOSURES) FROM THE DELAWARE DEPARTMENT OF TRANSPORTATION "TRAFFIC CONTROL STANDARDS FOR STREETS AND HIGHWAY CONSTRUCTION, MAINTENANCE, UTILITY AND EMERGENCY OPERATIONS".

4. WHEN CONTAINMENT EQUIPMENT FOR THE REMOVAL OF LEAD PAINT IS PRESENT, CASE 27 SHALL BE MODIFIED TO INCLUDE PORTABLE P.C.C. SAFETY BARRIER WITH END PROTECTION.

REVISIONS

PREL. TRACING RLB DESIGN JFL CHKD. JFL

9/14/99 10:01:03 AM G:\PLOTTING\PS7\OCF\MYLAR_HP.dcf Gina DeJong Division: TRANSPORTATION m:\1988\01883053a\traffic\note141.prt

METRIC					
MT	DWG. 2 OF 12	CONTRACT	COUNTY	FEDERAL AID PROJECT No	SHEET No	TOTAL SHEETS
		98-074-03	NEW CASTLE	EIM-N006(2)	33	45

SCALE: 1:1000

REHABILITATION OF BRIDGES
NO. 1-675, 1-676, 1-677 & 1-678,
SR-141 OVER I-95

MAINTENANCE OF TRAFFIC – STAGE I

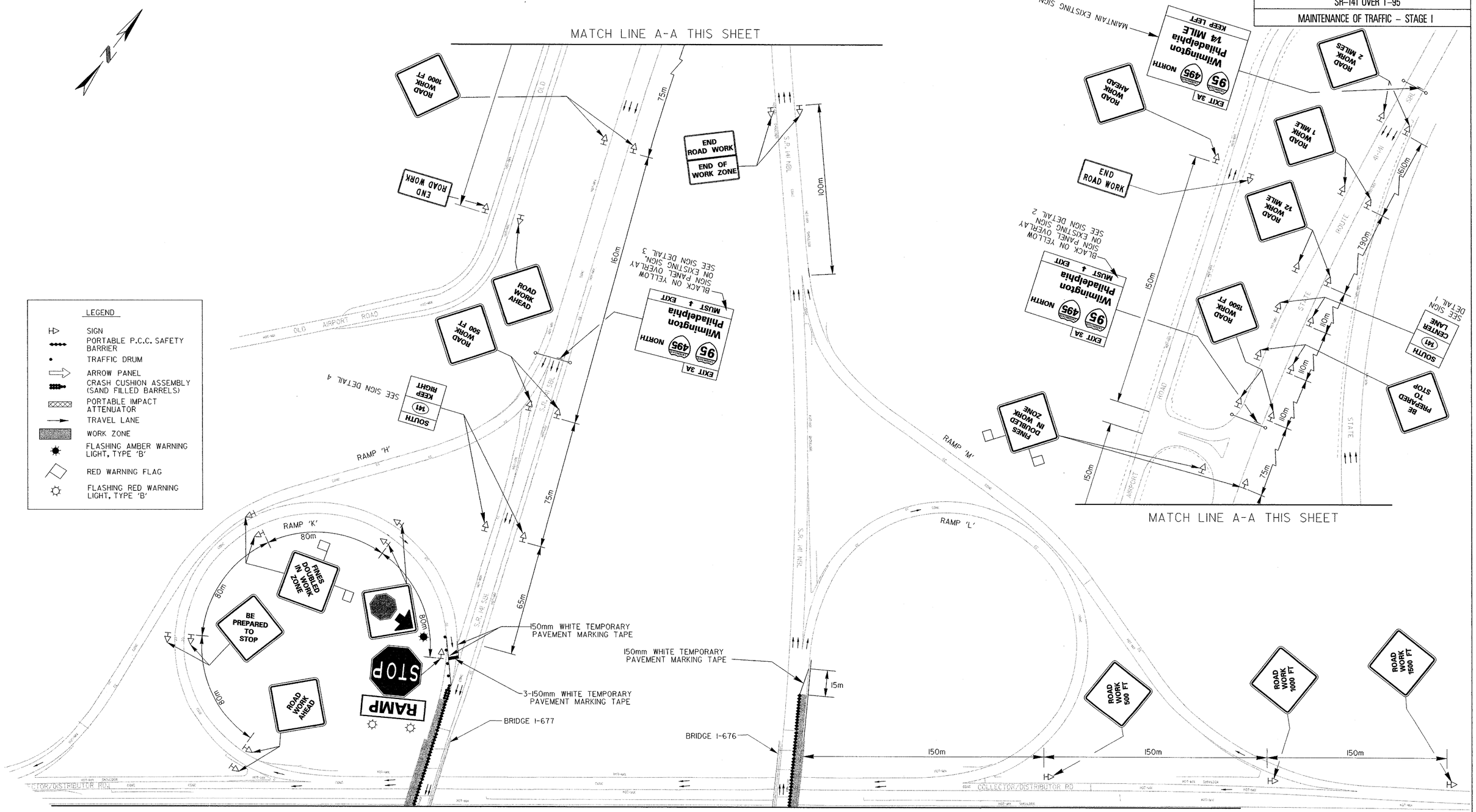

MATCH LINE SEE SHEET MT-3

REVISIONS

PREL. TRACING RLB DESIGN JFL CHKD. JFL

9/14/99 12:16:05 PM G:\PLOTTING\PS7\OCP\MYLAR_HP.pdf Gina DeJong Division: TRANSPORTATION m:\1988\0188305.3a\manassas\sn03d41.prt

METRIC					
MT	DWG. 3 OF 12	CONTRACT	COUNTY	FEDERAL AID PROJECT No	SHEET No	TOTAL SHEETS
		98-074-03	NEW CASTLE	EIM-N006(2)	34	45

REHABILITATION OF BRIDGES
NO. 1-675, 1-676, 1-677 & 1-678,
SR-141 OVER I-95

MAINTENANCE OF TRAFFIC - STAGE I

SCALE: 1:1000

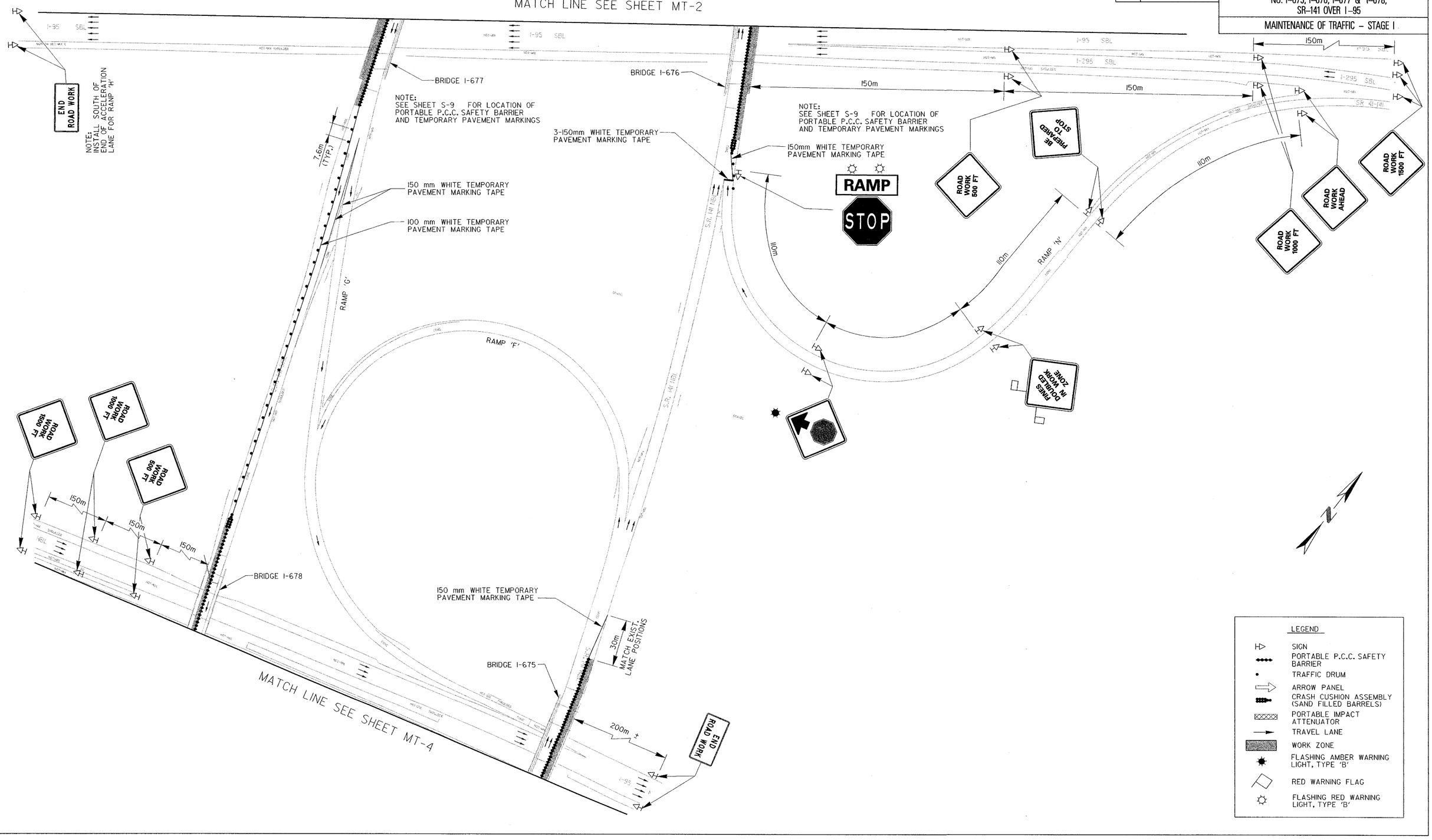

LEGEND

- SIGN
- PORTABLE P.C.C. SAFETY BARRIER
- TRAFFIC DRUM
- ARROW PANEL
- CRASH CUSHION ASSEMBLY (SAND FILLED BARRELS)
- PORTABLE IMPACT ATTENUATOR
- TRAVEL LANE
- WORK ZONE
- FLASHING AMBER WARNING LIGHT, TYPE 'B'
- RED WARNING FLAG
- FLASHING RED WARNING LIGHT, TYPE 'B'

REVISIONS

PREL. TRACING RLB DESIGN JFL CHKD. JFL

9/14/99 10:06:22 AM G:\PLOTTING\PS7\OCF\MYLAR_HP.dgf Gina DeJong Division: TRANSPORTATION m:\1988\0188305.3a\traffic\sn02i41.prt

METRIC		CONTRACT	COUNTY	FEDERAL AID PROJECT No	SHEET No	TOTAL SHEETS
MT	DWG. 4 OF 12	98-074-03	NEW CASTLE	EIM-N006(2)	35	45

SCALE: 1:1000

REHABILITATION OF BRIDGES
NO. 1-675, 1-676, 1-677 & 1-678,
SR-141 OVER I-95

MAINTENANCE OF TRAFFIC – STAGE I

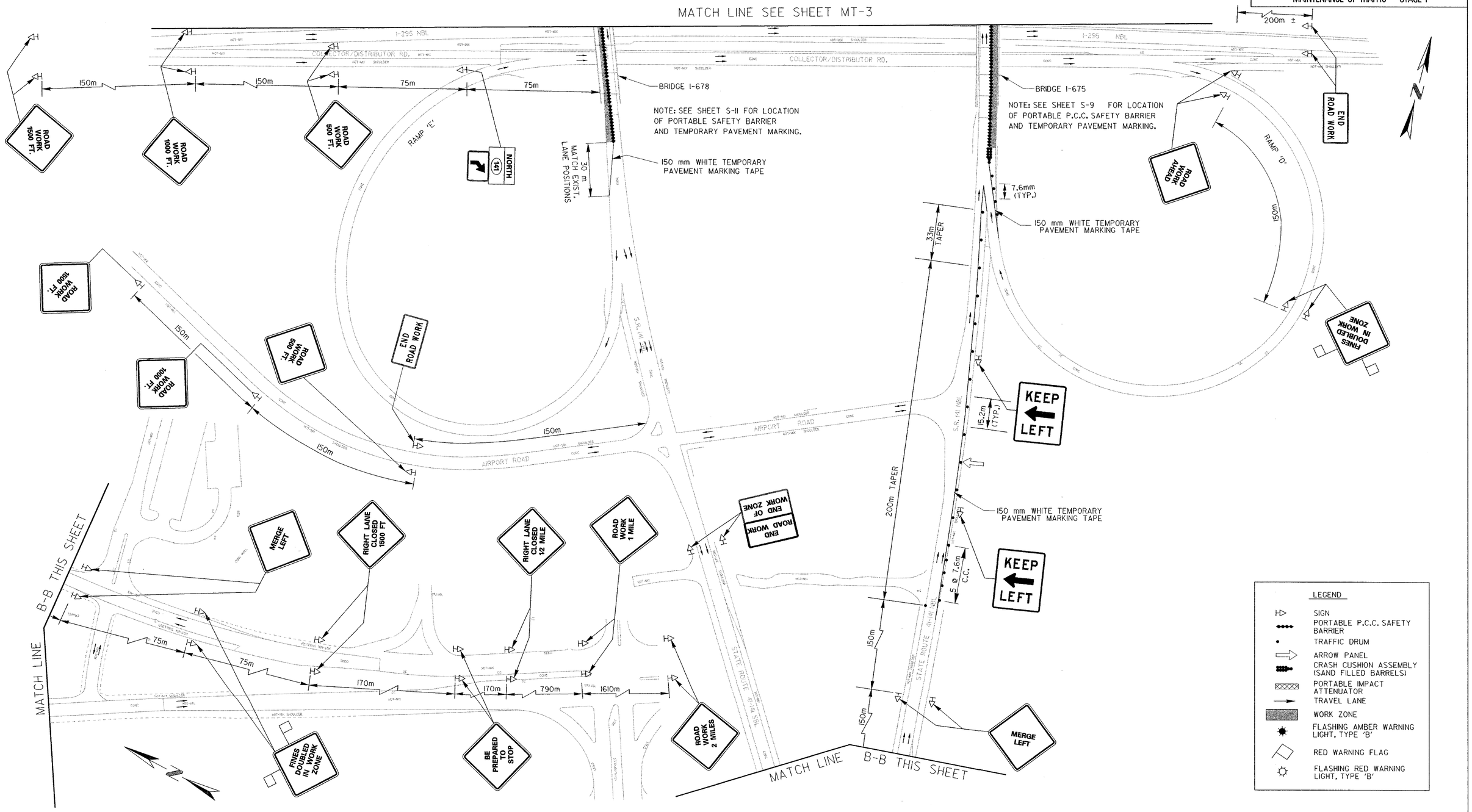

REVISIONS

PREL. TRACING RLB DESIGN JFL CHKD. JFL

9/14/99 10:08:09 AM G:\PLOTTING\PS7\QCF\MYLAR_HP.qcf Gina DeJong Division: TRANSPORTATION m:\1988\0188305.3a\manassas\snold41.prt

METRIC	CONTRACT	COUNTY	FEDERAL AID PROJECT No	SHEET No	TOTAL SHEETS
	98-074-03	NEW CASTLE	EIM-N006(2)	36	45
MT DWG. 5 OF 12	REHABILITATION OF BRIDGES NO. 1-675, 1-676, 1-677 & 1-678, SR-141 OVER I-95				
	MAINTENANCE OF TRAFFIC - STAGE II				

SCALE: 1:1000

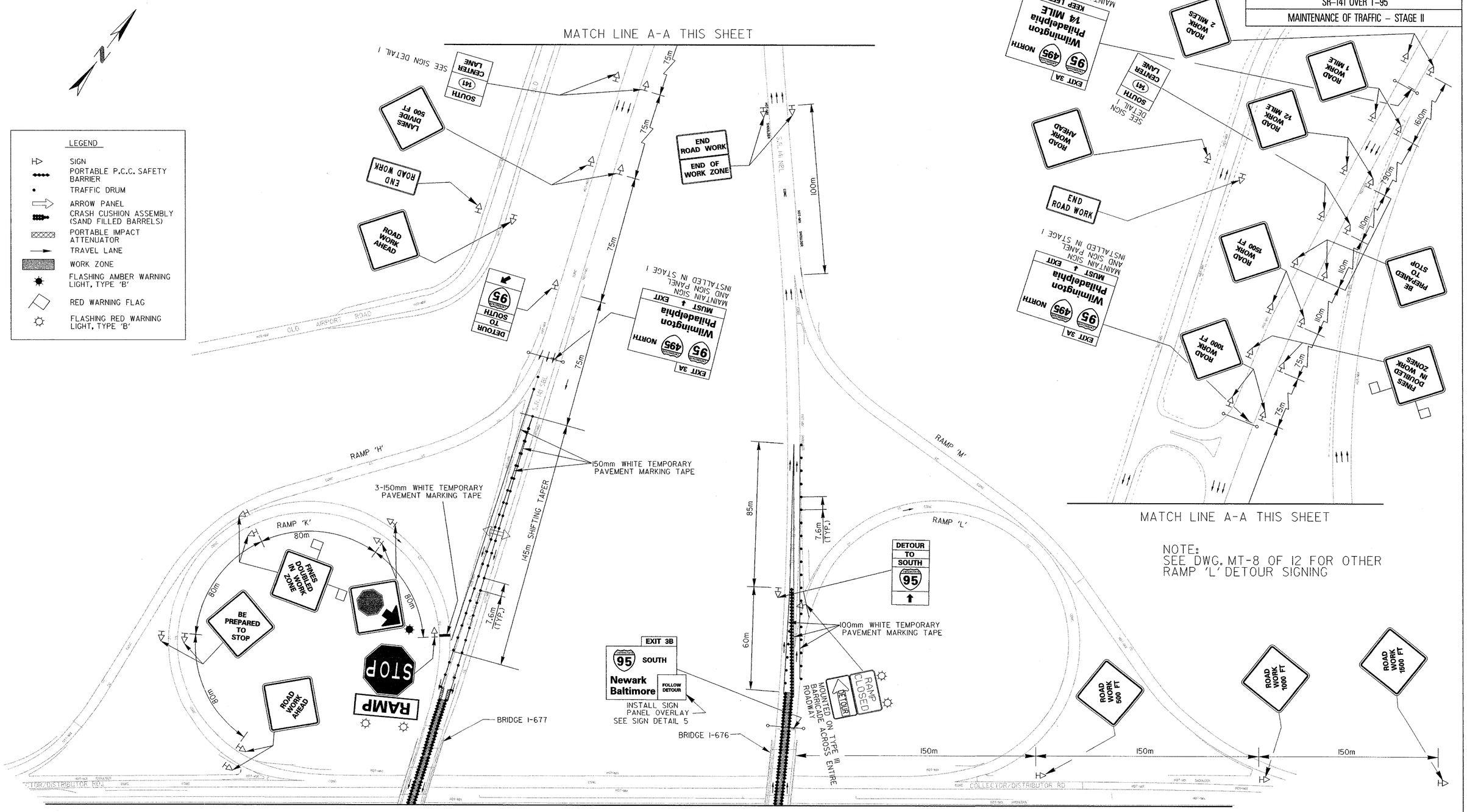

REVISIONS

PREL. TRACING RLB DESIGN JFL CHKD. JFL

9/14/99 11:56:20 AM G:\PLOTTING\PS7\OCP\MYLAR_HP.opt Gina DeJong Division: TRANSPORTATION m:\1988\0188305.3a\manassas\sn06d41.prt

METRIC		CONTRACT	COUNTY	FEDERAL AID PROJECT No	SHEET No	TOTAL SHEETS
MT	DWG. 6 OF 12	98-074-03	NEW CASTLE	EIM-N006(2)	37	45

SCALE: 1:1000

REHABILITATION OF BRIDGES
NO. 1-675, 1-676, 1-677 & 1-678,
SR-141 OVER I-95

MAINTENANCE OF TRAFFIC – STAGE II

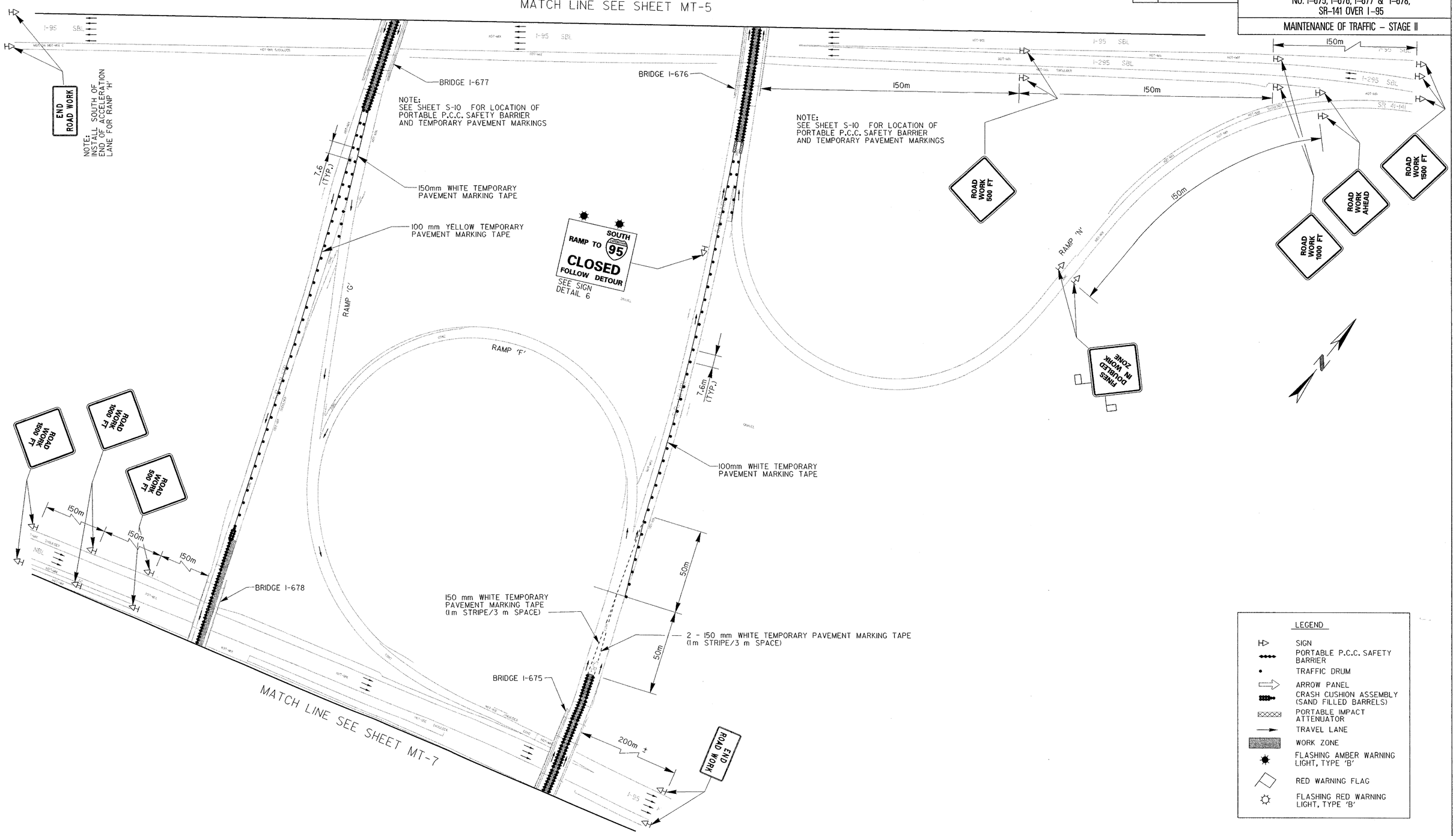

REVISIONS

PREL. TRACING RLB DESIGN JFL CHKD. JFL

9/14/99 10:11:47 AM G:\PLOTTING\PS7\OCP\MYLAR_HP.pcf Gina DeJong Division: TRANSPORTATION m:\1988\0188305.3a\traffic\sn05414i.prf

METRIC		CONTRACT	COUNTY	FEDERAL AID PROJECT No	SHEET No	TOTAL SHEETS
		98-074-03	NEW CASTLE	EIM-N006(2)	38	45
MT	DWG. 7 OF 12	REHABILITATION OF BRIDGES NO. 1-675, 1-676, 1-677 & 1-678, SR-141 OVER I-95				
		MAINTENANCE OF TRAFFIC – STAGE II				

SCALE: 1:1000

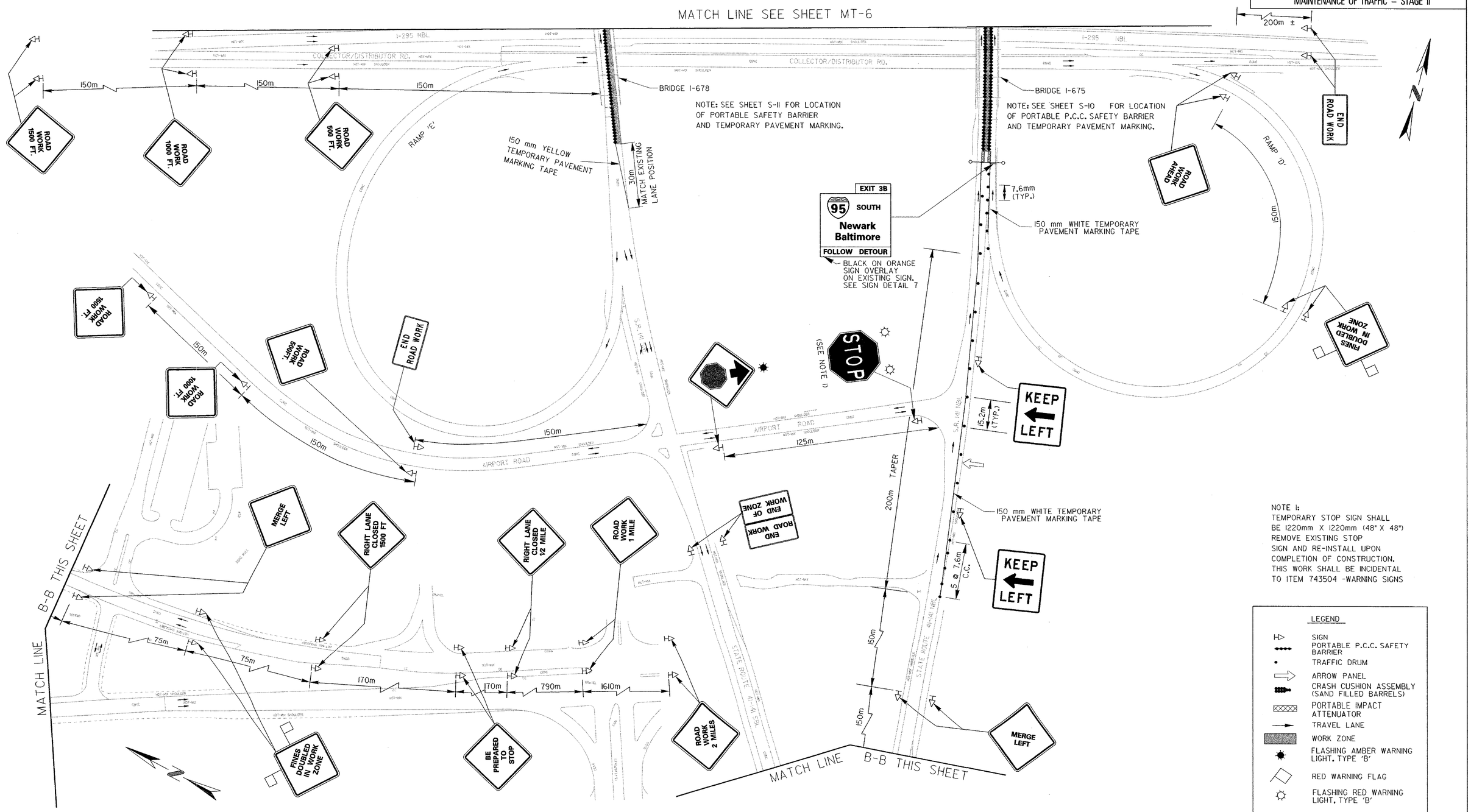

NOTE 1:
TEMPORARY STOP SIGN SHALL BE 1220mm X 1220mm (48" X 48") REMOVE EXISTING STOP SIGN AND RE-INSTALL UPON COMPLETION OF CONSTRUCTION. THIS WORK SHALL BE INCIDENTAL TO ITEM 743504 -WARNING SIGNS

LEGEND

- SIGN
- PORTABLE P.C.C. SAFETY BARRIER
- TRAFFIC DRUM
- ARROW PANEL
- CRASH CUSHION ASSEMBLY (SAND FILLED BARRELS)
- PORTABLE IMPACT ATTENUATOR
- TRAVEL LANE
- WORK ZONE
- FLASHING AMBER WARNING LIGHT, TYPE 'B'
- RED WARNING FLAG
- FLASHING RED WARNING LIGHT, TYPE 'B'

REVISIONS

PREL. TRACING RLB DESIGN JFL CHKD. JFL

9/14/99 10:14:26 AM G:\PLOTTING\PS7\OCP\MYLAR_HP.dgt Gina Delong Division: TRANSPORTATION m:\1988\0188305.3a\manassas\sn04d41.prf

METRIC	CONTRACT	COUNTY	FEDERAL AID PROJECT No	SHEET No	TOTAL SHEETS
	98-074-03	NEW CASTLE	EIM-N006(2)	39	45
MT DWG. 8 OF 12	REHABILITATION OF BRIDGES NO. 1-675, 1-676, 1-677 & 1-678, SR-141 OVER I-95				
	MAINTENANCE OF TRAFFIC – STAGE II				

SIGN DESIGNATION	SIGN PANEL
A	DETOUR TO SOUTH INTERSTATE 95 ⇧
B	DETOUR TO SOUTH INTERSTATE 95 ⇗
C	DETOUR TO SOUTH INTERSTATE 95 ⇗
D	DETOUR TO SOUTH INTERSTATE 95 ⇦
E	DETOUR TO SOUTH INTERSTATE 95 ⇦
F	DETOUR TO SOUTH INTERSTATE 95 ⇖
G	DETOUR TO SOUTH INTERSTATE 95 ⇖

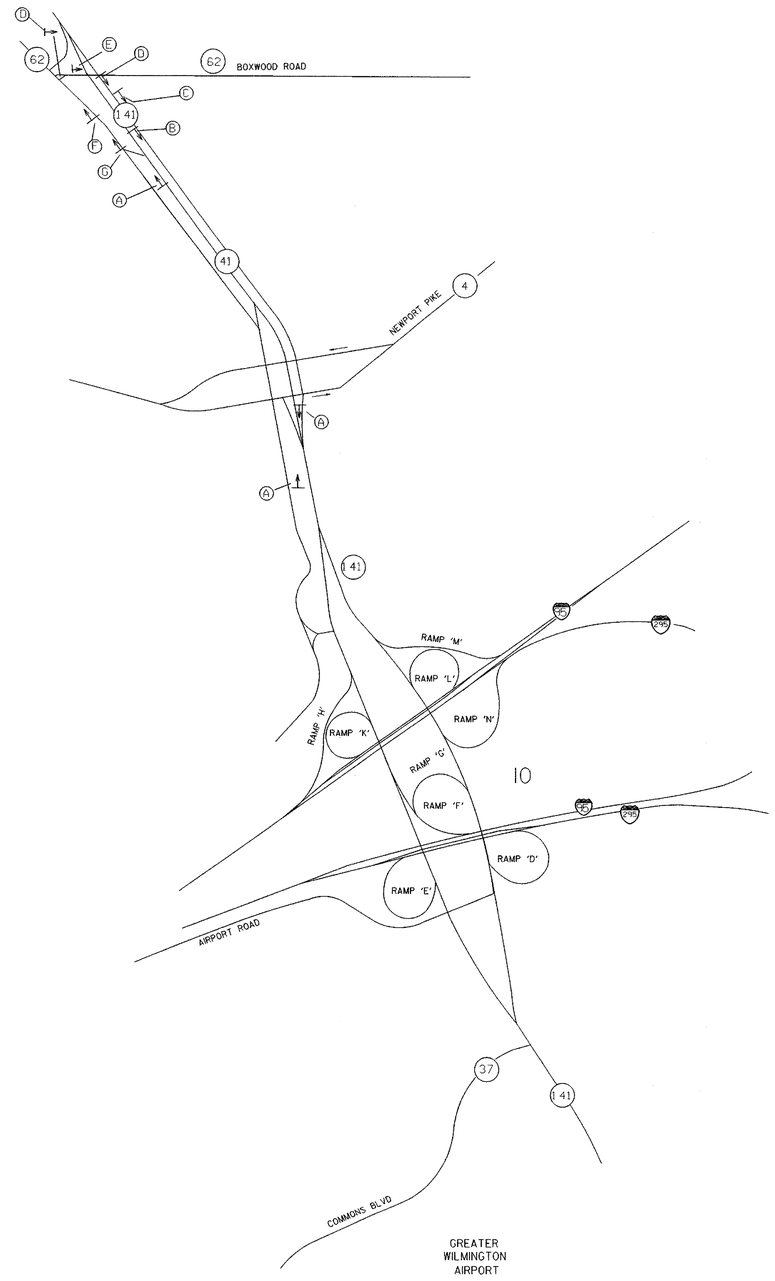

RAMP 'L' DETOUR
NOT TO SCALE

REVISIONS

PREL. TRACING R.L.B. DESIGN JFL CHKD. JFL

ZFAIR15J1 REVISION

9/14/99 10:15:30 AM G:\PLOTTING\PS7\OCP\MYLAR_HP.dgf Gina DeJong Division: TRANSPORTATION m:\1988\0188305.3a\manassas\detour.prf

METRIC		CONTRACT	COUNTY	FEDERAL AID PROJECT No	SHEET No	TOTAL SHEETS
MT	DWG. 9 OF 12	98-074-03	NEW CASTLE	EIM-N006(2)	40	45

SCALE: 1:1000

REHABILITATION OF BRIDGES
NO. 1-675, 1-676, 1-677 & 1-678,
SR-141 OVER I-95

MAINTENANCE OF TRAFFIC – STAGE III

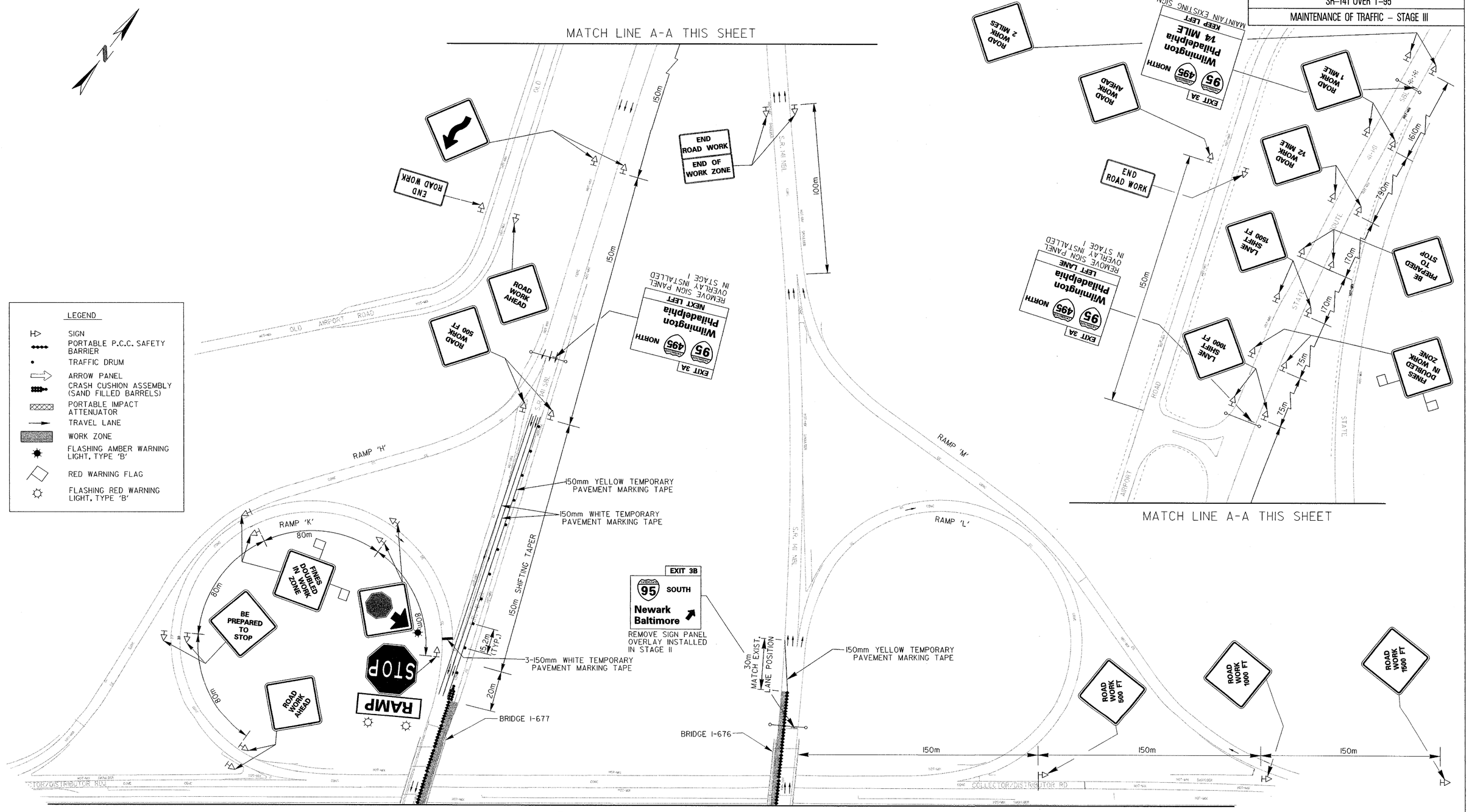

REVISIONS

PREL. TRACING RLB DESIGN JFL CHKD. JFL

9/14/99 10:16:36 AM G:\PLOTTING\PS7\OCP\MYLAR_HP.dgn Gina DeJong Division: TRANSPORTATION m:\1988\01883053a\manassas\sn0941.prt

METRIC					
MT	DWG. 10 OF 12	CONTRACT	COUNTY	FEDERAL AID PROJECT No	SHEET No	TOTAL SHEETS
		98-074-03	NEW CASTLE	EIM-N006(2)	41	45

REHABILITATION OF BRIDGES
NO. 1-675, 1-676, 1-677 & 1-678,
SR-141 OVER I-95

MAINTENANCE OF TRAFFIC – STAGE III

SCALE: 1:1000

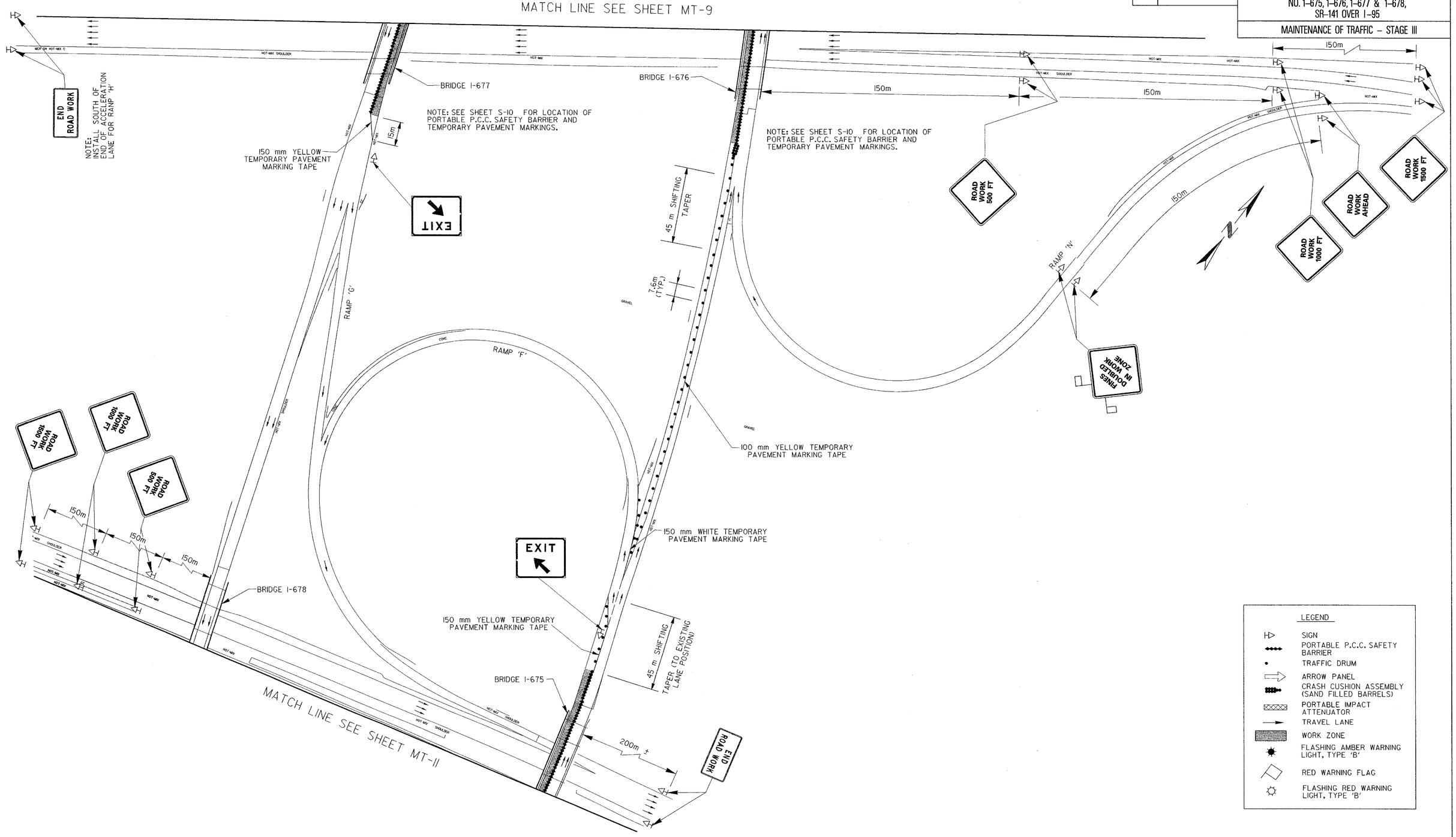

REVISIONS

PREL. TRACING RLB DESIGN JFL CHKD. JFL

METRIC		CONTRACT	COUNTY	FEDERAL AID PROJECT No	SHEET No	TOTAL SHEETS
SCALE: 1:1000	MT DWG. 11 OF 12	98-074-03	NEW CASTLE	EIM-N006(2)	42	45

REHABILITATION OF BRIDGES
NO. 1-675, 1-676, 1-677 & 1-678,
SR-141 OVER I-95

MAINTENANCE OF TRAFFIC – STAGE III

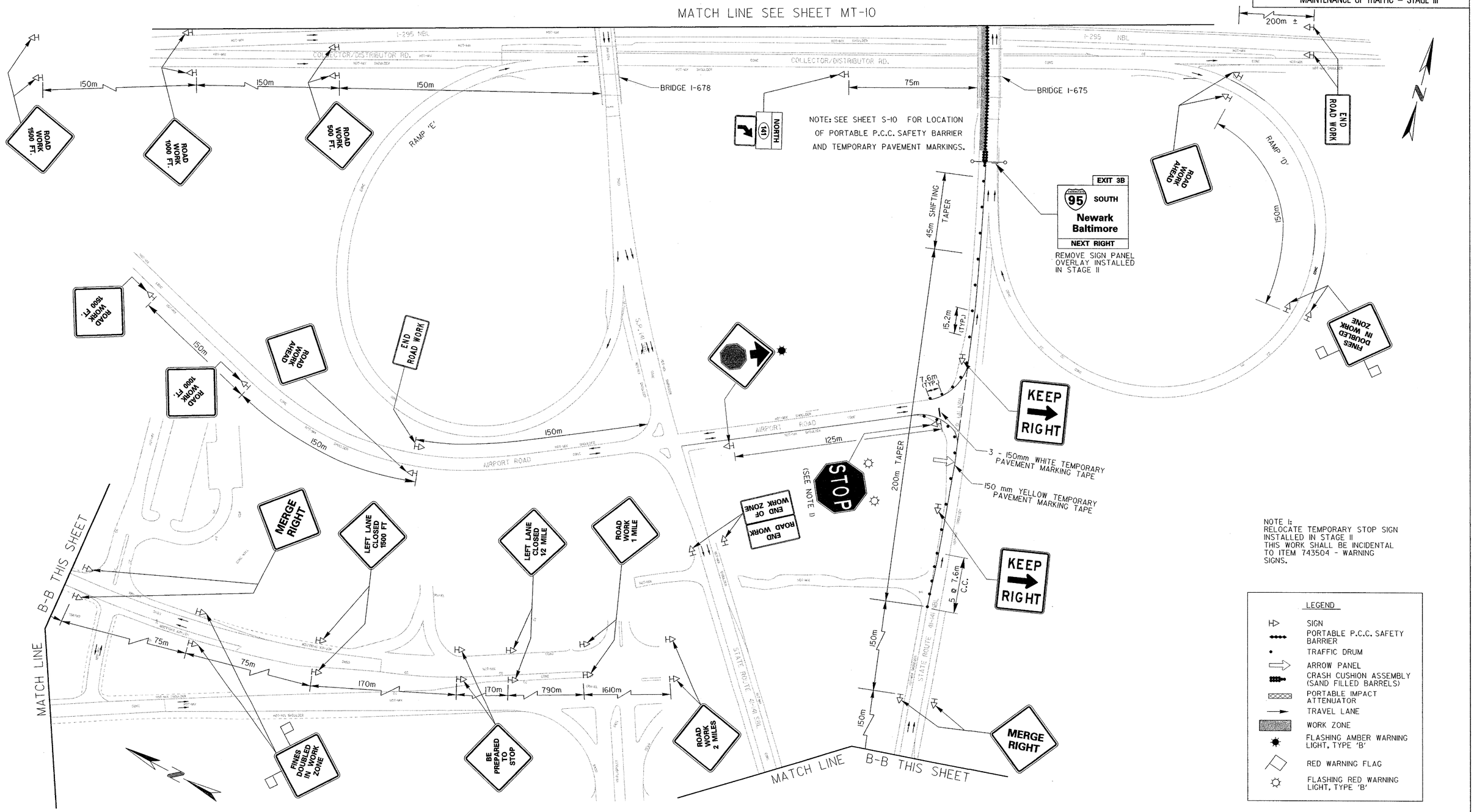

NOTE 1:
RELOCATE TEMPORARY STOP SIGN INSTALLED IN STAGE II
THIS WORK SHALL BE INCIDENTAL TO ITEM 743504 - WARNING SIGNS.

LEGEND

- SIGN
- PORTABLE P.C.C. SAFETY BARRIER
- TRAFFIC DRUM
- ARROW PANEL
- CRASH CUSHION ASSEMBLY (SAND FILLED BARRELS)
- PORTABLE IMPACT ATTENUATOR
- TRAVEL LANE
- WORK ZONE
- FLASHING AMBER WARNING LIGHT, TYPE 'B'
- RED WARNING FLAG
- FLASHING RED WARNING LIGHT, TYPE 'B'

REVISIONS

PREL. TRACING RLB DESIGN JFL CHKD. JFL

9/14/99 11:59:29 AM G:\PLOTTING\PS7\OCP\MYLAR_HP.qct Gina Delong Division: TRANSPORTATION m:\1988\01883053.3a\manassas\sn07d41.prf

METRIC		CONTRACT	COUNTY	FEDERAL AID PROJECT No	SHEET No	TOTAL SHEETS
MT	DWG. 12 OF 12	98-074-03	NEW CASTLE	EIM-N006(2)	43	45

REHABILITATION OF BRIDGES
NO. 1-675, 1-676, 1-677 & 1-678,
SR-141 OVER I-95

MAINTENANCE OF TRAFFIC – SIGN DETAILS

SIGN NUMBER	QUANTITY	LEGEND	SIZE WIDTH	SIZE HEIGHT	COLOR LEGEND	COLOR BCKGRND	BORDER WIDTH	BORDER RADIUS	ARROW	SHIELD	REMARKS
1	2	SOUTH / 141 / CENTER LANE (178mm)7" (203mm)8" (152mm)6" (203mm)8" (178mm)7"	30" (762mm)	15" (381mm)	B	W					M 3-3
			30" (762mm)	24" (610mm)	B	W					M 1-6
			30" (762mm)	36" (914mm)	B	O					15.6 SF/1.4 m²
2 (EXIST. P-25)	1	EXIT 3A / INTERSTATE 95 INTERSTATE 495 NORTH / Wilmington Philadelphia / LEFT LANE / MUST ↓ EXIT (152mm) 6" (305mm) 12" (152mm) 6"	7'-6"	2'-0"	W	G	1"	3"		36, 45	EXISTING
			16'-6"	11'-0"	W	G	2"	12"			EXISTING
			16'-6" (5029mm)	2'-0" (610mm)	B	Y	2" (51 mm)	12" (305 mm)	C		SIGN OVERLAY AREA = 33 SF/3.1m²
3 (EXIST. P-12)	1	EXIT 3A / INTERSTATE 95 INTERSTATE 495 NORTH / Wilmington Philadelphia / NEXT LEFT / MUST ↓ EXIT (152mm) 6" (305mm) 12" (152mm) 6"	7'-6"	2'-0"	W	G	1"	3"		36, 45	EXISTING
			16'-6"	11'-0"	W	G	2"	12"			EXISTING
			16'-6" (5029mm)	2'-0" (610mm)	B	Y	2" (51 mm)	12" (305 mm)			SIGN OVERLAY AREA = 33 SF/3.1m²
4	1	SOUTH / 141 / KEEP RIGHT (178mm) 7" (203mm) 8" (152mm) 6" (203mm) 8" (178mm) 7"	30" (762mm)	15" (381mm)	B	W					M 3-3
			30" (762mm)	24" (610mm)	B	W					M 1-6
			30" (762mm)	36" (914mm)	B	O					15.6 SF/1.4 m²

SIGN NUMBER	QUANTITY	LEGEND	SIZE WIDTH	SIZE HEIGHT	COLOR LEGEND	COLOR BCKGRND	BORDER WIDTH	BORDER RADIUS	ARROW	SHIELD	REMARKS
5 (EXIST. P-20)	1	EXIT 3B / INTERSTATE 95 SOUTH / Newark Baltimore / FOLLOW DETOUR (229mm)9" (305mm)12" (305mm)12" (305mm)12" (229mm)9"	7'-6"	2'-0"	W	G	1"	3"	A	36	EXISTING
			16'-0"	9'-6"	W	G	2"	12"			EXISTING
			7'-6" (2286mm)	4'-6" (1372mm)	B	O	1" (25 mm)	3" (76 mm)			SIGN OVERLAY AREA = 33.75 SF/3.1m²
6	1	SOUTH / INTERSTATE 95 / RAMP TO / CLOSED / FOLLOW DETOUR (305mm)12" (508mm)20" (305mm)12" 12"(305mm) 8"(203mm) 8"(203mm) 36"(914mm) 12"(305mm) 12"(305mm) 12"(305mm)	14'-0" (4267mm)	11'-0" (3353mm)	B	O				36 (914mm)	AREA = 154 SF/14.3m²
7 (EXIST. P-13)	1	EXIT 3B / INTERSTATE 95 SOUTH / Newark Baltimore / NEXT RIGHT / FOLLOW DETOUR (203mm)8" (203mm)8" (203mm)8"	7'-6"	2'-0"	W	G	1"	3"		36	EXISTING
			12'-0"	11'-0"	W	G	2"	12"			EXISTING
			12'-0" (3658mm)	2'-0" (610mm)			2" (51 mm)	12" (305 mm)			SIGN OVERLAY AREA = 24 SF/2.2m²

KEY TO COLOR ABBREVIATIONS: B=BLACK, G=GREEN, O=ORANGE, W=WHITE, Y=YELLOW

REVISIONS

PREL. TRACING RLB DESIGN JFL CHKD. JFL

CONTRACT	COUNTY	F.A.P. NO.	SHEET NO.	TOTAL SHTS.
98-074-03	NEW CASTLE	E IM-N006(2)	44	045

BR675, BR676, BR677 & BR678
ON SR141 OVER I- 95

ADDENDUMS

QUANTITY SUMMARY

ITEM	* 202000 C	211002 C	401645 C	401663 C	601522 C	* 602002 C	* 602013 C	* 602014 C	602546 C	602574 C	602575 C	602576 C	602577 C	602580 C	602586 C	* 602604 C	602611 C	603500 C	* 604000 C	605006 C	605532 C	605582 C
ITEM TITLE	EXCAVATION AND EMBANKMENT	REMOVAL OF STRUCTURES AND OBSTRUCTIONS (GUARDRAIL)	SUPERPAVE, TYPE C HOT MIX, 160 GYRATIONS, PG 64-22	SUPERPAVE, BITUMINOUS CONCRETE BASE COURSE, 160 GYRATIONS, PG 64-22	TEMPORARY PROTECTIVE SHIELD	PORTLAND CEMENT CONCRETE MASONRY, CLASS B	PORTLAND CEMENT CONCRETE MASONRY, SUPERSTRUCTURE, CLASS D	PORTLAND CEMENT CONCRETE MASONRY, APPROACH SLAB, CLASS D	WATERPROOFING P.C.C. MASONRY	DECK REPAIR, 6 mm to 25 mm DEPTH	DECK REPAIR, 25 mm to 75 mm DEPTH	DECK REPAIR, 75 mm TO < FULL DEPTH	DECK REPAIR, FULL DEPTH	PARTIAL REMOVAL OF P.C.C. MASONRY	REHABILITATION OF CONCRETE STRUCTURE	PRECAST CONCRETE PARAPET	REPAIR OF CONCRETE STRUCTURES BY EPOXY INJECTION	REPLACING BAR REINFORCEMENT	BAR REINFORCEMENT, EPOXY COATED	PAINTING, MOISTURE-CURED URETHANE SYSTEM	CLEANING EXISTING STEEL STRUCTURES (NON-HAZARDOUS BASE)	CLEANING BRIDGE SCUPPER
UNIT	m^3	m	t	t	m^2	m^3	m^3	m^3	m^2	m^2	m^2	m^2	m^2	m^3	m^3	m	m	kg	kg	m^2	L.S.	EA
SHEET NO. 0042 FROM STA. 1 TO STA. 2	200	1197	60	450	2323	8	115	158	1523	36	36	18	18	404	28	265	124	173	17635	1221	L.S.	27
TOTAL	200	1197	60	450	2323	8	115	158	1523	36	36	18	18	404	28	265	124	173	17635	1221	L.S.	27
PROPOSAL	200	1197	60	450	2323	8	115	158	1523	36	36	18	18	404	28	265	124	173	17635	1221	L.S.	27

ITEM	605584 C	605592 C	605595 C	605622 C	605629 C	605649 C	605650 C	702001 C	708041 C	712020 C	713003 C	720050 C	720501 C	720504 C	720506 C	720518 C	720527 C	720552 C	720558 C	720577 C	725001 C	725002 C
ITEM TITLE	STEEL STRUCTURE REPAIR	WELDING REPAIR	REMOVE AND REPLACE EXPANSION JOINTS	CLEANING OF STEEL STRUCTURE BY PRESSURE WASHING	CLEANING EXISTING STEEL STRUCTURES, HAZARDOUS (S.M.)	REPLACING BRIDGE BEARING, TYPE A	REPLACING BRIDGE BEARING, TYPE B	PORTLAND CEMENT CONCRETE CURB, TYPE 1	DRAINAGE INLET, TYPE 2	RIPRAP, R-4	GEOTEXTILES, RIPRAP	GALVANIZED STEEL BEAM GUARDRAIL, TYPE 1	CRASH CUSHION (SAND BARRELS)	PORTABLE P.C.C. SAFETY BARRIER	RELOCATING PORTABLE P.C.C. SAFETY BARRIER	RELOCATING CRASH CUSHION (SAND BARRELS)	PLASTIC DRUMS	REFLECTOR PANELS	PLASTIC DRUMS	FURNISH AND MAINTAIN PORTABLE IMPACT ATTENUATOR	GUARDRAIL TO BARRIER CONNECTION (EXIT TYPE)	GUARDRAIL TO BARRIER CONNECTION, APPROACH TYPE 1
UNIT	Kg	m	L.S.	L.S.	m^2	EA	EA	m	EA	t	m^2	m	EA	m	m	EA	EA-DY	EA	EA	EA-DY	EA	EA
SHEET NO. 0042 FROM STA. 1 TO STA. 2	1651	383	L.S.	L.S.	651	21	1	210	1	830	1505	402	70	1150	1300	98	5500	50	200	300	8	8
TOTAL	1651	383	L.S.	L.S.	651	21	1	210	1	830	1505	402	70	1150	1300	98	5500	50	200	300	8	8
PROPOSAL	1651	383	L.S.	L.S.	651	21	1	210	1	830	1505	402	70	1150	1300	98	5500	50	200	300	8	8

SEPTEMBER 21, 1

PREL. TRACING _____ DESIGN _____ CHKD. _____

LEGEND

C • FEDERAL AID FUNDED BRIDGE CONSTRUCTION

* • FIXED QUANTITY ITEM. REFER TO SECTION 109.06 OF THE STANDARD SPECIFICATIONS

CONTRACT	COUNTY	F.A.P. NO.	SHEET NO.	TOTAL SHTS.
98-074-03	NEW CASTLE	ACEIM-N006(2)	45	045

BR675, BR676, BR677 & BR678
ON SR141 OVER I- 95

ADDENDUMS

SECT: 01

QUANTITY SUMMARY

ITEM	**742500C	743003C	743500C	743501C	743504C	743506C	743514C	743525C	743537C	744001C
ITEM TITLE	FLAGGER, NEW CASTLE COUNTY, STATE	ARROWPANELS, TYPE C	WARNING LIGHTS, TYPE A	WARNING LIGHTS, TYPE B	WARNING SIGNS	TEMPORARY BARRICADES, TYPE III	FURNISH AND MAINTAIN MESSAGE BOARD	TEMPORARY WARNING SIGNS	FURNISH AND MAINTAIN TRUCK-MOUNTED ATTENUATOR, TYPE II	CONDUIT JUNCTION WELL, TYPE I
UNIT	h	EA-DY	EA-DY	EA-DY	EA	EA-DY	EA-DY	EA-DY	EA	m
SHEET NO. 0042 FROM STA. 1 TO STA. 2	100	350	2000	5300	175	50	400	800	80	1
TOTAL	100	350	2000	5300	175	50	400	800	80	1
PROPOSAL	100	350	2000	5300	175	50	400	800	80	1

ITEM	745018C	745506C	746511C	746591C	748518C	748519C	748525C	748526C	749502C	755000C	758000C	759501C
ITEM TITLE	PVC CONDUIT UNDER NEW PAVEMENT OR IN SODDED TRENCH, 50 mm	GALVANIZED CONDUIT IN/ON STRUCTURE, 50 mm	CABLES, 1/#4 AWG	FURNISH AND MAINTAIN PORTABLE LIGHT ASSEMBLY	BLACKOUT TAPE, 150 mm	RETROREFLECTIVE PREFORMED PATTERNED MARKINGS, 100 mm	TEMPORARY MARKINGS, TAPE, 100 mm	TEMPORARY MARKINGS, TAPE, 150 mm	SIGN PANEL OVERLAY ON EXISTING SIGN	HOT-MIX, HOT LAID, BITUMINOUS CONCRETE CURB	REMOVAL OF EXISTING PORTLAND CEMENT CONCRETE PAVEMENT, CURB, SIDEWALK, ETC.	FIELD OFFICE, SPECIAL
UNIT	m	m	m	EA-DY	m	m	m	m	m^2	m	m^2	EA-MO
SHEET NO. 0042 FROM STA. 1 TO STA. 2	25	145	740	60	5000	1500	6800	2900	12	280	1509	13
TOTAL	25	145	740	60	5000	1500	6800	2900	12	280	1509	13
PROPOSAL	25	145	740	60	5000	1500	6800	2900	12	280	1509	13

ITEM	760001C	760006C	762001C	763000C	763500C	763501C	763505C	763508C	763509C
ITEM TITLE	PAVEMENT - MILLING CONCRETE	PAVEMENT - MILLING, HOT-MIX, 50 mm DEPTH	SAW CUTTING, HOT MIX	INITIAL EXPENSE	MAINTENANCE OF TRAFFIC	CONSTRUCTION ENGINEERING	TRAFFIC OFFICERS	PROJECT CONTROL SYSTEM DEVELOPMENT PLAN	CPM SCHEDULE UPDATES AND/OR REVISIONS
UNIT	m^2-25mm	m^2	m	L.S.	L.S.	L.S.	h	L.S.	EA-MO
SHEET NO. 0042 FROM STA. 1 TO STA. 2	5403	6457	280	L.S.	L.S.	L.S.	200	L.S.	13
TOTAL	5403	6457	280	L.S.	L.S.	L.S.	200	L.S.	13
PROPOSAL	5403	6457	280	L.S.	L.S.	L.S.	200	L.S.	13

SECT: 01 ALT: A

ITEM	602583C	602584C
ITEM TITLE	FURNISHING MICRO-SILICA MODIFIED CONCRETE	CONSTRUCTING MICRO-SILICA MODIFIED CONCRETE OVERLAY
UNIT	m^3	m^2
SHEET NO. 0042 FROM STA. 1 TO STA. 2	346	4542
TOTAL	346	4542
PROPOSAL	346	4542

SECT: 01 ALT: B

ITEM	602543C	602544C
ITEM TITLE	FURNISHING LATEX CONCRETE	CONSTRUCTING LATEX CONCRETE OVERLAY
UNIT	m^3	m^2
SHEET NO. 0042 FROM STA. 1 TO STA. 2	346	4542
TOTAL	346	4542
PROPOSAL	346	4542

OCTOBER 13, 199

PREL. TRACING _____ DESIGN _____ CHKD. _____

LEGEND

C = FEDERAL AID FUNDED BRIDGE CONSTRUCTION PROJECT