PREPARED BY:
CENTURY ENGINEERING
CONSULTING ENGINEERS, SURVEYORS
4134 N. DUPONT HWY.
DOVER, DELAWARE 19901
(302) 734-9188

DelDOT

LOCATION MAP

MAPPING IS BASED ON 2010 GOOGLE STATE OF DELAWARE ORTHO PHOTOS. ALL INFORMATION SHOWN IS FOR DISPLAY PURPOSES ONLY.

300 SCALE
(60" X 40")

N
W E
S

DECEMBER 2012

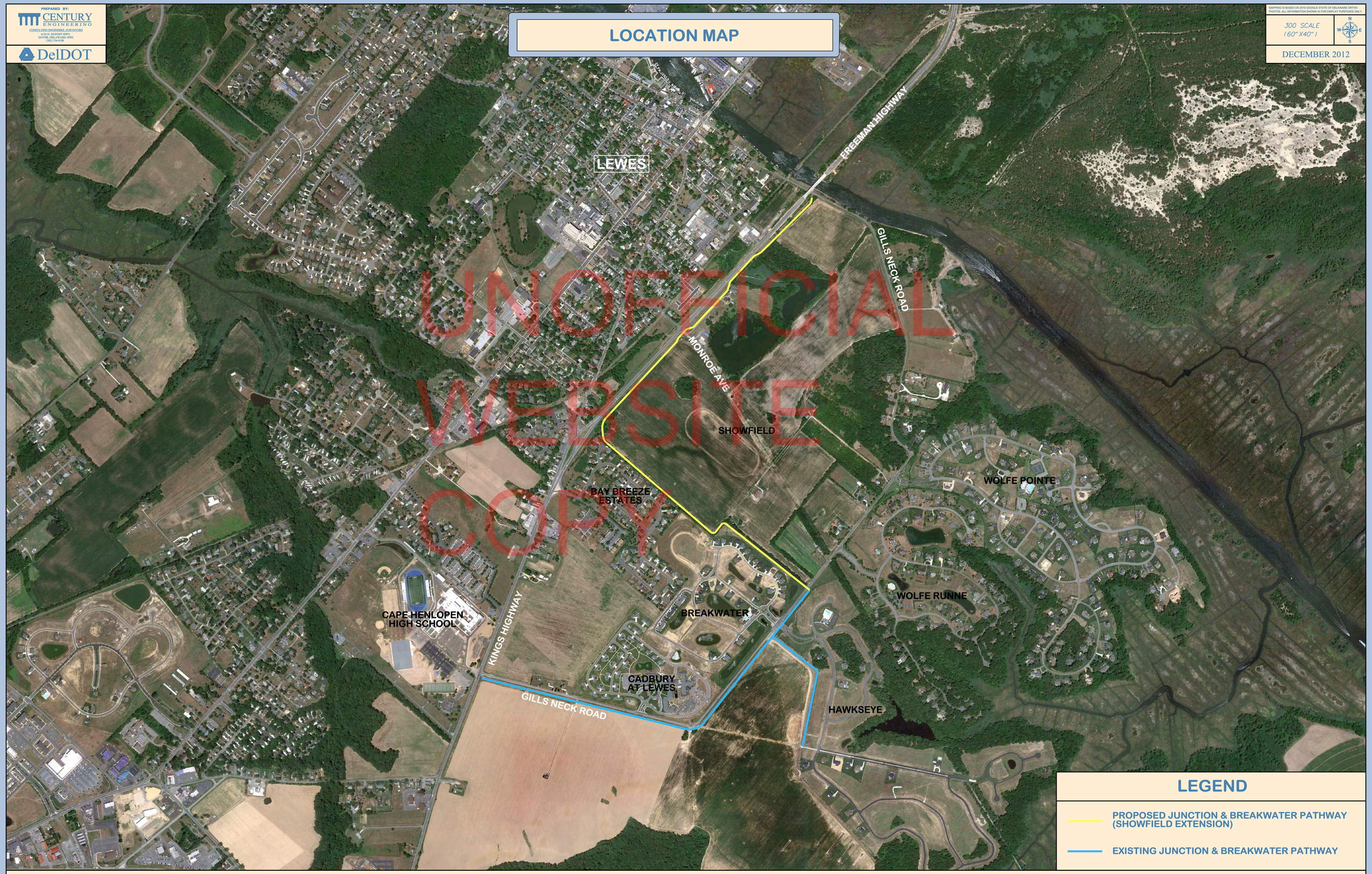

UNOFFICIAL WEBSITE COPY

LOCATION 1 - JUNCTION AND BREAKWATER, SHOWFIELD EXTENSION

PREPARED BY:
CENTURY ENGINEERING
CONSULTING ENGINEERS, SURVEYORS
4134 N. DUPONT HWY.
DOVER, DELAWARE 19901
(302) 734-9188

DelDOT

DECEMBER 2012

PROJECT PHOTOS

PROPOSED PATH LOCATION ALONG FREEMAN HIGHWAY, WEST OF MONROE AVE.

PROPOSED PATH LOCATION ALONG BREAKWATER DEVELOPMENT, NORTH OF GILLS NECK ROAD

PROPOSED PATH LOCATION ALONG FREEMAN HIGHWAY, EAST OF MONROE AVE., NEAR WETLANDS

PROPOSED PATH LOCATION ALONG SHOWFIELD PROPERTY, BETWEEN GILLS NECK ROAD AND FREEMAN HIGHWAY

UNOFFICIAL WEBSITE COPY

LOCATION 1 - JUNCTION AND BREAKWATER, SHOWFIELD EXTENSION

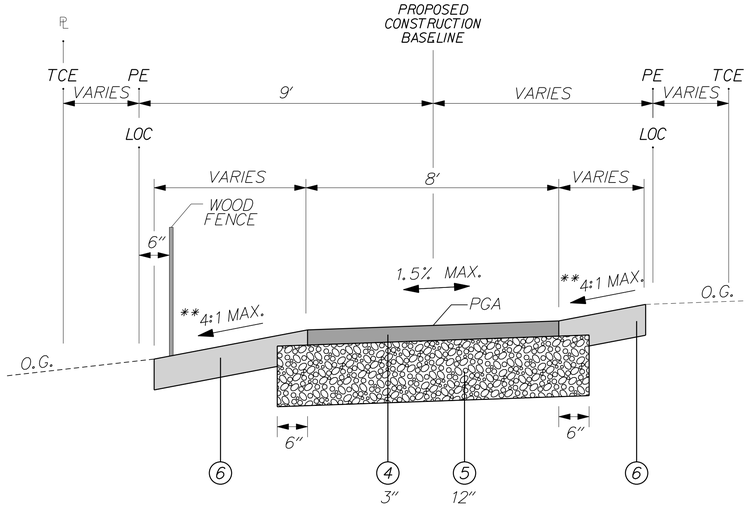

8' MULTI-USE PATH TYPICAL SECTION – PERVIOUS ASPHALT

STATION 213+46.37 TO 214+25.00

** CROSS SLOPE VARIES TO TIE-IN TO EXISTING GRADES.

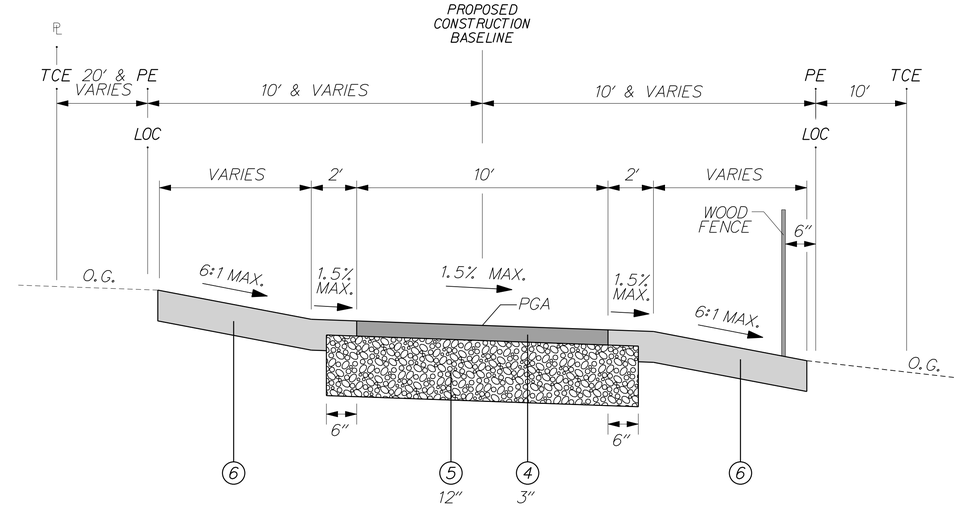

10' MULTI-USE PATH TYPICAL SECTION – PERVIOUS ASPHALT

STATION 216+04.92 TO 237+50.00

FOR INFORMATIONAL PURPOSES ONLY

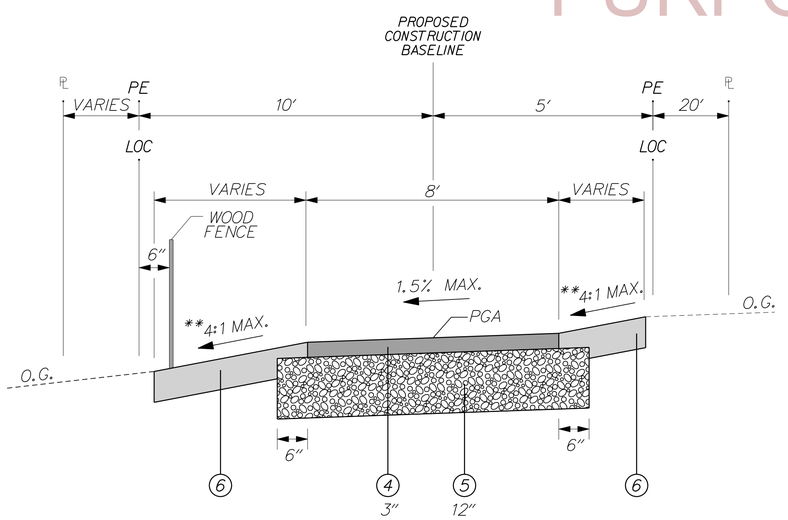

8' MULTI-USE PATH TYPICAL SECTION – PERVIOUS ASPHALT

STATION 200+00.00 TO 213+46.36

** CROSS SLOPE VARIES TO TIE-IN TO EXISTING GRADES.

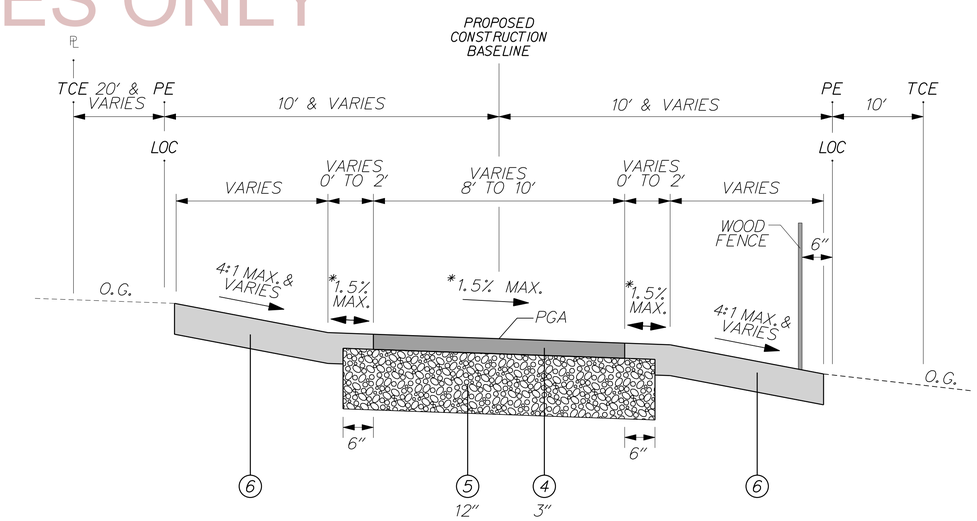

10' MULTI-USE PATH TYPICAL SECTION – PERVIOUS ASPHALT

STATION 214+25.01 TO 216+04.91

* CROSS SLOPE VARIES. SEE GRADES AND GEOMETRICS SHEET FOR DETAILS.

LEGEND

1. ITEM 401827 - WMA, SUPERPAVE, TYPE C, 160 GYR., PG 64-22
2. ITEM 401810 - WMA, SUPERPAVE, TYPE B, 160 GYR., PG 64-22
3. ITEM 302007 - GRADED AGGREGATE BASE COURSE, TYPE B
4. ITEM 401574 - PERVIOUS BITUMINOUS ASPHALT PAVEMENT
5. ITEM 302012 - DELAWARE NO. 57 STONE
6. ITEM 732002 - TOPSOIL, 6" DEPTH
   ITEM 734013 - PERMANENT GRASS SEEDING, DRY GROUND
7. ITEM 705522 - PCC SIDEWALK, SPECIAL
8. GALVANIZED STEEL BEAM GUARDRAIL
9. ITEM 401821 - WMA, SUPERPAVE, TYPE C, 160 GYR., PG 64-22, PATCHING
10. ITEM 302008 - GRADED AGGREGATE BASE COURSE, TYPE B, PATCHING
11. ITEM 209006 - BORROW, TYPE F (IF REQUIRED TO FILL VOIDS.)

PR - POINT OF ROTATION
PDGA - PROFILE DITCH GRADE APPLICATION
PGA - PROFILE GRADE APPLICATION

MAXIMUM SINGLE LIFTS FOR THE FOLLOWING MATERIALS AFTER COMPACTION ARE:
- 2" = WARM-MIX, TYPE C
- 3" = WARM-MIX, TYPE B
- 6" = WARM-MIX, BCBC
- 8" = GABC
- 3" = PERVIOUS ASPHALT

NOTES:

1. CONTRACTOR SHALL LOAD TEST ALL SUBGRADE SOIL PRIOR TO THE PLACEMENT OF THE SUBBASE COURSE. ALL UNSUITABLE MATERIAL FOUND SHALL BE EXCAVATED TO THE DEPTH OF STABLE SOIL AND BACKFILLED WITH APPROVED MATERIAL. THE CONTRACTOR SHALL COMPACT ALL MATERIALS TO MEET THE DELDOT STANDARD SPECIFICATIONS.

DELAWARE DEPARTMENT OF TRANSPORTATION	ADDENDUMS / REVISIONS	NOT TO SCALE	OPEN END CONSTRUCTION SERVICES, STATEWIDE TRAILS, KENT AND SUSSEX COUNTIES	CONTRACT T201230008 / COUNTY SUSSEX COUNTY	BRIDGE NO. – / DESIGNED BY: AMW / CHECKED BY: JMH	TYPICAL SECTIONS	SHEET NO. / TOTAL SHTS.

12/3/2012 G:\PROJECTS\115019.00 (DelDOT Agrmt 1595 TEP)\115019.07 (Task 7_Junction and Breakwater Pathway)\CADD FILES\ts01_gn.dgn 2:32:53 PM

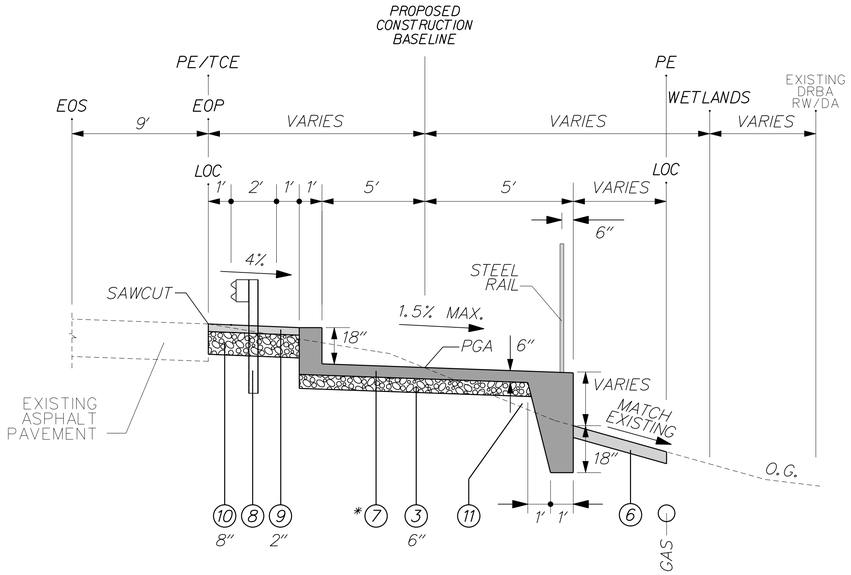

CONCRETE SLAB PATH TYPICAL SECTION – WETLANDS

STATION 261+63.89 TO 266+01.43

NOTE: CONTRACTOR SHALL NOT DISTURB EXISTING WETLANDS.

* SEE CONSTRUCTION DETAILS FOR ADDITIONAL INFORMATION.

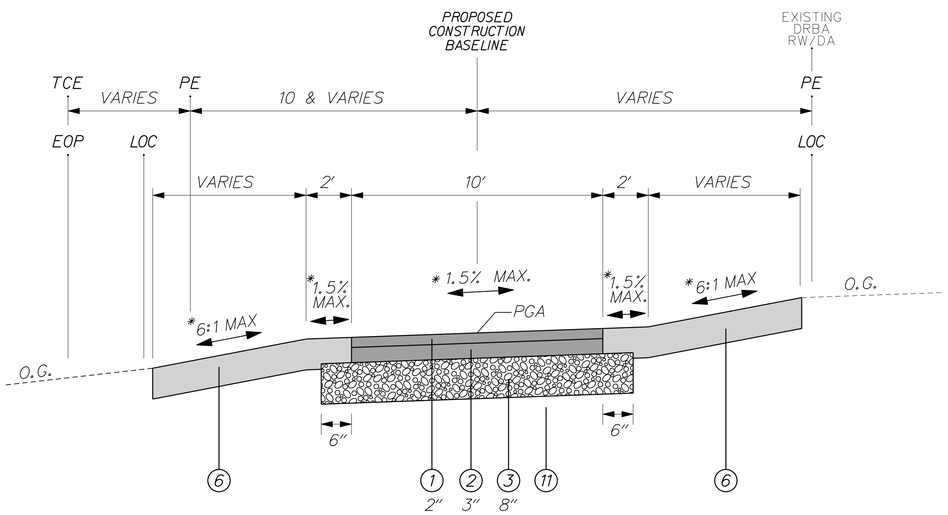

10' MULTI-USE PATH TYPICAL SECTION – ASPHALT

STATION 237+50.01 TO 252+00.93
STATION 252+57.12 TO 261+63.90
STATION 266+01.44 TO 276+96.57

* CROSS SLOPE VARIES. SEE GRADES AND GEOMETRICS SHEET FOR DETAILS.

FOR INFORMATIONAL PURPOSES ONLY

LEGEND

1. ITEM 401827 - WMA, SUPERPAVE, TYPE C, 160 GYR., PG 64-22
2. ITEM 401810 - WMA, SUPERPAVE, TYPE B, 160 GYR., PG 64-22
3. ITEM 302007 - GRADED AGGREGATE BASE COURSE, TYPE B
4. ITEM 401574 - PERVIOUS BITUMINOUS ASPHALT PAVEMENT
5. ITEM 302012 - DELAWARE NO. 57 STONE
6. ITEM 732002 - TOPSOIL, 6" DEPTH
   ITEM 734013 - PERMANENT GRASS SEEDING, DRY GROUND
7. ITEM 705522 - PCC SIDEWALK, SPECIAL
8. GALVANIZED STEEL BEAM GUARDRAIL
9. ITEM 401821 - WMA, SUPERPAVE, TYPE C, 160 GYR., PG 64-22, PATCHING
10. ITEM 302008 - GRADED AGGREGATE BASE COURSE, TYPE B, PATCHING
11. ITEM 209006 - BORROW, TYPE F (IF REQUIRED TO FILL VOIDS.)

PR - POINT OF ROTATION
PDGA - PROFILE DITCH GRADE APPLICATION
PGA - PROFILE GRADE APPLICATION

MAXIMUM SINGLE LIFTS FOR THE FOLLOWING MATERIALS AFTER COMPACTION ARE:
- 2" = WARM-MIX, TYPE C
- 3" = WARM-MIX, TYPE B
- 6" = WARM-MIX, BCBC
- 8" = GABC
- 3" = PERVIOUS ASPHALT

NOTES:

1. CONTRACTOR SHALL LOAD TEST ALL SUBGRADE SOIL PRIOR TO THE PLACEMENT OF THE SUBBASE COURSE. ALL UNSUITABLE MATERIAL FOUND SHALL BE EXCAVATED TO THE DEPTH OF STABLE SOIL AND BACKFILLED WITH APPROVED MATERIAL. THE CONTRACTOR SHALL COMPACT ALL MATERIALS TO MEET THE DELDOT STANDARD SPECIFICATIONS.

DELAWARE DEPARTMENT OF TRANSPORTATION	ADDENDUMS / REVISIONS	NOT TO SCALE	OPEN END CONSTRUCTION SERVICES, STATEWIDE TRAILS, KENT AND SUSSEX COUNTIES	CONTRACT T201230008 / COUNTY SUSSEX COUNTY	BRIDGE NO. – / DESIGNED BY: AMW / CHECKED BY: JMH	TYPICAL SECTIONS	SHEET NO. / TOTAL SHTS.

12/3/2012 G:\PROJECTS\115019.00 (DelDOT Agrmt 1595 TEP)\115019.07 (Task 7_Junction and Breakwater Pathway)\CADD FILES\ts01_gn.dgn 2:31:40 PM