NOTES:

1. THE MAXIMUM ALGEBRAIC DIFFERENCE ON THE HIGH SIDE BETWEEN THE TRAVELED WAY SLOPE AND THE ACCEL/DECEL LANES SHALL NOT EXCEED 4%. THE MAXIMUM ALGEBRAIC DIFFERENCE BETWEEN THE TRAVELED WAY SLOPE AND THE SHOULDER SLOPE SHALL NOT EXCEED 8%.
2. SHOULDER SLOPE ON THE LOW SIDE SHALL BE THE SAME AS THE TRAVELED WAY SLOPE WHEN SUPERELEVATION IS GREATER THAN 4%.
3. SEE GRADES AND GEOMETRICS SHEETS FOR SUPERELEVATED CROSS SLOPE TRANSITIONS.
4. SEE SHEET TS-43 FOR UNDERDRAIN DETAIL. SEE CONSTRUCTION PLANS FOR PLACEMENT LOCATIONS.
5. PGA - POINT OF GRADE APPLICATION
   PDGA - POINT OF DITCH GRADE APPLICATION
   P/R - POINT OF ROTATION
   P.G.L. - POINT OF GRADE LINE
6. THE MAXIMUM LIFTS FOR THE INDIVIDUAL PAVING MATERIALS ARE AS FOLLOWS:
   SUPERPAVE, TYPE C WMA - 2"
   SUPERPAVE, TYPE B WMA - 3"
   SUPERPAVE BIT. CONC. BASE COURSE - 4"
   GRADED AGGREGATE BASE COURSE - 8"
7. SUPERPAVE, TYPE B HOT-MIX SHALL BE PLACED IN TWO EQUAL LIFTS, WHEN THICKNESS EXCEEDS 3".
8. SEE SHEET DT-01 FOR RUMBLE STRIP LOCATIONS.
9. SEE SHEET DT-12 FOR SAFETY EDGE DETAILS. THESE DETAILS SHALL BE APPLIED AT ALL INSTANCES WHERE THE EDGE OF PROPOSED PAVEMENT MEETS THE 6" TOPSOIL.
10. ON THE HIGH SIDE OF THE SUPERELEVATED MEDIAN SECTION THE BOTTOM OF BORROW TYPE A SHALL FOLLOW THE SUPERELEVATION RATE FOR THE ROADWAY EXTENDED UNTIL IT INTERSECTS WITH EITHER THE BOTTOM OF TOPSOIL FOR THE MEDIAN SIDESLOPES OR IT INTERSECTS WITH THE CONSTRUCTION BASELINE. ON THE LOW SIDE OF THE SUPERELEVATED MEDIAN SECTION THE BOTTOM OF BORROW TYPE A SHALL BE CONSTRUCTED FROM THE POINT IN WHICH THE EXTENDED SUPERELEVATION SLOPE (e) INTERSECTS THE CONSTRUCTION BASELINE TO THE GRADE BREAK AT THE INSIDE EDGE OF TRAVELED WAY.
11. FOR INTERFACE BETWEEN MOMENT SLAB AND ROADWAY PAVEMENT AND APPROACH SLAB AND ROADWAY PAVEMENT, SEE STRUCTURAL DETAILS.
12. SEE SHEET DT-15 FOR DETAILS OF CONSTRUCTING PROPOSED EARTH BERM.

LEGEND

- (A) ITEM 209001 - BORROW, TYPE A
- (B) ITEM 209006 - BORROW, TYPE F
- (C) ITEM 302007 - GRADED AGGREGATE BASE COURSE, TYPE B
- (D) ITEM 304501 - PERMEABLE TREATED BASE, 4"
- (E) ITEM 304502 - SOIL CEMENT BASE COURSE, 6"
- (F) ITEM 401801 - WMA, SUPERPAVE, TYPE C, 160 GYRATIONS, PG 64-22
- (G) ITEM 401810 - WMA, SUPERPAVE, TYPE B, 160 GYRATIONS, PG 64-22
- (J) ITEM 401819 - WMA, SUPERPAVE, BITUMINOUS CONCRETE BASE COURSE, 160 GYRATIONS, PG 64-22
- (K) ITEM 501006 - PORTLAND CEMENT CONCRETE PAVEMENT, 12"
- (L) ITEM 701010 - PCC CURB, TYPE 1-8
- (N) ITEM 701022 - PCC CURB AND GUTTER, TYPE 3-8
- (P) ITEM 715001 - PERFORATED PIPE UNDERDRAINS, 6"
- (Q) ITEM 720050 - GALVANIZED STEEL BEAM GUARDRAIL, TYPE 1-31
- (R) ITEM 720052 - GALVANIZED STEEL BEAM GUARDRAIL, TYPE 3-31
- (S) ITEM 727000 - RIGHT OF WAY FENCE
- (T) ITEM 501001 - 8" PORTLAND CEMENT CONCRETE
- (U) ITEM 733002 - TOPSOILING, 6" DEPTH
  ITEM 734013 - PERMANENT GRASS SEEDING, DRY GROUND
- (V) ITEM 733002 - TOPSOILING, 6" DEPTH
  ITEM 734013 - PERMANENT GRASS SEEDING, DRY GROUND
  ITEM 735535 - SOIL RETENTION BLANKET MULCH, TYPE 5
- (W) ITEM 701016 - PCC CURB AND GUTTER, TYPE 1-4
- (X) ITEM 760017 - RUMBLE STRIPS, CONCRETE
- (Y) ITEM 705001 - PCC SIDEWALK, 4"
- (AA) ITEM 720626 - CONCRETE SINGLE FACE BARRIER, TYPE 1
- (BB) ITEM 760507 - PROFILE MILLING, HOT-MIX
- (CC) ITEM 401824 - WMA, SUPERPAVE, TYPE C, 160 GYRATIONS, PG 64-22, WEDGE
- (DD) ITEM 733001 - TOPSOILING, 4" DEPTH
  ITEM 734013 - PERMANENT GRASS SEEDING, DRY GROUND
- (EE) ITEM 713002 - GEOTEXTILE, SEPARATION
- (FF) ITEM 701013 - PCC CURB, TYPE 1-2

FILL SLOPE CHART		
STATION	SLOPE	SIDE
762+41 TO 763+90	6:1	RIGHT
763+90 TO 764+50	6:1 TO 4:1	RIGHT
764+50 TO 765+82	4:1	RIGHT
771+90 TO 777+68	6:1	RIGHT
831+50 TO 831+65	4:1	RIGHT
831+65 TO 831+90	4:1 TO 6:1	RIGHT
831+90 TO 832+20	6:1	RIGHT
832+20 TO 832+45	6:1 TO 4:1	RIGHT
832+45 TO 834+29	4:1	RIGHT
834+29 TO 834+54	4:1 TO 3:1	RIGHT
834+54 TO 835+66	3:1	RIGHT

(1) USE RUMBLE STRIPS, CONCRETE, SHALLOW DEPTH ITEM 760514, IN THE FOLLOWING LOCATIONS:
STA. 805+22 TO STA. 810+24 US 301 NB
STA. 806+08 TO STA. 810+86 US 301 SB

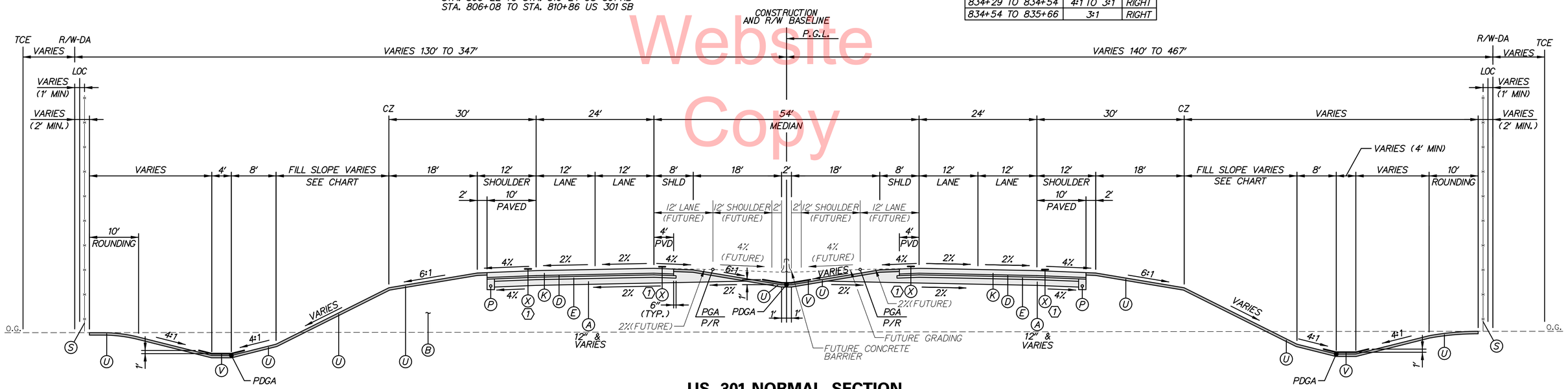

STA. 760+90 TO STA. 766+50, LT.
STA. 775+40 TO STA. 778+80, LT.
STA. 801+60 TO STA. 803+00, LT.

FILL SLOPE CHART		
STATION	SLOPE	SIDE
760+90 TO 766+50	6:1	LEFT
775+40 TO 778+80	6:1	LEFT
801+60 TO 803+00	4:1	LEFT

STA. 762+41 TO STA. 765+82, RT.
STA. 771+90 TO STA. 777+68, RT.
STA. 831+50 TO STA. 835+66, RT.

US 301 NORMAL SECTION

STATION 682+00 TO STATION 692+32
STATION 713+98 TO STATION 719+44
STATION 760+90 TO STATION 780+13
STATION 799+33 TO STATION 809+75
STATION 831+10 TO STATION 837+50

SEE NORMAL SECTION TS-03 TO TS-06 FOR ADDITIONAL DETAILS

Unofficial Website Copy

N:\31653-000\Contract 1A\CADD\TS001U301_1A.dgn
11/3/2014 3:03:52 PM

DELAWARE DEPARTMENT OF TRANSPORTATION

ADDENDUMS / REVISIONS

NOT TO SCALE

US 301, SR 896 TO SR 1

CONTRACT	BRIDGE NO.
T200911308	DESIGNED BY: KGMA
COUNTY	
NEW CASTLE	CHECKED BY: TAO

TYPICAL SECTIONS

TS-01

SHEET NO. 17
TOTAL SHTS. 875

NOTES:

1. THE MAXIMUM ALGEBRAIC DIFFERENCE ON THE HIGH SIDE BETWEEN THE TRAVELED WAY SLOPE AND THE ACCEL/DECEL LANES SHALL NOT EXCEED 4%. THE MAXIMUM ALGEBRAIC DIFFERENCE BETWEEN THE TRAVELED WAY SLOPE AND THE SHOULDER SLOPE SHALL NOT EXCEED 8%.
2. SHOULDER SLOPE ON THE LOW SIDE SHALL BE THE SAME AS THE TRAVELED WAY SLOPE WHEN SUPERELEVATION IS GREATER THAN 4%.
3. SEE GRADES AND GEOMETRICS SHEETS FOR SUPERELEVATED CROSS SLOPE TRANSITIONS.
4. SEE SHEET TS-43 FOR UNDERDRAIN DETAIL. SEE CONSTRUCTION PLANS FOR PLACEMENT LOCATIONS.
5. PGA - POINT OF GRADE APPLICATION
   PDGA - POINT OF DITCH GRADE APPLICATION
   P/R - POINT OF ROTATION
   P.G.L. - POINT OF GRADE LINE
6. THE MAXIMUM LIFTS FOR THE INDIVIDUAL PAVING MATERIALS ARE AS FOLLOWS:
   SUPERPAVE, TYPE C WMA - 2"
   SUPERPAVE, TYPE B WMA - 3"
   SUPERPAVE BIT. CONC. BASE COURSE - 4"
   GRADED AGGREGATE BASE COURSE - 8"
7. SUPERPAVE, TYPE B HOT-MIX SHALL BE PLACED IN TWO EQUAL LIFTS, WHEN THICKNESS EXCEEDS 3".
8. SEE SHEET DT-01 FOR RUMBLE STRIP LOCATIONS.
9. SEE SHEET DT-12 FOR SAFETY EDGE DETAILS. THESE DETAILS SHALL BE APPLIED AT ALL INSTANCES WHERE THE EDGE OF PROPOSED PAVEMENT MEETS THE 6" TOPSOIL.
10. ON THE HIGH SIDE OF THE SUPERELEVATED MEDIAN SECTION THE BOTTOM OF BORROW TYPE A SHALL FOLLOW THE SUPERELEVATION RATE FOR THE ROADWAY EXTENDED UNTIL IT INTERSECTS WITH EITHER THE BOTTOM OF TOPSOIL FOR THE MEDIAN SIDESLOPES OR IT INTERSECTS WITH THE CONSTRUCTION BASELINE. ON THE LOW SIDE OF THE SUPERELEVATED MEDIAN SECTION THE BOTTOM OF BORROW TYPE A SHALL BE CONSTRUCTED FROM THE POINT IN WHICH THE EXTENDED SUPERELEVATION SLOPE (e) INTERSECTS THE CONSTRUCTION BASELINE TO THE GRADE BREAK AT THE INSIDE EDGE OF TRAVELED WAY.
11. FOR INTERFACE BETWEEN MOMENT SLAB AND ROADWAY PAVEMENT AND APPROACH SLAB AND ROADWAY PAVEMENT, SEE STRUCTURAL DETAILS.
12. SEE SHEET DT-15 FOR DETAILS OF CONSTRUCTING PROPOSED EARTH BERM.

LEGEND

- (A) ITEM 209001 - BORROW, TYPE A
- (B) ITEM 209006 - BORROW, TYPE F
- (C) ITEM 302007 - GRADED AGGREGATE BASE COURSE, TYPE B
- (D) ITEM 304501 - PERMEABLE TREATED BASE, 4"
- (E) ITEM 304502 - SOIL CEMENT BASE COURSE, 6"
- (F) ITEM 401801 - WMA, SUPERPAVE, TYPE C, 160 GYRATIONS, PG 64-22
- (G) ITEM 401810 - WMA, SUPERPAVE, TYPE B, 160 GYRATIONS, PG 64-22
- (J) ITEM 401819 - WMA, SUPERPAVE, BITUMINOUS CONCRETE BASE COURSE, 160 GYRATIONS, PG 64-22
- (K) ITEM 501006 - PORTLAND CEMENT CONCRETE PAVEMENT, 12"
- (L) ITEM 701010 - PCC CURB, TYPE 1-8
- (N) ITEM 701022 - PCC CURB AND GUTTER, TYPE 3-8
- (P) ITEM 715001 - PERFORATED PIPE UNDERDRAINS, 6"
- (Q) ITEM 720050 - GALVANIZED STEEL BEAM GUARDRAIL, TYPE 1-31
- (R) ITEM 720052 - GALVANIZED STEEL BEAM GUARDRAIL, TYPE 3-31
- (S) ITEM 727000 - RIGHT OF WAY FENCE
- (T) ITEM 501001 - 8" PORTLAND CEMENT CONCRETE
- (U) ITEM 733002 - TOPSOILING, 6" DEPTH
  ITEM 734013 - PERMANENT GRASS SEEDING, DRY GROUND
- (V) ITEM 733002 - TOPSOILING, 6" DEPTH
  ITEM 734013 - PERMANENT GRASS SEEDING, DRY GROUND
  ITEM 735535 - SOIL RETENTION BLANKET MULCH, TYPE 5
- (W) ITEM 701016 - PCC CURB AND GUTTER, TYPE 1-4
- (X) ITEM 760017 - RUMBLE STRIPS, CONCRETE
- (Y) ITEM 705001 - PCC SIDEWALK, 4"
- (AA) ITEM 720626 - CONCRETE SINGLE FACE BARRIER, TYPE 1
- (BB) ITEM 760507 - PROFILE MILLING, HOT-MIX
- (CC) ITEM 401824 - WMA, SUPERPAVE, TYPE C, 160 GYRATIONS, PG 64-22, WEDGE
- (DD) ITEM 733001 - TOPSOILING, 4" DEPTH
  ITEM 734013 - PERMANENT GRASS SEEDING, DRY GROUND
- (EE) ITEM 713002 - GEOTEXTILE, SEPARATION
- (FF) ITEM 701013 - PCC CURB, TYPE 1-2

(1) TRANSITION SLOPE FROM 6:1 AT STA. 823+82 RT TO 4:1 AT STA. 824+07 RT.

(2) TRANSITION WIDTH FROM 4' AT STA. 823+25 RT TO 6' AT STA. 823+50 RT. HOLD 6' FROM STA. 823+50 RT TO 826+07 RT.

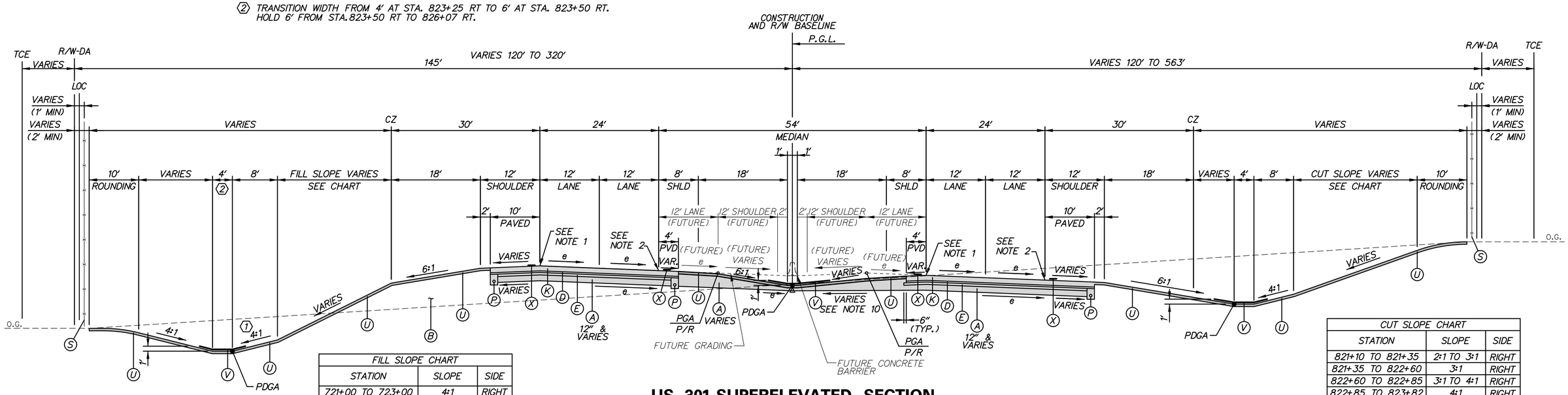

STA. 721+00 TO STA. 726+50, RT.
STA. 735+80 TO STA. 737+86, LT.
STA. 801+60 TO STA. 803+00, LT.

FILL SLOPE CHART		
STATION	SLOPE	SIDE
721+00 TO 723+00	4:1	RIGHT
723+00 TO 723+25	4:1 TO 6:1	RIGHT
723+25 TO 726+50	6:1	RIGHT
735+80 TO 737+86	4:1	LEFT
749+50 TO 750+00	4:1 TO 3:1	LEFT
823+82 TO 825+25	6:1	RIGHT
825+25 TO 825+50	6:1 TO 4:1	RIGHT
825+50 TO 826+07	4:1	RIGHT

CUT SLOPE CHART		
STATION	SLOPE	SIDE
821+10 TO 821+35	2:1 TO 3:1	RIGHT
821+35 TO 822+60	3:1	RIGHT
822+60 TO 822+85	3:1 TO 4:1	RIGHT
822+85 TO 823+82	4:1	RIGHT

US 301 SUPERELEVATED SECTION

STATION 692+32 TO STATION 713+98 (emax=-2.6%)
STATION 719+44 TO STATION 760+90 (emax=5.8%)
STATION 780+13 TO STATION 799+33 (emax=3.8%)
STATION 809+75 TO STATION 831+10 (emax=-5.7%)

SEE SUPERELEVATED SECTION TS-07 TO TS-15 FOR ADDITIONAL DETAILS

NOTE:
BETWEEN SR 896/BOYD'S CORNER ROAD AND STATION 700+00, EXCAVATE 2' BELOW EXISTING GRADE FOR ENTIRE ROADWAY FOOTPRINT, PLACE SEPARATION GEOTEXTILE AND BACKFILL 2' WITH BORROW, TYPE B. EXCAVATION WITHIN WOODED AREAS WILL BE INCIDENTAL TO ITEM 201000 - CLEARING AND GRUBBING; ALL OTHER EXCAVATION WILL BE PAID UNDER ITEM 202000 - EXCAVATION AND EMBANKMENT.

TS-02

DELAWARE DEPARTMENT OF TRANSPORTATION

ADDENDUMS / REVISIONS

US 301, SR 896 TO SR 1

CONTRACT	BRIDGE NO.	
T200911308	DESIGNED BY: KGMA	
COUNTY		
NEW CASTLE	CHECKED BY: TAO	

TYPICAL SECTIONS

SHEET NO. 18
TOTAL SHTS. 875

N:\31653-000\Contract_1A\CADD\TS0201301_1A.dgn
11/3/2014 3:04:24 PM

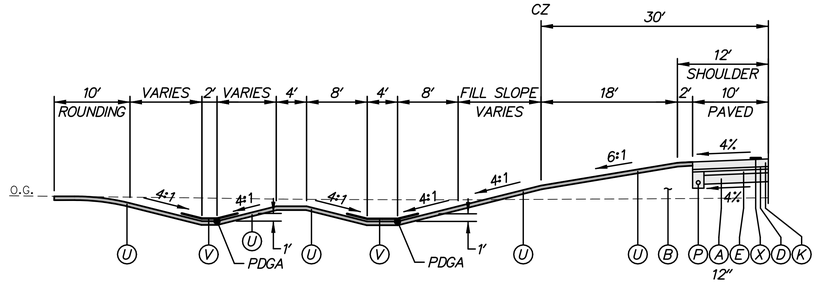

FILL SLOPE CHART		
STATION	SLOPE	SIDE
713+98 TO 719+44	4:1	LEFT
799+33 TO 800+25	4:1	RIGHT
800+25 TO 800+50	4:1 TO 3:1	RIGHT
800+50 TO 801+50	3:1	RIGHT
801+50 TO 802+00	3:1 TO 2:1	RIGHT

US 301 NORMAL FILL SECTION WITH DIVERSION DITCH

STA. 713+98 TO STA. 719+44, LT.
STA. 799+33 TO STA. 801+81, RT.

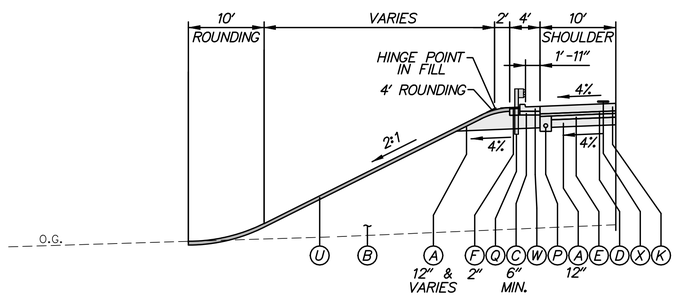

US 301 NORMAL FILL SECTION WITH CURB AND GUTTER; WITHOUT DITCH

STA.682+50 TO STA. 685+62, LT.

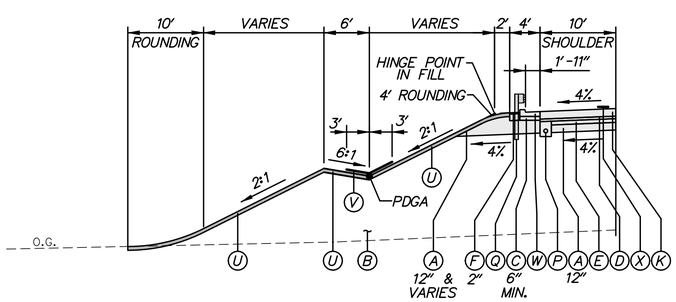

US 301 NORMAL FILL SECTION WITH CURB AND GUTTER AND HIGH FILL BENCH

STA. 682+00 TO STA. 682+50, LT.
STA. 682+00 TO STA. 684+57, RT.
STA. 686+55 TO STA. 692+32, RT.
STA. 687+32 TO STA. 692+32, LT.

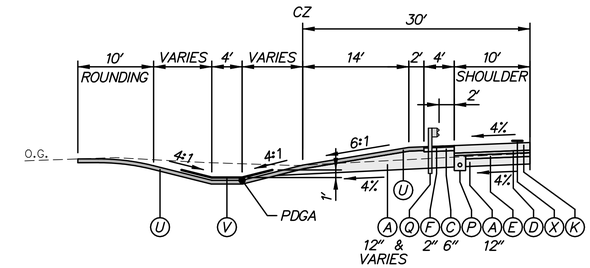

US 301 NORMAL FILL SECTION WITHOUT FILL SLOPE; WITH GUARDRAIL

STA. 770+46 TO STA. 773+15, LT.

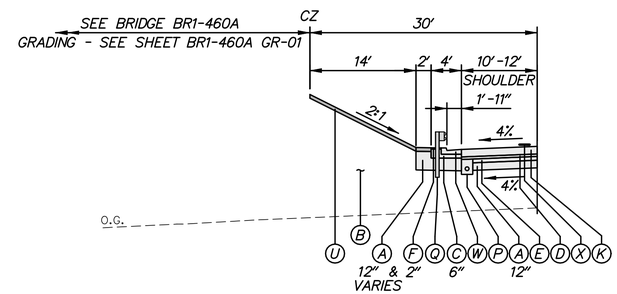

US 301 NORMAL FILL SECTION AT BRIDGE BR1–460A

STA. 768+50 TO STA. 769+21, LT.
STA. 769+86 TO STA. 770+46, LT.
STA. 768+47 TO STA. 769+11, RT.
STA. 769+78 TO STA. 770+52, RT.

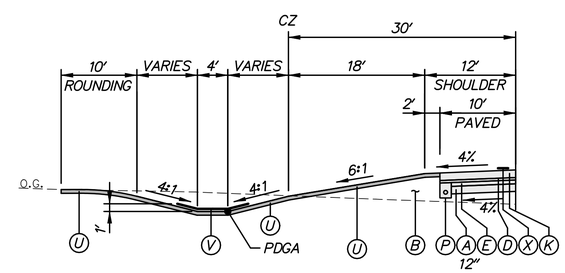

US 301 NORMAL FILL SECTION WITHOUT FILL SLOPE AND GUARDRAIL

STA. 766+50 TO STA. 768+50, LT.
STA. 773+15 TO STA. 775+40, LT.
STA. 801+00 TO STA. 801+60, LT.
STA. 760+90 TO STA. 762+41, RT.
STA. 770+52 TO STA. 771+90 RT.

LEGEND

- (A) ITEM 209001 - BORROW, TYPE A
- (B) ITEM 209006 - BORROW, TYPE F
- (C) ITEM 302007 - GRADED AGGREGATE BASE COURSE, TYPE B
- (D) ITEM 304501 - PERMEABLE TREATED BASE, 4"
- (E) ITEM 304502 - SOIL CEMENT BASE COURSE, 6"
- (F) ITEM 401801 - WMA, SUPERPAVE, TYPE C, 160 GYRATIONS, PG 64-22
- (G) ITEM 401810 - WMA, SUPERPAVE, TYPE B, 160 GYRATIONS, PG 64-22
- (J) ITEM 401819 - WMA, SUPERPAVE, BITUMINOUS CONCRETE BASE COURSE, 160 GYRATIONS, PG 64-22
- (K) ITEM 501006 - PORTLAND CEMENT CONCRETE PAVEMENT, 12"
- (L) ITEM 701010 - PCC CURB, TYPE 1-8
- (N) ITEM 701022 - PCC CURB AND GUTTER, TYPE 3-8
- (P) ITEM 715001 - PERFORATED PIPE UNDERDRAINS, 6"
- (Q) ITEM 720050 - GALVANIZED STEEL BEAM GUARDRAIL, TYPE 1-31
- (R) ITEM 720052 - GALVANIZED STEEL BEAM GUARDRAIL, TYPE 3-31
- (S) ITEM 727000 - RIGHT OF WAY FENCE
- (T) ITEM 501001 - 8" PORTLAND CEMENT CONCRETE
- (U) ITEM 733002 - TOPSOILING, 6" DEPTH
  ITEM 734013 - PERMANENT GRASS SEEDING, DRY GROUND
- (V) ITEM 733002 - TOPSOILING, 6" DEPTH
  ITEM 734013 - PERMANENT GRASS SEEDING, DRY GROUND
  ITEM 735535 - SOIL RETENTION BLANKET MULCH, TYPE 5
- (W) ITEM 701016 - PCC CURB AND GUTTER, TYPE 1-4
- (X) ITEM 760017 - RUMBLE STRIPS, CONCRETE
- (Y) ITEM 705001 - PCC SIDEWALK, 4"
- (AA) ITEM 720626 - CONCRETE SINGLE FACE BARRIER, TYPE 1
- (BB) ITEM 760507 - PROFILE MILLING, HOT-MIX
- (CC) ITEM 401824 - WMA, SUPERPAVE, TYPE C, 160 GYRATIONS, PG 64-22, WEDGE
- (DD) ITEM 733001 - TOPSOILING, 4" DEPTH
  ITEM 734013 - PERMANENT GRASS SEEDING, DRY GROUND
- (EE) ITEM 713002 - GEOTEXTILE, SEPARATION
- (FF) ITEM 701013 - PCC CURB, TYPE 1-2

NOTES:

1. THE MAXIMUM ALGEBRAIC DIFFERENCE ON THE HIGH SIDE BETWEEN THE TRAVELED WAY SLOPE AND THE ACCEL/DECEL LANES SHALL NOT EXCEED 4%. THE MAXIMUM ALGEBRAIC DIFFERENCE BETWEEN THE TRAVELED WAY SLOPE AND THE SHOULDER SLOPE SHALL NOT EXCEED 8%.
2. SHOULDER SLOPE ON THE LOW SIDE SHALL BE THE SAME AS THE TRAVELED WAY SLOPE WHEN SUPERELEVATION IS GREATER THAN 4%.
3. SEE GRADES AND GEOMETRICS SHEETS FOR SUPERELEVATED CROSS SLOPE TRANSITIONS.
4. SEE SHEET TS-43 FOR UNDERDRAIN DETAIL. SEE CONSTRUCTION PLANS FOR PLACEMENT LOCATIONS.
5. PGA - POINT OF GRADE APPLICATION
   PDGA - POINT OF DITCH GRADE APPLICATION
   P/R - POINT OF ROTATION
   P.G.L. - POINT OF GRADE LINE
6. THE MAXIMUM LIFTS FOR THE INDIVIDUAL PAVING MATERIALS ARE AS FOLLOWS:
   SUPERPAVE, TYPE C WMA - 2"
   SUPERPAVE, TYPE B WMA - 3"
   SUPERPAVE BIT. CONC. BASE COURSE - 4"
   GRADED AGGREGATE BASE COURSE - 8"
7. SUPERPAVE, TYPE B HOT-MIX SHALL BE PLACED IN TWO EQUAL LIFTS, WHEN THICKNESS EXCEEDS 3".
8. SEE SHEET DT-01 FOR RUMBLE STRIP LOCATIONS.
9. SEE SHEET DT-12 FOR SAFETY EDGE DETAILS. THESE DETAILS SHALL BE APPLIED AT ALL INSTANCES WHERE THE EDGE OF PROPOSED PAVEMENT MEETS THE 6" TOPSOIL.
10. ON THE HIGH SIDE OF THE SUPERELEVATED MEDIAN SECTION THE BOTTOM OF BORROW TYPE A SHALL FOLLOW THE SUPERELEVATION RATE FOR THE ROADWAY EXTENDED UNTIL IT INTERSECTS WITH EITHER THE BOTTOM OF TOPSOIL FOR THE MEDIAN SIDESLOPES OR IT INTERSECTS WITH THE CONSTRUCTION BASELINE. ON THE LOW SIDE OF THE SUPERELEVATED MEDIAN SECTION THE BOTTOM OF BORROW TYPE A SHALL BE CONSTRUCTED FROM THE POINT IN WHICH THE EXTENDED SUPERELEVATION SLOPE (e) INTERSECTS THE CONSTRUCTION BASELINE TO THE GRADE BREAK AT THE INSIDE EDGE OF TRAVELED WAY.
11. FOR INTERFACE BETWEEN MOMENT SLAB AND ROADWAY PAVEMENT AND APPROACH SLAB AND ROADWAY PAVEMENT, SEE STRUCTURAL DETAILS.
12. SEE SHEET DT-15 FOR DETAILS OF CONSTRUCTING PROPOSED EARTH BERM.

N:\31653-000\Contract 1A\CADD\TS003U301_1A.dgn
11/3/2014 3:04:55 PM

DELAWARE DEPARTMENT OF TRANSPORTATION	ADDENDUMS / REVISIONS	NOT TO SCALE	US 301, SR 896 TO SR 1	CONTRACT T200911308	BRIDGE NO.	TYPICAL SECTIONS	TS-03
				COUNTY NEW CASTLE	DESIGNED BY: JAD		SHEET NO. 19
					CHECKED BY: BRT		TOTAL SHTS. 875

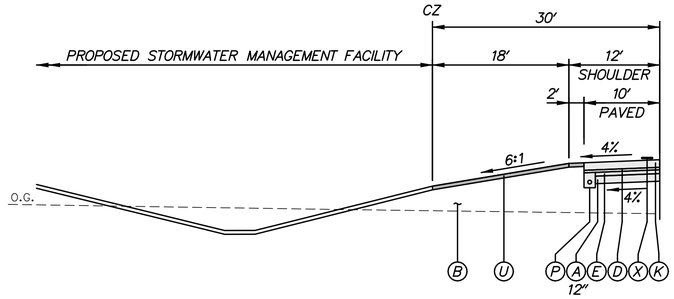

US 301 NORMAL BMP SECTION

STA. 713+98 TO STA. 719+44, RT., BMP NO. 720 - SEE SHEET SW-01
STA. 803+00 TO STA. 806+08, LT., BMP NO. 733 - SEE SHEET SW-22
STA. 834+33 TO STA. 837+50, LT., BMP NO. 737 - SEE SHEET SW-30

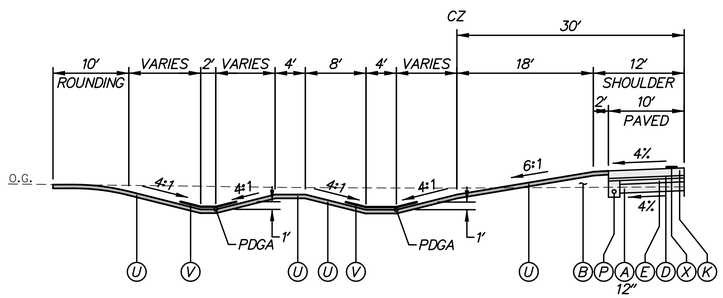

US 301 NORMAL FILL SECTION WITH DIVERSION DITCH; WITHOUT FILL SLOPE

STA. 799+33 TO STA. 801+00, LT.

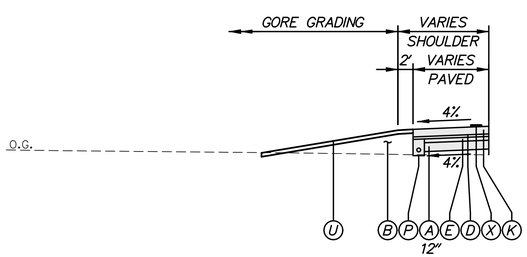

US 301 NORMAL GORE AREA

STA. 777+68 TO STA. 780+13, RT. - SEE SHEET DT-20
STA. 778+80 TO STA. 780+13, LT. - SEE SHEET DT-20

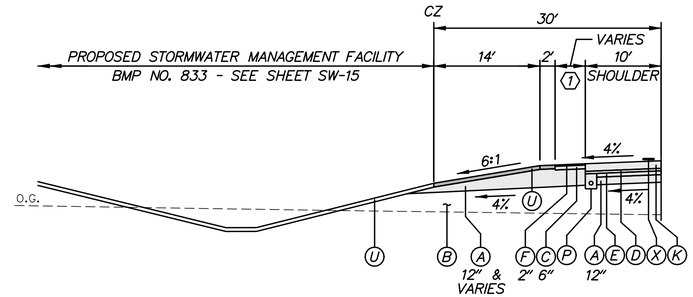

1 SEE DELDOT STANDARD CONSTRUCTION DETAIL, B-2 - GRADING FOR GUARDRAIL END TREATMENT ATTENUATOR TYPE 1.

US 301 NORMAL FILL SECTION BMP NO. 737 WITH MAINTENANCE PAVING

STA. 833+93 TO STA. 834+33, LT.

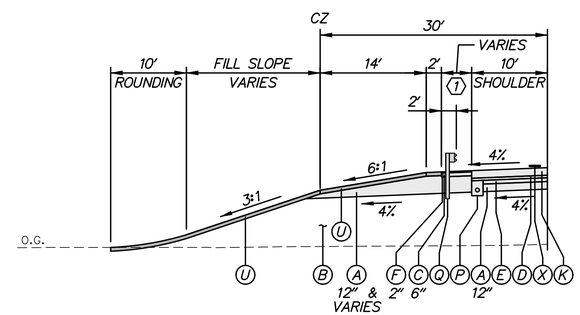

1 SEE DELDOT STANDARD CONSTRUCTION DETAIL, B-2 - GRADING FOR GUARDRAIL END TREATMENT ATTENUATOR TYPE 1.

FILL SLOPE CHART		
STATION	SLOPE	SIDE
831+10 TO 831+15	2:1	LEFT
831+15 TO 831+35	2:1 TO 3:1	LEFT
833+71 TO 833+93	2:1	LEFT

US 301 NORMAL FILL SECTION WITH GUARDRAIL; WITHOUT DITCH

STA. 831+10 TO STA. 831+50, LT.
STA. 833+71 TO STA. 833+93, LT.

LEGEND

- (A) ITEM 209001 - BORROW, TYPE A
- (B) ITEM 209006 - BORROW, TYPE F
- (C) ITEM 302007 - GRADED AGGREGATE BASE COURSE, TYPE B
- (D) ITEM 304501 - PERMEABLE TREATED BASE, 4"
- (E) ITEM 304502 - SOIL CEMENT BASE COURSE, 6"
- (F) ITEM 401801 - WMA, SUPERPAVE, TYPE C, 160 GYRATIONS, PG 64-22
- (G) ITEM 401810 - WMA, SUPERPAVE, TYPE B, 160 GYRATIONS, PG 64-22
- (J) ITEM 401819 - WMA, SUPERPAVE, BITUMINOUS CONCRETE BASE COURSE, 160 GYRATIONS, PG 64-22
- (K) ITEM 501006 - PORTLAND CEMENT CONCRETE PAVEMENT, 12"
- (L) ITEM 701010 - PCC CURB, TYPE 1-8
- (N) ITEM 701022 - PCC CURB AND GUTTER, TYPE 3-8
- (P) ITEM 715001 - PERFORATED PIPE UNDERDRAINS, 6"
- (Q) ITEM 720050 - GALVANIZED STEEL BEAM GUARDRAIL, TYPE 1-31
- (R) ITEM 720052 - GALVANIZED STEEL BEAM GUARDRAIL, TYPE 3-31
- (S) ITEM 727000 - RIGHT OF WAY FENCE
- (T) ITEM 501001 - 8" PORTLAND CEMENT CONCRETE
- (U) ITEM 733002 - TOPSOILING, 6" DEPTH
  ITEM 734013 - PERMANENT GRASS SEEDING, DRY GROUND
- (V) ITEM 733002 - TOPSOILING, 6" DEPTH
  ITEM 734013 - PERMANENT GRASS SEEDING, DRY GROUND
  ITEM 735535 - SOIL RETENTION BLANKET MULCH, TYPE 5
- (W) ITEM 701016 - PCC CURB AND GUTTER, TYPE 1-4
- (X) ITEM 760017 - RUMBLE STRIPS, CONCRETE
- (Y) ITEM 705001 - PCC SIDEWALK, 4"
- (AA) ITEM 720626 - CONCRETE SINGLE FACE BARRIER, TYPE 1
- (BB) ITEM 760507 - PROFILE MILLING, HOT-MIX
- (CC) ITEM 401824 - WMA, SUPERPAVE, TYPE C, 160 GYRATIONS, PG 64-22, WEDGE
- (DD) ITEM 733001 - TOPSOILING, 4" DEPTH
  ITEM 734013 - PERMANENT GRASS SEEDING, DRY GROUND
- (EE) ITEM 713002 - GEOTEXTILE, SEPARATION
- (FF) ITEM 701013 - PCC CURB, TYPE 1-2

NOTES:

1. THE MAXIMUM ALGEBRAIC DIFFERENCE ON THE HIGH SIDE BETWEEN THE TRAVELED WAY SLOPE AND THE ACCEL/DECEL LANES SHALL NOT EXCEED 4%. THE MAXIMUM ALGEBRAIC DIFFERENCE BETWEEN THE TRAVELED WAY SLOPE AND THE SHOULDER SLOPE SHALL NOT EXCEED 8%.
2. SHOULDER SLOPE ON THE LOW SIDE SHALL BE THE SAME AS THE TRAVELED WAY SLOPE WHEN SUPERELEVATION IS GREATER THAN 4%.
3. SEE GRADES AND GEOMETRICS SHEETS FOR SUPERELEVATED CROSS SLOPE TRANSITIONS.
4. SEE SHEET TS-43 FOR UNDERDRAIN DETAIL.
   SEE CONSTRUCTION PLANS FOR PLACEMENT LOCATIONS.
5. PGA - POINT OF GRADE APPLICATION
   PDGA - POINT OF DITCH GRADE APPLICATION
   P/R - POINT OF ROTATION
   P.G.L. - POINT OF GRADE LINE
6. THE MAXIMUM LIFTS FOR THE INDIVIDUAL PAVING MATERIALS ARE AS FOLLOWS:
   SUPERPAVE, TYPE C WMA - 2"
   SUPERPAVE, TYPE B WMA - 3"
   SUPERPAVE BIT. CONC. BASE COURSE - 4"
   GRADED AGGREGATE BASE COURSE - 8"
7. SUPERPAVE, TYPE B HOT-MIX SHALL BE PLACED IN TWO EQUAL LIFTS, WHEN THICKNESS EXCEEDS 3".
8. SEE SHEET DT-01 FOR RUMBLE STRIP LOCATIONS.
9. SEE SHEET DT-12 FOR SAFETY EDGE DETAILS. THESE DETAILS SHALL BE APPLIED AT ALL INSTANCES WHERE THE EDGE OF PROPOSED PAVEMENT MEETS THE 6" TOPSOIL.
10. ON THE HIGH SIDE OF THE SUPERELEVATED MEDIAN SECTION THE BOTTOM OF BORROW TYPE A SHALL FOLLOW THE SUPERELEVATION RATE FOR THE ROADWAY EXTENDED UNTIL IT INTERSECTS WITH EITHER THE BOTTOM OF TOPSOIL FOR THE MEDIAN SIDESLOPES OR IT INTERSECTS WITH THE CONSTRUCTION BASELINE. ON THE LOW SIDE OF THE SUPERELEVATED MEDIAN SECTION THE BOTTOM OF BORROW TYPE A SHALL BE CONSTRUCTED FROM THE POINT IN WHICH THE EXTENDED SUPERELEVATION SLOPE (e) INTERSECTS THE CONSTRUCTION BASELINE TO THE GRADE BREAK AT THE INSIDE EDGE OF TRAVELED WAY.
11. FOR INTERFACE BETWEEN MOMENT SLAB AND ROADWAY PAVEMENT AND APPROACH SLAB AND ROADWAY PAVEMENT, SEE STRUCTURAL DETAILS.
12. SEE SHEET DT-15 FOR DETAILS OF CONSTRUCTING PROPOSED EARTH BERM.

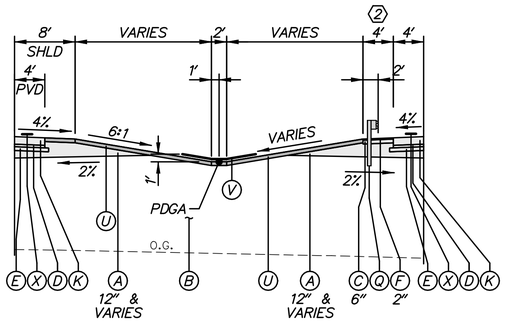

(2) TRANSITION WIDTH FROM 5.50' AT STA. 804+50 TO 4.00' AT STA. 804+96.

US 301 NORMAL MEDIAN SECTION WITH GUARDRAIL

STA. 804+50 TO STA. 805+15, MEDIAN

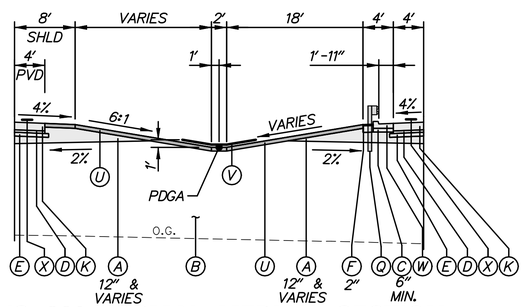

US 301 NORMAL MEDIAN SECTION WITH CURB AND GUTTER

STA. 805+15 TO STA. 805+22, MEDIAN

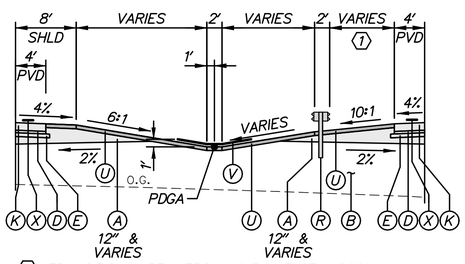

(1) TRANSITION WIDTH FROM 10.51' AT STA. 802+44 TO 3.50' AT STA. 804+50.

US 301 NORMAL MEDIAN SECTION WITH GUARDRAIL TYPE 3-31

STA. 802+44 TO STA. 804+50, MEDIAN

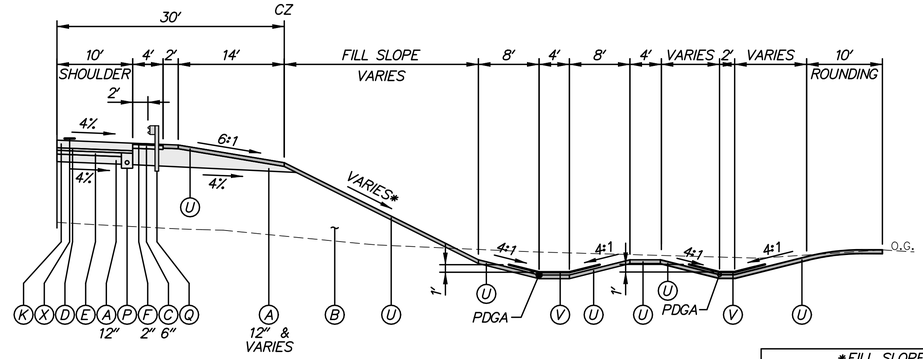

US 301 NORMAL FILL SECTION WITH GUARDRAIL AND DIVERSION DITCH

STA. 801+81 TO STA. 802+75, RT.

*FILL SLOPE CHART		
STATION	SLOPE	SIDE
801+50 TO 802+00	3:1 TO 2:1	RIGHT
802+00 TO 802+75	2:1	RIGHT

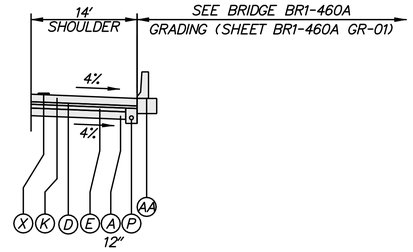

US 301 NORMAL SECTION AT BRIDGE BR1-460A ABUTMENT

STA. 769+11 TO STA. 769+77, RT.
STA. 769+21 TO STA. 769+86, LT.

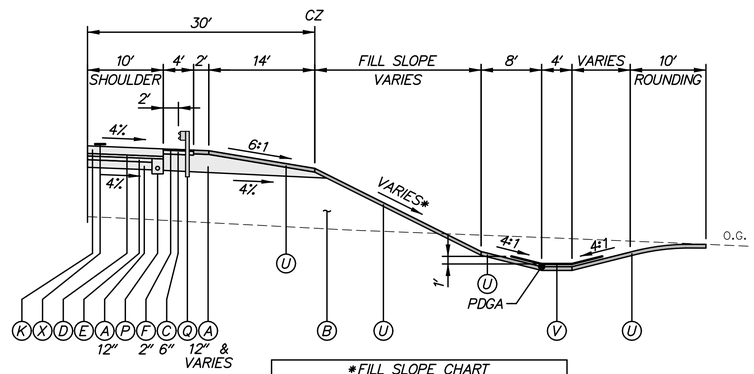

*FILL SLOPE CHART		
STATION	SLOPE	SIDE
831+50 TO 832+90	3:1	LEFT
832+90 TO 833+15	3:1 TO 2:1	LEFT
833+15 TO 833+71	2:1	LEFT
765+82 TO 768+47	6:1	RIGHT

US 301 NORMAL FILL SECTION WITH GUARDRAIL

STA. 765+82 TO STA. 768+47, RT.
STA. 803+35 TO STA. 804+46, RT.
STA. 831+50 TO STA. 833+71, LT.

LEGEND

- (A) ITEM 209001 - BORROW, TYPE A
- (B) ITEM 209006 - BORROW, TYPE F
- (C) ITEM 302007 - GRADED AGGREGATE BASE COURSE, TYPE B
- (D) ITEM 304501 - PERMEABLE TREATED BASE, 4"
- (E) ITEM 304502 - SOIL CEMENT BASE COURSE, 6"
- (F) ITEM 401801 - WMA, SUPERPAVE, TYPE C, 160 GYRATIONS, PG 64-22
- (G) ITEM 401810 - WMA, SUPERPAVE, TYPE B, 160 GYRATIONS, PG 64-22
- (J) ITEM 401819 - WMA, SUPERPAVE, BITUMINOUS CONCRETE BASE COURSE, 160 GYRATIONS, PG 64-22
- (K) ITEM 501006 - PORTLAND CEMENT CONCRETE PAVEMENT, 12"
- (L) ITEM 701010 - PCC CURB, TYPE 1-8
- (N) ITEM 701022 - PCC CURB AND GUTTER, TYPE 3-8
- (P) ITEM 715001 - PERFORATED PIPE UNDERDRAINS, 6"
- (Q) ITEM 720050 - GALVANIZED STEEL BEAM GUARDRAIL, TYPE 1-31
- (R) ITEM 720052 - GALVANIZED STEEL BEAM GUARDRAIL, TYPE 3-31
- (S) ITEM 727000 - RIGHT OF WAY FENCE
- (T) ITEM 501001 - 8" PORTLAND CEMENT CONCRETE
- (U) ITEM 733002 - TOPSOILING, 6" DEPTH
  ITEM 734013 - PERMANENT GRASS SEEDING, DRY GROUND
- (V) ITEM 733002 - TOPSOILING, 6" DEPTH
  ITEM 734013 - PERMANENT GRASS SEEDING, DRY GROUND
  ITEM 735535 - SOIL RETENTION BLANKET MULCH, TYPE 5
- (W) ITEM 701016 - PCC CURB AND GUTTER, TYPE 1-4
- (X) ITEM 760017 - RUMBLE STRIPS, CONCRETE
- (Y) ITEM 705001 - PCC SIDEWALK, 4"
- (AA) ITEM 720626 - CONCRETE SINGLE FACE BARRIER, TYPE 1
- (BB) ITEM 760507 - PROFILE MILLING, HOT-MIX
- (CC) ITEM 401824 - WMA, SUPERPAVE, TYPE C, 160 GYRATIONS, PG 64-22, WEDGE
- (DD) ITEM 733001 - TOPSOILING, 4" DEPTH
  ITEM 734013 - PERMANENT GRASS SEEDING, DRY GROUND
- (EE) ITEM 713002 - GEOTEXTILE, SEPARATION
- (FF) ITEM 701013 - PCC CURB, TYPE 1-2

NOTES:

1. THE MAXIMUM ALGEBRAIC DIFFERENCE ON THE HIGH SIDE BETWEEN THE TRAVELED WAY SLOPE AND THE ACCEL/DECEL LANES SHALL NOT EXCEED 4%. THE MAXIMUM ALGEBRAIC DIFFERENCE BETWEEN THE TRAVELED WAY SLOPE AND THE SHOULDER SLOPE SHALL NOT EXCEED 8%.
2. SHOULDER SLOPE ON THE LOW SIDE SHALL BE THE SAME AS THE TRAVELED WAY SLOPE WHEN SUPERELEVATION IS GREATER THAN 4%.
3. SEE GRADES AND GEOMETRICS SHEETS FOR SUPERELEVATED CROSS SLOPE TRANSITIONS.
4. SEE SHEET TS-43 FOR UNDERDRAIN DETAIL. SEE CONSTRUCTION PLANS FOR PLACEMENT LOCATIONS.
5. PGA - POINT OF GRADE APPLICATION
   PDGA - POINT OF DITCH GRADE APPLICATION
   P/R - POINT OF ROTATION
   P.G.L. - POINT OF GRADE LINE
6. THE MAXIMUM LIFTS FOR THE INDIVIDUAL PAVING MATERIALS ARE AS FOLLOWS:
   SUPERPAVE, TYPE C WMA - 2"
   SUPERPAVE, TYPE B WMA - 3"
   SUPERPAVE BIT. CONC. BASE COURSE - 4"
   GRADED AGGREGATE BASE COURSE - 8"
7. SUPERPAVE, TYPE B HOT-MIX SHALL BE PLACED IN TWO EQUAL LIFTS, WHEN THICKNESS EXCEEDS 3".
8. SEE SHEET DT-01 FOR RUMBLE STRIP LOCATIONS.
9. SEE SHEET DT-12 FOR SAFETY EDGE DETAILS. THESE DETAILS SHALL BE APPLIED AT ALL INSTANCES WHERE THE EDGE OF PROPOSED PAVEMENT MEETS THE 6" TOPSOIL.
10. ON THE HIGH SIDE OF THE SUPERELEVATED MEDIAN SECTION THE BOTTOM OF BORROW TYPE A SHALL FOLLOW THE SUPERELEVATION RATE FOR THE ROADWAY EXTENDED UNTIL IT INTERSECTS WITH EITHER THE BOTTOM OF TOPSOIL FOR THE MEDIAN SIDESLOPES OR IT INTERSECTS WITH THE CONSTRUCTION BASELINE. ON THE LOW SIDE OF THE SUPERELEVATED MEDIAN SECTION THE BOTTOM OF BORROW TYPE A SHALL BE CONSTRUCTED FROM THE POINT IN WHICH THE EXTENDED SUPERELEVATION SLOPE (e) INTERSECTS THE CONSTRUCTION BASELINE TO THE GRADE BREAK AT THE INSIDE EDGE OF TRAVELED WAY.
11. FOR INTERFACE BETWEEN MOMENT SLAB AND ROADWAY PAVEMENT AND APPROACH SLAB AND ROADWAY PAVEMENT, SEE STRUCTURAL DETAILS.
12. SEE SHEET DT-15 FOR DETAILS OF CONSTRUCTING PROPOSED EARTH BERM.

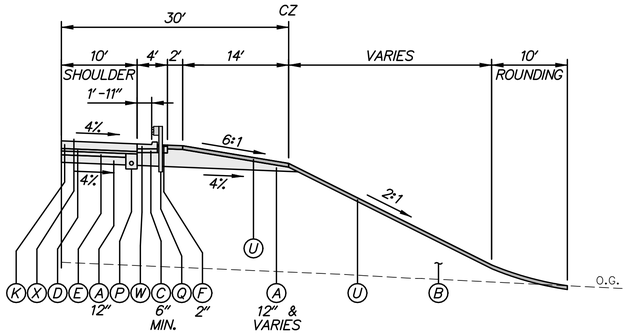

US 301 NORMAL FILL SECTION WITH CURB AND GUTTER; WITHOUT DITCH

STA. 805+08 TO STA. 805+22, RT.

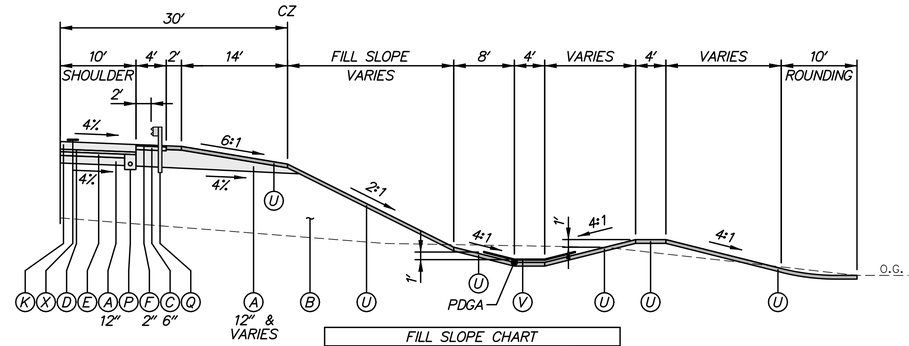

FILL SLOPE CHART		
STATION	SLOPE	SIDE
836+00 TO 837+00	3:1	RIGHT
837+00 TO 837+25	3:1 TO 4:1	RIGHT
837+25 TO 837+50	4:1	RIGHT

US 301 NORMAL FILL SECTION WITH GUARDRAIL AND BERM 1' ABOVE EXISTING GROUND

STA. 836+00 TO STA. 837+50, RT.

LEGEND

- (A) ITEM 209001 - BORROW, TYPE A
- (B) ITEM 209006 - BORROW, TYPE F
- (C) ITEM 302007 - GRADED AGGREGATE BASE COURSE, TYPE B
- (D) ITEM 304501 - PERMEABLE TREATED BASE, 4"
- (E) ITEM 304502 - SOIL CEMENT BASE COURSE, 6"
- (F) ITEM 401801 - WMA, SUPERPAVE, TYPE C, 160 GYRATIONS, PG 64-22
- (G) ITEM 401810 - WMA, SUPERPAVE, TYPE B, 160 GYRATIONS, PG 64-22
- (J) ITEM 401819 - WMA, SUPERPAVE, BITUMINOUS CONCRETE BASE COURSE, 160 GYRATIONS, PG 64-22
- (K) ITEM 501006 - PORTLAND CEMENT CONCRETE PAVEMENT, 12"
- (L) ITEM 701010 - PCC CURB, TYPE 1-8
- (N) ITEM 701022 - PCC CURB AND GUTTER, TYPE 3-8
- (P) ITEM 715001 - PERFORATED PIPE UNDERDRAINS, 6"
- (Q) ITEM 720050 - GALVANIZED STEEL BEAM GUARDRAIL, TYPE 1-31
- (R) ITEM 720052 - GALVANIZED STEEL BEAM GUARDRAIL, TYPE 3-31
- (S) ITEM 727000 - RIGHT OF WAY FENCE
- (T) ITEM 501001 - 8" PORTLAND CEMENT CONCRETE
- (U) ITEM 733002 - TOPSOILING, 6" DEPTH
ITEM 734013 - PERMANENT GRASS SEEDING, DRY GROUND
- (V) ITEM 733002 - TOPSOILING, 6" DEPTH
ITEM 734013 - PERMANENT GRASS SEEDING, DRY GROUND
ITEM 735535 - SOIL RETENTION BLANKET MULCH, TYPE 5
- (W) ITEM 701016 - PCC CURB AND GUTTER, TYPE 1-4
- (X) ITEM 760017 - RUMBLE STRIPS, CONCRETE
- (Y) ITEM 705001 - PCC SIDEWALK, 4"
- (AA) ITEM 720626 - CONCRETE SINGLE FACE BARRIER, TYPE 1
- (BB) ITEM 760507 - PROFILE MILLING, HOT-MIX
- (CC) ITEM 401824 - WMA, SUPERPAVE, TYPE C, 160 GYRATIONS, PG 64-22, WEDGE
- (DD) ITEM 733001 - TOPSOILING, 4" DEPTH
ITEM 734013 - PERMANENT GRASS SEEDING, DRY GROUND
- (EE) ITEM 713002 - GEOTEXTILE, SEPARATION
- (FF) ITEM 701013 - PCC CURB, TYPE 1-2

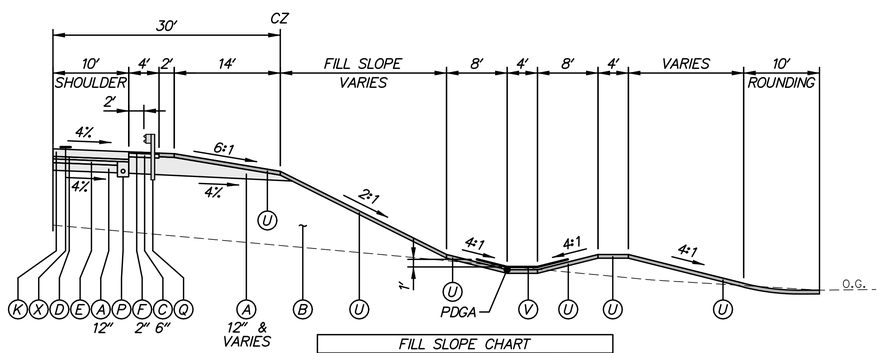

FILL SLOPE CHART		
STATION	SLOPE	SIDE
836+00 TO 837+00	3:1	RIGHT
837+00 TO 837+25	3:1 TO 4:1	RIGHT
837+25 TO 837+50	4:1	RIGHT

US 301 NORMAL FILL SECTION WITH BERM AND GUARDRAIL

STA. 802+75 TO STA. 803+35, RT.
STA. 804+46 TO STA. 805+08, RT.

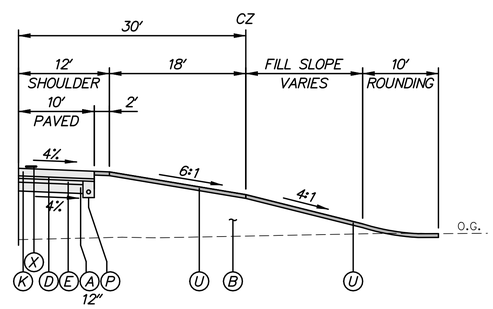

FILL SLOPE CHART		
STATION	SLOPE	SIDE
830+89 TO 831+14	3:1 TO 4:1	RIGHT
835+66 TO 836+00	3:1	RIGHT

US 301 NORMAL FILL SECTION WITHOUT DITCH AND GUARDRAIL

STA. 831+10 TO STA. 831+50, RT.
STA. 835+66 TO STA. 836+00, RT.

NOTES:

1. THE MAXIMUM ALGEBRAIC DIFFERENCE ON THE HIGH SIDE BETWEEN THE TRAVELED WAY SLOPE AND THE ACCEL/DECEL LANES SHALL NOT EXCEED 4%. THE MAXIMUM ALGEBRAIC DIFFERENCE BETWEEN THE TRAVELED WAY SLOPE AND THE SHOULDER SLOPE SHALL NOT EXCEED 8%.
2. SHOULDER SLOPE ON THE LOW SIDE SHALL BE THE SAME AS THE TRAVELED WAY SLOPE WHEN SUPERELEVATION IS GREATER THAN 4%.
3. SEE GRADES AND GEOMETRICS SHEETS FOR SUPERELEVATED CROSS SLOPE TRANSITIONS.
4. SEE SHEET TS-43 FOR UNDERDRAIN DETAIL.
SEE CONSTRUCTION PLANS FOR PLACEMENT LOCATIONS.
5. PGA - POINT OF GRADE APPLICATION
PDGA - POINT OF DITCH GRADE APPLICATION
P/R - POINT OF ROTATION
P.G.L. - POINT OF GRADE LINE
6. THE MAXIMUM LIFTS FOR THE INDIVIDUAL PAVING MATERIALS ARE AS FOLLOWS:
SUPERPAVE, TYPE C WMA - 2"
SUPERPAVE, TYPE B WMA - 3"
SUPERPAVE BIT. CONC. BASE COURSE - 4"
GRADED AGGREGATE BASE COURSE - 8"
7. SUPERPAVE, TYPE B HOT-MIX SHALL BE PLACED IN TWO EQUAL LIFTS, WHEN THICKNESS EXCEEDS 3".
8. SEE SHEET DT-01 FOR RUMBLE STRIP LOCATIONS.
9. SEE SHEET DT-12 FOR SAFETY EDGE DETAILS. THESE DETAILS SHALL BE APPLIED AT ALL INSTANCES WHERE THE EDGE OF PROPOSED PAVEMENT MEETS THE 6" TOPSOIL.
10. ON THE HIGH SIDE OF THE SUPERELEVATED MEDIAN SECTION THE BOTTOM OF BORROW TYPE A SHALL FOLLOW THE SUPERELEVATION RATE FOR THE ROADWAY EXTENDED UNTIL IT INTERSECTS WITH EITHER THE BOTTOM OF TOPSOIL FOR THE MEDIAN SIDESLOPES OR IT INTERSECTS WITH THE CONSTRUCTION BASELINE. ON THE LOW SIDE OF THE SUPERELEVATED MEDIAN SECTION THE BOTTOM OF BORROW TYPE A SHALL BE CONSTRUCTED FROM THE POINT IN WHICH THE EXTENDED SUPERELEVATION SLOPE (e) INTERSECTS THE CONSTRUCTION BASELINE TO THE GRADE BREAK AT THE INSIDE EDGE OF TRAVELED WAY.
11. FOR INTERFACE BETWEEN MOMENT SLAB AND ROADWAY PAVEMENT AND APPROACH SLAB AND ROADWAY PAVEMENT, SEE STRUCTURAL DETAILS.
12. SEE SHEET DT-15 FOR DETAILS OF CONSTRUCTING PROPOSED EARTH BERM.

N:\31653-000\Contract 1A\CADD\TS006U301_1A.dgn
11/3/2014 3:06:37 PM

DELAWARE DEPARTMENT OF TRANSPORTATION	ADDENDUMS / REVISIONS	NOT TO SCALE	US 301, SR 896 TO SR 1	CONTRACT T200911308	BRIDGE NO.	TYPICAL SECTIONS	TS-06
				COUNTY NEW CASTLE	DESIGNED BY: JAD		SHEET NO. 22
					CHECKED BY: BRT		TOTAL SHTS. 875

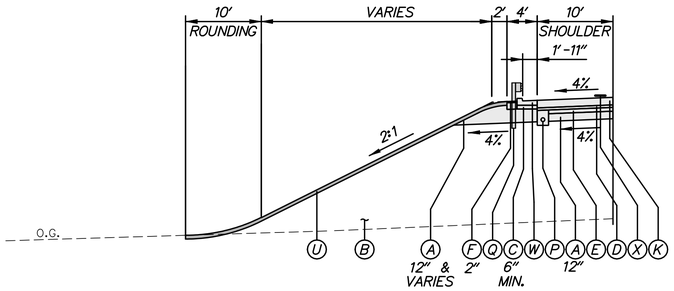

US 301 SUPERELEVATED FILL SECTION WITH CURB AND GUTTER; WITHOUT DITCH

STA. 694+00 TO STA. 696+85, LT.
STA. 694+50 TO STA. 699+25, RT.

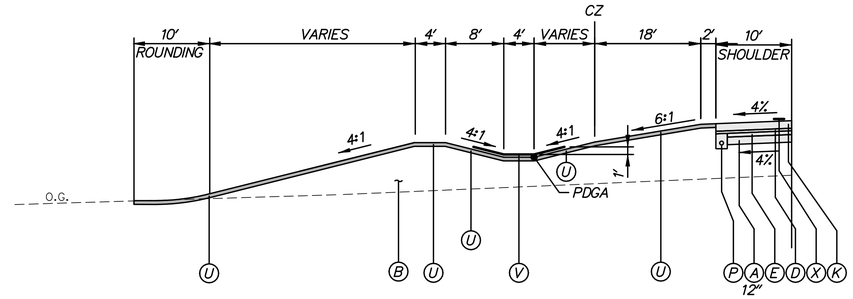

US 301 SUPERELEVATED FILL SECTION WITHOUT CURB AND GUTTER; WITH MID-FILL DITCH

STA. 699+89 TO STA. 709+00, LT.
STA. 699+37.50 TO STA. 709+00, RT.

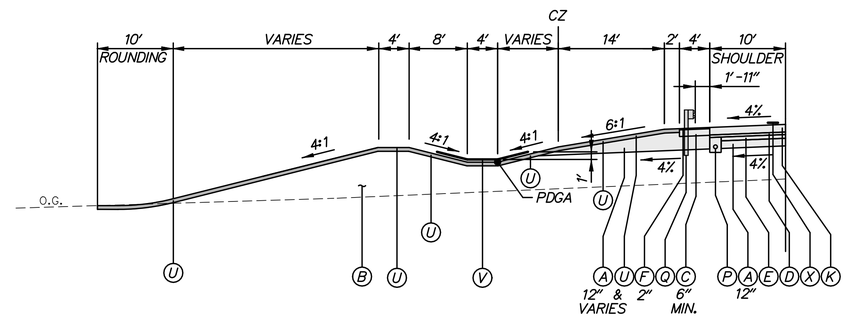

US 301 SUPERELEVATED FILL SECTION WITH GUARDRAIL; WITH MID-FILL DITCH

STA. 696+85 TO STA. 699+89, LT.
STA. 699+25 TO STA. 709+00, RT.

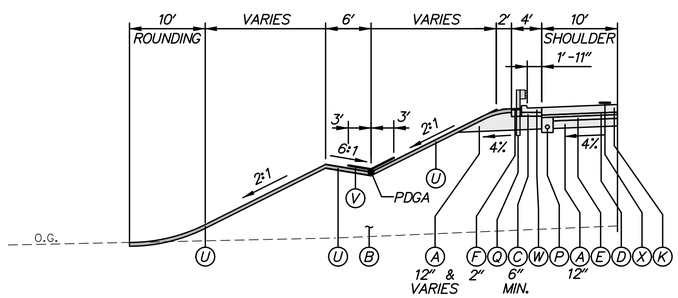

US 301 SUPERELEVATED FILL SECTION WITH CURB AND GUTTER AND HIGH FILL BENCH

STA. 692+32 TO STA. 694+50, RT.
STA. 692+32 TO STA. 694+00, LT.

LEGEND

- (A) ITEM 209001 - BORROW, TYPE A
- (B) ITEM 209006 - BORROW, TYPE F
- (C) ITEM 302007 - GRADED AGGREGATE BASE COURSE, TYPE B
- (D) ITEM 304501 - PERMEABLE TREATED BASE, 4"
- (E) ITEM 304502 - SOIL CEMENT BASE COURSE, 6"
- (F) ITEM 401801 - WMA, SUPERPAVE, TYPE C, 160 GYRATIONS, PG 64-22
- (G) ITEM 401810 - WMA, SUPERPAVE, TYPE B, 160 GYRATIONS, PG 64-22
- (J) ITEM 401819 - WMA, SUPERPAVE, BITUMINOUS CONCRETE BASE COURSE, 160 GYRATIONS, PG 64-22
- (K) ITEM 501006 - PORTLAND CEMENT CONCRETE PAVEMENT, 12"
- (L) ITEM 701010 - PCC CURB, TYPE 1-8
- (N) ITEM 701022 - PCC CURB AND GUTTER, TYPE 3-8
- (P) ITEM 715001 - PERFORATED PIPE UNDERDRAINS, 6"
- (Q) ITEM 720050 - GALVANIZED STEEL BEAM GUARDRAIL, TYPE 1-31
- (R) ITEM 720052 - GALVANIZED STEEL BEAM GUARDRAIL, TYPE 3-31
- (S) ITEM 727000 - RIGHT OF WAY FENCE
- (T) ITEM 501001 - 8" PORTLAND CEMENT CONCRETE
- (U) ITEM 733002 - TOPSOILING, 6" DEPTH
  ITEM 734013 - PERMANENT GRASS SEEDING, DRY GROUND
- (V) ITEM 733002 - TOPSOILING, 6" DEPTH
  ITEM 734013 - PERMANENT GRASS SEEDING, DRY GROUND
  ITEM 735535 - SOIL RETENTION BLANKET MULCH, TYPE 5
- (W) ITEM 701016 - PCC CURB AND GUTTER, TYPE 1-4
- (X) ITEM 760017 - RUMBLE STRIPS, CONCRETE
- (Y) ITEM 705001 - PCC SIDEWALK, 4"
- (AA) ITEM 720626 - CONCRETE SINGLE FACE BARRIER, TYPE 1
- (BB) ITEM 760507 - PROFILE MILLING, HOT-MIX
- (CC) ITEM 401824 - WMA, SUPERPAVE, TYPE C, 160 GYRATIONS, PG 64-22, WEDGE
- (DD) ITEM 733001 - TOPSOILING, 4" DEPTH
  ITEM 734013 - PERMANENT GRASS SEEDING, DRY GROUND
- (EE) ITEM 713002 - GEOTEXTILE, SEPARATION
- (FF) ITEM 701013 - PCC CURB, TYPE 1-2

NOTES:

1. THE MAXIMUM ALGEBRAIC DIFFERENCE ON THE HIGH SIDE BETWEEN THE TRAVELED WAY SLOPE AND THE ACCEL/DECEL LANES SHALL NOT EXCEED 4%. THE MAXIMUM ALGEBRAIC DIFFERENCE BETWEEN THE TRAVELED WAY SLOPE AND THE SHOULDER SLOPE SHALL NOT EXCEED 8%.
2. SHOULDER SLOPE ON THE LOW SIDE SHALL BE THE SAME AS THE TRAVELED WAY SLOPE WHEN SUPERELEVATION IS GREATER THAN 4%.
3. SEE GRADES AND GEOMETRICS SHEETS FOR SUPERELEVATED CROSS SLOPE TRANSITIONS.
4. SEE SHEET TS-43 FOR UNDERDRAIN DETAIL.
   SEE CONSTRUCTION PLANS FOR PLACEMENT LOCATIONS.
5. PGA - POINT OF GRADE APPLICATION
   PDGA - POINT OF DITCH GRADE APPLICATION
   P/R - POINT OF ROTATION
   P.G.L. - POINT OF GRADE LINE
6. THE MAXIMUM LIFTS FOR THE INDIVIDUAL PAVING MATERIALS ARE AS FOLLOWS:
   SUPERPAVE, TYPE C WMA - 2"
   SUPERPAVE, TYPE B WMA - 3"
   SUPERPAVE BIT. CONC. BASE COURSE - 4"
   GRADED AGGREGATE BASE COURSE - 8"
7. SUPERPAVE, TYPE B HOT-MIX SHALL BE PLACED IN TWO EQUAL LIFTS, WHEN THICKNESS EXCEEDS 3".
8. SEE SHEET DT-01 FOR RUMBLE STRIP LOCATIONS.
9. SEE SHEET DT-12 FOR SAFETY EDGE DETAILS. THESE DETAILS SHALL BE APPLIED AT ALL INSTANCES WHERE THE EDGE OF PROPOSED PAVEMENT MEETS THE 6" TOPSOIL.
10. ON THE HIGH SIDE OF THE SUPERELEVATED MEDIAN SECTION THE BOTTOM OF BORROW TYPE A SHALL FOLLOW THE SUPERELEVATION RATE FOR THE ROADWAY EXTENDED UNTIL IT INTERSECTS WITH EITHER THE BOTTOM OF TOPSOIL FOR THE MEDIAN SIDESLOPES OR IT INTERSECTS WITH THE CONSTRUCTION BASELINE. ON THE LOW SIDE OF THE SUPERELEVATED MEDIAN SECTION THE BOTTOM OF BORROW TYPE A SHALL BE CONSTRUCTED FROM THE POINT IN WHICH THE EXTENDED SUPERELEVATION SLOPE (e) INTERSECTS THE CONSTRUCTION BASELINE TO THE GRADE BREAK AT THE INSIDE EDGE OF TRAVELED WAY.
11. FOR INTERFACE BETWEEN MOMENT SLAB AND ROADWAY PAVEMENT AND APPROACH SLAB AND ROADWAY PAVEMENT, SEE STRUCTURAL DETAILS.
12. SEE SHEET DT-15 FOR DETAILS OF CONSTRUCTING PROPOSED EARTH BERM.

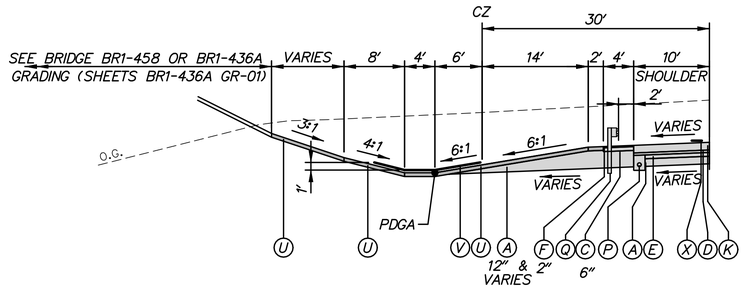

US 301 SUPERELEVATED SECTION WITH DITCH AND GUARDRAIL

STA. 811+53 TO STA. 813+12, LT.

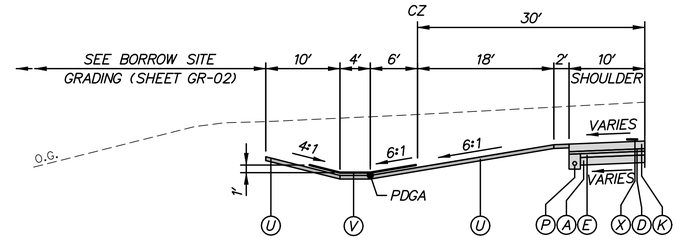

US 301 SUPERELEVATED CUT SECTION AT BORROW SITE; WITHOUT GUARDRAIL

STA. 819+17 TO STA. 820+31, LT.

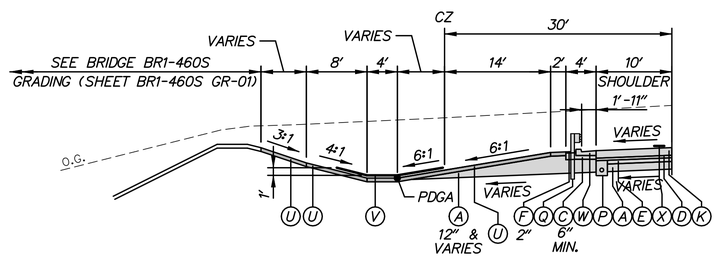

US 301 SUPERELEVATED SECTION, WITH BERM AND CURB AND GUTTER

STA. 811+50 TO STA. 811+53, LT.

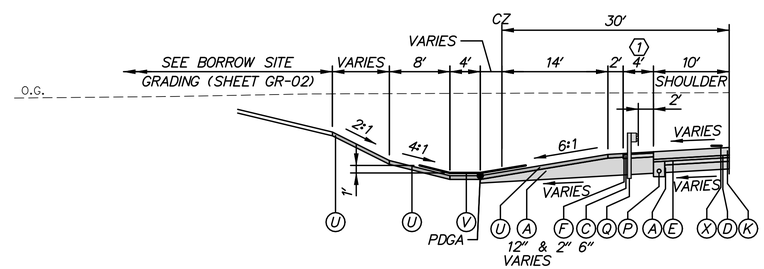

1 SEE DELDOT STANDARD CONSTRUCTION DETAIL, B-2 - GRADING FOR GUARDRAIL END TREATMENT ATTENUATOR TYPE 1.

US 301 SUPERELEVATED CUT SECTION WITH GUARDRAIL AT BORROW SITE

STA. 816+50 TO STA. 819+17, LT.

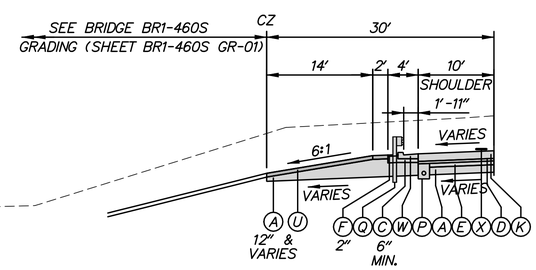

US 301 SUPERELEVATED SECTION WITH CURB AND GUTTER; WITHOUT DITCH

STA. 810+86 TO STA. 811+50, LT.

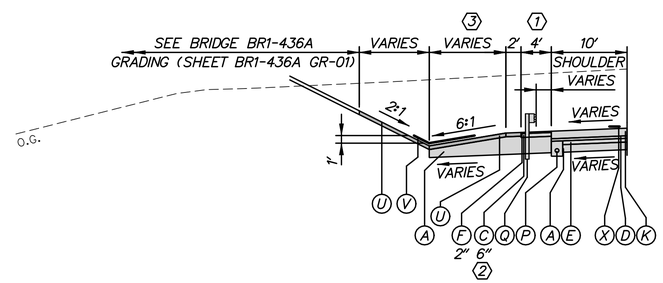

1 TRANSITION WIDTH FROM 4' AT STA. 814+43 TO 6' AT STA. 814+74. HOLD 6' WIDTH FROM STA. 814+74 TO STA. 815+63. TRANSITION WIDTH FROM 6' AT STA. 815+63 TO 4' AT STA. 815+93.

2 DEPTH 10" STA. 814+43 TO STA. 815+93.

3 WIDTH 0' STA. 813+70 TO STA. 815+97.

US 301 SUPERELEVATED SECTION WITH GUARDRAIL AT BR1-436A MSE WALL/ABUTMENT

STA. 813+12 TO STA. 816+50, LT.

LEGEND

- (A) ITEM 209001 - BORROW, TYPE A
- (B) ITEM 209006 - BORROW, TYPE F
- (C) ITEM 302007 - GRADED AGGREGATE BASE COURSE, TYPE B
- (D) ITEM 304501 - PERMEABLE TREATED BASE, 4"
- (E) ITEM 304502 - SOIL CEMENT BASE COURSE, 6"
- (F) ITEM 401801 - WMA, SUPERPAVE, TYPE C, 160 GYRATIONS, PG 64-22
- (G) ITEM 401810 - WMA, SUPERPAVE, TYPE B, 160 GYRATIONS, PG 64-22
- (J) ITEM 401819 - WMA, SUPERPAVE, BITUMINOUS CONCRETE BASE COURSE, 160 GYRATIONS, PG 64-22
- (K) ITEM 501006 - PORTLAND CEMENT CONCRETE PAVEMENT, 12"
- (L) ITEM 701010 - PCC CURB, TYPE 1-8
- (N) ITEM 701022 - PCC CURB AND GUTTER, TYPE 3-8
- (P) ITEM 715001 - PERFORATED PIPE UNDERDRAINS, 6"
- (Q) ITEM 720050 - GALVANIZED STEEL BEAM GUARDRAIL, TYPE 1-31
- (R) ITEM 720052 - GALVANIZED STEEL BEAM GUARDRAIL, TYPE 3-31
- (S) ITEM 727000 - RIGHT OF WAY FENCE
- (T) ITEM 501001 - 8" PORTLAND CEMENT CONCRETE
- (U) ITEM 733002 - TOPSOILING, 6" DEPTH
ITEM 734013 - PERMANENT GRASS SEEDING, DRY GROUND
- (V) ITEM 733002 - TOPSOILING, 6" DEPTH
ITEM 734013 - PERMANENT GRASS SEEDING, DRY GROUND
ITEM 735535 - SOIL RETENTION BLANKET MULCH, TYPE 5
- (W) ITEM 701016 - PCC CURB AND GUTTER, TYPE 1-4
- (X) ITEM 760017 - RUMBLE STRIPS, CONCRETE
- (Y) ITEM 705001 - PCC SIDEWALK, 4"
- (AA) ITEM 720626 - CONCRETE SINGLE FACE BARRIER, TYPE 1
- (BB) ITEM 760507 - PROFILE MILLING, HOT-MIX
- (CC) ITEM 401824 - WMA, SUPERPAVE, TYPE C, 160 GYRATIONS, PG 64-22, WEDGE
- (DD) ITEM 733001 - TOPSOILING, 4" DEPTH
ITEM 734013 - PERMANENT GRASS SEEDING, DRY GROUND
- (EE) ITEM 713002 - GEOTEXTILE, SEPARATION
- (FF) ITEM 701013 - PCC CURB, TYPE 1-2

NOTES:

1. THE MAXIMUM ALGEBRAIC DIFFERENCE ON THE HIGH SIDE BETWEEN THE TRAVELED WAY SLOPE AND THE ACCEL/DECEL LANES SHALL NOT EXCEED 4%. THE MAXIMUM ALGEBRAIC DIFFERENCE BETWEEN THE TRAVELED WAY SLOPE AND THE SHOULDER SLOPE SHALL NOT EXCEED 8%.
2. SHOULDER SLOPE ON THE LOW SIDE SHALL BE THE SAME AS THE TRAVELED WAY SLOPE WHEN SUPERELEVATION IS GREATER THAN 4%.
3. SEE GRADES AND GEOMETRICS SHEETS FOR SUPERELEVATED CROSS SLOPE TRANSITIONS.
4. SEE SHEET TS-43 FOR UNDERDRAIN DETAIL. SEE CONSTRUCTION PLANS FOR PLACEMENT LOCATIONS.
5. PGA - POINT OF GRADE APPLICATION
PDGA - POINT OF DITCH GRADE APPLICATION
P/R - POINT OF ROTATION
P.G.L. - POINT OF GRADE LINE
6. THE MAXIMUM LIFTS FOR THE INDIVIDUAL PAVING MATERIALS ARE AS FOLLOWS:
SUPERPAVE, TYPE C WMA - 2"
SUPERPAVE, TYPE B WMA - 3"
SUPERPAVE BIT. CONC. BASE COURSE - 4"
GRADED AGGREGATE BASE COURSE - 8"
7. SUPERPAVE, TYPE B HOT-MIX SHALL BE PLACED IN TWO EQUAL LIFTS, WHEN THICKNESS EXCEEDS 3".
8. SEE SHEET DT-01 FOR RUMBLE STRIP LOCATIONS.
9. SEE SHEET DT-12 FOR SAFETY EDGE DETAILS. THESE DETAILS SHALL BE APPLIED AT ALL INSTANCES WHERE THE EDGE OF PROPOSED PAVEMENT MEETS THE 6" TOPSOIL.
10. ON THE HIGH SIDE OF THE SUPERELEVATED MEDIAN SECTION THE BOTTOM OF BORROW TYPE A SHALL FOLLOW THE SUPERELEVATION RATE FOR THE ROADWAY EXTENDED UNTIL IT INTERSECTS WITH EITHER THE BOTTOM OF TOPSOIL FOR THE MEDIAN SIDESLOPES OR IT INTERSECTS WITH THE CONSTRUCTION BASELINE. ON THE LOW SIDE OF THE SUPERELEVATED MEDIAN SECTION THE BOTTOM OF BORROW TYPE A SHALL BE CONSTRUCTED FROM THE POINT IN WHICH THE EXTENDED SUPERELEVATION SLOPE (e) INTERSECTS THE CONSTRUCTION BASELINE TO THE GRADE BREAK AT THE INSIDE EDGE OF TRAVELED WAY.
11. FOR INTERFACE BETWEEN MOMENT SLAB AND ROADWAY PAVEMENT AND APPROACH SLAB AND ROADWAY PAVEMENT, SEE STRUCTURAL DETAILS.
12. SEE SHEET DT-15 FOR DETAILS OF CONSTRUCTING PROPOSED EARTH BERM.

N:\31653-000\Contract 1A\CADD\TS008U301_1A.dgn
11/3/2014 3:07:49 PM

DELAWARE DEPARTMENT OF TRANSPORTATION	ADDENDUMS / REVISIONS	NOT TO SCALE	US 301, SR 896 TO SR 1	CONTRACT T200911308	BRIDGE NO.	TYPICAL SECTIONS	TS-08
				COUNTY NEW CASTLE	DESIGNED BY: KGMA		SHEET NO. 24
					CHECKED BY: TAO		TOTAL SHTS. 875

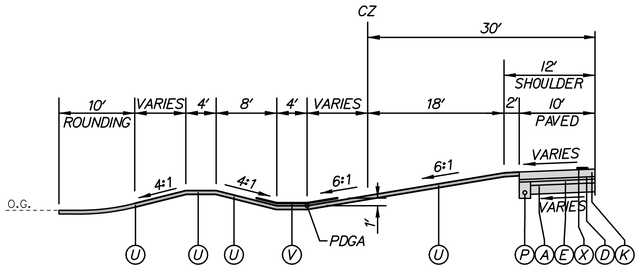

US 301 SUPERELEVATED CUT SECTION WITH BERM

STA. 709+00 TO 712+50, LT.

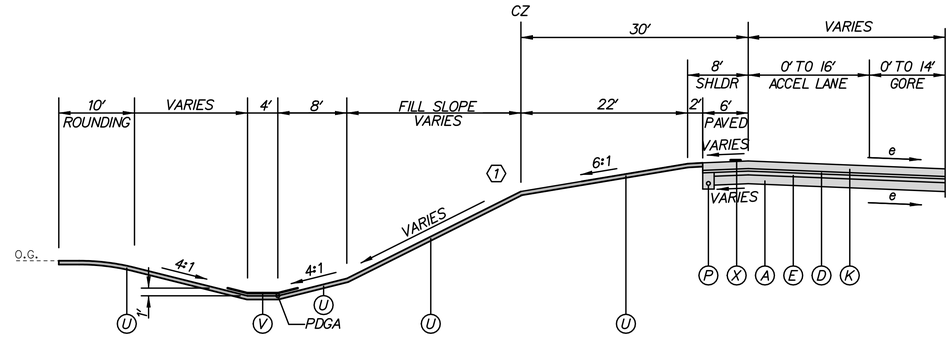

FILL SLOPE CHART		
STATION	SLOPE	SIDE
737+86 TO 749+50	4:1	LEFT
749+50 TO 750+00	4:1 TO 3:1	LEFT

1 FROM STA. 750+00 TO STA. 753+04 SEE BMP GRADING DETAIL SHEET SW-14

US 301 SUPERELEVATED ACCEL LANE

STA. 737+86 TO STA. 753+04, LT.

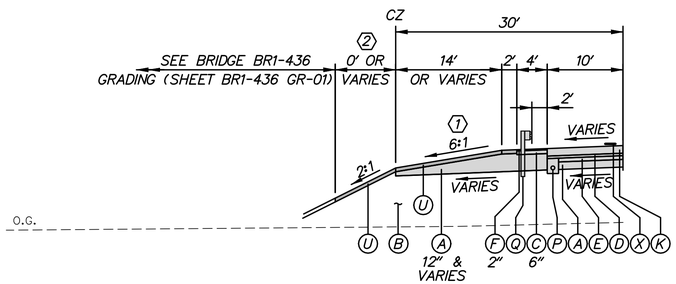

1 SLOPE 4% STA. 830+35 TO STA. 831+10.

2 WIDTH VARIES STA. 830+71 TO STA. 831+10.

US 301 SUPERELEVATED SECTION AT BRIDGE BR1-436

STA. 829+75 TO STA. 831+10, LT.

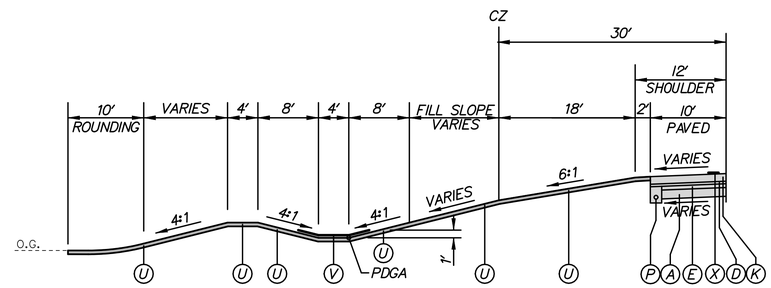

FILL SLOPE CHART		
STATION	SLOPE	SIDE
709+00 TO 712+50	6:1	RIGHT
735+00 TO 735+80	4:1	LEFT

US 301 SUPERELEVATED FILL SECTION WITH BERM

STA. 709+00 TO STA. 712+50, RT.
STA. 735+00 TO STA. 735+80, LT.

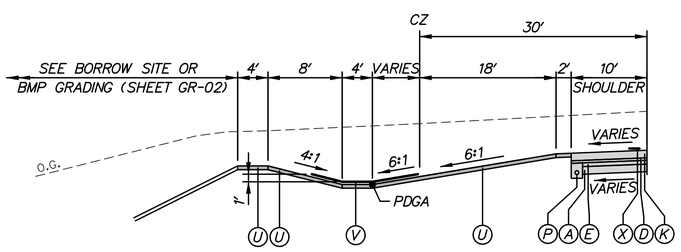

US 301 SUPERELEVATED SECTION WITH BERM AT BORROW SITE; WITHOUT GUARDRAIL

STA. 820+31 TO STA. 824+05, LT. BORROW SITE - SEE SHEET GR-02.
STA. 824+05 TO STA. 826+46, LT. BMP NO. 734 - SEE SHEET SW-26.

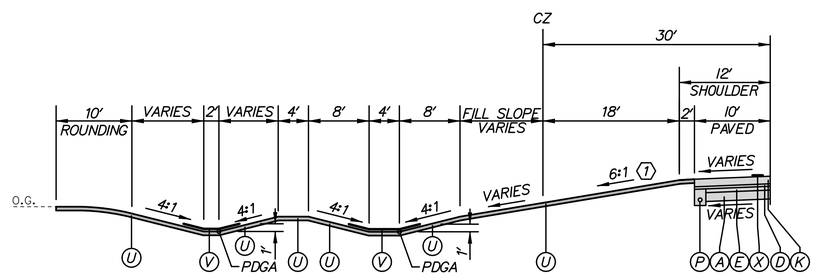

FILL SLOPE CHART		
STATION	SLOPE	SIDE
712+50 TO 713+98	4:1	LEFT
719+44 TO 728+00	4:1	LEFT
728+00 TO 728+25	4:1 TO 3:1	LEFT
728+25 TO 734+50	3:1	LEFT
734+50 TO 735+00	3:1 TO 4:1	LEFT
730+50 TO 735+00	4:1	RIGHT
740+50 TO 745+30	6:1	RIGHT

US 301 SUPERELEVATED SECTION WITH DIVERSION DITCH

STA. 712+50 TO STA. 713+98, LT.
STA. 719+44 TO STA. 735+00, LT.
STA. 730+50 TO STA. 735+00, RT,
STA. 740+50 TO STA. 745+30, RT.

1 STA. 726+00 TO STA. 726+25, LT., SLOPE VARIES FROM 6:1 TO 7:1.
STA. 728+25 TO STA. 728+50, LT., SLOPE VARIES FROM 7:1 TO 8:1.
STA. 729+00 TO STA. 729+50, LT., SLOPE VARIES FROM 8:1 TO 6:1.

LEGEND

- A ITEM 209001 - BORROW, TYPE A
- B ITEM 209006 - BORROW, TYPE F
- C ITEM 302007 - GRADED AGGREGATE BASE COURSE, TYPE B
- D ITEM 304501 - PERMEABLE TREATED BASE, 4"
- E ITEM 304502 - SOIL CEMENT BASE COURSE, 6"
- F ITEM 401801 - WMA, SUPERPAVE, TYPE C, 160 GYRATIONS, PG 64-22
- G ITEM 401810 - WMA, SUPERPAVE, TYPE B, 160 GYRATIONS, PG 64-22
- J ITEM 401819 - WMA, SUPERPAVE, BITUMINOUS CONCRETE BASE COURSE, 160 GYRATIONS, PG 64-22
- K ITEM 501006 - PORTLAND CEMENT CONCRETE PAVEMENT, 12"
- L ITEM 701010 - PCC CURB, TYPE 1-8
- N ITEM 701022 - PCC CURB AND GUTTER, TYPE 3-8
- P ITEM 715001 - PERFORATED PIPE UNDERDRAINS, 6"
- Q ITEM 720050 - GALVANIZED STEEL BEAM GUARDRAIL, TYPE 1-31
- R ITEM 720052 - GALVANIZED STEEL BEAM GUARDRAIL, TYPE 3-31
- S ITEM 727000 - RIGHT OF WAY FENCE
- T ITEM 501001 - 8" PORTLAND CEMENT CONCRETE
- U ITEM 733002 - TOPSOILING, 6" DEPTH
  ITEM 734013 - PERMANENT GRASS SEEDING, DRY GROUND
- V ITEM 733002 - TOPSOILING, 6" DEPTH
  ITEM 734013 - PERMANENT GRASS SEEDING, DRY GROUND
  ITEM 735535 - SOIL RETENTION BLANKET MULCH, TYPE 5
- W ITEM 701016 - PCC CURB AND GUTTER, TYPE 1-4
- X ITEM 760017 - RUMBLE STRIPS, CONCRETE
- Y ITEM 705001 - PCC SIDEWALK, 4"
- AA ITEM 720626 - CONCRETE SINGLE FACE BARRIER, TYPE 1
- BB ITEM 760507 - PROFILE MILLING, HOT-MIX
- CC ITEM 401824 - WMA, SUPERPAVE, TYPE C, 160 GYRATIONS, PG 64-22, WEDGE
- DD ITEM 733001 - TOPSOILING, 4" DEPTH
  ITEM 734013 - PERMANENT GRASS SEEDING, DRY GROUND
- EE ITEM 713002 - GEOTEXTILE, SEPARATION
- FF ITEM 701013 - PCC CURB, TYPE 1-2

NOTES:

1. THE MAXIMUM ALGEBRAIC DIFFERENCE ON THE HIGH SIDE BETWEEN THE TRAVELED WAY SLOPE AND THE ACCEL/DECEL LANES SHALL NOT EXCEED 4%. THE MAXIMUM ALGEBRAIC DIFFERENCE BETWEEN THE TRAVELED WAY SLOPE AND THE SHOULDER SLOPE SHALL NOT EXCEED 8%.
2. SHOULDER SLOPE ON THE LOW SIDE SHALL BE THE SAME AS THE TRAVELED WAY SLOPE WHEN SUPERELEVATION IS GREATER THAN 4%.
3. SEE GRADES AND GEOMETRICS SHEETS FOR SUPERELEVATED CROSS SLOPE TRANSITIONS.
4. SEE SHEET TS-43 FOR UNDERDRAIN DETAIL.
   SEE CONSTRUCTION PLANS FOR PLACEMENT LOCATIONS.
5. PGA - POINT OF GRADE APPLICATION
   PDGA - POINT OF DITCH GRADE APPLICATION
   P/R - POINT OF ROTATION
   P.G.L. - POINT OF GRADE LINE
6. THE MAXIMUM LIFTS FOR THE INDIVIDUAL PAVING MATERIALS ARE AS FOLLOWS:
   SUPERPAVE, TYPE C WMA - 2"
   SUPERPAVE, TYPE B WMA - 3"
   SUPERPAVE BIT. CONC. BASE COURSE - 4"
   GRADED AGGREGATE BASE COURSE - 8"
7. SUPERPAVE, TYPE B HOT-MIX SHALL BE PLACED IN TWO EQUAL LIFTS, WHEN THICKNESS EXCEEDS 3".
8. SEE SHEET DT-01 FOR RUMBLE STRIP LOCATIONS.
9. SEE SHEET DT-12 FOR SAFETY EDGE DETAILS. THESE DETAILS SHALL BE APPLIED AT ALL INSTANCES WHERE THE EDGE OF PROPOSED PAVEMENT MEETS THE 6" TOPSOIL.
10. ON THE HIGH SIDE OF THE SUPERELEVATED MEDIAN SECTION THE BOTTOM OF BORROW TYPE A SHALL FOLLOW THE SUPERELEVATION RATE FOR THE ROADWAY EXTENDED UNTIL IT INTERSECTS WITH EITHER THE BOTTOM OF TOPSOIL FOR THE MEDIAN SIDESLOPES OR IT INTERSECTS WITH THE CONSTRUCTION BASELINE. ON THE LOW SIDE OF THE SUPERELEVATED MEDIAN SECTION THE BOTTOM OF BORROW TYPE A SHALL BE CONSTRUCTED FROM THE POINT IN WHICH THE EXTENDED SUPERELEVATION SLOPE (e) INTERSECTS THE CONSTRUCTION BASELINE TO THE GRADE BREAK AT THE INSIDE EDGE OF TRAVELED WAY.
11. FOR INTERFACE BETWEEN MOMENT SLAB AND ROADWAY PAVEMENT AND APPROACH SLAB AND ROADWAY PAVEMENT, SEE STRUCTURAL DETAILS.
12. SEE SHEET DT-15 FOR DETAILS OF CONSTRUCTING PROPOSED EARTH BERM.

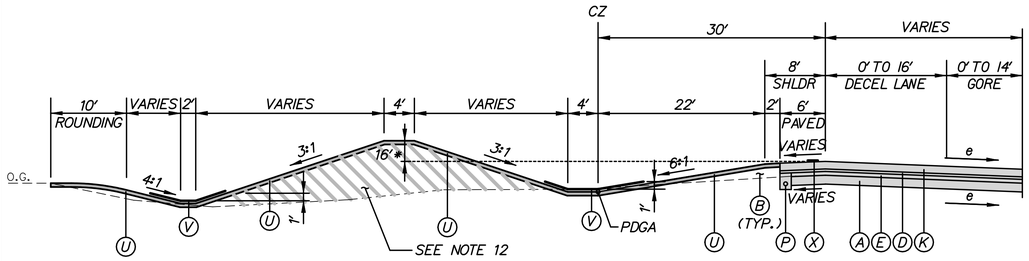

*NOTE: SEE GRADES AND GEOMETRICS FOR TOP OF BERM ELEVATIONS

US 301 SUPERELEVATED DECEL LANE

STA. 786+12 TO STA. 786+58, LT.
STA. 790+06 TO STA. 794+61, LT.

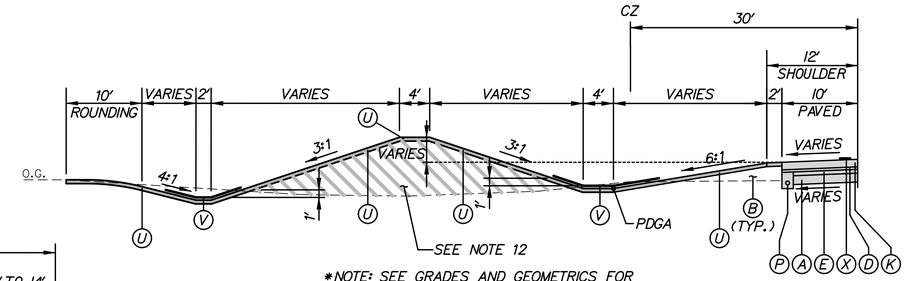

*NOTE: SEE GRADES AND GEOMETRICS FOR TOP OF BERM ELEVATIONS

US 301 SUPERELEVATED FILL SECTION WITH BERM

STA. 799+00 TO STA. 800+00, LT.

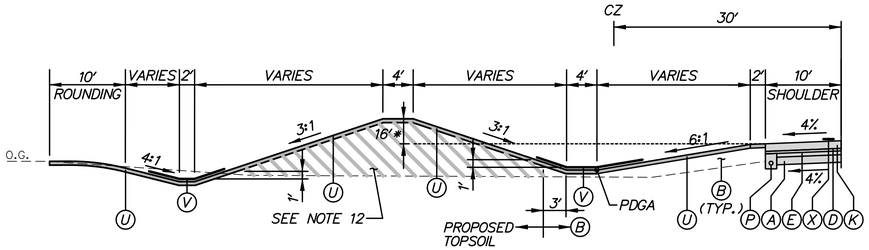

*NOTE: SEE GRADES AND GEOMETRICS FOR TOP OF BERM ELEVATIONS

US 301 SUPERELEVATED SECTION WITH 3:1 BERM

STA. 794+61 TO STA. 799+00. LT.

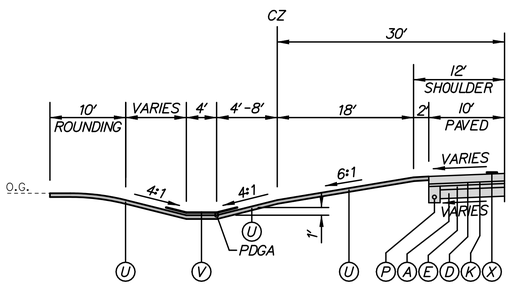

US 301 SUPERELEVATED SECTION

STA. 757+25 TO STA. 760+90, LT.

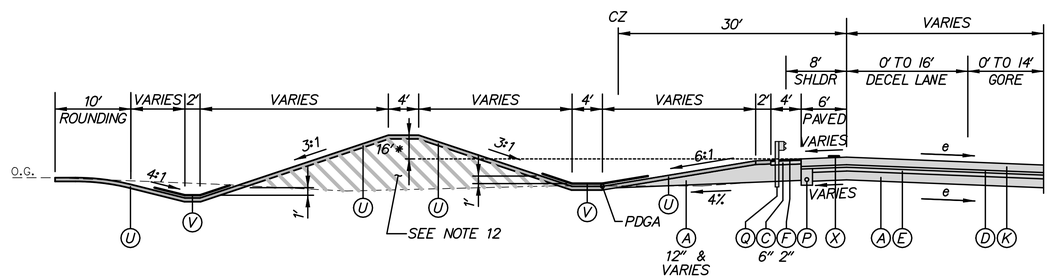

*NOTE: SEE GRADES AND GEOMETRICS FOR TOP OF BERM ELEVATIONS

US 301 SUPERELEVATED SECTION DECEL LANE WITH 3:1 BERM AND GUARDRAIL

STA. 786+58 TO STA. 790+06, LT.

LEGEND

- (A) ITEM 209001 - BORROW, TYPE A
- (B) ITEM 209006 - BORROW, TYPE F
- (C) ITEM 302007 - GRADED AGGREGATE BASE COURSE, TYPE B
- (D) ITEM 304501 - PERMEABLE TREATED BASE, 4"
- (E) ITEM 304502 - SOIL CEMENT BASE COURSE, 6"
- (F) ITEM 401801 - WMA, SUPERPAVE, TYPE C, 160 GYRATIONS, PG 64-22
- (G) ITEM 401810 - WMA, SUPERPAVE, TYPE B, 160 GYRATIONS, PG 64-22
- (J) ITEM 401819 - WMA, SUPERPAVE, BITUMINOUS CONCRETE BASE COURSE, 160 GYRATIONS, PG 64-22
- (K) ITEM 501006 - PORTLAND CEMENT CONCRETE PAVEMENT, 12"
- (L) ITEM 701010 - PCC CURB, TYPE 1-8
- (N) ITEM 701022 - PCC CURB AND GUTTER, TYPE 3-8
- (P) ITEM 715001 - PERFORATED PIPE UNDERDRAINS, 6"
- (Q) ITEM 720050 - GALVANIZED STEEL BEAM GUARDRAIL, TYPE 1-31
- (R) ITEM 720052 - GALVANIZED STEEL BEAM GUARDRAIL, TYPE 3-31
- (S) ITEM 727000 - RIGHT OF WAY FENCE
- (T) ITEM 501001 - 8" PORTLAND CEMENT CONCRETE
- (U) ITEM 733002 - TOPSOILING, 6" DEPTH
  ITEM 734013 - PERMANENT GRASS SEEDING, DRY GROUND
- (V) ITEM 733002 - TOPSOILING, 6" DEPTH
  ITEM 734013 - PERMANENT GRASS SEEDING, DRY GROUND
  ITEM 735535 - SOIL RETENTION BLANKET MULCH, TYPE 5
- (W) ITEM 701016 - PCC CURB AND GUTTER, TYPE 1-4
- (X) ITEM 760017 - RUMBLE STRIPS, CONCRETE
- (Y) ITEM 705001 - PCC SIDEWALK, 4"
- (AA) ITEM 720626 - CONCRETE SINGLE FACE BARRIER, TYPE 1
- (BB) ITEM 760507 - PROFILE MILLING, HOT-MIX
- (CC) ITEM 401824 - WMA, SUPERPAVE, TYPE C, 160 GYRATIONS, PG 64-22, WEDGE
- (DD) ITEM 733001 - TOPSOILING, 4" DEPTH
  ITEM 734013 - PERMANENT GRASS SEEDING, DRY GROUND
- (EE) ITEM 713002 - GEOTEXTILE, SEPARATION
- (FF) ITEM 701013 - PCC CURB, TYPE 1-2

NOTES:

1. THE MAXIMUM ALGEBRAIC DIFFERENCE ON THE HIGH SIDE BETWEEN THE TRAVELED WAY SLOPE AND THE ACCEL/DECEL LANES SHALL NOT EXCEED 4%. THE MAXIMUM ALGEBRAIC DIFFERENCE BETWEEN THE TRAVELED WAY SLOPE AND THE SHOULDER SLOPE SHALL NOT EXCEED 8%.
2. SHOULDER SLOPE ON THE LOW SIDE SHALL BE THE SAME AS THE TRAVELED WAY SLOPE WHEN SUPERELEVATION IS GREATER THAN 4%.
3. SEE GRADES AND GEOMETRICS SHEETS FOR SUPERELEVATED CROSS SLOPE TRANSITIONS.
4. SEE SHEET TS-43 FOR UNDERDRAIN DETAIL. SEE CONSTRUCTION PLANS FOR PLACEMENT LOCATIONS.
5. PGA - POINT OF GRADE APPLICATION
   PDGA - POINT OF DITCH GRADE APPLICATION
   P/R - POINT OF ROTATION
   P.G.L. - POINT OF GRADE LINE
6. THE MAXIMUM LIFTS FOR THE INDIVIDUAL PAVING MATERIALS ARE AS FOLLOWS:
   SUPERPAVE, TYPE C WMA - 2"
   SUPERPAVE, TYPE B WMA - 3"
   SUPERPAVE BIT. CONC. BASE COURSE - 4"
   GRADED AGGREGATE BASE COURSE - 8"
7. SUPERPAVE, TYPE B HOT-MIX SHALL BE PLACED IN TWO EQUAL LIFTS, WHEN THICKNESS EXCEEDS 3".
8. SEE SHEET DT-01 FOR RUMBLE STRIP LOCATIONS.
9. SEE SHEET DT-12 FOR SAFETY EDGE DETAILS. THESE DETAILS SHALL BE APPLIED AT ALL INSTANCES WHERE THE EDGE OF PROPOSED PAVEMENT MEETS THE 6" TOPSOIL.
10. ON THE HIGH SIDE OF THE SUPERELEVATED MEDIAN SECTION THE BOTTOM OF BORROW TYPE A SHALL FOLLOW THE SUPERELEVATION RATE FOR THE ROADWAY EXTENDED UNTIL IT INTERSECTS WITH EITHER THE BOTTOM OF TOPSOIL FOR THE MEDIAN SIDESLOPES OR IT INTERSECTS WITH THE CONSTRUCTION BASELINE. ON THE LOW SIDE OF THE SUPERELEVATED MEDIAN SECTION THE BOTTOM OF BORROW TYPE A SHALL BE CONSTRUCTED FROM THE POINT IN WHICH THE EXTENDED SUPERELEVATION SLOPE (e) INTERSECTS THE CONSTRUCTION BASELINE TO THE GRADE BREAK AT THE INSIDE EDGE OF TRAVELED WAY.
11. FOR INTERFACE BETWEEN MOMENT SLAB AND ROADWAY PAVEMENT AND APPROACH SLAB AND ROADWAY PAVEMENT, SEE STRUCTURAL DETAILS.
12. SEE SHEET DT-15 FOR DETAILS OF CONSTRUCTING PROPOSED EARTH BERM.

N:\31653-000\Contract 1A\CADD\TS010U301_1A.dgn
11/3/2014 2:39:25 PM

DELAWARE DEPARTMENT OF TRANSPORTATION	ADDENDUMS / REVISIONS	NOT TO SCALE	US 301, SR 896 TO SR 1	CONTRACT T200911308	BRIDGE NO.	TYPICAL SECTIONS	TS-10
				COUNTY NEW CASTLE	DESIGNED BY: KGMA		SHEET NO. 26
					CHECKED BY: TAO		TOTAL SHTS. 875

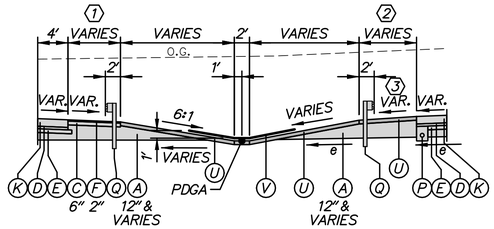

(1) WIDTH VARIES 6.74' TO 7.2' STA. 811+94 TO STA. 812+08.

(2) WIDTH VARIES 7.2' TO 8.12' STA. 811+94 TO STA. 812+08.

(2) TRANSITION SLOPE 4% TO 10% STA. 811+94 TO STA. 812+08.

US 301 SUPERELEVATED MEDIAN SECTION WITH GUARDRAIL, WITHOUT RIGHT MAINTENANCE PAVEMENT

STA. 811+94 TO STA. 812+08, MEDIAN

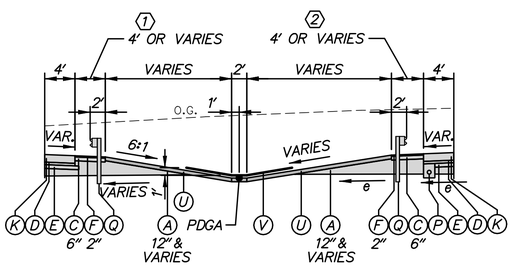

(1) WIDTH VARIES 4' TO 6.74' STA. 811+12 TO STA. 811+94.

(2) WIDTH VARIES 4' TO 7.2' STA. 810+98 TO STA. 811+94.

US 301 SUPERELEVATED MEDIAN SECTION WITH GUARDRAIL

STA. 810+92 TO STA. 811+94, MEDIAN

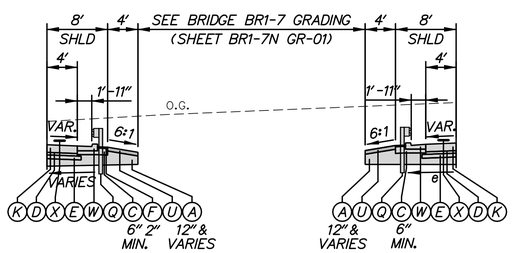

US 301 SUPERELEVATED MEDIAN SECTION WITH CURB AND GUTTER AT BR 1-7

STA. 810+86 TO STA. 810+92, MEDIAN

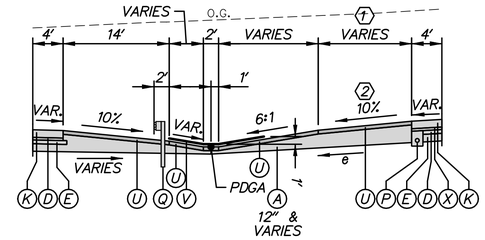

(1) WIDTH VARIES 12.51' TO 9.81' STA. 816+98 TO STA. 817+30.

(2) TRANSITION SLOPE 9.79% AT STA. 816+98 TO 8.66% AT STA. 817+30.

US 301 SUPERELEVATED MEDIAN SECTION WITH GUARDRAIL LEFT

STA. 816+98 TO STA. 817+30, MEDIAN

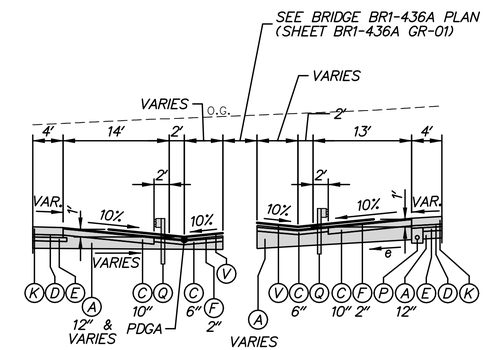

US 301 SUPERELEVATED MEDIAN SECTION WITH GUARDRAIL AT BR1-436A PIER

STA. 815+93 TO STA. 816+67, MEDIAN

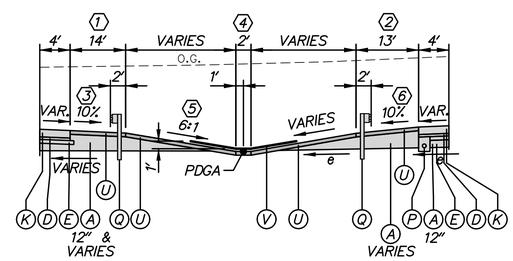

(1) WIDTH VARIES 7.2' TO 14' STA. 812+08 TO STA. 813+10.

(2) WIDTH VARIES 8.12' TO 13' STA. 812+08 TO STA. 812+81.
WIDTH VARIES 13' TO 12.51' STA. 816+91 TO STA. 816+98.

(3) TRANSITION SLOPE 4% AT STA. 812+08 TO 10% AT STA. 812+28.

(4) WIDTH 0' STA. 816+67 TO STA. 816+87.

(5) TRANSITION SLOPE 10% AT STA. 816+67 TO 6:1 AT STA. 816+87.

(6) TRANSITION SLOPE 10% AT STA. 816+92 TO 9.79% AT STA. 816+98.

US 301 SUPERELEVATED MEDIAN SECTION WITH GUARDRAIL, WITHOUT MAINTENANCE PAVEMENT

STA. 812+08 TO STA. 815+93, MEDIAN
STA. 816+67 TO STA. 816+98, MEDIAN

LEGEND

- (A) ITEM 209001 - BORROW, TYPE A
- (B) ITEM 209006 - BORROW, TYPE F
- (C) ITEM 302007 - GRADED AGGREGATE BASE COURSE, TYPE B
- (D) ITEM 304501 - PERMEABLE TREATED BASE, 4"
- (E) ITEM 304502 - SOIL CEMENT BASE COURSE, 6"
- (F) ITEM 401801 - WMA, SUPERPAVE, TYPE C, 160 GYRATIONS, PG 64-22
- (G) ITEM 401810 - WMA, SUPERPAVE, TYPE B, 160 GYRATIONS, PG 64-22
- (J) ITEM 401819 - WMA, SUPERPAVE, BITUMINOUS CONCRETE BASE COURSE, 160 GYRATIONS, PG 64-22
- (K) ITEM 501006 - PORTLAND CEMENT CONCRETE PAVEMENT, 12"
- (L) ITEM 701010 - PCC CURB, TYPE 1-8
- (N) ITEM 701022 - PCC CURB AND GUTTER, TYPE 3-8
- (P) ITEM 715001 - PERFORATED PIPE UNDERDRAINS, 6"
- (Q) ITEM 720050 - GALVANIZED STEEL BEAM GUARDRAIL, TYPE 1-31
- (R) ITEM 720052 - GALVANIZED STEEL BEAM GUARDRAIL, TYPE 3-31
- (S) ITEM 727000 - RIGHT OF WAY FENCE
- (T) ITEM 501001 - 8" PORTLAND CEMENT CONCRETE
- (U) ITEM 733002 - TOPSOILING, 6" DEPTH
  ITEM 734013 - PERMANENT GRASS SEEDING, DRY GROUND
- (V) ITEM 733002 - TOPSOILING, 6" DEPTH
  ITEM 734013 - PERMANENT GRASS SEEDING, DRY GROUND
  ITEM 735535 - SOIL RETENTION BLANKET MULCH, TYPE 5
- (W) ITEM 701016 - PCC CURB AND GUTTER, TYPE 1-4
- (X) ITEM 760017 - RUMBLE STRIPS, CONCRETE
- (Y) ITEM 705001 - PCC SIDEWALK, 4"
- (AA) ITEM 720626 - CONCRETE SINGLE FACE BARRIER, TYPE 1
- (BB) ITEM 760507 - PROFILE MILLING, HOT-MIX
- (CC) ITEM 401824 - WMA, SUPERPAVE, TYPE C, 160 GYRATIONS, PG 64-22, WEDGE
- (DD) ITEM 733001 - TOPSOILING, 4" DEPTH
  ITEM 734013 - PERMANENT GRASS SEEDING, DRY GROUND
- (EE) ITEM 713002 - GEOTEXTILE, SEPARATION
- (FF) ITEM 701013 - PCC CURB, TYPE 1-2

NOTES:

1. THE MAXIMUM ALGEBRAIC DIFFERENCE ON THE HIGH SIDE BETWEEN THE TRAVELED WAY SLOPE AND THE ACCEL/DECEL LANES SHALL NOT EXCEED 4%. THE MAXIMUM ALGEBRAIC DIFFERENCE BETWEEN THE TRAVELED WAY SLOPE AND THE SHOULDER SLOPE SHALL NOT EXCEED 8%.
2. SHOULDER SLOPE ON THE LOW SIDE SHALL BE THE SAME AS THE TRAVELED WAY SLOPE WHEN SUPERELEVATION IS GREATER THAN 4%.
3. SEE GRADES AND GEOMETRICS SHEETS FOR SUPERELEVATED CROSS SLOPE TRANSITIONS.
4. SEE SHEET TS-43 FOR UNDERDRAIN DETAIL.
   SEE CONSTRUCTION PLANS FOR PLACEMENT LOCATIONS.
5. PGA - POINT OF GRADE APPLICATION
   PDGA - POINT OF DITCH GRADE APPLICATION
   P/R - POINT OF ROTATION
   P.G.L. - POINT OF GRADE LINE
6. THE MAXIMUM LIFTS FOR THE INDIVIDUAL PAVING MATERIALS ARE AS FOLLOWS:
   SUPERPAVE, TYPE C WMA - 2"
   SUPERPAVE, TYPE B WMA - 3"
   SUPERPAVE BIT. CONC. BASE COURSE - 4"
   GRADED AGGREGATE BASE COURSE - 8"
7. SUPERPAVE, TYPE B HOT-MIX SHALL BE PLACED IN TWO EQUAL LIFTS, WHEN THICKNESS EXCEEDS 3".
8. SEE SHEET DT-01 FOR RUMBLE STRIP LOCATIONS.
9. SEE SHEET DT-12 FOR SAFETY EDGE DETAILS. THESE DETAILS SHALL BE APPLIED AT ALL INSTANCES WHERE THE EDGE OF PROPOSED PAVEMENT MEETS THE 6" TOPSOIL.
10. ON THE HIGH SIDE OF THE SUPERELEVATED MEDIAN SECTION THE BOTTOM OF BORROW TYPE A SHALL FOLLOW THE SUPERELEVATION RATE FOR THE ROADWAY EXTENDED UNTIL IT INTERSECTS WITH EITHER THE BOTTOM OF TOPSOIL FOR THE MEDIAN SIDESLOPES OR IT INTERSECTS WITH THE CONSTRUCTION BASELINE. ON THE LOW SIDE OF THE SUPERELEVATED MEDIAN SECTION THE BOTTOM OF BORROW TYPE A SHALL BE CONSTRUCTED FROM THE POINT IN WHICH THE EXTENDED SUPERELEVATION SLOPE (e) INTERSECTS THE CONSTRUCTION BASELINE TO THE GRADE BREAK AT THE INSIDE EDGE OF TRAVELED WAY.
11. FOR INTERFACE BETWEEN MOMENT SLAB AND ROADWAY PAVEMENT AND APPROACH SLAB AND ROADWAY PAVEMENT, SEE STRUCTURAL DETAILS.
12. SEE SHEET DT-15 FOR DETAILS OF CONSTRUCTING PROPOSED EARTH BERM.

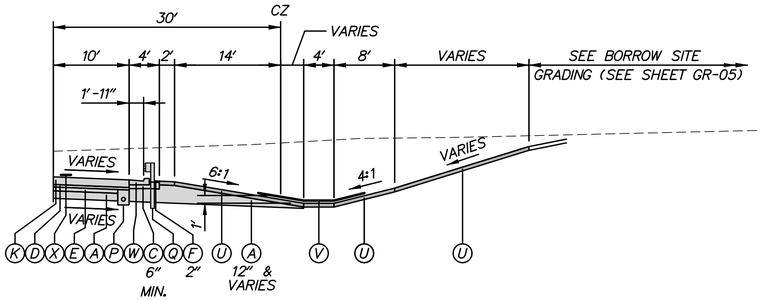

US 301 SUPERELEVATED CUT SECTION WITH CURB AND GUTTER

STA. 810+24 TO STA. 810+45, RT.

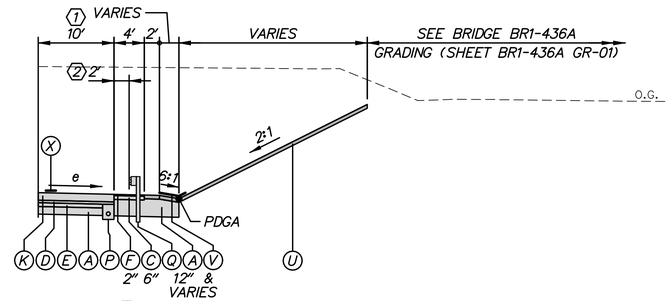

1 HOLD 14' WIDTH FROM STA. 817+77 TO STA. 818+01.
TRANSITION WIDTH FROM 14' AT STA. 818+01 TO 10' AT STA. 818+30.

2 HOLD 0' WIDTH FROM STA. 817+77 TO STA. 818+01.
TRANSITION WIDTH FROM 0' AT STA. 817+77 TO 2' AT STA. 818+30.

US 301 SUPERELEVATED SECTION AT BRIDGE BR1-436A WINGWALL

STA. 817+77 TO STA. 818+50, RT.

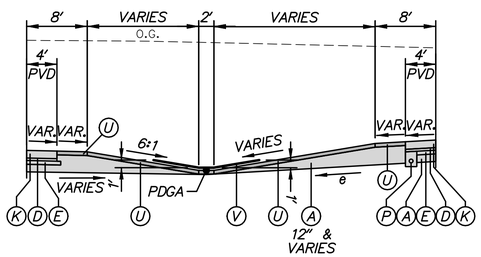

US 301 SUPERELEVATED MEDIAN SECTION WITHOUT GUARDRAIL

STA. 819+22 TO STA. 831+10, MEDIAN

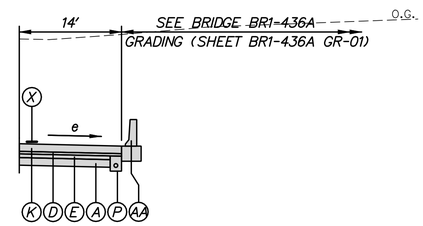

US 301 SUPERELEVATED SECTION AT BRIDGE BR1-436A ABUTMENT

STA. 816+87 TO STA. 817+77, RT.

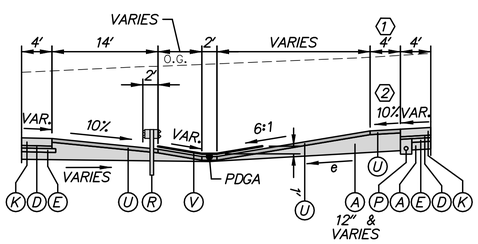

1 WIDTH VARIES 9.81' TO 4' STA. 817+30 TO STA. 817+99.

2 TRANSITION SLOPE 8.66% AT STA. 817+30 TO 5.70% AT STA. 818+13.

US 301 NORMAL SUPERELEVATED SECTION WITH GUARDRAIL TYPE 3-31

STA. 817+30 TO STA. 819+22, MEDIAN

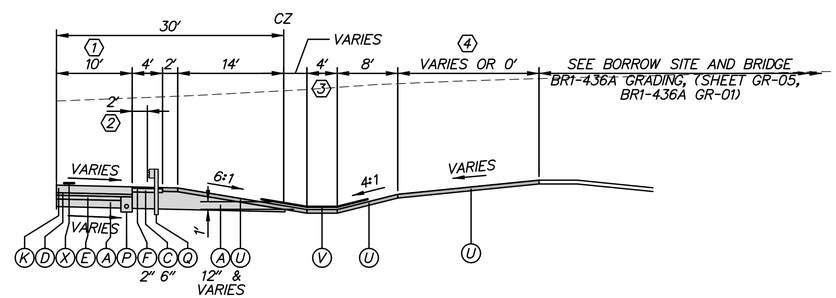

1 TRANSITION WIDTH FROM 10' AT STA. 816+32 TO 14' AT STA. 816+62.
HOLD 14' WIDTH FROM STA. 816+62 TO STA. 816+87.

2 TRANSITION WIDTH FROM 2' AT STA. 816+32 TO 0' AT STA. 816+62.
HOLD 0' WIDTH FROM STA. 816+62 TO STA. 816+87.

3 HOLD 0' WIDTH FROM STA. 816+00 TO STA. 816+87.

4 HOLD 0' WIDTH FROM STA. 810+45 TO STA. 810+69.

US 301 SUPERELEVATED CUT SECTION WITH GUARDRAIL AT BORROW SITE

STA. 810+45 TO STA. 816+87, RT.

LEGEND

- A ITEM 209001 - BORROW, TYPE A
- B ITEM 209006 - BORROW, TYPE F
- C ITEM 302007 - GRADED AGGREGATE BASE COURSE, TYPE B
- D ITEM 304501 - PERMEABLE TREATED BASE, 4"
- E ITEM 304502 - SOIL CEMENT BASE COURSE, 6"
- F ITEM 401801 - WMA, SUPERPAVE, TYPE C, 160 GYRATIONS, PG 64-22
- G ITEM 401810 - WMA, SUPERPAVE, TYPE B, 160 GYRATIONS, PG 64-22
- J ITEM 401819 - WMA, SUPERPAVE, BITUMINOUS CONCRETE BASE COURSE, 160 GYRATIONS, PG 64-22
- K ITEM 501006 - PORTLAND CEMENT CONCRETE PAVEMENT, 12"
- L ITEM 701010 - PCC CURB, TYPE 1-8
- N ITEM 701022 - PCC CURB AND GUTTER, TYPE 3-8
- P ITEM 715001 - PERFORATED PIPE UNDERDRAINS, 6"
- Q ITEM 720050 - GALVANIZED STEEL BEAM GUARDRAIL, TYPE 1-31
- R ITEM 720052 - GALVANIZED STEEL BEAM GUARDRAIL, TYPE 3-31
- S ITEM 727000 - RIGHT OF WAY FENCE
- T ITEM 501001 - 8" PORTLAND CEMENT CONCRETE
- U ITEM 733002 - TOPSOILING, 6" DEPTH
  ITEM 734013 - PERMANENT GRASS SEEDING, DRY GROUND
- V ITEM 733002 - TOPSOILING, 6" DEPTH
  ITEM 734013 - PERMANENT GRASS SEEDING, DRY GROUND
  ITEM 735535 - SOIL RETENTION BLANKET MULCH, TYPE 5
- W ITEM 701016 - PCC CURB AND GUTTER, TYPE 1-4
- X ITEM 760017 - RUMBLE STRIPS, CONCRETE
- Y ITEM 705001 - PCC SIDEWALK, 4"
- AA ITEM 720626 - CONCRETE SINGLE FACE BARRIER, TYPE 1
- BB ITEM 760507 - PROFILE MILLING, HOT-MIX
- CC ITEM 401824 - WMA, SUPERPAVE, TYPE C, 160 GYRATIONS, PG 64-22, WEDGE
- DD ITEM 733001 - TOPSOILING, 4" DEPTH
  ITEM 734013 - PERMANENT GRASS SEEDING, DRY GROUND
- EE ITEM 713002 - GEOTEXTILE, SEPARATION
- FF ITEM 701013 - PCC CURB, TYPE 1-2

NOTES:

1. THE MAXIMUM ALGEBRAIC DIFFERENCE ON THE HIGH SIDE BETWEEN THE TRAVELED WAY SLOPE AND THE ACCEL/DECEL LANES SHALL NOT EXCEED 4%. THE MAXIMUM ALGEBRAIC DIFFERENCE BETWEEN THE TRAVELED WAY SLOPE AND THE SHOULDER SLOPE SHALL NOT EXCEED 8%.
2. SHOULDER SLOPE ON THE LOW SIDE SHALL BE THE SAME AS THE TRAVELED WAY SLOPE WHEN SUPERELEVATION IS GREATER THAN 4%.
3. SEE GRADES AND GEOMETRICS SHEETS FOR SUPERELEVATED CROSS SLOPE TRANSITIONS.
4. SEE SHEET TS-43 FOR UNDERDRAIN DETAIL.
   SEE CONSTRUCTION PLANS FOR PLACEMENT LOCATIONS.
5. PGA - POINT OF GRADE APPLICATION
   PDGA - POINT OF DITCH GRADE APPLICATION
   P/R - POINT OF ROTATION
   P.G.L. - POINT OF GRADE LINE
6. THE MAXIMUM LIFTS FOR THE INDIVIDUAL PAVING MATERIALS ARE AS FOLLOWS:
   SUPERPAVE, TYPE C WMA - 2"
   SUPERPAVE, TYPE B WMA - 3"
   SUPERPAVE BIT. CONC. BASE COURSE - 4"
   GRADED AGGREGATE BASE COURSE - 8"
7. SUPERPAVE, TYPE B HOT-MIX SHALL BE PLACED IN TWO EQUAL LIFTS, WHEN THICKNESS EXCEEDS 3".
8. SEE SHEET DT-01 FOR RUMBLE STRIP LOCATIONS.
9. SEE SHEET DT-12 FOR SAFETY EDGE DETAILS. THESE DETAILS SHALL BE APPLIED AT ALL INSTANCES WHERE THE EDGE OF PROPOSED PAVEMENT MEETS THE 6" TOPSOIL.
10. ON THE HIGH SIDE OF THE SUPERELEVATED MEDIAN SECTION THE BOTTOM OF BORROW TYPE A SHALL FOLLOW THE SUPERELEVATION RATE FOR THE ROADWAY EXTENDED UNTIL IT INTERSECTS WITH EITHER THE BOTTOM OF TOPSOIL FOR THE MEDIAN SIDESLOPES OR IT INTERSECTS WITH THE CONSTRUCTION BASELINE. ON THE LOW SIDE OF THE SUPERELEVATED MEDIAN SECTION THE BOTTOM OF BORROW TYPE A SHALL BE CONSTRUCTED FROM THE POINT IN WHICH THE EXTENDED SUPERELEVATION SLOPE (e) INTERSECTS THE CONSTRUCTION BASELINE TO THE GRADE BREAK AT THE INSIDE EDGE OF TRAVELED WAY.
11. FOR INTERFACE BETWEEN MOMENT SLAB AND ROADWAY PAVEMENT AND APPROACH SLAB AND ROADWAY PAVEMENT, SEE STRUCTURAL DETAILS.
12. SEE SHEET DT-15 FOR DETAILS OF CONSTRUCTING PROPOSED EARTH BERM.

N:\31653-000\Contract 1A\CADD\TS012U301_1A.dgn
11/3/2014 3:10:10 PM

DELAWARE DEPARTMENT OF TRANSPORTATION	ADDENDUMS / REVISIONS	NOT TO SCALE	US 301, SR 896 TO SR 1	CONTRACT T200911308	BRIDGE NO.	TYPICAL SECTIONS	TS-12
				COUNTY NEW CASTLE	DESIGNED BY: KGMA		SHEET NO. 28
					CHECKED BY: TAO		TOTAL SHTS. 875

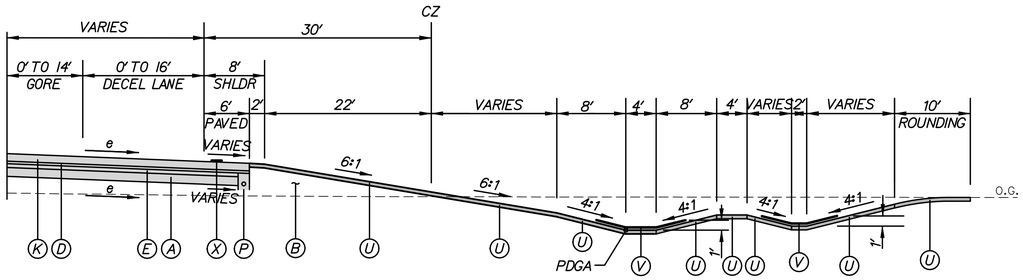

US 301 SUPERELEVATED FILL SECTION WITH DECEL LANE AND DIVERSION DITCH

STA. 745+30 TO STA. 745+70, RT.

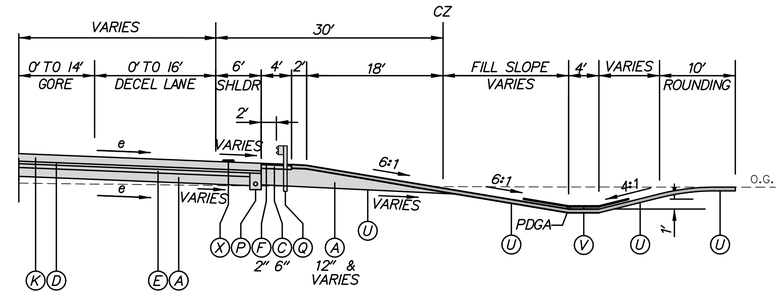

US 301 SUPERELEVATED FILL SECTION WITH DECEL LANE

STA. 747+12 TO STA. 748+50, RT.

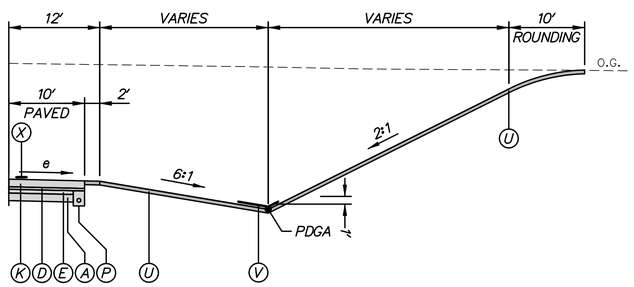

US 301 SUPERELEVATED CUT SECTION WITH V DITCH; WITHOUT GUARDRAIL

STA. 818+73 TO STA. 819+00, RT.

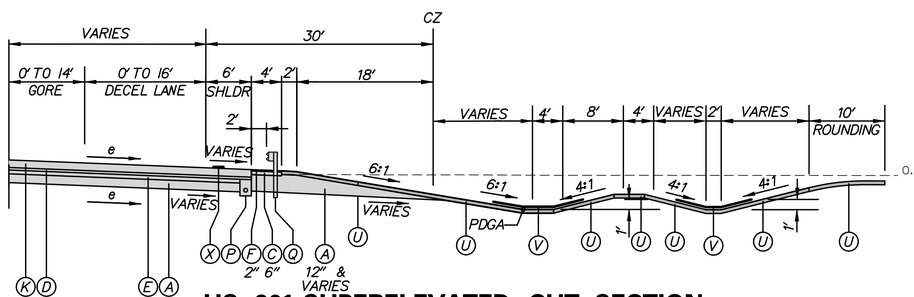

US 301 SUPERELEVATED CUT SECTION WITH DECEL LANE GUARDRAIL AND DIVERSION DITCH

STA. 748+50 TO STA. 749+92, RT.

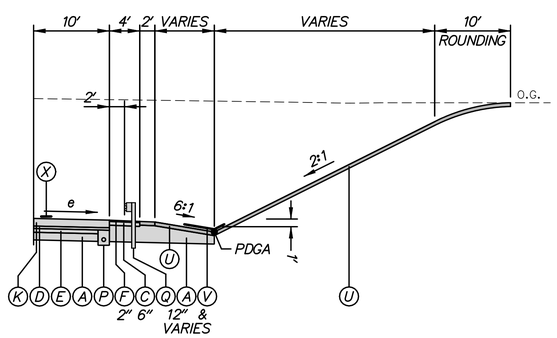

US 301 SUPERELEVATED CUT SECTION WITH V DITCH AND GUARDRAIL

STA. 818+50 TO STA. 818+73, RT.

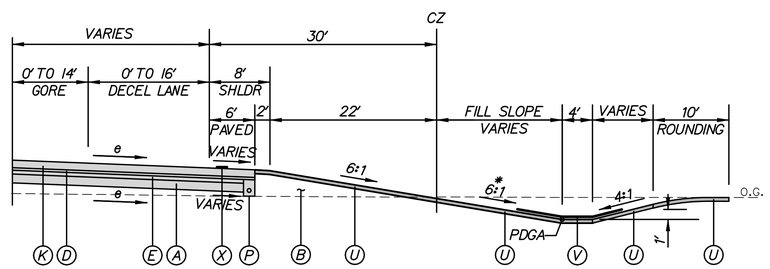

FILL SLOPE CHART		
STATION	SLOPE	SIDE
745+70 TO 747+12	6:1	RIGHT
753+78 TO 754+31	4:1	RIGHT

US 301 SUPERELEVATED FILL SECTION WITH DECEL LANE

STA. 745+70 TO STA. 747+12, RT.
STA. 753+78 TO STA. 754+31, RT.

LEGEND

- (A) ITEM 209001 - BORROW, TYPE A
- (B) ITEM 209006 - BORROW, TYPE F
- (C) ITEM 302007 - GRADED AGGREGATE BASE COURSE, TYPE B
- (D) ITEM 304501 - PERMEABLE TREATED BASE, 4"
- (E) ITEM 304502 - SOIL CEMENT BASE COURSE, 6"
- (F) ITEM 401801 - WMA, SUPERPAVE, TYPE C, 160 GYRATIONS, PG 64-22
- (G) ITEM 401810 - WMA, SUPERPAVE, TYPE B, 160 GYRATIONS, PG 64-22
- (J) ITEM 401819 - WMA, SUPERPAVE, BITUMINOUS CONCRETE BASE COURSE, 160 GYRATIONS, PG 64-22
- (K) ITEM 501006 - PORTLAND CEMENT CONCRETE PAVEMENT, 12"
- (L) ITEM 701010 - PCC CURB, TYPE 1-8
- (N) ITEM 701022 - PCC CURB AND GUTTER, TYPE 3-8
- (P) ITEM 715001 - PERFORATED PIPE UNDERDRAINS, 6"
- (Q) ITEM 720050 - GALVANIZED STEEL BEAM GUARDRAIL, TYPE 1-31
- (R) ITEM 720052 - GALVANIZED STEEL BEAM GUARDRAIL, TYPE 3-31
- (S) ITEM 727000 - RIGHT OF WAY FENCE
- (T) ITEM 501001 - 8" PORTLAND CEMENT CONCRETE
- (U) ITEM 733002 - TOPSOILING, 6" DEPTH
  ITEM 734013 - PERMANENT GRASS SEEDING, DRY GROUND
- (V) ITEM 733002 - TOPSOILING, 6" DEPTH
  ITEM 734013 - PERMANENT GRASS SEEDING, DRY GROUND
  ITEM 735535 - SOIL RETENTION BLANKET MULCH, TYPE 5
- (W) ITEM 701016 - PCC CURB AND GUTTER, TYPE 1-4
- (X) ITEM 760017 - RUMBLE STRIPS, CONCRETE
- (Y) ITEM 705001 - PCC SIDEWALK, 4"
- (AA) ITEM 720626 - CONCRETE SINGLE FACE BARRIER, TYPE 1
- (BB) ITEM 760507 - PROFILE MILLING, HOT-MIX
- (CC) ITEM 401824 - WMA, SUPERPAVE, TYPE C, 160 GYRATIONS, PG 64-22, WEDGE
- (DD) ITEM 733001 - TOPSOILING, 4" DEPTH
  ITEM 734013 - PERMANENT GRASS SEEDING, DRY GROUND
- (EE) ITEM 713002 - GEOTEXTILE, SEPARATION
- (FF) ITEM 701013 - PCC CURB, TYPE 1-2

NOTES:

1. THE MAXIMUM ALGEBRAIC DIFFERENCE ON THE HIGH SIDE BETWEEN THE TRAVELED WAY SLOPE AND THE ACCEL/DECEL LANES SHALL NOT EXCEED 4%. THE MAXIMUM ALGEBRAIC DIFFERENCE BETWEEN THE TRAVELED WAY SLOPE AND THE SHOULDER SLOPE SHALL NOT EXCEED 8%.
2. SHOULDER SLOPE ON THE LOW SIDE SHALL BE THE SAME AS THE TRAVELED WAY SLOPE WHEN SUPERELEVATION IS GREATER THAN 4%.
3. SEE GRADES AND GEOMETRICS SHEETS FOR SUPERELEVATED CROSS SLOPE TRANSITIONS.
4. SEE SHEET TS-43 FOR UNDERDRAIN DETAIL. SEE CONSTRUCTION PLANS FOR PLACEMENT LOCATIONS.
5. PGA - POINT OF GRADE APPLICATION
   PDGA - POINT OF DITCH GRADE APPLICATION
   P/R - POINT OF ROTATION
   P.G.L. - POINT OF GRADE LINE
6. THE MAXIMUM LIFTS FOR THE INDIVIDUAL PAVING MATERIALS ARE AS FOLLOWS:
   SUPERPAVE, TYPE C WMA - 2"
   SUPERPAVE, TYPE B WMA - 3"
   SUPERPAVE BIT. CONC. BASE COURSE - 4"
   GRADED AGGREGATE BASE COURSE - 8"
7. SUPERPAVE, TYPE B HOT-MIX SHALL BE PLACED IN TWO EQUAL LIFTS, WHEN THICKNESS EXCEEDS 3".
8. SEE SHEET DT-01 FOR RUMBLE STRIP LOCATIONS.
9. SEE SHEET DT-12 FOR SAFETY EDGE DETAILS. THESE DETAILS SHALL BE APPLIED AT ALL INSTANCES WHERE THE EDGE OF PROPOSED PAVEMENT MEETS THE 6" TOPSOIL.
10. ON THE HIGH SIDE OF THE SUPERELEVATED MEDIAN SECTION THE BOTTOM OF BORROW TYPE A SHALL FOLLOW THE SUPERELEVATION RATE FOR THE ROADWAY EXTENDED UNTIL IT INTERSECTS WITH EITHER THE BOTTOM OF TOPSOIL FOR THE MEDIAN SIDESLOPES OR IT INTERSECTS WITH THE CONSTRUCTION BASELINE. ON THE LOW SIDE OF THE SUPERELEVATED MEDIAN SECTION THE BOTTOM OF BORROW TYPE A SHALL BE CONSTRUCTED FROM THE POINT IN WHICH THE EXTENDED SUPERELEVATION SLOPE (e) INTERSECTS THE CONSTRUCTION BASELINE TO THE GRADE BREAK AT THE INSIDE EDGE OF TRAVELED WAY.
11. FOR INTERFACE BETWEEN MOMENT SLAB AND ROADWAY PAVEMENT AND APPROACH SLAB AND ROADWAY PAVEMENT, SEE STRUCTURAL DETAILS.
12. SEE SHEET DT-15 FOR DETAILS OF CONSTRUCTING PROPOSED EARTH BERM.

N:\31653-000\Contract 1A\CADD\TS013U301_1A.dgn
11/3/2014 2:44:39 PM

DELAWARE DEPARTMENT OF TRANSPORTATION

ADDENDUMS / REVISIONS

NOT TO SCALE

US 301, SR 896 TO SR 1

CONTRACT	BRIDGE NO.
T200911308	DESIGNED BY: KGMA
COUNTY	CHECKED BY: TAO
NEW CASTLE	

TYPICAL SECTIONS

TS-13

SHEET NO. 29

TOTAL SHTS. 875

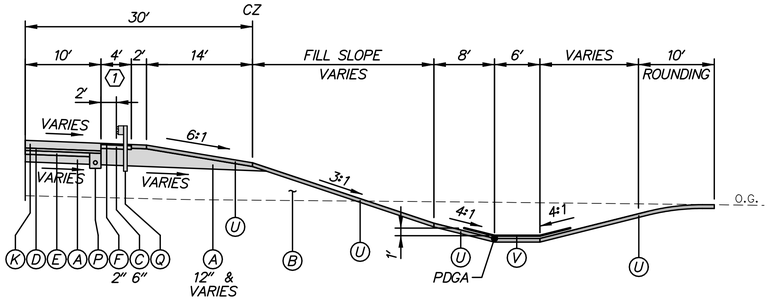

FILL SLOPE CHART		
STATION	SLOPE	SIDE
826+07 TO 826+95	4:1	RIGHT
826+95 TO 827+20	4:1 TO 3:1	RIGHT

(T) SEE DELDOT STANDARD CONSTRUCTION DETAIL, B-2 - GRADING FOR GUARDRAIL END TREATMENT ATTENUATOR TYPE 1.

US 301 SUPERELEVATED FILL SECTION WITH GUARDRAIL

STA. 826+07 TO STA. 827+50, RT.

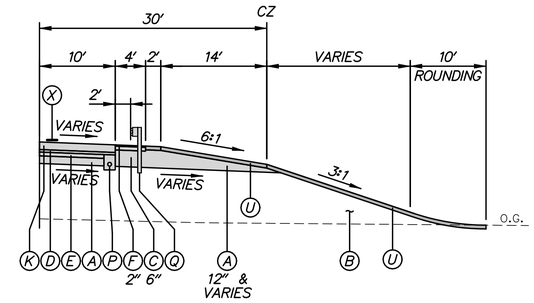

US 301 SUPERELEVATED FILL SECTION WITH GUARDRAIL; WITHOUT DITCH

STA. 827+50 TO STA. 829+13, RT.

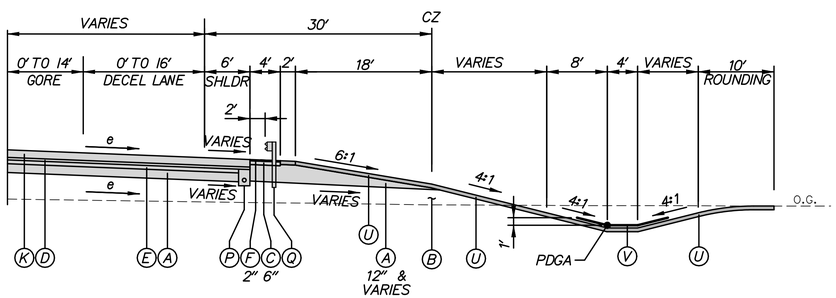

US 301 SUPERELEVATED FILL SECTION WITH DECEL LANE, GUARDRAIL AND DIVERSION DITCH

STA. 752+00 TO STA. 753+78, RT.

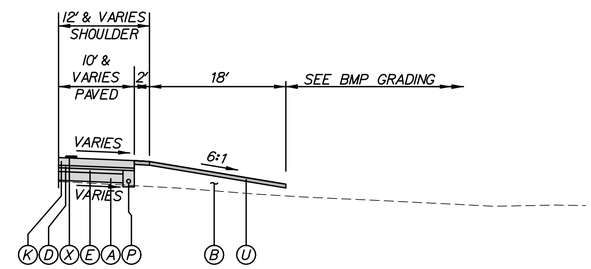

US 301 SUPERELEVATED BMP SECTION

STA. 712+50 TO STA. 713+98, RT. , BMP NO. 720
STA. 719+44 TO STA. 721+00, RT. , BMP NO. 720
STA. 726+50 TO STA. 730+50, RT. , BMP NO. 722
STA. 735+00 TO STA. 740+50, RT. , BMP NO. 723
STA. 826+46 TO STA. 829+75, LT. , BMP NO. 734

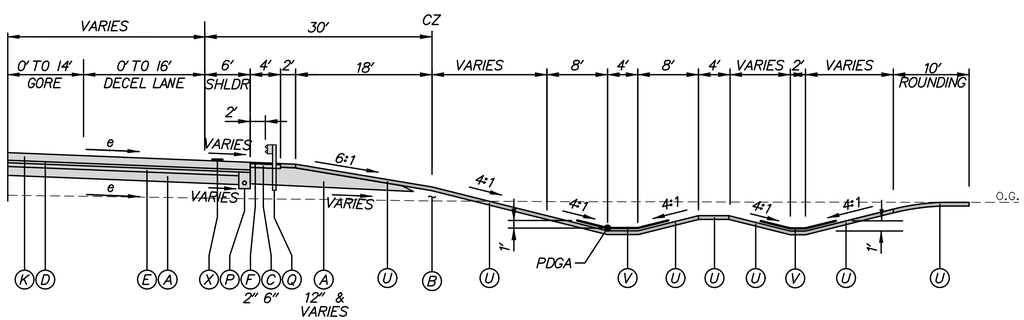

US 301 SUPERELEVATED FILL SECTION WITH DECEL LANE, GUARDRAIL AND DIVERSION & NORMAL DITCH

STA. 749+92 TO STA. 752+00, RT.

LEGEND

- (A) ITEM 209001 - BORROW, TYPE A
- (B) ITEM 209006 - BORROW, TYPE F
- (C) ITEM 302007 - GRADED AGGREGATE BASE COURSE, TYPE B
- (D) ITEM 304501 - PERMEABLE TREATED BASE, 4"
- (E) ITEM 304502 - SOIL CEMENT BASE COURSE, 6"
- (F) ITEM 401801 - WMA, SUPERPAVE, TYPE C, 160 GYRATIONS, PG 64-22
- (G) ITEM 401810 - WMA, SUPERPAVE, TYPE B, 160 GYRATIONS, PG 64-22
- (J) ITEM 401819 - WMA, SUPERPAVE, BITUMINOUS CONCRETE BASE COURSE, 160 GYRATIONS, PG 64-22
- (K) ITEM 501006 - PORTLAND CEMENT CONCRETE PAVEMENT, 12"
- (L) ITEM 701010 - PCC CURB, TYPE 1-8
- (N) ITEM 701022 - PCC CURB AND GUTTER, TYPE 3-8
- (P) ITEM 715001 - PERFORATED PIPE UNDERDRAINS, 6"
- (Q) ITEM 720050 - GALVANIZED STEEL BEAM GUARDRAIL, TYPE 1-31
- (R) ITEM 720052 - GALVANIZED STEEL BEAM GUARDRAIL, TYPE 3-31
- (S) ITEM 727000 - RIGHT OF WAY FENCE
- (T) ITEM 501001 - 8" PORTLAND CEMENT CONCRETE
- (U) ITEM 733002 - TOPSOILING, 6" DEPTH
  ITEM 734013 - PERMANENT GRASS SEEDING, DRY GROUND
- (V) ITEM 733002 - TOPSOILING, 6" DEPTH
  ITEM 734013 - PERMANENT GRASS SEEDING, DRY GROUND
  ITEM 735535 - SOIL RETENTION BLANKET MULCH, TYPE 5
- (W) ITEM 701016 - PCC CURB AND GUTTER, TYPE 1-4
- (X) ITEM 760017 - RUMBLE STRIPS, CONCRETE
- (Y) ITEM 705001 - PCC SIDEWALK, 4"
- (AA) ITEM 720626 - CONCRETE SINGLE FACE BARRIER, TYPE 1
- (BB) ITEM 760507 - PROFILE MILLING, HOT-MIX
- (CC) ITEM 401824 - WMA, SUPERPAVE, TYPE C, 160 GYRATIONS, PG 64-22, WEDGE
- (DD) ITEM 733001 - TOPSOILING, 4" DEPTH
  ITEM 734013 - PERMANENT GRASS SEEDING, DRY GROUND
- (EE) ITEM 713002 - GEOTEXTILE, SEPARATION
- (FF) ITEM 701013 - PCC CURB, TYPE 1-2

NOTES:

1. THE MAXIMUM ALGEBRAIC DIFFERENCE ON THE HIGH SIDE BETWEEN THE TRAVELED WAY SLOPE AND THE ACCEL/DECEL LANES SHALL NOT EXCEED 4%. THE MAXIMUM ALGEBRAIC DIFFERENCE BETWEEN THE TRAVELED WAY SLOPE AND THE SHOULDER SLOPE SHALL NOT EXCEED 8%.
2. SHOULDER SLOPE ON THE LOW SIDE SHALL BE THE SAME AS THE TRAVELED WAY SLOPE WHEN SUPERELEVATION IS GREATER THAN 4%.
3. SEE GRADES AND GEOMETRICS SHEETS FOR SUPERELEVATED CROSS SLOPE TRANSITIONS.
4. SEE SHEET TS-43 FOR UNDERDRAIN DETAIL.
   SEE CONSTRUCTION PLANS FOR PLACEMENT LOCATIONS.
5. PGA - POINT OF GRADE APPLICATION
   PDGA - POINT OF DITCH GRADE APPLICATION
   P/R - POINT OF ROTATION
   P.G.L. - POINT OF GRADE LINE
6. THE MAXIMUM LIFTS FOR THE INDIVIDUAL PAVING MATERIALS ARE AS FOLLOWS:
   SUPERPAVE, TYPE C WMA - 2"
   SUPERPAVE, TYPE B WMA - 3"
   SUPERPAVE BIT. CONC. BASE COURSE - 4"
   GRADED AGGREGATE BASE COURSE - 8"
7. SUPERPAVE, TYPE B HOT-MIX SHALL BE PLACED IN TWO EQUAL LIFTS, WHEN THICKNESS EXCEEDS 3".
8. SEE SHEET DT-01 FOR RUMBLE STRIP LOCATIONS.
9. SEE SHEET DT-12 FOR SAFETY EDGE DETAILS. THESE DETAILS SHALL BE APPLIED AT ALL INSTANCES WHERE THE EDGE OF PROPOSED PAVEMENT MEETS THE 6" TOPSOIL.
10. ON THE HIGH SIDE OF THE SUPERELEVATED MEDIAN SECTION THE BOTTOM OF BORROW TYPE A SHALL FOLLOW THE SUPERELEVATION RATE FOR THE ROADWAY EXTENDED UNTIL IT INTERSECTS WITH EITHER THE BOTTOM OF TOPSOIL FOR THE MEDIAN SIDESLOPES OR IT INTERSECTS WITH THE CONSTRUCTION BASELINE. ON THE LOW SIDE OF THE SUPERELEVATED MEDIAN SECTION THE BOTTOM OF BORROW TYPE A SHALL BE CONSTRUCTED FROM THE POINT IN WHICH THE EXTENDED SUPERELEVATION SLOPE (e) INTERSECTS THE CONSTRUCTION BASELINE TO THE GRADE BREAK AT THE INSIDE EDGE OF TRAVELED WAY.
11. FOR INTERFACE BETWEEN MOMENT SLAB AND ROADWAY PAVEMENT AND APPROACH SLAB AND ROADWAY PAVEMENT, SEE STRUCTURAL DETAILS.
12. SEE SHEET DT-15 FOR DETAILS OF CONSTRUCTING PROPOSED EARTH BERM.

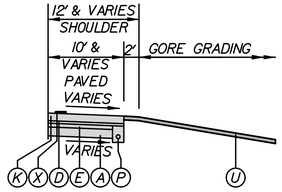

US 301 SUPERELEVATED GORE AREA

STA. 757+18 TO STA. 760+90, RT. - SEE SHEET DT-20
STA. 780+13 TO STA. 784+67, RT. - SEE SHEET DT-21
STA. 754+02 TO STA. 757+26, LT. - SEE SHEET DT-20
STA. 780+13 TO STA. 783+96, LT. - SEE SHEET DT-21

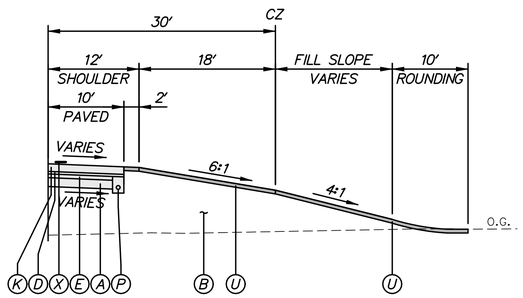

FILL SLOPE CHART		
STATION	SLOPE	SIDE
830+61 TO 830+89	3:1	RIGHT
830+89 TO 831+14	3:1 TO 4:1	RIGHT

US 301 SUPERELEVATED SECTION WITHOUT DITCH AND GUARDRAIL

STA. 830+61 TO STA. 831+10, RT.

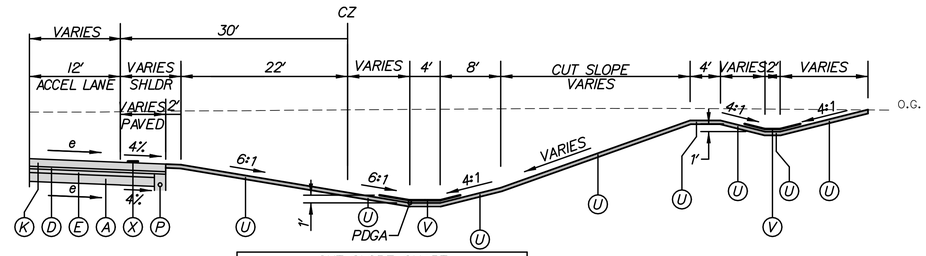

CUT SLOPE CHART		
STATION	SLOPE	SIDE
793+50 TO 796+50	3:1	RIGHT
796+50 TO 796+75	3:1 TO 4:1	RIGHT
796+75 TO 799+33	4:1	RIGHT

US 301 SUPERELEVATED CUT SECTION WITH ACCEL LANE AND DIVERSION DITCH

STA. 793+50 TO STA. 799+33, RT.

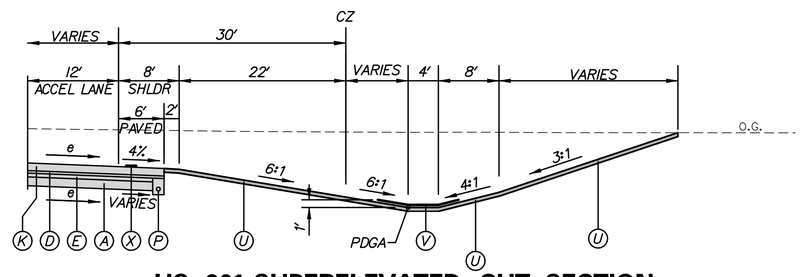

US 301 SUPERELEVATED CUT SECTION WITH ACCEL LANE

STA. 790+00 TO STA. 793+50, RT.

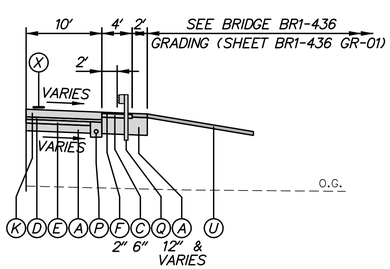

US 301 SUPERELEVATED SECTION AT BRIDGE BR1-436

STA. 829+13 TO STA. 830+61, RT.

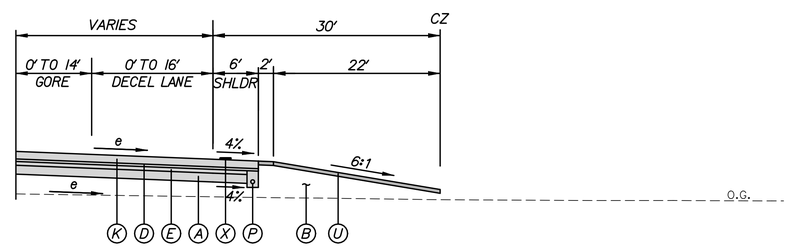

US 301 SUPERELEVATED WITH ACCEL LANE AND BMP

STA. 785+96 TO STA. 790+00, RT.

LEGEND

- (A) ITEM 209001 - BORROW, TYPE A
- (B) ITEM 209006 - BORROW, TYPE F
- (C) ITEM 302007 - GRADED AGGREGATE BASE COURSE, TYPE B
- (D) ITEM 304501 - PERMEABLE TREATED BASE, 4"
- (E) ITEM 304502 - SOIL CEMENT BASE COURSE, 6"
- (F) ITEM 401801 - WMA, SUPERPAVE, TYPE C, 160 GYRATIONS, PG 64-22
- (G) ITEM 401810 - WMA, SUPERPAVE, TYPE B, 160 GYRATIONS, PG 64-22
- (J) ITEM 401819 - WMA, SUPERPAVE, BITUMINOUS CONCRETE BASE COURSE, 160 GYRATIONS, PG 64-22
- (K) ITEM 501006 - PORTLAND CEMENT CONCRETE PAVEMENT, 12"
- (L) ITEM 701010 - PCC CURB, TYPE 1-8
- (N) ITEM 701022 - PCC CURB AND GUTTER, TYPE 3-8
- (P) ITEM 715001 - PERFORATED PIPE UNDERDRAINS, 6"
- (Q) ITEM 720050 - GALVANIZED STEEL BEAM GUARDRAIL, TYPE 1-31
- (R) ITEM 720052 - GALVANIZED STEEL BEAM GUARDRAIL, TYPE 3-31
- (S) ITEM 727000 - RIGHT OF WAY FENCE
- (T) ITEM 501001 - 8" PORTLAND CEMENT CONCRETE
- (U) ITEM 733002 - TOPSOILING, 6" DEPTH
  ITEM 734013 - PERMANENT GRASS SEEDING, DRY GROUND
- (V) ITEM 733002 - TOPSOILING, 6" DEPTH
  ITEM 734013 - PERMANENT GRASS SEEDING, DRY GROUND
  ITEM 735535 - SOIL RETENTION BLANKET MULCH, TYPE 5
- (W) ITEM 701016 - PCC CURB AND GUTTER, TYPE 1-4
- (X) ITEM 760017 - RUMBLE STRIPS, CONCRETE
- (Y) ITEM 705001 - PCC SIDEWALK, 4"
- (AA) ITEM 720626 - CONCRETE SINGLE FACE BARRIER, TYPE 1
- (BB) ITEM 760507 - PROFILE MILLING, HOT-MIX
- (CC) ITEM 401824 - WMA, SUPERPAVE, TYPE C, 160 GYRATIONS, PG 64-22, WEDGE
- (DD) ITEM 733001 - TOPSOILING, 4" DEPTH
  ITEM 734013 - PERMANENT GRASS SEEDING, DRY GROUND
- (EE) ITEM 713002 - GEOTEXTILE, SEPARATION
- (FF) ITEM 701013 - PCC CURB, TYPE 1-2

NOTES:

1. THE MAXIMUM ALGEBRAIC DIFFERENCE ON THE HIGH SIDE BETWEEN THE TRAVELED WAY SLOPE AND THE ACCEL/DECEL LANES SHALL NOT EXCEED 4%. THE MAXIMUM ALGEBRAIC DIFFERENCE BETWEEN THE TRAVELED WAY SLOPE AND THE SHOULDER SLOPE SHALL NOT EXCEED 8%.
2. SHOULDER SLOPE ON THE LOW SIDE SHALL BE THE SAME AS THE TRAVELED WAY SLOPE WHEN SUPERELEVATION IS GREATER THAN 4%.
3. SEE GRADES AND GEOMETRICS SHEETS FOR SUPERELEVATED CROSS SLOPE TRANSITIONS.
4. SEE SHEET TS-43 FOR UNDERDRAIN DETAIL.
   SEE CONSTRUCTION PLANS FOR PLACEMENT LOCATIONS.
5. PGA - POINT OF GRADE APPLICATION
   PDGA - POINT OF DITCH GRADE APPLICATION
   P/R - POINT OF ROTATION
   P.G.L. - POINT OF GRADE LINE
6. THE MAXIMUM LIFTS FOR THE INDIVIDUAL PAVING MATERIALS ARE AS FOLLOWS:
   SUPERPAVE, TYPE C WMA - 2"
   SUPERPAVE, TYPE B WMA - 3"
   SUPERPAVE BIT. CONC. BASE COURSE - 4"
   GRADED AGGREGATE BASE COURSE - 8"
7. SUPERPAVE, TYPE B HOT-MIX SHALL BE PLACED IN TWO EQUAL LIFTS, WHEN THICKNESS EXCEEDS 3".
8. SEE SHEET DT-01 FOR RUMBLE STRIP LOCATIONS.
9. SEE SHEET DT-12 FOR SAFETY EDGE DETAILS. THESE DETAILS SHALL BE APPLIED AT ALL INSTANCES WHERE THE EDGE OF PROPOSED PAVEMENT MEETS THE 6" TOPSOIL.
10. ON THE HIGH SIDE OF THE SUPERELEVATED MEDIAN SECTION THE BOTTOM OF BORROW TYPE A SHALL FOLLOW THE SUPERELEVATION RATE FOR THE ROADWAY EXTENDED UNTIL IT INTERSECTS WITH EITHER THE BOTTOM OF TOPSOIL FOR THE MEDIAN SIDESLOPES OR IT INTERSECTS WITH THE CONSTRUCTION BASELINE. ON THE LOW SIDE OF THE SUPERELEVATED MEDIAN SECTION THE BOTTOM OF BORROW TYPE A SHALL BE CONSTRUCTED FROM THE POINT IN WHICH THE EXTENDED SUPERELEVATION SLOPE (e) INTERSECTS THE CONSTRUCTION BASELINE TO THE GRADE BREAK AT THE INSIDE EDGE OF TRAVELED WAY.
11. FOR INTERFACE BETWEEN MOMENT SLAB AND ROADWAY PAVEMENT AND APPROACH SLAB AND ROADWAY PAVEMENT, SEE STRUCTURAL DETAILS.
12. SEE SHEET DT-15 FOR DETAILS OF CONSTRUCTING PROPOSED EARTH BERM.

N:\31653-000\Contract 1A\CADD\TS015U301_1A.dgn
11/3/2014 3:11:27 PM

DELAWARE DEPARTMENT OF TRANSPORTATION	ADDENDUMS / REVISIONS	NOT TO SCALE	US 301, SR 896 TO SR 1	CONTRACT T200911308	BRIDGE NO.	TYPICAL SECTIONS	TS-15
				COUNTY NEW CASTLE	DESIGNED BY: KGMA		SHEET NO. 31
					CHECKED BY: TAO		TOTAL SHTS. 875

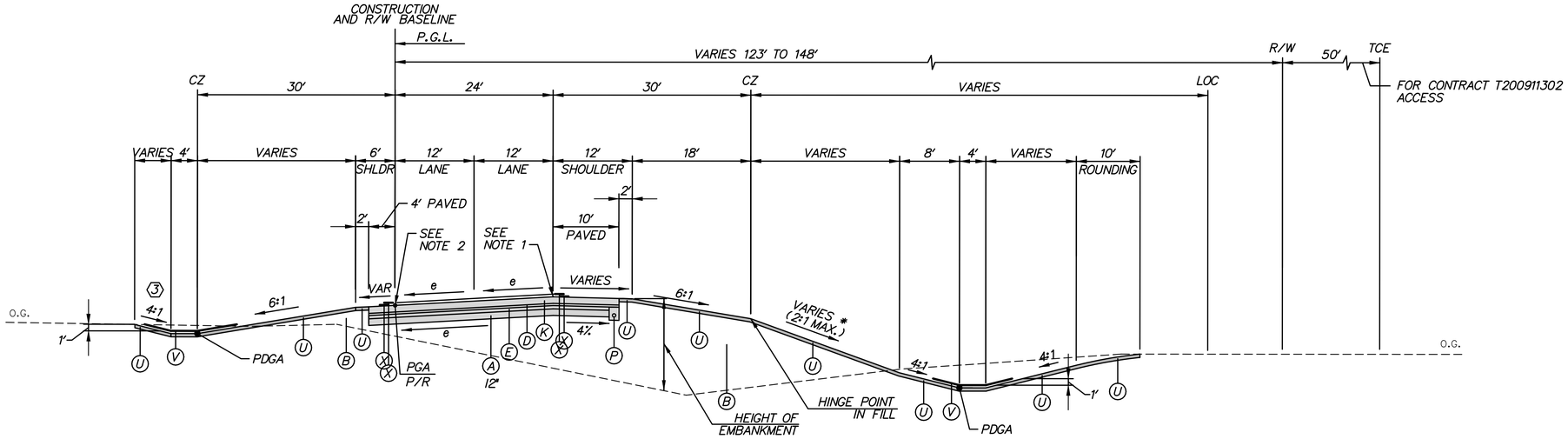

US 301 NB RAMP SUPERELEVATED SECTION

STATION 844+76 TO STATION 848+00 ($e_{max.}$=5.6%)

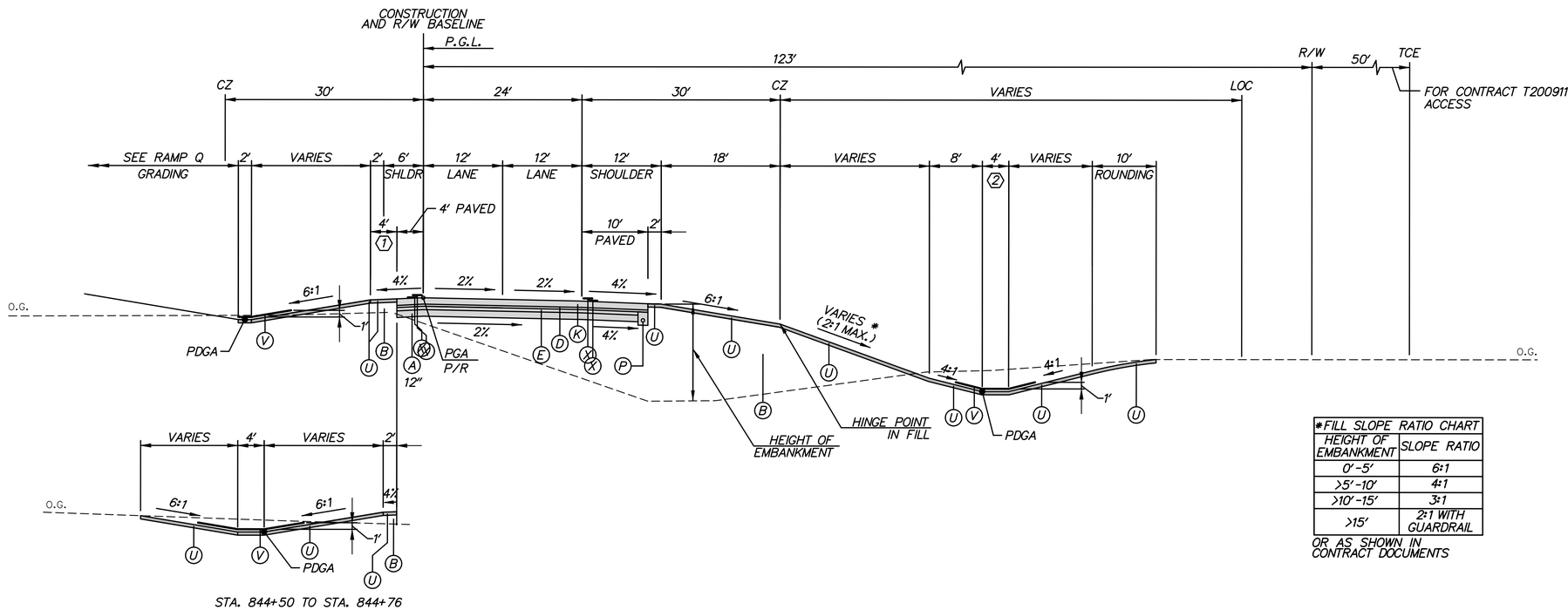

STA. 844+50 TO STA. 844+76

US 301 NB RAMP NORMAL SECTION

STATION 837+50 TO STATION 844+76

(1) VARY WIDTH 4' TO 2' STA. 841+38 TO STA. 841+88
HOLD 2' WIDTH STA. 841+88 TO STA. 844+76

(2) WIDTH 6' STA. 837+50 TO STA. 838+00

(3) SLOPE 6:1 STA. 844+76 TO STA. 845+25
VARY SLOPE 6:1 TO 4:1 STA. 845+25 TO STA. 845+50

*FILL SLOPE RATIO CHART	
HEIGHT OF EMBANKMENT	SLOPE RATIO
0'-5'	6:1
>5'-10'	4:1
>10'-15'	3:1
>15'	2:1 WITH GUARDRAIL

OR AS SHOWN IN CONTRACT DOCUMENTS

LEGEND

- (A) ITEM 209001 - BORROW, TYPE A
- (B) ITEM 209006 - BORROW, TYPE F
- (C) ITEM 302007 - GRADED AGGREGATE BASE COURSE, TYPE B
- (D) ITEM 304501 - PERMEABLE TREATED BASE, 4"
- (E) ITEM 304502 - SOIL CEMENT BASE COURSE, 6"
- (F) ITEM 401801 - WMA, SUPERPAVE, TYPE C, 160 GYRATIONS, PG 64-22
- (G) ITEM 401810 - WMA, SUPERPAVE, TYPE B, 160 GYRATIONS, PG 64-22
- (J) ITEM 401819 - WMA, SUPERPAVE, BITUMINOUS CONCRETE BASE COURSE, 160 GYRATIONS, PG 64-22
- (K) ITEM 501006 - PORTLAND CEMENT CONCRETE PAVEMENT, 12"
- (L) ITEM 701010 - PCC CURB, TYPE 1-8
- (N) ITEM 701022 - PCC CURB AND GUTTER, TYPE 3-8
- (P) ITEM 715001 - PERFORATED PIPE UNDERDRAINS, 6"
- (Q) ITEM 720050 - GALVANIZED STEEL BEAM GUARDRAIL, TYPE 1-31
- (R) ITEM 720052 - GALVANIZED STEEL BEAM GUARDRAIL, TYPE 3-31
- (S) ITEM 727000 - RIGHT OF WAY FENCE
- (T) ITEM 501001 - 8" PORTLAND CEMENT CONCRETE
- (U) ITEM 733002 - TOPSOILING, 6" DEPTH
  ITEM 734013 - PERMANENT GRASS SEEDING, DRY GROUND
- (V) ITEM 733002 - TOPSOILING, 6" DEPTH
  ITEM 734013 - PERMANENT GRASS SEEDING, DRY GROUND
  ITEM 735535 - SOIL RETENTION BLANKET MULCH, TYPE 5
- (W) ITEM 701016 - PCC CURB AND GUTTER, TYPE 1-4
- (X) ITEM 760017 - RUMBLE STRIPS, CONCRETE
- (Y) ITEM 705001 - PCC SIDEWALK, 4"
- (AA) ITEM 720626 - CONCRETE SINGLE FACE BARRIER, TYPE 1
- (BB) ITEM 760507 - PROFILE MILLING, HOT-MIX
- (CC) ITEM 401824 - WMA, SUPERPAVE, TYPE C, 160 GYRATIONS, PG 64-22, WEDGE
- (DD) ITEM 733001 - TOPSOILING, 4" DEPTH
  ITEM 734013 - PERMANENT GRASS SEEDING, DRY GROUND
- (EE) ITEM 713002 - GEOTEXTILE, SEPARATION
- (FF) ITEM 701013 - PCC CURB, TYPE 1-2

NOTES:

1. THE MAXIMUM ALGEBRAIC DIFFERENCE ON THE HIGH SIDE BETWEEN THE TRAVELED WAY SLOPE AND THE ACCEL/DECEL LANES SHALL NOT EXCEED 4%. THE MAXIMUM ALGEBRAIC DIFFERENCE BETWEEN THE TRAVELED WAY SLOPE AND THE SHOULDER SLOPE SHALL NOT EXCEED 8%.
2. SHOULDER SLOPE ON THE LOW SIDE SHALL BE THE SAME AS THE TRAVELED WAY SLOPE WHEN SUPERELEVATION IS GREATER THAN 4%.
3. SEE GRADES AND GEOMETRICS SHEETS FOR SUPERELEVATED CROSS SLOPE TRANSITIONS.
4. SEE SHEET TS-43 FOR UNDERDRAIN DETAIL.
   SEE CONSTRUCTION PLANS FOR PLACEMENT LOCATIONS.
5. PGA - POINT OF GRADE APPLICATION
   PDGA - POINT OF DITCH GRADE APPLICATION
   P/R - POINT OF ROTATION
   P.G.L. - POINT OF GRADE LINE
6. THE MAXIMUM LIFTS FOR THE INDIVIDUAL PAVING MATERIALS ARE AS FOLLOWS:
   SUPERPAVE, TYPE C WMA - 2"
   SUPERPAVE, TYPE B WMA - 3"
   SUPERPAVE BIT. CONC. BASE COURSE - 4"
   GRADED AGGREGATE BASE COURSE - 8"
7. SUPERPAVE, TYPE B HOT-MIX SHALL BE PLACED IN TWO EQUAL LIFTS, WHEN THICKNESS EXCEEDS 3".
8. SEE SHEET DT-01 FOR RUMBLE STRIP LOCATIONS.
9. SEE SHEET DT-12 FOR SAFETY EDGE DETAILS. THESE DETAILS SHALL BE APPLIED AT ALL INSTANCES WHERE THE EDGE OF PROPOSED PAVEMENT MEETS THE 6" TOPSOIL.
10. ON THE HIGH SIDE OF THE SUPERELEVATED MEDIAN SECTION THE BOTTOM OF BORROW TYPE A SHALL FOLLOW THE SUPERELEVATION RATE FOR THE ROADWAY EXTENDED UNTIL IT INTERSECTS WITH EITHER THE BOTTOM OF TOPSOIL FOR THE MEDIAN SIDESLOPES OR IT INTERSECTS WITH THE CONSTRUCTION BASELINE. ON THE LOW SIDE OF THE SUPERELEVATED MEDIAN SECTION THE BOTTOM OF BORROW TYPE A SHALL BE CONSTRUCTED FROM THE POINT IN WHICH THE EXTENDED SUPERELEVATION SLOPE (e) INTERSECTS THE CONSTRUCTION BASELINE TO THE GRADE BREAK AT THE INSIDE EDGE OF TRAVELED WAY.
11. FOR INTERFACE BETWEEN MOMENT SLAB AND ROADWAY PAVEMENT AND APPROACH SLAB AND ROADWAY PAVEMENT, SEE STRUCTURAL DETAILS.
12. SEE SHEET DT-15 FOR DETAILS OF CONSTRUCTING PROPOSED EARTH BERM.

TS-16

N:\31653-000\Contract 1A\CADD\TS016U301_1A.dgn
11/3/2014 3:11:57 PM

DELAWARE DEPARTMENT OF TRANSPORTATION	ADDENDUMS / REVISIONS	NOT TO SCALE	US 301, SR 896 TO SR 1	CONTRACT T200911308	BRIDGE NO.	TYPICAL SECTIONS	SHEET NO. 32
				COUNTY NEW CASTLE	DESIGNED BY: S.E.S.		TOTAL SHTS. 875
					CHECKED BY: B.R.T.		

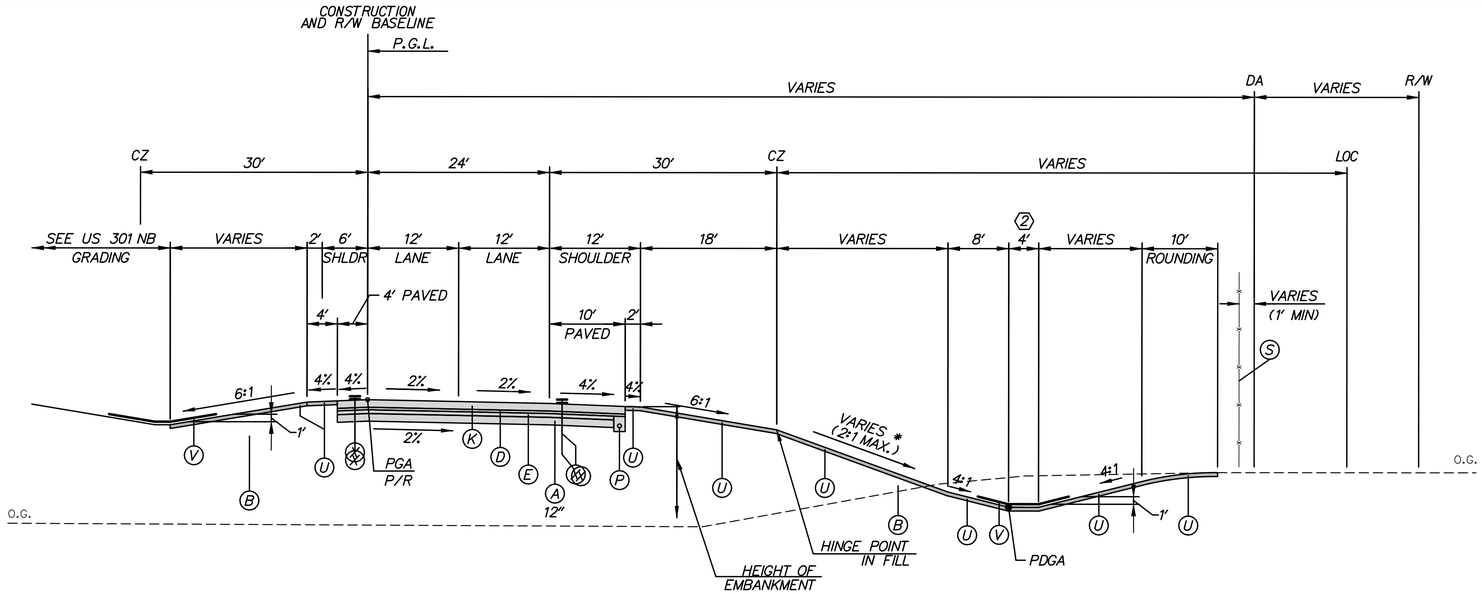

RAMP Q NORMAL SECTION
STATION 1036+21 TO STATION 1038+95

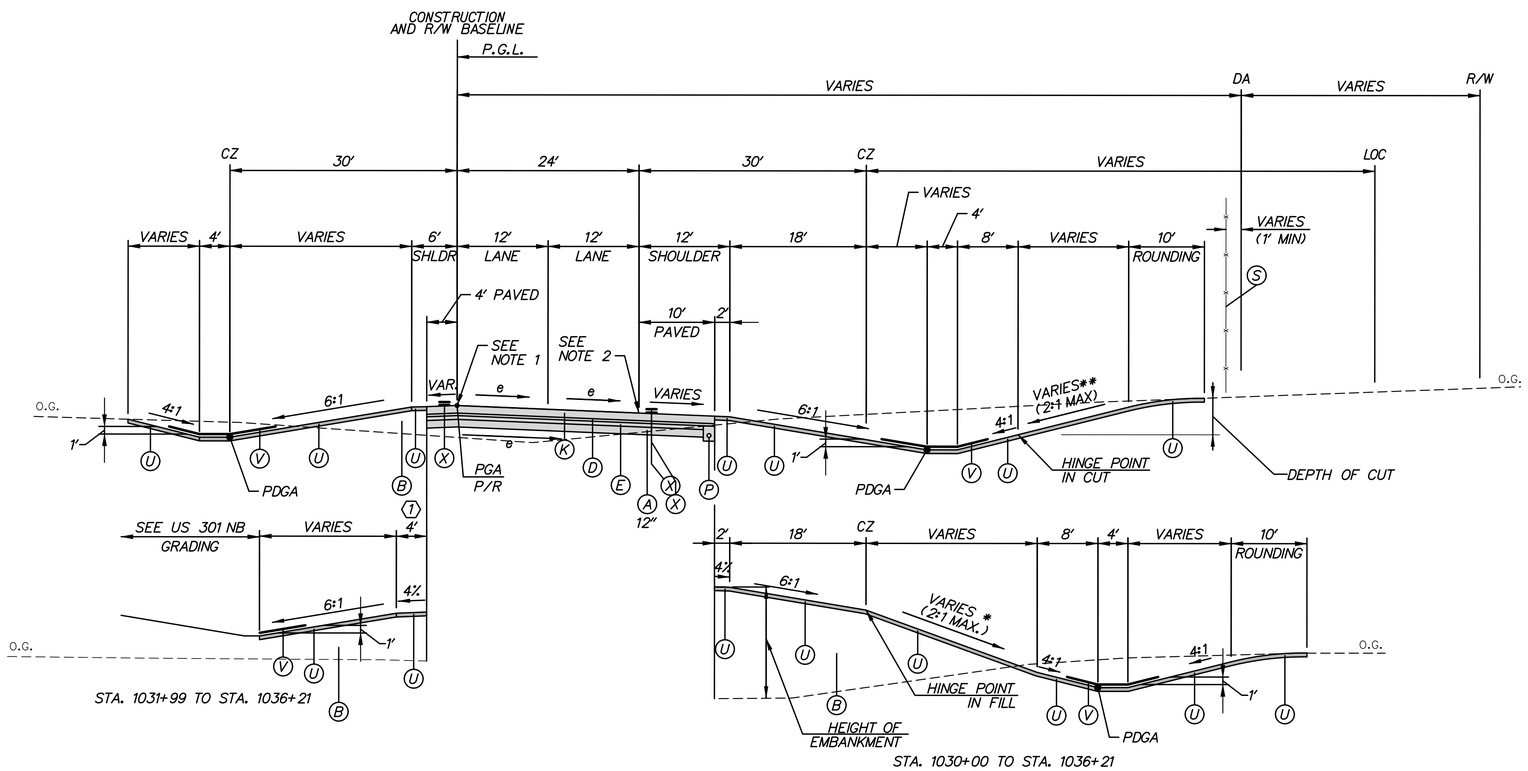

RAMP Q SUPERELEVATED SECTION
STATION 1028+50 TO STATION 1036+21 ($e_{max.}$ = 5.8%)

LEGEND

- (A) ITEM 209001 - BORROW, TYPE A
- (B) ITEM 209006 - BORROW, TYPE F
- (C) ITEM 302007 - GRADED AGGREGATE BASE COURSE, TYPE B
- (D) ITEM 304501 - PERMEABLE TREATED BASE, 4"
- (E) ITEM 304502 - SOIL CEMENT BASE COURSE, 6"
- (F) ITEM 401801 - WMA, SUPERPAVE, TYPE C, 160 GYRATIONS, PG 64-22
- (G) ITEM 401810 - WMA, SUPERPAVE, TYPE B, 160 GYRATIONS, PG 64-22
- (J) ITEM 401819 - WMA, SUPERPAVE, BITUMINOUS CONCRETE BASE COURSE, 160 GYRATIONS, PG 64-22
- (K) ITEM 501006 - PORTLAND CEMENT CONCRETE PAVEMENT, 12"
- (L) ITEM 701010 - PCC CURB, TYPE 1-8
- (N) ITEM 701022 - PCC CURB AND GUTTER, TYPE 3-8
- (P) ITEM 715001 - PERFORATED PIPE UNDERDRAINS, 6"
- (Q) ITEM 720050 - GALVANIZED STEEL BEAM GUARDRAIL, TYPE 1-31
- (R) ITEM 720052 - GALVANIZED STEEL BEAM GUARDRAIL, TYPE 3-31
- (S) ITEM 727000 - RIGHT OF WAY FENCE
- (T) ITEM 501001 - 8" PORTLAND CEMENT CONCRETE
- (U) ITEM 733002 - TOPSOILING, 6" DEPTH
ITEM 734013 - PERMANENT GRASS SEEDING, DRY GROUND
- (V) ITEM 733002 - TOPSOILING, 6" DEPTH
ITEM 734013 - PERMANENT GRASS SEEDING, DRY GROUND
ITEM 735535 - SOIL RETENTION BLANKET MULCH, TYPE 5
- (W) ITEM 701016 - PCC CURB AND GUTTER, TYPE 1-4
- (X) ITEM 760017 - RUMBLE STRIPS, CONCRETE
- (Y) ITEM 705001 - PCC SIDEWALK, 4"
- (AA) ITEM 720626 - CONCRETE SINGLE FACE BARRIER, TYPE 1
- (BB) ITEM 760507 - PROFILE MILLING, HOT-MIX
- (CC) ITEM 401824 - WMA, SUPERPAVE, TYPE C, 160 GYRATIONS, PG 64-22, WEDGE
- (DD) ITEM 733001 - TOPSOILING, 4" DEPTH
ITEM 734013 - PERMANENT GRASS SEEDING, DRY GROUND
- (EE) ITEM 713002 - GEOTEXTILE, SEPARATION
- (FF) ITEM 701013 - PCC CURB, TYPE 1-2

**CUT SLOPE RATIO CHART	
SLOPE RATIO	DEPTH OF CUT
4:1	0'-5'
3:1	>5'-10'
2:1	>10'

*FILL SLOPE RATIO CHART	
SLOPE RATIO	HEIGHT OF EMBANKMENT
6:1	0'-5'
4:1	>5'-10'
3:1	>10'-15'
2:1 WITH GUARDRAIL	>15'

NOTES:

1. THE MAXIMUM ALGEBRAIC DIFFERENCE ON THE HIGH SIDE BETWEEN THE TRAVELED WAY SLOPE AND THE ACCEL/DECEL LANES SHALL NOT EXCEED 4%. THE MAXIMUM ALGEBRAIC DIFFERENCE BETWEEN THE TRAVELED WAY SLOPE AND THE SHOULDER SLOPE SHALL NOT EXCEED 8%.
2. SHOULDER SLOPE ON THE LOW SIDE SHALL BE THE SAME AS THE TRAVELED WAY SLOPE WHEN SUPERELEVATION IS GREATER THAN 4%.
3. SEE GRADES AND GEOMETRICS SHEETS FOR SUPERELEVATED CROSS SLOPE TRANSITIONS.
4. SEE SHEET TS-43 FOR UNDERDRAIN DETAIL. SEE CONSTRUCTION PLANS FOR PLACEMENT LOCATIONS.
5. PGA - POINT OF GRADE APPLICATION
PDGA - POINT OF DITCH GRADE APPLICATION
P/R - POINT OF ROTATION
P.G.L. - POINT OF GRADE LINE
6. THE MAXIMUM LIFTS FOR THE INDIVIDUAL PAVING MATERIALS ARE AS FOLLOWS:
SUPERPAVE, TYPE C WMA - 2"
SUPERPAVE, TYPE B WMA - 3"
SUPERPAVE BIT. CONC. BASE COURSE - 4"
GRADED AGGREGATE BASE COURSE - 8"
7. SUPERPAVE, TYPE B HOT-MIX SHALL BE PLACED IN TWO EQUAL LIFTS, WHEN THICKNESS EXCEEDS 3".
8. SEE SHEET DT-01 FOR RUMBLE STRIP LOCATIONS.
9. SEE SHEET DT-12 FOR SAFETY EDGE DETAILS. THESE DETAILS SHALL BE APPLIED AT ALL INSTANCES WHERE THE EDGE OF PROPOSED PAVEMENT MEETS THE 6" TOPSOIL.
10. ON THE HIGH SIDE OF THE SUPERELEVATED MEDIAN SECTION THE BOTTOM OF BORROW TYPE A SHALL FOLLOW THE SUPERELEVATION RATE FOR THE ROADWAY EXTENDED UNTIL IT INTERSECTS WITH EITHER THE BOTTOM OF TOPSOIL FOR THE MEDIAN SIDESLOPES OR IT INTERSECTS WITH THE CONSTRUCTION BASELINE. ON THE LOW SIDE OF THE SUPERELEVATED MEDIAN SECTION THE BOTTOM OF BORROW TYPE A SHALL BE CONSTRUCTED FROM THE POINT IN WHICH THE EXTENDED SUPERELEVATION SLOPE (e) INTERSECTS THE CONSTRUCTION BASELINE TO THE GRADE BREAK AT THE INSIDE EDGE OF TRAVELED WAY.
11. FOR INTERFACE BETWEEN MOMENT SLAB AND ROADWAY PAVEMENT AND APPROACH SLAB AND ROADWAY PAVEMENT, SEE STRUCTURAL DETAILS.
12. SEE SHEET DT-15 FOR DETAILS OF CONSTRUCTING PROPOSED EARTH BERM.

(1) WIDTH 2' STA. 1031+99 TO STA. 1034+00
VARY WIDTH 2' TO 4' STA. 1034+00 TO STA. 1035+07

(2) WIDTH 6' STA. 1037+50 TO STA. 1038+95

N:\31653-000\Contract 1A\CADD\TS017U301_1A.dgn
11/3/2014 3:12:29 PM

DELAWARE DEPARTMENT OF TRANSPORTATION	ADDENDUMS / REVISIONS	NOT TO SCALE	US 301, SR 896 TO SR 1	CONTRACT T200911308	BRIDGE NO.	TYPICAL SECTIONS
				COUNTY NEW CASTLE	DESIGNED BY: S.E.S.	
					CHECKED BY: B.R.T.	

TS-17

SHEET NO.	TOTAL SHTS.
33	875

NOTES:

1. THE MAXIMUM ALGEBRAIC DIFFERENCE ON THE HIGH SIDE BETWEEN THE TRAVELED WAY SLOPE AND THE ACCEL/DECEL LANES SHALL NOT EXCEED 4%. THE MAXIMUM ALGEBRAIC DIFFERENCE BETWEEN THE TRAVELED WAY SLOPE AND THE SHOULDER SLOPE SHALL NOT EXCEED 8%.
2. SHOULDER SLOPE ON THE LOW SIDE SHALL BE THE SAME AS THE TRAVELED WAY SLOPE WHEN SUPERELEVATION IS GREATER THAN 4%.
3. SEE GRADES AND GEOMETRICS SHEETS FOR SUPERELEVATED CROSS SLOPE TRANSITIONS.
4. SEE SHEET TS-43 FOR UNDERDRAIN DETAIL.
   SEE CONSTRUCTION PLANS FOR PLACEMENT LOCATIONS.
5. PGA - POINT OF GRADE APPLICATION
   PDGA - POINT OF DITCH GRADE APPLICATION
   P/R - POINT OF ROTATION
   P.G.L. - POINT OF GRADE LINE
6. THE MAXIMUM LIFTS FOR THE INDIVIDUAL PAVING MATERIALS ARE AS FOLLOWS:
   SUPERPAVE, TYPE C WMA - 2"
   SUPERPAVE, TYPE B WMA - 3"
   SUPERPAVE BIT. CONC. BASE COURSE - 4"
   GRADED AGGREGATE BASE COURSE - 8"
7. SUPERPAVE, TYPE B HOT-MIX SHALL BE PLACED IN TWO EQUAL LIFTS, WHEN THICKNESS EXCEEDS 3".
8. SEE SHEET DT-01 FOR RUMBLE STRIP LOCATIONS.
9. SEE SHEET DT-12 FOR SAFETY EDGE DETAILS. THESE DETAILS SHALL BE APPLIED AT ALL INSTANCES WHERE THE EDGE OF PROPOSED PAVEMENT MEETS THE 6" TOPSOIL.
10. ON THE HIGH SIDE OF THE SUPERELEVATED MEDIAN SECTION THE BOTTOM OF BORROW TYPE A SHALL FOLLOW THE SUPERELEVATION RATE FOR THE ROADWAY EXTENDED UNTIL IT INTERSECTS WITH EITHER THE BOTTOM OF TOPSOIL FOR THE MEDIAN SIDESLOPES OR IT INTERSECTS WITH THE CONSTRUCTION BASELINE. ON THE LOW SIDE OF THE SUPERELEVATED MEDIAN SECTION THE BOTTOM OF BORROW TYPE A SHALL BE CONSTRUCTED FROM THE POINT IN WHICH THE EXTENDED SUPERELEVATION SLOPE (e) INTERSECTS THE CONSTRUCTION BASELINE TO THE GRADE BREAK AT THE INSIDE EDGE OF TRAVELED WAY.
11. FOR INTERFACE BETWEEN MOMENT SLAB AND ROADWAY PAVEMENT AND APPROACH SLAB AND ROADWAY PAVEMENT, SEE STRUCTURAL DETAILS.
12. SEE SHEET DT-15 FOR DETAILS OF CONSTRUCTING PROPOSED EARTH BERM.

LEGEND

- (A) ITEM 209001 - BORROW, TYPE A
- (B) ITEM 209006 - BORROW, TYPE F
- (C) ITEM 302007 - GRADED AGGREGATE BASE COURSE, TYPE B
- (D) ITEM 304501 - PERMEABLE TREATED BASE, 4"
- (E) ITEM 304502 - SOIL CEMENT BASE COURSE, 6"
- (F) ITEM 401801 - WMA, SUPERPAVE, TYPE C, 160 GYRATIONS, PG 64-22
- (G) ITEM 401810 - WMA, SUPERPAVE, TYPE B, 160 GYRATIONS, PG 64-22
- (J) ITEM 401819 - WMA, SUPERPAVE, BITUMINOUS CONCRETE BASE COURSE, 160 GYRATIONS, PG 64-22
- (K) ITEM 501006 - PORTLAND CEMENT CONCRETE PAVEMENT, 12"
- (L) ITEM 701010 - PCC CURB, TYPE 1-8
- (N) ITEM 701022 - PCC CURB AND GUTTER, TYPE 3-8
- (P) ITEM 715001 - PERFORATED PIPE UNDERDRAINS, 6"
- (Q) ITEM 720050 - GALVANIZED STEEL BEAM GUARDRAIL, TYPE 1-31
- (R) ITEM 720052 - GALVANIZED STEEL BEAM GUARDRAIL, TYPE 3-31
- (S) ITEM 727000 - RIGHT OF WAY FENCE
- (T) ITEM 501001 - 8" PORTLAND CEMENT CONCRETE
- (U) ITEM 733002 - TOPSOILING, 6" DEPTH
  ITEM 734013 - PERMANENT GRASS SEEDING, DRY GROUND
- (V) ITEM 733002 - TOPSOILING, 6" DEPTH
  ITEM 734013 - PERMANENT GRASS SEEDING, DRY GROUND
  ITEM 735535 - SOIL RETENTION BLANKET MULCH, TYPE 5
- (W) ITEM 701016 - PCC CURB AND GUTTER, TYPE 1-4
- (X) ITEM 760017 - RUMBLE STRIPS, CONCRETE
- (Y) ITEM 705001 - PCC SIDEWALK, 4"
- (AA) ITEM 720626 - CONCRETE SINGLE FACE BARRIER, TYPE 1
- (BB) ITEM 760507 - PROFILE MILLING, HOT-MIX
- (CC) ITEM 401824 - WMA, SUPERPAVE, TYPE C, 160 GYRATIONS, PG 64-22, WEDGE
- (DD) ITEM 733001 - TOPSOILING, 4" DEPTH
  ITEM 734013 - PERMANENT GRASS SEEDING, DRY GROUND
- (EE) ITEM 713002 - GEOTEXTILE, SEPARATION
- (FF) ITEM 701013 - PCC CURB, TYPE 1-2

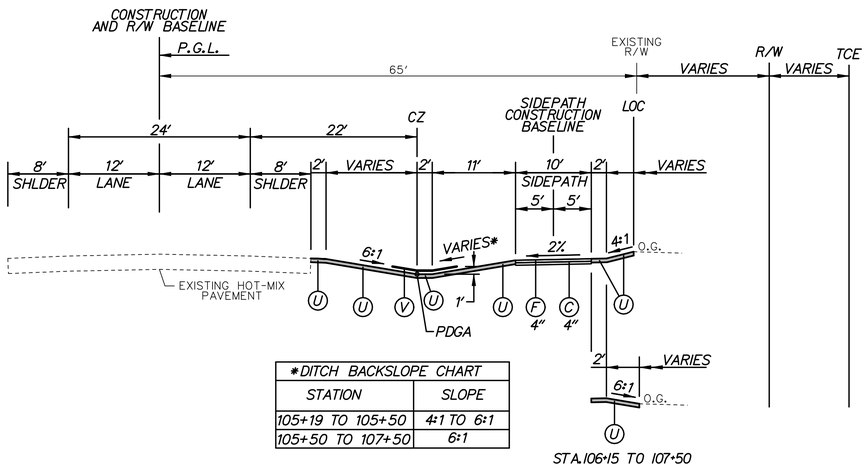

*DITCH BACKSLOPE CHART	
STATION	SLOPE
105+19 TO 105+50	4:1 TO 6:1
105+50 TO 107+50	6:1

JAMISON CORNER ROAD
STATION 105+19 TO STATION 107+50

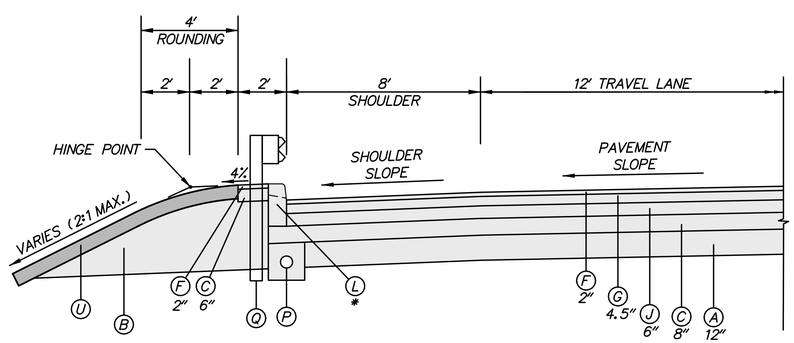

*DEPTH OF CURB IS TO BE EXTENDED TO THE TOP OF GABC AT NO ADDITIONAL COST

JAMISON CORNER ROAD GUARDRAIL DETAIL
(WHERE SHOWN ON PLANS)

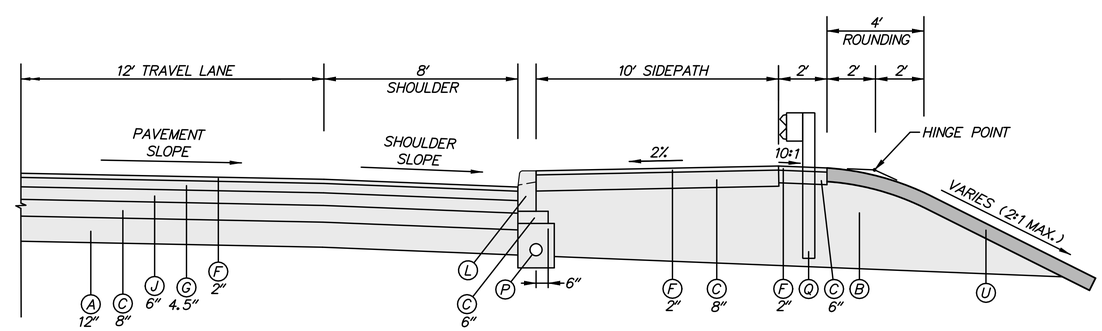

JAMISON CORNER ROAD GUARDRAIL DETAIL
(WHERE SHOWN ON PLANS)

N:\31653-000\CONTRACT 1A\CADD\TS018U301_1A.dgn
11/4/2014 8:26:15 AM

DELAWARE DEPARTMENT OF TRANSPORTATION	ADDENDUMS / REVISIONS	NOT TO SCALE	US 301, SR 896 TO SR 1	CONTRACT T200911308	BRIDGE NO.	TYPICAL SECTIONS	TS-18
				COUNTY NEW CASTLE	DESIGNED BY: KGMA		SHEET NO. 34
					CHECKED BY: TAO		TOTAL SHTS. 875

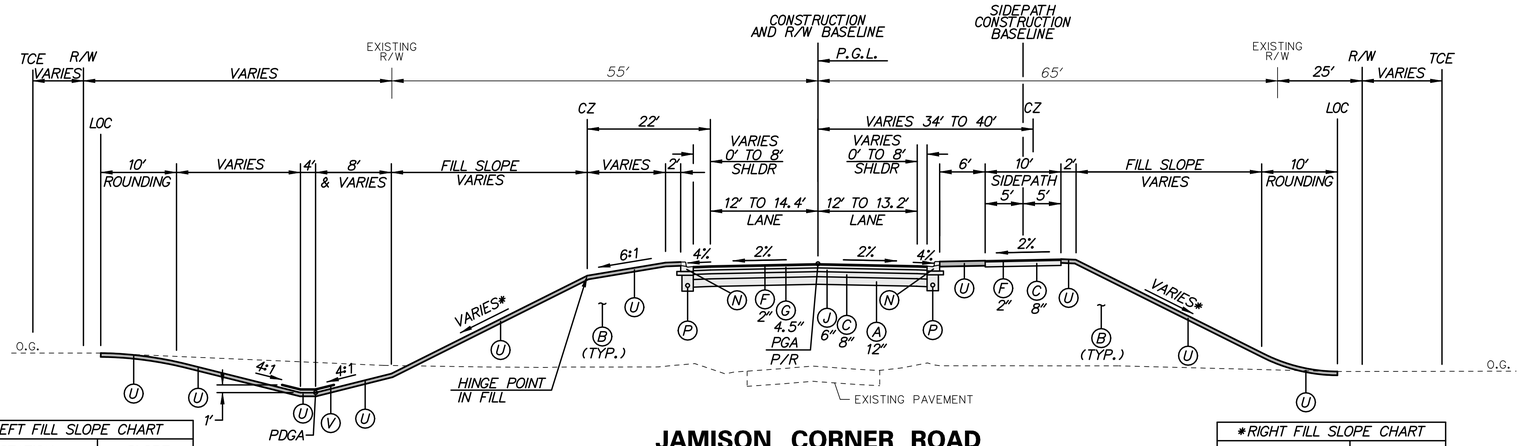

JAMISON CORNER ROAD
STATION 114+09 TO STATION 116+71

*LEFT FILL SLOPE CHART	
STATION	SLOPE
114+09 TO 114+32	4:1 TO 10:1
114+32 TO 114+46	10:1
114+46 TO 115+00	10:1 TO 3:1
115+00 TO 115+20	3:1
115+20 TO 115+50	3:1 TO 2:1
115+50 TO 116+70	2:1

*RIGHT FILL SLOPE CHART	
STATION	SLOPE
114+09 TO 114+20	4:1
114+20 TO 114+50	4:1 TO 3:1
114+50 TO 115+20	3:1
115+20 TO 115+50	3:1 TO 2:1
115+50 TO 116+71	2:1

**LEFT CUT SLOPE CHART	
STATION	SLOPE
109+30 TO 109+50	6:1 TO 4:1
109+50 TO 110+10	4:1

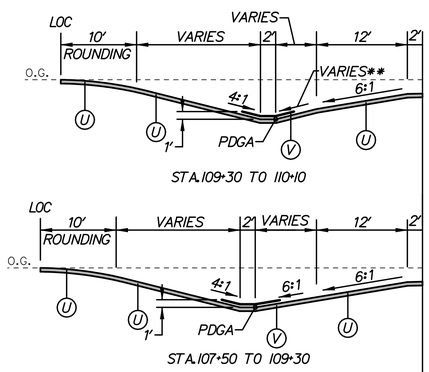

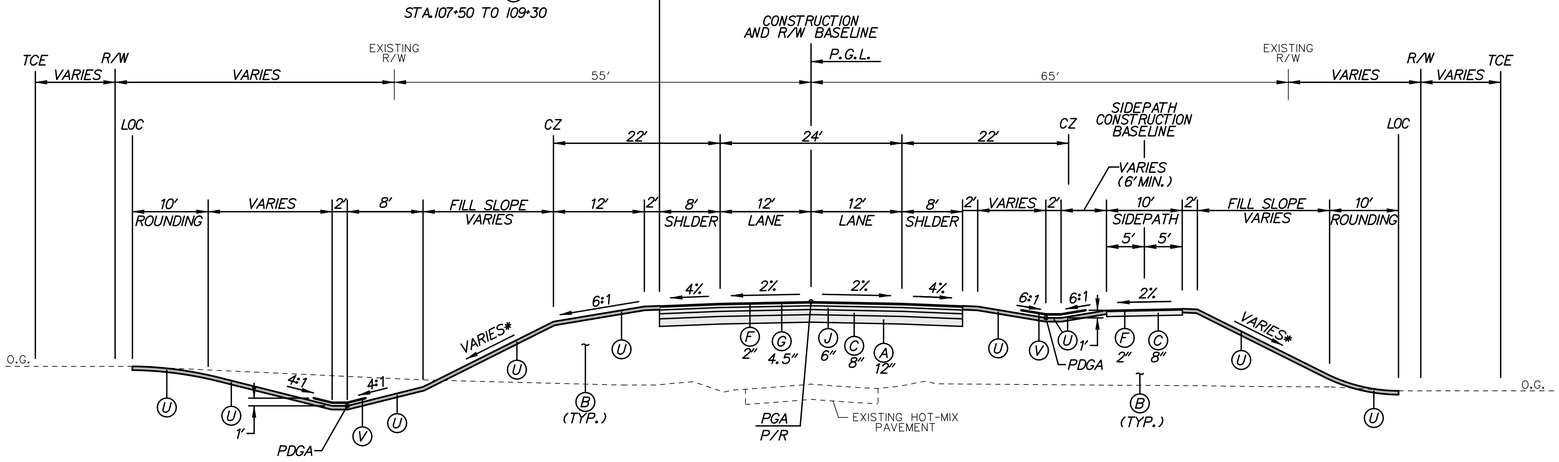

JAMISON CORNER ROAD
STATION 107+50 TO STATION 114+09

*LEFT FILL SLOPE CHART	
STATION	SLOPE
110+10 TO 111+50	6:1
111+50 TO 111+80	6:1 TO 4:1
111+80 TO 114+09	4:1

*RIGHT FILL SLOPE CHART	
STATION	SLOPE
107+50 TO 113+00	6:1
113+00 TO 113+25	6:1 TO 4:1
113+25 TO 114+09	4:1

LEGEND

- (A) ITEM 209001 - BORROW, TYPE A
- (B) ITEM 209006 - BORROW, TYPE F
- (C) ITEM 302007 - GRADED AGGREGATE BASE COURSE, TYPE B
- (D) ITEM 304501 - PERMEABLE TREATED BASE, 4"
- (E) ITEM 304502 - SOIL CEMENT BASE COURSE, 6"
- (F) ITEM 401801 - WMA, SUPERPAVE, TYPE C, 160 GYRATIONS, PG 64-22
- (G) ITEM 401810 - WMA, SUPERPAVE, TYPE B, 160 GYRATIONS, PG 64-22
- (J) ITEM 401819 - WMA, SUPERPAVE, BITUMINOUS CONCRETE BASE COURSE, 160 GYRATIONS, PG 64-22
- (K) ITEM 501006 - PORTLAND CEMENT CONCRETE PAVEMENT, 12"
- (L) ITEM 701010 - PCC CURB, TYPE 1-8
- (N) ITEM 701022 - PCC CURB AND GUTTER, TYPE 3-8
- (P) ITEM 715001 - PERFORATED PIPE UNDERDRAINS, 6"
- (Q) ITEM 720050 - GALVANIZED STEEL BEAM GUARDRAIL, TYPE 1-31
- (R) ITEM 720052 - GALVANIZED STEEL BEAM GUARDRAIL, TYPE 3-31
- (S) ITEM 727000 - RIGHT OF WAY FENCE
- (T) ITEM 501001 - 8" PORTLAND CEMENT CONCRETE
- (U) ITEM 733002 - TOPSOILING, 6" DEPTH
ITEM 734013 - PERMANENT GRASS SEEDING, DRY GROUND
- (V) ITEM 733002 - TOPSOILING, 6" DEPTH
ITEM 734013 - PERMANENT GRASS SEEDING, DRY GROUND
ITEM 735535 - SOIL RETENTION BLANKET MULCH, TYPE 5
- (W) ITEM 701016 - PCC CURB AND GUTTER, TYPE 1-4
- (X) ITEM 760017 - RUMBLE STRIPS, CONCRETE
- (Y) ITEM 705001 - PCC SIDEWALK, 4"
- (AA) ITEM 720626 - CONCRETE SINGLE FACE BARRIER, TYPE 1
- (BB) ITEM 760507 - PROFILE MILLING, HOT-MIX
- (CC) ITEM 401824 - WMA, SUPERPAVE, TYPE C, 160 GYRATIONS, PG 64-22, WEDGE
- (DD) ITEM 733001 - TOPSOILING, 4" DEPTH
ITEM 734013 - PERMANENT GRASS SEEDING, DRY GROUND
- (EE) ITEM 713002 - GEOTEXTILE, SEPARATION
- (FF) ITEM 701013 - PCC CURB, TYPE 1-2

NOTES:

1. THE MAXIMUM ALGEBRAIC DIFFERENCE ON THE HIGH SIDE BETWEEN THE TRAVELED WAY SLOPE AND THE ACCEL/DECEL LANES SHALL NOT EXCEED 4%. THE MAXIMUM ALGEBRAIC DIFFERENCE BETWEEN THE TRAVELED WAY SLOPE AND THE SHOULDER SLOPE SHALL NOT EXCEED 8%.
2. SHOULDER SLOPE ON THE LOW SIDE SHALL BE THE SAME AS THE TRAVELED WAY SLOPE WHEN SUPERELEVATION IS GREATER THAN 4%.
3. SEE GRADES AND GEOMETRICS SHEETS FOR SUPERELEVATED CROSS SLOPE TRANSITIONS.
4. SEE SHEET TS-43 FOR UNDERDRAIN DETAIL.
SEE CONSTRUCTION PLANS FOR PLACEMENT LOCATIONS.
5. PGA - POINT OF GRADE APPLICATION
PDGA - POINT OF DITCH GRADE APPLICATION
P/R - POINT OF ROTATION
P.G.L. - POINT OF GRADE LINE
6. THE MAXIMUM LIFTS FOR THE INDIVIDUAL PAVING MATERIALS ARE AS FOLLOWS:
SUPERPAVE, TYPE C WMA - 2"
SUPERPAVE, TYPE B WMA - 3"
SUPERPAVE BIT. CONC. BASE COURSE - 4"
GRADED AGGREGATE BASE COURSE - 8"
7. SUPERPAVE, TYPE B HOT-MIX SHALL BE PLACED IN TWO EQUAL LIFTS, WHEN THICKNESS EXCEEDS 3".
8. SEE SHEET DT-01 FOR RUMBLE STRIP LOCATIONS.
9. SEE SHEET DT-12 FOR SAFETY EDGE DETAILS. THESE DETAILS SHALL BE APPLIED AT ALL INSTANCES WHERE THE EDGE OF PROPOSED PAVEMENT MEETS THE 6" TOPSOIL.
10. ON THE HIGH SIDE OF THE SUPERELEVATED MEDIAN SECTION THE BOTTOM OF BORROW TYPE A SHALL FOLLOW THE SUPERELEVATION RATE FOR THE ROADWAY EXTENDED UNTIL IT INTERSECTS WITH EITHER THE BOTTOM OF TOPSOIL FOR THE MEDIAN SIDESLOPES OR IT INTERSECTS WITH THE CONSTRUCTION BASELINE. ON THE LOW SIDE OF THE SUPERELEVATED MEDIAN SECTION THE BOTTOM OF BORROW TYPE A SHALL BE CONSTRUCTED FROM THE POINT IN WHICH THE EXTENDED SUPERELEVATION SLOPE (e) INTERSECTS THE CONSTRUCTION BASELINE TO THE GRADE BREAK AT THE INSIDE EDGE OF TRAVELED WAY.
11. FOR INTERFACE BETWEEN MOMENT SLAB AND ROADWAY PAVEMENT AND APPROACH SLAB AND ROADWAY PAVEMENT, SEE STRUCTURAL DETAILS.
12. SEE SHEET DT-15 FOR DETAILS OF CONSTRUCTING PROPOSED EARTH BERM.

NOTES:

1. THE MAXIMUM ALGEBRAIC DIFFERENCE ON THE HIGH SIDE BETWEEN THE TRAVELED WAY SLOPE AND THE ACCEL/DECEL LANES SHALL NOT EXCEED 4%. THE MAXIMUM ALGEBRAIC DIFFERENCE BETWEEN THE TRAVELED WAY SLOPE AND THE SHOULDER SLOPE SHALL NOT EXCEED 8%.
2. SHOULDER SLOPE ON THE LOW SIDE SHALL BE THE SAME AS THE TRAVELED WAY SLOPE WHEN SUPERELEVATION IS GREATER THAN 4%.
3. SEE GRADES AND GEOMETRICS SHEETS FOR SUPERELEVATED CROSS SLOPE TRANSITIONS.
4. SEE SHEET TS-43 FOR UNDERDRAIN DETAIL.
   SEE CONSTRUCTION PLANS FOR PLACEMENT LOCATIONS.
5. PGA - POINT OF GRADE APPLICATION
   PDGA - POINT OF DITCH GRADE APPLICATION
   P/R - POINT OF ROTATION
   P.G.L. - POINT OF GRADE LINE
6. THE MAXIMUM LIFTS FOR THE INDIVIDUAL PAVING MATERIALS ARE AS FOLLOWS:
   SUPERPAVE, TYPE C WMA - 2"
   SUPERPAVE, TYPE B WMA - 3"
   SUPERPAVE BIT. CONC. BASE COURSE - 4"
   GRADED AGGREGATE BASE COURSE - 8"
7. SUPERPAVE, TYPE B HOT-MIX SHALL BE PLACED IN TWO EQUAL LIFTS, WHEN THICKNESS EXCEEDS 3".
8. SEE SHEET DT-01 FOR RUMBLE STRIP LOCATIONS.
9. SEE SHEET DT-12 FOR SAFETY EDGE DETAILS. THESE DETAILS SHALL BE APPLIED AT ALL INSTANCES WHERE THE EDGE OF PROPOSED PAVEMENT MEETS THE 6" TOPSOIL.
10. ON THE HIGH SIDE OF THE SUPERELEVATED MEDIAN SECTION THE BOTTOM OF BORROW TYPE A SHALL FOLLOW THE SUPERELEVATION RATE FOR THE ROADWAY EXTENDED UNTIL IT INTERSECTS WITH EITHER THE BOTTOM OF TOPSOIL FOR THE MEDIAN SIDESLOPES OR IT INTERSECTS WITH THE CONSTRUCTION BASELINE. ON THE LOW SIDE OF THE SUPERELEVATED MEDIAN SECTION THE BOTTOM OF BORROW TYPE A SHALL BE CONSTRUCTED FROM THE POINT IN WHICH THE EXTENDED SUPERELEVATION SLOPE (e) INTERSECTS THE CONSTRUCTION BASELINE TO THE GRADE BREAK AT THE INSIDE EDGE OF TRAVELED WAY.
11. FOR INTERFACE BETWEEN MOMENT SLAB AND ROADWAY PAVEMENT AND APPROACH SLAB AND ROADWAY PAVEMENT, SEE STRUCTURAL DETAILS.
12. SEE SHEET DT-15 FOR DETAILS OF CONSTRUCTING PROPOSED EARTH BERM.

LEGEND

- (A) ITEM 209001 - BORROW, TYPE A
- (B) ITEM 209006 - BORROW, TYPE F
- (C) ITEM 302007 - GRADED AGGREGATE BASE COURSE, TYPE B
- (D) ITEM 304501 - PERMEABLE TREATED BASE, 4"
- (E) ITEM 304502 - SOIL CEMENT BASE COURSE, 6"
- (F) ITEM 401801 - WMA, SUPERPAVE, TYPE C, 160 GYRATIONS, PG 64-22
- (G) ITEM 401810 - WMA, SUPERPAVE, TYPE B, 160 GYRATIONS, PG 64-22
- (J) ITEM 401819 - WMA, SUPERPAVE, BITUMINOUS CONCRETE BASE COURSE, 160 GYRATIONS, PG 64-22
- (K) ITEM 501006 - PORTLAND CEMENT CONCRETE PAVEMENT, 12"
- (L) ITEM 701010 - PCC CURB, TYPE 1-8
- (N) ITEM 701022 - PCC CURB AND GUTTER, TYPE 3-8
- (P) ITEM 715001 - PERFORATED PIPE UNDERDRAINS, 6"
- (Q) ITEM 720050 - GALVANIZED STEEL BEAM GUARDRAIL, TYPE 1-31
- (R) ITEM 720052 - GALVANIZED STEEL BEAM GUARDRAIL, TYPE 3-31
- (S) ITEM 727000 - RIGHT OF WAY FENCE
- (T) ITEM 501001 - 8" PORTLAND CEMENT CONCRETE
- (U) ITEM 733002 - TOPSOILING, 6" DEPTH
  ITEM 734013 - PERMANENT GRASS SEEDING, DRY GROUND
- (V) ITEM 733002 - TOPSOILING, 6" DEPTH
  ITEM 734013 - PERMANENT GRASS SEEDING, DRY GROUND
  ITEM 735535 - SOIL RETENTION BLANKET MULCH, TYPE 5
- (W) ITEM 701016 - PCC CURB AND GUTTER, TYPE 1-4
- (X) ITEM 760017 - RUMBLE STRIPS, CONCRETE
- (Y) ITEM 705001 - PCC SIDEWALK, 4"
- (AA) ITEM 720626 - CONCRETE SINGLE FACE BARRIER, TYPE 1
- (BB) ITEM 760507 - PROFILE MILLING, HOT-MIX
- (CC) ITEM 401824 - WMA, SUPERPAVE, TYPE C, 160 GYRATIONS, PG 64-22, WEDGE
- (DD) ITEM 733001 - TOPSOILING, 4" DEPTH
  ITEM 734013 - PERMANENT GRASS SEEDING, DRY GROUND
- (EE) ITEM 713002 - GEOTEXTILE, SEPARATION
- (FF) ITEM 701013 - PCC CURB, TYPE 1-2

(1) TRANSITION SLOPE FROM 6:1 AT STA. 119+44 TO 2:1 AT STA. 120+00. 2:1 SLOPE FROM STA. 120+00 TO STA. 120+78.

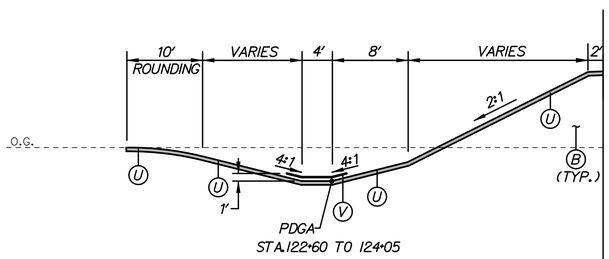

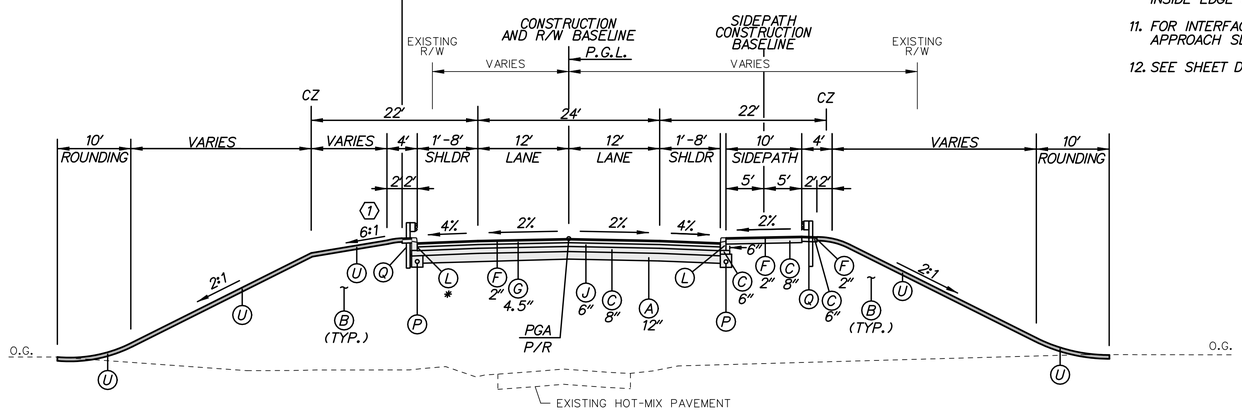

*DEPTH OF CURB IS TO BE EXTENDED TO THE TOP OF GABC AT NO ADDITIONAL COST

JAMISON CORNER ROAD
STATION 119+33 TO STATION 120+78
STATION 122+60 TO STATION 124+05

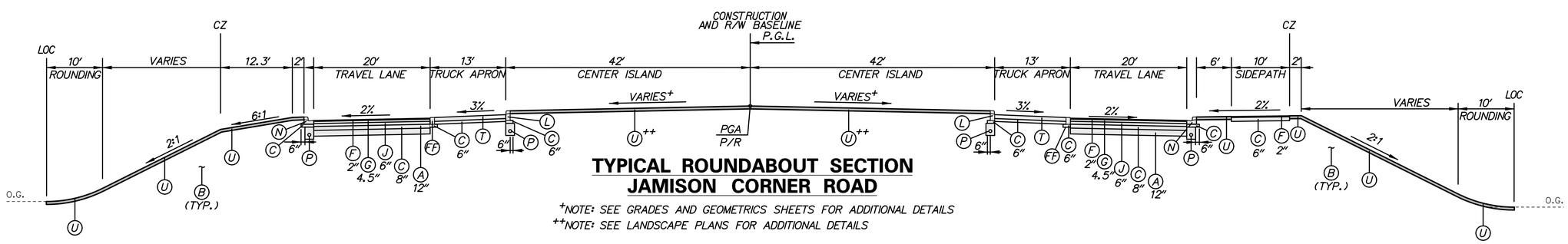

TYPICAL ROUNDABOUT SECTION
JAMISON CORNER ROAD

+NOTE: SEE GRADES AND GEOMETRICS SHEETS FOR ADDITIONAL DETAILS
++NOTE: SEE LANDSCAPE PLANS FOR ADDITIONAL DETAILS

N:\31653-000\CONTRACT 1A\CADD\TS020U301_1A.dgn
11/4/2014 8:28:06 AM

DELAWARE DEPARTMENT OF TRANSPORTATION	ADDENDUMS / REVISIONS	NOT TO SCALE	US 301, SR 896 TO SR 1	CONTRACT T200911308 / COUNTY NEW CASTLE	BRIDGE NO. / DESIGNED BY: KGMA / CHECKED BY: TAO	TYPICAL SECTIONS

TS-20
SHEET NO. 36
TOTAL SHTS. 875

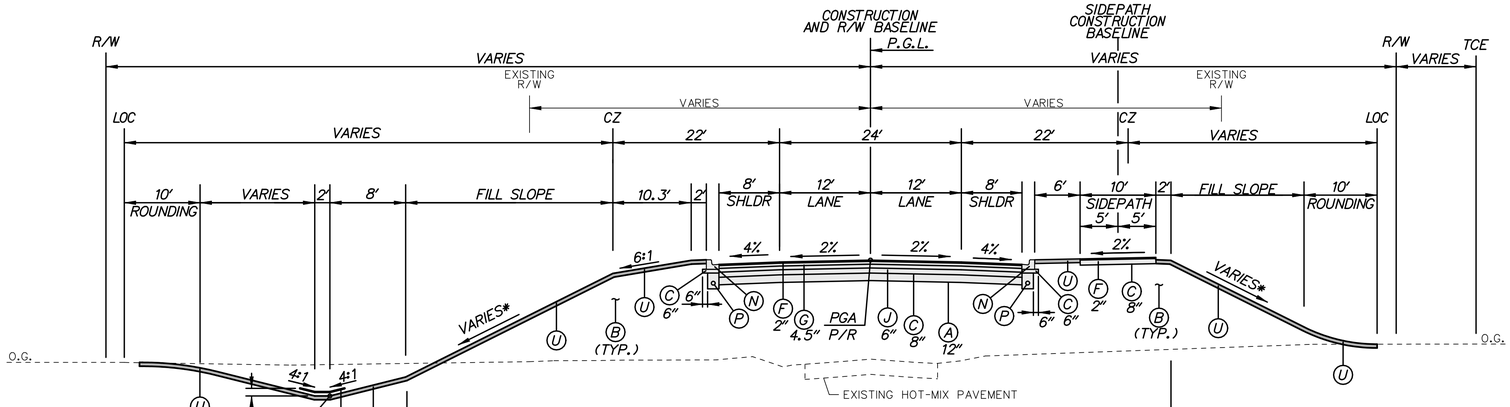

JAMISON CORNER ROAD
STA. 130+50 TO STA. 131+75

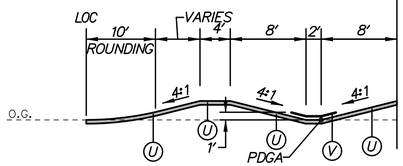

STA. 131+62 TO 131+70

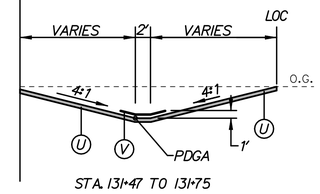

STA. 131+47 TO 131+75

*LEFT FILL SLOPE CHART	
STATION	SLOPE
126+71 TO 127+25	2:1
127+25 TO 127+55	2:1 TO 3:1
127+55 TO 129+20	3:1
129+20 TO 129+50	3:1 TO 4:1
129+50 TO 131+75	4:1

*RIGHT FILL SLOPE CHART	
STATION	SLOPE
126+71 TO 126+80	2:1
126+80 TO 127+00	2:1 TO 3:1
127+00 TO 128+70	3:1
128+70 TO 129+00	3:1 TO 4:1
129+00 TO 129+80	4:1
129+80 TO 131+47	4:1 TO 75:1

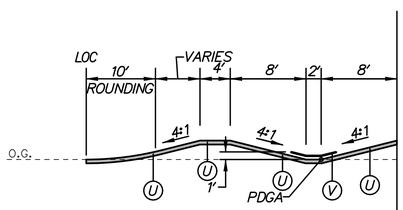

STA. 128+50 TO 129+60

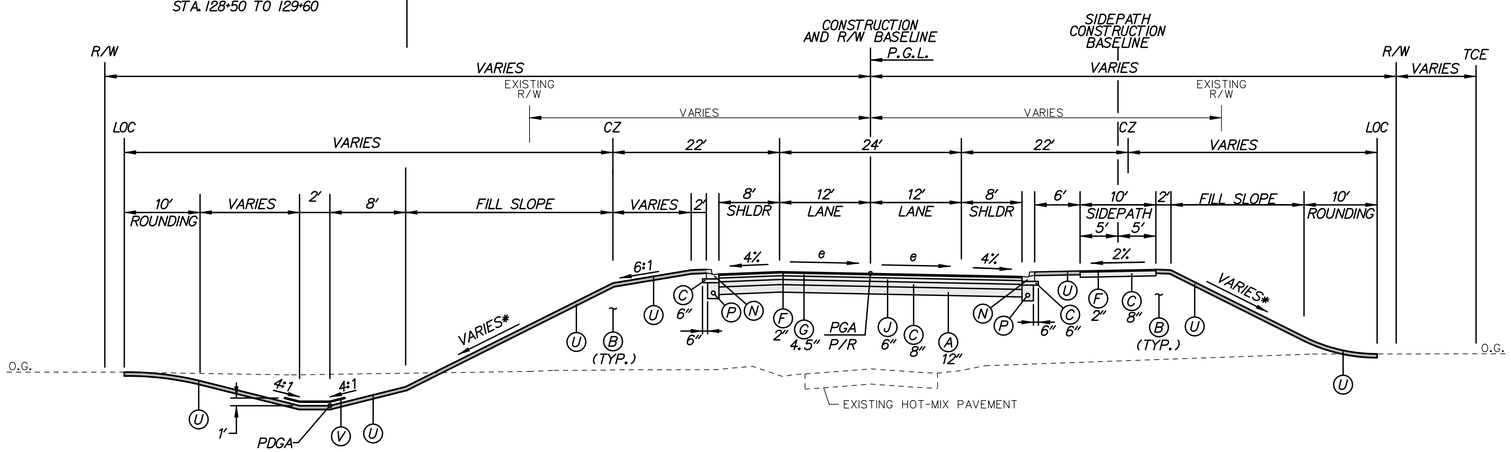

JAMISON CORNER ROAD
STA. 126+71 TO STA. 130+50 ($e_{max.}$=2.6%)

LEGEND

- (A) ITEM 209001 - BORROW, TYPE A
- (B) ITEM 209006 - BORROW, TYPE F
- (C) ITEM 302007 - GRADED AGGREGATE BASE COURSE, TYPE B
- (D) ITEM 304501 - PERMEABLE TREATED BASE, 4"
- (E) ITEM 304502 - SOIL CEMENT BASE COURSE, 6"
- (F) ITEM 401801 - WMA, SUPERPAVE, TYPE C, 160 GYRATIONS, PG 64-22
- (G) ITEM 401810 - WMA, SUPERPAVE, TYPE B, 160 GYRATIONS, PG 64-22
- (J) ITEM 401819 - WMA, SUPERPAVE, BITUMINOUS CONCRETE BASE COURSE, 160 GYRATIONS, PG 64-22
- (K) ITEM 501006 - PORTLAND CEMENT CONCRETE PAVEMENT, 12"
- (L) ITEM 701010 - PCC CURB, TYPE 1-8
- (N) ITEM 701022 - PCC CURB AND GUTTER, TYPE 3-8
- (P) ITEM 715001 - PERFORATED PIPE UNDERDRAINS, 6"
- (Q) ITEM 720050 - GALVANIZED STEEL BEAM GUARDRAIL, TYPE 1-31
- (R) ITEM 720052 - GALVANIZED STEEL BEAM GUARDRAIL, TYPE 3-31
- (S) ITEM 727000 - RIGHT OF WAY FENCE
- (T) ITEM 501001 - 8" PORTLAND CEMENT CONCRETE
- (U) ITEM 733002 - TOPSOILING, 6" DEPTH
ITEM 734013 - PERMANENT GRASS SEEDING, DRY GROUND
- (V) ITEM 733002 - TOPSOILING, 6" DEPTH
ITEM 734013 - PERMANENT GRASS SEEDING, DRY GROUND
ITEM 735535 - SOIL RETENTION BLANKET MULCH, TYPE 5
- (W) ITEM 701016 - PCC CURB AND GUTTER, TYPE 1-4
- (X) ITEM 760017 - RUMBLE STRIPS, CONCRETE
- (Y) ITEM 705001 - PCC SIDEWALK, 4"
- (AA) ITEM 720626 - CONCRETE SINGLE FACE BARRIER, TYPE 1
- (BB) ITEM 760507 - PROFILE MILLING, HOT-MIX
- (CC) ITEM 401824 - WMA, SUPERPAVE, TYPE C, 160 GYRATIONS, PG 64-22, WEDGE
- (DD) ITEM 733001 - TOPSOILING, 4" DEPTH
ITEM 734013 - PERMANENT GRASS SEEDING, DRY GROUND
- (EE) ITEM 713002 - GEOTEXTILE, SEPARATION
- (FF) ITEM 701013 - PCC CURB, TYPE 1-2

NOTES:

1. THE MAXIMUM ALGEBRAIC DIFFERENCE ON THE HIGH SIDE BETWEEN THE TRAVELED WAY SLOPE AND THE ACCEL/DECEL LANES SHALL NOT EXCEED 4%. THE MAXIMUM ALGEBRAIC DIFFERENCE BETWEEN THE TRAVELED WAY SLOPE AND THE SHOULDER SLOPE SHALL NOT EXCEED 8%.
2. SHOULDER SLOPE ON THE LOW SIDE SHALL BE THE SAME AS THE TRAVELED WAY SLOPE WHEN SUPERELEVATION IS GREATER THAN 4%.
3. SEE GRADES AND GEOMETRICS SHEETS FOR SUPERELEVATED CROSS SLOPE TRANSITIONS.
4. SEE SHEET TS-43 FOR UNDERDRAIN DETAIL.
SEE CONSTRUCTION PLANS FOR PLACEMENT LOCATIONS.
5. PGA - POINT OF GRADE APPLICATION
PDGA - POINT OF DITCH GRADE APPLICATION
P/R - POINT OF ROTATION
P.G.L. - POINT OF GRADE LINE
6. THE MAXIMUM LIFTS FOR THE INDIVIDUAL PAVING MATERIALS ARE AS FOLLOWS:
SUPERPAVE, TYPE C WMA - 2"
SUPERPAVE, TYPE B WMA - 3"
SUPERPAVE BIT. CONC. BASE COURSE - 4"
GRADED AGGREGATE BASE COURSE - 8"
7. SUPERPAVE, TYPE B HOT-MIX SHALL BE PLACED IN TWO EQUAL LIFTS, WHEN THICKNESS EXCEEDS 3".
8. SEE SHEET DT-01 FOR RUMBLE STRIP LOCATIONS.
9. SEE SHEET DT-12 FOR SAFETY EDGE DETAILS. THESE DETAILS SHALL BE APPLIED AT ALL INSTANCES WHERE THE EDGE OF PROPOSED PAVEMENT MEETS THE 6" TOPSOIL.
10. ON THE HIGH SIDE OF THE SUPERELEVATED MEDIAN SECTION THE BOTTOM OF BORROW TYPE A SHALL FOLLOW THE SUPERELEVATION RATE FOR THE ROADWAY EXTENDED UNTIL IT INTERSECTS WITH EITHER THE BOTTOM OF TOPSOIL FOR THE MEDIAN SIDESLOPES OR IT INTERSECTS WITH THE CONSTRUCTION BASELINE. ON THE LOW SIDE OF THE SUPERELEVATED MEDIAN SECTION THE BOTTOM OF BORROW TYPE A SHALL BE CONSTRUCTED FROM THE POINT IN WHICH THE EXTENDED SUPERELEVATION SLOPE (e) INTERSECTS THE CONSTRUCTION BASELINE TO THE GRADE BREAK AT THE INSIDE EDGE OF TRAVELED WAY.
11. FOR INTERFACE BETWEEN MOMENT SLAB AND ROADWAY PAVEMENT AND APPROACH SLAB AND ROADWAY PAVEMENT, SEE STRUCTURAL DETAILS.
12. SEE SHEET DT-15 FOR DETAILS OF CONSTRUCTING PROPOSED EARTH BERM.

N:\31653-000\CONTRACT 1A\CADD\TS021U301_1A.dgn
11/4/2014 8:28:59 AM

DELAWARE DEPARTMENT OF TRANSPORTATION	ADDENDUMS / REVISIONS	NOT TO SCALE	US 301, SR 896 TO SR 1	CONTRACT T200911308	BRIDGE NO.	TYPICAL SECTIONS	TS-21
				COUNTY NEW CASTLE	DESIGNED BY: KGMA		SHEET NO. 37
					CHECKED BY: TAO		TOTAL SHTS. 875

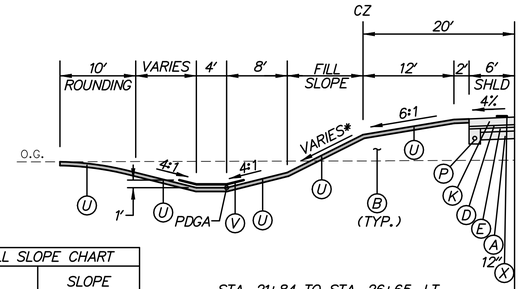

STA. 21+84 TO STA. 26+65, LT.

*LEFT FILL SLOPE CHART	
STATION	SLOPE
21+84 TO 22+00	4:1
22+00 TO 22+50	4:1 TO 3:1
22+50 TO 23+50	3:1
23+50 TO 24+00	3:1 TO 2:1
24+00 TO 26+65	2:1

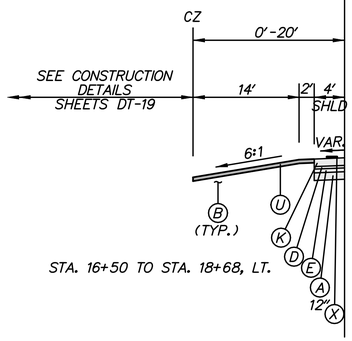

STA. 16+50 TO STA. 18+68, LT.

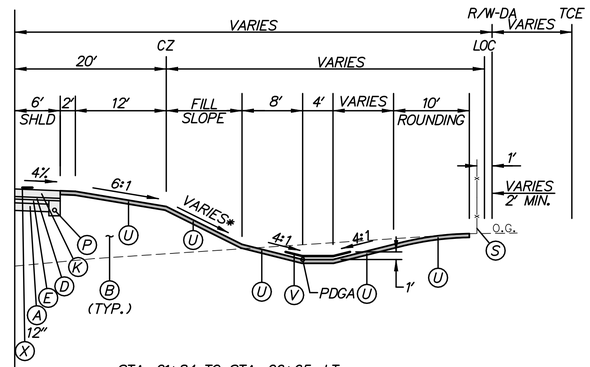

STA. 21+84 TO STA. 26+65, LT.

*RIGHT FILL SLOPE CHART	
STATION	SLOPE
21+84 TO 22+00	4:1
22+00 TO 22+50	4:1 TO 3:1
22+50 TO 23+50	3:1
23+50 TO 24+00	3:1 TO 2:1
24+00 TO 26+65	2:1

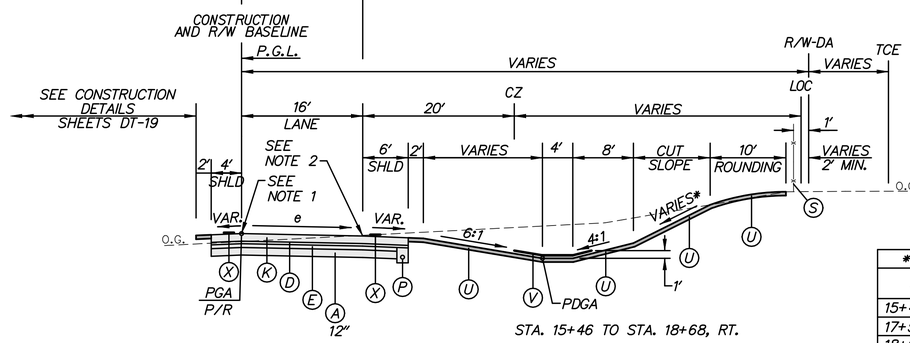

STA. 15+46 TO STA. 18+68, RT.

*RIGHT CUT SLOPE CHART	
STATION	SLOPE
15+46 TO 17+50	4:1
17+50 TO 18+00	4:1 TO 3:1
18+00 TO 18+68	3:1

RAMP N SUPERELEVATED SECTION

STATION 15+46 TO STATION 18+68 ($e_{max.}$=5.0%)
STATION 21+84 TO STATION 26+65 ($e_{max.}$=2.7%)

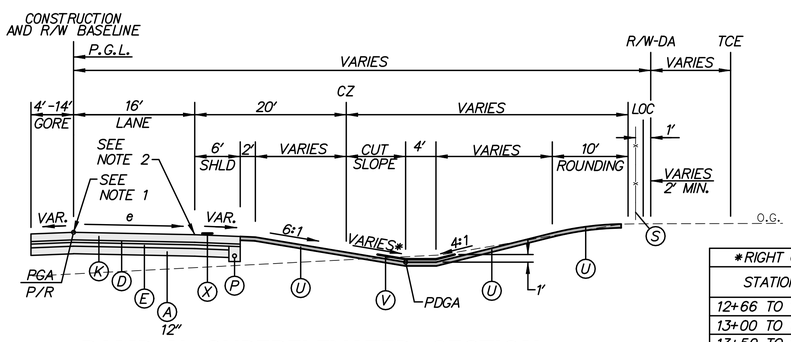

*RIGHT CUT SLOPE CHART	
STATION	SLOPE
12+66 TO 13+00	4:1
13+00 TO 13+50	4:1 TO 6:1
13+50 TO 15+46	6:1

RAMP N SUPERELEVATED SECTION

STATION 12+66 TO STATION 15+46 ($e_{max.}$=5.0%)

LEGEND

- (A) ITEM 209001 - BORROW, TYPE A
- (B) ITEM 209006 - BORROW, TYPE F
- (C) ITEM 302007 - GRADED AGGREGATE BASE COURSE, TYPE B
- (D) ITEM 304501 - PERMEABLE TREATED BASE, 4"
- (E) ITEM 304502 - SOIL CEMENT BASE COURSE, 6"
- (F) ITEM 401801 - WMA, SUPERPAVE, TYPE C, 160 GYRATIONS, PG 64-22
- (G) ITEM 401810 - WMA, SUPERPAVE, TYPE B, 160 GYRATIONS, PG 64-22
- (J) ITEM 401819 - WMA, SUPERPAVE, BITUMINOUS CONCRETE BASE COURSE, 160 GYRATIONS, PG 64-22
- (K) ITEM 501006 - PORTLAND CEMENT CONCRETE PAVEMENT, 12"
- (L) ITEM 701010 - PCC CURB, TYPE 1-8
- (N) ITEM 701022 - PCC CURB AND GUTTER, TYPE 3-8
- (P) ITEM 715001 - PERFORATED PIPE UNDERDRAINS, 6"
- (Q) ITEM 720050 - GALVANIZED STEEL BEAM GUARDRAIL, TYPE 1-31
- (R) ITEM 720052 - GALVANIZED STEEL BEAM GUARDRAIL, TYPE 3-31
- (S) ITEM 727000 - RIGHT OF WAY FENCE
- (T) ITEM 501001 - 8" PORTLAND CEMENT CONCRETE
- (U) ITEM 733002 - TOPSOILING, 6" DEPTH
  ITEM 734013 - PERMANENT GRASS SEEDING, DRY GROUND
- (V) ITEM 733002 - TOPSOILING, 6" DEPTH
  ITEM 734013 - PERMANENT GRASS SEEDING, DRY GROUND
  ITEM 735535 - SOIL RETENTION BLANKET MULCH, TYPE 5
- (W) ITEM 701016 - PCC CURB AND GUTTER, TYPE 1-4
- (X) ITEM 760017 - RUMBLE STRIPS, CONCRETE
- (Y) ITEM 705001 - PCC SIDEWALK, 4"
- (AA) ITEM 720626 - CONCRETE SINGLE FACE BARRIER, TYPE 1
- (BB) ITEM 760507 - PROFILE MILLING, HOT-MIX
- (CC) ITEM 401824 - WMA, SUPERPAVE, TYPE C, 160 GYRATIONS, PG 64-22, WEDGE
- (DD) ITEM 733001 - TOPSOILING, 4" DEPTH
  ITEM 734013 - PERMANENT GRASS SEEDING, DRY GROUND
- (EE) ITEM 713002 - GEOTEXTILE, SEPARATION
- (FF) ITEM 701013 - PCC CURB, TYPE 1-2

NOTES:

1. THE MAXIMUM ALGEBRAIC DIFFERENCE ON THE HIGH SIDE BETWEEN THE TRAVELED WAY SLOPE AND THE ACCEL/DECEL LANES SHALL NOT EXCEED 4%. THE MAXIMUM ALGEBRAIC DIFFERENCE BETWEEN THE TRAVELED WAY SLOPE AND THE SHOULDER SLOPE SHALL NOT EXCEED 8%.
2. SHOULDER SLOPE ON THE LOW SIDE SHALL BE THE SAME AS THE TRAVELED WAY SLOPE WHEN SUPERELEVATION IS GREATER THAN 4%.
3. SEE GRADES AND GEOMETRICS SHEETS FOR SUPERELEVATED CROSS SLOPE TRANSITIONS.
4. SEE SHEET TS-43 FOR UNDERDRAIN DETAIL.
   SEE CONSTRUCTION PLANS FOR PLACEMENT LOCATIONS.
5. PGA - POINT OF GRADE APPLICATION
   PDGA - POINT OF DITCH GRADE APPLICATION
   P/R - POINT OF ROTATION
   P.G.L. - POINT OF GRADE LINE
6. THE MAXIMUM LIFTS FOR THE INDIVIDUAL PAVING MATERIALS ARE AS FOLLOWS:
   SUPERPAVE, TYPE C WMA - 2"
   SUPERPAVE, TYPE B WMA - 3"
   SUPERPAVE BIT. CONC. BASE COURSE - 4"
   GRADED AGGREGATE BASE COURSE - 8"
7. SUPERPAVE, TYPE B HOT-MIX SHALL BE PLACED IN TWO EQUAL LIFTS, WHEN THICKNESS EXCEEDS 3".
8. SEE SHEET DT-01 FOR RUMBLE STRIP LOCATIONS.
9. SEE SHEET DT-12 FOR SAFETY EDGE DETAILS. THESE DETAILS SHALL BE APPLIED AT ALL INSTANCES WHERE THE EDGE OF PROPOSED PAVEMENT MEETS THE 6" TOPSOIL.
10. ON THE HIGH SIDE OF THE SUPERELEVATED MEDIAN SECTION THE BOTTOM OF BORROW TYPE A SHALL FOLLOW THE SUPERELEVATION RATE FOR THE ROADWAY EXTENDED UNTIL IT INTERSECTS WITH EITHER THE BOTTOM OF TOPSOIL FOR THE MEDIAN SIDESLOPES OR IT INTERSECTS WITH THE CONSTRUCTION BASELINE. ON THE LOW SIDE OF THE SUPERELEVATED MEDIAN SECTION THE BOTTOM OF BORROW TYPE A SHALL BE CONSTRUCTED FROM THE POINT IN WHICH THE EXTENDED SUPERELEVATION SLOPE (e) INTERSECTS THE CONSTRUCTION BASELINE TO THE GRADE BREAK AT THE INSIDE EDGE OF TRAVELED WAY.
11. FOR INTERFACE BETWEEN MOMENT SLAB AND ROADWAY PAVEMENT AND APPROACH SLAB AND ROADWAY PAVEMENT, SEE STRUCTURAL DETAILS.
12. SEE SHEET DT-15 FOR DETAILS OF CONSTRUCTING PROPOSED EARTH BERM.

N:\33653-000\CONTRACT 1A\CADD\TS022U301_1A.dgn
11/4/2014 8:29:50 AM

DELAWARE DEPARTMENT OF TRANSPORTATION

ADDENDUMS / REVISIONS

NOT TO SCALE

US 301, SR 896 TO SR 1

CONTRACT	BRIDGE NO.
T200911308	DESIGNED BY: KGMA
COUNTY	CHECKED BY: TAO
NEW CASTLE	

TYPICAL SECTIONS

TS-22

SHEET NO. 38
TOTAL SHTS. 875

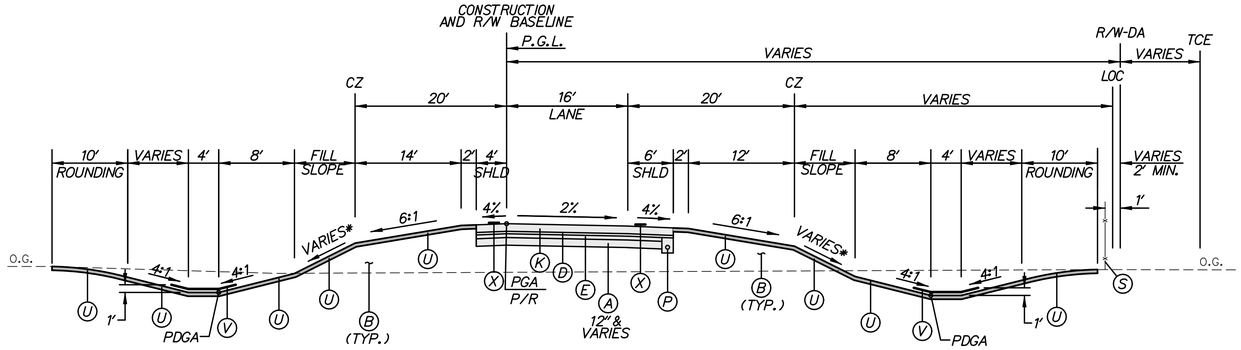

*LEFT FILL SLOPE CHART	
STATION	SLOPE
70+98 TO 71+75	2:1
71+75 TO 72+00	2:1 TO 3:1
72+00 TO 72+75	3:1
72+75 TO 73+00	3:1 TO 4:1
73+00 TO 73+55	4:1

*RIGHT FILL SLOPE CHART	
STATION	SLOPE
70+98 TO 71+75	2:1
71+75 TO 72+00	2:1 TO 3:1
72+00 TO 72+75	3:1
72+75 TO 73+00	3:1 TO 4:1
73+00 TO 73+55	4:1

RAMP O NORMAL SECTION
STATION 70+98 TO STATION 73+55

**DITCH FRONT SLOPE CHART	
STATION	SLOPE
19+25 to 19+50	6:1 TO 4:1
19+50 to 21+84	4:1

*LEFT FILL SLOPE CHART	
STATION	SLOPE
19+25 to 20+50	6:1
20+50 to 21+00	6:1 to 4:1
21+00 to 21+84	4:1

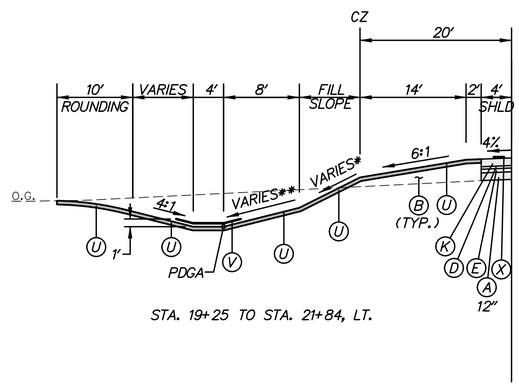

STA. 19+25 TO STA. 21+84, LT.

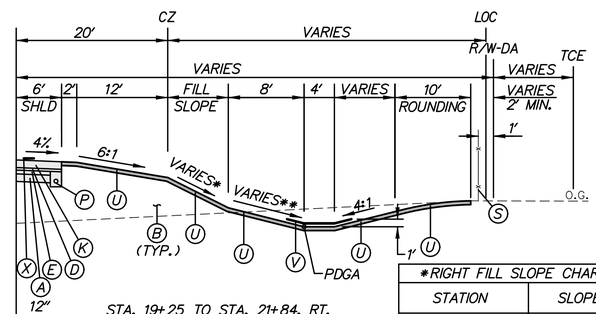

STA. 19+25 TO STA. 21+84, RT.

*RIGHT FILL SLOPE CHART	
STATION	SLOPE
19+25 to 21+00	6:1
21+00 to 21+50	6:1 TO 4:1
21+50 to 21+84	4:1

**DITCH FRONT SLOPE CHART	
STATION	SLOPE
19+25 to 19+50	6:1 TO 4:1
19+50 to 21+84	4:1

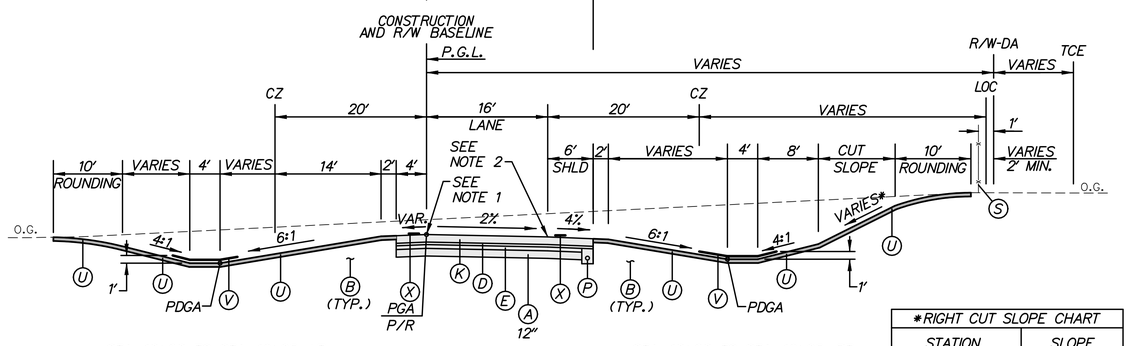

STA. 18+68 TO STA. 19+25, LT.

STA. 18+68 TO STA. 19+25, RT.

*RIGHT CUT SLOPE CHART	
STATION	SLOPE
18+68 to 19+00	3:1
19+00 to 19+25	3:1 TO 4:1

RAMP N NORMAL SECTION
STATION 18+68 TO STATION 21+84

LEGEND

- (A) ITEM 209001 - BORROW, TYPE A
- (B) ITEM 209006 - BORROW, TYPE F
- (C) ITEM 302007 - GRADED AGGREGATE BASE COURSE, TYPE B
- (D) ITEM 304501 - PERMEABLE TREATED BASE, 4"
- (E) ITEM 304502 - SOIL CEMENT BASE COURSE, 6"
- (F) ITEM 401801 - WMA, SUPERPAVE, TYPE C, 160 GYRATIONS, PG 64-22
- (G) ITEM 401810 - WMA, SUPERPAVE, TYPE B, 160 GYRATIONS, PG 64-22
- (J) ITEM 401819 - WMA, SUPERPAVE, BITUMINOUS CONCRETE BASE COURSE, 160 GYRATIONS, PG 64-22
- (K) ITEM 501006 - PORTLAND CEMENT CONCRETE PAVEMENT, 12"
- (L) ITEM 701010 - PCC CURB, TYPE 1-8
- (N) ITEM 701022 - PCC CURB AND GUTTER, TYPE 3-8
- (P) ITEM 715001 - PERFORATED PIPE UNDERDRAINS, 6"
- (Q) ITEM 720050 - GALVANIZED STEEL BEAM GUARDRAIL, TYPE 1-31
- (R) ITEM 720052 - GALVANIZED STEEL BEAM GUARDRAIL, TYPE 3-31
- (S) ITEM 727000 - RIGHT OF WAY FENCE
- (T) ITEM 501001 - 8" PORTLAND CEMENT CONCRETE
- (U) ITEM 733002 - TOPSOILING, 6" DEPTH
ITEM 734013 - PERMANENT GRASS SEEDING, DRY GROUND
- (V) ITEM 733002 - TOPSOILING, 6" DEPTH
ITEM 734013 - PERMANENT GRASS SEEDING, DRY GROUND
ITEM 735535 - SOIL RETENTION BLANKET MULCH, TYPE 5
- (W) ITEM 701016 - PCC CURB AND GUTTER, TYPE 1-4
- (X) ITEM 760017 - RUMBLE STRIPS, CONCRETE
- (Y) ITEM 705001 - PCC SIDEWALK, 4"
- (AA) ITEM 720626 - CONCRETE SINGLE FACE BARRIER, TYPE 1
- (BB) ITEM 760507 - PROFILE MILLING, HOT-MIX
- (CC) ITEM 401824 - WMA, SUPERPAVE, TYPE C, 160 GYRATIONS, PG 64-22, WEDGE
- (DD) ITEM 733001 - TOPSOILING, 4" DEPTH
ITEM 734013 - PERMANENT GRASS SEEDING, DRY GROUND
- (EE) ITEM 713002 - GEOTEXTILE, SEPARATION
- (FF) ITEM 701013 - PCC CURB, TYPE 1-2

NOTES:

1. THE MAXIMUM ALGEBRAIC DIFFERENCE ON THE HIGH SIDE BETWEEN THE TRAVELED WAY SLOPE AND THE ACCEL/DECEL LANES SHALL NOT EXCEED 4%. THE MAXIMUM ALGEBRAIC DIFFERENCE BETWEEN THE TRAVELED WAY SLOPE AND THE SHOULDER SLOPE SHALL NOT EXCEED 8%.
2. SHOULDER SLOPE ON THE LOW SIDE SHALL BE THE SAME AS THE TRAVELED WAY SLOPE WHEN SUPERELEVATION IS GREATER THAN 4%.
3. SEE GRADES AND GEOMETRICS SHEETS FOR SUPERELEVATED CROSS SLOPE TRANSITIONS.
4. SEE SHEET TS-43 FOR UNDERDRAIN DETAIL.
SEE CONSTRUCTION PLANS FOR PLACEMENT LOCATIONS.
5. PGA - POINT OF GRADE APPLICATION
PDGA - POINT OF DITCH GRADE APPLICATION
P/R - POINT OF ROTATION
P.G.L. - POINT OF GRADE LINE
6. THE MAXIMUM LIFTS FOR THE INDIVIDUAL PAVING MATERIALS ARE AS FOLLOWS:
SUPERPAVE, TYPE C WMA - 2"
SUPERPAVE, TYPE B WMA - 3"
SUPERPAVE BIT. CONC. BASE COURSE - 4"
GRADED AGGREGATE BASE COURSE - 8"
7. SUPERPAVE, TYPE B HOT-MIX SHALL BE PLACED IN TWO EQUAL LIFTS, WHEN THICKNESS EXCEEDS 3".
8. SEE SHEET DT-01 FOR RUMBLE STRIP LOCATIONS.
9. SEE SHEET DT-12 FOR SAFETY EDGE DETAILS. THESE DETAILS SHALL BE APPLIED AT ALL INSTANCES WHERE THE EDGE OF PROPOSED PAVEMENT MEETS THE 6" TOPSOIL.
10. ON THE HIGH SIDE OF THE SUPERELEVATED MEDIAN SECTION THE BOTTOM OF BORROW TYPE A SHALL FOLLOW THE SUPERELEVATION RATE FOR THE ROADWAY EXTENDED UNTIL IT INTERSECTS WITH EITHER THE BOTTOM OF TOPSOIL FOR THE MEDIAN SIDESLOPES OR IT INTERSECTS WITH THE CONSTRUCTION BASELINE. ON THE LOW SIDE OF THE SUPERELEVATED MEDIAN SECTION THE BOTTOM OF BORROW TYPE A SHALL BE CONSTRUCTED FROM THE POINT IN WHICH THE EXTENDED SUPERELEVATION SLOPE (e) INTERSECTS THE CONSTRUCTION BASELINE TO THE GRADE BREAK AT THE INSIDE EDGE OF TRAVELED WAY.
11. FOR INTERFACE BETWEEN MOMENT SLAB AND ROADWAY PAVEMENT AND APPROACH SLAB AND ROADWAY PAVEMENT, SEE STRUCTURAL DETAILS.
12. SEE SHEET DT-15 FOR DETAILS OF CONSTRUCTING PROPOSED EARTH BERM.

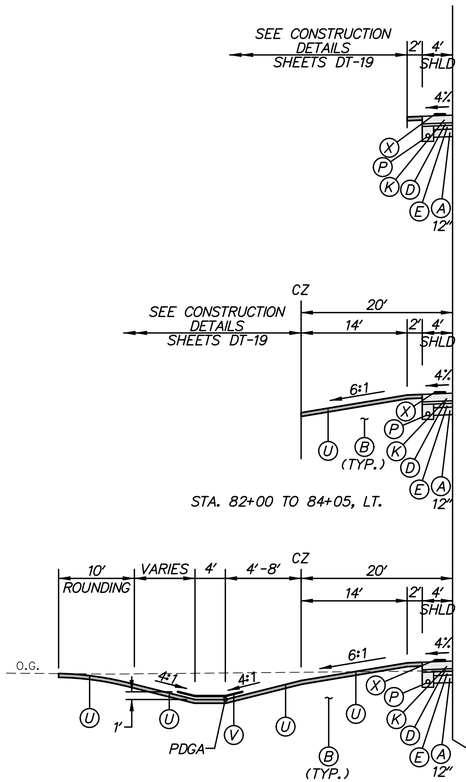

STA. 82+00 TO 84+05, LT.

STA. 79+85 TO 82+00, LT.

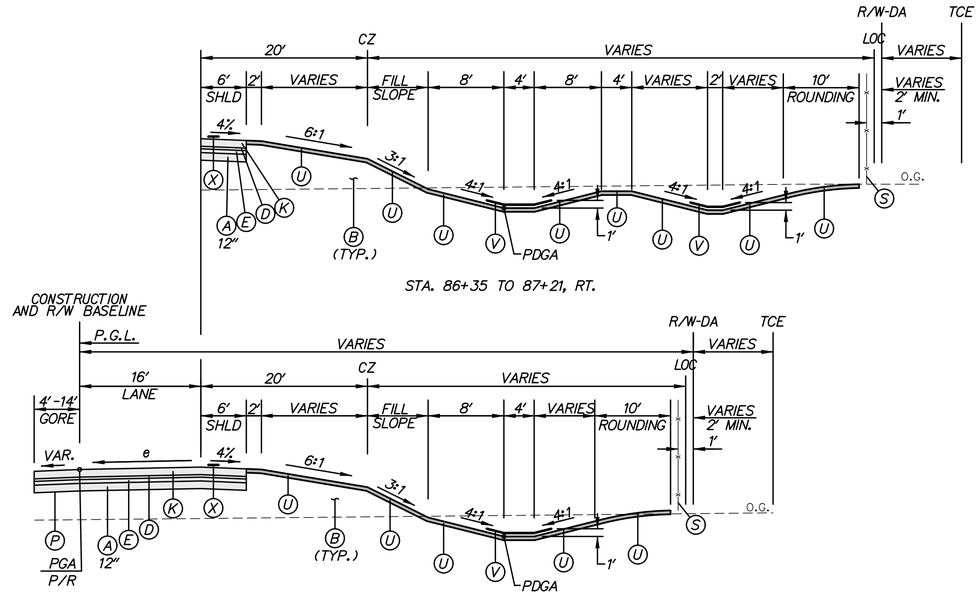

STA. 86+35 TO 87+21, RT.

RAMP O SUPERELEVATED SECTION
STATION 86+20 TO STATION 87+21 ($e_{max.}$=2.0%)

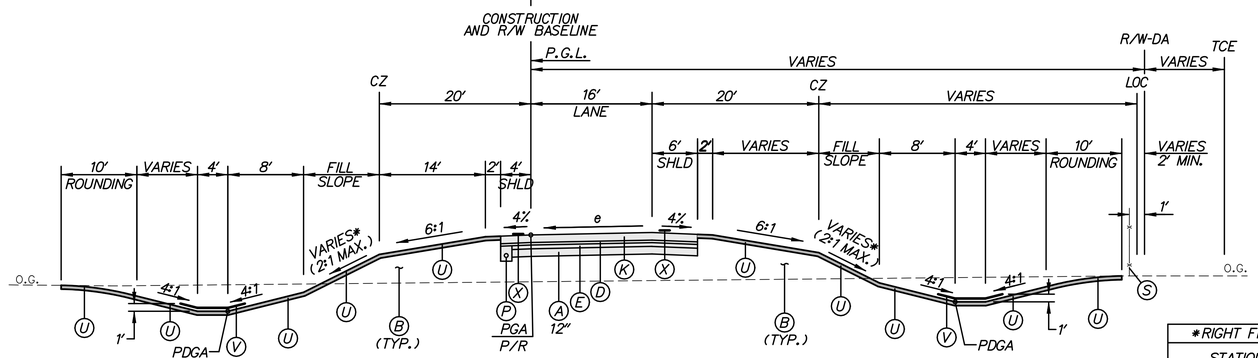

STA. 73+55 TO 79+85, LT.

*LEFT FILL SLOPE CHART	
STATION	SLOPE
73+55 TO 78+25	4:1
78+25 TO 78+50	4:1 TO 6:1
78+50 TO 79+85	6:1

RAMP O SUPERELEVATED SECTION
STATION 73+55 TO STATION 78+37 ($e_{max.}$=2.6%)
STATION 78+37 TO STATION 86+20 ($e_{max.}$=2.0%)

*RIGHT FILL SLOPE CHART	
STATION	SLOPE
73+55 TO 78+25	4:1
78+25 TO 78+50	4:1 TO 6:1
78+50 TO 84+75	6:1
84+75 TO 85+00	6:1 TO 4:1
85+00 TO 85+75	4:1
85+75 TO 86+00	4:1 TO 3:1
86+00 TO 86+20	3:1

LEGEND

- (A) ITEM 209001 - BORROW, TYPE A
- (B) ITEM 209006 - BORROW, TYPE F
- (C) ITEM 302007 - GRADED AGGREGATE BASE COURSE, TYPE B
- (D) ITEM 304501 - PERMEABLE TREATED BASE, 4"
- (E) ITEM 304502 - SOIL CEMENT BASE COURSE, 6"
- (F) ITEM 401801 - WMA, SUPERPAVE, TYPE C, 160 GYRATIONS, PG 64-22
- (G) ITEM 401810 - WMA, SUPERPAVE, TYPE B, 160 GYRATIONS, PG 64-22
- (J) ITEM 401819 - WMA, SUPERPAVE, BITUMINOUS CONCRETE BASE COURSE, 160 GYRATIONS, PG 64-22
- (K) ITEM 501006 - PORTLAND CEMENT CONCRETE PAVEMENT, 12"
- (L) ITEM 701010 - PCC CURB, TYPE 1-8
- (N) ITEM 701022 - PCC CURB AND GUTTER, TYPE 3-8
- (P) ITEM 715001 - PERFORATED PIPE UNDERDRAINS, 6"
- (Q) ITEM 720050 - GALVANIZED STEEL BEAM GUARDRAIL, TYPE 1-31
- (R) ITEM 720052 - GALVANIZED STEEL BEAM GUARDRAIL, TYPE 3-31
- (S) ITEM 727000 - RIGHT OF WAY FENCE
- (T) ITEM 501001 - 8" PORTLAND CEMENT CONCRETE
- (U) ITEM 733002 - TOPSOILING, 6" DEPTH
ITEM 734013 - PERMANENT GRASS SEEDING, DRY GROUND
- (V) ITEM 733002 - TOPSOILING, 6" DEPTH
ITEM 734013 - PERMANENT GRASS SEEDING, DRY GROUND
ITEM 735535 - SOIL RETENTION BLANKET MULCH, TYPE 5
- (W) ITEM 701016 - PCC CURB AND GUTTER, TYPE 1-4
- (X) ITEM 760017 - RUMBLE STRIPS, CONCRETE
- (Y) ITEM 705001 - PCC SIDEWALK, 4"
- (AA) ITEM 720626 - CONCRETE SINGLE FACE BARRIER, TYPE 1
- (BB) ITEM 760507 - PROFILE MILLING, HOT-MIX
- (CC) ITEM 401824 - WMA, SUPERPAVE, TYPE C, 160 GYRATIONS, PG 64-22, WEDGE
- (DD) ITEM 733001 - TOPSOILING, 4" DEPTH
ITEM 734013 - PERMANENT GRASS SEEDING, DRY GROUND
- (EE) ITEM 713002 - GEOTEXTILE, SEPARATION
- (FF) ITEM 701013 - PCC CURB, TYPE 1-2

NOTES:

1. THE MAXIMUM ALGEBRAIC DIFFERENCE ON THE HIGH SIDE BETWEEN THE TRAVELED WAY SLOPE AND THE ACCEL/DECEL LANES SHALL NOT EXCEED 4%. THE MAXIMUM ALGEBRAIC DIFFERENCE BETWEEN THE TRAVELED WAY SLOPE AND THE SHOULDER SLOPE SHALL NOT EXCEED 8%.
2. SHOULDER SLOPE ON THE LOW SIDE SHALL BE THE SAME AS THE TRAVELED WAY SLOPE WHEN SUPERELEVATION IS GREATER THAN 4%.
3. SEE GRADES AND GEOMETRICS SHEETS FOR SUPERELEVATED CROSS SLOPE TRANSITIONS.
4. SEE SHEET TS-43 FOR UNDERDRAIN DETAIL.
SEE CONSTRUCTION PLANS FOR PLACEMENT LOCATIONS.
5. PGA - POINT OF GRADE APPLICATION
PDGA - POINT OF DITCH GRADE APPLICATION
P/R - POINT OF ROTATION
P.G.L. - POINT OF GRADE LINE
6. THE MAXIMUM LIFTS FOR THE INDIVIDUAL PAVING MATERIALS ARE AS FOLLOWS:
SUPERPAVE, TYPE C WMA - 2"
SUPERPAVE, TYPE B WMA - 3"
SUPERPAVE BIT. CONC. BASE COURSE - 4"
GRADED AGGREGATE BASE COURSE - 8"
7. SUPERPAVE, TYPE B HOT-MIX SHALL BE PLACED IN TWO EQUAL LIFTS, WHEN THICKNESS EXCEEDS 3".
8. SEE SHEET DT-01 FOR RUMBLE STRIP LOCATIONS.
9. SEE SHEET DT-12 FOR SAFETY EDGE DETAILS. THESE DETAILS SHALL BE APPLIED AT ALL INSTANCES WHERE THE EDGE OF PROPOSED PAVEMENT MEETS THE 6" TOPSOIL.
10. ON THE HIGH SIDE OF THE SUPERELEVATED MEDIAN SECTION THE BOTTOM OF BORROW TYPE A SHALL FOLLOW THE SUPERELEVATION RATE FOR THE ROADWAY EXTENDED UNTIL IT INTERSECTS WITH EITHER THE BOTTOM OF TOPSOIL FOR THE MEDIAN SIDESLOPES OR IT INTERSECTS WITH THE CONSTRUCTION BASELINE. ON THE LOW SIDE OF THE SUPERELEVATED MEDIAN SECTION THE BOTTOM OF BORROW TYPE A SHALL BE CONSTRUCTED FROM THE POINT IN WHICH THE EXTENDED SUPERELEVATION SLOPE (e) INTERSECTS THE CONSTRUCTION BASELINE TO THE GRADE BREAK AT THE INSIDE EDGE OF TRAVELED WAY.
11. FOR INTERFACE BETWEEN MOMENT SLAB AND ROADWAY PAVEMENT AND APPROACH SLAB AND ROADWAY PAVEMENT, SEE STRUCTURAL DETAILS.
12. SEE SHEET DT-15 FOR DETAILS OF CONSTRUCTING PROPOSED EARTH BERM.

N:\31653-000\CONTRACT 1A\CADD\TS024U301_1A.dgn
11/4/2014 8:31:26 AM

DELAWARE DEPARTMENT OF TRANSPORTATION

ADDENDUMS / REVISIONS

NOT TO SCALE

US 301, SR 896 TO SR 1

CONTRACT	BRIDGE NO.
T200911308	DESIGNED BY: KGMA
COUNTY	
NEW CASTLE	CHECKED BY: TAO

TYPICAL SECTIONS

TS-24

SHEET NO. 40

TOTAL SHTS. 875

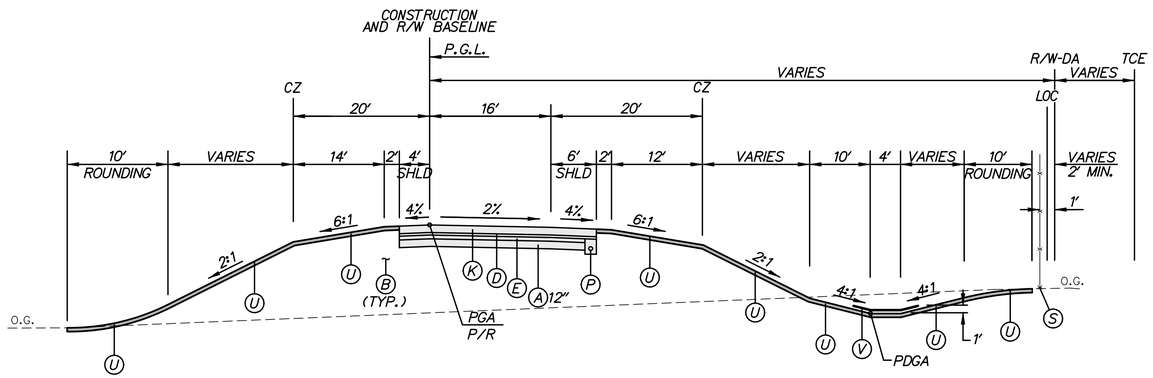

RAMP M NORMAL SECTION
STATION 29+08 TO STATION 30+00

LEGEND

- (A) ITEM 209001 - BORROW, TYPE A
- (B) ITEM 209006 - BORROW, TYPE F
- (C) ITEM 302007 - GRADED AGGREGATE BASE COURSE, TYPE B
- (D) ITEM 304501 - PERMEABLE TREATED BASE, 4"
- (E) ITEM 304502 - SOIL CEMENT BASE COURSE, 6"
- (F) ITEM 401801 - WMA, SUPERPAVE, TYPE C, 160 GYRATIONS, PG 64-22
- (G) ITEM 401810 - WMA, SUPERPAVE, TYPE B, 160 GYRATIONS, PG 64-22
- (J) ITEM 401819 - WMA, SUPERPAVE, BITUMINOUS CONCRETE BASE COURSE, 160 GYRATIONS, PG 64-22
- (K) ITEM 501006 - PORTLAND CEMENT CONCRETE PAVEMENT, 12"
- (L) ITEM 701010 - PCC CURB, TYPE 1-8
- (N) ITEM 701022 - PCC CURB AND GUTTER, TYPE 3-8
- (P) ITEM 715001 - PERFORATED PIPE UNDERDRAINS, 6"
- (Q) ITEM 720050 - GALVANIZED STEEL BEAM GUARDRAIL, TYPE 1-31
- (R) ITEM 720052 - GALVANIZED STEEL BEAM GUARDRAIL, TYPE 3-31
- (S) ITEM 727000 - RIGHT OF WAY FENCE
- (T) ITEM 501001 - 8" PORTLAND CEMENT CONCRETE
- (U) ITEM 733002 - TOPSOILING, 6" DEPTH
  ITEM 734013 - PERMANENT GRASS SEEDING, DRY GROUND
- (V) ITEM 733002 - TOPSOILING, 6" DEPTH
  ITEM 734013 - PERMANENT GRASS SEEDING, DRY GROUND
  ITEM 735535 - SOIL RETENTION BLANKET MULCH, TYPE 5
- (W) ITEM 701016 - PCC CURB AND GUTTER, TYPE 1-4
- (X) ITEM 760017 - RUMBLE STRIPS, CONCRETE
- (Y) ITEM 705001 - PCC SIDEWALK, 4"
- (AA) ITEM 720626 - CONCRETE SINGLE FACE BARRIER, TYPE 1
- (BB) ITEM 760507 - PROFILE MILLING, HOT-MIX
- (CC) ITEM 401824 - WMA, SUPERPAVE, TYPE C, 160 GYRATIONS, PG 64-22, WEDGE
- (DD) ITEM 733001 - TOPSOILING, 4" DEPTH
  ITEM 734013 - PERMANENT GRASS SEEDING, DRY GROUND
- (EE) ITEM 713002 - GEOTEXTILE, SEPARATION
- (FF) ITEM 701013 - PCC CURB, TYPE 1-2

NOTES:

1. THE MAXIMUM ALGEBRAIC DIFFERENCE ON THE HIGH SIDE BETWEEN THE TRAVELED WAY SLOPE AND THE ACCEL/DECEL LANES SHALL NOT EXCEED 4%. THE MAXIMUM ALGEBRAIC DIFFERENCE BETWEEN THE TRAVELED WAY SLOPE AND THE SHOULDER SLOPE SHALL NOT EXCEED 8%.
2. SHOULDER SLOPE ON THE LOW SIDE SHALL BE THE SAME AS THE TRAVELED WAY SLOPE WHEN SUPERELEVATION IS GREATER THAN 4%.
3. SEE GRADES AND GEOMETRICS SHEETS FOR SUPERELEVATED CROSS SLOPE TRANSITIONS.
4. SEE SHEET TS-43 FOR UNDERDRAIN DETAIL. SEE CONSTRUCTION PLANS FOR PLACEMENT LOCATIONS.
5. PGA - POINT OF GRADE APPLICATION
   PDGA - POINT OF DITCH GRADE APPLICATION
   P/R - POINT OF ROTATION
   P.G.L. - POINT OF GRADE LINE
6. THE MAXIMUM LIFTS FOR THE INDIVIDUAL PAVING MATERIALS ARE AS FOLLOWS:
   SUPERPAVE, TYPE C WMA - 2"
   SUPERPAVE, TYPE B WMA - 3"
   SUPERPAVE BIT. CONC. BASE COURSE - 4"
   GRADED AGGREGATE BASE COURSE - 8"
7. SUPERPAVE, TYPE B HOT-MIX SHALL BE PLACED IN TWO EQUAL LIFTS, WHEN THICKNESS EXCEEDS 3".
8. SEE SHEET DT-01 FOR RUMBLE STRIP LOCATIONS.
9. SEE SHEET DT-12 FOR SAFETY EDGE DETAILS. THESE DETAILS SHALL BE APPLIED AT ALL INSTANCES WHERE THE EDGE OF PROPOSED PAVEMENT MEETS THE 6" TOPSOIL.
10. ON THE HIGH SIDE OF THE SUPERELEVATED MEDIAN SECTION THE BOTTOM OF BORROW TYPE A SHALL FOLLOW THE SUPERELEVATION RATE FOR THE ROADWAY EXTENDED UNTIL IT INTERSECTS WITH EITHER THE BOTTOM OF TOPSOIL FOR THE MEDIAN SIDESLOPES OR IT INTERSECTS WITH THE CONSTRUCTION BASELINE. ON THE LOW SIDE OF THE SUPERELEVATED MEDIAN SECTION THE BOTTOM OF BORROW TYPE A SHALL BE CONSTRUCTED FROM THE POINT IN WHICH THE EXTENDED SUPERELEVATION SLOPE (e) INTERSECTS THE CONSTRUCTION BASELINE TO THE GRADE BREAK AT THE INSIDE EDGE OF TRAVELED WAY.
11. FOR INTERFACE BETWEEN MOMENT SLAB AND ROADWAY PAVEMENT AND APPROACH SLAB AND ROADWAY PAVEMENT, SEE STRUCTURAL DETAILS.
12. SEE SHEET DT-15 FOR DETAILS OF CONSTRUCTING PROPOSED EARTH BERM.

N:\31653-000\CONTRACT 1A\CADD\TS025U301_1A.dgn
11/4/2014 8:32:13 AM

DELAWARE DEPARTMENT OF TRANSPORTATION	ADDENDUMS / REVISIONS	NOT TO SCALE	US 301, SR 896 TO SR 1	CONTRACT T200911308	BRIDGE NO.	TYPICAL SECTIONS	TS-25
				COUNTY NEW CASTLE	DESIGNED BY: KGMA		SHEET NO. 41
					CHECKED BY: TAO		TOTAL SHTS. 875

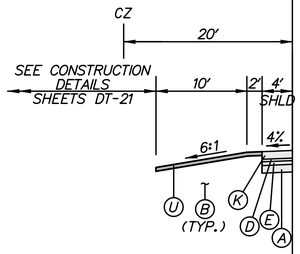

STA. 37+50 TO STA. 38+82, LT.

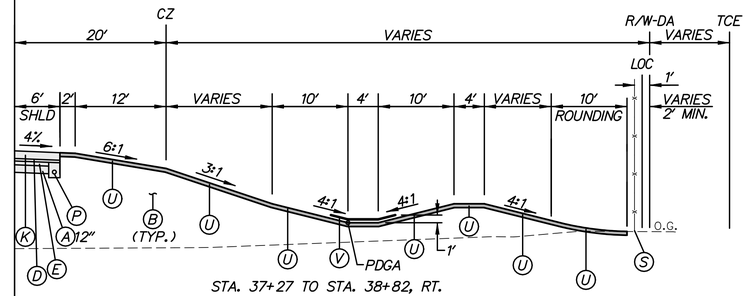

STA. 37+27 TO STA. 38+82, RT.

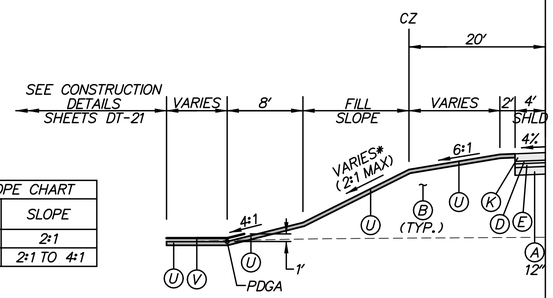

STA. 36+92 TO STA. 37+50, LT.

*LEFT FILL SLOPE CHART	
STATION	SLOPE
36+92 TO 37+00	2:1
37+00 TO 37+50	2:1 TO 4:1

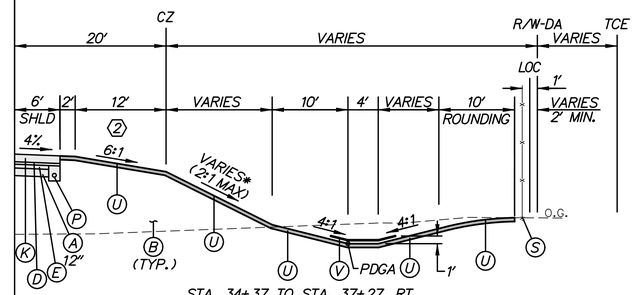

STA. 34+37 TO STA. 37+27, RT.

2 SEE SHEET 835 FOR TOLL FACILITY SITE PLAN

*RIGHT FILL SLOPE CHART	
STATION	SLOPE
34+37 TO 34+50	2:1 TO 3:1
34+50 TO 37+27	3:1

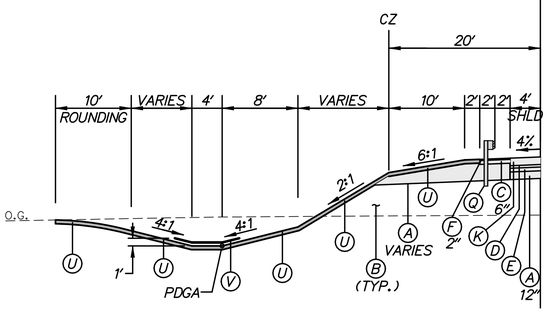

STA. 31+08 TO STA. 33+87, LT.

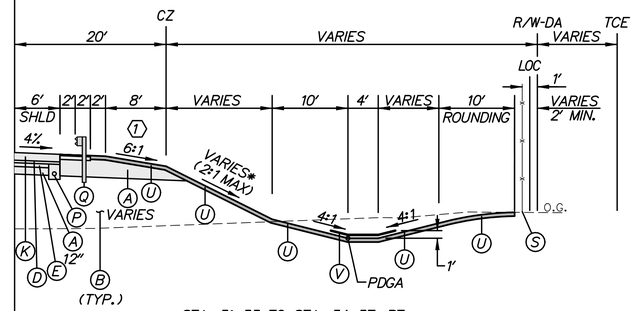

STA. 31+33 TO STA. 34+37, RT.

1 SEE SHEET 835 FOR TOLL FACILITY SITE PLAN

*RIGHT FILL SLOPE CHART	
STATION	SLOPE
31+33 TO 33+50	3:1
33+50 TO 34+00	3:1 TO 2:1
34+00 TO 34+37	2:1

CONSTRUCTION AND R/W BASELINE

P.G.L.

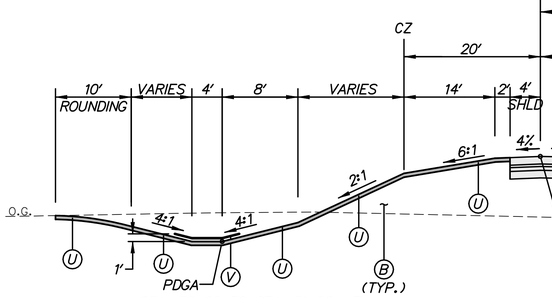

STA. 30+00 TO STA. 31+08, LT.
STA. 33+87 TO STA. 36+92, LT.

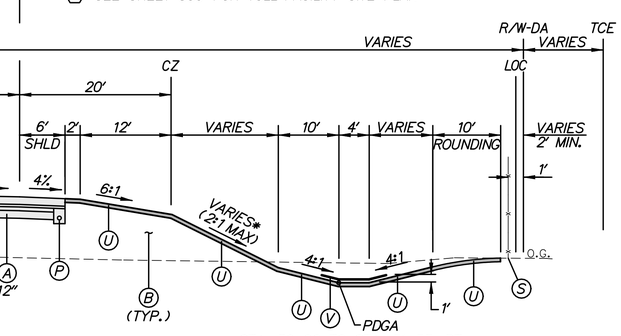

STA. 30+00 TO STA. 31+33, RT.

*RIGHT FILL SLOPE CHART	
STATION	SLOPE
30+00 TO 30+50	2:1
30+50 TO 31+00	2:1 TO 3:1
31+00 TO 31+33	3:1

RAMP M NORMAL SECTION
STATION 30+00 TO STATION 38+82

LEGEND

- (A) ITEM 209001 - BORROW, TYPE A
- (B) ITEM 209006 - BORROW, TYPE F
- (C) ITEM 302007 - GRADED AGGREGATE BASE COURSE, TYPE B
- (D) ITEM 304501 - PERMEABLE TREATED BASE, 4"
- (E) ITEM 304502 - SOIL CEMENT BASE COURSE, 6"
- (F) ITEM 401801 - WMA, SUPERPAVE, TYPE C, 160 GYRATIONS, PG 64-22
- (G) ITEM 401810 - WMA, SUPERPAVE, TYPE B, 160 GYRATIONS, PG 64-22
- (J) ITEM 401819 - WMA, SUPERPAVE, BITUMINOUS CONCRETE BASE COURSE, 160 GYRATIONS, PG 64-22
- (K) ITEM 501006 - PORTLAND CEMENT CONCRETE PAVEMENT, 12"
- (L) ITEM 701010 - PCC CURB, TYPE 1-8
- (N) ITEM 701022 - PCC CURB AND GUTTER, TYPE 3-8
- (P) ITEM 715001 - PERFORATED PIPE UNDERDRAINS, 6"
- (Q) ITEM 720050 - GALVANIZED STEEL BEAM GUARDRAIL, TYPE 1-31
- (R) ITEM 720052 - GALVANIZED STEEL BEAM GUARDRAIL, TYPE 3-31
- (S) ITEM 727000 - RIGHT OF WAY FENCE
- (T) ITEM 501001 - 8" PORTLAND CEMENT CONCRETE
- (U) ITEM 733002 - TOPSOILING, 6" DEPTH
  ITEM 734013 - PERMANENT GRASS SEEDING, DRY GROUND
- (V) ITEM 733002 - TOPSOILING, 6" DEPTH
  ITEM 734013 - PERMANENT GRASS SEEDING, DRY GROUND
  ITEM 735535 - SOIL RETENTION BLANKET MULCH, TYPE 5
- (W) ITEM 701016 - PCC CURB AND GUTTER, TYPE 1-4
- (X) ITEM 760017 - RUMBLE STRIPS, CONCRETE
- (Y) ITEM 705001 - PCC SIDEWALK, 4"
- (AA) ITEM 720626 - CONCRETE SINGLE FACE BARRIER, TYPE 1
- (BB) ITEM 760507 - PROFILE MILLING, HOT-MIX
- (CC) ITEM 401824 - WMA, SUPERPAVE, TYPE C, 160 GYRATIONS, PG 64-22, WEDGE
- (DD) ITEM 733001 - TOPSOILING, 4" DEPTH
  ITEM 734013 - PERMANENT GRASS SEEDING, DRY GROUND
- (EE) ITEM 713002 - GEOTEXTILE, SEPARATION
- (FF) ITEM 701013 - PCC CURB, TYPE 1-2

NOTES:

1. THE MAXIMUM ALGEBRAIC DIFFERENCE ON THE HIGH SIDE BETWEEN THE TRAVELED WAY SLOPE AND THE ACCEL/DECEL LANES SHALL NOT EXCEED 4%. THE MAXIMUM ALGEBRAIC DIFFERENCE BETWEEN THE TRAVELED WAY SLOPE AND THE SHOULDER SLOPE SHALL NOT EXCEED 8%.
2. SHOULDER SLOPE ON THE LOW SIDE SHALL BE THE SAME AS THE TRAVELED WAY SLOPE WHEN SUPERELEVATION IS GREATER THAN 4%.
3. SEE GRADES AND GEOMETRICS SHEETS FOR SUPERELEVATED CROSS SLOPE TRANSITIONS.
4. SEE SHEET TS-43 FOR UNDERDRAIN DETAIL.
   SEE CONSTRUCTION PLANS FOR PLACEMENT LOCATIONS.
5. PGA - POINT OF GRADE APPLICATION
   PDGA - POINT OF DITCH GRADE APPLICATION
   P/R - POINT OF ROTATION
   P.G.L. - POINT OF GRADE LINE
6. THE MAXIMUM LIFTS FOR THE INDIVIDUAL PAVING MATERIALS ARE AS FOLLOWS:
   SUPERPAVE, TYPE C WMA - 2"
   SUPERPAVE, TYPE B WMA - 3"
   SUPERPAVE BIT. CONC. BASE COURSE - 4"
   GRADED AGGREGATE BASE COURSE - 8"
7. SUPERPAVE, TYPE B HOT-MIX SHALL BE PLACED IN TWO EQUAL LIFTS, WHEN THICKNESS EXCEEDS 3".
8. SEE SHEET DT-01 FOR RUMBLE STRIP LOCATIONS.
9. SEE SHEET DT-12 FOR SAFETY EDGE DETAILS. THESE DETAILS SHALL BE APPLIED AT ALL INSTANCES WHERE THE EDGE OF PROPOSED PAVEMENT MEETS THE 6" TOPSOIL.
10. ON THE HIGH SIDE OF THE SUPERELEVATED MEDIAN SECTION THE BOTTOM OF BORROW TYPE A SHALL FOLLOW THE SUPERELEVATION RATE FOR THE ROADWAY EXTENDED UNTIL IT INTERSECTS WITH EITHER THE BOTTOM OF TOPSOIL FOR THE MEDIAN SIDESLOPES OR IT INTERSECTS WITH THE CONSTRUCTION BASELINE. ON THE LOW SIDE OF THE SUPERELEVATED MEDIAN SECTION THE BOTTOM OF BORROW TYPE A SHALL BE CONSTRUCTED FROM THE POINT IN WHICH THE EXTENDED SUPERELEVATION SLOPE (e) INTERSECTS THE CONSTRUCTION BASELINE TO THE GRADE BREAK AT THE INSIDE EDGE OF TRAVELED WAY.
11. FOR INTERFACE BETWEEN MOMENT SLAB AND ROADWAY PAVEMENT AND APPROACH SLAB AND ROADWAY PAVEMENT, SEE STRUCTURAL DETAILS.
12. SEE SHEET DT-15 FOR DETAILS OF CONSTRUCTING PROPOSED EARTH BERM.

N:\31653-000\CONTRACT 1A\CADD\TS026U301_1A.dgn
11/4/2014 8:33:07 AM

DELAWARE DEPARTMENT OF TRANSPORTATION	ADDENDUMS / REVISIONS	NOT TO SCALE	US 301, SR 896 TO SR 1	CONTRACT T200911308	BRIDGE NO.	TYPICAL SECTIONS	TS-26
				COUNTY NEW CASTLE	DESIGNED BY: KGMA		SHEET NO. 42
					CHECKED BY: TAO		TOTAL SHTS. 875

(1) TRANSITION SLOPE FROM 2:1 AT STA. 37+00 TO 3:1 AT STA. 37+50.
TRANSITION SLOPE FROM 3:1 AT STA. 38+50 TO 4:1 AT STA. 39+00.
TRANSITION SLOPE FROM 4:1 AT STA. 41+50 TO 6:1 AT STA. 42+00.

(2) TRAVEL LANE WIDTH TRANSITIONS FROM 19.46′ AT STA. 38+82 TO 16′ AT STA. 39+81.

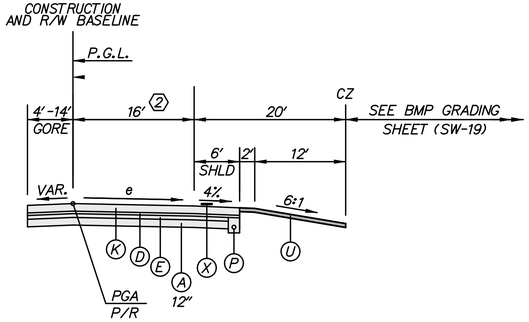

RAMP M SUPERELEVATED SECTION
STATION 43+87 TO STATION 45+14 (emax=3.8%)

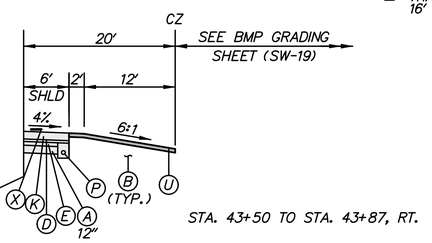

STA. 43+50 TO STA. 43+87, RT.

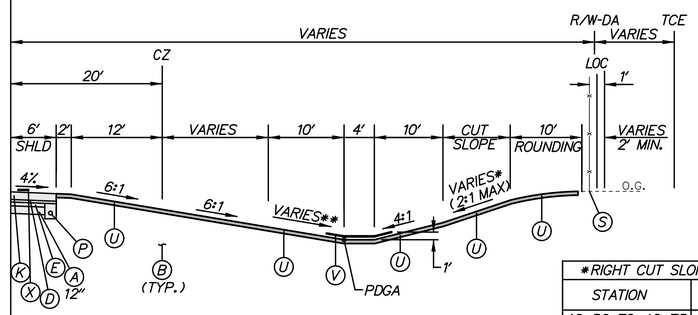

STA. 42+50 TO STA. 43+50, RT.

*RIGHT CUT SLOPE CHART	
STATION	SLOPE
42+50 TO 42+75	4:1 TO 3:1
42+75 TO 43+50	3:1

**DITCH FRONT SLOPE CHART	
STATION	SLOPE
42+75 TO 43+00	4:1 TO 6:1
43+00 TO 43+50	6:1

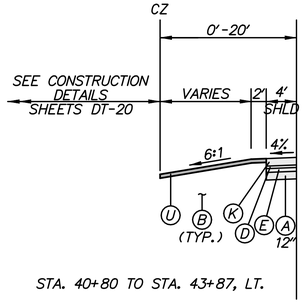

STA. 40+80 TO STA. 43+87, LT.

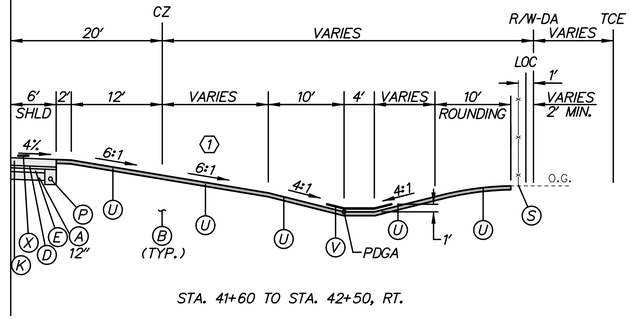

STA. 41+60 TO STA. 42+50, RT.

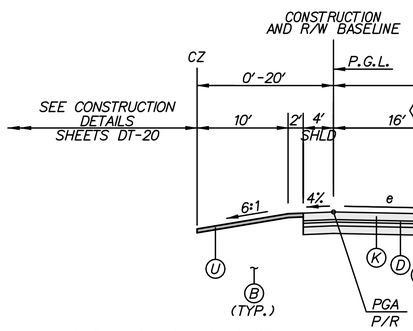

STA. 38+82 TO STA. 40+80, LT.

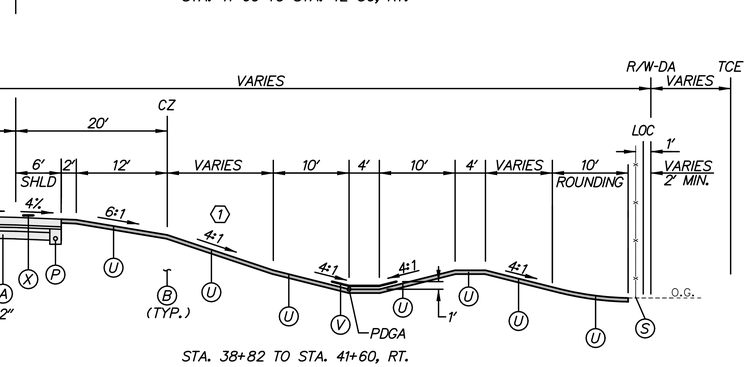

STA. 38+82 TO STA. 41+60, RT.

RAMP M SUPERELEVATED SECTION
STATION 38+82 TO STATION 43+87 (emax=3.8%)

LEGEND

- (A) ITEM 209001 - BORROW, TYPE A
- (B) ITEM 209006 - BORROW, TYPE F
- (C) ITEM 302007 - GRADED AGGREGATE BASE COURSE, TYPE B
- (D) ITEM 304501 - PERMEABLE TREATED BASE, 4″
- (E) ITEM 304502 - SOIL CEMENT BASE COURSE, 6″
- (F) ITEM 401801 - WMA, SUPERPAVE, TYPE C, 160 GYRATIONS, PG 64-22
- (G) ITEM 401810 - WMA, SUPERPAVE, TYPE B, 160 GYRATIONS, PG 64-22
- (J) ITEM 401819 - WMA, SUPERPAVE, BITUMINOUS CONCRETE BASE COURSE, 160 GYRATIONS, PG 64-22
- (K) ITEM 501006 - PORTLAND CEMENT CONCRETE PAVEMENT, 12″
- (L) ITEM 701010 - PCC CURB, TYPE 1-8
- (N) ITEM 701022 - PCC CURB AND GUTTER, TYPE 3-8
- (P) ITEM 715001 - PERFORATED PIPE UNDERDRAINS, 6″
- (Q) ITEM 720050 - GALVANIZED STEEL BEAM GUARDRAIL, TYPE 1-31
- (R) ITEM 720052 - GALVANIZED STEEL BEAM GUARDRAIL, TYPE 3-31
- (S) ITEM 727000 - RIGHT OF WAY FENCE
- (T) ITEM 501001 - 8″ PORTLAND CEMENT CONCRETE
- (U) ITEM 733002 - TOPSOILING, 6″ DEPTH
  ITEM 734013 - PERMANENT GRASS SEEDING, DRY GROUND
- (V) ITEM 733002 - TOPSOILING, 6″ DEPTH
  ITEM 734013 - PERMANENT GRASS SEEDING, DRY GROUND
  ITEM 735535 - SOIL RETENTION BLANKET MULCH, TYPE 5
- (W) ITEM 701016 - PCC CURB AND GUTTER, TYPE 1-4
- (X) ITEM 760017 - RUMBLE STRIPS, CONCRETE
- (Y) ITEM 705001 - PCC SIDEWALK, 4″
- (AA) ITEM 720626 - CONCRETE SINGLE FACE BARRIER, TYPE 1
- (BB) ITEM 760507 - PROFILE MILLING, HOT-MIX
- (CC) ITEM 401824 - WMA, SUPERPAVE, TYPE C, 160 GYRATIONS, PG 64-22, WEDGE
- (DD) ITEM 733001 - TOPSOILING, 4″ DEPTH
  ITEM 734013 - PERMANENT GRASS SEEDING, DRY GROUND
- (EE) ITEM 713002 - GEOTEXTILE, SEPARATION
- (FF) ITEM 701013 - PCC CURB, TYPE 1-2

NOTES:

1. THE MAXIMUM ALGEBRAIC DIFFERENCE ON THE HIGH SIDE BETWEEN THE TRAVELED WAY SLOPE AND THE ACCEL/DECEL LANES SHALL NOT EXCEED 4%. THE MAXIMUM ALGEBRAIC DIFFERENCE BETWEEN THE TRAVELED WAY SLOPE AND THE SHOULDER SLOPE SHALL NOT EXCEED 8%.
2. SHOULDER SLOPE ON THE LOW SIDE SHALL BE THE SAME AS THE TRAVELED WAY SLOPE WHEN SUPERELEVATION IS GREATER THAN 4%.
3. SEE GRADES AND GEOMETRICS SHEETS FOR SUPERELEVATED CROSS SLOPE TRANSITIONS.
4. SEE SHEET TS-43 FOR UNDERDRAIN DETAIL. SEE CONSTRUCTION PLANS FOR PLACEMENT LOCATIONS.
5. PGA - POINT OF GRADE APPLICATION
   PDGA - POINT OF DITCH GRADE APPLICATION
   P/R - POINT OF ROTATION
   P.G.L. - POINT OF GRADE LINE
6. THE MAXIMUM LIFTS FOR THE INDIVIDUAL PAVING MATERIALS ARE AS FOLLOWS:
   SUPERPAVE, TYPE C WMA - 2″
   SUPERPAVE, TYPE B WMA - 3″
   SUPERPAVE BIT. CONC. BASE COURSE - 4″
   GRADED AGGREGATE BASE COURSE - 8″
7. SUPERPAVE, TYPE B HOT-MIX SHALL BE PLACED IN TWO EQUAL LIFTS, WHEN THICKNESS EXCEEDS 3″.
8. SEE SHEET DT-01 FOR RUMBLE STRIP LOCATIONS.
9. SEE SHEET DT-12 FOR SAFETY EDGE DETAILS. THESE DETAILS SHALL BE APPLIED AT ALL INSTANCES WHERE THE EDGE OF PROPOSED PAVEMENT MEETS THE 6″ TOPSOIL.
10. ON THE HIGH SIDE OF THE SUPERELEVATED MEDIAN SECTION THE BOTTOM OF BORROW TYPE A SHALL FOLLOW THE SUPERELEVATION RATE FOR THE ROADWAY EXTENDED UNTIL IT INTERSECTS WITH EITHER THE BOTTOM OF TOPSOIL FOR THE MEDIAN SIDESLOPES OR IT INTERSECTS WITH THE CONSTRUCTION BASELINE. ON THE LOW SIDE OF THE SUPERELEVATED MEDIAN SECTION THE BOTTOM OF BORROW TYPE A SHALL BE CONSTRUCTED FROM THE POINT IN WHICH THE EXTENDED SUPERELEVATION SLOPE (e) INTERSECTS THE CONSTRUCTION BASELINE TO THE GRADE BREAK AT THE INSIDE EDGE OF TRAVELED WAY.
11. FOR INTERFACE BETWEEN MOMENT SLAB AND ROADWAY PAVEMENT AND APPROACH SLAB AND ROADWAY PAVEMENT, SEE STRUCTURAL DETAILS.
12. SEE SHEET DT-15 FOR DETAILS OF CONSTRUCTING PROPOSED EARTH BERM.

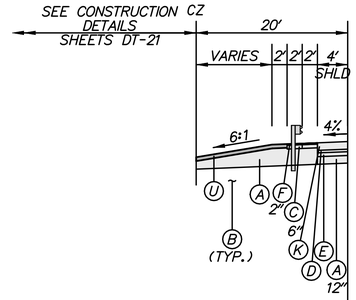

STA. 58+18 TO STA. 58+43, LT.

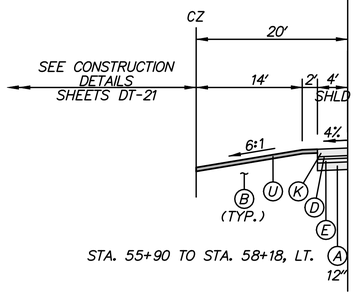

STA. 55+90 TO STA. 58+18, LT.

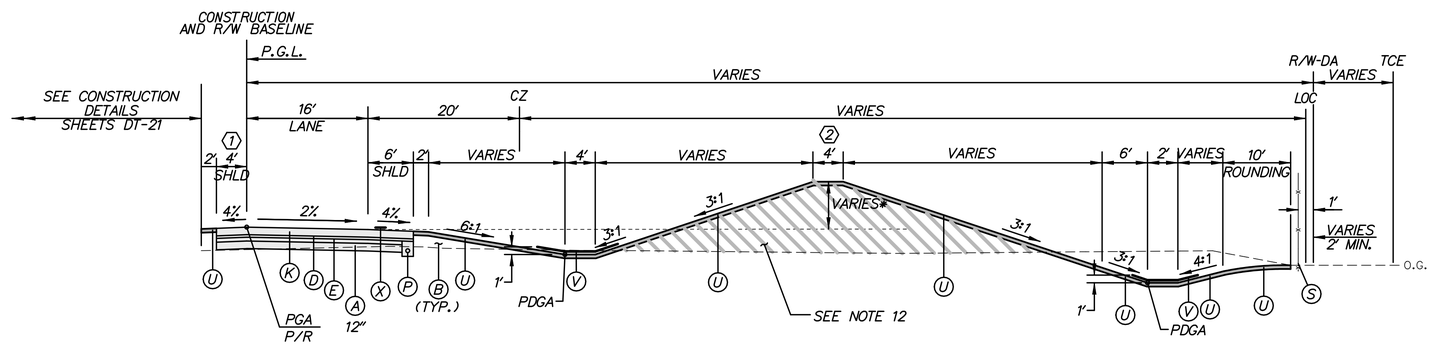

*NOTE: SEE GRADES AND GEOMETRICS FOR TOP OF BERM ELEVATIONS

RAMP P NORMAL SECTION WITH BERM
STATION 54+41 TO STATION 58+43

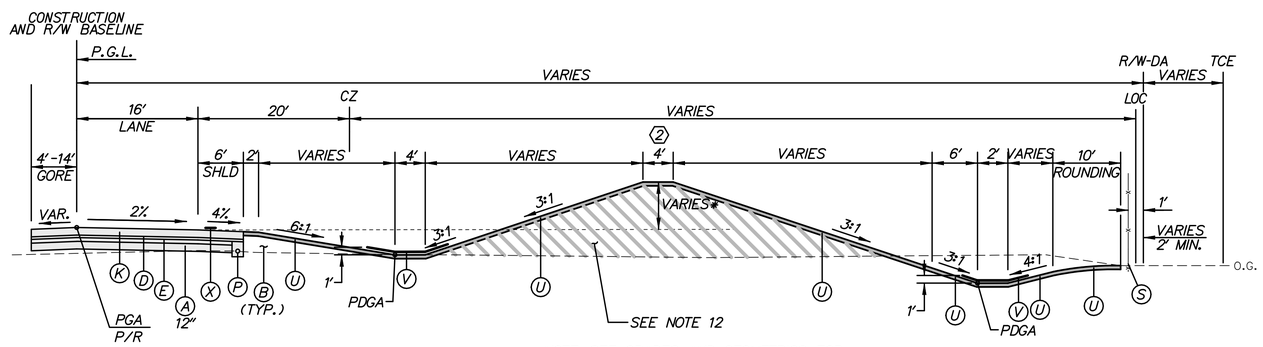

*NOTE: SEE GRADES AND GEOMETRICS FOR TOP OF BERM ELEVATIONS

RAMP P NORMAL SECTION WITH BERM
STATION 52+22 TO STATION 54+41

(1) SHOULDER WIDTH TRANSITIONS FROM 6' TO 4' FROM STA. 54+41 TO STA. 55+24.

SHOULDER SLOPE TRANSITIONS FROM -0.64% TO 4.00% FROM STA. 54+41 TO STA. 55+91.

(2) WIDTH VARIES FROM STATION STA. 57+85 TO STA. 58+29.

LEGEND

- (A) ITEM 209001 - BORROW, TYPE A
- (B) ITEM 209006 - BORROW, TYPE F
- (C) ITEM 302007 - GRADED AGGREGATE BASE COURSE, TYPE B
- (D) ITEM 304501 - PERMEABLE TREATED BASE, 4"
- (E) ITEM 304502 - SOIL CEMENT BASE COURSE, 6"
- (F) ITEM 401801 - WMA, SUPERPAVE, TYPE C, 160 GYRATIONS, PG 64-22
- (G) ITEM 401810 - WMA, SUPERPAVE, TYPE B, 160 GYRATIONS, PG 64-22
- (J) ITEM 401819 - WMA, SUPERPAVE, BITUMINOUS CONCRETE BASE COURSE, 160 GYRATIONS, PG 64-22
- (K) ITEM 501006 - PORTLAND CEMENT CONCRETE PAVEMENT, 12"
- (L) ITEM 701010 - PCC CURB, TYPE 1-8
- (N) ITEM 701022 - PCC CURB AND GUTTER, TYPE 3-8
- (P) ITEM 715001 - PERFORATED PIPE UNDERDRAINS, 6"
- (Q) ITEM 720050 - GALVANIZED STEEL BEAM GUARDRAIL, TYPE 1-31
- (R) ITEM 720052 - GALVANIZED STEEL BEAM GUARDRAIL, TYPE 3-31
- (S) ITEM 727000 - RIGHT OF WAY FENCE
- (T) ITEM 501001 - 8" PORTLAND CEMENT CONCRETE
- (U) ITEM 733002 - TOPSOILING, 6" DEPTH
ITEM 734013 - PERMANENT GRASS SEEDING, DRY GROUND
- (V) ITEM 733002 - TOPSOILING, 6" DEPTH
ITEM 734013 - PERMANENT GRASS SEEDING, DRY GROUND
ITEM 735535 - SOIL RETENTION BLANKET MULCH, TYPE 5
- (W) ITEM 701016 - PCC CURB AND GUTTER, TYPE 1-4
- (X) ITEM 760017 - RUMBLE STRIPS, CONCRETE
- (Y) ITEM 705001 - PCC SIDEWALK, 4"
- (AA) ITEM 720626 - CONCRETE SINGLE FACE BARRIER, TYPE 1
- (BB) ITEM 760507 - PROFILE MILLING, HOT-MIX
- (CC) ITEM 401824 - WMA, SUPERPAVE, TYPE C, 160 GYRATIONS, PG 64-22, WEDGE
- (DD) ITEM 733001 - TOPSOILING, 4" DEPTH
ITEM 734013 - PERMANENT GRASS SEEDING, DRY GROUND
- (EE) ITEM 713002 - GEOTEXTILE, SEPARATION
- (FF) ITEM 701013 - PCC CURB, TYPE 1-2

NOTES:

1. THE MAXIMUM ALGEBRAIC DIFFERENCE ON THE HIGH SIDE BETWEEN THE TRAVELED WAY SLOPE AND THE ACCEL/DECEL LANES SHALL NOT EXCEED 4%. THE MAXIMUM ALGEBRAIC DIFFERENCE BETWEEN THE TRAVELED WAY SLOPE AND THE SHOULDER SLOPE SHALL NOT EXCEED 8%.
2. SHOULDER SLOPE ON THE LOW SIDE SHALL BE THE SAME AS THE TRAVELED WAY SLOPE WHEN SUPERELEVATION IS GREATER THAN 4%.
3. SEE GRADES AND GEOMETRICS SHEETS FOR SUPERELEVATED CROSS SLOPE TRANSITIONS.
4. SEE SHEET TS-43 FOR UNDERDRAIN DETAIL. SEE CONSTRUCTION PLANS FOR PLACEMENT LOCATIONS.
5. PGA - POINT OF GRADE APPLICATION
PDGA - POINT OF DITCH GRADE APPLICATION
P/R - POINT OF ROTATION
P.G.L. - POINT OF GRADE LINE
6. THE MAXIMUM LIFTS FOR THE INDIVIDUAL PAVING MATERIALS ARE AS FOLLOWS:
SUPERPAVE, TYPE C WMA - 2"
SUPERPAVE, TYPE B WMA - 3"
SUPERPAVE BIT. CONC. BASE COURSE - 4"
GRADED AGGREGATE BASE COURSE - 8"
7. SUPERPAVE, TYPE B HOT-MIX SHALL BE PLACED IN TWO EQUAL LIFTS, WHEN THICKNESS EXCEEDS 3".
8. SEE SHEET DT-01 FOR RUMBLE STRIP LOCATIONS.
9. SEE SHEET DT-12 FOR SAFETY EDGE DETAILS. THESE DETAILS SHALL BE APPLIED AT ALL INSTANCES WHERE THE EDGE OF PROPOSED PAVEMENT MEETS THE 6" TOPSOIL.
10. ON THE HIGH SIDE OF THE SUPERELEVATED MEDIAN SECTION THE BOTTOM OF BORROW TYPE A SHALL FOLLOW THE SUPERELEVATION RATE FOR THE ROADWAY EXTENDED UNTIL IT INTERSECTS WITH EITHER THE BOTTOM OF TOPSOIL FOR THE MEDIAN SIDESLOPES OR IT INTERSECTS WITH THE CONSTRUCTION BASELINE. ON THE LOW SIDE OF THE SUPERELEVATED MEDIAN SECTION THE BOTTOM OF BORROW TYPE A SHALL BE CONSTRUCTED FROM THE POINT IN WHICH THE EXTENDED SUPERELEVATION SLOPE (e) INTERSECTS THE CONSTRUCTION BASELINE TO THE GRADE BREAK AT THE INSIDE EDGE OF TRAVELED WAY.
11. FOR INTERFACE BETWEEN MOMENT SLAB AND ROADWAY PAVEMENT AND APPROACH SLAB AND ROADWAY PAVEMENT, SEE STRUCTURAL DETAILS.
12. SEE SHEET DT-15 FOR DETAILS OF CONSTRUCTING PROPOSED EARTH BERM.

N:\31653-000\CONTRACT 1A\CADD\TS028U301_1A.dgn
11/4/2014 8:37:05 AM

DELAWARE DEPARTMENT OF TRANSPORTATION	ADDENDUMS / REVISIONS	NOT TO SCALE	US 301, SR 896 TO SR 1	CONTRACT T200911308	BRIDGE NO.	TYPICAL SECTIONS	TS-28
				COUNTY NEW CASTLE	DESIGNED BY: KGMA		SHEET NO. 44
					CHECKED BY: TAO		TOTAL SHTS. 875

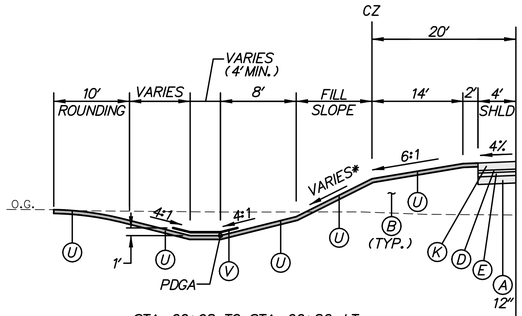

STA. 60+98 TO STA. 66+82, LT.

*LEFT FILL SLOPE CHART	
STATION	SLOPE
60+98 TO 61+50	4:1
61+50 TO 62+00	4:1 TO 3:1
62+00 TO 65+00	3:1
65+00 TO 65+50	3:1 TO 2:1
65+50 TO 66+82	2:1

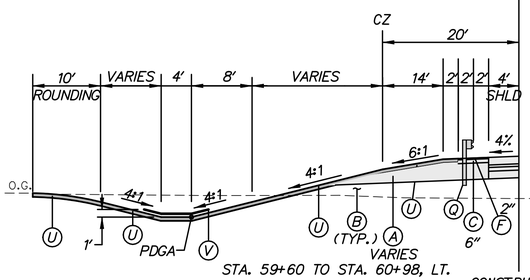

STA. 59+60 TO STA. 60+98, LT.

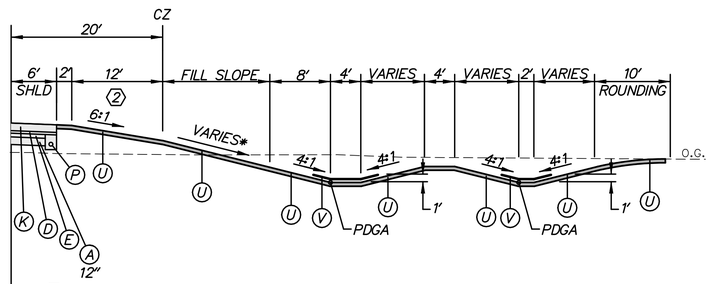

2 SEE SHEET 836 FOR TOLL FACILITY SITE PLAN

STA. 61+47 TO STA. 65+50, RT.

*RIGHT FILL SLOPE CHART	
STATION	SLOPE
61+47 TO 61+50	5:1
61+50 TO 62+50	5:1
62+50 TO 63+00	5:1 TO 4:1
63+00 TO 64+50	4:1
64+50 TO 65+00	4:1 TO 3:1
65+00 TO 65+50	3:1

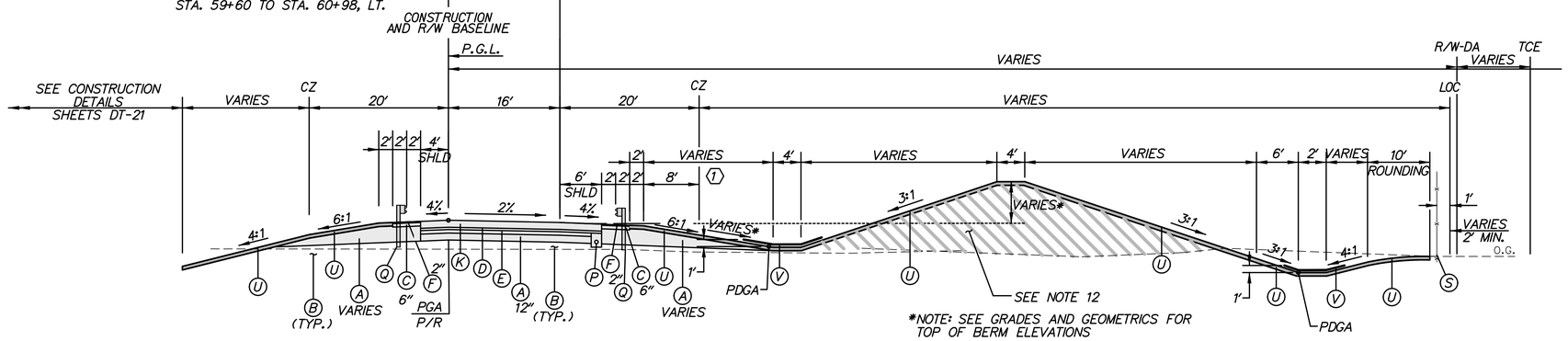

*NOTE: SEE GRADES AND GEOMETRICS FOR TOP OF BERM ELEVATIONS

STA. 58+43 TO STA. 59+60, LT.

STA. 58+43 TO STA. 61+47, RT.

1 SEE SHEET 836 FOR TOLL FACILITY SITE PLAN

*RIGHT FILL SLOPE CHART	
STATION	SLOPE
58+50 TO 60+50	5:1
60+50 TO 61+00	5:1 TO 4:1
61+00 TO 61+25	4:1
61+25 TO 61+47	4:1 TO 5:1

RAMP P NORMAL SECTION
STATION 58+43 TO STATION 65+50

LEGEND

- (A) ITEM 209001 - BORROW, TYPE A
- (B) ITEM 209006 - BORROW, TYPE F
- (C) ITEM 302007 - GRADED AGGREGATE BASE COURSE, TYPE B
- (D) ITEM 304501 - PERMEABLE TREATED BASE, 4"
- (E) ITEM 304502 - SOIL CEMENT BASE COURSE, 6"
- (F) ITEM 401801 - WMA, SUPERPAVE, TYPE C, 160 GYRATIONS, PG 64-22
- (G) ITEM 401810 - WMA, SUPERPAVE, TYPE B, 160 GYRATIONS, PG 64-22
- (J) ITEM 401819 - WMA, SUPERPAVE, BITUMINOUS CONCRETE BASE COURSE, 160 GYRATIONS, PG 64-22
- (K) ITEM 501006 - PORTLAND CEMENT CONCRETE PAVEMENT, 12"
- (L) ITEM 701010 - PCC CURB, TYPE 1-8
- (N) ITEM 701022 - PCC CURB AND GUTTER, TYPE 3-8
- (P) ITEM 715001 - PERFORATED PIPE UNDERDRAINS, 6"
- (Q) ITEM 720050 - GALVANIZED STEEL BEAM GUARDRAIL, TYPE 1-31
- (R) ITEM 720052 - GALVANIZED STEEL BEAM GUARDRAIL, TYPE 3-31
- (S) ITEM 727000 - RIGHT OF WAY FENCE
- (T) ITEM 501001 - 8" PORTLAND CEMENT CONCRETE
- (U) ITEM 733002 - TOPSOILING, 6" DEPTH
ITEM 734013 - PERMANENT GRASS SEEDING, DRY GROUND
- (V) ITEM 733002 - TOPSOILING, 6" DEPTH
ITEM 734013 - PERMANENT GRASS SEEDING, DRY GROUND
ITEM 735535 - SOIL RETENTION BLANKET MULCH, TYPE 5
- (W) ITEM 701016 - PCC CURB AND GUTTER, TYPE 1-4
- (X) ITEM 760017 - RUMBLE STRIPS, CONCRETE
- (Y) ITEM 705001 - PCC SIDEWALK, 4"
- (AA) ITEM 720626 - CONCRETE SINGLE FACE BARRIER, TYPE 1
- (BB) ITEM 760507 - PROFILE MILLING, HOT-MIX
- (CC) ITEM 401824 - WMA, SUPERPAVE, TYPE C, 160 GYRATIONS, PG 64-22, WEDGE
- (DD) ITEM 733001 - TOPSOILING, 4" DEPTH
ITEM 734013 - PERMANENT GRASS SEEDING, DRY GROUND
- (EE) ITEM 713002 - GEOTEXTILE, SEPARATION
- (FF) ITEM 701013 - PCC CURB, TYPE 1-2

NOTES:

1. THE MAXIMUM ALGEBRAIC DIFFERENCE ON THE HIGH SIDE BETWEEN THE TRAVELED WAY SLOPE AND THE ACCEL/DECEL LANES SHALL NOT EXCEED 4%. THE MAXIMUM ALGEBRAIC DIFFERENCE BETWEEN THE TRAVELED WAY SLOPE AND THE SHOULDER SLOPE SHALL NOT EXCEED 8%.
2. SHOULDER SLOPE ON THE LOW SIDE SHALL BE THE SAME AS THE TRAVELED WAY SLOPE WHEN SUPERELEVATION IS GREATER THAN 4%.
3. SEE GRADES AND GEOMETRICS SHEETS FOR SUPERELEVATED CROSS SLOPE TRANSITIONS.
4. SEE SHEET TS-43 FOR UNDERDRAIN DETAIL.
SEE CONSTRUCTION PLANS FOR PLACEMENT LOCATIONS.
5. PGA - POINT OF GRADE APPLICATION
PDGA - POINT OF DITCH GRADE APPLICATION
P/R - POINT OF ROTATION
P.G.L. - POINT OF GRADE LINE
6. THE MAXIMUM LIFTS FOR THE INDIVIDUAL PAVING MATERIALS ARE AS FOLLOWS:
SUPERPAVE, TYPE C WMA - 2"
SUPERPAVE, TYPE B WMA - 3"
SUPERPAVE BIT. CONC. BASE COURSE - 4"
GRADED AGGREGATE BASE COURSE - 8"
7. SUPERPAVE, TYPE B HOT-MIX SHALL BE PLACED IN TWO EQUAL LIFTS, WHEN THICKNESS EXCEEDS 3".
8. SEE SHEET DT-01 FOR RUMBLE STRIP LOCATIONS.
9. SEE SHEET DT-12 FOR SAFETY EDGE DETAILS. THESE DETAILS SHALL BE APPLIED AT ALL INSTANCES WHERE THE EDGE OF PROPOSED PAVEMENT MEETS THE 6" TOPSOIL.
10. ON THE HIGH SIDE OF THE SUPERELEVATED MEDIAN SECTION THE BOTTOM OF BORROW TYPE A SHALL FOLLOW THE SUPERELEVATION RATE FOR THE ROADWAY EXTENDED UNTIL IT INTERSECTS WITH EITHER THE BOTTOM OF TOPSOIL FOR THE MEDIAN SIDESLOPES OR IT INTERSECTS WITH THE CONSTRUCTION BASELINE. ON THE LOW SIDE OF THE SUPERELEVATED MEDIAN SECTION THE BOTTOM OF BORROW TYPE A SHALL BE CONSTRUCTED FROM THE POINT IN WHICH THE EXTENDED SUPERELEVATION SLOPE (e) INTERSECTS THE CONSTRUCTION BASELINE TO THE GRADE BREAK AT THE INSIDE EDGE OF TRAVELED WAY.
11. FOR INTERFACE BETWEEN MOMENT SLAB AND ROADWAY PAVEMENT AND APPROACH SLAB AND ROADWAY PAVEMENT, SEE STRUCTURAL DETAILS.
12. SEE SHEET DT-15 FOR DETAILS OF CONSTRUCTING PROPOSED EARTH BERM.

N:\31653-000\CONTRACT 1A\CADD\TS029U301_1A.dgn
11/4/2014 8:38:03 AM

DELAWARE DEPARTMENT OF TRANSPORTATION	ADDENDUMS / REVISIONS	NOT TO SCALE	US 301, SR 896 TO SR 1	CONTRACT T200911308	BRIDGE NO.	TYPICAL SECTIONS
				COUNTY NEW CASTLE	DESIGNED BY: KGMA	
					CHECKED BY: TAO	

TS-29

SHEET NO. 45

TOTAL SHTS. 875

LEGEND

- (A) ITEM 209001 - BORROW, TYPE A
- (B) ITEM 209006 - BORROW, TYPE F
- (C) ITEM 302007 - GRADED AGGREGATE BASE COURSE, TYPE B
- (D) ITEM 304501 - PERMEABLE TREATED BASE, 4"
- (E) ITEM 304502 - SOIL CEMENT BASE COURSE, 6"
- (F) ITEM 401801 - WMA, SUPERPAVE, TYPE C, 160 GYRATIONS, PG 64-22
- (G) ITEM 401810 - WMA, SUPERPAVE, TYPE B, 160 GYRATIONS, PG 64-22
- (J) ITEM 401819 - WMA, SUPERPAVE, BITUMINOUS CONCRETE BASE COURSE, 160 GYRATIONS, PG 64-22
- (K) ITEM 501006 - PORTLAND CEMENT CONCRETE PAVEMENT, 12"
- (L) ITEM 701010 - PCC CURB, TYPE 1-8
- (N) ITEM 701022 - PCC CURB AND GUTTER, TYPE 3-8
- (P) ITEM 715001 - PERFORATED PIPE UNDERDRAINS, 6"
- (Q) ITEM 720050 - GALVANIZED STEEL BEAM GUARDRAIL, TYPE 1-31
- (R) ITEM 720052 - GALVANIZED STEEL BEAM GUARDRAIL, TYPE 3-31
- (S) ITEM 727000 - RIGHT OF WAY FENCE
- (T) ITEM 501001 - 8" PORTLAND CEMENT CONCRETE
- (U) ITEM 733002 - TOPSOILING, 6" DEPTH
ITEM 734013 - PERMANENT GRASS SEEDING, DRY GROUND
- (V) ITEM 733002 - TOPSOILING, 6" DEPTH
ITEM 734013 - PERMANENT GRASS SEEDING, DRY GROUND
ITEM 735535 - SOIL RETENTION BLANKET MULCH, TYPE 5
- (W) ITEM 701016 - PCC CURB AND GUTTER, TYPE 1-4
- (X) ITEM 760017 - RUMBLE STRIPS, CONCRETE
- (Y) ITEM 705001 - PCC SIDEWALK, 4"
- (AA) ITEM 720626 - CONCRETE SINGLE FACE BARRIER, TYPE 1
- (BB) ITEM 760507 - PROFILE MILLING, HOT-MIX
- (CC) ITEM 401824 - WMA, SUPERPAVE, TYPE C, 160 GYRATIONS, PG 64-22, WEDGE
- (DD) ITEM 733001 - TOPSOILING, 4" DEPTH
ITEM 734013 - PERMANENT GRASS SEEDING, DRY GROUND
- (EE) ITEM 713002 - GEOTEXTILE, SEPARATION
- (FF) ITEM 701013 - PCC CURB, TYPE 1-2

NOTES:

1. THE MAXIMUM ALGEBRAIC DIFFERENCE ON THE HIGH SIDE BETWEEN THE TRAVELED WAY SLOPE AND THE ACCEL/DECEL LANES SHALL NOT EXCEED 4%. THE MAXIMUM ALGEBRAIC DIFFERENCE BETWEEN THE TRAVELED WAY SLOPE AND THE SHOULDER SLOPE SHALL NOT EXCEED 8%.
2. SHOULDER SLOPE ON THE LOW SIDE SHALL BE THE SAME AS THE TRAVELED WAY SLOPE WHEN SUPERELEVATION IS GREATER THAN 4%.
3. SEE GRADES AND GEOMETRICS SHEETS FOR SUPERELEVATED CROSS SLOPE TRANSITIONS.
4. SEE SHEET TS-43 FOR UNDERDRAIN DETAIL.
SEE CONSTRUCTION PLANS FOR PLACEMENT LOCATIONS.
5. PGA - POINT OF GRADE APPLICATION
PDGA - POINT OF DITCH GRADE APPLICATION
P/R - POINT OF ROTATION
P.G.L. - POINT OF GRADE LINE
6. THE MAXIMUM LIFTS FOR THE INDIVIDUAL PAVING MATERIALS ARE AS FOLLOWS:
SUPERPAVE, TYPE C WMA - 2"
SUPERPAVE, TYPE B WMA - 3"
SUPERPAVE BIT. CONC. BASE COURSE - 4"
GRADED AGGREGATE BASE COURSE - 8"
7. SUPERPAVE, TYPE B HOT-MIX SHALL BE PLACED IN TWO EQUAL LIFTS, WHEN THICKNESS EXCEEDS 3".
8. SEE SHEET DT-01 FOR RUMBLE STRIP LOCATIONS.
9. SEE SHEET DT-12 FOR SAFETY EDGE DETAILS. THESE DETAILS SHALL BE APPLIED AT ALL INSTANCES WHERE THE EDGE OF PROPOSED PAVEMENT MEETS THE 6" TOPSOIL.
10. ON THE HIGH SIDE OF THE SUPERELEVATED MEDIAN SECTION THE BOTTOM OF BORROW TYPE A SHALL FOLLOW THE SUPERELEVATION RATE FOR THE ROADWAY EXTENDED UNTIL IT INTERSECTS WITH EITHER THE BOTTOM OF TOPSOIL FOR THE MEDIAN SIDESLOPES OR IT INTERSECTS WITH THE CONSTRUCTION BASELINE. ON THE LOW SIDE OF THE SUPERELEVATED MEDIAN SECTION THE BOTTOM OF BORROW TYPE A SHALL BE CONSTRUCTED FROM THE POINT IN WHICH THE EXTENDED SUPERELEVATION SLOPE (e) INTERSECTS THE CONSTRUCTION BASELINE TO THE GRADE BREAK AT THE INSIDE EDGE OF TRAVELED WAY.
11. FOR INTERFACE BETWEEN MOMENT SLAB AND ROADWAY PAVEMENT AND APPROACH SLAB AND ROADWAY PAVEMENT, SEE STRUCTURAL DETAILS.
12. SEE SHEET DT-15 FOR DETAILS OF CONSTRUCTING PROPOSED EARTH BERM.

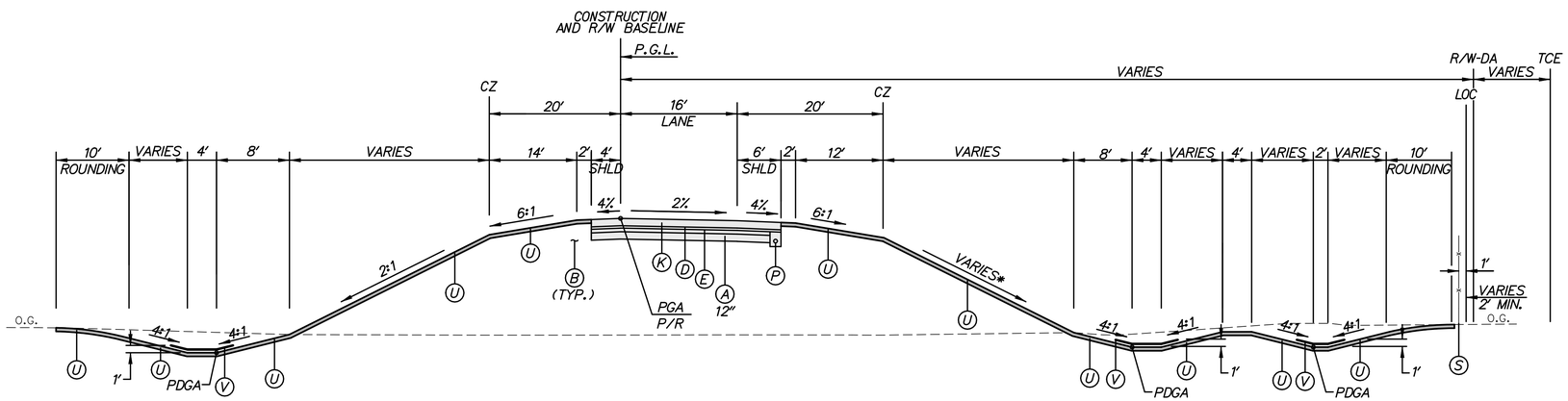

RAMP P NORMAL SECTION
STATION 65+50 TO STATION 67+59

*RIGHT FILL SLOPE CHART	
STATION	SLOPE
65+50 TO 66+00	3:1 TO 2:1
66+00 TO 67+59	2:1

N:\3653-000\CONTRACT 1A\CADD\TS030U301_1A.dgn
11/4/2014 8:39:00 AM

DELAWARE DEPARTMENT OF TRANSPORTATION

ADDENDUMS / REVISIONS

NOT TO SCALE

US 301, SR 896 TO SR 1

CONTRACT	BRIDGE NO.
T200911308	DESIGNED BY: KGMA
COUNTY	
NEW CASTLE	CHECKED BY: TAO

TYPICAL SECTIONS

TS-30

SHEET NO.
46
TOTAL SHTS.
875

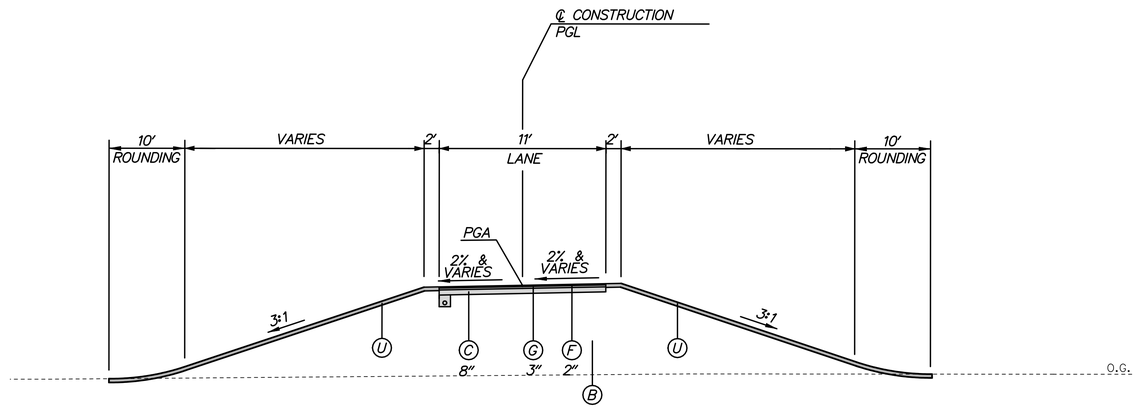

NB EMERGENCY ACCESS RAMP

STA. 403+99.28 TO STA. 405+05.98

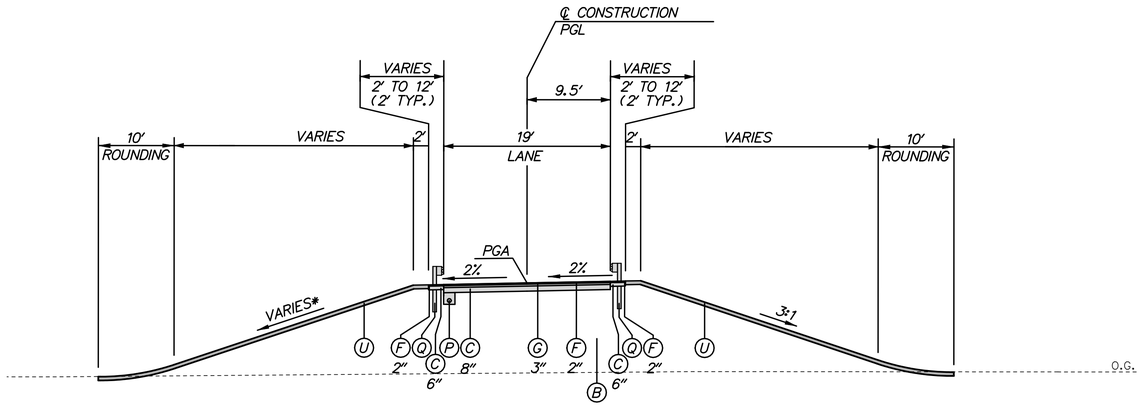

NB EMERGENCY ACCESS RAMP

STA. 400+88.68 TO STA. 403+99.28

*VARIABLE SLOPE TABLE	
LIMITS	SLOPE
STA. 400+88.68 TO STA. 402+56.92	2:1
STA. 402+56.92 TO STA. 403+06.92	TRANSITION FROM 2:1 TO 3:1
STA. 403+06.92 TO STA. 403+95.62	3:1

LEGEND

- (A) ITEM 209001 - BORROW, TYPE A
- (B) ITEM 209006 - BORROW, TYPE F
- (C) ITEM 302007 - GRADED AGGREGATE BASE COURSE, TYPE B
- (D) ITEM 304501 - PERMEABLE TREATED BASE, 4"
- (E) ITEM 304502 - SOIL CEMENT BASE COURSE, 6"
- (F) ITEM 401801 - WMA, SUPERPAVE, TYPE C, 160 GYRATIONS, PG 64-22
- (G) ITEM 401810 - WMA, SUPERPAVE, TYPE B, 160 GYRATIONS, PG 64-22
- (J) ITEM 401819 - WMA, SUPERPAVE, BITUMINOUS CONCRETE BASE COURSE, 160 GYRATIONS, PG 64-22
- (K) ITEM 501006 - PORTLAND CEMENT CONCRETE PAVEMENT, 12"
- (L) ITEM 701010 - PCC CURB, TYPE 1-8
- (N) ITEM 701022 - PCC CURB AND GUTTER, TYPE 3-8
- (P) ITEM 715001 - PERFORATED PIPE UNDERDRAINS, 6"
- (Q) ITEM 720050 - GALVANIZED STEEL BEAM GUARDRAIL, TYPE 1-31
- (R) ITEM 720052 - GALVANIZED STEEL BEAM GUARDRAIL, TYPE 3-31
- (S) ITEM 727000 - RIGHT OF WAY FENCE
- (T) ITEM 501001 - 8" PORTLAND CEMENT CONCRETE
- (U) ITEM 733002 - TOPSOILING, 6" DEPTH
  ITEM 734013 - PERMANENT GRASS SEEDING, DRY GROUND
- (V) ITEM 733002 - TOPSOILING, 6" DEPTH
  ITEM 734013 - PERMANENT GRASS SEEDING, DRY GROUND
  ITEM 735535 - SOIL RETENTION BLANKET MULCH, TYPE 5
- (W) ITEM 701016 - PCC CURB AND GUTTER, TYPE 1-4
- (X) ITEM 760017 - RUMBLE STRIPS, CONCRETE
- (Y) ITEM 705001 - PCC SIDEWALK, 4"
- (AA) ITEM 720626 - CONCRETE SINGLE FACE BARRIER, TYPE 1
- (BB) ITEM 760507 - PROFILE MILLING, HOT-MIX
- (CC) ITEM 401824 - WMA, SUPERPAVE, TYPE C, 160 GYRATIONS, PG 64-22, WEDGE
- (DD) ITEM 733001 - TOPSOILING, 4" DEPTH
  ITEM 734013 - PERMANENT GRASS SEEDING, DRY GROUND
- (EE) ITEM 713002 - GEOTEXTILE, SEPARATION
- (FF) ITEM 701013 - PCC CURB, TYPE 1-2

NOTES:

1. THE MAXIMUM ALGEBRAIC DIFFERENCE ON THE HIGH SIDE BETWEEN THE TRAVELED WAY SLOPE AND THE ACCEL/DECEL LANES SHALL NOT EXCEED 4%. THE MAXIMUM ALGEBRAIC DIFFERENCE BETWEEN THE TRAVELED WAY SLOPE AND THE SHOULDER SLOPE SHALL NOT EXCEED 8%.
2. SHOULDER SLOPE ON THE LOW SIDE SHALL BE THE SAME AS THE TRAVELED WAY SLOPE WHEN SUPERELEVATION IS GREATER THAN 4%.
3. SEE GRADES AND GEOMETRICS SHEETS FOR SUPERELEVATED CROSS SLOPE TRANSITIONS.
4. SEE SHEET TS-43 FOR UNDERDRAIN DETAIL.
   SEE CONSTRUCTION PLANS FOR PLACEMENT LOCATIONS.
5. PGA - POINT OF GRADE APPLICATION
   PDGA - POINT OF DITCH GRADE APPLICATION
   P/R - POINT OF ROTATION
   P.G.L. - POINT OF GRADE LINE
6. THE MAXIMUM LIFTS FOR THE INDIVIDUAL PAVING MATERIALS ARE AS FOLLOWS:
   SUPERPAVE, TYPE C WMA - 2"
   SUPERPAVE, TYPE B WMA - 3"
   SUPERPAVE BIT. CONC. BASE COURSE - 4"
   GRADED AGGREGATE BASE COURSE - 8"
7. SUPERPAVE, TYPE B HOT-MIX SHALL BE PLACED IN TWO EQUAL LIFTS, WHEN THICKNESS EXCEEDS 3".
8. SEE SHEET DT-01 FOR RUMBLE STRIP LOCATIONS.
9. SEE SHEET DT-12 FOR SAFETY EDGE DETAILS. THESE DETAILS SHALL BE APPLIED AT ALL INSTANCES WHERE THE EDGE OF PROPOSED PAVEMENT MEETS THE 6" TOPSOIL.
10. ON THE HIGH SIDE OF THE SUPERELEVATED MEDIAN SECTION THE BOTTOM OF BORROW TYPE A SHALL FOLLOW THE SUPERELEVATION RATE FOR THE ROADWAY EXTENDED UNTIL IT INTERSECTS WITH EITHER THE BOTTOM OF TOPSOIL FOR THE MEDIAN SIDESLOPES OR IT INTERSECTS WITH THE CONSTRUCTION BASELINE. ON THE LOW SIDE OF THE SUPERELEVATED MEDIAN SECTION THE BOTTOM OF BORROW TYPE A SHALL BE CONSTRUCTED FROM THE POINT IN WHICH THE EXTENDED SUPERELEVATION SLOPE (e) INTERSECTS THE CONSTRUCTION BASELINE TO THE GRADE BREAK AT THE INSIDE EDGE OF TRAVELED WAY.
11. FOR INTERFACE BETWEEN MOMENT SLAB AND ROADWAY PAVEMENT AND APPROACH SLAB AND ROADWAY PAVEMENT, SEE STRUCTURAL DETAILS.
12. SEE SHEET DT-15 FOR DETAILS OF CONSTRUCTING PROPOSED EARTH BERM.

N:\31653-000\CONTRACT 1A\CADD\TS031U301_1A.dgn
7/31/2015 1:43:21 PM

DELAWARE DEPARTMENT OF TRANSPORTATION

ADDENDUMS / REVISIONS

NOT TO SCALE

US 301, SR 896 TO SR 1

CONTRACT	BRIDGE NO.
T200911308	DESIGNED BY: K.A.H.
COUNTY	
NEW CASTLE	CHECKED BY: B.R.T.

TYPICAL SECTIONS

TS-31

SHEET NO. 47

TOTAL SHTS. 875

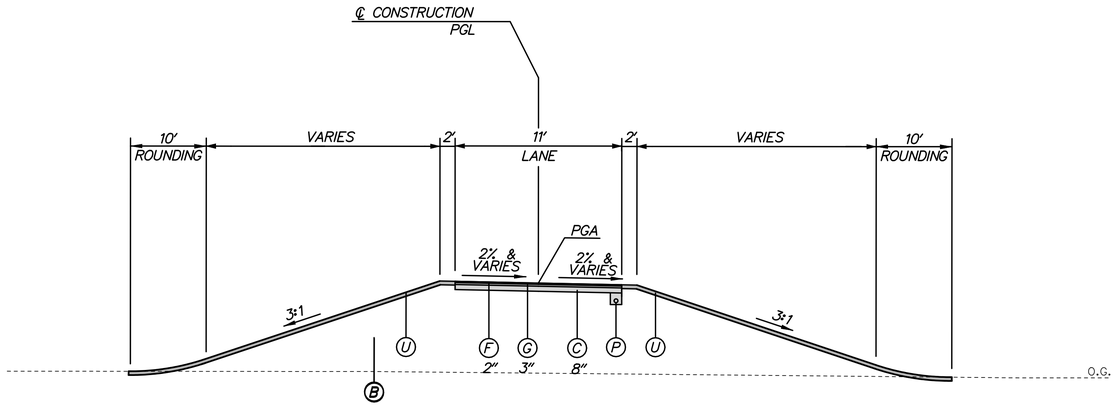

SB EMERGENCY ACCESS RAMP

STA. 204+23.38 TO STA. 205+44.33

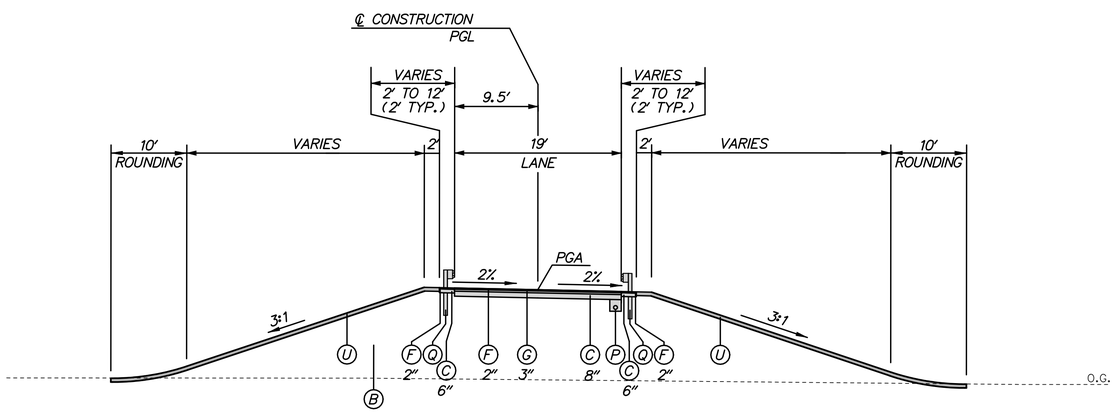

SB EMERGENCY ACCESS RAMP

STA. 200+88.42 TO STA. 204+23.38

LEGEND

- (A) ITEM 209001 - BORROW, TYPE A
- (B) ITEM 209006 - BORROW, TYPE F
- (C) ITEM 302007 - GRADED AGGREGATE BASE COURSE, TYPE B
- (D) ITEM 304501 - PERMEABLE TREATED BASE, 4"
- (E) ITEM 304502 - SOIL CEMENT BASE COURSE, 6"
- (F) ITEM 401801 - WMA, SUPERPAVE, TYPE C, 160 GYRATIONS, PG 64-22
- (G) ITEM 401810 - WMA, SUPERPAVE, TYPE B, 160 GYRATIONS, PG 64-22
- (J) ITEM 401819 - WMA, SUPERPAVE, BITUMINOUS CONCRETE BASE COURSE, 160 GYRATIONS, PG 64-22
- (K) ITEM 501006 - PORTLAND CEMENT CONCRETE PAVEMENT, 12"
- (L) ITEM 701010 - PCC CURB, TYPE 1-8
- (N) ITEM 701022 - PCC CURB AND GUTTER, TYPE 3-8
- (P) ITEM 715001 - PERFORATED PIPE UNDERDRAINS, 6"
- (Q) ITEM 720050 - GALVANIZED STEEL BEAM GUARDRAIL, TYPE 1-31
- (R) ITEM 720052 - GALVANIZED STEEL BEAM GUARDRAIL, TYPE 3-31
- (S) ITEM 727000 - RIGHT OF WAY FENCE
- (T) ITEM 501001 - 8" PORTLAND CEMENT CONCRETE
- (U) ITEM 733002 - TOPSOILING, 6" DEPTH
  ITEM 734013 - PERMANENT GRASS SEEDING, DRY GROUND
- (V) ITEM 733002 - TOPSOILING, 6" DEPTH
  ITEM 734013 - PERMANENT GRASS SEEDING, DRY GROUND
  ITEM 735535 - SOIL RETENTION BLANKET MULCH, TYPE 5
- (W) ITEM 701016 - PCC CURB AND GUTTER, TYPE 1-4
- (X) ITEM 760017 - RUMBLE STRIPS, CONCRETE
- (Y) ITEM 705001 - PCC SIDEWALK, 4"
- (AA) ITEM 720626 - CONCRETE SINGLE FACE BARRIER, TYPE 1
- (BB) ITEM 760507 - PROFILE MILLING, HOT-MIX
- (CC) ITEM 401824 - WMA, SUPERPAVE, TYPE C, 160 GYRATIONS, PG 64-22, WEDGE
- (DD) ITEM 733001 - TOPSOILING, 4" DEPTH
  ITEM 734013 - PERMANENT GRASS SEEDING, DRY GROUND
- (EE) ITEM 713002 - GEOTEXTILE, SEPARATION
- (FF) ITEM 701013 - PCC CURB, TYPE 1-2

NOTES:

1. THE MAXIMUM ALGEBRAIC DIFFERENCE ON THE HIGH SIDE BETWEEN THE TRAVELED WAY SLOPE AND THE ACCEL/DECEL LANES SHALL NOT EXCEED 4%. THE MAXIMUM ALGEBRAIC DIFFERENCE BETWEEN THE TRAVELED WAY SLOPE AND THE SHOULDER SLOPE SHALL NOT EXCEED 8%.
2. SHOULDER SLOPE ON THE LOW SIDE SHALL BE THE SAME AS THE TRAVELED WAY SLOPE WHEN SUPERELEVATION IS GREATER THAN 4%.
3. SEE GRADES AND GEOMETRICS SHEETS FOR SUPERELEVATED CROSS SLOPE TRANSITIONS.
4. SEE SHEET TS-43 FOR UNDERDRAIN DETAIL.
   SEE CONSTRUCTION PLANS FOR PLACEMENT LOCATIONS.
5. PGA - POINT OF GRADE APPLICATION
   PDGA - POINT OF DITCH GRADE APPLICATION
   P/R - POINT OF ROTATION
   P.G.L. - POINT OF GRADE LINE
6. THE MAXIMUM LIFTS FOR THE INDIVIDUAL PAVING MATERIALS ARE AS FOLLOWS:
   SUPERPAVE, TYPE C WMA - 2"
   SUPERPAVE, TYPE B WMA - 3"
   SUPERPAVE BIT. CONC. BASE COURSE - 4"
   GRADED AGGREGATE BASE COURSE - 8"
7. SUPERPAVE, TYPE B HOT-MIX SHALL BE PLACED IN TWO EQUAL LIFTS, WHEN THICKNESS EXCEEDS 3".
8. SEE SHEET DT-01 FOR RUMBLE STRIP LOCATIONS.
9. SEE SHEET DT-12 FOR SAFETY EDGE DETAILS. THESE DETAILS SHALL BE APPLIED AT ALL INSTANCES WHERE THE EDGE OF PROPOSED PAVEMENT MEETS THE 6" TOPSOIL.
10. ON THE HIGH SIDE OF THE SUPERELEVATED MEDIAN SECTION THE BOTTOM OF BORROW TYPE A SHALL FOLLOW THE SUPERELEVATION RATE FOR THE ROADWAY EXTENDED UNTIL IT INTERSECTS WITH EITHER THE BOTTOM OF TOPSOIL FOR THE MEDIAN SIDESLOPES OR IT INTERSECTS WITH THE CONSTRUCTION BASELINE. ON THE LOW SIDE OF THE SUPERELEVATED MEDIAN SECTION THE BOTTOM OF BORROW TYPE A SHALL BE CONSTRUCTED FROM THE POINT IN WHICH THE EXTENDED SUPERELEVATION SLOPE (e) INTERSECTS THE CONSTRUCTION BASELINE TO THE GRADE BREAK AT THE INSIDE EDGE OF TRAVELED WAY.
11. FOR INTERFACE BETWEEN MOMENT SLAB AND ROADWAY PAVEMENT AND APPROACH SLAB AND ROADWAY PAVEMENT, SEE STRUCTURAL DETAILS.
12. SEE SHEET DT-15 FOR DETAILS OF CONSTRUCTING PROPOSED EARTH BERM.

N:\31653-000\CONTRACT 1A\CADD\TS032U301_1A.dgn
7/31/2015 1:46:55 PM

DELAWARE DEPARTMENT OF TRANSPORTATION	ADDENDUMS / REVISIONS	NOT TO SCALE	US 301, SR 896 TO SR 1	CONTRACT T200911308	BRIDGE NO.	TYPICAL SECTIONS	TS-32
				COUNTY NEW CASTLE	DESIGNED BY: K.A.H.		SHEET NO. 48
					CHECKED BY: B.R.T.		TOTAL SHTS. 875

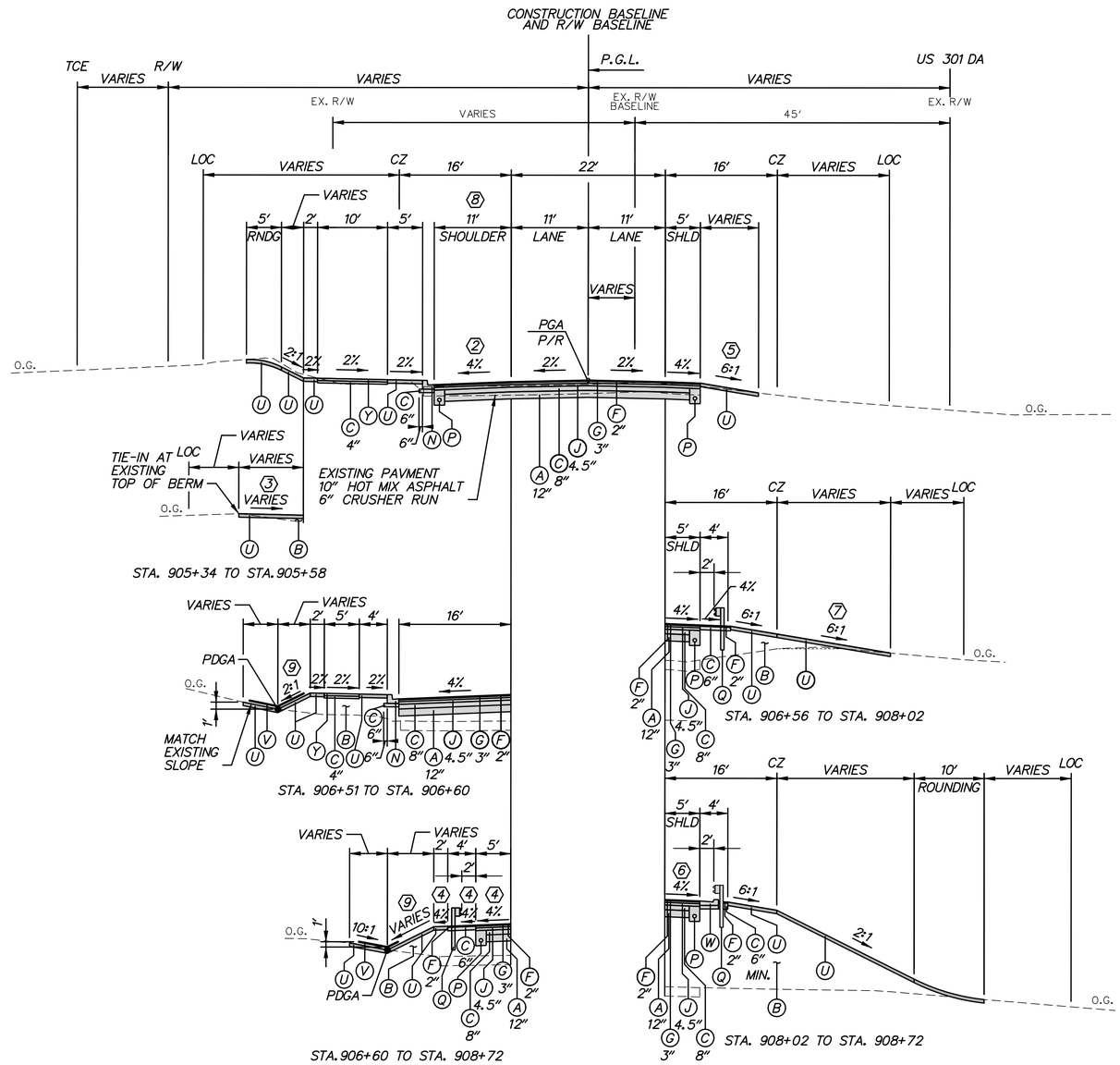

HYETTS CORNER ROAD NORMAL SECTION
STATION 904+00 TO STATION 908+72

(1) HOLD 6% SLOPE FROM STA. 902+80 TO STA. 903+10. TRANSITION SLOPE FROM 6% AT STA. 903+10 TO 2% AT STA. 903+90.

(2) HOLD -2% SLOPE FROM STA. 904+00 TO STA. 904+50. TRANSITION SLOPE FROM -2% AT STA. 904+50 TO -4% AT STA. 904+91.

(3) HOLD 2% SLOPE FROM STA. 905+34 TO STA. 905+46.

(4) TRANSITION SLOPE FROM -4% AT STA. 907+52 TO 2.2% AT STA. 908+79.

(5) HOLD 4% SLOPE FROM STA. 904+00 TO STA. 904+80. TRANSITION SLOPE FROM 4% AT STA. 904+80 TO 6:1 AT STA. 904+85.

(6) TRANSITION SLOPE FROM -4% AT STA. 908+42 TO -2.2% AT STA. 908+79.

(7) TRANSITION SLOPE FROM 6:1 AT STA. 907+03 TO 2:1 AT STA. 907+28. HOLD 2:1 SLOPE FROM STA. 907+28 TO STA. 908+72.

(8) TRANSITION WIDTH FROM 15' AT STA. 903+84 TO 11' AT STA. 904+34.

(9) HOLD 2:1 SLOPE FROM STA. 907+00 TO STA. 908+72.

NOTES:

1. THE MAXIMUM ALGEBRAIC DIFFERENCE ON THE HIGH SIDE BETWEEN THE TRAVELED WAY SLOPE AND THE ACCEL/DECEL LANES SHALL NOT EXCEED 4%. THE MAXIMUM ALGEBRAIC DIFFERENCE BETWEEN THE TRAVELED WAY SLOPE AND THE SHOULDER SLOPE SHALL NOT EXCEED 8%.
2. SHOULDER SLOPE ON THE LOW SIDE SHALL BE THE SAME AS THE TRAVELED WAY SLOPE WHEN SUPERELEVATION IS GREATER THAN 4%.
3. SEE GRADES AND GEOMETRICS SHEETS FOR SUPERELEVATED CROSS SLOPE TRANSITIONS.
4. SEE SHEET TS-43 FOR UNDERDRAIN DETAIL. SEE CONSTRUCTION PLANS FOR PLACEMENT LOCATIONS.
5. PGA - POINT OF GRADE APPLICATION
   PDGA - POINT OF DITCH GRADE APPLICATION
   P/R - POINT OF ROTATION
   P.G.L. - POINT OF GRADE LINE
6. THE MAXIMUM LIFTS FOR THE INDIVIDUAL PAVING MATERIALS ARE AS FOLLOWS:
   SUPERPAVE, TYPE C WMA - 2"
   SUPERPAVE, TYPE B WMA - 3"
   SUPERPAVE BIT. CONC. BASE COURSE - 4"
   GRADED AGGREGATE BASE COURSE - 8"
7. SUPERPAVE, TYPE B HOT-MIX SHALL BE PLACED IN TWO EQUAL LIFTS, WHEN THICKNESS EXCEEDS 3".
8. SEE SHEET DT-01 FOR RUMBLE STRIP LOCATIONS.
9. SEE SHEET DT-12 FOR SAFETY EDGE DETAILS. THESE DETAILS SHALL BE APPLIED AT ALL INSTANCES WHERE THE EDGE OF PROPOSED PAVEMENT MEETS THE 6" TOPSOIL.
10. ON THE HIGH SIDE OF THE SUPERELEVATED MEDIAN SECTION THE BOTTOM OF BORROW TYPE A SHALL FOLLOW THE SUPERELEVATION RATE FOR THE ROADWAY EXTENDED UNTIL IT INTERSECTS WITH EITHER THE BOTTOM OF TOPSOIL FOR THE MEDIAN SIDESLOPES OR IT INTERSECTS WITH THE CONSTRUCTION BASELINE. ON THE LOW SIDE OF THE SUPERELEVATED MEDIAN SECTION THE BOTTOM OF BORROW TYPE A SHALL BE CONSTRUCTED FROM THE POINT IN WHICH THE EXTENDED SUPERELEVATION SLOPE (e) INTERSECTS THE CONSTRUCTION BASELINE TO THE GRADE BREAK AT THE INSIDE EDGE OF TRAVELED WAY.
11. FOR INTERFACE BETWEEN MOMENT SLAB AND ROADWAY PAVEMENT AND APPROACH SLAB AND ROADWAY PAVEMENT, SEE STRUCTURAL DETAILS.
12. SEE SHEET DT-15 FOR DETAILS OF CONSTRUCTING PROPOSED EARTH BERM.
13. STA. 908+25 TO STA. 908+75 WILL INCLUDE LIGHTWEIGHT AGGREGATE FILL ABOVE THE NCC-S 60" STEEL CASING. FOR DETAIL SEE SHEET DT-18.

LEGEND

- (A) ITEM 209001 - BORROW, TYPE A
- (B) ITEM 209006 - BORROW, TYPE F
- (C) ITEM 302007 - GRADED AGGREGATE BASE COURSE, TYPE B
- (D) ITEM 304501 - PERMEABLE TREATED BASE, 4"
- (E) ITEM 304502 - SOIL CEMENT BASE COURSE, 6"
- (F) ITEM 401801 - WMA, SUPERPAVE, TYPE C, 160 GYRATIONS, PG 64-22
- (G) ITEM 401810 - WMA, SUPERPAVE, TYPE B, 160 GYRATIONS, PG 64-22
- (J) ITEM 401819 - WMA, SUPERPAVE, BITUMINOUS CONCRETE BASE COURSE, 160 GYRATIONS, PG 64-22
- (K) ITEM 501006 - PORTLAND CEMENT CONCRETE PAVEMENT, 12"
- (L) ITEM 701010 - PCC CURB, TYPE 1-8
- (N) ITEM 701022 - PCC CURB AND GUTTER, TYPE 3-8
- (P) ITEM 715001 - PERFORATED PIPE UNDERDRAINS, 6"
- (Q) ITEM 720050 - GALVANIZED STEEL BEAM GUARDRAIL, TYPE 1-31
- (R) ITEM 720052 - GALVANIZED STEEL BEAM GUARDRAIL, TYPE 3-31
- (S) ITEM 727000 - RIGHT OF WAY FENCE
- (T) ITEM 501001 - 8" PORTLAND CEMENT CONCRETE
- (U) ITEM 733002 - TOPSOILING, 6" DEPTH
  ITEM 734013 - PERMANENT GRASS SEEDING, DRY GROUND
- (V) ITEM 733002 - TOPSOILING, 6" DEPTH
  ITEM 734013 - PERMANENT GRASS SEEDING, DRY GROUND
  ITEM 735535 - SOIL RETENTION BLANKET MULCH, TYPE 5
- (W) ITEM 701016 - PCC CURB AND GUTTER, TYPE 1-4
- (X) ITEM 760017 - RUMBLE STRIPS, CONCRETE
- (Y) ITEM 705001 - PCC SIDEWALK, 4"
- (AA) ITEM 720626 - CONCRETE SINGLE FACE BARRIER, TYPE 1
- (BB) ITEM 760507 - PROFILE MILLING, HOT-MIX
- (CC) ITEM 401824 - WMA, SUPERPAVE, TYPE C, 160 GYRATIONS, PG 64-22, WEDGE
- (DD) ITEM 733001 - TOPSOILING, 4" DEPTH
  ITEM 734013 - PERMANENT GRASS SEEDING, DRY GROUND
- (EE) ITEM 713002 - GEOTEXTILE, SEPARATION
- (FF) ITEM 701013 - PCC CURB, TYPE 1-2

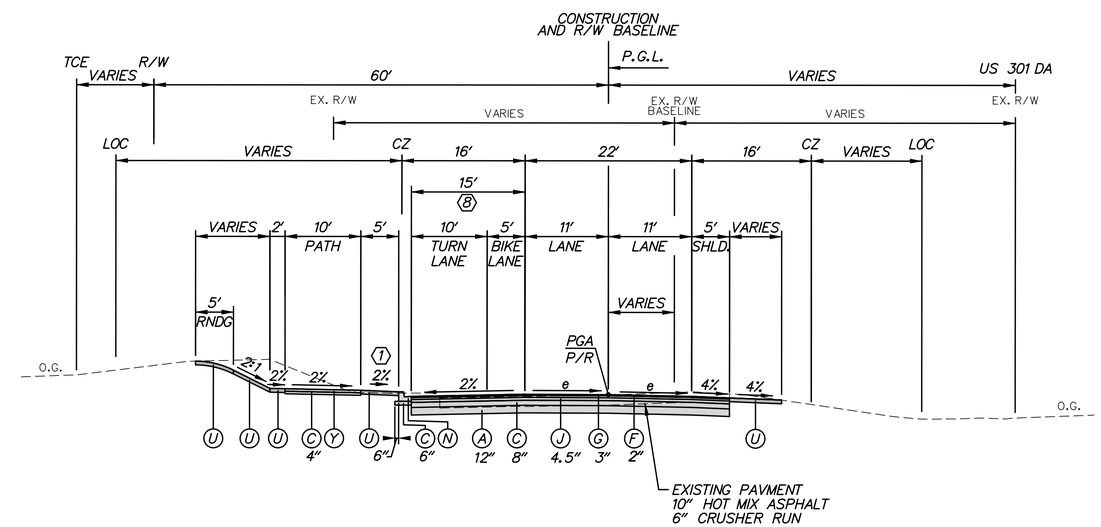

HYETTS CORNER ROAD SUPERELEVATED SECTION
STATION 902+80 TO STATION 904+00 ($e_{max.}$=3.8%)

N:\31653-000\Contract 1A\CADD\TS033U301_1A.dgn
11/3/2014 2:41:02 PM

DELAWARE DEPARTMENT OF TRANSPORTATION	ADDENDUMS / REVISIONS	NOT TO SCALE	US 301, SR 896 TO SR 1	CONTRACT T200911308	BRIDGE NO.	TYPICAL SECTIONS	TS-33
				COUNTY NEW CASTLE	DESIGNED BY: K.A.H.		SHEET NO. 49
					CHECKED BY: B.R.T.		TOTAL SHTS. 875

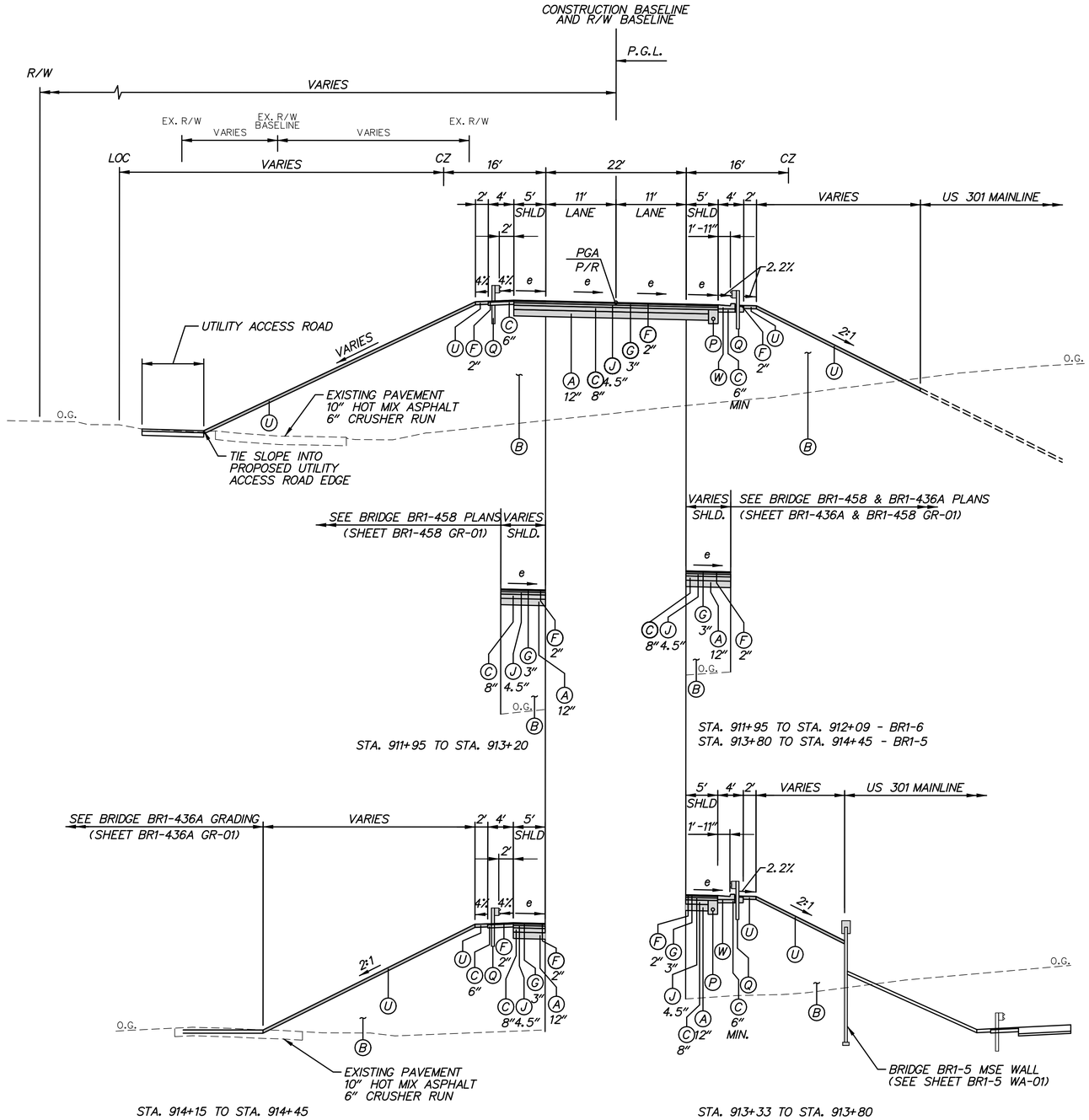

HYETTS CORNER ROAD SUPERELEVATED SECTION
STATION 911+95 TO STATION 914+45 ($e_{max.}$=2.2%)

LEGEND

- (A) ITEM 209001 - BORROW, TYPE A
- (B) ITEM 209006 - BORROW, TYPE F
- (C) ITEM 302007 - GRADED AGGREGATE BASE COURSE, TYPE B
- (D) ITEM 304501 - PERMEABLE TREATED BASE, 4"
- (E) ITEM 304502 - SOIL CEMENT BASE COURSE, 6"
- (F) ITEM 401801 - WMA, SUPERPAVE, TYPE C, 160 GYRATIONS, PG 64-22
- (G) ITEM 401810 - WMA, SUPERPAVE, TYPE B, 160 GYRATIONS, PG 64-22
- (J) ITEM 401819 - WMA, SUPERPAVE, BITUMINOUS CONCRETE BASE COURSE, 160 GYRATIONS, PG 64-22
- (K) ITEM 501006 - PORTLAND CEMENT CONCRETE PAVEMENT, 12"
- (L) ITEM 701010 - PCC CURB, TYPE 1-8
- (N) ITEM 701022 - PCC CURB AND GUTTER, TYPE 3-8
- (P) ITEM 715001 - PERFORATED PIPE UNDERDRAINS, 6"
- (Q) ITEM 720050 - GALVANIZED STEEL BEAM GUARDRAIL, TYPE 1-31
- (R) ITEM 720052 - GALVANIZED STEEL BEAM GUARDRAIL, TYPE 3-31
- (S) ITEM 727000 - RIGHT OF WAY FENCE
- (T) ITEM 501001 - 8" PORTLAND CEMENT CONCRETE
- (U) ITEM 733002 - TOPSOILING, 6" DEPTH
ITEM 734013 - PERMANENT GRASS SEEDING, DRY GROUND
- (V) ITEM 733002 - TOPSOILING, 6" DEPTH
ITEM 734013 - PERMANENT GRASS SEEDING, DRY GROUND
ITEM 735535 - SOIL RETENTION BLANKET MULCH, TYPE 5
- (W) ITEM 701016 - PCC CURB AND GUTTER, TYPE 1-4
- (X) ITEM 760017 - RUMBLE STRIPS, CONCRETE
- (Y) ITEM 705001 - PCC SIDEWALK, 4"
- (AA) ITEM 720626 - CONCRETE SINGLE FACE BARRIER, TYPE 1
- (BB) ITEM 760507 - PROFILE MILLING, HOT-MIX
- (CC) ITEM 401824 - WMA, SUPERPAVE, TYPE C, 160 GYRATIONS, PG 64-22, WEDGE
- (DD) ITEM 733001 - TOPSOILING, 4" DEPTH
ITEM 734013 - PERMANENT GRASS SEEDING, DRY GROUND
- (EE) ITEM 713002 - GEOTEXTILE, SEPARATION
- (FF) ITEM 701013 - PCC CURB, TYPE 1-2

NOTES:

1. THE MAXIMUM ALGEBRAIC DIFFERENCE ON THE HIGH SIDE BETWEEN THE TRAVELED WAY SLOPE AND THE ACCEL/DECEL LANES SHALL NOT EXCEED 4%. THE MAXIMUM ALGEBRAIC DIFFERENCE BETWEEN THE TRAVELED WAY SLOPE AND THE SHOULDER SLOPE SHALL NOT EXCEED 8%.
2. SHOULDER SLOPE ON THE LOW SIDE SHALL BE THE SAME AS THE TRAVELED WAY SLOPE WHEN SUPERELEVATION IS GREATER THAN 4%.
3. SEE GRADES AND GEOMETRICS SHEETS FOR SUPERELEVATED CROSS SLOPE TRANSITIONS.
4. SEE SHEET TS-43 FOR UNDERDRAIN DETAIL.
SEE CONSTRUCTION PLANS FOR PLACEMENT LOCATIONS.
5. PGA - POINT OF GRADE APPLICATION
PDGA - POINT OF DITCH GRADE APPLICATION
P/R - POINT OF ROTATION
P.G.L. - POINT OF GRADE LINE
6. THE MAXIMUM LIFTS FOR THE INDIVIDUAL PAVING MATERIALS ARE AS FOLLOWS:
SUPERPAVE, TYPE C WMA - 2"
SUPERPAVE, TYPE B WMA - 3"
SUPERPAVE BIT. CONC. BASE COURSE - 4"
GRADED AGGREGATE BASE COURSE - 8"
7. SUPERPAVE, TYPE B HOT-MIX SHALL BE PLACED IN TWO EQUAL LIFTS, WHEN THICKNESS EXCEEDS 3".
8. SEE SHEET DT-01 FOR RUMBLE STRIP LOCATIONS.
9. SEE SHEET DT-12 FOR SAFETY EDGE DETAILS. THESE DETAILS SHALL BE APPLIED AT ALL INSTANCES WHERE THE EDGE OF PROPOSED PAVEMENT MEETS THE 6" TOPSOIL.
10. ON THE HIGH SIDE OF THE SUPERELEVATED MEDIAN SECTION THE BOTTOM OF BORROW TYPE A SHALL FOLLOW THE SUPERELEVATION RATE FOR THE ROADWAY EXTENDED UNTIL IT INTERSECTS WITH EITHER THE BOTTOM OF TOPSOIL FOR THE MEDIAN SIDESLOPES OR IT INTERSECTS WITH THE CONSTRUCTION BASELINE. ON THE LOW SIDE OF THE SUPERELEVATED MEDIAN SECTION THE BOTTOM OF BORROW TYPE A SHALL BE CONSTRUCTED FROM THE POINT IN WHICH THE EXTENDED SUPERELEVATION SLOPE (e) INTERSECTS THE CONSTRUCTION BASELINE TO THE GRADE BREAK AT THE INSIDE EDGE OF TRAVELED WAY.
11. FOR INTERFACE BETWEEN MOMENT SLAB AND ROADWAY PAVEMENT AND APPROACH SLAB AND ROADWAY PAVEMENT, SEE STRUCTURAL DETAILS.
12. SEE SHEET DT-15 FOR DETAILS OF CONSTRUCTING PROPOSED EARTH BERM.

TS-34

DELAWARE DEPARTMENT OF TRANSPORTATION	ADDENDUMS / REVISIONS	NOT TO SCALE	US 301, SR 896 TO SR 1	CONTRACT T200911308	BRIDGE NO.	TYPICAL SECTIONS	SHEET NO. 50
				COUNTY NEW CASTLE	DESIGNED BY: K.A.H.		TOTAL SHTS. 875
					CHECKED BY: B.R.T.		

N:\31653-000\Contract 1A\CADD\TS0341301_1A.dgn
11/3/2014 3:14:13 PM

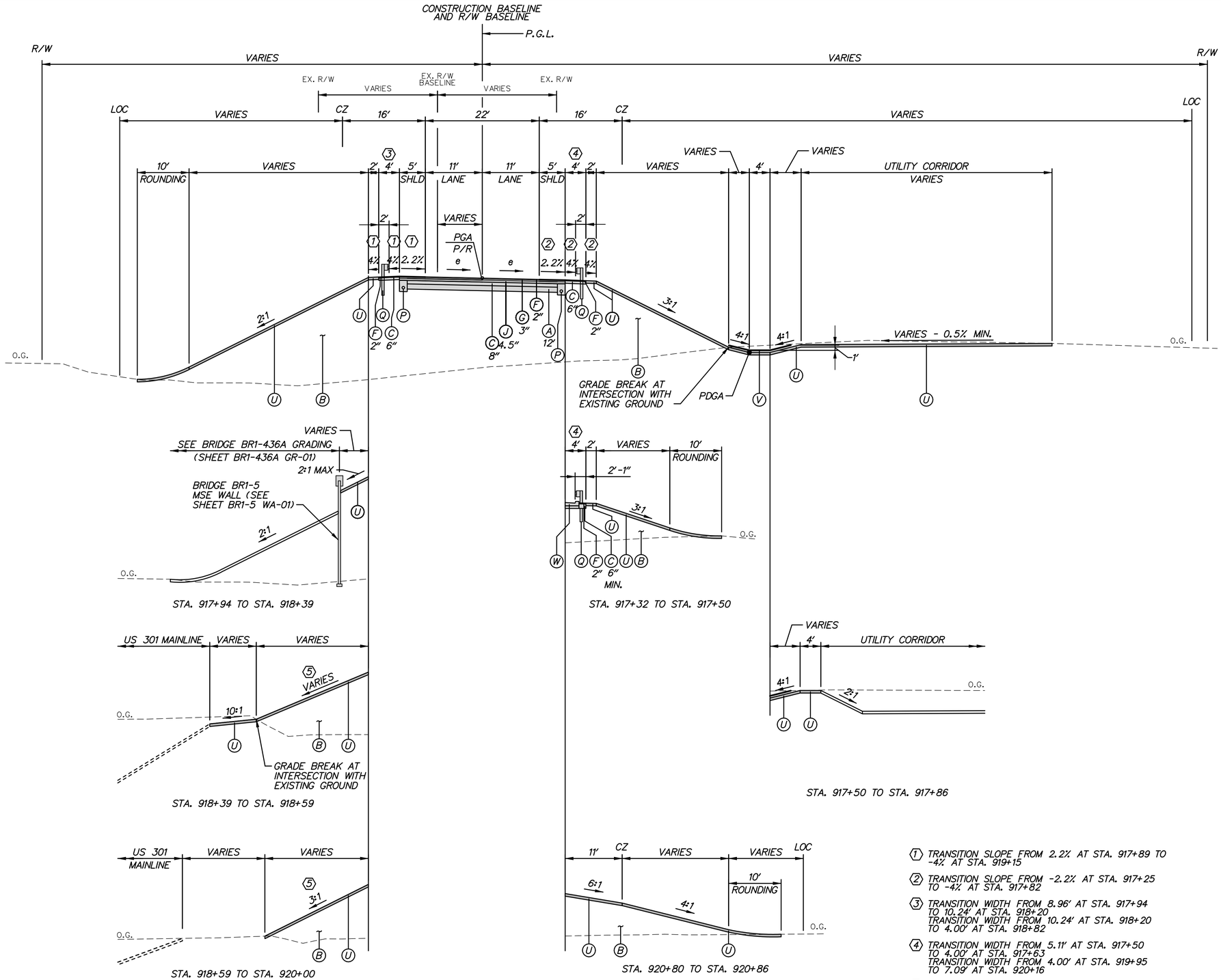

LEGEND

- (A) ITEM 209001 - BORROW, TYPE A
- (B) ITEM 209006 - BORROW, TYPE F
- (C) ITEM 302007 - GRADED AGGREGATE BASE COURSE, TYPE B
- (D) ITEM 304501 - PERMEABLE TREATED BASE, 4″
- (E) ITEM 304502 - SOIL CEMENT BASE COURSE, 6″
- (F) ITEM 401801 - WMA, SUPERPAVE, TYPE C, 160 GYRATIONS, PG 64-22
- (G) ITEM 401810 - WMA, SUPERPAVE, TYPE B, 160 GYRATIONS, PG 64-22
- (J) ITEM 401819 - WMA, SUPERPAVE, BITUMINOUS CONCRETE BASE COURSE, 160 GYRATIONS, PG 64-22
- (K) ITEM 501006 - PORTLAND CEMENT CONCRETE PAVEMENT, 12″
- (L) ITEM 701010 - PCC CURB, TYPE 1-8
- (N) ITEM 701022 - PCC CURB AND GUTTER, TYPE 3-8
- (P) ITEM 715001 - PERFORATED PIPE UNDERDRAINS, 6″
- (Q) ITEM 720050 - GALVANIZED STEEL BEAM GUARDRAIL, TYPE 1-31
- (R) ITEM 720052 - GALVANIZED STEEL BEAM GUARDRAIL, TYPE 3-31
- (S) ITEM 727000 - RIGHT OF WAY FENCE
- (T) ITEM 501001 - 8″ PORTLAND CEMENT CONCRETE
- (U) ITEM 733002 - TOPSOILING, 6″ DEPTH
ITEM 734013 - PERMANENT GRASS SEEDING, DRY GROUND
- (V) ITEM 733002 - TOPSOILING, 6″ DEPTH
ITEM 734013 - PERMANENT GRASS SEEDING, DRY GROUND
ITEM 735535 - SOIL RETENTION BLANKET MULCH, TYPE 5
- (W) ITEM 701016 - PCC CURB AND GUTTER, TYPE 1-4
- (X) ITEM 760017 - RUMBLE STRIPS, CONCRETE
- (Y) ITEM 705001 - PCC SIDEWALK, 4″
- (AA) ITEM 720626 - CONCRETE SINGLE FACE BARRIER, TYPE 1
- (BB) ITEM 760507 - PROFILE MILLING, HOT-MIX
- (CC) ITEM 401824 - WMA, SUPERPAVE, TYPE C, 160 GYRATIONS, PG 64-22, WEDGE
- (DD) ITEM 733001 - TOPSOILING, 4″ DEPTH
ITEM 734013 - PERMANENT GRASS SEEDING, DRY GROUND
- (EE) ITEM 713002 - GEOTEXTILE, SEPARATION
- (FF) ITEM 701013 - PCC CURB, TYPE 1-2

NOTES:

1. THE MAXIMUM ALGEBRAIC DIFFERENCE ON THE HIGH SIDE BETWEEN THE TRAVELED WAY SLOPE AND THE ACCEL/DECEL LANES SHALL NOT EXCEED 4%. THE MAXIMUM ALGEBRAIC DIFFERENCE BETWEEN THE TRAVELED WAY SLOPE AND THE SHOULDER SLOPE SHALL NOT EXCEED 8%.
2. SHOULDER SLOPE ON THE LOW SIDE SHALL BE THE SAME AS THE TRAVELED WAY SLOPE WHEN SUPERELEVATION IS GREATER THAN 4%.
3. SEE GRADES AND GEOMETRICS SHEETS FOR SUPERELEVATED CROSS SLOPE TRANSITIONS.
4. SEE SHEET TS-43 FOR UNDERDRAIN DETAIL.
SEE CONSTRUCTION PLANS FOR PLACEMENT LOCATIONS.
5. PGA - POINT OF GRADE APPLICATION
PDGA - POINT OF DITCH GRADE APPLICATION
P/R - POINT OF ROTATION
P.G.L. - POINT OF GRADE LINE
6. THE MAXIMUM LIFTS FOR THE INDIVIDUAL PAVING MATERIALS ARE AS FOLLOWS:
SUPERPAVE, TYPE C WMA - 2″
SUPERPAVE, TYPE B WMA - 3″
SUPERPAVE BIT. CONC. BASE COURSE - 4″
GRADED AGGREGATE BASE COURSE - 8″
7. SUPERPAVE, TYPE B HOT-MIX SHALL BE PLACED IN TWO EQUAL LIFTS, WHEN THICKNESS EXCEEDS 3″.
8. SEE SHEET DT-01 FOR RUMBLE STRIP LOCATIONS.
9. SEE SHEET DT-12 FOR SAFETY EDGE DETAILS. THESE DETAILS SHALL BE APPLIED AT ALL INSTANCES WHERE THE EDGE OF PROPOSED PAVEMENT MEETS THE 6″ TOPSOIL.
10. ON THE HIGH SIDE OF THE SUPERELEVATED MEDIAN SECTION THE BOTTOM OF BORROW TYPE A SHALL FOLLOW THE SUPERELEVATION RATE FOR THE ROADWAY EXTENDED UNTIL IT INTERSECTS WITH EITHER THE BOTTOM OF TOPSOIL FOR THE MEDIAN SIDESLOPES OR IT INTERSECTS WITH THE CONSTRUCTION BASELINE. ON THE LOW SIDE OF THE SUPERELEVATED MEDIAN SECTION THE BOTTOM OF BORROW TYPE A SHALL BE CONSTRUCTED FROM THE POINT IN WHICH THE EXTENDED SUPERELEVATION SLOPE (e) INTERSECTS THE CONSTRUCTION BASELINE TO THE GRADE BREAK AT THE INSIDE EDGE OF TRAVELED WAY.
11. FOR INTERFACE BETWEEN MOMENT SLAB AND ROADWAY PAVEMENT AND APPROACH SLAB AND ROADWAY PAVEMENT, SEE STRUCTURAL DETAILS.
12. SEE SHEET DT-15 FOR DETAILS OF CONSTRUCTING PROPOSED EARTH BERM.

(1) TRANSITION SLOPE FROM 2.2% AT STA. 917+89 TO -4% AT STA. 919+15

(2) TRANSITION SLOPE FROM -2.2% AT STA. 917+25 TO -4% AT STA. 917+82

(3) TRANSITION WIDTH FROM 8.96′ AT STA. 917+94 TO 10.24′ AT STA. 918+20
TRANSITION WIDTH FROM 10.24′ AT STA. 918+20 TO 4.00′ AT STA. 918+82

(4) TRANSITION WIDTH FROM 5.11′ AT STA. 917+50 TO 4.00′ AT STA. 917+63
TRANSITION WIDTH FROM 4.00′ AT STA. 919+95 TO 7.09′ AT STA. 920+16

(5) TRANSITION SLOPE FROM 2:1 AT STA. 918+39 TO 3:1 AT STA. 918+63

HYETTS CORNER ROAD SUPERELEVATED SECTION
STATION 917+32 TO STATION 920+86 ($e_{max.}$=2.2%)

TS-35

DELAWARE DEPARTMENT OF TRANSPORTATION	ADDENDUMS / REVISIONS	NOT TO SCALE	US 301, SR 896 TO SR 1	CONTRACT T200911308 / COUNTY NEW CASTLE	BRIDGE NO. / DESIGNED BY: K.A.H. / CHECKED BY: B.R.T.	TYPICAL SECTIONS	SHEET NO. 51 / TOTAL SHTS. 875

N:\31653-000\Contract 1A\CADD\TS035U301_1A.dgn
11/3/2014 3:14:45 PM

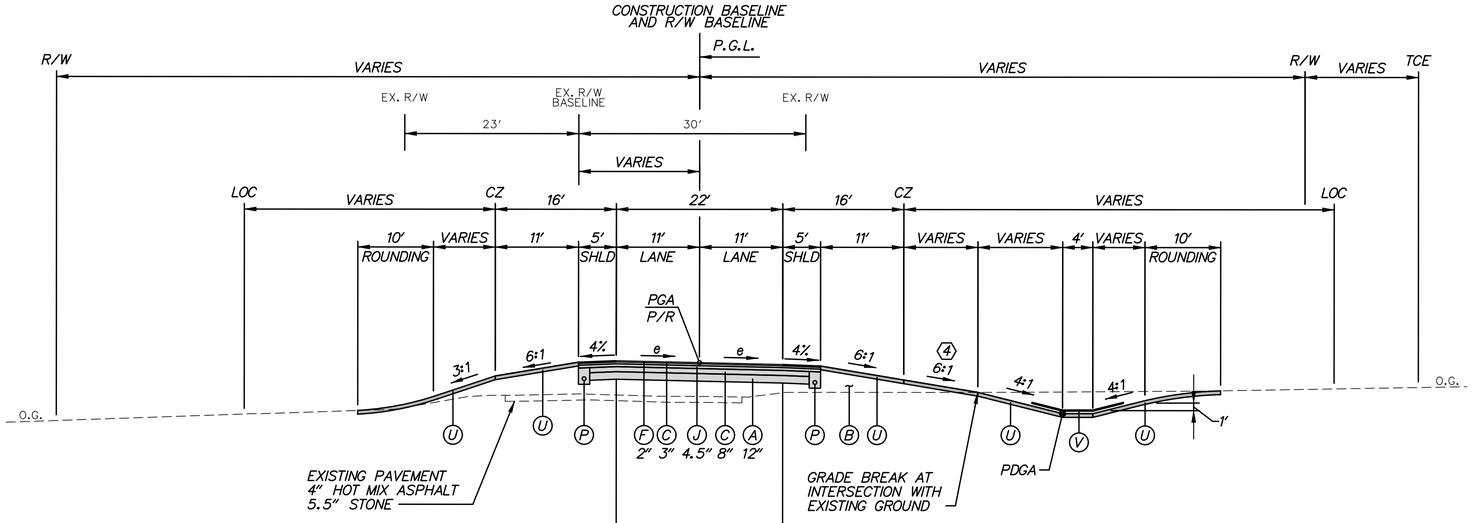

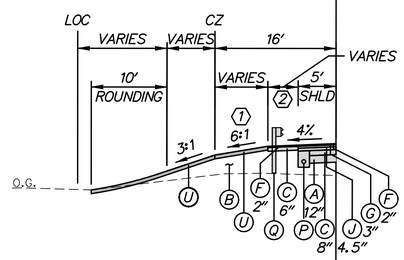

STA. 920+86 TO STA. 921+87

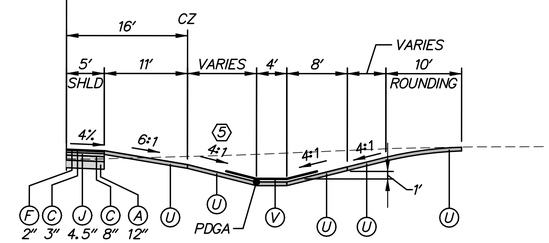

STA. 923+38 TO STA. 927+75

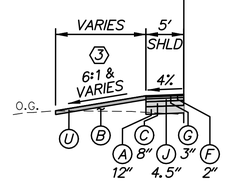

STA. 923+38 TO STA. 927+75

HYETTS CORNER ROAD SUPERELEVATED SECTION
STATION 920+86 TO STATION 927+75 ($e_{max.}$=2.2%)

(1) TRANSITION SLOPE FROM 4.0% AT STA. 920+86 TO 6:1 AT STA. 921+11.

(2) SEE DELDOT STANDARD CONSTRUCTION DETAIL, B-2 - GRADING FOR GUARDRAIL END TREATMENT ATTENUATOR TYPE 1.

(3) TIE INTO EXISTING DITCH BOTTOM FROM STA. 924+35 TO STA. 925+69 & STA. 925+92 TO STA. 926+60. TIE INTO EXISTING DRIVEWAY FROM STA. 925+69 TO STA. 925+92.

(4) HOLD 4:1 SLOPE FROM STA. 920+86 TO STA. 922+45. TRANSITION SLOPE FROM 4:1 AT STA. 922+45 TO 6:1 AT STA. 922+70.

(5) TRANSITION SLOPE FROM 4:1 AT STA. 923+90 TO 6:1 AT STA. 924+15. HOLD 6:1 SLOPE FROM STA. 924+15 TO STA. 927+75.

LEGEND

- (A) ITEM 209001 - BORROW, TYPE A
- (B) ITEM 209006 - BORROW, TYPE F
- (C) ITEM 302007 - GRADED AGGREGATE BASE COURSE, TYPE B
- (D) ITEM 304501 - PERMEABLE TREATED BASE, 4"
- (E) ITEM 304502 - SOIL CEMENT BASE COURSE, 6"
- (F) ITEM 401801 - WMA, SUPERPAVE, TYPE C, 160 GYRATIONS, PG 64-22
- (G) ITEM 401810 - WMA, SUPERPAVE, TYPE B, 160 GYRATIONS, PG 64-22
- (J) ITEM 401819 - WMA, SUPERPAVE, BITUMINOUS CONCRETE BASE COURSE, 160 GYRATIONS, PG 64-22
- (K) ITEM 501006 - PORTLAND CEMENT CONCRETE PAVEMENT, 12"
- (L) ITEM 701010 - PCC CURB, TYPE 1-8
- (N) ITEM 701022 - PCC CURB AND GUTTER, TYPE 3-8
- (P) ITEM 715001 - PERFORATED PIPE UNDERDRAINS, 6"
- (Q) ITEM 720050 - GALVANIZED STEEL BEAM GUARDRAIL, TYPE 1-31
- (R) ITEM 720052 - GALVANIZED STEEL BEAM GUARDRAIL, TYPE 3-31
- (S) ITEM 727000 - RIGHT OF WAY FENCE
- (T) ITEM 501001 - 8" PORTLAND CEMENT CONCRETE
- (U) ITEM 733002 - TOPSOILING, 6" DEPTH
ITEM 734013 - PERMANENT GRASS SEEDING, DRY GROUND
- (V) ITEM 733002 - TOPSOILING, 6" DEPTH
ITEM 734013 - PERMANENT GRASS SEEDING, DRY GROUND
ITEM 735535 - SOIL RETENTION BLANKET MULCH, TYPE 5
- (W) ITEM 701016 - PCC CURB AND GUTTER, TYPE 1-4
- (X) ITEM 760017 - RUMBLE STRIPS, CONCRETE
- (Y) ITEM 705001 - PCC SIDEWALK, 4"
- (AA) ITEM 720626 - CONCRETE SINGLE FACE BARRIER, TYPE 1
- (BB) ITEM 760507 - PROFILE MILLING, HOT-MIX
- (CC) ITEM 401824 - WMA, SUPERPAVE, TYPE C, 160 GYRATIONS, PG 64-22, WEDGE
- (DD) ITEM 733001 - TOPSOILING, 4" DEPTH
ITEM 734013 - PERMANENT GRASS SEEDING, DRY GROUND
- (EE) ITEM 713002 - GEOTEXTILE, SEPARATION
- (FF) ITEM 701013 - PCC CURB, TYPE 1-2

NOTES:

1. THE MAXIMUM ALGEBRAIC DIFFERENCE ON THE HIGH SIDE BETWEEN THE TRAVELED WAY SLOPE AND THE ACCEL/DECEL LANES SHALL NOT EXCEED 4%. THE MAXIMUM ALGEBRAIC DIFFERENCE BETWEEN THE TRAVELED WAY SLOPE AND THE SHOULDER SLOPE SHALL NOT EXCEED 8%.
2. SHOULDER SLOPE ON THE LOW SIDE SHALL BE THE SAME AS THE TRAVELED WAY SLOPE WHEN SUPERELEVATION IS GREATER THAN 4%.
3. SEE GRADES AND GEOMETRICS SHEETS FOR SUPERELEVATED CROSS SLOPE TRANSITIONS.
4. SEE SHEET TS-43 FOR UNDERDRAIN DETAIL.
SEE CONSTRUCTION PLANS FOR PLACEMENT LOCATIONS.
5. PGA - POINT OF GRADE APPLICATION
PDGA - POINT OF DITCH GRADE APPLICATION
P/R - POINT OF ROTATION
P.G.L. - POINT OF GRADE LINE
6. THE MAXIMUM LIFTS FOR THE INDIVIDUAL PAVING MATERIALS ARE AS FOLLOWS:
SUPERPAVE, TYPE C WMA - 2"
SUPERPAVE, TYPE B WMA - 3"
SUPERPAVE BIT. CONC. BASE COURSE - 4"
GRADED AGGREGATE BASE COURSE - 8"
7. SUPERPAVE, TYPE B HOT-MIX SHALL BE PLACED IN TWO EQUAL LIFTS, WHEN THICKNESS EXCEEDS 3".
8. SEE SHEET DT-01 FOR RUMBLE STRIP LOCATIONS.
9. SEE SHEET DT-12 FOR SAFETY EDGE DETAILS. THESE DETAILS SHALL BE APPLIED AT ALL INSTANCES WHERE THE EDGE OF PROPOSED PAVEMENT MEETS THE 6" TOPSOIL.
10. ON THE HIGH SIDE OF THE SUPERELEVATED MEDIAN SECTION THE BOTTOM OF BORROW TYPE A SHALL FOLLOW THE SUPERELEVATION RATE FOR THE ROADWAY EXTENDED UNTIL IT INTERSECTS WITH EITHER THE BOTTOM OF TOPSOIL FOR THE MEDIAN SIDESLOPES OR IT INTERSECTS WITH THE CONSTRUCTION BASELINE. ON THE LOW SIDE OF THE SUPERELEVATED MEDIAN SECTION THE BOTTOM OF BORROW TYPE A SHALL BE CONSTRUCTED FROM THE POINT IN WHICH THE EXTENDED SUPERELEVATION SLOPE (e) INTERSECTS THE CONSTRUCTION BASELINE TO THE GRADE BREAK AT THE INSIDE EDGE OF TRAVELED WAY.
11. FOR INTERFACE BETWEEN MOMENT SLAB AND ROADWAY PAVEMENT AND APPROACH SLAB AND ROADWAY PAVEMENT, SEE STRUCTURAL DETAILS.
12. SEE SHEET DT-15 FOR DETAILS OF CONSTRUCTING PROPOSED EARTH BERM.

N:\31653-000\Contract 1A\CADD\TS0360J01_1A.dgn
11/3/2014 3:15:21 PM

DELAWARE DEPARTMENT OF TRANSPORTATION	ADDENDUMS / REVISIONS	NOT TO SCALE	US 301, SR 896 TO SR 1	CONTRACT T200911308	BRIDGE NO.	TYPICAL SECTIONS	TS-36
				COUNTY NEW CASTLE	DESIGNED BY: K.A.H.		SHEET NO. 52
					CHECKED BY: B.R.T.		TOTAL SHTS. 875

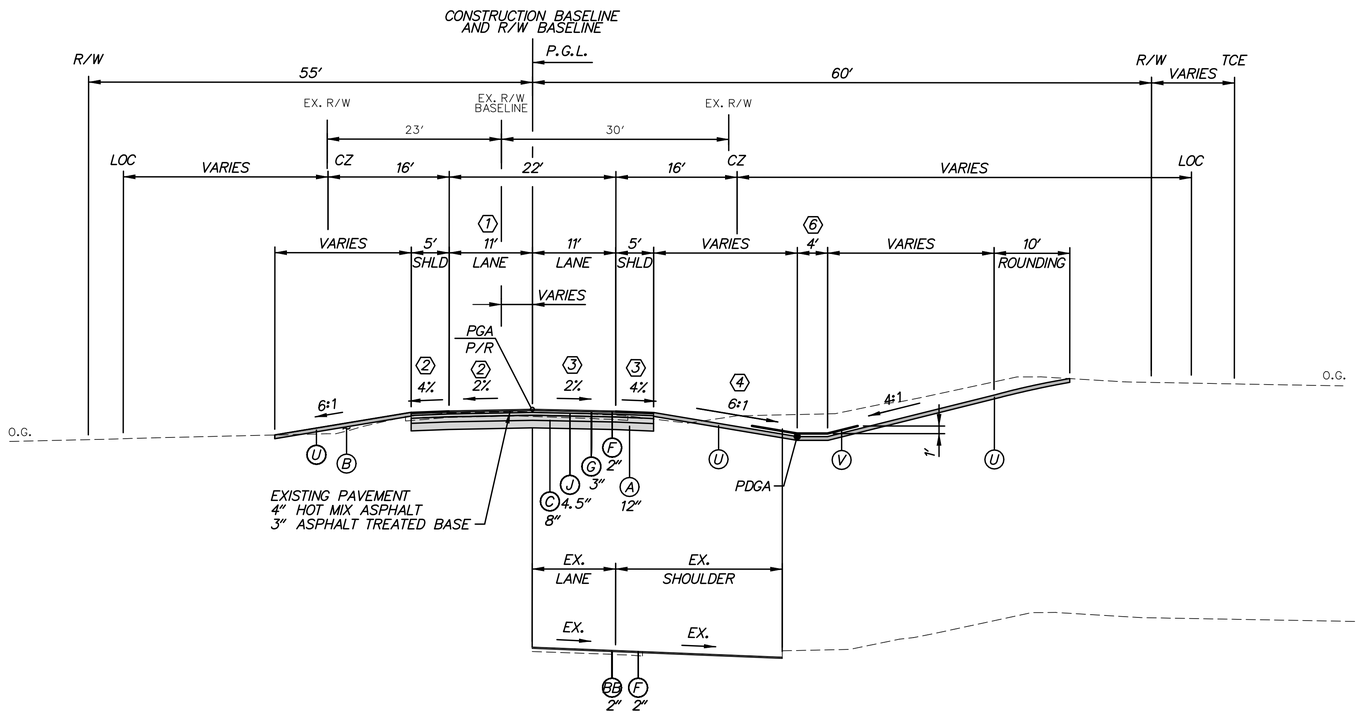

STA. 929+90 TO STA. 930+25

HYETTS CORNER ROAD NORMAL SECTION
STATION 927+75 TO STATION 930+25

(1) TRANSITION WIDTH FROM 11' AT STA. 929+90 TO EXISTING AT STA. 930+25.

(2) TRANSITION SLOPE FROM NORMAL AT STA. 929+90 TO EXISTING AT STA. 930+25.

(3) TRANSITION SLOPE FROM NORMAL AT STA. 929+54 TO EXISTING STA. 929+90.

(4) TRANSITION SLOPE FROM 6:1 AT STA. 929+45 TO TIE INTO EXISTING DITCH ELEVATION AT STA. 930+00.

LEGEND

- (A) ITEM 209001 - BORROW, TYPE A
- (B) ITEM 209006 - BORROW, TYPE F
- (C) ITEM 302007 - GRADED AGGREGATE BASE COURSE, TYPE B
- (D) ITEM 304501 - PERMEABLE TREATED BASE, 4"
- (E) ITEM 304502 - SOIL CEMENT BASE COURSE, 6"
- (F) ITEM 401801 - WMA, SUPERPAVE, TYPE C, 160 GYRATIONS, PG 64-22
- (G) ITEM 401810 - WMA, SUPERPAVE, TYPE B, 160 GYRATIONS, PG 64-22
- (J) ITEM 401819 - WMA, SUPERPAVE, BITUMINOUS CONCRETE BASE COURSE, 160 GYRATIONS, PG 64-22
- (K) ITEM 501006 - PORTLAND CEMENT CONCRETE PAVEMENT, 12"
- (L) ITEM 701010 - PCC CURB, TYPE 1-8
- (N) ITEM 701022 - PCC CURB AND GUTTER, TYPE 3-8
- (P) ITEM 715001 - PERFORATED PIPE UNDERDRAINS, 6"
- (Q) ITEM 720050 - GALVANIZED STEEL BEAM GUARDRAIL, TYPE 1-31
- (R) ITEM 720052 - GALVANIZED STEEL BEAM GUARDRAIL, TYPE 3-31
- (S) ITEM 727000 - RIGHT OF WAY FENCE
- (T) ITEM 501001 - 8" PORTLAND CEMENT CONCRETE
- (U) ITEM 733002 - TOPSOILING, 6" DEPTH
  ITEM 734013 - PERMANENT GRASS SEEDING, DRY GROUND
- (V) ITEM 733002 - TOPSOILING, 6" DEPTH
  ITEM 734013 - PERMANENT GRASS SEEDING, DRY GROUND
  ITEM 735535 - SOIL RETENTION BLANKET MULCH, TYPE 5
- (W) ITEM 701016 - PCC CURB AND GUTTER, TYPE 1-4
- (X) ITEM 760017 - RUMBLE STRIPS, CONCRETE
- (Y) ITEM 705001 - PCC SIDEWALK, 4"
- (AA) ITEM 720626 - CONCRETE SINGLE FACE BARRIER, TYPE 1
- (BB) ITEM 760507 - PROFILE MILLING, HOT-MIX
- (CC) ITEM 401824 - WMA, SUPERPAVE, TYPE C, 160 GYRATIONS, PG 64-22, WEDGE
- (DD) ITEM 733001 - TOPSOILING, 4" DEPTH
  ITEM 734013 - PERMANENT GRASS SEEDING, DRY GROUND
- (EE) ITEM 713002 - GEOTEXTILE, SEPARATION
- (FF) ITEM 701013 - PCC CURB, TYPE 1-2

NOTES:

1. THE MAXIMUM ALGEBRAIC DIFFERENCE ON THE HIGH SIDE BETWEEN THE TRAVELED WAY SLOPE AND THE ACCEL/DECEL LANES SHALL NOT EXCEED 4%. THE MAXIMUM ALGEBRAIC DIFFERENCE BETWEEN THE TRAVELED WAY SLOPE AND THE SHOULDER SLOPE SHALL NOT EXCEED 8%.
2. SHOULDER SLOPE ON THE LOW SIDE SHALL BE THE SAME AS THE TRAVELED WAY SLOPE WHEN SUPERELEVATION IS GREATER THAN 4%.
3. SEE GRADES AND GEOMETRICS SHEETS FOR SUPERELEVATED CROSS SLOPE TRANSITIONS.
4. SEE SHEET TS-43 FOR UNDERDRAIN DETAIL.
   SEE CONSTRUCTION PLANS FOR PLACEMENT LOCATIONS.
5. PGA - POINT OF GRADE APPLICATION
   PDGA - POINT OF DITCH GRADE APPLICATION
   P/R - POINT OF ROTATION
   P.G.L. - POINT OF GRADE LINE
6. THE MAXIMUM LIFTS FOR THE INDIVIDUAL PAVING MATERIALS ARE AS FOLLOWS:
   SUPERPAVE, TYPE C WMA - 2"
   SUPERPAVE, TYPE B WMA - 3"
   SUPERPAVE BIT. CONC. BASE COURSE - 4"
   GRADED AGGREGATE BASE COURSE - 8"
7. SUPERPAVE, TYPE B HOT-MIX SHALL BE PLACED IN TWO EQUAL LIFTS, WHEN THICKNESS EXCEEDS 3".
8. SEE SHEET DT-01 FOR RUMBLE STRIP LOCATIONS.
9. SEE SHEET DT-12 FOR SAFETY EDGE DETAILS. THESE DETAILS SHALL BE APPLIED AT ALL INSTANCES WHERE THE EDGE OF PROPOSED PAVEMENT MEETS THE 6" TOPSOIL.
10. ON THE HIGH SIDE OF THE SUPERELEVATED MEDIAN SECTION THE BOTTOM OF BORROW TYPE A SHALL FOLLOW THE SUPERELEVATION RATE FOR THE ROADWAY EXTENDED UNTIL IT INTERSECTS WITH EITHER THE BOTTOM OF TOPSOIL FOR THE MEDIAN SIDESLOPES OR IT INTERSECTS WITH THE CONSTRUCTION BASELINE. ON THE LOW SIDE OF THE SUPERELEVATED MEDIAN SECTION THE BOTTOM OF BORROW TYPE A SHALL BE CONSTRUCTED FROM THE POINT IN WHICH THE EXTENDED SUPERELEVATION SLOPE (e) INTERSECTS THE CONSTRUCTION BASELINE TO THE GRADE BREAK AT THE INSIDE EDGE OF TRAVELED WAY.
11. FOR INTERFACE BETWEEN MOMENT SLAB AND ROADWAY PAVEMENT AND APPROACH SLAB AND ROADWAY PAVEMENT, SEE STRUCTURAL DETAILS.
12. SEE SHEET DT-15 FOR DETAILS OF CONSTRUCTING PROPOSED EARTH BERM.

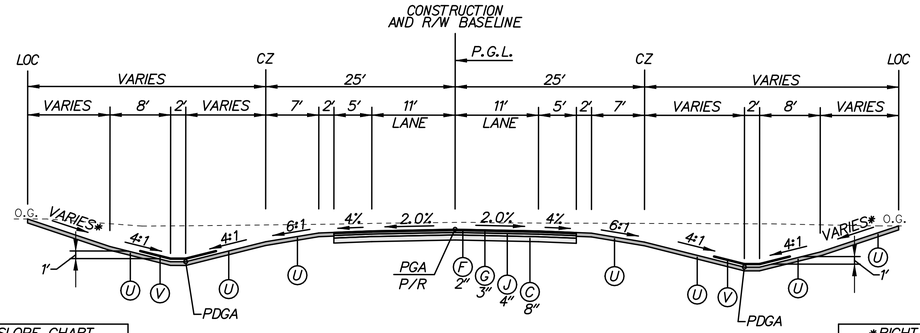

*LEFT CUT SLOPE CHART	
STATION	SLOPE
208+55 TO 208+75	4:1
208+75 TO 209+00	4:1 TO 3:1
209+00 TO 212+50	3:1
212+50 TO 212+75	3:1 TO 4:1
212+75 TO 215+92	4:1

RUNAROUND ROAD NORMAL SECTION
STATION 208+55 TO STATION 215+92

*RIGHT CUT SLOPE CHART	
STATION	SLOPE
208+55 TO 208+75	4:1
208+75 TO 209+00	4:1 TO 3:1
209+00 TO 212+50	3:1
212+50 TO 212+75	3:1 TO 4:1
212+75 TO 215+92	4:1

NOTES:

1. THE MAXIMUM ALGEBRAIC DIFFERENCE ON THE HIGH SIDE BETWEEN THE TRAVELED WAY SLOPE AND THE ACCEL/DECEL LANES SHALL NOT EXCEED 4%. THE MAXIMUM ALGEBRAIC DIFFERENCE BETWEEN THE TRAVELED WAY SLOPE AND THE SHOULDER SLOPE SHALL NOT EXCEED 8%.
2. SHOULDER SLOPE ON THE LOW SIDE SHALL BE THE SAME AS THE TRAVELED WAY SLOPE WHEN SUPERELEVATION IS GREATER THAN 4%.
3. SEE GRADES AND GEOMETRICS SHEETS FOR SUPERELEVATED CROSS SLOPE TRANSITIONS.
4. SEE SHEET TS-43 FOR UNDERDRAIN DETAIL. SEE CONSTRUCTION PLANS FOR PLACEMENT LOCATIONS.
5. PGA - POINT OF GRADE APPLICATION
   PDGA - POINT OF DITCH GRADE APPLICATION
   P/R - POINT OF ROTATION
   P.G.L. - POINT OF GRADE LINE
6. THE MAXIMUM LIFTS FOR THE INDIVIDUAL PAVING MATERIALS ARE AS FOLLOWS:
   SUPERPAVE, TYPE C WMA - 2"
   SUPERPAVE, TYPE B WMA - 3"
   SUPERPAVE BIT. CONC. BASE COURSE - 4"
   GRADED AGGREGATE BASE COURSE - 8"
7. SUPERPAVE, TYPE B HOT-MIX SHALL BE PLACED IN TWO EQUAL LIFTS, WHEN THICKNESS EXCEEDS 3".
8. SEE SHEET DT-01 FOR RUMBLE STRIP LOCATIONS.
9. SEE SHEET DT-12 FOR SAFETY EDGE DETAILS. THESE DETAILS SHALL BE APPLIED AT ALL INSTANCES WHERE THE EDGE OF PROPOSED PAVEMENT MEETS THE 6" TOPSOIL.
10. ON THE HIGH SIDE OF THE SUPERELEVATED MEDIAN SECTION THE BOTTOM OF BORROW TYPE A SHALL FOLLOW THE SUPERELEVATION RATE FOR THE ROADWAY EXTENDED UNTIL IT INTERSECTS WITH EITHER THE BOTTOM OF TOPSOIL FOR THE MEDIAN SIDESLOPES OR IT INTERSECTS WITH THE CONSTRUCTION BASELINE. ON THE LOW SIDE OF THE SUPERELEVATED MEDIAN SECTION THE BOTTOM OF BORROW TYPE A SHALL BE CONSTRUCTED FROM THE POINT IN WHICH THE EXTENDED SUPERELEVATION SLOPE (e) INTERSECTS THE CONSTRUCTION BASELINE TO THE GRADE BREAK AT THE INSIDE EDGE OF TRAVELED WAY.
11. FOR INTERFACE BETWEEN MOMENT SLAB AND ROADWAY PAVEMENT AND APPROACH SLAB AND ROADWAY PAVEMENT, SEE STRUCTURAL DETAILS.
12. SEE SHEET DT-15 FOR DETAILS OF CONSTRUCTING PROPOSED EARTH BERM.

LEGEND

- (A) ITEM 209001 - BORROW, TYPE A
- (B) ITEM 209006 - BORROW, TYPE F
- (C) ITEM 302007 - GRADED AGGREGATE BASE COURSE, TYPE B
- (D) ITEM 304501 - PERMEABLE TREATED BASE, 4"
- (E) ITEM 304502 - SOIL CEMENT BASE COURSE, 6"
- (F) ITEM 401801 - WMA, SUPERPAVE, TYPE C, 160 GYRATIONS, PG 64-22
- (G) ITEM 401810 - WMA, SUPERPAVE, TYPE B, 160 GYRATIONS, PG 64-22
- (J) ITEM 401819 - WMA, SUPERPAVE, BITUMINOUS CONCRETE BASE COURSE, 160 GYRATIONS, PG 64-22
- (K) ITEM 501006 - PORTLAND CEMENT CONCRETE PAVEMENT, 12"
- (L) ITEM 701010 - PCC CURB, TYPE 1-8
- (N) ITEM 701022 - PCC CURB AND GUTTER, TYPE 3-8
- (P) ITEM 715001 - PERFORATED PIPE UNDERDRAINS, 6"
- (Q) ITEM 720050 - GALVANIZED STEEL BEAM GUARDRAIL, TYPE 1-31
- (R) ITEM 720052 - GALVANIZED STEEL BEAM GUARDRAIL, TYPE 3-31
- (S) ITEM 727000 - RIGHT OF WAY FENCE
- (T) ITEM 501001 - 8" PORTLAND CEMENT CONCRETE
- (U) ITEM 733002 - TOPSOILING, 6" DEPTH
  ITEM 734013 - PERMANENT GRASS SEEDING, DRY GROUND
- (V) ITEM 733002 - TOPSOILING, 6" DEPTH
  ITEM 734013 - PERMANENT GRASS SEEDING, DRY GROUND
  ITEM 735535 - SOIL RETENTION BLANKET MULCH, TYPE 5
- (W) ITEM 701016 - PCC CURB AND GUTTER, TYPE 1-4
- (X) ITEM 760017 - RUMBLE STRIPS, CONCRETE
- (Y) ITEM 705001 - PCC SIDEWALK, 4"
- (AA) ITEM 720626 - CONCRETE SINGLE FACE BARRIER, TYPE 1
- (BB) ITEM 760507 - PROFILE MILLING, HOT-MIX
- (CC) ITEM 401824 - WMA, SUPERPAVE, TYPE C, 160 GYRATIONS, PG 64-22, WEDGE
- (DD) ITEM 733001 - TOPSOILING, 4" DEPTH
  ITEM 734013 - PERMANENT GRASS SEEDING, DRY GROUND
- (EE) ITEM 713002 - GEOTEXTILE, SEPARATION
- (FF) ITEM 701013 - PCC CURB, TYPE 1-2

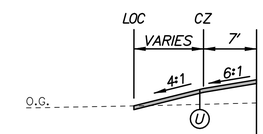

STA. 226+25 TO STA. 227+33, LT.

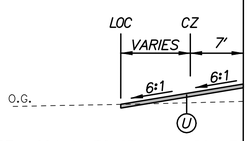

STA. 204+99 TO STA. 206+50, LT.

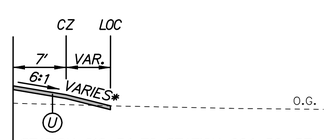

STATION 216+34 TO STATION 224+50, RT.

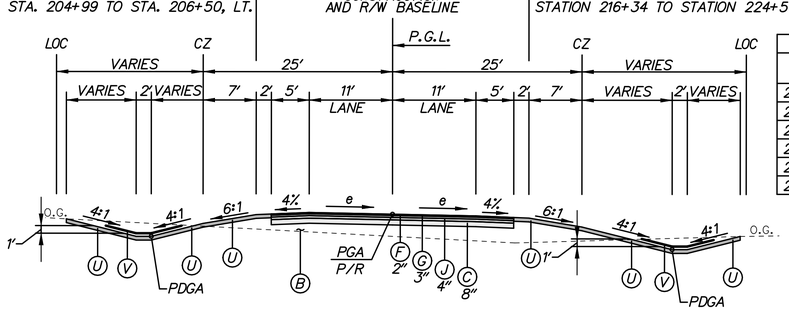

*RIGHT FILL SLOPE CHART	
STATION	SLOPE
216+34 TO 219+25	4:1
219+25 TO 219+50	4:1 TO 6:1
219+50 TO 221+50	6:1
221+50 TO 221+75	6:1 TO 4:1
221+75 TO 224+50	4:1
227+45 TO 227+33	4:1

RUNAROUND ROAD SUPERELEVATED SECTION
STATION 204+99 TO STATION 206+46 (emax=2.0%)
STATION 215+92 TO STATION 224+55 (emax=-3.4%)
STATION 225+05 TO STATION 227+33 (emax=4.2%)

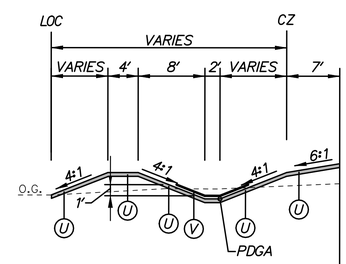

STA. 206+50 TO STA. 208+15, LT.

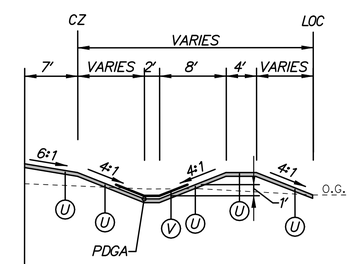

STA. 207+50 TO STA. 208+32, RT.

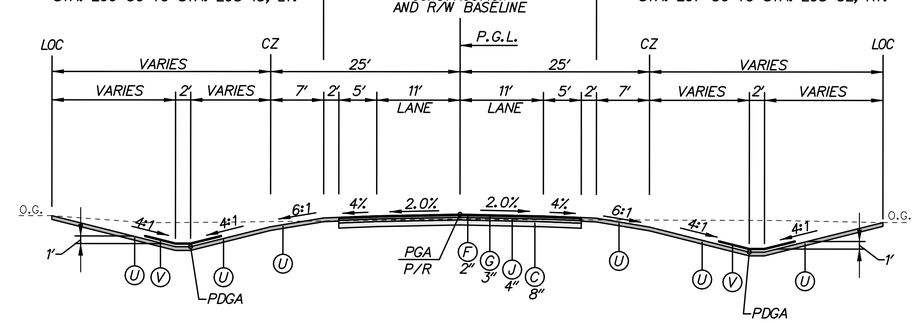

RUNAROUND ROAD NORMAL SECTION
STATION 206+46 TO STATION 208+55
STATION 224+55 TO STATION 225+05

N:\31653-000\CONTRACT 1A\CADD\TS038U301_1A.dgn
11/4/2014 8:39:53 AM

DELAWARE DEPARTMENT OF TRANSPORTATION	ADDENDUMS / REVISIONS	NOT TO SCALE	US 301, SR 896 TO SR 1	CONTRACT T200911308	BRIDGE NO.	TYPICAL SECTIONS
				COUNTY NEW CASTLE	DESIGNED BY: K.A.H.	
					CHECKED BY: B.R.T.	

TS-39

SHEET NO.
54
TOTAL SHTS.
875

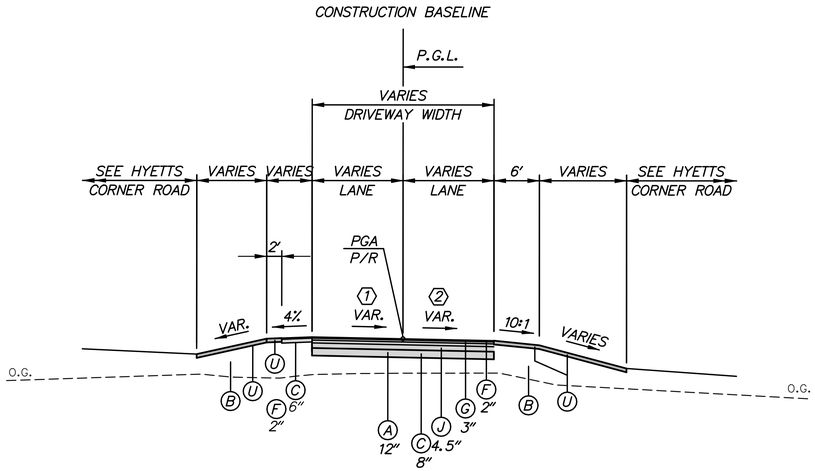

ANGELO DRIVE
STATION 451+14 TO 451+34

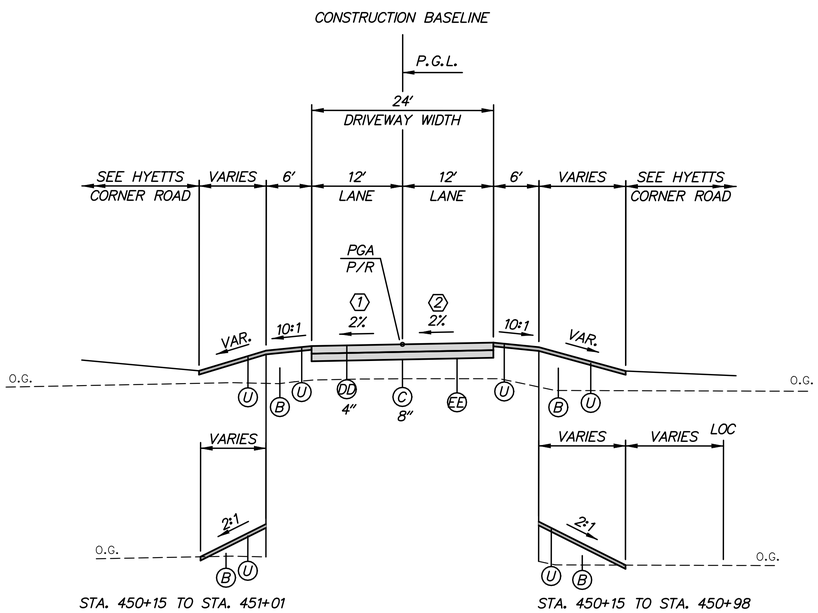

ANGELO DRIVE
STATION 450+15 TO 451+14

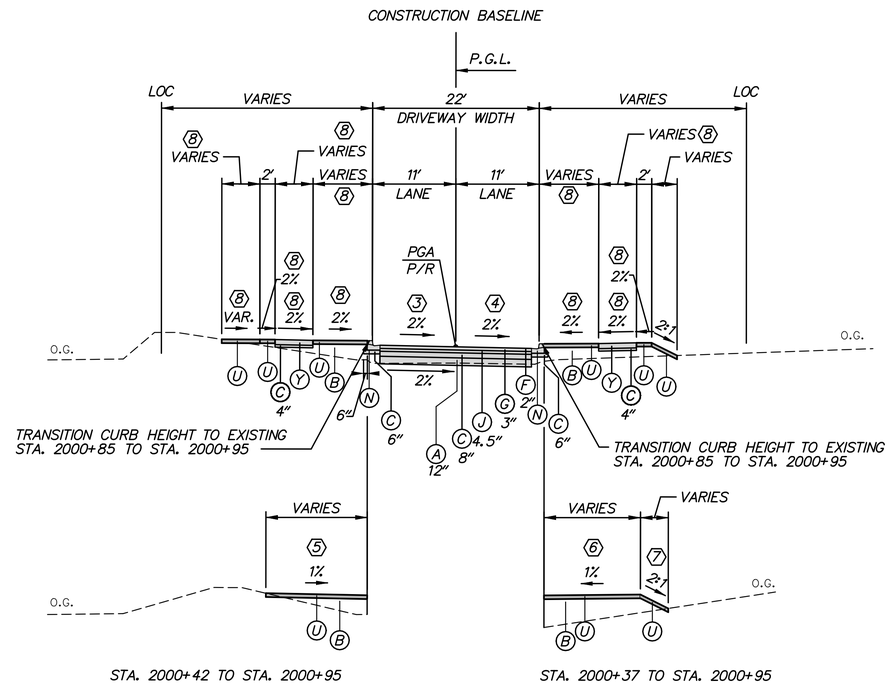

HIGH SCHOOL DRIVEWAY
STATION 2000+22 TO 2000+95

(1) TRANSITION SLOPE FROM EX. TO -2% STA. 450+15 TO STA. 450+30.
TRANSITION SLOPE FROM -2.0% TO +2.72% STA. 450+61 TO STA. 451+34.

(2) TRANSITION SLOPE FROM EX. TO +2% STA. 450+15 TO STA. 450+30.
TRANSITION SLOPE FROM +2.0% TO -2.72% STA. 450+61 TO STA. 451+34.

(3) HOLD SLOPE -0.38% FROM STA. 2000+22 TO STA. 2000+25.
TRANSITION SLOPE FROM -0.38% TO +2.0% STA. 2000+25 TO STA. 2000+40.
TRANSITION SLOPE FROM +2.0% TO EX. STA. 2000+85 TO STA. 2000+95

(4) HOLD SLOPE +0.80% FROM STA. 2000+22 TO STA. 2000+25.
TRANSITION SLOPE FROM +0.80% TO -2.0% STA. 2000+25 TO STA. 2000+40.
TRANSITION SLOPE FROM -2.0% TO EX. STA. 2000+75 TO STA. 2000+95

(5) TRANSITION SLOPE FROM +1.0% TO EX. STA. 2000+85 TO STA. 2000+95.

(6) TRANSITION SLOPE FROM +2.0% TO +1.0% STA. 2000+37 TO STA. 2000+50.
TRANSITION SLOPE FROM +1.0% TO EX. STA. 2000+85 TO STA. 2000+95.

(7) TRANSITION SLOPE FROM -2:1 TO +1.0% STA. 2000+37 TO STA. 2000+50.
HOLD SLOPE +1.05 FROM STA. 2000+50 TO 2000+95.

(8) SEE GG-36 FOR ELEVATIONS AND COORDINATES.

LEGEND

- (A) ITEM 209001 - BORROW, TYPE A
- (B) ITEM 209006 - BORROW, TYPE F
- (C) ITEM 302007 - GRADED AGGREGATE BASE COURSE, TYPE B
- (D) ITEM 304501 - PERMEABLE TREATED BASE, 4"
- (E) ITEM 304502 - SOIL CEMENT BASE COURSE, 6"
- (F) ITEM 401801 - WMA, SUPERPAVE, TYPE C, 160 GYRATIONS, PG 64-22
- (G) ITEM 401810 - WMA, SUPERPAVE, TYPE B, 160 GYRATIONS, PG 64-22
- (J) ITEM 401819 - WMA, SUPERPAVE, BITUMINOUS CONCRETE BASE COURSE, 160 GYRATIONS, PG 64-22
- (K) ITEM 501006 - PORTLAND CEMENT CONCRETE PAVEMENT, 12"
- (L) ITEM 701010 - PCC CURB, TYPE 1-8
- (N) ITEM 701022 - PCC CURB AND GUTTER, TYPE 3-8
- (P) ITEM 715001 - PERFORATED PIPE UNDERDRAINS, 6"
- (Q) ITEM 720050 - GALVANIZED STEEL BEAM GUARDRAIL, TYPE 1-31
- (R) ITEM 720052 - GALVANIZED STEEL BEAM GUARDRAIL, TYPE 3-31
- (S) ITEM 727000 - RIGHT OF WAY FENCE
- (T) ITEM 501001 - 8" PORTLAND CEMENT CONCRETE
- (U) ITEM 733002 - TOPSOILING, 6" DEPTH
  ITEM 734013 - PERMANENT GRASS SEEDING, DRY GROUND
- (V) ITEM 733002 - TOPSOILING, 6" DEPTH
  ITEM 734013 - PERMANENT GRASS SEEDING, DRY GROUND
  ITEM 735535 - SOIL RETENTION BLANKET MULCH, TYPE 5
- (W) ITEM 701016 - PCC CURB AND GUTTER, TYPE 1-4
- (X) ITEM 760017 - RUMBLE STRIPS, CONCRETE
- (Y) ITEM 705001 - PCC SIDEWALK, 4"
- (AA) ITEM 720626 - CONCRETE SINGLE FACE BARRIER, TYPE 1
- (BB) ITEM 760507 - PROFILE MILLING, HOT-MIX
- (CC) ITEM 401824 - WMA, SUPERPAVE, TYPE C, 160 GYRATIONS, PG 64-22, WEDGE
- (DD) ITEM 733001 - TOPSOILING, 4" DEPTH
  ITEM 734013 - PERMANENT GRASS SEEDING, DRY GROUND
- (EE) ITEM 713002 - GEOTEXTILE, SEPARATION
- (FF) ITEM 701013 - PCC CURB, TYPE 1-2

NOTES:

1. THE MAXIMUM ALGEBRAIC DIFFERENCE ON THE HIGH SIDE BETWEEN THE TRAVELED WAY SLOPE AND THE ACCEL/DECEL LANES SHALL NOT EXCEED 4%. THE MAXIMUM ALGEBRAIC DIFFERENCE BETWEEN THE TRAVELED WAY SLOPE AND THE SHOULDER SLOPE SHALL NOT EXCEED 8%.
2. SHOULDER SLOPE ON THE LOW SIDE SHALL BE THE SAME AS THE TRAVELED WAY SLOPE WHEN SUPERELEVATION IS GREATER THAN 4%.
3. SEE GRADES AND GEOMETRICS SHEETS FOR SUPERELEVATED CROSS SLOPE TRANSITIONS.
4. SEE SHEET TS-43 FOR UNDERDRAIN DETAIL.
   SEE CONSTRUCTION PLANS FOR PLACEMENT LOCATIONS.
5. PGA - POINT OF GRADE APPLICATION
   PDGA - POINT OF DITCH GRADE APPLICATION
   P/R - POINT OF ROTATION
   P.G.L. - POINT OF GRADE LINE
6. THE MAXIMUM LIFTS FOR THE INDIVIDUAL PAVING MATERIALS ARE AS FOLLOWS:
   SUPERPAVE, TYPE C WMA - 2"
   SUPERPAVE, TYPE B WMA - 3"
   SUPERPAVE BIT. CONC. BASE COURSE - 4"
   GRADED AGGREGATE BASE COURSE - 8"
7. SUPERPAVE, TYPE B HOT-MIX SHALL BE PLACED IN TWO EQUAL LIFTS, WHEN THICKNESS EXCEEDS 3".
8. SEE SHEET DT-01 FOR RUMBLE STRIP LOCATIONS.
9. SEE SHEET DT-12 FOR SAFETY EDGE DETAILS. THESE DETAILS SHALL BE APPLIED AT ALL INSTANCES WHERE THE EDGE OF PROPOSED PAVEMENT MEETS THE 6" TOPSOIL.
10. ON THE HIGH SIDE OF THE SUPERELEVATED MEDIAN SECTION THE BOTTOM OF BORROW TYPE A SHALL FOLLOW THE SUPERELEVATION RATE FOR THE ROADWAY EXTENDED UNTIL IT INTERSECTS WITH EITHER THE BOTTOM OF TOPSOIL FOR THE MEDIAN SIDESLOPES OR IT INTERSECTS WITH THE CONSTRUCTION BASELINE. ON THE LOW SIDE OF THE SUPERELEVATED MEDIAN SECTION THE BOTTOM OF BORROW TYPE A SHALL BE CONSTRUCTED FROM THE POINT IN WHICH THE EXTENDED SUPERELEVATION SLOPE (e) INTERSECTS THE CONSTRUCTION BASELINE TO THE GRADE BREAK AT THE INSIDE EDGE OF TRAVELED WAY.
11. FOR INTERFACE BETWEEN MOMENT SLAB AND ROADWAY PAVEMENT AND APPROACH SLAB AND ROADWAY PAVEMENT, SEE STRUCTURAL DETAILS.
12. SEE SHEET DT-15 FOR DETAILS OF CONSTRUCTING PROPOSED EARTH BERM.

N:\31653-000\Contract 1A\CADD\TS039U301_1A.dgn
11/3/2014 2:45:35 PM

DELAWARE DEPARTMENT OF TRANSPORTATION	ADDENDUMS / REVISIONS	NOT TO SCALE	US 301, SR 896 TO SR 1	CONTRACT T200911308 / COUNTY NEW CASTLE	BRIDGE NO. / DESIGNED BY: S.E.S. / CHECKED BY: B.R.T.	TYPICAL SECTIONS

TS-39
SHEET NO. 55
TOTAL SHTS. 875

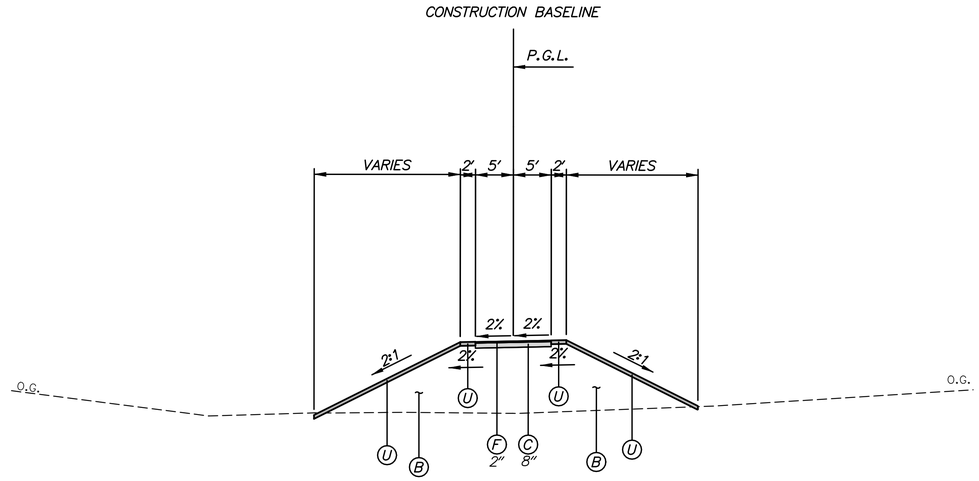

WINDSOR COMMONS PATH
STATION 2100+23 TO 2101+72

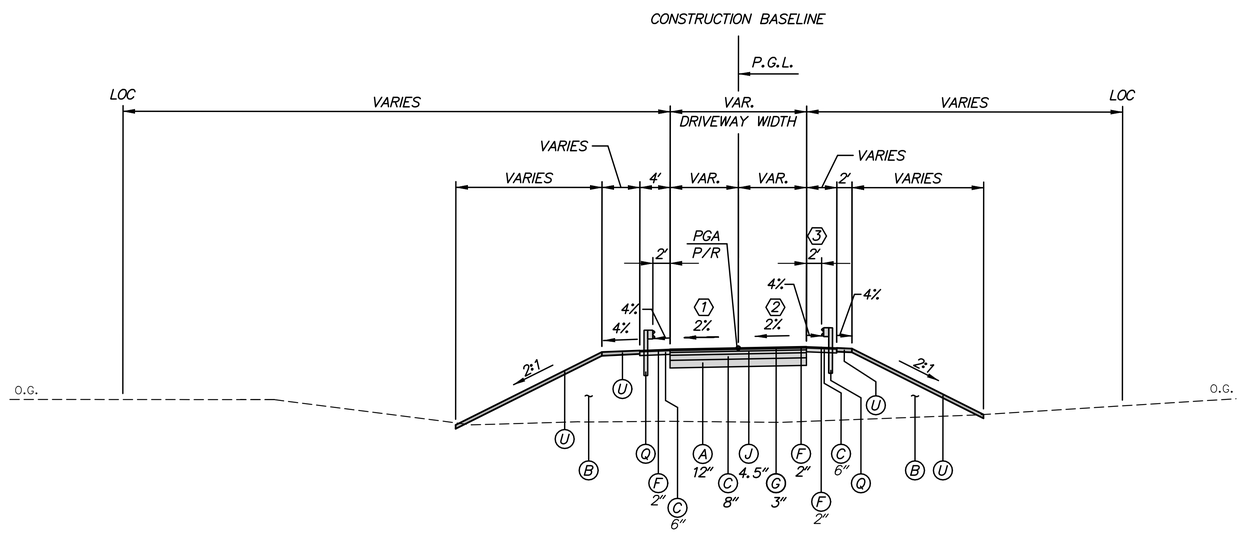

UTILITY ACCESS ROAD NORMAL SECTION
STATION 400+16 TO 400+46

(1) TRANSITION SLOPE FROM -2.62% TO -2% STA. 400+16 TO STA. 400+26.

(2) TRANSITION SLOPE FROM +2.62% TO +2% STA. 400+16 TO STA. 400+26.

(3) WIDTH VARIES 5' TO 2.28' STA. 400+16 TO STA. 400+46

LEGEND

- (A) ITEM 209001 - BORROW, TYPE A
- (B) ITEM 209006 - BORROW, TYPE F
- (C) ITEM 302007 - GRADED AGGREGATE BASE COURSE, TYPE B
- (D) ITEM 304501 - PERMEABLE TREATED BASE, 4"
- (E) ITEM 304502 - SOIL CEMENT BASE COURSE, 6"
- (F) ITEM 401801 - WMA, SUPERPAVE, TYPE C, 160 GYRATIONS, PG 64-22
- (G) ITEM 401810 - WMA, SUPERPAVE, TYPE B, 160 GYRATIONS, PG 64-22
- (J) ITEM 401819 - WMA, SUPERPAVE, BITUMINOUS CONCRETE BASE COURSE, 160 GYRATIONS, PG 64-22
- (K) ITEM 501006 - PORTLAND CEMENT CONCRETE PAVEMENT, 12"
- (L) ITEM 701010 - PCC CURB, TYPE 1-8
- (N) ITEM 701022 - PCC CURB AND GUTTER, TYPE 3-8
- (P) ITEM 715001 - PERFORATED PIPE UNDERDRAINS, 6"
- (Q) ITEM 720050 - GALVANIZED STEEL BEAM GUARDRAIL, TYPE 1-31
- (R) ITEM 720052 - GALVANIZED STEEL BEAM GUARDRAIL, TYPE 3-31
- (S) ITEM 727000 - RIGHT OF WAY FENCE
- (T) ITEM 501001 - 8" PORTLAND CEMENT CONCRETE
- (U) ITEM 733002 - TOPSOILING, 6" DEPTH
ITEM 734013 - PERMANENT GRASS SEEDING, DRY GROUND
- (V) ITEM 733002 - TOPSOILING, 6" DEPTH
ITEM 734013 - PERMANENT GRASS SEEDING, DRY GROUND
ITEM 735535 - SOIL RETENTION BLANKET MULCH, TYPE 5
- (W) ITEM 701016 - PCC CURB AND GUTTER, TYPE 1-4
- (X) ITEM 760017 - RUMBLE STRIPS, CONCRETE
- (Y) ITEM 705001 - PCC SIDEWALK, 4"
- (AA) ITEM 720626 - CONCRETE SINGLE FACE BARRIER, TYPE 1
- (BB) ITEM 760507 - PROFILE MILLING, HOT-MIX
- (CC) ITEM 401824 - WMA, SUPERPAVE, TYPE C, 160 GYRATIONS, PG 64-22, WEDGE
- (DD) ITEM 733001 - TOPSOILING, 4" DEPTH
ITEM 734013 - PERMANENT GRASS SEEDING, DRY GROUND
- (EE) ITEM 713002 - GEOTEXTILE, SEPARATION
- (FF) ITEM 701013 - PCC CURB, TYPE 1-2

NOTES:

1. THE MAXIMUM ALGEBRAIC DIFFERENCE ON THE HIGH SIDE BETWEEN THE TRAVELED WAY SLOPE AND THE ACCEL/DECEL LANES SHALL NOT EXCEED 4%. THE MAXIMUM ALGEBRAIC DIFFERENCE BETWEEN THE TRAVELED WAY SLOPE AND THE SHOULDER SLOPE SHALL NOT EXCEED 8%.
2. SHOULDER SLOPE ON THE LOW SIDE SHALL BE THE SAME AS THE TRAVELED WAY SLOPE WHEN SUPERELEVATION IS GREATER THAN 4%.
3. SEE GRADES AND GEOMETRICS SHEETS FOR SUPERELEVATED CROSS SLOPE TRANSITIONS.
4. SEE SHEET TS-43 FOR UNDERDRAIN DETAIL.
SEE CONSTRUCTION PLANS FOR PLACEMENT LOCATIONS.
5. PGA - POINT OF GRADE APPLICATION
PDGA - POINT OF DITCH GRADE APPLICATION
P/R - POINT OF ROTATION
P.G.L. - POINT OF GRADE LINE
6. THE MAXIMUM LIFTS FOR THE INDIVIDUAL PAVING MATERIALS ARE AS FOLLOWS:
SUPERPAVE, TYPE C WMA - 2"
SUPERPAVE, TYPE B WMA - 3"
SUPERPAVE BIT. CONC. BASE COURSE - 4"
GRADED AGGREGATE BASE COURSE - 8"
7. SUPERPAVE, TYPE B HOT-MIX SHALL BE PLACED IN TWO EQUAL LIFTS, WHEN THICKNESS EXCEEDS 3".
8. SEE SHEET DT-01 FOR RUMBLE STRIP LOCATIONS.
9. SEE SHEET DT-12 FOR SAFETY EDGE DETAILS. THESE DETAILS SHALL BE APPLIED AT ALL INSTANCES WHERE THE EDGE OF PROPOSED PAVEMENT MEETS THE 6" TOPSOIL.
10. ON THE HIGH SIDE OF THE SUPERELEVATED MEDIAN SECTION THE BOTTOM OF BORROW TYPE A SHALL FOLLOW THE SUPERELEVATION RATE FOR THE ROADWAY EXTENDED UNTIL IT INTERSECTS WITH EITHER THE BOTTOM OF TOPSOIL FOR THE MEDIAN SIDESLOPES OR IT INTERSECTS WITH THE CONSTRUCTION BASELINE. ON THE LOW SIDE OF THE SUPERELEVATED MEDIAN SECTION THE BOTTOM OF BORROW TYPE A SHALL BE CONSTRUCTED FROM THE POINT IN WHICH THE EXTENDED SUPERELEVATION SLOPE (e) INTERSECTS THE CONSTRUCTION BASELINE TO THE GRADE BREAK AT THE INSIDE EDGE OF TRAVELED WAY.
11. FOR INTERFACE BETWEEN MOMENT SLAB AND ROADWAY PAVEMENT AND APPROACH SLAB AND ROADWAY PAVEMENT, SEE STRUCTURAL DETAILS.
12. SEE SHEET DT-15 FOR DETAILS OF CONSTRUCTING PROPOSED EARTH BERM.

N:\31653-000\Contract 1A\CADD\TS040U301_1A.dgn
11/3/2014 3:16:57 PM

DELAWARE DEPARTMENT OF TRANSPORTATION	ADDENDUMS / REVISIONS	NOT TO SCALE	US 301, SR 896 TO SR 1	CONTRACT T200911308	BRIDGE NO.	TYPICAL SECTIONS	TS-40
				COUNTY NEW CASTLE	DESIGNED BY: S.E.S.		SHEET NO. 56
					CHECKED BY: B.R.T.		TOTAL SHTS. 875

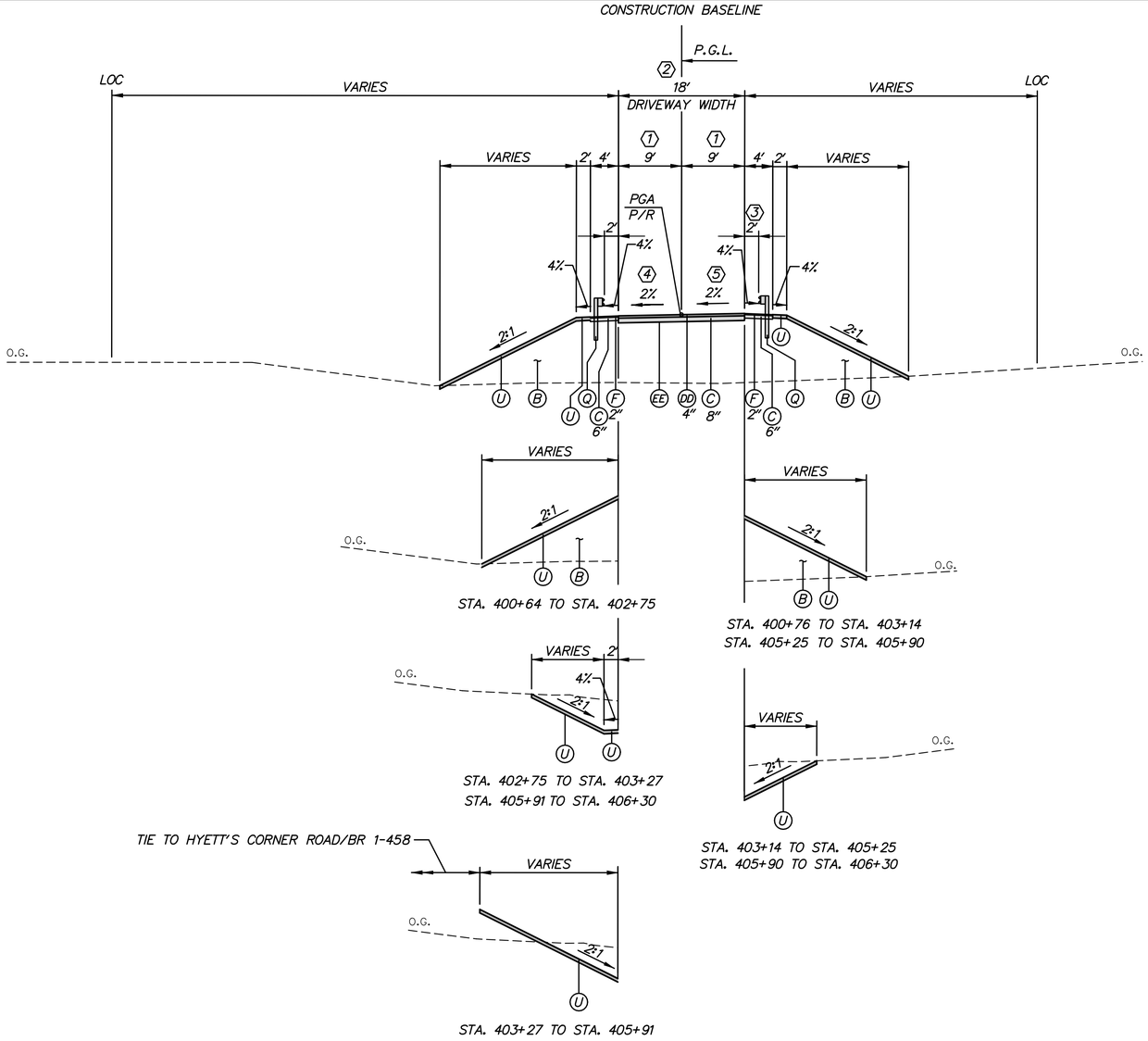

UTILITY ACCESS ROAD NORMAL SECTION
STATION 400+46 TO 406+30

(1) HOLD 9' WIDTH FROM STA. 400+76 TO STA. 403+09.
TRANSITION WIDTH FROM 9' TO AT STA. 403+09 TO 7.5' AT STA. 403+25.
HOLD 7.5' WIDTH FROM STA. 403+25 TO STA. 405+90.
WIDTH VARIES STA. 405+90 TO STA. 406+30. SEE PLANS.

(2) HOLD 18' WIDTH FROM STA. 400+76 TO STA. 403+09.
TRANSITION WIDTH FROM 18' AT STA. 403+09 TO 15' AT STA. 403+25.
HOLD 15' WIDTH FROM STA. 403+25 TO STA. 405+90.
WIDTH VARIES FROM STA. 405+90 TO STA. 406+30. SEE PLANS.

(3) TRANSITION WIDTH FROM 2.18' AT STA. 400+46 TO 2' AT STA. 400+56.

(4) TRANSITION SLOPE FROM -2.0% AT STA. 400+95 TO +2.0% AT STA. 401+45.
HOLD +2.0% SLOPE FROM STA. 401+45 TO STA. 406+30.

(5) TRANSITION SLOPE FROM +2.0% AT STA. 400+95 TO -2.0% AT STA. 401+45.
HOLD -2.0% SLOPE FROM STA. 401+45 TO STA. 406+30.

LEGEND

- (A) ITEM 209001 - BORROW, TYPE A
- (B) ITEM 209006 - BORROW, TYPE F
- (C) ITEM 302007 - GRADED AGGREGATE BASE COURSE, TYPE B
- (D) ITEM 304501 - PERMEABLE TREATED BASE, 4"
- (E) ITEM 304502 - SOIL CEMENT BASE COURSE, 6"
- (F) ITEM 401801 - WMA, SUPERPAVE, TYPE C, 160 GYRATIONS, PG 64-22
- (G) ITEM 401810 - WMA, SUPERPAVE, TYPE B, 160 GYRATIONS, PG 64-22
- (J) ITEM 401819 - WMA, SUPERPAVE, BITUMINOUS CONCRETE BASE COURSE, 160 GYRATIONS, PG 64-22
- (K) ITEM 501006 - PORTLAND CEMENT CONCRETE PAVEMENT, 12"
- (L) ITEM 701010 - PCC CURB, TYPE 1-8
- (N) ITEM 701022 - PCC CURB AND GUTTER, TYPE 3-8
- (P) ITEM 715001 - PERFORATED PIPE UNDERDRAINS, 6"
- (Q) ITEM 720050 - GALVANIZED STEEL BEAM GUARDRAIL, TYPE 1-31
- (R) ITEM 720052 - GALVANIZED STEEL BEAM GUARDRAIL, TYPE 3-31
- (S) ITEM 727000 - RIGHT OF WAY FENCE
- (T) ITEM 501001 - 8" PORTLAND CEMENT CONCRETE
- (U) ITEM 733002 - TOPSOILING, 6" DEPTH
  ITEM 734013 - PERMANENT GRASS SEEDING, DRY GROUND
- (V) ITEM 733002 - TOPSOILING, 6" DEPTH
  ITEM 734013 - PERMANENT GRASS SEEDING, DRY GROUND
  ITEM 735535 - SOIL RETENTION BLANKET MULCH, TYPE 5
- (W) ITEM 701016 - PCC CURB AND GUTTER, TYPE 1-4
- (X) ITEM 760017 - RUMBLE STRIPS, CONCRETE
- (Y) ITEM 705001 - PCC SIDEWALK, 4"
- (AA) ITEM 720626 - CONCRETE SINGLE FACE BARRIER, TYPE 1
- (BB) ITEM 760507 - PROFILE MILLING, HOT-MIX
- (CC) ITEM 401824 - WMA, SUPERPAVE, TYPE C, 160 GYRATIONS, PG 64-22, WEDGE
- (DD) ITEM 733001 - TOPSOILING, 4" DEPTH
  ITEM 734013 - PERMANENT GRASS SEEDING, DRY GROUND
- (EE) ITEM 713002 - GEOTEXTILE, SEPARATION
- (FF) ITEM 701013 - PCC CURB, TYPE 1-2

NOTES:

1. THE MAXIMUM ALGEBRAIC DIFFERENCE ON THE HIGH SIDE BETWEEN THE TRAVELED WAY SLOPE AND THE ACCEL/DECEL LANES SHALL NOT EXCEED 4%. THE MAXIMUM ALGEBRAIC DIFFERENCE BETWEEN THE TRAVELED WAY SLOPE AND THE SHOULDER SLOPE SHALL NOT EXCEED 8%.
2. SHOULDER SLOPE ON THE LOW SIDE SHALL BE THE SAME AS THE TRAVELED WAY SLOPE WHEN SUPERELEVATION IS GREATER THAN 4%.
3. SEE GRADES AND GEOMETRICS SHEETS FOR SUPERELEVATED CROSS SLOPE TRANSITIONS.
4. SEE SHEET TS-43 FOR UNDERDRAIN DETAIL.
   SEE CONSTRUCTION PLANS FOR PLACEMENT LOCATIONS.
5. PGA - POINT OF GRADE APPLICATION
   PDGA - POINT OF DITCH GRADE APPLICATION
   P/R - POINT OF ROTATION
   P.G.L. - POINT OF GRADE LINE
6. THE MAXIMUM LIFTS FOR THE INDIVIDUAL PAVING MATERIALS ARE AS FOLLOWS:
   SUPERPAVE, TYPE C WMA - 2"
   SUPERPAVE, TYPE B WMA - 3"
   SUPERPAVE BIT. CONC. BASE COURSE - 4"
   GRADED AGGREGATE BASE COURSE - 8"
7. SUPERPAVE, TYPE B HOT-MIX SHALL BE PLACED IN TWO EQUAL LIFTS, WHEN THICKNESS EXCEEDS 3".
8. SEE SHEET DT-01 FOR RUMBLE STRIP LOCATIONS.
9. SEE SHEET DT-12 FOR SAFETY EDGE DETAILS. THESE DETAILS SHALL BE APPLIED AT ALL INSTANCES WHERE THE EDGE OF PROPOSED PAVEMENT MEETS THE 6" TOPSOIL.
10. ON THE HIGH SIDE OF THE SUPERELEVATED MEDIAN SECTION THE BOTTOM OF BORROW TYPE A SHALL FOLLOW THE SUPERELEVATION RATE FOR THE ROADWAY EXTENDED UNTIL IT INTERSECTS WITH EITHER THE BOTTOM OF TOPSOIL FOR THE MEDIAN SIDESLOPES OR IT INTERSECTS WITH THE CONSTRUCTION BASELINE. ON THE LOW SIDE OF THE SUPERELEVATED MEDIAN SECTION THE BOTTOM OF BORROW TYPE A SHALL BE CONSTRUCTED FROM THE POINT IN WHICH THE EXTENDED SUPERELEVATION SLOPE (e) INTERSECTS THE CONSTRUCTION BASELINE TO THE GRADE BREAK AT THE INSIDE EDGE OF TRAVELED WAY.
11. FOR INTERFACE BETWEEN MOMENT SLAB AND ROADWAY PAVEMENT AND APPROACH SLAB AND ROADWAY PAVEMENT, SEE STRUCTURAL DETAILS.
12. SEE SHEET DT-15 FOR DETAILS OF CONSTRUCTING PROPOSED EARTH BERM.

TS-41

N:\31653-000\Contract 1A\CADD\TS041U301_1A.dgn
11/3/2014 3:17:39 PM

DELAWARE DEPARTMENT OF TRANSPORTATION	ADDENDUMS / REVISIONS	NOT TO SCALE	US 301, SR 896 TO SR 1	CONTRACT T200911308 / COUNTY NEW CASTLE	BRIDGE NO. / DESIGNED BY: S.E.S. / CHECKED BY: B.R.T.	TYPICAL SECTIONS	SHEET NO. 57 / TOTAL SHTS. 875

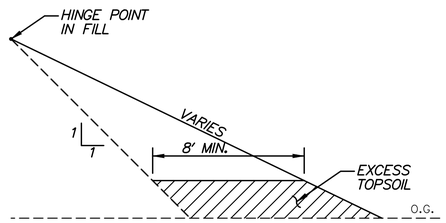

NOTES:
1. EXCESS TOPSOIL SHALL BE PLACED IN LIFTS CONCURRENTLY WITH THE CONSTRUCTION OF THE REST OF THE EMBANKMENT AND SHALL BE PLACED AND COMPACTED IN ACCORDANCE WITH SECTION 202 OF THE STANDARD SPECIFICATIONS WITH ALL COSTS INCIDENTAL TO ITEM 202000.

USE OF EXCESS TOPSOIL IN OUTER PORTIONS OF EMBANKMENT
NOT TO SCALE

NOTES:
1. THE MAXIMUM ALGEBRAIC DIFFERENCE ON THE HIGH SIDE BETWEEN THE TRAVELED WAY SLOPE AND THE ACCEL/DECEL LANES SHALL NOT EXCEED 4%. THE MAXIMUM ALGEBRAIC DIFFERENCE BETWEEN THE TRAVELED WAY SLOPE AND THE SHOULDER SLOPE SHALL NOT EXCEED 8%.
2. SHOULDER SLOPE ON THE LOW SIDE SHALL BE THE SAME AS THE TRAVELED WAY SLOPE WHEN SUPERELEVATION IS GREATER THAN 4%.
3. SEE GRADES AND GEOMETRICS SHEETS FOR SUPERELEVATED CROSS SLOPE TRANSITIONS.
4. SEE SHEET TS-43 FOR UNDERDRAIN DETAIL. SEE CONSTRUCTION PLANS FOR PLACEMENT LOCATIONS.
5. PGA - POINT OF GRADE APPLICATION
   PDGA - POINT OF DITCH GRADE APPLICATION
   P/R - POINT OF ROTATION
   P.G.L. - POINT OF GRADE LINE
6. THE MAXIMUM LIFTS FOR THE INDIVIDUAL PAVING MATERIALS ARE AS FOLLOWS:
   SUPERPAVE, TYPE C WMA - 2"
   SUPERPAVE, TYPE B WMA - 3"
   SUPERPAVE BIT. CONC. BASE COURSE - 4"
   GRADED AGGREGATE BASE COURSE - 8"
7. SUPERPAVE, TYPE B HOT-MIX SHALL BE PLACED IN TWO EQUAL LIFTS, WHEN THICKNESS EXCEEDS 3".
8. SEE SHEET DT-01 FOR RUMBLE STRIP LOCATIONS.
9. SEE SHEET DT-12 FOR SAFETY EDGE DETAILS. THESE DETAILS SHALL BE APPLIED AT ALL INSTANCES WHERE THE EDGE OF PROPOSED PAVEMENT MEETS THE 6" TOPSOIL.
10. ON THE HIGH SIDE OF THE SUPERELEVATED MEDIAN SECTION THE BOTTOM OF BORROW TYPE A SHALL FOLLOW THE SUPERELEVATION RATE FOR THE ROADWAY EXTENDED UNTIL IT INTERSECTS WITH EITHER THE BOTTOM OF TOPSOIL FOR THE MEDIAN SIDESLOPES OR IT INTERSECTS WITH THE CONSTRUCTION BASELINE. ON THE LOW SIDE OF THE SUPERELEVATED MEDIAN SECTION THE BOTTOM OF BORROW TYPE A SHALL BE CONSTRUCTED FROM THE POINT IN WHICH THE EXTENDED SUPERELEVATION SLOPE (e) INTERSECTS THE CONSTRUCTION BASELINE TO THE GRADE BREAK AT THE INSIDE EDGE OF TRAVELED WAY.
11. FOR INTERFACE BETWEEN MOMENT SLAB AND ROADWAY PAVEMENT AND APPROACH SLAB AND ROADWAY PAVEMENT, SEE STRUCTURAL DETAILS.
12. SEE SHEET DT-15 FOR DETAILS OF CONSTRUCTING PROPOSED EARTH BERM.

LEGEND

- (A) ITEM 209001 - BORROW, TYPE A
- (B) ITEM 209006 - BORROW, TYPE F
- (C) ITEM 302007 - GRADED AGGREGATE BASE COURSE, TYPE B
- (D) ITEM 304501 - PERMEABLE TREATED BASE, 4"
- (E) ITEM 304502 - SOIL CEMENT BASE COURSE, 6"
- (F) ITEM 401801 - WMA, SUPERPAVE, TYPE C, 160 GYRATIONS, PG 64-22
- (G) ITEM 401810 - WMA, SUPERPAVE, TYPE B, 160 GYRATIONS, PG 64-22
- (J) ITEM 401819 - WMA, SUPERPAVE, BITUMINOUS CONCRETE BASE COURSE, 160 GYRATIONS, PG 64-22
- (K) ITEM 501006 - PORTLAND CEMENT CONCRETE PAVEMENT, 12"
- (L) ITEM 701010 - PCC CURB, TYPE 1-8
- (N) ITEM 701022 - PCC CURB AND GUTTER, TYPE 3-8
- (P) ITEM 715001 - PERFORATED PIPE UNDERDRAINS, 6"
- (Q) ITEM 720050 - GALVANIZED STEEL BEAM GUARDRAIL, TYPE 1-31
- (R) ITEM 720052 - GALVANIZED STEEL BEAM GUARDRAIL, TYPE 3-31
- (S) ITEM 727000 - RIGHT OF WAY FENCE
- (T) ITEM 501001 - 8" PORTLAND CEMENT CONCRETE
- (U) ITEM 733002 - TOPSOILING, 6" DEPTH
  ITEM 734013 - PERMANENT GRASS SEEDING, DRY GROUND
- (V) ITEM 733002 - TOPSOILING, 6" DEPTH
  ITEM 734013 - PERMANENT GRASS SEEDING, DRY GROUND
  ITEM 735535 - SOIL RETENTION BLANKET MULCH, TYPE 5
- (W) ITEM 701016 - PCC CURB AND GUTTER, TYPE 1-4
- (X) ITEM 760017 - RUMBLE STRIPS, CONCRETE
- (Y) ITEM 705001 - PCC SIDEWALK, 4"
- (AA) ITEM 720626 - CONCRETE SINGLE FACE BARRIER, TYPE 1
- (BB) ITEM 760507 - PROFILE MILLING, HOT-MIX
- (CC) ITEM 401824 - WMA, SUPERPAVE, TYPE C, 160 GYRATIONS, PG 64-22, WEDGE
- (DD) ITEM 733001 - TOPSOILING, 4" DEPTH
  ITEM 734013 - PERMANENT GRASS SEEDING, DRY GROUND
- (EE) ITEM 713002 - GEOTEXTILE, SEPARATION
- (FF) ITEM 701013 - PCC CURB, TYPE 1-2

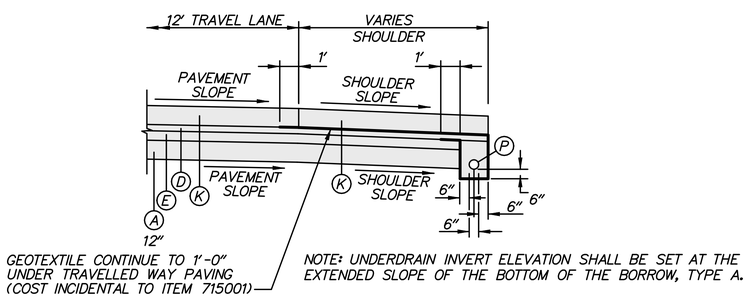

US 301 MAINLINE AND RAMPS UNDERDRAIN DETAIL
NOT TO SCALE

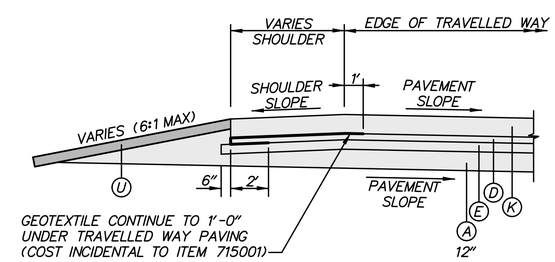

US 301 MAINLINE AND RAMPS SHOULDER WITHOUT UNDERDRAIN
NOT TO SCALE

N:\31653-000\CONTRACT 1A\CADD\TS042U301_1A.dgn
11/4/2014 8:40:49 AM

DELAWARE DEPARTMENT OF TRANSPORTATION	ADDENDUMS / REVISIONS	NOT TO SCALE	US 301, SR 896 TO SR 1	CONTRACT T200911308	BRIDGE NO.	TYPICAL SECTIONS	TS-43
				COUNTY NEW CASTLE	DESIGNED BY: K.A.H.		SHEET NO. 58
					CHECKED BY: B.R.T.		TOTAL SHTS. 875

CIRCULAR CURVE NO. 33 – US 301

	STATION	NORTHING	EASTING
PC (3004)	648+22.31	545720.3518	576534.9377
PI (3005)	660+33.99	546363.4011	577561.9060
CC (15000)		548263.0171	574942.8155
PT (3006)	671+25.46	547539.2979	577854.2121
Radius:	3000.0000		
Design Speed(mph):	70.0000		
Superelevation:	5.4000%		
Delta:	43° 59′ 13.2475″ Left		
Degree of Curvature(Arc):	1° 54′ 35.4935″		
Length:	2303.1546		
Tangent:	1211.6832		
Chord:	2247.0091		
Middle Ordinate:	218.3211		
External:	235.4561		
Tangent Direction:	N 57° 56′ 48.2475″ E		
Radial Direction:	S 32° 03′ 11.7525″ E		
Chord Direction:	N 35° 57′ 11.6238″ E		
Radial Direction:	S 76° 02′ 25.0000″ E		
Tangent Direction:	N 13° 57′ 35.0000″ E		

CIRCULAR CURVE NO. 34 – SB EMERGENCY ACCESS RAMP

	STATION	NORTHING	EASTING
PC (3027)	200+97.36	548667.1066	578034.2417
PI (3028)	202+07.61	548693.7041	577927.2446
CC (15001)		548764.1532	578058.3656
PT (3029)	202+64.19	548797.6055	577964.1269
Radius:	100.0000		
Design Speed(mph):			
Superelevation:			
Delta:	95° 35′ 01.7736″ Right		
Degree of Curvature(Arc):	57° 17′ 44.8062″		
Length:	166.8252		
Tangent:	110.2534		
Chord:	148.1420		
Middle Ordinate:	32.8175		
External:	48.8483		
Tangent Direction:	N 76° 02′ 25.0000″ W		
Radial Direction:	N 13° 57′ 35.0000″ E		
Chord Direction:	N 28° 14′ 54.1132″ W		
Radial Direction:	S 70° 27′ 23.2264″ E		
Tangent Direction:	N 19° 32′ 36.7736″ E		

CIRCULAR CURVE NO. 36 – NB EMERGENCY ACCESS RAMP

	STATION	NORTHING	EASTING
PC (3057)	400+87.96	548488.0125	578180.6792
PI (3058)	402+22.17	548455.6355	578310.9264
CC (15003)		548585.0591	578204.8032
PT (3059)	402+74.05	548589.7018	578304.6953
Radius:	100.0000		
Design Speed(mph):			
Superelevation:			
Delta:	106° 37′ 14.7047″ Left		
Degree of Curvature(Arc):	57° 17′ 44.8062″		
Length:	186.0883		
Tangent:	134.2110		
Chord:	160.3768		
Middle Ordinate:	40.2520		
External:	67.3696		
Tangent Direction:	S 76° 02′ 25.0000″ E		
Radial Direction:	S 13° 57′ 35.0000″ W		
Chord Direction:	N 50° 38′ 57.6476″ E		
Radial Direction:	N 87° 20′ 20.2953″ E		
Tangent Direction:	N 2° 39′ 39.7047″ W		

HORIZONTAL / VERTICAL CONTROL DATA

POINT	STATION	OFFSET	NORTHING	EASTING	ELEVATION
18	682+62.1913	881.0251	548429.9136	578983.4403	67.23
708	638+27.5545	-6.0476	545197.5533	575688.6180	48.37
1170	637+12.1400	87.8896	545056.6850	575640.6510	42.56

CONSTRUCTION ALIGNMENT CONTROL

POINT	STATION	OFFSET	NORTHING	EASTING
3026	682+63.39	0.0000′	548643.6196	578128.7260
3012	675+00.00	0.0000′	547902.7716	577944.5649
3054	680+00.00	0.0000′	548388.0043	578065.1848
3055	685+00.00	0.0000′	548873.2370	578185.8046
3056	681+24.92	0.0000′	548509.2313	578095.3196

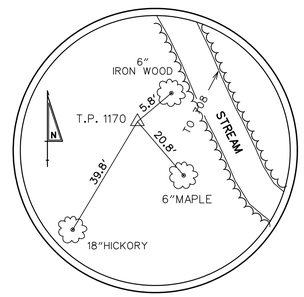

TRAVERSE POINT #1170
C.M. WITH CAP

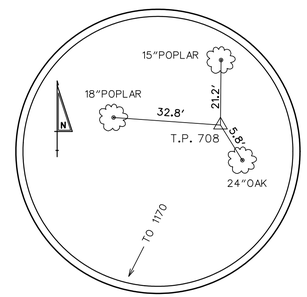

TRAVERSE POINT #708
CAPPED WITH REBAR

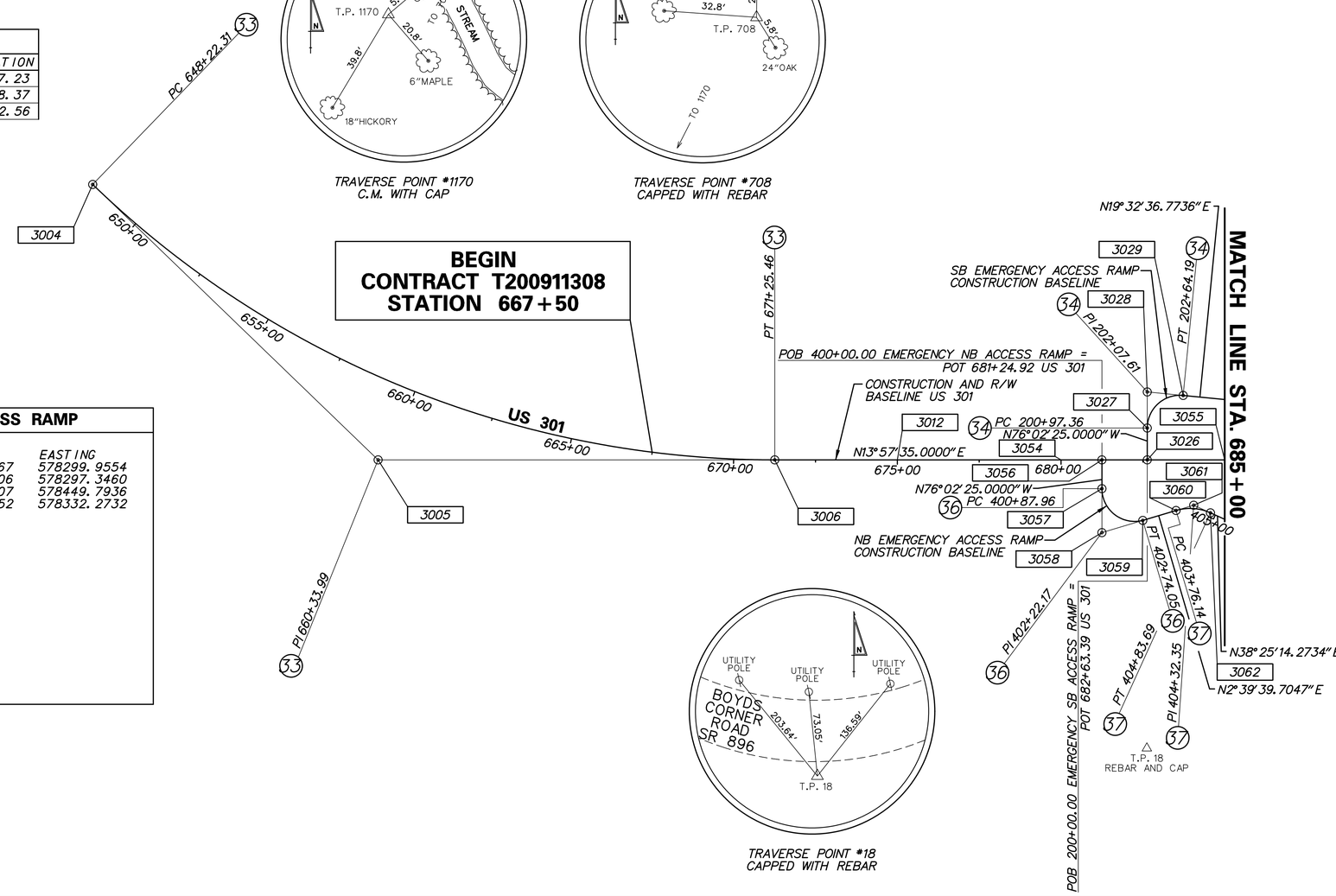

TRAVERSE POINT #18
CAPPED WITH REBAR

CIRCULAR CURVE NO. 37 – NB EMERGENCY ACCESS RAMP

	STATION	NORTHING	EASTING
PC (3060)	403+76.14	548691.6867	578299.9554
PI (3061)	404+32.35	548747.8306	578297.3460
CC (15004)		548698.6507	578449.7936
PT (3062)	404+83.69	548791.8652	578332.2732
Radius:	150.0000		
Design Speed(mph):			
Superelevation:			
Delta:	41° 04′ 53.9782″ Right		
Degree of Curvature(Arc):	38° 11′ 49.8708″		
Length:	107.5515		
Tangent:	56.2046		
Chord:	105.2624		
Middle Ordinate:	9.5366		
External:	10.1841		
Tangent Direction:	N 2° 39′ 39.7047″ W		
Radial Direction:	N 87° 20′ 20.2953″ E		
Chord Direction:	N 17° 52′ 47.2844″ E		
Radial Direction:	S 51° 34′ 45.7266″ E		
Tangent Direction:	N 38° 25′ 14.2734″ E		

DATUM REFERENCE:
HORIZONTAL - THIS PROJECT IS REFERENCED TO THE DELAWARE STATE PLANE COORDINATE SYSTEM (NAD 83-2007).
VERTICAL - THIS PROJECT IS REFERENCED TO NAVD 88 BASED ON THE FOLLOWING STATE OF DELAWARE BENCHMARK

POINT	ELEV.
JU1066	64.03

N:\31653-000\Contract 1A\CADD\HV001U301_1A.dgn
7/31/2015 11:19:44 PM

DELAWARE DEPARTMENT OF TRANSPORTATION

ADDENDUMS / REVISIONS

SCALE 0 200 400 600 FEET

US 301, SR 896 TO SR 1

CONTRACT	BRIDGE NO.
T200911308	DESIGNED BY: JJO
COUNTY	
NEW CASTLE	CHECKED BY: TAO

HORIZONTAL AND VERTICAL CONTROL

HV-01
SHEET NO. 59
TOTAL SHTS. 875

CIRCULAR CURVE NO. 1 – US 301

	STATION	NORTHING	EASTING
PC (10008)	694+56.04	549801.0390	578416.4390
PI (10009)	703+18.35	550637.8805	578624.4623
CC (10010)		551730.9569	570652.7146
PT (10011)	711+74.02	551499.8299	578649.3752
Radius:	8000.0000		
Design Speed(mph):	70.0000		
Superelevation:	-2.6000%		
Delta:	12° 18′ 15.0000″	Left	
Degree of Curvature(Arc):	0° 42′ 58.3101″		
Length:	1717.9858		
Tangent:	862.3093		
Chord:	1714.6865		
Middle Ordinate:	46.0725		
External:	46.3394		
Tangent Direction:	N 13° 57′ 35.0000″ E		
Radial Direction:	S 76° 02′ 25.0000″ E		
Chord Direction:	N 7° 48′ 27.5000″ E		
Radial Direction:	S 88° 20′ 40.0000″ E		
Tangent Direction:	N 1° 39′ 20.0000″ E		

CIRCULAR CURVE NO. 2 – US 301

	STATION	NORTHING	EASTING
PC (10012)	722+96.36	552621.7005	578681.8005
PI (10013)	743+52.83	554677.3101	578741.2137
CC (10014)		552549.4733	581180.7569
PT (10015)	757+38.18	555015.4469	580769.6920
Radius:	2500.0000		
Design Speed(mph):	70.0000		
Superelevation:	5.8000%		
Delta:	78° 52′ 50.0000″	Right	
Degree of Curvature(Arc):	2° 17′ 30.5922″		
Length:	3441.8135		
Tangent:	2056.4681		
Chord:	3176.3679		
Middle Ordinate:	569.2821		
External:	737.1378		
Tangent Direction:	N 1° 39′ 20.0000″ E		
Radial Direction:	S 88° 20′ 40.0000″ E		
Chord Direction:	N 41° 05′ 45.0000″ E		
Radial Direction:	S 9° 27′ 50.0000″ E		
Tangent Direction:	N 80° 32′ 10.0000″ E		

CIRCULAR CURVE NO. 35 – SB EMERGENCY ACCESS RAMP

	STATION	NORTHING	EASTING
PC (3030)	204+27.79	548951.7873	578018.8575
PI (3031)	204+60.98	548983.0640	578029.9599
CC (15002)		548903.6160	578154.5613
PT (3032)	204+93.03	549006.3259	578053.6322
Radius:	144.0000		
Design Speed(mph):			
Superelevation:			
Delta:	25° 57′ 26.8930″	Right	
Degree of Curvature(Arc):	39° 47′ 19.4488″		
Length:	65.2382		
Tangent:	33.1887		
Chord:	64.6817		
Middle Ordinate:	3.6787		
External:	3.7751		
Tangent Direction:	N 19° 32′ 36.7736″ E		
Radial Direction:	S 70° 27′ 23.2264″ E		
Chord Direction:	N 32° 31′ 20.2201″ E		
Radial Direction:	S 44° 29′ 56.3334″ E		
Tangent Direction:	N 45° 30′ 03.6666″ E		

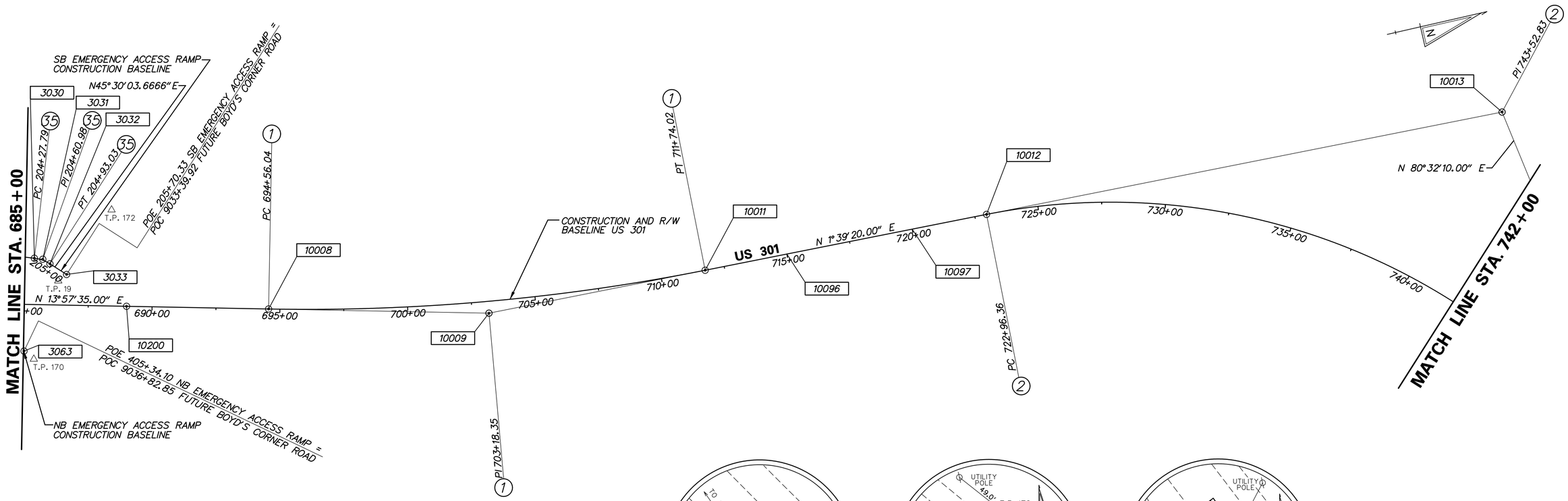

HORIZONTAL / VERTICAL CONTROL DATA

POINT	STATION	OFFSET	NORTHING	EASTING	ELEVATION
19	686+31.0361	-94.3142	549023.1553	578125.8871	67.37
170	685+41.3268	213.3891	548861.8653	578402.8611	67.09
172	688+34.3356	-375.7361	549288.3407	577901.8207	67.90

CONSTRUCTION ALIGNMENT CONTROL

POINT	STATION	OFFSET	NORTHING	EASTING
3033	205+70.33	0.0000′	549060.5022	578108.7644
3063	405+34.10	0.0000′	548831.3617	578363.6009
10096	715+00.00	0.0000′	551825.6700	578658.7929
10097	720+00.00	0.0000′	552325.4613	578673.2383
10200	689+00.00	0.0000′	549261.4232	578282.3005

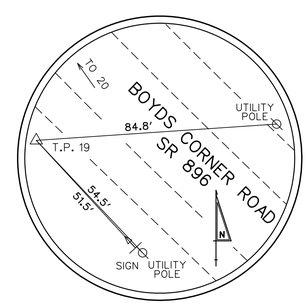

TRAVERSE POINT #19
CAPPED WITH REBAR

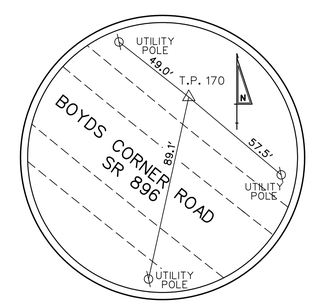

TRAVERSE POINT #170
NAIL SET

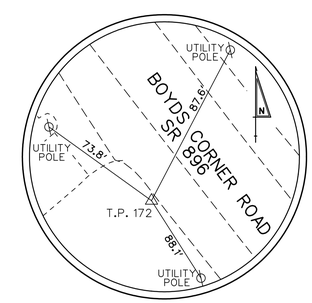

TRAVERSE POINT #172
NAIL SET

N:\31653-000\Contract 1A\CADD\HV002U301_1A.dgn
7/31/2015 12:08 PM

DELAWARE DEPARTMENT OF TRANSPORTATION

ADDENDUMS / REVISIONS

SCALE 0 200 400 600 FEET

US 301, SR 896 TO SR 1

CONTRACT	BRIDGE NO.
T200911308	DESIGNED BY: JJO
COUNTY	
NEW CASTLE	CHECKED BY: TAO

HORIZONTAL AND VERTICAL CONTROL

HV–02

SHEET NO. 60

TOTAL SHTS. 875

CONSTRUCTION ALIGNMENT CONTROL				
POINT	STATION	OFFSET	NORTHING	EASTING
10041	89+23.13	0.0000′	554876.9926	580146.4152
10042	100+00.00	0.0000′	553053.2001	582155.2718
10044	68+97.28	0.0000′	555584.2718	581925.9814
10050	200+00.00	0.0000′	553351.9767	582128.2056
10067	300+00.00	0.0000′	553556.1934	582161.9184
10068	307+27.84	0.0000′	554281.0672	582096.2519
10069	309+09.96	0.0000′	554459.6742	582060.6594
10070	311+79.70	0.0000′	554728.3090	582036.3237
10111	30+00.00	0.0000′	554896.8309	582179.4963
10112	35+00.00	0.0000′	555091.7521	582639.9371
10113	60+00.00	0.0000′	555545.8239	582822.4330
10114	65+00.00	0.0000′	555567.2487	582322.8922
10115	80+00.00	0.0000′	555251.8762	580989.9941
10116	85+00.00	0.0000′	555048.8252	580533.0802
10117	105+00.00	0.0000′	553551.1610	582110.1614
10118	110+00.00	0.0000′	554049.1219	582065.0510
10119	115+00.00	0.0000′	554547.0828	582019.9406
10120	120+00.00	0.0000′	555045.0437	581974.8302
10121	125+00.00	0.0000′	555543.0046	581929.7198
10122	210+00.00	0.0000′	554349.0302	582168.3857
10123	215+00.00	0.0000′	554846.6184	582217.4360

LIMIT OF CONSTRUCTION
CONTRACT T200911308
STATION 132+93

HORIZONTAL / VERTICAL CONTROL DATA					
POINT	STATION	OFFSET	NORTHING	EASTING	ELEVATION
47	128+24.32	-35.7761′	555871.5238	581897.1177	75.97′
48	61+04.85	477.4797′	556027.3579	582738.1371	72.41′
50	50+59.49	447.8839′	555985.6637	583740.8043	67.95′

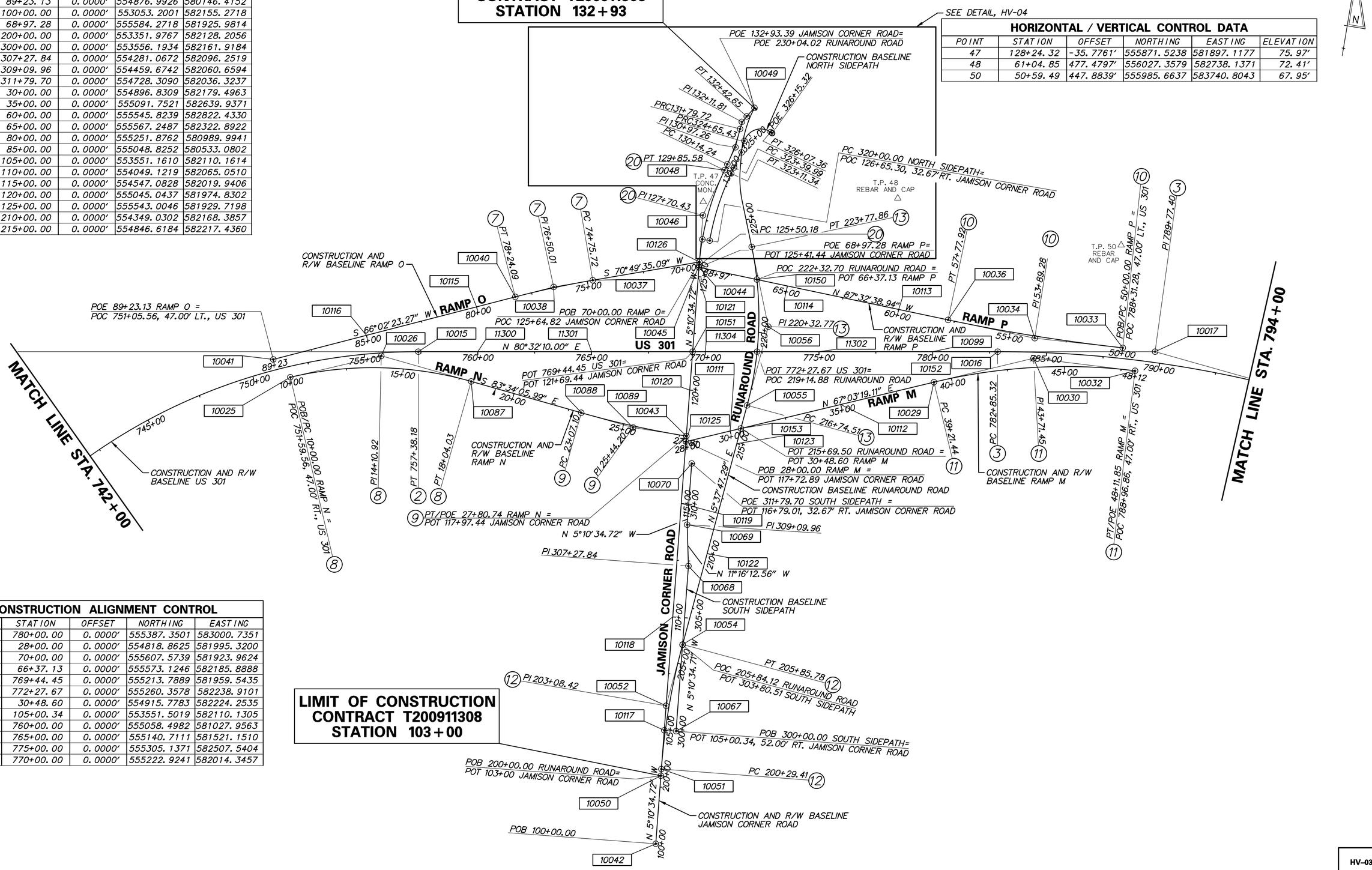

LIMIT OF CONSTRUCTION
CONTRACT T200911308
STATION 103+00

CONSTRUCTION ALIGNMENT CONTROL				
POINT	STATION	OFFSET	NORTHING	EASTING
10099	780+00.00	0.0000′	555387.3501	583000.7351
10125	28+00.00	0.0000′	554818.8625	581995.3200
10126	70+00.00	0.0000′	555607.5739	581923.9624
10150	66+37.13	0.0000′	555573.1246	582185.8888
10151	769+44.45	0.0000′	555213.7889	581959.5435
10152	772+27.67	0.0000′	555260.3578	582238.9101
10153	30+48.60	0.0000′	554915.7783	582224.2535
10465	105+00.34	0.0000′	553551.5019	582110.1305
11300	760+00.00	0.0000′	555058.4982	581027.9563
11301	765+00.00	0.0000′	555140.7111	581521.1510
11302	775+00.00	0.0000′	555305.1371	582507.5404
11304	770+00.00	0.0000′	555222.9241	582014.3457

CIRCULAR CURVE NO. 17 – NORTH SIDEPATH

	STATION	NORTHING	EASTING
PC (10075)	323+39.99	556042.3337	582005.9149
PI (10076)	324+02.82	556102.6855	582023.3866
CC (10077)		556279.4427	581186.8787
PRC (10078)	324+65.43	556164.9465	582031.8234

Radius:	852.6670
Design Speed(mph):	0.0000
Superelevation:	0.0000%
Delta:	8° 25′ 43.0073″ Left
Degree of Curvature(Arc):	6° 43′ 10.5464″
Length:	125.4333
Tangent:	62.8300
Chord:	125.3203
Middle Ordinate:	2.3055
External:	2.3117
Tangent Direction:	N 16° 08′ 44.1806″ E
Radial Direction:	S 73° 51′ 15.8194″ E
Chord Direction:	N 11° 55′ 52.6770″ E
Radial Direction:	S 82° 16′ 58.8267″ E
Tangent Direction:	N 7° 43′ 01.1733″ E

CIRCULAR CURVE NO. 18 – NORTH SIDEPATH

	STATION	NORTHING	EASTING
PRC (10078)	324+65.43	556164.9465	582031.8234
PI (10079)	325+69.47	556268.0491	582045.7946
CC (10080)		556154.8755	582106.1442
PT (10081)	326+07.36	556222.2013	582139.1933

Radius:	75.0000
Design Speed(mph):	0.0000
Superelevation:	0.0000%
Delta:	108° 25′ 43.1342″ Right
Degree of Curvature(Arc):	76° 23′ 39.7417″
Length:	141.9328
Tangent:	104.0449
Chord:	121.6815
Middle Ordinate:	31.1434
External:	53.2589
Tangent Direction:	N 7° 43′ 01.1733″ E
Radial Direction:	S 82° 16′ 58.8267″ E
Chord Direction:	N 61° 55′ 52.7405″ E
Radial Direction:	S 26° 08′ 44.3076″ W
Tangent Direction:	S 63° 51′ 15.6924″ E

CIRCULAR CURVE NO. 29 – JAMISON CORNER ROAD

	STATION	NORTHING	EASTING
PC (10455)	130+14.24	556051.4191	581974.5367
PI (10456)	130+97.26	556131.1661	581997.6231
CC (10457)		556279.4427	581186.8786
PCC (10458)	131+79.72	556213.9221	582004.2568

Radius:	820.0000
Design Speed(mph):	0.0000
Superelevation:	0.0000%
Delta:	11° 33′ 44.9942″ Left
Degree of Curvature(Arc):	6° 59′ 14.2447″
Length:	165.4790
Tangent:	83.0214
Chord:	165.1984
Middle Ordinate:	4.1707
External:	4.1921
Tangent Direction:	N 16° 08′ 43.7964″ E
Radial Direction:	S 73° 51′ 16.2036″ E
Chord Direction:	N 10° 21′ 51.2993″ E
Radial Direction:	S 85° 25′ 01.1978″ E
Tangent Direction:	N 4° 34′ 58.8022″ E

CIRCULAR CURVE NO. 30 – JAMISON CORNER ROAD

	STATION	NORTHING	EASTING
PRC (10458)	131+79.72	556213.9221	582004.2568
PI (10459)	132+11.81	556245.9135	582006.8212
CC (10460)		556203.5347	582133.8411
PT (10461)	132+42.65	556273.0359	582023.9795

Radius:	130.0000
Design Speed(mph):	0.0000
Superelevation:	0.0000%
Delta:	27° 44′ 07.6720″ Right
Degree of Curvature(Arc):	44° 04′ 25.2356″
Length:	62.9298
Tangent:	32.0941
Chord:	62.3171
Middle Ordinate:	3.7893
External:	3.9031
Tangent Direction:	N 04° 34′ 58.8150″ E
Radial Direction:	S 85° 25′ 01.1850″ E
Chord Direction:	N 18° 27′ 02.6510″ E
Radial Direction:	S 57° 40′ 53.5131″ E
Tangent Direction:	N 32° 19′ 06.4869″ E

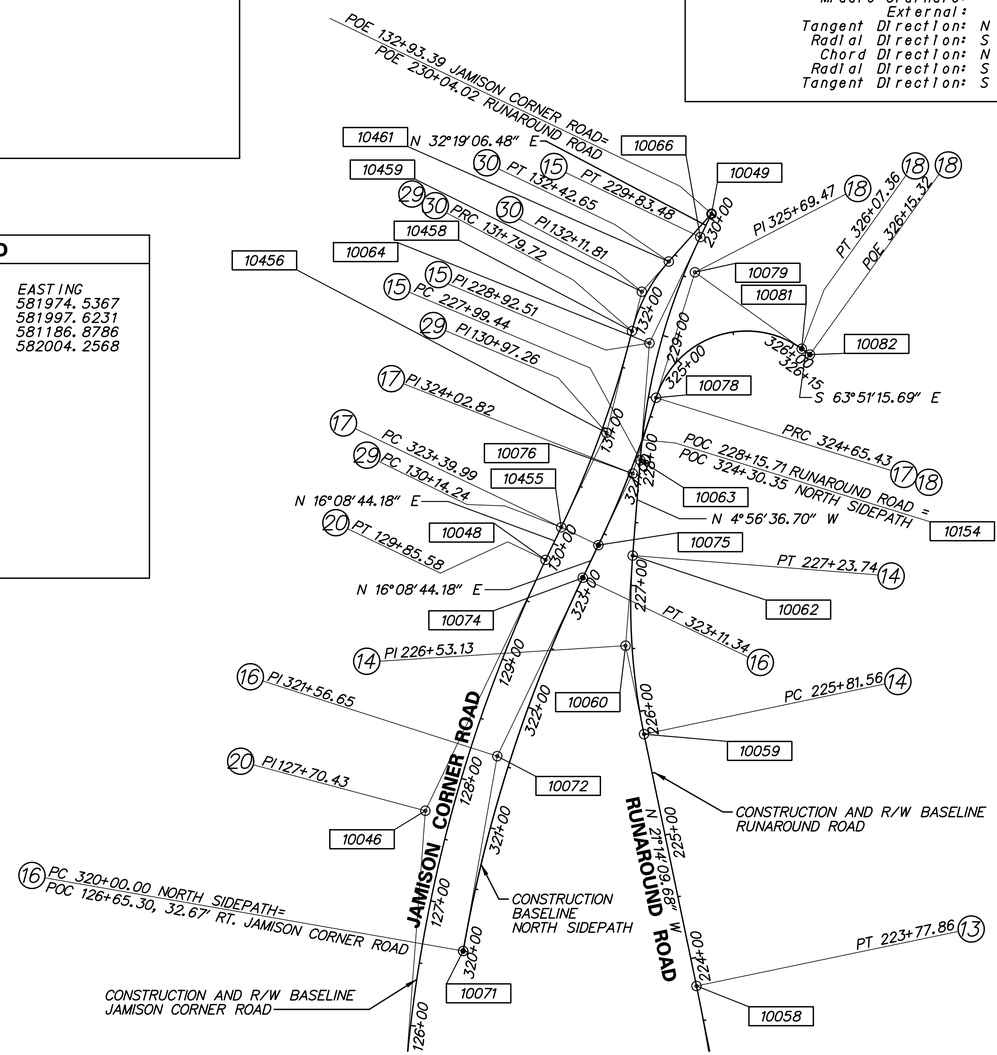

CONSTRUCTION ALIGNMENT CONTROL

POINT	STATION	OFFSET	NORTHING	EASTING
10049	132+93.39	0.0000′	556315.9202	582051.1092
10058	223+77.86	0.0000′	555710.7546	582139.9353
10082	326+15.32	0.0000′	556218.6929	582146.3404
10154	324+30.35	0.0000′	556130.2907	582026.3992

HORIZONTAL / VERTICAL CONTROL DATA

POINT	STATION	OFFSET	NORTHING	EASTING	ELEVATION
51	795+79.16	-504.5564	555982.7810	584618.7329	59.22′
53	906+61.44	-27.5244	555707.5738	585777.7673	34.15′
54	915+46.23	-34.7167	555333.3041	586584.1692	56.16′
55	923+65.80	-33.7864	554844.5916	587248.5351	53.02′
B46	824+41.48	1289.3068	554175.8125	587806.1237	47.34′
180	910+16.05	-323.9046	555843.8978	586228.1894	35.85′
181	910+17.50	2.4195	555545.2737	586096.6093	28.25′
182	912+53.65	-61.0870	555499.8636	586338.4024	39.24′
185	913+22.74	-198.7582	555588.9589	586465.1848	45.17′
186	808+53.59	35.2954	555306.2249	585834.5172	31.70′
187	806+16.50	-167.5047	555533.8070	585621.1009	34.27′

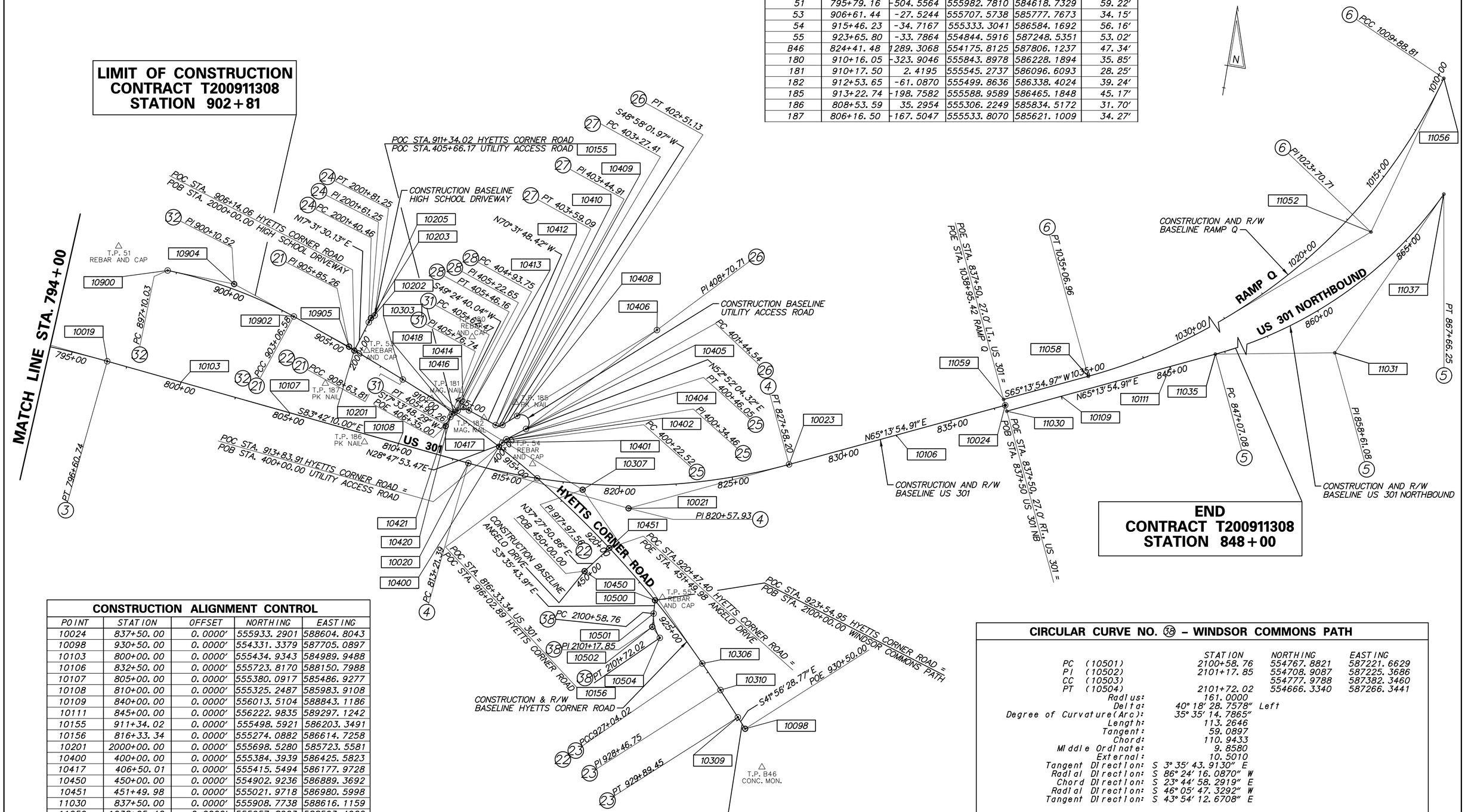

CONSTRUCTION ALIGNMENT CONTROL

POINT	STATION	OFFSET	NORTHING	EASTING
10024	837+50.00	0.0000′	555933.2901	588604.8043
10098	930+50.00	0.0000′	554331.3379	587705.0897
10103	800+00.00	0.0000′	555434.9343	584989.9488
10106	832+50.00	0.0000′	555723.8170	588150.7988
10107	805+00.00	0.0000′	555380.0917	585486.9277
10108	810+00.00	0.0000′	555325.2487	585983.9108
10109	840+00.00	0.0000′	556013.5104	588843.1186
10111	845+00.00	0.0000′	556222.9835	589297.1242
10155	911+34.02	0.0000′	555498.5921	586203.3491
10156	816+33.34	0.0000′	555274.0882	586614.7258
10201	2000+00.00	0.0000′	555698.5280	585723.5581
10400	400+00.00	0.0000′	555384.3939	586425.5823
10417	406+50.01	0.0000′	555415.5494	586177.9728
10450	450+00.00	0.0000′	554902.9236	586889.3692
10451	451+49.98	0.0000′	555021.9718	586980.5998
11030	837+50.00	0.0000′	555908.7738	588616.1159
11059	1038+95.42	0.0000′	555957.8063	588593.4922
10500	2100+00.00	0.0000′	554826.5251	587217.9780
10501	2100+58.76	0.0000′	554767.8821	587221.6629
10502	2101+17.85	0.0000′	554708.9087	587225.3686
10504	2101+72.02	0.0000′	554666.3340	587266.3441

CIRCULAR CURVE NO. 38 – WINDSOR COMMONS PATH

		STATION	NORTHING	EASTING
PC	(10501)	2100+58.76	554767.8821	587221.6629
PI	(10502)	2101+17.85	554708.9087	587225.3686
CC	(10503)		554777.9788	587382.3460
PT	(10504)	2101+72.02	554666.3340	587266.3441

Radius:	161.0000
Delta:	40° 18′ 28.7578″ Left
Degree of Curvature(Arc):	35° 35′ 14.7865″
Length:	113.2646
Tangent:	59.0897
Chord:	110.9433
Middle Ordinate:	9.8580
External:	10.5010
Tangent Direction:	S 3° 35′ 43.9130″ E
Radial Direction:	S 86° 24′ 16.0870″ W
Chord Direction:	S 23° 44′ 58.2919″ E
Radial Direction:	S 46° 05′ 47.3292″ W
Tangent Direction:	S 43° 54′ 12.6708″ E

N:\31653-000\Contract 1A\CADD\HV005U301_1A.dgn
11/3/2014 10:27:59 AM

DELAWARE DEPARTMENT OF TRANSPORTATION

ADDENDUMS / REVISIONS

SCALE 0 200 400 600 FEET

US 301, SR 896 TO SR 1

CONTRACT	BRIDGE NO.
T200911308	DESIGNED BY: JJO
COUNTY	
NEW CASTLE	CHECKED BY: TAO

HORIZONTAL AND VERTICAL CONTROL

HV-05

SHEET NO. 63

TOTAL SHTS. 875

CIRCULAR CURVE NO. 3 - US 301

	STATION	NORTHING	EASTING
PC (10016)	782+85.32	555434.2632	583282.1665
PI (10017)	789+77.40	555548.0588	583964.8248
CC (10018)		550502.3161	584104.2963
PT (10019)	796+60.74	555472.1474	584652.7269

Radius:	5000.0000
Design Speed(mph):	70.0000
Superelevation:	3.8000%
Delta:	15° 45′ 40.0000″ Right
Degree of Curvature(Arc):	1° 08′ 45.2961″
Length:	1375.4164
Tangent:	692.0779
Chord:	1371.0839
Middle Ordinate:	47.2197
External:	47.6699
Tangent Direction:	N 80° 32′ 10.0000″ E
Radial Direction:	S 9° 27′ 50.0000″ E
Chord Direction:	N 88° 25′ 00.0000″ E
Radial Direction:	S 6° 17′ 50.0000″ W
Tangent Direction:	S 83° 42′ 10.0000″ E

CIRCULAR CURVE NO. 7 - RAMP O

	STATION	NORTHING	EASTING
PC (10037)	74+75.72	555451.3321	581474.6303
PI (10038)	76+50.01	555394.0909	581310.0115
CC (10039)		551512.6509	582844.1886
PT (10040)	78+24.09	555323.3126	581150.7433

Radius:	4170.0000
Design Speed(mph):	50.0000
Superelevation:	2.6000%
Delta:	4° 47′ 11.8142″ Left
Degree of Curvature(Arc):	1° 22′ 26.3983″
Length:	348.3709
Tangent:	174.2868
Chord:	348.2696
Middle Ordinate:	3.6374
External:	3.6406
Tangent Direction:	S 70° 49′ 35.0870″ W
Radial Direction:	N 19° 10′ 24.9130″ W
Chord Direction:	S 68° 25′ 59.1808″ W
Radial Direction:	N 23° 57′ 36.7272″ W
Tangent Direction:	S 66° 02′ 23.2728″ W

CIRCULAR CURVE NO. 8 - RAMP N

	STATION	NORTHING	EASTING
PC (10025)	10+00.00	554812.0483	580233.1477
PI (10026)	14+10.92	554970.7890	580612.1675
CC (10027)		553354.7028	580843.5116
PT (10087)	18+04.03	554924.7585	581020.5004

Radius:	1580.0000
Design Speed(mph):	50.0000
Superelevation:	5.0000%
Delta:	29° 09′ 23.5010″ Right
Degree of Curvature(Arc):	3° 37′ 34.7346″
Length:	804.0263
Tangent:	410.9192
Chord:	795.3790
Middle Ordinate:	50.8685
External:	52.5607
Tangent Direction:	N 67° 16′ 30.5125″ E
Radial Direction:	S 22° 43′ 29.4875″ E
Chord Direction:	N 81° 51′ 12.2634″ E
Radial Direction:	S 6° 25′ 54.0135″ W
Tangent Direction:	S 83° 34′ 05.9865″ E

CIRCULAR CURVE NO. 9 - RAMP N

	STATION	NORTHING	EASTING
PC (10088)	23+07.10	554868.4055	581520.4040
PI (10089)	25+44.20	554841.8461	581756.0109
CC (10110)		558843.2301	581968.4769
PT (10043)	27+80.74	554843.3060	581993.1056

Radius:	4000.0000
Design Speed(mph):	50.0000
Superelevation:	2.7000%
Delta:	6° 47′ 04.0306″ Left
Degree of Curvature(Arc):	1° 25′ 56.6202″
Length:	473.6442
Tangent:	237.0992
Chord:	473.3675
Middle Ordinate:	7.0085
External:	7.0208
Tangent Direction:	S 83° 34′ 05.9865″ E
Radial Direction:	S 6° 25′ 54.0135″ W
Chord Direction:	S 86° 57′ 38.0018″ E
Radial Direction:	S 0° 21′ 10.0171″ E
Tangent Direction:	N 89° 38′ 49.9829″ E

CIRCULAR CURVE NO. 10 - RAMP P

	STATION	NORTHING	EASTING
PC (10033)	50+00.00	555541.4091	583821.8956
PI (10034)	53+89.28	555519.6275	583433.2291
CC (10035)		563399.0795	583381.5363
PT (10036)	57+77.92	555536.3078	583044.3103

Radius:	7870.0000
Design Speed(mph):	50.0000
Superelevation:	3.8000%
Delta:	5° 39′ 48.4699″ Right
Degree of Curvature(Arc):	0° 43′ 40.8997″
Length:	777.9187
Tangent:	389.2764
Chord:	777.6021
Middle Ordinate:	9.6098
External:	9.6216
Tangent Direction:	S 86° 47′ 32.5933″ W
Radial Direction:	N 3° 12′ 27.4067″ W
Chord Direction:	S 89° 37′ 26.8294″ W
Radial Direction:	N 2° 27′ 21.0632″ E
Tangent Direction:	N 87° 32′ 38.9368″ W

CIRCULAR CURVE NO. 11 - RAMP M

	STATION	NORTHING	EASTING
PC (10029)	39+21.44	555256.0485	583028.0364
PI (10030)	43+71.45	555431.4805	583442.4401
CC (10031)		552963.0533	583998.7438
PT (10032)	48+11.85	555450.7657	583892.0343

Radius:	2490.0000
Design Speed(mph):	50.0000
Superelevation:	3.8000%
Delta:	20° 29′ 18.6568″ Right
Degree of Curvature(Arc):	2° 18′ 03.7272″
Length:	890.4042
Tangent:	450.0076
Chord:	885.6677
Middle Ordinate:	39.6943
External:	40.3373
Tangent Direction:	N 67° 03′ 19.1151″ E
Radial Direction:	S 22° 56′ 40.8849″ E
Chord Direction:	N 77° 17′ 58.4429″ E
Radial Direction:	S 2° 27′ 22.2281″ E
Tangent Direction:	N 87° 32′ 37.7719″ E

CIRCULAR CURVE NO. 12 - RUNAROUND ROAD

	STATION	NORTHING	EASTING
PC (10051)	200+29.41	553381.2645	582125.5524
PI (10052)	203+08.42	553659.1425	582100.3794
CC (10053)		553647.4159	585063.5217
PT (10054)	205+85.78	553936.8125	582127.7510

Radius:	2950.0000
Design Speed(mph):	35.0000
Superelevation:	2.0000%
Delta:	10° 48′ 22.0026″ Right
Degree of Curvature(Arc):	1° 56′ 32.0272″
Length:	556.3766
Tangent:	279.0159
Chord:	555.5523
Middle Ordinate:	13.1070
External:	13.1655
Tangent Direction:	N 5° 10′ 34.7162″ W
Radial Direction:	N 84° 49′ 25.2838″ E
Chord Direction:	N 0° 13′ 36.2851″ E
Radial Direction:	S 84° 22′ 12.7136″ E
Tangent Direction:	N 5° 37′ 47.2864″ E

CIRCULAR CURVE NO. 13 - RUNAROUND ROAD

	STATION	NORTHING	EASTING
PC (10055)	216+74.51	555020.2878	582234.5556
PI (10056)	220+32.77	555376.8208	582269.7013
CC (10057)		555167.4386	580741.7909
PT (10058)	223+77.86	555710.7546	582139.9353

Radius:	1500.0000
Design Speed(mph):	35.0000
Superelevation:	-3.4000%
Delta:	26° 51′ 56.9707″ Left
Degree of Curvature(Arc):	3° 49′ 10.9873″
Length:	703.3456
Tangent:	358.2611
Chord:	696.9200
Middle Ordinate:	41.0361
External:	42.1903
Tangent Direction:	N 5° 37′ 47.2864″ E
Radial Direction:	S 84° 22′ 12.7136″ E
Chord Direction:	N 7° 48′ 11.1990″ W
Radial Direction:	N 68° 45′ 50.3157″ E
Tangent Direction:	N 21° 14′ 09.6843″ W

CIRCULAR CURVE NO. 14 - RUNAROUND ROAD

	STATION	NORTHING	EASTING
PC (10059)	225+81.56	555900.6228	582066.1529
PI (10060)	226+53.13	555967.3351	582040.2286
CC (10061)		556081.7281	582532.2010
PT (10062)	227+23.74	556038.6412	582034.0610

Radius:	500.0000
Design Speed(mph):	30.0000
Superelevation:	4.2000%
Delta:	16° 17′ 32.9829″ Right
Degree of Curvature(Arc):	11° 27′ 32.9622″
Length:	142.1788
Tangent:	71.5723
Chord:	141.7003
Middle Ordinate:	5.0452
External:	5.0966
Tangent Direction:	N 21° 14′ 09.6843″ W
Radial Direction:	N 68° 45′ 50.3157″ E
Chord Direction:	N 13° 05′ 23.1929″ W
Radial Direction:	N 85° 03′ 23.2985″ E
Tangent Direction:	N 4° 56′ 36.7015″ W

CIRCULAR CURVE NO. 15 - RUNAROUND ROAD

	STATION	NORTHING	EASTING
PC (10063)	227+99.44	556114.0658	582027.5371
PI (10064)	228+92.51	556206.7915	582019.5167
CC (10065)		556157.1527	582525.6771
PT (10066)	229+83.48	556296.1923	582045.3980

Radius:	500.0000
Design Speed(mph):	25.0000
Superelevation:	2.0000%
Delta:	21° 05′ 20.8293″ Right
Degree of Curvature(Arc):	11° 27′ 32.9619″
Length:	184.0373
Tangent:	93.0718
Chord:	183.0002
Middle Ordinate:	8.4436
External:	8.5886
Tangent Direction:	N 4° 56′ 36.7015″ W
Radial Direction:	N 85° 03′ 23.2985″ E
Chord Direction:	N 5° 36′ 03.7132″ E
Radial Direction:	S 73° 51′ 15.8722″ E
Tangent Direction:	N 16° 08′ 44.1278″ E

CIRCULAR CURVE NO. 16 - NORTH SIDEPATH

	STATION	NORTHING	EASTING
PC (10071)	320+00.00	555707.6943	581953.1244
PI (10072)	321+56.65	555864.3382	581954.3853
CC (10073)		555698.5397	583090.4209
PT (10074)	323+11.34	556014.8086	581997.9461

Radius:	1137.3333
Design Speed(mph):	N/A
Superelevation:	0.0000
Delta:	15° 41′ 03.8952″ Right
Degree of Curvature(Arc):	5° 02′ 15.8269″
Length:	311.3390
Tangent:	156.6489
Chord:	310.3678
Middle Ordinate:	10.6368
External:	10.7372
Tangent Direction:	N 0° 27′ 40.2817″ E
Radial Direction:	S 89° 32′ 19.7183″ E
Chord Direction:	N 8° 18′ 12.2293″ E
Radial Direction:	S 73° 51′ 15.8230″ E
Tangent Direction:	N 16° 08′ 44.1770″ E

CIRCULAR CURVE NO. 20 - JAMISON CORNER ROAD

	STATION	NORTHING	EASTING
PC (10045)	125+50.18	555592.9814	581925.1924
PI (10046)	127+70.43	555812.3302	581905.3215
CC (10073)		555698.5397	583090.4209
PT (10048)	129+85.58	556023.8904	581966.5673

Radius:	1170.0000
Design Speed(mph):	25.0000
Superelevation:	2.6000%
Delta:	21° 19′ 18.5152″ Right
Degree of Curvature(Arc):	4° 53′ 49.4706″
Length:	435.3989
Tangent:	220.2471
Chord:	432.8909
Middle Ordinate:	20.1951
External:	20.5498
Tangent Direction:	N 5° 10′ 34.7188″ W
Radial Direction:	N 84° 49′ 25.2812″ E
Chord Direction:	N 5° 29′ 04.5388″ E
Radial Direction:	S 73° 51′ 16.2036″ E
Tangent Direction:	N 16° 08′ 43.7964″ E

HV-06

N:\31653-000\CONTRACT 1A\CADD\HV006U301_1A.dgn
11/21/2012 9:01:56 AM

DELAWARE
DEPARTMENT OF TRANSPORTATION

ADDENDUMS / REVISIONS

US 301,
SR 896 TO SR 1

CONTRACT	BRIDGE NO.
T200911308	DESIGNED BY: JJO
COUNTY	
NEW CASTLE	CHECKED BY: TAO

HORIZONTAL AND
VERTICAL CONTROL

SHEET NO. 64
TOTAL SHTS. 875

CIRCULAR CURVE NO. 4 – US 301

	STATION	NORTHING	EASTING
PC (10020)	813+21.39	555289.9967	586303.3609
PI (10021)	820+57.93	555209.2089	587035.4534
CC (10022)		557924.0074	586594.0291
PT (10023)	827+58.20	555517.7782	587704.2367

Radius:	2650.0000
Design Speed(mph):	70.0000
Superelevation:	-5.7000%
Delta:	31° 03′ 55.0855″ Left
Degree of Curvature(Arc):	2° 09′ 43.5776″
Length:	1436.8083
Tangent:	736.5366
Chord:	1419.2736
Middle Ordinate:	96.7833
External:	100.4520
Tangent Direction:	S 83° 42′ 10.0000″ E
Radial Direction:	S 6° 17′ 50.0000″ W
Chord Direction:	N 80° 45′ 52.4572″ E
Radial Direction:	S 24° 46′ 05.0855″ E
Tangent Direction:	N 65° 13′ 54.9145″ E

CIRCULAR CURVE NO. 5 – US 301 NB

	STATION	NORTHING	EASTING
PC (11035)	847+07.08	556309.7394	589485.1561
PI (11031)	858+61.08	556793.2018	590532.9974
CC (11036)		557971.3996	588718.4844
PT (11037)	867+66.25	557947.0963	590548.3230

Radius:	1830.0000
Design Speed(mph):	60.0000
Superelevation:	5.6000%
Delta:	64° 28′ 15.5392″ Left
Degree of Curvature(Arc):	3° 07′ 51.3009″
Length:	2059.1726
Tangent:	1153.9962
Chord:	1952.2453
Middle Ordinate:	282.0709
External:	333.4711
Tangent Direction:	N 65° 13′ 54.9145″ E
Radial Direction:	S 24° 46′ 05.0855″ E
Chord Direction:	N 32° 59′ 47.1449″ E
Radial Direction:	S 89° 14′ 20.6248″ E
Tangent Direction:	N 0° 45′ 39.3752″ E

CIRCULAR CURVE NO. 6 – RAMP Q

	STATION	NORTHING	EASTING
PCC (11056)	1009+81.26	558079.7851	590360.2533
PI (11052)	1023+68.13	556701.5748	590205.5139
CC (11057)		558354.2586	587915.6134
PT (11058)	1035+06.96	556120.5512	588946.2206

Radius:	2460.0000
Design Speed(mph):	70.0000
Superelevation:	-5.8000%
Delta:	58° 49′ 33.0402″ Right
Degree of Curvature(Arc):	2° 19′ 44.7482″
Length:	2525.6935
Tangent:	1386.8698
Chord:	2416.2131
Middle Ordinate:	317.0864
External:	364.0057
Tangent Direction:	S 6° 24′ 21.9290″ W
Radial Direction:	N 83° 35′ 38.0710″ W
Chord Direction:	S 35° 49′ 08.4491″ W
Radial Direction:	N 24° 46′ 05.0308″ W
Tangent Direction:	S 65° 13′ 54.9692″ W

CIRCULAR CURVE NO. 21 – HYETTS CORNER ROAD

	STATION	NORTHING	EASTING
PCC (10902)	903+06.58	555803.4184	585434.5358
PI (10905)	905+85.26	555712.2895	585697.8902
CC (10903)		545625.5116	581912.6628
PCC (10303)	908+63.81	555607.6631	585956.1795

Radius:	10770.0221
Design Speed(mph):	45.0000
Superelevation:	2.0000%
Delta:	2° 57′ 51.8669″ Right
Degree of Curvature(Arc):	0° 31′ 55.1753″
Length:	557.2266
Tangent:	278.6755
Chord:	557.1645
Middle Ordinate:	3.6036
External:	3.6048
Tangent Direction:	S 70° 54′ 46.0250″ E
Radial Direction:	S 19° 05′ 13.9750″ W
Chord Direction:	S 69° 25′ 50.0909″ E
Radial Direction:	S 22° 03′ 05.8418″ W
Tangent Direction:	S 67° 56′ 54.1582″ E

CIRCULAR CURVE NO. 22 – HYETTS CORNER ROAD

	STATION	NORTHING	EASTING
PCC (10303)	908+63.81	555607.6631	585956.1795
PI (10307)	917+97.56	555257.0923	586821.6269
CC (10305)		551529.5409	584304.2355
PCC (10306)	927+04.02	554585.2418	587470.0990

Radius:	4400.0000
Design Speed(mph):	45.0000
Superelevation:	2.2000%
Delta:	23° 57′ 46.0199″ Right
Degree of Curvature(Arc):	1° 18′ 07.8365″
Length:	1840.2096
Tangent:	933.7554
Chord:	1826.8272
Middle Ordinate:	95.8537
External:	97.9883
Tangent Direction:	S 67° 56′ 54.1582″ E
Radial Direction:	S 22° 03′ 05.8418″ W
Chord Direction:	S 55° 58′ 01.1486″ E
Radial Direction:	S 46° 00′ 51.8618″ W
Tangent Direction:	S 43° 59′ 08.1382″ E

CIRCULAR CURVE NO. 23 – HYETTS CORNER ROAD

	STATION	NORTHING	EASTING
PCC (10306)	927+04.02	554585.2418	587470.0990
PI (10310)	928+46.75	554482.5427	587569.2245
CC (10308)		549029.4220	581713.9835
PT (10309)	929+89.45	554376.3758	587664.6209

Radius:	8000.0000
Design Speed(mph):	45.0000
Superelevation:	2.2000%
Delta:	2° 02′ 39.3668″ Right
Degree of Curvature(Arc):	0° 42′ 58.3101″
Length:	285.4337
Tangent:	142.7320
Chord:	285.4186
Middle Ordinate:	1.2730
External:	1.2732
Tangent Direction:	S 43° 59′ 08.1371″ E
Radial Direction:	S 46° 00′ 51.8629″ W
Chord Direction:	S 42° 57′ 48.5036″ E
Radial Direction:	S 48° 03′ 31.2297″ W
Tangent Direction:	S 41° 56′ 28.7703″ E

CIRCULAR CURVE NO. 32 – HYETTS CORNER ROAD

	STATION	NORTHING	EASTING
PC (10900)	897+10.03	555912.5970	584850.2869
PI (10904)	905+10.52	555901.6787	585150.5722
CC (10901)		553903.9244	584777.2517
PCC (10902)	903+06.58	555803.4184	585434.5358

Radius:	2010.0000
Design Speed(mph):	45.0000
Superelevation:	2.0000%
Delta:	17° 00′ 17.4989″ Right
Degree of Curvature(Arc):	2° 51′ 01.9307″
Length:	596.5495
Tangent:	300.4837
Chord:	594.3625
Middle Ordinate:	22.0907
External:	22.3362
Tangent Direction:	S 87° 55′ 03.5239″ E
Radial Direction:	S 2° 04′ 56.4761″ W
Chord Direction:	S 79° 24′ 54.7745″ E
Radial Direction:	S 19° 05′ 13.9750″ W
Tangent Direction:	S 70° 54′ 46.0250″ E

CIRCULAR CURVE NO. 24 – HIGH SCHOOL DRIVEWAY

	STATION	NORTHING	EASTING
PC (10202)	2001+40.46	555832.6781	585765.9199
PI (10203)	2001+61.25	555852.5030	585772.1802
CC (10204)		555806.7816	585847.9282
PT (10205)	2001+81.25	555867.2791	585786.8050

Radius:	86.0000
Design Speed(mph):	20.0000
Superelevation:	6.0000%
Delta:	27° 10′ 48.6055″ Right
Degree of Curvature(Arc):	66° 37′ 22.7980″
Length:	40.7970
Tangent:	20.7898
Chord:	40.4155
Middle Ordinate:	2.4079
External:	2.4772
Tangent Direction:	N 17° 31′ 30.1307″ E
Radial Direction:	S 72° 28′ 29.8693″ E
Chord Direction:	N 31° 06′ 54.4335″ E
Radial Direction:	S 45° 17′ 41.2638″ E
Tangent Direction:	N 44° 42′ 18.7362″ E

CIRCULAR CURVE NO. 25 – UTILITY ACCESS ROAD

	STATION	NORTHING	EASTING
PC (10401)	400+22.52	555404.1285	586436.4307
PI (10402)	400+34.46	555414.5907	586442.1819
CC (10403)		555377.1518	586485.5047
PT (10404)	400+46.05	555421.7976	586451.7000

Radius:	56.0000
Design Speed(mph):	
Superelevation:	
Delta:	24° 04′ 10.8518″ Right
Degree of Curvature(Arc):	102° 18′ 50.0111″
Length:	23.5253
Tangent:	11.9388
Chord:	23.3527
Middle Ordinate:	1.2308
External:	1.2585
Tangent Direction:	N 28° 47′ 53.4716″ E
Radial Direction:	S 61° 12′ 06.5284″ E
Chord Direction:	N 40° 49′ 58.8975″ E
Radial Direction:	S 37° 07′ 55.6766″ E
Tangent Direction:	N 52° 52′ 04.3234″ E

CIRCULAR CURVE NO. 26 – UTILITY ACCESS ROAD

	STATION	NORTHING	EASTING
PC (10405)	401+44.54	555481.2573	586530.2283
PI (10406)	408+70.71	556008.4425	587029.6137
CC (10407)		555505.3270	586504.8186
PT (10408)	402+51.13	555531.7289	586481.8417

Radius:	35.0000
Design Speed(mph):	
Superelevation:	
Delta:	174° 28′ 52.0005″ Left
Degree of Curvature(Arc):	163° 42′ 08.0178″
Length:	106.5844
Tangent:	726.1612
Chord:	69.9188
Middle Ordinate:	33.3150
External:	692.0042
Tangent Direction:	N 43° 26′ 55.6603″ E
Radial Direction:	S 46° 33′ 04.3397″ E
Chord Direction:	N 43° 47′ 30.3399″ W
Radial Direction:	N 41° 01′ 56.3401″ W
Tangent Direction:	S 48° 58′ 03.6599″ W

CIRCULAR CURVE NO. 27 – UTILITY ACCESS ROAD

	STATION	NORTHING	EASTING
PC (10409)	403+27.41	555481.6507	586424.2999
PI (10410)	403+44.91	555470.1645	586411.1018
CC (10411)		555504.2808	586404.6052
PT (10412)	403+59.09	555475.9962	586394.6059

Radius:	30.0000
Design Speed(mph):	
Superelevation:	
Delta:	60° 30′ 09.6049″ Right
Degree of Curvature(Arc):	190° 59′ 09.3542″
Length:	31.6791
Tangent:	17.4964
Chord:	30.2276
Middle Ordinate:	4.0853
External:	4.7293
Tangent Direction:	S 48° 58′ 01.9741″ W
Radial Direction:	N 41° 01′ 58.0259″ W
Chord Direction:	S 79° 13′ 06.7765″ W
Radial Direction:	N 19° 28′ 11.5790″ E
Tangent Direction:	N 70° 31′ 48.4210″ W

CIRCULAR CURVE NO. 28 – UTILITY ACCESS ROAD

	STATION	NORTHING	EASTING
PC (10413)	404+93.75	555520.8800	586267.6460
PI (10414)	405+22.65	555530.5133	586240.3970
CC (10415)		555473.7391	586250.9805
PCC (10416)	405+46.16	555511.7090	586218.4491

Radius:	50.0000
Design Speed(mph):	
Superelevation:	
Delta:	60° 03′ 31.5362″ Left
Degree of Curvature(Arc):	114° 35′ 29.6125″
Length:	52.4112
Tangent:	28.9017
Chord:	50.0444
Middle Ordinate:	6.7116
External:	7.7521
Tangent Direction:	N 70° 31′ 48.4210″ W
Radial Direction:	N 19° 28′ 11.5790″ E
Chord Direction:	S 79° 26′ 25.8109″ W
Radial Direction:	N 40° 35′ 19.9572″ W
Tangent Direction:	S 49° 24′ 40.0428″ W

HV-07

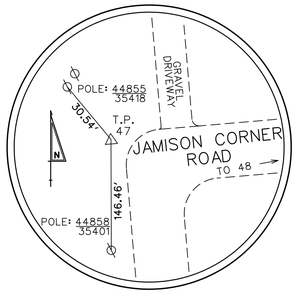

TRAVERSE POINT #47
CONCRETE MONUMENT

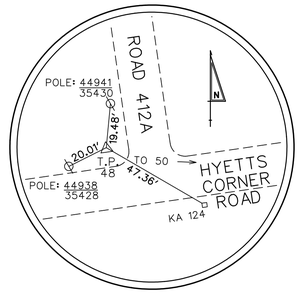

TRAVERSE POINT #48
REBAR AND CAP

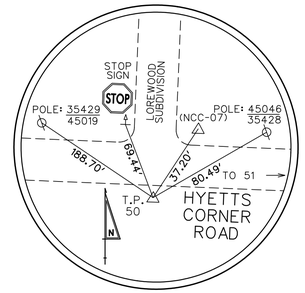

TRAVERSE POINT #50
REBAR AND CAP

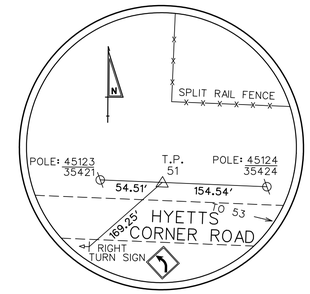

TRAVERSE POINT #51
REBAR AND CAP

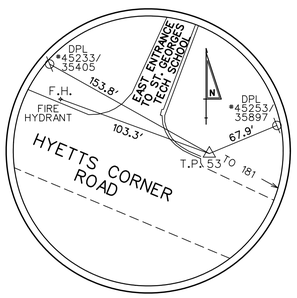

TRAVERSE POINT #53
REBAR AND CAP

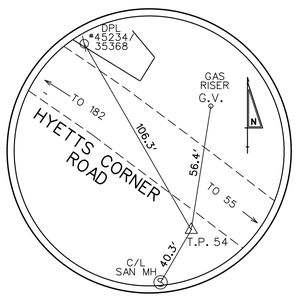

TRAVERSE POINT #54
REBAR AND CAP

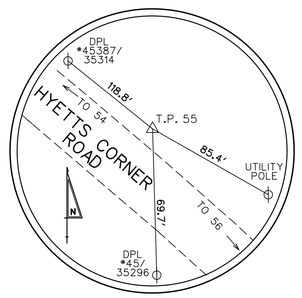

TRAVERSE POINT #55
REBAR AND CAP

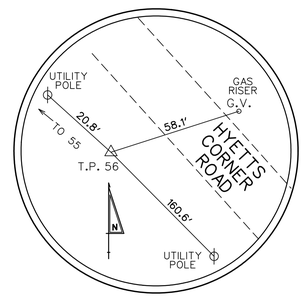

TRAVERSE POINT #B46
CONCRETE MONUMENT

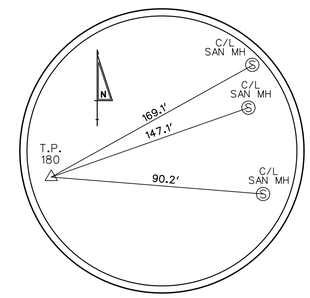

TRAVERSE POINT #180
REBAR AND CAP

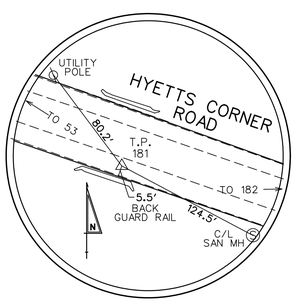

TRAVERSE POINT #181
MAG NAIL

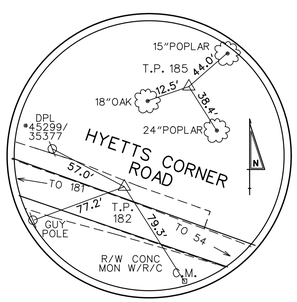

TRAVERSE POINT #182 - MAG NAIL
TRAVERSE POINT #185 - PK NAIL

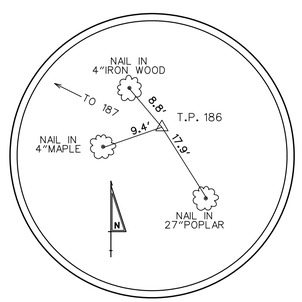

TRAVERSE POINT #186
PK NAIL

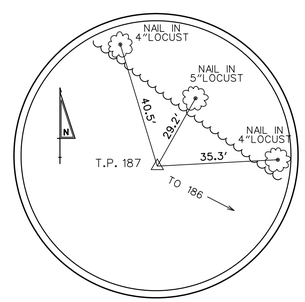

TRAVERSE POINT #187
PK NAIL

n:\31653-000\contract to\cadd\HV008U301_1A.dgn
10/30/2012 2:41:00 PM

DELAWARE DEPARTMENT OF TRANSPORTATION	ADDENDUMS / REVISIONS	NOT TO SCALE	US 301, SR 896 TO SR 1	CONTRACT T200911308	BRIDGE NO.	HORIZONTAL AND VERTICAL CONTROL	HV-08
				COUNTY NEW CASTLE	DESIGNED BY: JJO		SHEET NO. 66
					CHECKED BY: TAO		TOTAL SHTS. 875