NOTES:

1. THE LIMITS OF GRADING FOR THE BORROW SITES AS SHOWN ON GR-02, GR-03 AND GR-04 SHALL BE CONSIDERED THE MAXIMUM LIMITS OF FINAL GRADING FOR THE BORROW SITES. SHOULD LESS BORROW MATERIAL BE REQUIRED, THE SITES SHALL BE EXCAVATED TO A SHALLOWER ELEVATION OR THE LIMITS OF GRADING SHALL BE REDUCED. THE CONTRACTOR SHALL SUBMIT A REVISED FINAL GRADING PLAN TO THE ENGINEER FOR APPROVAL. THE LIMITS OF GRADING FOR THE BORROW SITE AS SHOWN ON GR-05 SHALL BE CONSIDERED THE ACTUAL LIMIT OF FINAL GRADING.

2. EXCAVATION OR DEWATERING SHALL NOT AFFECT THE LOCAL GROUND WATER TABLE. THE BOTTOM LIMIT OF EXCAVATION OR ANY OTHER WORK CANNOT EXCEED:
A. 12" BELOW THE FINAL GRADING SHOWN ON GR-02, OR ELEVATION 30, WHICHEVER IS LESS;
B. 12" BELOW THE FINAL GRADING SHOWN ON GR-03 AND GR-04, OR ELEVATION 27, WHICHEVER IS LESS; AND
C. 12" BELOW THE FINAL GRADING SHOWN ON GR-05;
IN ACCORDANCE WITH STIPULATIONS CONTAINED IN THE PROJECT'S BIOLOGICAL ASSESSMENT, PERMITS, AND RECORD OF DECISION. TRENCHING FOR CONSTRUCTION OF UTILITIES OR PIPES INCLUDED IN THE CONTRACT DOCUMENTS IS EXCLUDED FROM THIS REQUIREMENT. TRENCHING OR OTHER METHODS FOR DEWATERING THE BORROW SITES IS INCLUDED IN THIS REQUIREMENT.

3. NO EXCAVATION IS TO OCCUR WITHIN 50 FEET OF ANY WOODS LINE OR PROPERTY LINE, EXCEPT AT THE BORROW SITE OUTFALL LOCATION AS SHOWN ON GR-02 THROUGH GR-05. HEDGEROWS AND OLD FIELDS ARE NOT CONSIDERED TO BE WOODS LINES.

4. EXISTING BORROW SITE TOPSOIL AND AGRICULTURAL SOIL SHALL BE STRIPPED, STOCKPILED, AND QUARANTINED FOR RE-USE ON THE BORROW SITE. AGRICULTURAL SOIL IS DEFINED AS THE TOP 9-INCHES OF SOIL OBTAINED FROM AN ACTIVE FARM FIELD OR RECENTLY ABANDONED FARM FIELD (LESS THAN 2 YEARS FALLOW OR ABANDONED).). AGRICULTURAL SOILS SHALL BE TREATED AS TOPSOIL AS DESCRIBED IN SECTION 202. THE SOURCE OF THE AGRICULTURAL SOIL MUST HAVE BEEN IN CROP. NO TOPSOIL OR AGRICULTURAL SOIL REMOVED FROM THE BORROW SITE SHALL BE PLACED IN ANOTHER LOCATION. ALL OF THE TOPSOIL AND AGRICULTURAL SOIL SHALL BE RE-USED ON THE SITE.

5. FOR THE BORROW SITES SHOWN ON GR-02, GR-03, AND GR-04, FINAL INTERNAL BORROW SITE SIDE SLOPE GRADES SHALL BE A MAXIMUM OF 5:1. WITH THE APPROVAL OF THE ENGINEER, SLOPES MAY BE OVEREXCAVATED TO 3:1 AND BACKFILLED WITH TOPSOIL, AGRICULTURAL SOIL,ROOTMAT, OR UNSUITABLE SOILS TO CREATE A FINAL SLOPE OF 5:1. OVEREXCAVATED SLOPES SHALL ALSO INCLUDE A BENCH AS APPROVED BY THE ENGINEER TO PREVENT SLIPPAGE OF MATERIALS SUBSEQUENTLY PLACED. UNSUITABLE SOIL IS DEFINED AS A-4,A-5, A-6, OR A-7 SOILS, AASHTO CLASSIFICATION. AGRICULTURAL SOIL, ROOTMAT AND UNSUITABLE SOILS MAY BE IMPORTED TO THE BORROW SITE FROM WITHIN THE CONTRACT LIMITS AND PLACED ABOVE THE MAXIMUM EXCAVATION LIMITS AS DEFINED IN NOTE 2. UNSUITABLE SOILS AND ROOTMAT SHALL BE BURIED A MINIMUM OF 18 INCHES BELOW FINAL GRADE WITH THE 18 INCHES CONSISTING OF TOPSOIL OR AGRICULTURAL SOILS. UNSUITABLE SOILS AND ROOTMAT SHALL BE PLACED SUCH THAT INTERNAL SLOPES AND GRADING WITHIN THE BORROW SITES SHALL BE CONTINUOUS SMOOTH LINES AND GRADES REPRESENTING A NATURALIZED CONDITION AND SHALL NOT APPEAR DISTURBED, MOUNDED, OR PILED, AS SOLELY DETERMINED BY THE ENGINEER. MATERIALS PLACED IN THESE OVER-EXCAVATED AREAS SHALL BE APPROVED BY THE ENGINEER AND COMPACTED AS DIRECTED BY THE ENGINEER. TOPOGRAPHIC SURVEY ON THE FINAL OVEREXCAVATED SLOPES FOR MEASUREMENT OF FINAL EXCAVATED QUANTITIES SHALL BE PERFORMED BEFORE PLACING ANY UNSUITABLE MATERIALS OR ROOTMAT. TOPOGRAPHIC SURVEY ON THE FINAL SLOPES OF THE UNSUITABLE MATERIALS OR ROOTMAT PLACED SHALL BE PERFORMED PRIOR TO PLACING ANY TOPSOIL OR AGRICULTURAL SOIL TO ENSURE THAT THESE MATERIALS ARE BURIED A MINIMUM OF 18" BELOW FINAL GRADES. THE CONTRACTOR SHALL SUBMIT A REVISED GRADING PLAN TO THE ENGINEER FOR APPROVAL.

6. TRASH, CONSTRUCTION DEBRIS, PILE CUTOFFS, ASPHALT MILLINGS, ROCKS AND STONES AND OTHER CONSTRUCTION WASTE GENERATED ON THE CONTRACT SHALL NOT BE BURIED IN THE BORROW SITE OR THE SIDE SLOPES OF THE BORROW SITE. WITH PERMISSION AND UNDER THE DIRECTION OF THE ENGINEER, TREE STUMPS AND LARGE SECTIONS OF TREE TRUNKS CAN BE PLACED ON THE FINAL SOIL SURFACE. THE MINIMUM DISTANCE BETWEEN THE PLACED STUMPS/TRUNKS SHALL BE 35 FEET. STUMPS AND TRUNKS SHALL NOT BE PLACED IN PILES. TREE STUMP PLACEMENT IS OPTIONAL AND NOT MANDATORY.

7. UNDER FINAL CONDITIONS THE BORROW SITES SHALL BE GRADED TO DRAIN. WATER SHOULD NOT STAND ON THE SITES FOLLOWING RAIN EVENTS BUT SHALL BE CONVEYED VIA STABLE CHANNELS, SWALES, OR STABLE OVERLAND FLOW TO ADJACENT WETLANDS AND FORESTED AREAS. THE CONTRACTOR SHALL NOT CHANGE THE BORROW SITE OUTFALL LOCATIONS AS SHOWN ON GR-02 THROUGH GR-05.

8. FOLLOWING EXTRACTION OF BORROW, AND PRIOR TO SECTION 733 - TOPSOILING, SUBSOILS SHALL BE TILLED AS SPECIFIED IN SPECIAL PROVISION 202555 - SUBSOIL TILLAGE. SUBSOILS SHALL BE TILLED THROUGH THE EXTENT OF THE BORROW SITES, EXCEPT THAT NO SUBSOIL TILLAGE SHOULD BE PERFORMED:
A. WITHIN STORMWATER MANAGEMENT PONDS,
B. WITHIN 15' OF THE TOE OF SLOPE OF STORMWATER MANAGEMENT POND EMBANKMENTS, OR
C. WITHIN 10' OF UNDERGROUND UTILITIES.
TOPOGRAPHIC SURVEY ON THE FINAL EXCAVATED SLOPES FOR MEASUREMENT OF FINAL EXCAVATED QUANTITIES SHALL BE PERFORMED BEFORE THE SUBSOILS ARE TILLED.

9. A MINIMUM OF 6 INCHES OF TOPSOIL SHALL BE PLACED OVER ALL EXCAVATED AND DISTURBED AREAS IN CONFORMANCE WITH SECTION 733 - TOPSOILING. LOCAL AGRICULTURAL SOILS GENERATED WITHIN THE CONTRACT LIMITS SHALL BE CONSIDERED ACCEPTABLE TOPSOIL MATERIAL. WITH THE PERMISSION OF THE ENGINEER, THE TOPSOILING DEPTH MAY EXCEED THE MINIMUM 6-INCH DEPTH, BUT THE FINAL ELEVATION AT ANY LOCATION SHALL NOT EXCEED THE ORIGINAL GROUND ELEVATION AT THE START OF THE PROJECT. FOLLOWING THE FINAL TOPSOILING, INTERNAL SLOPES AND GRADING WITHIN THE BORROW SITE SHALL BE CONTINUOUS SMOOTH LINES AND GRADES REPRESENTING A NATURALIZED CONDITION AND SHALL NOT APPEAR DISTURBED,MOUNDED, OR PILED, AS SOLELY DETERMINED BY THE ENGINEER. NO INTERNAL GRADE SHALL EXCEED 5:1.

10. AT THE CONCLUSION OF ALL GRADING AND TOPSOIL PLACEMENT OPERATIONS, ALL DISTURBED AREAS SHALL BE SEEDED WITH ITEM 734551 - NATIVE GRASS SEEDING - NO MOW MIX. TIMING FOR THE SEEDING OPERATIONS SHALL BE PER THE SPECIFICATION, SEPTEMBER 1ST TO NOVEMBER 15TH. SEED SHALL BE DISCED INTO THE SOIL A MINIMUM OF 6 INCHES DEEP IN THREE PASSES WITH EACH PASS 90 DEGREES TO THE PREVIOUS PASS. THE COST OF DISCING SHALL BE INCIDENTAL TO ITEM 734551 - NATIVE GRASS SEEDING: NO MOW MIX.

11. SOILS MEETING GRADATION REQUIREMENTS FOR BORROW TYPES A, C, D, AND F ARE AVAILABLE IN THE BORROW SOURCES FOR THIS PROJECT. THE CONTRACTOR IS RESPONSIBLE FOR IDENTIFYING THE LOCATION OF QUALIFYING MATERIALS AND SORTING AND STOCKPILING THESE MATERIALS AS NEEDED TO COMPLETE THE WORK. NO COMPENSATION WILL BE PROVIDED FOR ACTIVITIES ASSOCIATED WITH ACQUISITION OF THESE MATERIALS FROM OFF-SITE DUE TO A FAILURE TO USE MATERIAL AVAILABLE ON-SITE. GEOTECHNICAL DATA WILL BE PROVIDED BY THE DEPARTMENT TO ASSIST IN THE LOCATION OF BORROW TYPES, BUT IT IS THE RESPONSIBILITY OF THE CONTRACTOR TO VERIFY THE GRADATION OF THE MATERIALS.

NOTES:

12. MEASUREMENT AND PAYMENT:

A. ALL EXCAVATION INCLUDING STRIPPING AND STOCKPILING OF TOPSOIL AND AGRICULTURAL SOILS SHALL BE CALCULATED AND PAID FOR UNDER ITEM 202000, EXCAVATION AND EMBANKMENT. MEASUREMENT SHALL BE BY CROSS-SECTIONAL METHOD. DOUBLE HANDLING FOR STOCKPILING AND SORTING OF MATERIAL TYPES FOR USE ON THE PROJECT SHALL NOT BE MEASURED BUT SHALL BE INCIDENTAL TO ITEM 202000. MATERIALS OTHER THAN TOPSOIL, AGRICULTURAL SOIL, OR UNSUITABLE MATERIALS EXCAVATED FROM THE BORROW SITES AND NOT USED ELSEWHERE FOR THE CONSTRUCTION OF THE PROJET SHALL BE INCORPORATED BACK INTO THE BORROW SITE. STOCKPILES OF UNUSED MATERIALS SHALL BE MEASURED BY THE ENGINEER BEFORE THE CONTRACTOR MOVES THE MATERIAL BACK INTO THE BORROW SITE AND THE ENGINEER SHALL MEASURE THE FINAL GROUND AT THE STOCKPILE AFTER THE MATERIALS HAVE BEEN REMOVED. THE MEASURED QUANTITY OF THE STOCKPILES SHALL BE DEDUCTED FROM THE FINAL QUANTITY PAID UNDER ITEM 202000. THE UNUSED MATERIALS SHALL BE INCORPORATED INTO THE BORROW SITE IN ACCORDANCE WITH THESE PROJECT NOTES AND AS DIRECTED BY THE ENGINEER.

B. CLEARING AND GRUBBING OF THE BORROW SITE SHALL BE INCIDENTAL TO ITEM 201000. PLACEMENT OF STUMPS AND TREE TRUNKS, IF ELECTED AND APPROVED, SHALL BE INCIDENTAL TO ITEM 201000.

C. EROSION AND SEDIMENT CONTROL MEASURES SHALL BE PAID FOR UNDER ITEM 202572 - BORROW AREA EROSION AND SEDIMENT CONTROL AND DEWATERING.

D. PLACEMENT OF UNSUITABLE SOILS OR ROOTMAT SHALL BE INCIDENTAL TO THE ITEMS FOR THEIR REMOVAL.

E. SUBSOIL TILLAGE SHALL BE MEASURED AND PAID UNDER ITEM 202555.

F. TOPSOILING SHALL BE PAID UNDER ITEM 733002 UNDER SPECIFICATION SECTION 733. THE SURFACE OF THE FINAL TOPSOIL AREA SHALL BE MEASURED ONCE FOR PAYMENT AND PAID UNDER THE SPECIFIED ITEM REGARDLESS OF THE ACTUAL DEPTH PLACED. THE CONTRACTOR SHALL MEET ALL TOPSOILING REQUIREMENTS WITH TOPSOIL OR AGRICULTURAL SOILS REMOVED FROM THE BORROW SITE. TOPSOIL REMOVED FROM ELSEWHERE WITHIN THE CONTRACT LIMITS THAT IS IN EXCESS OF THE TOPSOILING NEEDED FOR THE PROJECT MAY BE DISPOSED OF AT THE BORROW SITE WITH THE PERMISSION OF THE ENGINEER. ANY OTHER TOPSOIL NEEDED AT THE BORROW SITE DUE TO THE CONTRACTOR'S OPERATIONS, SUCH AS BURYING UNSUITABLE MATERIALS, SHALL BE PROVIDED BY THE CONTRACTOR AT NO EXPENSE TO THE DEPARTMENT.

G. NATIVE GRASS SEEDING SHALL BE MEASURED AND PAID UNDER ITEM 734551.

13. MONITORING WELLS SHALL BE ABANDONED BY A WELL DRILLER LICENSED IN DELAWARE IN ACCORDANCE WITH THE PROVISIONS IN ITEM 211521 - ABANDONMENT OF WELLS. PHYSICAL REMOVAL AND DISPOSAL OF THE ABANDONED WELLS ENCOUNTERED DURING EXCAVATION SHALL BE INCIDENTAL TO ITEM 202000 - EXCAVATION AND EMBANKMENT.

14. SEDIMENT REMOVED FROM SEDIMENT CONTROL DEVICES SHALL BE TREATED PER NOTE 5 ABOVE.

Unofficial Website Copy

PHASE 2-SEDIMENT TRAP SCHEDULE

NO.	D. AREA	LENGTH	WIDTH	DEPTH	OUT. TYPE	WEIR EL.	CLEAN EL.	WEIR LENGTH	EMBANK. EL.
18	1.33 AC	48'	26'	2.00'	STONE	33.85	31.00	5'	35.00

PHASE 2-EARTH DIKE SCHEDULE

NO.	BEGIN STA.	END STA.	OFFSET	LENGTH	TYPE
45	827+43	828+46	-635'	120'	A-2
46	828+65	828+70	-411'	314'	A-2

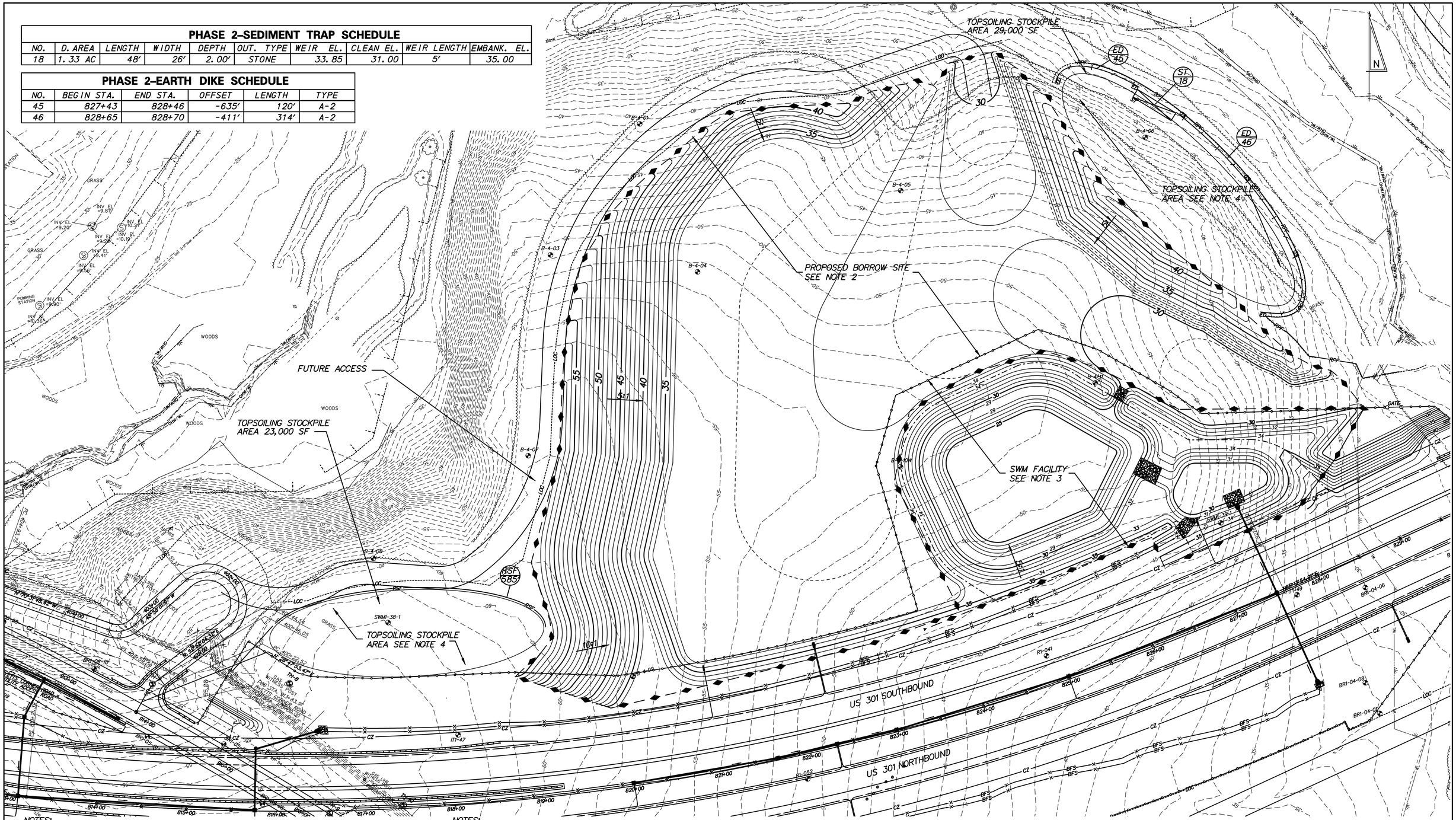

NOTES:

1. SEE SHEET GR-01 FOR NOTES REGARDING VILLAGE OF SCOTT RUN WEST BORROW SITE.

2. WITHIN THE LIMITS INDICATED, EROSION AND SEDIMENT CONTROL SHALL BE PER ITEM 202572 - BORROW AREA EROSION AND SEDIMENT CONTROL AND DEWATERING.

NOTES:

3. WITHIN THE STORMWATER MANAGEMENT LIMITS INDICATED, AND ABOVE TOP OF BERM ELEVATION (EL. 34), EROSION AND SEDIMENT CONTROL SHALL BE PER ITEM 202572 - BORROW AREA EROSION AND SEDIMENT CONTROL AND DEWATERING. ADDITIONAL EROSION AND SEDIMENT CONTROL ACTIVITIES INDICATED FOR CONSTRUCTION OF THE STORMWATER MANAGEMENT POND SHALL BE PAID UNDER THE APPLICABLE EROSION AND SEDIMENT CONTROL LINE ITEMS. SEE CONSTRUCTION PHASING, MOT, & EROSION CONTROL PLANS.

4. EROSION AND SEDIMENT CONTROL FOR TOPSOIL STOCKPILES SHALL BE PAID PER THE APPLICABLE BID ITEMS.

N:\31653-000\CONTRACT 1A\CADD\DE002U301_1A.dgn
8/3/2015 9:20:01 AM

DELAWARE DEPARTMENT OF TRANSPORTATION	ADDENDUMS / REVISIONS	SCALE 0 50 100 150 FEET	US 301, SR 896 TO SR 1	CONTRACT T200911308	BRIDGE NO.	BORROW SITE GRADING VILLAGE OF SCOTT RUN WEST	GR-02
				COUNTY NEW CASTLE	DESIGNED BY: K.A.H.		SHEET NO. 220
					CHECKED BY: B.R.T.		TOTAL SHTS. 875

PHASE 2–EARTH DIKE SCHEDULE

NO.	BEGIN STA.	END STA.	OFFSET	LENGTH	TYPE
52	832+10	833+32	-365′	151′	A-1
53	831+58	832+10	-508′	222′	A-1
54	831+58	833+31	-780′	365′	A-1

PHASE 2–SEDIMENT TRAP SCHEDULE

NO.	D. AREA	LENGTH	WIDTH	DEPTH	OUT. TYPE	WEIR EL.	CLEAN EL.	WEIR LENGTH	EMBANK. EL.
13	14.19AC	164′	84′	2.00′	RIPRAP	29.00	26.00	16′	30.00
22	1.74 AC	60′	29′	2.00′	STONE	28.60	26.00	7′	30.00

NOTES:

1. SEE SHEET GR-01 FOR NOTES REGARDING VILLAGE OF SCOTT\RUN WEST BORROW SITE.
2. WITHIN THE LIMITS INDICATED, EROSION AND SEDIMENT CONTROL SHALL BE PER ITEM 202572 - BORROW AREA EROSION AND SEDIMENT CONTROL AND DEWATERING.
3. WITHIN THE STORMWATER MANAGEMENT LIMITS INDICATED, AND ABOVE TOP OF BERM ELEVATION (EL. 34), EROSION AND SEDIMENT CONTROL SHALL BE PER ITEM 202572 - BORROW AREA EROSION AND SEDIMENT CONTROL AND DEWATERING. ADDITIONAL EROSION AND SEDIMENT CONTROL ACTIVITIES INDICATED FOR CONSTRUCTION OF THE STORMWATER MANAGEMENT POND SHALL BE PAID UNDER THE APPLICABLE EROSION AND SEDIMENT CONTROL LINE ITEMS. SEE CONSTRUCTION PHASING, MOT, & EROSION CONTROL PLANS.
4. EROSION AND SEDIMENT CONTROL FOR TOPSOIL STOCKPILES SHALL BE PAID PER THE APPLICABLE BID ITEMS.

N:\31653-000\Contract 1A\CADD\DE003U301_1A.dgn
11/3/2014 2:22:20 PM

DELAWARE DEPARTMENT OF TRANSPORTATION

ADDENDUMS / REVISIONS

SCALE 0 50 100 150 FEET

US 301, SR 896 TO SR 1

CONTRACT	BRIDGE NO.
T200911308	DESIGNED BY: K.A.H.
COUNTY	
NEW CASTLE	CHECKED BY: B.R.T.

BORROW SITE GRADING VILLAGE OF SCOTT RUN EAST

GR–03

SHEET NO. 221

TOTAL SHTS. 875

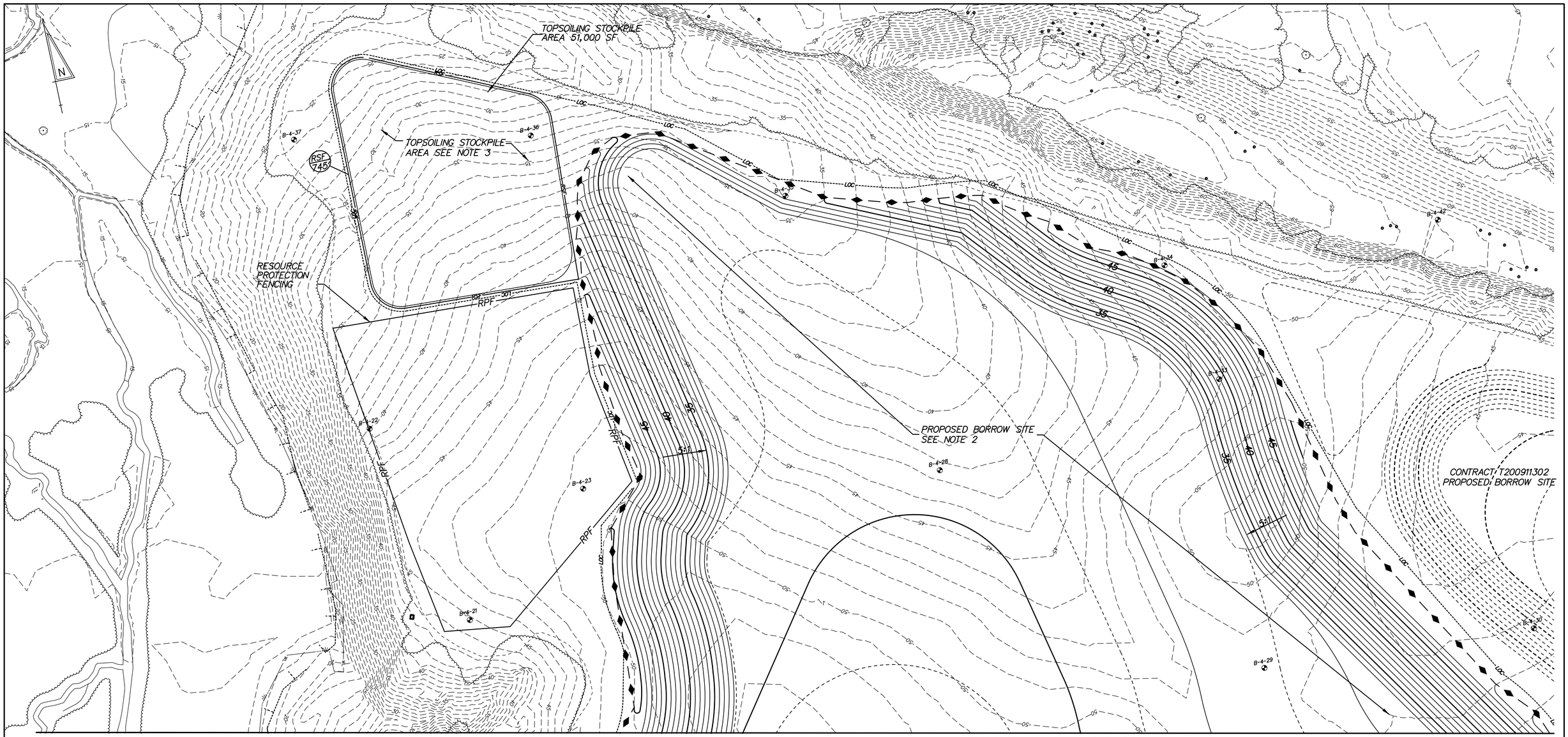

MATCHLINE SHEET GR–03

NOTES:

1. *SEE SHEET GR-01 FOR NOTES REGARDING VILLAGE OF SCOTT RUN EAST BORROW SITE.*

2. *WITHIN THE LIMITS INDICATED, EROSION AND SEDIMENT CONTROL SHALL BE PER ITEM 202572 - BORROW AREA EROSION AND SEDIMENT CONTROL AND DEWATERING.*

3. *EROSION AND SEDIMENT CONTROL FOR TOPSOIL STOCKPILES SHALL BE PAID PER THE APPLICABLE BID ITEMS.*

N:\31653-000\CONTRACT 1A\CADD\DE004U301_1A.dgn
11/3/2014 6:32:10 PM

DELAWARE DEPARTMENT OF TRANSPORTATION	ADDENDUMS / REVISIONS	SCALE 0 50 100 150 FEET	**US 301, SR 896 TO SR 1**	CONTRACT T200911308	BRIDGE NO.	**BORROW SITE GRADING VILLAGE OF SCOTT RUN EAST**	GR–04
				COUNTY NEW CASTLE	DESIGNED BY: S.E.S.		SHEET NO. 222
					CHECKED BY: B.R.T.		TOTAL SHTS. 875

NOTES:

1. GRADES SHOWN ON THIS PLAN SHALL NOT BE CHANGED WITHOUT APPROVAL OF THE ENGINEER. OVEREXCAVATION AND THE BURIAL OF TREE STUMPS AND TRUNKS, TOPSOIL, AGRICULTURAL SOIL, ROOMAT, AND UNSUITABLE SOLIS ETC. WHICH ARE PERMITED PER THE NOTES ON GR-01 WILL NOT BE PERMITTED ON THIS PARCEL.

2. SUBSOIL TILLAGE SHALL NOT BE PERFORMED ON THIS PARCEL. SEEDING ON THIS PARCEL SHALL BE PERFORMED UNDER ITEM 734013 - PERMANANT GRASS SEEDING - DRY GROUND, INSTEAD OF NATIVE GRASS SEEDING.

3. SEE SHEET GR-01 FOR NOTES REGARDING HYETTS CORNER LLC SITE, WHICH SHALL BE MODIFIED PER NOTES 1 AND 2 ABOVE.

4. TEST PILES WERE INSTALLED AT THE LOCATIONS SHOWN AS PART OF A TEST PILE DRIVING PROGRAM FOR US301. THESE TEST PILES ARE A MIX OF CONCRETE AND STEEL PILES. THEY WERE CUT OFF APPROXIMATELY THREE FEET BELOW THE EXISTING GROUND. THE CONTRACTOR SHALL EXCAVATE AT THE TEST PILE LOCATIONS AND CUT OFF THE PILES SO THAT THEY ARE A MINIMUM OF THREE FEET BELOW THE FINAL GRADE. ALL COSTS SHALL BE INCIDENTAL TO ITEM 202000.

5. WITHIN THE LIMITS INDICATED, EROSION AND SEDIMENT CONTROL SHALL BE PER ITEM 202572 - BORROW AREA EROSION AND SEDIMENT CONTROL AND DEWATERING.

6. EROSION AND SEDIMENT CONTROL FOR TOPSOIL STOCKPILES SHALL BE PAID PER THE APPLICABLE BID ITEMS.

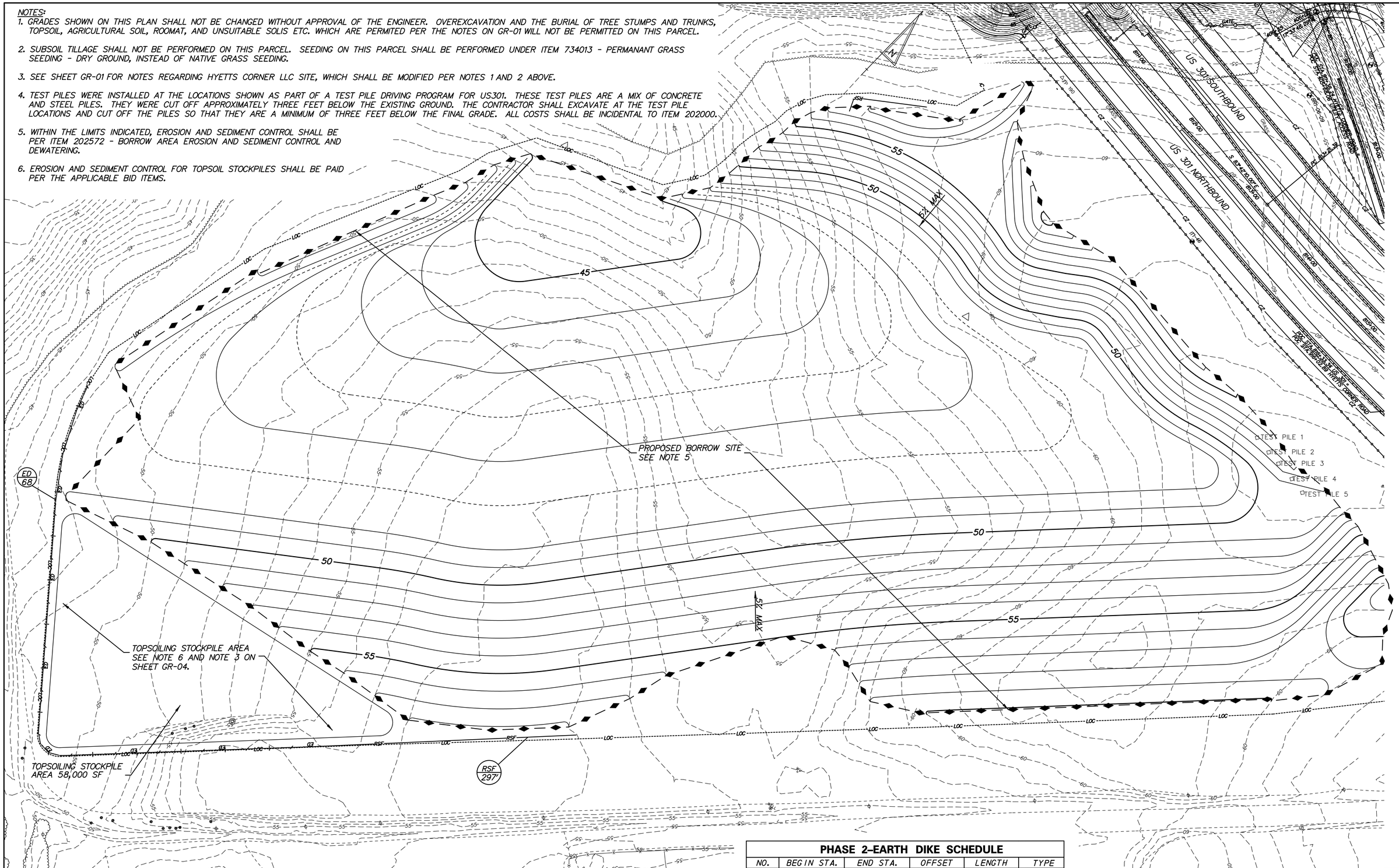

PHASE 2-EARTH DIKE SCHEDULE					
NO.	BEGIN STA.	END STA.	OFFSET	LENGTH	TYPE
68	806+24	810+86	1240'	725'	A-1

N:\31653-000\Contract_1A\CADD\DE005U301_1A.dgn
11/3/2014 2:30:27 PM

DELAWARE
DEPARTMENT OF TRANSPORTATION

ADDENDUMS / REVISIONS

SCALE
0 50 100 150
FEET

US 301,
SR 896 TO SR 1

CONTRACT	BRIDGE NO.
T200911308	DESIGNED BY: S.E.S.
COUNTY	
NEW CASTLE	CHECKED BY: B.R.T.

BORROW SITE GRADING
HYETTS CORNER LLC

GR-05

SHEET NO.
223
TOTAL SHTS.
875

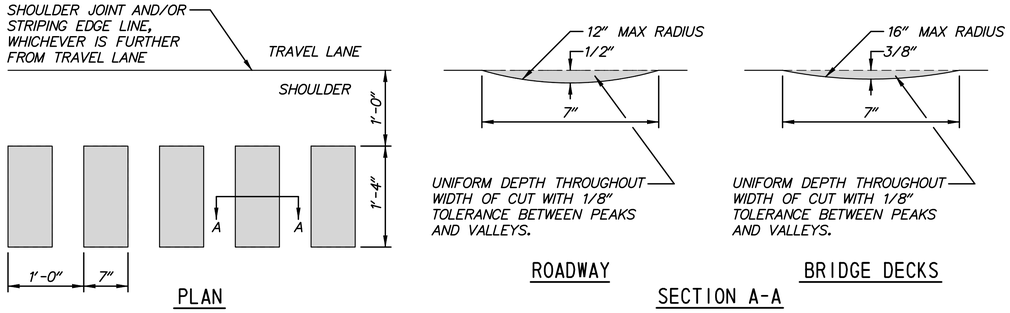

US 301 EDGELINE RUMBLE STRIPS DETAIL

NOT TO SCALE

NOTES:

1. ALL WORK REQUIRED TO COMPLETE THE INSTALLATION OF EDGELINE RUMBLE STRIPS SHALL BE INCIDENTAL TO ITEM 760017 - RUMBLE STRIPS, CONCRETE OR ITEM 760015 - RUMBLE STRIPS, CONCRETE, SHALLOW DEPTH.

2. EDGELINE RUMBLE STRIPS (ROADWAY DEPTH - SEE ABOVE) SHALL BE INSTALLED ALONG ALL INSIDE SHOULDERS OF US 301, AS PER THIS DETAIL, EXCEPT FOR THE FOLLOWING LOCATIONS:

   STATION 684+50 RT. TO STATION 687+00 RT.
   STATION 805+22 RT. TO STATION 810+24 RT.
   STATION 685+00 LT. TO STATION 687+50 LT.
   STATION 806+08 LT. TO STATION 810+86 LT.

3. EDGELINE RUMBLE STRIPS SHALL BE INSTALLED ALONG THE OUTSIDE SHOULDERS OF US 301 AND RAMP Q. EDGELINE RUMBLE STRIPS SHALL BE INSTALLED ALONG BOTH SHOULDERS OF RAMP M, N, O AND P, AS PER THIS DETAIL, AT THE FOLLOWING LOCATIONS:

US 301
STATION 682+00 RT. TO STATION 684+50 RT.
STATION 687+00 RT. TO STATION 751+60 RT.
STATION 757+50 RT. TO STATION 784+50 RT.
STATION 788+97 RT. TO STATION 805+22 RT.
STATION 810+24 RT. TO STATION 848+00 RT.
STATION 687+50 LT. TO STATION 751+06 LT.
STATION 754+50 LT. TO STATION 783+50 LT.
STATION 788+31 LT. TO STATION 806+08 LT.
STATION 810+86 LT. TO STATION 837+50 LT.

RAMP Q
STATION 1028+50 RT. TO STATION 1038+95 RT.
STATION 1028+50 LT. TO STATION 1038+95 LT.

RAMP N
STATION 10+00 RT. TO STATION 26+50 RT.
STATION 15+50 LT. TO STATION 26+50 LT.

RAMP O
STATION 71+00 RT. TO STATION 86+00 RT.
STATION 71+00 LT. TO STATION 89+23 LT

RAMP M
STATION 40+00 RT. TO STATION 48+12 RT.

RAMP P
STATION 50+00 RT. TO STATION 57+94 RT.

4. EDGELINE RUMBLE STRIPS (BRIDGE DECK DEPTH - SEE ABOVE) SHALL BE INSTALLED ALONG THE INSIDE AND OUTSIDE SHOULDERS OF US 301 (BRIDGE I-460N/I-460S) IN ACCORDANCE WITH ITEM 760015 - RUMBLE STRIPS, CONCRETE, SHALLOW DEPTH AT THE FOLLOWING LOCATIONS:
   STATION 805+22 TO 810+24 RT.
   STATION 806+08 TO 810+86 LT.

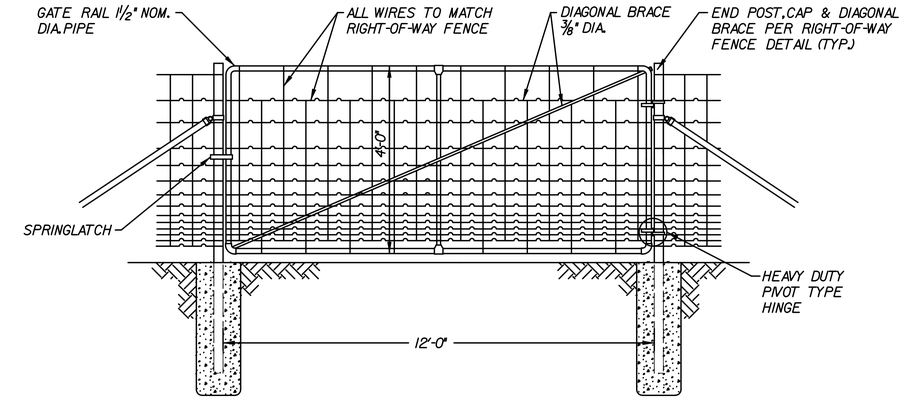

ITEM 727001 - RIGHT-OF-WAY FENCE GATE

NOT TO SCALE

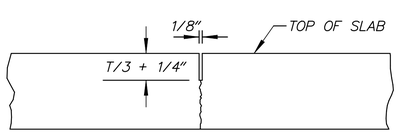

T = PAVEMENT THICKNESS IN INCHES

LONGITUDINAL AND TRANSVERSE SAW-CUT JOINT DETAIL

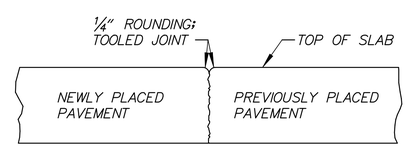

LONGITUDINAL AND TRANSVERSE CONSTRUCTION JOINT DETAIL

NOTES:

1. THESE JOINT DETAILS SHALL BE APPLIED IN LIEU OF THE SEALANT RESERVOIR AND SEALANT DETAILS IN THE STANDARD CONSTRUCTION DETAILS.
2. NO JOINT SEALANT IS REQUIRED TO BE PLACED IN THE PAVEMENT JOINTS, UNLESS SPECIFICALLY NOTED OTHERWISE ON THE PLANS.
3. DOWEL AND TIE BARS NOT SHOWN. SEE STANDARD CONSTRUCTION DETAILS FOR DOWEL AND TIE BAR REQUIREMENTS.

PCC PAVEMENT JOINT DETAILS

NOT TO SCALE

NOTES

1. THIS DETAIL SHALL APPLY TO PAVEMENT CONSTRUCTED BY THE FIRST CONTRACTOR TO PERFORM WORK IN THIS AREA. SELECTION OF WHICH CONTRACT WILL CONSTRUCT THIS DETAIL WILL BE BASED UPON FIELD CONDITIONS AND WILL BE AT THE DIRECTION OF THE ENGINEER. PAYMENT SHALL BE MADE UNDER THE APPLICABLE CONTRACT PAY ITEMS.
2. THE FIRST CONTRACTOR SHALL COVER THE EXPOSED PERMEABLE TREATED BASE COURSE AND SOIL CEMENT BASE COURSE, INCLUDING SIDES AND ENDS, WITH POLYETHYLENE SHEETING, PROPERLY ANCHORED AND LAPPED AT LEAST 18". NO CONSTRUCTION TRAFFIC OF ANY KIND SHALL BE PERMITTED TO TRAVERSE OVER THE PTB OR SOIL CEMENT AT ANY TIME, EITHER COVERED OR UNCOVERED WITH POLYETHYLENE, EXCEPT FOR NECESSARY EQUIPMENT UTILIZED DURING PAVING OPERATIONS. ALL COSTS FOR FURNISHING, INSTALLING AND MAINTAINING THE POLYETHYLENE SHALL BE INCIDENTAL TO THE UNIT PRICE BID FOR THE PTB AND SOIL CEMENT BASE COURSE PAY ITEMS.
3. THE SECOND CONTRACTOR TO PERFORM OPERATIONS IN THIS AREA SHALL REMOVE AND PROPERLY DISPOSE OF THE POLYETHYLENE AND ANCHORING IMMEDIATELY PRIOR TO BEGINNING PAVEMENT OPERATIONS WITH ALL COSTS INCIDENTAL TO THE UNIT PRICE BID FOR THE PTB AND SOIL CEMENT BASE COURSE PAY ITEMS.
4. THE SECOND CONTRACTOR SHALL ALSO SAW CUT THE ENDS OF THE PTB AND SOIL CEMENT BASE COURSE A MINIMUM OF 6" FROM THE END FINISHED BY THE FIRST CONTRACTOR OR AS DIRECTED BY THE ENGINEER. COSTS FOR SAWCUTTING THE PTB SHALL BE MEASURED FOR PAYMENT UNDER ITEM 762001 SAWCUTTING, HOT MIX. COSTS FOR SAWCUTTING THE SOIL CEMENT BASE COURSE SHALL BE MEASURED FOR PAYMENT UNDER ITEM 762002 SAWCUTTING, CONCRETE, FULL DEPTH.
5. THE FIRST CONTRACTOR SHALL CONSTRUCT AND MAINTAIN EDGE BERMS AND TEMPORARY SLOPE DRAINS ALONG THE TOP OF ALL SIDE AND END SLOPES PER THE INCREMENTAL STABILIZATION DETAILS (STANDARD NO. E-1). WHEN THE FIRST CONTRACTOR'S WORK IN THIS AREA IS COMPLETE AND ACCEPTED BY THE ENGINEER, THE FIRST CONTRACTOR SHALL LEAVE ANY E&S MATERIALS ON THE SITE NEEDED TO PROVIDE PROTECTION FOR AREAS WHERE THE SECOND CONTRACTOR IS TO PERFORM WORK WITH COSTS INCIDENTAL TO THE RESPECTIVE PAY ITEMS.
6. THE SECOND CONTRACTOR SHALL TAKE POSSESSION AND BE RESPONSIBLE FOR MAINTAINING, REPLACING AS NEEDED, REMOVING THE E&S MATERIALS AND MEASURES LEFT IN PLACE BY THE FIRST CONTRACTOR AND RESTORATION OF THE AREAS WITH ALL COSTS INCIDENTAL TO ITEM 202000.
7. THE CONTRACTOR FOR CONTRACT T200911301 IS EXPECTED TO BE THE FIRST CONTRACTOR DESCRIBED IN THE ABOVE NOTES.

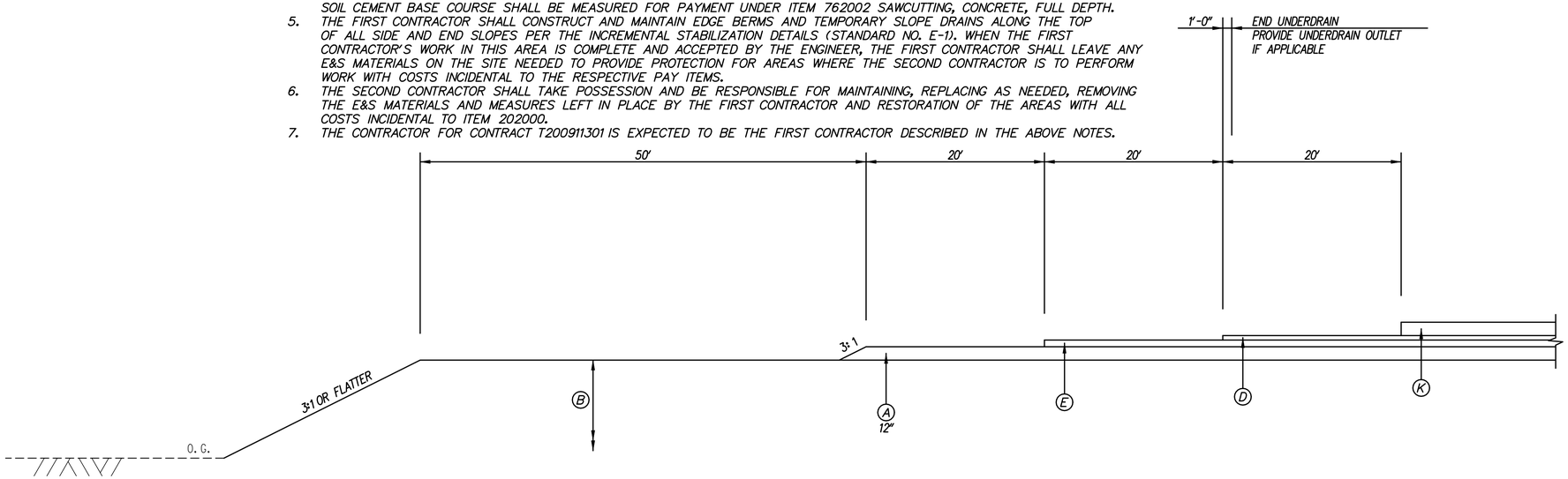

PAVEMENT DETAIL AT LIMIT OF CONSTRUCTION
NOT TO SCALE

LEGEND

- (A) ITEM 209001 - BORROW, TYPE A
- (B) ITEM 209006 - BORROW, TYPE F
- (C) ITEM 302007 - GRADED AGGREGATE BASE COURSE, TYPE B
- (D) ITEM 304501 - PERMEABLE TREATED BASE, 4"
- (E) ITEM 304502 - SOIL CEMENT BASE COURSE, 6"
- (F) ITEM 401801 - WMA, SUPERPAVE, TYPE C, 160 GYRATIONS, PG 64-22
- (G) ITEM 401810 - WMA, SUPERPAVE, TYPE B, 160 GYRATIONS, PG 64-22
- (J) ITEM 401819 - WMA, SUPERPAVE, BITUMINOUS CONCRETE BASE COURSE, 160 GYRATIONS, PG 64-22
- (K) ITEM 501006 - PORTLAND CEMENT CONCRETE PAVEMENT, 12"
- (L) ITEM 701010 - PCC CURB, TYPE 1-8
- (N) ITEM 701022 - PCC CURB AND GUTTER, TYPE 3-8
- (P) ITEM 715001 - PERFORATED PIPE UNDERDRAINS, 6"
- (Q) ITEM 720050 - GALVANIZED STEEL BEAM GUARDRAIL, TYPE 1-31
- (R) ITEM 720052 - GALVANIZED STEEL BEAM GUARDRAIL, TYPE 3-31
- (S) ITEM 727000 - RIGHT OF WAY FENCE
- (T) ITEM 501001 - 8" PORTLAND CEMENT CONCRETE
- (U) ITEM 733002 - TOPSOILING, 6" DEPTH
  ITEM 734013 - PERMANENT GRASS SEEDING, DRY GROUND
- (V) ITEM 733002 - TOPSOILING, 6" DEPTH
  ITEM 734013 - PERMANENT GRASS SEEDING, DRY GROUND
  ITEM 735535 - SOIL RETENTION BLANKET MULCH, TYPE 5
- (W) ITEM 701016 - PCC CURB AND GUTTER, TYPE 1-4
- (X) ITEM 760017 - RUMBLE STRIPS, CONCRETE
- (Y) ITEM 705001 - PCC SIDEWALK, 4"
- (AA) ITEM 720626 - CONCRETE SINGLE FACE BARRIER, TYPE 1
- (BB) ITEM 760507 - PROFILE MILLING, HOT-MIX
- (CC) ITEM 401824 - WMA, SUPERPAVE, TYPE C, 160 GYRATIONS, PG 64-22, WEDGE
- (DD) ITEM 733001 - TOPSOILING, 4" DEPTH
  ITEM 734013 - PERMANENT GRASS SEEDING, DRY GROUND
- (EE) ITEM 713002 - GEOTEXTILE, SEPARATION
- (FF) ITEM 701013 - PCC CURB, TYPE 1-2

N:\3653-000\CONTRACT 1A\CADD\DT002U301_1A.dgn
11/9/2012 9:35:29 AM

DT-02

DELAWARE DEPARTMENT OF TRANSPORTATION	ADDENDUMS / REVISIONS	NOT TO SCALE	US 301, SR 896 TO SR 1	CONTRACT T200911308	BRIDGE NO.	CONSTRUCTION DETAILS	SHEET NO. 225
				COUNTY NEW CASTLE	DESIGNED BY: SJB		TOTAL SHTS. 875
					CHECKED BY: TAO		

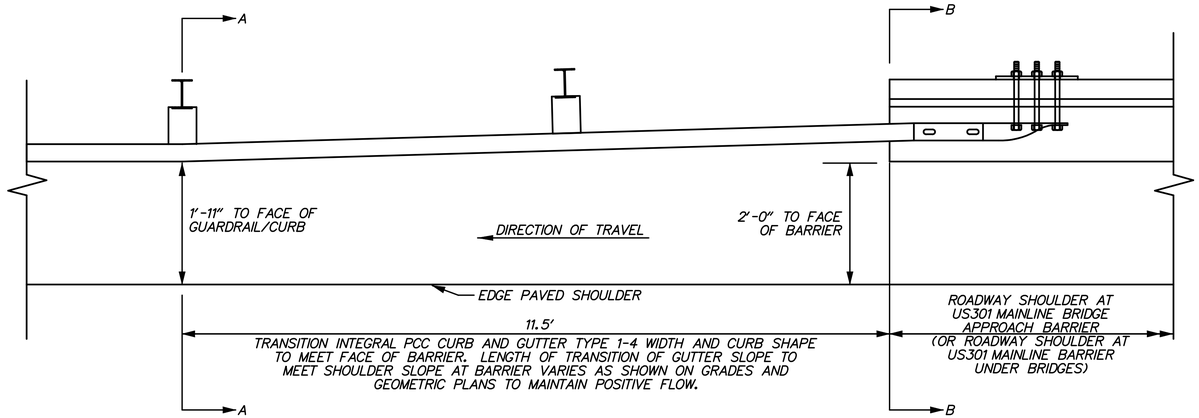

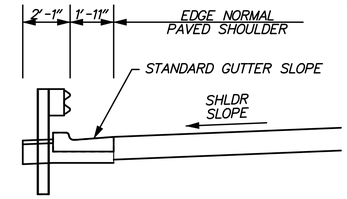

SECTION A-A

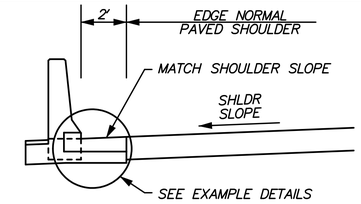

SECTION B-B

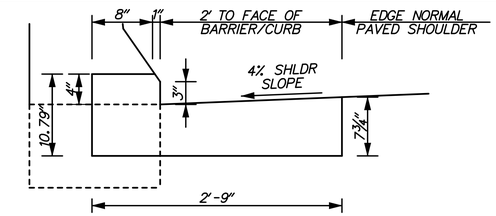

BARRIER/CURB DETAIL (4%)

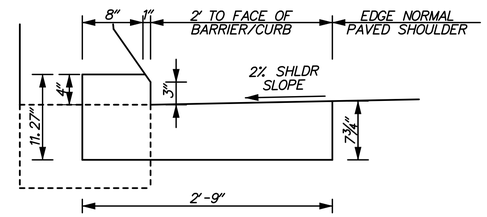

BARRIER/CURB DETAIL (2%)

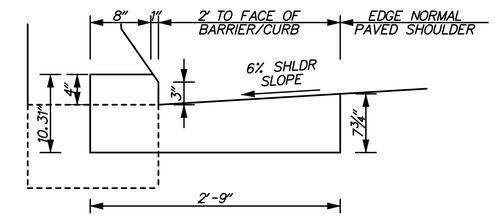

BARRIER/CURB DETAIL (6%)

NOTES:
1. PLACE PREFORMED EXPANSION JOINT MATERIAL BETWEEN END OF CURB AND BARRIER PER SECTION 701.01.
2. TRANSITION LIMITS TO BE MEASURED FOR PAYMENT UNDER ITEM 701016 WITH ALL COSTS FOR TRANSITION INCLUDED IN ITEM 701016.

CURB TRANSITION DETAILS AT GUARDRAIL TO BARRIER CONNECTION (EXIT TYPE)

US 301 SOUTHBOUND INSIDE SHOULDER: STA. 805+96.40 TO STA. 806+07.90

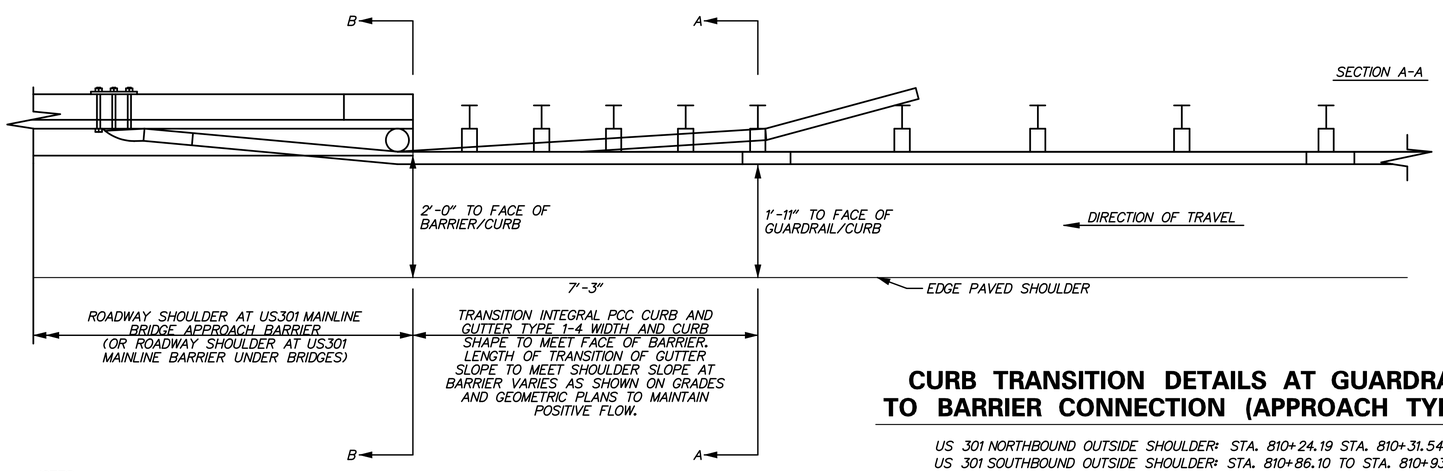

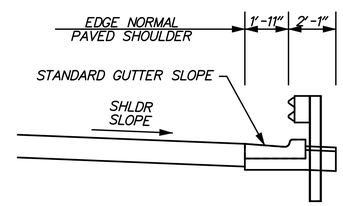

SECTION A-A

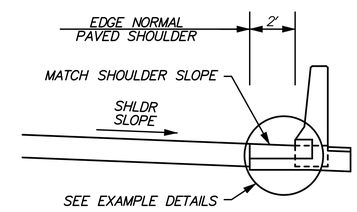

SECTION B-B

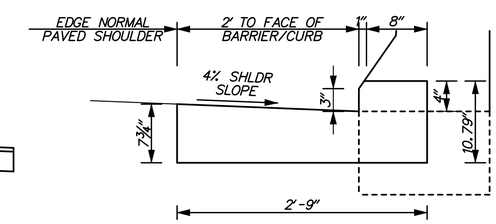

BARRIER/CURB DETAIL (4%)

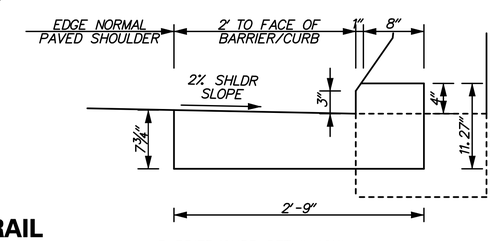

BARRIER/CURB DETAIL (2%)

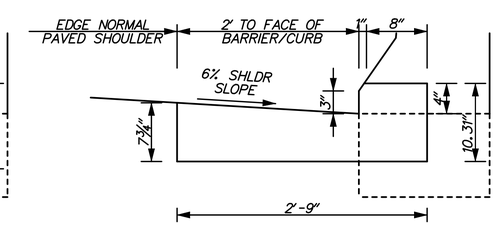

BARRIER/CURB DETAIL (6%)

NOTES:
1. PLACE PREFORMED EXPANSION JOINT MATERIAL BETWEEN END OF CURB AND BARRIER PER SECTION 701.03.
2. TRANSITION LIMITS TO BE MEASURED FOR PAYMENT UNDER ITEM 701016 WITH ALL COSTS FOR TRANSITION INCLUDED IN ITEM 701016.

CURB TRANSITION DETAILS AT GUARDRAIL TO BARRIER CONNECTION (APPROACH TYPE 1)

US 301 NORTHBOUND OUTSIDE SHOULDER: STA. 810+24.19 STA. 810+31.54
US 301 SOUTHBOUND OUTSIDE SHOULDER: STA. 810+86.10 TO STA. 810+93.35
HYETTS CORNER ROAD, RIGHT: STA. 908+65.35 TO STA. 908+72.60
STA. 912+09.21 TO STA. 912+16.46
STA. 913+72.51 TO STA. 913+79.76
JAMISON CORNER ROAD, LEFT: STA. 120+70.50 TO STA. 120+77.75
STA. 122+60.47 TO STA. 122+71.97

DELAWARE DEPARTMENT OF TRANSPORTATION	ADDENDUMS / REVISIONS	NOT TO SCALE	US 301, SR 896 TO SR 1	CONTRACT T200911308	BRIDGE NO.	CONSTRUCTION DETAILS	DT-03
				COUNTY NEW CASTLE	DESIGNED BY: KAH		SHEET NO. 226
					CHECKED BY: BRT		TOTAL SHTS. 875

r:\31653-000\contract to\cadd\DT003U301_1A.dgn
10/31/2012 9:37:59 AM

REINFORCED CONCRETE FLARED END SECTION
12″ - 33″ DIAMETER

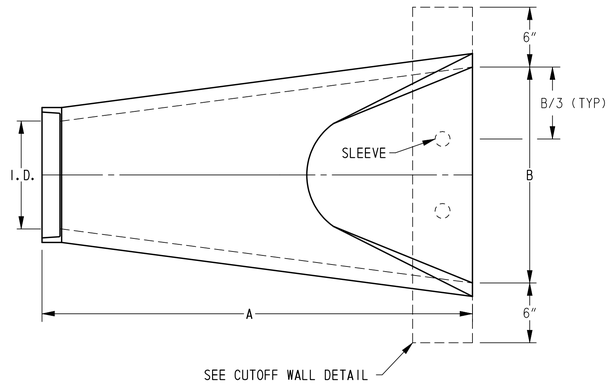

PLAN VIEW

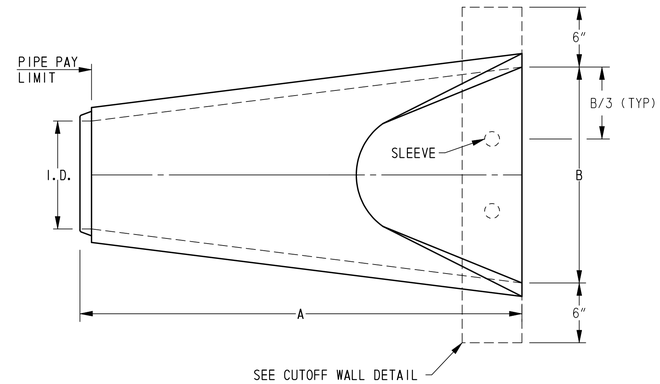

PLAN VIEW

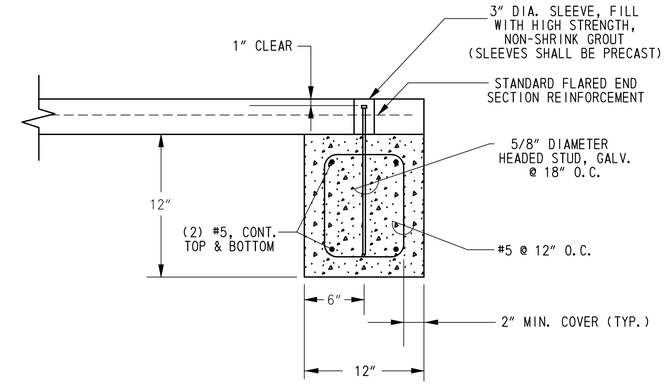

CUTOFF WALL DETAIL
N. T. S.

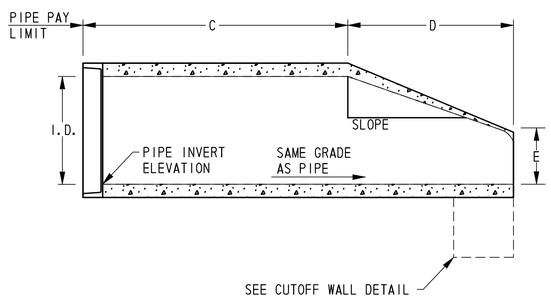

SIDE VIEW

FLARED END SECTION - OUTLET
N. T. S.

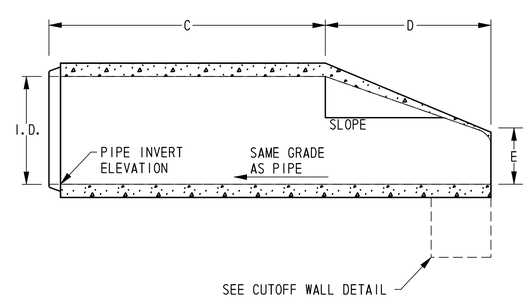

SIDE VIEW

FLARED END SECTION - INLET
N. T. S.

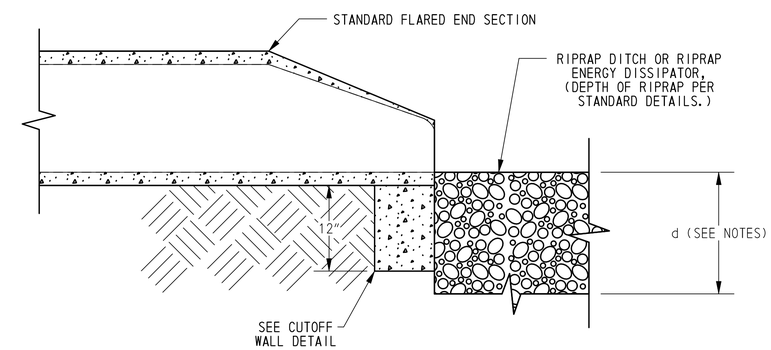

SIDE VIEW WITH OUTLET PROTECTION
N. T. S.

PIPE I.D.	SLOPE	WALL	A (INCHES)	B (INCHES)	C (INCHES)	D (INCHES)	E (INCHES)
12	3:1	2	69	24	48	21	5
15	3:1	2 1/4	73	30	46	27	6
18	3:1	2 1/2	73	36	46	27	9
21	3:1	2 3/4	74	42	38	36	9
24	3:1	3	72 1/2	48	29	43 1/2	9 1/2
27	3:1	3 1/4	75	54	25 1/2	49 1/2	10 1/2
30	3:1	3 1/2	73 3/4	60	19 3/4	54	12
33	3:1	3 3/4	81	66	26	55	14

NOTES:

1. FLARED END SECTIONS SHALL BE MANUFACTURED TO ASTM C-76 AND AASHTO M-170 WITH CLASS III REINFORCEMENT.
2. FLARED END SECTIONS SHALL BE BEDDED IN ACCORDANCE WITH DELDOT STANDARD SPECIFICATION 612, REINFORCED CONCRETE PIPE.
3. FLARED END SECTIONS 27 INCHES AND LARGER SHALL INCLUDE A 12 INCH WIDE CUTOFF WALL CONSTRUCTED AS SHOWN. CUTOFF WALL MAY BE CAST-IN-PLACE OR PRECAST CLASS B CONCRETE. ALL COSTS FOR THE CUTOFF WALL SHALL BE INCIDENTAL TO THE FLARED END SECTION.
4. DEPTH OF RIPRAP (d) PER STANDARD DETAILS.

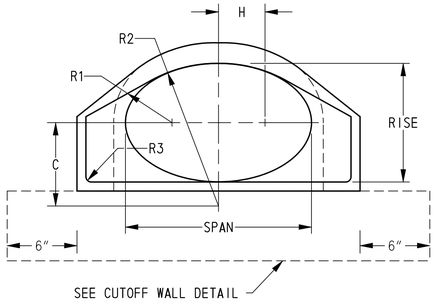

FRONT VIEW

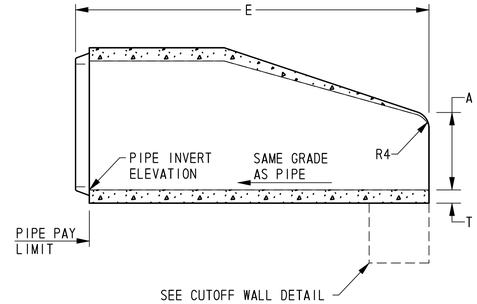

INLET SIDE VIEW

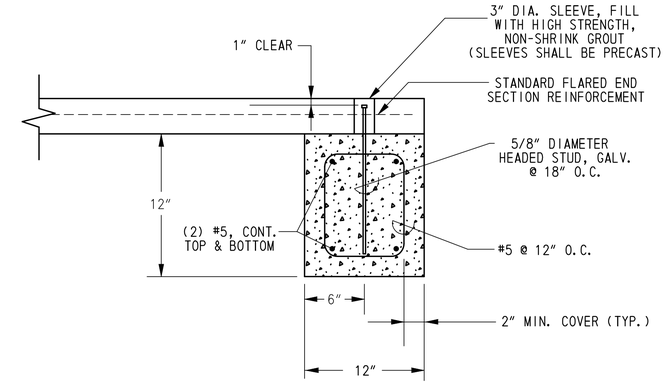

CUTOFF WALL DETAIL
N. T. S.

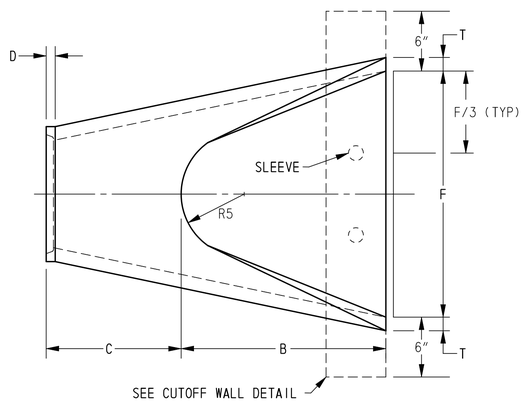

TOP VIEW

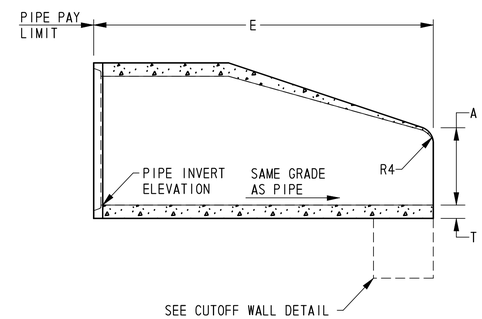

OUTLET SIDE VIEW

FLARED END SECTION - ELLIPTICAL
N. T. S.

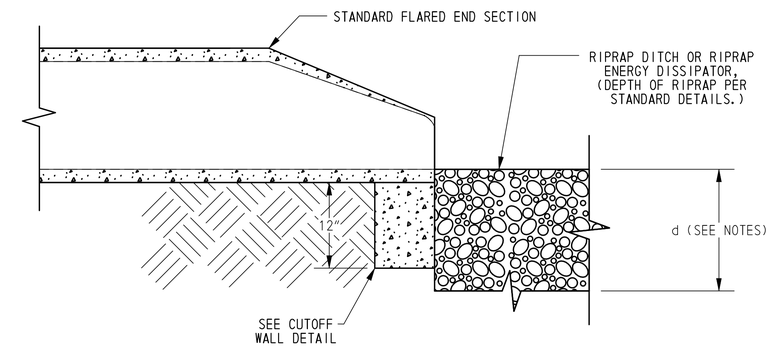

SIDE VIEW WITH OUTLET PROTECTION
N. T. S.

ELLIPTICAL FLARED END SECTIONS
TABLE OF DIMENSIONS

NOMINAL		EQUIVALENT DIA.	ACTUAL		T	A	B	C	D	E	F	G	H	R1	R2	R3	R4	R5
RISE	SPAN		RISE	SPAN	(INCHES)	(INCHES)			(INCHES)		(INCHES)	(INCHES)	(INCHES)	(INCHES)	(INCHES)	(INCHES)	(INCHES)	(INCHES)
14	23	18	14 5/8	22 7/8	2 3/4	6	2′-2″	3′-11″	2	6′-1″	36	12 25/32	5 11/32	8 27/32	20 11/16	1 1/2	3	12
19	30	24	19 1/8	30 1/8	3 1/4	9	2′-7″	3′-6″	2	6′-1″	48	16 11/16	6 27/32	11 15/32	29 1/2	1 1/2	3	14
22	34	27	21 9/16	34	3 1/2	10 1/2	2′-9″	3′-4″	2 1/4	6′-1″	54	18 3/4	7 3/4	12 3/4	33 1/32	1 1/2	3	14 1/2
24	38	30	24	37 7/8	3 3/4	12	4′-6″	1′-6″	2 1/2	6′-0″	60	20 13/16	8 11/16	14	36 9/16	1 1/2	3	15
27	42	33	26 23/32	41 15/16	4 1/2	11	5′-3″	2′-9″	3	8′-0″	72	24 31/32	10 5/16	16 13/16	43 7/8	1 1/2	4	18

NOTES:

1. FLARED END SECTIONS SHALL BE MANUFACTURED TO ASTM C-76 AND AASHTO M-170 WITH CLASS III REINFORCEMENT.
2. FLARED END SECTIONS SHALL BE BEDDED IN ACCORDANCE WITH DELDOT STANDARD SPECIFICATION 612, REINFORCED CONCRETE PIPE.
3. FLARED END SECTIONS WITH A RISE OF 27 INCHES AND LARGER SHALL INCLUDE A 12 INCH WIDE CUTOFF WALL CONSTRUCTED AS SHOWN. CUTOFF WALL MAY BE CAST-IN-PLACE OR PRECAST CLASS B CONCRETE. ALL COSTS FOR THE CUTOFF WALL SHALL BE INCIDENTAL TO THE FLARED END SECTION.
4. DEPTH OF RIPRAP (d) PER STANDARD DETAILS.

DT-05

DELAWARE DEPARTMENT OF TRANSPORTATION

ADDENDUMS / REVISIONS

NOT TO SCALE

US 301, SR 896 TO SR 1

CONTRACT T200911308 | BRIDGE NO. | DESIGNED BY: KAH | COUNTY NEW CASTLE | CHECKED BY: BRT

CONSTRUCTION DETAILS

SHEET NO. 228 | TOTAL SHTS. 875

nt\33653-000\contract 1a\cadd\DT005U301_1A.dgn
10/31/2012 9:38:11 AM

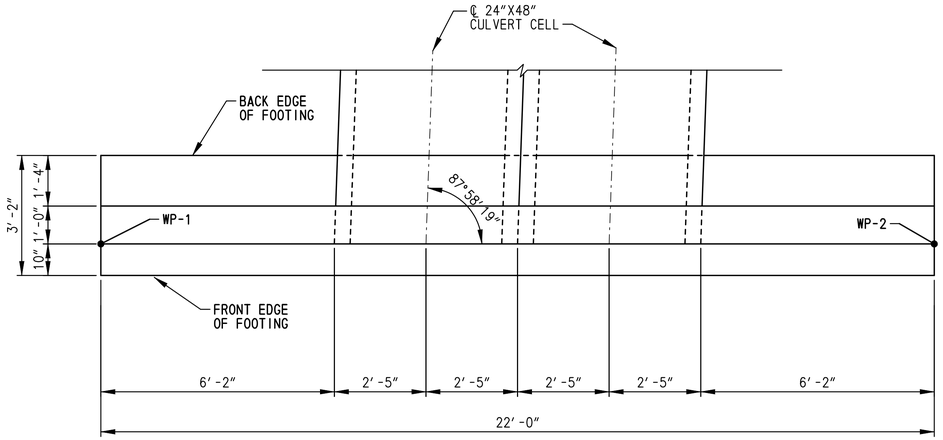

ENDWALL NO. 201 – NO. 206 – PLAN

SCALE: 1/2"=1'-0"

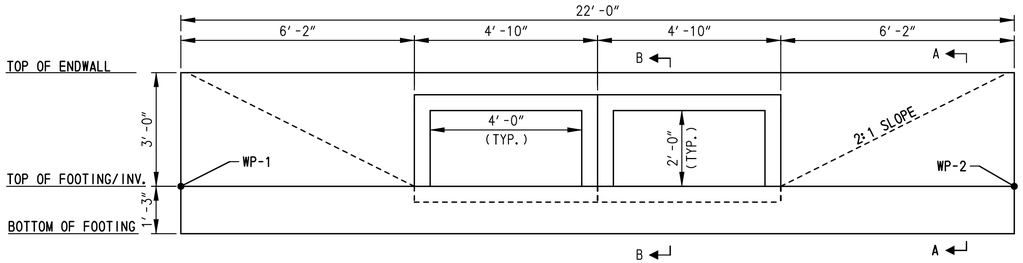

ENDWALL NO. 201 – NO.206 – ELEVATION

SCALE: 1/2"=1'-0"

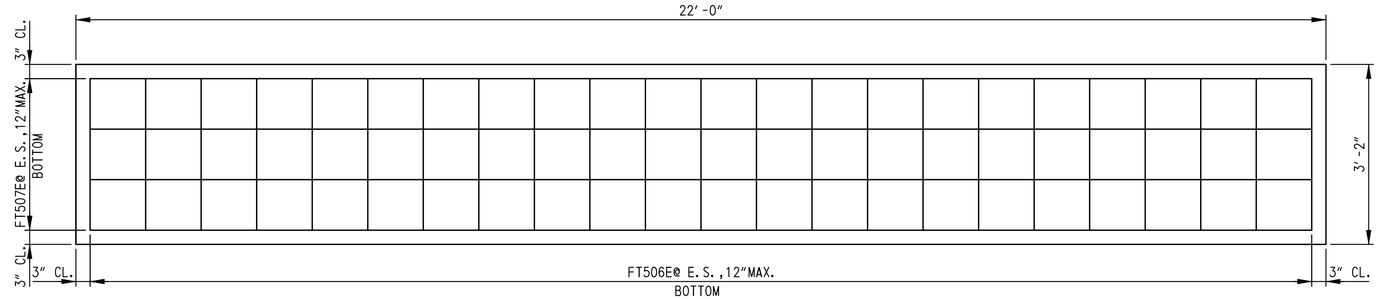

ENDWALL NO. 201 – NO. 206 – FOOTING REINFORCEMENT PLAN

SCALE: 3/4"=1'-0"

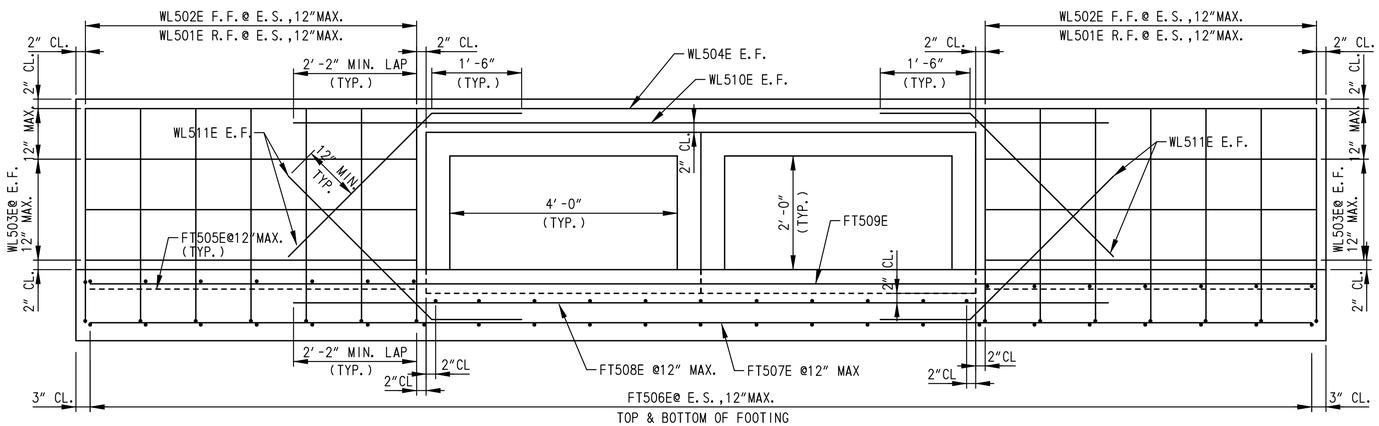

ENDWALL NO. 201 – NO. 206 – REINFORCEMENT ELEVATION

SCALE: 3/4"=1'-0"

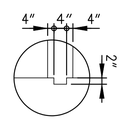

CONSTRUCTION KEY DETAIL

SCALE: 1"=1'-0"

WORKING POINT LOCATION			
ENDWALL NO.	WP	NORTHING	EASTING
EW/201	WP-1	551520.1908	578543.9895
	WP-2	551498.1976	578543.4409
EW/202	WP-1	551568.0458	578542.9314
	WP-2	551546.0481	578542.6144
EW/203	WP-1	551486.0955	578764.7519
	WP-2	551508.0914	578765.1753
EW/204	WP-1	551533.8078	578766.6904
	WP-2	551555.8035	578767.123
EW/205	WP-1	553435.8449	578703.304
	WP-2	553415.0226	578696.2752
EW/206	WP-1	553291.9954	578919.4179
	WP-2	553312.7364	578926.6378

ENDWALL NO. 201 - NO. 206 NOTES:

1. MAXIMUM FACTORED BEARING RESISTANCE FOR THE ENDWALL IS 2 KSF.
2. KEYS ARE NOMINAL SIZE.
3. CONCRETE SHALL BE CLASS A, 4500 PSI.
4. RIPRAP IN FRONT OF WALL NOT SHOWN FOR CLARITY.
5. ENDWALL NO. 203 SHALL BE CAST-IN-PLACE. NO PRECAST ALTERNATIVE WILL BE ALLOWED.
6. E.F. = EACH FACE
   F.F. = FRONT FACE
   R.F. = RARE FACE
   E.S. = EQUAL SPACING.
7. SEE REINFORCING BAR LIST ON DRAWING DT-09.
8. THE COST OF THE GRADED AGGREGATE BEDDING SHALL BE INCIDENTAL TO THE CONTRACT UNIT COST FOR THE ENDWALL (ITEM 617515).

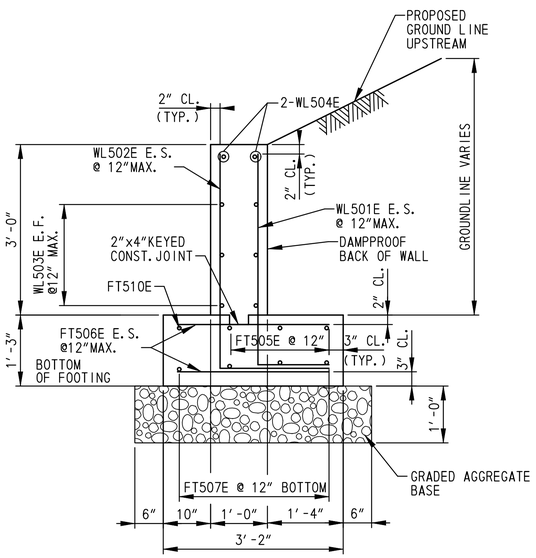

SECTION A–A

SCALE: 3/4"=1'-0"

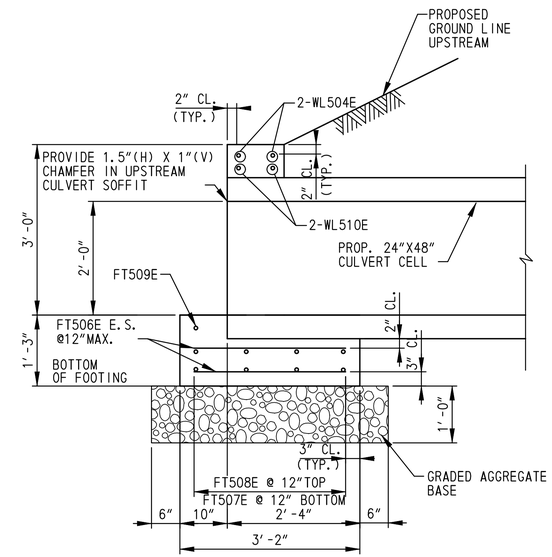

SECTION B–B

SCALE: 3/4"=1'-0"

DT-06

r:\31653-000\contract_to\cadd\DT006U301_1A.dgn
10/31/2012 9:38:22 AM

DELAWARE DEPARTMENT OF TRANSPORTATION

ADDENDUMS / REVISIONS

US 301, SR 896 TO SR 1

CONTRACT	BRIDGE NO.
T200911308	DESIGNED BY: HQ
COUNTY	
NEW CASTLE	CHECKED BY: JW

CONSTRUCTION DETAILS

SHEET NO. 229

TOTAL SHTS. 875

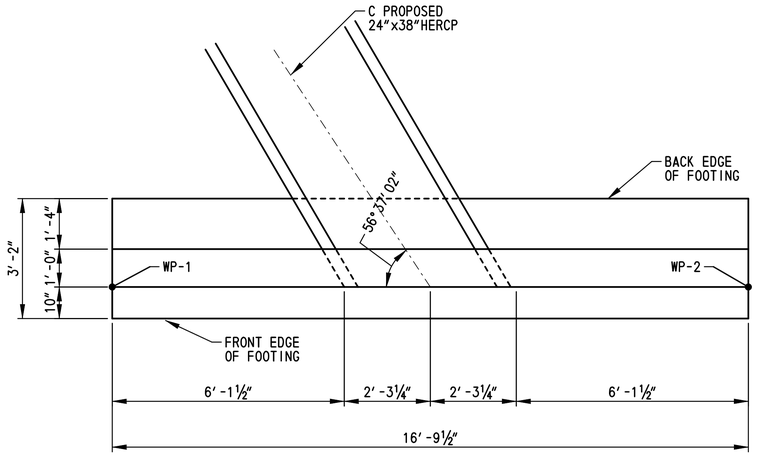

ENDWALL NO. 240 – PLAN

SCALE: 1/2"=1'-0"

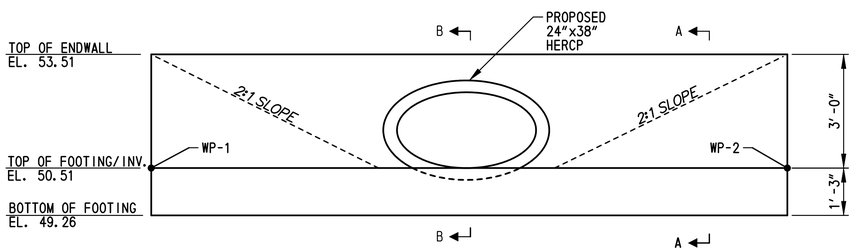

ENDWALL NO. 240 – ELEVATION

SCALE: 1/2"=1'-0"

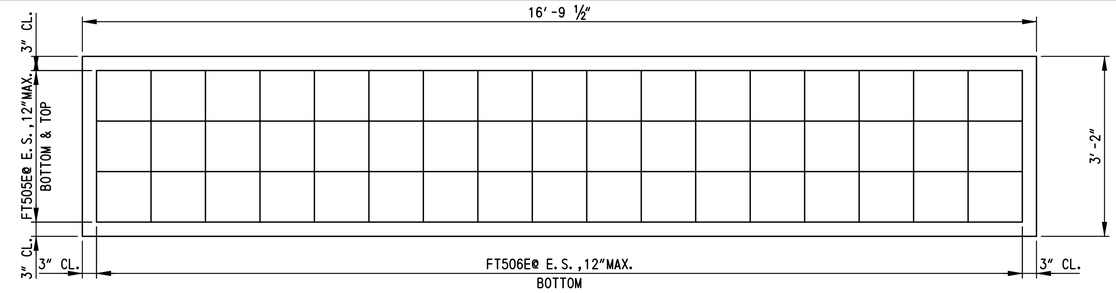

ENDWALL NO. 240 – FOOTING REINFORCEMENT PLAN

SCALE: ¾"=1'-0"

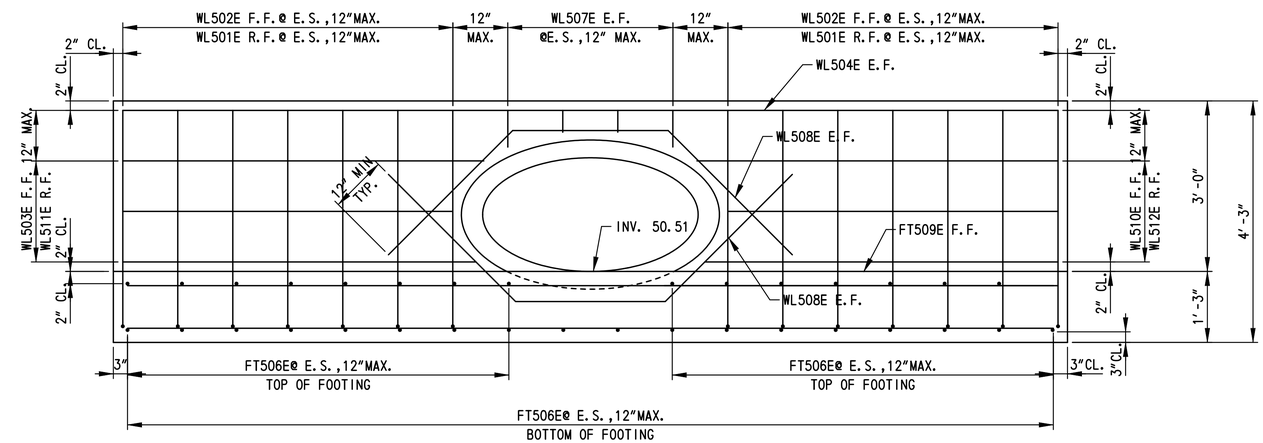

ENDWALL NO. 240 – REINFORCEMENT ELEVATION

SCALE: ¾"=1'-0"

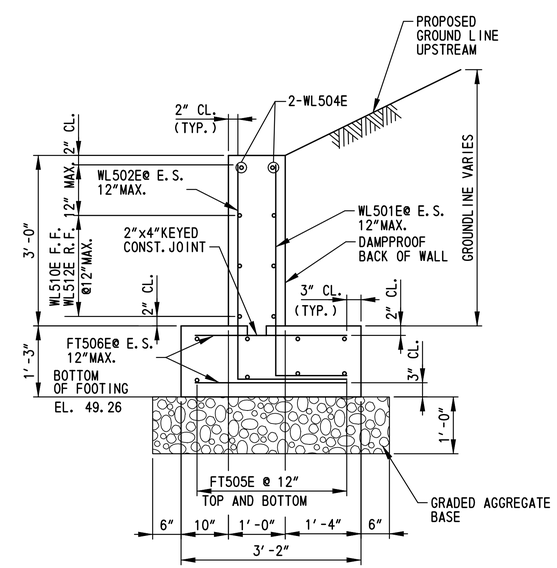

SECTION A–A

SCALE: ¾"=1'-0"

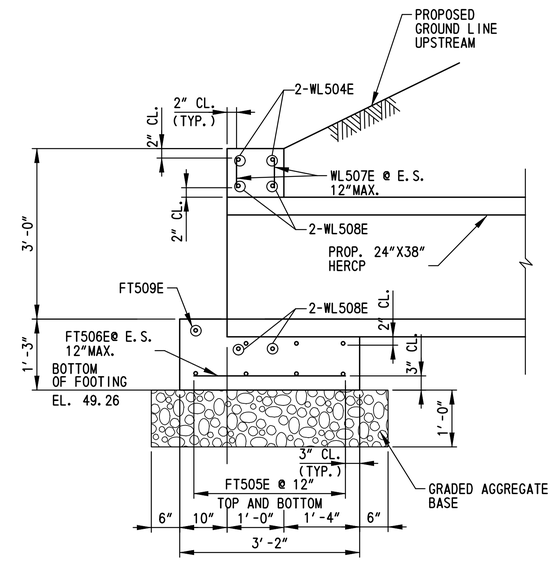

SECTION B–B

SCALE: ¾"=1'-0"

ENDWALL NO. 241 NOTES:

1. MAXIMUM FACTORED BEARING RESISTANCE FOR THE ENDWALL IS 2 KSF.
2. KEYS ARE NOMINAL SIZE.
3. CONCRETE SHALL BE CLASS A, 4500 PSI.
4. RIPRAP IN FRONT OF WALL NOT SHOWN FOR CLARITY.
5. E.F. = EACH FACE
   F.F. = FRONT FACE
   R.F. = RARE FACE
6. E.S. = EQUAL SPACING.
7. SEE REINFORCING BAR LIST ON DRAWING DT-10.
8. THE COST OF THE GRADED AGGREGATE BEDDING SHALL BE INCIDENTAL TO THE CONTRACT UNIT COST FOR THE ENDWALL (ITEM617515).

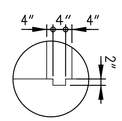

CONSTRUCTION KEY DETAIL

SCALE: 1"=1'-0"

WORKING POINT COORDINATE		
WORKING POINT	NORTHING	EASTING
WP-1	555531.6193	585111.2089
WP-2	555532.1564	585094.5676

n:\31653-000\contract 1a\cadd\DT0071J01_14.dgn
10/31/2012 9:38:30 AM

DELAWARE DEPARTMENT OF TRANSPORTATION

ADDENDUMS / REVISIONS

US 301, SR 896 TO SR 1

CONTRACT	BRIDGE NO.
T200911308	DESIGNED BY: HQ
COUNTY	
NEW CASTLE	CHECKED BY: JW

CONSTRUCTION DETAILS

DT-07

SHEET NO. 230

TOTAL SHTS. 875

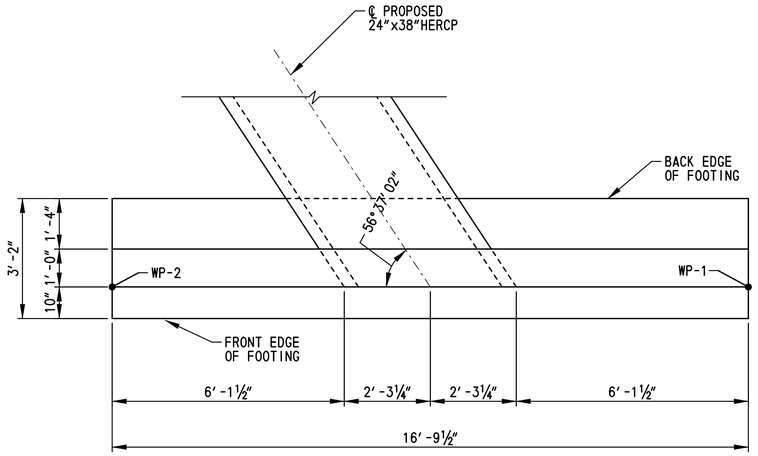

ENDWALL NO. 241 – PLAN

SCALE: 1/2"=1'-0"

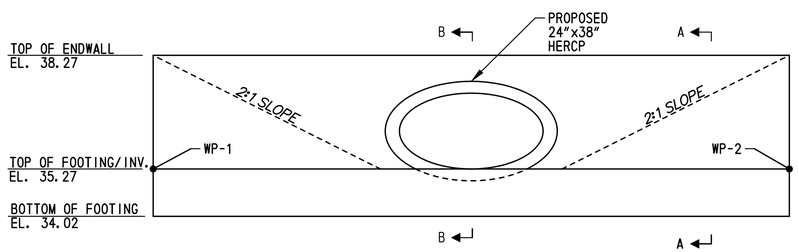

ENDWALL NO. 241 – ELEVATION

SCALE: 1/2"=1'-0"

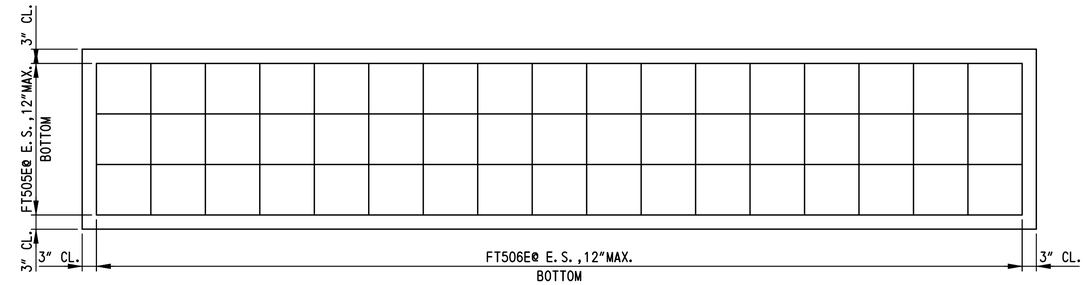

ENDWALL NO. 241 – FOOTING REINFORCEMENT PLAN

SCALE: ¾"=1'-0"

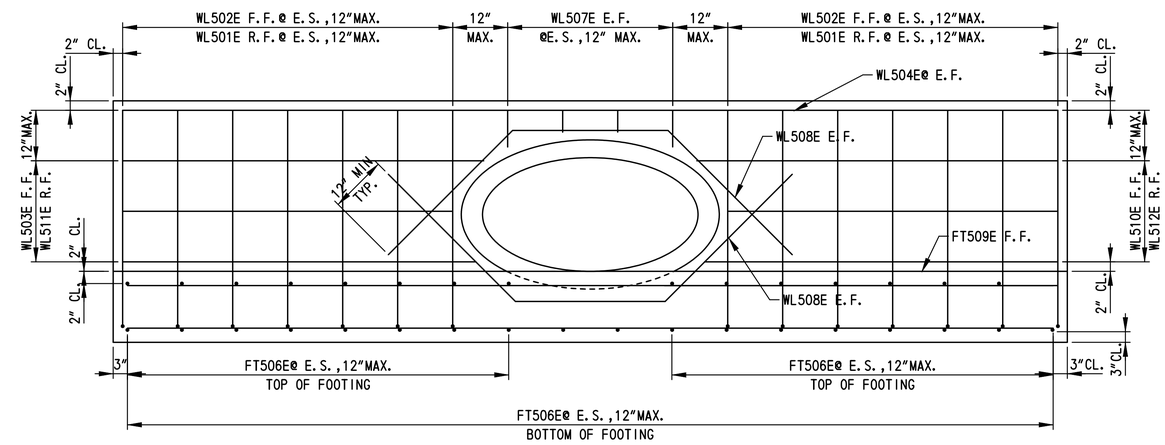

ENDWALL NO. 241 – REINFORCEMENT ELEVATION

SCALE: ¾"=1'-0"

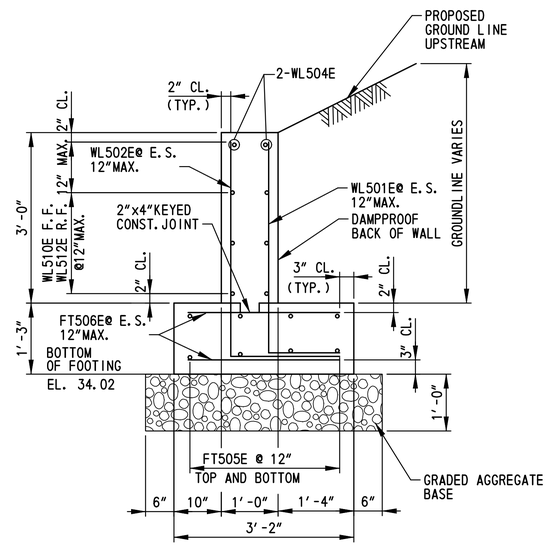

SECTION A–A

SCALE: ¾"=1'-0"

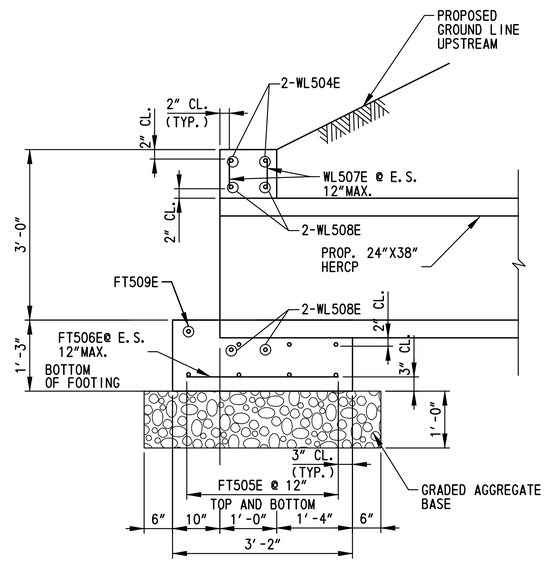

SECTION B–B

SCALE: ¾"=1'-0"

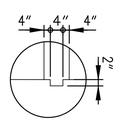

CONSTRUCTION KEY DETAIL

SCALE: 1"=1'-0"

ENDWALL NO. 241 NOTES:

1. MAXIMUM FACTORED BEARING RESISTANCE FOR THE ENDWALL IS 2 KSF.
2. KEYS ARE NOMINAL SIZE.
3. CONCRETE SHALL BE CLASS A, 4500 PSI.
4. RIPRAP IN FRONT OF WALL NOT SHOWN FOR CLARITY.
5. E.F. = EACH FACE
   F.F. = FRONT FACE
   R.F. = RARE FACE
   E.S. = EQUAL SPACING.
6. SEE REINFORCING BAR LIST ON DRAWING DT-10.
7. THE COST OF THE GRADED AGGREGATE BEDDING SHALL BE INCIDENTAL TO THE CONTRACT UNIT COST FOR THE ENDWALL (ITEM617515).

WORKING POINT COORDINATE		
WORKING POINT	NORTHING	EASTING
WP-1	555260.0006	585242.4235
WP-2	555258.566	585259.1545

DELAWARE
DEPARTMENT OF TRANSPORTATION

ADDENDUMS / REVISIONS

US 301,
SR 896 TO SR 1

CONTRACT	BRIDGE NO.
T200911308	DESIGNED BY: DKE
COUNTY	CHECKED BY: JDC
NEW CASTLE	

CONSTRUCTION DETAILS

DT-08

SHEET NO. 231

TOTAL SHTS. 875

n:\31653-000\contract_to\cadd\DT008U301_1A.dgn
10/31/2012 9:36:39 AM

(1) ANY MARK NUMBER WITH SUFFIX 'E' DENOTES EPOXY COATED REINFORCING STEEL.

(2) ALL MARK 'LOCATION PREFIXES' SHALL CONSIST OF TWO LETTERS AND ARE AS FOLLOWS: AB = ABUTMENT, AS = APPROACH SLAB, BC = BOX CULVERT, BW = BACKWALL, CL = COLUMN, DK = DECK, DL = DOWEL, FT = FOOTING, HW = HEADWALL, MS = MISC. BARS, PA = PARAPET, PR = PIER, SC = SHEETPILE CAP, SL = SLAB, TW = TOEWALL, WL = WALL (UNIQUE LOCATION), WW = WINGWALL

SPECIFICATIONS					BENDING DIMENSIONS (FEET-INCHES /QUARTER INCH)										
QTY.	SIZE	LENGTH	MARK	TYPE	A	B	C	D	E	F/R	G	H	J	K	O
ENDWALL NO.201															
28	5	5-10	WL501E	17		3-10 0	1-30								
28	5	5-90	WL502E	17		3-10 0	1-110								
12	5	5-100	WL503E	STR		5-10 0									
2	5	21-80	WL504E	STR		21-80									
6	5	5-90	FT505E	STR		5-90									
46	5	2-80	FT506E	STR		2-80									
4	5	21-60	FT507E	STR		21-60									
4	5	14-40	FT508E	STR		14-40									
1	5	21-60	FT509E	STR		21-60									
2	5	14-40	WL510E	STR		14-40									
8	5	5-03	WL511E	6			3-63	1-60				2-61			4-01
ENDWALL NO.202															
28	5	5-10	WL501E	17		3-10 0	1-30								
28	5	5-90	WL502E	17		3-10 0	1-110								
12	5	5-100	WL503E	STR		5-10 0									
2	5	21-80	WL504E	STR		21-80									
6	5	5-90	FT505E	STR		5-90									
46	5	2-80	FT506E	STR		2-80									
4	5	21-60	FT507E	STR		21-60									
4	5	14-40	FT508E	STR		14-40									
1	5	21-60	FT509E	STR		21-60									
2	5	14-40	WL510E	STR		14-40									
8	5	5-03	WL511E	6			3-63	1-60				2-61			4-01
ENDWALL NO.203															
28	5	5-10	WL501E	17		3-10 0	1-30								
28	5	5-90	WL502E	17		3-10 0	1-110								
12	5	5-100	WL503E	STR		5-10 0									
2	5	21-80	WL504E	STR		21-80									
6	5	5-90	FT505E	STR		5-90									
46	5	2-80	FT506E	STR		2-80									
4	5	21-60	FT507E	STR		21-60									
4	5	14-40	FT508E	STR		14-40									
1	5	21-60	FT509E	STR		21-60		T0							
2	5	14-40	WL510E	STR		14-40									
8	5	5-03	WL511E	6			3-63	1-60				2-61			4-01

SPECIFICATIONS					BENDING DIMENSIONS (FEET-INCHES /QUARTER INCH)										
QTY.	SIZE	LENGTH	MARK	TYPE	A	B	C	D	E	F/R	G	H	J	K	O
ENDWALL NO.204															
28	5	5-10	WL501E	17		3-10 0	1-30								
28	5	5-90	WL502E	17		3-10 0	1-110								
12	5	5-100	WL503E	STR		5-10 0									
2	5	21-80	WL504E	STR		21-80									
6	5	5-90	FT505E	STR		5-90									
46	5	2-80	FT506E	STR		2-80									
4	5	21-60	FT507E	STR		21-60									
4	5	14-40	FT508E	STR		14-40									
1	5	21-60	FT509E	STR		21-60		T0							
2	5	14-40	WL510E	STR		14-40									
8	5	5-03	WL511E	6			3-63	1-60				2-61			4-01
ENDWALL NO.205															
28	5	5-10	WL501E	17		3-10 0	1-30								
28	5	5-90	WL502E	17		3-10 0	1-110								
12	5	5-100	WL503E	STR		5-10 0									
2	5	21-80	WL504E	STR		21-80									
6	5	5-90	FT505E	STR		5-90									
46	5	2-80	FT506E	STR		2-80									
4	5	21-60	FT507E	STR		21-60									
4	5	14-40	FT508E	STR		14-40									
1	5	21-60	FT509E	STR		21-60		T0							
2	5	14-40	WL510E	STR		14-40									
8	5	5-03	WL511E	6			3-63	1-60				2-61			4-01
ENDWALL NO.206															
28	5	5-10	WL501E	17		3-10 0	1-30								
28	5	5-90	WL502E	17		3-10 0	1-110								
12	5	5-100	WL503E	STR		5-10 0									
2	5	21-80	WL504E	STR		21-80									
6	5	5-90	FT505E	STR		5-90									
46	5	2-80	FT506E	STR		2-80									
4	5	21-60	FT507E	STR		21-60									
4	5	14-40	FT508E	STR		14-40									
1	5	21-60	FT509E	STR		21-60		T0							
2	5	14-40	WL510E	STR		14-40									
8	5	5-03	WL511E	6			3-63	1-60				2-61			4-01

SPECIFICATIONS					BENDING DIMENSIONS (FEET-INCHES /QUARTER INCH)										
QTY.	SIZE	LENGTH	MARK	TYPE	A	B	C	D	E	F/R	G	H	J	K	O

ASTM STANDARD ENGLISH REINFORCING BARS

BAR SIZE	NOMINAL DIMENSIONS: DIAMETER (INCHES)	AREA (INCHES²)	WEIGHT (LBS./FT.)	RECOMMENDED END HOOKS, APPLICABLE TO ALL GRADES: D	180° HOOKS: A OR G	180° HOOKS: J	90° HOOKS: A OR G	STIRRUP AND TIE HOOKS, APPLICABLE TO ALL GRADES: D	90° HOOK: A OR G	135° HOOK: A OR G	135° HOOK: A OR G
3	0.375	0.110	0.376	2¼"	5"	3"	6"	1½"	4"	4"	2½"
4	0.500	0.200	0.668	3"	6"	4"	8"	2"	4½"	4½"	3"
5	0.625	0.310	1.043	3¾"	7"	5"	10"	2½"	6"	5½"	3¾"
6	0.750	0.440	1.502	4½"	8"	6"	1-0"	4½"	1-0"	8"	4½"
7	0.875	0.600	2.044	5¼"	10"	7"	1-2"	5¼"	1-2"	9"	5¼"
8	1.000	0.790	2.670	6"	11"	8"	1-4"	6"	1-4"	10½"	6"
9	1.128	1.000	3.400	9½"	1-3"	11¾"	1-7"				
10	1.270	1.270	4.303	10¾"	1-5"	1-1¼"	1-10"				
11	1.410	1.560	5.313	1-0"	1-7"	1-2¾"	2-0"				
14	1.693	2.250	7.650	1-6¼"	2-3"	1-9¾"	2-7"				
18	2.257	4.000	13.600	2-0"	3-0"	2-4½"	3-5"				

NOTES:

1. FIGURES SHOWN IN CIRCLES REPRESENT BAR BEND TYPES.
2. STANDARD BAR BENDS INCLUDE ONLY THOSE TYPES BELOW, INDICATED AS SUCH.
3. ALL DIMENSIONS OUT-TO-OUT, EXCEPT "A" AND "G" ON STD. 180° AND 135° HOOKS.
4. "J" DIMENSIONS ON 180° HOOKS TO BE SHOWN ONLY WHERE NECESSARY TO RESTRICT HOOK SIZE, OTHERWISE STANDARD 'ACI' HOOKS ARE TO BE USED.
5. WHERE "J" IS NOT SHOWN, "J" WILL BE KEPT EQUAL TO OR LESS THAN "H" ON TYPES 3, 5 AND 22. WHERE "J" CAN EXCEED "H", IT SHALL BE SHOWN.
6. "H" DIMENSIONS OF STIRRUPS TO BE SHOWN AS NEEDED TO FIT WITHIN THE CONCRETE.
7. UNLESS OTHERWISE NOTED, DIAMETER "D" IS THE SAME FOR ALL BENDS AND HOOKS ON A BAR (EXCEPT FOR BEND TYPES 11 AND 13).
8. WHERE SLOPE DIFFERS FROM 45° OFFSET, "H" AND "K" MUST BE SHOWN.
9. WHERE BARS ARE TO BE BENT MORE ACCURATELY THAN STANDARD BENDING TOLERANCES, BENDING DIMENSIONS REQUIRING CLOSER FABRICATION SHOULD HAVE LIMITS INDICATED.
10. FOR RECOMMENDED DIAMETER "D", OF BENDS, HOOKS, ETC., REFER TO TABLE ABOVE, 'CRSI' OR 'ACI' TABLES WHERE APPLICABLE AND REQUIRED.
11. TYPE S1-S6, S11, T1-T3 AND T6-T9 APPLICABLE TO BAR SIZES #3 THROUGH #8.

STANDARD BAR BENDS

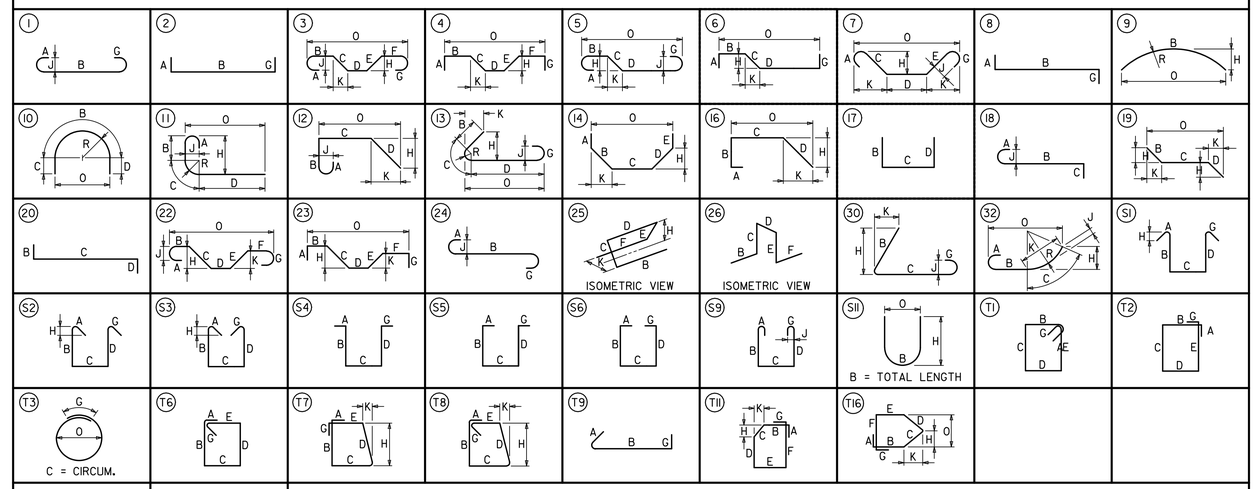

SPECIAL BAR BENDS

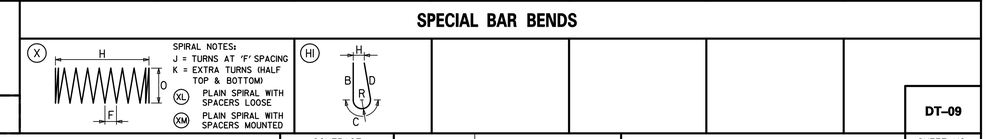

STIRRUP AND TIE HOOKS

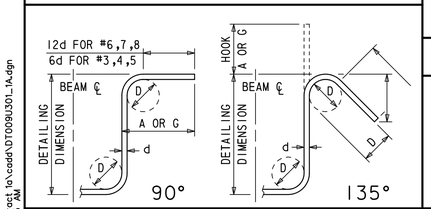

180° AND 90° END HOOKS

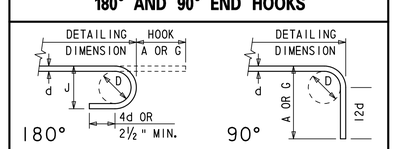

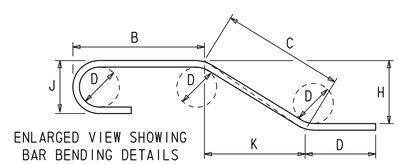

DELAWARE DEPARTMENT OF TRANSPORTATION

ADDENDUMS / REVISIONS

US 301, SR 896 TO SR 1

CONTRACT	BRIDGE NO.	
T200911308	DESIGNED BY: K.M.K.	
COUNTY		
NEW CASTLE	CHECKED BY: J.A.G.	

CONSTRUCTION DETAILS

DT-09

SHEET NO. 232

TOTAL SHTS. 875

n:\31653-000\contract 1a\cadd\DT009U301_1A.dgn
10/31/2012 9:38:55 AM

(1) ANY MARK NUMBER WITH SUFFIX 'E' DENOTES EPOXY COATED REINFORCING STEEL.

(2) ALL MARK 'LOCATION PREFIXES' SHALL CONSIST OF TWO LETTERS AND ARE AS FOLLOWS: AB = ABUTMENT, AS = APPROACH SLAB, BC = BOX CULVERT, BW = BACKWALL, CL = COLUMN, DK = DECK, DL = DOWEL, FT = FOOTING, HW = HEADWALL, MS = MISC. BARS, PA = PARAPET, PR = PIER, SC = SHEETPILE CAP, SL = SLAB, TW = TOEWALL, WL = WALL (UNIQUE LOCATION), WW = WINGWALL

SPECIFICATIONS					BENDING DIMENSIONS (FEET-INCHES /QUARTER INCH)											
QTY.	SIZE	LENGTH	MARK	TYPE	A	B	C	D	E	F/R	G	H	J	K	O
ENDWALL NO. 240															
14	5	5-1 0	WL501E	17		3-10 0	1-3 0								
14	5	5-9 0	WL502E	17		3-10 0	1-11 0								
1X3	5	5-7 3	WL503E	STR		5-7 3									
		TO				TO									
		5-2 2				5-2 2									
2	5	16-5 2	WL504E	STR		16-5 2									
8	5	16-3 2	FT505E	STR		16-3 2									
32	5	2-8 0	FT506E	STR		2-8 0									
2X4	5	0-7 3	WL507E	STR		0-7 3									
		TO				TO									
		0-7 3				0-4 0									
4	5	8-11 0	WL508E	4			3-1 0	2-9 0	3-1 0			2-2 1		2-2 1	7-12
1X3	5	5-10 2	WL509E	STR		5-10 2									
		TO				TO									
		5-5 2				5-5 2									
1X3	5	5-2 2	WL510E	STR		5-2 2									
		TO				TO									
		4-9 2				4-9 2									
1X3	5	6-3 2	WL511E	STR		6-3 2									
		TO				TO									
		5-10 2				5-10 2									
ENDWALL NO. 241															
14	5	5-1 0	WL501E	17		3-10 0	1-3 0								
14	5	5-9 0	WL502E	17		3-10 0	1-11 0								
1X3	5	5-7 3	WL503E	STR		5-7 3									
		TO				TO									
		5-2 2				5-2 2									
2	5	16-5 2	WL504E	STR		16-5 2									
8	5	16-3 2	FT505E	STR		16-3 2									
32	5	2-8 0	FT506E	STR		2-8 0									
2X4	5	0-7 3	WL507E	STR		0-7 3									
		TO				TO									
		0-7 3				0-4 0									
4	5	8-11 0	WL508E	4			3-1 0	2-9 0	3-1 0			2-2 1		2-2 1	
1X3	5	5-10 2	WL509E	STR		5-10 2									
		TO				TO									
		5-5 2				5-5 2									
1X3	5	5-2 2	WL510E	STR		5-2 2									
		TO				TO									
		4-9 2				4-9 2									
1X3	5	6-3 2	WL511E	STR		6-3 2									
		TO				TO									
		5-10 2				5-10 2									

SPECIFICATIONS					BENDING DIMENSIONS (FEET-INCHES /QUARTER INCH)											
QTY.	SIZE	LENGTH	MARK	TYPE	A	B	C	D	E	F/R	G	H	J	K	O
		TO				TO									
		4-9 2				4-9 2									
1X3	5	6-3 2	WL511E	STR		6-3 2									
		TO				TO									
		5-10 2				5-10 2									

SPECIFICATIONS					BENDING DIMENSIONS (FEET-INCHES /QUARTER INCH)											
QTY.	SIZE	LENGTH	MARK	TYPE	A	B	C	D	E	F/R	G	H	J	K	O

ASTM STANDARD ENGLISH REINFORCING BARS				RECOMMENDED END HOOKS, APPLICABLE TO ALL GRADES				STIRRUP AND TIE HOOKS, APPLICABLE TO ALL GRADES			
	NOMINAL DIMENSIONS				180° HOOKS		90° HOOKS		90° HOOK	135° HOOK	
BAR SIZE	DIAMETER (INCHES)	AREA (INCHES²)	WEIGHT (LBS./FT.)	D	A OR G	J	A OR G	D	A OR G	A OR G	A OR G
3	0.375	0.110	0.376	2¼"	5"	3"	6"	1½"	4"	4"	2½"
4	0.500	0.200	0.668	3"	6"	4"	8"	2"	4½"	4½"	3"
5	0.625	0.310	1.043	3¾"	7"	5"	10"	2½"	6"	5½"	3¾"
6	0.750	0.440	1.502	4½"	8"	6"	1-0"	4½"	1-0"	8"	4½"
7	0.875	0.600	2.044	5¼"	10"	7"	1-2"	5¼"	1-2"	9"	5¼"
8	1.000	0.790	2.670	6"	11"	8"	1-4"	6"	1-4"	10½"	6"
9	1.128	1.000	3.400	9½"	1-3"	11¾"	1-7"				
10	1.270	1.270	4.303	10¾"	1-5"	1-1¼"	1-10"				
11	1.410	1.560	5.313	1-0"	1-7"	1-2¾"	2-0"				
14	1.693	2.250	7.650	1-6¼"	2-3"	1-9¾"	2-7"				
18	2.257	4.000	13.600	2-0"	3-0"	2-4½"	3-5"				

NOTES:

1. FIGURES SHOWN IN CIRCLES REPRESENT BAR BEND TYPES.
2. STANDARD BAR BENDS INCLUDE ONLY THOSE TYPES BELOW, INDICATED AS SUCH.
3. ALL DIMENSIONS OUT-TO-OUT, EXCEPT "A" AND "G" ON STD. 180° AND 135° HOOKS.
4. "J" DIMENSIONS ON 180° HOOKS TO BE SHOWN ONLY WHERE NECESSARY TO RESTRICT HOOK SIZE, OTHERWISE STANDARD 'ACI' HOOKS ARE TO BE USED.
5. WHERE "J" IS NOT SHOWN, "J" WILL BE KEPT EQUAL TO OR LESS THAN "H" ON TYPES 3, 5 AND 22. WHERE "J" CAN EXCEED "H", IT SHALL BE SHOWN.
6. "H" DIMENSIONS OF STIRRUPS TO BE SHOWN AS NEEDED TO FIT WITHIN THE CONCRETE.
7. UNLESS OTHERWISE NOTED, DIAMETER "D" IS THE SAME FOR ALL BENDS AND HOOKS ON A BAR (EXCEPT FOR BEND TYPES 11 AND 13).
8. WHERE SLOPE DIFFERS FROM 45° OFFSET, "H" AND "K" MUST BE SHOWN.
9. WHERE BARS ARE TO BE BENT MORE ACCURATELY THAN STANDARD BENDING TOLERANCES, BENDING DIMENSIONS REQUIRING CLOSER FABRICATION SHOULD HAVE LIMITS INDICATED.
10. FOR RECOMMENDED DIAMETER "D", OF BENDS, HOOKS, ETC., REFER TO TABLE ABOVE, 'CRSI' OR 'ACI' TABLES WHERE APPLICABLE AND REQUIRED.
11. TYPE S1-S6, S11, T1-T3 AND T6-T9 APPLICABLE TO BAR SIZES #3 THROUGH #8.

STANDARD BAR BENDS

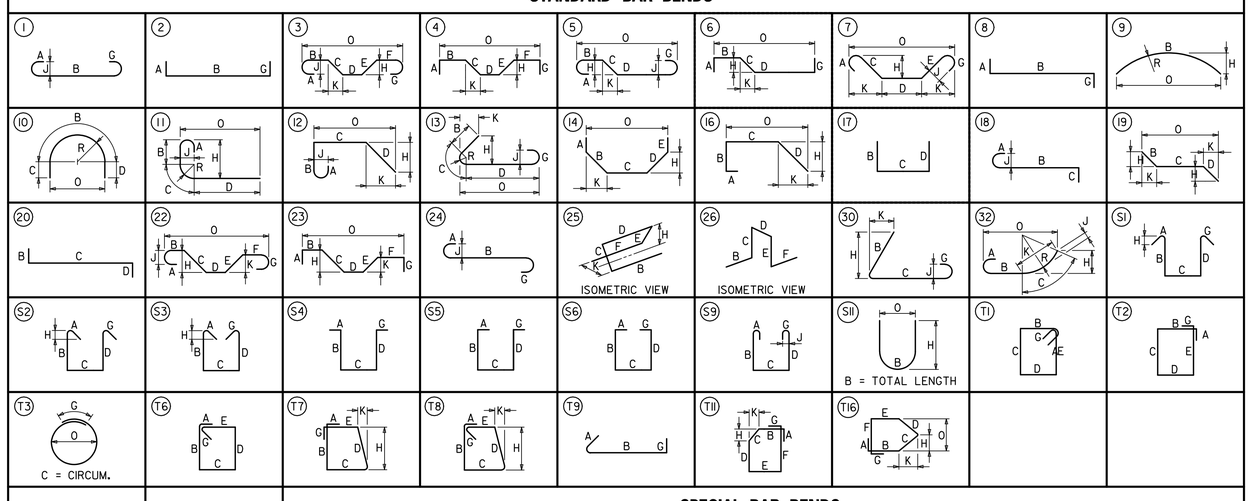

SPECIAL BAR BENDS

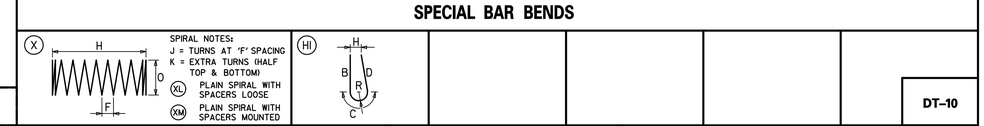

STIRRUP AND TIE HOOKS

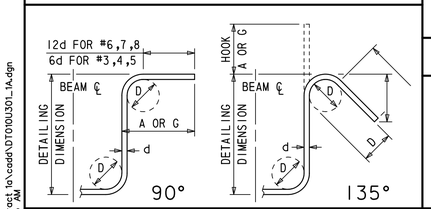

180° AND 90° END HOOKS

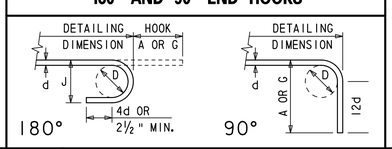

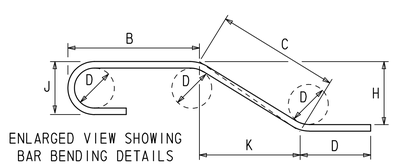

DELAWARE DEPARTMENT OF TRANSPORTATION

ADDENDUMS / REVISIONS

US 301, SR 896 TO SR 1

CONTRACT	BRIDGE NO.	
T200911308	DESIGNED BY: K.M.K.	
COUNTY		
NEW CASTLE	CHECKED BY: J.A.G.	

CONSTRUCTION DETAILS

DT-10

SHEET NO. 233

TOTAL SHTS. 875

n:\31653-000\contract to\cadd\DT010U301_1A.dgn
10/31/2012 9:39:05 AM

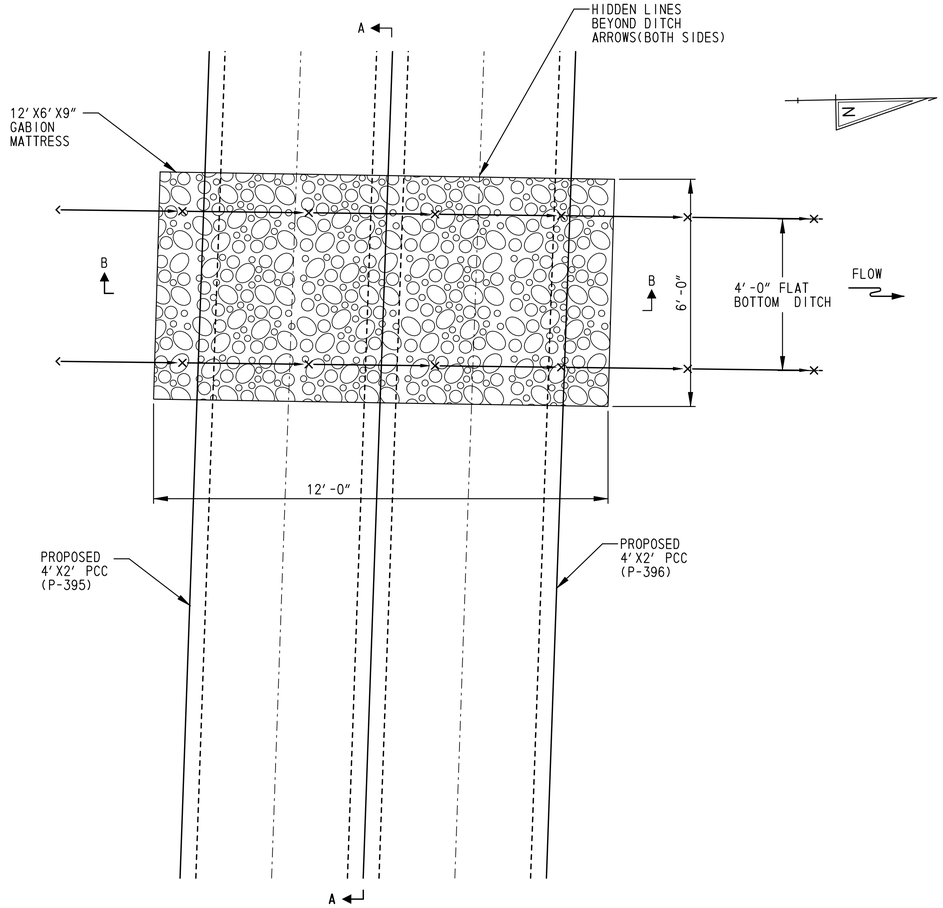

PLAN – PIPES 395 & 396 GABION MATTRESS PROTECTION

SCALE: 1/2"=1'-0"

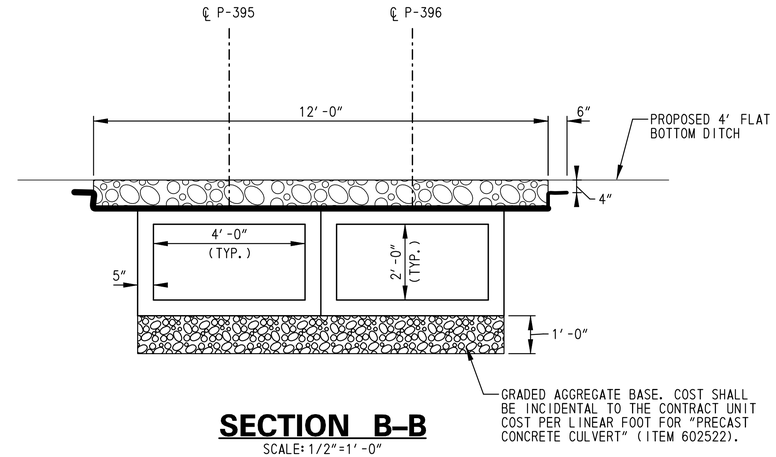

SECTION B–B

SCALE: 1/2"=1'-0"

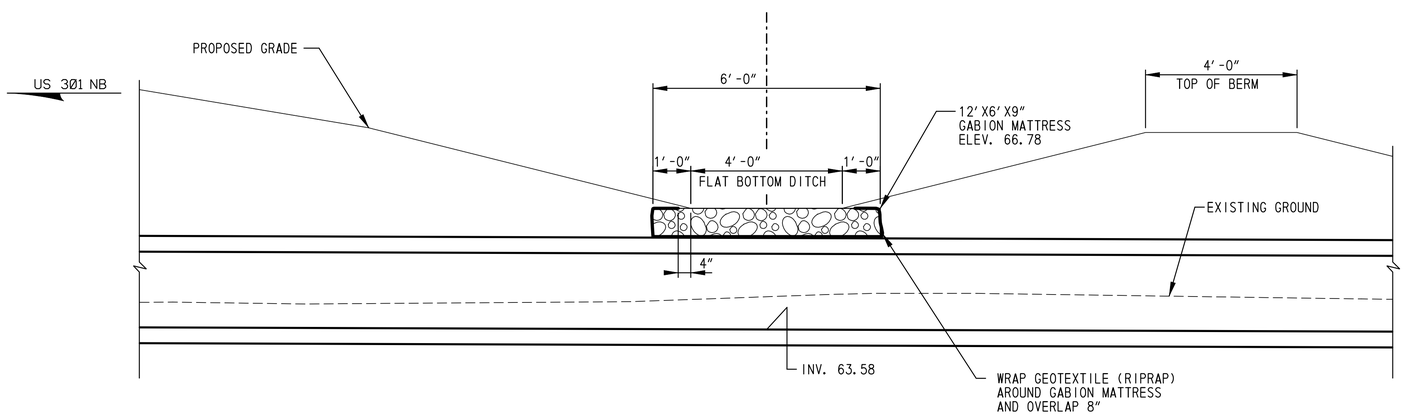

SECTION A–A

SCALE: 1/2"=1'-0"

n:\31653-000\contract 1a\cadd\DT01U301_1A.dgn
10/31/2012 9:39:17 AM

DELAWARE DEPARTMENT OF TRANSPORTATION	ADDENDUMS / REVISIONS		US 301, SR 896 TO SR 1	CONTRACT T200911308	BRIDGE NO.	CONSTRUCTION DETAILS	DT–11
				COUNTY NEW CASTLE	DESIGNED BY: DLH		SHEET NO. 234
					CHECKED BY: JDC		TOTAL SHTS. 875

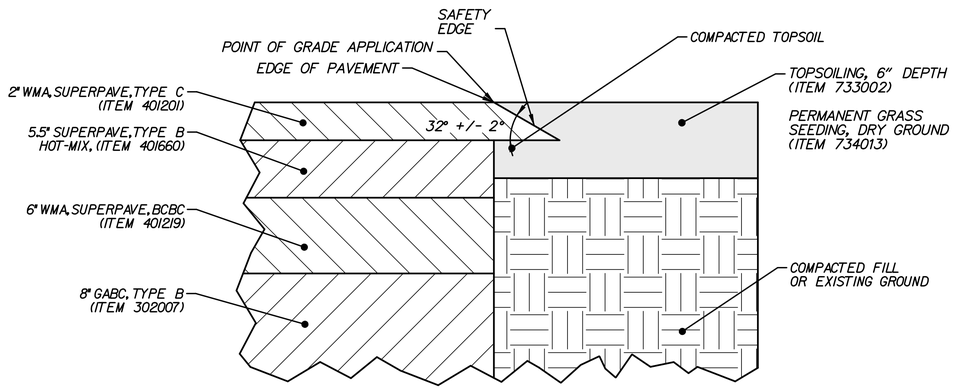

NOTE:

1. FOR ADDITIONAL INFORMATION, SEE ITEM 401752 SAFETY EDGE FOR ROADWAY PAVEMENT.
2. THE SAFETY EDGE SHALL NOT BE CONSTRUCTED ADJACENT TO OTHER PAVEMENTS, CURB, CURB & GUTTER, CONCRETE SAFETY BARRIER OR MAINTENANCE PAVEMENT UNDER GUARDRAIL. THE CONTRACTOR SHALL STAKE OUT THE LIMITS OF THE AREAS NOT TO RECIEVE THE SAFETY EDGE FOR APPROVAL BY THE ENGINEER PRIOR TO BEGINNING PAVEMENT OPERATIONS.
3. IN BITUMINOUS CONCRETE PAVEMENT SECTIONS, PRIOR TO THE CONSTRUCTION OF THE SAFETY EDGE IN OVERLAY SECTIONS AND MILL/OVERLAY SECTIONS, THE EXISTING TOPSOIL OR IN-SITU MATERIAL AT THE EDGE OF PAVEMENT SHALL BE COMPACTED SO THAT IT IS LEVEL WITH THE BOTTOM OF THE FINAL SURFACE LAYER PRIOR TO PLACING THE FINAL SURFACE OVERLAY. AFTER THE FINAL SURFACE OVERLAY IS PACED, TOPSOIL SHALL BE PLACED TO THE TOP OF THE FINAL SURFACE OVERLAY.
4. IN BITUMINOUS CONCRETE PAVEMENT SECTIONS WHERE FULL DEPTH TOPSOIL IS PROPOSED TO BE PLACED ADJACENT TO THE EDGE OF PAVEMENT, THE TOPSOIL SHALL BE PLACED AND COMPACTED ALONG THE PAVEMENT EDGE TO THAT IS IT LEVEL WITH THE BOTTOM OF THE FINAL SURFACE LAYER PRIOR TO PACING THE FINAL SURFACE OVERAY. AFTER THE FINAL SURFACE OVERLAY IS PLACED, THE TOPSOIL SHALL BE PLACED TO THE TOP OF THE FINAL SURFACE OVERLAY. ALL COSTS FOR PLACING AND COMPACTING THE TOPSOIL SHALL BE INCLUDED IN THE PRICE OF THE TOPSOIL ITEM,

SAFETY EDGE - BITUMINOUS PAVEMENT AND OVERLAYS

NOT TO SCALE

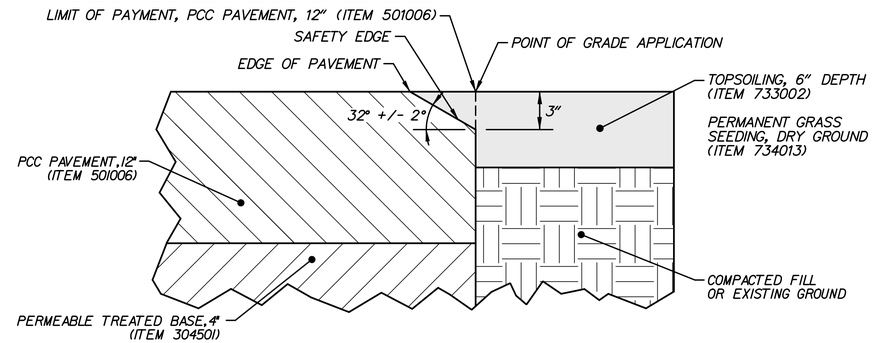

NOTE:

1. FOR ADDITIONAL INFORMATION, SEE ITEM 401752 SAFETY EDGE FOR ROADWAY PAVEMENT.
2. THE SAFETY EDGE SHALL NOT BE CONSTRUCTED ADJACENT TO OTHER PAVEMENTS, CURB, CURB & GUTTER, CONCRETE SAFETY BARRIER OR MAINTENANCE PAVEMENT UNDER GUARDRAIL. THE CONTRACTOR SHALL STAKE OUT THE LIMITS OF THE AREAS NOT TO RECIEVE THE SAFETY EDGE FOR APPROVAL BY THE ENGINEER PRIOR TO BEGINNING PAVEMENT OPERATIONS.

SAFETY EDGE - CONCRETE PAVEMENT

NOT TO SCALE

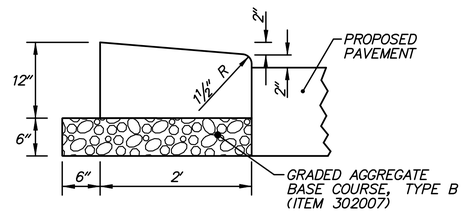

P.C.C. CURB TYPE 2, MODIFIED

NOT TO SCALE

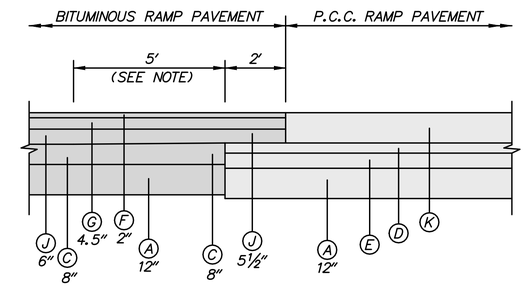

NOTE: TRANSITION BCBC FROM 6" TO 5½"

BITUMINOUS RAMP/ P.C.C. RAMP INTERFACE

NOT TO SCALE

LEGEND

- (A) ITEM 209001 - BORROW, TYPE A
- (C) ITEM 302007 - GRADED AGGREGATE BASE COURSE, TYPE B
- (D) ITEM 304501 - PERMEABLE TREATED BASE, 4"
- (E) ITEM 304502 - SOIL CEMENT BASE COURSE, 6"
- (F) ITEM 401801 - WMA, SUPERPAVE, TYPE C, 160 GYRATIONS, PG 64-22
- (G) ITEM 401810 - WMA, SUPERPAVE, TYPE B, 160 GYRATIONS, PG 64-22
- (J) ITEM 401819 - WMA, SUPERPAVE, BITUMINOUS CONCRETE BASE COURSE, 160 GYRATIONS, PG 64-22
- (K) ITEM 501006 - PORTLAND CEMENT CONCRETE PAVEMENT, 12"

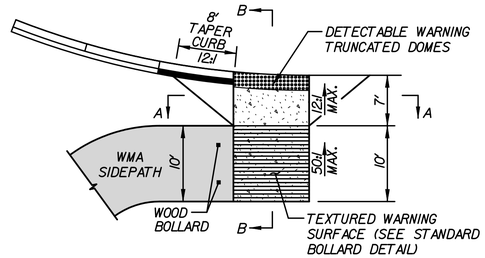

PLAN

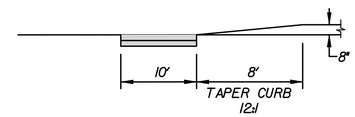

SECTION A-A

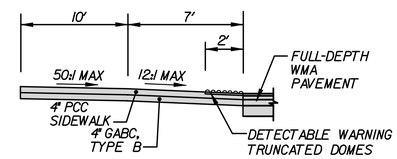

SECTION B-B

SIDEPATH CURB RAMP DETAIL

NOT TO SCALE

DT-14

DELAWARE DEPARTMENT OF TRANSPORTATION	ADDENDUMS / REVISIONS	NOT TO SCALE	US 301, SR 896 TO SR 1	CONTRACT T200911308	BRIDGE NO.	CONSTRUCTION DETAILS
				COUNTY NEW CASTLE	DESIGNED BY: SJB	
					CHECKED BY: TAO	

SHEET NO. 237
TOTAL SHTS. 875

n:\31653-000\contract 1a\cadd\DT014U301_1A.dgn
10/29/2014 4:42:12 PM

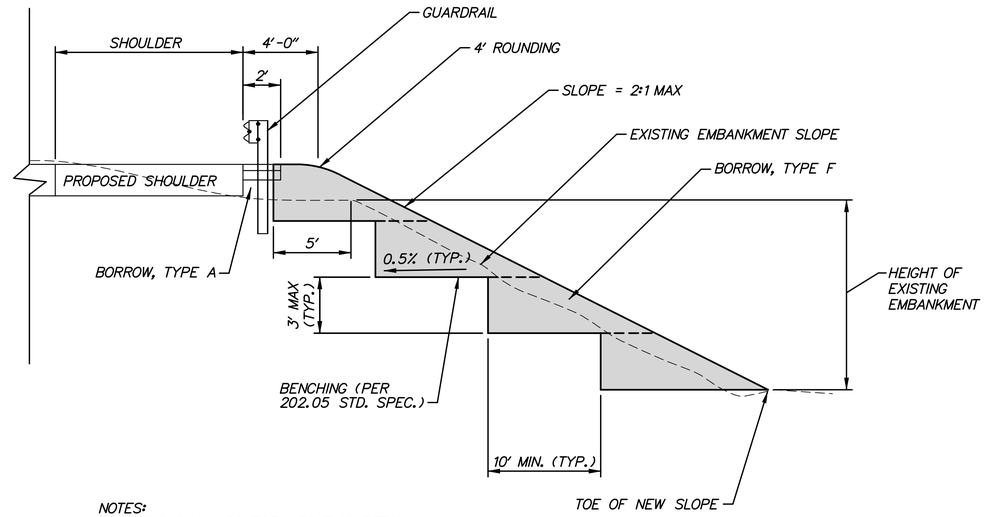

NOTES:
BENCHING SHALL CONFORM TO THIS DETAIL AT ALL LOCATIONS WHERE EXISTING EMBANKMENTS WITH A SLOPE 4:1 OR STEEPER, AND A HEIGHT OF 3' OR MORE, ARE WIDENED.

BENCHING DETAIL

NOT TO SCALE

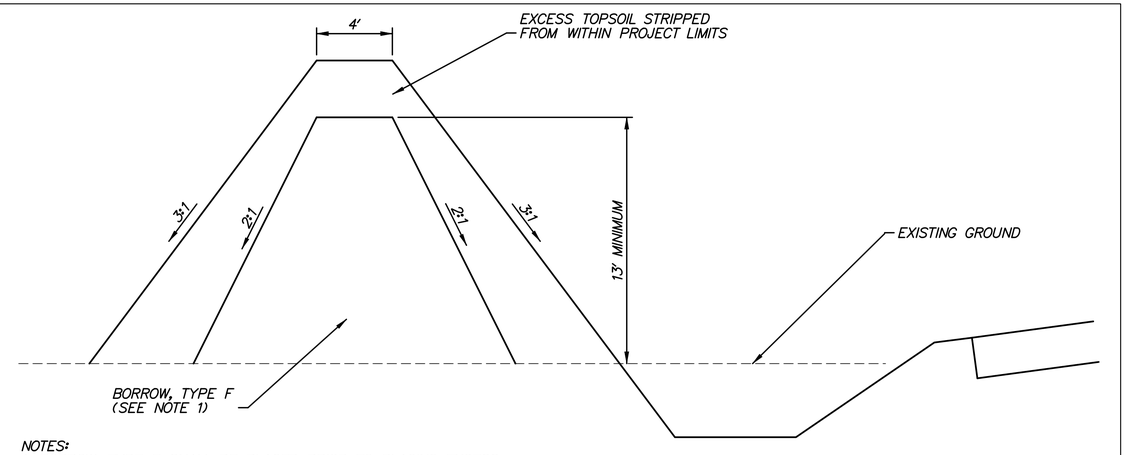

NOTES:
1. BORROW, TYPE F SHALL BE PLACED PRIOR TO PLACING EXCESS TOPSOIL OUTSIDE OF THE LIMITS OF THE EXISTING BERM.

2. WITHIN THE LIMITS OF THE EXISTING BERM THE EXISTING EMBANKMENT SHALL BE BENCHED AS REQUIRED BY THE BENCHING DETAIL ON THIS SHEET PRIOR TO PLACING EXCESS TOPSOIL.

3. CONTRACTOR SHALL NOT STRIP TOPSOIL THAT WILL REMAIN UNDER THE PROPOSED EARTH BERM. TOPSOIL STRIPPED FROM THIS AREA WILL NOT BE MEASURED OR PAID. CONSTRUCTION OF BERM IS INCIDENTAL TO ITEM 202000.

EARTH BERM

NOT TO SCALE

V:\3653-000\Contract 1A\CADD\DT015U301_1A.dgn
11/3/2014 4:09:08 PM

DT-15

DELAWARE DEPARTMENT OF TRANSPORTATION	ADDENDUMS / REVISIONS	NOT TO SCALE	US 301, SR 896 TO SR 1	CONTRACT T200911308	BRIDGE NO.	CONSTRUCTION DETAILS	SHEET NO. 238
				COUNTY NEW CASTLE	DESIGNED BY: SJB		TOTAL SHTS. 875
					CHECKED BY: TAO		

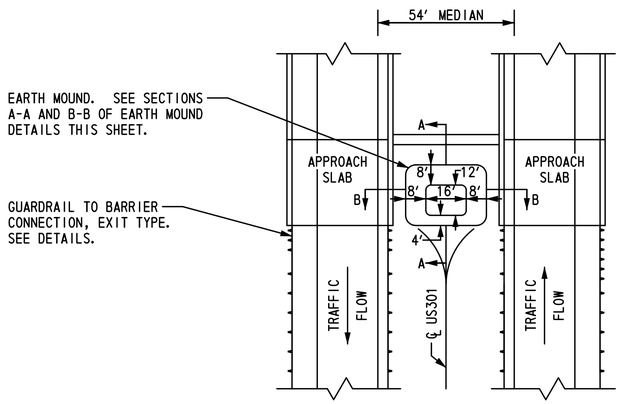

NOTES:
1. SEE PLAN SHEETS FOR LENGTH AND APPLICATION OF GUARDRAIL.

BRIDGE PROTECTION SYSTEM MAINLINE BRIDGE PARAPET AND MEDIAN OPENING PROTECTION PLAN

NOT TO SCALE

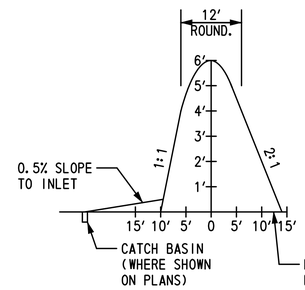

SECTION A-A

NOT TO SCALE

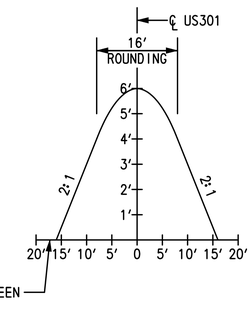

SECTION B-B

NOT TO SCALE

NOTES:
1. DISTANCE BETWEEN THE OUTSIDE FACE OF BRIDGE PARAPET AND THE TOE OF SLOPE FOR THE EARTH MOUND SHALL NOT EXCEED FOUR (4) FEET.
2. SEE PLAN SHEETS AND BRIDGE PLANS FOR THE LOCATIONS OF EARTH MOUNDS AT BRIDGE APPROACHES.
3. EARTH MOUND SHALL BE CONSTRUCTED OF MATERIALS MEETING THE REQUIREMENTS OF BORROW, TYPE F AND COMPACTED IN ACCORDANCE WITH SECTION 202.
4. STABILIZE MOUND SURFACE WITH TOPSOIL, SEED AND MULCH PER ROADWAY TYPICAL SECTIONS.

EARTH MOUND DETAILS AT BRIDGE APPROACHES

NOT TO SCALE

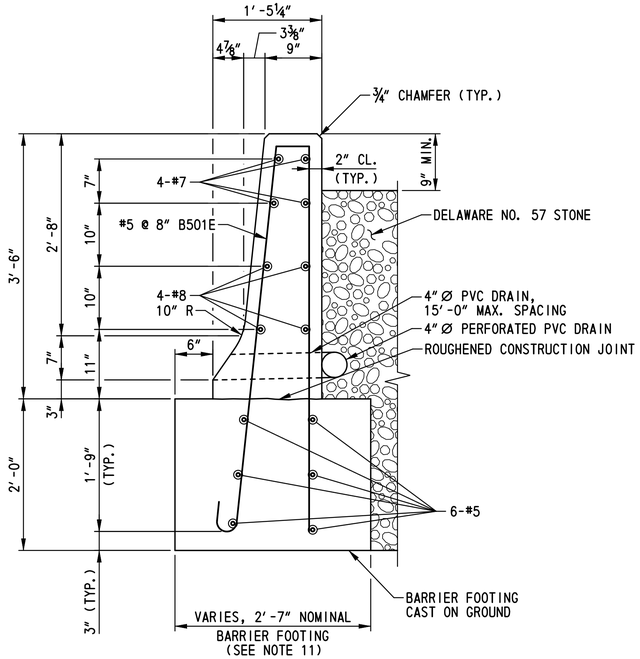

CONCRETE SINGLE FACE BARRIER TYPE 1

SCALE: 1″=1′-0″

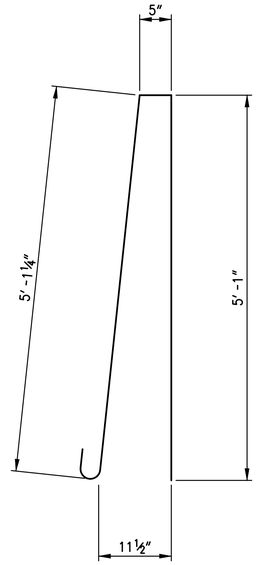

B501E

SCALE: 1″=1′-0″

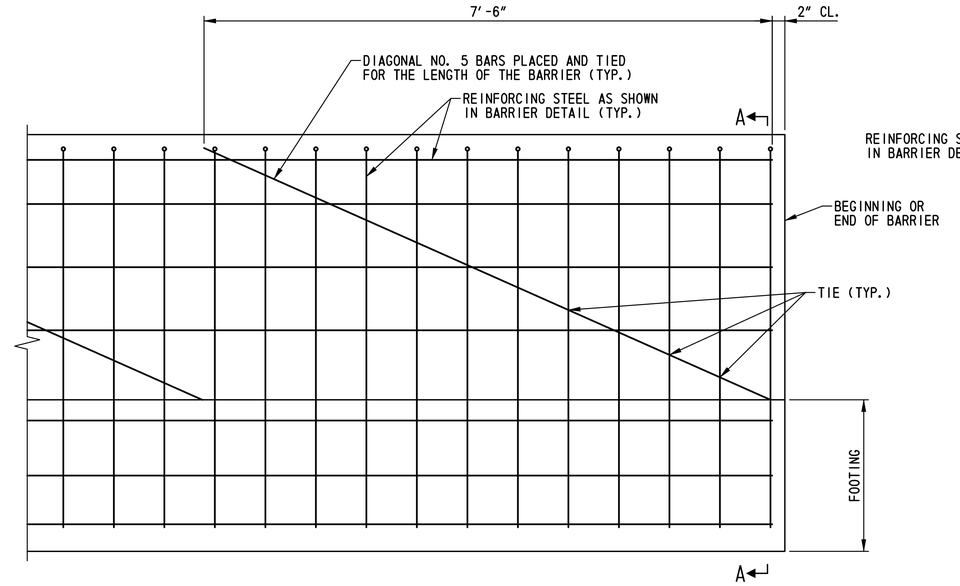

ELEVATION

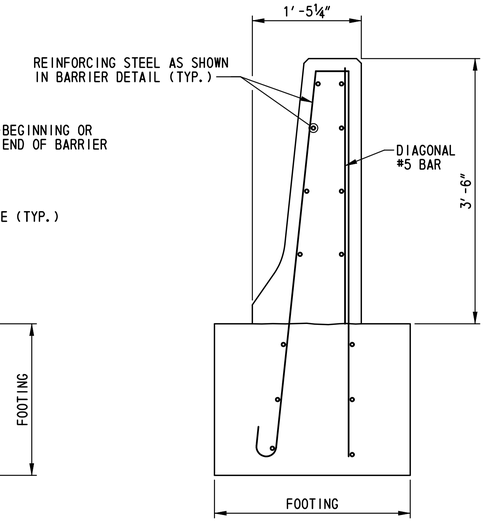

SECTION A-A CONCRETE SINGLE FACE BARRIER TYPE 1

DIAGONAL BAR DETAIL

SCALE: 1″=1′-0″

CONCRETE BARRIER NOTES:

1. CONCRETE SINGLE FACE BARRIER TYPE 1 MEET TL-4 LOADING CRITERIA AS SPECIFIED IN NCHRP REPORT 350.
2. THE BARRIER AND FOOTING SHALL BE CAST SEPARATELY USING THE FIXED FORM OR THE SLIP FORM CONSTRUCTION METHOD. ALL CONCRETE SHALL BE CLASS A PORTLAND CEMENT CONCRETE (f′c = 4,500 PSI AT 28 DAYS) AND SHALL BE CONTINUOUSLY PLACED WHEN USING FIXED FORM CONSTRUCTION. ALL CONCRETE SHALL BE CLASS B PORTLAND CEMENT CONCRETE (f′c = 3,000 PSI AT 28 DAYS) WHEN USING THE SLIP FORMING CONSTRUCTION METHOD. WHEN USING THE SLIP FORMING CONSTRUCTION METHOD, THE SLIP FORMING MACHINE SHALL BE SUPPORTED OFF OF THE THE CONCRETE SOIL CEMENT BASE COURSE REQUIRED FOR THE ADJACENT ROADWAY.
3. ALL REINFORCING STEEL SHALL MEET THE REQUIREMENTS OF AASHTO M 31 (ASTM A 615), GRADE 60 AND SHALL BE BENT BEFORE APPLYING EPOXY COATING. ALL BAR LAPS SHALL BE IN CONFORMANCE WITH THE CURRENT EDITION OF THE AASHTO LRFD BRIDGE DESIGN SPECIFICATIONS AND ALL BARS SHALL BE TIED TOGETHER.
4. ALL REINFORCING STEEL SHALL BE PROTECTED WITH FUSION-BONDED EPOXY CONFORMING AASHTO M 284 (ASTM A 775).
5. WHEN THE BARRIER IS CONSTRUCTED USING THE SLIP FORM METHOD, DIAGONAL NO. 5 BARS ARE REQUIRED.
6. SPACING OF BARRIER CONTROL JOINTS SHALL BE A MAXIMUM OF 10 FEET REGARDLESS OF CONSTRUCTION METHOD, SEE DETAIL THIS SHEET. SPACING OF FOOTING CONTROL JOINTS SHALL BE A MAXIMUM OF 10 FEET AND ALIGN WITH THE CONTROL JOINTS IN THE BARRIER.
7. THE CONTRACTOR HAS THE OPTION TO CONSTRUCT THE FOOTING AND BARRIER AFTER CONSTRUCTION OF THE PAVEMENT. THE FOOTING FORMS, IF USED, SHALL BE REMOVED IF THE BARRIER AND FOOTING ARE CONSTRUCTED BEFORE THE PAVEMENT.
8. THE FOOTING REAR VERTICAL WALL SHALL BE FORMED OR THE CONCRETE PLACED AGAINST THE VERTICAL EARTH SIDE IF APPROVED BY THE ENGINEER. NO ADDITIONAL COMPENSATION FOR ADDITIONAL CONCRETE WILL BE PAID IF THE CONCRETE IS PLACED AGAINST THE EARTH.
9. THE CONTRACTOR SHALL ATTACH THE YELLOW AND/OR WHITE REFLECTORS TO THE BARRIERS AS SHOWN IN THE DETAIL ON THIS SHEET. PAYMENT FOR THE REFLECTORS SHALL BE IN ACCORDANCE WITH ITEM NOS. 720544 AND 720545 AS APPROPRIATE.
10. PRIOR TO PLACING BARRIER CONCRETE ADJACENT TO EXISTING CONCRETE PAVEMENT, OR PRIOR TO PLACING CONCRETE PAVEMENT ADJACENT TO EXISTING BARRIER CONCRETE, AN APPROVED BOND BREAKER SHALL BE APPLIED TO THE EXISTING CONCRETE VERTICAL FACE. THIS LONGITUDINAL JOINT AT THE INTERFACE BETWEEN THE CONCRETE PAVEMENT AND THE BARRIER CONCRETE SHALL NOT BE SEALED. VERTICAL CRACKS IN THE EXISTING CONCRETE FACE SHALL BE COVERED OR SEALED AS APPROVED BY THE ENGINEER TO PREVENT INTRUSION OF THE NEW CONCRETE INTO THE EXISTING CONCRETE. ALL WORK SHALL BE INCIDENTAL TO THE APPROPRIATE BARRIER ITEM.
11. BARRIER FOOTING WIDTH VARIES ALONG THE THE FRONT FACE OF MSE WALLS AS INDICATED BELOW:
    2′-5″ MIN. AT BRIDGE NO. 1-436A, ABUTMENT B
    2′-0″ MIN. AT BRIDGE NO. 1-460A, ABUTMENT A
    2′-0¼″ MIN. AT BRIDGE NO. 1-460A, ABUTMENT B

    PLACE 1-INCH THICK x 2′-0″ EXPANDED POLYSTYRENE BETWEEN BARRIER FOOTING AND FRONT FACE OF MSE WALL AT THESE LOCATIONS. EXPANDED POLYSTYRENE SHALL CONFORM TO ASTM C 578, EXCEPT THAT THE MAXIMUM ALLOWABLE WATER ABSOROPTION SHALL BE 2%.
12. COST OF THE CONCRETE SINGLE FACE BARRIER TYPE 1 CONCRETE FOOTING, REINFORCING STEEL, PVC DRAIN PIPE, PERFORATED PVC DRAIN PIPE, DELAWARE NO. 57 STONE, EXPANDED POLYSTYRENE, BOND BREAKER AND EXCAVATION SHALL BE INCIDENTAL TO THE CONTRACT UNIT PRICE PER LINEAR FOOT FOR CONCRETE SINGLE FACE BARRIER TYPE 1 (720626).

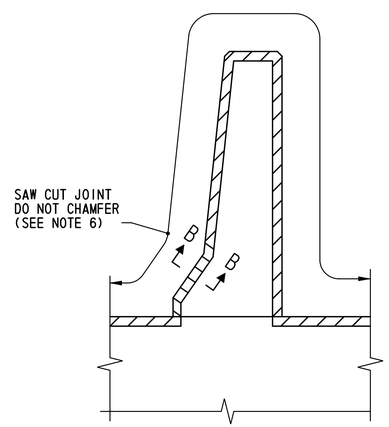

BARRIER CONTROL JOINT DETAIL

SCALE: 1″=1′-0″

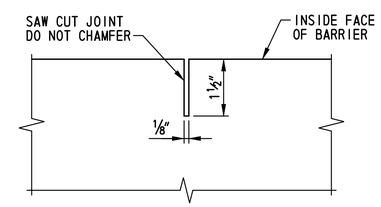

SECTION B-B

SCALE: 6″=1′-0″

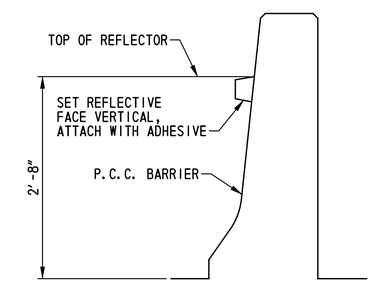

REFLECTOR DETAIL

SCALE: 1″=1′-0″

REFLECTOR DETAIL NOTES:

1. COLOR OF REFLECTOR ON TRAFFIC SIDE SHALL MATCH ADJACENT LANE LINE COLOR. BACK SIDE OF ALL REFLECTORS SHALL BE RED.
2. THE SPACING OF REFLECTORS ON PERMANENT P.C.C. BARRIER SHALL BE COORDINATED WITH THE DELINEATORS AT THE APPROACHES TO THE BARRIER SUCH THAT THE SPACING OF DELINEATORS/REFLECTORS DOES NOT EXCEED 100 FT.
3. ALL COST SHALL BE INCLUDED IN ITEM 720544 - REFLECTORS, WHITE, CONCRETE AND 720545 - REFLECTORS, YELLOW, CONCRETE.

DT-17

DELAWARE DEPARTMENT OF TRANSPORTATION	ADDENDUMS / REVISIONS	SCALE: AS NOTED	US 301, SR 896 TO SR 1	CONTRACT T200911308	BRIDGE NO.	CONSTRUCTION DETAILS	SHEET NO. 240
				COUNTY NEW CASTLE	DESIGNED BY: B.K.B.		TOTAL SHTS. 875
					CHECKED BY: W.A.G.		

n:\31653-000\contract 10\cadd\DT017U301_1A.dgn 10/31/2014 11:34:15 PM

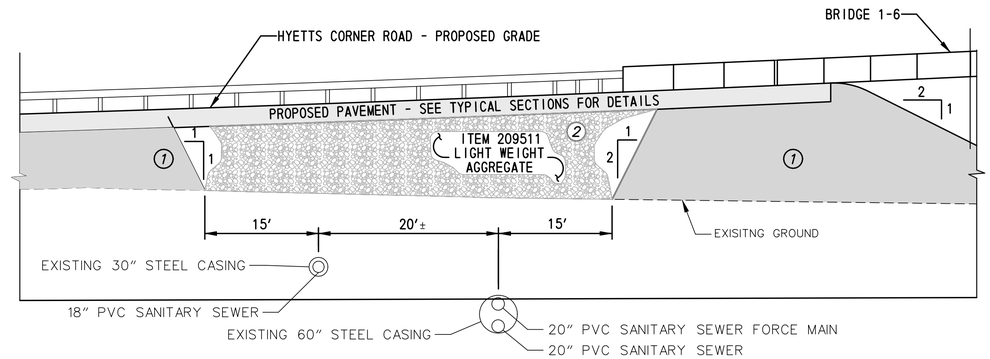

SECTION A-A

NOT TO SCALE

NOTES:

1. CONSTRUCT PROPOSED EMBANKMENT ON BOTH ENDS
2. CONSTRUCT LIGHT WEIGHT AGGREGATE FILL EMBANKMENT

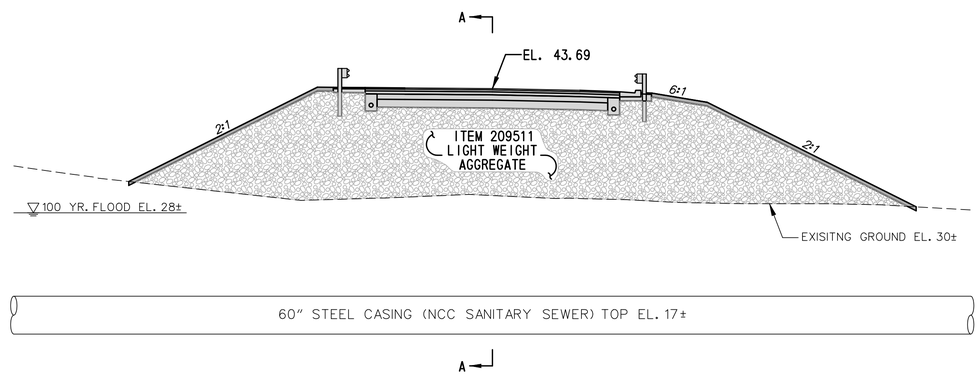

ELEVATION - STA. 908+60±

NOT TO SCALE

HYETTS CORNER ROAD LIGHT WEIGHT AGGREGATE FILL EMBANKMENT DETAIL

NOT TO SCALE

NOTE: SEE SEE DT-19 FOR SEQUENCE OF CONSTRUCTION

N:\31653-000\Contract 1A\CADD\DT018U301_1A.dgn
11/3/2014 3:18:26 PM

DELAWARE DEPARTMENT OF TRANSPORTATION	ADDENDUMS / REVISIONS	NOT TO SCALE	US 301, SR 896 TO SR 1	CONTRACT T200911308	BRIDGE NO.	CONSTRUCTION DETAILS	DT-18
				COUNTY NEW CASTLE	DESIGNED BY: SES		SHEET NO. 241
					CHECKED BY: BRT		TOTAL SHTS. 875

SEQUENCE OF CONSTRUCTION - DETAILS

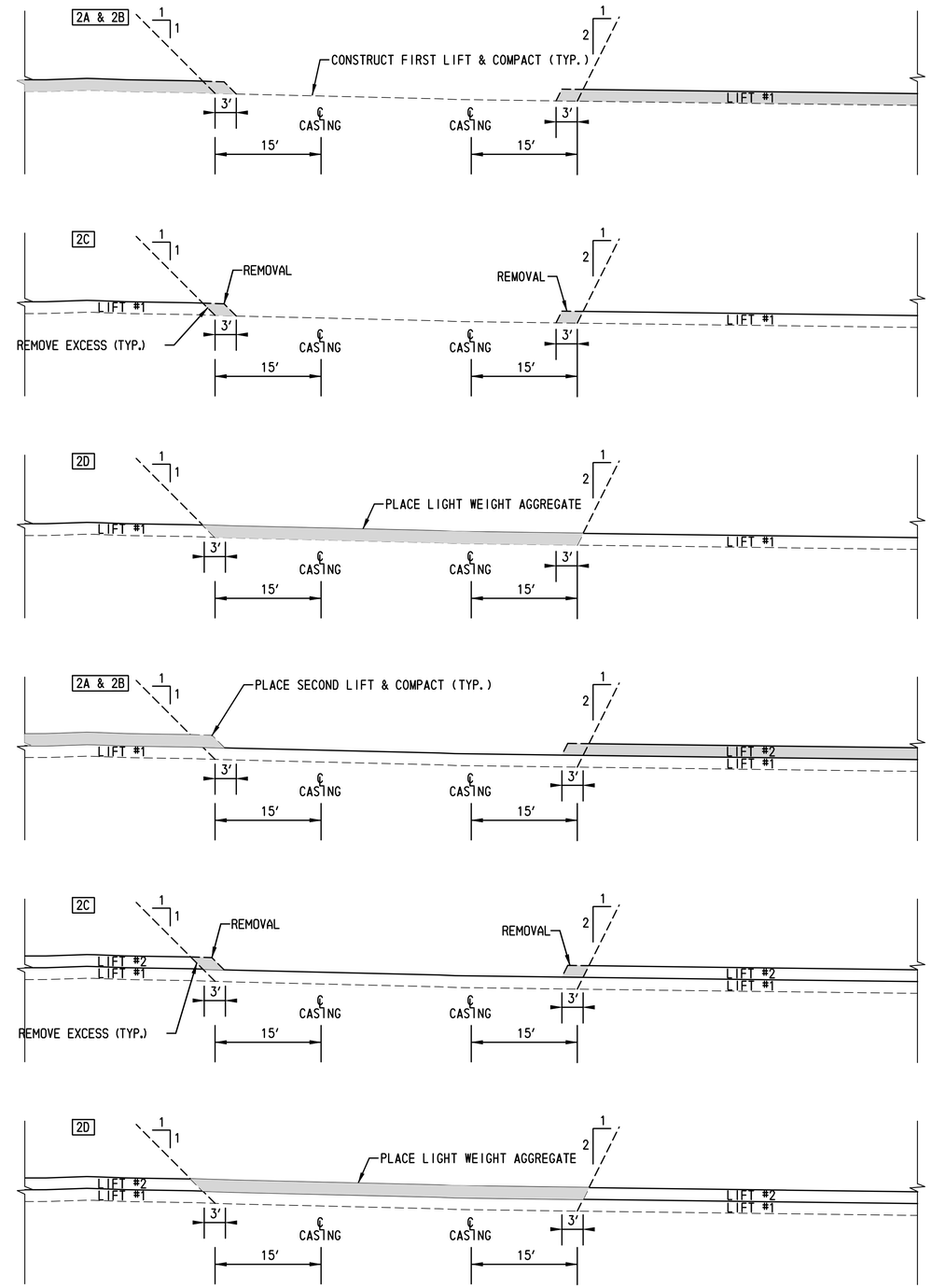

REPEAT FOR ALL LIFTS UNTIL SUBGRADE IS COMPLETE.

SEQUENCE OF CONSTRUCTION

1. REMOVE EXISTING ROADWAY AND BASE, AND PREPARE SUBGRADE UNDER EXISTING ROADWAY.
2. REPEAT THE FOLLOWING IN STANDARD LIFT HEIGHTS REQUIRED FOR COMPACTION, UNTIL THE ENTIRE ROADWAY SUBGRADE IS COMPLETE:
   A. CONSTRUCT FIRST LIFT OF BRIDGE 1-6 ABUTMENT A MSE WALL ON EAST SIDE OF EXISTING SANITARY SEWER, USING BORROW TYPE B, BORROW TYPE C, AND/OR #57 STONE AS SHOWN ON BRIDGE 1-6, ABUTMENT A TYPICAL SECTION DETAILS. EXTEND MATERIAL PLACEMENT 3' INTO ULTIMATE LIGHT WEIGHT AGGREGATE AREA (12' FROM CENTERLINE OF PIPE) AND COMPACT ENTIRE LIFT. ADDITIONAL MATERIAL PLACED SHALL BE INCIDENTAL TO THE APPLICABLE MATERIAL AND SHALL NOT BE MEASURED OR PAID FOR.
   B. CONSTRUCT FIRST LIFT OF TYPE F EMBANKMENT ON WEST SIDE OF EXISTING SANITARY SEWER SLEEVE AS SHOWN; EXTEND MATERIAL PLACEMENT 3' INTO ULTIMATE LIGHT WEIGHT AGGREGATE AREA AND COMPACT ENTIRE LIFT. NOTE THAT ADDITIONAL MATERIAL PLACED SHALL BE INCIDENTAL TO THE APPLICABLE MATERIAL AND SHALL NOT BE MEASURED OR PAID FOR.
   C. REMOVE THE EXCESS 3' OF MATERIAL FROM EITHER SIDE OF THE TRENCH.
   D. FILL WITH LIGHTWEIGHT AGGREGATE, EVEN WITH THE LIFTS ON EITHER SIDE OF THE TRENCH, AND COMPACT PER SPECIFICATION FOR ITEM #209511.
3. CONSTRUCT ROADWAY ON FINAL EMBANKMENT PER THE TYPICAL SECTION AND PLANS.

N:\31653-000\Contract 1A\CADD\DT019U301_1A.dgn
11/3/2014 3:19:06 PM

DELAWARE DEPARTMENT OF TRANSPORTATION	ADDENDUMS / REVISIONS	NOT TO SCALE	US 301, SR 896 TO SR 1	CONTRACT T200911308	BRIDGE NO.	CONSTRUCTION DETAILS	DT-19
				COUNTY NEW CASTLE	DESIGNED BY: SES		SHEET NO. 242
					CHECKED BY: BRT		TOTAL SHTS. 875

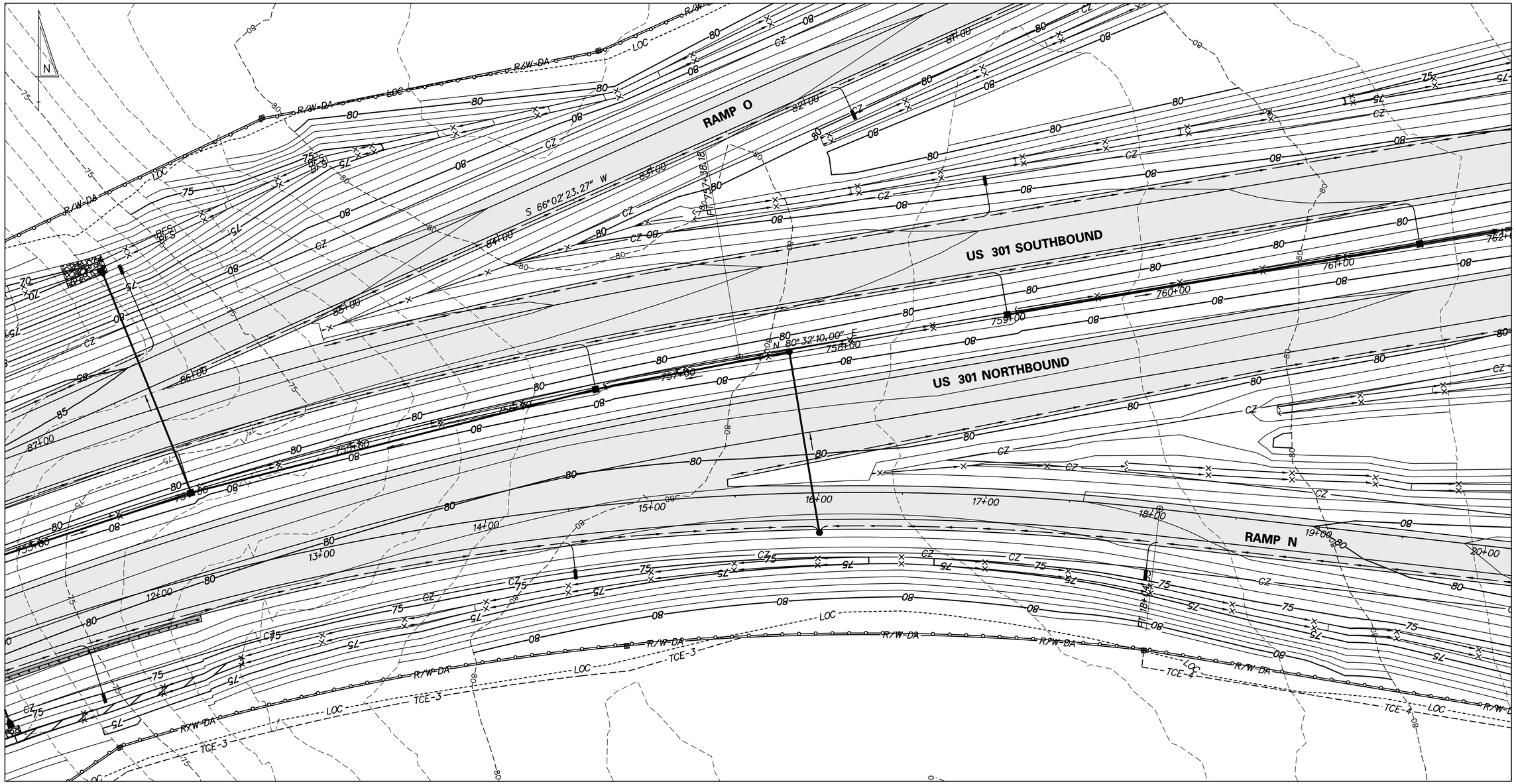

GORE AREA GRADING PLAN - RAMP N AND RAMP O

N:\31653-000\Contract 1A\CADD\DT020U301_1A.dgn
11/3/2014 4:32:41 PM

DELAWARE DEPARTMENT OF TRANSPORTATION

ADDENDUMS / REVISIONS	

SCALE
0 30 60 90
FEET

US 301, SR 896 TO SR 1

CONTRACT	BRIDGE NO.
T200911308	DESIGNED BY: KGMA
COUNTY	
NEW CASTLE	CHECKED BY: TAO

CONSTRUCTION DETAILS

DT-20
SHEET NO.
243
TOTAL SHTS.
875

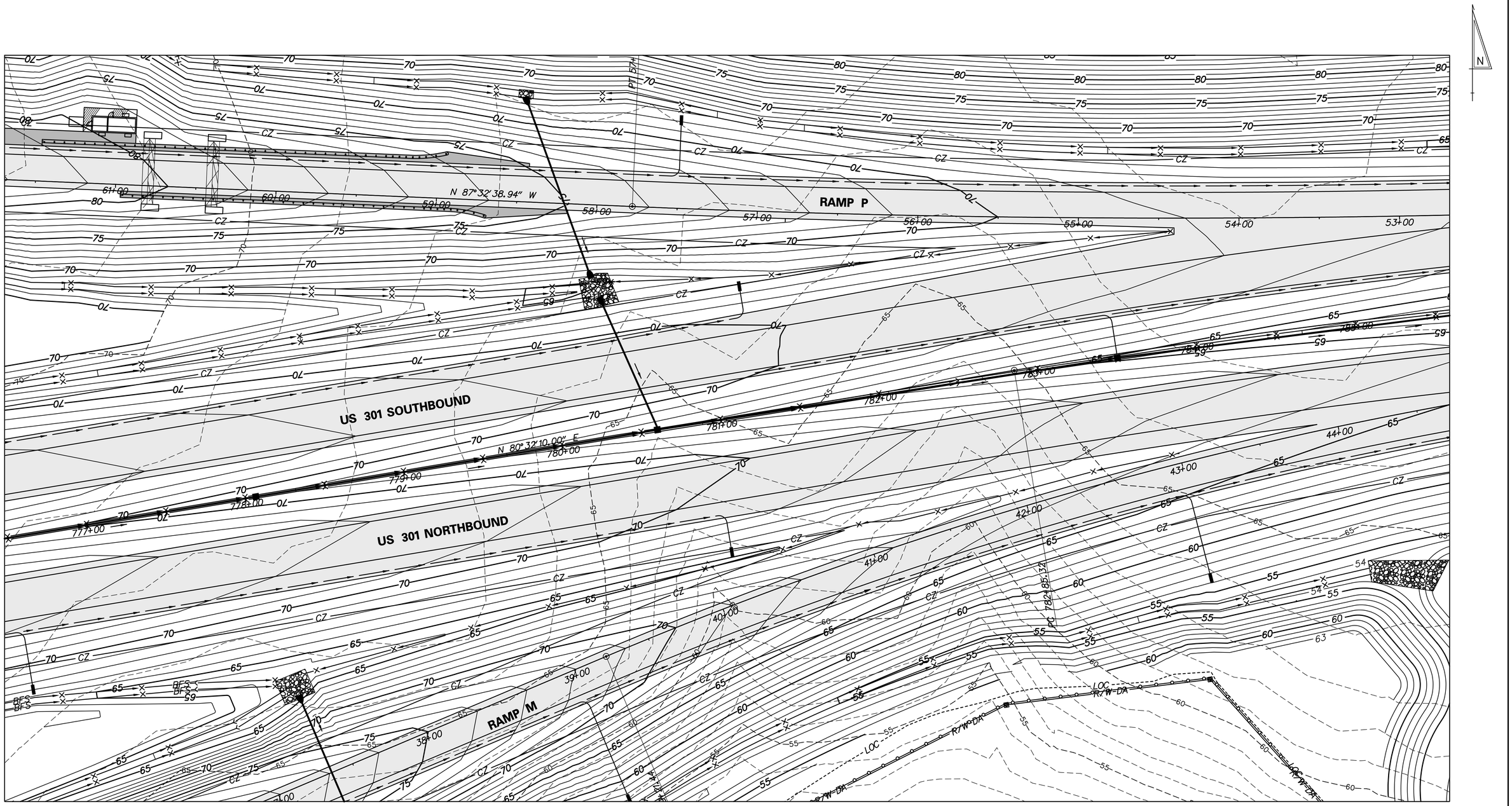

GORE AREA GRADING PLAN - RAMP M AND RAMP P

DELAWARE DEPARTMENT OF TRANSPORTATION	ADDENDUMS / REVISIONS	SCALE 0 30 60 90 FEET	US 301, SR 896 TO SR 1	CONTRACT T200911308	BRIDGE NO.	CONSTRUCTION DETAILS	DT-21
				COUNTY NEW CASTLE	DESIGNED BY: KGMA		SHEET NO. 244
					CHECKED BY: TAO		TOTAL SHTS. 875

nt\3653-000\contract 1a\cadd\DT021U301_1A.dgn
10/29/2014 4:42:17 PM

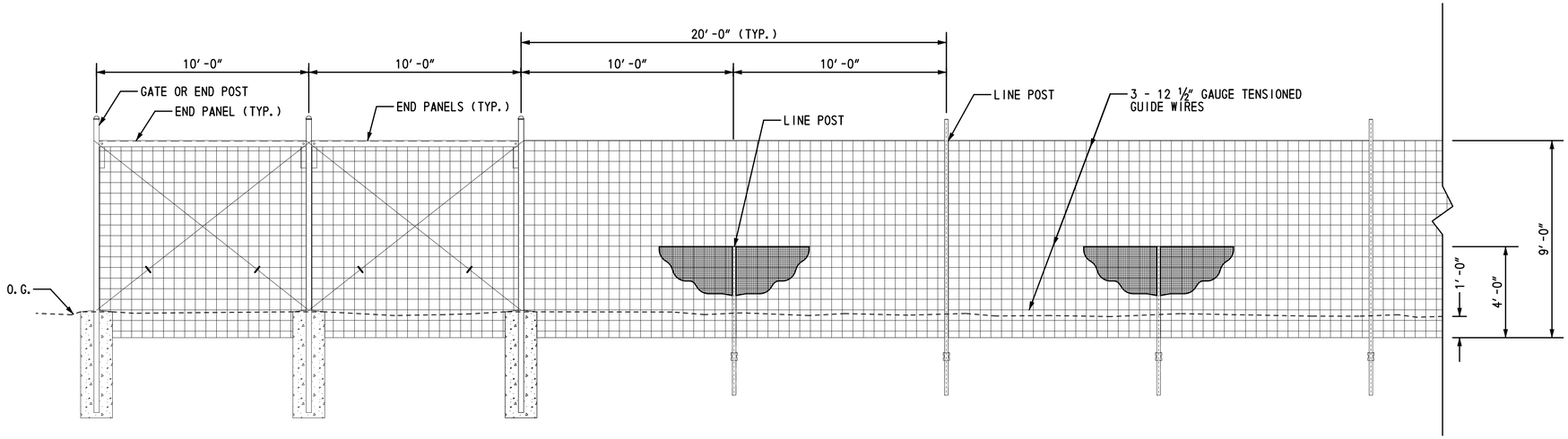

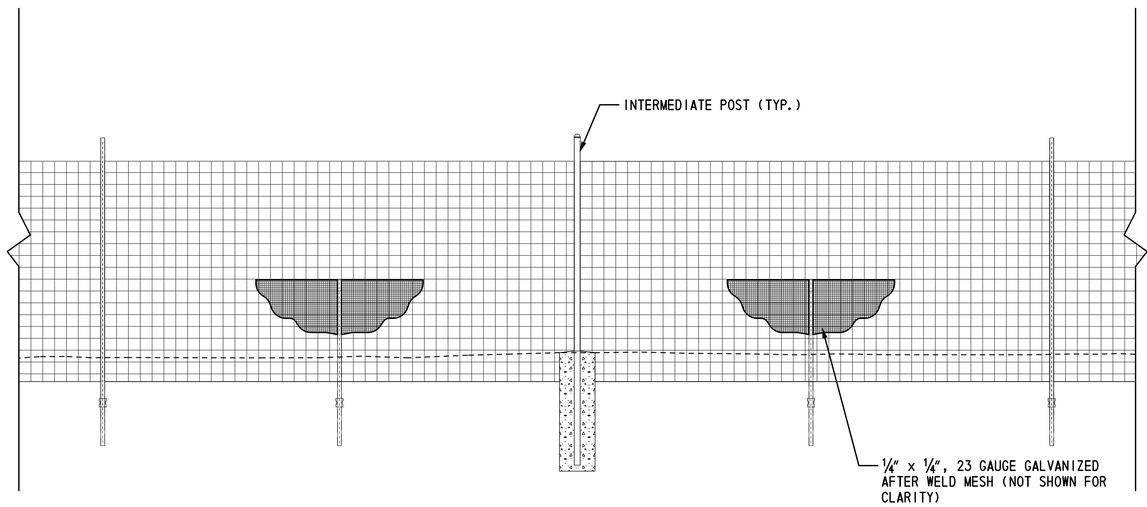

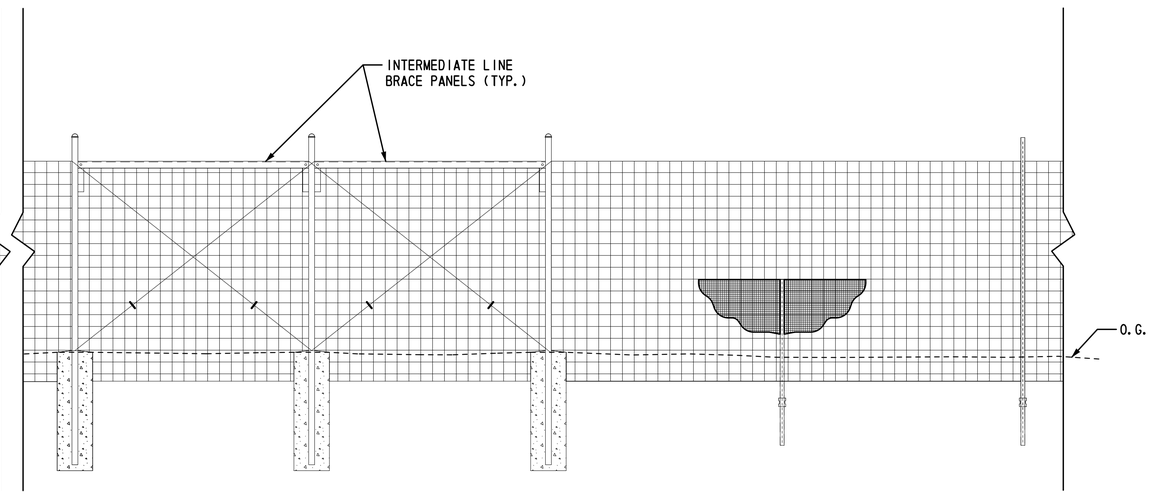

WILDLIFE EXCLUSION FENCE DETAIL

NOT TO SCALE

NOTES

1. THE WILDLIFE EXCLUSION FENCE WILL BE CONSTRUCTED WITH WOVEN WIRE FENCE FABRIC AND WELDED WIRE MESH. ATTACH WELDED WIRE MESH TO WOVEN WIRE FABRIC USING 9 GAUGE HOG RINGS AT 2' INTERVALS (TOP,CENTER AND BOTTOM OF WELDED WIRE MESH).
2. WILDLIFE EXCLUSION FENCE WILL BE BURIED 1' INTO THE GROUND. TRIM FENCE AS NECESSARY AROUND CONCRETE FOOTING.
3. INTERMEDIATE POSTS SHALL BE PLACED AT THE LOW POINT OF A DIP AND AT THE CROWN OF A HUMP. THE MAXIMUM SPACING BETWEEN INTERMEDIATE POSTS SHALL NOT EXCEED 120 FEET.
4. INTERMEDIATE LINE BRACE PANELS (2) SHALL BE PLACED AT DRAMATIC CHANGES (WHERE GRADE CHANGES EXCEED 15%) IN THE TOPOGRAPHY. THE MAXIMUM SPACING BETWEEN LINE BRACES SHALL NOT EXCEED 1320 FEET.
5. TENSION GUIDE WIRES SHALL BE TIED OFF AT BOTH ENDS OF THE FENCE THEN TENSIONED IN THE MIDDLE OF THE PULL.
6. GENERAL FENCE INSTALLATION SHALL ADHERE TO THE GUIDELINES WRITTEN BY THE FENCING MANUFACTURER.

DT-22

DELAWARE DEPARTMENT OF TRANSPORTATION	ADDENDUMS / REVISIONS	NOT TO SCALE	US 301, SR 896 TO SR 1	CONTRACT T200911308 / COUNTY NEW CASTLE	BRIDGE NO. / DESIGNED BY: LB / CHECKED BY: MAA	CONSTRUCTION DETAILS	SHEET NO. 245 / TOTAL SHTS. 875

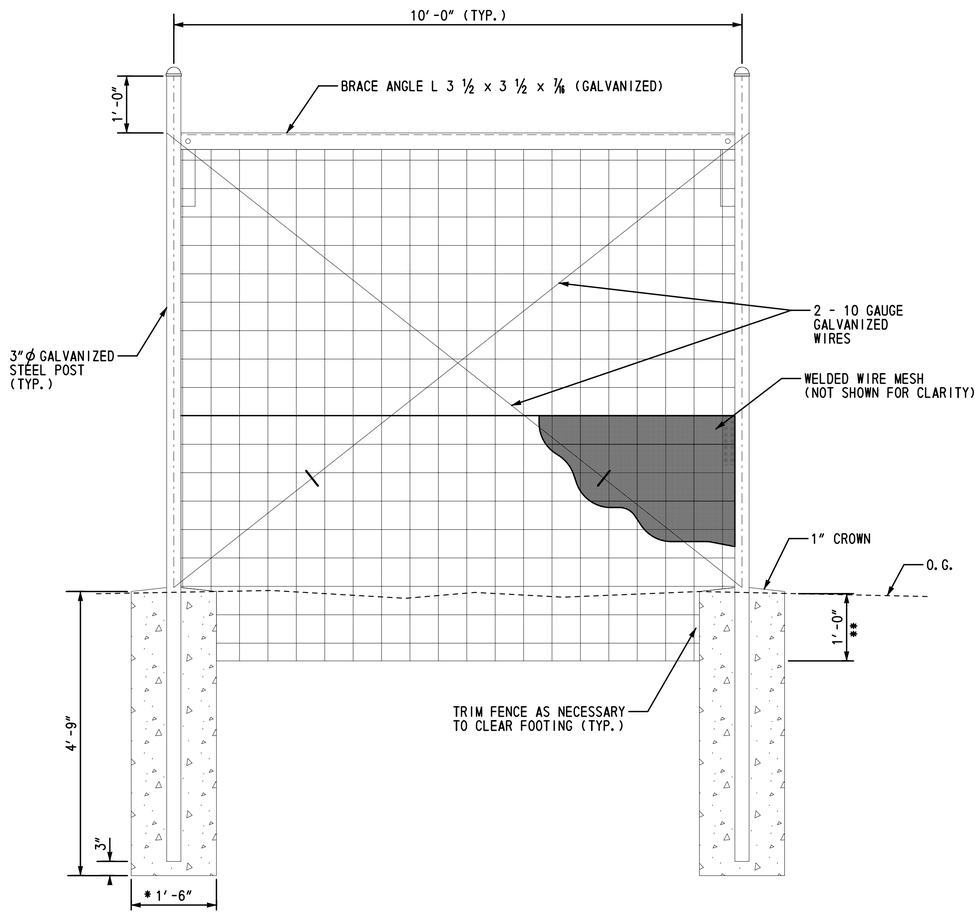

* 1'-0" INTERMEDIATE POSTS
** BURY 1'-0" WIRE FENCE AND WELDED WIRE MESH

END PANEL AND INTERMEDIATE BRACE PANEL

SCALE: ¾"=1'

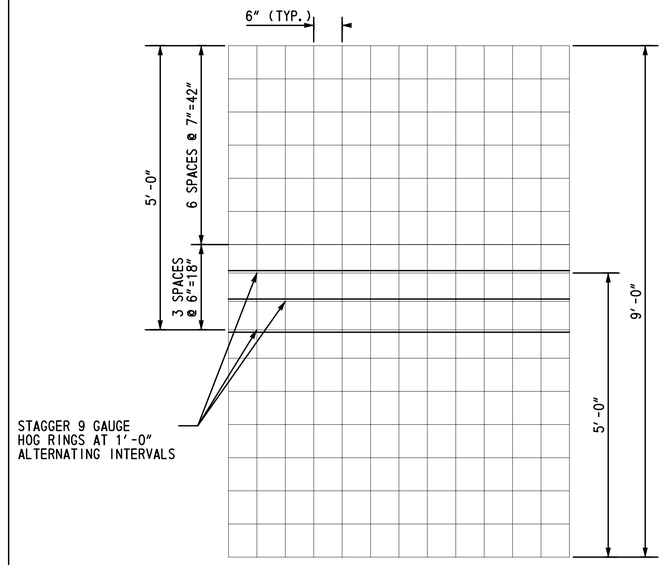

WIRE FENCE FABRIC DETAIL

SCALE: ¾"=1'

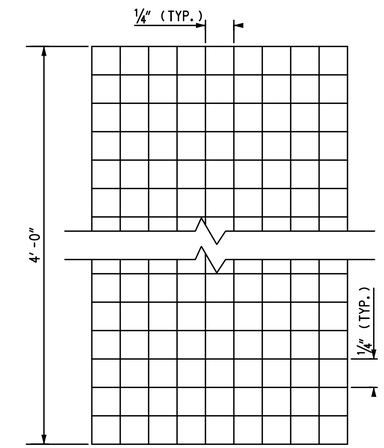

WELDED WIRE MESH DETAIL

NOT TO SCALE

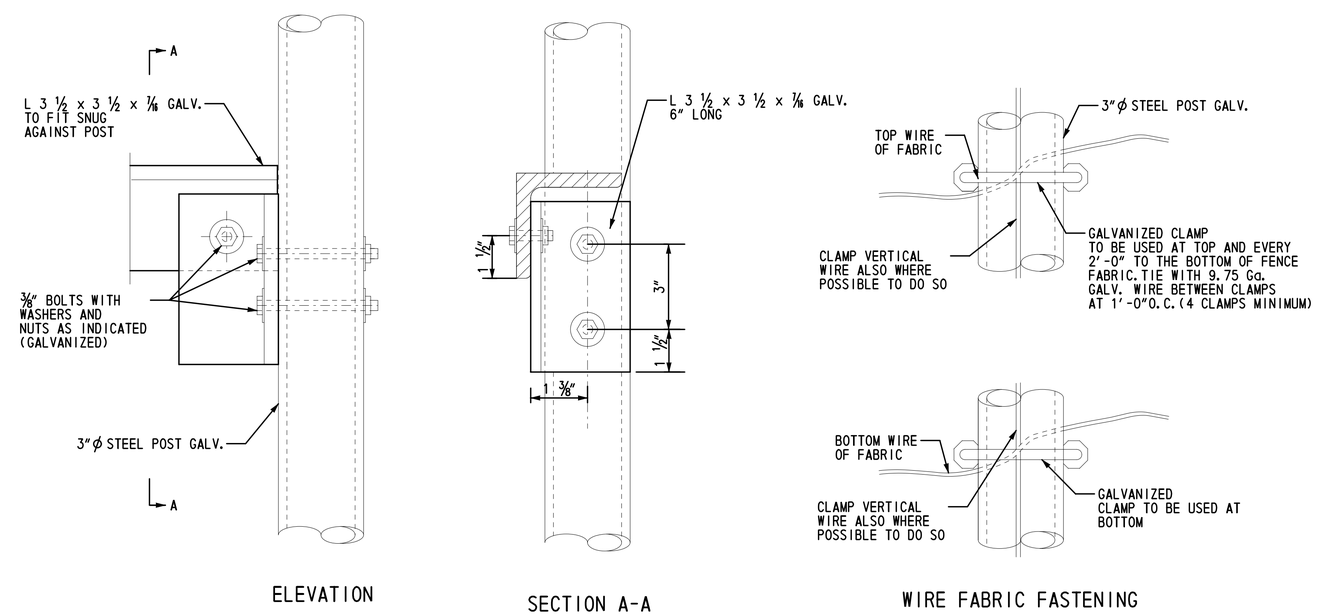

FASTENING DETAILS FOR STEEL POSTS

SCALE: ⅜"=1'

DT-23

DELAWARE DEPARTMENT OF TRANSPORTATION	ADDENDUMS / REVISIONS	SCALE: AS NOTED	US 301, SR 896 TO SR 1	CONTRACT T200911308 / COUNTY NEW CASTLE	BRIDGE NO. / DESIGNED BY: LB / CHECKED BY: MAA	CONSTRUCTION DETAILS	SHEET NO. 246 / TOTAL SHTS. 875

P:\1445 US 301 SECT.1\DESIGN\FINAL_SUBMISSION\CONTRACT_1A-PSE\REF\SB003U301_1A.DGN

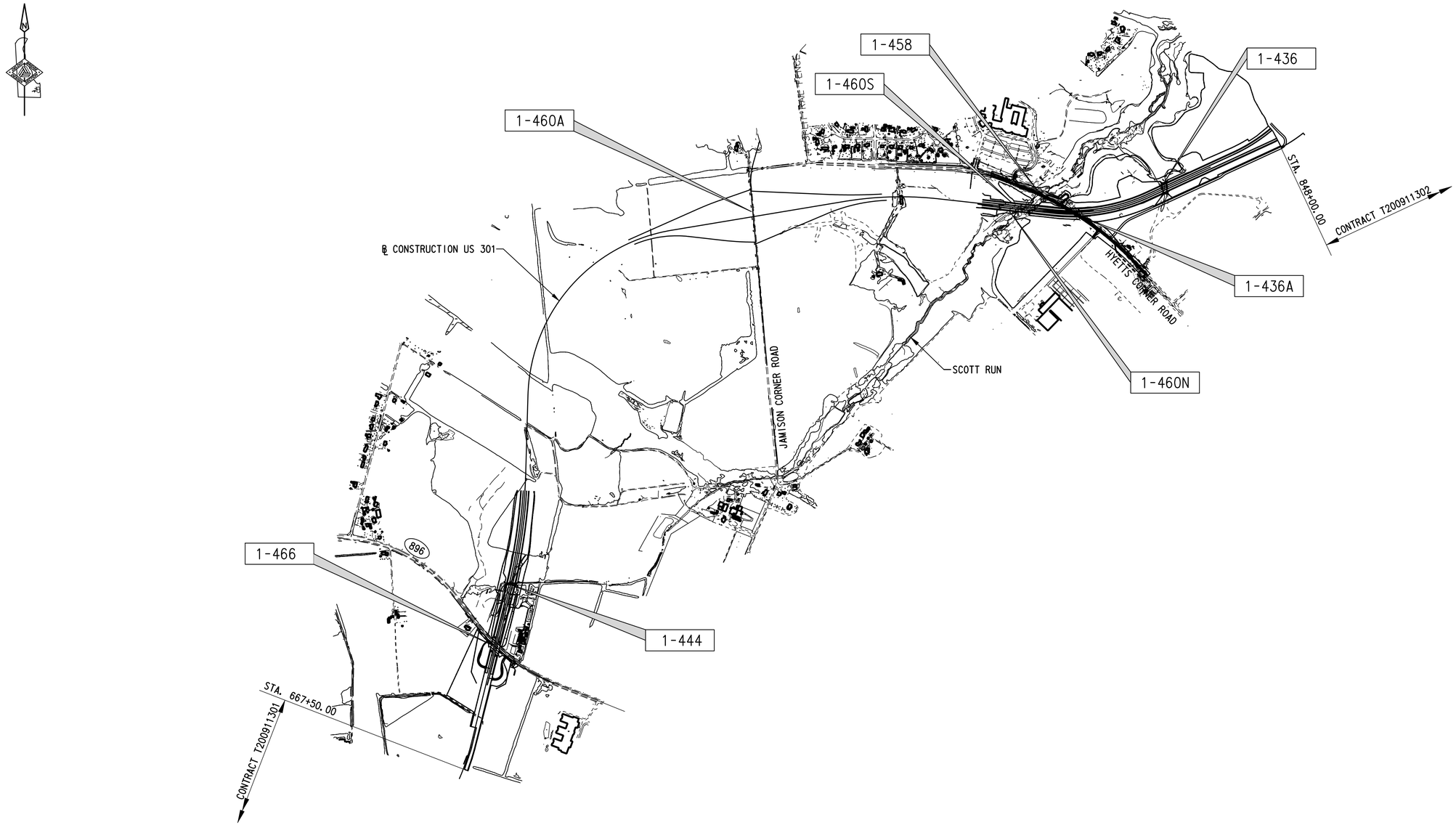

STRUCTURE LOCATION PLAN - CONTRACT T200911308

SCALE: 1" = 800'-0"

IS-04

DELAWARE DEPARTMENT OF TRANSPORTATION	ADDENDUMS / REVISIONS	800 400 0 800 1600 SCALE: 1" = 800'	US 301, SR 896 TO SR 1	CONTRACT T200911308	BRIDGE NO.	STRUCTURE LOCATION PLAN	SHEET NO. 247
				COUNTY NEW CASTLE	DESIGNED BY: WRA/MTA		TOTAL SHTS. 875
					CHECKED BY: P.S.D.		

n:\31653-000\contract 1a\cadd\S004U301_1A.dgn
10/31/2014 11:36:13 PM

PROJECT NOTES:

1. LOCATION
   PROPOSED NEW PRECAST PORTLAND CEMENT CONCRETE ARCH (PRECAST P.C.C. ARCH) STRUCTURE CARRYING US 301 OVER TRIBUTARY TO SCOTT RUN, NEW CASTLE COUNTY, DELAWARE.

2. ELEVATIONS
   VERTICAL DATUM IS REFERENCED TO NAVD 88.

3. DESIGN CRITERIA AND SPECIFICATIONS
   2007 AASHTO LRFD BRIDGE DESIGN SPECIFICATIONS INCLUDING 2008 AND 2009 INTERIM PROVISIONS, AND THE 2005 DELDOT BRIDGE DESIGN MANUAL, INCLUDING LATEST REVISIONS.

   PROVIDE MATERIAL AND PERFORM WORK IN ACCORDANCE WITH THE DELAWARE DEPARTMENT OF TRANSPORTATION STANDARD SPECIFICATIONS AND CONSTRUCTION DETAILS AND CONTRACT SPECIAL PROVISIONS.

4. LOADING
   DEAD LOAD INCLUDES SOIL FILL, PAVEMENT AND 2" FUTURE WEARING SURFACE. HL-93 AND DELAWARE LEGAL LOADS FOR LIVE LOAD. LATERAL EARTH PRESSURE IN CONFORMANCE WITH AASHTO LRFD BRIDGE DESIGN SPECIFICATIONS WITH 2008 AND 2009 INTERIM PROVISIONS.

5. FOUNDATIONS
   THE FOUNDATION DESIGN PROVIDED IN THE CONTRACT DOCUMENTS IS BASED ON THE FOLLOWING LOADS:

ARCH REACTIONS ON FOOTING		
LOAD	VERTICAL (UNFACTORED)	HORIZONTAL (UNFACTORED)
DL	45.1 KIP/FT	24.0 KIP/FT
LL (HL-93)	5.9 KIP/FT	4.5 KIP/FT

WINGWALL REACTIONS ON FOOTING			
LOAD	VERTICAL (UNFACTORED)	HORIZONTAL (UNFACTORED)	ECCENTRICITY (FROM FRONT FACE)
DL, HORIZONTAL AND VERTICAL EARTH PRESSURE	19.5 KIP/FT	4.9 KIP/FT	2.36 FT

   THE CONTRACTOR IS RESPONSIBLE FOR VERIFYING THAT THE FOOTING LOADS ASSOCIATED WITH THE PRECAST P.C.C. ARCH AND WINGWALL ELEMENTS TO BE PROVIDED UNDER THIS CONTRACT MATCH THE FOOTING DESIGN LOADS. IF THE CONTRACTOR'S PROPOSED PRECAST ARCH AND WINGWALL REACTIONS DO NOT MATCH THOSE SHOWN ABOVE, THE FOOTINGS SHALL BE REVISED BY THE CONTRACTOR TO SUPPORT THOSE LOADS AS REQUIRED BY DESIGN. ALL CALCULATIONS SHALL BE CERTIFIED BY A REGISTERED PROFESSIONAL ENGINEER IN THE STATE OF DELAWARE. A FINAL FOUNDATION REPORT HAS BEEN PREPARED BY WHITMAN, REQUARDT & ASSOCIATES, LLP AND THIS REPORT IS AVAILABLE UPON REQUEST FROM THE DELAWARE DEPARTMENT OF TRANSPORTATION. THE DEPARTMENT DOES NOT GUARANTEE THE INFORMATION PROVIDED IN THE FINAL FOUNDATION REPORT, AND THIS REPORT IS AVAILABLE TO THE CONTRACTOR FOR INFORMATION ONLY.

   ANY MODIFICATIONS TO THE PROVIDED FOOTING DESIGN AND DETAILS WHICH ARE NECESSSARY TO MEET THE REQUIREMENTS OF THE CONTRACTOR'S PROPOSED PRECAST P.C.C. ARCH AND WINGWALL ELEMENTS ARE THE REPONSIBLITY OF THE CONTRACTOR, AND SHALL BE INCIDENTAL TO ITEM 602556 - PRECAST P.C.C. ARCH. ALL FOOTING MODIFICATIONS SHALL SUBMITTED TO THE ENGINEER FOR REVIEW AND APPROVAL. SEE SPECIAL PROVISIONS FOR ADDITIONAL REQUIREMENTS.

   FINAL ELEVATION OF BOTTOM OF FOOTING AND ACCEPTABLILTY OF BEARING STRATA SHALL BE DETERMINED BY THE ENGINEER.

6. PORTLAND CEMENT CONCRETE
   STRUCTURAL ELEMENTS OF PORTLAND CEMENT CONCRETE SHALL BE AS NOTED (f'c = 28 DAY STRENGTH)

   PRECAST P.C.C. ARCH, HEADWALLS AND WINGWALLS (f'c = 5,000 PSI)

   CLASS B - CAST-IN-PLACE FOOTINGS FOR PRECAST P.C.C. ARCH AND WINGWALLS (f'c = 3000 KSI)

   MIX REQUIREMENTS SHALL CONFORM TO SECTION 812 OF THE DELAWARE DEPARTMENT OF TRANSPORTATION STANDARD SPECIFICATIONS UNLESS NOTED OTHERWISE.

   ALL EXPOSED EDGES SHALL BE CHAMFERED ¾" UNLESS NOTED OTHERWISE.

7. BAR REINFORCEMENT
   ALL REINFORCING STEEL SHALL CONFORM TO AASHTO M 31 (ASTM A 615), GRADE 60 AND UNLESS SPECIFIED OTHERWISE ON THE PLANS SHALL BE PROTECTED WITH FUSION BONDED EPOXY CONFORMING TO AASHTO M 284 (ASTM A 775) AND DENOTED WITH A SUFFIX 'E' IN THE BAR MARKS. LONGITUDINAL DISTRIBUTION REINFORCEMENT MAY CONSIST OF WELDED WIRE FABRIC. ALL WELDED WIRE FABRIC SHALL CONFORM TO ASTM A 185 OR A 497. PAYMENT FOR EPOXY COATED BAR REINFORCEMENT IN PRECAST ELEMENTS SHALL BE INCIDENTAL TO ITEM 602556 - PRECAST P.C.C. ARCH.

   ALL REINFORCING STEEL HAS BEEN DETAILED FOR A MAXIMUM LENGTH OF 60 FT.

   ALL SPLICES, NOT SHOWN, SHALL BE LAPPED AS PER THE AASHTO LRFD BRIDGE DESIGN SPECIFICATIONS.

   ALL REINFORCING STEEL SHALL HAVE A CLEAR COVER OF 2" UNLESS NOTED OTHERWISE ON THE PLANS, WITH THE EXCEPTION OF BARS AT THE BOTTOM AND SIDES OF FOOTINGS WHICH SHALL HAVE A CLEAR COVER OF 3".

8. POST-TENSIONING STRANDS AND ANCHOR PLATES
   LOW RELAXATION, PLASTIC SHEATHED, GREASED STRAND SHALL CONFORM TO AASHTO M203 (ASTM A 416), GRADE 270. STRUCTURAL STEEL FOR ANCHOR PLATES SHALL CONFORM TO AASHTO M 270 (ASTM A 709), GRADE 36 AND SHALL BE HOT-DIP GALVANIZED. PAYMENT SHALL BE INCIDENTAL TO ITEM 602556 - PRECAST P.C.C. ARCH.

9. CONSTRUCTION
   DO NOT EXCEED A 2'-0" DIFFERENCE IN FILL ELEVATION ON THE SIDES OF THE ARCH DURING PLACEMENT OF THE BACKFILL. DO NOT ALLOW WHEELS OF ROLLERS TO COME CLOSER THAN 1'-0" TO THE FACE OF STRUCTURE DURING COMPACTION OF THE BACKFILL.

10. CONSTRUCTION JOINTS
    KEYED CONSTRUCTION JOINTS SHALL BE 2" X 4" OR AS NOTED. ALL EXPOSED CONSTRUCTION JOINT EDGES SHALL HAVE A ¾" V-NOTCH UNLESS NOTED OTHERWISE.

11. STRUCTURAL BACKFILL
    SELECT BACKFILL FOR PRECAST P.C.C. ARCH UNITS AND PRECAST WINGWALLS SHALL BE AS REQUIRED BY THE MANUFACTURER. THE COST OF SELECT BACKFILL SHALL BE INCIDENTAL TO ITEM 602556 - PRECAST P.C.C. ARCH. FOR LIMITS OF PAYMENT FOR SELECT BACKFILL, SEE DWG. NO. ST-02.

12. RIPRAP
    RIPRAP SHALL CONFORM WITH THE REQUIREMENTS OF SECTION 712 OF THE DELAWARE DEPARTMENT OF TRANSPORTATION STANDARD SPECIFICATIONS. GEOTEXTILE SHALL CONFORM WITH SECTION 713 OF THE DELAWARE DEPARTMENT OF TRANSPORTATION STANDARD SPECIFICATIONS. RIPRAP SHALL BE RECESSED, CHOKED, TOPSOILED AND SEEDED IN CONFORMANCE WITH THE NOTES ON DWG. NO. PE-01.

13. MISCELLANEOUS:
    ALL AREAS DISTURBED BY THE CONTRACTOR'S OPERATIONS SHALL BE GRADED BACK TO THE ORIGINAL EXISTING GRADE, TOP SOILED, SEEDED AND MULCHED. PAYMENT SHALL BE INCIDENTAL TO THE CONTRACT. AS DIRECTED BY THE ENGINEER, ALL AREAS DISTURBED BY THE CONTRACTOR'S OPERATION RESULTING FROM UNAUTHORIZED ACTIVITIES OUTSIDE THE LIMIT OF CONSTRUCTION SHALL BE TOP SOILED, SEEDED, AND MULCHED AT THE CONTRACTOR'S EXPENSE.

14. STABILIZING STRUCTURAL EXCAVATIONS
    THE CONTRACTOR IS RESPONSIBLE FOR THE STABILITY OF ALL EXCAVATED SLOPES AND THE DESIGN OF ANY TEMPORARY SHORING AND BRACING THAT MAY BE USED. ALL SURFACE RUNOFF SHOULD BE DIVERTED AWAY FROM EXCAVATIONS. PERFORM ALL EXCAVATIONS IN CONFORMANCE WITH OSHA REQUIREMENTS.

    SHORING IS REQUIRED FOR ANY EXCAVATION EXCEEDING 5 FEET IN HEIGHT. COST FOR DESIGN AND CONSTRUCTION OF SHORING SHALL BE INCIDENTAL ITEM 207000 - EXCAVATION AND BACKFILL FOR STRUCTURES. IN LIEU OF SHORING, THE CONTRACTOR MAY USE A 2:1 CUT SLOPE IF PERMITTED BY THE ENGINEER. NO PAYMENT WILL BE MADE FOR ADDITIONAL EXCAVATION AND BACKFILL OUTSIDE THE PAY LIMITS DEFINED IN SECTION 207 OF THE STANDARD SPECIFICATIONS, UNLESS NOTED OTHERWISE ON THE PLANS. SEE DRAWING ST-02 FOR ADDITIONAL INFORMATION.

    BACKFILL AND GRADE ALL EXCAVATIONS AS SOON AS POSSIBLE TO PREVENT SURFACE WATER PONDING AND CONCENTRATED FLOW ENTERENING THE EXCAVATON. KEEP THE EXCAVATION DRY WITH PUMPS AS REQUIRED. DEWATERING OF THE EXCAVATION IS ANTICIPATED SINCE THE BOTTOM OF FOOTING IS BELOW THE WATER TABLE.

15. HYDRAULIC DATA
    DRAINAGE AREA = 0.28 SQ. MI. (179.2 AC.)
    25-YR FLOOD ELEVATION = 28.10
    DESIGN FREQUENCY = 50 YEARS
    DESIGN DISCHARGE = 269 CFS
    DESIGN HEADWATER ELEVATION = 28.37 FT
    DESIGN VELOCITY, CHANNEL = 5.17 FPS
    AVAILABLE FLOW AREA OF PROPOSED OPENING = 530 SF

    NOTE: SEE REPORT TITLED, "HYDROLOGIC AND HYDRAULIC ANALYSES OF SCOTT RUN WATERSHED AND PROPOSED BRIDGES 1-1, 1-2, 1-4 NB & SB, 1-6, AND 1-7 NB & SB FOR US 301 EXTENSION," DATED MAY 2011.

16. SCOUR DATA
    STRUCTURE HAS BEEN ANALYZED FOR THE EFFECTS OF SCOUR IN ACCORDANCE WITH THE PROCEDURES DESCRIBED IN HEC-18, 'EVALUATING SCOUR AT BRIDGES' AND HEC-23, 'BRIDGE SCOUR AND STREAM INSTABILITY COUNTERMEASURES'. SCOUR COUNTERMEASURES HAVE BEEN DESIGNED FOR THE WORST CASE OF THE OVERTOPPING FLOOD OR THE 500-YR FLOOD EVENT.

    DESIGN STORM EVENT = 100 YEAR FLOOD
    DESIGN STORM DISCHARGE = 313 CFS
    DESIGN STORM VELOCITY, CHANNEL = 5.53 FPS
    DESIGN STORM MAXIMUM DEPTH OF FLOW = 1.74 FT
    DESIGN STORM HEADWATER ELEVATION = 28.49 FT

    CHECK STORM EVENT = 500 YEAR FLOOD
    CHECK STORM DISCHARGE = 400 CFS
    CHECK STORM VELOCITY, CHANNEL = 5.61 FPS
    CHECK STORM MAXIMUM DEPTH OF FLOW = 2.09 FT
    CHECK STORM HEADWATER ELEVATION = 28.84 FT

17. LOAD RATINGS
    THE CONTRACTOR SHALL SUBMIT LOAD RATINGS USING THE LOAD AND RESISTANCE FACTOR RATING METHOD IN CONFORMANCE WITH THE LATEST EDITION OF THE AASHTO MANUAL FOR BRIDGE EVALUATION. OPERATING AND INVENTORY RATINGS SHALL BE BASED ON THE HL-93 DESIGN LOAD. LEGAL LOAD RATINGS SHALL BE BASED ON DELAWARE LEGAL LOADS.

18. UTILITIES
    BEFORE BEGINNING WORK, THE CONTRACTOR SHALL GIVE NOTIFICATION BY TELEPHONE BY CALLING "MISS UTILITY" AT 1-800-282-8555 A MINIMUM OF 48 HOURS PRIOR TO START OF WORK. VERIFY AND LOCATE ALL UTILITIES PRIOR TO STARTING WORK.

    COORDINATE THE REQUIREMENTS FOR PROTECTION OF ANY UTILITY WITH THE UTILITY OWNER PRIOR TO STARTING WORK.

    CONDUCT OPERATIONS IN A MANNER WHICH ENSURES THAT THE UTILITIES WILL NOT BE DISTURBED OR ENDANGERED. ANY DAMAGE INCURRED TO THESE UTILITIES OR ANY OTHER UTILITIES, SHOWN OR NOT SHOWN ON THE PLANS, DUE TO THE CONTRACTOR'S OPERATIONS SHALL BE REPAIRED AT THE CONTRACTOR'S EXPENSE TO THE SATISFACTION OF THE APPROPRIATE UTILITY COMPANY. THE DEPARTMENT DOES NOT ASSUME RESPONSIBILITY FOR REIMBURSEMENT, PARTICIPATION IN DESIGN AND/OR REVISIONS, OR LIABILITY FOR ACCURACY OF TYPE, SIZE AND LOCATION OF ANY UTILITY.

    THE CONTRACTOR IS RESPONSIBLE FOR TEMPORARILY SUPPORTING, PROTECTING, OR RELOCATING ANY UTILITIES DURING CONSTRUCTION. WHERE NECESSARY, THE COST FOR THIS WORK WILL BE INCIDENTAL TO THE CONTRACT.

BRIDGE NO. 1-436 INDEX OF SHEETS

SHEET NO.	DWG. NO.	TABLE OF CONTENTS
248	PN-01	PROJECT NOTES
249	QS-01	QUANTITY SUMMARY
250	PE-01	GENERAL PLAN AND ELEVATION
251	GR-01	GRADING PLAN
252	TS-01	PRECAST ARCH SECTIONS
253	WW-01	WINGWALL ELEVATIONS
254	ST-01	PRELOAD FILL DETAILS - 1
255	ST-02	PRELOAD FILL DETAILS - 2
256	FT-01	GEOMETRIC AND FOOTING LAYOUT PLAN
257	FT-02	FOOTING A REINFORCEMENT PLAN
258	FT-03	FOOTING B REINFORCEMENT PLAN
259	RB-01	FOOTING A REINFORCEMENT LIST
260	RB-02	FOOTING B REINFORCEMENT LIST
261	BO-01	BORING PROFILE

ITEM NO.	ITEM NAME	UNITS	QUANTITY
202000	Excavation and Embankment	C.Y.	15,240
202505	Settlement Platform	EA	8
202518	Settlement Monument	EA	4
207000	Excavation and Backfill for Structures	C.Y.	10,060
207501	Sheeting and Shoring	L.S.	1
302007	Graded Aggregate Base Course	C.Y.	300
302011	Delaware No. 3 Stone	TON	205
302012	Delaware No. 57 Stone	TON	221
601506	Maintenance of Streamflow	L.S.	1
602004	Portland Cement Concrete Masonry, Abutment Footing, Class B	C.Y.	923
602556	Precast P.C.C. Arch	L.S.	1
603000	Bar Reinforcement	LBS	79,900
712021	Riprap, R-5	TON	736
713003	Geotextiles, Riprap	S.Y.	1,044
733001	Topsoiling, 4" Depth	S.Y.	1,400
734531	Streambank Seed Mix	S.Y.	252
735535	Soil Retention Blanket Mulch, Type 5	S.Y.	252

NOTES:

1. ITEM 202000 IS REPRESENTED UNDER TYPE F MATERIAL REQUIRED, "PLUS EMBANKMENT FOR STRUCTURES". SEE DRAWING EW-06.
2. ITEM 207000 IS REPRESENTED ON DRAWING EW-06 UNDER EXCAVATION AVAILABLE FOR EMBANKMENT, "PLUS EXCAVATION AND BACKFILLING FOR STRUCTURES".

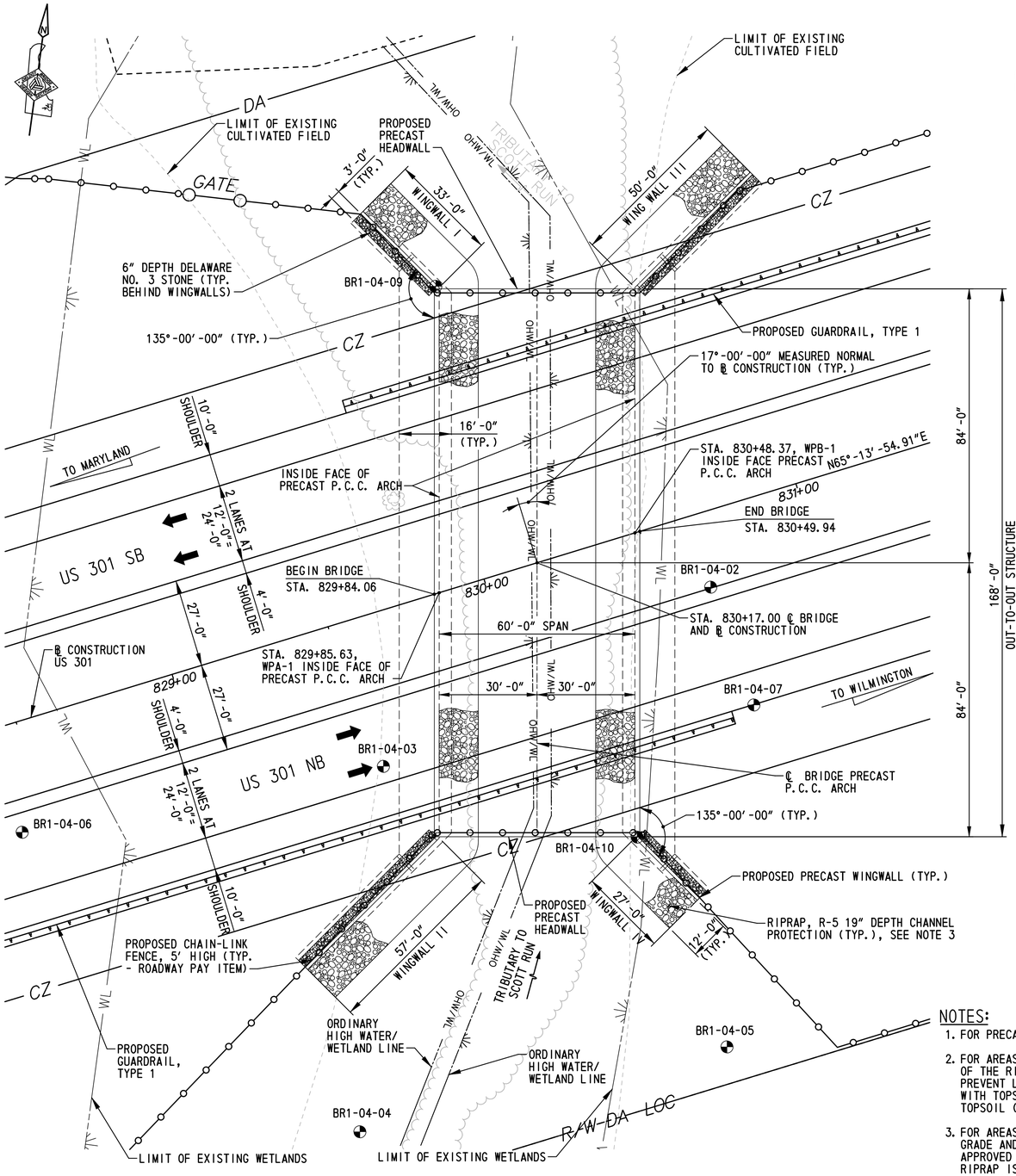

PLAN

SCALE: 1"=20'-0"

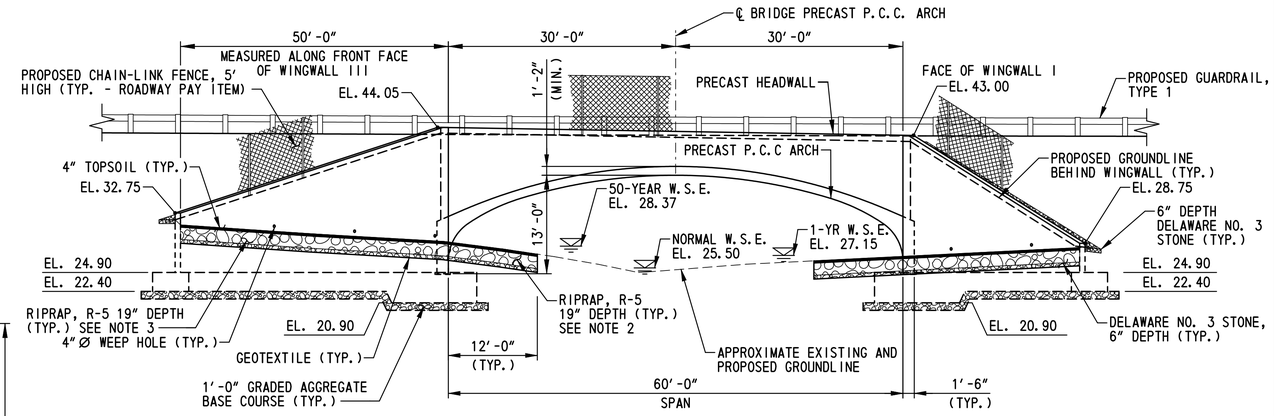

NORTH ELEVATION

SCALE: 1"=10'-0"

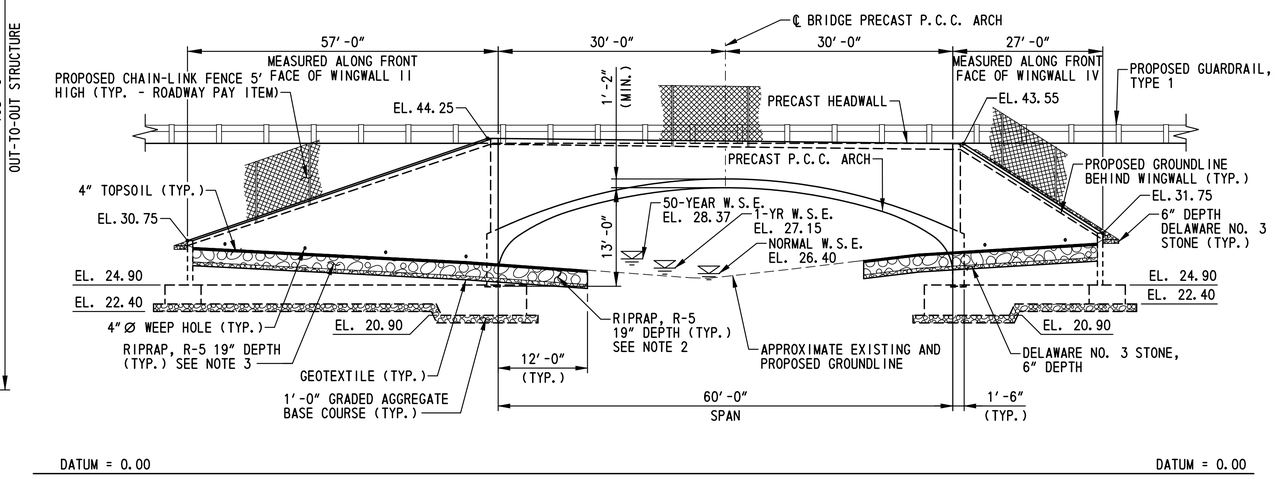

SOUTH ELEVATION

SCALE: 1"=10'-0"

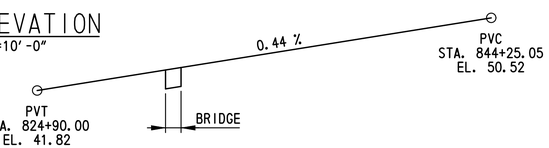

VERTICAL CURVE

SCALE: NOT TO SCALE

NOTES:

1. FOR PRECAST P.C.C. ARCH AND WINGWALL REQUIREMENTS, SEE SPECIAL PROVISIONS.
2. FOR AREAS UNDER THE PRECAST P.C.C. ARCH, RIPRAP SHALL BE RECESSED 4" BELOW EXISTING GRADE. THE TOP OF THE RIPRAP IS PLACED BELOW EXISTING GRADE AND CHOKED WITH DELAWARE #57 STONE (ITEM 302012) TO PREVENT LOSS OF TOPSOIL THROUGH THE RIPRAP AS APPROVED BY THE ENGINEER. FILL THE REMAINING VOIDS WITH TOPSOIL (ITEM 733001) SO THAT THE RIPRAP IS BARELY VISIBLE, REGARDLESS OF DEPTH. APPLY ADDITIONAL TOPSOIL (ITEM 733001) TO MATCH EXISTING GRADE.
3. FOR AREAS NOT UNDER THE PRECAST P.C.C. ARCH, THE TOP OF THE RIPRAP SHALL BE RECESSED 4" BELOW EXISTING GRADE AND CHOKED WITH DELAWARE #57 STONE (ITEM 302012) TO PREVENT LOSS OF TOPSOIL THROUGH THE RIPRAP AS APPROVED BY THE ENGINEER. FILL THE REMAINING VOIDS WITH TOPSOIL - 4" DEPTH (ITEM 733001) SO THAT THE RIPRAP IS BARELY VISIBLE, REGARDLESS OF DEPTH. APPLY AN ADDITIONAL 4" LAYER OF TOPSOIL (ITEM 733001). SEED WITH STREAMBANK SEED MIX (ITEM 734531) FROM ABOVE THE 1-YEAR W.S.E. OR ORDINARY HIGH WATER MARK, WHICHEVER IS GREATER, TO TOP OF SLOPE. IMMEDIATELY FOLLOWING SEEDING, INSTALL SOIL RETENTION BLANKET MULCH, TYPE 5 (ITEM 735535).
4. ALL WORK, STARTING WITH TOPSOIL PLACMENT THROUGH SEEDING AND MULCHING SHALL BE COMPLETED PRIOR TO ANY ANTICIPATED RAIN EVENT. RIPRAP AND ALL OTHER ITEMS SHALL BE PAID FOR UNDER THEIR RESPECTIVE ITEMS.
5. THE CONTRACTOR SHALL NOT ACCESS THE STREAM. FOR ADDITIONAL REQUIREMENTS, SEE MAINTENANCE OF STREAM FLOW PLANS ON DWG. NOS. MS-01 AND MS-02.

TEST BORINGS

DESIGNATION	STATION	OFFSET
BR1-04-02	830+65.32	22.86' RT.
BR1-04-03	829+53.61	46.15' RT.
BR1-04-04	829+13.94	150.57' RT.
BR1-04-05	830+29.66	159.09' RT.
BR1-04-06	828+42.13	32.91' RT.
BR1-04-07	830+67.58	60.79' RT.
BR1-04-09	830+12.00	90.00' LT.
BR1-04-10	830+22.00	90.00' RT.

FOR BORING PROFILES, SEE DWG. NO. BO-01.

BR1-4
PE-01

N:\3653-000\CONTRACT 1A\CADD\Bridge\Br_No4\PE01_br1-4.dgn
12/3/2012 3:00:17 PM

DELAWARE DEPARTMENT OF TRANSPORTATION

ADDENDUMS / REVISIONS

SCALE: AS NOTED

US 301, SR 896 TO SR 1

CONTRACT	BRIDGE NO.	1-436
T200911308	DESIGNED BY: M.P.U.	
COUNTY		
NEW CASTLE	CHECKED BY: P.S.D.	

GENERAL PLAN AND ELEVATIONS

SHEET NO. 250
TOTAL SHTS. 875

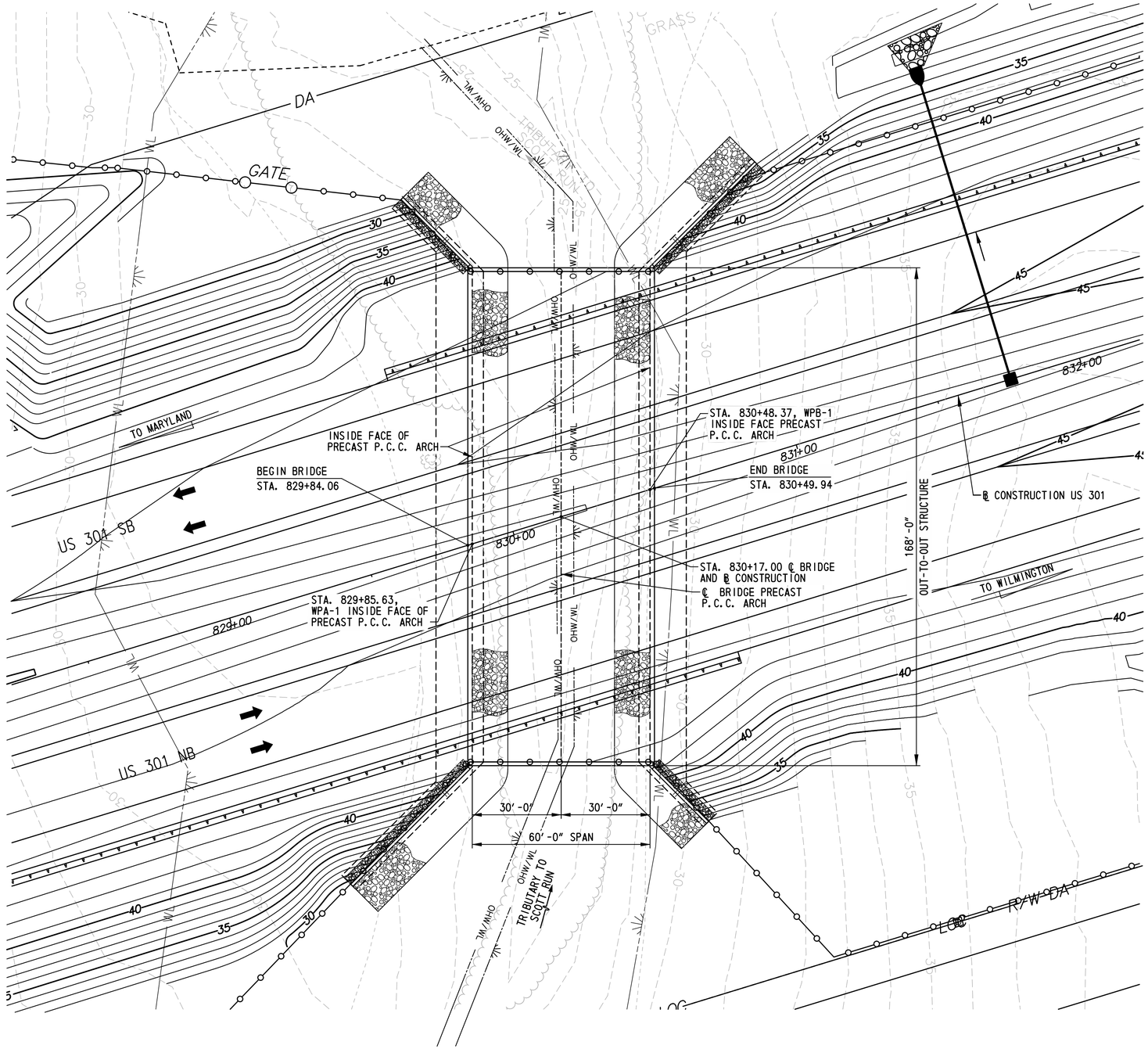

LEGEND

EXISTING CONTOURS

PROPOSED CONTOURS

PLAN

SCALE: 1"=20'-0"

DELAWARE DEPARTMENT OF TRANSPORTATION	ADDENDUMS / REVISIONS	SCALE: AS NOTED	US 301, SR 896 TO SR 1	CONTRACT T200911308	BRIDGE NO. 1-436	GRADING PLAN	BR1-4 GR-01
				COUNTY NEW CASTLE	DESIGNED BY: M.P.U.		SHEET NO. 251
					CHECKED BY: P.S.D.		TOTAL SHTS. 875

r:\31653-000\contract 1a\cadd\bridge\br_no4\GR01_br1-4.dgn
10/23/2012 5:20:15 PM

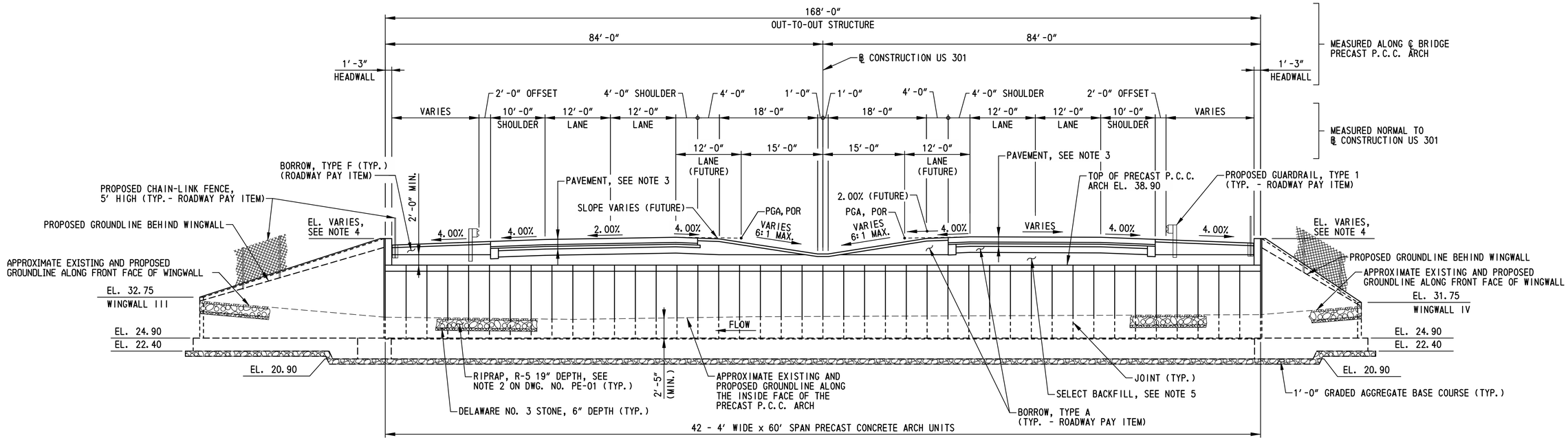

LONGITUDINAL SECTION (LOOKING STATION AHEAD)

SCALE: 1"=10'-0"

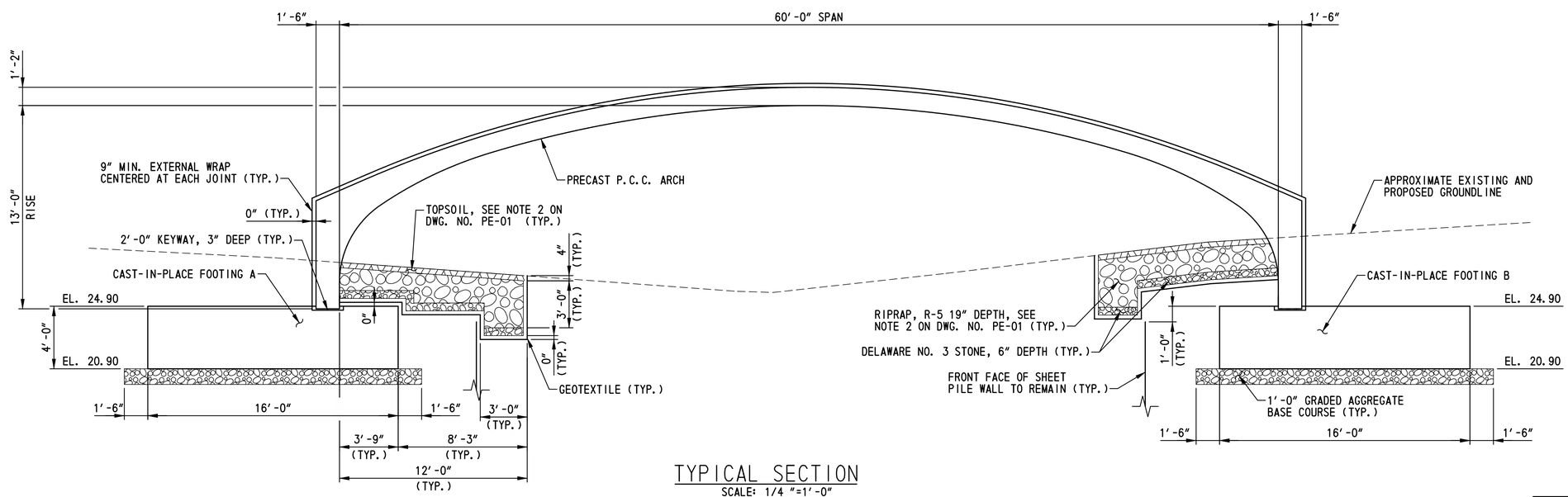

TYPICAL SECTION

SCALE: 1/4 "=1'-0"

NOTES:

1. ALL ROADWAY DIMENSIONS AND CROSS SLOPES ARE MEASURED NORMAL TO BASELINE CONSTRUCTION US 301.
2. LONGITUDINAL SECTION TAKEN LOOKING STATION AHEAD AT CENTERLINE OF PRECAST ARCH.
3. FOR PAVEMENT ITEMS, SEE ROADWAY TYPICAL SECTIONS.
4. FOR HEADWALL ELEVATIONS, SEE DWG. NO. PE-01.
5. FOR STRUCTURAL BACKFILL REQUIREMENTS, SEE NOTE 11 ON DWG. NO. PN-01.

n:\31653-000\contract 1a\cadd\bridge\br_no4\TS01_br1-4.dgn
10/23/2012 5:22:10 PM

DELAWARE DEPARTMENT OF TRANSPORTATION	ADDENDUMS / REVISIONS	SCALE: AS NOTED	US 301, SR 896 TO SR 1	CONTRACT T200911308	BRIDGE NO. 1-436	PRECAST ARCH SECTIONS	BR1-4 TS-01
				COUNTY NEW CASTLE	DESIGNED BY: M.P.U.		SHEET NO. 252
					CHECKED BY: P.S.D.		TOTAL SHTS. 875

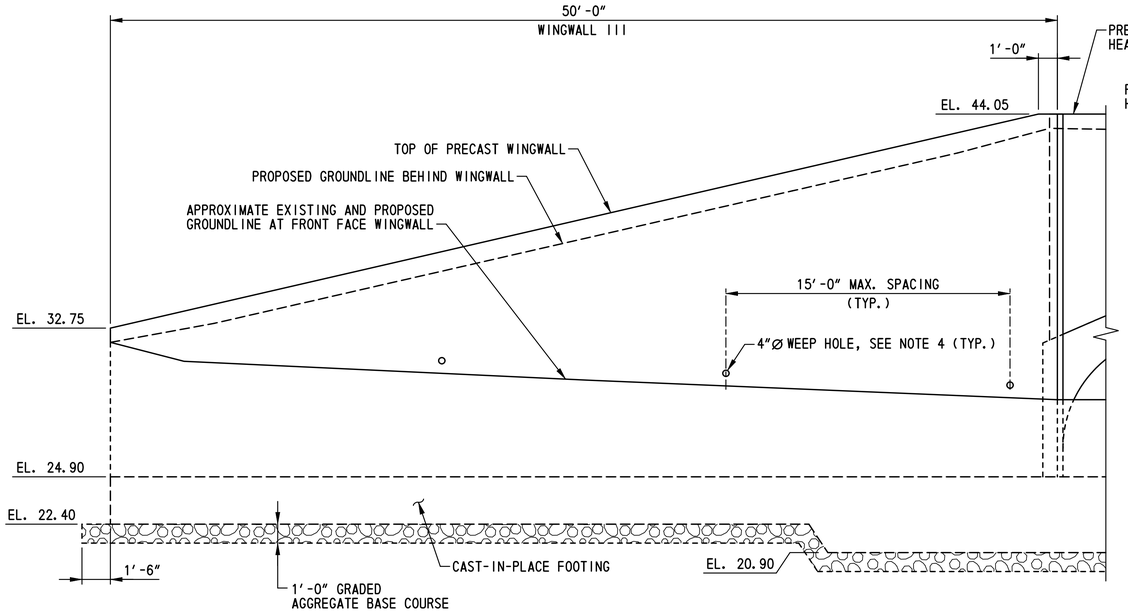

WINGWALL III ELEVATION
SCALE: 1/4"=1'-0"

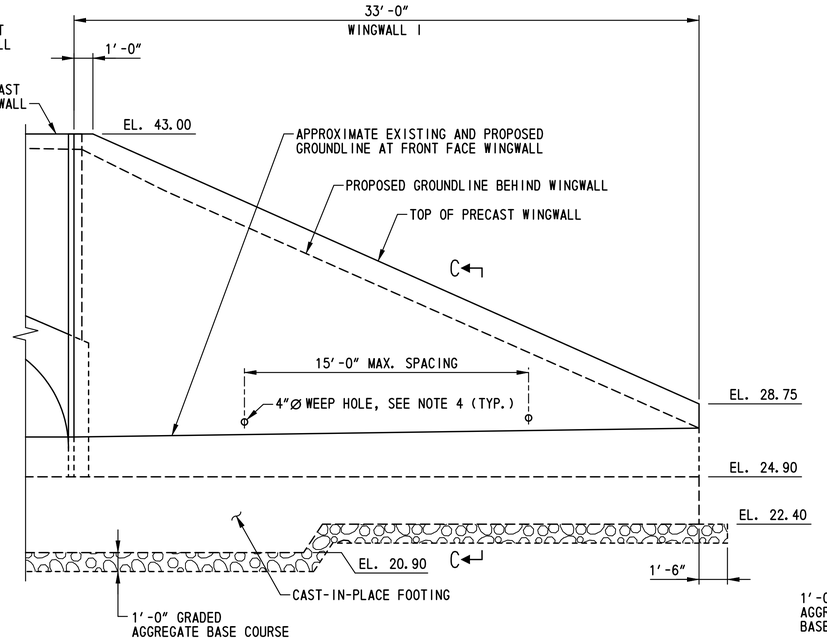

WINGWALL I ELEVATION
SCALE: 1/4"=1'-0"

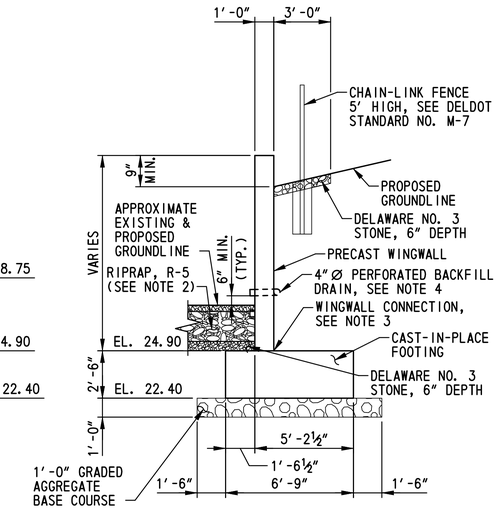

SECTION C-C
SCALE: 1/4 "=1'-0"

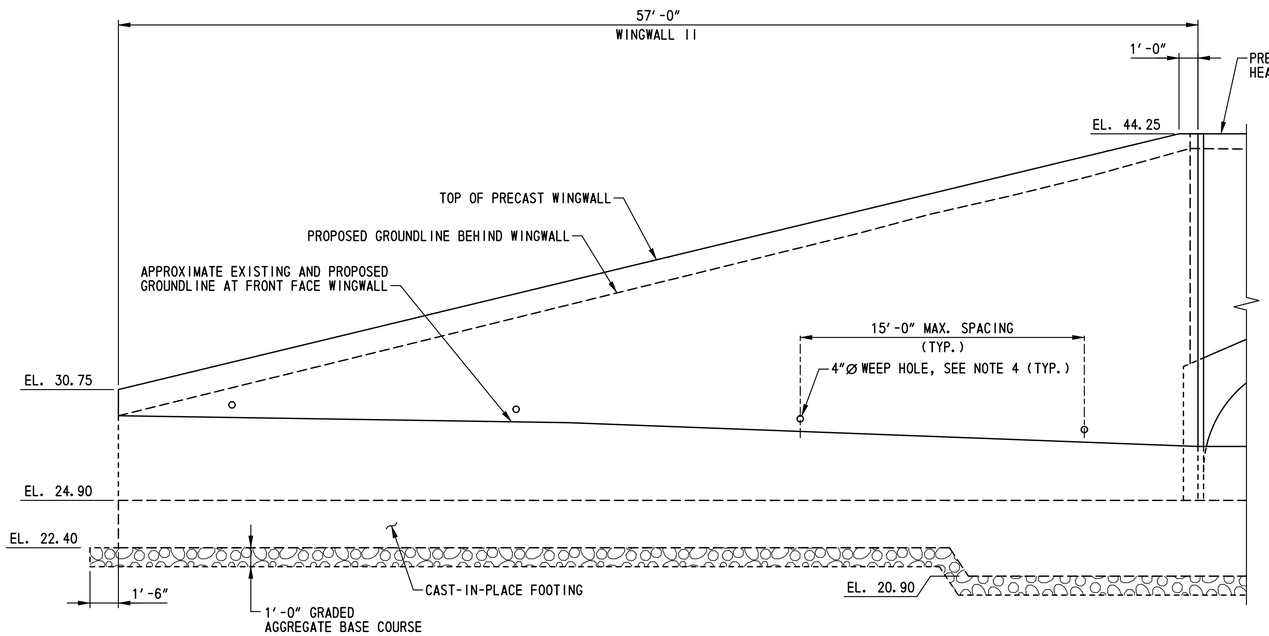

WINGWALL II ELEVATION
SCALE: 1/4"=1'-0"

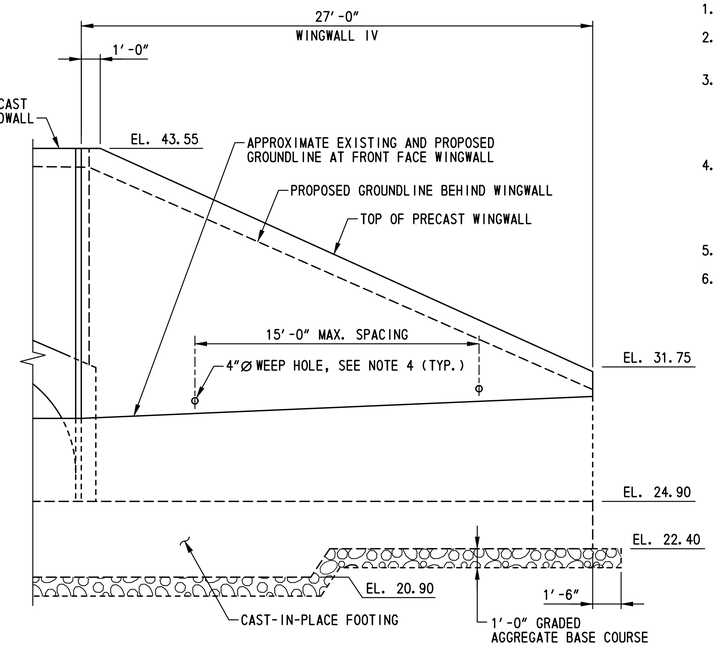

WINGWALL IV ELEVATION
SCALE: 1/4"=1'-0"

NOTES:

1. FOR WINGWALL LOCATIONS, SEE DWG. NO. PE-01.
2. FOR RIPRAP DETAILS, SEE NOTES 2 AND 3 ON DWG. NO. PE-01 AND TYPICAL SECTION ON DWG. NO. TS-01.
3. THE CONNECTION OF THE PRECAST WINGWALL TO THE CAST-IN-PLACE FOOTING SHALL BE DESIGNED BY THE CONTRACTOR. THE CONTRACTOR SHALL SUBMIT DETAILS FOR THIS CONNECTION WITH THE SHOP DRAWINGS FOR REVIEW AND APPROVAL.
4. PROVIDE BACKFILL DRAIN AND WEEPHOLES COMPATIABLE WITH THE PRECAST WINGWALL SYSTEM. THE CONTRACTOR SHALL SUBMIT DRAIN DETAILS WITH THE SHOP DRAWINGS FOR REVIEW AND APPROVAL, COST SHALL BE INCIDENTAL TO ITEM 602556 - PRECAST P.C.C. ARCH.
5. FENCING NOT SHOWN IN ELEVATION VIEWS FOR CLARITY.
6. THE LOCATION OF WINGWALL EXPANSION AND CONTRACTION JOINTS SHALL BE DETERMINED BY THE CONTRACTOR. THE CONTRACTOR SHALL SUBMIT THE JOINT LOCATIONS WITH THE SHOP DRAWINGS FOR REVIEW AND APPROVAL.

n:\31653-000\contract 1a\cadd\bridge\br_no4\WW01_br1-4.dgn
10/23/2012 5:22:14 PM

DELAWARE DEPARTMENT OF TRANSPORTATION	ADDENDUMS / REVISIONS	SCALE: AS NOTED	US 301, SR 896 TO SR 1	CONTRACT T200911308	BRIDGE NO. 1-436	WINGWALL ELEVATIONS	BR1-4 WW-01
				COUNTY NEW CASTLE	DESIGNED BY: A.J.F.		SHEET NO. 253
					CHECKED BY: P.S.D.		TOTAL SHTS. 875

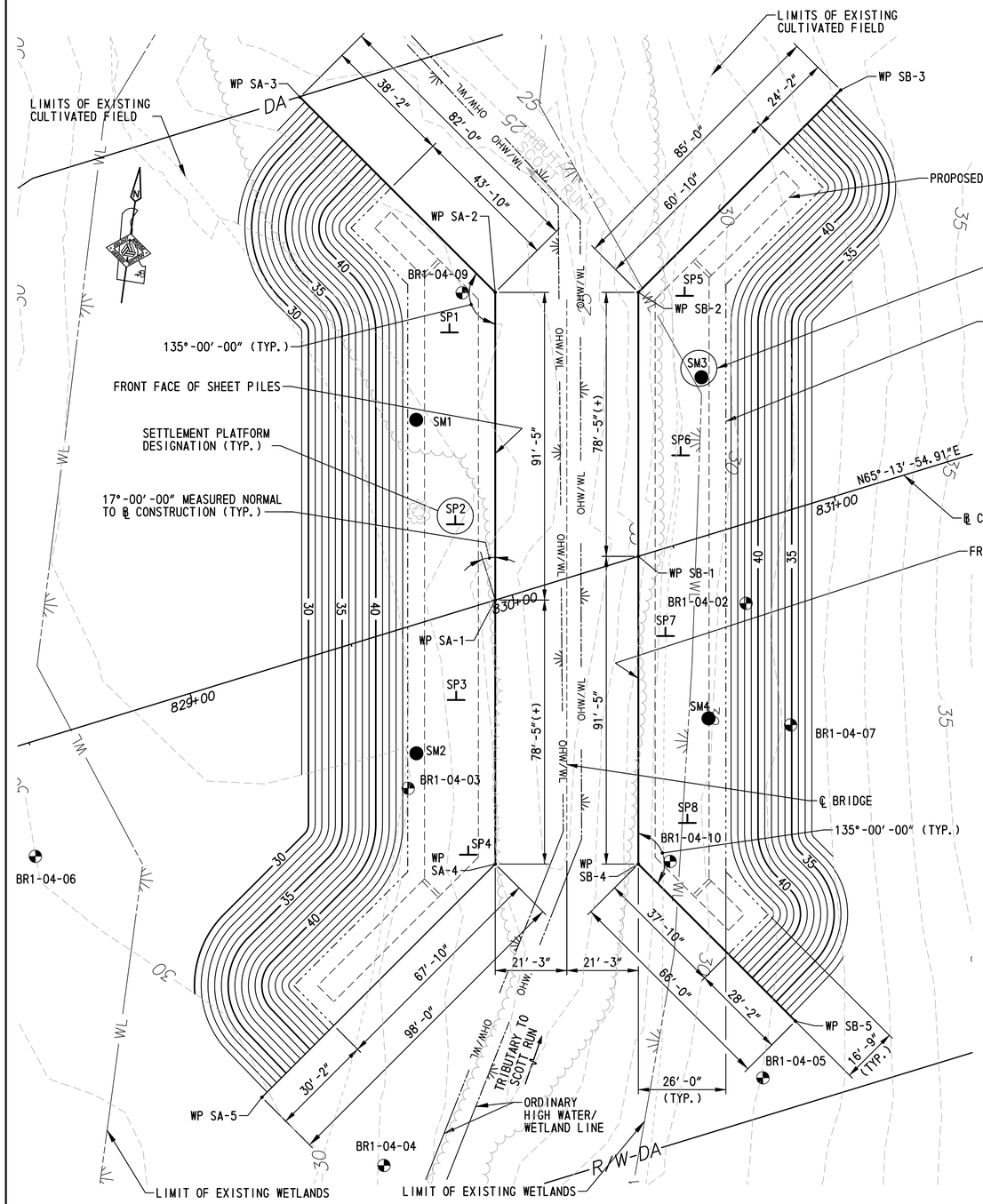

PLAN

SCALE: 1"=20'-0"

NOTES:

1. FOR SEQUENCE OF CONSTRUCTION AND TYPICAL SECTIONS, SEE DWG. NO. ST-02.
2. PERMANENT SHEET PILES SHALL BE PAID UNDER ITEM 207501 - SHEETING AND SHORING. THE CONTRACTOR SHALL DESIGN THE SHEET PILE WALL SUCH THAT THE MAXIMIUM DEFLECTION AT THE TOP OF THE SHEETING IS 1" OR LESS. DESIGN SHALL INCLUDE A 2-FOOT LIVE LOAD SURCHAGE.
3. A SETTLEMENT QUARANTINE PERIOD OF APPROXIMATELY 60-DAYS IS REQUIRED AFTER CONSTRUCTION OF THE FULL HEIGHT OF THE PRELOAD FILL IS ACHIEVED. THE ENGINEER SHALL APPROVE THE COMPLETION OF THE SETTLEMENT QUARANTINE PERIOD PRIOR TO EXCAVATION FOR BRIDGE FOOTING CONSTRUCTION.
4. READINGS ON THE SETTLEMENT PLATFORMS SHALL BE MADE AFTER THE INITIAL INSTALLATION OF THE RISER AND CASING PIPES AND INSTALLATION RECORD SHEETS ARE APPROVED BY THE ENGINEER AND PRIOR TO PRELOAD FILL PLACEMENT. DURING PRELOAD FILL PLACEMENT, READINGS ON ALL SETTLEMENT PLATFORMS SHALL BE TAKEN AT A MINIMUM OF 3 CALENDAR DAY INTERVALS. AFTER COMPLETION OF THE PRELOAD FILL PLACEMENT, INSTALL SETTLEMENT MONUMENTS AS INDICATED ON THE BRIDGE PLANS AND TAKE INITIAL READINGS. READINGS ON ALL SETTLEMENT MONITORING DEVICES SHALL THEN BE TAKEN AT A MINIMUM OF 3 CALENDAR DAY INTERVALS. ONCE THE SETTLEMENT HAS CEASED ON ALL MONITORED SETTLEMENT MONITORING DEVICES IN THE VICINITY OF THE SUBSTRUCTURE UNIT AFTER CALENDAR DAY 6, THAT IS THREE READINGS, AFTER THE COMPLETION OF THE PRELOAD FILL AND SETTLEMENT MONUMENT PLACEMENT, THE SUBSTRUCTURE WILL BE RELEASED BY THE ENGINEER FOR REMOVAL OF THE PRELOAD FILL WITHIN THREE WORKING DAYS OF RECEIPT OF SETTLEMENT MONITORING RESULTS. THE SETTLEMENT QUARANTINE PERIOD IS CONSIDERED TO BE COMPLETE AFTER THREE CONSECUTIVE READINGS THAT ARE WITHIN 0.01 FEET FOR ALL SETTLEMENT MONITORING DEVICES AT EACH FOOTING. FOR ADDITIONAL SETTLEMENT PLATFORM AND MONUMENT REQUIREMENTS, SEE SPECIAL PROVISIONS.

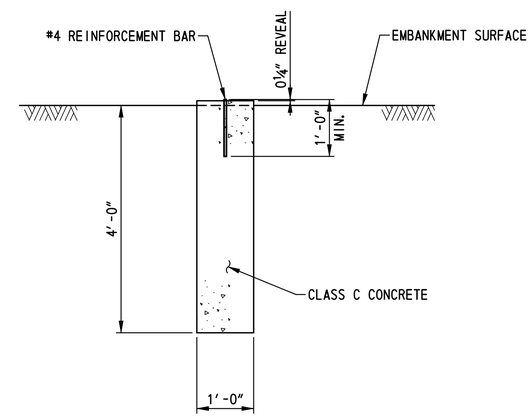

SETTLEMENT MONUMENT DETAIL

SCALE: ¾"=1'-0"

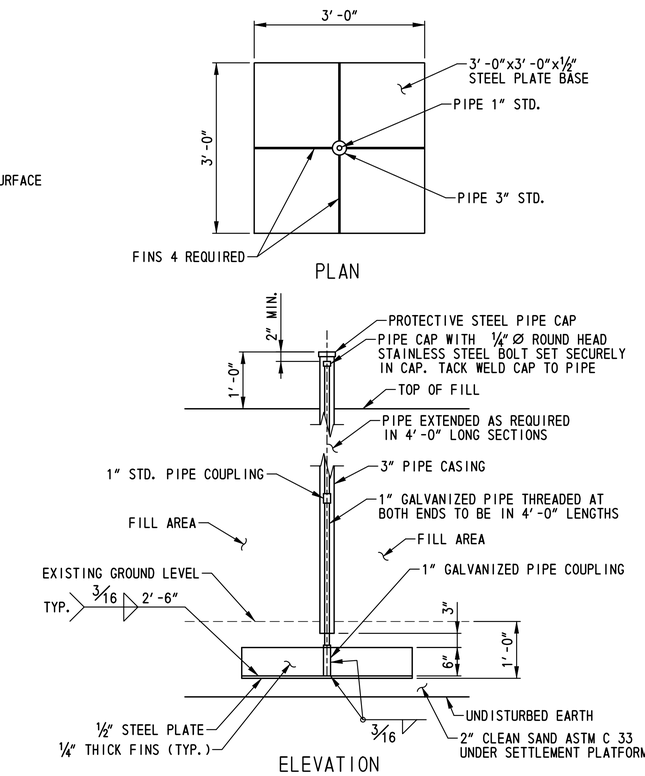

SETTLEMENT PLATFORM DETAILS

SCALE: ¾"=1'-0"

SETTLEMENT MONUMENT COORDINATES		
SETTLEMENT MONUMENT	COORDINATES	
	NORTHING	EASTING
SM1	555666.7868	587888.5435
SM2	555568.6226	587902.0074
SM3	555690.7617	587970.7952
SM4	555590.6285	587986.5646

SETTLEMENT PLATFORM COORDINATES		
SETTLEMENT PLATFORM	COORDINATES	
	NORTHING	EASTING
SP1	555693.8160	587894.8204
SP2	555637.5912	587904.2423
SP3	555585.9065	587911.5695
SP4	555540.8565	587921.3419
SP5	555714.0622	587962.5707
SP6	555666.9175	587967.8031
SP7	555613.1380	587970.5902
SP8	555559.0079	587984.5521

WORKING POINT COORDINATES		
WORKING POINT	COORDINATES	
	NORTHING	EASTING
WP SA-1	555616.8932	587919.0555
WP SA-2	555707.4711	587906.6994
WP SA-3	555757.0840	587841.4125
WP SA-4	555539.1894	587929.6554
WP SA-5	555461.1614	587870.3602
WP SB-1	555635.5119	587959.4093
WP SB-2	555713.2159	587948.8093
WP SB-3	555780.8922	588000.2380
WP SB-4	555544.9337	587971.7654
WP SB-5	555505.0003	588024.3149

BR1-4
ST-01

N:\31653-000\CONTRACT 1A\CADD\Bridge\Br_No4\ST01_br1-4.dgn
4/28/2015 11:24:07 AM

DELAWARE DEPARTMENT OF TRANSPORTATION

ADDENDUMS / REVISIONS

SCALE: AS NOTED

US 301, SR 896 TO SR 1

CONTRACT	BRIDGE NO. 1-436
T200911308	DESIGNED BY: M.R.P.
COUNTY	
NEW CASTLE	CHECKED BY: P.S.D.

PRELOAD FILL DETAILS - 1

SHEET NO. 254
TOTAL SHTS. 875

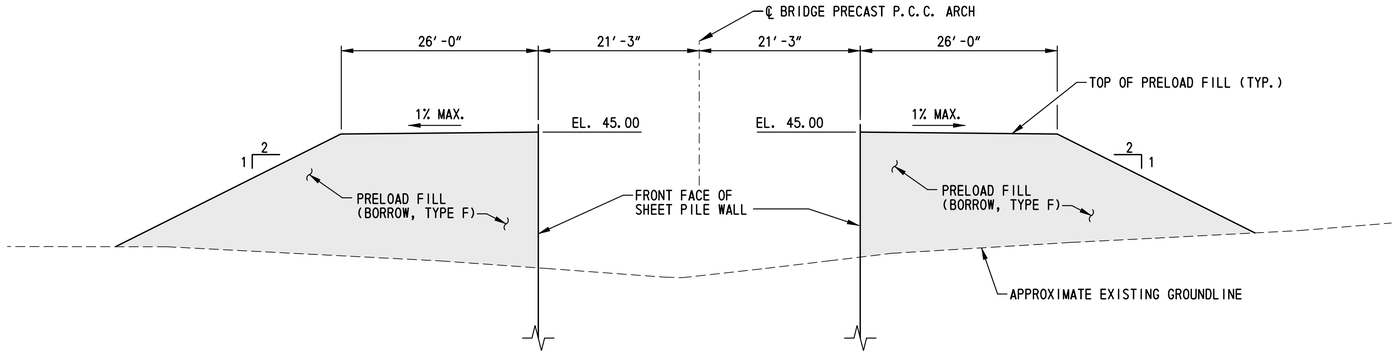

TYPICAL SECTION - SHEET PILE AND PRELOAD FILL

SCALE: 1″=10′-0″

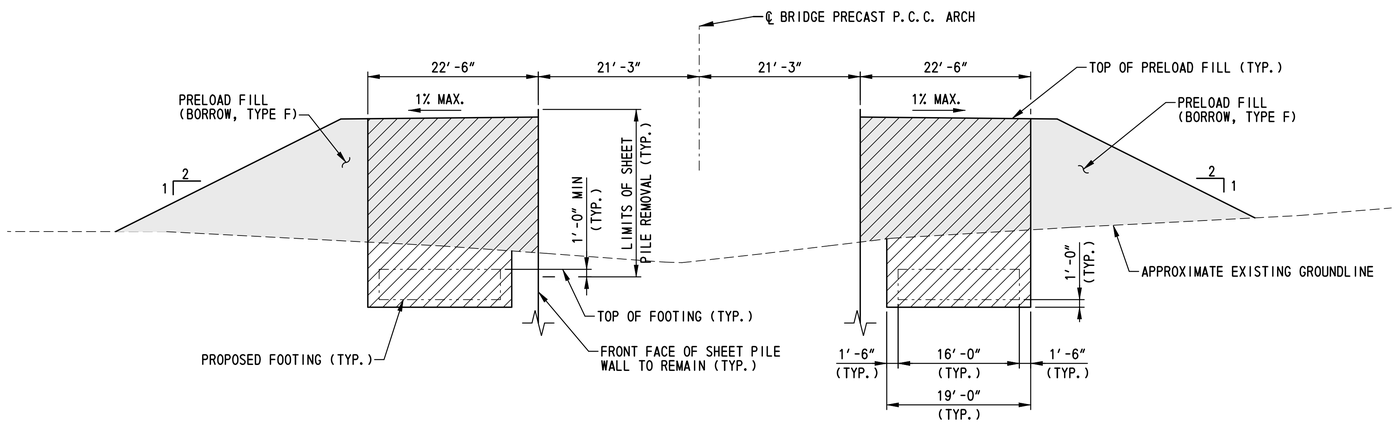

TYPICAL SECTION - EXCAVATION

SCALE: 1″=10′-0″

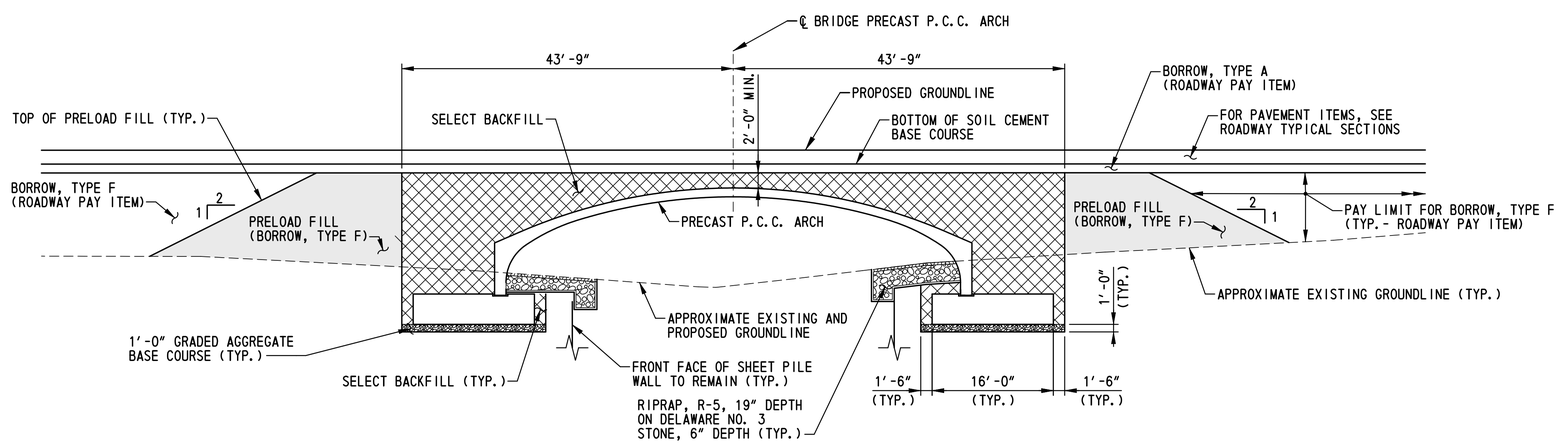

TYPICAL SECTION - BACKFILL

SCALE: 1″=10′-0″

SEQUENCE OF CONSTRUCTION:

1. INSTALL PERMANENT STEEL SHEET PILES USING THE VIBRATORY METHOD ONLY AS SHOWN ON DWG. NO. ST-01, ITEM 207501 - SHEETING AND SHORING. SEE SPECIAL PROVISIONS.
2. INSTALL SETTLEMENT PLATFORMS AT LOCATIONS SHOWN ON DWG. NO. ST-01, ITEM 202505 - SETTLEMENT PLATFORM. SEE SPECIAL PROVISIONS.
3. CONSTRUCT PRELOAD FILL (BORROW, TYPE F), ITEM 202000 - EXCAVATION AND EMBANKMENT.
4. INSTALL SETTLEMENT MONUMENTS AT LOCATIONS SHOWN ON DWG. NO. ST-01, ITEM 202518 - SETTLEMENT MONUMENT. SEE SPECIAL PROVISIONS.
5. AFTER COMPLETION OF THE SETTLEMENT QUARANTINE PERIOD AS DETERMINED BY THE ENGINEER, EXCAVATE FOR FOOTINGS AS SHOWN, ITEM 207000 - EXCAVATION AND BACKFILL FOR STRUCTURES. REMOVAL OF ADDITIONAL PRELOAD FILL MATERIAL AT THE ENDS OF THE WINGWALLS TO PROPOSED GRADE SHALL BE INCIDENTAL TO ITEM 207000 - EXCAVATION AND BACKFILL FOR STRUCTURES.
6. CUT AND REMOVE STEEL SHEET PILES IN CONFORMANCE WITH THE SPECIAL PROVISIONS TO THE LIMITS SHOWN. REMOVAL OF SHEET PILES SHALL BE INCIDENTAL TO ITEM 207501 - SHEETING AND SHORING. SEE DWG. NO. TS-01 FOR SHEET PILE REMOVAL LIMITS.
7. PLACE GRADED AGGREGATE FOR BASE COURSE, ITEM 302007 - GRADED AGGREGATE BASE COURSE, TYPE B. CONSTRUCT FOOTINGS.
8. CONSTRUCT PRECAST P.C.C. ARCH AND WINGWALLS. BACKFILL STRUCTURE WITH SELECT BACKFILL, AS SHOWN. INSTALL RIPRAP, R-5 19″ DEPTH ON DELAWARE NO. 3 STONE, 6″ DEPTH, AS SHOWN. SEE NOTE 2 ON DWG. NO. PE-01 FOR ADDITIONAL INFORMATION.

LEGEND

- LIMITS OF PRELOAD FILL (BORROW, TYPE F), ITEM 202000 - EXCAVATION AND EMBANKMENT
- LIMITS OF PAYMENT FOR EXCAVATION, ITEM 207000 - EXCAVATION AND BACKFILL FOR STRUCTURES
- LIMITS OF SELECT BACKFILL, INCIDENTAL TO ITEM 602556 - PRECAST P.C.C. ARCH
- RIPRAP, R-5 19″ DEPTH, ITEM 712021 - RIPRAP, R-5 AND DELAWARE NO. 3 STONE, 6″ DEPTH, ITEM - 302011 DELAWARE NO. 3 STONE.
- GRADED AGGREGATE BASE COURSE, ITEM 302007 - GRADED AGGREGATE BASE COURSE, TYPE B

NOTES:

1. FOR PRELOAD FILL PLAN AND NOTES, SEE DWG. NO. ST-01.
2. FOR ARCH AND WINGWALL FOOTING DIMENSIONS, SEE DWG. NO. FT-01.
3. DEWATER FOOTING EXCAVATIONS AS REQUIRED. FOR ADDITIONAL REQUIREMENTS, SEE DWG. NOS. MS-01 AND MS-02.
4. FOR SHORING AND BRACING REQUIREMENTS, SEE NOTE 14 ON DWG.NO. PN-01.

BR1-4
ST-02

DELAWARE DEPARTMENT OF TRANSPORTATION	ADDENDUMS / REVISIONS	SCALE: AS NOTED	US 301, SR 896 TO SR 1	CONTRACT T200911308	BRIDGE NO. 1-436	PRELOAD FILL DETAILS - 2	SHEET NO. 255
				COUNTY NEW CASTLE	DESIGNED BY: M.R.P.		TOTAL SHTS. 875
					CHECKED BY: P.S.D.		

n:\31653-000\contract 1a\cadd\bridge\br_no4\ST02_br1-4.dgn
10/23/2012 5:22:08 PM

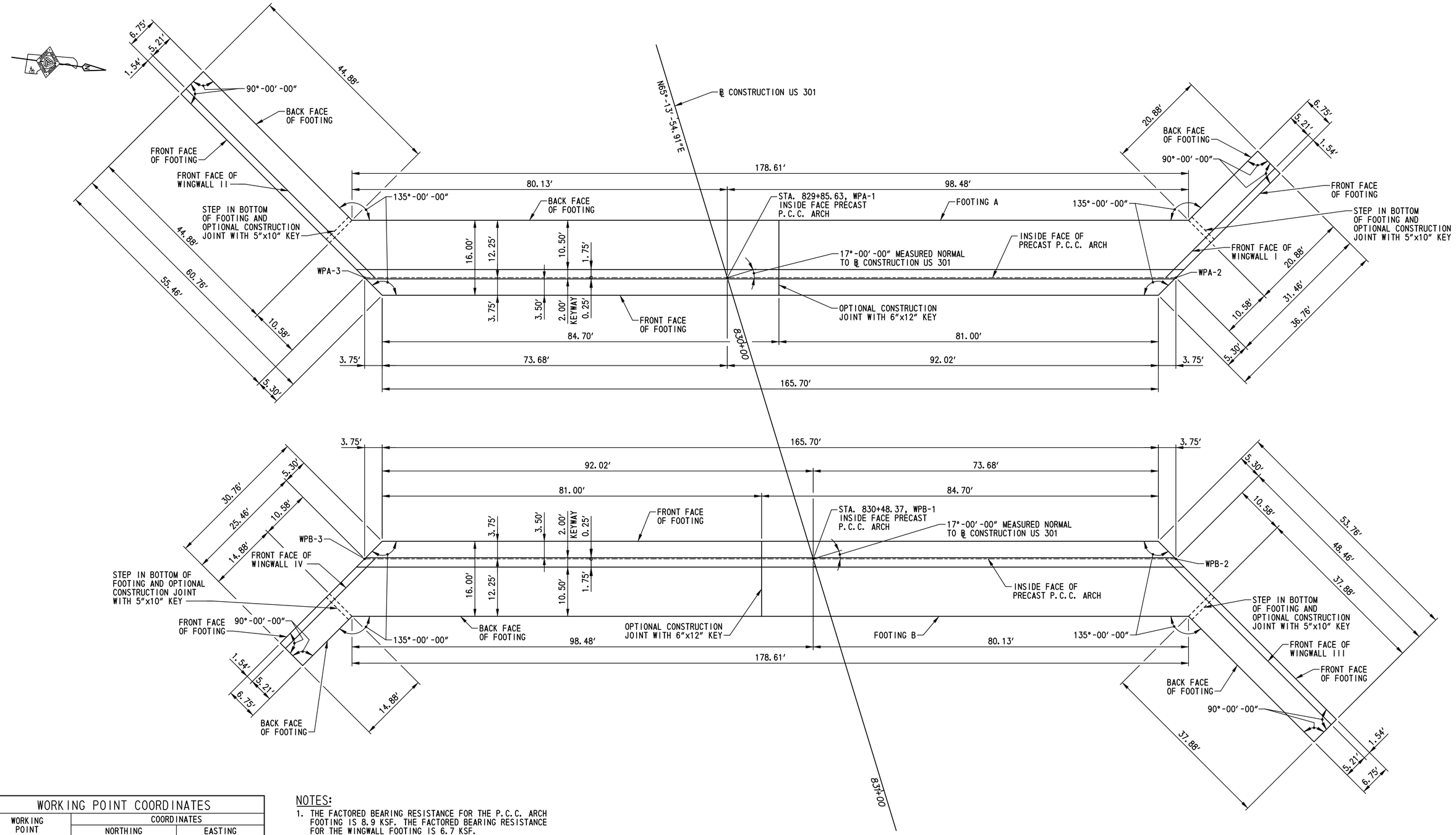

WORKING POINT COORDINATES		
WORKING POINT	COORDINATES	
	NORTHING	EASTING
WPA-1	555613.0599	587910.7473
WPA-2	555707.9521	587897.8026
WPA-3	555536.3432	587921.2126
WPB-1	555639.3452	587967.7173
WPB-2	555716.0619	587957.2520
WPB-3	555544.4529	587980.6620

NOTES:

1. THE FACTORED BEARING RESISTANCE FOR THE P.C.C. ARCH FOOTING IS 8.9 KSF. THE FACTORED BEARING RESISTANCE FOR THE WINGWALL FOOTING IS 6.7 KSF.
2. SEE DWG. NO. ST-01 FOR SETTLEMENT QUARANTINE PERIOD AND MONITORING REQUIREMENTS.
3. FOR ADDITIONAL FOUNDATION REQUIREMENTS, SEE NOTE 5 ON DWG. NO. PN-01.

GEOMETRIC AND FOOTING LAYOUT PLAN

SCALE: 1"=10'-0"

BR1-4
FT-01

DELAWARE DEPARTMENT OF TRANSPORTATION

ADDENDUMS / REVISIONS

SCALE: AS NOTED

US 301, SR 896 TO SR 1

CONTRACT	BRIDGE NO.	1-436
T200911308	DESIGNED BY: M.P.U.	
COUNTY		
NEW CASTLE	CHECKED BY: P.S.D.	

GEOMETRIC AND FOOTING LAYOUT PLAN

SHEET NO. 256
TOTAL SHTS. 875

m:\31653-000\contract 1a\cadd\bridge\br_no4\FT01_br1-4.dgn
10/23/2012 5:19:12 PM

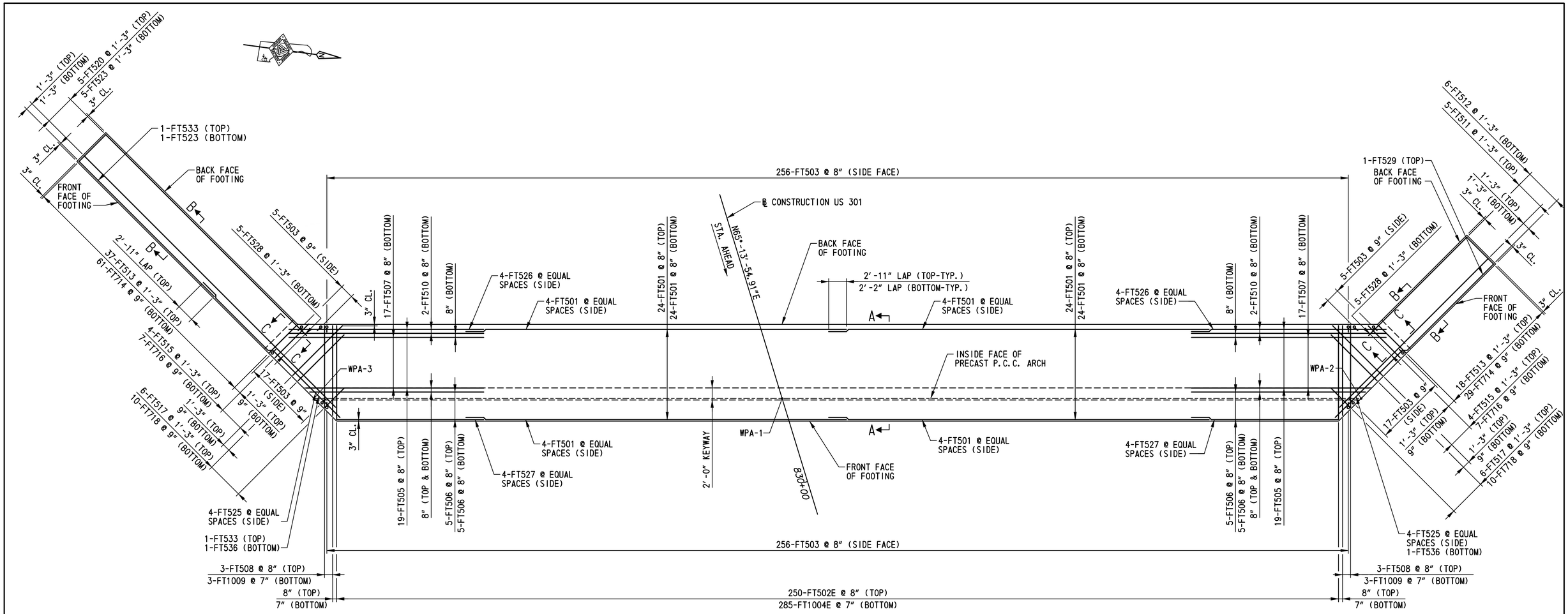

FOOTING A REINFORCEMENT PLAN

SCALE: 1/8"=1'-0"

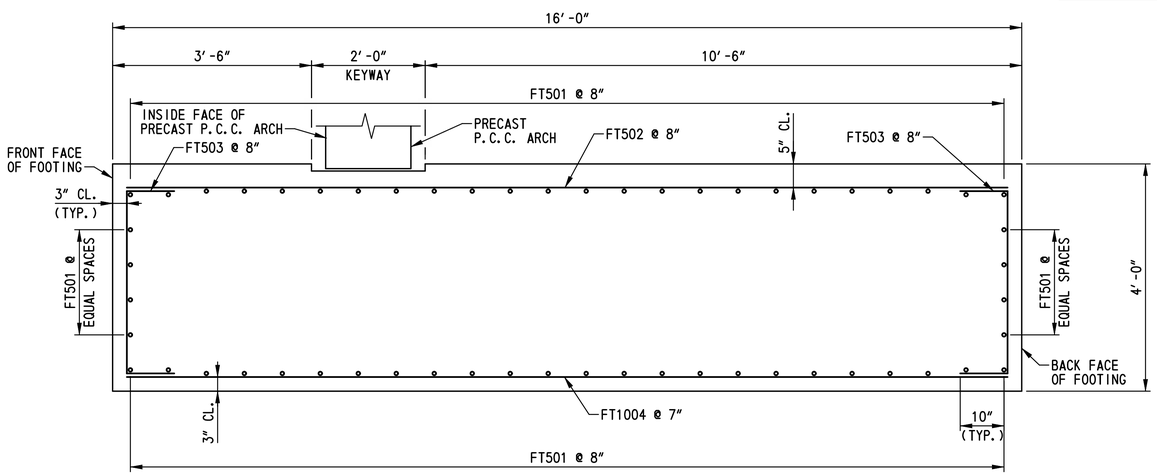

SECTION A-A

SCALE: 3/4"=1'-0"

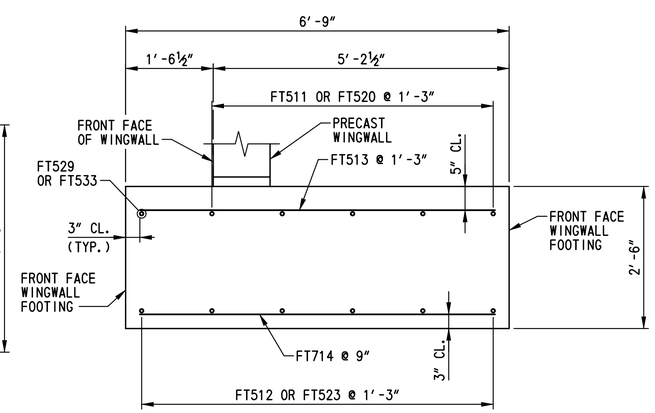

SECTION B-B

SCALE: 3/4"=1'-0"

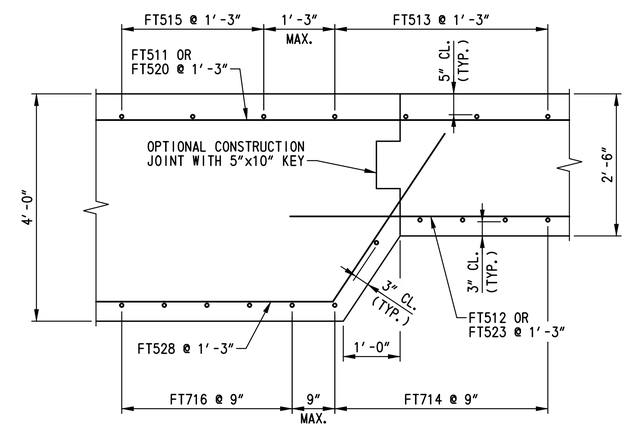

SECTION C-C

SCALE: 3/4"=1'-0"

DELAWARE DEPARTMENT OF TRANSPORTATION	ADDENDUMS / REVISIONS	SCALE: AS NOTED	US 301, SR 896 TO SR 1	CONTRACT T200911308 / COUNTY NEW CASTLE	BRIDGE NO. 1-436 / DESIGNED BY: M.P.U. / CHECKED BY: P.S.D.	FOOTING A REINFORCEMENT PLAN

BR1-4 FT-02

SHEET NO. 257

TOTAL SHTS. 875

r:\31653-000\contract to\cadd\bridge\br_no4\FT02_br1-4.dgn
10/23/2012 5:19:35 PM

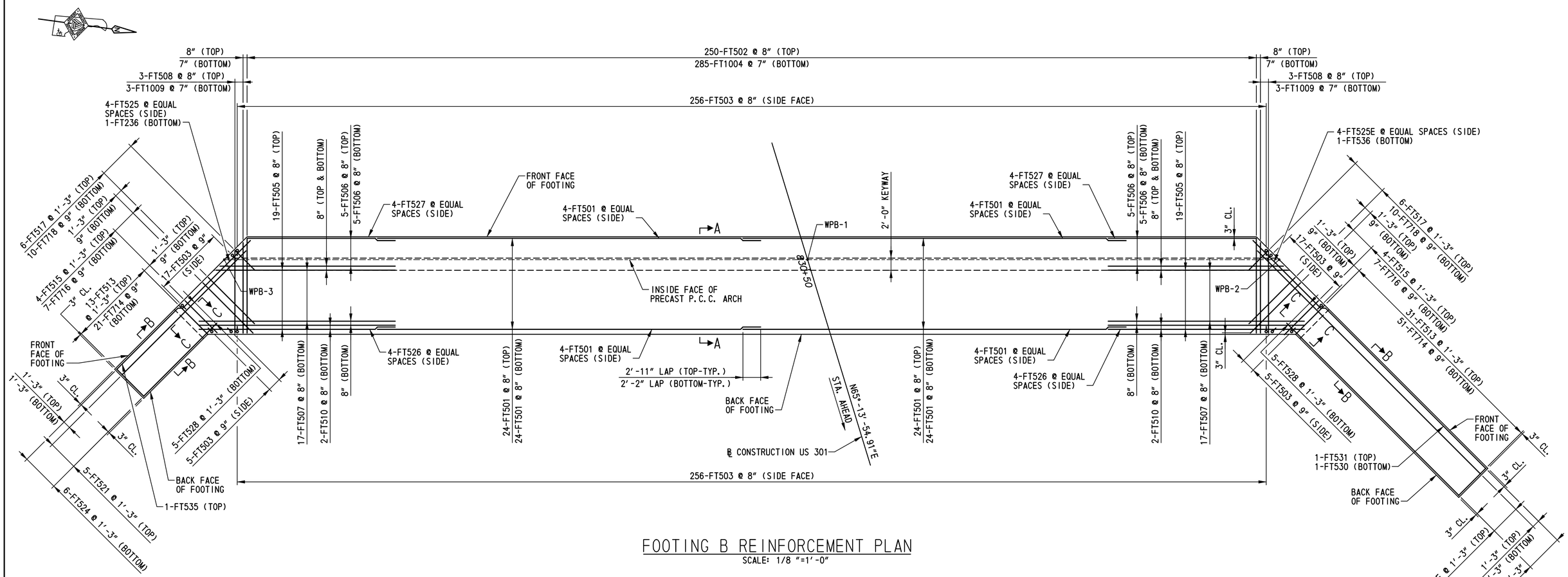

FOOTING B REINFORCEMENT PLAN

SCALE: 1/8 "=1'-0"

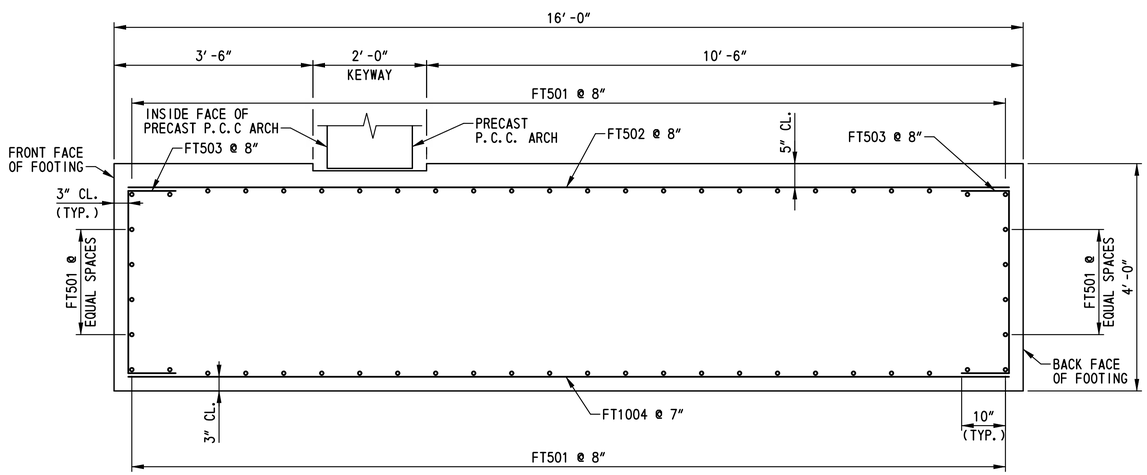

SECTION A-A

SCALE: 3/4"=1'-0"

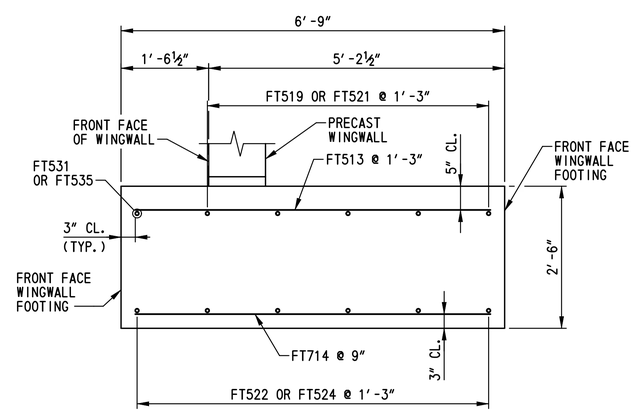

SECTION B-B

SCALE: 3/4"=1'-0"

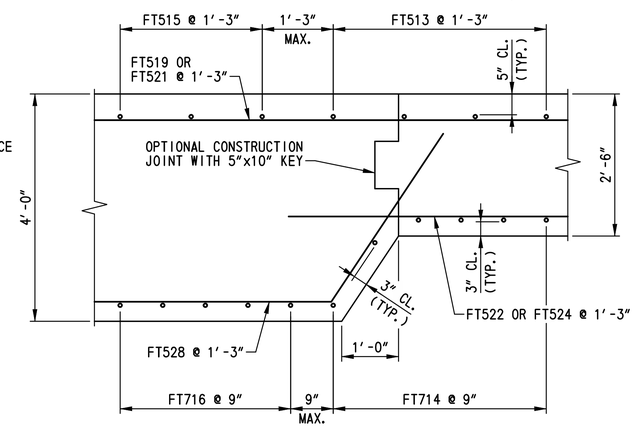

SECTION C-C

SCALE: 3/4"=1'-0"

DELAWARE DEPARTMENT OF TRANSPORTATION	ADDENDUMS / REVISIONS	SCALE: AS NOTED	US 301, SR 896 TO SR 1	CONTRACT T200911308 / COUNTY NEW CASTLE	BRIDGE NO. 1-436 / DESIGNED BY: M.P.U. / CHECKED BY: P.S.D.	FOOTING B REINFORCEMENT PLAN

BR1-4 FT-03

SHEET NO. 258

TOTAL SHTS. 875

r:\31653-000\contract 1a\cadd\bridge\br_no4\FT03_br1-4.dgn
10/23/2012 5:19:38 PM

(1) ANY MARK NUMBER WITH SUFFIX 'E' DENOTES EPOXY COATED REINFORCING STEEL.

(2) ALL MARK 'LOCATION PREFIXES' SHALL CONSIST OF TWO LETTERS AND ARE AS FOLLOWS: AB = ABUTMENT, AS = APPROACH SLAB, BC = BOX CULVERT, BW = BACKWALL, CL = COLUMN, DK = DECK, DL = DOWEL, FT = FOOTING, HW = HEADWALL, MS = MISC. BARS, PA = PARAPET, PR = PIER, SC = SHEETPILE CAP, SL = SLAB, TW = TOEWALL, WL = WALL (UNIQUE LOCATION), WW = WINGWALL

SPECIFICATIONS					BENDING DIMENSIONS (FEET-INCHES /QUARTER INCH)										
QTY.	SIZE	LENGTH	MARK	TYPE	A	B	C	D	E	F/R	G	H	J	K	O
FOOTING A															
104	5	60-00 0	FT501	STR		60-00 0									
250	5	15-06 0	FT502	STR		15-06 0									
556	5	5-00 0	FT503	2	0-10 0	3-04 0	0-10 0								
285	10	15-06 0	FT1004	STR		15-06 0									
38*	5	30-05 3	FT505	STR		30-05 3									
		T0				T0									
		35-03 3				35-03 3									
			*2 SETS OF 19												
20*	5	27-02 2	FT506	STR		27-02 2									
		T0				T0									
		29-10 2				29-10 2									
			*4 SETS OF 5												
34*	5	30-05 3	FT507	STR		30-05 3									
		T0				T0									
		34-09 1				34-09 1									
			*2 SETS OF 17												
6*	5	13-04 3	FT508	STR		13-04 3									
		T0				T0									
		14-08 3				14-08 3									
			*2 SETS OF 3												
6*	10	13-07 3	FT1009	STR		13-07 3									
		T0				T0									
		14-09 3				14-09 3									
			*2 SETS OF 3												
4	5	36-07 0	FT510	6			1-11 0	34-08 0				1-04 3		1-03 3	35-11 3
5*	5	23-00 1	FT511	STR		23-00 1									
		T0				T0									
		34-08 1				34-08 1									
			*1 SET OF 5												
6	5	21-09 3	FT512	STR		21-09 3									
55	5	6-03 0	FT513	STR		6-03 0									
90	7	6-03 0	FT714	STR		6-03 0									
8*	5	7-04 1	FT515	STR		7-04 1									
		T0				T0									
		11-00 0				11-00 0									
			*2 SETS OF 4												

SPECIFICATIONS					BENDING DIMENSIONS (FEET-INCHES /QUARTER INCH)										
QTY.	SIZE	LENGTH	MARK	TYPE	A	B	C	D	E	F/R	G	H	J	K	O
14*	7	6-10 3	FT716	STR		6-10 3									
		T0				T0									
		11-04 3				11-04 3									
			*2 SETS OF 7												
12*	5	5-03 0	FT517	STR		5-03 0									
		T0				T0									
		11-03 3				11-03 3									
			*2 SETS OF 6												
20*	7	4-11 2	FT718	STR		4-11 2									
		T0				T0									
		11-08 2				11-08 2									
			*2 SETS OF 10												
5*	5	47-00 1	FT520	STR		47-00 1									
		T0				T0									
		58-08 1				58-08 1									
			*1 SET OF 5												
6	5	45-09 3	FT523	STR		45-09 3									
8	5	16-01 3	FT525	STR		16-01 3									
8	5	34-07 1	FT526	STR		34-07 1									
8	5	27-02 2	FT527	STR		27-02 2									
10*	5	17-05 1	FT528	6			3-06 3	13-10 2				2-11 2		1-11 3	15-10 1
		T0					T0	T0				T0		T0	T0
		5-09 1					3-06 3	2-02 2				2-11 2		1-11 3	4-02 1
			*2 SETS OF 5												
1	5	36-05 1	FT529	STR		36-05 1									
2	5	31-08 0	FT533	STR		31-08 0									
2	5	19-02 0	FT536	6			3-06 3	15-07 1				2-11 2		1-11 3	17-07 0

SPECIFICATIONS					BENDING DIMENSIONS (FEET-INCHES /QUARTER INCH)										
QTY.	SIZE	LENGTH	MARK	TYPE	A	B	C	D	E	F/R	G	H	J	K	O

ASTM STANDARD ENGLISH REINFORCING BARS				RECOMMENDED END HOOKS, APPLICABLE TO ALL GRADES				STIRRUP AND TIE HOOKS, APPLICABLE TO ALL GRADES			
	NOMINAL DIMENSIONS				180° HOOKS		90° HOOKS		90° HOOK	135° HOOK	
BAR SIZE	DIAMETER (INCHES)	AREA (INCHES²)	WEIGHT (LBS./FT.)	D	A OR G	J	A OR G	D	A OR G	A OR G	A OR G
3	0.375	0.110	0.376	2¼"	5"	3"	6"	1½"	4"	4"	2½"
4	0.500	0.200	0.668	3"	6"	4"	8"	2"	4½"	4½"	3"
5	0.625	0.310	1.043	3¾"	7"	5"	10"	2½"	6"	5½"	3¾"
6	0.750	0.440	1.502	4½"	8"	6"	1-0"	4½"	1-0"	8"	4½"
7	0.875	0.600	2.044	5¼"	10"	7"	1-2"	5¼"	1-2"	9"	5¼"
8	1.000	0.790	2.670	6"	11"	8"	1-4"	6"	1-4"	10½"	6"
9	1.128	1.000	3.400	9½"	1-3"	11¾"	1-7"				
10	1.270	1.270	4.303	10¾"	1-5"	1-1¼"	1-10"				
11	1.410	1.560	5.313	1-0"	1-7"	1-2¾"	2-0"				
14	1.693	2.250	7.650	1-6¼"	2-3"	1-9¾"	2-7"				
18	2.257	4.000	13.600	2-0"	3-0"	2-4½"	3-5"				

NOTES:

1. FIGURES SHOWN IN CIRCLES REPRESENT BAR BEND TYPES.
2. STANDARD BAR BENDS INCLUDE ONLY THOSE TYPES BELOW, INDICATED AS SUCH.
3. ALL DIMENSIONS OUT-TO-OUT, EXCEPT "A" AND "G" ON STD. 180° AND 135° HOOKS.
4. "J" DIMENSIONS ON 180° HOOKS TO BE SHOWN ONLY WHERE NECESSARY TO RESTRICT HOOK SIZE, OTHERWISE STANDARD 'ACI' HOOKS ARE TO BE USED.
5. WHERE "J" IS NOT SHOWN, "J" WILL BE KEPT EQUAL TO OR LESS THAN "H" ON TYPES 3, 5 AND 22. WHERE "J" CAN EXCEED "H", IT SHALL BE SHOWN.
6. "H" DIMENSIONS OF STIRRUPS TO BE SHOWN AS NEEDED TO FIT WITHIN THE CONCRETE.
7. UNLESS OTHERWISE NOTED, DIAMETER "D" IS THE SAME FOR ALL BENDS AND HOOKS ON A BAR (EXCEPT FOR BEND TYPES 11 AND 13).
8. WHERE SLOPE DIFFERS FROM 45° OFFSET, "H" AND "K" MUST BE SHOWN.
9. WHERE BARS ARE TO BE BENT MORE ACCURATELY THAN STANDARD BENDING TOLERANCES, BENDING DIMENSIONS REQUIRING CLOSER FABRICATION SHOULD HAVE LIMITS INDICATED.
10. FOR RECOMMENDED DIAMETER "D", OF BENDS, HOOKS, ETC., REFER TO TABLE ABOVE, 'CRSI' OR 'ACI' TABLES WHERE APPLICABLE AND REQUIRED.
11. TYPE S1-S6, S11, T1-T3 AND T6-T9 APPLICABLE TO BAR SIZES #3 THROUGH #8.

STANDARD BAR BENDS

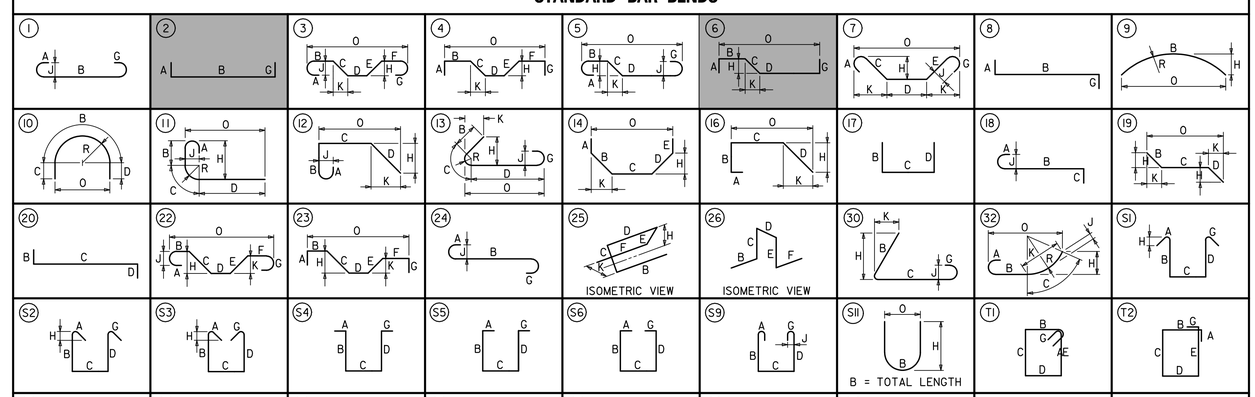

SPECIAL BAR BENDS

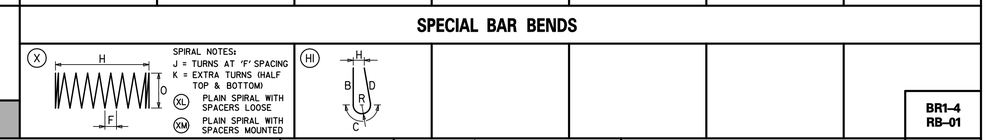

STIRRUP AND TIE HOOKS

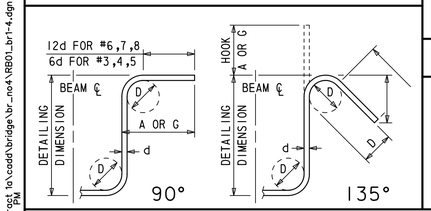

180° AND 90° END HOOKS

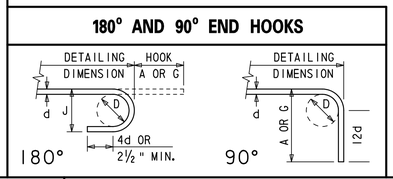

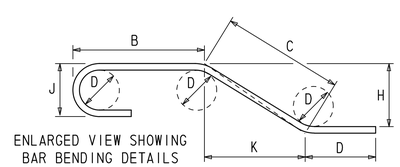

ENLARGED VIEW SHOWING BAR BENDING DETAILS

n:\31653-000\contract 1a\cadd\bridge\br_no4\RB01_br1-4.dgn
10/23/2012 5:24:33 PM

DELAWARE DEPARTMENT OF TRANSPORTATION

ADDENDUMS / REVISIONS

SCALE: AS NOTED

US 301, SR 896 TO SR 1

CONTRACT	BRIDGE NO. 1-436
T200911308	DESIGNED BY: M.P.U.
COUNTY: NEW CASTLE	CHECKED BY: P.S.D.

FOOTING A REINFORCEMENT LIST

BR1-4
RB-01

SHEET NO. 259
TOTAL SHTS. 875

① ANY MARK NUMBER WITH SUFFIX 'E' DENOTES EPOXY COATED REINFORCING STEEL.

② ALL MARK 'LOCATION PREFIXES' SHALL CONSIST OF TWO LETTERS AND ARE AS FOLLOWS: AB = ABUTMENT, AS = APPROACH SLAB, BC = BOX CULVERT, BW = BACKWALL, CL = COLUMN, DK = DECK, DL = DOWEL, FT = FOOTING, HW = HEADWALL, MS = MISC. BARS, PA = PARAPET, PR = PIER, SC = SHEETPILE CAP, SL = SLAB, TW = TOEWALL, WL = WALL (UNIQUE LOCATION), WW = WINGWALL

SPECIFICATIONS					BENDING DIMENSIONS (FEET-INCHES /QUARTER INCH)										
QTY.	SIZE	LENGTH	MARK	TYPE	A	B	C	D	E	F/R	G	H	J	K	O
FOOTING B															
104	5	60-00 0	FT501	STR		60-00 0									
250	5	15-06 0	FT502	STR		15-06 0									
556	5	5-00 0	FT503	2	0-10 0	3-04 0	0-10 0								
285	10	15-06 0	FT1004	STR		15-06 0									
38*	5	30-05 3	FT505	STR		30-05 3									
		T0				T0									
		35-03 3				35-03 3									
			*2 SETS OF	19											
20*	5	27-02 2	FT506	STR		27-02 2									
		T0				T0									
		29-10 2				29-10 2									
			*4 SETS OF	5											
34*	5	30-05 3	FT507	STR		30-05 3									
		T0				T0									
		34-09 1				34-09 1									
			*2 SETS OF	17											
6*	5	13-04 3	FT508	STR		13-04 3									
		T0				T0									
		14-08 3				14-08 3									
			*2 SETS OF	3											
6*	10	13-07 3	FT1009	STR		13-07 3									
		T0				T0									
		14-09 3				14-09 3									
			*2 SETS OF	3											
4	5	36-07 0	FT510	6			1-11 0	34-08 0				1-04 3		1-03 3	35-11 3
44	5	6-03 0	FT513	STR		6-03 0									
72	7	6-03 0	FT714	STR		6-03 0									
8*	5	7-04 1	FT515	STR		7-04 1									
		T0				T0									
		11-00 0				11-00 0									
			*2 SETS OF	4											
14*	7	6-10 3	FT716	STR		6-10 3									
		T0				T0									
		11-04 3				11-04 3									
			*2 SETS OF	7											
12*	5	5-03 0	FT517	STR		5-03 0									
		T0				T0									
		11-03 3				11-03 3									
			*2 SETS OF	6											

SPECIFICATIONS					BENDING DIMENSIONS (FEET-INCHES /QUARTER INCH)										
QTY.	SIZE	LENGTH	MARK	TYPE	A	B	C	D	E	F/R	G	H	J	K	O
20*	7	4-11 2	FT718	STR		4-11 2									
		T0				T0									
		11-08 2				11-08 2									
			*2 SETS OF	10											
5*	5	40-00 1	FT519	STR		40-00 1									
		T0				T0									
		51-08 1				51-08 1									
			*1 SET OF	5											
5*	5	17-00 1	FT521	STR		17-00 1									
		T0				T0									
		28-08 1				28-08 1									
			*1 SET OF	5											
6	5	38-09 3	FT522	STR		38-09 3									
6	5	15-09 3	FT524	STR		15-09 3									
8	5	16-01 3	FT525	STR		16-01 3									
8	5	34-07 1	FT526	STR		34-07 1									
8	5	27-02 2	FT527	STR		27-02 2									
10*	5	17-05 1	FT528	6			3-06 3	13-10 2				2-11 2		1-11 3	15-10 1
		T0					T0	T0				T0		T0	T0
		5-09 1					3-06 3	2-02 2				2-11 2		1-11 3	4-02 1
			*2 SETS OF	5											
1	5	53-05 1	FT531	STR		53-05 1									
1	5	30-05 1	FT535	STR		30-05 1									
2	5	19-02 0	FT536	6			3-06 3	15-07 1				2-11 2		1-11 3	17-07 0

SPECIFICATIONS					BENDING DIMENSIONS (FEET-INCHES /QUARTER INCH)										
QTY.	SIZE	LENGTH	MARK	TYPE	A	B	C	D	E	F/R	G	H	J	K	O

ASTM STANDARD ENGLISH REINFORCING BARS				RECOMMENDED END HOOKS, APPLICABLE TO ALL GRADES				STIRRUP AND TIE HOOKS, APPLICABLE TO ALL GRADES			
	NOMINAL DIMENSIONS				180° HOOKS		90° HOOKS		90° HOOK	135° HOOK	
BAR SIZE	DIAMETER (INCHES)	AREA (INCHES²)	WEIGHT (LBS./FT.)	D	A OR G	J	A OR G	D	A OR G	A OR G	A OR G
3	0.375	0.110	0.376	2¼″	5″	3″	6″	1½″	4″	4″	2½″
4	0.500	0.200	0.668	3″	6″	4″	8″	2″	4½″	4½″	3″
5	0.625	0.310	1.043	3¾″	7″	5″	10″	2½″	6″	5½″	3¾″
6	0.750	0.440	1.502	4½″	8″	6″	1-0″	4½″	1-0″	8″	4½″
7	0.875	0.600	2.044	5¼″	10″	7″	1-2″	5¼″	1-2″	9″	5¼″
8	1.000	0.790	2.670	6″	11″	8″	1-4″	6″	1-4″	10½″	6″
9	1.128	1.000	3.400	9½″	1-3″	11¾″	1-7″				
10	1.270	1.270	4.303	10¾″	1-5″	1-1¼″	1-10″				
11	1.410	1.560	5.313	1-0″	1-7″	1-2¾″	2-0″				
14	1.693	2.250	7.650	1-6¼″	2-3″	1-9¾″	2-7″				
18	2.257	4.000	13.600	2-0″	3-0″	2-4½″	3-5″				

NOTES:

1. FIGURES SHOWN IN CIRCLES REPRESENT BAR BEND TYPES.
2. STANDARD BAR BENDS INCLUDE ONLY THOSE TYPES BELOW, INDICATED AS SUCH.
3. ALL DIMENSIONS OUT-TO-OUT, EXCEPT "A" AND "G" ON STD. 180° AND 135° HOOKS.
4. "J" DIMENSIONS ON 180° HOOKS TO BE SHOWN ONLY WHERE NECESSARY TO RESTRICT HOOK SIZE, OTHERWISE STANDARD 'ACI' HOOKS ARE TO BE USED.
5. WHERE "J" IS NOT SHOWN, "J" WILL BE KEPT EQUAL TO OR LESS THAN "H" ON TYPES 3, 5 AND 22. WHERE "J" CAN EXCEED "H", IT SHALL BE SHOWN.
6. "H" DIMENSIONS OF STIRRUPS TO BE SHOWN AS NEEDED TO FIT WITHIN THE CONCRETE.
7. UNLESS OTHERWISE NOTED, DIAMETER "D" IS THE SAME FOR ALL BENDS AND HOOKS ON A BAR (EXCEPT FOR BEND TYPES 11 AND 13).
8. WHERE SLOPE DIFFERS FROM 45° OFFSET, "H" AND "K" MUST BE SHOWN.
9. WHERE BARS ARE TO BE BENT MORE ACCURATELY THAN STANDARD BENDING TOLERANCES, BENDING DIMENSIONS REQUIRING CLOSER FABRICATION SHOULD HAVE LIMITS INDICATED.
10. FOR RECOMMENDED DIAMETER "D", OF BENDS, HOOKS, ETC., REFER TO TABLE ABOVE, 'CRSI' OR 'ACI' TABLES WHERE APPLICABLE AND REQUIRED.
11. TYPE S1-S6, S11, T1-T3 AND T6-T9 APPLICABLE TO BAR SIZES #3 THROUGH #8.

STANDARD BAR BENDS

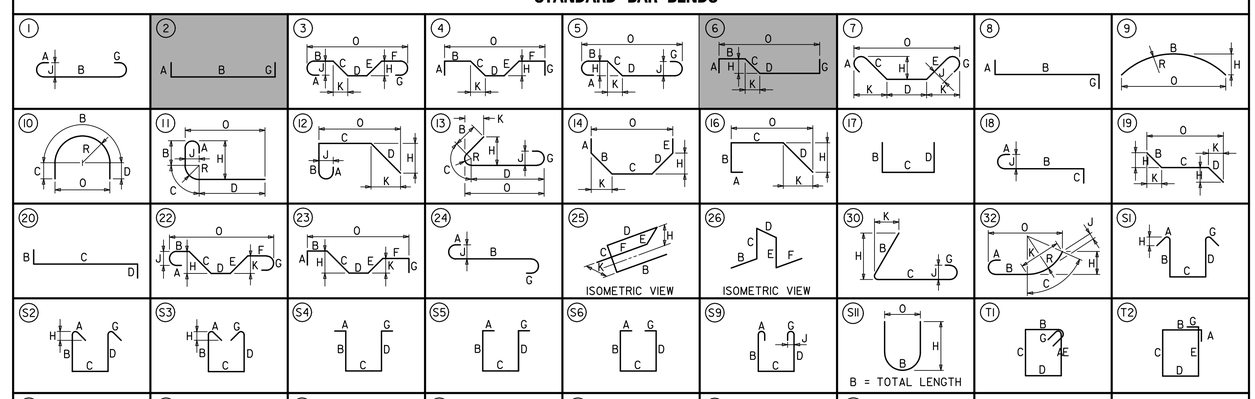

SPECIAL BAR BENDS

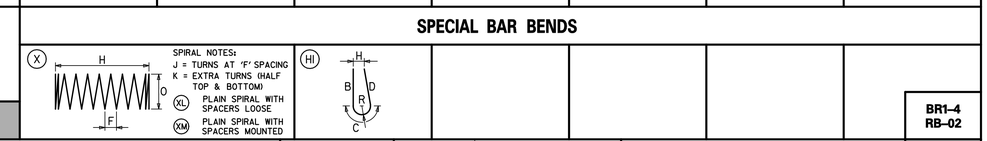

STIRRUP AND TIE HOOKS

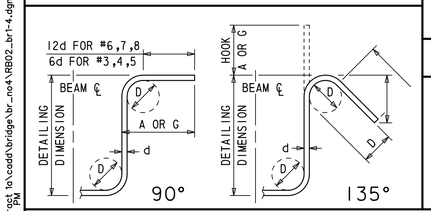

180° AND 90° END HOOKS

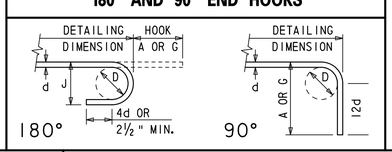

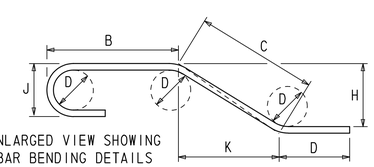

ENLARGED VIEW SHOWING BAR BENDING DETAILS

DELAWARE DEPARTMENT OF TRANSPORTATION

ADDENDUMS / REVISIONS

SCALE: AS NOTED

US 301, SR 896 TO SR 1

CONTRACT	BRIDGE NO. 1-436	FOOTING B REINFORCEMENT LIST	SHEET NO.
T200911308	DESIGNED BY: M.P.U.		260
COUNTY			TOTAL SHTS.
NEW CASTLE	CHECKED BY: P.S.D.		875

BR1-4
RB-02

n:\31653-000\contract 1a\cadd\bridge\br_no4\RB02_br1-4.dgn
10/23/2012 5:24:56 PM

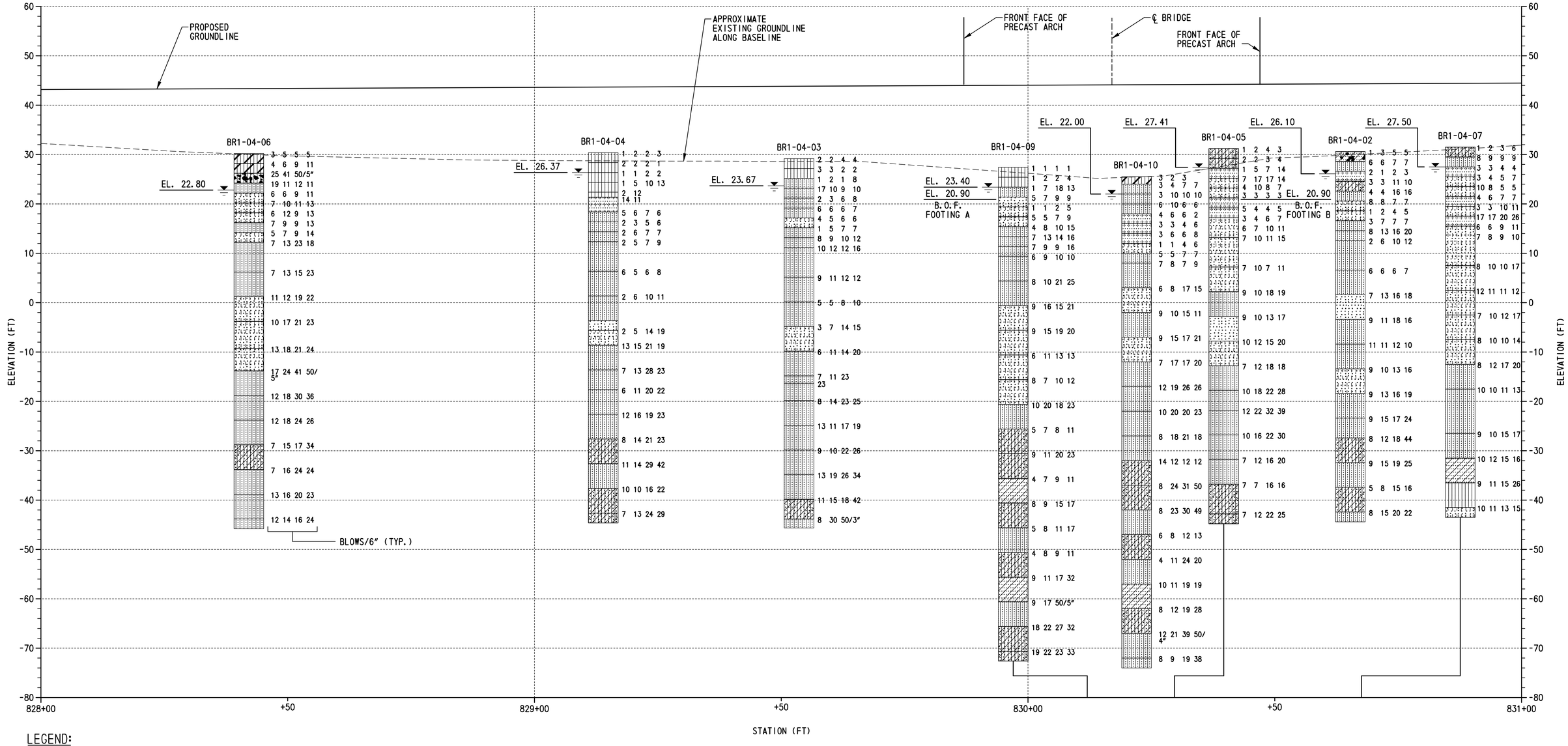

LEGEND:

- SILT
- POORLY GRADED CLAYEY SILTY SAND
- SILTY SAND
- WELL GRADED GRAVEL WITH SILT
- POOLY GRADED GRAVEL WITH SILT
- WELL GRADED SAND WITH SILT
- POORLY GRADED SAND WITH SILT
- POORLY GRADED GRAVEL WITH CLAY
- POORLY GRADED SAND
- SILTY LOW PLASTICITY CLAY
- CLAYEY SAND
- WATER TABLE AT BORING COMPLETION

BORING PROFILE

SCALE: 1"=10'-0"

TEST BORINGS				
DESIGNATION	STATION	OFFSET	NORTHING	EASTING
BR1-04-02	830+65.32	22.86' RT.	555626	587993
BR1-04-03	829+53.61	46.15' RT.	555558	587901
BR1-04-04	829+13.94	150.57' RT.	555446	587909
BR1-04-05	830+29.66	159.09' RT.	555487	588017
BR1-04-06	828+42.13	32.91' RT.	555523	587794
BR1-04-07	830+67.58	60.79' RT.	555592	588011
BR1-04-09	830+12.00	90.00' LT.	555706	587897
BR1-04-10	830+22.00	90.00' RT.	555547	587981

NOTES:

1. FOR BORING LOCATIONS, SEE DWG. NO. PE-01.
2. BORINGS BR1-04-05, BR1-04-07, AND BR1-04-09 ARE SHOWN OFFSET AS INDICATED FOR CLARITY.
3. RESULTS OF TESTS CONDUCTED ON SAMPLES RECOVERED ARE REPORTED ON THE BORING LOGS. LOGS AND LABRATORY TESTING ARE INCLUDED AS PART OF THE CONTRACT DOCUMENTS, SEE CD.

VERTICAL SCALE FEET 30 20 10 0

BR1-4
BO-01