PROJECT NOTES:

1. LOCATION
   PROPOSED NEW STRUCTURE CARRYING HYETTS CORNER ROAD OVER US 301 IN NEW CASTLE COUNTY, DELAWARE.

2. ELEVATIONS
   VERTICAL DATUM IS REFERENCED TO NAVD 88.

3. DESIGN CRITERIA AND SPECIFICATIONS
   2007 AASHTO LRFD BRIDGE DESIGN SPECIFICATIONS, INCLUDING 2008 AND 2009 INTERIM PROVISIONS AND THE 2005 DELDOT BRIDGE DESIGN MANUAL. PROVIDE MATERIAL AND PERFORM WORK IN ACCORDANCE WITH THE DELDOT STANDARD SPECIFICATIONS AND STANDARD CONSTRUCTION DETAILS AND THE CONTRACT SPECIAL PROVISIONS.

4. LOADING
   HL-93 AND DELAWARE LEGAL LOADS FOR LIVE LOAD WITH PROVISIONS FOR FUTURE 2" WEARING SURFACE AND 15 LBS/FT^2 FOR THE USE OF STEEL BRIDGE DECK FORMS WHICH REMAIN IN PLACE.

5. CONCRETE
   ALL CONCRETE PROPERTIES SHALL BE IN ACCORDANCE WITH SECTION 812 OF THE DELAWARE DEPARTMENT OF TRANSPORTATION STANDARD SPECIFICATIONS.

   CLASS A - ABUTMENTS, STEMS, BACKWALLS, PIER, AND PARAPETS (f'c = 4,500 PSI).

   CLASS B - PIER FOOTINGS NOT EXPOSED (f'c = 3,000 PSI).

   CLASS D - CONCRETE DECK SLAB, SLEEPER SLABS, AND APPROACH SLABS (f'c = 4,500 PSI).

   ALL EXPOSED EDGES SHALL BE CHAMFERED ¾" UNLESS NOTED OTHERWISE.

6. REINFORCING STEEL
   ALL REINFORCING STEEL SHALL BE AASHTO M 31 (ASTM A 615), GRADE 60. EPOXY COATED REINFORCING STEEL SHALL BE PROTECTED WITH FUSION BONDED EPOXY, CONFORMING TO AASHTO M 284 (ASTM A 775).

   EPOXY COATED REINFORCING STEEL SHALL BE USED IN THE FOLLOWING LOCATIONS:

   SLEEPER SLABS
   APPROACH SLABS
   DECK SLAB
   PARAPETS
   ABUTMENTS

   ALL REINFORCING STEEL HAS BEEN DETAILED FOR A MAXIMUM LENGTH OF 60 FT.

   ALL SPLICES, NOT SHOWN, SHALL BE LAPPED AS PER THE AASHTO LRFD BRIDGE DESIGN SPECIFICATIONS.

   MINIMUM CONCRETE COVER FOR REINFORCING STEEL UNLESS NOTED OTHERWISE SHALL BE:

   FOUNDATION ELEMENTS: 3"
   DECK SLABS: 2½" TOP OF SLAB (INCLUDES ½" INTEGRAL WEARING SURFACE)
   1" BOTTOM OF SLAB WHEN STAY-IN-PLACE FORMS ARE USED
   COLUMNS: 2" TO TIES
   PIER CAPS: 2" TO STIRRUPS
   2" TO MAIN STEEL AT ENDS

7. STRUCTURAL STEEL
   ALL STRUCTURAL STEEL SHALL BE AASHTO M 270 (ASTM A 709), GRADE 50W, INCLUDING THE ADDITIONAL REQUIREMENTS FOR CHARPY V-NOTCH TESTING OF AASHTO M 270 FOR PRIMARY LOAD CARRYING MEMBERS UNDER TENSILE STRESS.

8. ELASTOMERIC BEARINGS AND TFE-STAINLESS STEEL BEARINGS
   FOR REQUIREMENTS OF THE ELASTOMERIC BEARINGS, SEE DWG. NO. BB-03. FOR REQUIREMENTS OF THE TFE-STAINLESS STEEL BEARINGS, SEE DWG. NOS. BB-01 AND BB-02.

9. PRESTRESSED CONCRETE PILES
   ALL PRESTRESSED CONCRETE PILES SHALL BE IN ACCORDANCE WITH SECTION 618 OF THE DELAWARE DEPARTMENT OF TRANSPORTATION SPECIFICATIONS EXCEPT THAT SEVEN WIRE LOW RELAXATION STRAND SHALL BE USED.

10. STEEL H-PILES
    SEE PILE NOTE 6 ON DWG. NO. PL-02 REGARDING STEEL H-PILE ALTERNATIVE. STEEL H-PILES SHALL BE AASHTO M 270 (ASTM A 709), GRADE 50.

11. MSE WALLS
    FOR MSE WALL NOTES, SEE DWG. NO. AB-02.

12. FOUNDATION REQUIREMENTS
    FOR FOUNDATION REQUIREMENTS, SEE DWG. NOS. PL-01, PL-02 AND PR-01. DELDOT STANDARD SPECIFICATION 619.11 (A)(6) SHALL BE MODIFIED BY REFERENCE TO SPECIAL PROVISIONS 619519 & 619539.

13. TRAFFIC CONTROL REQUIREMENTS
    PROVIDE A MINIMUM TEMPORARY VERTICAL CLEARANCE OF 16'-6" AT ALL TIMES DURING CONSTRUCITON.

    DO NOT PICK OR LIFT OBJECTS OVER LANES AND/OR SHOULDERS OPEN TO TRAFFIC.

    DO NOT PERFORM ANY WORK DIRECTLY OVER OPEN LANES OF TRAFFIC WITHOUT ADEQUATE SHIEDLING OR WORK PLATFORMS, LANE CLOSURES OR DETOURS IN ACCORDANCE WITH THE CONTRACT PLANS AND SPECIFICATIONS.

13. TRAFFIC CONTROL REQUIREMENTS (CONTINUED)
    INSTALL SIP FORMS, ADDITIONAL PROTECTIVE SHIELD SYSTEM, WORK PLATFORMS AND/OR OVERHANG FALSEWORK BEFORE BEGINNING ANY CONSTRUCTION OPERATIONS OVER TRAFFIC.

    IF THE CONTRACTOR DETERMINES THAT ADDITIONAL PROTECTIVE SHIELDING OR WORK PLATFORMS ARE NEEDED FOR PROTECTING TRAFFIC WHILE WORKING OVER TRAVELWAYS HAVE THE DRAWINGS AND DESIGN CALCULATIONS PREPARED, SIGNED AND SEALED BY A DELAWARE REGISTERED PROFESSIONAL ENGINEER. THE APPROVAL OF THE ENGINEER WILL NOT RELIEVE THE CONTRACTOR OF THE RESPONSIBILITY FOR THE SAFETY OF THE METHOD OR EQUIPMENT. BASED ON CONTRACTOR MEANS AND METHODS DETERMINE AND CLEARLY DEFINE ALL DEAD AND LIVE LOADS FOR THIS SYSTEM, WHICH, AT A MINIMUM SHALL BE INSTALLED BETWEEN BEAMS OR GIRDERS OVER ANY TRAVEL WAY OR SHOULDER AREA WHERE TRAFFIC IS MAINTAINED. NO SEPARATE PAYMENT WILL BE MADE FOR ADDITIONAL PROTECTIVE SHIELDING OR WORK PLATFORMS.

    ALL FORMWORK INCLUDING STAY-IN-PLACE FORMS SHALL BE MORTAR TIGHT.

    WHILE PLACING DECK, DECK OVERHANG AND PARAPET CONCRETE OVER LANES OPEN TO TRAFFIC, NO CLOSURE OR DETOURS WILL BE ALLOWED DURING THESE OPERATONS.

    THE MAINTENANCE OF TRAFFIC REQUIRED FOR THE INSTALLATION OF THESE ITEMS WILL BE PAID UNDER THE MAINTENANCE OF TRAFFIC UNIT BID ITEMS. CONTRACTOR SHALL ADHERE TO THE TRAFFIC CONTROL PLAN, DELAWARE MUTCD, AND TRAFFIC LANE CLOSURE AND WORK RESTRICTIONS PROVIDED IN THE CONTRACT DOCUMENTS.

    FOR ADDITIONAL TRAFFIC CONTROL REQUIREMENTS, SEE DWG. NOS. CS-07, CS-09 AND CS-10.

14. CONSTRUCTION JOINTS
    KEYED CONSTRUCTION JOINTS SHALL BE 2"x4" OR UNLESS NOTED OTHERWISE. ALL EXPOSED CONSTRUCTION JOINT EDGES SHALL HAVE A ¾" V-NOTCH UNLESS NOTED OTHERWISE.

15. MISCELLANEOUS
    ALL AREAS DISTURBED BY THE CONTRACTOR'S OPERATIONS SHALL BE GRADED BACK TO THE ORIGINAL EXISTING GRADE, TOP SOILED, SEEDED AND MULCHED. PAYMENT SHALL BE INCIDENTAL TO THE CONTRACT. AS DIRECTED BY THE ENGINEER, ALL AREAS DISTURBED BY THE CONTRACTOR'S OPERATION RESULTING FROM UNAUTHORIZED ACTIVITIES OUTSIDE THE LIMIT OF CONSTRUCTION SHALL BE TOP SOILED, SEEDED, AND MULCHED AT THE CONTRACTOR'S EXPENSE.

16. STABILIZING STRUCTURAL EXCAVATIONS
    IN LIEU OF A 2:1 SLOPE, THE CONTRACTOR MAY USE SHORING FOR EXCAVATIONS EXCEEDING 5 FEET IN HEIGHT. THE COST OF THE SHORING SHALL BE INCIDENTAL TO ITEM 207000 - EXCAVATION AND BACKFILL FOR STRUCTURES.

17. LOAD RATINGS
    FOR LOAD AND RESISTANCE FACTOR RATING, SEE BRIDGE NO. 1-436A LOAD RATING SUMMARY ON THIS SHEET.

18. UTILITIES
    BEFORE BEGINNING WORK, THE CONTRACTOR SHALL GIVE NOTIFICATION BY TELEPHONE BY CALLING "MISS UTILITY" AT 1-800-282-8555 A MINIMUM OF 2 WORKING DAYS PRIOR TO START OF WORK. VERIFY AND LOCATE ALL UTILITIES PRIOR TO STARTING WORK.

    COORDINATE THE REQUIREMENTS FOR PROTECTION OF ANY UTILITY WITH THE UTILITY OWNER PRIOR TO STARTING WORK.

    CONDUCT OPERATIONS IN A MANNER WHICH ENSURES THAT THE UTILITIES WILL NOT BE DISTURBED OR ENDANGERED. ANY DAMAGE INCURRED TO THESE UTILITIES OR ANY OTHER UTILITIES, SHOWN OR NOT SHOWN ON THE PLANS, DUE TO THE CONTRACTOR'S OPERATIONS SHALL BE REPAIRED AT THE CONTRACTOR'S EXPENSE TO THE SATISFACTION OF THE APPROPRIATE UTILITY COMPANY. THE DEPARTMENT DOES NOT ASSUME RESPONSIBILITY FOR REIMBURSEMENT, PARTICIPATION IN DESIGN AND/OR REVISIONS, OR LIABILITY FOR ACCURACY OF TYPE, SIZE AND LOCATION OF ANY UTILITY.

    THE CONTRACTOR IS RESPONSIBLE FOR TEMPORARILY SUPPORTING, PROTECTING, OR RELOCATING ANY UTILITIES DURING CONSTRUCTION. WHERE NECESSARY, THE COST FOR THIS WORK WILL BE INCIDENTAL TO THE CONTRACT.

Unofficial Website Copy

LOAD RATING SUMMARY

DESIGN VEHICLE	RATING FACTOR	RATING WEIGHT (TON)	CONTROLLING MEMBER	CONTROLLING POINT	LOAD EFFECT
HL-93 TRUCK (INVENTORY)	1.29	N/A	EXTERIOR GIRDER	200	SHEAR
HL-93 TANDEM (INVENTORY)	1.56	N/A	EXTERIOR GIRDER	200	SHEAR
HL-93 TRUCK TRAIN (INVENTORY)	1.31	N/A	EXTERIOR GIRDER	200	FLEXURE
HS-20 (INVENTORY)	2.08	74.95	EXTERIOR GIRDER	200	SHEAR
HL-93 TRUCK (OPERATING)	1.67	N/A	EXTERIOR GIRDER	200	SHEAR
HL-93 TANDEM (OPERATING)	2.02	N/A	EXTERIOR GIRDER	200	SHEAR
HL-93 TRUCK TRAIN (OPERATING)	1.70	N/A	EXTERIOR GIRDER	200	FLEXURE
HS-20 (OPERATING)	2.70	97.16	EXTERIOR GIRDER	200	SHEAR
DE S220 & LEGAL-LANE (LEGAL)	4.11	82.27	EXTERIOR GIRDER	206	FLEXURE
DE S335 & LEGAL-LANE (LEGAL)	2.32	81.31	EXTERIOR GIRDER	206	FLEXURE
DE S437 & LEGAL-LANE (LEGAL)	2.21	81.07	EXTERIOR GIRDER	206	FLEXURE
DE S330 & LEGAL-LANE (LEGAL)	3.01	90.34	EXTERIOR GIRDER	104	FLEXURE
DE S435 & LEGAL-LANE (LEGAL)	2.59	90.55	EXTERIOR GIRDER	104	FLEXURE
DE S540 & LEGAL-LANE (LEGAL)	2.29	91.66	EXTERIOR GIRDER	104	FLEXURE

NOTE: LOAD RATING INCLUDES FUTURE WEARING SURFACE AS NOTED IN THE PLANS.

BRIDGE NO. 1-436A INDEX OF SHEETS

SHEET NO.	DWG. NO.	TABLE OF CONTENTS
262	PN-01	PROJECT NOTES
263	QS-01	QUANTITY SUMMARY
264	TS-01	SUPERSTRUCTURE TYPICAL SECTION
265	PE-01	GENERAL PLAN AND ELEVATION
266	GR-01	GRADING PLAN
267	FT-01	GEOMETRIC AND FOOTING LAYOUT PLAN
268	WA-01	MSE WALL LAYOUT PLAN
269	PL-01	PILE LAYOUT PLAN
270	PL-02	PILE DETAILS
271	AB-01	ABUTMENT A PLAN AND ELEVATION
272	AB-02	MSE WALL AT ABUTMENT A
273	AB-03	ABUTMENT B PLAN AND ELEVATION
274	AB-04	MSE WALL AT ABUTMENT B
275	AB-05	ABUTMENT AND MSE WALL SECTIONS
276	AB-06	ABUTMENT A REINFORCEMENT DETAILS - 1
277	AB-07	ABUTMENT A REINFORCEMENT DETAILS - 2
278	AB-08	ABUTMENT B REINFORCEMENT DETAILS - 1
279	AB-09	ABUTMENT B REINFORCEMENT DETAILS - 2
280	AB-10	ABUTMENT REINFORCEMENT DETAILS
281	PR-01	PIER PLAN, ELEVATION AND SECTION
282	PR-02	PIER REINFORCEMENT DETAILS - 1
283	PR-03	PIER REINFORCEMENT DETAILS - 2
284	RB-01	SUBSTRUCTURE REINFORCEMENT LIST
285	BB-01	EXPANSION BEARING DETAILS - ABUTMENT A
286	BB-02	EXPANSION BEARING DETAILS - ABUTMENT B
287	BB-03	FIXED BEARING DETAILS - PIER
288	BM-01	GIRDER ELEVATION
289	BM-02	STRUCTURAL STEEL DETAILS - 1
290	BM-03	STRUCTURAL STEEL DETAILS - 2
291	BM-04	SPLICE DETAILS
292	CT-01	CAMBER DIAGRAM
293	FR-01	FRAMING PLAN
294	PS-01	DECK SLAB POURING SEQUENCE
295	SD-01	SUPERSTRUCTURE DETAILS
296	DK-01	DECK SLAB AND PARAPET REINFORCEMENT - SPAN 1
297	DK-02	DECK SLAB AND PARAPET REINFORCEMENT - SPAN 2
298	DK-03	DECK SLAB AND PARAPET REINFORCEMENT DETAILS
299	RB-02	SUPERSTRUCTURE REINFORCEMENT LIST
300	RE-01	FINISHED ROADWAY ELEVATIONS - SPAN 1
301	RE-02	FINISHED ROADWAY ELEVATIONS - SPAN 2
302	FD-01	FENCE DETAILS - 1
303	FD-02	FENCE DETAILS - 2
304	EX-01	ARMORED STRIP SEAL JOINT DETAILS
305	AS-01	APPROACH SLAB A AND SLEEPER SLAB A PLAN
306	AS-02	APPROACH SLAB A AND SLEEPER SLAB A REINFORCEMENT PLANS
307	AS-03	APPROACH SLAB B AND SLEEPER SLAB B PLAN
308	AS-04	APPROACH SLAB B AND SLEEPER SLAB B REINFORCEMENT PLANS
309	AS-05	APPROACH SLAB AND SLEEPER SLAB DETAILS - 1
310	AS-06	APPROACH SLAB AND SLEEPER SLAB DETAILS - 2
311	RB-03	APPROACH SLAB A AND SLEEPER SLAB A REINFORCEMENT LIST
312	RB-04	APPROACH SLAB B AND SLEEPER SLAB B REINFORCEMENT LIST
313	BO-01	BORING PROFILE

ITEM NO.	ITEM NAME	UNITS	QUANTITY
202505	Settlement Platform	EACH	4
202518	Settlement Monument	EACH	2
207000	Excavation and Backfill for Structures	C.Y.	1,436
302011	Delaware No. 3 Stone	TON	65
302012	Delaware No. 57 Stone	TON	150
602003	Portland Cement Concrete Masonry, Abutment Footing, Class A	C.Y.	130
602006	Portland Cement Concrete Masonry, Pier Footing, Class B	C.Y.	150
602007	Portland Cement Concrete Masonry, Pier Above Footing, Class A	C.Y.	122
602013	Portland Cement Concrete Masonry, Superstructure, Class D	C.Y.	429
602014	Portland Cement Concrete Masonry, Approach Slab, Class D	C.Y.	129
602015	Portland Cement Concrete Masonry, Abutment Above Footing, Class A	C.Y.	52
602017	Portland Cement Concrete Masonry, Parapet, Class A	C.Y.	90
602772	Mechanically Stabilized Earth Walls	L.S.	1
602794	Permanent Casing for Prestressed Concrete Pile, 24" Diameter	L.F.	167
603000	Bar Reinforcement	LBS	39,466
604000	Bar Reinforcement, Epoxy Coated	LBS	177,229
605001	Steel Structures	LBS	442,870
605512	Prefabricated Expansion Joint System 4"	L.F.	157
605581	Elastomeric Bearing Pads	EACH	4
605639	TFE Stainless Steel Structural Bearings	EACH	8
618062	Steel H Piles, HP 14x73	L.F.	927
618065	Steel H Test Piles, HP 14x73	L.F.	305
618081	Furnish Precast Prestressed Concrete Piles, 14" x 14"	L.F.	764
618091	Furnish Precast Prestressed Concrete Test Piles, 14" x 14"	L.F.	239
619042	Install Steel H Piles, HP 14x73	L.F.	927
619045	Install Steel H Test Piles, HP 14x73	L.F.	305
619061	Install Precast Prestressed Concrete Piles, 14" x 14"	L.F.	764
619067	Install Precast Prestressed Concrete Test Piles, 14" x 14"	L.F.	239
619501	Production Pile Restrike	EACH	3
619502	Test Pile Restrike	EA.DY.	1
619519	Dynamic Pile Testing by Contractor	EACH	10
619539	Signal Matching Analysis by Contractor	EACH	10
727507	Bridge Safety Fence	L.F.	664

NOTE:

THE QUANTITY SUMMARY INCLUDES QUANTITIES FOR BRIDGE 1-436A STANDARD ITEMS, PILE ALTERNATIVE 1 (14" PRESTRESSED CONCRETE PILES) ITEMS AND PILE ALTERNATIVE 2 (HP 14X73 PILES) ITEMS. ITEM NOS. 618081, 618091, 619061 AND 619067 ARE APPLICABLE TO PILE ALTERNATIVE 1. ITEM NOS. 618062, 618065, 619042 AND 619045 ARE APPLICABLE TO PILE ALTERNATIVE 2. ALL OTHER ITEMS ARE STANDARD ITEMS. SEE PILE NOTE 6 ON DWG. NO. PL-02 FOR ADDITIONAL INFORMATION REGARDING PILE ALTERNATIVES.

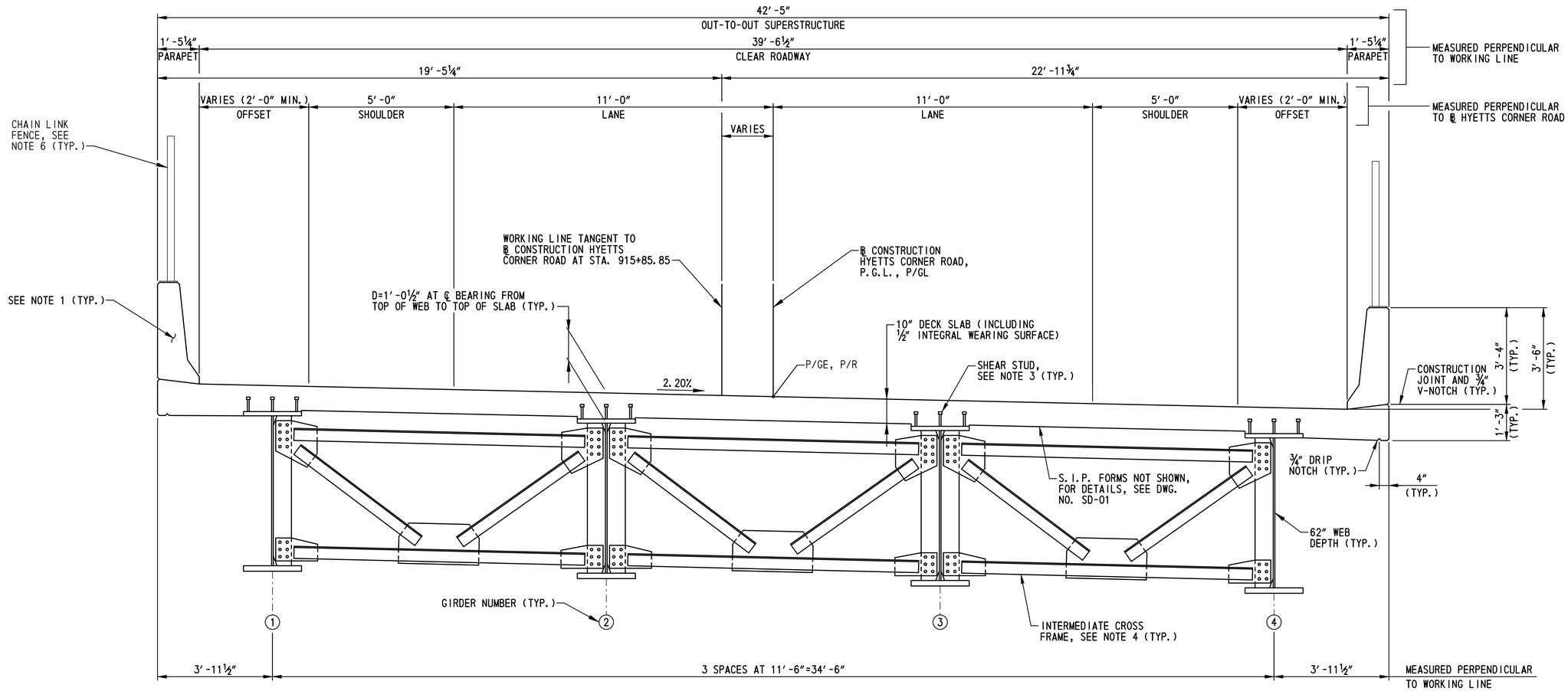

SUPERSTRUCTURE TYPICAL SECTION

SCALE: ½″=1′-0″

NOTES:

1. PARAPETS SHALL NOT BE SLIP FORMED. FOR PARAPET AND PARAPET REINFORCEMENT DETAILS, SEE DWG. NOS. DK-01 THRU DK-03.
2. FOR DECK SLAB REINFORCEMENT DETAILS, SEE DWG. NOS. DK-01 THRU DK-03.
3. FOR SHEAR STUD DETAILS AND SPACING, SEE DWG. NOS. SD-01 AND BM-01.
4. FOR CONNECTION PLATE, DIAPHRAGM AND CROSS FRAME DETAILS AND SPACING, SEE DWG. NOS. BM-02, BM-03 AND FR-01.
5. FOR GIRDER ELEVATION, SEE DWG. NO. BM-01.
6. FOR CHAIN LINK FENCE DETAILS, SEE DWG. NOS. FD-01 AND FD-02.
7. FOR SUPERSTRUCTURE DETAILS, SEE DWG. NO. SD-01.

BR1-5
TS-01

DELAWARE DEPARTMENT OF TRANSPORTATION	ADDENDUMS / REVISIONS	SCALE: AS NOTED	US 301, SR 896 TO SR 1	CONTRACT T200911308	BRIDGE NO. 1-436A	SUPERSTRUCTURE TYPICAL SECTION	SHEET NO. 264
				COUNTY NEW CASTLE	DESIGNED BY: W.T.R.		TOTAL SHTS. 875
					CHECKED BY: B.K.B.		

N:\31653-000\CONTRACT 1A\CADD\Bridge\Br_No5\TS01_br1-5.dgn
7/2/2015 1:46:05 PM

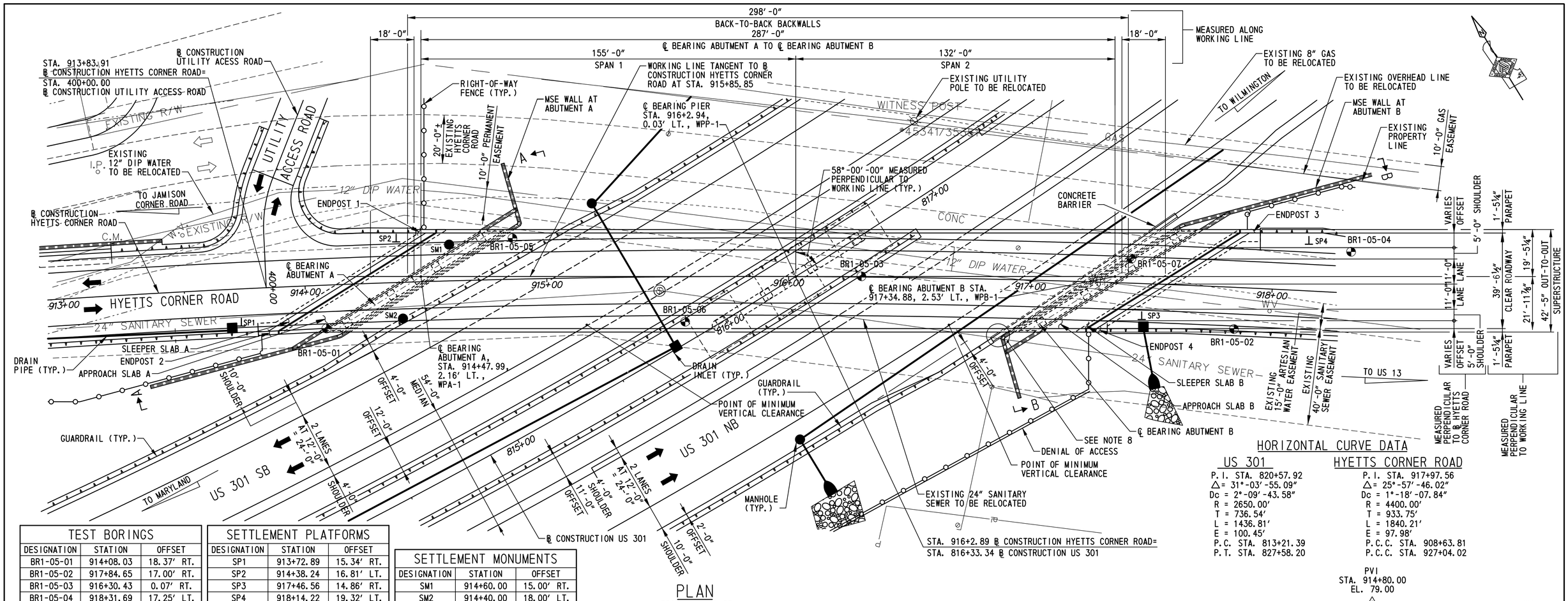

PLAN

SCALE: 1″=20′-0″

TEST BORINGS		
DESIGNATION	STATION	OFFSET
BR1-05-01	914+08.03	18.37′ RT.
BR1-05-02	917+84.65	17.00′ RT.
BR1-05-03	916+30.43	0.07′ RT.
BR1-05-04	918+31.69	17.25′ LT.
BR1-05-05	914+85.93	17.15′ LT.
BR1-05-06	915+57.07	18.62′ RT.
BR1-05-07	917+41.35	10.15′ LT.

FOR BORING PROFILES, SEE DWG. NO. BO-01.

SETTLEMENT PLATFORMS		
DESIGNATION	STATION	OFFSET
SP1	913+72.89	15.34′ RT.
SP2	914+38.24	16.81′ LT.
SP3	917+46.56	14.86′ RT.
SP4	918+14.22	19.32′ LT.

SETTLEMENT MONUMENTS		
DESIGNATION	STATION	OFFSET
SM1	914+60.00	15.00′ RT.
SM2	914+40.00	18.00′ LT.

FOR SETTLEMENT MONUMENT AND SETTLEMENT PLATFORM DETAILS, SEE DWG. NO. WA-01.
FOR SETTLEMENT MONITORING REQUIREMENTS, SEE THE SPECIAL PROVISIONS.

HORIZONTAL CURVE DATA

US 301	HYETTS CORNER ROAD
P.I. STA. 820+57.92	P.I. STA. 917+97.56
Δ= 31°-03′-55.09″	Δ= 25°-57′-46.02″
Dc = 2°-09′-43.58″	Dc = 1°-18′-07.84″
R = 2650.00′	R = 4400.00′
T = 736.54′	T = 933.75′
L = 1436.81′	L = 1840.21′
E = 100.45′	E = 97.98′
P.C. STA. 813+21.39	P.C.C. STA. 908+63.81
P.T. STA. 827+58.20	P.C.C. STA. 927+04.02

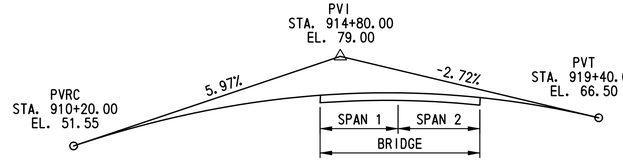

VERTICAL CURVE DATA
HYETTS CORNER ROAD

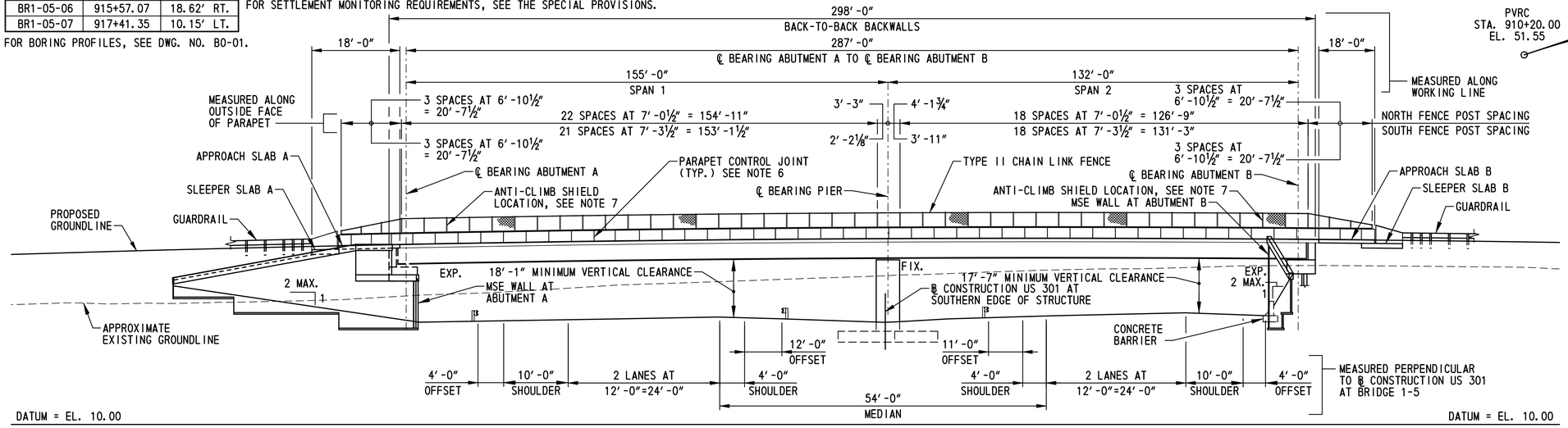

ELEVATION

SCALE: 1″=20′-0″

NOTES:

1. FOR DEVELOPED ELEVATIONS A-A AND B-B, SEE DWG. NOS. AB-02 AND AB-04.
2. EXISTING AND PROPOSED CONTOURS NOT SHOWN IN PLAN FOR CLARITY. FOR EXISTING AND PROPOSED CONTOURS, SEE DWG. NO. GR-01.
3. ALL UTILITIES ARE TO BE RELOCATED PRIOR TO BRIDGE CONSTRUCTION. SEE PROJECT NOTE 18 FOR ADDITIONAL INFORMATION.
4. PILE FOUNDATION AT ABUTMENT A NOT SHOWN IN ELEVATION FOR CLARITY. FOR PILE FOUNDATIONS SEE DWG. NO. PL-01. ABUTMENT A AND ABUTMENT B ARE SUPPORTED ON DEEP FOUNDATIONS WHILE THE PIER IS SUPPORTED ON A SHALLOW FOUNDATION.
5. FOR DRAIN INLET, DRAIN PIPE AND MANHOLE INFORMATION, SEE DWG. NO. CP-21.
6. PLACE PARAPET CONTROL JOINTS CENTERED BETWEEN FENCE POSTS. SEE DWG. NO. FD-01 FOR DETAILS. REFLECTORS SHALL BE INSTALLED ALONG EACH PARAPET. SEE DWG. NO. DT-17 FOR DETAILS.
7. LOCATE ANTI-CLIMB SHIELD AT SIXTH FENCE POST FROM THE END OF THE FENCE AT EACH CORNER OF THE STRUCTURE.
8. TAPER CONCRETE BARRIER FOOTING FROM 2′-7″ (FULL WIDTH) TO 2′-5″ TO FACILITATE MSE WALL CONSTRUCTION.

BR1-5
PE-01

DELAWARE DEPARTMENT OF TRANSPORTATION

ADDENDUMS / REVISIONS

SCALE: AS NOTED

US 301, SR 896 TO SR 1

CONTRACT	BRIDGE NO.	1-436A
T200911308	DESIGNED BY: W.T.R.	
COUNTY		
NEW CASTLE	CHECKED BY: B.K.B.	

GENERAL PLAN AND ELEVATION

SHEET NO. 265
TOTAL SHTS. 875

N:\31653-000\CONTRACT 1A\CADD\Bridge\Br_No5\PE01_br1-5.dgn
4/28/2015 11:21:42 AM

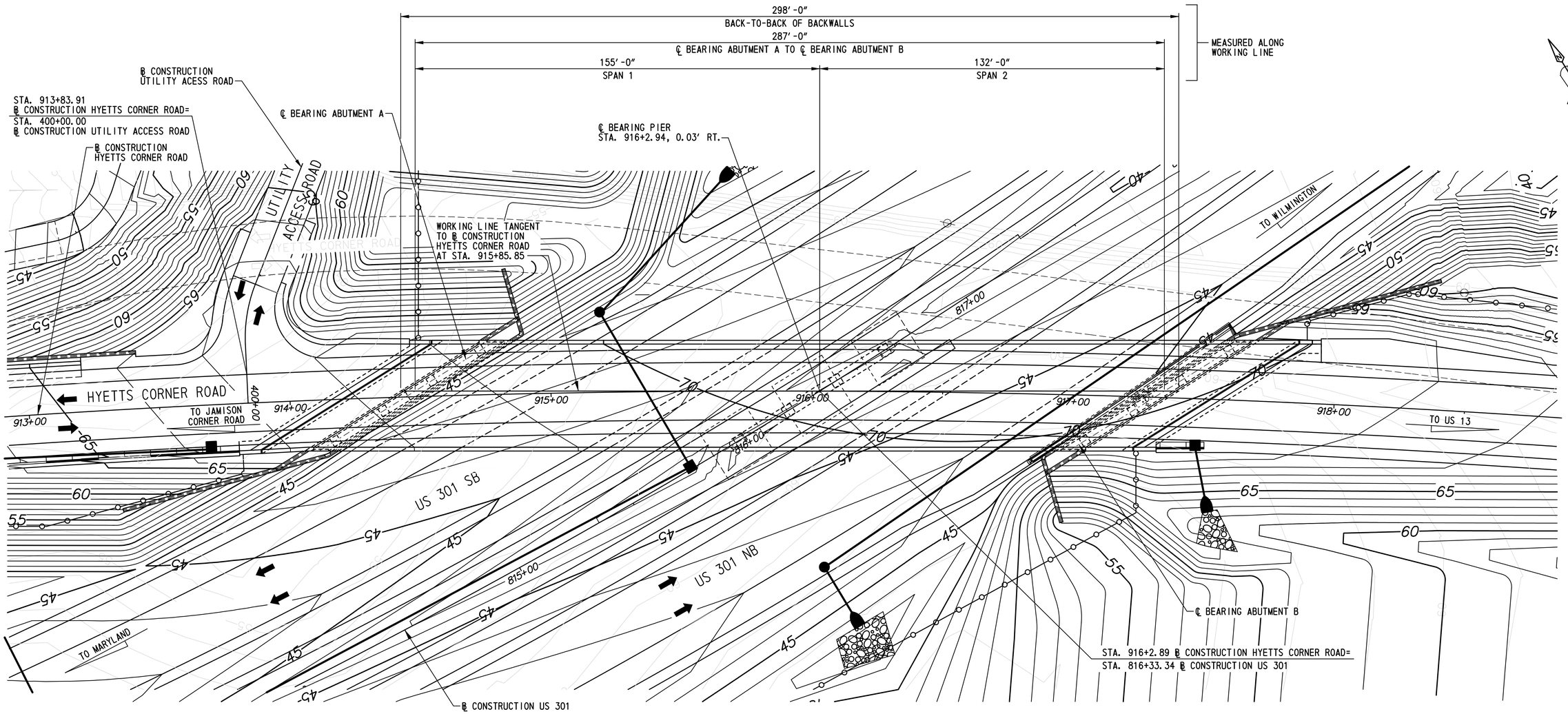

PLAN
SCALE: 1/4"=1'-0"

NOTE:
FOR ADDITIONAL INFORMATION, SEE DWG. NO. PE-01.

N:\31653-000\CONTRACT 1A\CADD\Bridge\Br_No5\GR01_br1-5.dgn
10/24/2012 12:49:54 PM

DELAWARE DEPARTMENT OF TRANSPORTATION	ADDENDUMS / REVISIONS	SCALE: AS NOTED	US 301, SR 896 TO SR 1	CONTRACT T200911308	BRIDGE NO. 1-436A	GRADING PLAN	BR1-5 GR-01
				COUNTY NEW CASTLE	DESIGNED BY: W.T.R.		SHEET NO. 266
					CHECKED BY: B.K.B.		TOTAL SHTS. 875

HORIZONTAL CURVE DATA

US 301

P.I. STA. 820+57.92
△= 31°-03′-55.09″
Dc = 2°-09′-43.58″
R = 2650.00′
T = 736.54′
L = 1436.81′
E = 100.45′
P.C. STA. 813+21.39
P.T. STA. 827+58.20

HYETTS CORNER ROAD

P.I. STA. 917+97.56
△= 25°-57′-46.02″
Dc = 1°-18′-07.84″
R = 4400.00′
T = 933.75′
L = 1840.21′
E = 97.98′
P.C.C. STA. 908+63.81
P.C.C. STA. 927+04.02

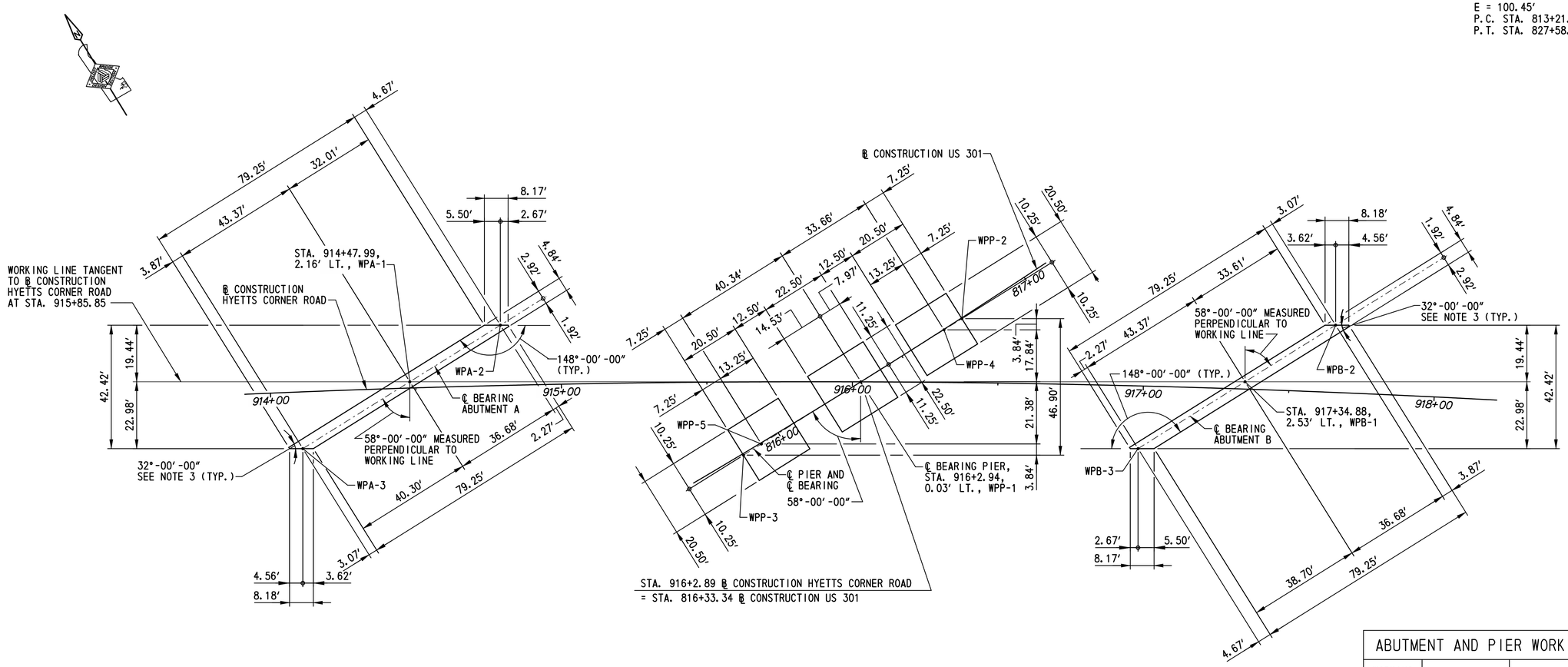

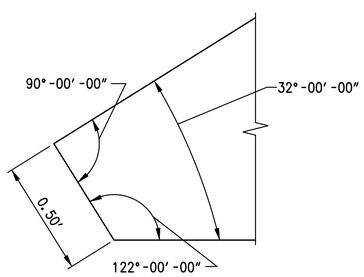

DETAIL A

SCALE: 3″=1′-0″

GEOMETRIC AND FOOTING LAYOUT PLAN

SCALE: 1″=20′-0″

ABUTMENT AND PIER WORKING POINT LOCATION CHART

WORKING POINT	STATION	OFFSET	NORTHING	EASTING
WPA-1	914+47.99	2.16′ LT.	555354.9699	586482.5633
WPA-2	914+79.54	20.73′ LT.	555355.3195	586519.2397
WPA-3	914+10.34	19.50′ RT.	555354.5566	586439.1997
WPB-1	917+34.88	2.53′ LT.	555205.2095	586727.3922
WPB-2	917+65.15	23.11′ LT.	555205.5591	586764.0681
WPB-3	916+98.73	21.54′ RT.	555204.7961	586684.0281
WPP-1	916+2.94	0.03′ LT.	555274.0882	586614.7258
WPP-2	916+37.37	21.98′ LT.	555274.4787	586655.6922
WPP-3	915+62.44	25.16′ RT.	555273.6352	586567.1962
WPP-4	916+31.30	18.07′ LT.	555274.4096	586648.4425
WPP-5	915+68.64	21.35′ RT.	555273.7043	586574.4458

NOTES:

1. FOR PILE LAYOUT PLAN, SEE DWG. NO. PL-01.
2. MSE WALL AT ABUTMENTS NOT SHOWN FOR CLARITY. FOR MSE WALL LAYOUT PLANS, SEE DWG. NO. WA-01.
3. FOR REQUIREMENTS OF ACUTE CORNER OF ABUTMENT, SEE DETAIL A ON THIS SHEET.

BR1-5
FT-01

DELAWARE DEPARTMENT OF TRANSPORTATION

ADDENDUMS / REVISIONS

SCALE: AS NOTED

US 301, SR 896 TO SR 1

CONTRACT	BRIDGE NO.	1-436A
T200911308	DESIGNED BY: W.T.R.	
COUNTY		
NEW CASTLE	CHECKED BY: B.K.B.	

GEOMETRIC AND FOOTING LAYOUT PLAN

SHEET NO. 267
TOTAL SHTS. 875

m:\31653-000\contract 1a\cadd\bridge\Br_No5\FT01_br1-5.dgn
10/24/2012 11:50:53 AM

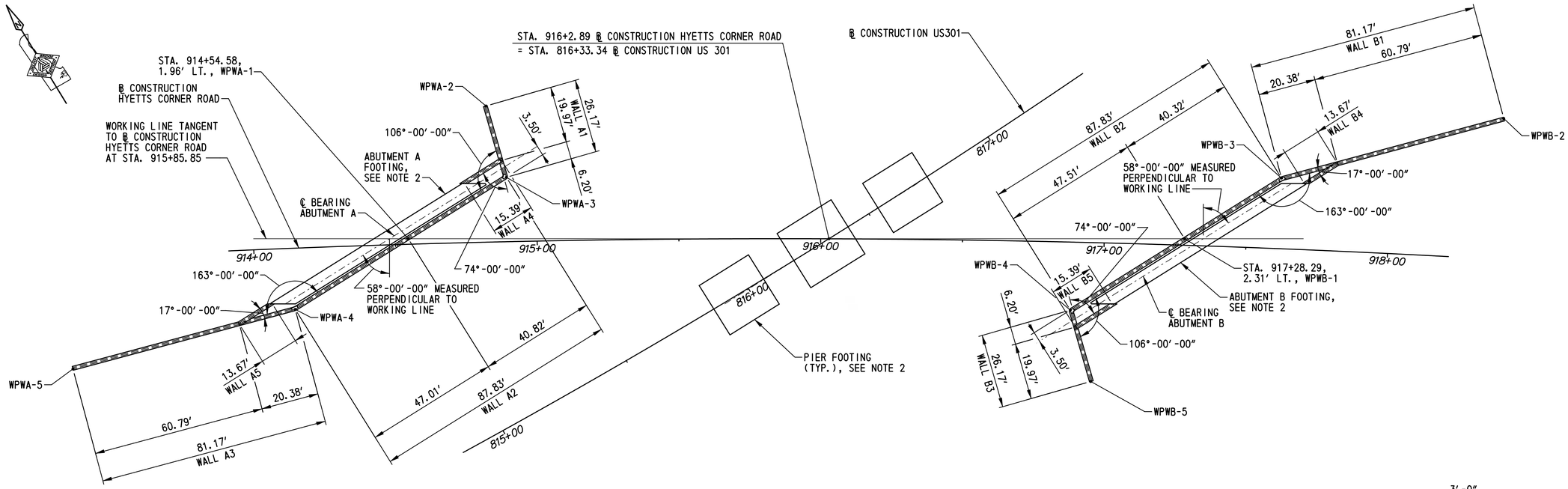

MSE WALL LAYOUT PLAN

SCALE: 1″=20′-0″

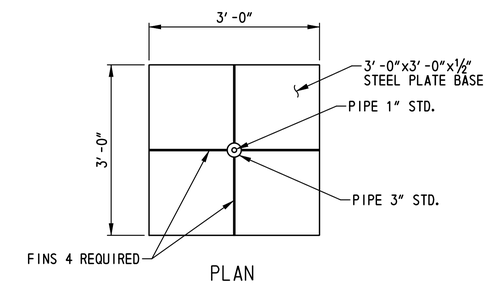

PLAN

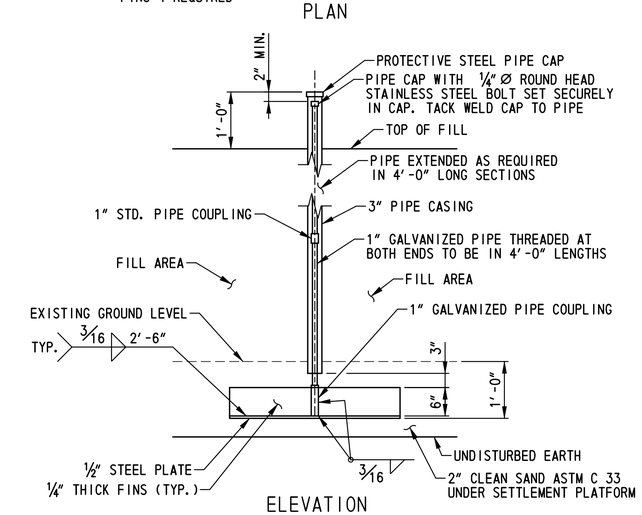

ELEVATION

SETTLEMENT PLATFORM DETAILS

SCALE: ¾″=1′-0″

MSE WALL WORKING POINT LOCATION CHART				
WORKING POINT	STATION	OFFSET	NORTHING	EASTING
WPWA-1	914+54.58	1.96′ LT.	555351.5234	586488.1976
WPWA-2	914+83.06	48.00′ LT.	555377.1331	586535.9911
WPWA-3	914+89.65	22.69′ LT.	555351.9125	586529.0187
WPWA-4	914+13.79	21.56′ RT.	555351.0754	586441.1893
WPWA-5	913+33.92	38.77′ RT.	555374.0664	586363.3430
WPWB-1	917+28.29	2.31′ LT.	555208.6559	586721.7579
WPWB-2	918+38.23	49.69′ LT.	555186.0487	586839.9265
WPWB-3	917+61.58	24.90′ LT.	555209.0402	586762.0785
WPWB-4	916+88.61	23.98′ RT.	555208.2031	586674.2492
WPWB-5	916+96.50	48.95′ RT.	555182.9833	586677.2770

NOTES:

1. DIMENSIONS SHOWN FOR MSE WALL ARE MEASURED WORKING POINT TO WORKING POINT ALONG FRONT FACE OF MSE WALL.
2. FOR ABUTMENT AND PIER FOOTING LAYOUT PLANS, SEE DWG. NO. FT-01.
3. SEE DWG. NO. PE-01 FOR SETTLEMENT PLATFORM AND SETTLEMENT MONUMENT LOCATIONS.

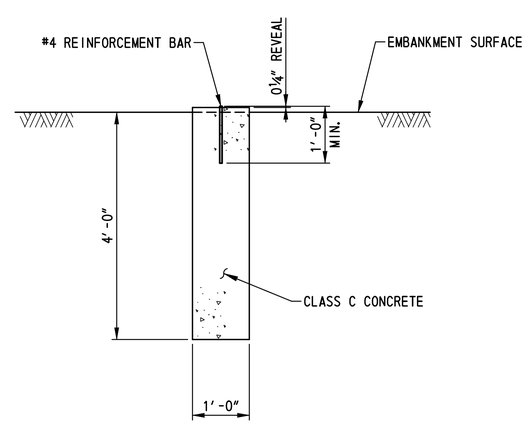

SETTLEMENT MONUMENT DETAIL

SCALE: ¾″=1′-0″

N:\33653-000\CONTRACT 1A\CADD\Bridge\Br_No5\WA01_br1-5.dgn
4/28/2015 12:07:29 PM

DELAWARE DEPARTMENT OF TRANSPORTATION	ADDENDUMS / REVISIONS	SCALE: AS NOTED	US 301, SR 896 TO SR 1	CONTRACT T200911308	BRIDGE NO. 1-436A	MSE WALL LAYOUT PLAN	BR1-5 WA-01
				COUNTY NEW CASTLE	DESIGNED BY: W.T.R.		SHEET NO. 268
					CHECKED BY: B.K.B.		TOTAL SHTS. 875

PILE TIP DATA TABLE, SEE PILE NOTE 6					
SUBSTRUCTURE UNIT	DESIGN DATA			ACTUAL FIELD DATA	
	MINIMUM TIP ELEVATION	14" SQ. P.C.P. ESTIMATED TIP ELEVATION	HP 14x73 S.P. ESTIMATED TIP ELEVATION	AVERAGE ACTUAL MINIMUM TIP ELEVATION	AVERAGE ACTUAL MAXIMUM TIP ELEVATION
ABUTMENT A	12.0	2.0	-15.0		
ABUTMENT B	5.0	5.0	-1.0		

ABUTMENT A PILE DRIVING INFORMATION
PILE SIZE AND TYPE:
ACTUAL BEARING OBTAINED:
HAMMER TYPE:
PILE HAMMER ENERGY: 45,000 LB-FT TO 75,000 LB-FT
SPECIAL DRIVING CONDITIONS AND COMMENTS:

ABUTMENT B PILE DRIVING INFORMATION
PILE SIZE AND TYPE:
ACTUAL BEARING OBTAINED:
HAMMER TYPE:
PILE HAMMER ENERGY: 45,000 LB-FT TO 75,000 LB-FT
SPECIAL DRIVING CONDITIONS AND COMMENTS:

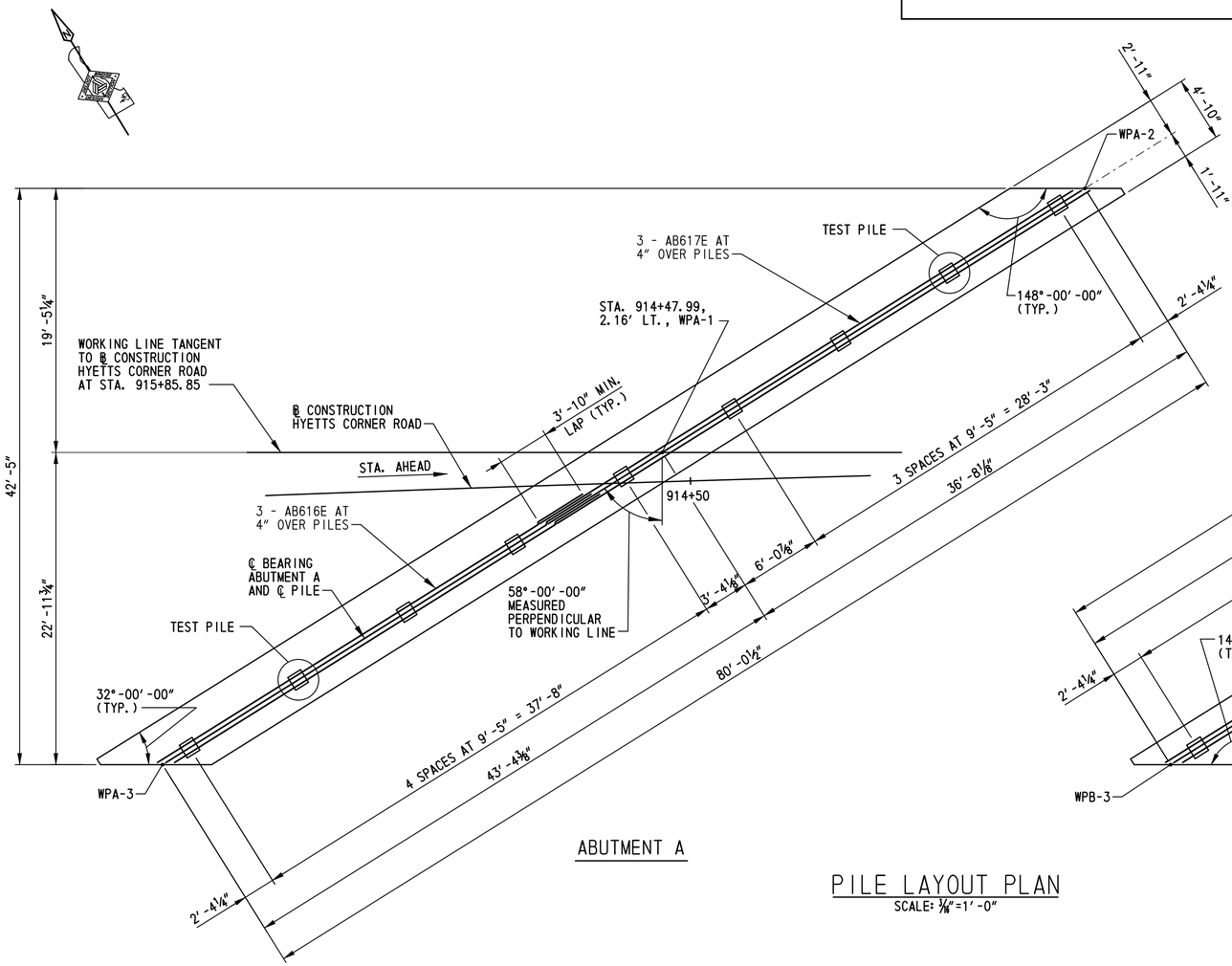

ABUTMENT A

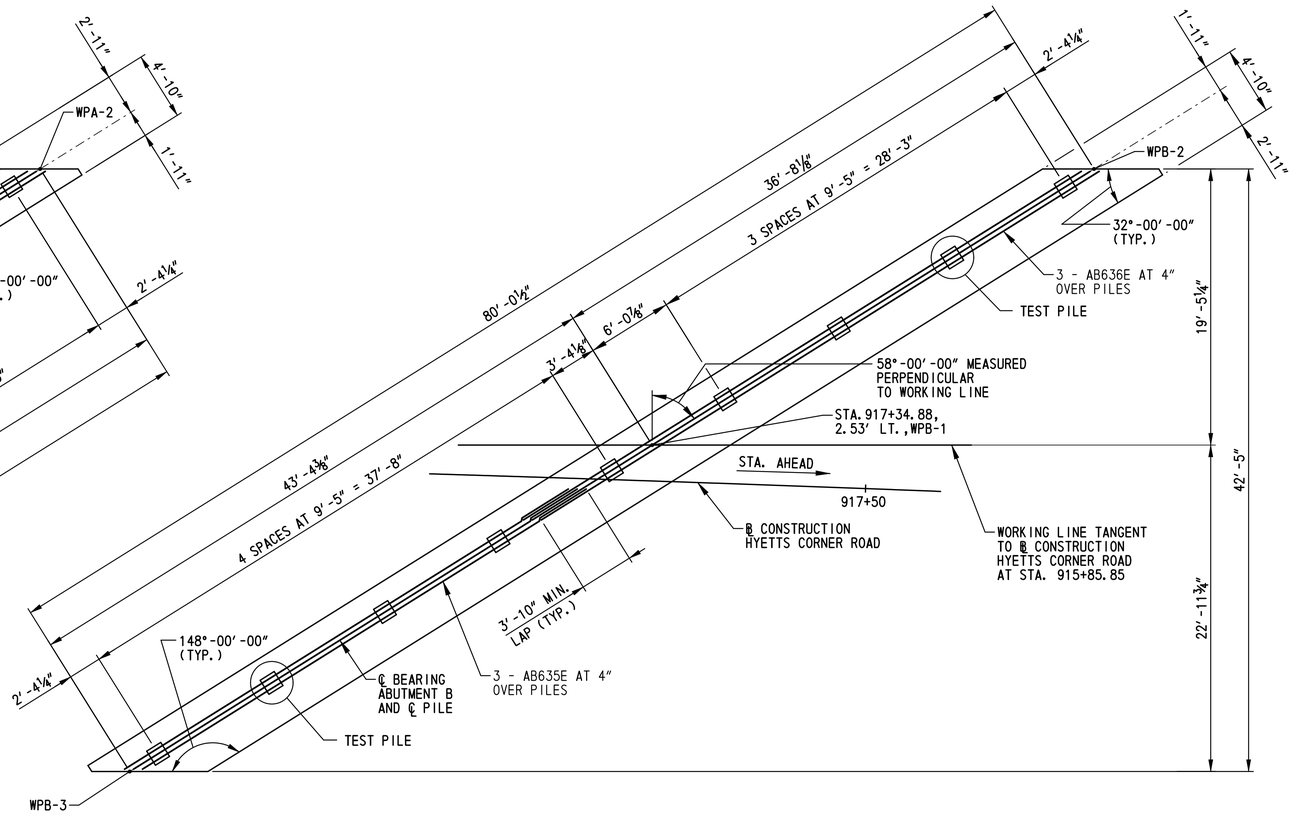

ABUTMENT B

PILE LAYOUT PLAN

SCALE: 1/16"=1'-0"

PILE LEGEND:

1. □ DENOTES PLUMB 14" SQUARE PRESTRESSED CONCRETE PILE, SEE PILE NOTE 6 ON DWG. NO. PL-02
2. (□) DENOTES LOCATION OF 14" SQUARE PRESTRESSED CONCRETE PILE, DYNAMIC PILE TESTING AND SIGNAL MATCHING ANALYSIS, SEE PILE NOTE 6 ON DWG. NO. PL-02

PILE INSTALLATION SEQUENCE OF CONSTRUCTION:

1. PILE CASINGS SHALL BE INSTALLED DURING INSTALLATION OF THE MSE WALL SELECT BACKFILL AND REINFORCEMENT TO THE ELEVATION OF THE BOTTOM OF THE ABUTMENT STEMS. AT ABUTMENT B PILE CASINGS SHALL BE INSTALLED BELOW THE BOTTOM OF THE MSE WALL TO AN ELEVATION OF 22.0 TO GET BELOW AN EXISTING GRAVEL LAYER.
2. CONSTRUCT MSE WALLS, INCLUDING WIRE FACED MSE WALLS AT REAR FACES OF ABUTMENT STEMS AND BACKWALLS, TO THE REQUIRED ELEVATIONS. A SETTLEMENT WAITING PERIOD OF 60 DAYS IS REQUIRED AFTER THIS CONSTRUCTION.
3. AFTER COMPLETION OF THE SETTLEMENT WAITING PERIOD AS DETERMINED BY THE ENGINEER BASED ON THE INSTRUMENTATION, THE PILES SHALL BE SET AND CENTERED IN THE CASINGS.
4. PILES SHALL BE INSTALLED TO THE MINIMUM TIP ELEVATION AND REQUIRED NOMINAL RESISTANCE SPECIFIED. FOR PILE RESTRIKE REQUIREMENTS SEE SPECIAL PROVISIONS.
5. AFTER PILE INSTALLATION/DRIVING IS COMPLETE, THE CASING SHALL BE FILLED WITH SAND.
6. TEST PILES MAY BE DRIVEN PRIOR TO PLACING EMBANKMENT AND SURCHARGE MATERIAL. RESTRIKES OF THESE TEST PILES SHALL BE PERFORMED PRIOR TO PLACING EMBANKMENT IN ACCORDANCE WITH ITEM 619502 - TEST PILE RESTRIKE. AFTER THE EMBANKMENT HAS BEEN PLACED, SETTLEMENT HAS BEEN ACHIEVED AND THE SUBSTRUCTURE HAS BEEN RELEASED BY THE ENGINEER, THE TEST PILE SHALL BE ACTING AS A PRODUCTION PILE AND IT SHALL BE RE-STRUCK PRIOR TO PLACING ANY OTHER PRODUCTION PILES WITH PAYMENT UNDER ITEM 619501 - PRODUCTION PILE RESTRIKE. ONCE THE TEST PILE HAS BEEN ACCEPTED, THE REMAINING PRODUCTION PILES MAY BE INSTALLED.

NOTE:

1. FOR PILE NOTES AND DETAILS, SEE DWG. NO. PL-02.

BR1-5
PL-01

N:\31653-000\CONTRACT 1A\CADD\Bridge\Br_No5\PL01_Br1-5.dgn
7/22/2015 2:11:05 PM

DELAWARE DEPARTMENT OF TRANSPORTATION	ADDENDUMS / REVISIONS	SCALE: AS NOTED	US 301, SR 896 TO SR 1	CONTRACT T200911308	BRIDGE NO. 1-436A	PILE LAYOUT PLAN	SHEET NO. 269
				COUNTY NEW CASTLE	DESIGNED BY: W.T.R.		TOTAL SHTS. 875
					CHECKED BY: B.K.B.		

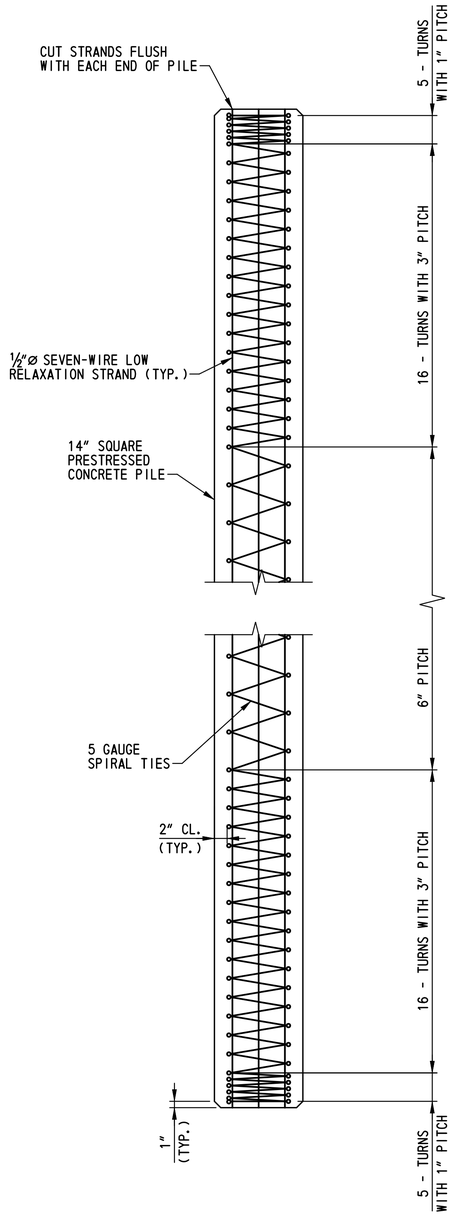

PILE ELEVATION

SCALE: 1"=1'-0"

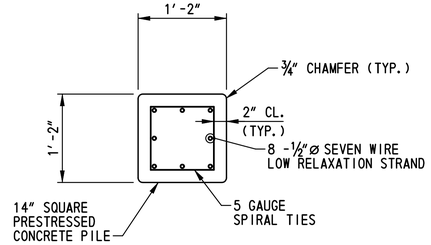

PILE TYPICAL SECTION

SCALE: 1"=1'-0"

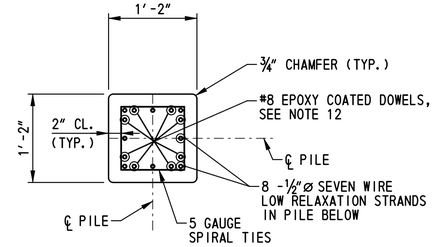

BUILD-UP TYPICAL SECTION

SCALE: 1"=1'-0"

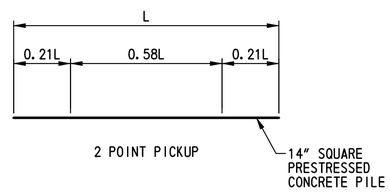

PILE PICKUP DATA

NOT TO SCALE

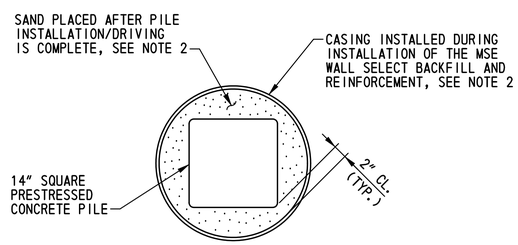

PILE CASING DETAIL

SCALE: 1"=1'-0"

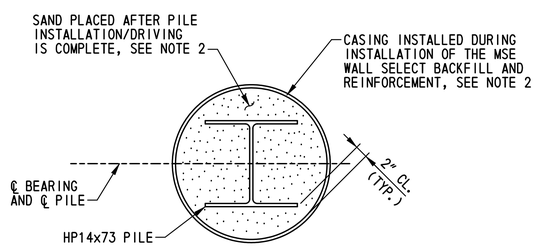

SCALE: AS NOTED

STEEL PILE ALTERNATIVE CASING DETAIL

SCALE: 1"=1'-0"

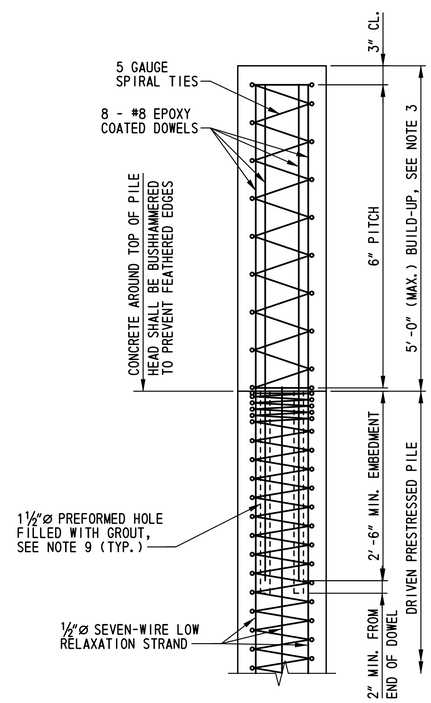

BUILD-UP WITHOUT DRIVING

SCALE: 1"=1'-0"

PILE NOTES:

1. THE FACTORED RESISTANCE OF THE 14" SQUARE PRESTRESSED CONCRETE PILING IS 100 TONS AT ABUTMENT A AND 85 TONS AT ABUTMENT B. PILES SHALL BE DRIVEN AND TESTED IN ACCORDANCE WITH THE SPECIAL PROVISION FOR DYNAMIC PILE TESTING TO A NOMINAL CAPACITY OF 155 TONS AT ABUTMENT A AND 135 TONS AT ABUTMENT B.

2. PILES SHALL BE DRIVEN TO THE DRIVING CRITERIA DEVELOPED FROM DYNAMIC PILE TESTING AND SPECIFIED BY THE ENGINEER TO ACHIEVE A NOMINAL RESISTANCE OF 155 TONS AT ABUTMENT A, 135 TONS AT ABUTMENT B AND TO THE SPECIFIED MINIMUM TIP ELEVATION. PILES MEETING THE AFOREMENTIONED CRITERIA WILL BE CONSIDERED SATISFACTORY.

3. DYNAMIC PILE TESTING SHALL BE PERFORMED AFTER CONSTRUCTION OF THE MSE WALL AND COMPLETION OF THE SETTLEMENT WAITING PERIOD AS DETERMINED BY THE ENGINEER, BASED ON THE RESULTS OF INSTRUMENTATION. THE CONTRACTOR SHALL BE RESPONSIBLE FOR SUBMITTING A WAVE EQUATION ANALYSIS AND ALL OTHER INCIDENTALS IN ACCORDANCE WITH THE SPECIAL PROVISIONS. THE WAVE EQUATION ANALYSIS AND DYNAMIC PILE TESTING MUST BE SIGNED AND SEALED BY A PROFESSIONAL ENGINEER LICENSED IN THE STATE OF DELAWARE IN ACCORDANCE WITH THE SPECIAL PROVISIONS. UPON COMPLETION OF THE DYNAMIC PILE TESTING THE CONTRACTOR SHALL SUBMIT A SIGNAL MATCHING ANALYSIS TO THE ENGINEER FOR REVIEW AND APPROVAL IN ACCORDANCE WITH THE SPECIAL PROVISIONS.

4. ALL TEST PILES SHALL BE 10 FEET LONGER THAN THE PILE LENGTH COMPUTED FROM THE PILE TIP DATA TABLE. PILE LENGTHS FOR ORDERING PURPOSES SHALL BE DETERMINED BY THE TEST PILES. DYNAMIC PILE TESTING AND SIGNAL MATCHING ANALYSIS SHALL BE COMPLETED BY THE CONTRACTOR IN ACCORDANCE WITH THE SPECIAL PROVISIONS. TEST AND PRODUCTION PILE RESTRIKES WILL BE PAID FOR AS FOLLOWS:

   A. ALL TEST PILES WILL BE RESTRUCK AFTER A WAITING PERIOD OF AT LEAST 48 HOURS. TEST PILE RESTRIKES SHALL BE INCIDENTAL TO THE INITIAL INSTALLATION OF THE PILE PROVIDED THEY ARE REQUESTED WITHIN FIVE WORKING DAYS FROM THE COMPLETION OF THE INITIAL DRIVE. IF RESTRIKES ARE REQUESTED AFTER FIVE WORKING DAYS FROM THE COMPLETION OF THE INITIAL DRIVE THEN THE TEST PILE RESTRIKE SHALL BE PAID FOR IN ACCORDANCE WITH THE SPECIAL PROVISIONS.

   B. IF DIRECTED BY THE ENGINEER TO RESTRIKE A PRODUCTION PILE, THE RESTRIKE OF THE PRODUCTION PILE SHALL BE PAID SEPARATELY UNDER ITEM NO. 619501 - PRODUCTION PILE RESTRIKE.

   THE DEPARTMENT RESERVES THE RIGHT TO PERFORM DYNAMIC PILE TESTING OF RESTRIKES.

5. SEE DWG. NO. PE-01 FOR SETTLEMENT PLATFORM AND MONUMENT LOCATIONS. READINGS ON THE SETTLEMENT PLATFORMS SHALL BE MADE AFTER THE INITIAL INSTALLATION OF THE RISER AND CASING PIPES AND INSTALLATION RECORD SHEETS ARE APPROVED BY THE ENGINEER AND PRIOR TO FILL PLACEMENT. DURING FILL PLACEMENT, READINGS ON ALL SETTLEMENT PLATFORMS SHALL BE TAKEN AT A MINIMUM OF 3 CALENDAR DAY INTERVALS. AFTER COMPLETION OF THE FILL AND SURCHARGE PLACEMENT, INSTALL SETTLEMENT MONUMENTS IF INDICATED ON THE BRIDGE PLANS AND TAKE INITIAL READINGS. READINGS ON ALL SETTLEMENT MONITORING DEVICES SHALL THEN BE TAKEN AT A MINIMUM OF 3 CALENDAR DAY INTERVALS. IF THE SETTLEMENT HAS CEASED ON ALL MONITORED SETTLEMENT MONITORING DEVICES IN THE VICINITY OF THE SUBSTRUCTURE UNIT BY CALENDAR DAY 6, THAT IS THREE READINGS, AFTER THE COMPLETION OF THE FILL, SURCHARGE AND SETTLEMENT MONUMENT PLACEMENT, THE SUBSTRUCTURE WILL BE RELEASED BY THE ENGINEER FOR REMOVAL OF THE SURCHARGE AND INSTALLATION OF PRODUCTION PILES WITHIN THREE WORKING DAYS OF RECEIPT OF SETTLEMENT MONITORING RESULTS. AFTER COMPLETION OF THE ABUTMENT AND MSE WALL PANEL PLACEMENT, THE CONTRACTOR SHALL ESTABLISH REFERENCE POINTS TO MONITOR SETTLEMENT ON TOP OF THE ABUTMENT SEAT AND EITHER ON TOP OF THE MSE WALL PANELS OR ON TOP OF THE MSE WALL LEVELING PAD AT POINTS WITHIN FIVE FEET OF ALL ENDS AND CORNERS AND AT THE CENTER OF BRIDGES AND THE CENTERLINE OF US301. AFTER THE CONCRETE ABUTMENTS HAVE BEEN CONSTRUCTED AND THE MSE WALL PANELS HAVE BEEN PLACED, READINGS ON ALL SETTLEMENT MONITORING DEVICES AND REFERENCE POINTS SHALL CONTINUE TO BE TAKEN AT A MINIMUM OF 30-DAY INTERVALS FOR THE NEXT 6 MONTHS OR AS DIRECTED BY THE ENGINEER. SEE SPECIAL PROVISIONS FOR ADDITIONAL SETTLEMENT MONITORING REQUIREMENTS.

6. THROUGHOUT THE PLANS 14" PRESTRESSED CONCRETE PILES ARE DEPICTED. THE CONTRACTOR HAS THE OPTION TO INSTALL HP 14x73 STEEL PILES AS AN ALTERNATIVE TO THE 14" PRESTRESSED CONCRETE PILES SHOWN. THE HP 14x73 STEEL PILES SHALL BE INSTALLED IN THE SAME LOCATIONS AS THE 14" PRESTRESSED CONCRETE PILES. PILE NOTES 1 THRU 4 ARE APPLICABLE TO THE HP 14x73 STEEL PILE ALTERNATIVE. THE PILE INSTALLATION SEQUENCE OF CONSTRUCTION IS APPLICABLE TO THE HP 14x73 STEEL PILE ALTERNATIVE WITH THE EXCEPTION OF THE PORTION OF SEQUENCE OF CONSTRUCTION NOTE 1 THAT PERTAINS TO THE INSTALLATION OF CASING BELOW THE GRAVEL LAYER. THE ESTIMATED PILE TIP ELEVATION FOR THE HP 14x73 STEEL PILES IS SHOWN IN THE PILE TIP DATA TABLE ON DWG. NO. PL-01. FOR ORIENTATION OF THE HP 14x73 STEEL PILES, SEE DETAIL THIS SHEET.

7. ONLY ONE PILE TYPE SHALL BE USED FOR THIS STRUCTURE.

8. FOR PILE SEQUENCE OF CONSTRUCTION, SEE DWG. NO. PL-01.

9. PROVIDE 1½" DIAMETER PREFORMED HOLES IN PILE HEAD AT THE DOWEL LOCATIONS. DOWELS SHALL BE GROUTED INTO PLACE WITH AN APPROVED EPOXY GROUT. PRIOR TO THE GROUTING PROCEDURE, PREFORMED HOLES SHALL REMAIN PLUGGED TO ENSURE THAT WATER AND FOREIGN MATERIAL DOES NOT ENTER THE PREFORMED HOLES. HOLES SHALL BE GROUTED WHEN THE PILE BUILD-UP IS NOT NEEDED.

10. MINIMUM COMPRESSIVE STRENGTH OF EPOXY GROUT SHALL BE f'c=6,000 PSI.

11. THE COMPRESSIVE STRENGTH OF THE PILE BUILD-UP SHALL BE f'c=6,000 PSI.

12. DOWEL HOLES SHALL BE POSITIONED TO MAINTAIN A 1" CLEAR DISTANCE FROM ALL PRESTRESSING STRANDS IN THE PILE.

NOTES:

1. FOR ADDITIONAL PILE INFORMATION, SEE DWG. NO. PL-01.

2. PAYMENT FOR INSTALLATION OF CASING AND SAND ABOVE THE BOTTOM OF MSE WALL ELEVATION AT THE FRONT OF THE ABUTMENTS WILL BE INCIDENTAL TO ITEM NO. 602772 - MECHANICALLY STABILIZED EARTH WALLS. PAYMENT FOR INSTALLATION OF CASING AND SAND BELOW THE BOTTOM OF MSE WALL ELEVATION REQUIRED AT ABUTMENT B (14" PRESTRESSED CONCRETE PILE ALTERNATIVE ONLY) WILL BE MADE UNDER ITEM 602794 - PERMANENT CASING FOR PRESTRESSED CONCRETE PILE, 24" DIAMETER.

3. THE CAST-IN-PLACE CONCRETE PILE BUILD-UP SHALL BE USED WHERE PILES MUST BE DRIVEN TO AN ELEVATION WHICH RESULTS IN THE TOP OF PILE BEING LOWER THAN THE BOTTOM OF CAP TO ACHIEVE THE REQUIRED NOMINAL RESISTANCE. PILE BUILD-UP WILL BE MEASURED AND PAID FOR IN CONFORMANCE WITH SECTION 618 OF THE DELAWARE DEPARTMENT OF TRANSPORTATION STANDARD SPECIFICATIONS.

BR1-5
PL-02

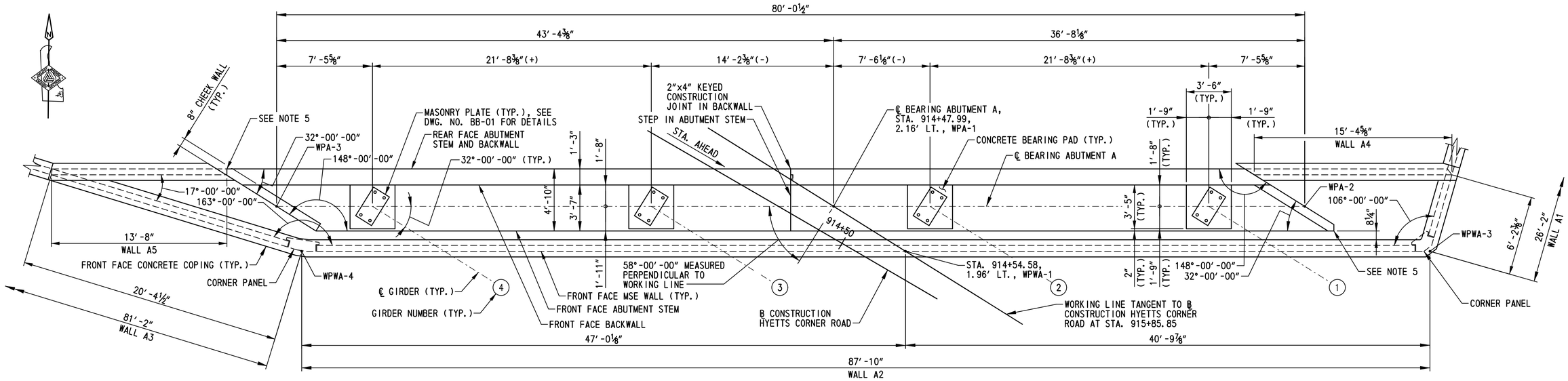

NOTE:
DIMENSIONS SHOWN FOR MSE WALL ARE MEASURED WORKING POINT TO WORKING POINT ALONG FRONT FACE OF MSE WALL.

PLAN
SCALE: ¼″=1′-0″

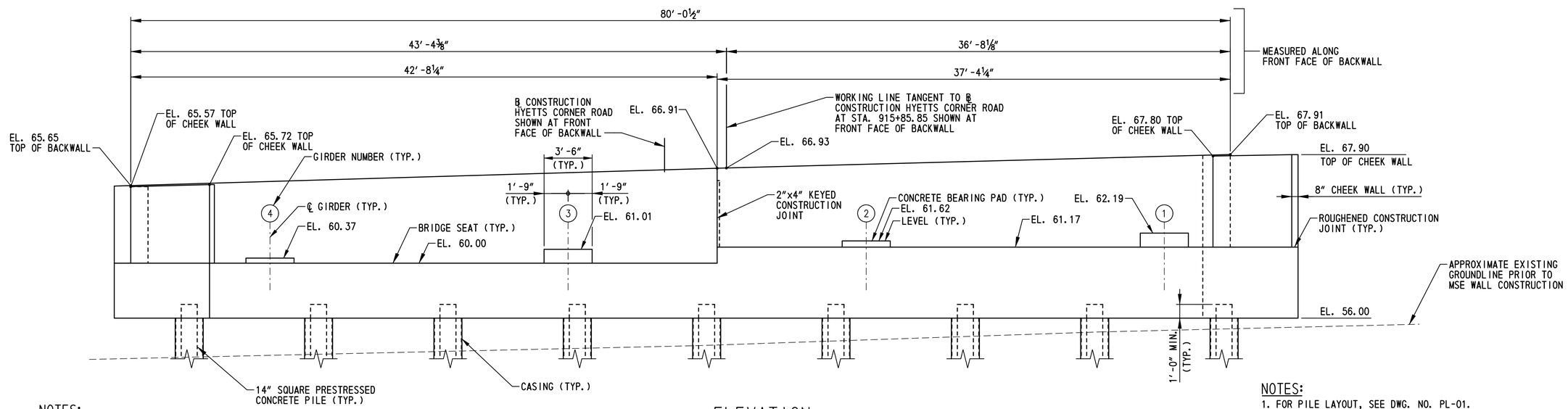

NOTES:
1. MSE WALL NOT SHOWN FOR CLARITY.
2. PROPOSED GROUNDLINE LOCATED AT BOTTOM OF MSE WALL, APPROXIMATELY EL. 43.00.

ELEVATION
SCALE: ¼″=1′-0″

NOTES:
1. FOR PILE LAYOUT, SEE DWG. NO. PL-01.
2. FOR MSE WALL DEVELOPED ELEVATION, SEE DWG. NO. AB-02.
3. FOR ABUTMENT A REINFORCEMENT DETAILS, SEE DWG. NOS. AB-06, AB-07 AND AB-10.
4. FOR ABUTMENT AND MSE WALL SECTIONS, SEE DWG. NO. AB-05.
5. FOR REQUIREMENTS AT ACUTE CORNER OF ABUTMENTS, SEE DETAIL A ON DWG. NO. FT-01.

BR1-5
AB-01

DELAWARE DEPARTMENT OF TRANSPORTATION	ADDENDUMS / REVISIONS	SCALE: AS NOTED	US 301, SR 896 TO SR 1	CONTRACT T200911308	BRIDGE NO. 1-436A	ABUTMENT A PLAN AND ELEVATION	SHEET NO. 271
				COUNTY NEW CASTLE	DESIGNED BY: W.T.R.		TOTAL SHTS. 875
					CHECKED BY: B.K.B.		

n:\31653-000\contract t9\cadd\bridge\Br_No5\AB01_br1-5.dgn
10/24/2012 11:25:50 AM

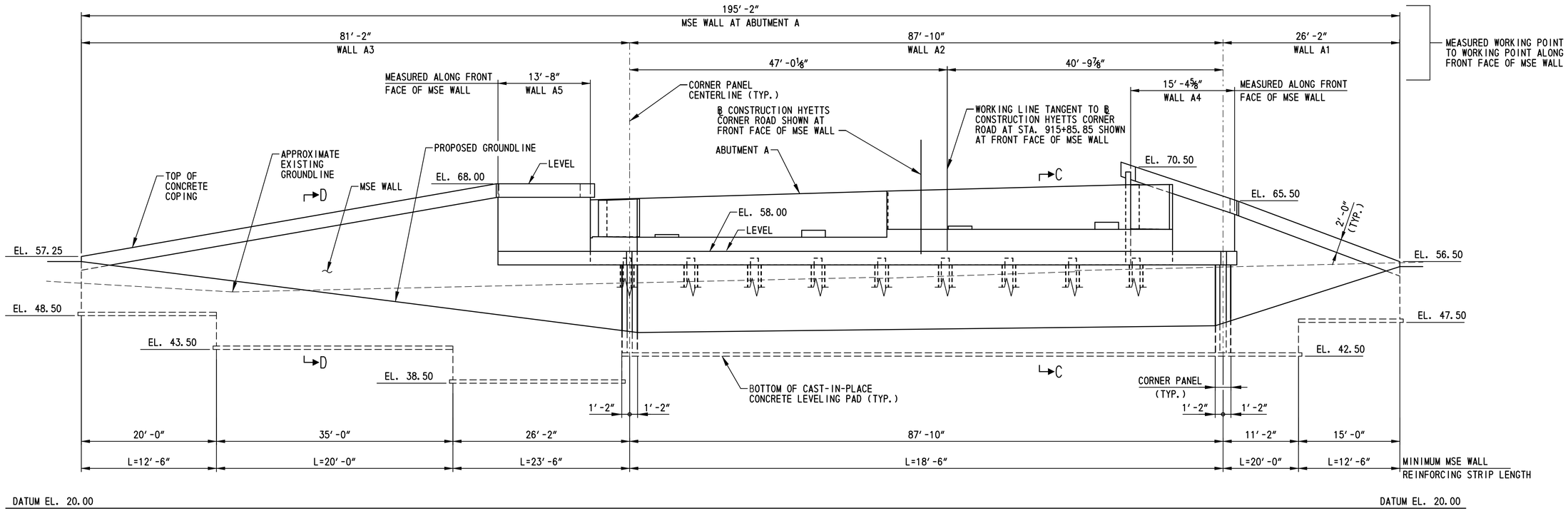

DEVELOPED ELEVATION A-A

SCALE: ⅛″=1′-0″

MSE WALL NOTES:

1. DESIGN CRITERIA
   SEE SPECIAL PROVISION FOR ITEM 602772.

2. CONCRETE
   ALL CONCRETE PROPERTIES SHALL BE IN ACCORDANCE WITH SECTION 812 OF THE DELAWARE DEPARTMENT OF TRANSPORTATION STANDARD SPECIFICATIONS.

   CLASS A - MSE WALL PANELS AND MSE WALL COPING (f′c = 4,500 PSI).

   CLASS B - MSE WALL LEVELING PADS (f′c = 3,000 PSI).

   ALL EXPOSED EDGES SHALL BE CHAMFERED ¾″ UNLESS NOTED OTHERWISE.

3. REINFORCING STEEL
   ALL REINFORCING STEEL SHALL BE AASHTO M 31 (ASTM A 615), GRADE 60 AND SHALL BE PROTECTED WITH FUSION BONDED EPOXY, CONFORMING TO AASHTO M 284 (ASTM A 775).

   MINIMUM CONCRETE COVER FOR REINFORCING STEEL SHALL BE 2″ UNLESS NOTED OTHERWISE.

4. ARCHITECTURAL FINISH
   THE COMPONENTS OF THE MSE WALL SHALL HAVE THE ARCHITECTURAL TREATMENT AS SPECIFIED IN THE SPECIAL PROVISION FOR ITEM 602772.

5. REINFORCING STRIPS
   REINFORCING STRIPS SHALL BE LOCATED TO CLEAR THE PILE CASING WITH 2″ MINIMUM CLEARANCE AND A MAXIMUM 15 DEGREE SKEW.

6. COPING
   THE MSE WALL COPING SHALL BE A PRECAST CONCRETE COPING INSTALLED IN CONFORMANCE WITH THE PROPRIETARY WALL MANUFACTURER'S RECOMMENDATIONS. FOR LOCATIONS ALONG THE MSE WALL WHERE A PRECAST CONCRETE COPING CANNOT BE UTILIZED A CAST-IN-PLACE CONCRETE COPING INSTALLED IN CONFORMANCE WITH THE PROPRIETARY MSE WALL MANUFACTURER'S RECOMMENDATION MAY BE UTILIZED.

7. LEVELING PAD
   THE LEVELING PAD STEPS MAY BE LOCATED AT THE DISCRETION OF THE PROPRIETARY WALL MANUFACTURER PROVIDED THAT THE MINIMUM EMBEDMENT IS MAINTAINED IN ACCORDANCE WITH THE SPECIFIED DESIGN CRITERIA. ANY CHANGES TO THE STEP LOCATIONS SHALL BE SUBMITTED TO THE ENGINEER FOR APPROVAL.

8. BACKFILL AND FOUNDATION SOILS
   MSE WALL BACKFILL SHALL CONSIST OF SELECT BACKFILL AND MEET THE REQUIREMENTS PROVIDED IN THE SPECIAL PROVISIONS. FOR ADDITIONAL REQUIREMENTS OF MSE WALL BACKFILL AND FOUNDATION SOILS, SEE THE SOIL PROPERTIES TABLE ON THIS SHEET.

9. INTERNAL STABILITY
   THE INTERNAL STABILITY OF THE MSE WALL SHALL BE DESIGNED BY THE PROPRIETARY WALL MANUFACTURER USING THE SOIL PROPERTIES PROVIDED AT EACH MSE WALL LOCATION. THE INTERNAL STABILITY CALCULATIONS SHALL BE SIGNED AND SEALED BY A PROFESSIONAL ENGINEER LICENSED IN THE STATE OF DELAWARE AS INDICATED IN THE PROJECT SPECIFICATIONS.

10. QUARANTINE PERIOD
    ALLOW A MINIMUM OF 60 DAYS QUARANTINE PERIOD FOR SETTLEMENT MONITORING. BEGIN THE QUARANTINE PERIOD WHEN THE FULL HEIGHT OF THE MSE WALL IS ACHIEVED, THE APPROACH EMBANKMENTS ARE AT ITS FINAL ROADWAY SUBGRADE ELEVATION AND THE SETTLEMENT PLATFORMS ARE COMPLETELY CONSTRUCTED. THE ENGINEER WILL DETERMINE THE DURATION OF THE QUARANTINE PERIOD BASED ON THE SETTLEMENT READINGS. THE ENGINEER WILL NOTIFY THE CONTRACTOR, IN WRITING, WHEN THE QUARANTINE PERIOD CAN BE LIFTED BASED ON THE RESULTS OF THE SETTLEMENT READINGS.

11. SETTLEMENT REQUIREMENTS
    THE CONTRACTOR AND MSE WALL MANUFACTURER SHALL DESIGN AND CONSTRUCT THE FINAL WALL FACING SUCH THAT THE FINAL WALL FACING IS AT THE REQUIRED ELEVATIONS AFTER SETTLEMENT IS ACHIEVED. THE ANTICIPATED SETTLEMENT IS 4 INCHES AT THE FACE OF WALL.

12. SERVICE LIFE
    ALL MSE WALL COMPONENTS SHALL BE DESIGNED FOR A MINIMUM SERVICE LIFE OF 100 YEARS.

13. WALL SYSTEM
    ONLY ONE MSE WALL SYSTEM SHALL BE USED ON THIS PROJECT.

14. TEMPORARY SUPPORT OF EMBANKMENT
    TEMPORARY SUPPORT OF EMBANKMENT IS REQUIRED AT THE REAR FACE OF BOTH ABUTMENT STEMS AND BACKWALLS TO ALLOW THE UNDERLYING SOILS TO PRECONSOLIDATE UNDER THE FINAL REQUIRED SOIL PRESSURE PRIOR TO PILE INSTALLATION. THE LIMITS OF THE TEMPORARY SUPPORT OF EMBANKMENT SHALL BE THE FULL ABUTMENT HEIGHT OVER THE FULL ABUTMENT LENGTH. THE TEMPORARY SUPPORT OF EMBANKMENT SHALL BE DESIGNED BY THE MSE WALL DESIGNER TO RESIST THE FULL HORIZONTAL EARTH PRESSURE AND HORIZONTAL SOIL PRESSURE DUE TO SURCHARGE OF SOIL AND THE CONTRACTOR'S EQUIPMENT AND MATERIALS. ALL MSE WALL REINFORCING STRIPS SHALL BE DESIGNED FOR A MINIMUM SERVICE LIFE OF 100 YEARS. THE DESIGN OF THE TEMPORARY SUPPORT OF EMBANKMENT SHALL BE COMPATIBLE WITH THE ABUTMENT ANCHORS SHOWN ON DWG. NO. AB-05. PAYMENT FOR CONSTRUCTION OF THE TEMPORARY SUPPORT OF EMBANKMENT WILL BE MADE UNDER ITEM NO. 602772 - MECHANICALLY STABILIZED EARTH WALLS. SEE THE SPECIAL PROVISIONS FOR ADDITIONAL INFORMATION AND REQUIREMENTS.

SOIL PROPERTIES TABLE

SOIL TYPE	UNIT WEIGHT (PCF)	DRAINED ANGLE OF FRICTION (DEGREES)	UNDRAINED SHEAR STRENGTH (PSF)
SELECT BACKFILL	125	34 (MIN.)	0
FOUNDATION SOIL (ABUTMENT A)	115	30	0
FOUNDATION SOIL (ABUTMENT B)	115	32	0
RETAINED FILL	120	30	0

NOTES:

1. FOR LOCATION OF DEVELOPED ELEVATION A-A, SEE DWG. NO. PE-01.
2. FOR SECTIONS C-C AND D-D, SEE DWG. NO. AB-05.
3. FOR ABUTMENT A PLAN AND ELEVATION, SEE DWG. NO. AB-01.
4. FOR ADDITIONAL INFORMATION ON MSE WALL, SEE DWG. NO. WA-01.

BR1-5
AB-02

N:\31653-000\CONTRACT 1A\CADD\Bridge\Br_No5\AB02_br1-5.dgn
7/2/2015 2:51:25 PM

DELAWARE DEPARTMENT OF TRANSPORTATION

ADDENDUMS / REVISIONS

SCALE: AS NOTED

US 301, SR 896 TO SR 1

CONTRACT T200911308
COUNTY NEW CASTLE
BRIDGE NO. 1-436A
DESIGNED BY: W.T.R.
CHECKED BY: B.K.B.

MSE WALL AT ABUTMENT A

SHEET NO. 272
TOTAL SHTS. 875

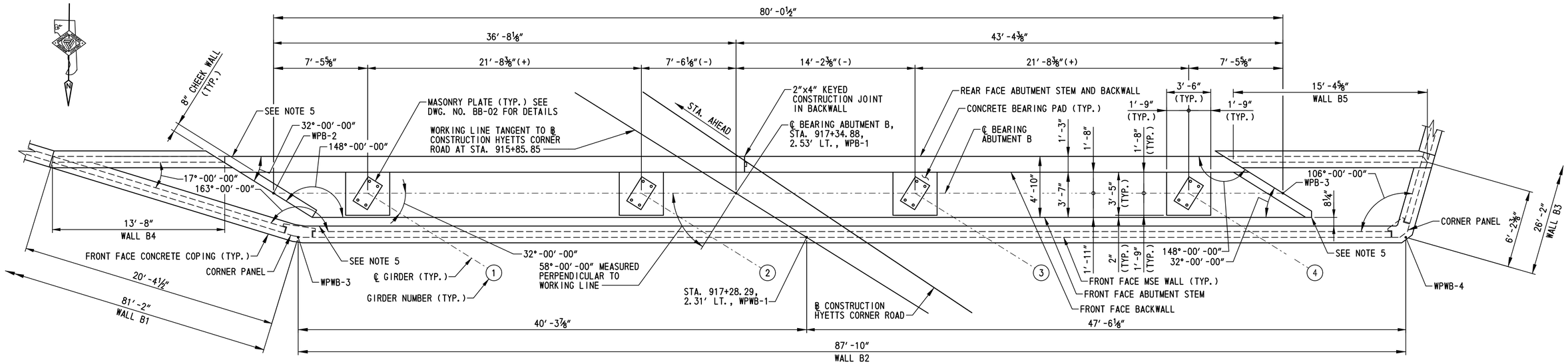

NOTE:
DIMENSIONS SHOWN FOR MSE WALL ARE MEASURED ALONG FRONT FACE OF MSE WALL.

PLAN
SCALE: ¼″=1′-0″

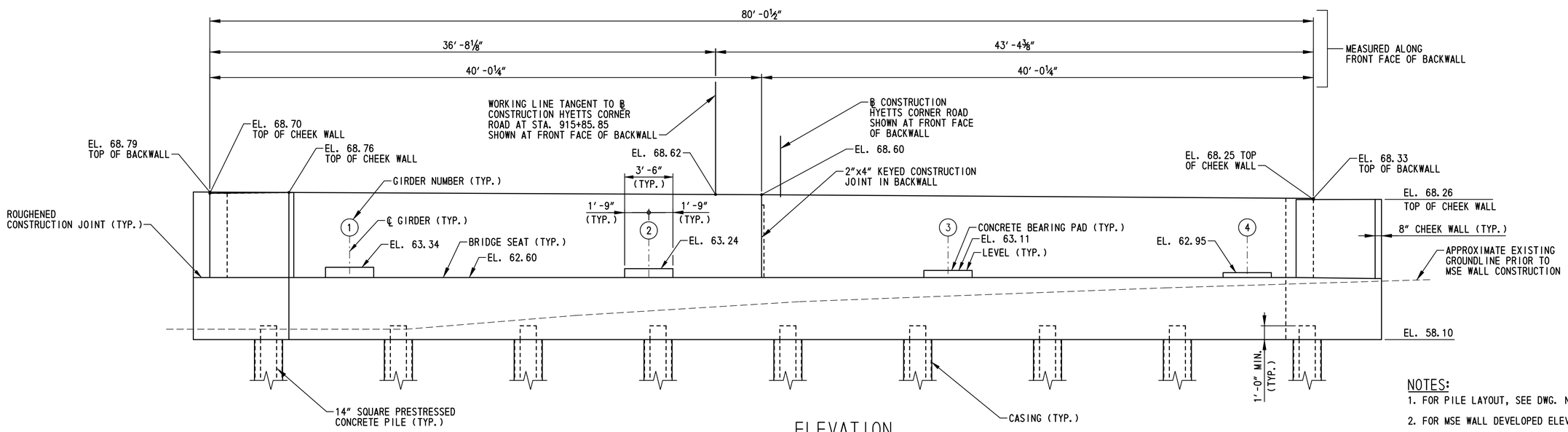

NOTES:
1. MSE WALL NOT SHOWN FOR CLARITY.
2. PROPOSED GROUNDLINE LOCATED AT BOTTOM OF MSE WALL, APPROXIMATELY EL. 43.00.

ELEVATION
SCALE: ¼″=1′-0″

NOTES:
1. FOR PILE LAYOUT, SEE DWG. NO. PL-01.
2. FOR MSE WALL DEVELOPED ELEVATION, SEE DWG. NO. AB-04.
3. FOR ABUTMENT B REINFORCEMENT DETAILS, SEE DWG. NOS. AB-08 THRU AB-10.
4. FOR ABUTMENT AND MSE WALL SECTIONS, SEE DWG. NO. AB-05.
5. FOR REQUIREMENTS AT ACUTE CORNER OF ABUTMENTS, SEE DETAIL A ON DWG. NO. FT-01.

BR1-5
AB-03

DELAWARE DEPARTMENT OF TRANSPORTATION	ADDENDUMS / REVISIONS	SCALE: AS NOTED	US 301, SR 896 TO SR 1	CONTRACT T200911308	BRIDGE NO. 1-436A	ABUTMENT B PLAN AND ELEVATION	SHEET NO. 273
				COUNTY NEW CASTLE	DESIGNED BY: W.T.R.		TOTAL SHTS. 875
					CHECKED BY: B.K.B.		

n:\31653-000\contract 1a\cadd\bridge\Br_No5\AB03_br1-5.dgn
10/24/2012 1:26:13 AM

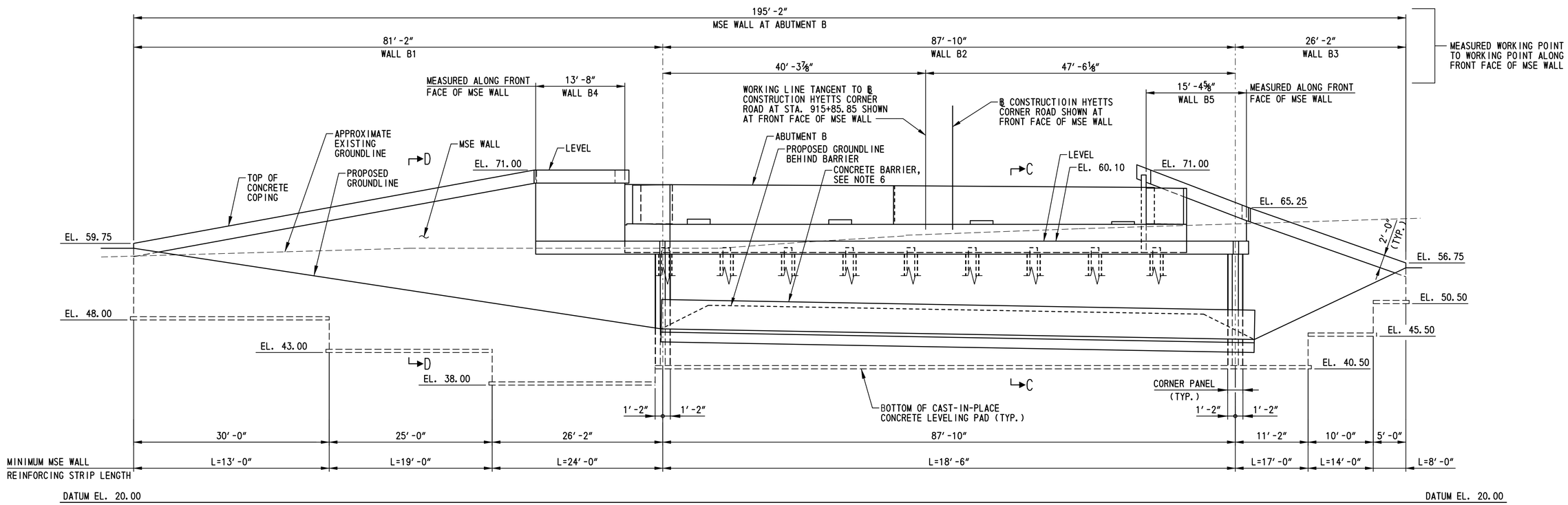

DEVELOPED ELEVATION B-B

SCALE: ⅛″=1′-0″

NOTES:

1. FOR LOCATION OF DEVELOPED ELEVATION B-B, SEE DWG. NO. PE-01.
2. FOR SECTIONS C-C AND D-D, SEE DWG. NO. AB-05.
3. FOR ABUTMENT B PLAN AND ELEVATION, SEE DWG. NO. AB-03.
4. FOR ADDITIONAL INFORMATION ON MSE WALL, SEE DWG. NO. WA-01.
5. FOR MSE WALL NOTES AND SOIL PROPERTIES, SEE DWG. NO. AB-02.
6. FOR CONCRETE BARRIER DETAILS, SEE DWG. NO. DT-17.

BR1-5
AB-04

DELAWARE DEPARTMENT OF TRANSPORTATION

ADDENDUMS / REVISIONS

SCALE: AS NOTED

US 301, SR 896 TO SR 1

CONTRACT	BRIDGE NO.	1-436A
T200911308	DESIGNED BY: W.T.R.	
COUNTY		
NEW CASTLE	CHECKED BY: B.K.B.	

MSE WALL AT ABUTMENT B

SHEET NO. 274
TOTAL SHTS. 875

N:\31653-000\CONTRACT 1A\CADD\Bridge\Br_Nc5\AB04_br1-5.dgn
7/9/2015 10:25:29 AM

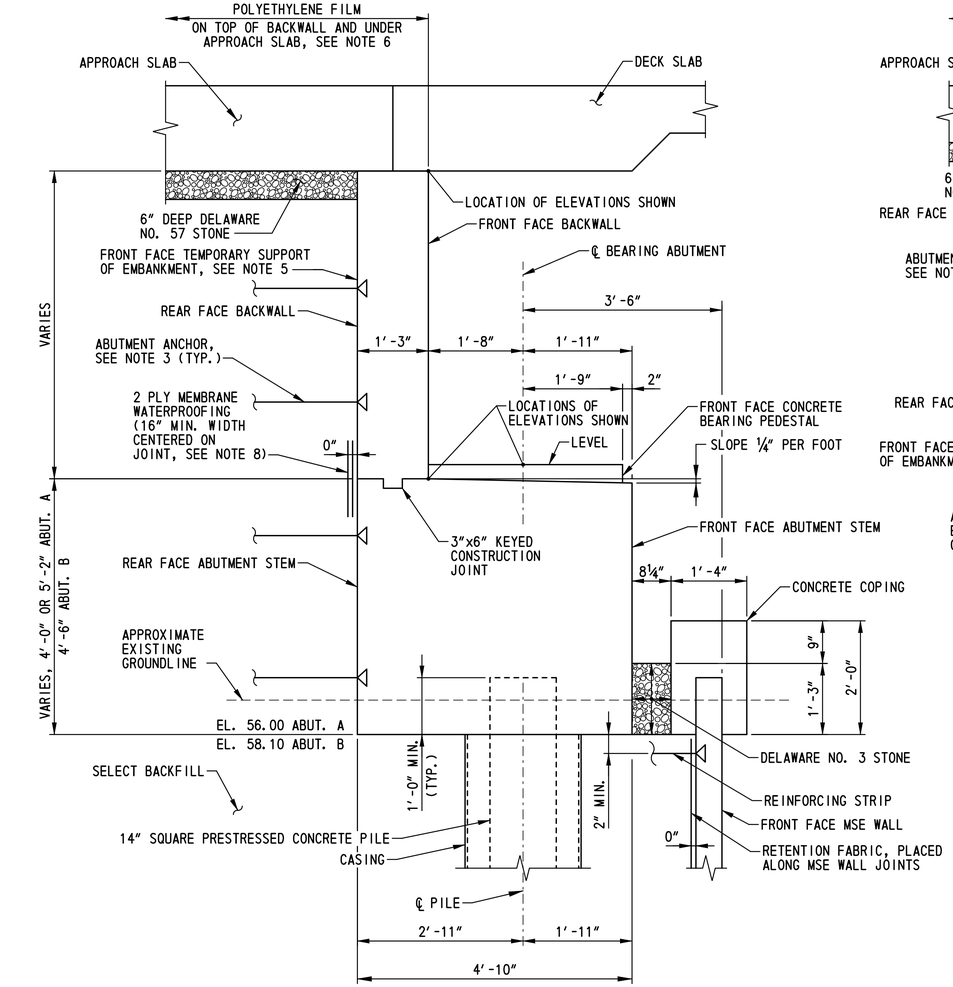

TYPICAL ABUTMENT SECTION

SCALE: ¾"=1'-0"

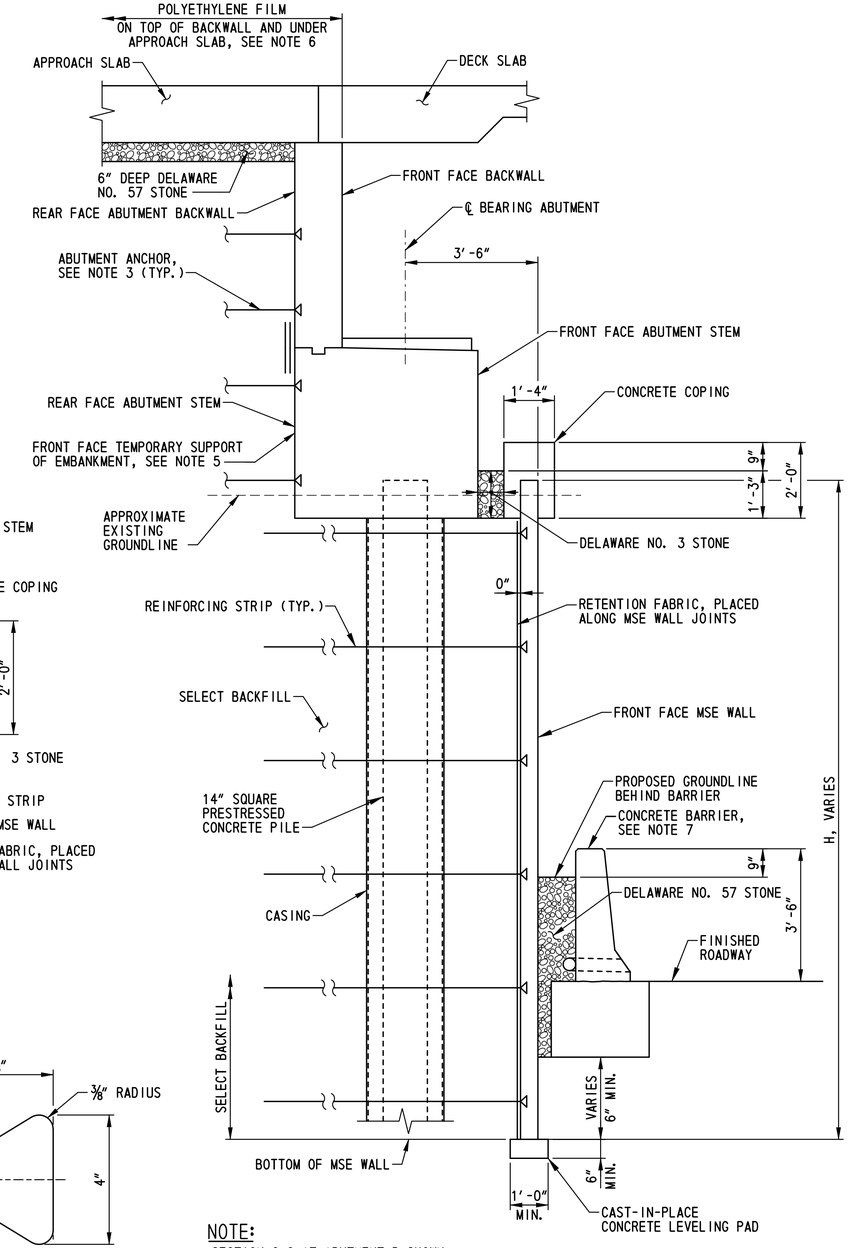

NOTE:

SECTION C-C AT ABUTMENT B SHOWN, ABUTMENT A SIMILAR WITHOUT BARRIER.

SECTION C-C

SCALE: ½"=1'-0"

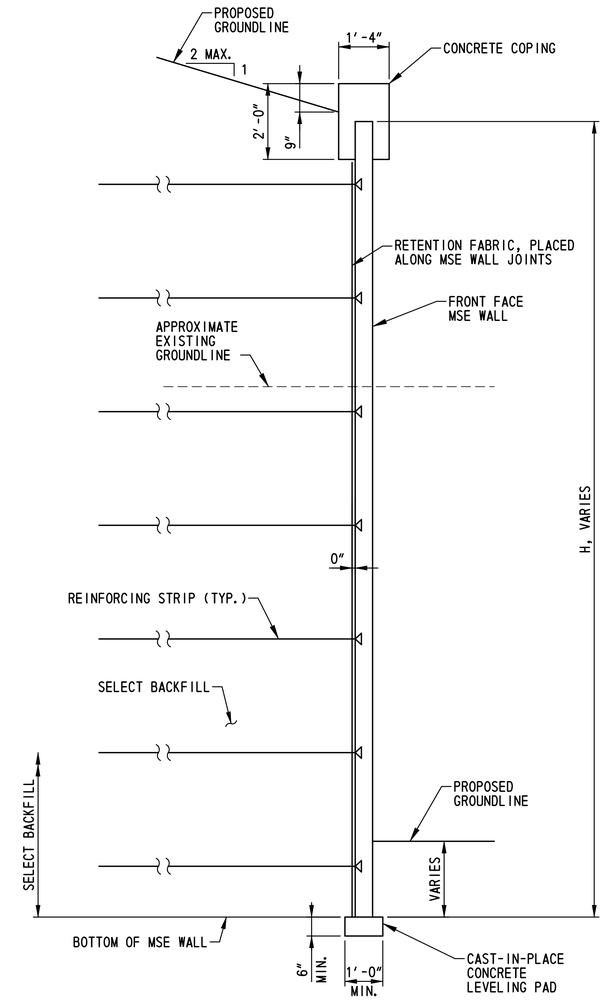

SECTION D-D

SCALE: ½"=1'-0"

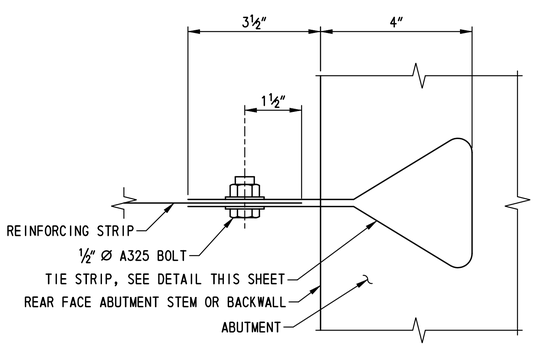

ABUTMENT ANCHOR DETAIL

NOT TO SCALE

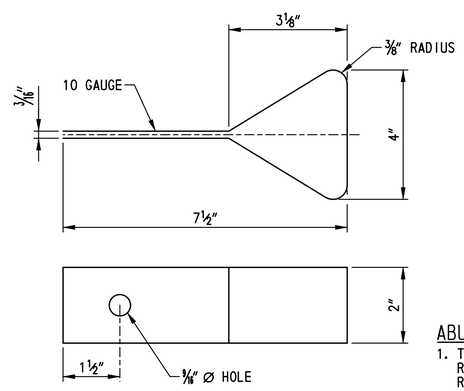

TIE STRIP DETAIL

NOT TO SCALE

ABUTMENT ANCHOR NOTES:

1. THE ABUTMENT ANCHOR SHOWN CONSISTING OF A TIE STRIP ATTACHED TO A REINFORCING STRIP MAY BE MODIFIED PER THE MSE WALL MANUFACTURER'S RECOMMENDATIONS. ANY CHANGES TO THE ABUTMENT ANCHOR DETAIL SHOWN SHALL BE SUBMITTED TO THE ENGINEER FOR APPROVAL.
2. THE ATTACHMENT OF THE ABUTMENT ANCHOR TO THE TEMPORARY SUPPORT OF EMBANKMENT LOCATED AT THE REAR FACE OF THE ABUTMENT STEMS AND BACKWALLS IS NOT SHOWN. THIS ATTACHMENT SHALL BE MADE PER THE MSE WALL MANUFACTURER'S RECOMMENDATIONS AND A DETAIL SUBMITTED TO THE ENGINEER FOR APPROVAL.

NOTES:

1. FOR LOCATIONS OF SECTIONS C-C AND D-D, SEE DWG. NOS. AB-02 AND AB-04.
2. FOR PILE LAYOUT, SEE DWG. NO. PL-01.
3. PROVIDE ABUTMENT ANCHORS IN SELECT BACKFILL. SEE ABUTMENT ANCHOR DETAIL THIS SHEET. THE ABUTMENT ANCHORS SHALL BE DESIGNED FOR A MINIMUM FACTORED HORIZONTAL FORCE OF 1.00 KLF AT ABUTMENT A AND ABUTMENT B. THE POINT OF APPLICATION OF FORCES SHALL BE AT THE CENTER OF BEARINGS. DESIGN OF ABUTMENT ANCHORS SHALL BE COMPATIBLE WITH THE TEMPORARY SUPPORT OF EMBANKMENT DESIGN. PAYMENT FOR ABUTMENT ANCHORS WILL BE INCIDENTAL TO ITEM NO. 602772 - MECHANICALLY STABILIZED EARTH WALLS.
4. FOR MSE WALL NOTES AND SOIL PROPERTIES, SEE DWG. NO. AB-02.
5. FOR TEMPORARY SUPPORT OF EMBANKMENT INFORMATION, SEE MSE WALL NOTE 14 ON DWG. NO. AB-02.
6. FOR POLYETHYLENE FILM INFORMATION, SEE DWG. NO. AS-05.
7. FOR CONCRETE BARRIER DETAILS, SEE DWG. NO. DT-17.
8. MEMBRANE WATERPROOFING SHALL BE INCIDENTAL TO ITEM 602015 - PORTLAND CEMENT CONCRETE MASONRY, ABUTMENT ABOVE FOOTING, CLASS A. SEE SPECIAL PROVISION ITEM 602616 - WATERPROOFING P.C.C. MASONRY SURFACES FOR ADDITIONAL REQUIREMENTS.

N:\31653-000\CONTRACT 1A\CADD\Bridge\Br_Ab05_br1-5.dgn
7/29/2015 12:28:02 PM

DELAWARE DEPARTMENT OF TRANSPORTATION	ADDENDUMS / REVISIONS	SCALE: AS NOTED	US 301, SR 896 TO SR 1	CONTRACT T200911308	BRIDGE NO. 1-436A	ABUTMENT AND MSE WALL SECTIONS
				COUNTY NEW CASTLE	DESIGNED BY: W.T.R.	
					CHECKED BY: B.K.B.	

BR1-5
AB-05

SHEET NO. 275
TOTAL SHTS. 875

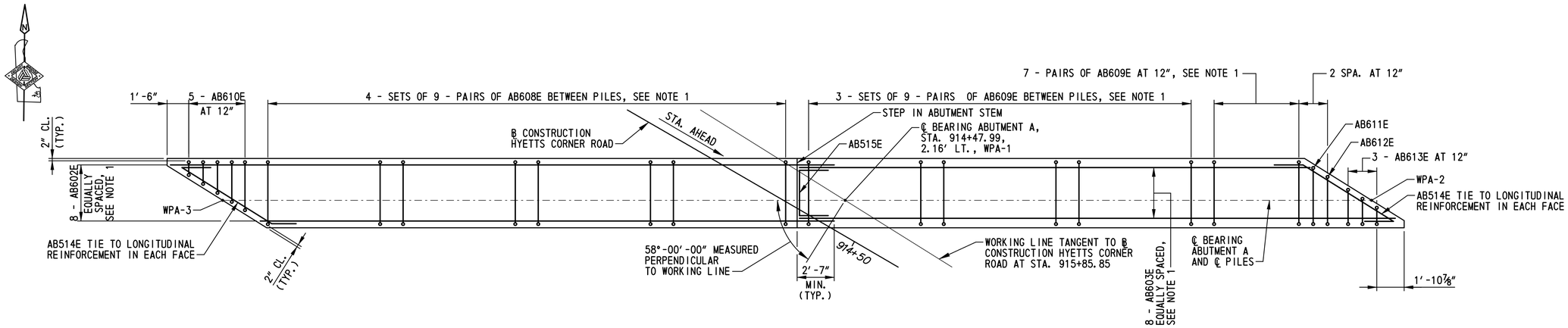

ABUTMENT A STEM TOP MAT REINFORCEMENT PLAN

SCALE: 1/4 ″=1′-0″

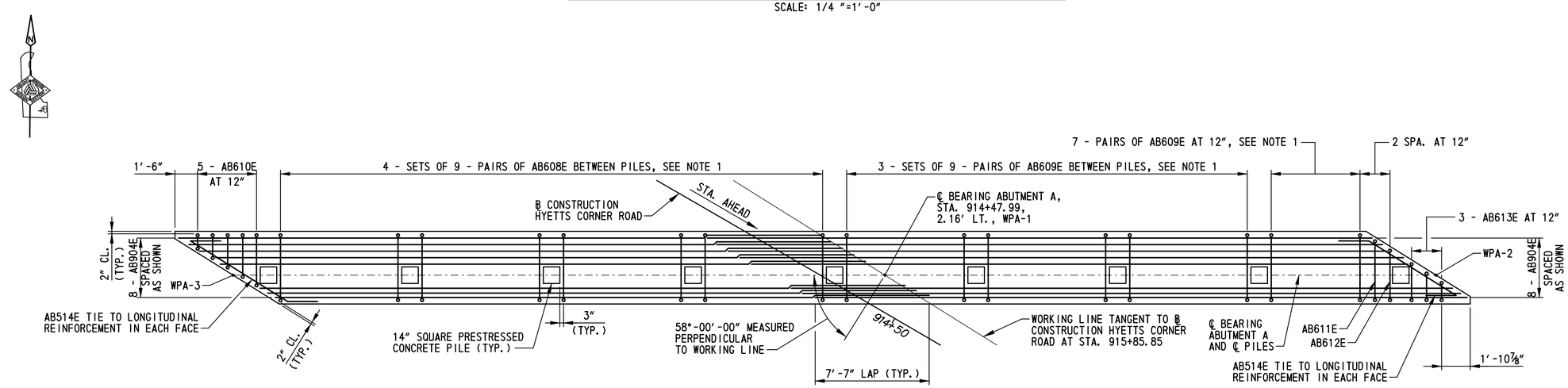

ABUTMENT A STEM BOTTOM MAT REINFORCEMENT PLAN

SCALE: 1/4 ″=1′-0″

NOTES:

1. SPACE REINFORCING STEEL AS NECESSARY TO CLEAR ANCHOR BOLTS. FOR ADDITIONAL INFORMATION, SEE DWG. NOS. BB-01 AND AB-10.
2. FOR ADDITIONAL REINFORCEMENT DETAILS, SEE DWG. NOS. AB-07 AND AB-10.
3. REINFORCING STEEL OVER PILES NOT SHOWN FOR CLARITY. FOR ADDITIONAL INFORMATION, SEE DWG. NO. PL-01.

DELAWARE DEPARTMENT OF TRANSPORTATION	ADDENDUMS / REVISIONS	SCALE: AS NOTED	US 301, SR 896 TO SR 1	CONTRACT T200911308	BRIDGE NO. 1-436A	ABUTMENT A REINFORCEMENT DETAILS - 1	BR1-5 AB-06
				COUNTY NEW CASTLE	DESIGNED BY: W.T.R.		SHEET NO. 276
					CHECKED BY: B.K.B.		TOTAL SHTS. 875

r:\31653-000\contract 1a\cadd\bridge\Br_No5\AB06_br1-5.dgn
10/24/2012 11:26:41 AM

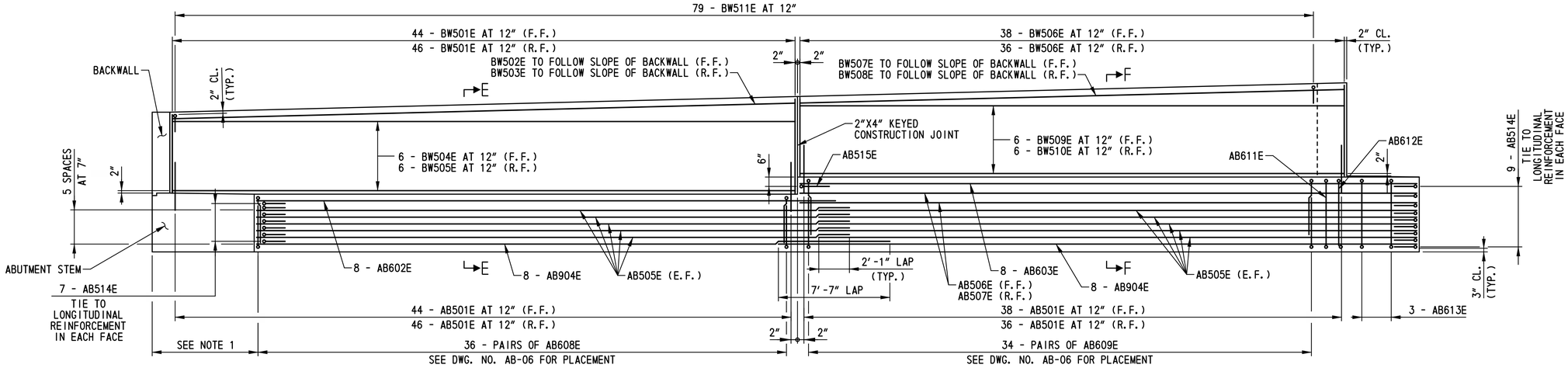

ABUTMENT A REINFORCEMENT ELEVATION

SCALE: 1/4"=1'-0"

NOTES:

1. REINFORCEMENT SHOWN ALONG FRONT FACE OF BACKWALL AND FRONT FACE OF ABUTMENT CAP ONLY FOR CLARITY.
2. PILES NOT SHOWN FOR CLARITY. FOR PLACEMENT OF TRANSVERSE REINFORCEMENT BETWEEN PILES, SEE DWG. NO. AB-06.
3. CHEEK WALLS AND CONCRETE BEARING PADS NOT SHOWN FOR CLARITY. FOR REINFORCEMENT IN CHEEK WALLS AND CONCRETE BEARING PADS, SEE DWG. NO. AB-10.

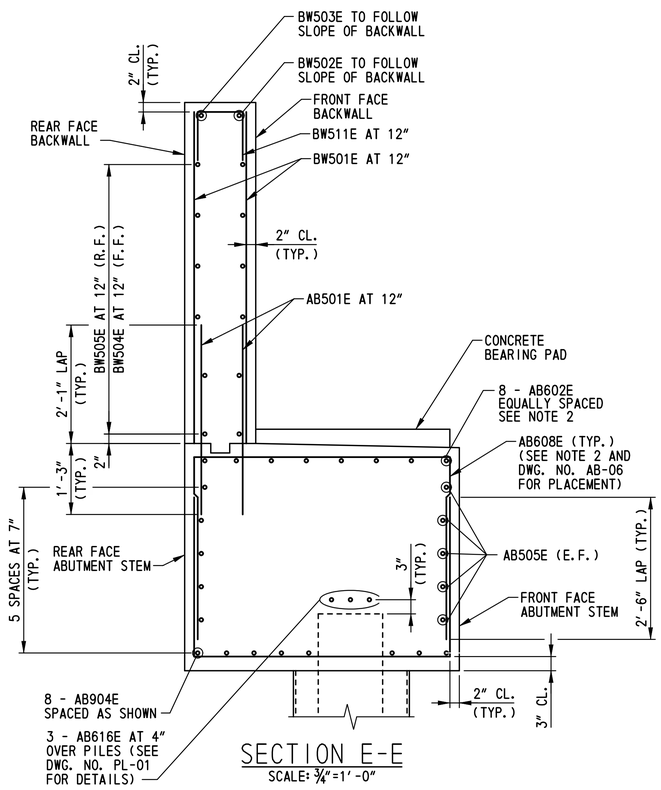

SECTION E-E

SCALE: 3/4"=1'-0"

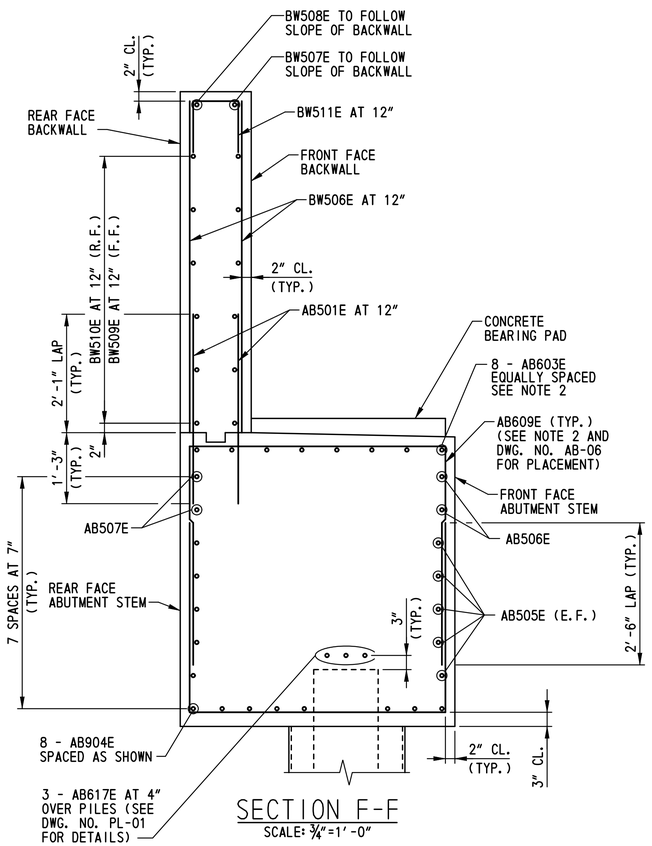

SECTION F-F

SCALE: 3/4"=1'-0"

NOTES:

1. FOR ADDITIONAL REINFORCEMENT DETAILS, SEE DWG NOS. AB-06 AND AB-10.
2. SPACE REINFORCING STEEL AS NECESSARY TO CLEAR ANCHOR BOLTS. FOR ADDITIONAL INFORMATION, SEE DWG. NOS. BB-01 AND AB-10.

DELAWARE DEPARTMENT OF TRANSPORTATION	ADDENDUMS / REVISIONS	SCALE: AS NOTED	US 301, SR 896 TO SR 1	CONTRACT T200911308	BRIDGE NO. 1-436A	ABUTMENT A REINFORCEMENT DETAILS - 2	BR1-5 AB-07
				COUNTY NEW CASTLE	DESIGNED BY: W.T.R.		SHEET NO. 277
					CHECKED BY: B.K.B.		TOTAL SHTS. 875

n:\3653-000\contract 1a\cadd\bridge\Br_No5\AB07_br1-5.dgn
10/24/2012 11:26:52 AM

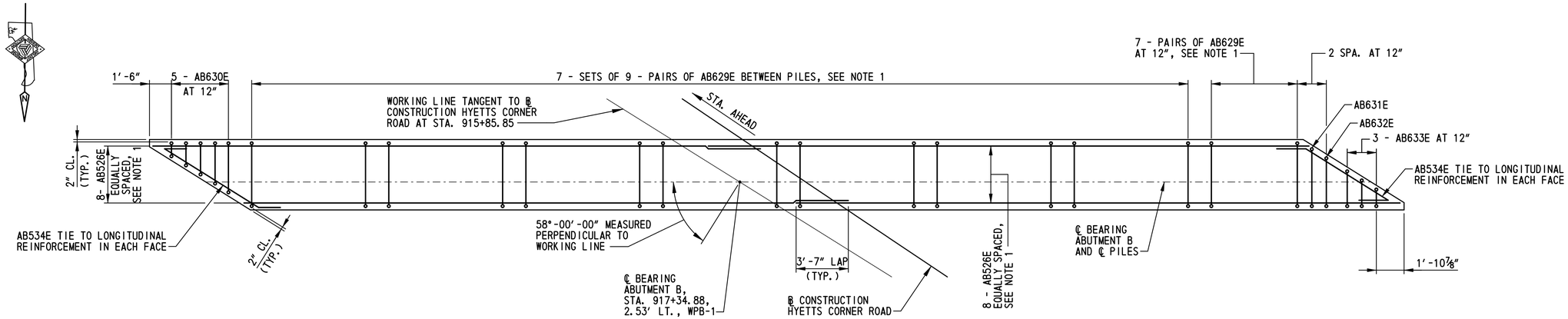

ABUTMENT B STEM TOP MAT REINFORCEMENT PLAN

SCALE: 1/4 "=1'-0"

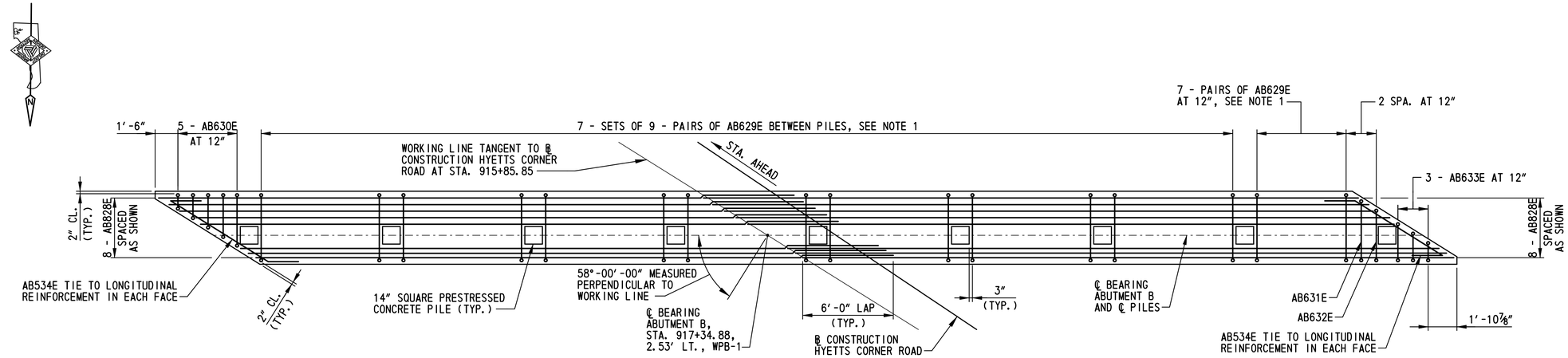

ABUTMENT B STEM BOTTOM MAT REINFORCEMENT PLAN

SCALE: 1/4 "=1'-0"

NOTES:

1. SPACE REINFORCING STEEL AS NECESSARY TO CLEAR ANCHOR BOLTS. FOR ADDITIONAL INFORMATION, SEE DWG. NOS. BB-02 AND AB-10.
2. FOR ADDITIONAL REINFORCEMENT DETAILS, SEE DWG. NOS. AB-09 AND AB-10.
3. REINFORCING STEEL OVER PILES NOT SHOWN FOR CLARITY. FOR ADDITIONAL INFORMATION, SEE DWG. NO. PL-01.

BR1-5
AB-08

DELAWARE DEPARTMENT OF TRANSPORTATION	ADDENDUMS / REVISIONS	SCALE: AS NOTED	US 301, SR 896 TO SR 1	CONTRACT T200911308	BRIDGE NO. 1-436A	ABUTMENT B REINFORCEMENT DETAILS - 1	SHEET NO. 278
				COUNTY NEW CASTLE	DESIGNED BY: W.T.R.		TOTAL SHTS. 875
					CHECKED BY: B.K.B.		

n:\33653-000\contract 1a\cadd\bridge\Br_No5\AB08_br1-5.dgn
10/24/2012 11:27:00 AM

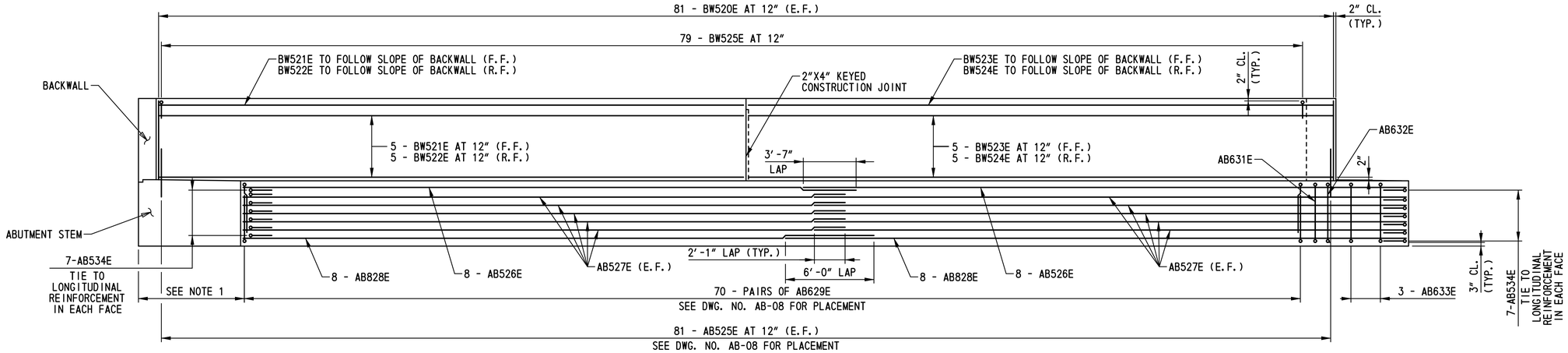

ABUTMENT B REINFORCEMENT ELEVATION

SCALE: 1/4"=1'-0"

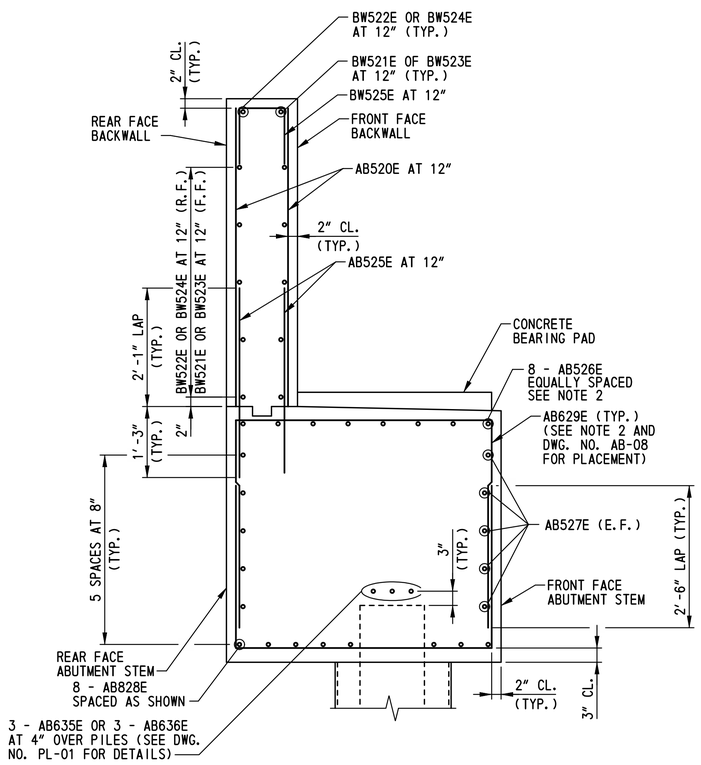

ABUTMENT B TYPICAL REINFORCEMENT SECTION

SCALE: 3/4"=1'-0"

NOTES:

1. REINFORCEMENT SHOWN ALONG FRONT FACE OF BACKWALL AND FRONT FACE OF ABUTMENT CAP ONLY FOR CLARITY.
2. PILES NOT SHOWN FOR CLARITY. FOR PLACEMENT OF TRANSVERSE REINFORCEMENT BETWEEN PILES, SEE DWG. NO. AB-08.
3. CHEEK WALLS AND CONCRETE BEARING PADS NOT SHOWN FOR CLARITY. FOR REINFORCEMENT IN CHEEK WALLS AND CONCRETE BEARING PADS, SEE DWG. NO. AB-10.

NOTES:

1. FOR ADDITIONAL REINFORCEMENT DETAILS, SEE DWG NOS. AB-08 AND AB-10.
2 SPACE REINFORCING STEEL AS NECESSARY TO CLEAR ANCHOR BOLTS. FOR ADDITIONAL INFORMATION, SEE DWG. NOS. BB-02 AND AB-10.

BR1-5
AB-09

DELAWARE DEPARTMENT OF TRANSPORTATION	ADDENDUMS / REVISIONS	SCALE: AS NOTED	US 301, SR 896 TO SR 1	CONTRACT T200911308	BRIDGE NO. 1-436A	ABUTMENT B REINFORCEMENT DETAILS - 2	SHEET NO. 279
				COUNTY NEW CASTLE	DESIGNED BY: W.T.R.		TOTAL SHTS. 875
					CHECKED BY: B.K.B.		

n:\31653-000\contract t:\cadd\bridge\Br_No5\AB09_br1-5.dgn
10/24/2012 1:27:12 AM

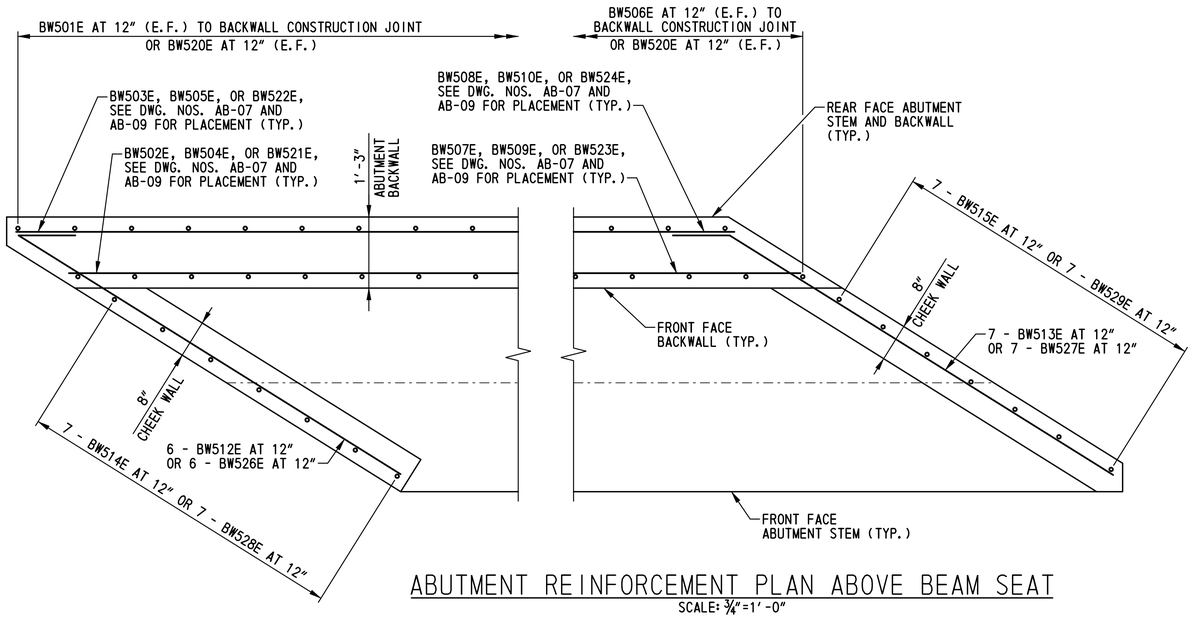

ABUTMENT REINFORCEMENT PLAN ABOVE BEAM SEAT

SCALE: ¾"=1'-0"

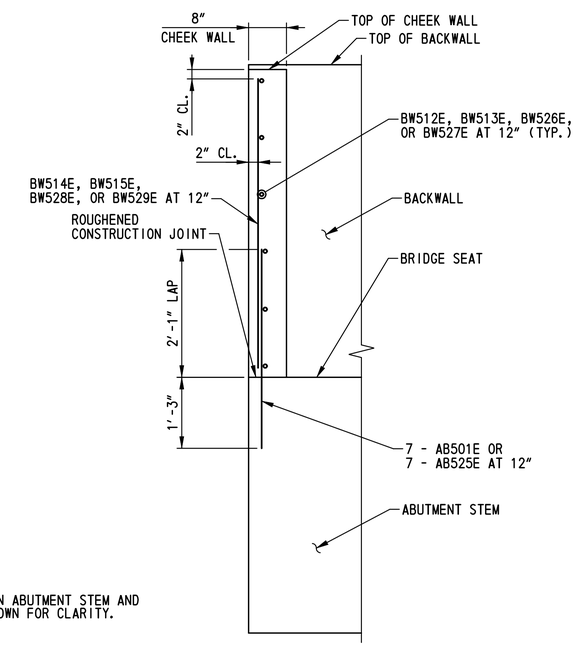

NOTE:

REINFORCEMENT IN ABUTMENT STEM AND BACKWALL NOT SHOWN FOR CLARITY.

CHEEK WALL TYPICAL REINFORCEMENT SECTION

SCALE: ¾"=1'-0"

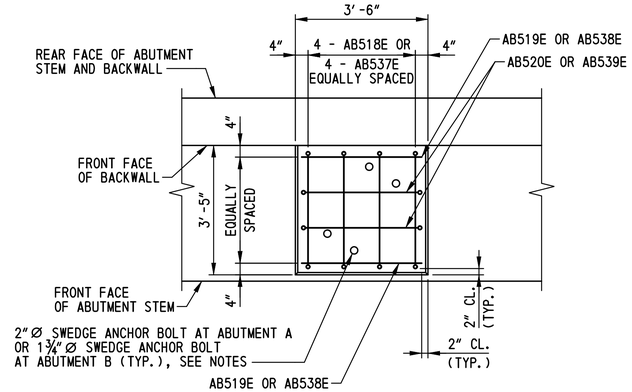

PLAN

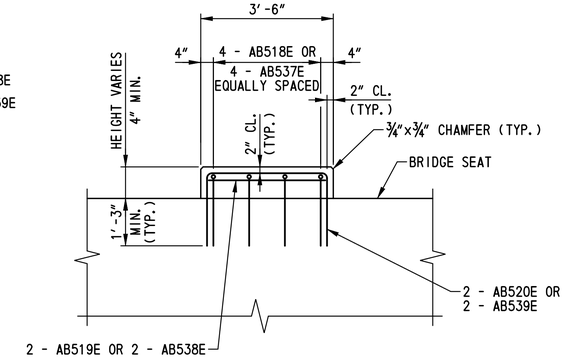

ELEVATION

ABUTMENT CONCRETE BEARING PAD DETAILS

SCALE: ½"=1'-0"

NOTES:

1. FOR ANCHOR BOLT DIMENSIONS AND LOCATION, SEE DWG. NOS. BB-01 AND BB-02.
2. ANCHOR BOLTS SHALL BE CAST IN PLACE. A TEMPORARY CASTING TEMPLATE SHALL BE USED TO ENSURE THE ANCHOR BOLTS ARE PROPERLY ALIGNED AND PLUMB. THE TEMPLATE SHALL BE REMOVED AFTER THE CONCRETE HAS SET.
3. SPACE REINFORCING STEEL AS NECESSARY TO CLEAR ANCHOR BOLTS.
4. ANCHOR BOLTS NOT SHOWN IN ELEVATION FOR CLARITY.

n:\31653-000\contract 1a\cadd\bridge\Br_No5\AB10_br1-5.dgn
10/24/2012 11:27:18 AM

DELAWARE DEPARTMENT OF TRANSPORTATION	ADDENDUMS / REVISIONS	SCALE: AS NOTED	US 301, SR 896 TO SR 1	CONTRACT T200911308	BRIDGE NO. 1-436A	ABUTMENT REINFORCEMENT DETAILS	BR1-5 AB-10
				COUNTY NEW CASTLE	DESIGNED BY: W.T.R.		SHEET NO. 280
					CHECKED BY: B.K.B.		TOTAL SHTS. 875

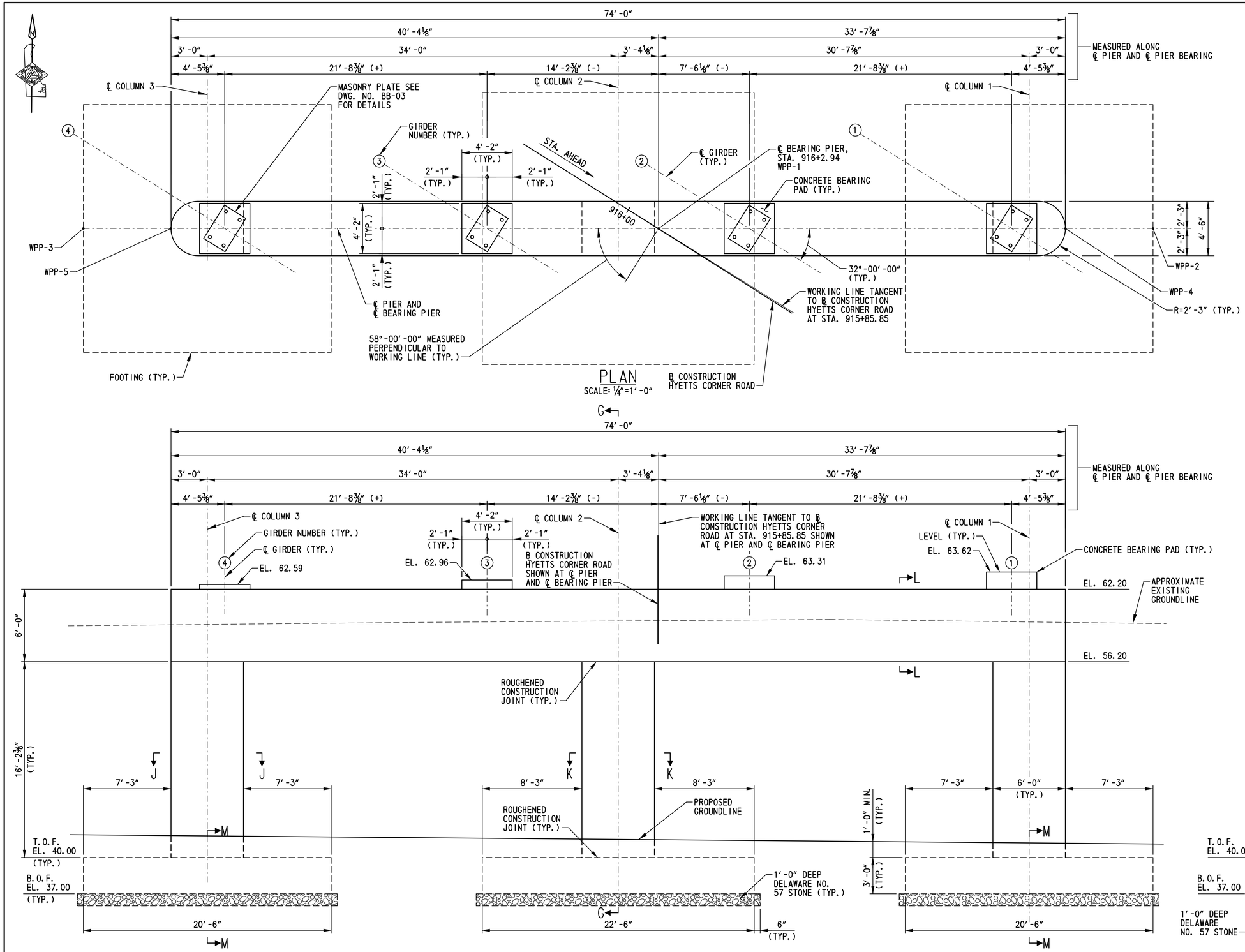

NOTES:

1. MAXIMUM ALLOWABLE BEARING RESISTANCE:

   SERVICE LIMIT STATE = 4.1 KSF.

   FACTORED RESISTANCE STRENGTH LIMIT STATE = 22.0 KSF.

2. FOR PIER REINFORCEMENT DETAILS, SEE DWG. NOS. PR-02 AND PR-03.

3. FOR SECTION M-M, SEE DWG. NO. PR-02. FOR SECTIONS J-J, K-K AND L-L, SEE DWG. NO. PR-03.

DELAWARE DEPARTMENT OF TRANSPORTATION

ADDENDUMS / REVISIONS

SCALE: AS NOTED

US 301, SR 896 TO SR 1

CONTRACT	BRIDGE NO.	1-436A
T200911308	DESIGNED BY: W.T.R.	
COUNTY		
NEW CASTLE	CHECKED BY: B.K.B.	

PIER PLAN, ELEVATION AND SECTION

BR1-5
PR-01

SHEET NO. 281

TOTAL SHTS. 875

r:\31653-000\contract_to\cadd\bridge\Br_No5\PR01_br1-5.dgn
10/24/2012 11:34:07 AM

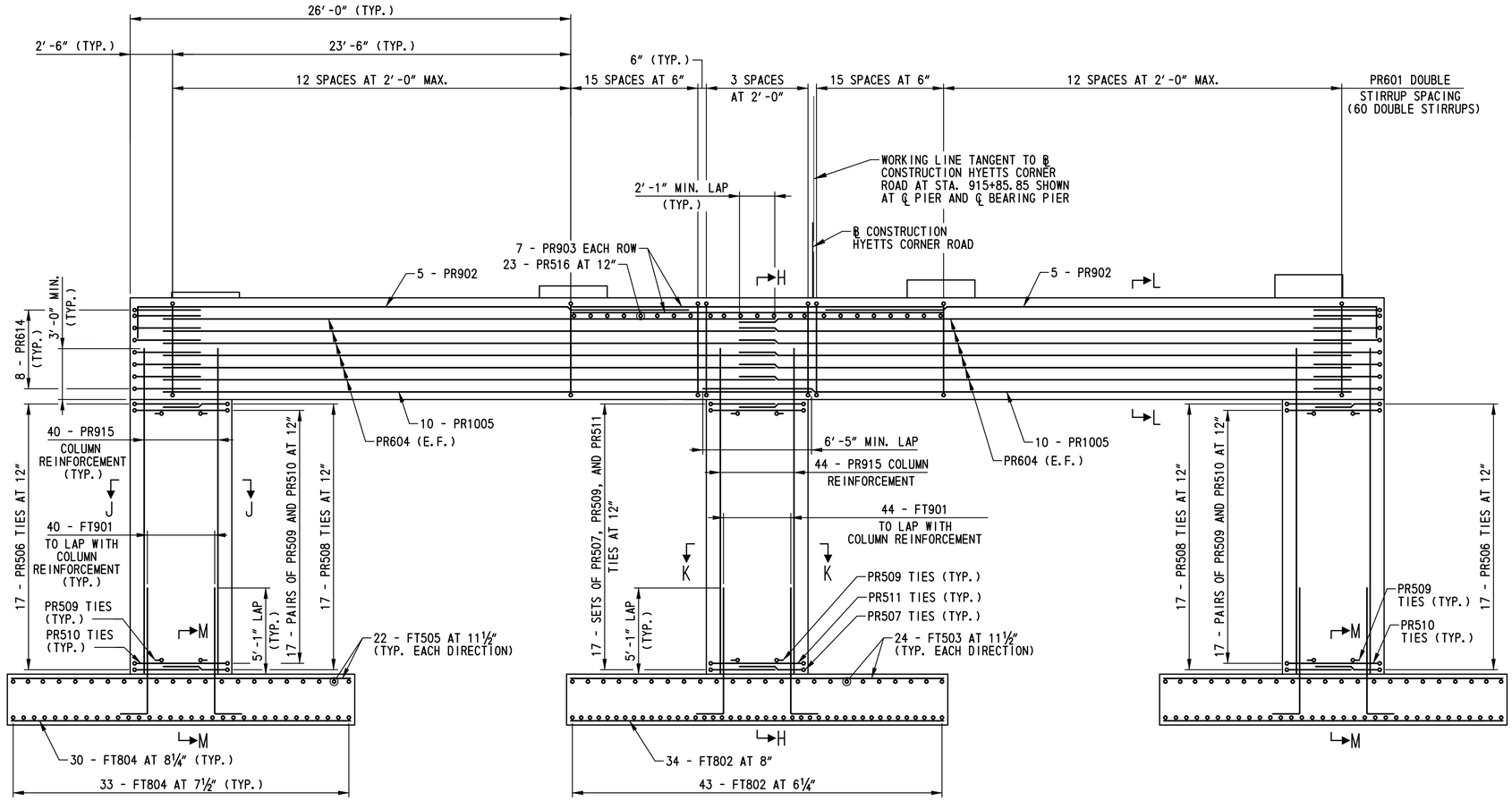

REINFORCEMENT ELEVATION

SCALE: ¼"=1'-0"

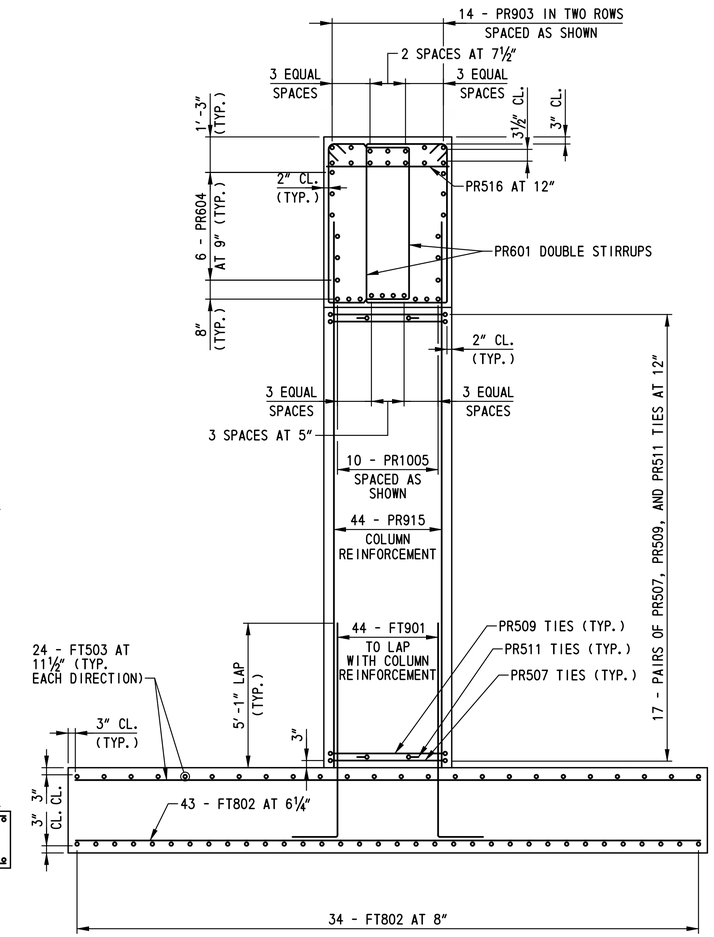

SECTION H-H

SCALE: ⅜"=1'-0"

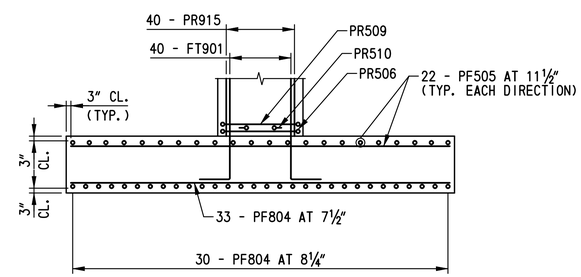

SECTION M-M

SCALE: ¼"=1'-0"

NOTES:

1. FOR CONCRETE BEARING PAD REINFORCING DETAILS, SEE DWG. NO. PR-03.
2. FOR SECTIONS J-J, K-K AND L-L, SEE DWG. NO. PR-03.
3. SPACE REINFORCING STEEL AS NECESSARY TO CLEAR ANCHOR BOLTS. FOR ADDITIONAL INFORMATION, SEE DWG. NOS. PR-03 AND BB-03.
4. ALTERNATE 90 DEGREE AND 135 DEGREE HOOK OF PR509 AND PR511 TIES IN EACH LAYER OF CENTER COLUMN. ALTERNATE 90 DEGREE AND 135 DEGREE HOOK OF PR509 AND PR510 TIES IN EACH LAYER OF EXTERIOR COLUMNS.

BR1-5
PR-02

DELAWARE DEPARTMENT OF TRANSPORTATION

ADDENDUMS / REVISIONS

SCALE: AS NOTED

US 301, SR 896 TO SR 1

CONTRACT	BRIDGE NO.	1-436A
T200911308	DESIGNED BY: W.T.R.	
COUNTY		
NEW CASTLE	CHECKED BY: B.K.B.	

PIER REINFORCEMENT DETAILS - 1

SHEET NO.
282
TOTAL SHTS.
875

r:\31653-000\contract to\cadd\bridge\Br_No5\PR02_br1-5.dgn
10/24/2012 11:34:14 AM

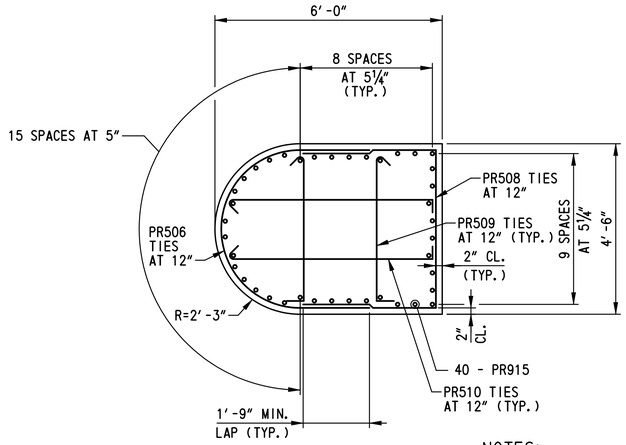

SECTION J-J
SCALE: ½″=1′-0″

NOTES:

1. ALTERNATE 90 DEGREE AND 135 DEGREE HOOK OF PR509 AND PR510 TIES IN EACH LAYER.
2. SECTION J-J SHOWN AT COLUMN 3, COLUMN 1 SIMILAR.

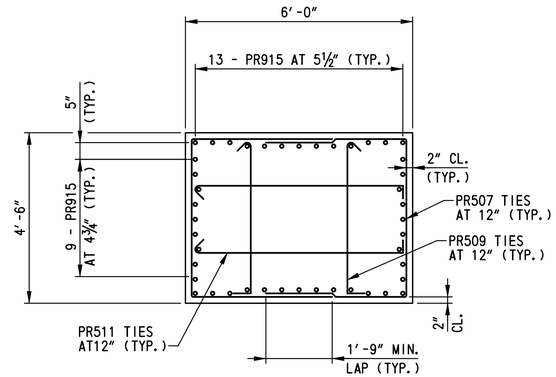

SECTION K-K
SCALE: ½″=1′-0″

NOTE:

ALTERNATE 90 DEGREE AND 135 DEGREE HOOK OF PR509 AND PR511 TIES IN EACH LAYER.

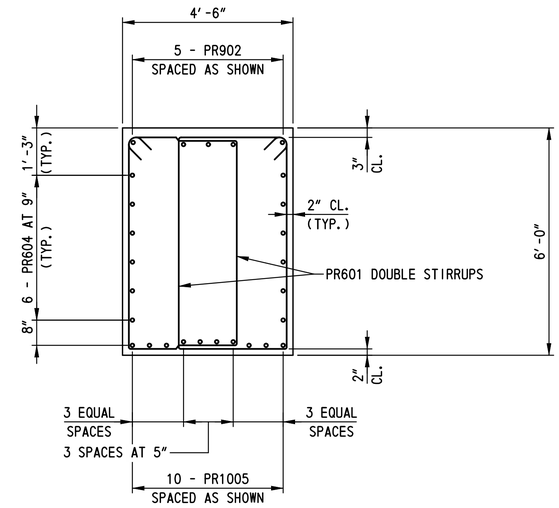

SECTION L-L
SCALE: ½″=1′-0″

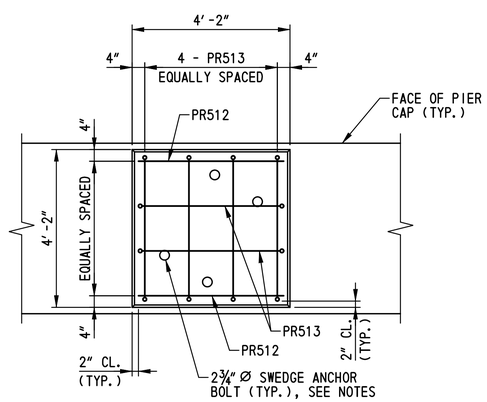

PLAN

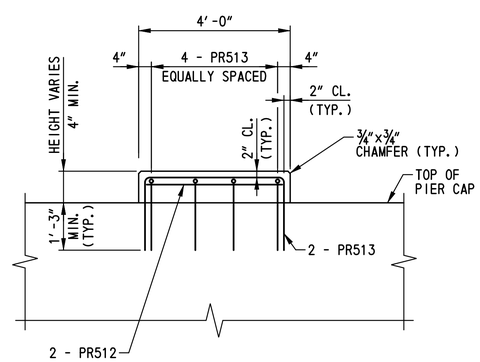

ELEVATION

PIER CONCRETE BEARING PAD REINFORCEMENT DETAILS
SCALE: ½″=1′-0″

NOTES:

1. FOR LOCATION OF SECTIONS J-J, K-K AND L-L, SEE DWG. NO. PR-02.
2. FOR ANCHOR BOLT DIMENSIONS AND LOCATION, SEE DWG. NOS. BB-01 AND BB-02.
3. ANCHOR BOLTS SHALL BE CAST IN PLACE. A TEMPORARY CASTING TEMPLATE SHALL BE USED TO ENSURE THE ANCHOR BOLTS ARE PROPERLY ALIGNED AND PLUMB. THE TEMPLATE SHALL BE REMOVED AFTER THE CONCRETE HAS SET.
4. SPACE REINFORCING STEEL AS NECESSARY TO CLEAR ANCHOR BOLTS.
5. ANCHOR BOLTS NOT SHOWN IN ELEVATION FOR CLARITY.

BR1-5
PR-03

DELAWARE DEPARTMENT OF TRANSPORTATION	ADDENDUMS / REVISIONS	SCALE: AS NOTED	US 301, SR 896 TO SR 1	CONTRACT T200911308 / COUNTY NEW CASTLE	BRIDGE NO. 1-436A / DESIGNED BY: W.T.R. / CHECKED BY: B.K.B.	PIER REINFORCEMENT DETAILS – 2

SHEET NO. 283
TOTAL SHTS. 875

pt\33653-000\contract 1a\cadd\bridge\Br_No5\PR03_br1-5.dgn
10/24/2012 11:34:20 AM

① ANY MARK NUMBER WITH SUFFIX 'E' DENOTES EPOXY COATED REINFORCING STEEL.

② ALL MARK 'LOCATION PREFIXES' SHALL CONSIST OF TWO LETTERS AND ARE AS FOLLOWS: AB = ABUTMENT, AS = APPROACH SLAB, BC = BOX CULVERT, BW = BACKWALL, CL = COLUMN, DK = DECK, DL = DOWEL, FT = FOOTING, HW = HEADWALL, MS = MISC. BARS, PA = PARAPET, PR = PIER, SC = SHEETPILE CAP, SL = SLAB, TW = TOEWALL, WL = WALL (UNIQUE LOCATION), WW = WINGWALL

SPECIFICATIONS					BENDING DIMENSIONS (FEET-INCHES /QUARTER INCH)										
QTY.	SIZE	LENGTH	MARK	TYPE	A	B	C	D	E	F/R	G	H	J	K	O
ABUTMENT A															
178	5	3-04 0	AB501E	STR		3-04 0									
8	6	39-07 2	AB602E	STR		39-07 2									
		T0				T0									
		46-03 3				46-03 3									
8	6	35-03 1	AB603E	STR		35-03 1									
		T0				T0									
		41-11 2				41-11 2									
16	9	43-04 1	AB904E	STR		43-04 1									
20	5	40-07 1	AB505E	STR		40-07 1									
2	5	41-11 2	AB506E	STR		41-11 2									
2	5	35-03 1	AB507E	STR		35-03 1									
72	6	10-06 0	AB608E	17		3-00 0	4-06 0	3-00 0							
68	6	11-08 0	AB609E	17		3-07 0	4-06 0	3-07 0							
5	6	10-06 0	AB610E	T1	0-08 0	1-01 0	3-06 0	1-01 0	3-06 0		0-08 0				
		T0				T0		T0							
		7-02 0				3-07 0		3-07 0							
1	6	18-10 2	AB611E	T1	0-08 0	4-01 1	4-08 0	4-01 1	4-08 0		0-08 0				
1	6	17-07 2	AB612E	T1	0-08 0	3-05 3	4-08 0	3-05 3	4-08 0		0-08 0				
3	6	13-04 0	AB613E	T1	0-08 0	1-04 0	4-08 0	1-04 0	4-08 0		0-08 0				
		T0				T0		T0							
		5-02 0				2-07 0		2-07 0							
16	5	11-00 2	AB514E	A		1-06 0	8-00 2	1-06 0				6-10 0			
1	5	5-06 2	AB515E	2	0-07 0	4-04 2					0-07 0				
3	6	36-06 0	AB616E	STR		36-06 0									
3	6	47-00 0	AB617E	STR		47-00 0									
16	5	7-04 0	AB518E	17		2-01 2	3-01 0	2-01 2							
8	5	3-02 0	AB519E	STR		3-02 0									
8	5	7-05 0	AB520E	17		2-01 2	3-02 0	2-01 2							
90*	5	5-05 2	BW501E	STR		5-05 2									
		T0				T0									
		6-08 1				6-08 1									
			*1 SET OF 44, 1 SET OF 46												
1	5	42-06 0	BW502E	STR		42-06 0									
1	5	43-07 0	BW503E	STR		43-07 0									
6	5	42-05 3	BW504E	STR		42-05 3									
6	5	43-06 3	BW505E	STR		43-06 3									
74*	5	5-06 1	BW506E	STR		5-06 1									
		T0				T0									

SPECIFICATIONS					BENDING DIMENSIONS (FEET-INCHES /QUARTER INCH)										
QTY.	SIZE	LENGTH	MARK	TYPE	A	B	C	D	E	F/R	G	H	J	K	O
		6-06 1				6-06 1									
			*1 SET OF 38, 1 SET OF 36												
1	5	36-07 2	BW507E	STR		36-07 2									
1	5	35-01 3	BW508E	STR		35-01 3									
6	5	36-07 1	BW509E	STR		36-07 1									
6	5	35-01 3	BW510E	STR		35-01 3									
79	5	2-07 0	BW511E	2	0-10 0	0-11 0	0-10 0								
6	5	9-02 2	BW512E	30		1-00 0	8-02 2					0-06 1		0-10 1	
7	5	9-00 0	BW513E	3			1-00 0	8-00 0					0-06 1	0-10 1	
7	5	5-04 3	BW514E	STR		5-04 3									
		T0				T0									
		5-06 2				5-06 2									
7	5	6-05 2	BW515E	STR		6-05 2									
		T0				T0									
		6-06 3				6-06 3									
ABUTMENT B															
176	5	3-04 0	AB525E	STR		3-04 0									
16	5	41-06 0	AB526E	STR		41-06 0									
20	5	40-07 0	AB527E	STR		40-07 0									
16	8	42-09 0	AB828E	STR		42-09 0									
140	6	11-00 0	AB629E	17		3-03 0	4-06 0	3-03 0							
5	6	11-06 0	AB630E	T1	0-08 0	1-01 0	4-00 0	1-01 0	4-00 0		0-08 0				
		T0				T0		T0							
		7-02 0				3-07 0		3-07 0							
1	6	17-06 2	AB631E	T1	0-08 0	4-01 1	4-00 0	4-01 1	4-00 0		0-08 0				
1	6	16-03 2	AB632E	T1	0-08 0	3-05 3	4-00 0	3-05 3	4-00 0		0-08 0				
3	6	12-00 0	AB633E	T1	0-08 0	1-04 0	4-00 0	1-04 0	4-00 0		0-08 0				
		T0				T0		T0							
		5-02 0				2-07 0		2-07 0							
14	5	11-00 2	AB534E	A		1-06 0	8-00 2	1-06 0				6-10 0			
3	6	36-06 0	AB635E	STR		36-06 0									
3	6	47-00 0	AB636E	STR		47-00 0									
16	5	6-09 0	AB537E	17		1-10 0	3-01 0	1-10 0							
8	5	3-02 0	AB538E	STR		3-02 0									
8	5	6-10 0	AB539E	17		1-10 0	3-02 0	1-10 0							
162*	5	5-06 3	BW520E	STR		5-06 3									
		T0				T0									
		6-00 0				6-00 0									

SPECIFICATIONS					BENDING DIMENSIONS (FEET-INCHES /QUARTER INCH)										
QTY.	SIZE	LENGTH	MARK	TYPE	A	B	C	D	E	F/R	G	H	J	K	O
			*2 SETS OF 81												
6	5	39-10 3	BW521E	STR		39-10 3									
6	5	40-10 3	BW522E	STR		40-10 3									
6	5	39-02 1	BW523E	STR		39-02 1									
6	5	37-10 3	BW524E	STR		37-10 3									
79	5	2-07 0	BW525E	2	0-10 0	0-11 0	0-10 0								
6	5	9-02 2	BW526E	30		1-00 0	8-02 2							0-06 1	
7	5	9-00 0	BW527E	3			1-00 0	8-00 0							0-06 1	0-10 1
7	5	6-00 0	BW528E	STR		6-00 0									
7	5	5-05 3	BW529E	STR		5-05 3									
PIER															
120	6	18-02 0	PR601	T1	0-08 0	2-10 0	5-07 0	2-10 0	5-07 0		0-08 0				
10	9	32-07 0	PR902	2	1-07 0	31-00 0									
14	9	22-00 0	PR903	STR		22-00 0									
24	6	35-09 2	PR604	STR		35-09 2									
20	10	40-00 2	PR1005	STR		40-00 2									
34	5	10-00 2	PR506	10		6-06 2	1-09 0	1-09 0		2-00 2					4-02 0
34	5	11-11 0	PR507	17		3-10 2	4-02 0	3-10 2							
34	5	11-04 0	PR508	17		3-07 0	4-02 0	3-07 0							
102	5	5-01 2	PR509	T9	0-05 2	4-02 0					0-06 0				
68	5	6-05 2	PR510	T9	0-05 2	5-06 0					0-06 0				
34	5	6-07 2	PR511	T9	0-05 2	5-08 0					0-06 0				
8	5	3-10 0	PR512	STR		3-10 0									
24	5	8-10 0	PR513	17		2-06 0	3-10 0	2-06 0							
16	6	10-8 2	PR614	10		6-06 2	2-01 0	2-01 0		2-00 2					4-02 0
124	9	19-02 2	PR915	STR		19-02 2									
23	5	4-01 0	PR516	STR		4-01 0									
124	9	9-02 0	FT901	2	1-07 0	7-07 0									
77	8	22-00 0	FT802	STR		22-00 0									
48	5	22-00 0	FT503	STR		22-00 0									
126	8	20-00 0	FT804	STR		20-00 0									
88	5	20-00 0	FT505	STR		20-00 0									

ASTM STANDARD ENGLISH REINFORCING BARS				RECOMMENDED END HOOKS, APPLICABLE TO ALL GRADES				STIRRUP AND TIE HOOKS, APPLICABLE TO ALL GRADES			
NOMINAL DIMENSIONS					180° HOOKS		90° HOOKS		90° HOOK	135° HOOK	
BAR SIZE	DIAMETER (INCHES)	AREA (INCHES²)	WEIGHT (LBS./FT.)	D	A OR G	J	A OR G	D	A OR G	A OR G	H
3	0.375	0.110	0.376	2¼"	5"	3"	6"	1½"	4"	4"	2½"
4	0.500	0.200	0.668	3"	6"	4"	8"	2"	4½"	4½"	3"
5	0.625	0.310	1.043	3¾"	7"	5"	10"	2½"	6"	5½"	3¾"
6	0.750	0.440	1.502	4½"	8"	6"	1-0"	4½"	1-0"	8"	4½"
7	0.875	0.600	2.044	5¼"	10"	7"	1-2"	5¼"	1-2"	9"	5¼"
8	1.000	0.790	2.670	6"	11"	8"	1-4"	6"	1-4"	10½"	6"
9	1.128	1.000	3.400	9½"	1-3"	11¾"	1-7"				
10	1.270	1.270	4.303	10¾"	1-5"	1-1¼"	1-10"				
11	1.410	1.560	5.313	1-0"	1-7"	1-2¾"	2-0"				
14	1.693	2.250	7.650	1-6¼"	2-3"	1-9¾"	2-7"				
18	2.257	4.000	13.600	2-0"	3-0"	2-4½"	3-5"				

NOTES:

1. FIGURES SHOWN IN CIRCLES REPRESENT BAR BEND TYPES.
2. STANDARD BAR BENDS INCLUDE ONLY THOSE TYPES BELOW, INDICATED AS SUCH.
3. ALL DIMENSIONS OUT-TO-OUT, EXCEPT "A" AND "G" ON STD. 180° AND 135° HOOKS.
4. "J" DIMENSIONS ON 180° HOOKS TO BE SHOWN ONLY WHERE NECESSARY TO RESTRICT HOOK SIZE, OTHERWISE STANDARD 'ACI' HOOKS ARE TO BE USED.
5. WHERE "J" IS NOT SHOWN, "J" WILL BE KEPT EQUAL TO OR LESS THAN "H" ON TYPES 3, 5 AND 22. WHERE "J" CAN EXCEED "H", IT SHALL BE SHOWN.
6. "H" DIMENSIONS OF STIRRUPS TO BE SHOWN AS NEEDED TO FIT WITHIN THE CONCRETE.
7. UNLESS OTHERWISE NOTED, DIAMETER "D" IS THE SAME FOR ALL BENDS AND HOOKS ON A BAR (EXCEPT FOR BEND TYPES 11 AND 13).
8. WHERE SLOPE DIFFERS FROM 45° OFFSET, "H" AND "K" MUST BE SHOWN.
9. WHERE BARS ARE TO BE BENT MORE ACCURATELY THAN STANDARD BENDING TOLERANCES, BENDING DIMENSIONS REQUIRING CLOSER FABRICATION SHOULD HAVE LIMITS INDICATED.
10. FOR RECOMMENDED DIAMETER "D", OF BENDS, HOOKS, ETC., REFER TO TABLE ABOVE, 'CRSI' OR 'ACI' TABLES WHERE APPLICABLE AND REQUIRED.
11. TYPE S1-S6, S11, T1-T3 AND T6-T9 APPLICABLE TO BAR SIZES #3 THROUGH #8.

STANDARD BAR BENDS

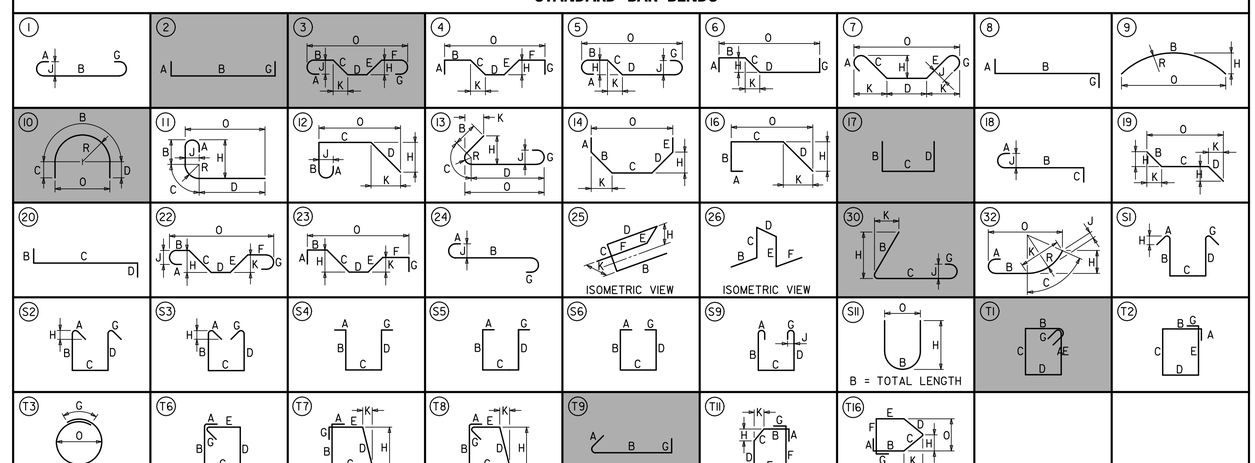

SPECIAL BAR BENDS

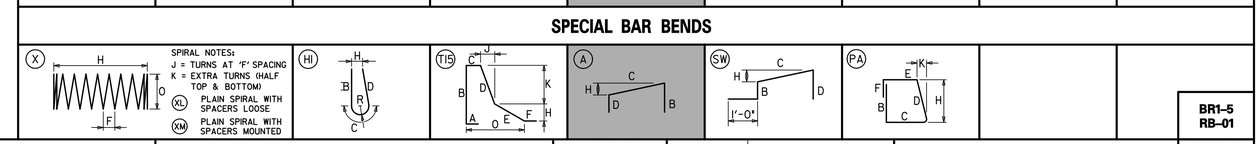

STIRRUP AND TIE HOOKS

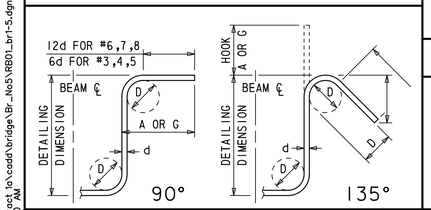

180° AND 90° END HOOKS

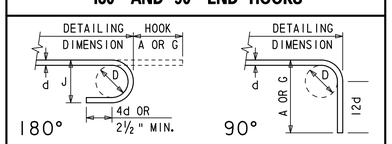

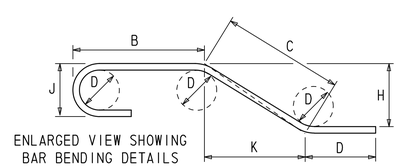

n:\3653-000\contract 1\cadd\bridge\Br_No5\RB01_br1-5.dgn
10/24/2012 11:34:40 AM

DELAWARE DEPARTMENT OF TRANSPORTATION

ADDENDUMS / REVISIONS

US 301, SR 896 TO SR 1

CONTRACT	BRIDGE NO.	1-436A
T200911308	DESIGNED BY: W.T.R.	
COUNTY		
NEW CASTLE	CHECKED BY: B.K.B.	

SUBSTRUCTURE REINFORCEMENT LIST

BR1-5
RB-01

SHEET NO.
284
TOTAL SHTS.
875

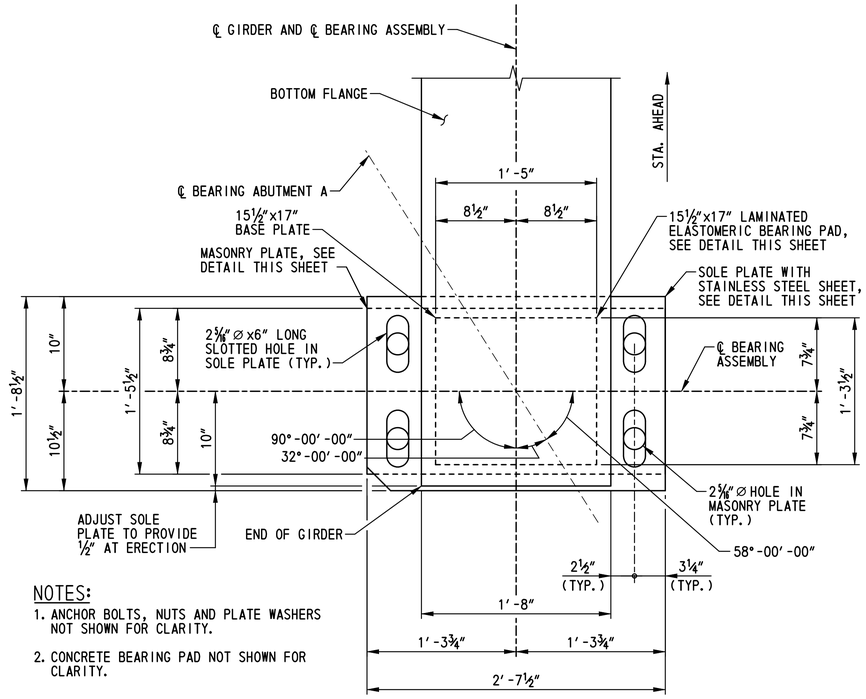

NOTES:

1. ANCHOR BOLTS, NUTS AND PLATE WASHERS NOT SHOWN FOR CLARITY.
2. CONCRETE BEARING PAD NOT SHOWN FOR CLARITY.

EXPANSION BEARING PLAN

SCALE: 1½"=1'-0"

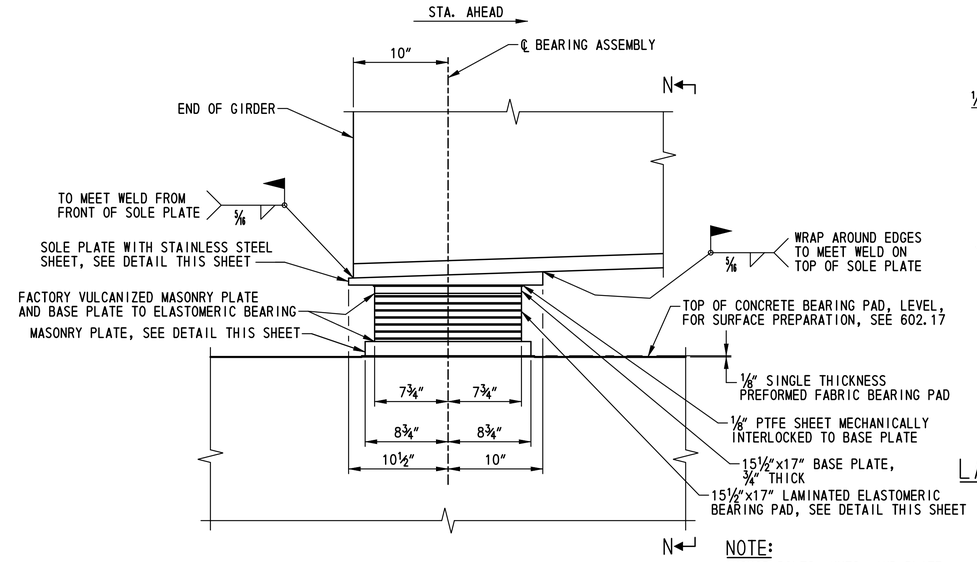

NOTE:

ANCHOR BOLTS, NUTS, AND PLATE WASHERS NOT SHOWN FOR CLARITY.

EXPANSION BEARING ELEVATION

SCALE: 1½"=1'-0"

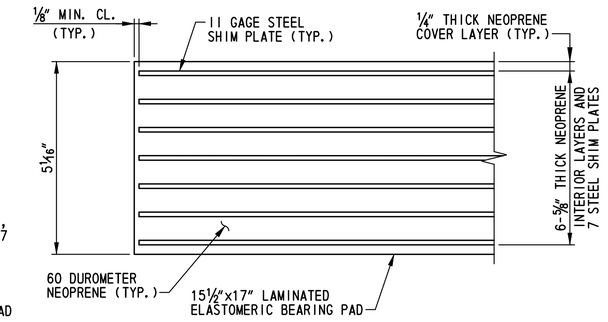

LAMINATED ELASTOMERIC BEARING PAD DETAIL

NOT TO SCALE

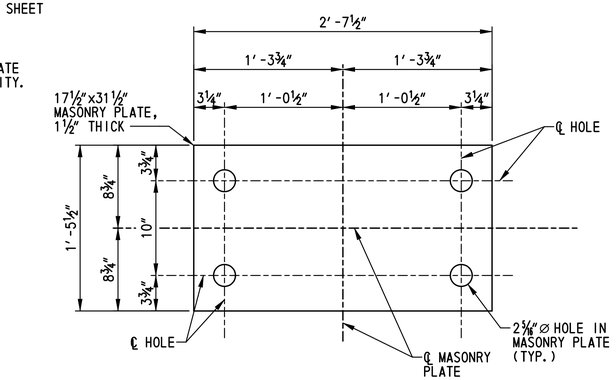

MASONRY PLATE

SCALE: 1½"=1'-0"

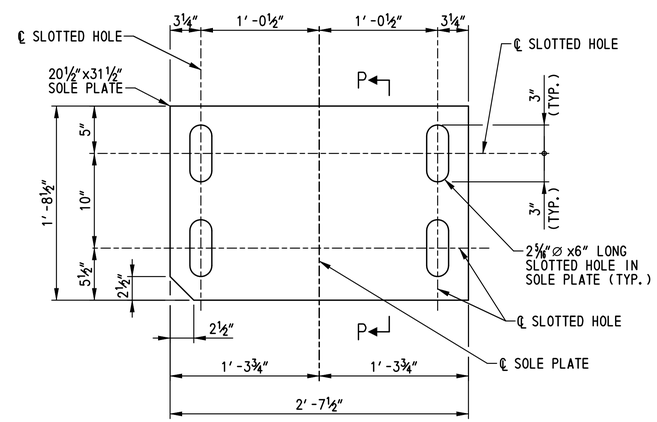

SOLE PLATE

SCALE: 1½"=1'-0"

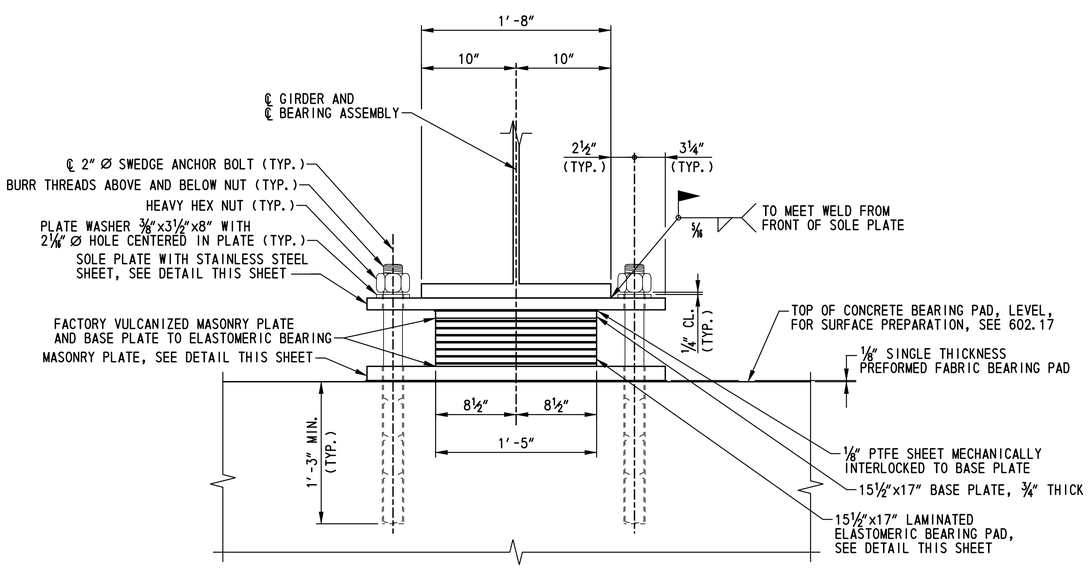

VIEW N-N

SCALE: 1½"=1'-0"

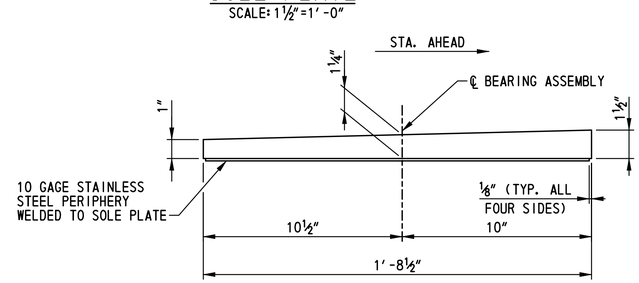

SECTION P-P

SCALE: 3"=1'-0"

ABUTMENT A EXPANSION BEARING NOTES:

1. BEARING ASSEMBLIES SHALL BE PLACED PERPENDICULAR TO THE CENTERLINE OF GIRDER.
2. SOLE PLATES, BASE PLATES AND MASONRY PLATES SHALL BE ASTM A 709, GRADE 36 STEEL. PLATES SHALL BE PAINTED WITH A URETHANE PAINT SYSTEM IN ACCORDANCE WITH SPECIAL PROVISION ITEM 605537 - URETHANE PAINT SYSTEM, NEW STEEL. TOPCOAT COLOR SHALL BE STANDARD COLOR NO. 10076 (BROWN) OF FEDERAL STANDARD NO. 595B. THE COST OF PAINTING SHALL BE INCIDENTAL TO ITEM 605639 - TFE STAINLESS STEEL STRUCTURAL BEARINGS.
3. FILL SLOTS AND HOLES AROUND ANCHOR BOLTS WITH NONHARDENING CAULKING COMPOUND OR ELASTIC JOINT SEALER.
4. 1000 RMS FINISH ON ALL STEEL PLATES.
5. ANCHOR BOLTS SHALL BE UNPAINTED ASTM F 1554, GRADE 105 GALVANIZED STEEL. PLATE WASHERS SHALL BE UNPAINTED ASTM A 709, GRADE 36 GALVANIZED STEEL. NUTS SHALL BE UNPAINTED ASTM A 563 GALVANIZED STEEL.
6. ELASTOMERIC BEARINGS SHALL CONFORM TO M 251 AND THE ELASTOMER SHALL BE 60 DUROMETER NEOPRENE. SHIMS SHALL BE 11 GAGE MILD STEEL CONFORMING TO ASTM A 36.
7. STAINLESS STEEL SHEET SHALL BE ASTM A 167 OR A 264, TYPE 304, #8 MIRROR FINISH.
8. PTFE SHEET SHALL BE DIMPLED LUBRICATED MEETING THE REQUIREMENTS OF ASTM D 4894 OR D 4895. PTFE SHEET SHALL HAVE THE SAME PLAN AREA AS THE BASE PLATE.
9. THE BASE PLATE AND MASONRY PLATE SHALL BE FACTORY VULCANIZED TO THE ELASTOMERIC BEARING, AND BEARINGS ARE TO BE SHIPPED ASSEMBLED AS UNITS.
10. BEARING MAXIMUM DESIGN LOAD: 275 KIPS. BEARING DESIGN COEFFICIENT OF FRICTION: 0.04.
11. CONTRACTOR SHALL TOUCH UP SOLE PLATE PAINT SYSTEM, IN ACCORDANCE WITH THE MANUFACTURER'S RECOMMENDATIONS, AFTER WELDING THE SOLE PLATE TO THE GIRDER.
12. PAYMENT FOR ABUTMENT A EXPANSION BEARINGS WILL BE MADE UNDER ITEM NO. 605639 - TFE STAINLESS STEEL STRUCTURAL BEARINGS.

BR1-5
BB-01

DELAWARE DEPARTMENT OF TRANSPORTATION

ADDENDUMS / REVISIONS

SCALE: AS NOTED

US 301, SR 896 TO SR 1

CONTRACT	BRIDGE NO.	1-436A
T200911308	DESIGNED BY: W.T.R.	
COUNTY		
NEW CASTLE	CHECKED BY: B.K.B.	

EXPANSION BEARING DETAILS - ABUTMENT A

SHEET NO. 285

TOTAL SHTS. 875

N:\33653-000\CONTRACT 1A\CADD\Bridge\Br_No5\BB01_br1-5.dgn
4/30/2015 2:59:41 PM

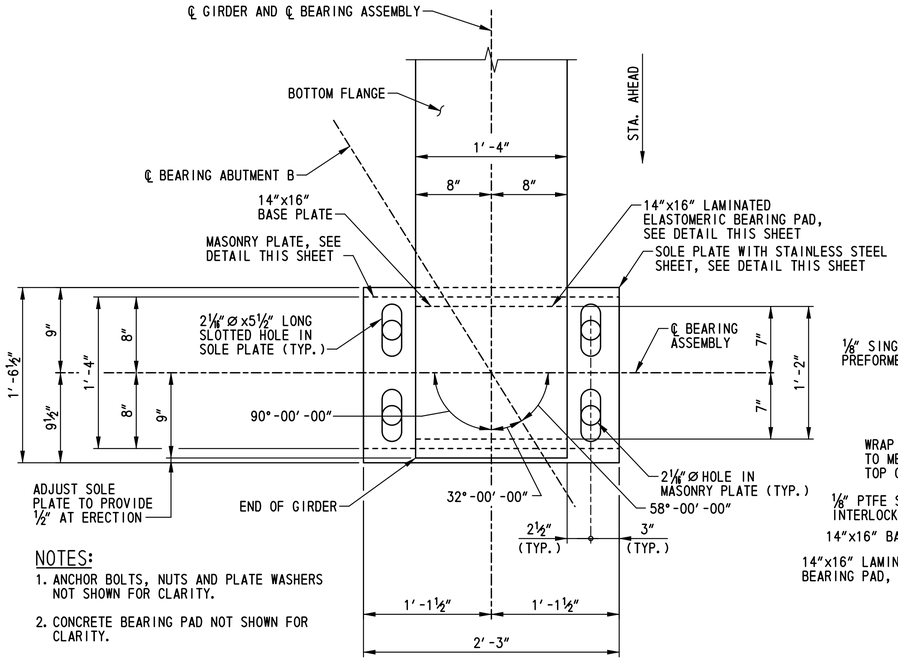

NOTES:

1. ANCHOR BOLTS, NUTS AND PLATE WASHERS NOT SHOWN FOR CLARITY.
2. CONCRETE BEARING PAD NOT SHOWN FOR CLARITY.

EXPANSION BEARING PLAN

SCALE: 1 1/2″=1′-0″

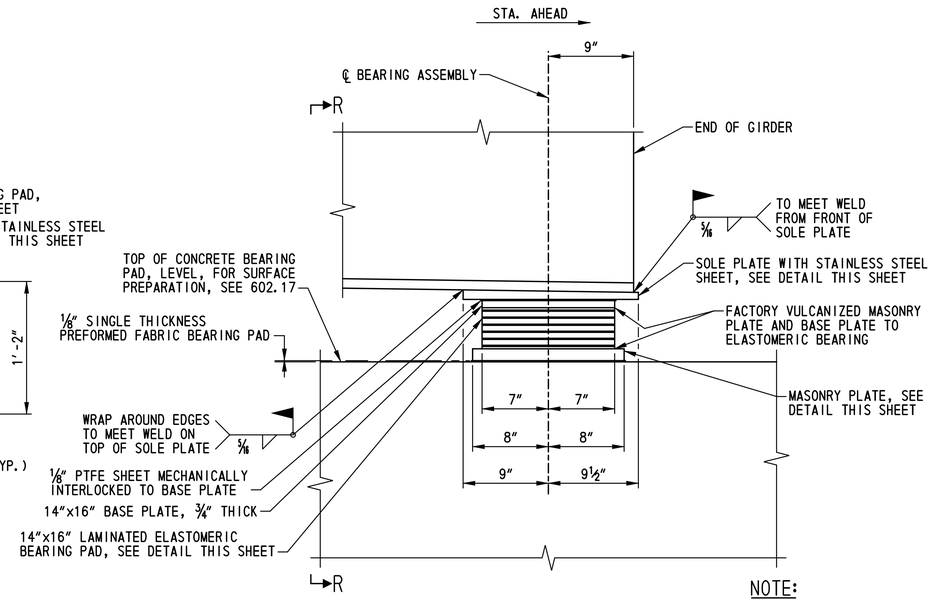

NOTE:

ANCHOR BOLTS, NUTS, AND PLATE WASHERS NOT SHOWN FOR CLARITY.

EXPANSION BEARING ELEVATION

SCALE: 1 1/2″=1′-0″

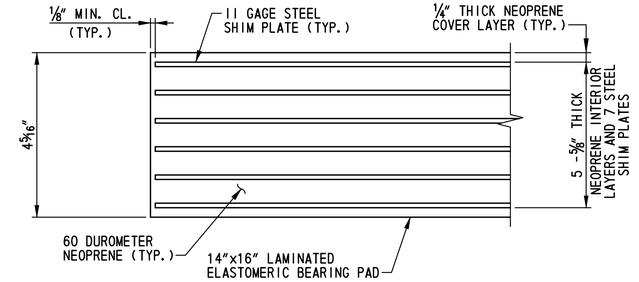

LAMINATED ELASTOMERIC BEARING PAD DETAIL

NOT TO SCALE

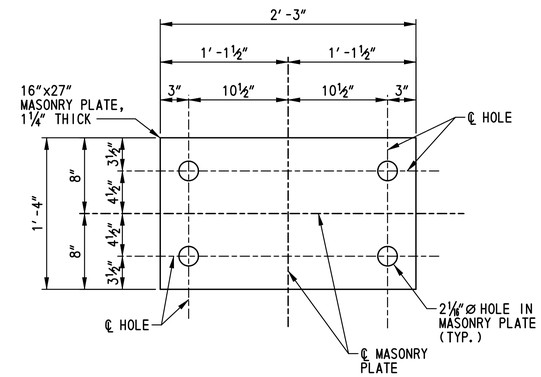

MASONRY PLATE

SCALE: 1 1/2″=1′-0″

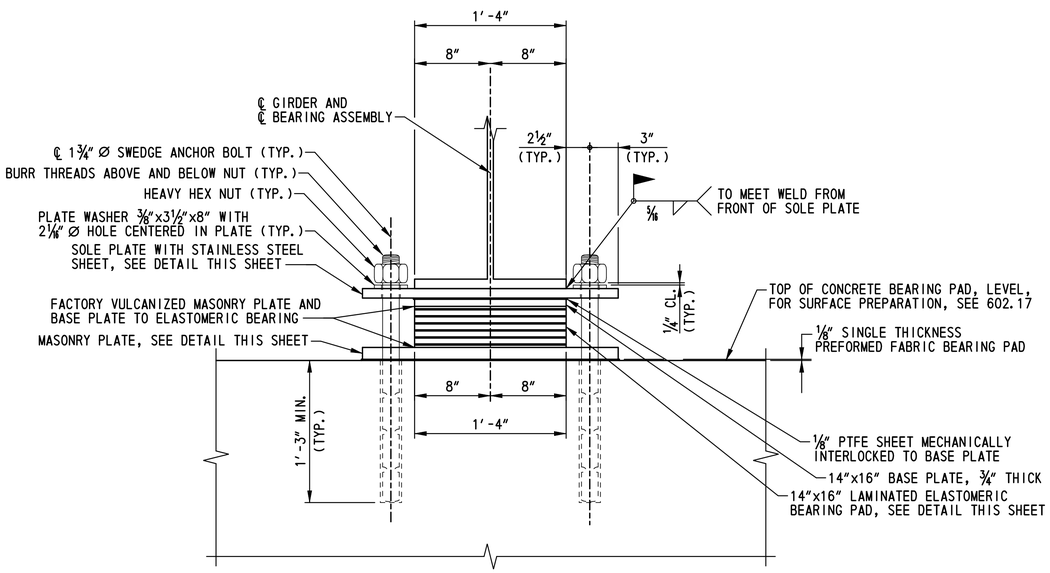

VIEW R-R

SCALE: 1 1/2″=1′-0″

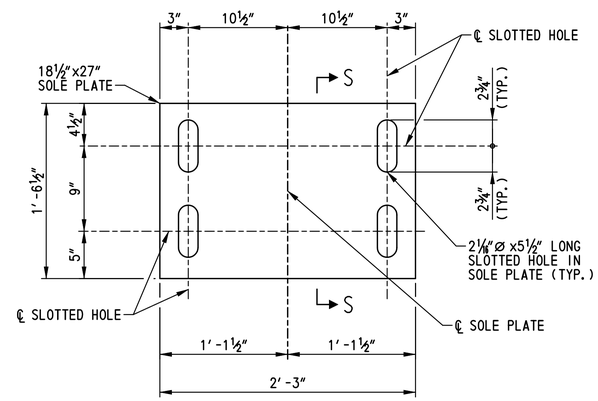

SOLE PLATE

SCALE: 1 1/2″=1′-0″

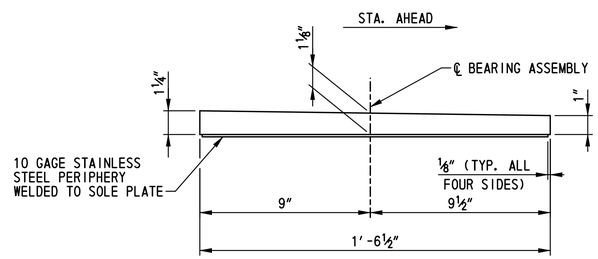

SECTION S-S

SCALE: 3″=1′-0″

ABUTMENT B EXPANSION BEARING NOTES:

1. BEARING ASSEMBLIES SHALL BE PLACED PERPENDICULAR TO THE CENTERLINE OF GIRDER.
2. SOLE PLATES, BASE PLATES AND MASONRY PLATES SHALL BE ASTM A 709, GRADE 36 STEEL. PLATES SHALL BE PAINTED WITH A URETHANE PAINT SYSTEM IN ACCORDANCE WITH SPECIAL PROVISION ITEM 605537 - URETHANE PAINT SYSTEM, NEW STEEL. TOPCOAT COLOR SHALL BE STANDARD COLOR NO. 10076 (BROWN) OF FEDERAL STANDARD NO. 595B. THE COST OF PAINTING SHALL BE INCIDENTAL TO ITEM 605639 - TFE STAINLESS STEEL STRUCTURAL BEARINGS.
3. FILL SLOTS AND HOLES AROUND ANCHOR BOLTS WITH NONHARDENING CAULKING COMPOUND OR ELASTIC JOINT SEALER.
4. 1000 RMS FINISH ON ALL STEEL PLATES.
5. ANCHOR BOLTS SHALL BE UNPAINTED ASTM F 1554, GRADE 105 GALVANIZED STEEL. PLATE WASHERS SHALL BE UNPAINTED ASTM A 709, GRADE 36 GALVANIZED STEEL. NUTS SHALL BE UNPAINTED ASTM A 563 GALVANIZED STEEL.
6. ELASTOMERIC BEARINGS SHALL CONFORM TO M 251 AND THE ELASTOMER SHALL BE 60 DUROMETER NEOPRENE. SHIMS SHALL BE 11 GAGE MILD STEEL CONFORMING TO ASTM A 36.
7. STAINLESS STEEL SHEET SHALL BE ASTM A 167 OR A 240, TYPE 304, #8 MIRROR FINISH. PTFE SHEET SHALL HAVE THE SAME PLAN AREA AS THE BASE PLATE.
8. PTFE SHEET SHALL BE DIMPLED LUBRICATED MEETING THE REQUIREMENTS OF ASTM D 4894 OR D 4895. PTFE SHEET SHALL HAVE THE SAME PLAN AREA AS THE BASE PLATE.
9. THE BASE PLATE AND MASONRY PLATE SHALL BE FACTORY VULCANIZED TO THE ELASTOMERIC BEARING, AND BEARINGS ARE TO BE SHIPPED ASSEMBLED AS UNITS.
10. BEARING MAXIMUM DESIGN LOAD: 220 KIPS. BEARING DESIGN COEFFICIENT OF FRICTION: 0.04.
11. CONTRACTOR SHALL TOUCH UP SOLE PLATE PAINT SYSTEM, IN ACCORDANCE WITH THE MANUFACTURER'S RECOMMENDATIONS, AFTER WELDING THE SOLE PLATE TO THE GIRDER.
12. PAYMENT FOR ABUTMENT B EXPANSION BEARINGS WILL BE MADE UNDER ITEM NO. 605639 - TFE STAINLESS STEEL STRUCTURAL BEARINGS.

BR1-5
BB-02

N:\31653-000\CONTRACT 1A\CADD\Bridge\Br_No5\BB02_br1-5.dgn
4/30/2015 3:02:03 PM

DELAWARE DEPARTMENT OF TRANSPORTATION

ADDENDUMS / REVISIONS

SCALE: AS NOTED

US 301, SR 896 TO SR 1

CONTRACT	BRIDGE NO.	1-436A
T200911308	DESIGNED BY: W.T.R.	
COUNTY		
NEW CASTLE	CHECKED BY: B.K.B.	

EXPANSION BEARING DETAILS - ABUTMENT B

SHEET NO.
286
TOTAL SHTS.
875

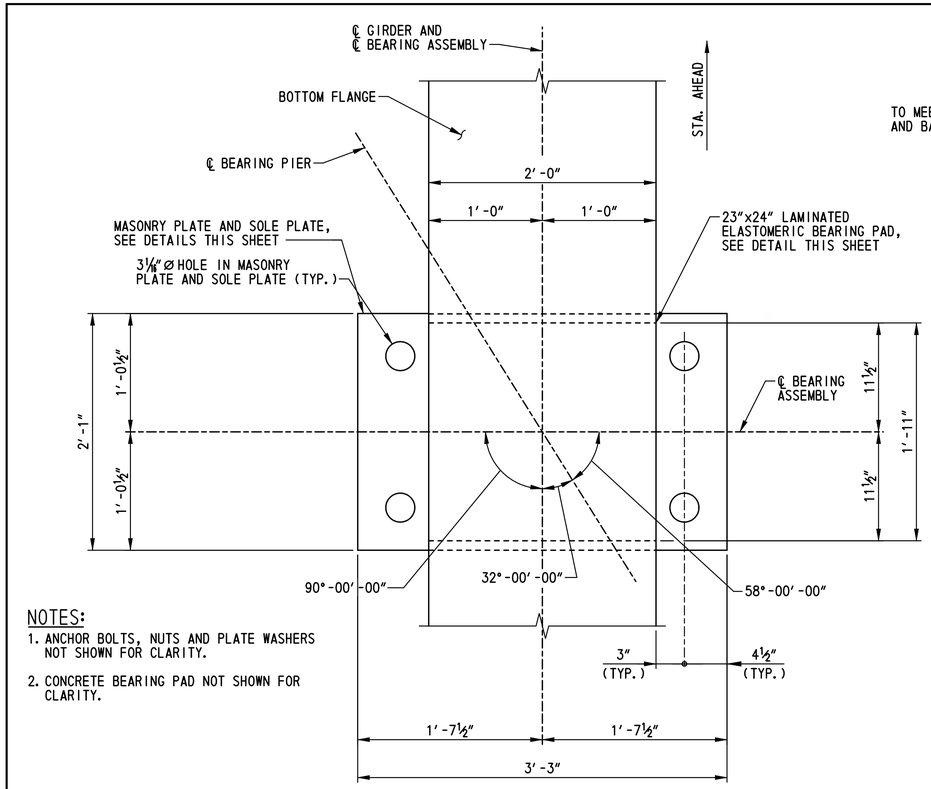

NOTES:

1. ANCHOR BOLTS, NUTS AND PLATE WASHERS NOT SHOWN FOR CLARITY.
2. CONCRETE BEARING PAD NOT SHOWN FOR CLARITY.

FIXED BEARING PLAN

SCALE: 1 1/2″=1′-0″

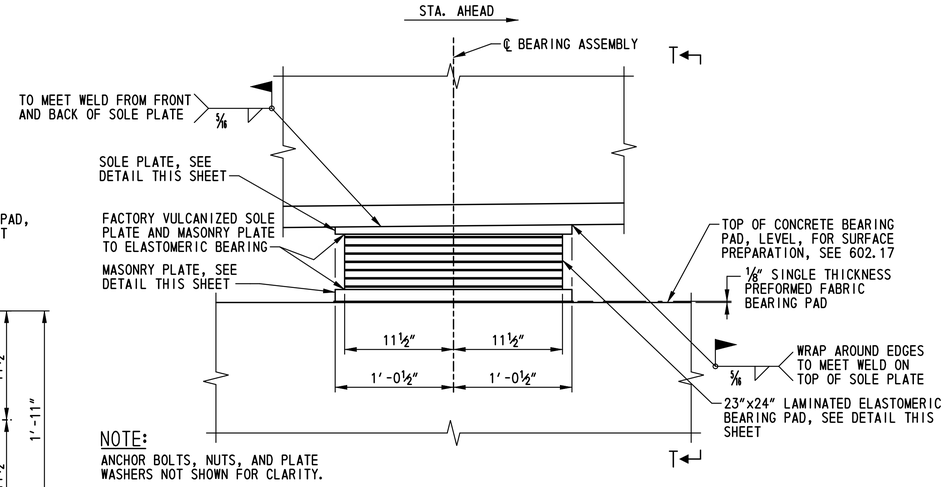

NOTE:

ANCHOR BOLTS, NUTS, AND PLATE WASHERS NOT SHOWN FOR CLARITY.

FIXED BEARING ELEVATION

SCALE: 1 1/2″=1′-0″

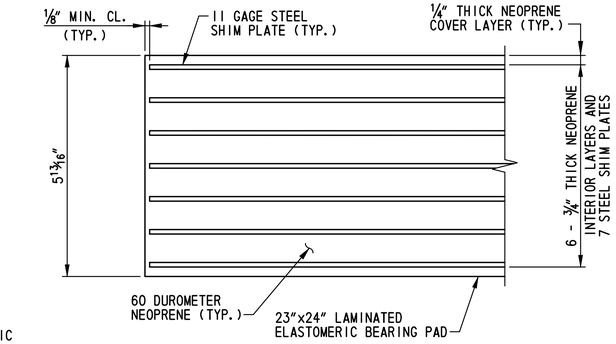

LAMINATED ELASTOMERIC BEARING PAD DETAIL

NOT TO SCALE:

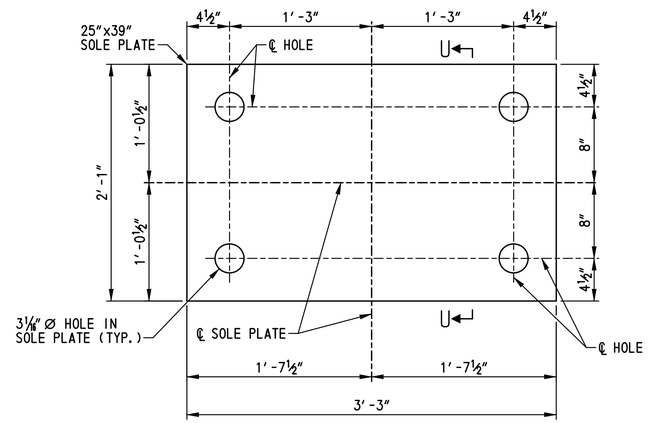

SOLE PLATE

SCALE: 1 1/2″=1′-0″

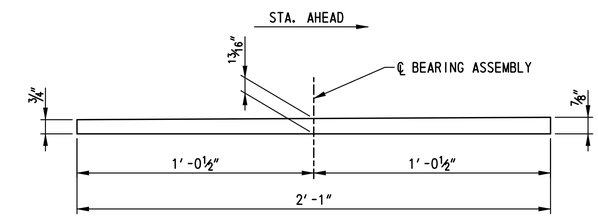

SECTION U-U

SCALE: 3″=1′-0″

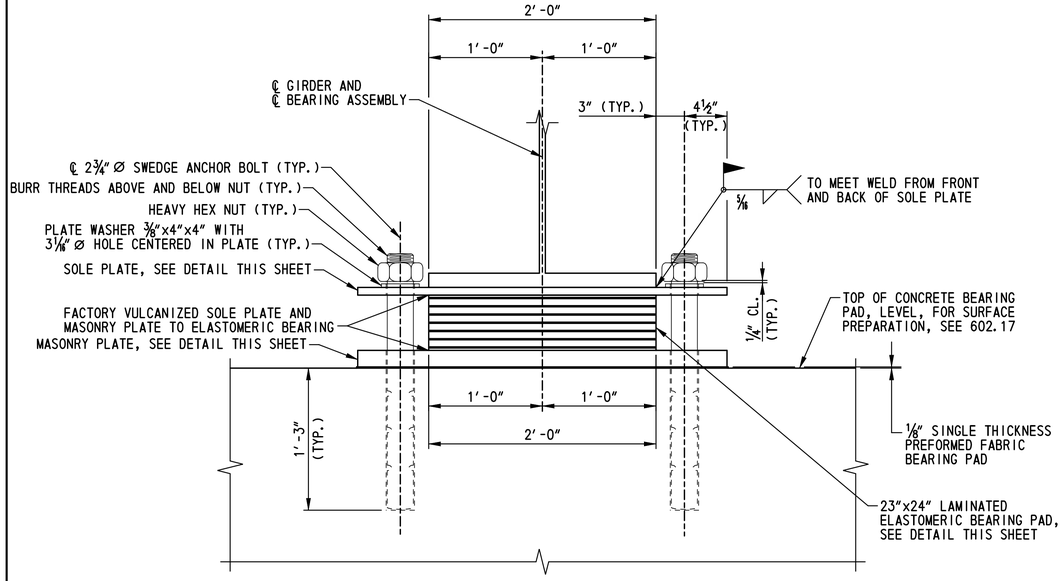

VIEW T-T

SCALE: 1 1/2″=1′-0″

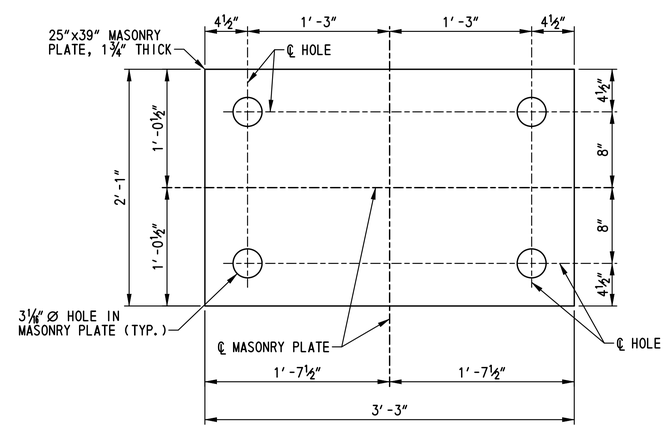

MASONRY PLATE

SCALE: 1 1/2″=1′-0″

PIER FIXED BEARING NOTES:

1. BEARING ASSEMBLIES SHALL BE PLACED PERPENDICULAR TO THE CENTERLINE OF GIRDER.
2. SOLE PLATES AND MASONRY PLATES SHALL BE ASTM A 709, GRADE 36 STEEL. PLATES SHALL BE PAINTED WITH A URETHANE PAINT SYSTEM IN ACCORDANCE WITH SPECIAL PROVISION ITEM 605537 - URETHANE PAINT SYSTEM, NEW STEEL. TOPCOAT COLOR SHALL BE STANDARD COLOR NO. 10076 (BROWN) OF FEDERAL STANDARD NO. 595B. THE COST OF PAINTING SHALL BE INCIDENTAL TO ITEM 605581 - ELASTOMERIC BEARING PADS.
3. FILL HOLES AROUND ANCHOR BOLTS WITH NONHARDENING CAULKING COMPOUND OR ELASTIC JOINT SEALER.
4. 1000 RMS FINISH ON ALL STEEL PLATES.
5. ANCHOR BOLTS SHALL BE UNPAINTED ASTM F 1554, GRADE 105 GALVANIZED STEEL. PLATE WASHERS SHALL BE UNPAINTED ASTM A 709, GRADE 36 GALVANIZED STEEL. NUTS SHALL BE UNPAINTED ASTM A 563 GALVANIZED STEEL.
6. ELASTOMERIC BEARINGS SHALL CONFORM TO M 251 AND THE ELASTOMER SHALL BE 60 DUROMETER NEOPRENE. SHIMS SHALL BE 11 GAGE MILD STEEL CONFORMING TO ASTM A 36.
7. THE SOLE PLATE AND MASONRY PLATE SHALL BE FACTORY VULCANIZED TO THE ELASTOMERIC BEARING, AND BEARINGS ARE TO BE SHIPPED ASSEMBLED AS UNITS.
8. BEARING MAXIMUM DESIGN LOAD: 720 KIPS.
9. CONTRACTOR SHALL TOUCH UP SOLE PLATE PAINT SYSTEM, IN ACCORDANCE WITH THE MANUFACTURER'S RECOMMENDATIONS, AFTER WELDING THE SOLE PLATE TO THE GIRDER.
10. PAYMENT FOR PIER FIXED BEARINGS WILL BE MADE UNDER ITEM NO. 605581 - ELASTOMERIC BEARING PADS.

BR1-5
BB-03

N:\31653-000\CONTRACT 1A\CADD\Bridge\Br_No5\BB03_br1-5.dgn
5/1/2015 11:43:01 AM

DELAWARE DEPARTMENT OF TRANSPORTATION	ADDENDUMS / REVISIONS	SCALE: AS NOTED	US 301, SR 896 TO SR 1	CONTRACT T200911308	BRIDGE NO. 1-436A	FIXED BEARING DETAILS – PIER	SHEET NO. 287
				COUNTY NEW CASTLE	DESIGNED BY: W.T.R.		TOTAL SHTS. 875
					CHECKED BY: B.K.B.		

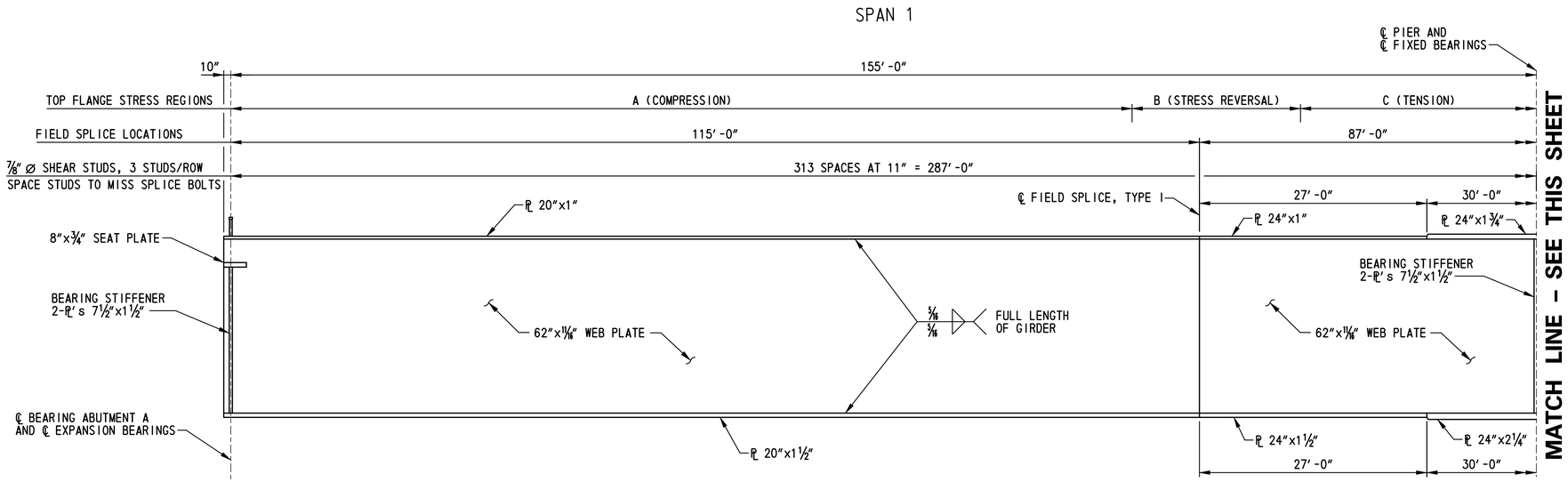

GIRDER ELEVATION
NOT TO SCALE

TOP FLANGE STRESS REGIONS					
GIRDER	A	B	C	D	E
1	102′-2″	23′-6″	59′-6″	32′-3″	69′-7″
2	106′-5″	20′-0″	59′-0″	28′-4″	73′-3″
3	107′-10″	18′-9″	59′-5″	29′-4″	71′-8″
4	105′-6″	22′-0″	59′-7″	33′-7″	66′-4″

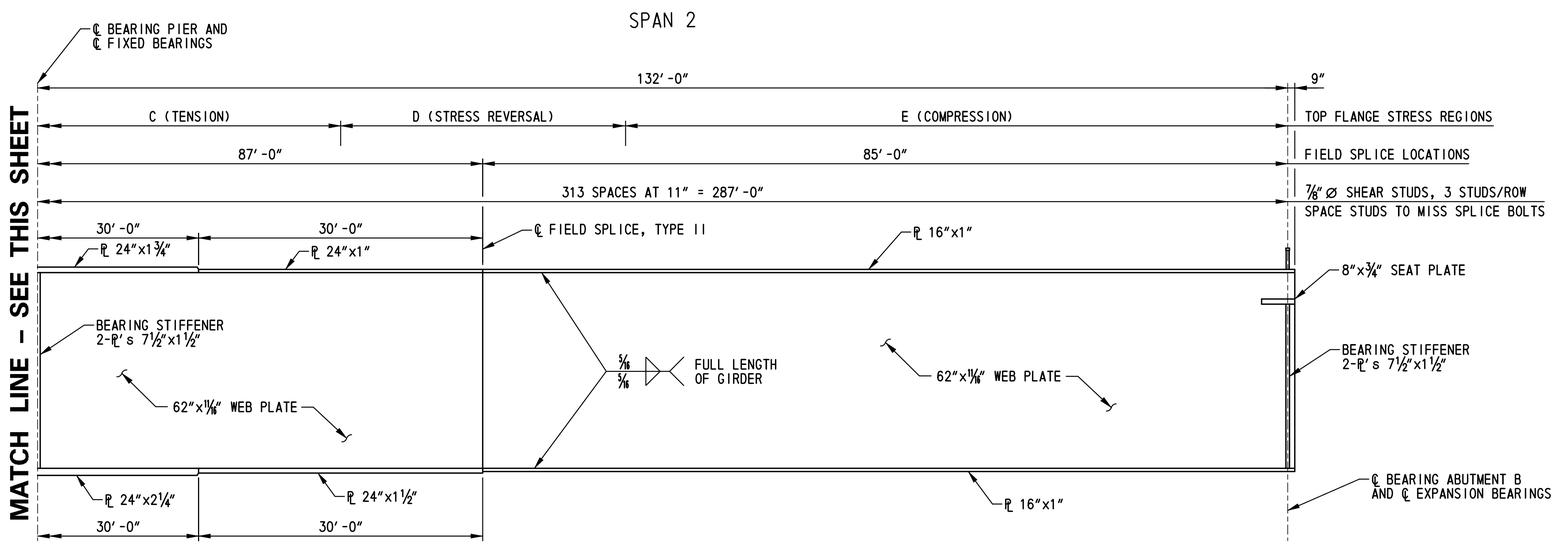

GIRDER ELEVATION
NOT TO SCALE

NOTES:

1. THE ENTIRE STRUCTURAL STEEL SUPERSTRUCTURE SHALL BE PREASSEMBLED IN THE FABRICATION SHOP WITH THE SPECIFIED BOLT DIAMETERS REQUIRED FOR CONSTRUCTION. AFTER THE STRUCTURAL STEEL SUPERSTRUCTURE HAS BEEN PREASSEMBLED PRIOR TO DISASSEMBLING DELDOT OR THEIR AUTHORIZED REPRESENTATIVES SHALL APPROVE THE PREASSEMBLED STRUCTURAL STEEL. NO STRUCTURAL STEEL SHALL BE DELIVERED TO THE PROJECT SITE UNTIL DELDOT OR THEIR AUTHORIZED REPRESENTATIVES HAS PROVIDED APPROVAL IN WRITING.
2. THE GIRDERS ARE REQUIRED TO BE PLUMB UNDER FULL DEAD LOAD.
3. THE CONTRACTOR IS RESPONSIBLE FOR THE ENTIRE ERECTION OF THE BRIDGE. THE CONTRACTOR SHALL SUBMIT DRAWINGS SEALED BY A PROFESSIONAL ENGINEER REGISTERED IN THE STATE OF DELAWARE, ILLUSTRATING FULLY THE PROPOSED METHOD OF ERECTION. THE DRAWINGS SHALL SHOW DETAILS OF ALL TEMPORARY SHORING, FALSEWORK, BRACING, GUYS, DEAD-MEN, LIFTING DEVICES, HOLD-DOWN DEVICES AND ATTACHMENTS TO THE BRIDGE MEMBERS. THE DRAWINGS SHALL ALSO INCLUDE THE SEQUENCE OF ERECTION, LOCATION OF CRANES, CRANE CAPACITIES, LOCATION OF LIFTING POINTS ON THE BRIDGE MEMBERS AND WEIGHTS OF MEMBERS. THE PLAN AND DRAWINGS SHALL BE COMPLETE IN DETAIL FOR ALL ANTICIPATED PHASES AND CONDITIONS DURING ERECTION. CALCULATIONS SEALED BY A PROFESSIONAL ENGINEER REGISTERED IN THE STATE OF DELAWARE ARE REQUIRED TO DEMONSTRATE THAT ALLOWABLE STRESSES ARE NOT EXCEEDED AND THAT MEMBER CAPACITIES AND FINAL GEOMETRY WILL BE CORRECT.
4. THERE SHALL BE NO FIELD WELDING TO THE TOP FLANGE, EXCEPT FOR SHEAR STUDS, IN THE TENSION AND STRESS REVERSAL REGIONS.
5. CROSS FRAME CONNECTION PLATE SPACING NOT SHOWN. FOR LOCATION OF CROSS FRAME CONNECTION PLATES, SEE DWG. NO. FR-01.
6. FOR BEARING STIFFENER AND CONNECTION PLATE DETAILS, SEE DWG. NOS. BM-02 AND BM-03.
7. FOR SHOP FLANGE SPLICE DETAILS, SEE DWG. NO. BM-04.
8. FOR FIELD SPLICE DETAILS, SEE DWG. NO. BM-04.
9. FOR SHEAR STUD DETAILS, SEE DWG. NO. SD-01.

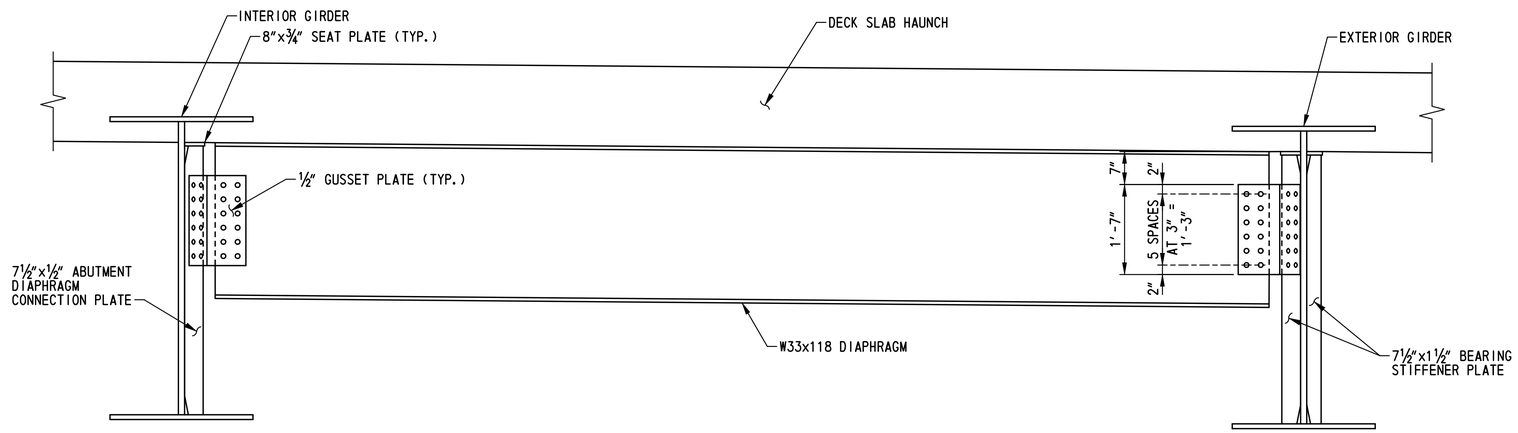

NOTE:
SEE DIAPHRAGM CONNECTION DETAIL FOR HORIZONTAL SPACING OF HOLES IN DIAPHRAGM, GUSSET PLATE, AND CONNECTION PLATE.

ABUTMENT DIAPHRAGM DETAIL
SCALE: ¾"=1'-0"

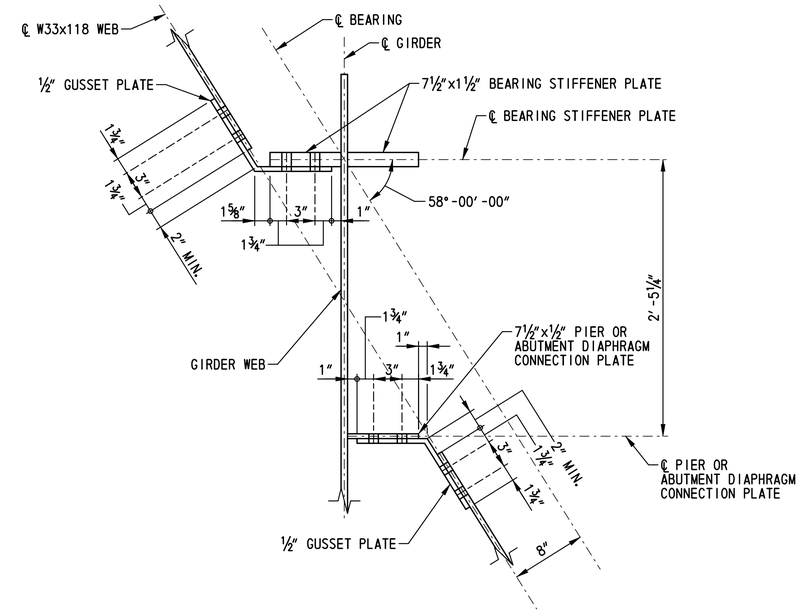

PIER AND ABUTMENT DIAPHRAGM CONNECTION DETAIL
SCALE: 1½"=1'-0"

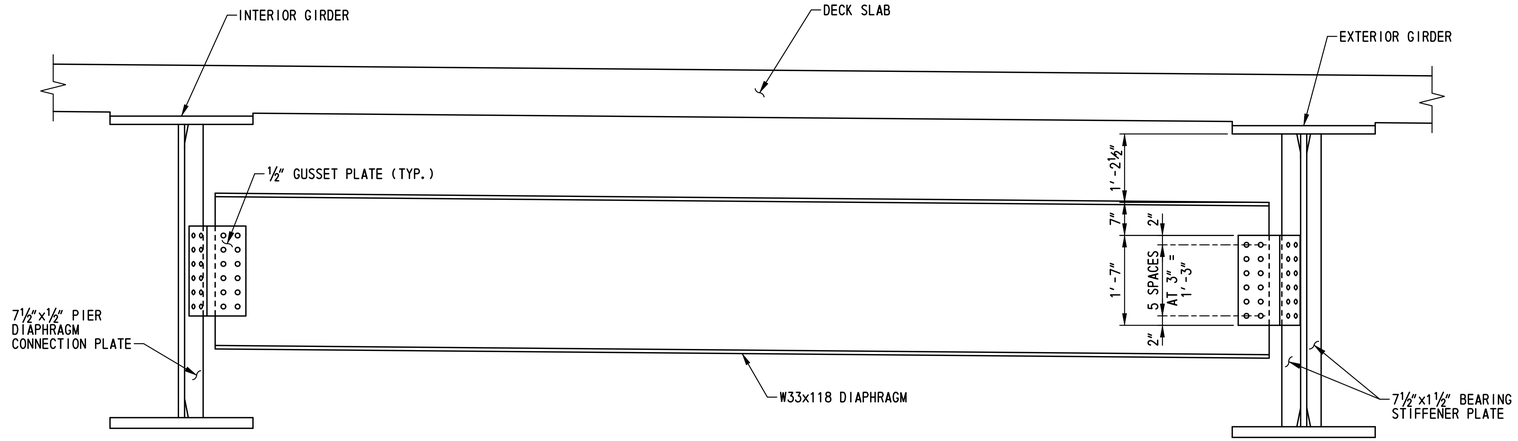

NOTE:
SEE DIAPHRAGM CONNECTION DETAIL FOR HORIZONTAL SPACING OF HOLES IN DIAPHRAGM, GUSSET PLATE, AND CONNECTION PLATE.

PIER DIAPHRAGM DETAIL
SCALE: ¾"=1'-0"

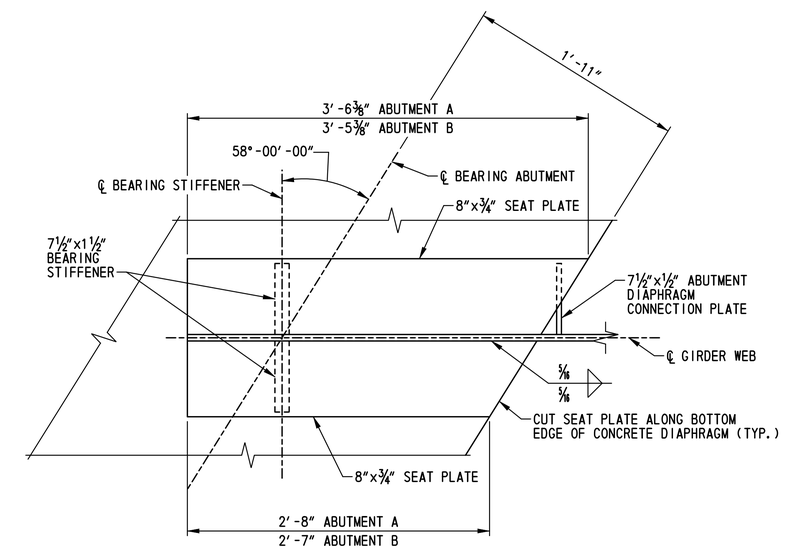

SEAT PLATE DETAIL
SCALE: 1½"=1'-0"

NOTES:
1. FOR DIAPHRAGM LOCATIONS, SEE DWG. NO. FR-01.
2. ALL BOLTS TO BE ⅞" Ø HIGH STRENGTH BOLTS CONFORMING TO A 325, TYPE 3. ALL BOLTS HOLES SHALL BE 15/16" Ø . ALL BOLTS SHALL BE FABRICATED WITH THREADS THAT ARE EXCLUDED FROM THE SHEAR PLANE.
3. THE MINIMUM ACCEPTABLE EDGE DISTANCE FOR ANY HOLE SHALL BE 1½".
4. THE GIRDERS ARE REQUIRED TO BE PLUMB UNDER FULL DEAD LOAD.

BR1-5
BM-02

DELAWARE DEPARTMENT OF TRANSPORTATION	ADDENDUMS / REVISIONS	SCALE: AS NOTED	US 301, SR 896 TO SR 1	CONTRACT T200911308 / COUNTY NEW CASTLE	BRIDGE NO. 1-436A / DESIGNED BY: W.T.R. / CHECKED BY: B.K.B.	STRUCTURAL STEEL DETAILS - I	SHEET NO. 289 / TOTAL SHTS. 875

n:\31653-000\contract to\cadd\bridge\Br_No5\BM02_br1-5.dgn
10/24/2012 11:29:15 AM

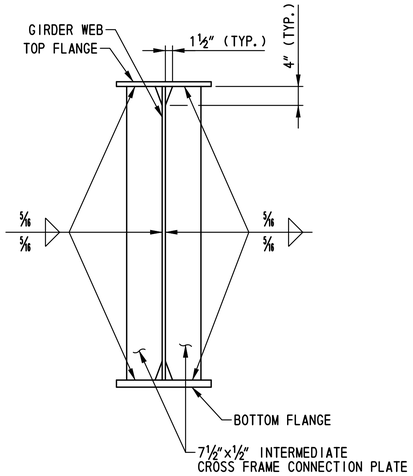

INTERMEDIATE CROSS FRAME CONNECTION PLATES
SCALE: ¾"=1'-0"

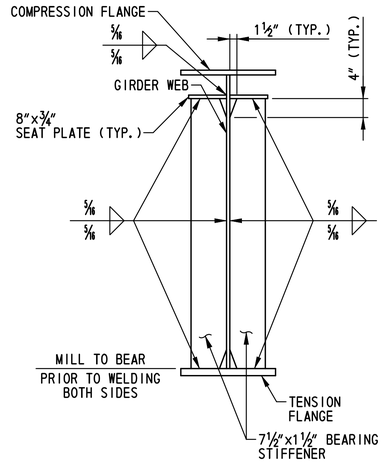

ABUTMENT BEARING STIFFENERS/ DIAPHRAGM CONNECTION PLATE
SCALE: ¾"=1'-0"

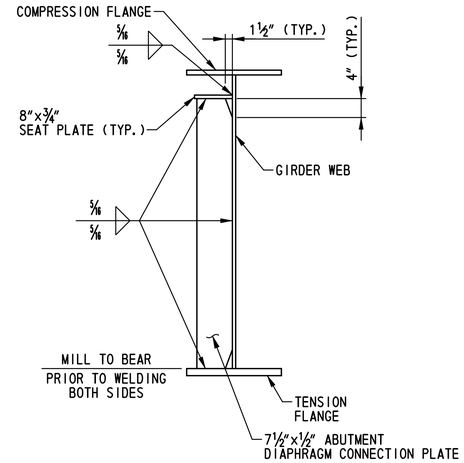

ABUTMENT DIAPHRAGM CONNECTION PLATE
SCALE: ¾"=1'-0"

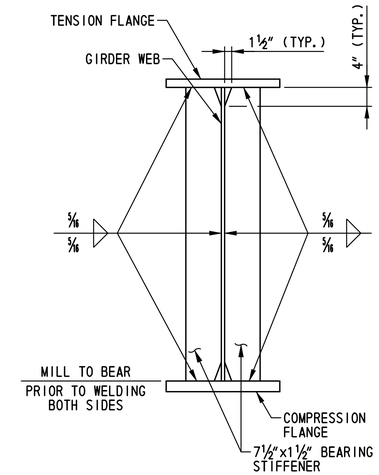

PIER BEARING STIFFENERS/ DIAPHRAGM CONNECTION PLATE
SCALE: ¾"=1'-0"

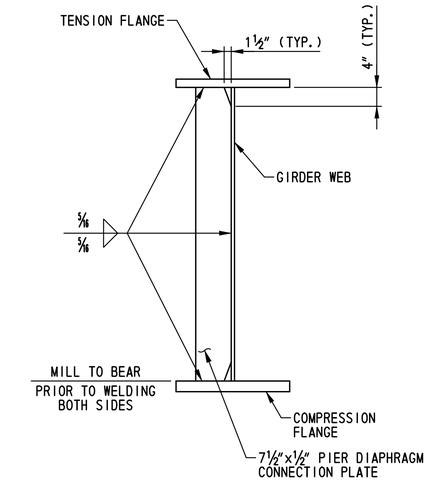

PIER DIAPHRAGM CONNECTION PLATE
SCALE: ¾"=1'-0"

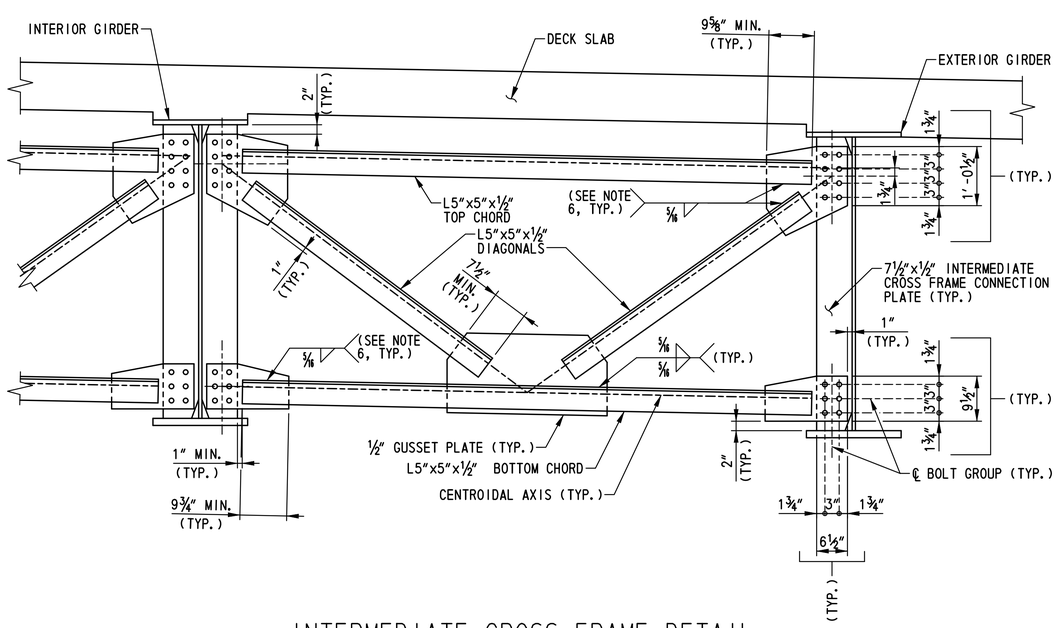

INTERMEDIATE CROSS FRAME DETAIL
SCALE: ¾"=1'-0"

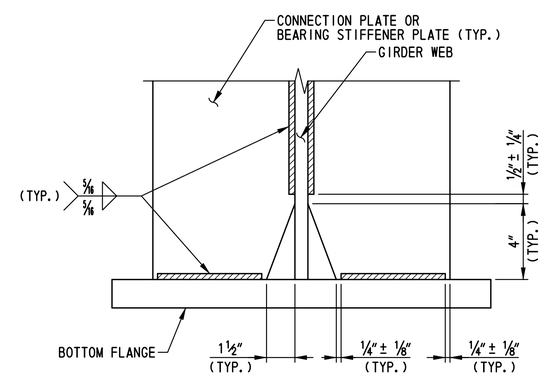

CONNECTION PLATE OR STIFFENER WELD TERMINATION DETAIL
SCALE: 3"=1'-0"

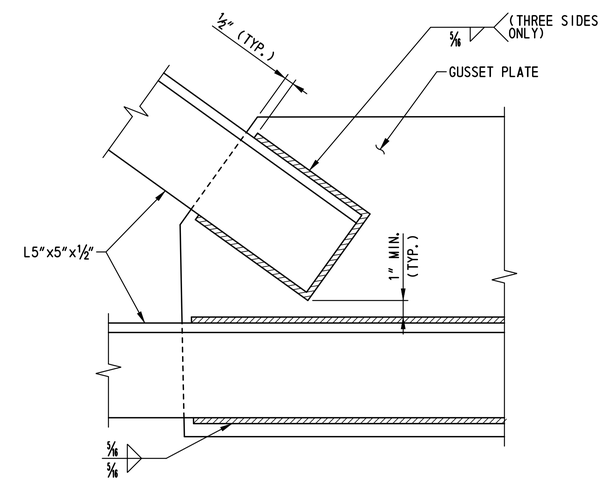

INTERMEDIATE CROSS FRAME WELD DETAIL
SCALE: 3"=1'-0"

NOTES:

1. FOR ADDITIONAL BEARING STIFFENER INFORMATION, SEE DWG. NO. BM-01.
2. FOR CROSS FRAME LOCATIONS, SEE DWG. NO. FR-01.
3. ALL BOLTS TO BE ⅞" Ø HIGH STRENGTH BOLTS CONFORMING TO A 325, TYPE 3. ALL BOLTS HOLES SHALL BE 15/16" Ø . ALL BOLTS SHALL BE FABRICATED WITH THREADS THAT ARE EXCLUDED FROM THE SHEAR PLANE.
4. THE MINIMUM ACCEPTABLE EDGE DISTANCE FOR ANY HOLE SHALL BE 1½".
5. THE GIRDERS ARE REQUIRED TO BE PLUMB UNDER FULL DEAD LOAD.
6. ENDS OF TOP CHORD, DIAGONALS AND BOTTOM CHORD SHALL BE WELDED ALONG ALL THREE SIDES ON THE NEAR FACE OF THE GUSSET PLATES.

DELAWARE DEPARTMENT OF TRANSPORTATION	ADDENDUMS / REVISIONS	SCALE: AS NOTED	US 301, SR 896 TO SR 1	CONTRACT T200911308	BRIDGE NO. 1-436A	STRUCTURAL STEEL DETAILS – 2	BR1-5 BM-03
				COUNTY NEW CASTLE	DESIGNED BY: W.T.R.		SHEET NO. 290
					CHECKED BY: B.K.B.		TOTAL SHTS. 875

n:\3653-000\contract 1a\cadd\bridge\Br_No5\BM03_br1-5.dgn
10/24/2012 11:29:22 AM

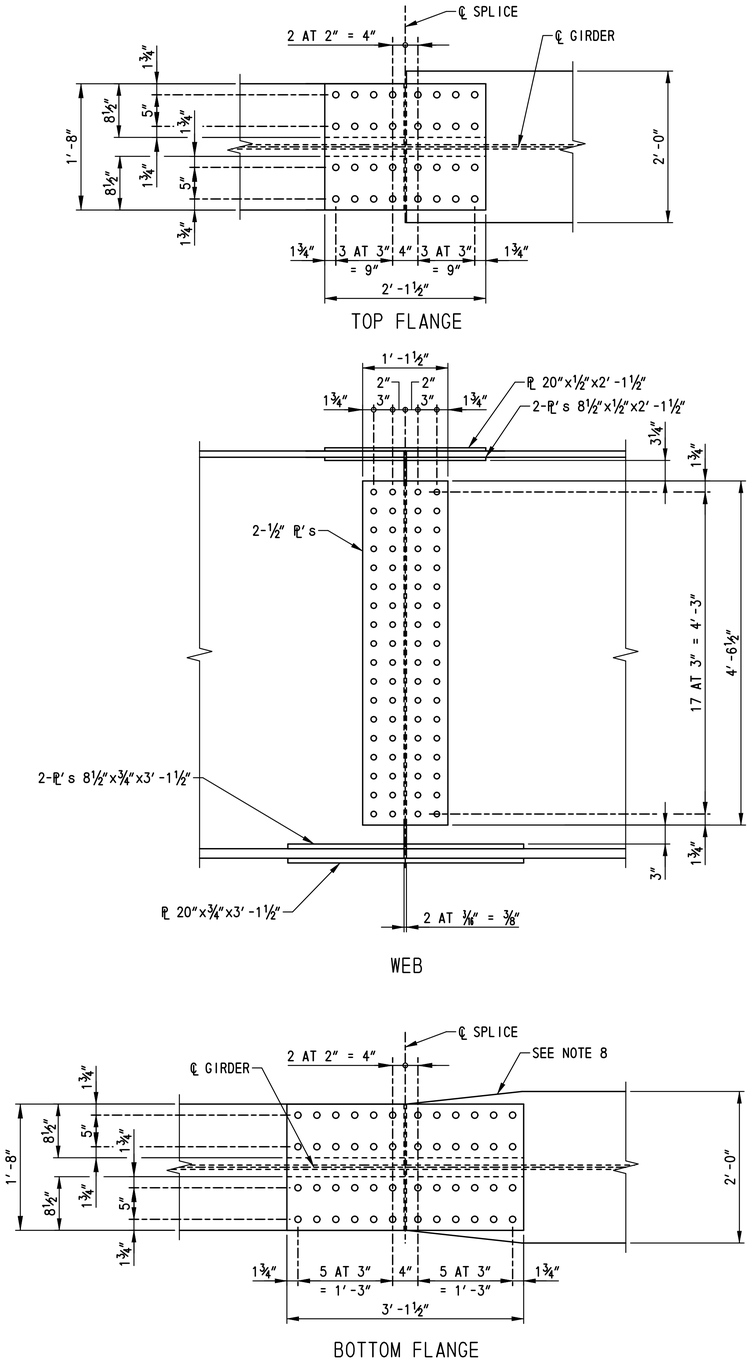

FIELD SPLICE DETAIL - TYPE I

SCALE: 1"=1'-0"

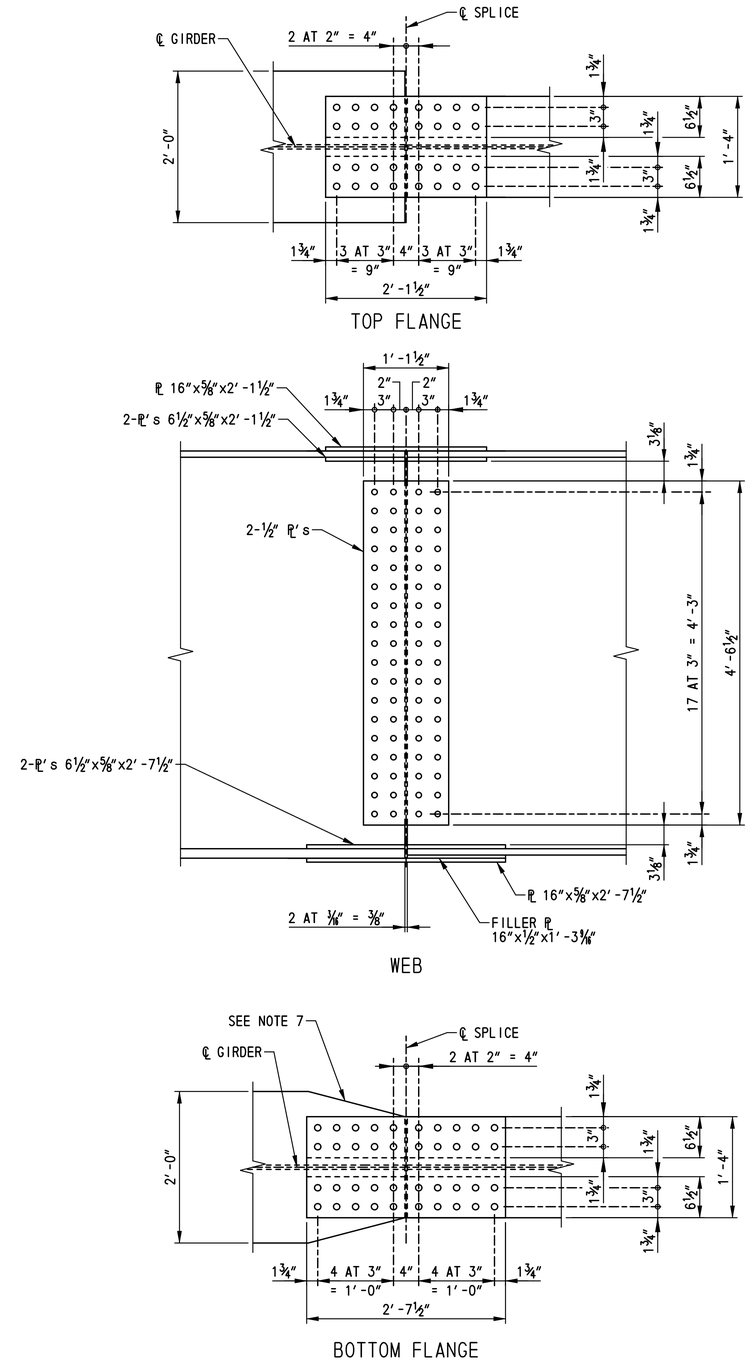

FIELD SPLICE DETAIL - TYPE II

SCALE: 1"=1'-0"

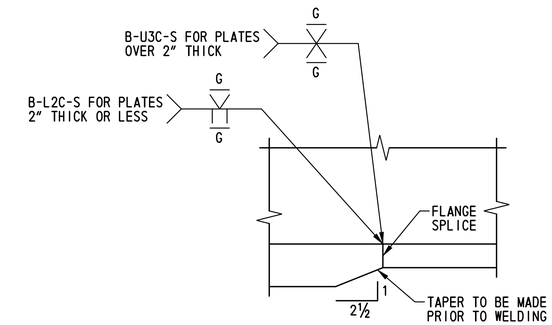

FLANGE TRANSITION SHOP SPLICE

SCALE: 3"=1'-0"

SPLICE NOTES:

1. FOR LOCATIONS OF FIELD AND SHOP SPLICES, SEE DWG. NOS. BM-01 AND FR-01.
2. FIELD SPLICE DESIGNED AS A SLIP CRITICAL CONNECTION WITH CLASS A SURFACE CONDITIONS.
3. ALL BOLTS TO BE ⅞" ∅ HIGH STRENGTH BOLTS CONFORMING TO A 325, TYPE 3. ALL BOLT HOLES SHALL BE 15/16" ∅ . ALL BOLTS SHALL BE FABRICATED WITH THREADS THAT ARE EXCLUDED FROM THE SHEAR PLANE.
4. THE MINIMUM ACCEPTABLE EDGE DISTANCE FOR ANY HOLE SHALL BE 1½".
5. BOLT HEADS SHALL BE ON THE EXTERIOR FACE OF THE EXTERIOR GIRDERS AND THE BOTTOM OF THE BOTTOM FLANGES.
6. BOLTS NOT SHOWN IN SPLICE.
7. SPACE SHEAR STUDS TO MISS TOP FLANGE SPLICE BOLTS.
8. ON EACH SIDE OF THE ℄ OF SPLICE A MINIMUM OF 50 PERCENT OF THE WEB, TOP FLANGE, AND BOTTOM FLANGE SPLICE BOLTS SHALL BE IN PLACE BEFORE THE GIRDER IS LEFT UNSUPPORTED.
9. WHEN FLANGE IS LARGER THAN ADJACENT FLANGE BY MORE THAN 2", THE LARGER FLANGE SHALL BE TAPERED TO SMALLER FLANGE WIDTH IN A DISTANCE OF ½ LENGTH OF SPLICE PLATE (BOTTOM FLANGE ONLY).
10. FIELD SPLICES SHALL BE COMPLETELY SHOP ASSEMBLED AND MATCH MARKED AFTER ALL SHOP WELDING HAS BEEN COMPLETED. CONTACT SURFACES SHALL BE FREE OF ALL OIL AND DIRT.
11. BUTT WELDS OF FLANGE SPLICE PLATES TO BE GROUND FLUSH PRIOR TO ATTACHING WEB PLATES.

pr\31853-000\contract let\cadd\bridge\Br_Ne05\BM04_br1-5.dgn
10/24/2012 11:29:27 AM

DELAWARE DEPARTMENT OF TRANSPORTATION	ADDENDUMS / REVISIONS	SCALE: AS NOTED	US 301, SR 896 TO SR 1	CONTRACT T200911308	BRIDGE NO. 1-436A	SPLICE DETAILS	BR1-5 BM-04
				COUNTY NEW CASTLE	DESIGNED BY: W.T.R.		SHEET NO. 291
					CHECKED BY: B.K.B.		TOTAL SHTS. 875

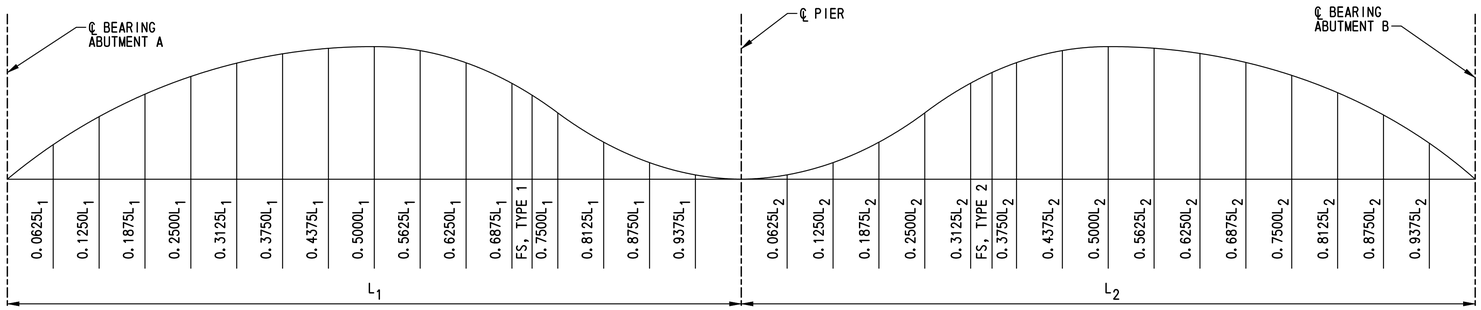

DEFLECTION AND TOTAL CAMBERS (IN.)

LOCATION		℄ BRG. ABUT. A	0.0625L1	0.1250L1	0.1875L1	0.2500L1	0.3125L1	0.3750L1	0.4375L1	0.5000L1	0.5625L1	0.6250L1	0.6875L1	FS, TYPE 1	0.7500L1	0.8125L1	0.8750L1	0.9375L1	℄ PIER	0.0625L2	0.1250L2	0.1875L2	0.2500L2	0.3125L2	FS, TYPE 2	0.3750L2	0.4375L2	0.5000L2	0.5625L2	0.6250L2	0.6875L2	0.7500L2	0.8125L2	0.8750L2	0.9375L2	℄ BRG. ABUT. B
GIRDER 1	DLS	0	1/4	1/2	11/16	7/8	1	1 1/16	1 1/16	1 1/16	15/16	13/16	11/16	1/2	1/2	3/8	3/16	1/16	0	0	0	0	1/16	1/8	3/16	3/16	1/4	1/4	5/16	5/16	5/16	1/4	1/4	3/16	1/16	0
	DLC	0	1 1/16	2	2 13/16	3 1/2	4	4 1/4	4 5/16	4 3/16	3 3/4	3 3/16	2 11/16	2 1/16	2	1 3/8	3/4	5/16	0	0	1/16	3/16	1/2	3/4	15/16	1 1/16	1 3/8	1 5/8	1 3/4	1 13/16	1 3/4	1 9/16	1 5/16	15/16	1/2	0
	SDL	0	3/16	3/8	5/16	1/16	3/4	13/16	13/16	13/16	3/4	5/8	1/2	3/8	3/8	1/4	1/8	1/16	0	0	1/16	1/16	1/8	3/16	1/4	1/4	3/16	3/8	7/16	7/16	3/8	3/8	5/16	3/16	1/8	0
	TD&C	0	1 1/2	2 7/8	4 1/16	5 1/16	5 3/4	6 1/8	6 3/16	6 1/16	5 7/16	4 3/4	3 7/8	3	2 7/8	2	1 1/16	7/16	0	0	1/8	1/4	11/16	1 1/16	1 3/8	1 1/2	1 15/16	2 1/4	2 1/2	2 9/16	2 7/16	2 3/16	1 7/8	1 5/16	11/16	0
	VCO	0	13/16	1 7/16	2	2 7/16	2 13/16	3	3 1/8	3 1/4	3 1/8	3	2 11/16	2 1/2	2 7/16	1 15/16	1 3/8	3/4	0	9/16	1	1 1/2	1 11/16	2	2 3/16	2 1/4	2 5/16	2 1/4	2 1/4	2 1/4	1 15/16	1 13/16	1 7/16	1	1/2	0
	TRC	0	2 5/16	4 3/16	6 1/16	7 1/2	8 9/16	9 1/8	9 3/16	9 5/16	8 9/16	7 3/4	6 5/16	5 1/2	5 3/16	3 15/16	2 7/16	1 3/16	0	9/16	1 1/8	1 3/4	2 3/8	3 1/16	3 9/16	3 3/4	4 1/4	4 1/2	4 3/4	4 13/16	4 3/8	4	3 3/16	2 5/16	1 3/16	0

LOCATION		℄ BRG. ABUT. A	0.0625L1	0.1250L1	0.1875L1	0.2500L1	0.3125L1	0.3750L1	0.4375L1	0.5000L1	0.5625L1	0.6250L1	0.6875L1	FS, TYPE 1	0.7500L1	0.8125L1	0.8750L1	0.9375L1	℄ PIER	0.0625L2	0.1250L2	0.1875L2	0.2500L2	0.3125L2	FS, TYPE 2	0.3750L2	0.4375L2	0.5000L2	0.5625L2	0.6250L2	0.6875L2	0.7500L2	0.8125L2	0.8750L2	0.9375L2	℄ BRG. ABUT. B
GIRDER 2	DLS	0	1/4	1/2	11/16	7/8	1	1 1/16	1 1/16	1 1/16	1	7/8	11/16	1/2	1/2	3/8	3/16	1/16	0	0	0	0	1/16	1/8	3/16	3/16	1/4	5/16	5/16	3/8	5/16	5/16	1/4	3/16	1/8	0
	DLC	0	1 1/8	2 3/16	3 1/8	3 13/16	4 3/8	4 11/16	4 11/16	4 5/8	4 3/16	3 5/8	2 15/16	2 5/16	2 1/4	1 1/2	13/16	3/8	0	0	1/16	1/4	9/16	7/8	1 1/8	1 1/4	1 9/16	1 7/8	2	2 1/16	2	1 13/16	1 1/2	1 1/16	9/16	0
	SDL	0	3/16	3/8	1/2	5/8	3/4	3/4	13/16	3/4	11/16	5/8	1/2	3/8	3/8	1/4	1/8	1/16	0	0	0	1/16	1/8	3/16	3/16	3/16	1/4	5/16	5/16	3/8	5/16	5/16	1/4	3/16	1/16	0
	TD&C	0	1 9/16	3 1/16	4 5/16	5 5/16	6 1/8	6 1/2	6 9/16	6 7/16	5 7/8	5 1/8	4 1/8	3 1/4	3 1/8	2 1/8	1 1/8	1/2	0	0	1/16	5/16	3/4	1 3/16	1 1/2	1 5/8	2 1/16	2 1/2	2 5/8	2 13/16	2 5/8	2 7/16	2	1 7/16	3/4	0
	VCO	0	3/4	1 3/8	1 7/8	2 3/8	2 11/16	2 15/16	3 1/16	3 1/8	3 1/8	2 9/16	2 3/4	2 7/16	2 3/8	1 15/16	1 3/8	11/16	0	9/16	15/16	1 3/8	1 5/8	1 15/16	2 1/16	2 1/8	2 5/16	2 1/4	2 1/4	2 3/16	2	1 11/16	1 3/8	1	9/16	0
	TRC	0	2 5/16	4 7/16	6 3/16	7 11/16	8 13/16	9 7/16	9 5/8	9 9/16	9	8 1/16	6 7/8	5 11/16	5 1/2	4 1/16	2 1/2	1 3/16	0	9/16	1	1 11/16	2 3/8	3 1/8	3 9/16	3 3/4	4 3/8	4 13/16	4 7/8	5	4 5/8	4 1/8	3 3/8	2 7/16	1 5/16	0

LOCATION		℄ BRG. ABUT. A	0.0625L1	0.1250L1	0.1875L1	0.2500L1	0.3125L1	0.3750L1	0.4375L1	0.5000L1	0.5625L1	0.6250L1	0.6875L1	FS, TYPE 1	0.7500L1	0.8125L1	0.8750L1	0.9375L1	℄ PIER	0.0625L2	0.1250L2	0.1875L2	0.2500L2	0.3125L2	FS, TYPE 2	0.3750L2	0.4375L2	0.5000L2	0.5625L2	0.6250L2	0.6875L2	0.7500L2	0.8125L2	0.8750L2	0.9375L2	℄ BRG. ABUT. B
GIRDER 3	DLS	0	1/4	1/2	11/16	7/8	1	1 1/16	1 1/16	1 1/16	1	7/8	11/16	1/2	1/2	3/8	3/16	1/16	0	0	0	0	1/16	1/8	3/16	3/16	1/4	5/16	5/16	3/8	5/16	5/16	1/4	3/16	1/8	0
	DLC	0	1 1/8	2 3/16	3 1/8	3 11/16	4 3/8	4 11/16	4 3/4	4 5/8	4 3/16	3 11/16	3	2 3/8	2 1/4	1 1/2	13/16	3/8	0	0	1/16	1/4	1/2	7/8	1 1/16	1 3/16	1 9/16	1 7/8	2	2 1/16	2	1 13/16	1 1/2	1 1/16	9/16	0
	SDL	0	3/16	3/8	1/2	5/8	3/4	13/16	13/16	13/16	3/4	5/8	1/2	3/8	3/8	1/4	1/8	1/16	0	0	0	1/16	1/16	1/8	3/16	3/16	1/4	5/16	5/16	5/16	5/16	1/4	1/4	3/16	1/16	0
	TD&C	0	1 9/16	3 1/16	4 5/16	5 5/16	6 1/8	6 9/16	6 5/8	6 1/2	5 15/16	5 3/16	4 3/16	3 1/4	3 1/8	2 1/8	1 1/8	1/2	0	0	1/16	5/16	5/8	1 1/8	1 7/16	1 13/16	2 1/16	2 1/2	2 5/8	2 3/4	2 5/8	2 3/8	2	1 7/16	3/4	0
	VCO	0	5/8	1	1 7/16	1 11/16	1 15/16	2 3/16	2 3/16	2 3/16	2 3/8	2 1/4	2	1 13/16	1 3/4	1 7/16	1 1/16	1/2	0	13/16	1 1/2	2	2 1/16	2 3/4	2 15/16	3 1/16	3 3/16	3 1/4	3 3/16	3	2 3/4	2 7/16	1 15/16	1 7/16	3/4	0
	TRC	0	2 3/16	4 1/16	5 3/4	7	8 1/16	8 3/4	8 15/16	8 13/16	8 5/16	7 7/16	6 3/16	5 1/16	4 7/8	3 9/16	2 3/16	1	0	13/16	1 9/16	2 5/16	3 1/16	3 7/8	4 3/8	4 5/8	5 1/4	5 3/4	5 13/16	5 3/4	5 3/8	4 13/16	3 15/16	2 7/8	1 1/2	0

LOCATION		℄ BRG. ABUT. A	0.0625L1	0.1250L1	0.1875L1	0.2500L1	0.3125L1	0.3750L1	0.4375L1	0.5000L1	0.5625L1	0.6250L1	0.6875L1	FS, TYPE 1	0.7500L1	0.8125L1	0.8750L1	0.9375L1	℄ PIER	0.0625L2	0.1250L2	0.1875L2	0.2500L2	0.3125L2	FS, TYPE 2	0.3750L2	0.4375L2	0.5000L2	0.5625L2	0.6250L2	0.6875L2	0.7500L2	0.8125L2	0.8750L2	0.9375L2	℄ BRG. ABUT. B
GIRDER 4	DLS	0	1/4	1/2	11/16	7/8	1	1 1/16	1 1/16	1 1/16	15/16	13/16	11/16	1/2	1/2	3/8	3/16	1/16	0	0	0	0	0	1/8	3/16	3/16	1/4	5/16	5/16	5/16	5/16	5/16	1/4	3/16	1/16	0
	DLC	0	1 1/16	2 1/16	2 7/8	3 1/2	4 1/16	4 5/16	4 5/16	4 1/4	3 7/8	3 3/8	2 11/16	2 1/16	2 1/16	1 3/8	3/4	5/16	0	0	1/16	3/16	3/16	13/16	1	1 1/16	1 3/8	1 5/8	1 3/4	1 13/16	1 3/4	1 9/16	1 5/16	15/16	1/2	0
	SDL	0	1/4	7/16	5/8	3/4	7/8	15/16	15/16	15/16	13/16	3/4	5/8	7/16	7/16	5/16	3/16	1/16	0	0	0	0	0	1/8	3/16	3/16	1/4	5/16	5/16	5/16	5/16	5/16	1/4	3/16	1/16	0
	TD&C	0	1 9/16	3	4 3/16	5 1/16	5 15/16	6 5/16	6 5/16	6 1/4	5 5/8	4 15/16	4	3 1/8	3	2 1/16	1 1/8	7/16	0	0	1/16	3/16	3/16	1 1/16	1 5/16	1 7/16	1 7/8	2 1/4	2 3/8	2 7/16	2 3/8	2 3/16	1 13/16	1 5/16	5/8	0
	VCO	0	11/16	1 7/16	2	2 3/8	2 3/4	3 1/16	3 3/16	3 3/16	3 1/16	3 1/16	2 13/16	2 1/2	2 7/16	1 15/16	1 3/8	3/4	0	7/16	1	1 3/8	1 3/8	2	2 3/16	2 1/4	2 5/16	2 1/4	2 1/4	2 1/4	1 15/16	1 13/16	1 7/16	1	1/2	0
	TRC	0	2 1/4	4 7/16	6 3/16	7 1/2	8 11/16	9 3/8	9 1/2	9 7/16	8 13/16	8	6 13/16	5 5/8	5 7/16	4	2 7/16	1 3/16	0	7/16	1 1/16	1 9/16	1 9/16	3 1/16	3 1/2	3 11/16	4 3/16	4 1/2	4 5/8	4 11/16	4 5/16	4	3 1/4	2 5/16	1 1/8	0

NOTES:

1. ALL GIRDERS OF ALL SPANS SHALL BE CAMBERED FOR DEAD LOAD DEFLECTION TO THE DIMENSIONS SHOWN ON THIS PLAN. THE CAMBER TOLERANCE IS NOTHING UNDER TO 3/4 INCH OVER.
2. CAMBERS ARE SHOWN IN INCHES.
3. POSITIVE DEFLECTIONS ARE MEASURED IN THE DOWNWARD DIRECTION. POSITIVE VERTICAL CURVE ORDINATE AND POSITIVE CAMBER ARE MEASURED IN THE UPWARD DIRECTION.

LEGEND:

DLS - DENOTES DEFLECTION DUE TO STRUCTURAL STEEL

DLC - DENOTES DEFLECTION DUE TO CONCRETE SLAB

SDL - DENOTES DEFLECTION DUE TO PARAPET AND FUTURE WEARING SURFACE

TD&C - DENOTES TOTAL DEAD LOAD DEFLECTION AND CAMBER

VCO - DENOTES CAMBER FOR VERTICAL CURVE ORDINATE DUE TO ROADWAY PROFILE

TRC - TOTAL REQUIRED CAMBER = TD&C + VCO

FS - FIELD SPLICE

BR1-5
CT-01

DELAWARE
DEPARTMENT OF TRANSPORTATION

ADDENDUMS / REVISIONS

SCALE: AS NOTED

US 301,
SR 896 TO SR 1

CONTRACT T200911308
COUNTY NEW CASTLE
BRIDGE NO. 1-436A
DESIGNED BY: W.T.R.
CHECKED BY: B.K.B.

CAMBER DIAGRAM

SHEET NO. 292
TOTAL SHTS. 875

N:\31653-000\CONTRACT 1A\CADD\Bridge\Br_No5\CT01_br1-5.dgn
12/7/2012 4:24:23 PM

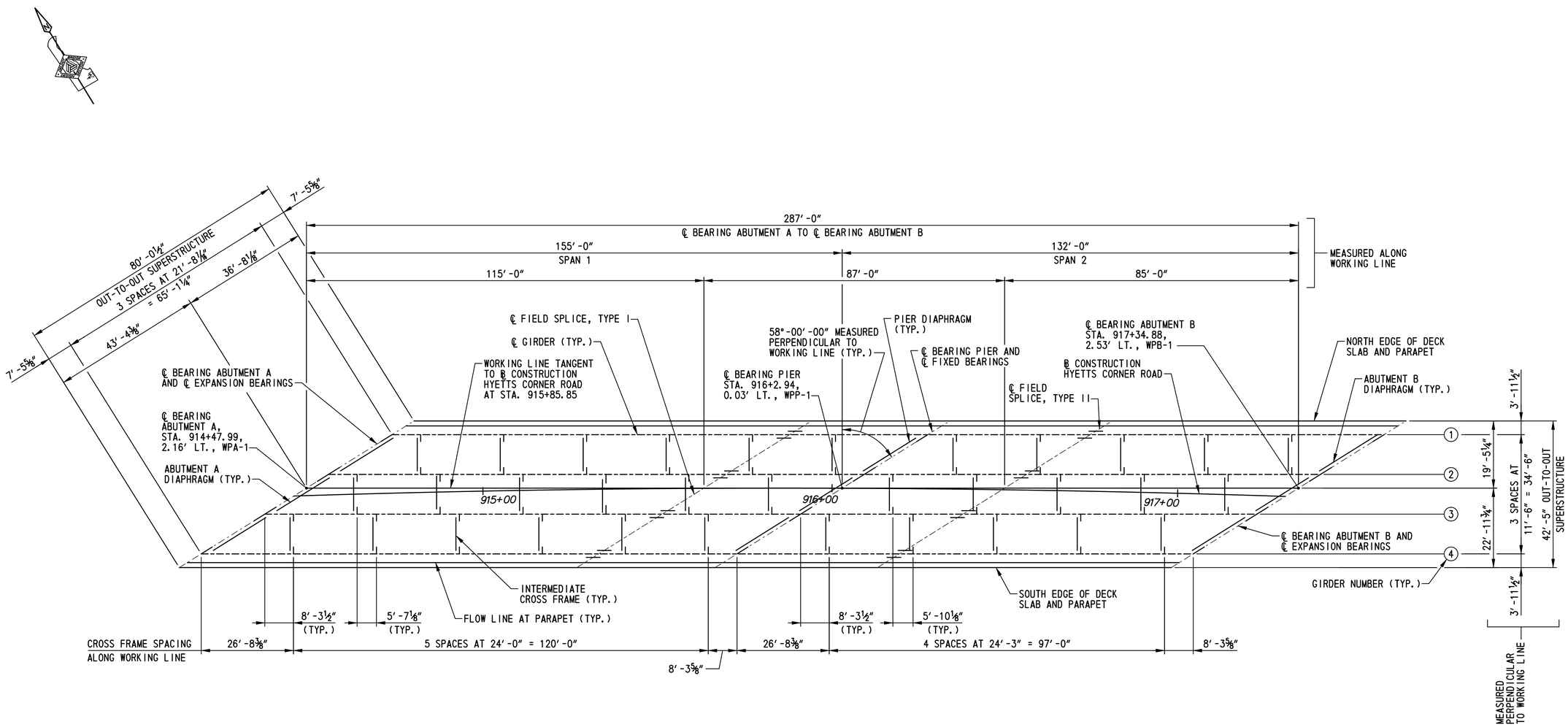

FRAMING PLAN

SCALE: 1/16″=1′-0″

NOTES:

1. INTERMEDIATE CROSS FRAMES SHALL BE PERPENDICULAR TO THE WORKING LINE.
2. ABUTMENT AND PIER DIAPHRAGMS SHALL BE PARALLEL TO THE ℄ BEARINGS.
3. FOR CROSS FRAME AND DIAPHRAGM DETAILS, SEE DWG. NOS. BM-02 AND BM-03.
4. FOR FIELD SPLICE DETAILS, SEE DWG. NO. BM-04.

n:\31653-000\contract 1a\cadd\bridge\Br_No5\FR01_br1-5.dgn
10/24/2012 11:36:48 AM

DELAWARE DEPARTMENT OF TRANSPORTATION	ADDENDUMS / REVISIONS	SCALE: AS NOTED	US 301, SR 896 TO SR 1	CONTRACT T200911308	BRIDGE NO. 1-436A	FRAMING PLAN	BR1-5 FR-01
				COUNTY NEW CASTLE	DESIGNED BY: W.T.R.		SHEET NO. 293
					CHECKED BY: B.K.B.		TOTAL SHTS. 875

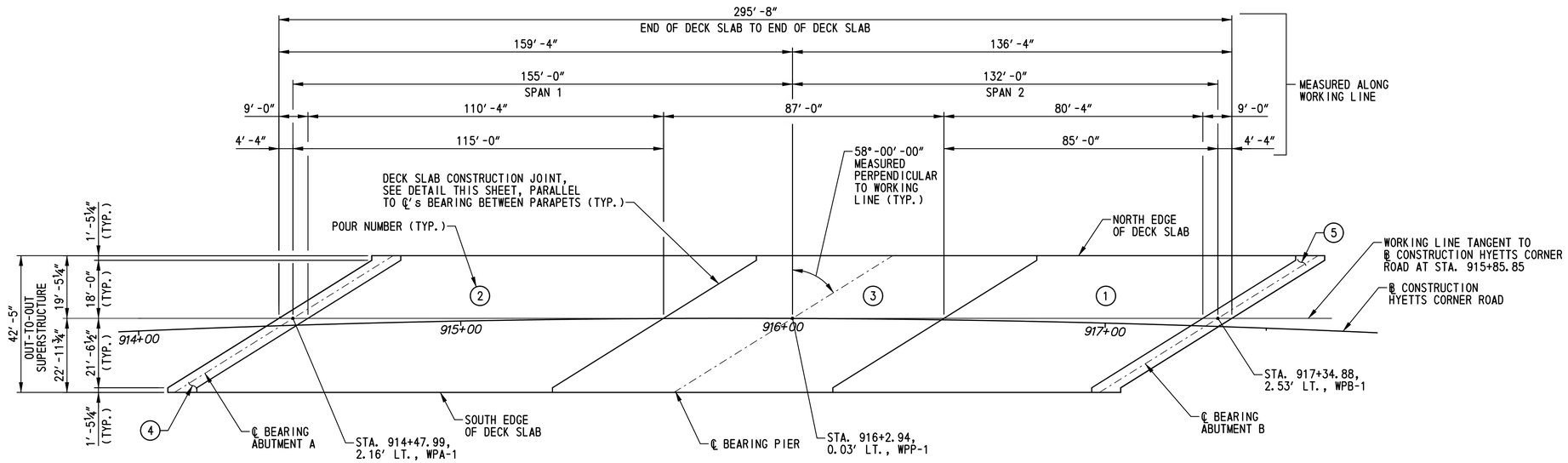

DECK SLAB POURING SEQUENCE PLAN

SCALE: 1"=20'-0"

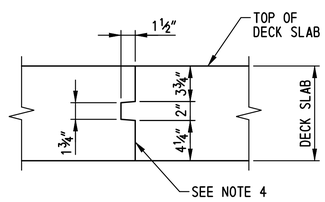

DECK SLAB CONSTRUCTION JOINT DETAIL

SCALE: 1½"=1'-0"

NOTES:

1. THE POURING SEQUENCE FOR THE DECK SLAB SHALL BE MADE IN THE NUMBERED ORDER INDICATED. THERE MUST BE AT LEAST FORTY (40) HOURS BETWEEN THE COMPLETION OF ONE NUMBERED POUR AND THE START OF THE NEXT NUMBERED POUR. THE CONTRACTOR MAY REVERSE THE ORDER OF POURS NUMBERED 4 AND 5. THE CONTRACTOR MAY MAKE POURS NUMBERED 4 AND 5 WITHOUT ANY DELAY BETWEEN THEM.
2. THE CONTRACTOR SHALL FOLLOW THE POURING SEQUENCE SHOWN ON THESE PLANS. NO OTHER ALTERNATE POURING SEQUENCE WILL BE ALLOWED FOR THIS PROJECT.
3. THE DECK SLAB SHALL BE FINISHED SUCH THAT THE CONCRETE FINISHING MACHINE IS PARALLEL TO THE CONSTRUCTION JOINT.
4. ENTIRE FACE OF CONSTRUCTION JOINT SHALL BE COATED WITH AN APPROVED EPOXY BONDING COMPOUND.
5. FOR FINISHED ROADWAY ELEVATIONS, SEE DWG. NOS. RE-01 AND RE-02.
6. FOR DECK SLAB REINFORCEMENT, SEE DWG. NOS. DK-01 THRU DK-03.

BR1-5
PS-01

DELAWARE DEPARTMENT OF TRANSPORTATION	ADDENDUMS / REVISIONS	SCALE: AS NOTED	US 301, SR 896 TO SR 1	CONTRACT T200911308	BRIDGE NO. 1-436A	DECK SLAB POURING SEQUENCE	SHEET NO. 294
				COUNTY NEW CASTLE	DESIGNED BY: W.T.R.		TOTAL SHTS. 875
					CHECKED BY: B.K.B.		

n:\31653-000\contract_to\cadd\bridge\Br_No5\PS01_br1-5.dgn
10/24/2012 11:34:29 AM

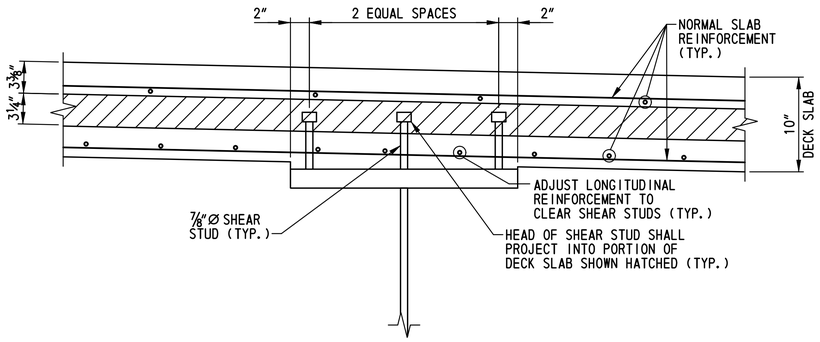

SHEAR STUD DETAIL

SCALE: 1½"=1'-0"

NOTES:

1. S.I.P. FORMS NOT SHOWN FOR CLARITY.
2. FOR LONGITUDINAL SPACING OF SHEAR STUDS SEE DWG. NO. BM-01.

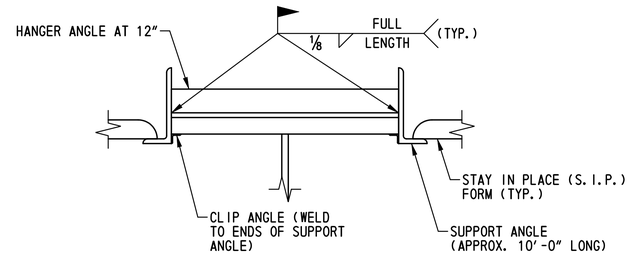

TENSION FLANGE S.I.P. FORM ATTACHMENT DETAIL

SCALE: 1½"=1'-0"

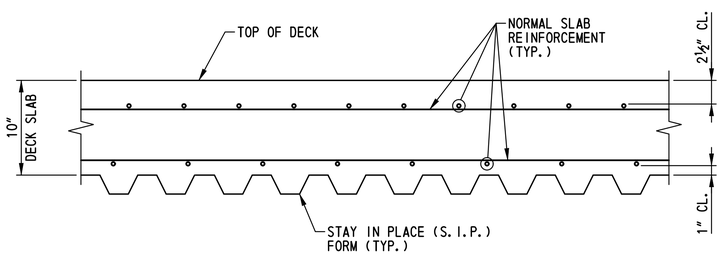

S.I.P. FORM PLACEMENT DETAIL

SCALE: 1½"=1'-0"

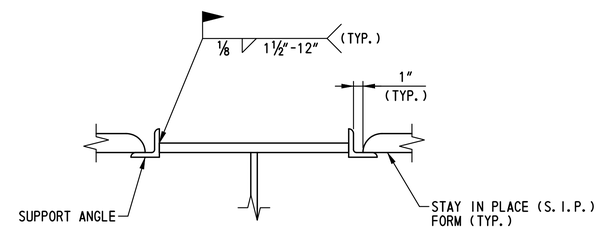

COMPRESSION FLANGE S.I.P. FORM ATTACHMENT DETAIL

SCALE: 1½"=1'-0"

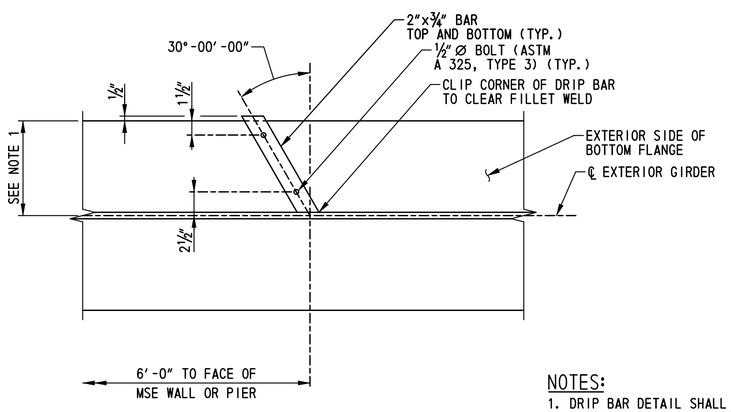

DRIP BAR DETAIL

SCALE: 1½"=1'-0"

NOTES:

1. DRIP BAR DETAIL SHALL BE PLACED ON BOTTOM FLANGE. PROVIDE DRIP BAR FOR EXTERIOR FACE OF GIRDER NOS. 1 AND 4 ONLY.
2. DRIP BARS ARE PLACED ADJACENT TO SUPPORTS TO PREVENT WATER FLOW ONTO SUPPORT.
3. DRIP BARS SHALL BE CAULKED AGAINST FLANGE, WEB AND FILLET WELD WITH AN APPROVED NONHARDENING CAULKING COMPOUND.

STAY IN PLACE FORM NOTES:

1. STAY IN PLACE FORMS SHALL CONFORM TO 602.03.
2. NO WELDING OF STAY IN PLACE FORMS TO TENSION FLANGES IS PERMITTED.
3. STAY IN PLACE FORMS SHALL BE VERTICALLY ADJUSTED TO ATTAIN FINISHED LINES AND GRADES REQUIRED ON THE PLANS.
4. ANY PERMANENTLY EXPOSED FORM METAL WHERE THE GALVANIZED COATING HAS BEEN DAMAGED SHALL BE THOROUGHLY CLEANED, WIRE BRUSHED, AND PAINTED WITH TWO COATS OF ZINC-OXIDE DUST PRIMER, FEDERAL SPECIFICATION TT-P-641D, TYPE II, NO COLOR ADDED, TO THE SATISFACTION OF THE ENGINEER. MINOR HEAT DISCOLORATION IN AREAS OF WELDS NEED NOT BE TOUCHED UP.

BR1-5
SD-01

DELAWARE DEPARTMENT OF TRANSPORTATION

ADDENDUMS / REVISIONS

SCALE: AS NOTED

US 301, SR 896 TO SR 1

CONTRACT	BRIDGE NO.	1-436A
T200911308	DESIGNED BY: W.T.R.	
COUNTY		
NEW CASTLE	CHECKED BY: B.K.B.	

SUPERSTRUCTURE DETAILS

SHEET NO. 295
TOTAL SHTS. 875

N:\31653-000\CONTRACT 1A\CADD\Bridge\Br_Nc5\SD01_br1-5.dgn
7/6/2015 2:54:11 PM

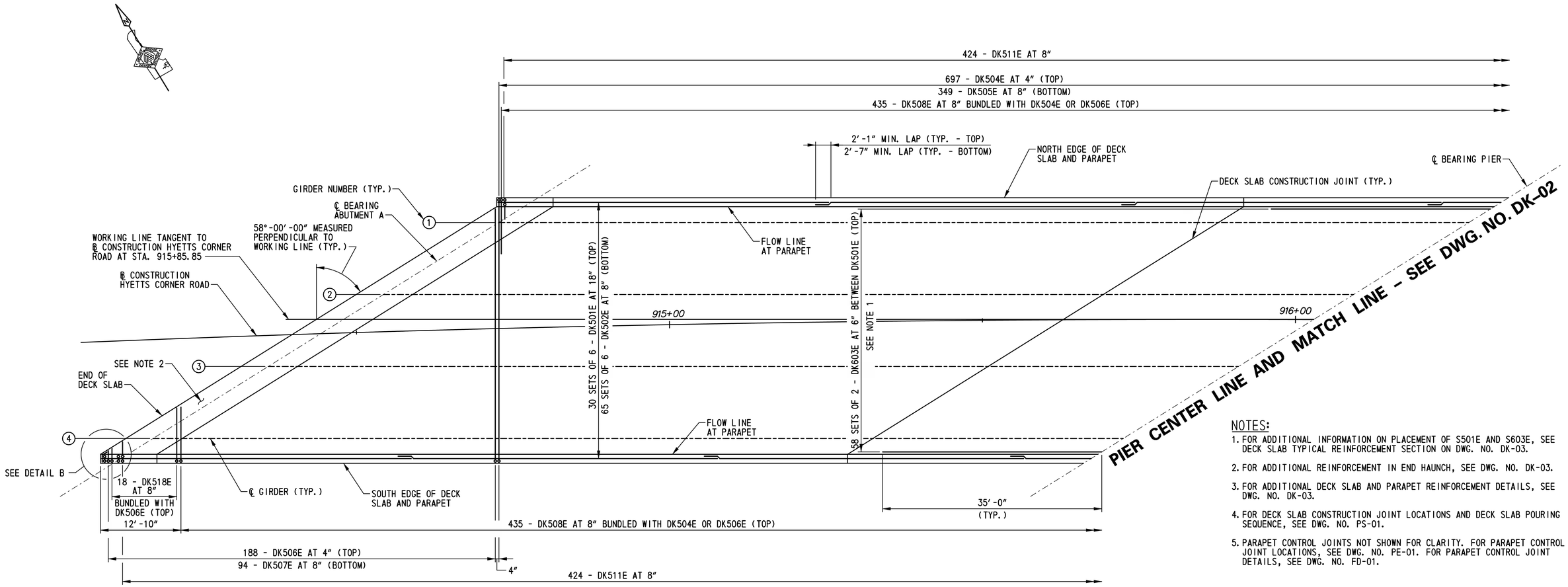

DECK SLAB REINFORCEMENT PLAN - SPAN 1

SCALE: 1/8"=1'-0"

NOTES:

1. FOR ADDITIONAL INFORMATION ON PLACEMENT OF S501E AND S603E, SEE DECK SLAB TYPICAL REINFORCEMENT SECTION ON DWG. NO. DK-03.
2. FOR ADDITIONAL REINFORCEMENT IN END HAUNCH, SEE DWG. NO. DK-03.
3. FOR ADDITIONAL DECK SLAB AND PARAPET REINFORCEMENT DETAILS, SEE DWG. NO. DK-03.
4. FOR DECK SLAB CONSTRUCTION JOINT LOCATIONS AND DECK SLAB POURING SEQUENCE, SEE DWG. NO. PS-01.
5. PARAPET CONTROL JOINTS NOT SHOWN FOR CLARITY. FOR PARAPET CONTROL JOINT LOCATIONS, SEE DWG. NO. PE-01. FOR PARAPET CONTROL JOINT DETAILS, SEE DWG. NO. FD-01.

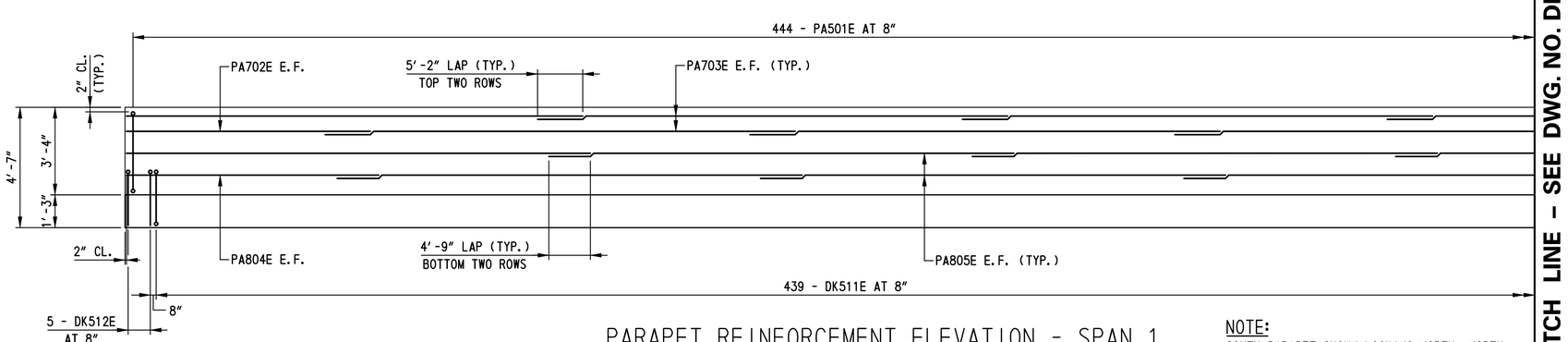

PARAPET REINFORCEMENT ELEVATION - SPAN 1

HORIZONTAL SCALE: 1/8"=1'-0"
VERTICAL SCALE: 3/8"=1'-0"

NOTE:

SOUTH PARAPET SHOWN LOOKING NORTH, NORTH PARAPET SIMILAR LOOKING SOUTH.

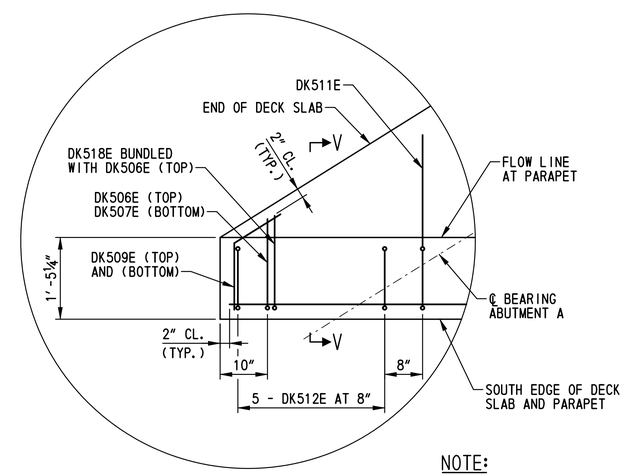

DETAIL B

SCALE: 3/4"=1'-0"

NOTE:

FOR SECTION V-V, SEE DWG. NO. DK-03.

DELAWARE DEPARTMENT OF TRANSPORTATION	ADDENDUMS / REVISIONS	SCALE: AS NOTED	US 301, SR 896 TO SR 1	CONTRACT T200911308 / COUNTY NEW CASTLE	BRIDGE NO. 1-436A / DESIGNED BY: W.T.R. / CHECKED BY: B.K.B.	DECK SLAB AND PARAPET REINFORCEMENT - SPAN 1

BR1-5 DK-01

SHEET NO. 296

TOTAL SHTS. 875

n:\31653-000\contract_to\cadd\bridge\Br_No5\DK01_br1-5.dgn 10/24/2012 11:29:50 AM

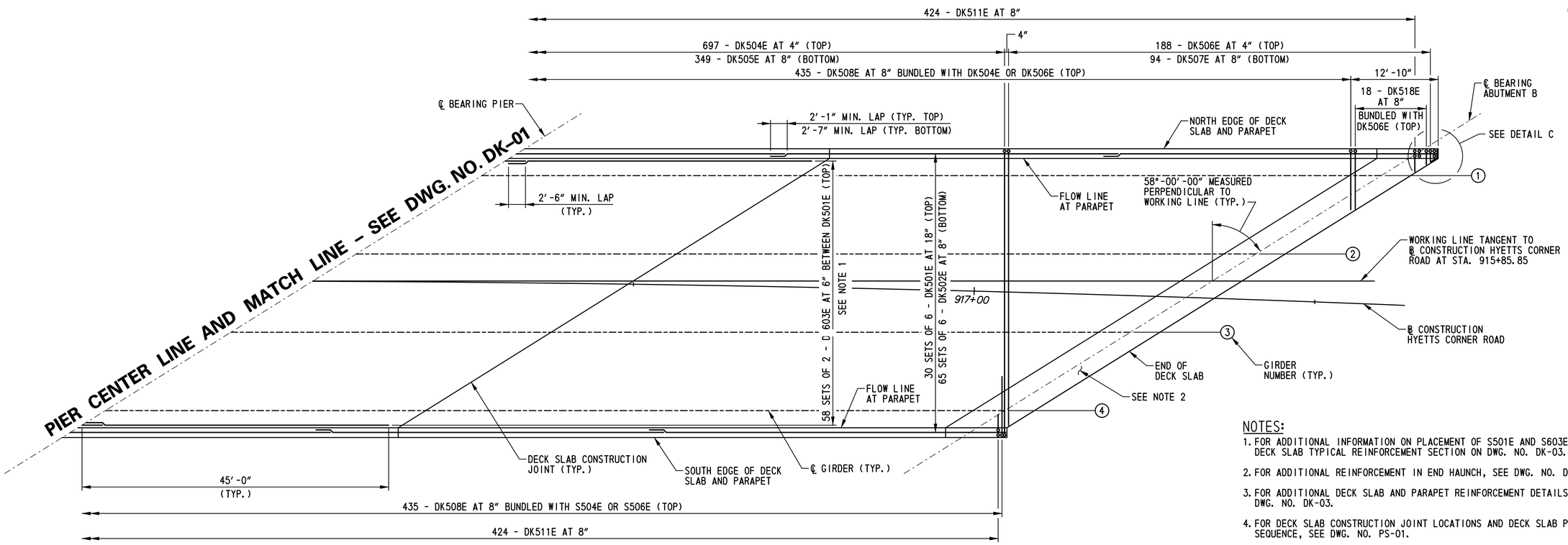

DECK SLAB REINFORCEMENT PLAN - SPAN 2

SCALE: 1/8"=1'-0"

NOTES:

1. FOR ADDITIONAL INFORMATION ON PLACEMENT OF S501E AND S603E, SEE DECK SLAB TYPICAL REINFORCEMENT SECTION ON DWG. NO. DK-03.
2. FOR ADDITIONAL REINFORCEMENT IN END HAUNCH, SEE DWG. NO. DK-03.
3. FOR ADDITIONAL DECK SLAB AND PARAPET REINFORCEMENT DETAILS, SEE DWG. NO. DK-03.
4. FOR DECK SLAB CONSTRUCTION JOINT LOCATIONS AND DECK SLAB POURING SEQUENCE, SEE DWG. NO. PS-01.
5. PARAPET CONTROL JOINTS NOT SHOWN FOR CLARITY. FOR PARAPET CONTROL JOINT LOCATIONS, SEE DWG. NO. PE-01. FOR PARAPET CONTROL JOINT DETAILS, SEE DWG. NO. FD-01.

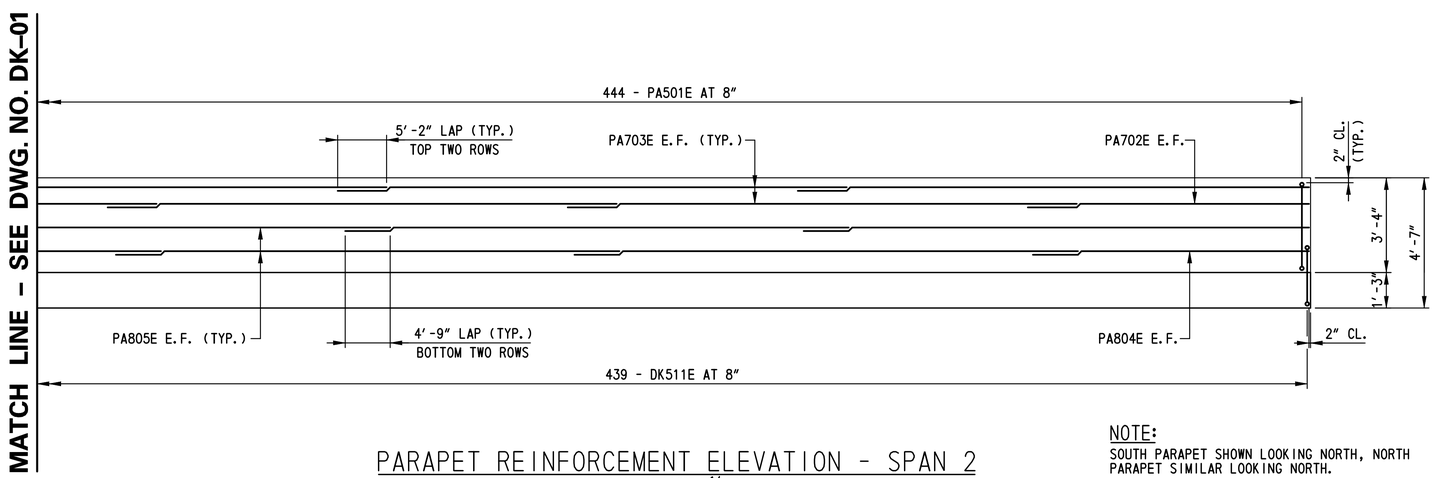

PARAPET REINFORCEMENT ELEVATION - SPAN 2

HORIZONTAL SCALE: 1/8"=1'-0"
VERTICAL SCALE: 3/8"=1'-0"

NOTE:

SOUTH PARAPET SHOWN LOOKING NORTH, NORTH PARAPET SIMILAR LOOKING NORTH.

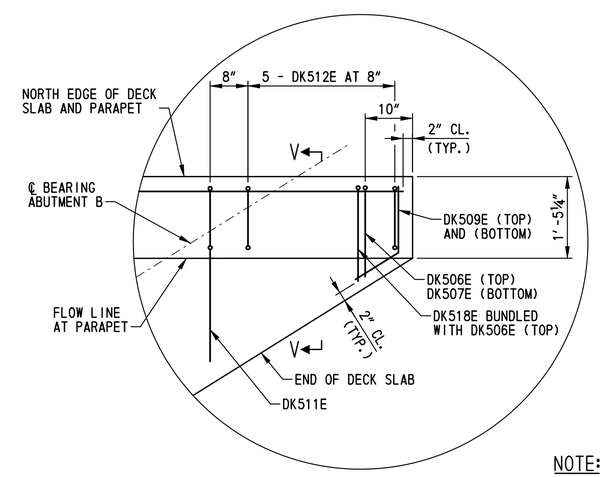

DETAIL C

SCALE: 3/4"=1'-0"

NOTE:

FOR SECTION V-V, SEE DWG. NO. DK-03.

DELAWARE DEPARTMENT OF TRANSPORTATION	ADDENDUMS / REVISIONS	SCALE: AS NOTED	US 301, SR 896 TO SR 1	CONTRACT T200911308	BRIDGE NO. 1-436A	DECK SLAB AND PARAPET REINFORCEMENT - SPAN 2
				COUNTY NEW CASTLE	DESIGNED BY: W.T.R.	
					CHECKED BY: B.K.B.	

BR1-5
DK-02

SHEET NO. 297
TOTAL SHTS. 875

n:\31653-000\contract to\cadd\bridge\Br_No5\DK02_br1-5.dgn
10/24/2012 11:29:56 AM

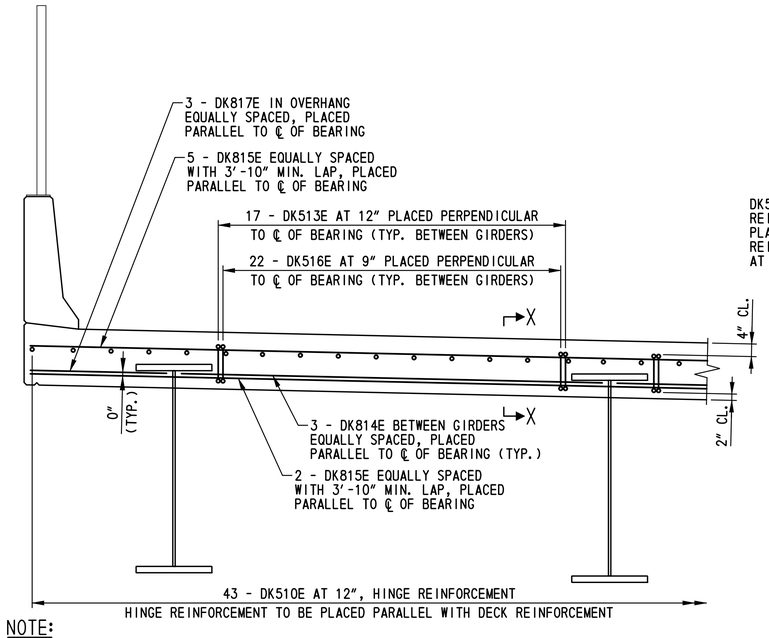

NOTE:
NORMAL SLAB AND PARAPET REINFORCEMENT NOT SHOWN FOR CLARITY.

CONCRETE END HAUNCH TYPICAL REINFORCEMENT SECTION

SCALE: ½"=1'-0"

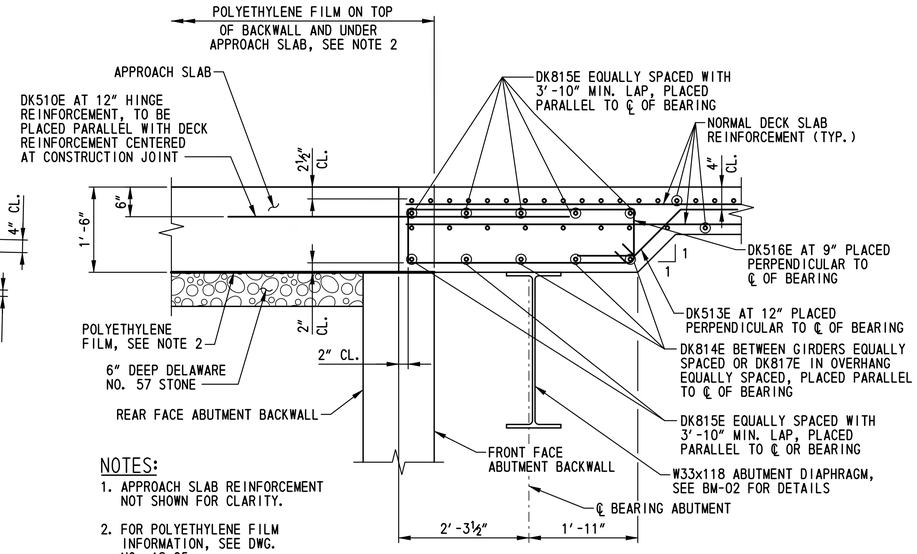

NOTES:
1. APPROACH SLAB REINFORCEMENT NOT SHOWN FOR CLARITY.
2. FOR POLYETHYLENE FILM INFORMATION, SEE DWG. NO. AS-05.

SECTION X-X

SCALE: ¾"=1'-0"

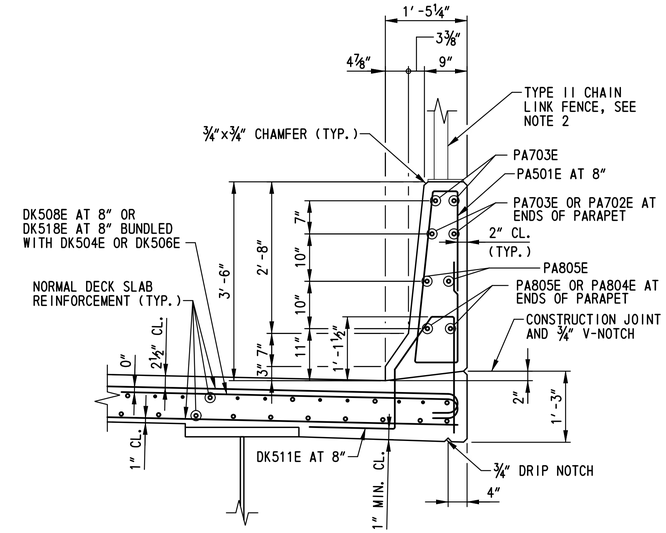

PARAPET TYPICAL REINFORCEMENT SECTION

SCALE: ¾"=1'-0"

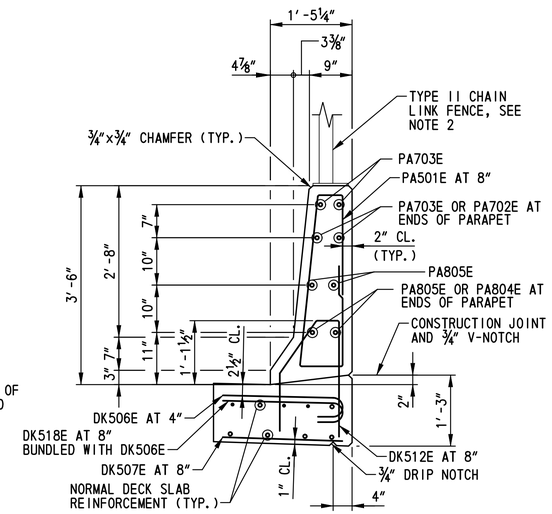

SECTION V-V

SCALE: ¾"=1'-0"

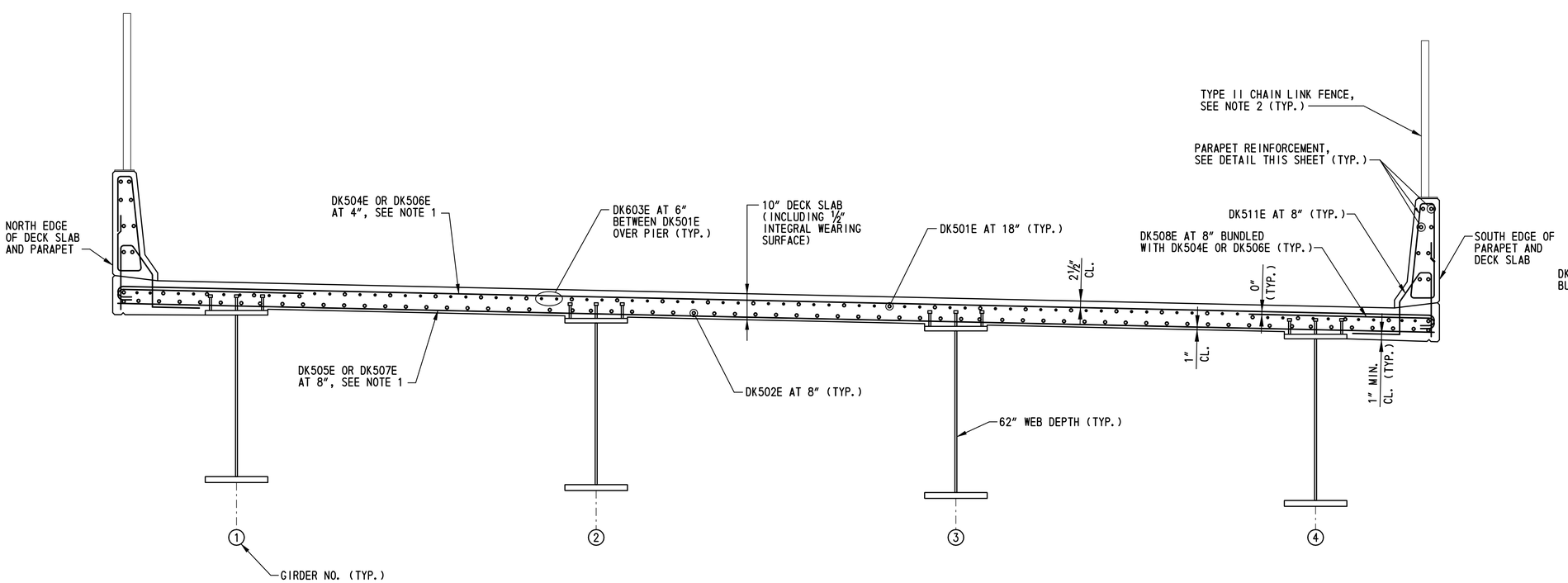

DECK SLAB TYPICAL REINFORCEMENT SECTION

SCALE: ½"=1'-0"

NOTES:
1. FOR ADDITIONAL TOP AND BOTTOM TRANSVERSE BARS, SEE DETAIL B AND C ON DWG. NOS. DK-01 AND DK-02.
2. FOR TYPE II CHAIN LINK FENCE DETAILS, SEE DWG. NOS. FD-01 AND FD-02.
3. FOR LOCATION OF SECTION V-V, SEE DWG. NOS. DK-01 AND DK-02.

BR1-5
DK-03

DELAWARE DEPARTMENT OF TRANSPORTATION	ADDENDUMS / REVISIONS	SCALE: AS NOTED	US 301, SR 896 TO SR 1	CONTRACT T200911308	BRIDGE NO. 1-436A	DECK SLAB AND PARAPET REINFORCEMENT DETAILS
				COUNTY NEW CASTLE	DESIGNED BY: W.T.R.	SHEET NO. 298
					CHECKED BY: B.K.B.	TOTAL SHTS. 875

n:\3653-000\contract_to\cadd\bridge\Br_No5\DK03_br1-5.dgn
10/24/2012 11:30:07 AM

① ANY MARK NUMBER WITH SUFFIX 'E' DENOTES EPOXY COATED REINFORCING STEEL.

② ALL MARK 'LOCATION PREFIXES' SHALL CONSIST OF TWO LETTERS AND ARE AS FOLLOWS: AB = ABUTMENT, AS = APPROACH SLAB, BC = BOX CULVERT, BW = BACKWALL, CL = COLUMN, DK = DECK, DL = DOWEL, FT = FOOTING, HW = HEADWALL, MS = MISC. BARS, PA = PARAPET, PR = PIER, SC = SHEETPILE CAP, SL = SLAB, TW = TOEWALL, WL = WALL (UNIQUE LOCATION), WW = WINGWALL

SPECIFICATIONS					BENDING DIMENSIONS (FEET-INCHES /QUARTER INCH)										
QTY.	SIZE	LENGTH	MARK	TYPE	A	B	C	D	E	F/R	G	H	J	K	O
DECK SLAB															
180	5	50-11 2	DK501E	STR		50-11 2									
390	5	51-04 2	DK502E	STR		51-04 2									
116	6	41-03 0	DK603E	STR		41-03 0									
697	5	42-09 0	DK504E	1	0-08 0	42-01 0							0-06 0		
349	5	42-01 0	DK505E	STR		42-01 0									
376•	5	2-03 1	DK506E	1	0-08 0	1-07 1							0-06 0		
		T0				T0									
		40-06 0				40-06 0									
			•2 SETS OF 188												
188•	5	1-07 1	DK507E	STR		1-07 1									
		T0				T0									
		40-03 3				40-03 3									
			•2 SETS OF 94												
848	5	9-07 2	DK508E	1	0-10 0	8-09 2									
4	5	3-02 1	DK509E	3		1-02 1	2-00 0					1-08 1		1-00 3	
86	5	6-00 0	DK510E	STR		6-00 0									
878	5	5-07 1	DK511E	T15		2-00 1	0-05 2	1-01 2	1-00 0	1-00 0			0-07 3	0-11 0	1-01 1
10	5	4-07 1	DK512E	T15		2-00 1	0-05 2	1-01 2	1-00 0				0-07 3	0-11 0	1-01 1
102	5	3-02 3	DK513E	6		1-00 0	1-02 3	1-00 0				0-10 2		0-10 2	2-10 2
18	8	17-11 0	DK814E	STR		17-11 0									
14	8	41-07 2	DK815E	STR		41-07 2									
132	5	10-10 0	DK516E	T1	0-05 2	3-10 2	1-01 0	3-10 2	1-01 0		0-05 2				
12	8	5-03 1	DK817E	STR		5-03 1									
36•	5	2-05 0	DK518E	1	0-10 0	1-07 0									
		T0				T0									
		8-08 0				8-08 0									
			•2 SETS OF 18												
888	5	9-03 1	PA501E	PA		2-06 2	0-09 0	3-00 1	0-05 0	2-06 2		3-00 0		0-04 0	
8	7	29-03 0	PA702E	STR		29-03 0									
44	7	53-07 0	PA703E	STR		53-07 0									
8	8	29-00 0	PA804E	STR		29-00 0									
44	8	53-02 1	PA805E	STR		53-02 1									

SPECIFICATIONS					BENDING DIMENSIONS (FEET-INCHES /QUARTER INCH)										
QTY.	SIZE	LENGTH	MARK	TYPE	A	B	C	D	E	F/R	G	H	J	K	O

SPECIFICATIONS					BENDING DIMENSIONS (FEET-INCHES /QUARTER INCH)										
QTY.	SIZE	LENGTH	MARK	TYPE	A	B	C	D	E	F/R	G	H	J	K	O

ASTM STANDARD ENGLISH REINFORCING BARS				RECOMMENDED END HOOKS, APPLICABLE TO ALL GRADES				STIRRUP AND TIE HOOKS, APPLICABLE TO ALL GRADES			
	NOMINAL DIMENSIONS				180° HOOKS		90° HOOKS		90° HOOK	135° HOOK	
BAR SIZE	DIAMETER (INCHES)	AREA (INCHES²)	WEIGHT (LBS./FT.)	D	A OR G	J	A OR G	D	A OR G	A OR G	H
3	0.375	0.110	0.376	2¼"	5"	3"	6"	1½"	4"	4"	2½"
4	0.500	0.200	0.668	3"	6"	4"	8"	2"	4½"	4½"	3"
5	0.625	0.310	1.043	3¾"	7"	5"	10"	2½"	6"	5½"	3¾"
6	0.750	0.440	1.502	4½"	8"	6"	1-0"	4½"	1-0"	8"	4½"
7	0.875	0.600	2.044	5¼"	10"	7"	1-2"	5¼"	1-2"	9"	5¼"
8	1.000	0.790	2.670	6"	11"	8"	1-4"	6"	1-4"	10½"	6"
9	1.128	1.000	3.400	9½"	1-3"	11¾"	1-7"				
10	1.270	1.270	4.303	10¾"	1-5"	1-1¼"	1-10"				
11	1.410	1.560	5.313	1-0"	1-7"	1-2¾"	2-0"				
14	1.693	2.250	7.650	1-6¼"	2-3"	1-9¾"	2-7"				
18	2.257	4.000	13.600	2-0"	3-0"	2-4½"	3-5"				

NOTES:

1. FIGURES SHOWN IN CIRCLES REPRESENT BAR BEND TYPES.
2. STANDARD BAR BENDS INCLUDE ONLY THOSE TYPES BELOW, INDICATED AS SUCH.
3. ALL DIMENSIONS OUT-TO-OUT, EXCEPT "A" AND "G" ON STD. 180° AND 135° HOOKS.
4. "J" DIMENSIONS ON 180° HOOKS TO BE SHOWN ONLY WHERE NECESSARY TO RESTRICT HOOK SIZE, OTHERWISE STANDARD 'ACI' HOOKS ARE TO BE USED.
5. WHERE "J" IS NOT SHOWN, "J" WILL BE KEPT EQUAL TO OR LESS THAN "H" ON TYPES 3, 5 AND 22. WHERE "J" CAN EXCEED "H", IT SHALL BE SHOWN.
6. "H" DIMENSIONS OF STIRRUPS TO BE SHOWN AS NEEDED TO FIT WITHIN THE CONCRETE.
7. UNLESS OTHERWISE NOTED, DIAMETER "D" IS THE SAME FOR ALL BENDS AND HOOKS ON A BAR (EXCEPT FOR BEND TYPES 11 AND 13).
8. WHERE SLOPE DIFFERS FROM 45° OFFSET, "H" AND "K" MUST BE SHOWN.
9. WHERE BARS ARE TO BE BENT MORE ACCURATELY THAN STANDARD BENDING TOLERANCES, BENDING DIMENSIONS REQUIRING CLOSER FABRICATION SHOULD HAVE LIMITS INDICATED.
10. FOR RECOMMENDED DIAMETER "D", OF BENDS, HOOKS, ETC., REFER TO TABLE ABOVE, 'CRSI' OR 'ACI' TABLES WHERE APPLICABLE AND REQUIRED.
11. TYPE S1-S6, S11, T1-T3 AND T6-T9 APPLICABLE TO BAR SIZES #3 THROUGH #8.

STANDARD BAR BENDS

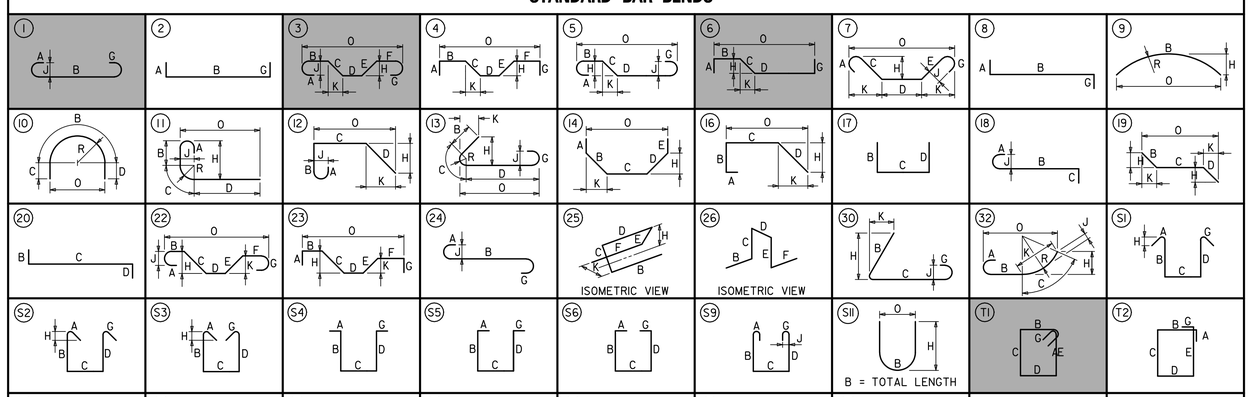

SPECIAL BAR BENDS

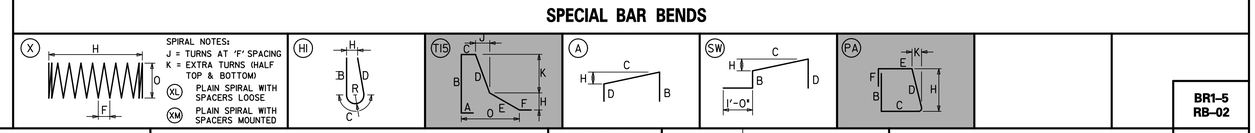

STIRRUP AND TIE HOOKS

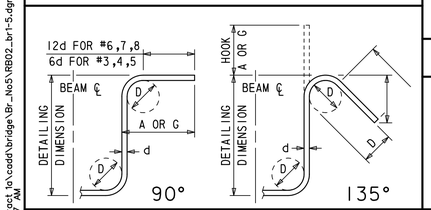

180° AND 90° END HOOKS

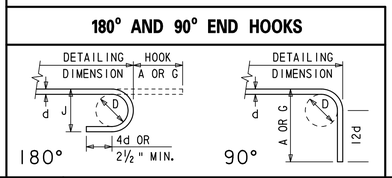

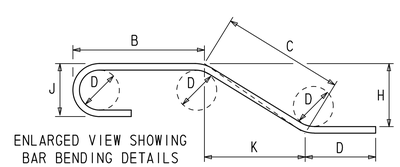

ADDENDUMS / REVISIONS

DELAWARE DEPARTMENT OF TRANSPORTATION

US 301, SR 896 TO SR 1

CONTRACT	BRIDGE NO.	1-436A
T200911308	DESIGNED BY: W.T.R.	
COUNTY		
NEW CASTLE	CHECKED BY: B.K.B.	

SUPERSTRUCTURE REINFORCEMENT LIST

BR1-5
RB-02

SHEET NO. 299
TOTAL SHTS. 875

n:\31653-000\contract_to\cadd\bridge\Br_No5\RB02_br1-5.dgn
10/24/2012 11:34:47 AM

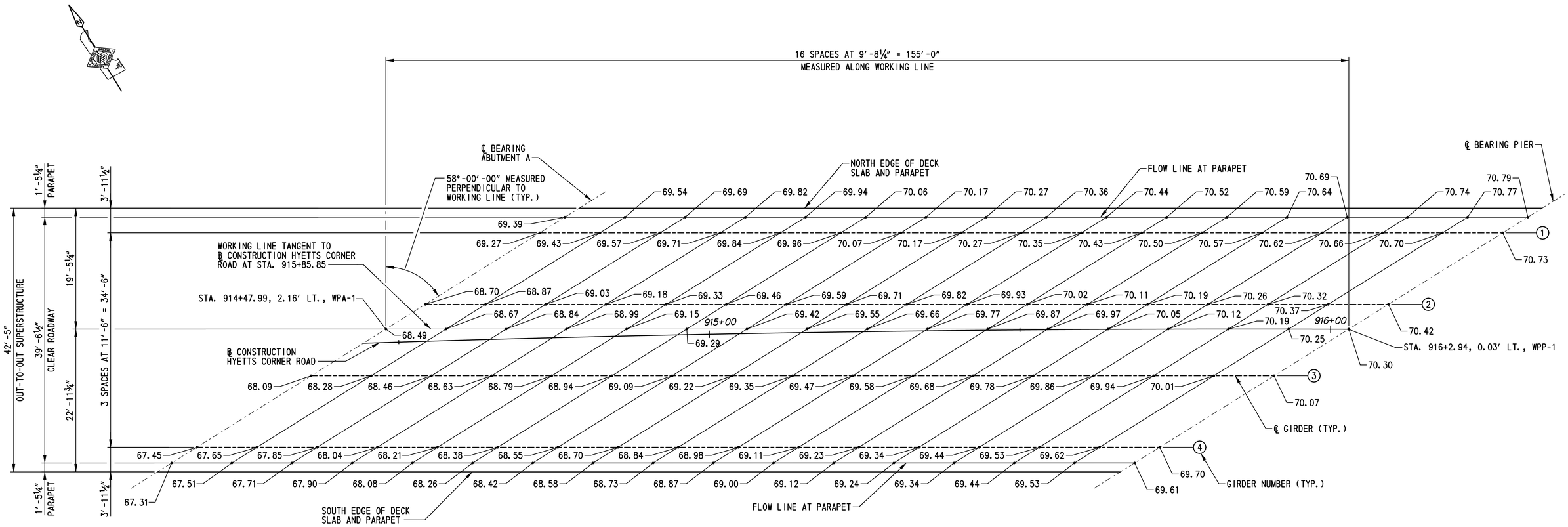

FINISHED ROADWAY ELEVATIONS - SPAN 1

SCALE: ⅛″=1′-0″

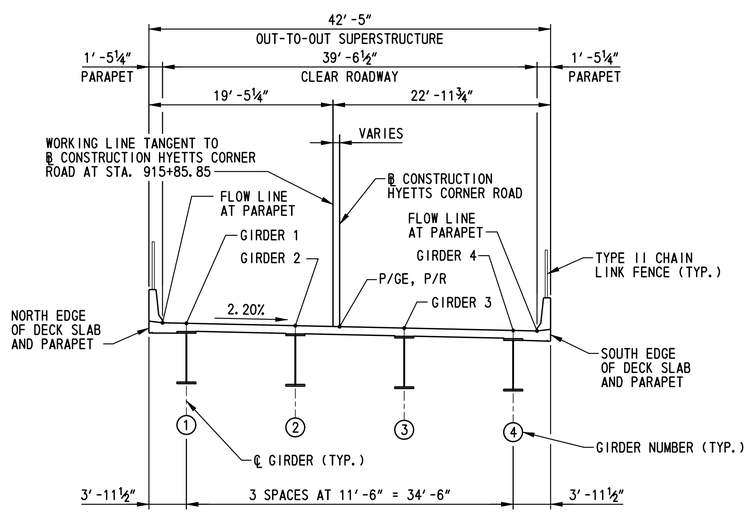

LOCATIONS OF FINISHED ROADWAY ELEVATIONS

SCALE: ⅛″=1′-0″

FINISHED ROADWAY ELEVATIONS ALONG ℄ CONSTRUCTION - SPAN 1		
LOCATION	STATION	ELEVATION
℄ BEARING ABUTMENT A	914+44.27	68.37
1	914+54.47	68.57
2	914+64.62	68.75
3	914+74.74	68.93
4	914+84.82	69.09
5	914+94.86	69.24
6	915+04.86	69.39
7	915+14.83	69.52
8	915+24.76	69.65
9	915+34.65	69.76
10	915+44.50	69.87
11	915+54.32	69.96
12	915+64.10	70.05
13	915+73.85	70.12
14	915+83.56	70.19
15	915+93.24	70.25
℄ BEARING PIER	916+02.89	70.30

NOTES:

1. FINISHED ROADWAY ELEVATIONS SHOWN ARE TOP OF PROPOSED CONCRETE DECK SLAB.
2. FOR VERTICAL CURVE DATA, SEE DWG. NO. PE-01.

m:\31653_000\contract 1a\cadd\bridge\Br_No5\RE01_br1-5.dgn
10/24/2012 11:35:13 AM

DELAWARE DEPARTMENT OF TRANSPORTATION

ADDENDUMS / REVISIONS

SCALE: AS NOTED

US 301, SR 896 TO SR 1

CONTRACT T200911308
COUNTY NEW CASTLE
BRIDGE NO. 1-436A
DESIGNED BY: W.T.R.
CHECKED BY: B.K.B.

FINISHED ROADWAY ELEVATIONS - SPAN 1

BR1-5 RE-01
SHEET NO. 300
TOTAL SHTS. 875

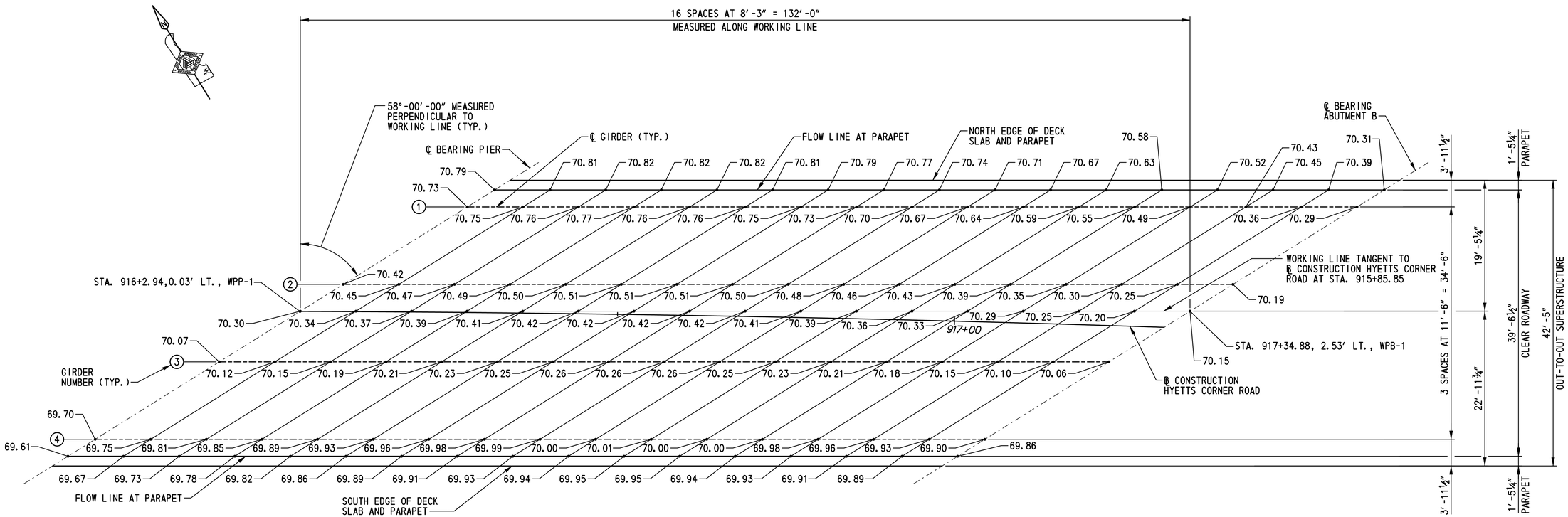

FINISHED ROADWAY ELEVATIONS - SPAN 2

SCALE: ⅛″=1′-0″

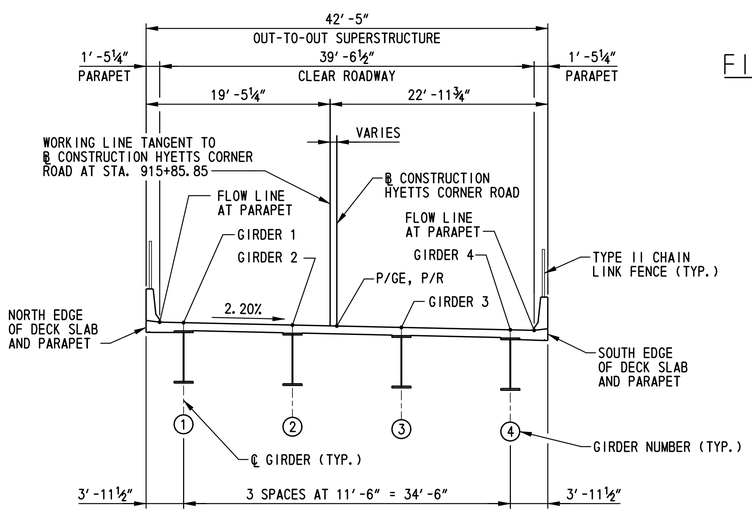

LOCATIONS OF FINISHED ROADWAY ELEVATIONS

SCALE: ⅛″=1′-0″

FINISHED ROADWAY ELEVATIONS ALONG ℬ CONSTRUCTION - SPAN 2

LOCATION	STATION	ELEVATION
℄ BEARING PIER	916+02.89	70.30
1	916+11.07	70.33
2	916+19.23	70.36
3	916+27.37	70.38
4	916+35.49	70.40
5	916+43.58	70.41
6	916+51.65	70.41
7	916+59.70	70.41
8	916+67.72	70.40
9	916+75.72	70.39
10	916+83.70	70.37
11	916+91.66	70.34
12	916+99.60	70.31
13	917+07.51	70.27
14	917+15.40	70.23
15	917+23.28	70.18
℄ BEARING ABUTMENT B	917+31.13	70.12

NOTES:

1. FINISHED ROADWAY ELEVATIONS SHOWN ARE TOP OF PROPOSED CONCRETE DECK SLAB.
2. FOR VERTICAL CURVE DATA, SEE DWG. NO. PE-01.

BR1-5
RE-02

DELAWARE DEPARTMENT OF TRANSPORTATION

ADDENDUMS / REVISIONS

SCALE: AS NOTED

US 301, SR 896 TO SR 1

CONTRACT	BRIDGE NO.	1-436A
T200911308	DESIGNED BY: W.T.R.	
COUNTY		
NEW CASTLE	CHECKED BY: B.K.B.	

FINISHED ROADWAY ELEVATIONS - SPAN 2

SHEET NO. 301
TOTAL SHTS. 875

r:\31853-000\contract 1a\cadd\bridge\Br_No5\RE02_br1-5.dgn
10/24/2012 11:35:27 AM

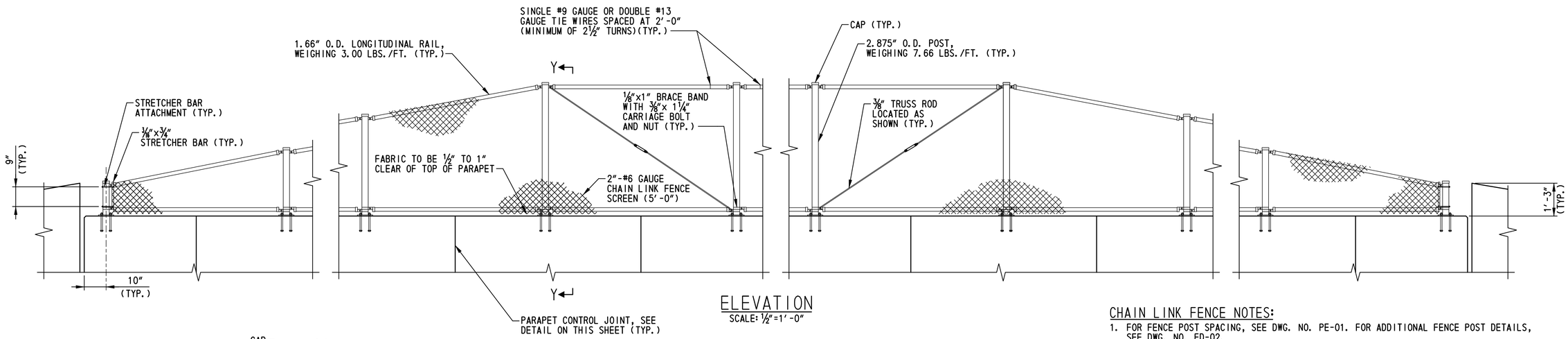

ELEVATION
SCALE: ½"=1'-0"

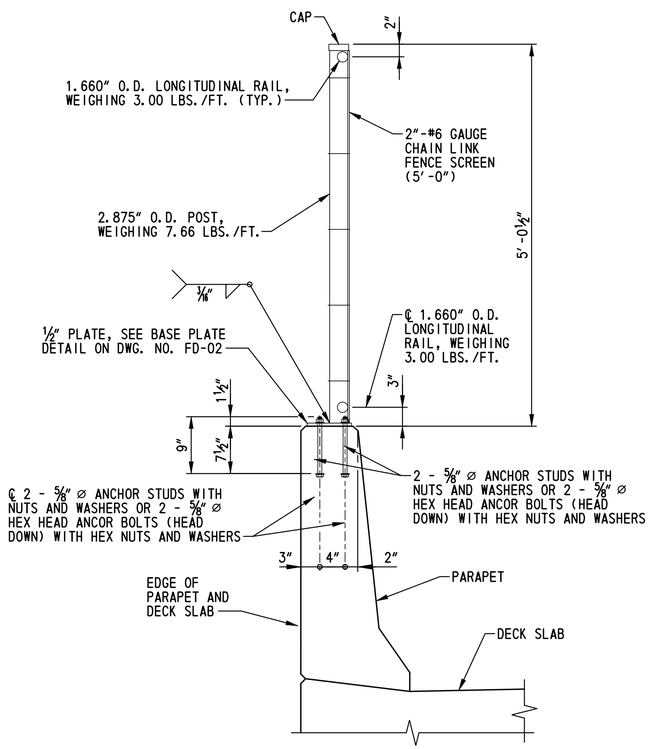

SECTION Y-Y
SCALE: 1"=1'-0"

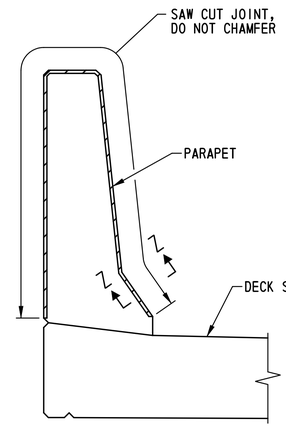

PARAPET CONTROL JOINT DETAIL
SCALE: 1"=1'-0"

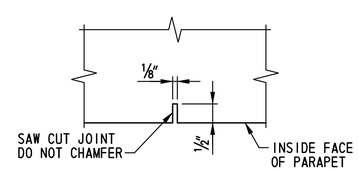

SECTION Z-Z
NOT TO SCALE

NOTE:
PLACE PARAPET CONTROL JOINT CENTERED BETWEEN FENCE POSTS.

CHAIN LINK FENCE NOTES:

1. FOR FENCE POST SPACING, SEE DWG. NO. PE-01. FOR ADDITIONAL FENCE POST DETAILS, SEE DWG. NO. FD-02.
2. POSTS AND RAILS SHALL CONFORM TO ASTM F 1083, SCHEDULE 80. FABRIC SHALL BE 2"-#6 CHAIN LINK FENCE SCREEN (5'-0") IN CONFORMANCE WITH AASHTO M 181.
3. ALL POSTS, BRACES, FITTINGS AND HARDWARE SHALL BE GALVANIZED.
4. ALL PLATES SHALL BE STEEL CONFORMING TO ASTM A 709, GRADE 36.
5. ANCHOR STUDS OR ANCHOR BOLTS SHALL CONFORM TO ASTM A 276, TYPE 430 OR TYPE 304 STAINLESS STEEL ANNEALED, HOT-FINISHED, ULTIMATE STRENGTH 70,000 PSI MIN., 20% MIN. ELONGATION. THREADS MAY BE ROLLED OR CUT.
6. EPOXY GROUT FOR ANCHOR STUDS IN CORED HOLES SHALL BE A SAND AND EPOXY MIXED BY VOLUME IN CONFORMANCE WITH THE MANUFACTURER'S RECOMMENDATIONS. THE GROUT SHALL BE CAPABLE OF DEVELOPING A MINIMUM COMPRESSIVE STRENGTH OF 6500 PSI AT 7 DAYS WHEN TESTED IN CONFORMANCE WITH ASTM C 579.
7. ALL LONGITUDINAL RAILS SHALL BE PARALLEL TO TOP OF PARAPET.
8. ALL POSTS SHALL BE SET NORMAL TO TOP OF PARAPET.
9. THE CHAIN LINK FENCE SHALL BE TRUE TO LINE, TAUT, TIGHT FIT TO TOP OF PARAPET, WITH ½" TO 1" CLEAR TO TOP OF PARAPET, AND SHALL COMPLY WITH THE BEST PRACTICE FOR FENCE CONTRUCTION OF THIS TYPE.
10. POSTS AND RAILS SHALL BE PERMANENTLY POSITIONED BEFORE FABRIC IS PLACED.
11. BEFORE PLACING FENCING, PLACE ½" TO 1" THICK MATERIAL (WOOD, ETC.) ON TOP OF PARAPET TO ENSURE THE DESIRED GAP IS ACHIEVED. AFTER FENCE IS RIGIDLY ATTACHED, THIS TEMPORARY BLOCKING SHALL BE REMOVED.
12. AS AN OPTION, THE CONTRACTOR MAY SET THE ANCHOR STUDS AFTER PLACING CONCRETE BARRIER USING 7/8" DIA. CORED HOLES AND AN APPROVED EPOXY GROUT. NUTS AND WASHERS SHALL BE OMITTED FROM THE EMBEDDED ENDS OF ANCHOR STUDS. IF CONTRACTOR ELECTS TO PLACE ANCHOR STUDS AFTER PLACING CONCRETE PARAPET, NEWLY PLACED REBARS SHALL BE LOCATED SO THAT CORING DOES NOT DAMAGE THE REBAR. NO ADDITIONAL COMPENSATION WILL BE ALLOWED FOR THIS OPTION.
13. COAT ALL SURFACES OF BASE PLATES IN CONTACT WITH CONCRETE WITH A CAULKING COMPOUND JUST PRIOR TO BASE PLATE INSTALLATION. AFTER POSTS AND RAILS ARE PERMANENTLY POSITIONED SEAL THE ENTIRE PERIMETER OF THE BASE PLATE BETWEEN METAL SURFACES AND THE CONCRETE WITH A CAULKING COMPOUND. CAULKING COMPOUND SHALL ADHERE TO STEEL AND CONCRETE SURFACES AND MEET THE REQUIREMENTS OF ASTM C 834 OR ASTM C 920. PAYMENT FOR THE CAULKING COMPOUND SHALL BE INCIDENTAL TO ITEM 727507 - BRIDGE SAFETY FENCE.
14. FOR ANTI-CLIMB SHIELD LOCATION, SEE DWG. NO. PE-01. FOR ANTI-CLIMB SHIELD DETAILS, SEE DWG. NO. FD-02. PAYMENT FOR INSTALLATION OF ANTI-CLIMB SHIELDS WILL BE INCIDENTAL TO ITEM NO. 727507 - BRIDGE SAFETY FENCE.

N:\33653-000\CONTRACT 1A\CADD\Bridge\Br_No5\FD01_br1-5.dgn
12/10/2012 12:15:43 PM

DELAWARE DEPARTMENT OF TRANSPORTATION	ADDENDUMS / REVISIONS	SCALE: AS NOTED	US 301, SR 896 TO SR 1	CONTRACT T200911308	BRIDGE NO. 1-436A	FENCE DETAILS – 1	BR1-5 FD-01
				COUNTY NEW CASTLE	DESIGNED BY: B.K.B.		SHEET NO. 302
					CHECKED BY: W.A.G.		TOTAL SHTS. 875

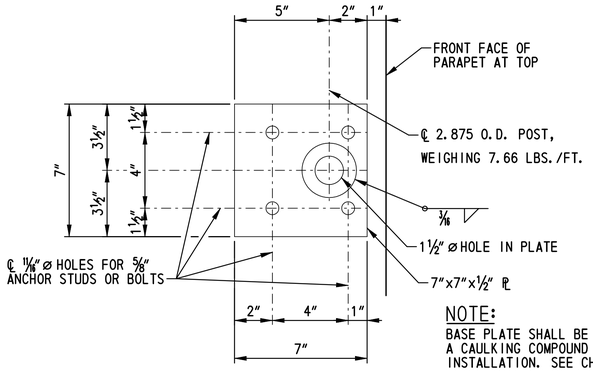

NOTE:
BASE PLATE SHALL BE COATED WITH A CAULKING COMPOUND PRIOR TO INSTALLATION. SEE CHAIN LINK FENCE NOTE 13 ON DWG. NO. FD-01 FOR ADDITIONAL INFORMATION.

BASE PLATE DETAIL
SCALE: 3"=1'-0"

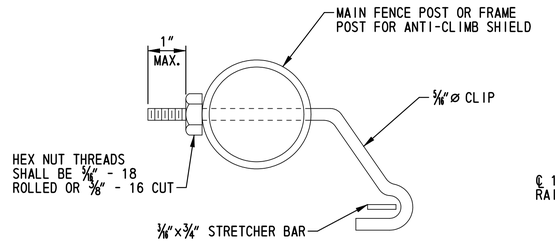

STRETCHER BAR ATTACHMENT
NOT TO SCALE

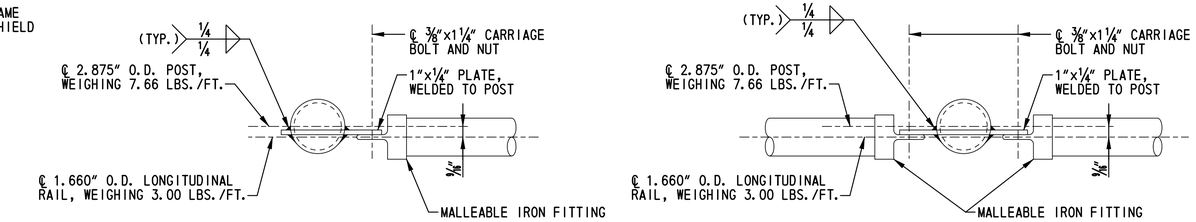

TOP LONGITUDINAL RAIL - POST ATTACHMENT
SCALE: 3"=1'-0"

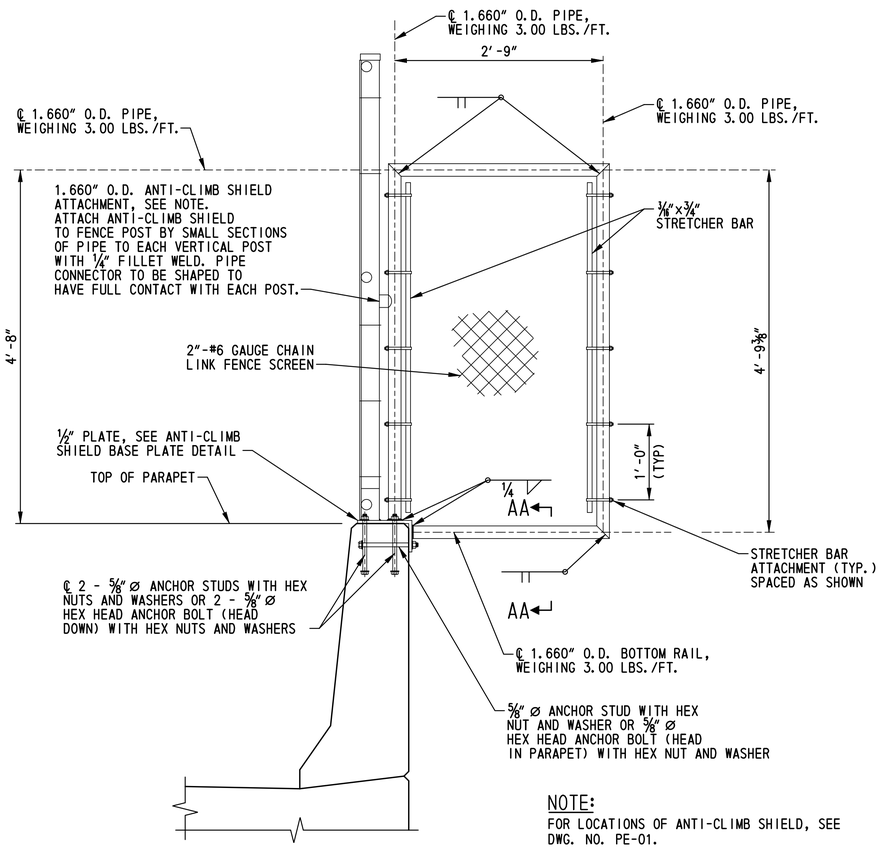

NOTE:
FOR LOCATIONS OF ANTI-CLIMB SHIELD, SEE DWG. NO. PE-01.

ANTI-CLIMB SHIELD DETAIL
SCALE: 1"=1'-0"

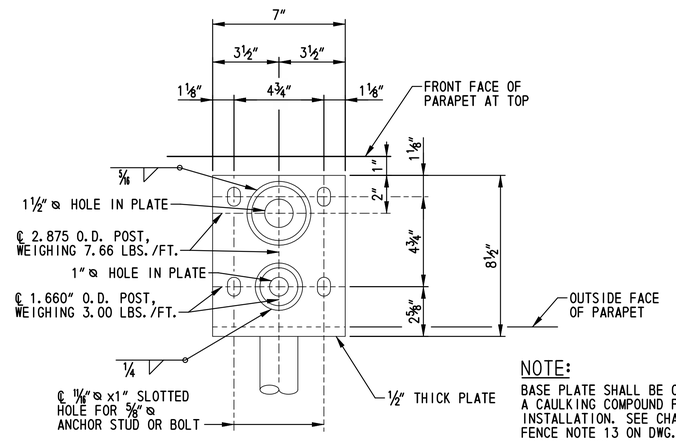

NOTE:
BASE PLATE SHALL BE COATED WITH A CAULKING COMPOUND PRIOR TO INSTALLATION. SEE CHAIN LINK FENCE NOTE 13 ON DWG. NO. FD-01 FOR ADDITIONAL INFORMATION.

ANTI-CLIMB SHIELD BASE PLATE DETAIL
SCALE: 3"=1'-0"

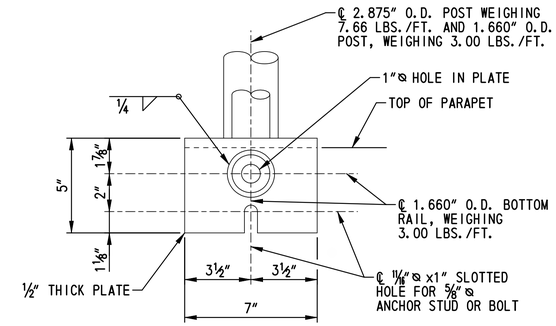

SECTION AA-AA
SCALE: 3"=1'-0"

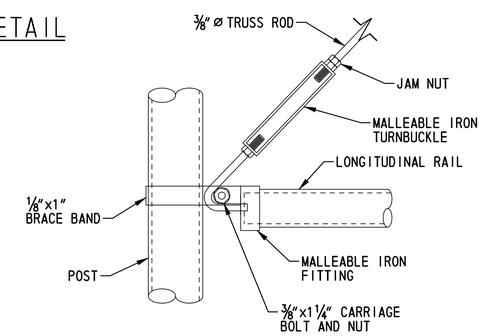

TRUSS ROD ATTACHMENT
SCALE: 3"=1'-0"

NOTE:
FOR FENCE NOTES, SEE DWG. NO. FD-01.

BR1-5
FD-02

N:\31653-000\CONTRACT 1A\CADD\Bridge\Br_No5\FD02_br1-5.dgn
3/04/10 PM
7/6/2015

DELAWARE DEPARTMENT OF TRANSPORTATION

ADDENDUMS / REVISIONS	

SCALE: AS NOTED

US 301, SR 896 TO SR 1

CONTRACT	BRIDGE NO.	1-436A
T200911308	DESIGNED BY: B.K.B.	
COUNTY		
NEW CASTLE	CHECKED BY: W.A.G.	

FENCE DETAILS - 2

SHEET NO.
303
TOTAL SHTS.
875

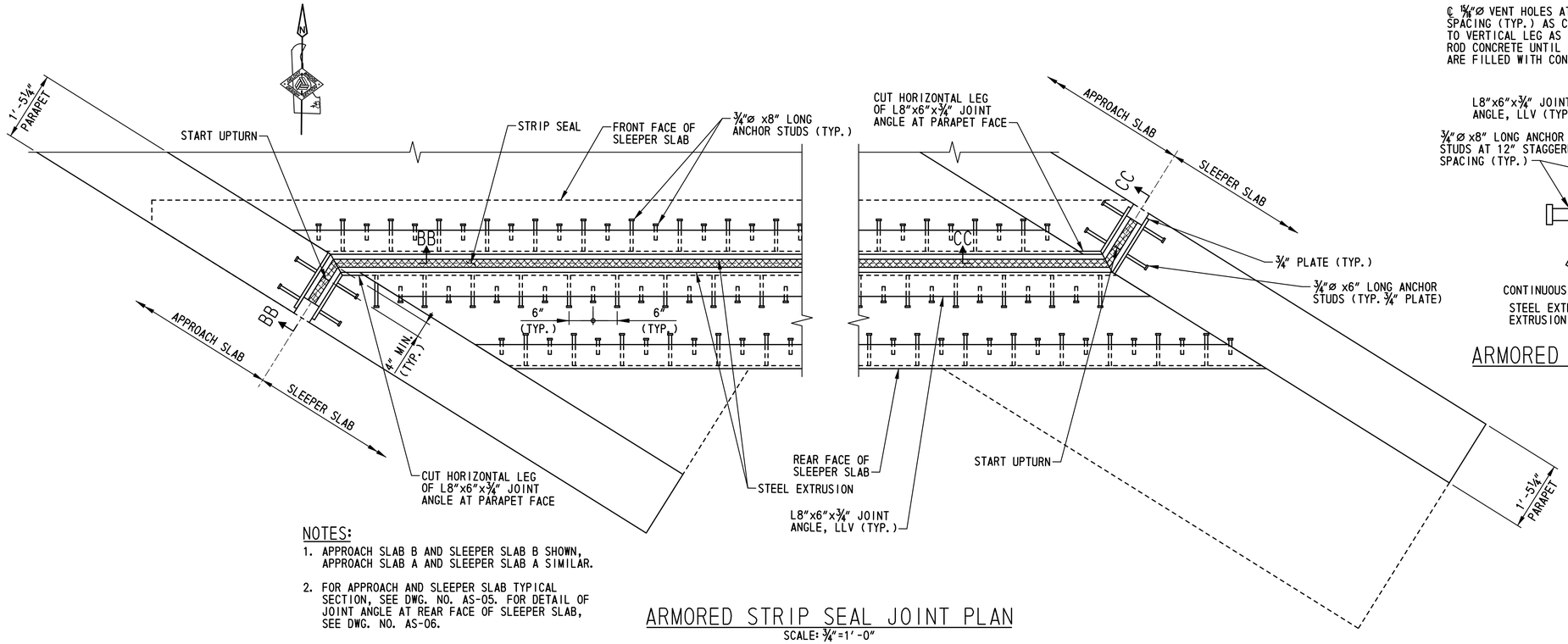

NOTES:

1. APPROACH SLAB B AND SLEEPER SLAB B SHOWN, APPROACH SLAB A AND SLEEPER SLAB A SIMILAR.
2. FOR APPROACH AND SLEEPER SLAB TYPICAL SECTION, SEE DWG. NO. AS-05. FOR DETAIL OF JOINT ANGLE AT REAR FACE OF SLEEPER SLAB, SEE DWG. NO. AS-06.

ARMORED STRIP SEAL JOINT PLAN

SCALE: ¾"=1'-0"

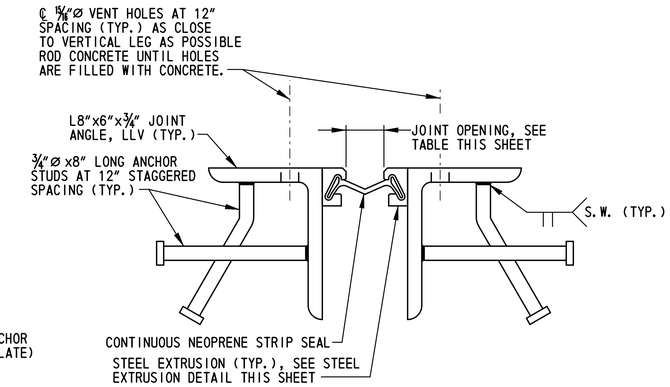

ARMORED STRIP SEAL JOINT ASSEMBLY DETAIL

SCALE: 3"=1'-0"

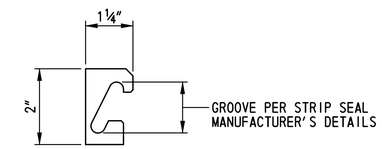

STEEL EXTRUSION DETAIL

NOT TO SCALE

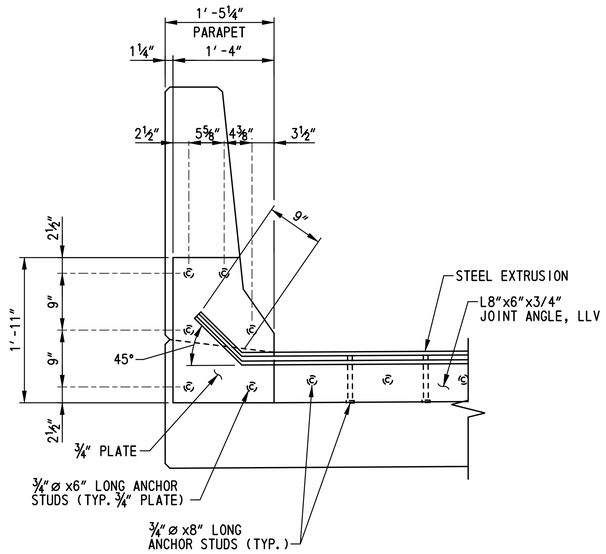

SECTION BB-BB

SCALE: 1"=1'-0"

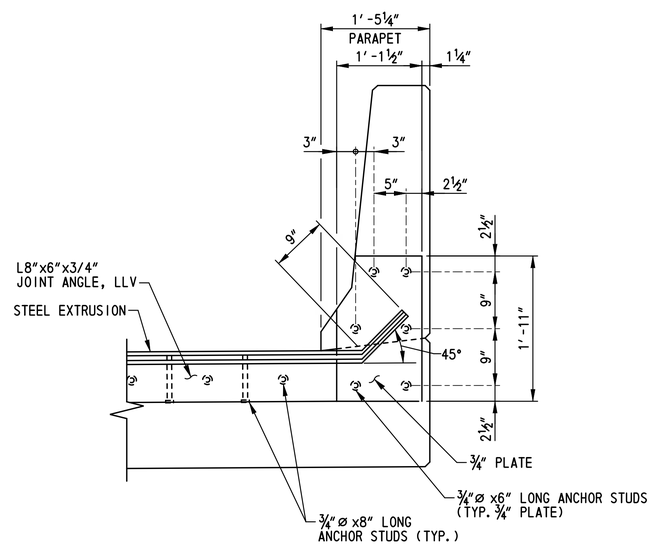

SECTION CC-CC

SCALE: 1"=1'-0"

JOINT OPENING TABLE											
LOCATION	TEMPERATURE (°F)										
	0	10	20	30	40	50	60	70	80	90	100
APPROACH SLAB A	2¾"	2⅝"	2½"	2⅜"	2¼"	2⅛"	2"	1⅞"	1¾"	1⅝"	1½"
APPROACH SLAB B	2⅝"	2½"	2 7/16"	2 5/16"	2 3/16"	2⅛"	2"	1⅞"	1 13/16"	1 11/16"	1 9/16"

NOTE: JOINT OPENINGS SHOWN ARE MEASURED NORMAL TO JOINT.

NOTE:

PAYMENT FOR CONSTRUCTION OF THE ARMORED STRIP SEAL JOINT WILL BE MADE UNDER ITEM NO. 605512 - PREFABRICATED EXPANSION JOINT SYSTEM 4". SEE THE SPECIAL PROVISIONS FOR ADDITIONAL INFORMATION AND REQUIREMENTS.

N:\31653-000\CONTRACT 1A\CADD\Bridge\Br_No5\EX01_br1-5.dgn
4/28/2015 3:23:20 PM

DELAWARE DEPARTMENT OF TRANSPORTATION	ADDENDUMS / REVISIONS	SCALE: AS NOTED	US 301, SR 896 TO SR 1	CONTRACT T200911308	BRIDGE NO. 1-436A	ARMORED STRIP SEAL JOINT DETAILS	BR1-5 EX-01
				COUNTY NEW CASTLE	DESIGNED BY: W.T.R.		SHEET NO. 304
					CHECKED BY: B.K.B.		TOTAL SHTS. 875

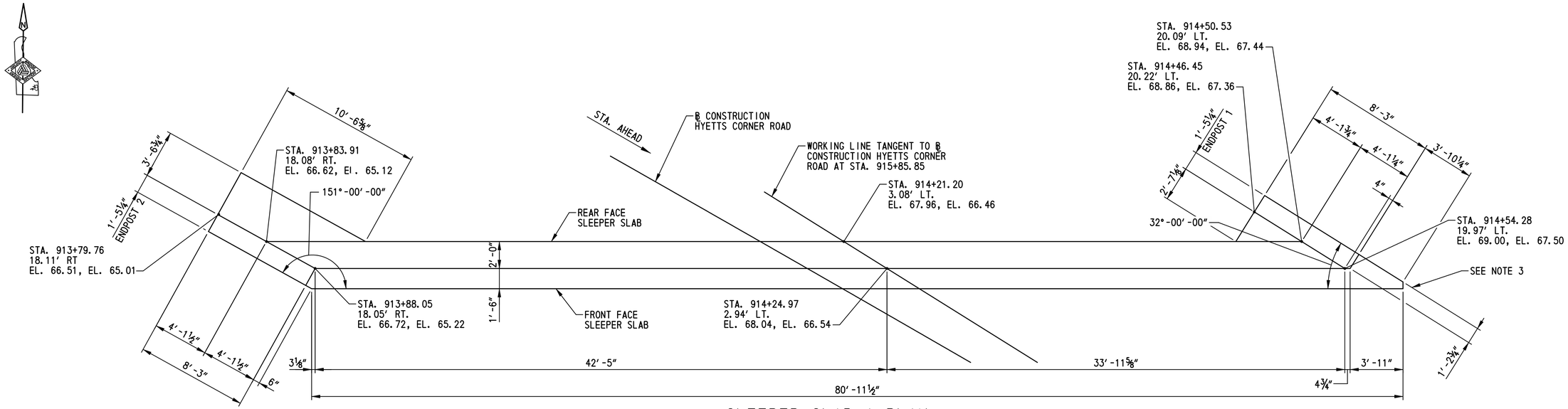

SLEEPER SLAB A PLAN

SCALE: ¼"=1'-0"

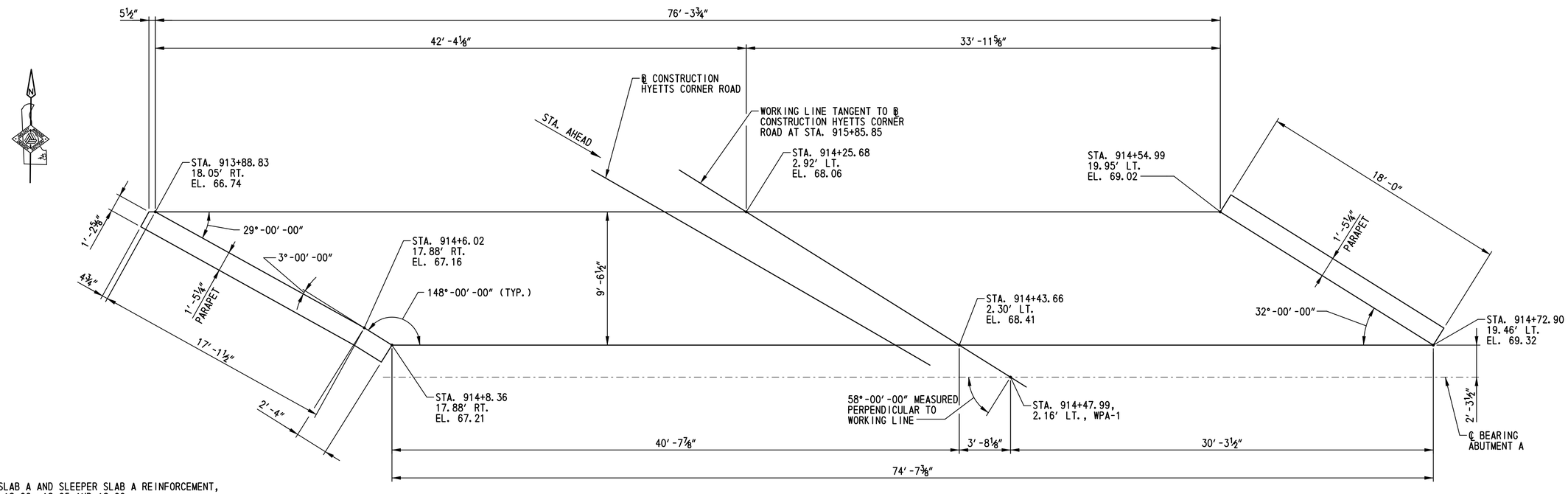

APPROACH SLAB A PLAN

SCALE: ¼"=1'-0"

NOTES:

1. FOR APPROACH SLAB A AND SLEEPER SLAB A REINFORCEMENT, SEE DWG. NOS. AS-02, AS-05 AND AS-06.
2. FOR APPRAOCH SLAB A AND SLEEPER SLAB A TYPICAL SECTIONS, SEE DWG. NO. AS-05.
3. FOR REQUIREMENTS AT ACUTE CORNER OF SLEEPER SLAB, SEE DETAIL A ON DWG. NO. FT-01.
4. PAYMENT FOR CONSTRUCTION OF SLEEPER SLABS WILL BE MADE UNDER ITEM NO. 602014 - PORTLAND CEMENT CONCRETE MASONRY, APPROACH SLAB, CLASS D.

r:\31653-000\contract_to\cadd\bridge\Br_No5\AS01_br1-5.dgn
10/24/2012 11:27:24 AM

DELAWARE DEPARTMENT OF TRANSPORTATION	ADDENDUMS / REVISIONS	SCALE: AS NOTED	US 301, SR 896 TO SR 1	CONTRACT T200911308	BRIDGE NO. 1-436A	APPROACH SLAB A AND SLEEPER SLAB A PLAN	BR1-5 AS-01
				COUNTY NEW CASTLE	DESIGNED BY: W.T.R.		SHEET NO. 305
					CHECKED BY: B.K.B.		TOTAL SHTS. 875

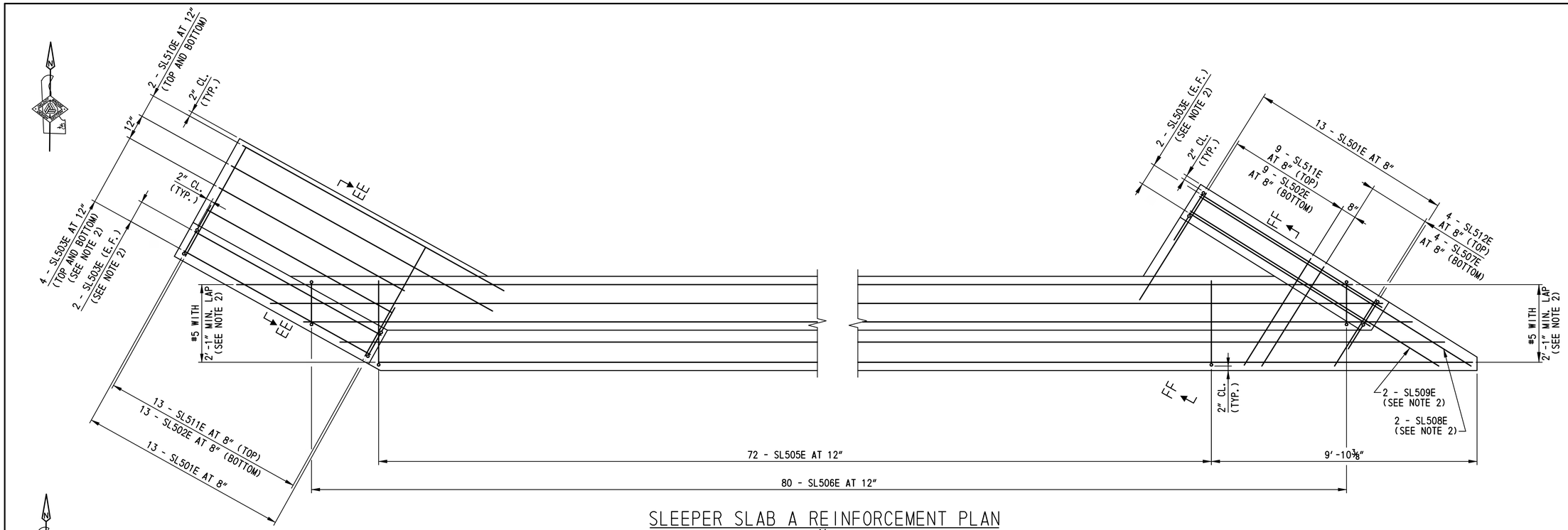

SLEEPER SLAB A REINFORCEMENT PLAN

SCALE: ½"=1'-0"

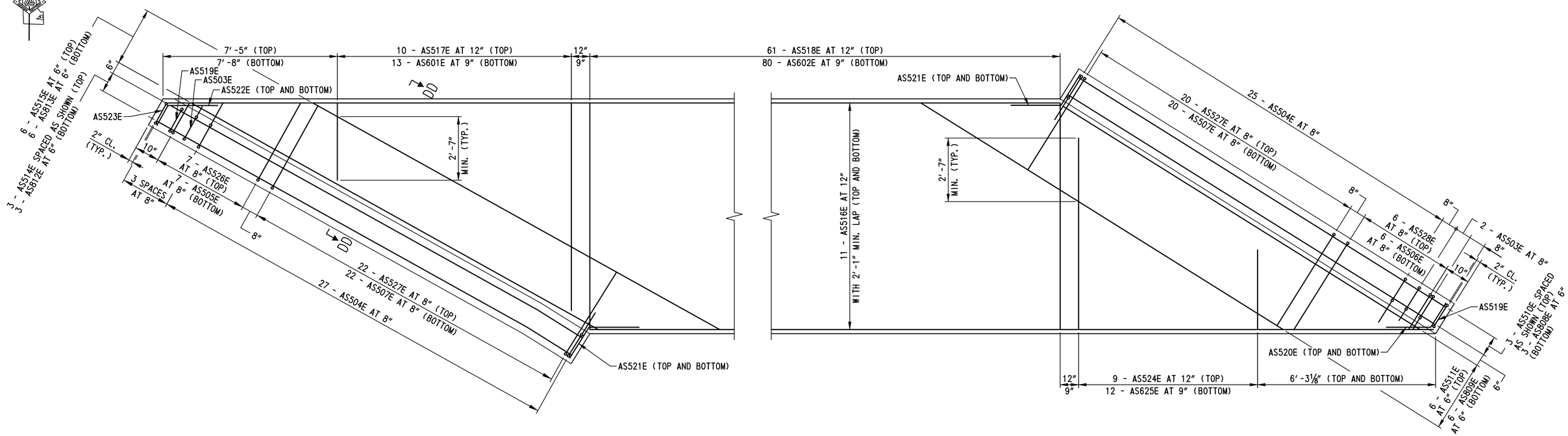

APPROACH SLAB A REINFORCEMENT PLAN

SCALE: ½"=1'-0"

NOTES:

1. FOR SECTIONS DD-DD, EE-EE AND FF-FF, SEE DWG. NO. AS-06.
2. FOR ADDITIONAL REINFORCEMENT DETAILS, SEE DWG. NO. AS-05.

BR1-5
AS-02

DELAWARE DEPARTMENT OF TRANSPORTATION	ADDENDUMS / REVISIONS	SCALE: AS NOTED	US 301, SR 896 TO SR 1	CONTRACT T200911308	BRIDGE NO. 1-436A	APPROACH SLAB A AND SLEEPER SLAB A REINFORCEMENT PLANS	SHEET NO. 306
				COUNTY NEW CASTLE	DESIGNED BY: W.T.R.		TOTAL SHTS. 875
					CHECKED BY: B.K.B.		

r:\31653-000\contract 1a\cadd\bridge\Br_No5\AS02_br1-5.dgn
10/24/2012 11:27:29 AM

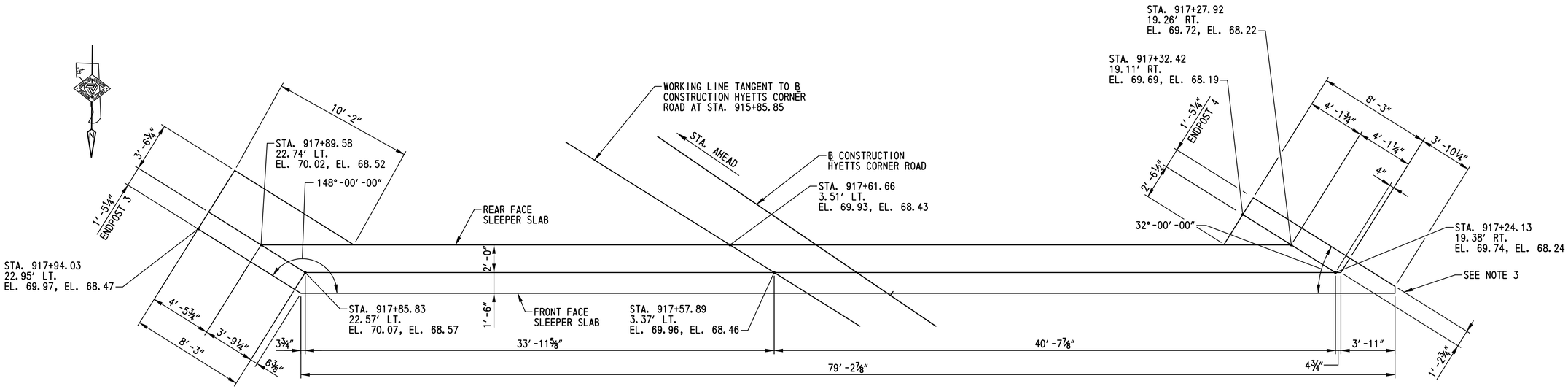

SLEEPER SLAB B PLAN

SCALE: ¼"=1'-0"

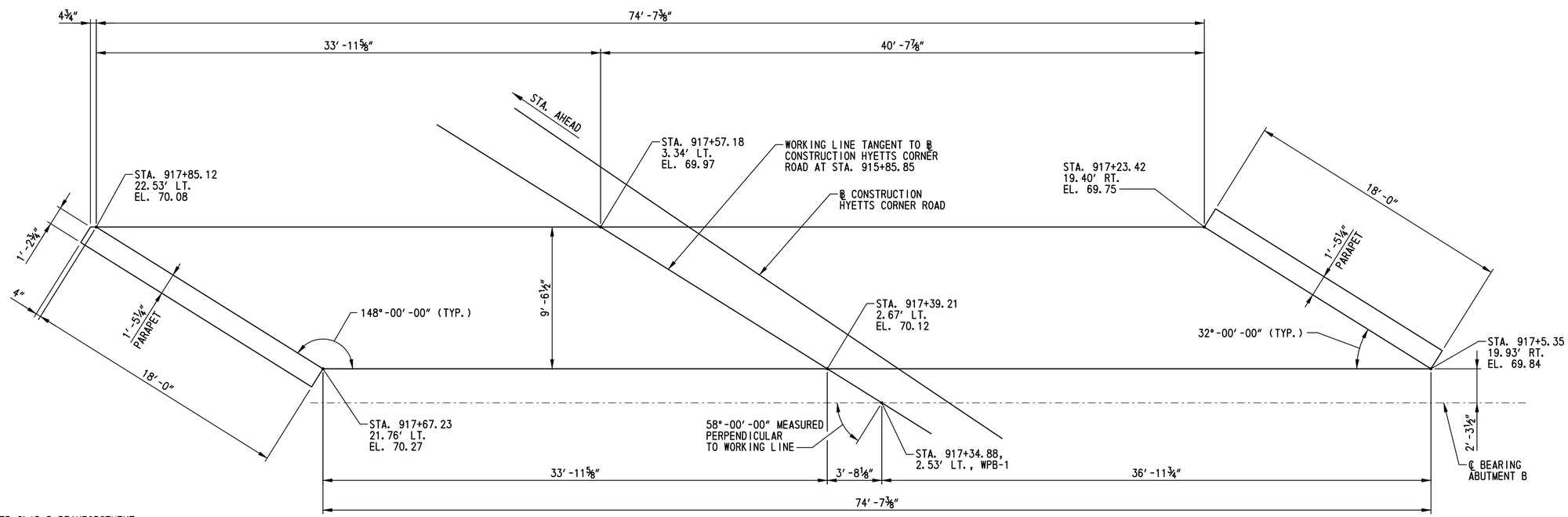

APPROACH SLAB B PLAN

SCALE: ¼"=1'-0"

NOTES:

1. FOR APPROACH SLAB B AND SLEEPER SLAB B REINFORCEMENT, SEE DWG. NOS. AS-04 THRU AS-06.
2. FOR APPRAOCH SLAB B AND SLEEPER SLAB B TYPICAL SECTIONS, SEE DWG. NO. AS-05.
3. FOR REQUIREMENTS AT ACUTE CORNER OF SLEEPER SLAB, SEE DETAIL A ON DWG. NO. FT-01.
4. PAYMENT FOR CONSTRUCTION OF SLEEPER SLABS WILL BE MADE UNDER ITEM NO. 602014 - PORTLAND CEMENT CONCRETE MASONRY, APPROACH SLAB, CLASS D.

pt\31653-000\contract 1a\cadd\bridge\Br_No5\AS03_br1-5.dgn
10/24/2012 11:27:43 AM

DELAWARE DEPARTMENT OF TRANSPORTATION	ADDENDUMS / REVISIONS	SCALE: AS NOTED	US 301, SR 896 TO SR 1	CONTRACT T200911308	BRIDGE NO. 1-436A	APPROACH SLAB B AND SLEEPER SLAB B PLAN	BR1-5 AS-03
				COUNTY NEW CASTLE	DESIGNED BY: W.T.R.		SHEET NO. 307
					CHECKED BY: B.K.B.		TOTAL SHTS. 875

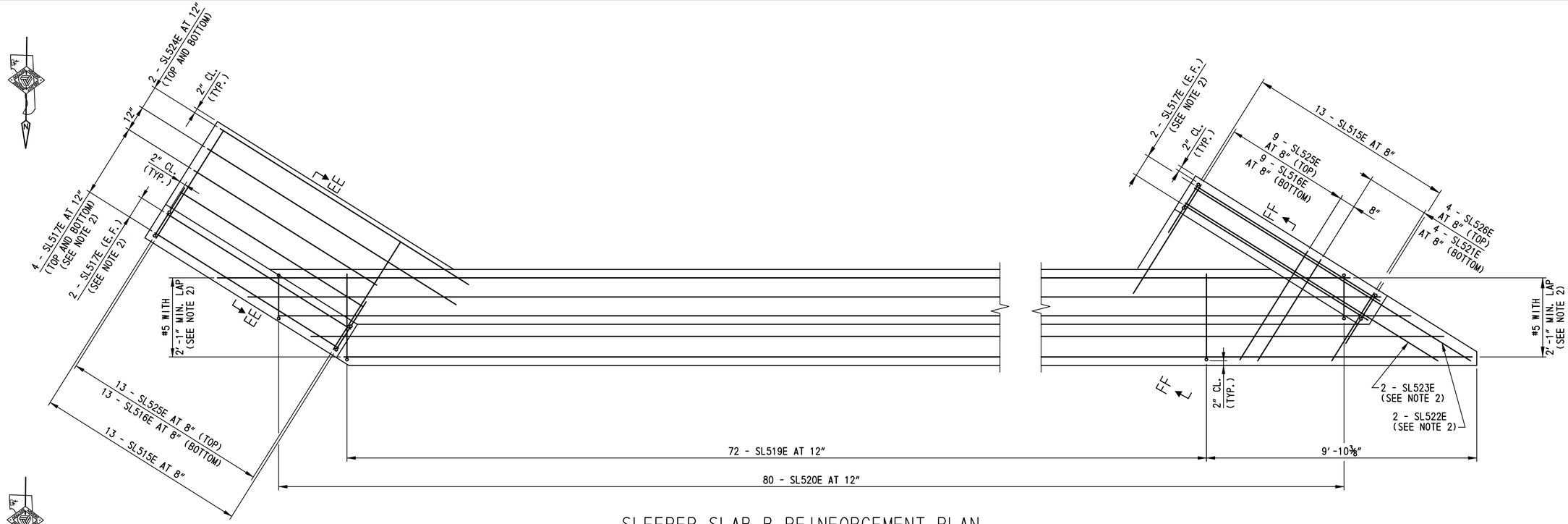

SLEEPER SLAB B REINFORCEMENT PLAN

SCALE: ½"=1'-0"

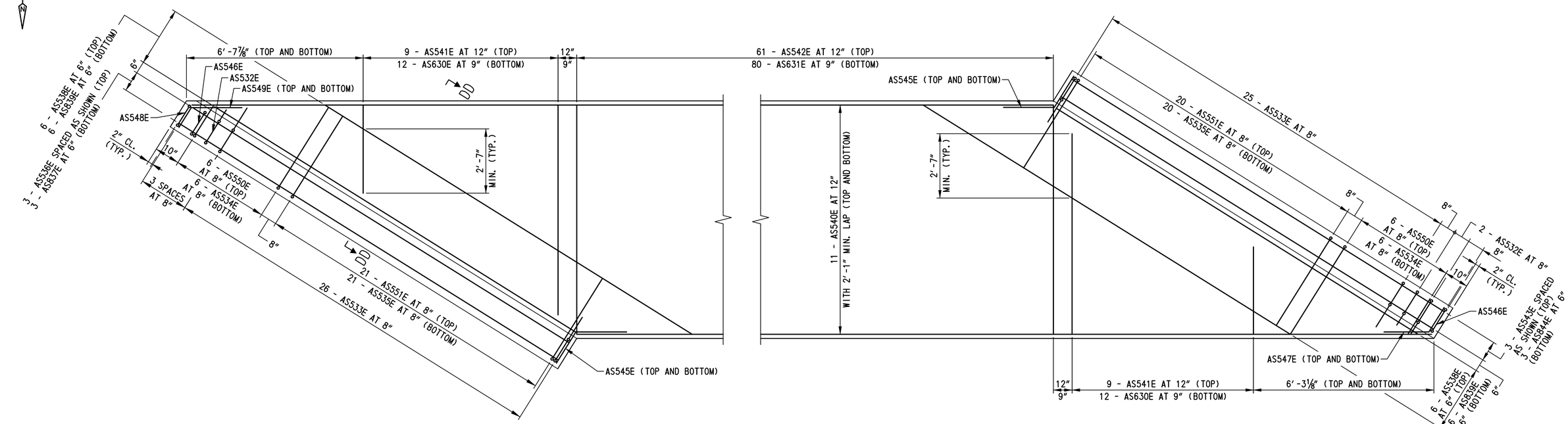

APPROACH SLAB B REINFORCEMENT PLAN

SCALE: ½"=1'-0"

NOTES:

1. FOR SECTIONS DD-DD, EE-EE AND FF-FF, SEE DWG. NO. AS-06.
2. FOR ADDITIONAL REINFORCEMENT DETAILS, SEE DWG. NO. AS-05.

DELAWARE DEPARTMENT OF TRANSPORTATION	ADDENDUMS / REVISIONS	SCALE: AS NOTED	US 301, SR 896 TO SR 1	CONTRACT T200911308	BRIDGE NO. 1-436A	APPROACH SLAB B AND SLEEPER SLAB B REINFORCEMENT PLANS
				COUNTY NEW CASTLE	DESIGNED BY: W.T.R.	
					CHECKED BY: B.K.B.	

BR1-5 AS-04

SHEET NO. 308

TOTAL SHTS. 875

n:\31653-000\contract to\cadd\bridge\Br_No5\AS04_br1-5.dgn
10/24/2012 11:28:00 AM

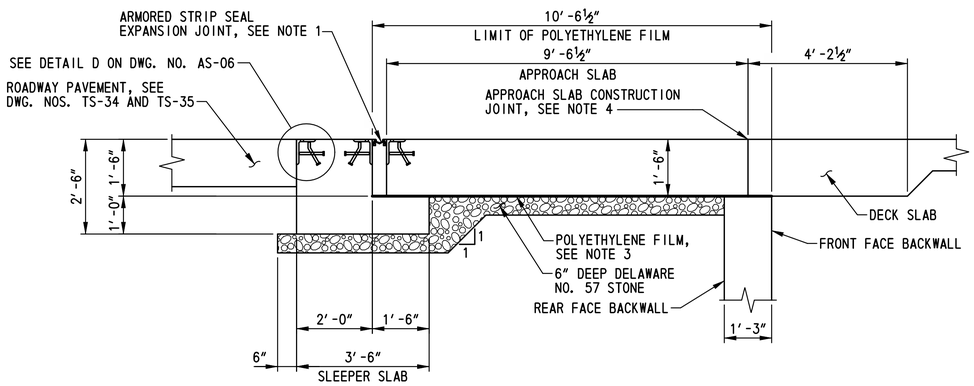

APPROACH AND SLEEPER SLAB TYPICAL SECTION

SCALE: 1/2 ″=1′-0″

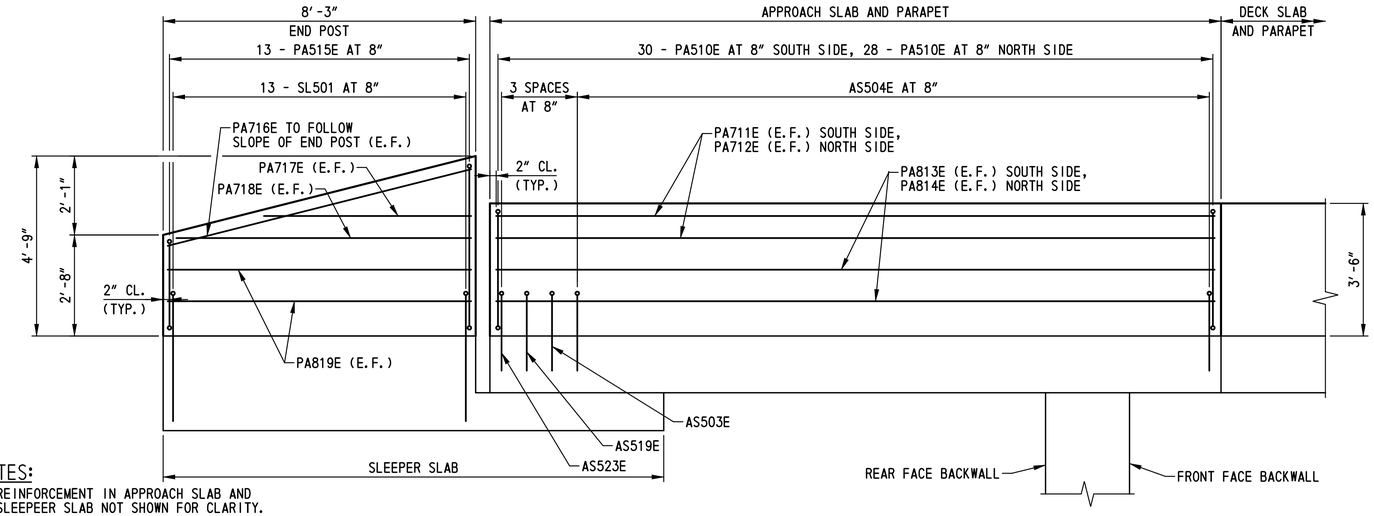

NOTES:

1. REINFORCEMENT IN APPROACH SLAB AND SLEEPEER SLAB NOT SHOWN FOR CLARITY. FENCING NOT SHOWN FOR CLARITY.
2. SOUTH SIDE SHOWN, NORTH SIDE SIMILAR.

APPROACH SLAB A AND SLEEPER SLAB A PARAPET REINFORCEMENT ELEVATION

SCALE: ½″=1′-0″

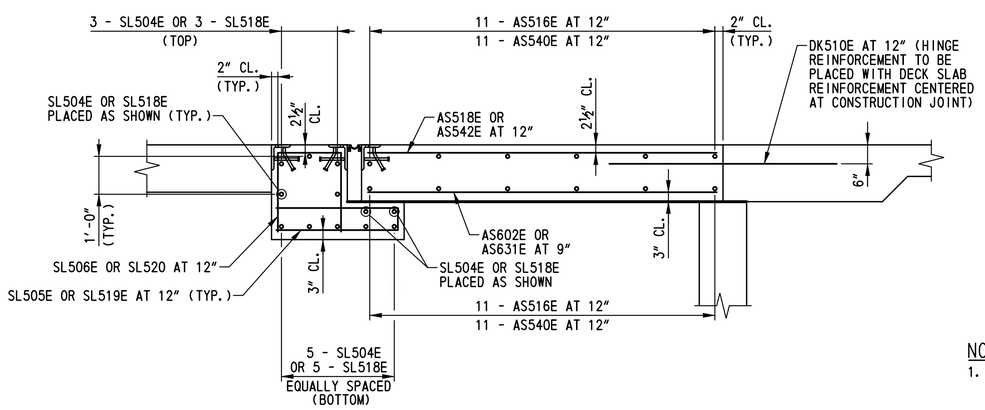

APPROACH AND SLEEPER SLAB TYPICAL REINFORCEMENT SECTION

SCALE: ½″=1′-0″

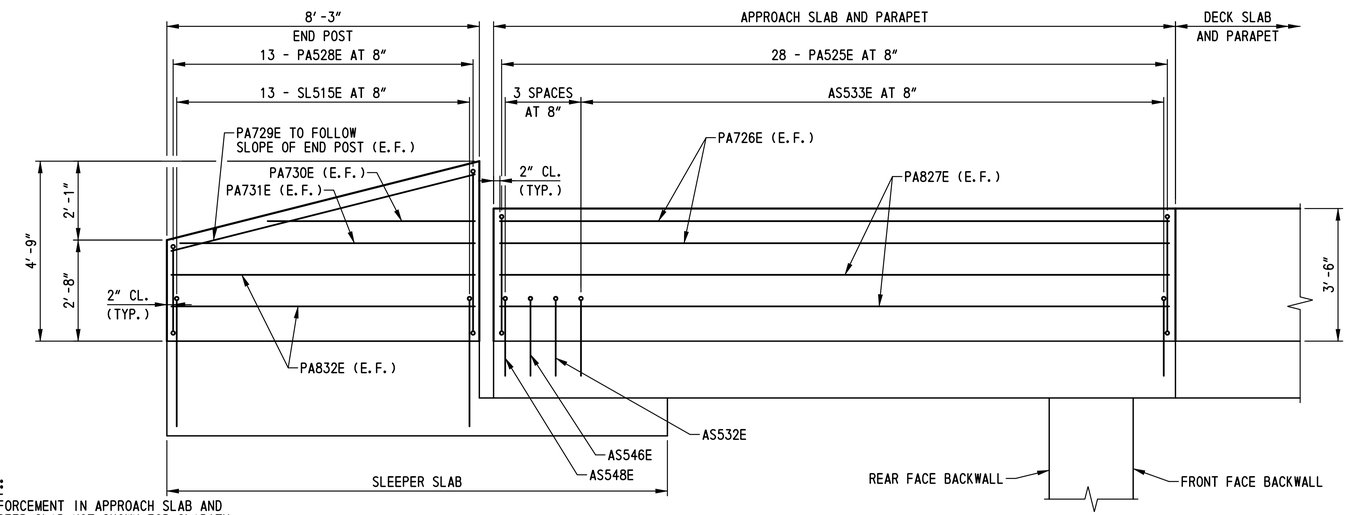

NOTES:

1. REINFORCEMENT IN APPROACH SLAB AND SLEEPEER SLAB NOT SHOWN FOR CLARITY. FENCING NOT SHOWN FOR CLARITY.
2. NORTH SIDE SHOWN, SOUTH SIDE SIMILAR.

APPROACH SLAB B AND SLEEPER SLAB B PARAPET REINFORCEMENT ELEVATION

SCALE: ½″=1′-0″

NOTES:

1. FOR ARMORED STRIP SEAL EXPANSION JOINT DETAILS, SEE DWG. NO. EX-01.
2. FOR ADDITIONAL REINFORCEMENT DETAILS, SEE DWG. NOS. AS-02 AND AS-04.
3. POLYETHYLENE FILM SHALL BE A WHITE OPAQUE POLYETHYLENE FILM CONFORMING TO ASTM C 171 AND SHALL BE PLACED IN TWO LAYERS PRIOR TO THE PLACEMENT FOR THE APPROACH SLAB AND DECK SLAB REINFORCEMENT. THE POLYETHYLENE FILM SHALL BE FASTENED TO THE FRONT OF THE BACKWALLS AND LAPPED 2′-0″ MINIMUM WITH THE FILM PLACED ON THE FINISHED SUBGRADE FOR THE APPROACH SLABS. PAYMENT FOR INSTALLATION OF POLYETHYLENE FILM WILL BE INCIDENTAL TO ITEM NO. 602014 - PORTLAND CEMENT CONCRETE MASONRY, APPROACH SLAB, CLASS D.
4. THE APPROACH SLAB SHALL BE POURED AFTER THE DECK SLAB. THE APPROACH SLAB SHALL BE POURED STARTING AT THE SLEEPER SLAB END. THE APPROACH SLAB CONSTRUCTION JOINT SHALL CONSIST OF A 3″ DEEP SAWCUT MADE WITHIN 36 HOURS OF APPROACH SLAB CONCRETE PLACEMENT. THE SAWCUT SHALL BE SEALED WITH AN APPROVED COLD APPLIED SILICONE SEALER PLACED IN A CLEAN AIR-BLOWN NOTCH FREE OF MOISTURE. PAYMENT FOR INSTALLATION OF CONSTRUCTION JOINT WILL BE INCIDENTAL TO ITEM NO. 602014 - PORTLAND CEMENT CONCRETE MASONRY, APPROACH SLAB, CLASS D.
5. PAYMENT FOR CONSTRUCTION OF SLEEPER SLABS WILL BE MADE UNDER ITEM NO. 602014 - PORTLAND CEMENT CONCRETE MASONRY, APPROACH SLAB, CLASS D.

BR1-5
AS-05

N:\31653-000\CONTRACT 1A\CADD\Bridge\Br_No5\AS05_br1-5.dgn
7/6/2015 3:25:51 PM

DELAWARE DEPARTMENT OF TRANSPORTATION	ADDENDUMS / REVISIONS	SCALE: AS NOTED	US 301, SR 896 TO SR 1	CONTRACT T200911308	BRIDGE NO. 1-436A	APPROACH SLAB AND SLEEPER SLAB DETAILS - 1	SHEET NO. 309
				COUNTY NEW CASTLE	DESIGNED BY: W.T.R.		TOTAL SHTS. 875
					CHECKED BY: B.K.B.		

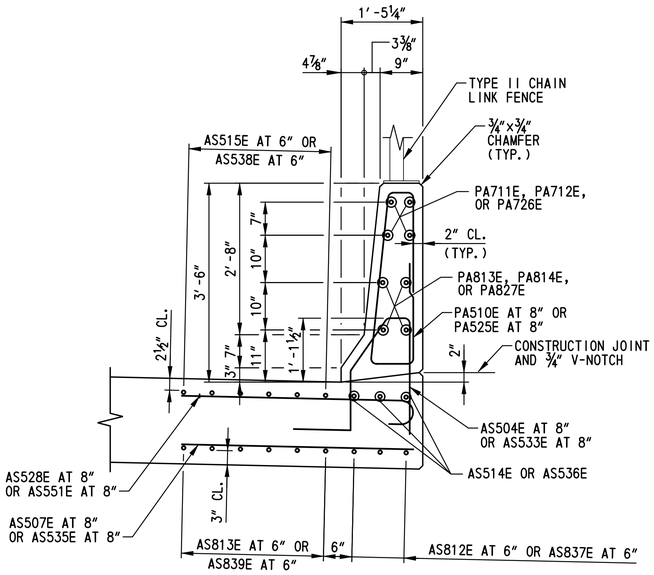

SECTION DD-DD
SCALE: ¾"=1'-0"

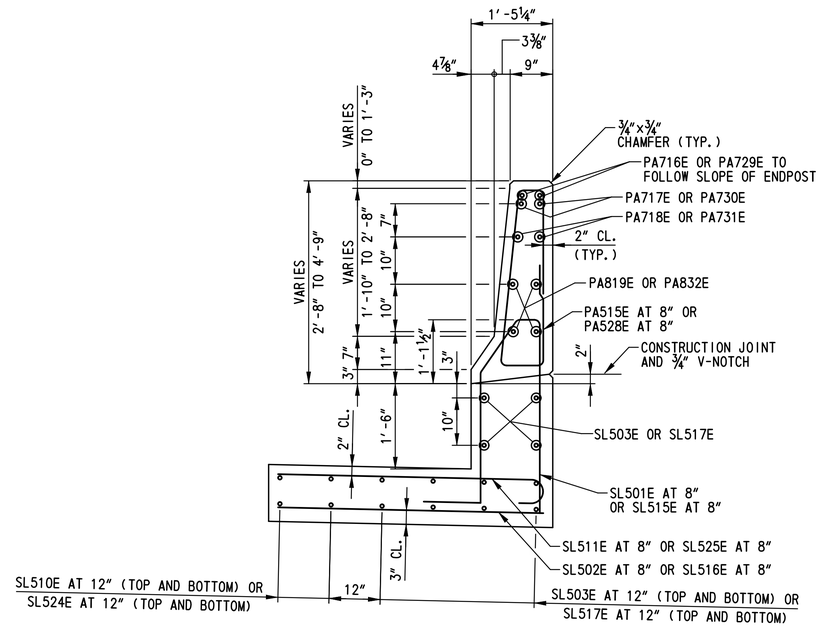

SECTION EE-EE
SCALE: ¾"=1'-0"

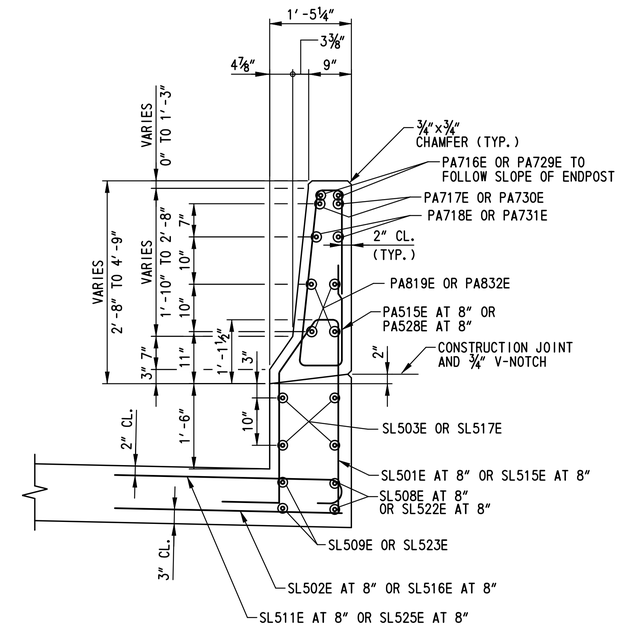

SECTION FF-FF
SCALE: ¾"=1'-0"

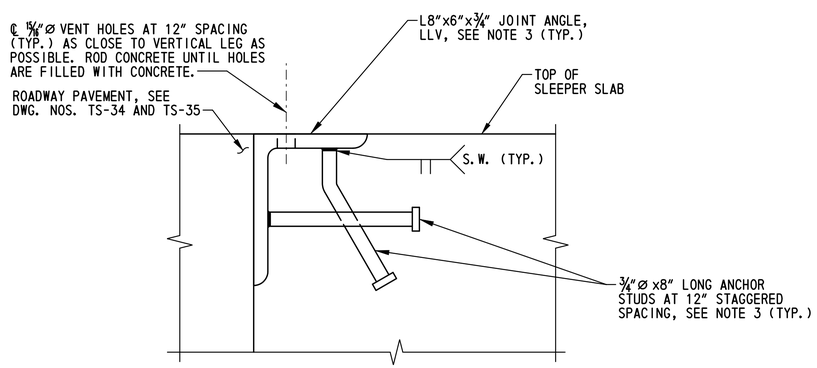

DETAIL D
SCALE: 3"=1'-0"

NOTES:

1. FOR LOCATIONS OF SECTIONS DD-DD, EE-EE AND FF-FF, SEE DWG. NOS. AS-02 AND AS-04.
2. ADDITIONAL REINFORCEMENT IN APPROACH SLAB AND SLEEPER SLAB NOT SHOWN FOR CLARITY. SEE DWG. NOS. AS-02, AS-04 AND AS-05 FOR DETAILS.
3. FOR LIMITS OF ANGLES AND STUDS AT APPROACH PAVEMENT EDGE OF SLEEPER SLABS, SEE DWG. NO. EX-01. PAYMENT FOR INSTALLATION OF ANGLES AND STUDS AT APPROACH PAVEMENT EDGE OF SLEEPER SLAB WILL BE INCIDENTAL TO ITEM NO. 602014 - PORTLAND CEMENT CONCRETE MASONRY, APPROACH SLAB, CLASS D.

BR1-5
AS-06

DELAWARE DEPARTMENT OF TRANSPORTATION	ADDENDUMS / REVISIONS	SCALE: AS NOTED	US 301, SR 896 TO SR 1	CONTRACT T200911308	BRIDGE NO. 1-436A	APPROACH SLAB AND SLEEPER SLAB DETAILS - 2	SHEET NO. 310
				COUNTY NEW CASTLE	DESIGNED BY: W.T.R.		TOTAL SHTS. 875
					CHECKED BY: B.K.B.		

N:\31653-000\CONTRACT 1A\CADD\Bridge\Br_No5\AS06_br1-5.dgn
7/6/2015 3:28:52 PM

① ANY MARK NUMBER WITH SUFFIX 'E' DENOTES EPOXY COATED REINFORCING STEEL.

② ALL MARK 'LOCATION PREFIXES' SHALL CONSIST OF TWO LETTERS AND ARE AS FOLLOWS: AB = ABUTMENT, AS = APPROACH SLAB, BC = BOX CULVERT, BW = BACKWALL, CL = COLUMN, DK = DECK, DL = DOWEL, FT = FOOTING, HW = HEADWALL, MS = MISC. BARS, PA = PARAPET, PR = PIER, SC = SHEETPILE CAP, SL = SLAB, TW = TOEWALL, WL = WALL (UNIQUE LOCATION), WW = WINGWALL

SPECIFICATIONS					BENDING DIMENSIONS (FEET-INCHES /QUARTER INCH)											
QTY.	SIZE	LENGTH	MARK	TYPE	A	B	C	D	E	F/R	G	H	J	K	O
APPROACH SLAB A															
13	6	3-03 2	AS601E	STR		3-03 2									
		T0				T0									
		8-03 1				8-03 1									
80	6	9-02 2	AS602E	STR		9-02 2									
3	5	5-01 1	AS503E	T15		2-00 1	0-05 2	1-01 2	1-00 0	0-06 0			0-07 3	0-11 0	1-01 1
52	5	5-07 1	AS504E	T15		2-00 1	0-05 2	1-01 2	1-00 0	1-00 0			0-07 3	0-11 0	1-01 1
7	5	1-05 1	AS505E	STR		1-05 1									
		T0				T0									
		3-08 0				3-08 0									
6	5	1-08 3	AS506E	STR		1-08 3									
		T0				T0									
		3-09 3				3-09 3									
42	5	4-00 0	AS507E	STR		4-00 0									
3	8	17-08 0	AS808E	STR		17-08 0									
6	8	17-04 2	AS809E	STR		17-04 2									
3	5	17-08 0	AS510E	STR		17-08 0									
6	5	17-04 2	AS511E	STR		17-04 2									
3	8	19-05 1	AS812E	3		17-03 2	2-01 3					0-01 1		2-01 3	
6	8	18-11 3	AS813E	STR		18-11 3									
3	5	19-05 1	AS514E	3		17-03 2	2-01 3					0-01 1		2-01 3	
6	5	18-11 3	AS515E	STR		18-11 3									
44	5	39-05 0	AS516E	STR		39-05 0									
10	5	3-03 0	AS517E	STR		3-03 0									
		T0				T0									
		8-03 0				8-03 0									
60	5	9-02 2	AS518E	STR		9-02 2									
2	5	4-07 1	AS519E	T15		2-00 1	0-05 2	1-01 2	1-00 0				0-07 3	0-11 0	1-01 1
2	5	3-02 1	AS520E	3		2-00 0	1-02 1					1-00 0		0-07 2	
2	5	3-04 1	AS521E	3		2-00 0	1-04 1					1-01 3		0-08 3	
2	5	2-11 2	AS522E	3		2-00 0	0-11 2					0-10 0		0-05 2	
1	5	4-10 3	AS523E	T15		2-03 2	0-05 2	0-09 0	1-04 3				0-05 0	0-07 1	0-10 2
9	5	3-01 1	AS524E	STR		3-01 1									
		T0				T0									
		8-01 1				8-01 1									
12	6	3-01 1	AS625E	STR		3-01 1									
		T0				T0									
		8-03 1				8-03 1									
7	5	2-00 1	AS526E	1	0-07 0	1-05 1							0-05 0		
		T0				T0									

SPECIFICATIONS					BENDING DIMENSIONS (FEET-INCHES /QUARTER INCH)											
QTY.	SIZE	LENGTH	MARK	TYPE	A	B	C	D	E	F/R	G	H	J	K	O
		3-08 0				3-08 0									
42	5	4-07 0	AS527E	1	0-07 0	4-00 0							0-05 0		
6	5	2-03 3	AS528E	1	0-07 0	1-08 3							0-05 0		
		T0				T0									
		3-09 3				3-09 3									
26	5	8-03 0	SL501E	T15		3-04 0	0-05 2	1-01 2	2-04 0	1-00 0			0-07 3	0-11 0	1-01 1
22	5	4-08 0	SL502E	STR		4-08 0									
16	5	7-11 0	SL503E	STR		7-11 0									
24	5	41-07 1	SL504E	STR		41-07 1									
72	5	6-11 0	SL505E	17		3-02 0	0-07 0	3-02 0							
80	5	5-09 0	SL506E	17		2-00 2	1-08 0	2-00 2							
4	5	2-10 0	SL507E	STR		2-10 0									
		T0				T0									
		3-11 0				3-11 0									
2	5	11-10 1	SL508E	STR		11-10 1									
2	5	10-07 2	SL509E	STR		10-07 2									
4	5	11-01 0	SL510E	STR		11-01 0									
22	5	5-03 0	SL511E	1	0-07 0	4-08 0							0-05 0		
4	5	3-05 0	SL512E	1	0-07 0	2-10 0							0-05 0		
		T0				T0									
		3-11 0				3-11 0									
58	5	9-03 1	PA510E	PA		2-06 2	0-09 0	3-00 1	0-05 0	2-06 2		3-00 0		0-04 0	
4	7	19-05 1	PA711E	3		17-03 2	2-01 3					0-01 1		2-01 3	
4	7	17-08 0	PA712E	STR		17-08 0									
4	8	19-05 1	PA813E	3		17-03 2	2-01 3					0-01 1		2-01 3	
4	8	17-08 0	PA814E	STR		17-08 0									
26*	5	7-08 2	PA515E	PA		2-01 2	0-09 0	2-02 1	0-06 1	2-01 2		2-02 0		0-02 3	
		T0				T0		T0	T0	T0		T0		T0	
		10-11 0				3-02 0		4-03 1	0-03 3	3-02 0		4-03 0		0-05 1	
			*2 SETS 13												
4	7	8-02 0	PA716E	STR		8-02 0									
4	7	5-05 0	PA717E	STR		5-05 0									
4	7	7-09 0	PA718E	STR		7-09 0									
8	8	7-11 0	PA819E	STR		7-11 0									

SPECIFICATIONS					BENDING DIMENSIONS (FEET-INCHES /QUARTER INCH)											
QTY.	SIZE	LENGTH	MARK	TYPE	A	B	C	D	E	F/R	G	H	J	K	O

ASTM STANDARD ENGLISH REINFORCING BARS				RECOMMENDED END HOOKS, APPLICABLE TO ALL GRADES				STIRRUP AND TIE HOOKS, APPLICABLE TO ALL GRADES			
	NOMINAL DIMENSIONS				180° HOOKS		90° HOOKS		90° HOOK	135° HOOK	
BAR SIZE	DIAMETER (INCHES)	AREA (INCHES²)	WEIGHT (LBS./FT.)	D	A OR G	J	A OR G	D	A OR G	A OR G	H
3	0.375	0.110	0.376	2¼"	5"	3"	6"	1½"	4"	4"	2½"
4	0.500	0.200	0.668	3"	6"	4"	8"	2"	4½"	4½"	3"
5	0.625	0.310	1.043	3¾"	7"	5"	10"	2½"	6"	5½"	3¾"
6	0.750	0.440	1.502	4½"	8"	6"	1-0"	4½"	1-0"	8"	4½"
7	0.875	0.600	2.044	5¼"	10"	7"	1-2"	5¼"	1-2"	9"	5¼"
8	1.000	0.790	2.670	6"	11"	8"	1-4"	6"	1-4"	10½"	6"
9	1.128	1.000	3.400	9½"	1-3"	11¾"	1-7"				
10	1.270	1.270	4.303	10¾"	1-5"	1-1¼"	1-10"				
11	1.410	1.560	5.313	1-0"	1-7"	1-2¾"	2-0"				
14	1.693	2.250	7.650	1-6¼"	2-3"	1-9¾"	2-7"				
18	2.257	4.000	13.600	2-0"	3-0"	2-4½"	3-5"				

NOTES:

1. FIGURES SHOWN IN CIRCLES REPRESENT BAR BEND TYPES.
2. STANDARD BAR BENDS INCLUDE ONLY THOSE TYPES BELOW, INDICATED AS SUCH.
3. ALL DIMENSIONS OUT-TO-OUT, EXCEPT "A" AND "G" ON STD. 180° AND 135° HOOKS.
4. "J" DIMENSIONS ON 180° HOOKS TO BE SHOWN ONLY WHERE NECESSARY TO RESTRICT HOOK SIZE, OTHERWISE STANDARD 'ACI' HOOKS ARE TO BE USED.
5. WHERE "J" IS NOT SHOWN, "J" WILL BE KEPT EQUAL TO OR LESS THAN "H" ON TYPES 3, 5 AND 22. WHERE "J" CAN EXCEED "H", IT SHALL BE SHOWN.
6. "H" DIMENSIONS OF STIRRUPS TO BE SHOWN AS NEEDED TO FIT WITHIN THE CONCRETE.
7. UNLESS OTHERWISE NOTED, DIAMETER "D" IS THE SAME FOR ALL BENDS AND HOOKS ON A BAR (EXCEPT FOR BEND TYPES 11 AND 13).
8. WHERE SLOPE DIFFERS FROM 45° OFFSET, "H" AND "K" MUST BE SHOWN.
9. WHERE BARS ARE TO BE BENT MORE ACCURATELY THAN STANDARD BENDING TOLERANCES, BENDING DIMENSIONS REQUIRING CLOSER FABRICATION SHOULD HAVE LIMITS INDICATED.
10. FOR RECOMMENDED DIAMETER "D", OF BENDS, HOOKS, ETC., REFER TO TABLE ABOVE, 'CRSI' OR 'ACI' TABLES WHERE APPLICABLE AND REQUIRED.
11. TYPE S1-S6, S11, T1-T3 AND T6-T9 APPLICABLE TO BAR SIZES #3 THROUGH #8.

STANDARD BAR BENDS

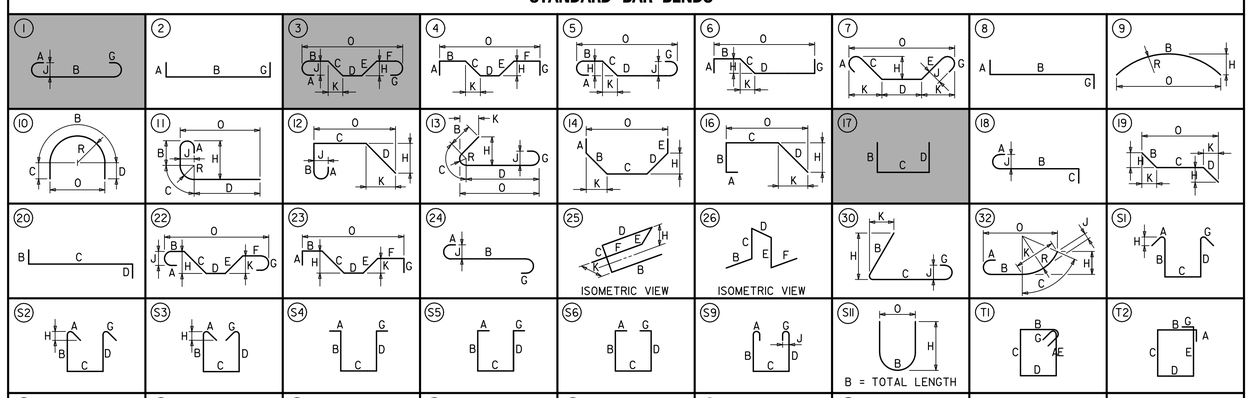

SPECIAL BAR BENDS

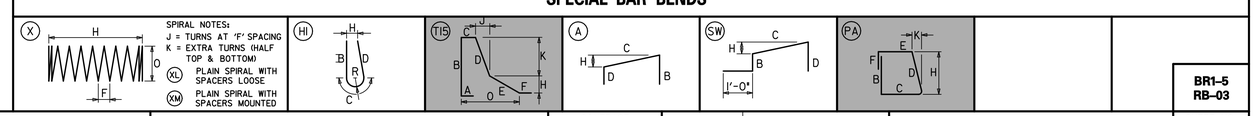

STIRRUP AND TIE HOOKS

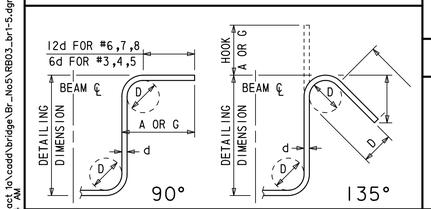

180° AND 90° END HOOKS

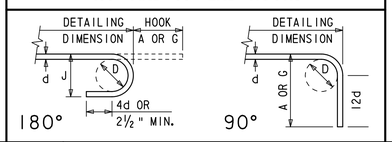

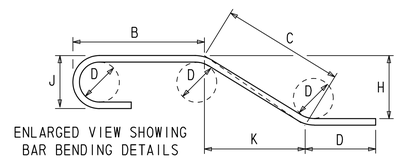

ENLARGED VIEW SHOWING BAR BENDING DETAILS

DELAWARE DEPARTMENT OF TRANSPORTATION

ADDENDUMS / REVISIONS

US 301, SR 896 TO SR 1

CONTRACT	BRIDGE NO.	1-436A
T200911308	DESIGNED BY: W.T.R.	
COUNTY		
NEW CASTLE	CHECKED BY: B.K.B.	

APPROACH SLAB A AND SLEEPER SLAB A REINFORCEMENT LIST

BR1-5
RB-03

SHEET NO. 311

TOTAL SHTS. 875

n:\31653-000\contract_1a\cadd\bridge\Br_Ns5\RB03_br1-5.dgn
10/24/2012 11:34:54 AM

① ANY MARK NUMBER WITH SUFFIX 'E' DENOTES EPOXY COATED REINFORCING STEEL.

② ALL MARK 'LOCATION PREFIXES' SHALL CONSIST OF TWO LETTERS AND ARE AS FOLLOWS: AB = ABUTMENT, AS = APPROACH SLAB, BC = BOX CULVERT, BW = BACKWALL, CL = COLUMN, DK = DECK, DL = DOWEL, FT = FOOTING, HW = HEADWALL, MS = MISC. BARS, PA = PARAPET, PR = PIER, SC = SHEETPILE CAP, SL = SLAB, TW = TOEWALL, WL = WALL (UNIQUE LOCATION), WW = WINGWALL

SPECIFICATIONS					BENDING DIMENSIONS (FEET-INCHES /QUARTER INCH)											
QTY.	SIZE	LENGTH	MARK	TYPE	A	B	C	D	E	F/R	G	H	J	K	O
APPROACH SLAB B															
24	6	3-01 1	AS630E	STR		3-01 1									
		T0				T0									
		8-01 1				8-01 1									
			*2 SETS OF	12											
80	6	9-02 2	AS631E	STR		9-02 2									
3	5	5-01 1	AS532E	T15		2-00 1	0-05 2	1-01 2	1-00 0	0-06 0			0-07 3	0-11 0	1-01 1
51	5	5-07 1	AS533E	T15		2-00 1	0-05 2	1-01 2	1-00 0	1-00 0			0-07 3	0-11 0	1-01 1
12*	5	1-04 3	AS534E	STR		1-04 3									
		T0				T0									
		3-05 3				3-05 3									
			*2 SETS OF	6											
41	5	4-00 0	AS535E	STR		4-00 0									
2	5	17-08 0	AS536E	STR		17-08 0									
3	8	17-08 0	AS837E	STR		17-08 0									
12	5	17-04 2	AS538E	STR		17-04 2									
12	8	17-04 2	AS839E	STR		17-04 2									
44	5	38-06 0	AS540E	STR		38-06 0									
18*	5	3-01 1	AS541E	STR		3-01 1									
		T0				T0									
		8-03 1				8-03 1									
			*2 SETS OF	9											
61	5	9-02 2	AS542E	STR		9-02 2									
2	5	18-00 0	AS543E	STR		18-00 0									
3	8	18-00 0	AS844E	STR		18-00 0									
4	5	3-04 1	AS545E	3		2-00 0	1-04 1					1-01 3		0-08 3	
2	5	4-07 1	AS546E	T15		2-00 1	0-05 2	1-01 2	1-00 0				0-07 3	0-11 0	1-01 1
2	5	3-02 1	AS547E	3		2-00 0	1-02 1					1-00 0		0-07 2	
1	5	4-06 3	AS548E	T15		2-00 1	0-05 2	0-10 0	1-03 0				0-06 1	0-10 0	0-11 3
2	5	2-11 3	AS549E	3		2-00 0	0-11 3					0-10 0		0-06 1	
12*	5	1-11 3	AS550E	1	0-07 0	1-04 3							0-05 0		
		T0				T0									
		3-05 3				3-05 3									
			*2 SETS OF	6											
41	5	4-07 0	AS551E	1	0-07 0	4-00 0							0-05 0		
26	5	8-03 0	SL515E	T15		3-04 0	0-05 2	1-01 2	2-04 0	1-00 0			0-07 3	0-11 0	1-01 1
22	5	4-08 0	SL516E	STR		4-08 0									
16	5	7-11 0	SL517E	STR		7-11 0									
24	5	41-07 1	SL518E	STR		41-07 1									

SPECIFICATIONS					BENDING DIMENSIONS (FEET-INCHES /QUARTER INCH)											
QTY.	SIZE	LENGTH	MARK	TYPE	A	B	C	D	E	F/R	G	H	J	K	O
72	5	6-11 0	SL519E	17		3-02 0	0-07 0	3-02 0							
80	5	5-09 0	SL520E	17		2-00 2	1-08 0	2-00 2							
4	5	2-10 0	SL521E	STR		2-10 0									
		T0				T0									
		3-11 0				3-11 0									
2	5	11-10 1	SL522E	STR		11-10 1									
2	5	10-07 2	SL523E	STR		10-07 2									
4	5	10-09 0	SL524E	STR		10-09 0									
22	5	5-03 0	SL525E	1	0-07 0	4-08 0							0-05 0		
4	5	3-05 0	SL526	1	0-07 0	2-10 0							0-05 0		
		T0				T0									
		3-11 0				3-11 0									
56	5	9-03 1	PA525E	PA		2-06 2	0-09 0	3-00 1	0-05 0	2-06 2		3-00 0		0-04 0	
8	7	17-08 0	PA726E	STR		17-08 0									
8	8	17-08 0	PA827E	STR		17-08 0									
26*	5	7-08 2	PA528E	PA		2-01 2	0-09 0	2-02 1	0-06 1	2-01 2		2-02 0		0-02 3	
		T0				T0		T0	T0	T0		T0		T0	
		10-11 0				3-02 0		4-03 1	0-03 3	3-02 0		4-03 0		0-05 1	
			*2 SETS OF	13											
4	7	8-02 0	PA729E	STR		8-02 0									
4	7	5-05 0	PA730E	STR		5-05 0									
4	7	7-09 0	PA731E	STR		7-09 0									
8	8	7-11 0	PA832E	STR		7-11 0									

SPECIFICATIONS					BENDING DIMENSIONS (FEET-INCHES /QUARTER INCH)											
QTY.	SIZE	LENGTH	MARK	TYPE	A	B	C	D	E	F/R	G	H	J	K	O

ASTM STANDARD ENGLISH REINFORCING BARS				RECOMMENDED END HOOKS, APPLICABLE TO ALL GRADES				STIRRUP AND TIE HOOKS, APPLICABLE TO ALL GRADES			
NOMINAL DIMENSIONS					180° HOOKS		90° HOOKS		90° HOOK	135° HOOK	
BAR SIZE	DIAMETER (INCHES)	AREA (INCHES²)	WEIGHT (LBS./FT.)	D	A OR G	J	A OR G	D	A OR G	A OR G	H
3	0.375	0.110	0.376	2¼"	5"	3"	6"	1½"	4"	4"	2½"
4	0.500	0.200	0.668	3"	6"	4"	8"	2"	4½"	4½"	3"
5	0.625	0.310	1.043	3¾"	7"	5"	10"	2½"	6"	5½"	3¾"
6	0.750	0.440	1.502	4½"	8"	6"	1-0"	4½"	1-0"	8"	4½"
7	0.875	0.600	2.044	5¼"	10"	7"	1-2"	5¼"	1-2"	9"	5¼"
8	1.000	0.790	2.670	6"	11"	8"	1-4"	6"	1-4"	10½"	6"
9	1.128	1.000	3.400	9½"	1-3"	11¾"	1-7"				
10	1.270	1.270	4.303	10¾"	1-5"	1-1¼"	1-10"				
11	1.410	1.560	5.313	1-0"	1-7"	1-2¾"	2-0"				
14	1.693	2.250	7.650	1-6¼"	2-3"	1-9¾"	2-7"				
18	2.257	4.000	13.600	2-0"	3-0"	2-4½"	3-5"				

NOTES:

1. FIGURES SHOWN IN CIRCLES REPRESENT BAR BEND TYPES.
2. STANDARD BAR BENDS INCLUDE ONLY THOSE TYPES BELOW, INDICATED AS SUCH.
3. ALL DIMENSIONS OUT-TO-OUT, EXCEPT "A" AND "G" ON STD. 180° AND 135° HOOKS.
4. "J" DIMENSIONS ON 180° HOOKS TO BE SHOWN ONLY WHERE NECESSARY TO RESTRICT HOOK SIZE, OTHERWISE STANDARD 'ACI' HOOKS ARE TO BE USED.
5. WHERE "J" IS NOT SHOWN, "J" WILL BE KEPT EQUAL TO OR LESS THAN "H" ON TYPES 3, 5 AND 22. WHERE "J" CAN EXCEED "H", IT SHALL BE SHOWN.
6. "H" DIMENSIONS OF STIRRUPS TO BE SHOWN AS NEEDED TO FIT WITHIN THE CONCRETE.
7. UNLESS OTHERWISE NOTED, DIAMETER "D" IS THE SAME FOR ALL BENDS AND HOOKS ON A BAR (EXCEPT FOR BEND TYPES 11 AND 13).
8. WHERE SLOPE DIFFERS FROM 45° OFFSET, "H" AND "K" MUST BE SHOWN.
9. WHERE BARS ARE TO BE BENT MORE ACCURATELY THAN STANDARD BENDING TOLERANCES, BENDING DIMENSIONS REQUIRING CLOSER FABRICATION SHOULD HAVE LIMITS INDICATED.
10. FOR RECOMMENDED DIAMETER "D", OF BENDS, HOOKS, ETC., REFER TO TABLE ABOVE, 'CRSI' OR 'ACI' TABLES WHERE APPLICABLE AND REQUIRED.
11. TYPE S1-S6, S11, T1-T3 AND T6-T9 APPLICABLE TO BAR SIZES #3 THROUGH #8.

STANDARD BAR BENDS

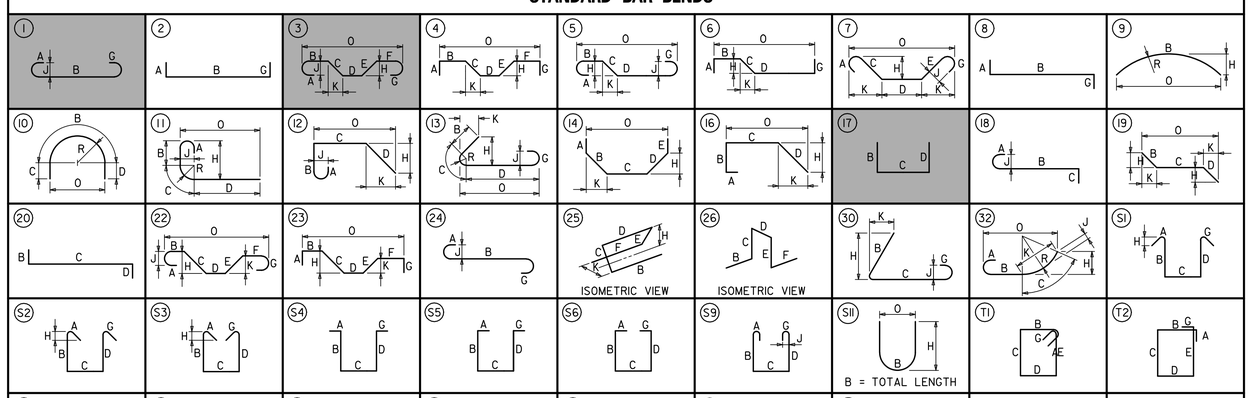

SPECIAL BAR BENDS

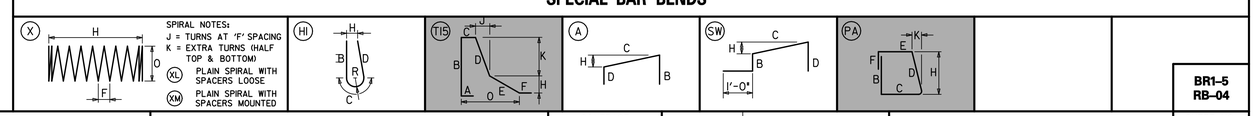

STIRRUP AND TIE HOOKS

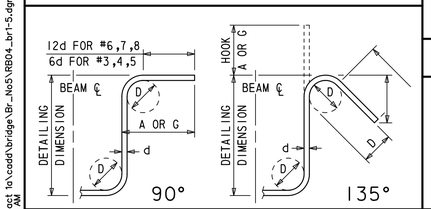

180° AND 90° END HOOKS

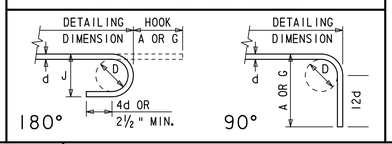

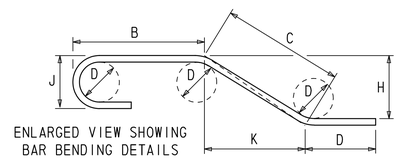

ENLARGED VIEW SHOWING BAR BENDING DETAILS

DELAWARE DEPARTMENT OF TRANSPORTATION

ADDENDUMS / REVISIONS

US 301, SR 896 TO SR 1

CONTRACT	BRIDGE NO.	1-436A
T200911308	DESIGNED BY: W.T.R.	
COUNTY		
NEW CASTLE	CHECKED BY: B.K.B.	

APPROACH SLAB B AND SLEEPER SLAB B REINFORCEMENT LIST

BR1-5 RB-04

SHEET NO. 312

TOTAL SHTS. 875

n:\31653-000\contract 10\cadd\bridge\Br_Ns5\RB04_br1-5.dgn 10/24/2012 1h:35m:01AM

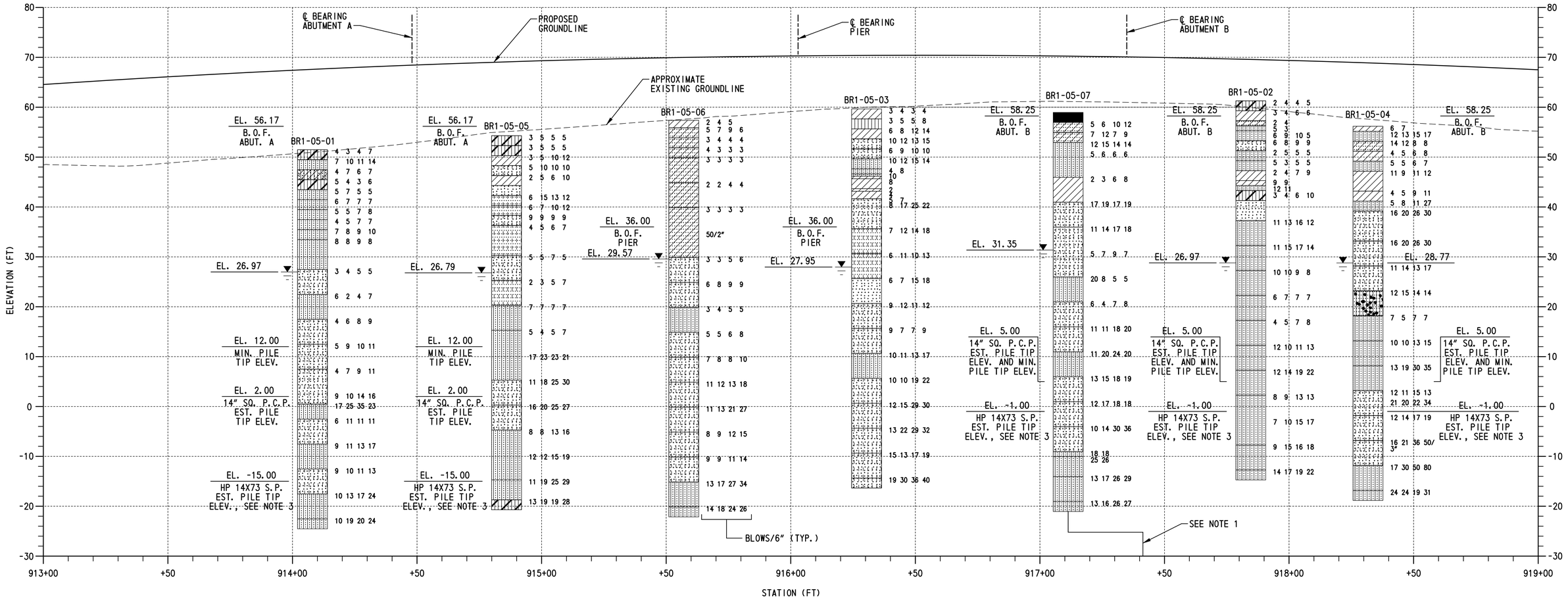

BORING PROFILE

HORIZONTAL SCALE: 1"=20'-0"
VERTICAL SCALE: 1"=10'-0"

TEST BORINGS				
DESIGNATION	STATION	OFFSET	NORTHING	EASTING
BR1-05-01	914+08.03	18.37' RT.	555357	586438
BR1-05-02	917+84.65	17.00' RT.	555161	586758
BR1-05-03	916+30.43	0.07' RT.	555260	586638
BR1-05-04	918+31.69	17.25' LT.	555163	586816
BR1-05-05	914+85.93	17.15' LT.	555348	586523
BR1-05-06	915+57.07	18.62' RT.	555282	586566
BR1-05-07	917+41.35	10.15' LT.	555208	586737

LEGEND:

- SILTY LOW PLASTICITY CLAY
- SILTY SAND
- POORLY GRADED CLAYEY SILTY SAND
- POORLY GRADED SAND WITH SILT
- LOW PLASTICITY CLAY
- CLAYEY SAND
- POORLY GRADED SAND
- SILT
- WELL GRADED SAND WITH SILT
- POORLY GRADED GRAVEL WITH SILT
- PAVING
- WATER TABLE AT BORING COMPLETION

NOTES:

1. BORING BR1-05-07 IS SHOWN 30'-0" UPSTATION FROM ACTUAL BORING LOCATION FOR CLARITY.
2. FOR ADDITIONAL BORING INFORMATION, SEE DWG. NO. PE-01.
3. SEE PILE NOTE 6 ON DWG. NO. PL-01 REGARDING THE STEEL H-PILE ALTERNATIVE.

BR1-5
BO-01

DELAWARE DEPARTMENT OF TRANSPORTATION

ADDENDUMS / REVISIONS

SCALE: AS NOTED

US 301, SR 896 TO SR 1

CONTRACT	BRIDGE NO. 1-436A
T200911308	DESIGNED BY: W.T.R.
COUNTY	CHECKED BY: B.K.B.
NEW CASTLE	

BORING PROFILE

SHEET NO. 313
TOTAL SHTS. 875

n:\31653-000\contract_to\cadd\bridge\Br_No5\B001_br1-5.dgn
10/24/2012 11:29:34 AM