PROJECT NOTES:

1. LOCATION
PROPOSED NEW STRUCTURE CARRYING US 301 SOUTH BOUND OVER SCOTT RUN IN NEW CASTLE COUNTY, DELAWARE.

2. ELEVATIONS
VERTICAL DATUM IS REFERENCED TO NAVD 88.

3. DESIGN CRITERIA AND SPECIFICATIONS
2007 AASHTO LRFD BRIDGE DESIGN SPECIFICATIONS, INCLUDING 2008 AND 2009 INTERIM REVISIONS AND THE 2005 DELDOT BRIDGE DESIGN MANUAL, INCLUDING LATEST REVISIONS.

PROVIDE MATERIAL AND PERFORM WORK IN ACCORDANCE TO THE DELAWARE DEPARTMENT OF TRANSPORTATION STANDARD SPECIFICATIONS AND CONSTRUCTION DETAILS AND CONTRACT SPECIAL PROVISIONS.

4. LOADING
HL-93 AND DELAWARE LEGAL LOAD FOR LIVE LOAD WITH PROVISIONS FOR FUTURE 2" WEARING SURFACE AND 15 LBS/FT^2 FOR USE OF STEEL BRIDGE DECK FORMS WHICH REMAIN IN PLACE.

5. CONCRETE
ALL CONCRETE PROPERTIES SHALL BE IN ACCORDANCE WITH SECTION 812 OF THE DELAWARE DEPARTMENT OF TRANSPORTATION STANDARD SPECIFICATIONS.

CLASS A - ABUTMENTS, STEMS, BACKWALLS, PIERS AND PARAPETS (f'c = 4,500 PSI).

CLASS B - PIER FOOTINGS (f'c = 3,000 PSI).

CLASS D - CONCRETE DECK SLAB, MOMENT SLAB, SLEEPER SLAB AND APPROACH SLAB (f'c = 4,500 PSI).

ALL EXPOSED EDGES SHALL BE CHAMFERED ¾" UNLESS NOTED OTHERWISE.

6. REINFORCING STEEL
ALL REINFORCING STEEL SHALL BE AASHTO M 31 (ASTM A 615), GRADE 60 AND UNLESS SPECIFIED OTHERWISE ON THE PLANS SHALL BE PROTECTED WITH FUSION BONDED EPOXY CONFORMING TO AASHTO M 284 (ASTM A 775) AND DENOTED WITH A SUFFIX 'E' IN THE BAR MARKS.

MINIMUM CONCRETE COVER FOR REINFORCING STEEL SHALL BE:

FOUNDATION ELEMENTS: 3"
DECK SLABS: 2½" TOP OF SLAB (INCLUDES ½" INTEGRAL WEARING SURFACE)
1" BOTTOM OF SLAB WHEN STAY-IN-PLACE FORMS ARE USED
COLUMNS: 2" CLEAR TO TIES
PIER CAPS: 2" TO STIRRUPS
2" TO MAIN STEEL AT ENDS

ALL REINFORCING STEEL HAS BEEN DETAILED FOR A MAXIMUM LENGTH OF 60 FT. ALL SPLICES NOT SHOWN, SHALL BE LAPPED AS PER THE AASHTO LRFD BRIDGE DESIGN SPECIFICATIONS.

7. STRUCTURAL STEEL
ALL STRUCTURAL STEEL SHALL BE AASHTO M 270 (ASTM A 709), GRADE 50W, INCLUDING THE ADDITIONAL REQUIREMENTS FOR CHARPY V-NOTCH TESTING OF AASHTO M 270 FOR PRIMARY LOAD CARRYING MEMBERS UNDER TENSILE STRESS.

8. ELASTOMERIC BEARINGS
ELASTOMERIC BEARINGS SHALL CONFORM TO AASHTO M 251. ELASTOMER SHALL BE 60 DUROMETER. SHIMS SHALL BE 11 GAGE MILD STEEL CONFORMING TO ASTM A 36. FOR ADDITIONAL REQUIREMENTS FOR THE ELASTOMERIC BEARINGS, SEE DWG. NOS. BB-01 AND BB-02.

9. PRESTRESSED CONCRETE PILES
ALL PRESTRESSED CONCRETE PILES SHALL CONFORM TO THE REQUIREMENTS OF SECTION 618 OF THE DELAWARE DEPARTMENT OF TRANSPORTATION STANDARD SPECIFICATIONS, EXCEPT THAT SEVEN WIRE LOW RELAXATION STRANDS SHALL BE USED.

10. STEEL H-PILES
SEE NOTE 1 ON DWG. NO. PL-02 REGARDING STEEL H-PILE ALTERNATIVE. STEEL H-PILES SHALL BE AASHTO M 270 (ASTM A 709), GRADE 50.

11. FOUNDATION REQUIREMENTS
FOR FOUNDATION REQUIREMENTS, SEE DWG. NO. PL-01. DELDOT STANDARD SPECIFICATION 619.11 (A)(6) SHALL BE MODIFIED BY REFERENCE TO SPECIAL PROVISIONS 619519 & 619539.

12. CONSTRUCTION JOINTS
KEYED CONSTRUCTION JOINTS SHALL BE 2" X 4" UNLESS NOTED OTHERWISE. ALL EXPOSED CONSTRUCTION JOINT EDGES SHALL HAVE A ¾" V-NOTCH UNLESS NOTED OTHERWISE.

13. RIPRAP
RIPRAP SHALL CONFORM WITH THE REQUIREMENTS OF SECTION 712 OF THE DELAWARE DEPARTMENT OF TRANSPORTATION STANDARD SPECIFICATIONS. GEOTEXTILE SHALL CONFORM TO SECTION 713 OF THE DELAWARE DEPARTMENT OF TRANSPORTATION STANDARD SPECIFICATIONS. RIPRAP SHALL BE RECESSED, CHOKED, TOPSOILED AND SEEDED IN CONFORMANCE WITH THE ENVIRONMENTAL COMPLIANCE NOTES ON DWG. NO. EC-04.

14. MISCELLANEOUS
ALL AREAS DISTURBED BY THE CONTRACTOR'S OPERATIONS SHALL BE GRADED BACK TO THE ORIGINAL EXISTING GRADE, TOPSOILED, SEEDED AND MULCHED. PAYMENT SHALL BE INCIDENTAL TO THE CONTRACT. AS DIRECTED BY THE ENGINEER, ALL AREAS DISTURBED BY THE CONTRACTOR'S OPERATION RESULTING FROM UNAUTHORIZED ACTIVITIES OUTSIDE THE LIMIT OF CONSTRUCTION SHALL BE TOPSOILED,SEEDED, AND MULCHED AT THE CONTRACTOR'S EXPENSE.

15. STABILIZING STRUCTURAL EXCAVATIONS
IN LIEU OF A 2:1 SLOPE, THE CONTRACTOR MAY USE SHORING FOR EXCAVATIONS EXCEEDING 5 FEET IN HEIGHT. THE COST OF THE SHORING SHALL BE INCIDENTAL TO ITEM 207000 - EXCAVATION AND BACKFILL FOR STRUCTURES.

16. HYDRAULIC DATA
DRAINAGE AREA = 2.15 SQ. MI. (1376 AC.)
25-YR FLOOD ELEVATION = 28.54
DESIGN FREQUENCY = 50 YEARS
DESIGN DISCHARGE (Q50) = 1145 CFS
DESIGN HEADWATER ELEVATION = 28.89 FT
DESIGN VELOCITY, CHANNEL = 4.37 FPS
AVAILABLE FLOW AREA OF PROPOSED OPENING = 6210 SF

NOTE: SEE REPORT TITLED, "HYDROLOGIC AND HYDRAULIC ANALYSES OF SCOTT RUN WATERSHED AND PROPOSED BRIDGES 1-1, 1-2, 1-4 NB & SB, 1-6, AND 1-7 NB & SB FOR US 301 EXTENSION," DATED MAY 2011.

17. SCOUR DATA
THE PROPOSED STRUCTURE HAS BEEN ANALYZED FOR THE EFFECTS OF SCOUR IN ACCORDANCE WITH FHWA HEC-18 - 'EVALUATING SCOUR AT BRIDGES' AND HEC-23 -'BRIDGE SCOUR AND STREAM INSTABILITY COUNTERMEASURES.' SCOUR COUNTERMEASURES HAVE BEEN DESIGNED FOR THE WORSE CASE OF THE OVERTOPPING FLOOD OR THE 500-YR FLOOD EVENT.

DESIGN STORM EVENT = 100 YEAR FLOOD
DESIGN STORM DISCHARGE = 1335 CFS
DESIGN STORM VELOCITY, CHANNEL = 4.69 FPS
DESIGN STORM MAXIMUM DEPTH OF FLOW = 5.99 FT
DESIGN STORM HEADWATER ELEVATION = 29.24 FT
DESIGN STORM SCOUR DEPTH = 2.92 FT

CHECK STORM EVENT = 500 YEAR FLOOD
CHECK STORM DISCHARGE = 1750 CFS
CHECK STORM VELOCITY, CHANNEL = 5.35 FPS
CHECK STORM MAXIMUM DEPTH OF FLOW = 6.60 FT
CHECK STORM HEADWATER ELEVATION = 29.84 FT
CHECK STORM SCOUR DEPTH = 3.31 FT

18. LOAD RATINGS
FOR LOAD AND RESISTANCE FACTOR RATING, SEE BRIDGE NO. 1-460S LOAD RATING SUMMARY ON THIS SHEET.

19. UTILITIES
BEFORE BEGINNING WORK, THE CONTRACTOR SHALL GIVE NOTIFICATION BY TELEPHONE BY CALLING "MISS UTILITY" AT 1-800-282-8555 A MINIMUM OF 48 HOURS PRIOR TO START OF WORK. VERIFY AND LOCATE ALL UTILITIES PRIOR TO STARTING WORK.

COORDINATE THE REQUIREMENTS FOR PROTECTION OF ANY UTILITY WITH THE UTILITY OWNER PRIOR TO STARTING WORK.

CONDUCT OPERATIONS IN A MANNER WHICH ENSURES THAT THE UTILITIES WILL NOT BE DISTURBED OR ENDANGERED. ANY DAMAGE INCURRED TO THESE UTILITIES OR ANY OTHER UTILITIES, SHOWN OR NOT SHOWN ON THE PLANS, DUE TO THE CONTRACTOR'S OPERATIONS SHALL BE REPAIRED AT THE CONTRACTOR'S EXPENSE TO THE SATISFACTION OF THE APPROPRIATE UTILITY COMPANY. THE DEPARTMENT DOES NOT ASSUME RESPONSIBILITY FOR REIMBURSEMENT, PARTICIPATION IN DESIGN AND/OR REVISIONS, OR LIABILITY FOR ACCURACY OF TYPE, SIZE AND LOCATION OF ANY UTILITY.

THE CONTRACTOR IS RESPONSIBLE FOR TEMPORARILY SUPPORTING, PROTECTING, OR RELOCATING ANY UTILITIES DURING CONSTRUCTION. WHERE NECESSARY, THE COST FOR THIS WORK WILL BE INCIDENTAL TO THE CONTRACT.

LOAD RATING SUMMARY

DESIGN VEHICLE	RATING FACTOR	RATING WEIGHT (TON)	CONTROLLING MEMBER	CONTROLLING POINT	LOAD EFFECT
HL-93 TRUCK (INVENTORY)	1.12	N/A	INTERIOR GIRDER	200	SHEAR
HL-93 TANDEM (INVENTORY)	1.33	N/A	INTERIOR GIRDER	200	SHEAR
HL-93 TRUCK TRAIN (INVENTORY)	1.16	N/A	INTERIOR GIRDER	200	FLEXURE
HS-20 (INVENTORY)	2.08	74.82	INTERIOR GIRDER	200	SHEAR
HL-93 TRUCK (OPERATING)	1.46	N/A	INTERIOR GIRDER	200	SHEAR
HL-93 TANDEM (OPERATING)	1.73	N/A	INTERIOR GIRDER	200	SHEAR
HL-93 TRUCK TRAIN (OPERATING)	1.50	N/A	INTERIOR GIRDER	200	FLEXURE
HS-20 (OPERATING)	2.69	96.99	INTERIOR GIRDER	200	SHEAR
DE S220 & LEGAL-LANE (LEGAL)	3.78	75.57	INTERIOR GIRDER	200	SHEAR
DE S335 & LEGAL-LANE (LEGAL)	2.16	75.62	INTERIOR GIRDER	200	SHEAR
DE S437 & LEGAL-LANE (LEGAL)	2.07	75.79	INTERIOR GIRDER	200	SHEAR
DE S330 & LEGAL-LANE (LEGAL)	2.61	78.23	INTERIOR GIRDER	200	SHEAR
DE S435 & LEGAL-LANE (LEGAL)	2.21	77.42	INTERIOR GIRDER	200	SHEAR
DE S540 & LEGAL-LANE (LEGAL)	1.97	78.80	INTERIOR GIRDER	200	SHEAR

NOTE: LOAD RATING INCLUDES FUTURE WEARING SURFACE AS NOTED IN THE PLANS.

BRIDGE NO. 1-460S INDEX OF SHEETS

SHEET NO.	DWG. NO.	TABLE OF CONTENTS
438	PN-01	PROJECT NOTES
439	QS-01	QUANTITY SUMMARY
440	TS-01	SUPERSTRUCTURE TYPICAL SECTION
441	PE-01	GENERAL PLAN AND ELEVATION
442	GR-01	GRADING PLAN
443	FT-01	GEOMETRIC AND FOOTING LAYOUT PLAN
444	PL-01	PILE LAYOUT PLAN
445	PL-02	PILE DETAILS
446	AB-01	ABUTMENT A PLAN AND ELEVATION
447	AB-02	ABUTMENT A TYPICAL SECTION
448	AB-03	MSE WALL AT ABUTMENT A
449	AB-04	ABUTMENT A MSE WALL TYPICAL SECTIONS - 1
450	AB-05	ABUTMENT A MSE WALL TYPICAL SECTIONS - 2
451	AB-06	ABUTMENT A MSE WALL TYPICAL SECTIONS - 3
452	AB-07	ABUTMENT B PLAN AND ELEVATION
453	AB-08	ABUTMENT B TYPICAL SECTION
454	AB-09	MSE WALL AT ABUTMENT B
455	AB-10	ABUTMENT B MSE WALL TYPICAL SECTIONS - 1
456	AB-11	ABUTMENT B MSE WALL TYPICAL SECTIONS - 2
457	AB-12	ABUTMENT B MSE WALL TYPICAL SECTIONS - 3
458	AB-13	ABUTMENT A REINFORCEMENT DETAILS - 1
459	AB-14	ABUTMENT A REINFORCEMENT DETAILS - 2
460	AB-15	ABUTMENT A REINFORCEMENT DETAILS - 3
461	AB-16	ABUTMENT B REINFORCEMENT DETAILS - 1
462	AB-17	ABUTMENT B REINFORCEMENT DETAILS - 2
463	AB-18	ABUTMENT B REINFORCEMENT DETAILS - 3
464	PR-01	PIER PLAN AND ELEVATIONS
465	PR-02	PIER REINFORCEMENT DETAILS - 1
466	PR-03	PIER REINFORCEMENT DETAILS - 2
467	PR-04	PIER SCOUR COUNTERMEASURES PLAN AND SECTION
468	RB-01	SUBSTRUCTURE REINFORCEMENT LIST
469	BB-01	EXPANSION BEARING DETAILS - ABUTMENT A AND ABUTMENT B
470	BB-02	FIXED BEARING DETAILS - PIER
471	BM-01	GIRDER ELEVATION
472	BM-02	CROSS FRAME DETAILS
473	BM-03	STIFFENER, SEAT, AND CONNECTION PLATE DETAILS
474	BM-04	SPLICE DETAILS
475	CT-01	CAMBER DIAGRAM
476	FR-01	FRAMING PLAN
477	DK-01	DECK SLAB POURING SEQUENCE
478	DK-02	DECK SLAB AND PARAPET REINFORCEMENT - SPAN 1
479	DK-03	DECK SLAB AND PARAPET REINFORCEMENT - SPAN 2
480	DK-04	DECK SLAB AND PARAPET REINFORCEMENT DETAILS
481	SD-01	SUPERSTRUCTURE DETAILS
482	RB-02	SUPERSTRUCTURE REINFORCEMENT LIST
483	FD-01	FINISHED BRIDGE DECK ELEVATIONS - SPAN 1
484	FD-02	FINISHED BRIDGE DECK ELEVATIONS - SPAN 2
485	EX-01	ARMORED STRIP SEAL JOINT DETAILS
486	AS-01	APPROACH SLAB A PLAN AND REINFORCEMENT PLAN
487	AS-02	APPROACH SLAB B PLAN AND REINFORCEMENT PLAN
488	AS-03	MOMENT SLAB A PLAN
489	AS-04	MOMENT SLAB A REINFORCEMENT PLAN
490	AS-05	MOMENT SLAB B PLAN
491	AS-06	MOMENT SLAB B REINFORCEMENT PLAN
492	AS-07	APPROACH SLAB AND SLEEPER SLAB DETAILS
493	AS-08	MOMENT SLAB DETAILS
494	RB-03	APPROACH SLAB AND MOMENT SLAB REINFORCEMENT LIST
495	BO-01	BORING PROFILE - 1
496	BO-02	BORING PROFILE - 2

Unofficial Website Copy

ITEM NO.	ITEM NAME	UNITS	QUANTITY
202000	Excavation and Embankment	C.Y.	461
202505	Settlement Platform	Each	4
202518	Settlement Monument	Each	4
207000	Excavation and Backfill for Structures	C.Y.	300
302011	Delaware No. 3 Stone	TON	94
302012	Delaware No. 57 Stone	TON	326
602003	Portland Cement Concrete Masonry, Abutment Footing, Class A	C.Y.	75
602006	Portland Cement Concrete Masonry, Pier Footing, Class B	C.Y.	149
602007	Portland Cement Concrete Masonry, Pier Above Footing, Class A	C.Y.	125
602013	Portland Cement Concrete Masonry, Superstructure, Class D	C.Y.	560
602014	Portland Cement Concrete Masonry, Approach Slab, Class D	C.Y.	104
602015	Portland Cement Concrete Masonry, Abutment Above Footing, Class A	C.Y.	40
602017	Portland Cement Concrete Masonry, Parapet, Class A	C.Y.	123
602018	Portland Cement Concrete Masonry, Class D	C.Y.	67
602772	Mechanically Stabilized Earth Walls	L.S.	1
603000	Bar Reinforcement	LBS	41,500
604000	Bar Reinforcement, Epoxy Coated	LBS	212,000
605001	Steel Structures	LBS	854,000
605512	Prefabricated Expansion Joint System, 4"	L.F.	90
605581	Elastomeric Bridge Bearing Pad	Each	5
605639	TFE Stainless Steel Structural Bearings	Each	10
618062	Steel H Piles, HP 14 x 73	L.F.	3,152
618065	Steel H Test Piles, HP 14 x 73	L.F.	558
618081	Furnish Precast Prestressed Concrete Piles, 14" x 14"	L.F.	2,870
618091	Furnish Precast Prestressed Concrete Test Piles, 14" x 14"	L.F.	508
619042	Install Steel H Piles, HP 14 x 73	L.F.	3,152
619045	Install Steel H Test Piles, HP 14 x 73	L.F.	558
619061	Install Precast Prestressed Concrete Piles, 14" x 14"	L.F.	2,870
619067	Install Precast Prestressed Concrete Test Piles, 14" x 14"	L.F.	508
619501	Production Pile Restrike	Each	6
619502	Test Pile Restrike	EA.DY.	1
619519	Dynamic Pile Testing by Contractor	Each	17
619539	Signal Matching Analysis by Contractor	Each	17
712021	Riprap, R-5	TON	565
713003	Geotextiles, Riprap	S.Y.	450
733001	Topsoiling, 4" Depth	S.Y.	700
734531	Streambank Seed Mix	S.Y.	345
735535	Soil Retention Blanket Mulch, Type 5	S.Y.	345
760015	Rumble Strips, Concrete, Shallow Depth	L.F.	955

NOTES:

1. THE QUANTITY SUMMARY INCLUDES QUANTITIES FOR BRIDGE NO. 1-460S STANDARD ITEMS, PILE ALTERNATIVE 1 (14" SQUARE PRESTRESSED CONCRETE PILES) ITEMS AND PILE ALTERNATIVE 2 (HP 14X73 PILES) ITEMS. ITEM NOS. 618081, 618091, 619061 AND 619067 ARE APPLICABLE TO PILE ALTERNATIVE 1. ITEM NOS. 618062, 618065, 619042 AND 619045 ARE APPLICABLE TO PILE ALTERNATIVE 2. ALL OTHER ITEMS ARE STANDARD ITEMS. SEE PILE NOTE 1 ON DWG. NO. PL-02 FOR ADDITIONAL INFORMATION REGARDING PILE ALTERNATIVES.

2. ITEM 202000 IS REPRESENTED AS FOLLOWS:
   ON DRAWING EW-05:
   - o 234 CY UNDER TYPE C MATERIAL REQUIRED, "TYPE C BACKFILL FOR STRUCTURES"; AND
   - o 74 CY UNDER TYPE F MATERIAL REQUIRED, "PLUS EMBANKMENT FOR STRUCTURES".

   ON DRAWING EW-06:
   - o 99 CY UNDER TYPE C MATERIAL REQUIRED, "TYPE C BACKFILL FOR STRUCTURES"; AND
   - o 54 CY UNDER TYPE F MATERIAL REQUIRED, "PLUS EMBANKMENT FOR STRUCTURES".

3. ITEM 207000 IS REPRESENTED ON DRAWING EW-05 UNDER EXCAVATION AVAILABLE FOR EMBANKMENT, "PLUS EXCAVATION AND BACKFILLING FOR STRUCTURES".

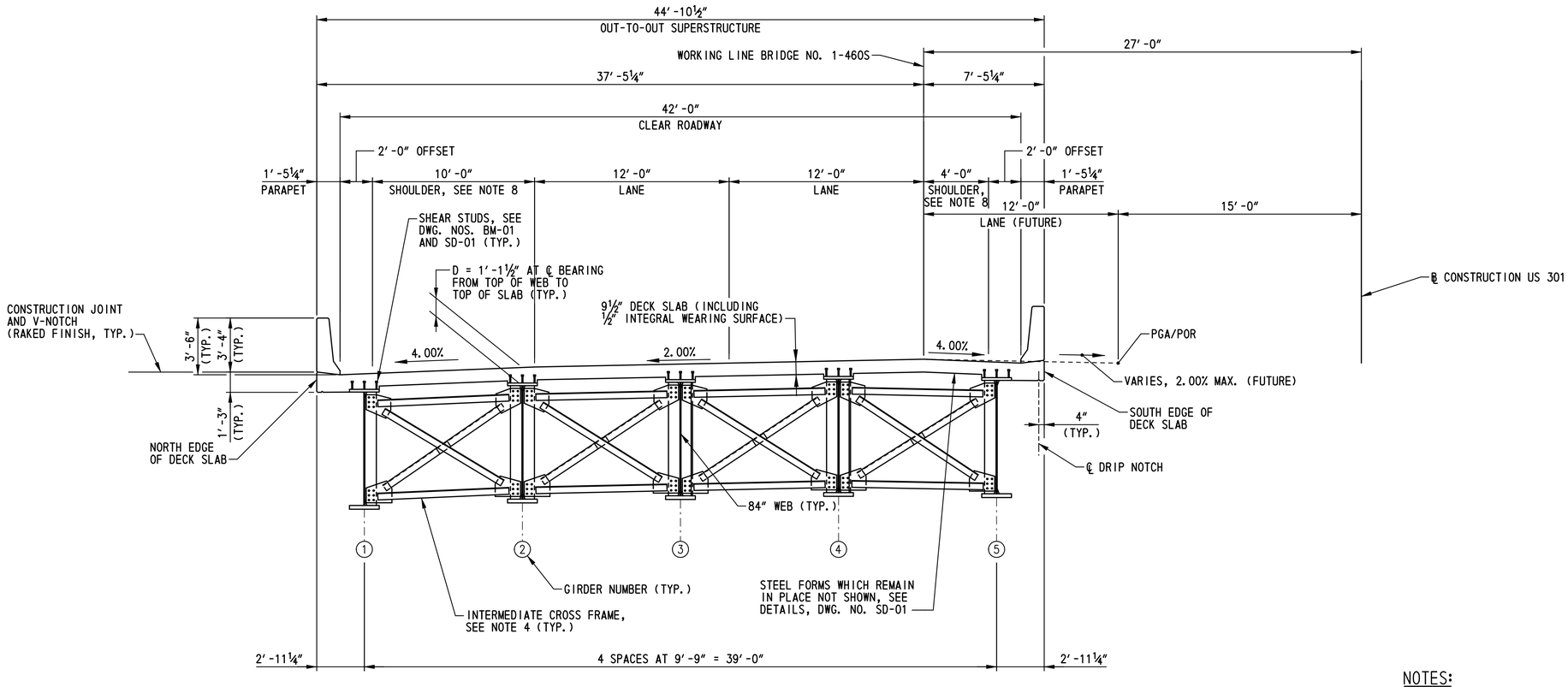

SUPERSTRUCTURE TYPICAL SECTION

SCALE: ¼″=1′-0″

NOTES:

1. TYPICAL SECTION SHOWN LOOKING STATIONS AHEAD.
2. FOR DECK SLAB AND PARAPET REINFORCEMENT DETAILS, SEE DWG. NOS. DK-01 THRU DK-04.
3. FOR FRAMING PLAN, SEE DWG. NO. FR-01.
4. FOR ABUTMENT, PIER AND INTERMEDIATE CROSS FRAME DETAILS, SEE DWG. NO. BM-02.
5. FOR GIRDER ELEVATION, SEE DWG. NO. BM-01.
6. FOR STAY-IN-PLACE FORM DETAILS, SEE DWG. NO. SD-01.
7. PARAPETS SHALL NOT BE SLIP FORMED.
8. RUMBLE STRIPS SHALL BE LOCATED IN THE DECK SLAB, APPROACH SLABS AND MOMENT SLABS AT EACH SHOULDER FROM STA. 806+07.90 TO STA. 810+86.10. FOR RUMBLE STRIP DETAIL, SEE DWG. NO. DT-01. RUMBLE STRIPS SHALL BE PAID UNDER ITEM 760015, RUMBLE STRIPS, CONCRETE, SHALLOW DEPTH. RUMBLE STRIPS SHALL BE COATED WITH A HIGH MOLECULAR WEIGHT METHACRYLATE SEALER. SEE SPECIAL PROVISION ITEM 602501. THE SEALER SHALL BE APPLIED IN ACCORDANCE WITH THE MANUFACTURER'S RECOMMENDATIONS IN A 1′-8″ WIDE STRIP, CENTERED ON THE RUMBLE STRIPS, CONTINUOUSLY FROM STA. 806+07.00 TO STA. 810+87.00. COST OF HIGH MOLECULAR WEIGHT METHACRYLATE SEALER SHALL BE INCIDENTAL TO ITEM 760015, RUMBLE STRIPS, CONCRETE, SHALLOW DEPTH.
9. REFLECTORS SHALL BE INSTALLED ALONG EACH PARAPET (ROADWAY PAY ITEM). SEE DWG. NO. DT-17 FOR DETAILS.

BR1-7S
TS-01

DELAWARE DEPARTMENT OF TRANSPORTATION	ADDENDUMS / REVISIONS	SCALE: AS NOTED	US 301, SR 896 TO SR 1	CONTRACT T200911308	BRIDGE NO. 1-460S	SUPERSTRUCTURE TYPICAL SECTION	SHEET NO. 440
				COUNTY NEW CASTLE	DESIGNED BY: M.P.U.		TOTAL SHTS. 875
					CHECKED BY: P.S.D.		

N:\31653-000\CONTRACT 1A\CADD\Bridge\Br_No7\BR_No7S\TS01_br1-7S.dgn
7/29/2015 11:50:27 AM

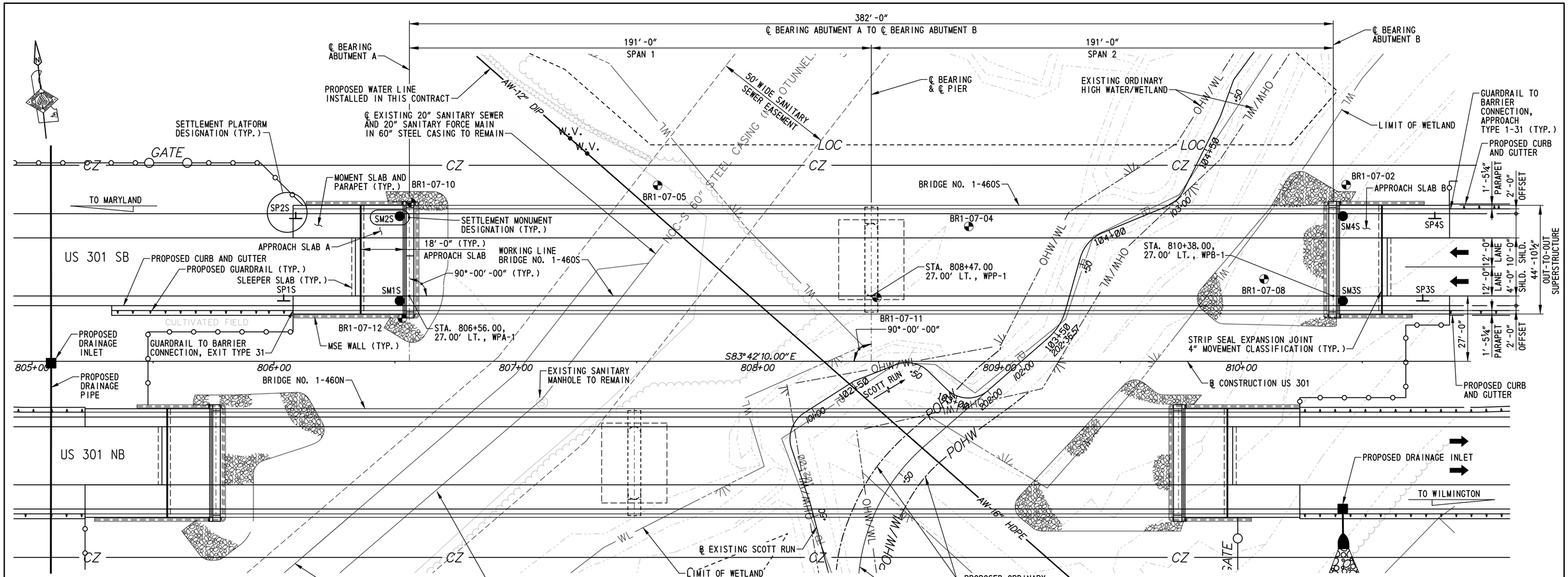

PLAN
SCALE: 1"=20'-0"

VERTICAL CURVE
SCALE: NOT TO SCALE

TEST BORINGS		
BORING DESIGNATION	STATION	OFFSET
BR1-07-02	810+43.35	72.95' LT.
BR1-07-04	808+87.30	55.73' LT.
BR1-07-05	807+58.66	72.72' LT.
BR1-07-08	810+09.42	33.99' LT.
BR1-07-10	806+56.83	65.51' LT.
BR1-07-11	808+49.29	26.38' LT.
BR1-07-12	806+53.04	17.80' LT.

NOTE:

1. RECESS, CHOKE, TOPSOIL, SEED AND MULCH RIPRAP IN ACCORDANCE WITH THE ENVIRONMENTAL COMPLIANCE NOTES ON DRAWING NO. EC-04.
2. FOR MAINTENANCE OF STREAMFLOW, SEE DRAWING NOS. MS-07 THRU MS-10.

SETTLEMENT PLATFORMS		
DESIGNATION	STATION	OFFSET
SP1S	806+04.00	25.00' LT.
SP2S	806+09.00	59.00' LT.
SP3S	810+75.00	25.00' LT.
SP4S	810+80.00	59.00' LT.

SETTLEMENT MONUMENTS		
DESIGNATION	STATION	OFFSET
SM1S	806+52	25.00' LT.
SM2S	806+52	60.00' LT.
SM3S	810+42	25.00' LT.
SM4S	810+42	60.00' LT.

FOR SETTLEMENT MONUMENT AND SETTLEMENT PLATFORM DETAILS, SEE DWG. NO. FT-01.
FOR SETTLEMENT MONITORING REQUIREMENTS, SEE THE SPECIAL PROVISIONS.

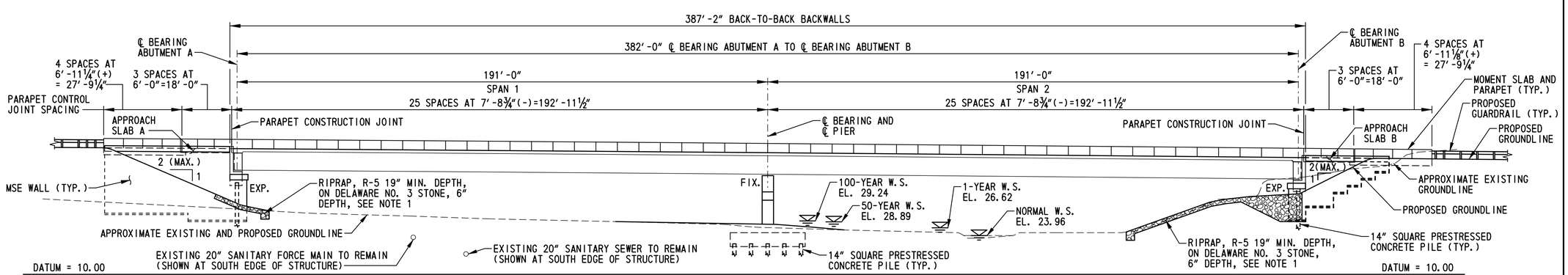

ELEVATION
SCALE: 1"=20'-0"

N:\33653-000\CONTRACT 1A\CADD\Bridge\Br_No7\BR_No7SVPE01_br1-7S.dgn
7/29/2015 3:33:24 PM

DELAWARE DEPARTMENT OF TRANSPORTATION

ADDENDUMS / REVISIONS

SCALE: AS NOTED

US 301, SR 896 TO SR 1

CONTRACT	BRIDGE NO.	1-460S
T200911308	DESIGNED BY: M.P.U.	
COUNTY		
NEW CASTLE	CHECKED BY: P.S.D.	

GENERAL PLAN AND ELEVATION

BR1-7S
PE-01

SHEET NO.
441
TOTAL SHTS.
875

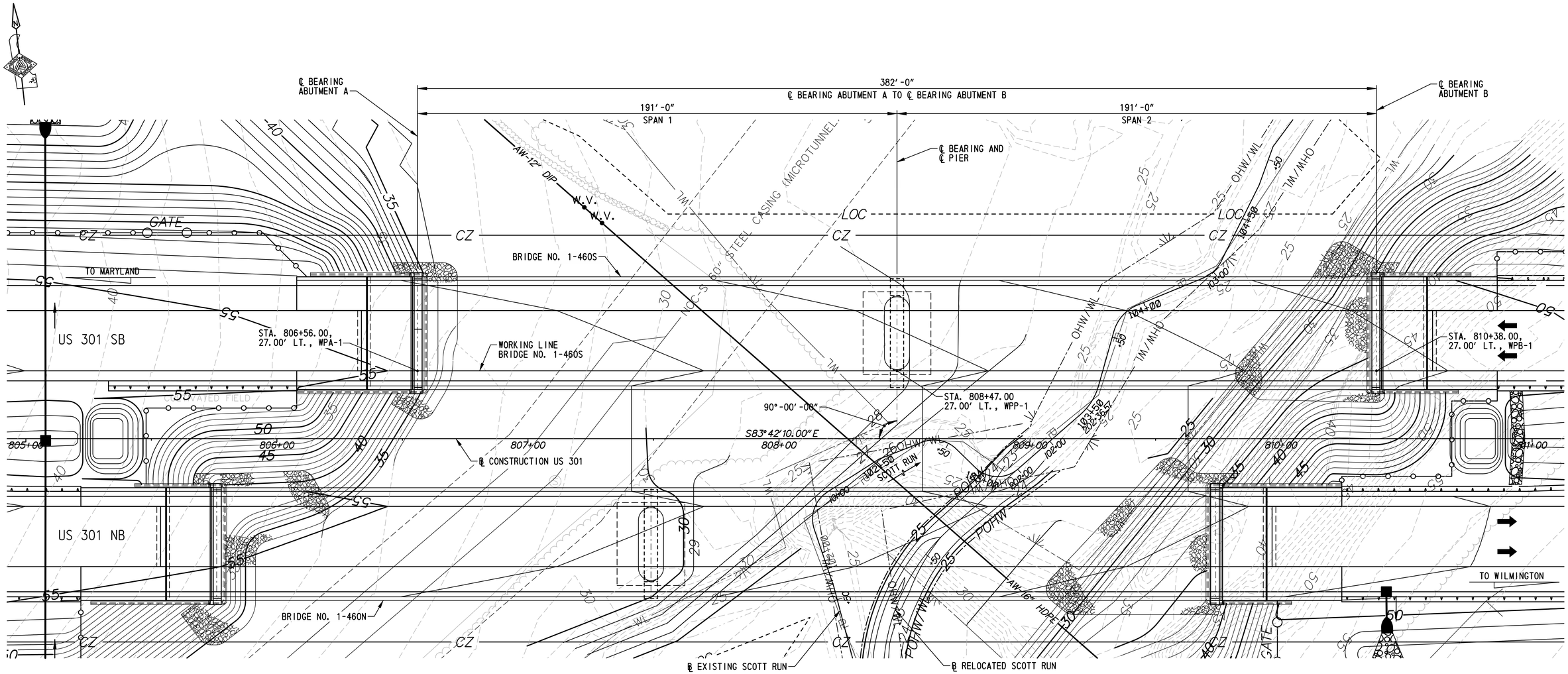

GRADING PLAN

SCALE: 1"=20'-0"

NOTE:
FOR ADDITIONAL INFORMATION, SEE DWG. NO. PE-01.

N:\33653-000\CONTRACT 1A\CADD\Bridge\Br_No7\BR_No7S\GR01_br1-7S.dgn
7/8/2015 4:57:27 PM

DELAWARE DEPARTMENT OF TRANSPORTATION	ADDENDUMS / REVISIONS	SCALE: AS NOTED	US 301, SR 896 TO SR 1	CONTRACT T200911308	BRIDGE NO. 1-460S	GRADING PLAN	BR1-7S GR-01
				COUNTY NEW CASTLE	DESIGNED BY: A.D.D.		SHEET NO. 442
					CHECKED BY: P.S.D.		TOTAL SHTS. 875

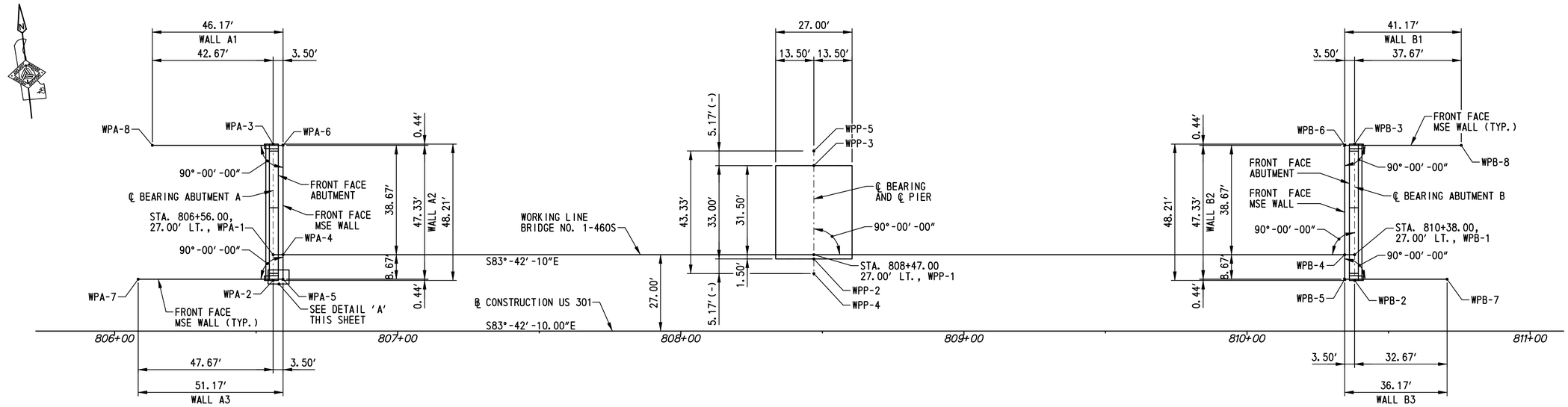

GEOMETRIC AND FOOTING LAYOUT PLAN

SCALE: 1"=20'-0"

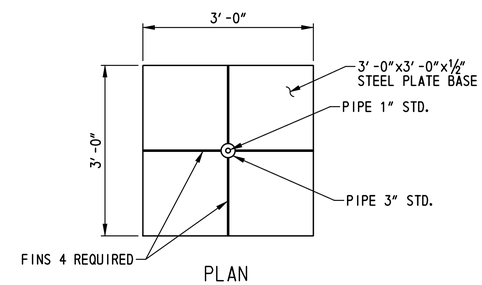

PLAN

NOTES:

1. FOR PILE LAYOUT PLANS, SEE DWG. NO. PL-01.
2. FOR SETTLEMENT MONUMENT AND SETTLEMENT PLATFORM LOCATIONS, SEE DWG. NO. PE-01.

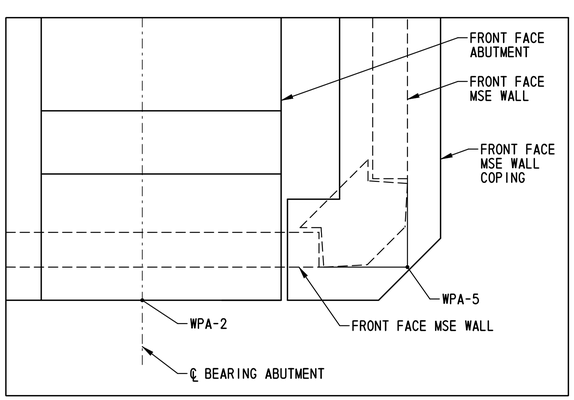

DETAIL 'A'

SCALE: 1"=1'-0"

NOTES:

WPA-5 SHOWN, WPA-6, WPB-5 AND WPB-6 SIMILAR.

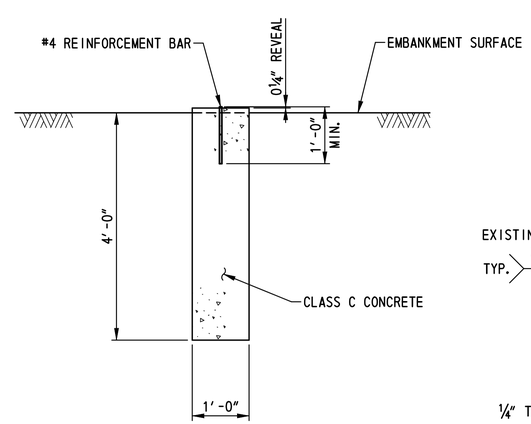

SETTLEMENT MONUMENT DETAIL

SCALE: ¾"=1'-0"

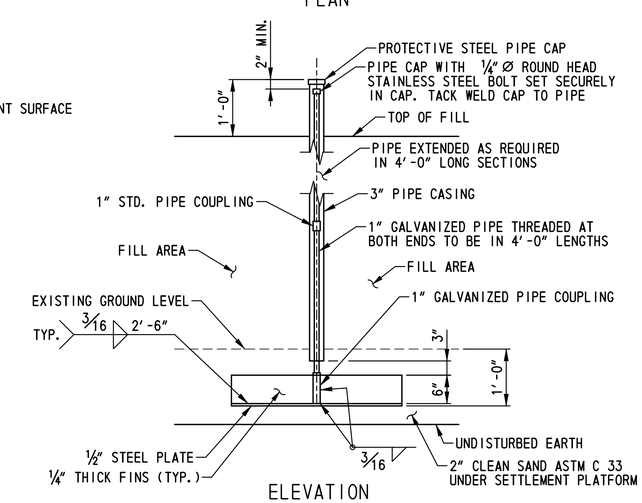

ELEVATION

SETTLEMENT PLATFORM DETAILS

SCALE: ¾"=1'-0"

WORKING POINT COORDINATES

WORKING POINT	COORDINATES	
	NORTHING	EASTING
WPA-1	555389.8179	585644.9479
WPA-2	555380.7686	585643.9493
WPA-3	555428.6860	585649.2371
WPA-4	555389.8179	585644.9479
WPA-5	555380.8196	585647.4762
WPA-6	555427.8672	585652.6680
WPA-7	555386.4318	585596.6183
WPA-8	555432.9311	585606.7799
WPP-1	555368.8679	585834.7955
WPP-2	555367.3768	585834.6310
WPP-3	555400.1777	585838.2506
WPP-4	555362.2413	585834.0643
WPP-5	555405.3132	585838.8173
WPB-1	555347.9179	586024.6431
WPB-2	555338.8685	586023.6445
WPB-3	555386.3510	586028.8842
WPB-4	555347.9179	586024.6431
WPB-5	555339.6873	586020.2136
WPB-6	555386.7349	586025.4054
WPB-7	555335.7203	586056.1620
WPB-8	555382.2195	586066.3237

N:\33653-000\CONTRACT 1A\CADD\Bridge\Br_No7\BR_No7SVFT01_br1-7S.dgn
5/1/2015 12:00:02 PM

DELAWARE DEPARTMENT OF TRANSPORTATION

ADDENDUMS / REVISIONS

SCALE: AS NOTED

US 301, SR 896 TO SR 1

CONTRACT	BRIDGE NO.	1-460S
T200911308	DESIGNED BY: A.D.D.	
COUNTY		
NEW CASTLE	CHECKED BY: P.S.D.	

GEOMETRIC AND FOOTING LAYOUT PLAN

BR1-7S FT-01

SHEET NO. 443

TOTAL SHTS. 875

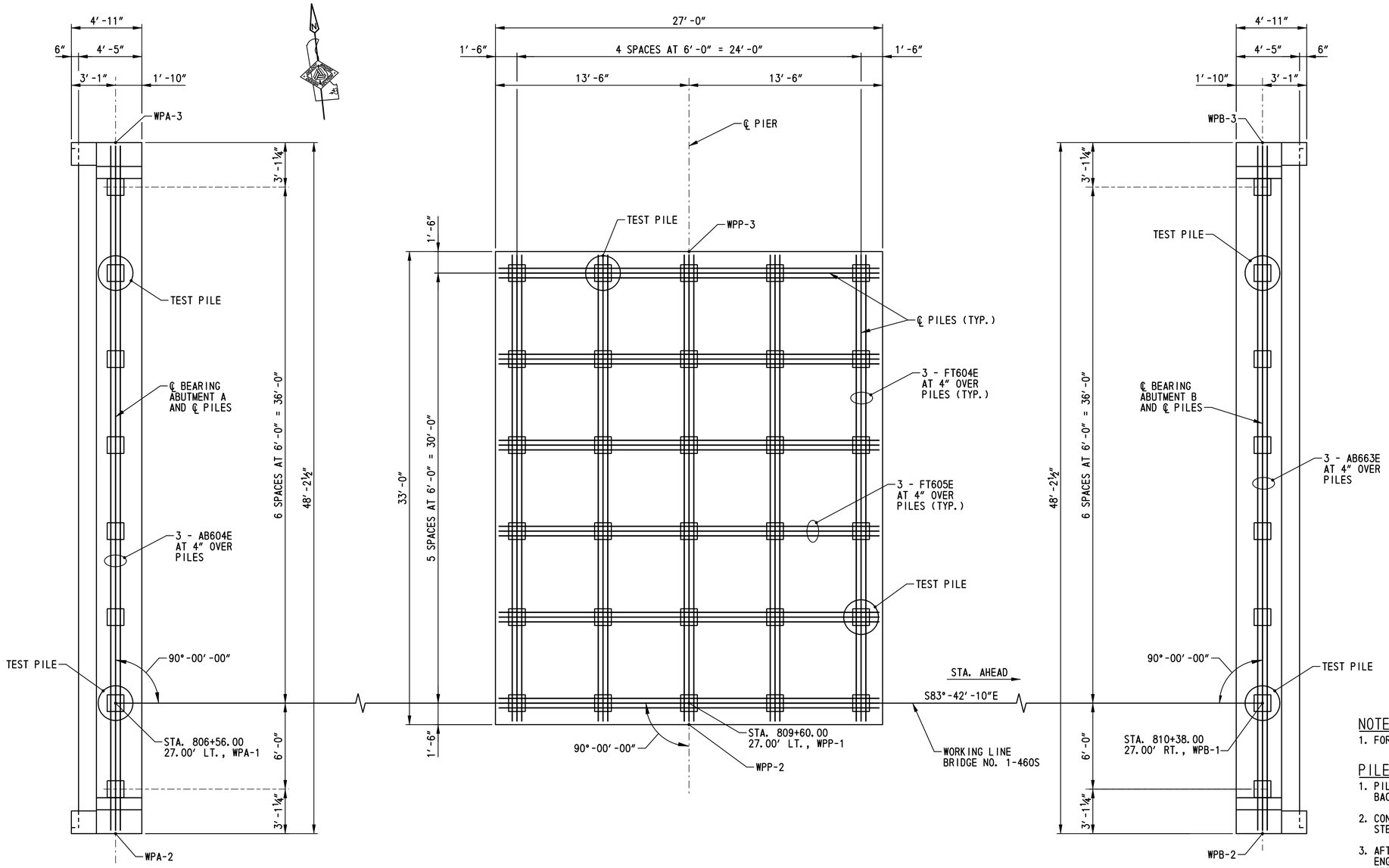

ABUTMENT A

PIER

ABUTMENT B

PILE LAYOUT PLAN

SCALE: ¼″=1′-0″

PILE LEGEND:

1. ☐ DENOTES PLUMB 14″ SQUARE PRESTRESSED CONCRETE OR HP 14x73 STEEL PILE
2. (☐) DENOTES LOCATION OF 14″ SQUARE PRESTRESSED CONCRETE OR HP 14x73 STEEL PILE AND DYNAMIC PILE TESTING.

PILE TIP DATA

	DESIGN DATA			ACTUAL FIELD DATA	
SUBSTRUCTURE UNIT	MINIMUM TIP ELEVATION	14″ SQ. PCP ESTIMATED TIP ELEVATION	HP14x73 ESTIMATED TIP ELEVATION	AVERAGE ACTUAL MINIMUM TIP ELEVATION	AVERAGE ACTUAL MAXIMUM TIP ELEVATION
ABUTMENT A	-30.0	-34.0	-46.0		
PIER	-40.0	-48.0	-54.0		
ABUTMENT B	-40.0	-41.0	-48.0		

ABUTMENT A PILE DRIVING INFORMATION

PILE SIZE AND TYPE: 14″ SQUARE PRESTRESSED CONCRETE OR HP 14x73
ACTUAL BEARING OBTAINED:
HAMMER TYPE:
PILE HAMMER ENERGY: 45,000 LB-FT TO 75,000 LB-FT
SPECIAL DRIVING CONDITIONS AND COMMENTS:

PIER PILE DRIVING INFORMATION

PILE SIZE AND TYPE: 14″ SQUARE PRESTRESSED CONCRETE OR HP 14x73
ACTUAL BEARING OBTAINED:
HAMMER TYPE:
PILE HAMMER ENERGY: 45,000 LB-FT TO 75,000 LB-FT
SPECIAL DRIVING CONDITIONS AND COMMENTS:

ABUTMENT B PILE DRIVING INFORMATION

PILE SIZE AND TYPE: 14″ SQUARE PRESTRESSED CONCRETE OR HP 14x73
ACTUAL BEARING OBTAINED:
HAMMER TYPE:
PILE HAMMER ENERGY: 45,000 LB-FT TO 75,000 LB-FT
SPECIAL DRIVING CONDITIONS AND COMMENTS:

NOTE:

1. FOR PILE NOTES AND DETAILS, SEE DWG. NO. PL-02.

PILE INSTALLATION SEQUENCE OF CONSTRUCTION AT ABUTMENTS:

1. PILE CASING SHALL BE INSTALLED DURING INSTALLATION OF THE MSE WALL SELECT BACKFILL AND REINFORCEMENT TO THE BOTTOM ELEVATION OF THE ABUTMENT STEMS.
2. CONSTRUCT MSE WALLS, INCLUDING WIRE FACE MSE WALLS AT REAR FACES OF ABUTMENT STEMS AND BACKWALLS, TO THE REQUIRED ELEVATIONS.
3. AFTER COMPLETION OF THE SETTLEMENT WAITING PERIOD AS DETERMINED BY THE ENGINEER THE PILES SHALL BE SET AND CENTERED IN THE CASINGS. A 60-DAY SETTLEMENT WAITING PERIOD IS ANTICIPATED AT ABUTMENT A AND ABUTMENT B. SETTLEMENT IS CONSIDERED TO BE COMPLETE AFTER TWO CONSECUTIVE SETTLEMENT PLATFORM READINGS THAT ARE WITHIN 0.01 FEET FOR ALL SETTLEMENT PLATFORMS. SEE SPECIAL PROVISIONS FOR SETTLEMENT PLATFORM AND MONUMENT REQUIREMENTS.
4. PILES SHALL BE INSTALLED TO THE MINIMUM TIP ELEVATION AND REQUIRED NOMINAL RESISTANCE SPECIFIED. FOR PILE RESTRIKE REQUIREMENTS SEE SPECIAL PROVISIONS.
5. AFTER PILE INSTALLATION/ DRIVING IS COMPLETE THE CASINGS SHALL BE FILLED WITH SAND.
6. TEST PILES MAY BE DRIVEN PRIOR TO PLACING EMBANKMENT AND SURCHARGE MATERIAL. RESTRIKES OF THESE TEST PILES SHALL BE PERFORMED PRIOR TO PLACING EMBANKMENT IN ACCORDANCE WITH ITEM 619502-TEST PILE RESTRIKE. AFTER THE EMBANKMENT HAS BEEN PLACED, SETTLEMENT HAS BEEN ACHIEVED AND THE SUBSTRUCTURE HAS BEEN RELEASED BY THE ENGINEER, THE TEST PILE SHALL BE ACTING AS A PRODUCTION PILE AND IT SHALL BE RE-STRUCK PRIOR TO PLACING ANY OTHER PRODUCTION PILES WITH PAYMENT UNDER ITEM 619501 - PRODUCTION PILE RESTRIKE. ONCE THE TEST PILE HAS BEEN ACCEPTED, THE REMAINING PRODUCTION PILES MAY BE INSTALLED.

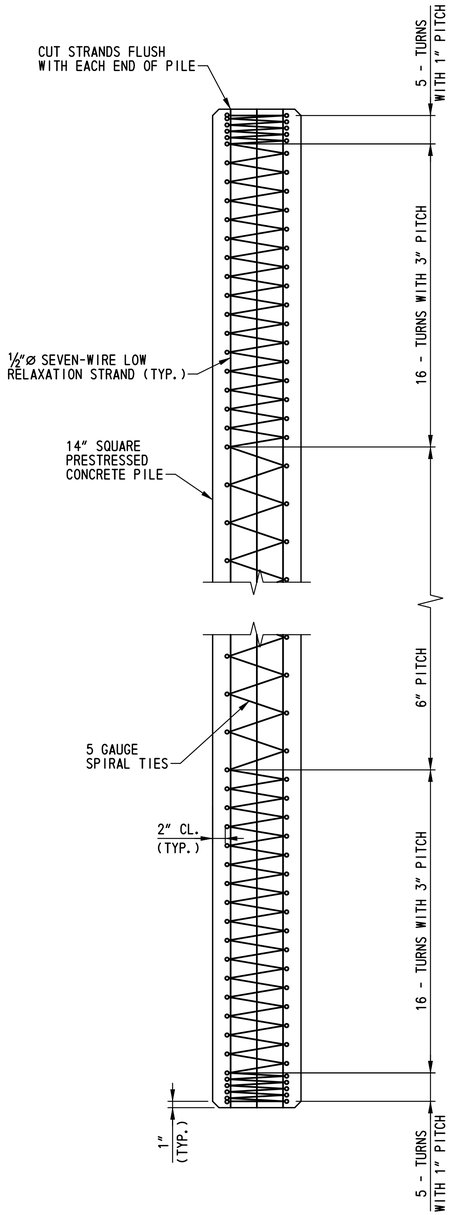

PILE ELEVATION

SCALE: 1"=1'-0"

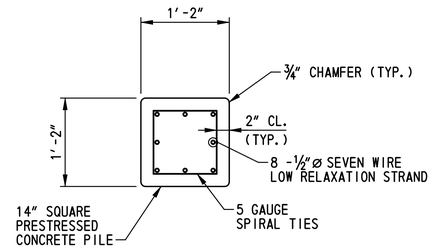

PILE TYPICAL SECTION

SCALE: 1"=1'-0"

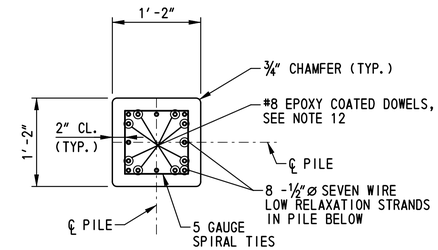

BUILD-UP TYPICAL SECTION

SCALE: 1"=1'-0"

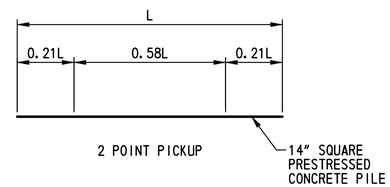

PILE PICKUP DATA

NOT TO SCALE

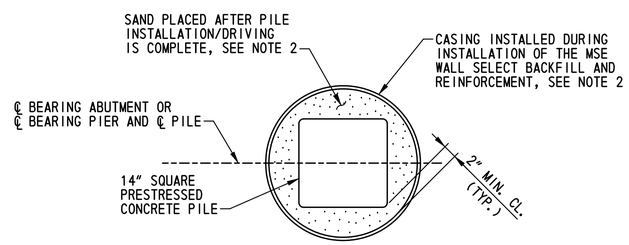

PILE CASING DETAIL

SCALE: 1"=1'-0"

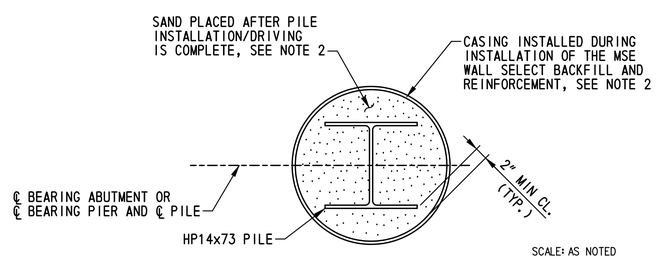

SCALE: AS NOTED

STEEL PILE ALTERNATIVE CASING DETAIL

SCALE: 1"=1'-0"

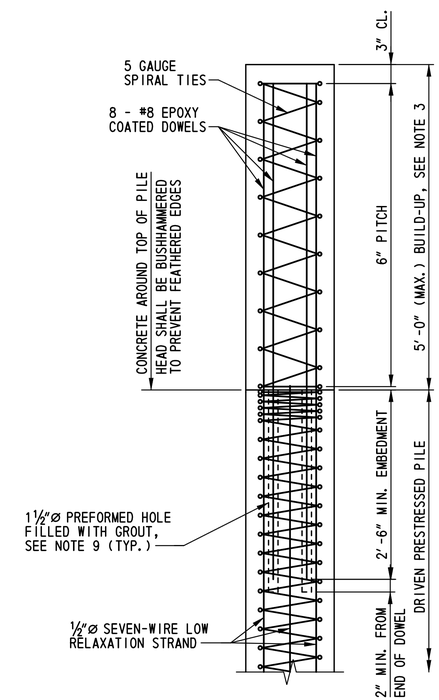

BUILD-UP WITHOUT DRIVING

SCALE: 1"=1'-0"

PILE NOTES:

1. THE CONTRACTOR HAS THE OPTION TO INSTALL HP 14X73 STEEL PILES (PILE ALTERNATIVE 2) AS AN ALTERNATIVE TO THE 14" SQUARE PRESTRESSED CONCRETE PILES (PILE ALTERNATIVE 1) SHOWN. THE HP 14X73 STEEL PILES SHALL BE INSTALLED AT THE SAME LOCATIONS AS THE 14" SQUARE PRESTRESSED PILES AND ORIENTED AS SHOWN ON DWG. NO. PL-02. ONLY ONE TYPE OF PILING MAY BE USED FOR THIS BRIDGE.

2. THE FACTORED RESISTANCE OF THE 14" SQUARE PRESTRESSED CONCRETE AND HP 14x73 STEEL PILING IS 145 TONS. PILES SHALL BE DRIVEN AND TESTED IN ACCORDANCE WITH THE SPECIAL PROVISION FOR DYNAMIC PILE TESTING TO A NOMINAL RESISTANCE OF 225 TONS.

3. PILES SHALL BE DRIVEN TO THE DRIVING CRITERIA DEVELOPED FROM DYNAMIC PILE TESTING AND AS SPECIFIED BY THE ENGINEER TO ACHIEVE A NOMINAL PILE DRIVING RESISTANCE OF 225 TONS AND TO THE SPECIFIED MINIMUM TIP ELEVATION. PILES MEETING THE AFOREMENTIONED CRITERIA WILL BE CONSIDERED SATISFACTORY.

4. THE CONTRACTOR SHALL BE RESPONSIBLE FOR SUBMITTING A WAVE EQUATION ANALYSIS AND ALL OTHER INCIDENTALS IN ACCORDANCE WITH THE SPECIAL PROVISIONS. THE WAVE EQUATION ANALYSIS AND DYNAMIC PILE TESTING MUST BE SIGNED AND SEALED BY A REGISTERED PROFESSIONAL ENGINEER LICENSED IN THE STATE OF DELAWARE IN ACCORDANCE WITH THE SPECIAL PROVISIONS. UPON COMPLETION OF THE DYNAMIC PILE TESTING, THE CONTRACTOR SHALL SUBMIT A SIGNAL MATCHING ANALYSIS TO THE ENGINEER FOR REVIEW AND APPROVAL IN ACCORDANCE WITH THE SPECIAL PROVISIONS.

5. ALL TEST PILES SHALL BE 10 FEET LONGER THAN THE PILE LENGTH COMPUTED FROM THE PILE TIP DATA TABLE. PILE LENGTHS FOR ORDERING PURPOSES SHALL BE DETERMINED BY THE TEST PILES. DYNAMIC PILE TESTING AND SIGNAL MATCHING ANALYSIS SHALL BE COMPLETED BY THE CONTRACTOR IN ACCORDANCE WITH THE SPECIAL PROVISIONS. TEST AND PRODUCTION PILE RESTRIKES WILL BE PAID FOR AS FOLLOWS:

   A. ALL TEST PILES WILL BE RESTRUCK AFTER A WAITING PERIOD OF AT LEAST 48 HOURS. TEST PILE RESTRIKES SHALL BE INCIDENTAL TO THE INITIAL INSTALLATION OF THE PILE PROVIDED THEY ARE REQUESTED WITHIN FIVE WORKING DAYS FROM THE COMPLETION OF THE INITIAL DRIVE. IF RESTRIKES ARE REQUESTED AFTER FIVE WORKING DAYS FROM THE COMPLETION OF THE INITIAL DRIVE, THEN THE TEST PILE RESTRIKE SHALL BE PAID FOR IN ACCORDANCE WITH THE SPECIAL PROVISIONS.

   B. IF DIRECTED BY THE ENGINEER TO RESTRIKE A PRODUCTION PILE, THE RESTRIKE OF THE PRODUCTION PILE SHALL BE PAID SEPARATELY UNDER ITEM NO. 619501 - PRODUCTION PILE RESTRIKE.

6. THE DEPARTMENT RESERVES THE RIGHT TO PERFORM DYNAMIC PILE TESTING OF RESTRIKES.

7. SEE DWG. NO. PE-01 FOR SETTLEMENT PLATFORM AND MONUMENT LOCATIONS. READINGS ON THE SETTLEMENT PLATFORMS SHALL BE MADE AFTER THE INITIAL INSTALLATION OF THE RISER AND CASING PIPES AND INSTALLATION RECORD SHEETS ARE APPROVED BY THE ENGINEER AND PRIOR TO FILL PLACEMENT. DURING FILL PLACEMENT, READINGS ON ALL SETTLEMENT PLATFORMS SHALL BE TAKEN AT A MINIMUM OF 3 CALENDAR DAY INTERVALS. AFTER COMPLETION OF THE FILL AND SURCHARGE PLACEMENT, INSTALL SETTLEMENT MONUMENTS IF INDICATED ON THE BRIDGE PLANS AND TAKE INITIAL READINGS. READINGS ON ALL SETTLEMENT MONITORING DEVICES SHALL THEN BE TAKEN AT A MINIMUM OF 3 CALENDAR DAY INTERVALS. IF THE SETTLEMENT HAS CEASED ON ALL MONITORED SETTLEMENT MONITORING DEVICES IN THE VICINITY OF THE SUBSTRUCTURE UNIT BY CALENDAR DAY 6, THAT IS THREE READINGS, AFTER THE COMPLETION OF THE FILL, SURCHARGE AND SETTLEMENT MONUMENT PLACEMENT, THE SUBSTRUCTURE WILL BE RELEASED BY THE ENGINEER FOR REMOVAL OF THE SURCHARGE AND INSTALLATION OF PRODUCTION PILES WITHIN THREE WORKING DAYS OF RECEIPT OF SETTLEMENT MONITORING RESULTS. AFTER COMPLETION OF THE ABUTMENT AND MSE WALL PANEL PLACEMENT, THE CONTRACTOR SHALL ESTABLISH REFERENCE POINTS TO MONITOR SETTLEMENT ON TOP OF THE ABUTMENT SEAT AND EITHER ON TOP OF THE MSE WALL PANELS OR ON TOP OF THE MSE WALL LEVELING PAD AT POINTS WITHIN FIVE FEET OF ALL ENDS AND CORNERS AND AT THE CENTER OF BRIDGES AND THE CENTERLINE OF US301. AFTER THE CONCRETE ABUTMENTS HAVE BEEN CONSTRUCTED AND THE MSE WALL PANELS HAVE BEEN PLACED, READINGS ON ALL SETTLEMENT MONITORING DEVICES AND REFERENCE POINTS SHALL CONTINUE TO BE TAKEN AT A MINIMUM OF 30-DAY INTERVALS FOR THE NEXT 6 MONTHS OR AS DIRECTED BY THE ENGINEER. SEE SPECIAL PROVISIONS FOR ADDITIONAL SETTLEMENT MONITORING REQUIREMENTS.

8. FOR PILE SEQUENCE OF CONSTRUCTION AT ABUTMENTS, SEE DWG. NO. PL-01.

9. PROVIDE 1½" DIAMETER PREFORMED HOLES IN PILE HEAD AT THE DOWEL LOCATIONS. DOWELS SHALL BE GROUTED INTO PLACE WITH AN APPROVED EPOXY GROUT. PRIOR TO THE GROUTING PROCEDURE, PREFORMED HOLES SHALL REMAIN PLUGGED TO ENSURE THAT WATER AND FOREIGN MATERIAL DOES NOT ENTER THE PREFORMED HOLES. HOLES SHALL BE GROUTED WHEN THE PILE BUILD-UP IS NOT NEEDED.

10. MINIMUM COMPRESSIVE STRENGTH OF EPOXY GROUT SHALL BE f'c=6,000 PSI.

11. THE COMPRESSIVE STRENGTH OF THE PILE BUILD-UP SHALL BE f'c=6,000 PSI.

12. DOWEL HOLES SHALL BE POSITIONED TO MAINTAIN A 1" CLEAR DISTANCE FROM ALL PRESTRESSING STRANDS IN THE PILE.

NOTES:

1. FOR ADDITIONAL PILE INFORMATION, SEE DWG. NO. PL-01.

2. PAYMENT FOR FURNISHING AND INSTALLATION OF CASING AND SAND WILL BE INCIDENTAL TO ITEM NO. 602772 - MECHANICALLY STABILIZED EARTH WALLS. SEE SPECIAL PROVISIONS FOR ADDITIONAL REQUIREMENTS.

3. THE CAST-IN-PLACE CONCRETE PILE BUILD-UP SHALL BE USED WHERE PILES MUST BE DRIVEN TO AN ELEVATION WHICH RESULTS IN THE TOP OF PILE BEING LOWER THAN THE BOTTOM OF CAP TO ACHIEVE THE REQUIRED NOMINAL RESISTANCE. PILE BUILD-UP WILL BE MEASURED AND PAID FOR IN CONFORMANCE WITH SECTION 618 OF THE DELAWARE DEPARTMENT OF TRANSPORTATION STANDARD SPECIFICATIONS.

BR1-7S
PL-02

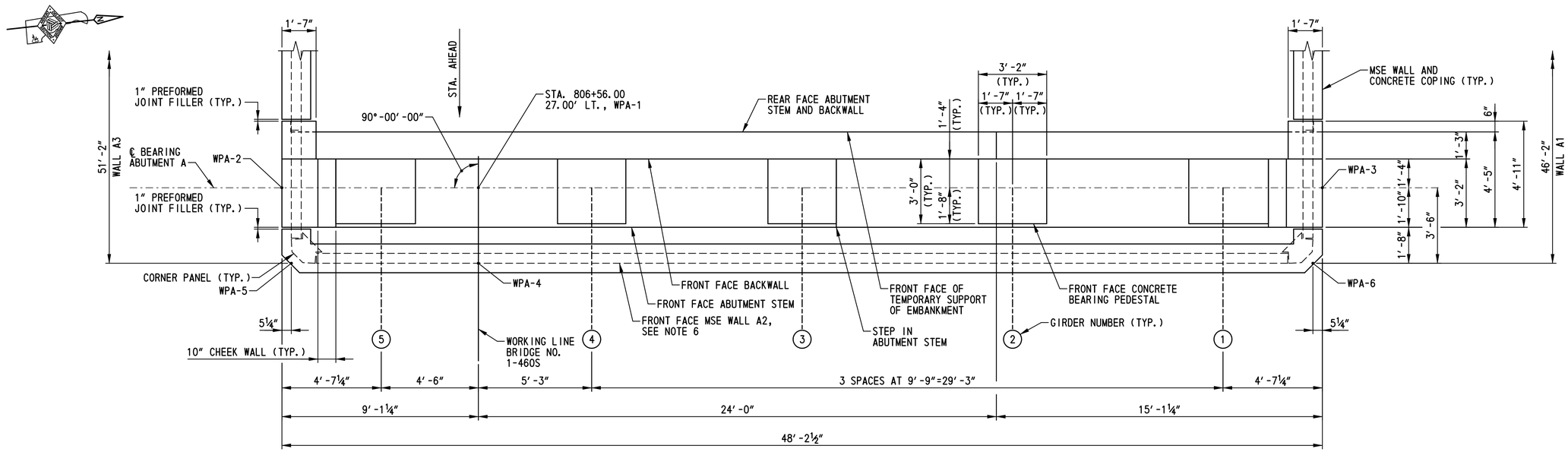

PLAN

SCALE: ⅜"=1'-0"

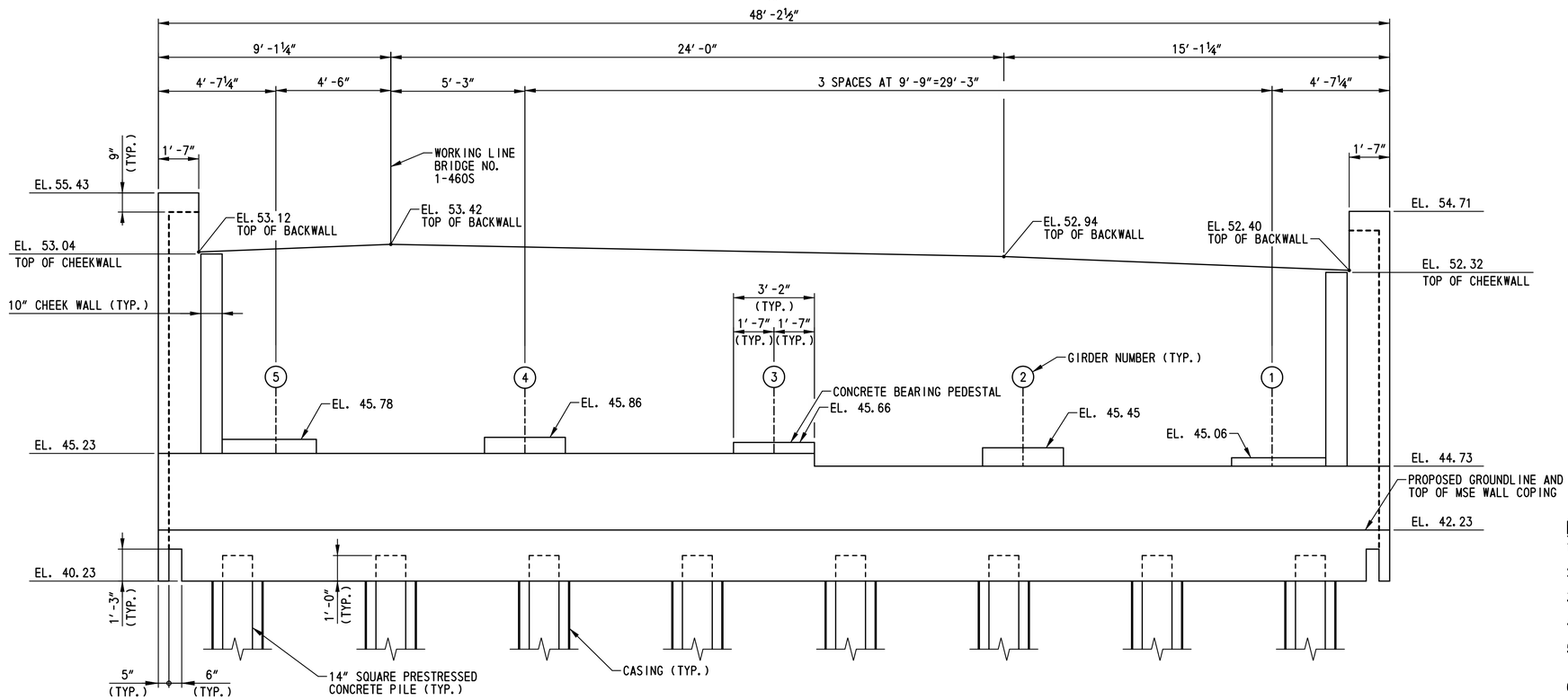

ELEVATION

SCALE: ⅜"=1'-0"

NOTES:

1. MSE WALL NOT SHOWN IN ELEVATION FOR CLARITY.
2. FOR APPROXIMATE EXISTING GROUNDLINE SEE DWG. NO. AB-03.
3. FOR PILE LAYOUT SEE DWG. NO. PL-01.
4. FOR ABUTMENT A TYPICAL SECTION SEE DWG. NO. AB-02.
5. FOR ABUTMENT A MSE WALL TYPICAL SECTIONS SEE DWG. NO. AB-04 THRU AB-06.
6. FOR ABUTMENT A MSE WALL ELEVATION AND NOTES, SEE DWG. NO. AB-03.

BR1-7S
AB-01

DELAWARE DEPARTMENT OF TRANSPORTATION	ADDENDUMS / REVISIONS	SCALE: AS NOTED	US 301, SR 896 TO SR 1	CONTRACT T200911308 / COUNTY NEW CASTLE	BRIDGE NO. 1-460S / DESIGNED BY: A.D.D. / CHECKED BY: P.S.D.	ABUTMENT A PLAN AND ELEVATION

SHEET NO. 446
TOTAL SHTS. 875

rt\31653-000\contract 1a\cadd\bridge\br_no7\BR_No7SV801_br17S.dgn
10/24/2012 1:49:58 PM

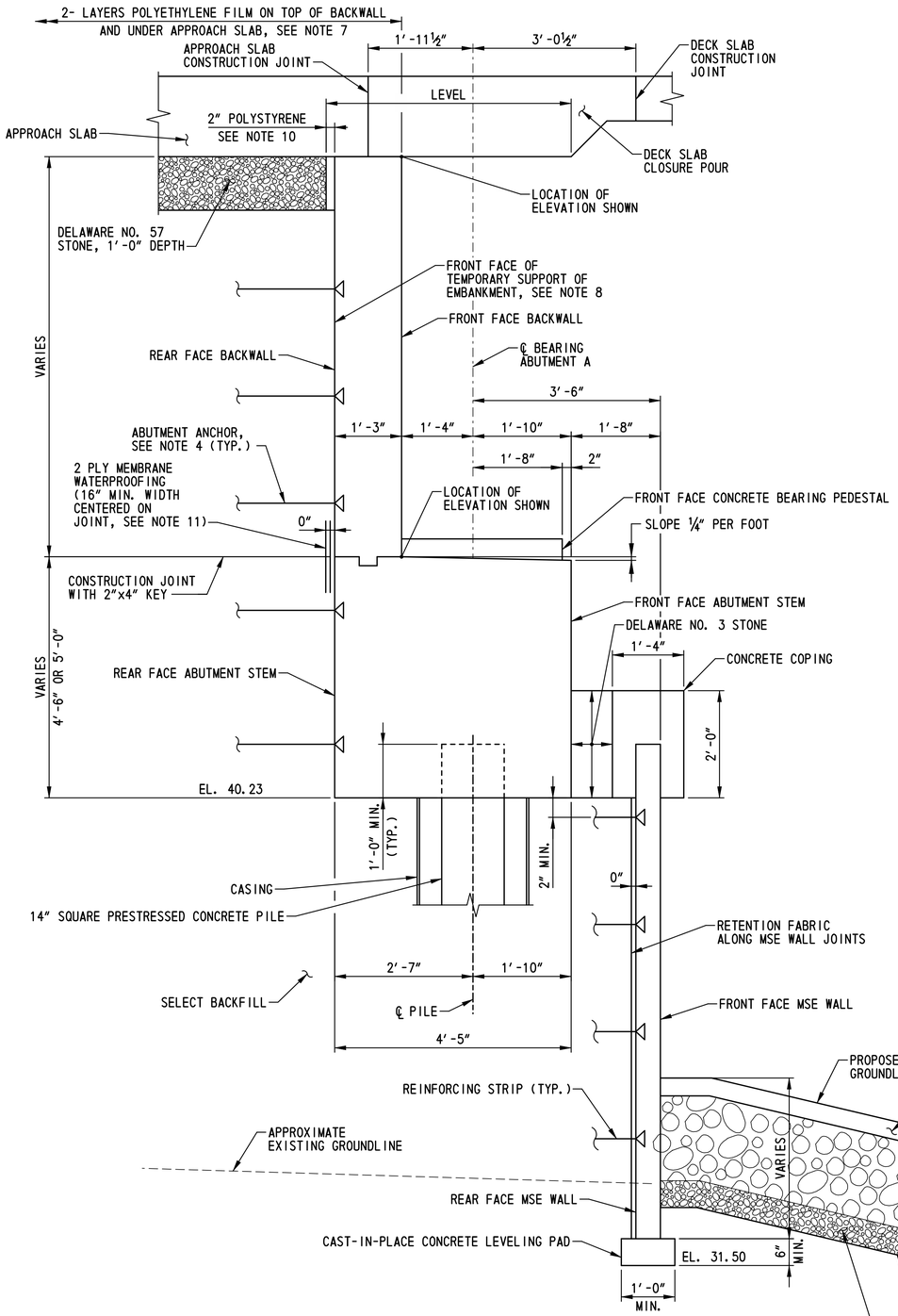

ABUTMENT A TYPICAL SECTION

SCALE: ¾″=1′-0″

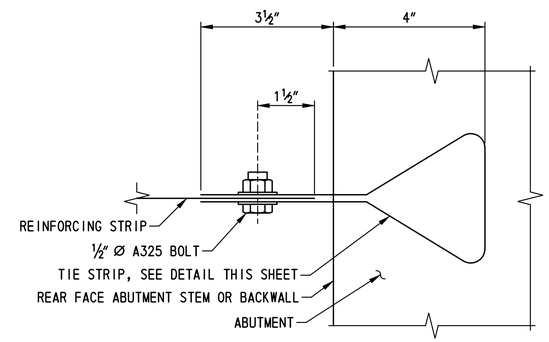

ABUTMENT ANCHOR DETAIL

NOT TO SCALE

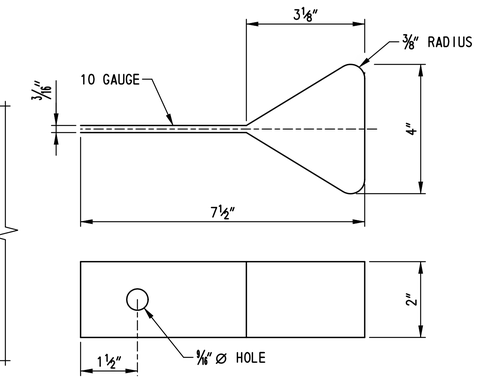

TIE STRIP DETAIL

NOT TO SCALE

ABUTMENT ANCHOR NOTES:

1. THE ABUTMENT ANCHOR SHOWN CONSISTING OF A TIE STRIP ATTACHED TO A REINFORCING STRIP MAY BE MODIFIED PER THE MSE WALL MANUFACTURER'S RECOMMENDATIONS. ANY CHANGES TO THE ABUTMENT ANCHOR DETAIL SHOWN SHALL BE SUBMITTED TO THE ENGINEER FOR APPROVAL.

2. THE ATTACHMENT OF THE ABUTMENT ANCHOR TO THE TEMPORARY SUPPORT OF EMBANKMENT LOCATED AT THE REAR FACE OF THE ABUTMENT STEM AND BACKWALL IS NOT SHOWN. THIS ATTACHMENT SHALL BE MADE PER THE MSE WALL MANUFACTURER'S RECOMMENDATIONS AND A DETAIL SUBMITTED TO THE ENGINEER FOR APPROVAL.

NOTES:

1. FOR PILE LAYOUT, SEE DWG. NO. PL-01.

2. FOR ABUTMENT A PLAN AND ELEVATION, SEE DWG. NO. AB-01.

3. FOR ABUTMENT A MSE WALL ELEVATIONS AND NOTES, SEE DWG. NO. AB-03.

4. PROVIDE ABUTMENT ANCHORS IN SELECT BACKFILL. SEE ABUTMENT ANCHOR DETAIL THIS SHEET. ABUTMENT ANCHORS SHALL BE DESIGNED FOR A MINIMUM FACTORED HORIZONTAL FORCE OF 2.0 KIPS PER FOOT OF ABUTMENT LENGTH. THE POINT OF APPLICATION OF FORCES SHALL BE AT THE CENTER OF BEARINGS. DESIGN OF ABUTMENT ANCHORS SHALL BE COMPATIBLE WITH THE TEMPORARY SUPPORT OF EMBANKMENT DESIGN. PAYMENT FOR ABUTMENT ANCHORS WILL BE INCIDENTAL TO ITEM 602772 - MECHANICALLY STABILIZED EARTH WALLS.

5. PROPRIETARY WALL MANUFACTURER SHALL DESIGN AND CONTRACTOR SHALL CONSTRUCT FINAL WALL AND FACING SUCH THAT THE FINAL WALL FACING IS AT THE REQUIRED ELEVATION AFTER SETTLEMENT HAS TAKEN PLACE.

6. THE ANTICIPATED SETTLEMENT IS 6 INCHES BEHIND THE FACE OF WALL.

7. TOP OF BACKWALL SHALL BE STEEL TROWEL FINISHED. TWO LAYERS OF WHITE POLYETHYLENE FILM SHALL BE PLACED ON TOP OF THE BACKWALLS PRIOR TO PLACEMENT OF THE APPROACH AND DECK SLAB REINFORCEMENT. THE FILM SHALL BE FASTENED TO THE FRONT FACE OF THE BACKWALL AND LAPPED 2′-0″ MINIMUM WITH THE FILM PLACED ON THE FINISHED SUBGRADE FOR THE APPROACH SLAB. COST SHALL BE INCIDENTAL TO ITEM 602014 - PORTLAND CEMENT CONCRETE MASONRY, APPROACH SLAB, CLASS D. FOR ADDITIONAL REQUIREMENTS, SEE DWG. NO. AS-07.

8. FOR TEMPORARY SUPPORT OF EMBANKMENT REQUIREMENTS, SEE NOTE 14 ON DWG. NO. AB-03.

9. RECESS, CHOKE, TOPSOIL, SEED AND MULCH RIPRAP IN CONFORMANCE WITH THE ENVIRONMENTAL COMPLIANCE NOTES ON DWG. NO. EC-04.

10. EXPANDED POLYSTYRENE SHALL CONFORM TO ASTM C 578, EXCEPT THAT THE MAXIMUM ALLOWABLE WATER ABSORPTION SHALL BE 2%. COST SHALL BE INCIDENTAL TO ITEM 602014 - PORTLAND CEMENT CONCRETE MASONRY, APPROACH SLAB, CLASS D.

11. MEMBRANE WATERPROOFING SHALL BE INCIDENTAL TO ITEM 602015 - PORTLAND CEMENT CONCRETE MASONRY, ABUTMENT ABOVE FOOTING, CLASS A. SEE SPECIAL PROVISION ITEM 602616 - WATERPROOFING P.C.C. MASONRY SURFACES FOR ADDITIONAL REQUIREMENTS.

BR1-7S
AB-02

N:\33653-000\CONTRACT 1A\CADD\Bridge\Br_No7\BR_No7SV4802_br1-7S.dgn
7/29/2015 3:38:12 PM

DELAWARE DEPARTMENT OF TRANSPORTATION	ADDENDUMS / REVISIONS	SCALE: AS NOTED	US 301, SR 896 TO SR 1	CONTRACT T200911308	BRIDGE NO. 1-460S	ABUTMENT A TYPICAL SECTION
				COUNTY NEW CASTLE	DESIGNED BY: A.D.D.	
					CHECKED BY: P.S.D.	

SHEET NO. 447
TOTAL SHTS. 875

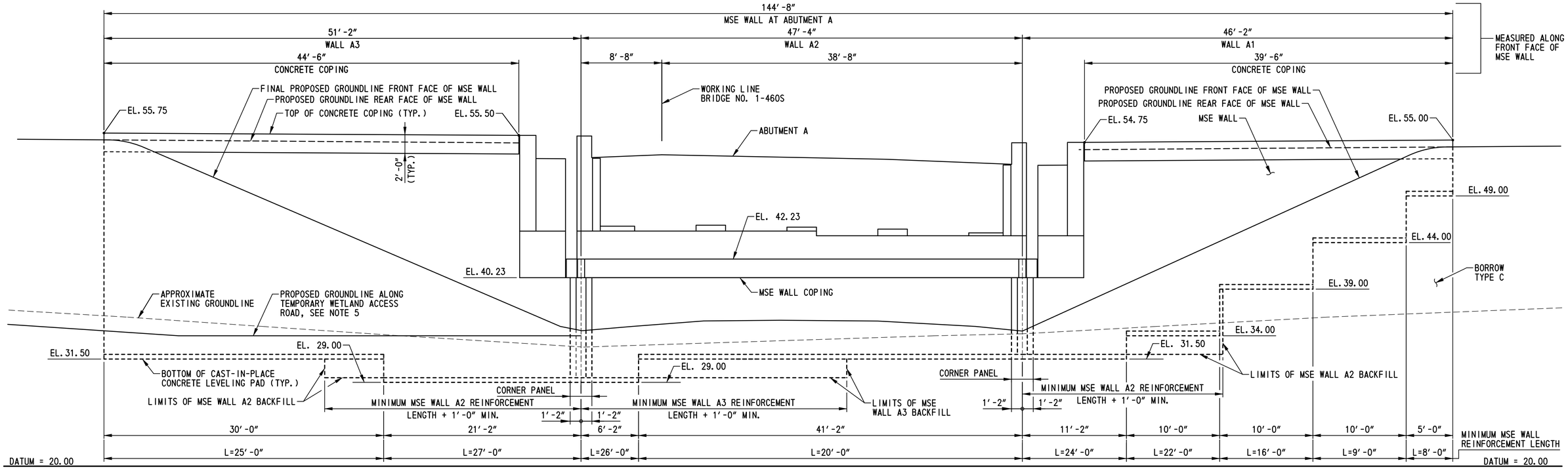

DEVELOPED ELEVATION

SCALE: 3/16″=1′-0″

MSE WALL NOTES:

1. DESIGN CRITERIA
   SEE SPECIAL PROVISION FOR ITEM 602772.

2. CONCRETE
   ALL CONCRETE PROPERTIES SHALL BE IN ACCORDANCE WITH SECTION 812 OF THE DELAWARE DEPARTMENT OF TRANSPORTATION STANDARD SPECIFICATIONS.

   CLASS A - MSE WALL PANELS AND MSE WALL COPING (f′c = 4,500 PSI)

   CLASS B - MSE WALL LEVELING PAD (f′c = 3,000 PSI)

   ALL EXPOSED EDGES OF CONCRETE SHALL BE CHAMFERED ¾″, UNLESS NOTED OTHERWISE,

3. REINFORCING STEEL
   ALL REINFORCING STEEL SHALL BE AASHTO M31 (ASTM A 615), GRADE 60 AND SHALL BE PROTECTED WITH FUSION BONDED EPOXY, CONFORMING TO AASHTO M284 (ASTM A 775).

   MINIMUM CONCRETE COVER FOR REINFORCING STEEL SHALL BE 2″ UNLESS NOTED OTHERWISE.

   THE MSE WALL MANUFACTURER MAY SUBSTITUTE ALTERNATIVE REINFORCING CONFIGURATIONS AND SUBMIT FOR APPROVAL.

4. ARCHITECTURAL FINISH
   THE COMPONENTS OF THE MSE WALL SHALL HAVE THE ARCHITECTURAL TREATMENT AS SPECIFIED IN THE SPECIAL PROVISION FOR ITEM 602772.

5. WALL REINFORCEMENT
   WALL REINFORCEMENT SHALL BE LOCATED TO CLEAR THE PILE CASINGS WITH 2″ MINIMUM CLEARANCE AND A MAXIMUM 15 DEGREE SKEW.

6. COPING
   THE MSE WALL COPING SHALL BE A PRECAST CONCRETE COPING INSTALLED IN CONFORMANCE WITH THE PROPRIETARY WALL MANUFACTURER'S RECOMMENDATIONS. FOR LOCATIONS ALONG THE MSE WALL WHERE A PRECAST CONCRETE COPING CANNOT BE UTILIZED, A CAST-IN-PLACE CONCRETE COPING INSTALLED IN CONFORMANCE WITH THE PROPRIETARY WALL MANUFACTURER'S RECOMMENDATIONS MAY BE UTILIZED.

7. LEVELING PAD
   THE LEVELING PAD STEPS MAY BE RELOCATED AT THE DESCRETION OF THE PROPRIETARY WALL MANUFACTURER PROVIDED THAT THE MINIMUM EMBEDMENT IS MAINTAINED IN ACCORDANCE WITH THE SPECIFIED DESIGN CRITERIA. ANY CHANGES TO THE STEP LOCATIONS SHALL BE SUBMITTED TO THE ENGINEER FOR APPROVAL.

8. BACKFILL AND FOUNDATION SOILS
   MSE WALL BACKFILL SHALL CONSIST OF SELECT BACKFILL AND MEET THE REQUIREMENTS PROVIDED IN THE SPECIAL PROVISIONS. MSE WALL BACKFILL AT ABUTMENT B BELOW EL. 31.00 SHALL CONSIST OF DELAWARE NO. 57 STONE. SEE SOIL PROPERTIES TABLE ON THIS SHEET.

9. INTERNAL STABILITY
   THE INTERNAL STABILITY OF THE MSE WALL SHALL BE DESIGNED BY THE PROPRIETARY WALL MANUFACTURER USING THE SOIL PROPERTIES PROVIDED AT EACH WALL LOCATION. THE INTERNAL STABILITY CALCULATIONS SHALL BE SIGNED AND SEALED BY A PROFESSIONAL ENGINEER LICENSED IN THE STATE OF DELAWARE AS INDICATED IN THE PROJECT SPECIFICATIONS.

10. QUARANTINE PERIOD
    ALLOW A MINIMUM OF 60 DAYS QUARANTINE PERIOD FOR SETTLEMENT MONITORING. BEGIN THE QUARANTINE PERIOD WHEN THE FULL HEIGHT OF THE MSE WALL IS ACHIEVED, THE APPROACH EMBANKMENTS ARE AT THEIR FINAL ROADWAY SUBGRADE ELEVATION AND THE SETTLEMENT PLATFORMS ARE COMPLETELY CONSTRUCTED. THE ENGINEER WILL DETERMINE THE DURATION OF THE QUARANTINE PERIOD BASED ON THE SETTLEMENT READINGS. THE ENGINEER WILL NOTIFY THE CONTRACTOR, IN WRITING, WHEN THE QUARANTINE PERIOD CAN BE LIFTED BASED ON THE RESULTS OF THE SETTLEMENT READINGS.

11. SETTLEMENT REQUIREMENTS
    THE PROPRIETARY WALL MANUFACTURER SHALL DESIGN AND THE CONTRACTOR SHALL CONSTRUCT FINAL WALL AND FACING SUCH THAT THE FINAL WALL FACING IS AT THE REQUIRED ELEVATION AFTER SETTLEMENT HAS TAKEN PLACE. THE ANTICIPATED SETTLEMENT IS 6 INCHES BEHIND THE FACE OF WALLS A2 AND B2. SEE SPECIAL PROVISIONS FOR SETTLEMENT MONITORING REQUIREMENTS.

12. SERVICE LIFE
    ALL RETAINING WALL COMPONENTS SHALL BE DESIGNED FOR A MINIMUM SERVICE LIFE OF 100 YEARS.

13. WALL SYSTEM
    ONLY ONE MSE WALL MANUFACTURER SYSTEM MAY BE USED ON THIS PROJECT.

14. TEMPORARY SUPPORT OF EMBANKMENT
    TEMPORARY SUPPORT OF EMBANKMENT IS REQUIRED AT THE REAR FACE OF BOTH ABUTMENT STEMS AND BACKWALLS TO ALLOW THE UNDERLYING SOILS TO PRECONSOLIDATE UNDER THE FINAL REQUIRED SOIL PRESSURE PRIOR TO PILE INSTALLATION. THE LIMITS OF THE TEMPORARY SUPPORT OF EMBANKMENT SHALL BE THE FULL ABUTMENT HEIGHT OVER THE FULL ABUTMENT LENGTH. THE TEMPORARY SUPPORT OF EMBANKMENT SHALL BE DESIGNED BY THE MSE WALL DESIGNER TO RESIST THE FULL HORIZONTAL EARTH PRESSURE AND HORIZONTAL SOIL PRESSURE DUE TO SURCHARGE OF SOIL AND THE CONTRACTOR'S EQUIPMENT AND MATERIALS. ALL MSE WALL REINFORCING STRIPS SHALL BE DESIGNED FOR A MINIMUM SERVICE LIFE OF 100 YEARS. THE DESIGN OF THE TEMPORARY SUPPORT OF EMBANKMENT SHALL BE COMPATIBLE WITH THE ABUTMENT ANCHORS SHOWN ON DWG. NOS. AB-02 AND AB-08. PAYMENT FOR CONSTRUCTION OF THE TEMPORARY SUPPORT OF EMBANKMENT WILL BE MADE UNDER ITEM NO. 602772 - MECHANICALLY STABILIZED EARTH WALLS. SEE THE SPECIAL PROVISIONS FOR ADDITIONAL INFORMATION AND REQUIREMENTS.

SOIL PROPERTIES

SOIL TYPE	UNIT WEIGHT (PCF)	DRAINED ANGLE OF FRICTION (DEGREES)	UNDRAINED SHEAR (PSF)
SELECT BACKFILL	125	34 MIN.	0
NO. 57 STONE (ABUTMENT B)	105	34 MIN.	0
IN-SITU FOUNDATION SOIL	115	28	0
BORROW, TYPE C	120	32	0
RETAINED FILL	120	30	0

NOTES:

1. FOR MSE WALL PLAN, SEE GEOMETRIC AND FOOTING LAYOUT PLAN ON DWG. NO. FT-01.
2. FOR ABUTMENT A PLAN AND ELEVATION, SEE DWG. NO. AB-01.
3. FOR ABUTMENT A TYPICAL SECTION, SEE DWG. NO. AB-02.
4. FOR ABUTMENT A MSE WALL TYPICAL SECTIONS, SEE DWG. NOS. AB-04 THRU AB-06.
5. FOR TEMPORARY WETLAND ACCESS ROAD DETAILS, SEE SPECIAL PROVISIONS AND MAINTENANCE OF STREAMFLOW PLANS MS-07 THRU MS-10.

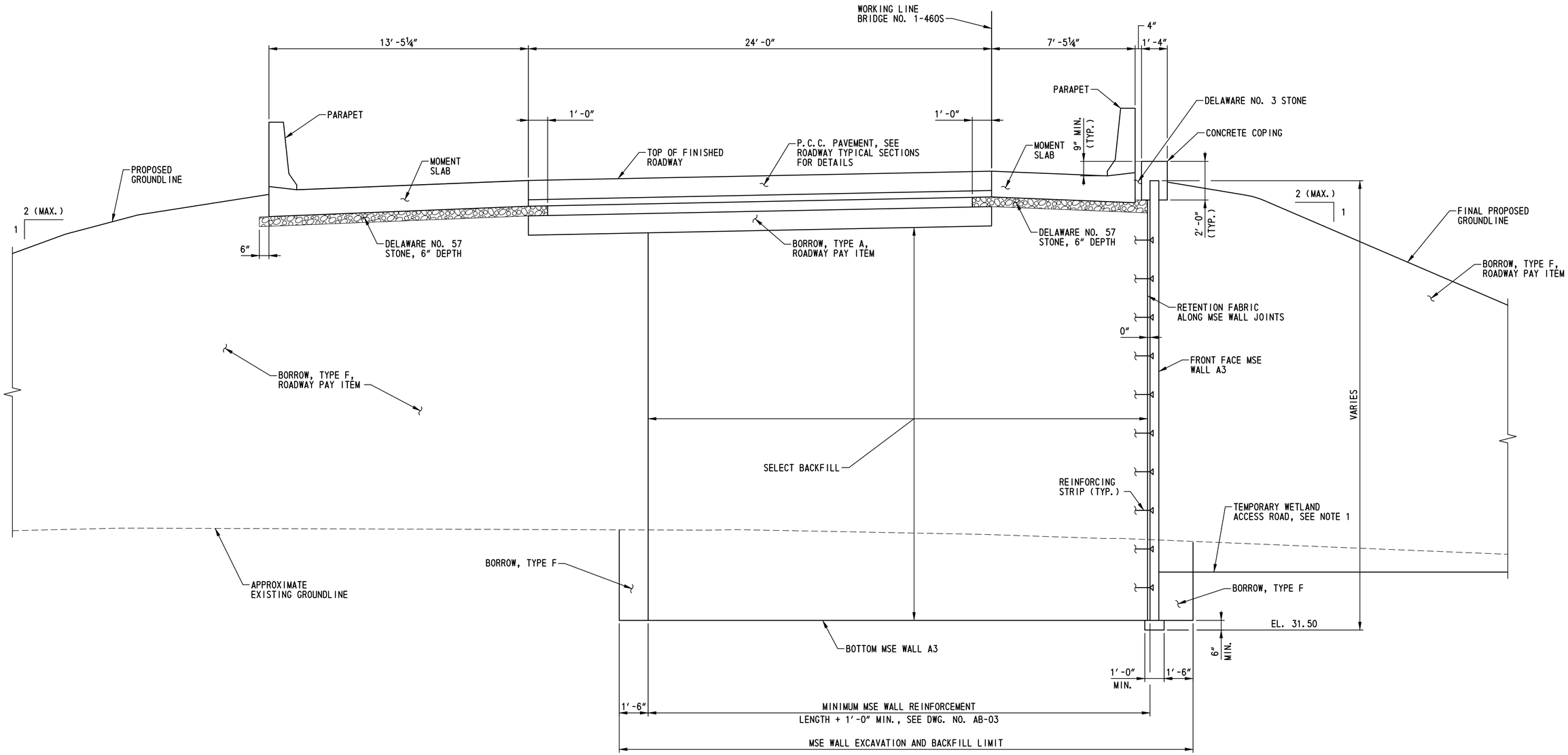

TYPICAL SECTION - STA. 806+08.33 TO STA. 806+13.33

SCALE: ⅜"=1'-0"

NOTES:

1. FOR WETLAND ROAD ACCESS ROAD DETAILS, SEE SPECIAL PROVISIONS AND MAINTENANCE OF STREAM FLOW PLANS MS-07 THRU MS-10.
2. FOR MSE WALL ELEVATION AND NOTES, SEE DWG. NO. AB-03.
3. FOR MOMENT SLAB DETAILS, SEE DWG. NO. AS-08.

n:\31653-000\contract 1a\cadd\bridge\br_no7\BR_No7S\AB04_br1-7S.dgn
10/24/2012 11:50:06 PM

DELAWARE DEPARTMENT OF TRANSPORTATION	ADDENDUMS / REVISIONS	SCALE: AS NOTED	US 301, SR 896 TO SR 1	CONTRACT T200911308	BRIDGE NO. 1-460S	ABUTMENT A MSE WALL TYPICAL SECTIONS - 1	BR1-7S AB-04
				COUNTY NEW CASTLE	DESIGNED BY: A.D.D.		SHEET NO. 449
					CHECKED BY: P.S.D.		TOTAL SHTS. 875

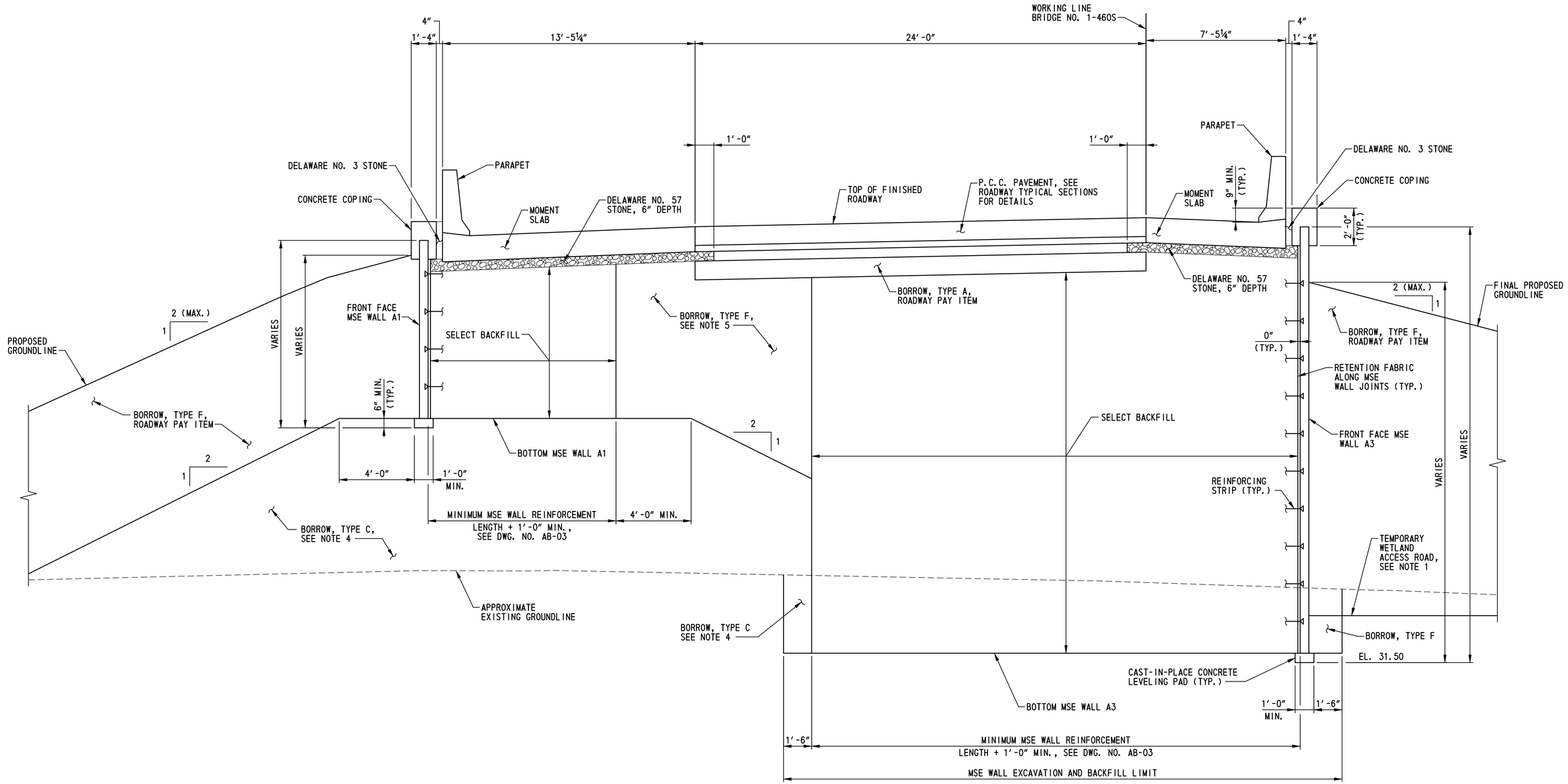

TYPICAL SECTION - STA. 806+13.33 TO STA. 806+37.17

SCALE: ⅜"=1'-0"

NOTES:

1. FOR WETLAND ACCESS ROAD DETAILS, SEE SPECIAL PROVISIONS AND MAINTENANCE OF STREAM FLOW PLANS MS-07 THRU MS-10.
2. FOR MSE WALL ELEVATIONS AND NOTES, SEE DWG. NO. AB-03.
3. FOR MOMENT SLAB DETAILS, SEE DWG. NO. AS-08.
4. BORROW, TYPE C SHALL BE OBTAINED FROM BORROW SOURCES AND PAID UNDER ITEM 202000 - EXCAVATION AND EMBANKMENT.
5. BORROW, TYPE F SHALL BE PAID UNDER ITEM 202000 - EXCAVATION AND EMBANKMENT.

BR1-7S
AB-05

DELAWARE DEPARTMENT OF TRANSPORTATION	ADDENDUMS / REVISIONS	SCALE: AS NOTED	US 301, SR 896 TO SR 1	CONTRACT T200911308	BRIDGE NO. 1-460S	ABUTMENT A MSE WALL TYPICAL SECTIONS - 2	SHEET NO. 450
				COUNTY NEW CASTLE	DESIGNED BY: A.D.D.		TOTAL SHTS. 875
					CHECKED BY: P.S.D.		

r:\31653-000\contract 1a\cadd\bridge\br_no7\BR_No7SVAB05_br1-7S.dgn
10/24/2012 11:50:07 PM

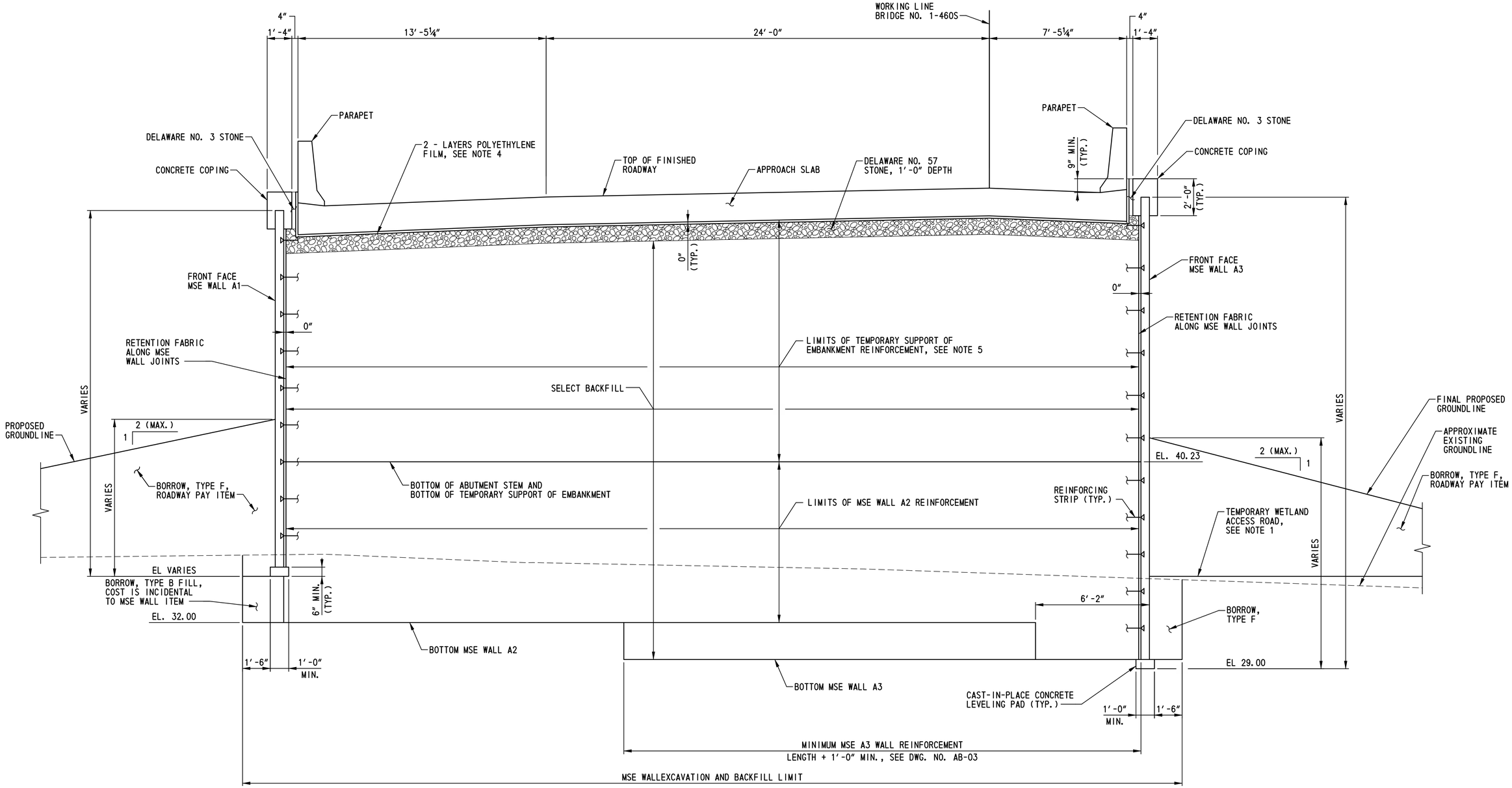

TYPICAL SECTION - STA. 806+37.17 TO STA. 806+59.50

SCALE: ⅜"=1'-0"

NOTES:

1. FOR WETLAND ACCESS ROAD DETAILS, SEE SPECIAL PROVISIONS AND MAINTENANCE OF STREAM FLOW PLANS MS-07 THRU MS-10.
2. FOR MSE WALL ELEVATION AND NOTES, SEE DWG. NO. AB-03.
3. FOR APPROACH SLAB DETAILS, SEE DWG. NO. AS-07.
4. FOR POLYETHYLENE FILM DETAILS, SEE DWG. NO. AS-07.
5. FOR TEMPORARY SUPPORT OF EMBANKMENT DETAILS, SEE DWG. NOS. AB-02 AND AB-03.

BR1-7S
AB-06

N:\31653-000\CONTRACT 1A\CADD\Bridge\Br_No7\BR_No7S\AB06_br1-7S.dgn
10/26/2012 3:29:44 PM

DELAWARE DEPARTMENT OF TRANSPORTATION	ADDENDUMS / REVISIONS	SCALE: AS NOTED	US 301, SR 896 TO SR 1	CONTRACT T200911308	BRIDGE NO. 1-460S	ABUTMENT A MSE WALL TYPICAL SECTIONS - 3	SHEET NO. 451
				COUNTY NEW CASTLE	DESIGNED BY: A.D.D.		TOTAL SHTS. 875
					CHECKED BY: P.S.D.		

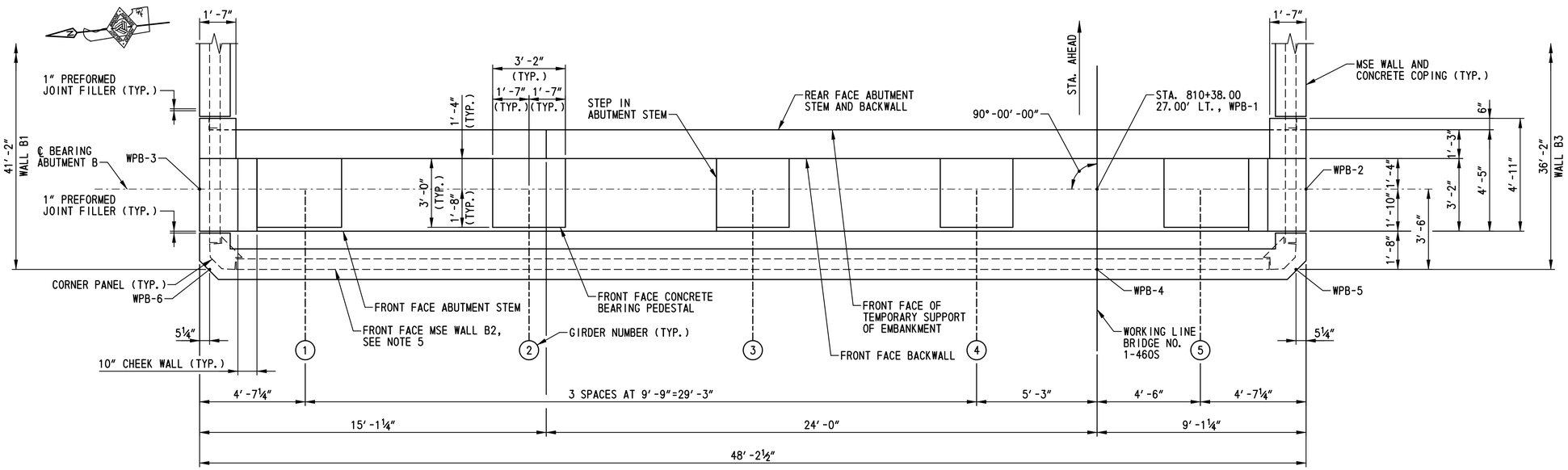

PLAN

SCALE: ⅜"=1'-0"

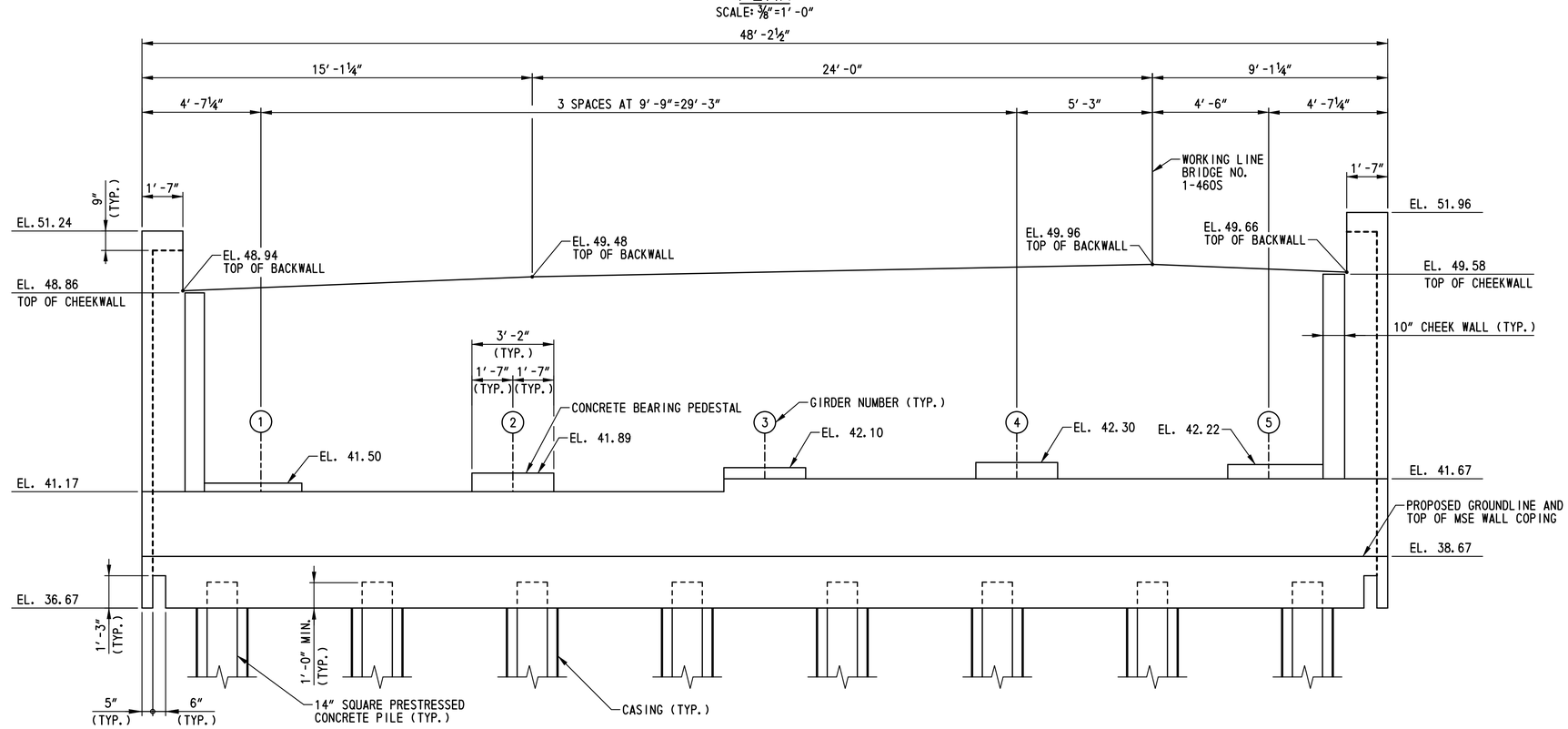

ELEVATION

SCALE: ⅜"=1'-0"

NOTES:

1. MSE WALL NOT SHOWN IN ELEVATION FOR CLARITY.
2. FOR APPROXIMATE EXISTING GROUNDLINE SEE DWG. NO. AB-09.
3. FOR PILE LAYOUT SEE DWG. NO. PL-01.
4. FOR ABUTMENT B TYPICAL SECTION SEE DWG. NO. AB-08.
5. FOR ABUTMENT B MSE WALL TYPICAL SECTIONS SEE DWG. NO. AB-10 THRU AB-12.

N:\31653-000\Contract 1A\CADD\Bridge\Br_No7\BR_No7S\AB07_br1-7S.dgn
11/7/2012 8:40:17 AM

DELAWARE DEPARTMENT OF TRANSPORTATION	ADDENDUMS / REVISIONS	SCALE: AS NOTED	US 301, SR 896 TO SR 1	CONTRACT T200911308	BRIDGE NO. 1-460S	ABUTMENT B PLAN AND ELEVATION	BR1-7S AB-07
				COUNTY NEW CASTLE	DESIGNED BY: A.D.D.		SHEET NO. 452
					CHECKED BY: P.S.D.		TOTAL SHTS. 875

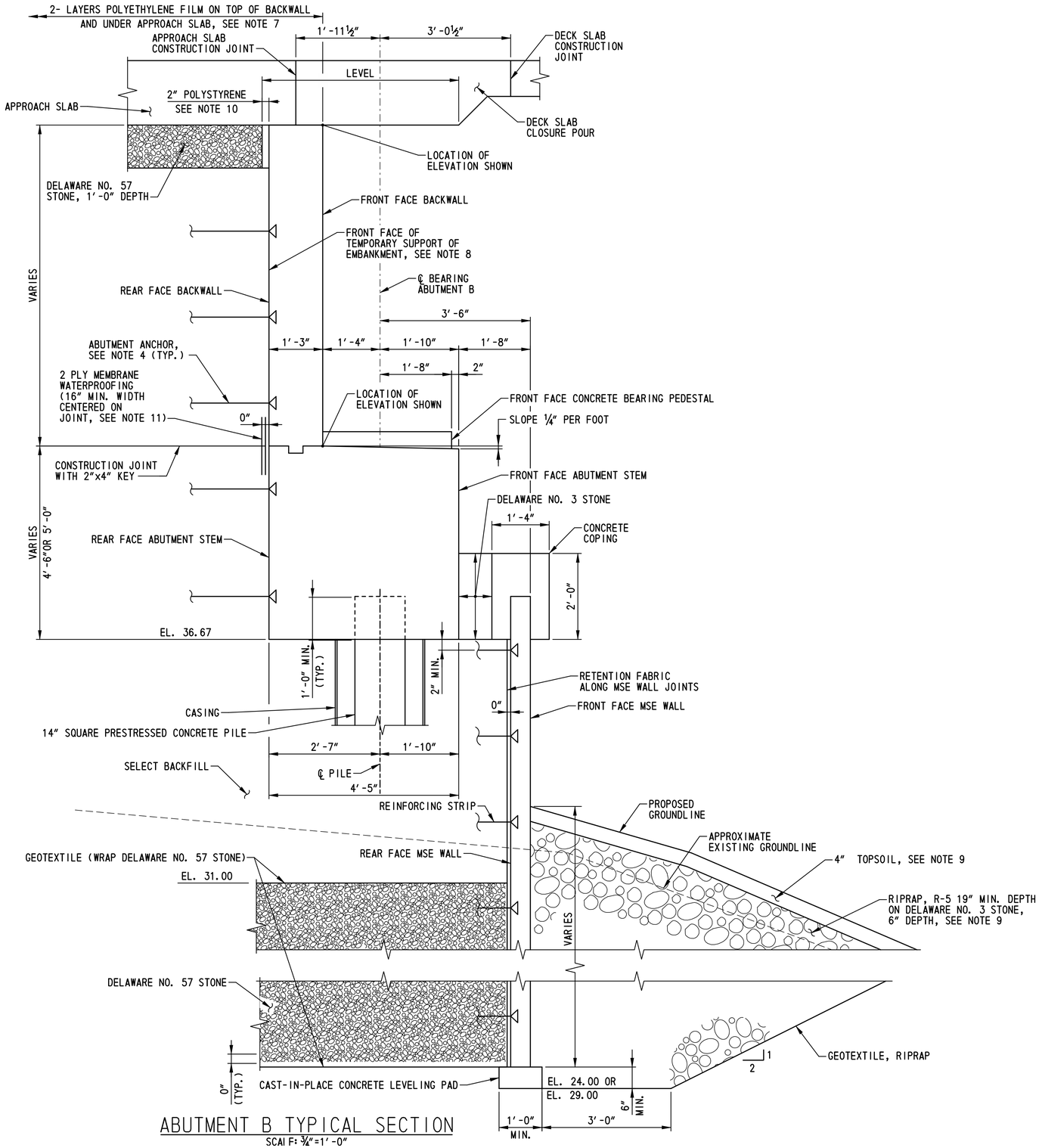

ABUTMENT B TYPICAL SECTION

SCALE: ¾"=1'-0"

NOTES:

1. FOR PILE LAYOUT, SEE DWG. NO. PL-01.
2. FOR ABUTMENT B PLAN AND ELEVATION, SEE DWG. NO. AB-07.
3. FOR ABUTMENT B MSE WALL ELEVATION, SEE DWG. NO. AB-09.
4. PROVIDE ABUTMENT ANCHORS IN SELECT BACKFILL. SEE ABUTMENT ANCHOR DETAIL ON DWG. NO. AB-02. ABUTMENT ANCHORS SHALL BE DESIGNED FOR A MINIMUM FACTORED HORIZONTAL FORCE OF 2.0 KIPS PER FOOT OF ABUTMENT LENGTH. THE POINT OF APPLICATION OF FORCES SHALL BE AT THE CENTER OF BEARINGS. DESIGN OF ABUTMENT ANCHORS SHALL BE COMPATIBLE WITH THE TEMPORARY SUPPORT OF EMBANKMENT DESIGN. PAYMENT FOR ABUTMENT ANCHORS WILL BE INCIDENTAL TO ITEM 602772 - MECHANICALLY STABILIZED EARTH WALLS.
5. PROPRIETARY WALL MANUFACTURER SHALL DESIGN AND CONTRACTOR SHALL CONSTRUCT FINAL WALL AND FACING SUCH THAT THE FINAL WALL FACING IS AT THE REQUIRED ELEVATION AFTER SETTLEMENT HAS TAKEN PLACE.
6. THE ANTICIPATED SETTLEMENT IS 6 INCHES BEHIND THE FACE OF WALL.
7. TOP OF BACKWALL SHALL BE STEEL TROWEL FINISHED. TWO LAYERS OF WHITE POLYETHYLENE FILM SHALL BE PLACED ON TOP OF THE BACKWALLS PRIOR TO PLACEMENT OF THE APPROACH AND DECK SLAB REINFORCEMENT. THE FILM SHALL BE FASTENED TO THE FRONT FACE OF THE BACKWALL AND LAPPED 2'-0" MINIMUM WITH THE FILM PLACED ON THE FINISHED SUBGRADE FOR THE APPROACH SLAB. COST SHALL BE INCIDENTAL TO ITEM 602014 - PORTLAND CEMENT CONCRETE MASONRY, APPROACH SLAB, CLASS D. FOR ADDITIONAL REQUIREMENTS, SEE DWG. NO. AS-07.
8. FOR TEMPORARY SUPPORT OF EMBANKMENT REQUIREMENTS, SEE NOTE 14 ON DWG. NO. AB-03.
9. RECESS, CHOKE, TOPSOIL, SEED AND MULCH RIPRAP IN CONFORMANCE WITH THE ENVIRONMENTAL COMPLIANCE NOTES ON DWG. NO. EC-04.
10. EXPANDED POLYSTYRENE SHALL CONFORM TO ASTM C 578, EXCEPT THAT THE MAXIMUM ALLOWABLE WATER ABSORPTION SHALL BE 2%. COST SHALL BE INCIDENTAL TO ITEM 602014 - PORTLAND CEMENT CONCRETE MASONRY, APPROACH SLAB, CLASS D.
11. MEMBRANE WATERPROOFING SHALL BE INCIDENTAL TO ITEM 602015 - PORTLAND CEMENT CONCRETE MASONRY, ABUTMENT ABOVE FOOTING, CLASS A. SEE SPECIAL PROVISION ITEM 602616 - WATERPROOFING P.C.C. MASONRY SURFACES FOR ADDITIONAL REQUIREMENTS.

BR1-7S
AB-08

N:\31653-000\CONTRACT 1A\CADD\Bridge\Br_No7\BR_No7S\AB08_br1-7S.dgn
7/29/2015 3:50:38 PM

DELAWARE DEPARTMENT OF TRANSPORTATION

ADDENDUMS / REVISIONS

SCALE: AS NOTED

US 301, SR 896 TO SR 1

CONTRACT	BRIDGE NO.	1-460S
T200911308	DESIGNED BY: A.D.D.	
COUNTY		
NEW CASTLE	CHECKED BY: P.S.D.	

ABUTMENT B TYPICAL SECTION

SHEET NO.
453
TOTAL SHTS.
875

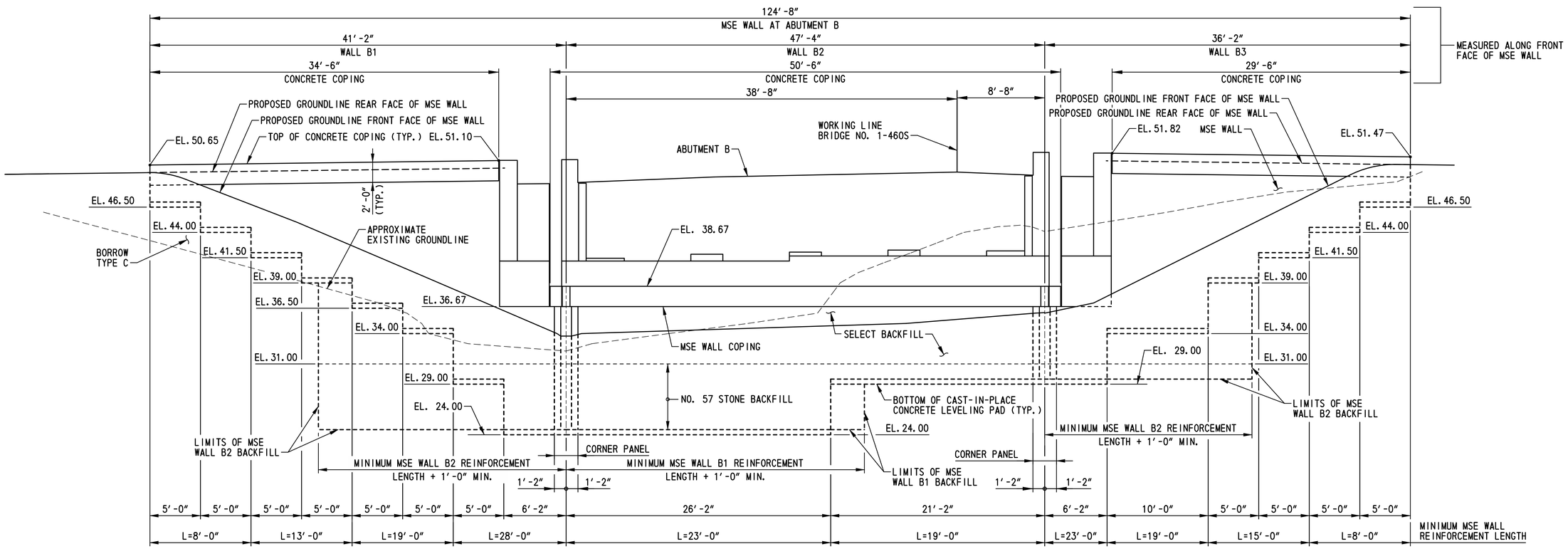

DEVELOPED ELEVATION

SCALE: 3/16″=1′-0″

NOTES:

1. FOR MSE WALL PLAN, SEE GEOMETRIC AND FOOTING LAYOUT PLAN ON DWG. NO. FT-01.
2. FOR NOTES AND SOIL PROPERTIES, SEE DWG. NO. AB-03.
3. FOR ABUTMENT B PLAN AND ELEVATION, SEE DWG. NO. AB-07.
4. FOR ABUTMENT B TYPICAL SECTION, SEE DWG. NO. AB-08.
5. FOR ABUTMENT B MSE WALL TYPICAL SECTIONS, SEE DWG. NOS. AB-10 THRU AB-12.

BR1-7S
AB-09

DELAWARE DEPARTMENT OF TRANSPORTATION	ADDENDUMS / REVISIONS	SCALE: AS NOTED	US 301, SR 896 TO SR 1	CONTRACT T200911308	BRIDGE NO. 1-460S	MSE WALL AT ABUTMENT B	SHEET NO. 454
				COUNTY NEW CASTLE	DESIGNED BY: A.D.D.		TOTAL SHTS. 875
					CHECKED BY: P.S.D.		

n:\31653-000\contract 10\cadd\bridge\br_no7\BR_No7S\AB09_br1-7S.dgn
10/24/2012 1:50:14 PM

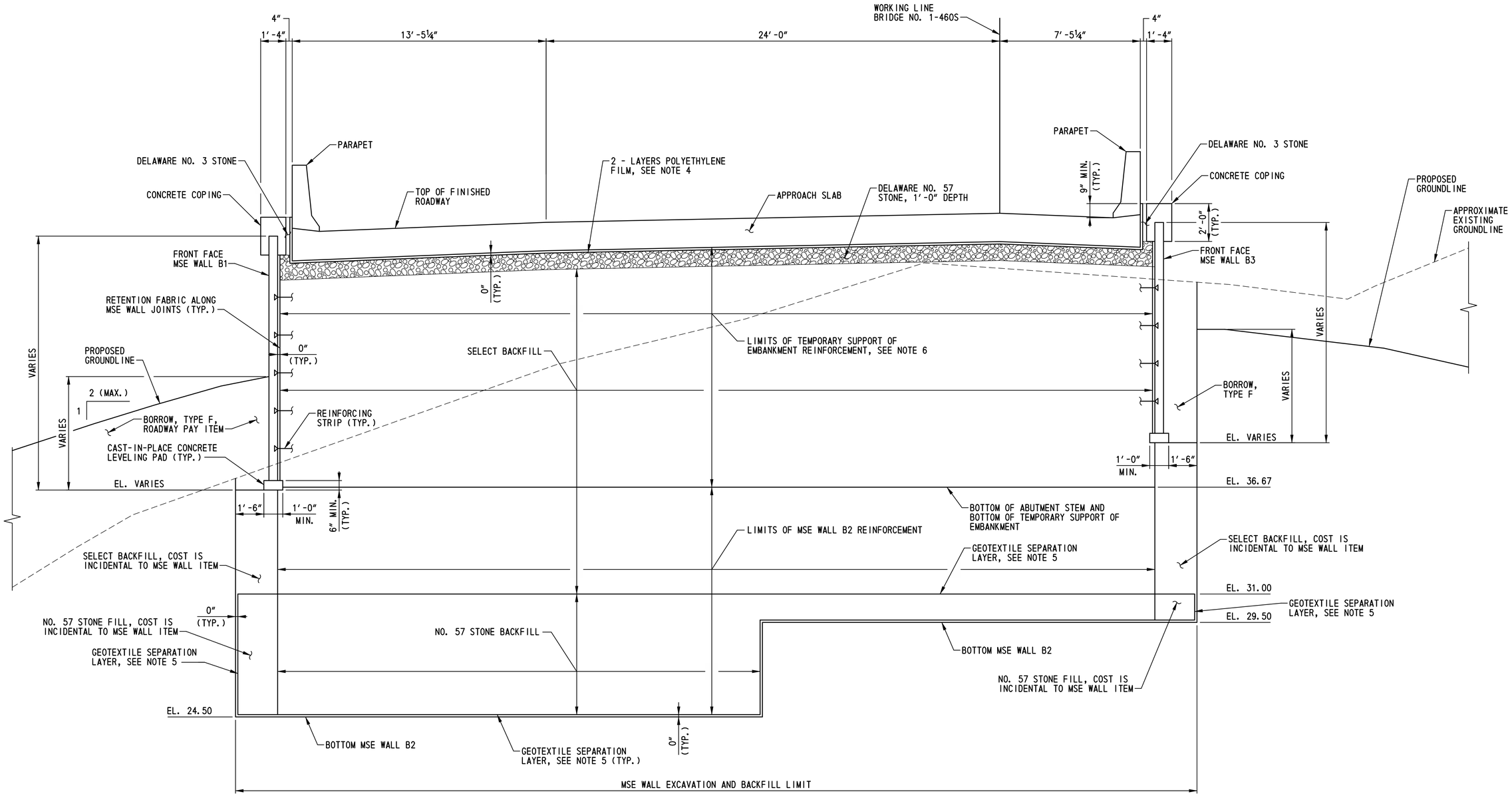

TYPICAL SECTION - STA. 810+40.58 TO STA. 810+56.83

SCALE: ⅜"=1'-0"

NOTES:

1. FOR MSE WALL ELEVATION SEE DWG. NO. AB-09.
2. FOR MSE WALL NOTES, SEE DWG. NO. AB-03.
3. FOR APPROACH SLAB DETAILS, SEE DWG. NO. AS-07.
4. FOR POLYETHYLENE FILM DETAILS, SEE DWG. NO. AS-07.
5. COST OF GEOTEXTILE SEPARATION LAYER IS INCIDENTAL TO ITEM 602772 - MECHANICALLY STABILIZED EARTH WALLS.
6. FOR TEMPORARY SUPPORT OF EMBANKMENT DETAILS, SEE DWG. NOS. AB-03 AND AB-08.

BR1-7S
AB-10

DELAWARE DEPARTMENT OF TRANSPORTATION	ADDENDUMS / REVISIONS	SCALE: AS NOTED	US 301, SR 896 TO SR 1	CONTRACT T200911308	BRIDGE NO. 1-460S	ABUTMENT B MSE WALL TYPICAL SECTIONS - 1	SHEET NO. 455
				COUNTY NEW CASTLE	DESIGNED BY: A.D.D.		TOTAL SHTS. 875
					CHECKED BY: P.S.D.		

r:\31653-000\contract 1a\cadd\bridge\br_no7\BR_No7S\AB10_br1-7S.dgn
10/24/2012 11:50:15 PM

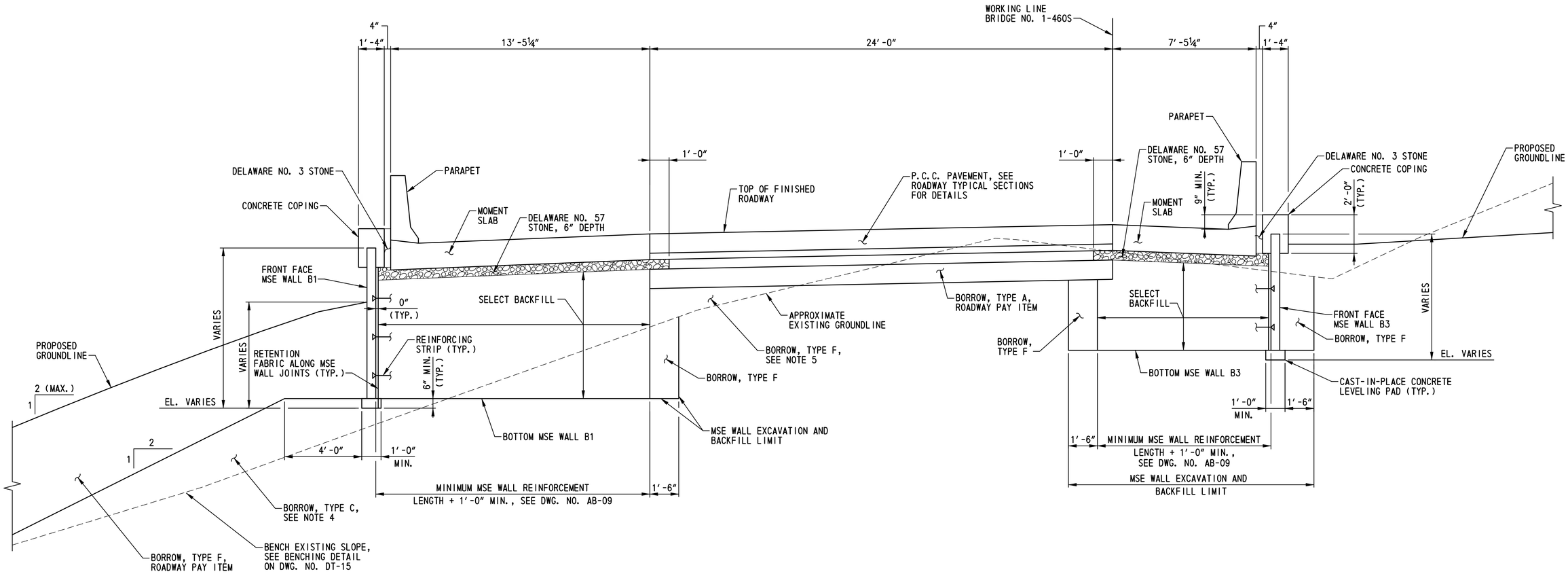

TYPICAL SECTION - STA. 810+56.83 TO STA. 810+70.67

SCALE: ⅜"=1'-0"

NOTES:

1. FOR MSE WALL ELEVATIONS, SEE DWG. NO. AB-09.
2. FOR MSE WALL NOTES, SEE DWG. NO. AB-03.
3. FOR MOMENT SLAB DETAILS, SEE DWG. NO. AS-08.
4. BORROW, TYPE C SHALL BE OBTAINED FROM BORROW SOURCES AND PAID UNDER ITEM 202000 - EXCAVATION AND EMBANKMENT.
5. BORROW, TYPE F SHALL BE PAID UNDER ITEM 202000 - EXCAVATION AND EMBANKMENT.

N:\31653-000\CONTRACT 1A\CADD\Bridge\Br_No7\BR_No7S\AB11_br1-7S.dgn
7/16/2015 2:05:37 PM

DELAWARE DEPARTMENT OF TRANSPORTATION	ADDENDUMS / REVISIONS	SCALE: AS NOTED	US 301, SR 896 TO SR 1	CONTRACT T200911308	BRIDGE NO. 1-460S	ABUTMENT B MSE WALL TYPICAL SECTIONS - 2	BR1-7S AB-11
				COUNTY NEW CASTLE	DESIGNED BY: A.D.D.		SHEET NO. 456
					CHECKED BY: P.S.D.		TOTAL SHTS. 875

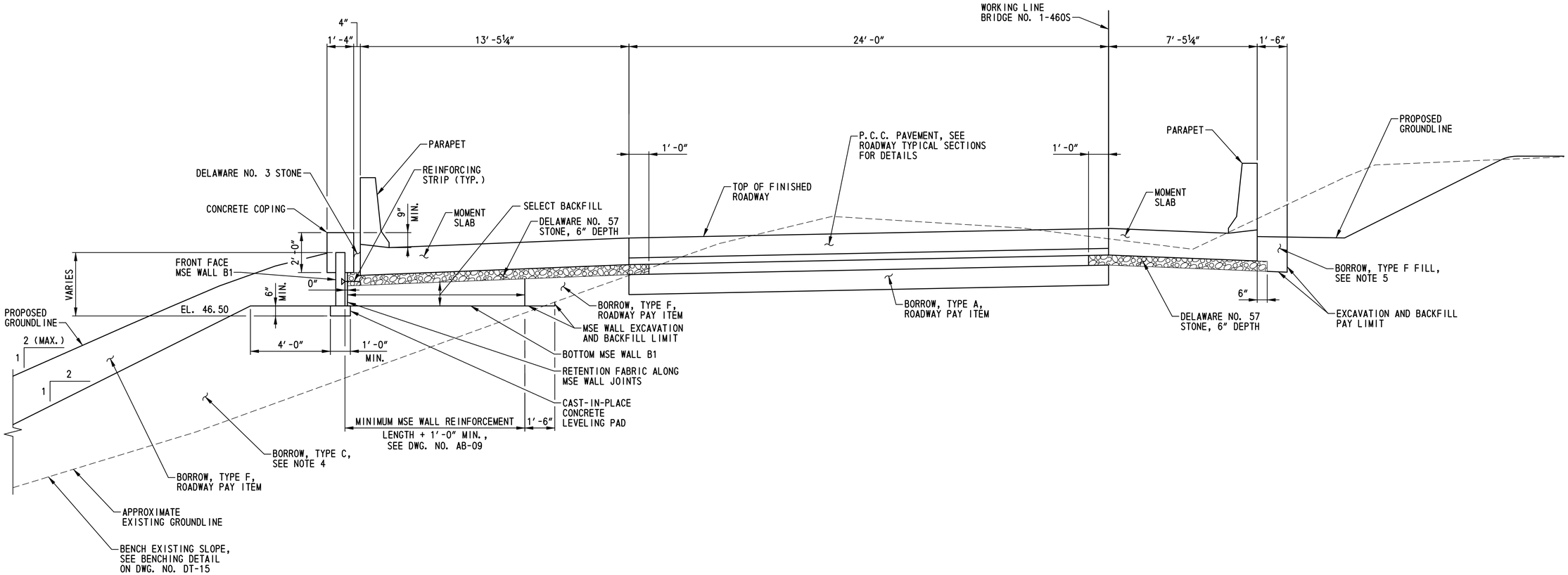

TYPICAL SECTION - STA. 810+70.67 TO STA. 810+75.67

SCALE: ⅜"=1'-0"

NOTES:

1. FOR MSE WALL ELEVATIONS, SEE DWG. NO. AB-09.
2. FOR MSE WALL NOTES, SEE DWG. NO. AB-03.
3. FOR MOMENT SLAB DETAILS, SEE DWG. NO. AS-08.
4. BORROW, TYPE C SHALL BE OBTAINED FROM BORROW SOURCES AND PAID UNDER ITEM 202000 - EXCAVATION AND EMBANKMENT.
5. BORROW, TYPE F SHALL BE PAID UNDER ITEM 202000 - EXCAVATION AND EMBANKMENT.

N:\31653-000\CONTRACT 1A\CADD\Bridge\Br_No7\BR_No7S\AB12_br1-7S.dgn
7/16/2015 2:06:45 PM

DELAWARE DEPARTMENT OF TRANSPORTATION	ADDENDUMS / REVISIONS	SCALE: AS NOTED	US 301, SR 896 TO SR 1	CONTRACT T200911308	BRIDGE NO. 1-460S	ABUTMENT B MSE WALL TYPICAL SECTIONS - 3	BR1-7S AB-12
				COUNTY NEW CASTLE	DESIGNED BY: A.D.D.		SHEET NO. 457
					CHECKED BY: P.S.D.		TOTAL SHTS. 875

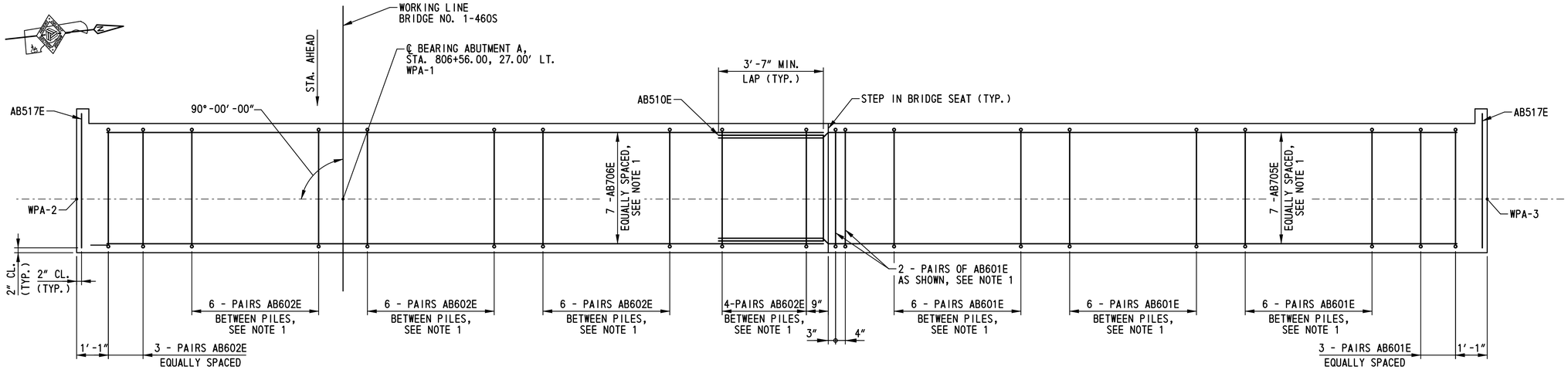

ABUTMENT A TOP MAT REINFORCEMENT PLAN

SCALE: ½″=1′-0″

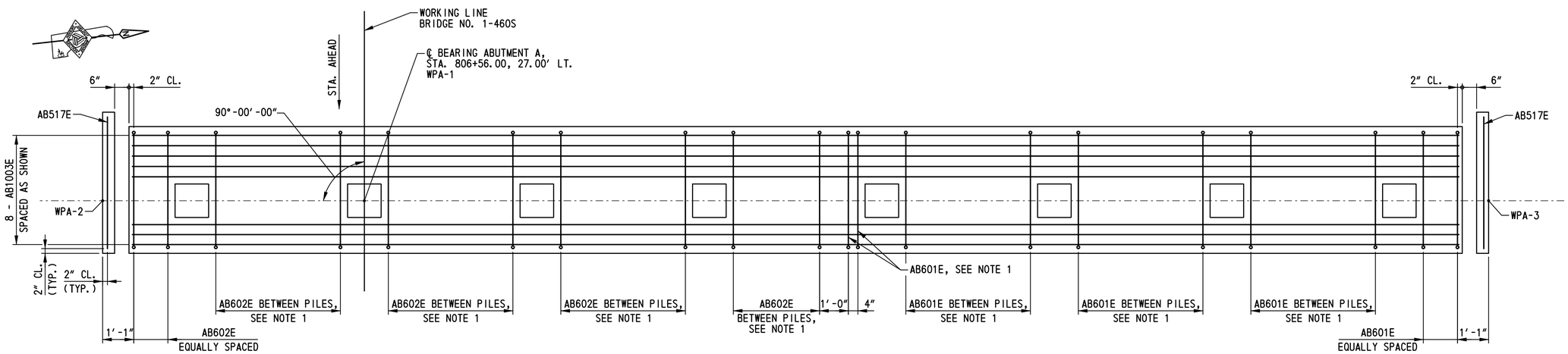

ABUTMENT A BOTTOM MAT REINFORCEMENT PLAN

SCALE: ½″=1′-0″

NOTES:

1. SPACE REINFORCING STEEL AS NECESSARY TO CLEAR ANCHOR BOLTS. FOR ADDITIONAL INFORMATION, SEE DWG. NOS. BB-01 AND AB-14.
2. FOR ADDITIONAL REINFORCEMENT DETAILS, SEE DWG. NOS. AB-14 AND AB-15.
3. REINFORCING STEEL OVER PILES NOT SHOWN FOR CLARITY. FOR ADDITIONAL INFORMATION, SEE DWG. NO. PL-01.

BR1-7S
AB-13

DELAWARE
DEPARTMENT OF TRANSPORTATION

ADDENDUMS / REVISIONS

SCALE: AS NOTED

US 301,
SR 896 TO SR 1

CONTRACT	BRIDGE NO.	1-460S
T200911308	DESIGNED BY: A.D.D.	
COUNTY		
NEW CASTLE	CHECKED BY: P.S.D.	

ABUTMENT A
REINFORCEMENT
DETAILS - 1

SHEET NO. 458
TOTAL SHTS. 875

r:\31653-000\contract to\cadd\bridge\br_no7\BR_No7S\AB13_br1-7S.dgn
10/24/2012 1:50:19 PM

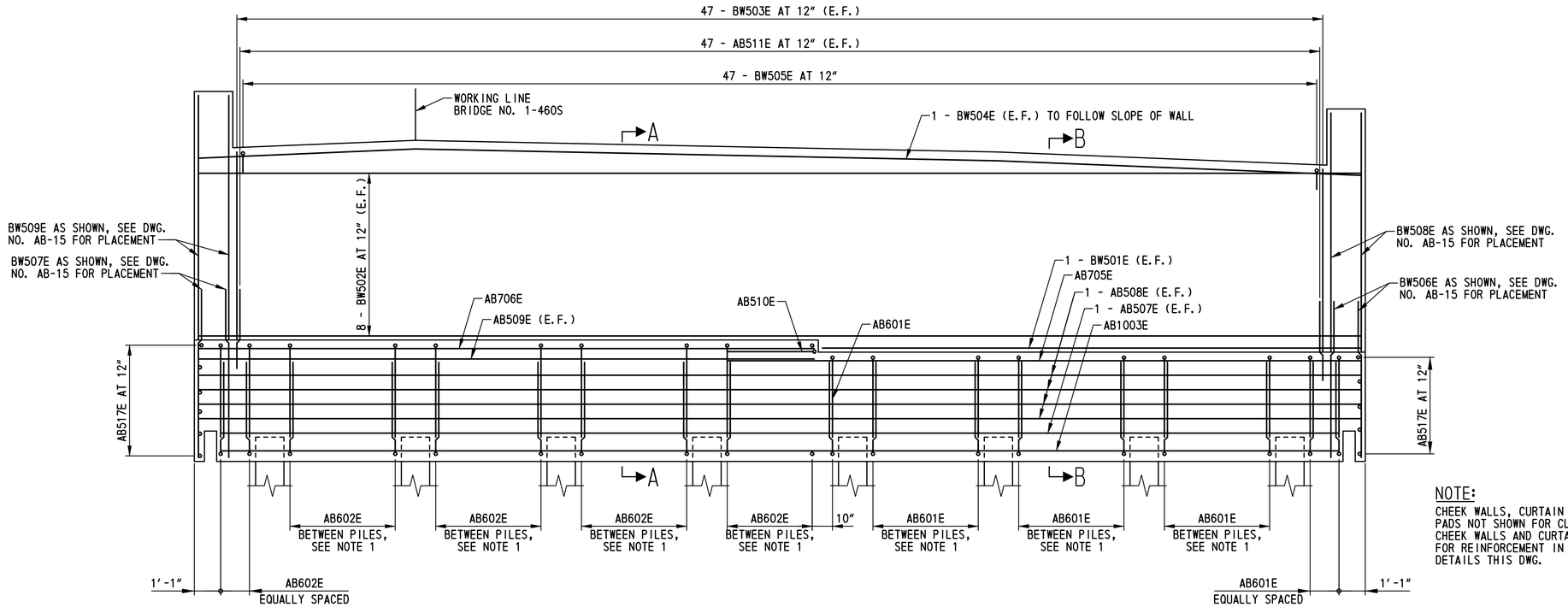

ABUTMENT A REINFORCEMENT

SCALE: 3/8"=1'-0"

NOTE:

CHEEK WALLS, CURTAIN WALLS, AND CONCRETE BEARING PADS NOT SHOWN FOR CLARITY. FOR REINFORCEMENT IN CHEEK WALLS AND CURTAIN WALLS SEE DWG. NO. AB-15. FOR REINFORCEMENT IN CONCRETE BEARING PAD SEE DETAILS THIS DWG.

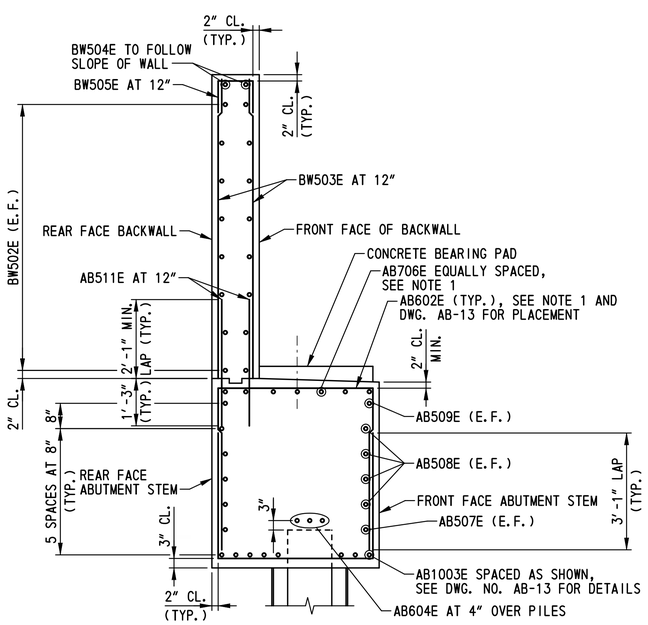

SECTION A-A

SCALE: 1/2"=1'-0"

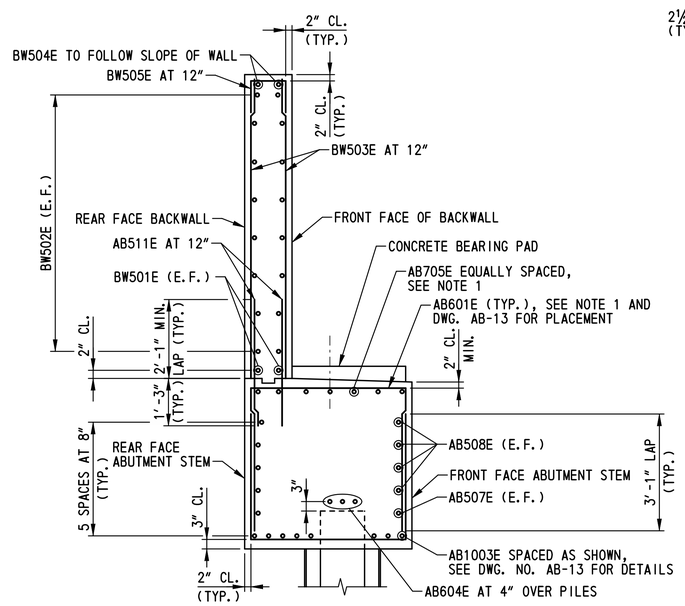

SECTION B-B

SCALE: 1/2"=1'-0"

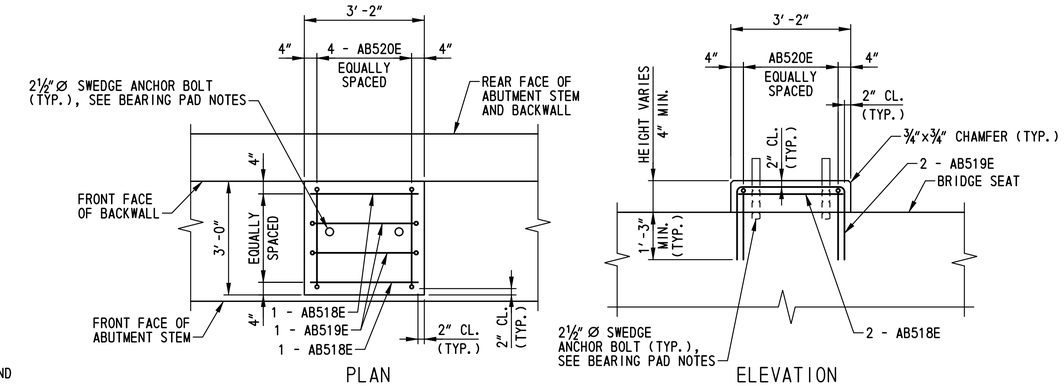

ABUTMENT CONCRETE BEARING PAD DETAILS

SCALE: 1/2"=1'-0"

BEARING PAD NOTES:

1. FOR ANCHOR BOLT DIMENSIONS AND LOCATION, SEE DWG. NO. BB-01.
2. ANCHOR BOLTS SHALL BE CAST IN PLACE. A TEMPORARY CASTING TEMPLATE SHALL BE USED TO ENSURE THE ANCHOR BOLTS ARE PROPERLY ALIGNED AND PLUMB. THE TEMPLATE SHALL BE REMOVED AFTER CONCRETE HAS SET.
3. SPACE REINFORCING STEEL AS NECESSARY TO CLEAR ANCHOR BOLTS.

NOTES:

1. SPACE REINFORCING STEEL AS NECESSARY TO CLEAR ANCHOR BOLTS. FOR ADDITIONAL INFORMATION, SEE DWG.NOS. BB-01 AND AB-13.
2. FOR ADDITIONAL REINFORCEMENT DETAILS, SEE DWG. NOS. AB-13 AND AB-15.
3. REINFORCING STEEL OVER PILES NOT SHOWN FOR CLARITY. FOR ADDITIONAL INFORMATION, SEE DWG. NO. PL-01.

BR1-7S
AB-14

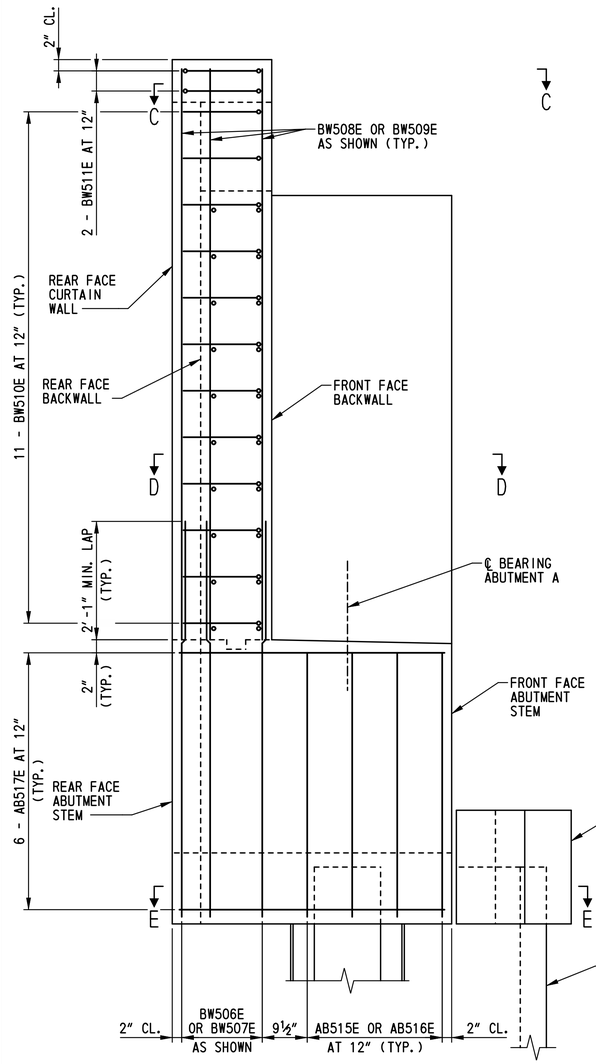

WING WALL ELEVATION
SCALE: ¾"=1'-0"

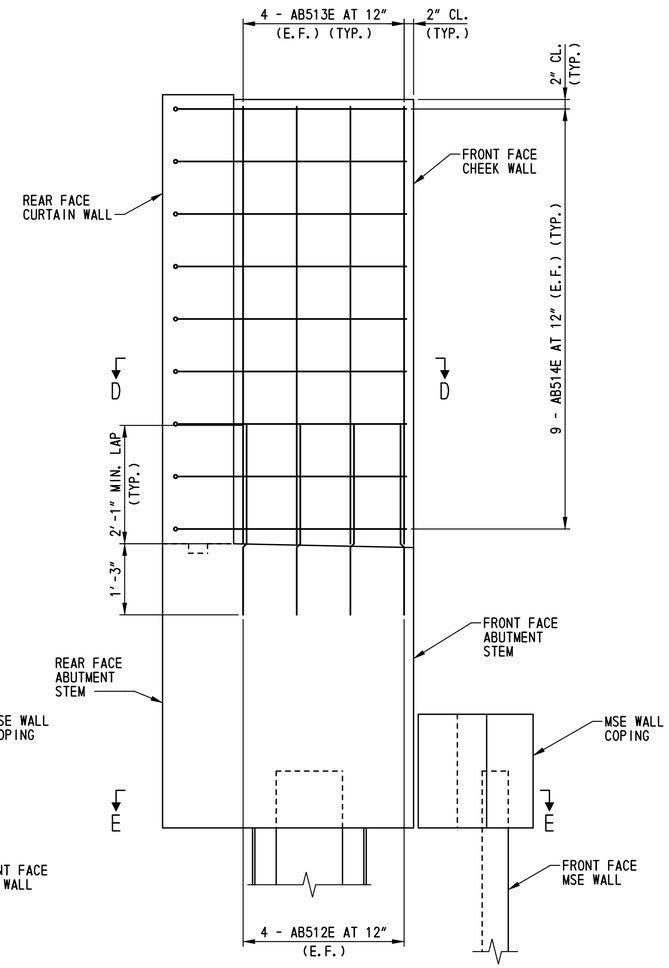

CHEEK WALL ELEVATION
SCALE: ¾"=1'-0"

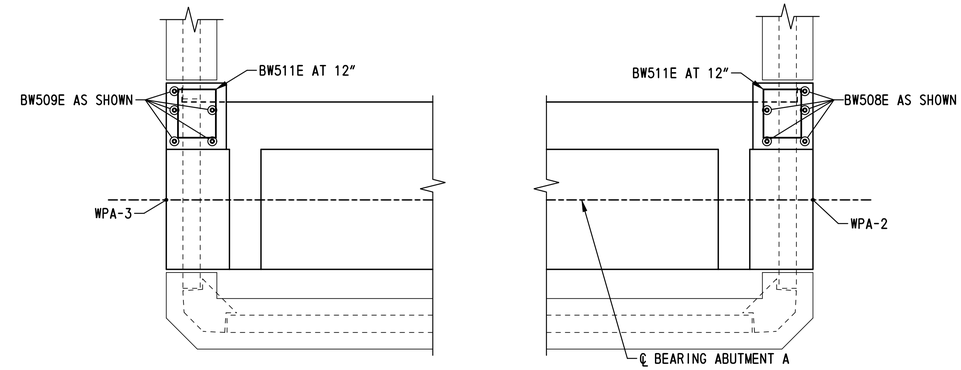

SECTION C-C
SCALE: ½"=1'-0"

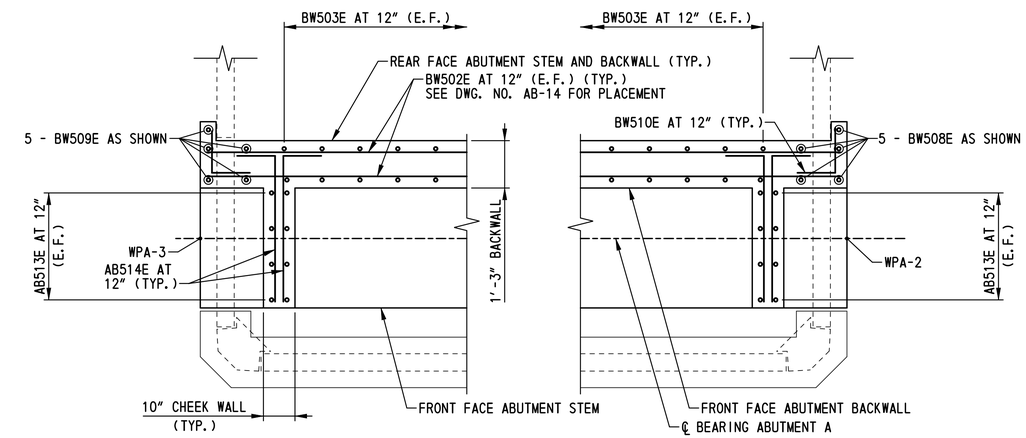

SECTION D-D
SCALE: ½"=1'-0"

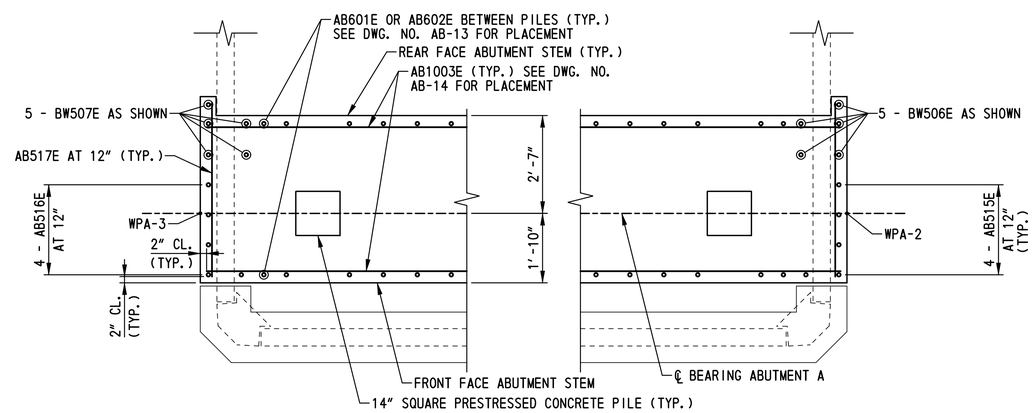

SECTION E-E
SCALE: ½"=1'-0"

n:\31653-000\contract 1a\cadd\bridge\br_no7\BR_No7S\AB15_br1-7S.dgn
10/24/2012 1:50:28 PM

DELAWARE DEPARTMENT OF TRANSPORTATION

ADDENDUMS / REVISIONS	

SCALE: AS NOTED

US 301, SR 896 TO SR 1

CONTRACT	BRIDGE NO.	1-460S
T200911308	DESIGNED BY: A.D.D.	
COUNTY		
NEW CASTLE	CHECKED BY: P.S.D.	

ABUTMENT A REINFORCEMENT DETAILS – 3

BR1-7S AB-15
SHEET NO.
460
TOTAL SHTS.
875

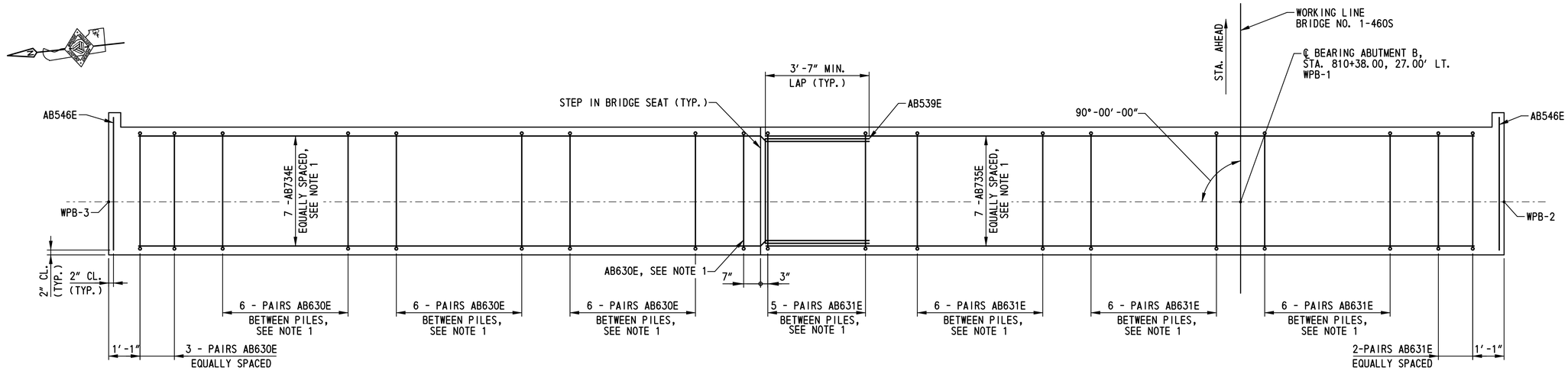

ABUTMENT B TOP MAT REINFORCEMENT PLAN

SCALE: 1/2 "=1'-0"

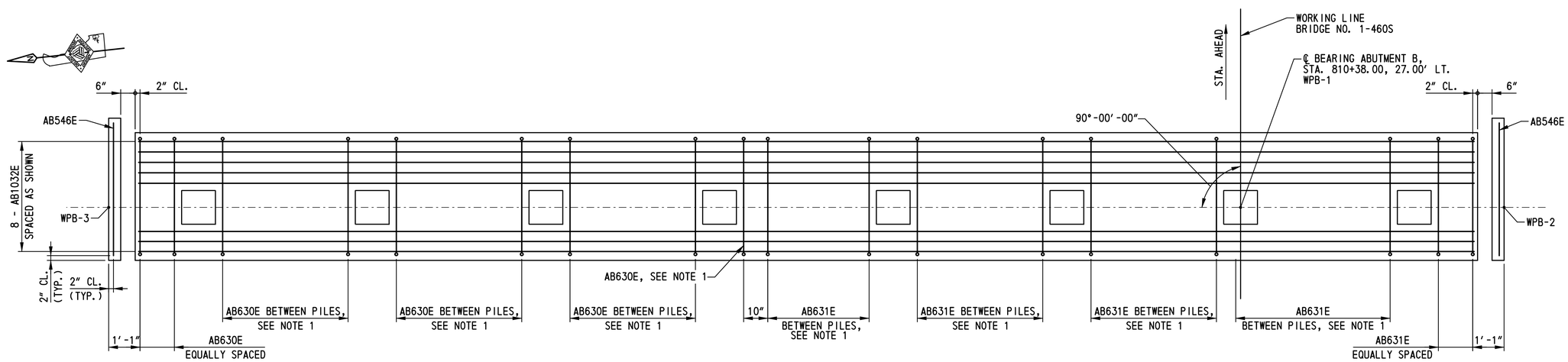

ABUTMENT B BOTTOM MAT REINFORCEMENT PLAN

SCALE: 1/2 "=1'-0"

NOTES:

1. SPACE REINFORCING STEEL AS NECESSARY TO CLEAR ANCHOR BOLTS. FOR ADDITIONAL INFORMATION, SEE DWG. NOS. BB-01 AND AB-17.
2. FOR ADDITIONAL REINFORCEMENT DETAILS, SEE DWG. NOS. AB-17 AND AB-18.
3. REINFORCING STEEL OVER PILES NOT SHOWN FOR CLARITY. FOR ADDITIONAL INFORMATION, SEE DWG. NO. PL-01.

BR1-7S
AB-16

DELAWARE DEPARTMENT OF TRANSPORTATION	ADDENDUMS / REVISIONS	SCALE: AS NOTED	US 301, SR 896 TO SR 1	CONTRACT T200911308	BRIDGE NO. 1-460S	ABUTMENT B REINFORCEMENT DETAILS - 1	SHEET NO. 461
				COUNTY NEW CASTLE	DESIGNED BY: A.D.D.		TOTAL SHTS. 875
					CHECKED BY: P.S.D.		

p:\31653-000\contract to\cadd\bridge\br_no7\BR_No7S\AB16_br1-7S.dgn
10/24/2012 11:50:28 PM

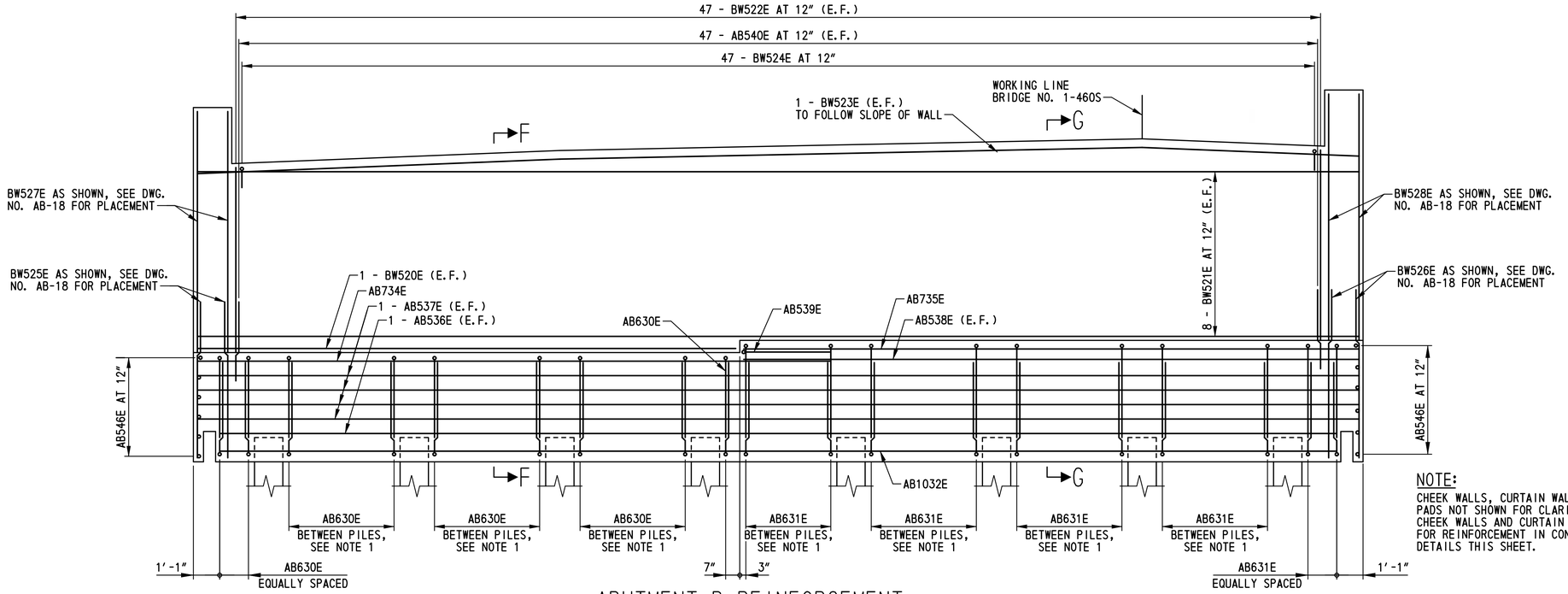

ABUTMENT B REINFORCEMENT

SCALE: 3/8"=1'-0"

NOTE:

CHEEK WALLS, CURTAIN WALLS, AND CONCRETE BEARING PADS NOT SHOWN FOR CLARITY. FOR REINFORCEMENT IN CHEEK WALLS AND CURTAIN WALLS SEE DWG. NO. AB-18. FOR REINFORCEMENT IN CONCRETE BEARING PAD SEE DETAILS THIS SHEET.

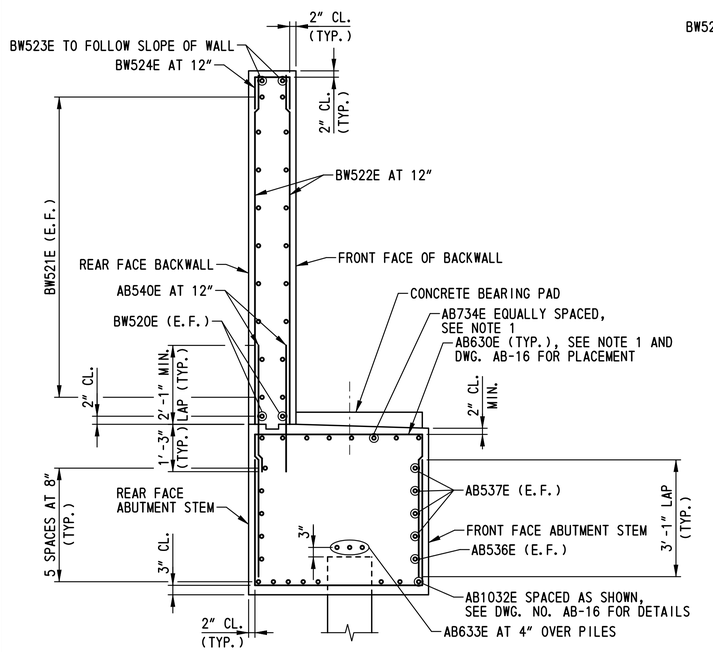

SECTION F-F

SCALE: 1/2"=1'-0"

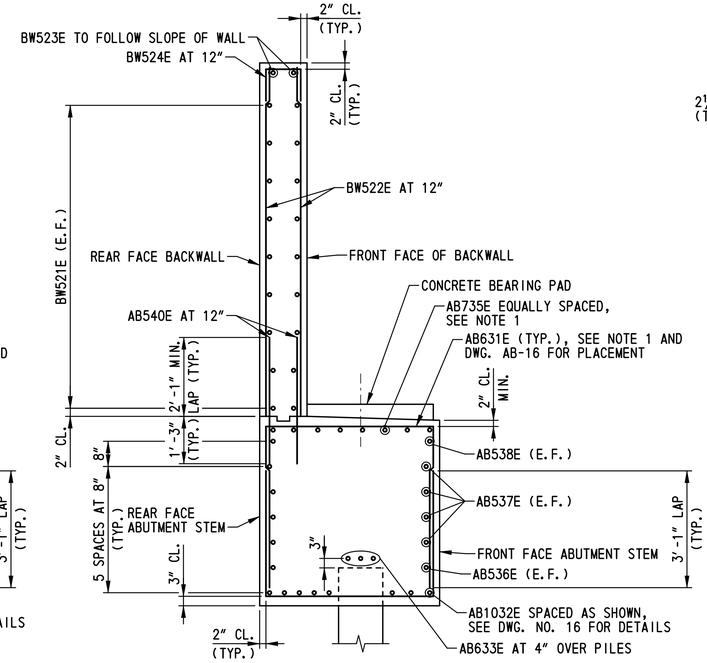

SECTION G-G

SCALE: 1/2"=1'-0"

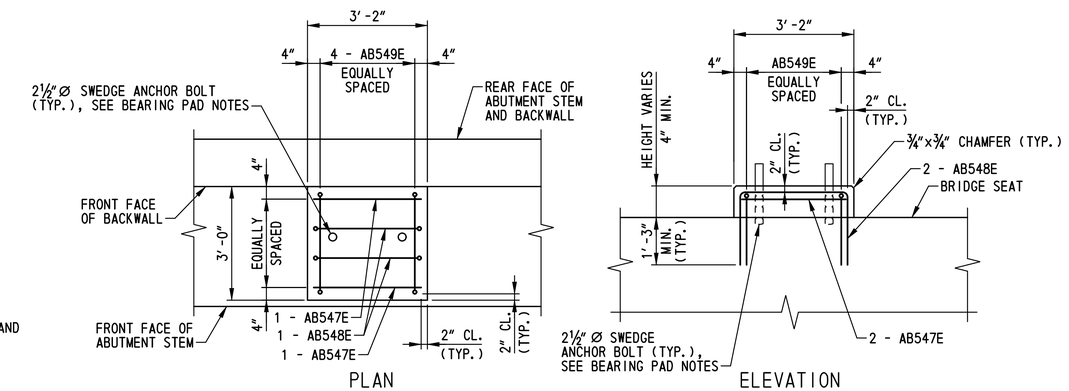

ABUTMENT CONCRETE BEARING PAD DETAILS

SCALE: 1/2"=1'-0"

BEARING PAD NOTES:

1. FOR ANCHOR BOLT DIMENSIONS AND LOCATION, SEE DWG. NO. BB-01.
2. ANCHOR BOLTS SHALL BE CAST IN PLACE. A TEMPORARY CASTING TEMPLATE SHALL BE USED TO ENSURE THE ANCHOR BOLTS ARE PROPERLY ALIGNED AND PLUMB. THE TEMPLATE SHALL BE REMOVED AFTER CONCRETE HAS SET.
3. SPACE REINFORCING STEEL AS NECESSARY TO CLEAR ANCHOR BOLTS.

NOTES:

1. SPACE REINFORCING STEEL AS NECESSARY TO CLEAR ANCHOR BOLTS. FOR ADDITIONAL INFORMATION, SEE DWG. NOS. BB-01 AND AB-16.
2. FOR ADDITIONAL REINFORCEMENT DETAILS, SEE DWG. NOS. AB-16 AND AB-18.
3. REINFORCING STEEL OVER PILES NOT SHOWN FOR CLARITY. FOR ADDITIONAL INFORMATION, SEE DWG. NO. PL-01.

BR1-7S
AB-17

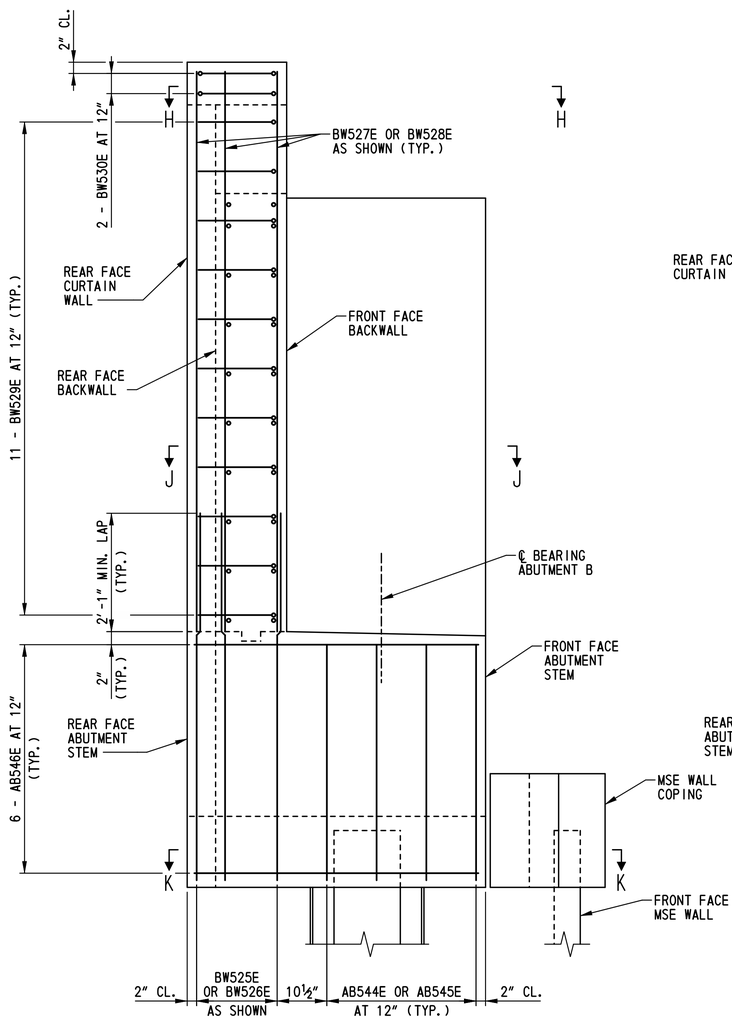

WING WALL ELEVATION
SCALE: ¾"=1'-0"

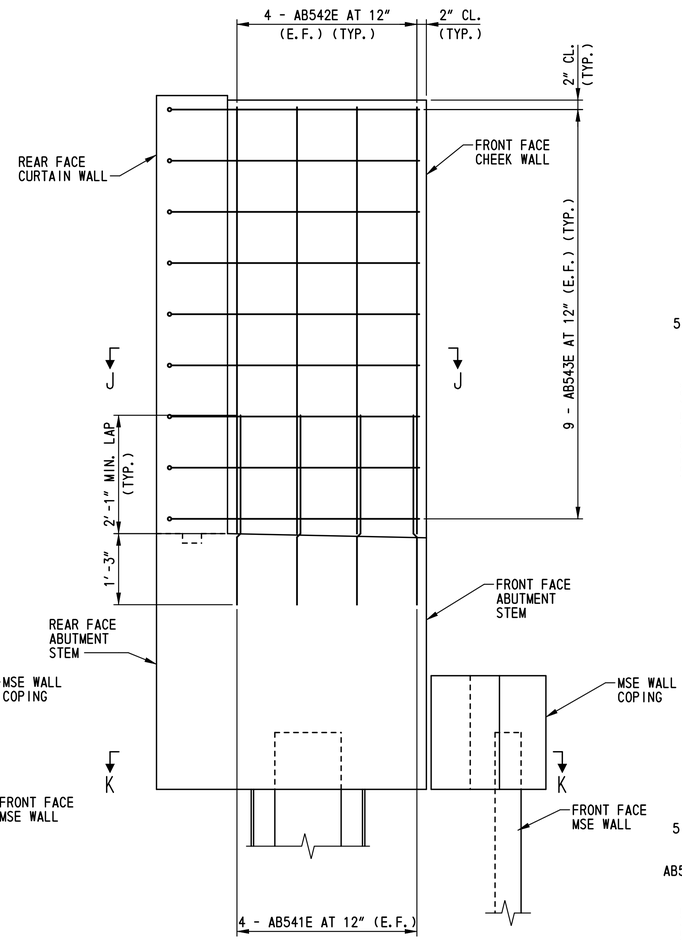

CHEEK WALL ELEVATION
SCALE: ¾"=1'-0"

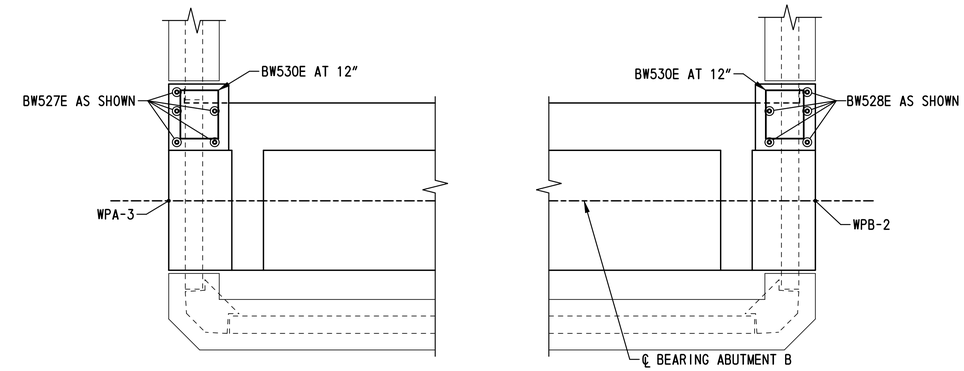

SECTION H-H
SCALE: ½"=1'-0"

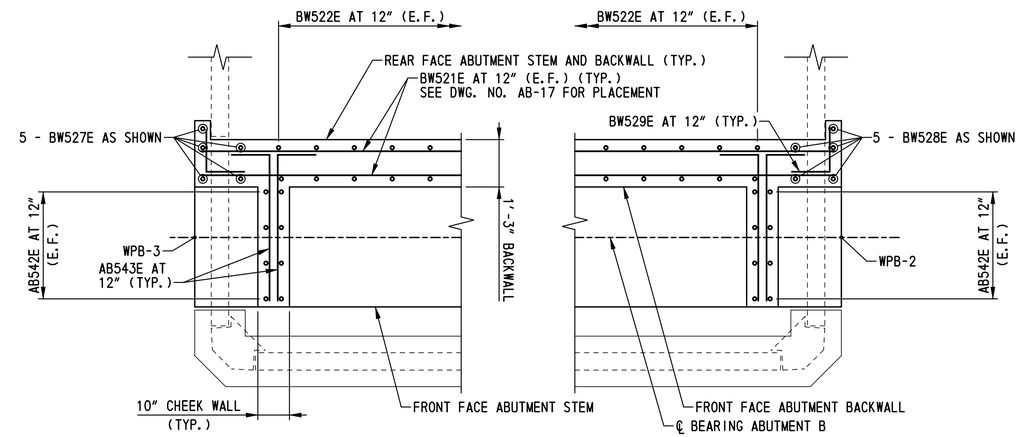

SECTION J-J
SCALE: ½"=1'-0"

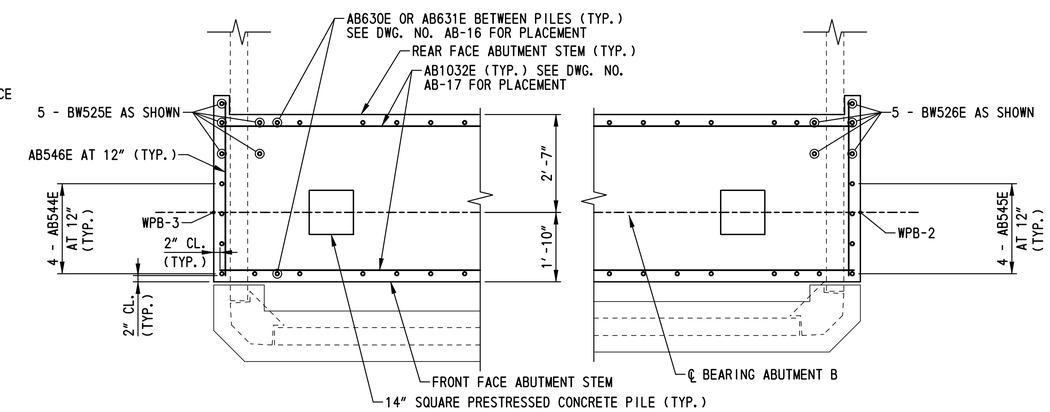

SECTION K-K
SCALE: ½"=1'-0"

n:\31653-000\contract 1a\cadd\bridge\br_no7\BR_No7S\AB18_br1-7S.dgn
10/24/2012 1:50:34 PM

DELAWARE DEPARTMENT OF TRANSPORTATION	ADDENDUMS / REVISIONS	SCALE: AS NOTED	US 301, SR 896 TO SR 1	CONTRACT T200911308	BRIDGE NO. 1-460S	ABUTMENT B REINFORCEMENT DETAILS – 3	BR1-7S AB-18
				COUNTY NEW CASTLE	DESIGNED BY: A.D.D.		SHEET NO. 463
					CHECKED BY: P.S.D.		TOTAL SHTS. 875

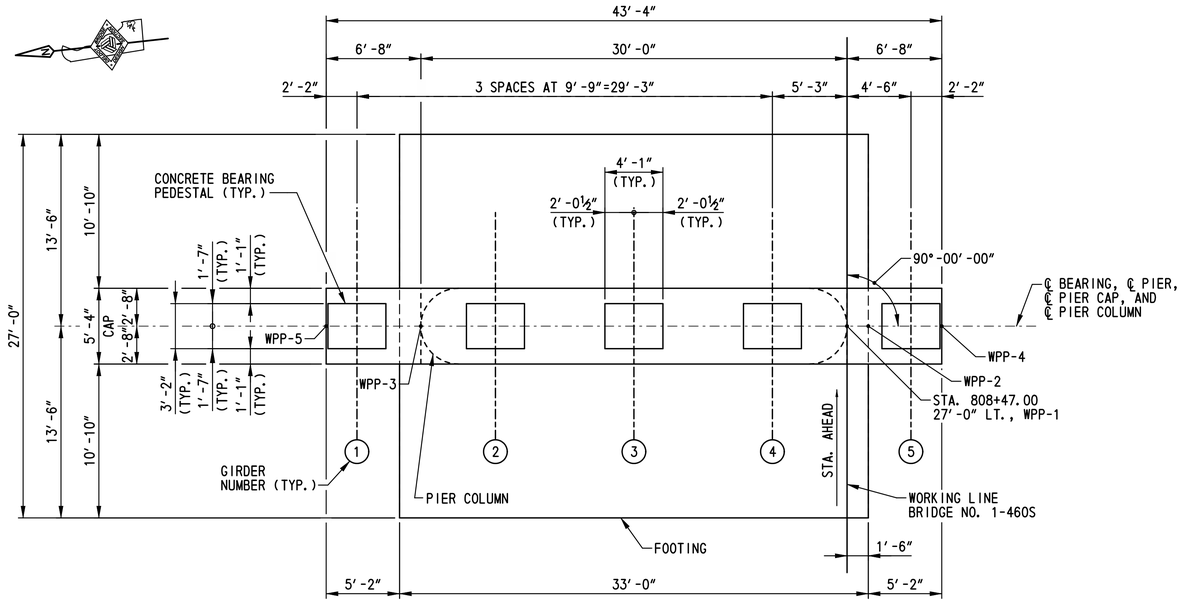

PLAN
SCALE: 3/16"=1'-0"

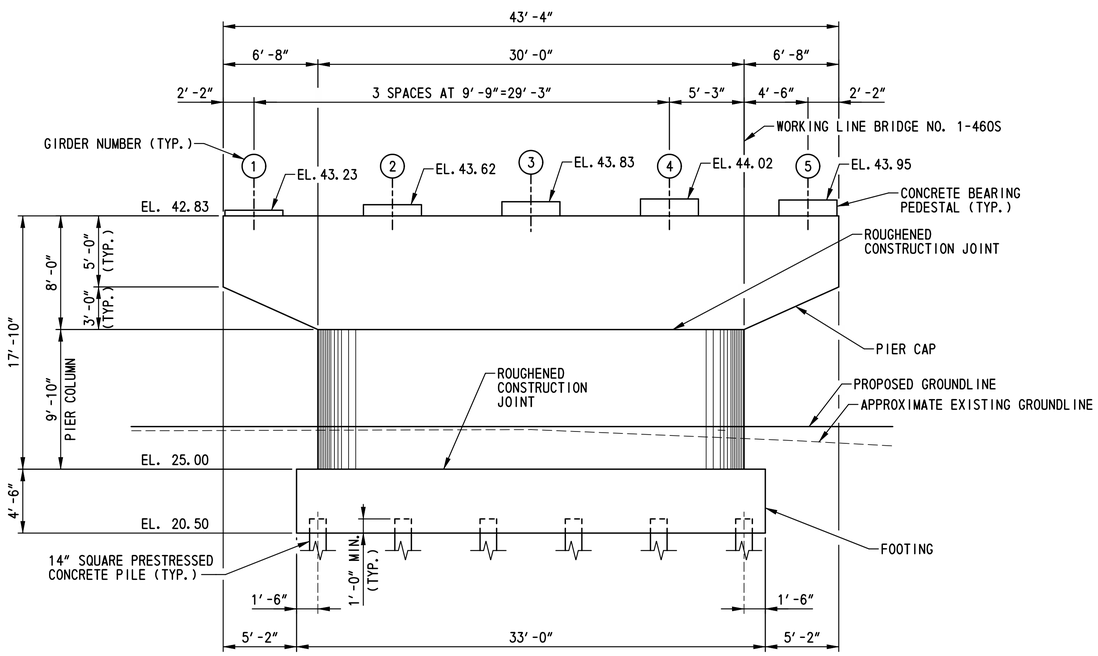

ELEVATION
SCALE: 3/16"=1'-0"

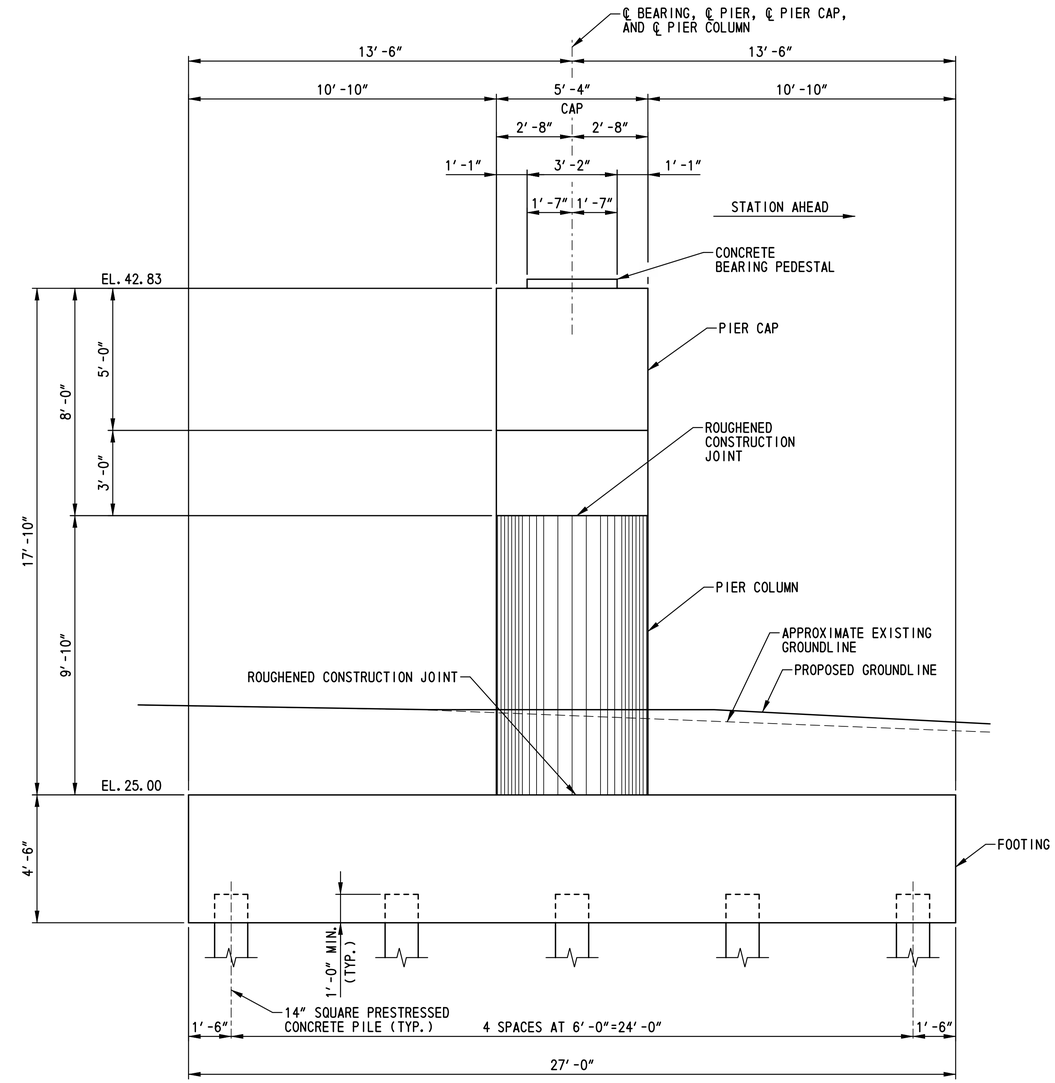

PIER SIDE ELEVATION
SCALE: 3/8"=1'-0"

NOTE:
1. FOR PILE LAYOUT, SEE DWG. NO. PL-01.
2. FOR PIER REINFORCEMENT DETAILS, SEE DWG. NOS. PR-02 AND PR-03.

N:\31653-000\CONTRACT 1A\CADD\Bridge\Br_No7\BR_No7S\PR01_br1-7S.dgn
7/8/2015 3:51:59 PM

DELAWARE DEPARTMENT OF TRANSPORTATION	ADDENDUMS / REVISIONS	SCALE: AS NOTED	US 301, SR 896 TO SR 1	CONTRACT T200911308	BRIDGE NO. 1-460S	PIER PLAN AND ELEVATIONS	BR1-7S PR-01
				COUNTY NEW CASTLE	DESIGNED BY: S.E.B.		SHEET NO. 464
					CHECKED BY: P.S.D.		TOTAL SHTS. 875

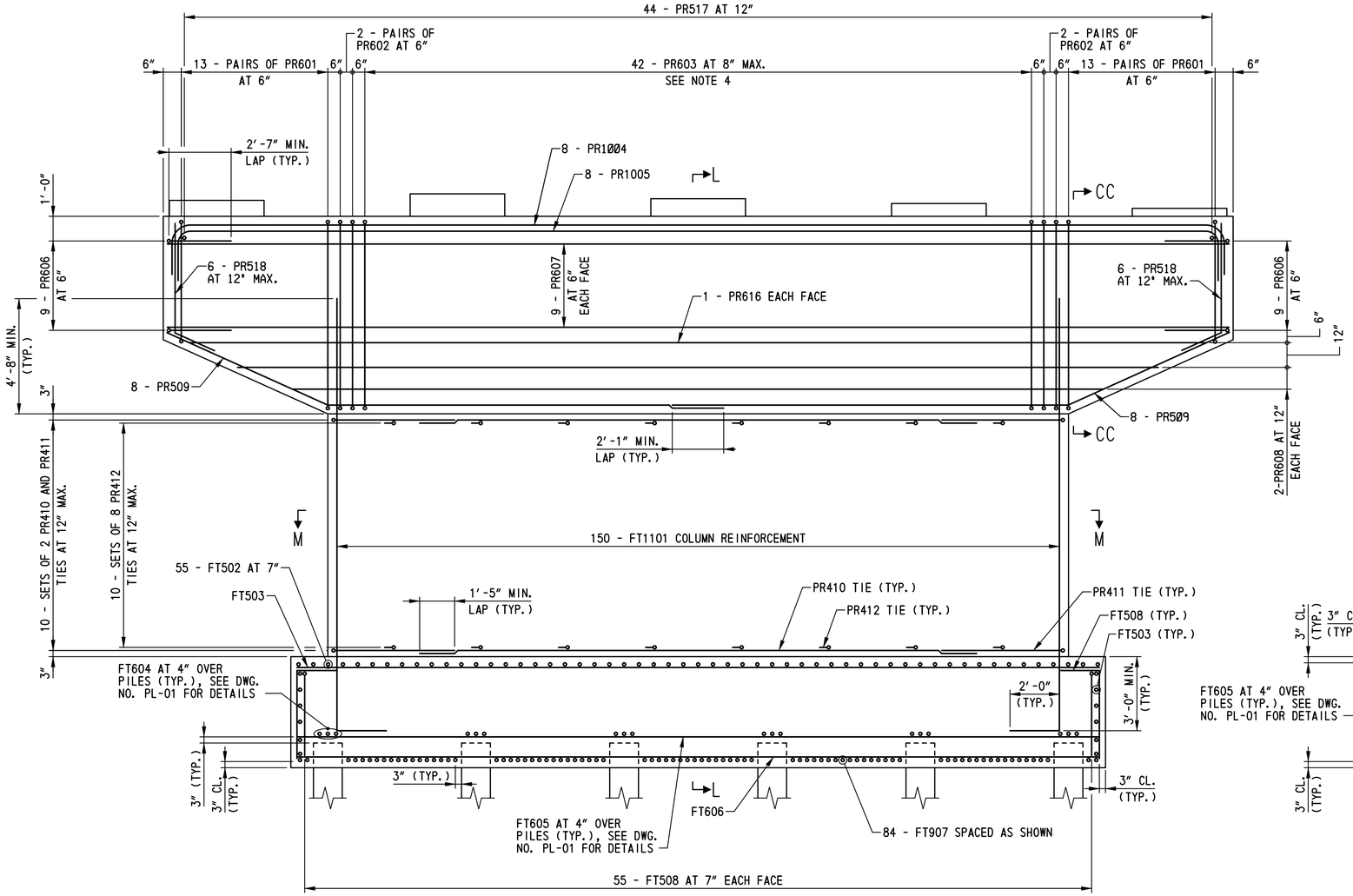

ELEVATION
SCALE: 3/8"=1'-0"

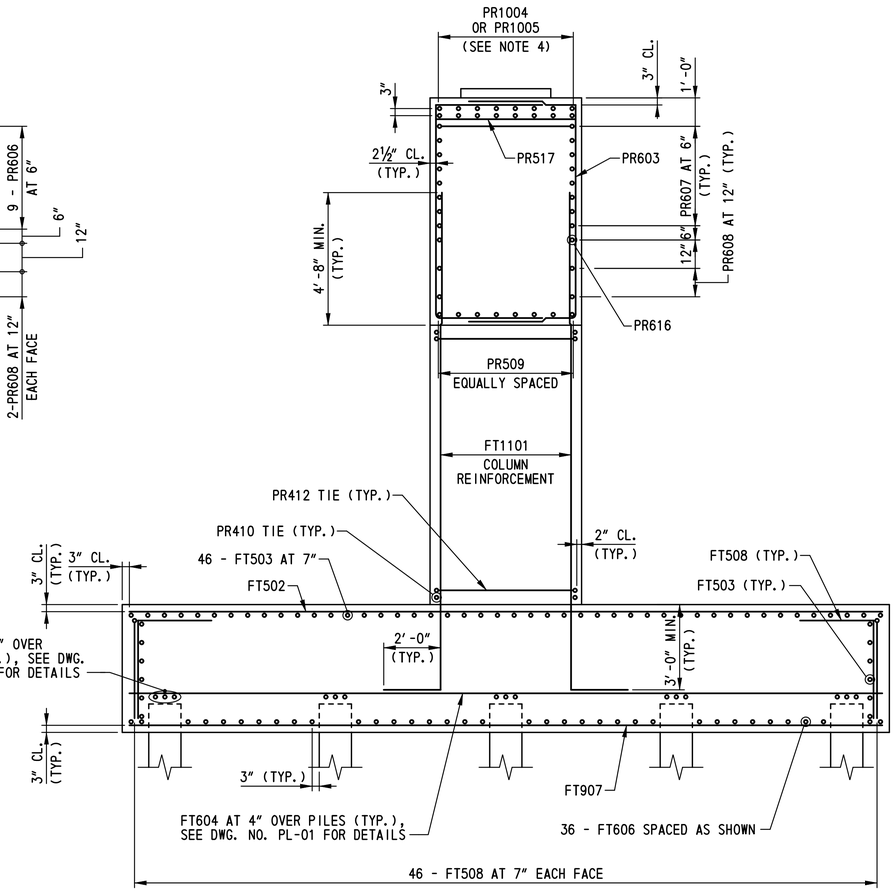

SECTION L-L
SCALE: 3/8"=1'-0"

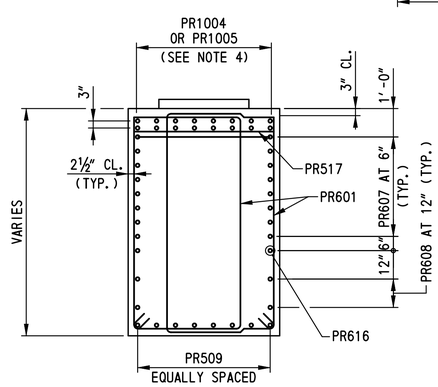

SECTION CC-CC
SCALE: 3/8"=1'-0"

NOTES:

1. FOR PIER PLAN AND ELEVATIONS, SEE DWG. NO. PR-01.
2. FOR CONCRETE BEARING PEDESTAL REINFORCING DETAILS, SEE DWG. NO. PR-03.
3. FOR SECTION M-M, SEE DWG. NO. PR-03.
4. SPACE REINFORCING STEEL AS NECESSARY TO CLEAR ANCHOR BOLTS. FOR ADDITIONAL INFORMATION, SEE DWG. NOS. PR-03 AND BB-03.
5. ALTERNATE 90 DEGREE AND 135 DEGREE HOOK OF PR412 IN EACH LAYER OF COLUMN.

BR1-7S
PR-02

DELAWARE DEPARTMENT OF TRANSPORTATION

ADDENDUMS / REVISIONS

SCALE: AS NOTED

US 301, SR 896 TO SR 1

CONTRACT	BRIDGE NO.	1-460S
T200911308	DESIGNED BY: S.E.B.	
COUNTY		
NEW CASTLE	CHECKED BY: P.S.D.	

PIER REINFORCEMENT DETAILS - 1

SHEET NO.
465
TOTAL SHTS.
875

rt\33653-000\contract 1a\cadd\bridge\br_no7\BR_No7S\PR02_br1-7S.dgn
10/24/2012 11:31:11 PM

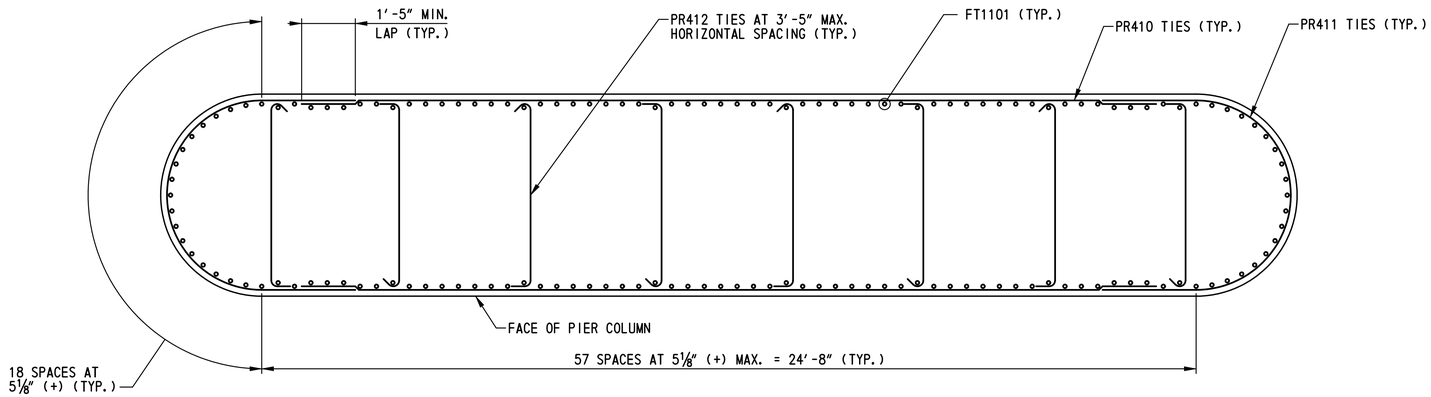

SECTION M-M

SCALE: ½"=1'-0"

NOTE:

ALTERNATE 90 DEGREE AND 135 DEGREE HOOK OF PR412 TIES IN EACH LAYER.

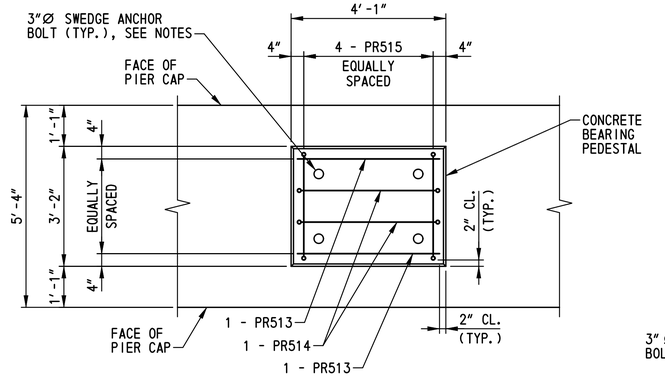

PLAN

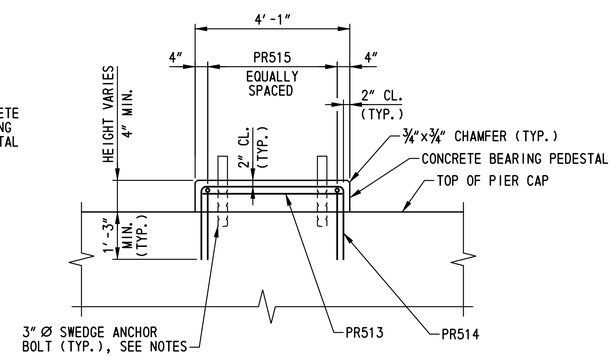

ELEVATION

PIER CONCRETE BEARING PEDESTAL REINFORCEMENT DETAILS

SCALE: ½"=1'-0"

NOTES:

1. FOR ANCHOR BOLT DIMENSIONS AND LOCATION, SEE DWG. NO. BB-02.
2. ANCHOR BOLTS SHALL BE F1554 GRADE 105 STEEL, GALVANIZED IN ACCORDANCE WITH A153.
3. ANCHOR BOLTS SHALL BE CAST IN PLACE. A TEMPORARY CASTING TEMPLATE SHALL BE USED TO ENSURE THE ANCHOR BOLTS ARE PROPERLY ALIGNED AND PLUMB. THE TEMPLATE SHALL BE REMOVED AFTER THE CONCRETE HAS SET.
4. SPACE REINFORCING STEEL AS NECESSARY TO CLEAR ANCHOR BOLTS.

SHEET NOT USED

BR1-7S
PR-04

DELAWARE DEPARTMENT OF TRANSPORTATION	ADDENDUMS / REVISIONS	SCALE: AS NOTED	US 301, SR 896 TO SR 1	CONTRACT T200911308	BRIDGE NO. 1-460S	PIER SCOUR COUNTERMEASURES PLAN AND SECTION	SHEET NO. 467
				COUNTY NEW CASTLE	DESIGNED BY: M.P.U.		TOTAL SHTS. 875
					CHECKED BY: P.S.D.		

N:\31653-000\CONTRACT 1A\CADD\Bridge\Br_No7\BR_No7S\PR04_br1-7S.dgn
7/8/2015 4:18:39 PM

① ANY MARK NUMBER WITH SUFFIX 'E' DENOTES EPOXY COATED REINFORCING STEEL.

② ALL MARK 'LOCATION PREFIXES' SHALL CONSIST OF TWO LETTERS AND ARE AS FOLLOWS: AB = ABUTMENT, AS = APPROACH SLAB, BC = BOX CULVERT, BW = BACKWALL, CL = COLUMN, DK = DECK, DL = DOWEL, FT = FOOTING, HW = HEADWALL, MS = MISC. BARS, PA = PARAPET, PR = PIER, SC = SHEETPILE CAP, SL = SLAB, TW = TOEWALL, WL = WALL (UNIQUE LOCATION), WW = WINGWALL

SPECIFICATIONS					BENDING DIMENSIONS (FEET-INCHES /QUARTER INCH)											
QTY.	SIZE	LENGTH	MARK	TYPE	A	B	C	D	E	F/R	G	H	J	K	O
ABUTMENT A															
46	6	11-02 2	AB601E	17		3-06 3	4-01 0	3-06 3							
50	6	11-08 2	AB602E	17		3-09 3	4-01 0	3-09 3							
8	10	46-00 2	AB1003E	STR		46-00 2									
3	6	47-10 2	AB604E	STR		47-10 2									
7	7	25-11 1	AB705E	STR		25-11 1									
7	7	25-04 1	AB706E	STR		25-04 1									
2	5	46-00 2	AB507E	STR		46-00 2									
8	5	47-10 2	AB508E	STR		47-10 2									
2	5	25-04 1	AB509E	STR		25-04 1									
1	5	11-01 2	AB510E	17		3-07 0	3-11 2	3-07 0							
47	5	4-01 0	AB511E	STR		4-01 0									
16	5	3-07 2	AB512E	STR		3-07 2									
16	5	7-06 0	AB513E	STR		7-06 0									
36	5	4-09 3	AB514E	T2	0-10 0	3-11 3									
4	5	4-01 0	AB515E	STR		4-01 0									
4	5	4-07 0	AB516E	STR		4-07 0									
12	5	4-01 0	AB517E	STR		4-01 0									
10	5	2-10 0	AB518E	STR		2-10 0									
10	5	6-05 2	AB519E	17		1-09 3	2-10 0	1-09 3							
20	5	6-03 2	AB520E	17		1-09 3	2-08 0	1-09 3							
ABUTMENT A (BW)															
2	5	22-02 1	BW501E	STR		22-02 1									
8	5	47-10 2	BW502E	STR		47-10 2									
47	5	7-08 0	BW503E	STR		7-08 0									
1	5	47-11 0	BW504E	STR		47-11 0									
47	5	2-07 0	BW505E	17		0-10 0	0-11 0	0-10 0							
5	5	6-06 0	BW506E	STR		6-06 0									
5	5	7-00 0	BW507E	STR		7-00 0									
5	5	9-10 0	BW508E	STR		9-10 0									
5	5	10-00 2	BW509E	STR		10-00 2									
20	5	2-01 3	BW510E	17		1-03 3	0-10 0								
4	5	7-00 0	BW511E	T2	0-10 0	1-03 0	1-05 0	1-03 0	1-05 0		0-10 0				

SPECIFICATIONS					BENDING DIMENSIONS (FEET-INCHES /QUARTER INCH)											
QTY.	SIZE	LENGTH	MARK	TYPE	A	B	C	D	E	F/R	G	H	J	K	O
ABUTMENT B															
43	6	11-02 2	AB630E	17		3-06 3	4-01 0	3-06 3							
50	6	11-08 2	AB631E	17		3-09 3	4-01 0	3-09 3							
8	10	46-00 2	AB1032E	STR		46-00 2									
3	6	47-10 2	AB633E	STR		47-10 2									
7	7	24-11 1	AB734E	STR		24-11 1									
7	7	25-04 1	AB735E	STR		25-04 1									
2	5	46-00 2	AB536E	STR		46-00 2									
8	5	47-10 2	AB537E	STR		47-10 2									
2	5	25-04 1	AB538E	STR		25-04 1									
1	5	11-01 2	AB539E	17		3-07 0	3-11 2	3-07 0							
47	5	4-01 0	AB540E	STR		4-01 0									
16	5	3-07 1	AB541E	STR		3-07 1									
16	5	7-06 1	AB542E	STR		7-06 1									
36	5	4-09 3	AB543E	T2	0-10 0	3-11 3									
4	5	4-01 0	AB544E	STR		4-01 0									
4	5	4-07 0	AB545E	STR		4-07 0									
12	5	4-01 0	AB546E	STR		4-01 0									
10	5	2-10 0	AB547E	STR		2-10 0									
10	5	6-05 2	AB548E	17		1-09 3	2-10 0	1-09 3							
20	5	6-03 2	AB549E	17		1-09 3	2-08 0	1-09 3							
ABUTMENT B (BW)															
2	5	22-02 1	BW520E	STR		22-02 1									
8	5	47-10 2	BW521E	STR		47-10 2									
47	5	7-07 1	BW522E	STR		7-07 1									
1	5	47-11 0	BW523E	STR		47-11 0									
47	5	2-07 0	BW524E	17		0-10 0	0-11 0	0-10 0							
5	5	6-06 0	BW525E	STR		6-06 0									
5	5	7-00 0	BW526E	STR		7-00 0									
5	5	9-10 3	BW527E	STR		9-10 3									
5	5	10-01 2	BW528E	STR		10-01 2									
20	5	2-01 3	BW529E	17		1-03 3	0-10 0								
4	5	7-00 0	BW530E	T2	0-10 0	1-03 0	1-05 0	1-03 0	1-05 0		0-10 0				

SPECIFICATIONS					BENDING DIMENSIONS (FEET-INCHES /QUARTER INCH)											
QTY.	SIZE	LENGTH	MARK	TYPE	A	B	C	D	E	F/R	G	H	J	K	O
PIER															
52	6	16-10 2	PR601	T1	0-07 3	3-00 0	4-09 2	3-00 0	4-09 2		0-07 3				
							T0		T0						
		24-07 3					7-06 0		7-06 0						
			*4 SETS OF	13											
8	6	22-05 2	PR602	T1	0-07 3	3-00 0	7-07 0	3-00 0	7-07 0		0-07 3				
42	6	22-01 0	PR603	S6	1-00 0	7-07 0	4-11 0	7-07 0	1-00 0						
8	10	46-06 2	PR1004	2	1-10 0	42-10 2					1-10 0				
8	10	46-04 0	PR1005	2	1-10 0	42-08 0					1-10 0				
18	6	9-11 2	PR606	17		2-07 0	4-09 2	2-07 0							
18	6	43-00 0	PR607	STR		43-00 0									
4*	6	31-09 1	PR608	STR		31-09 1									
		T0				T0									
		36-02 3				36-02 3									
			*2 SETS OF	2											
16	5	23-02 0	PR509	3			7-02 0	16-00 0				2-11 1		6-06 2	22-06 2
22	4	22-06 0	PR410	STR		22-06 0									
22	4	12-10 1	PR411	S11		12-10 1						5-00 0			5-00 0
88	4	5-09 0	PR412	T9	0-04 2	5-00 0					0-04 2				
10	5	3-09 0	PR513	STR		3-09 0									
10	5	8-04 0	PR514	17		2-03 2	3-09 0	2-03 2							
20	5	7-04 0	PR515	17		2-03 0	2-10 0	2-03 0							
2	6	40-08 0	PR616	STR		40-08 0									
44	5	5-00 0	PR517	STR		5-00 0									
12	5	6-03 2	PR518	3		4-06 2	1-09 0					1-07 1		0-08 2	5-03 0
150	11	19-08 0	FT1101	2	2-00 0	17-08 0									
67	5	26-06 0	FT502	STR		26-06 0									
58	5	32-06 0	FT503	STR		32-06 0									
18	6	26-06 0	FT604	STR		26-06 0									
15	6	32-06 0	FT605	STR		32-06 0									
36	6	32-06 0	FT606	STR		32-06 0									
84	9	26-06 0	FT907	STR		26-06 0									
202	5	4-08 2	FT508	2	0-10 0	3-10 2									

ASTM STANDARD ENGLISH REINFORCING BARS

BAR SIZE	NOMINAL DIMENSIONS: DIAMETER (INCHES)	AREA (INCHES²)	WEIGHT (LBS./FT.)
3	0.375	0.110	0.376
4	0.500	0.200	0.668
5	0.625	0.310	1.043
6	0.750	0.440	1.502
7	0.875	0.600	2.044
8	1.000	0.790	2.670
9	1.128	1.000	3.400
10	1.270	1.270	4.303
11	1.410	1.560	5.313
14	1.693	2.250	7.650
18	2.257	4.000	13.600

RECOMMENDED END HOOKS, APPLICABLE TO ALL GRADES

	180° HOOKS		90° HOOKS
D	A OR G	J	A OR G
2¼"	5"	3"	6"
3"	6"	4"	8"
3¾"	7"	5"	10"
4½"	8"	6"	1-0"
5¼"	10"	7"	1-2"
6"	11"	8"	1-4"
9½"	1-3"	11¾"	1-7"
10¾"	1-5"	1-1¼"	1-10"
1-0"	1-7"	1-2¾"	2-0"
1-6¼"	2-3"	1-9¾"	2-7"
2-0"	3-0"	2-4½"	3-5"

STIRRUP AND TIE HOOKS, APPLICABLE TO ALL GRADES

	90° HOOK	135° HOOK	
D	A OR G	A OR G	A OR G
1½"	4"	4"	2½"
2"	4½"	4½"	3"
2½"	6"	5½"	3¾"
4½"	1-0"	8"	4½"
5¼"	1-2"	9"	5¼"
6"	1-4"	10½"	6"

NOTES:

1. FIGURES SHOWN IN CIRCLES REPRESENT BAR BEND TYPES.
2. STANDARD BAR BENDS INCLUDE ONLY THOSE TYPES BELOW, INDICATED AS SUCH.
3. ALL DIMENSIONS OUT-TO-OUT, EXCEPT "A" AND "G" ON STD. 180° AND 135° HOOKS.
4. "J" DIMENSIONS ON 180° HOOKS TO BE SHOWN ONLY WHERE NECESSARY TO RESTRICT HOOK SIZE, OTHERWISE STANDARD 'ACI' HOOKS ARE TO BE USED.
5. WHERE "J" IS NOT SHOWN, "J" WILL BE KEPT EQUAL TO OR LESS THAN "H" ON TYPES 3, 5 AND 22. WHERE "J" CAN EXCEED "H", IT SHALL BE SHOWN.
6. "H" DIMENSIONS OF STIRRUPS TO BE SHOWN AS NEEDED TO FIT WITHIN THE CONCRETE.
7. UNLESS OTHERWISE NOTED, DIAMETER "D" IS THE SAME FOR ALL BENDS AND HOOKS ON A BAR (EXCEPT FOR BEND TYPES 11 AND 13).
8. WHERE SLOPE DIFFERS FROM 45° OFFSET, "H" AND "K" MUST BE SHOWN.
9. WHERE BARS ARE TO BE BENT MORE ACCURATELY THAN STANDARD BENDING TOLERANCES, BENDING DIMENSIONS REQUIRING CLOSER FABRICATION SHOULD HAVE LIMITS INDICATED.
10. FOR RECOMMENDED DIAMETER "D", OF BENDS, HOOKS, ETC., REFER TO TABLE ABOVE, 'CRSI' OR 'ACI' TABLES WHERE APPLICABLE AND REQUIRED.
11. TYPE S1-S6, S11, T1-T3 AND T6-T9 APPLICABLE TO BAR SIZES #3 THROUGH #8.

STANDARD BAR BENDS

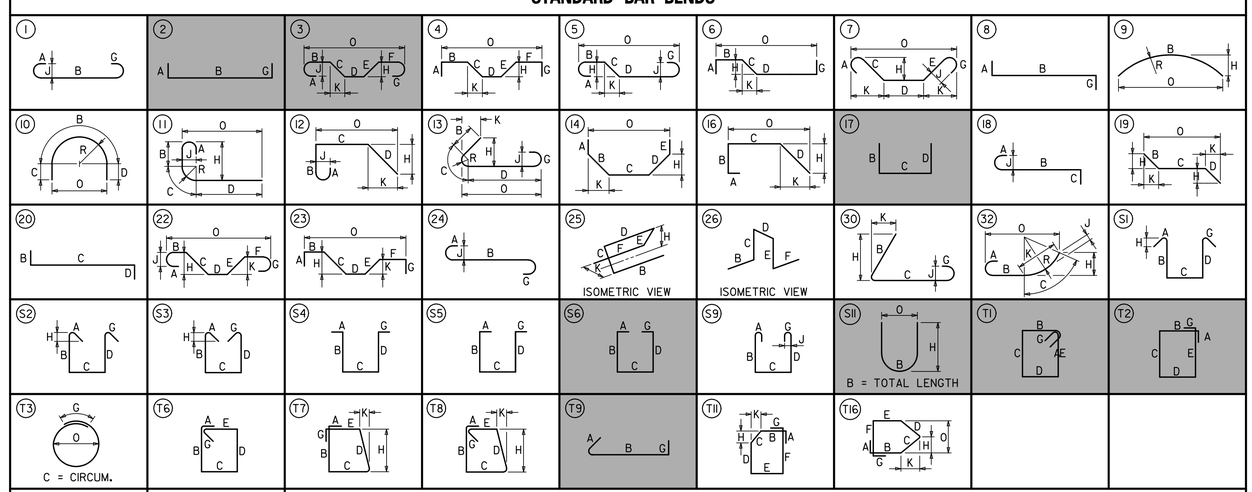

SPECIAL BAR BENDS

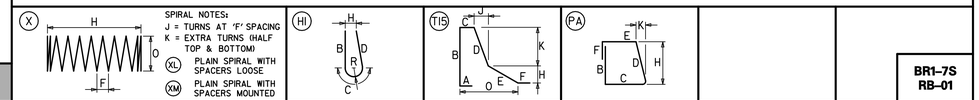

STIRRUP AND TIE HOOKS

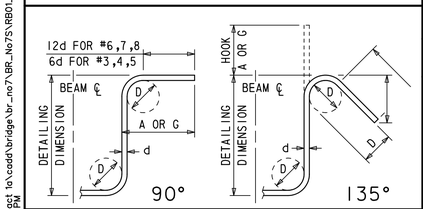

180° AND 90° END HOOKS

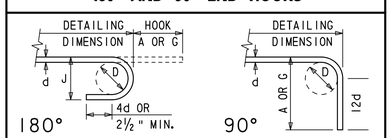

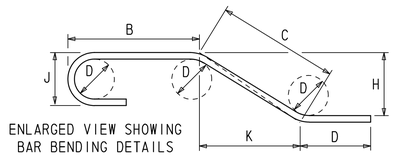

ENLARGED VIEW SHOWING BAR BENDING DETAILS

DELAWARE DEPARTMENT OF TRANSPORTATION

ADDENDUMS / REVISIONS

US 301, SR 896 TO SR 1

CONTRACT	BRIDGE NO.	1-460S
T200911308	DESIGNED BY: S.E.B./A.D.D.	
COUNTY: NEW CASTLE	CHECKED BY: P.S.D.	

SUBSTRUCTURE REINFORCEMENT LIST

BR1-7S RB-01

SHEET NO. 468 / TOTAL SHTS. 875

r:\31653-000\contract 1a\cadd\bridge\br_no7\BR_No7S\RB01_br1-7S.dgn
10/24/2012 11:53:16 PM

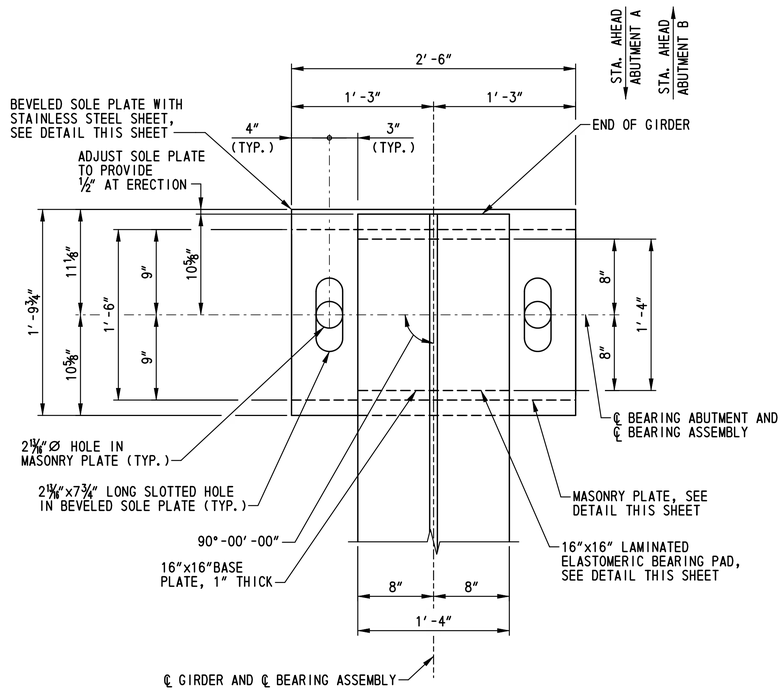

EXPANSION BEARING PLAN

SCALE: 1½″=1′-0″

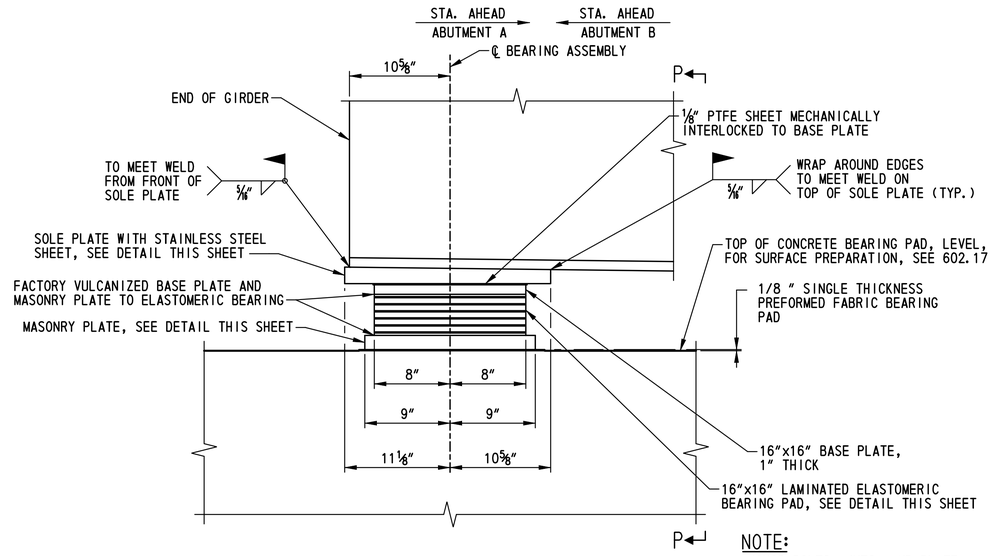

NOTE:
ANCHOR BOLTS, NUTS, AND PLATE WASHERS NOT SHOWN FOR CLARITY.

EXPANSION BEARING ELEVATION

SCALE: 1½″=1′-0″

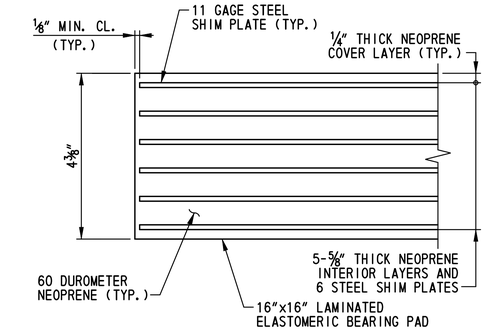

LAMINATED ELASTOMERIC BEARING PAD

SCALE: 6″=1′-0″

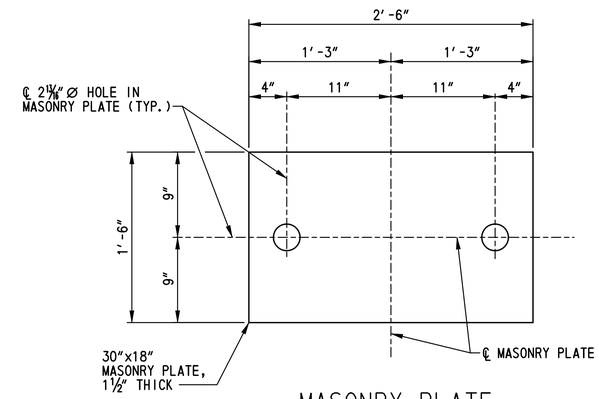

MASONRY PLATE

SCALE: 1½″=1′-0″

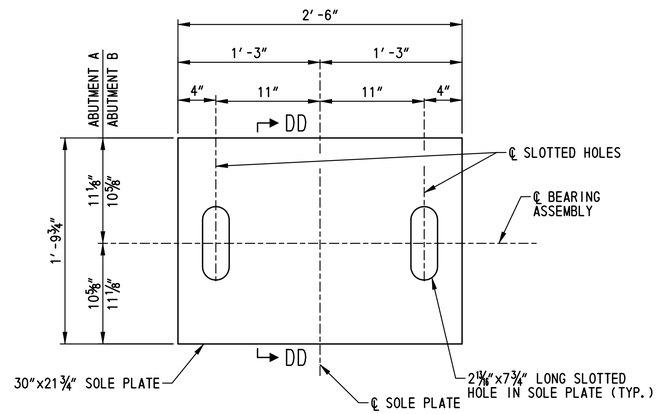

SOLE PLATE

SCALE: 1½″=1′-0″

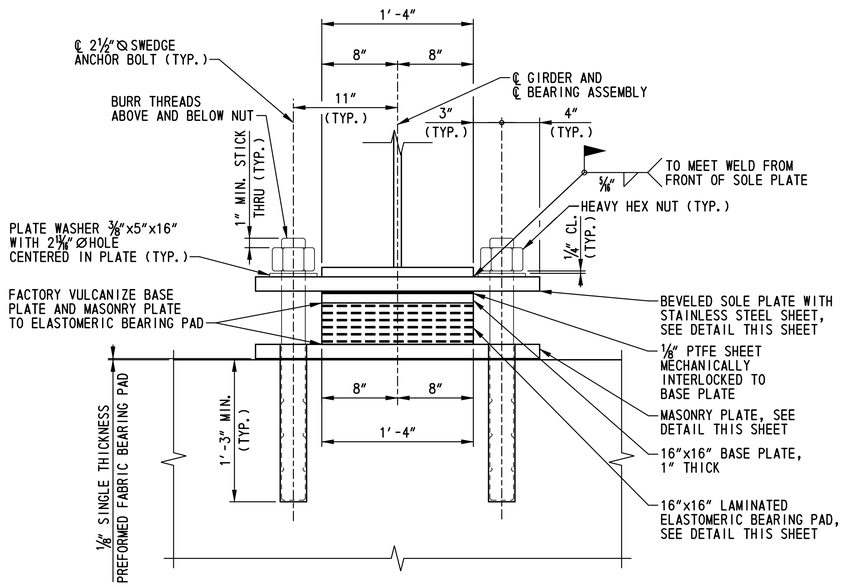

VIEW P-P

SCALE: 1½″=1′-0″

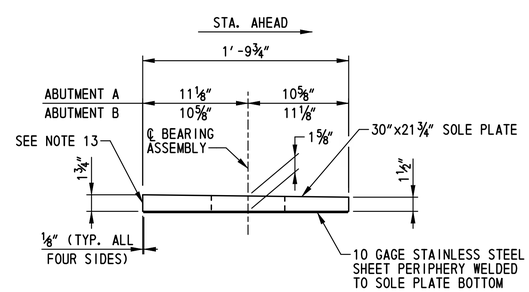

SECTION DD-DD

SCALE: 1½″=1′-0″

ABUTMENT A EXPANSION BEARING NOTES:

1. BEARING ASSEMBLIES SHALL BE PLACED PERPENDICULAR TO THE CENTERLINE OF GIRDER.
2. SOLE PLATES, BASE PLATES AND MASONRY PLATES SHALL BE ASTM A 709, GRADE 36 STEEL. PLATES SHALL BE PAINTED WITH A URETHANE PAINT SYSTEM IN ACCORDANCE WITH SPECIAL PROVISION ITEM 605537 - URETHANE PAINT SYSTEM, NEW STEEL. TOPCOAT COLOR SHALL BE STANDARD COLOR NO. 10076 (BROWN) OF FEDERAL STANDARD NO. 595B. THE COST OF PAINTING SHALL BE INCIDENTAL TO ITEM 605639 - TFE STAINLESS STEEL STRUCTURAL BEARINGS.
3. FILL SLOTS AND HOLES AROUND ANCHOR BOLTS WITH NONHARDENING CAULKING COMPOUND OR ELASTIC JOINT SEALER.
4. 1000 RMS FINISH ON ALL STEEL PLATES.
5. ANCHOR BOLTS SHALL BE UNPAINTED ASTM F 1554, GRADE 105 GALVANIZED STEEL. PLATE WASHERS SHALL BE UNPAINTED ASTM A 709, GRADE 36 GALVANIZED STEEL. NUTS SHALL BE UNPAINTED ASTM A 563 GALVANIZED STEEL.
6. ELASTOMERIC BEARINGS SHALL CONFORM TO M 251 AND THE ELASTOMER SHALL BE 60 DUROMETER NEOPRENE. SHIMS SHALL BE 11 GAGE MILD STEEL CONFORMING TO ASTM A 36.
7. STAINLESS STEEL SHEET SHALL BE ASTM A 167 OR A 264, TYPE 304, #8 MIRROR FINISH.
8. PTFE SHEET SHALL BE DIMPLED LUBRICATED MEETING THE REQUIREMENTS OF ASTM D 4894 OR D 4895. PTFE SHEET SHALL HAVE THE SAME PLAN AREA AS THE BASE PLATE.
9. THE BASE PLATE AND MASONRY PLATE SHALL BE FACTORY VULCANIZED TO THE ELASTOMERIC BEARING, AND BEARINGS ARE TO BE SHIPPED ASSEMBLED AS UNITS.
10. BEARING MAXIMUM DESIGN LOAD: 263 KIPS.
    BEARING DESIGN COEFFICIENT OF FRICTION: 0.04.
11. CONTRACTOR SHALL TOUCH UP SOLE PLATE PAINT SYSTEM, IN ACCORDANCE WITH THE MANUFACTURER'S RECOMMENDATIONS, AFTER WELDING THE SOLE PLATE TO THE GIRDER.
12. PAYMENT FOR ABUTMENT A EXPANSION BEARINGS WILL BE MADE UNDER ITEM NO. 605639 - TFE STAINLESS STEEL STRUCTURAL BEARINGS.
13. THICKER END OF BEVELED SOLE PLATE SHALL BE MARKED TO ENSURE PROPER INSTALLATION IN THE FIELD.

BR1-7S
BB-01

N:\31653-000\CONTRACT 1A\CADD\Bridge\Br_No7\BR_No7SBB01_br1-7S.dgn
4/30/2015 1:41:54 PM

DELAWARE DEPARTMENT OF TRANSPORTATION	ADDENDUMS / REVISIONS	SCALE: AS NOTED	US 301, SR 896 TO SR 1	CONTRACT T200911308	BRIDGE NO. 1-460S	EXPANSION BEARING DETAILS – ABUTMENT A AND ABUTMENT B
				COUNTY NEW CASTLE	DESIGNED BY: M.P.U.	SHEET NO. 469
					CHECKED BY: P.S.D.	TOTAL SHTS. 875

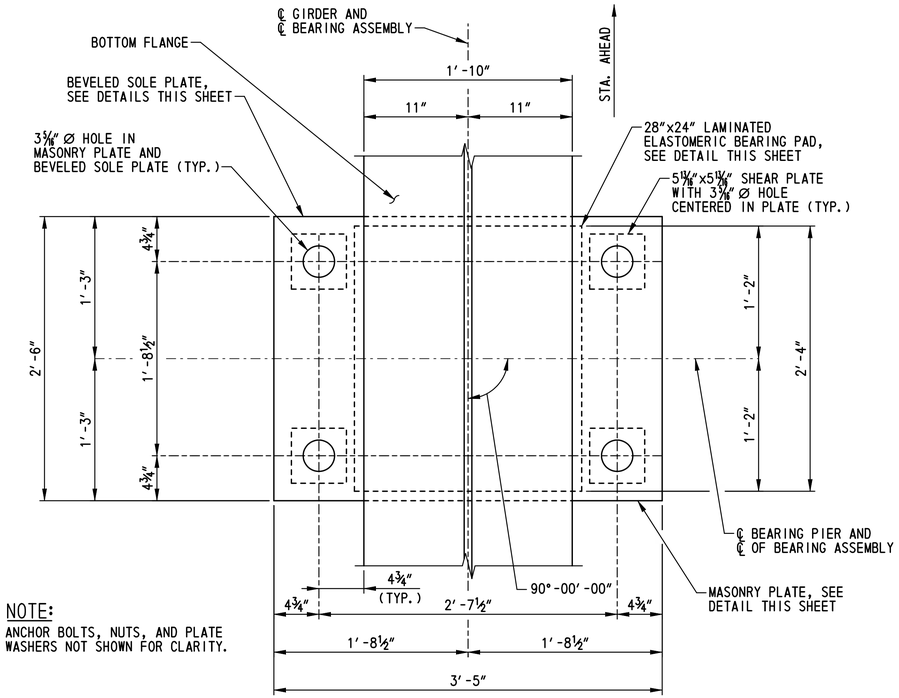

NOTE:
ANCHOR BOLTS, NUTS, AND PLATE WASHERS NOT SHOWN FOR CLARITY.

FIXED BEARING PLAN
SCALE: 1 1/2"=1'-0"

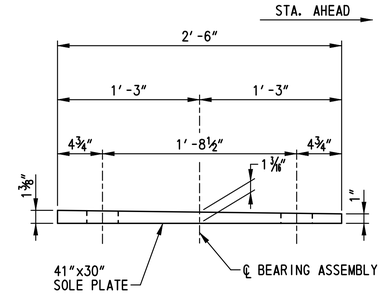

SECTION R-R
SCALE: 1 1/2"=1'-0"

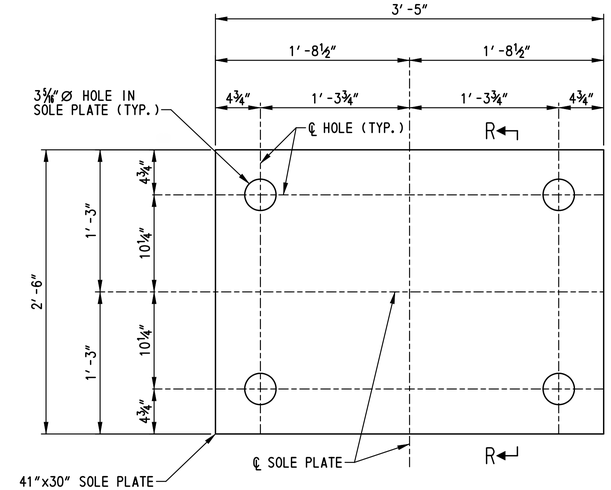

SOLE PLATE
SCALE: 1 1/2"=1'-0"

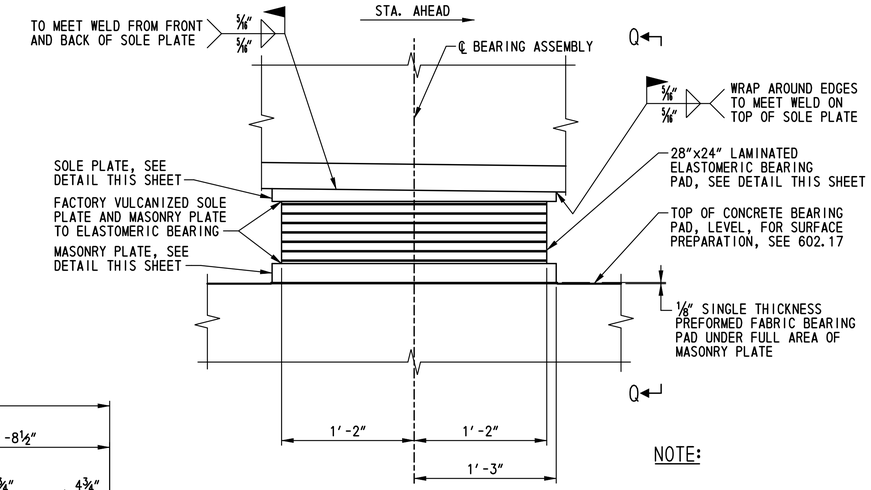

NOTE:
ANCHOR BOLTS, SHEAR PLATES, NUTS, AND PLATE WASHERS NOT SHOWN FOR CLARITY.

FIXED BEARING ELEVATION
SCALE: 1 1/2"=1'-0"

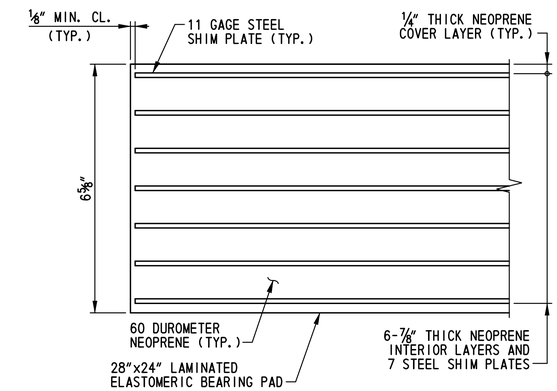

LAMINATED ELASTOMERIC BEARING PAD
SCALE: 6"=1'-0"

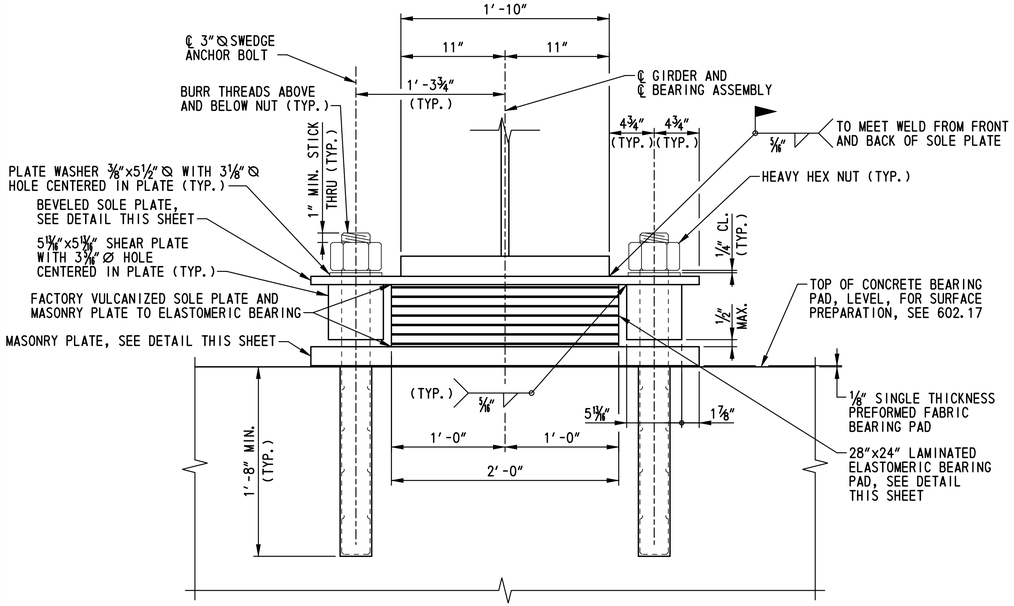

VIEW Q-Q
SCALE: 1 1/2"=1'-0"

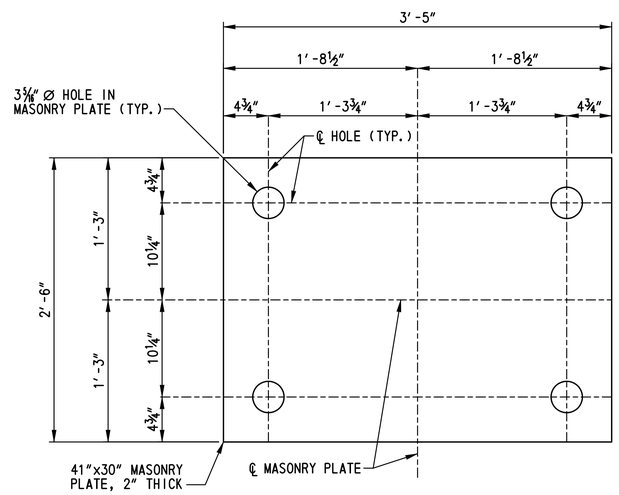

MASONRY PLATE
SCALE: 1 1/2"=1'-0"

PIER FIXED BEARING NOTES:

1. BEARING ASSEMBLIES SHALL BE PLACED PERPENDICULAR TO THE CENTERLINE OF GIRDER.
2. SOLE PLATES AND MASONRY PLATES SHALL BE ASTM A 709, GRADE 36 STEEL. PLATES SHALL BE PAINTED WITH A URETHANE PAINT SYSTEM IN ACCORDANCE WITH SPECIAL PROVISION ITEM 605537 - URETHANE PAINT SYSTEM, NEW STEEL. TOPCOAT COLOR SHALL BE STANDARD COLOR NO. 10076 (BROWN) OF FEDERAL STANDARD NO. 595B. THE COST OF PAINTING SHALL BE INCIDENTAL TO ITEM 605581 - ELASTOMERIC BEARING PADS.
3. FILL HOLES AROUND ANCHOR BOLTS WITH NONHARDENING CAULKING COMPOUND OR ELASTIC JOINT SEALER.
4. 1000 RMS FINISH ON ALL STEEL PLATES.
5. ANCHOR BOLTS SHALL BE UNPAINTED ASTM F 1554, GRADE 105 GALVANIZED STEEL. PLATE WASHERS SHALL BE UNPAINTED ASTM A 709, GRADE 36 GALVANIZED STEEL. NUTS SHALL BE UNPAINTED ASTM A 563 GALVANIZED STEEL.
6. ELASTOMERIC BEARINGS SHALL CONFORM TO M 251 AND THE ELASTOMER SHALL BE 60 DUROMETER NEOPRENE. SHIMS SHALL BE 11 GAGE MILD STEEL CONFORMING TO ASTM A 36.
7. THE SOLE PLATE AND MASONRY PLATE SHALL BE FACTORY VULCANIZED TO THE ELASTOMERIC BEARING, AND BEARINGS ARE TO BE SHIPPED ASSEMBLED AS UNITS.
8. BEARING MAXIMUM DESIGN LOAD: 789 KIPS.
9. CONTRACTOR SHALL TOUCH UP SOLE PLATE PAINT SYSTEM, IN ACCORDANCE WITH THE MANUFACTURER'S RECOMMENDATIONS, AFTER WELDING THE SOLE PLATE TO THE GIRDER.
10. PAYMENT FOR PIER FIXED BEARINGS WILL BE MADE UNDER ITEM NO. 605581 - ELASTOMERIC BEARING PADS.

BR1-7S
BB-02

N:\31653-000\CONTRACT 1A\CADD\Bridge\Br_No7\BR_No7S\BB02_br1-7S.dgn
4/30/2015 1:53:09 PM

DELAWARE DEPARTMENT OF TRANSPORTATION	ADDENDUMS / REVISIONS	SCALE: AS NOTED	US 301, SR 896 TO SR 1	CONTRACT T200911308	BRIDGE NO. 1-460S	FIXED BEARING DETAILS – PIER	SHEET NO. 470
				COUNTY NEW CASTLE	DESIGNED BY: M.P.U.		TOTAL SHTS. 875
					CHECKED BY: P.S.D.		

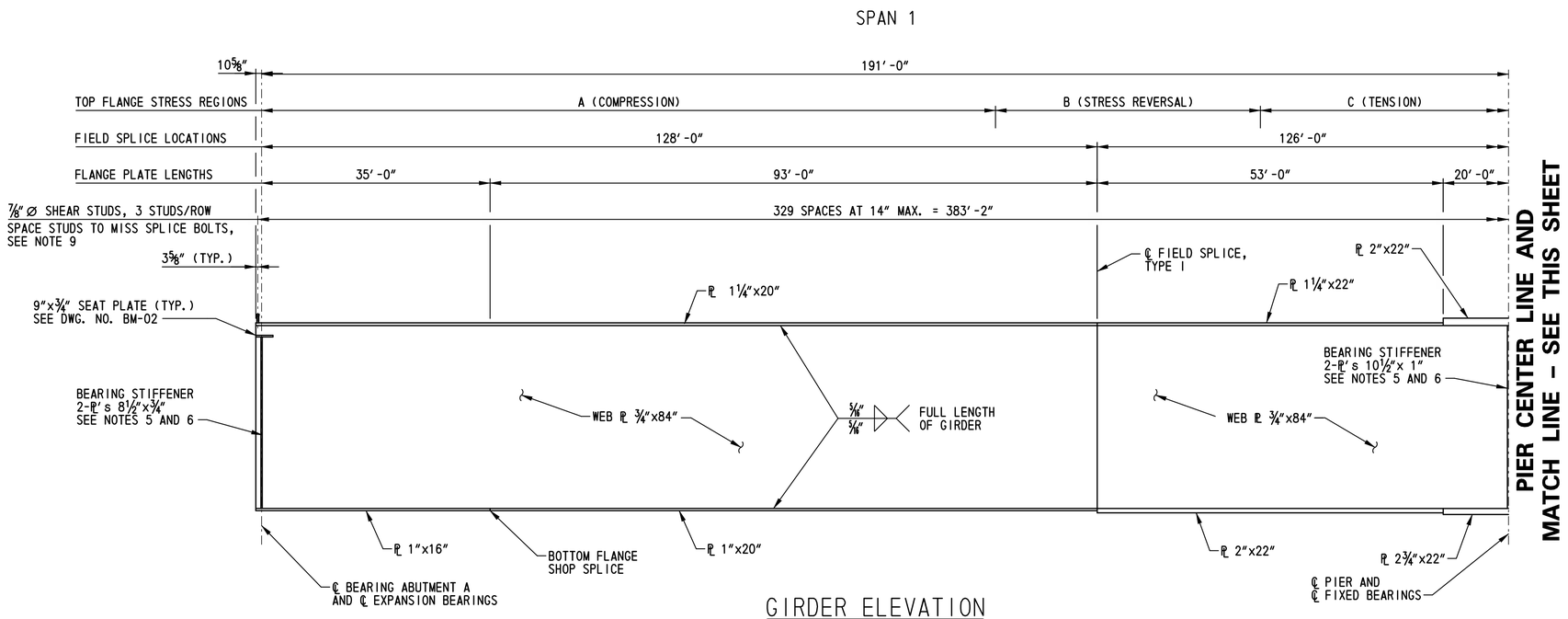

GIRDER ELEVATION

HORIZONTAL SCALE: ¼"=1'-0"
VERTICAL SCALE: ⅜"=1'-0"

TOP FLANGE STRESS REGIONS					
GIRDER NO.	A	B	C	D	E
1 AND 5	112'-5"	40'-7"	75'-11"	40'-8"	112'-5"
2 - 4	117'-9½"	32'-8"	81'-1"	32'-8"	117'-9½"

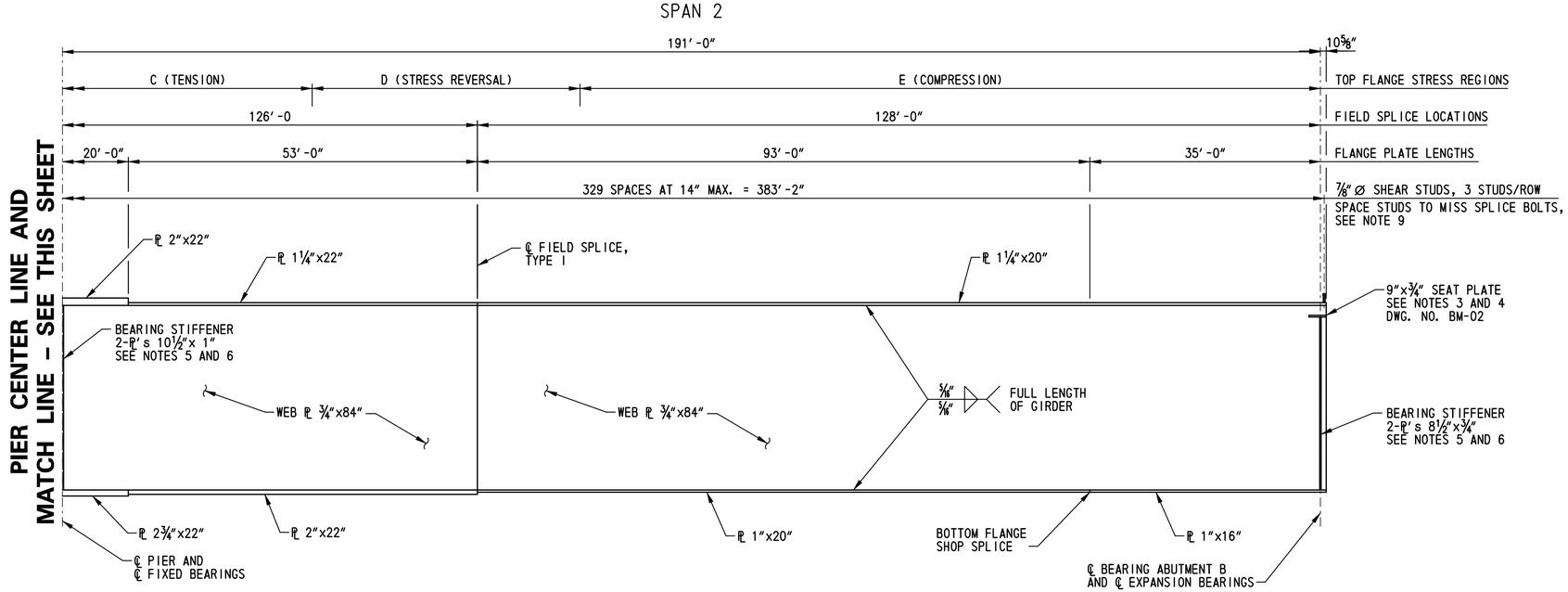

GIRDER ELEVATION

HORIZONTAL SCALE: ¼"=1'-0"
VERTICAL SCALE: ⅜"=1'-0"

NOTES:

1. THE GIRDERS ARE REQUIRED TO BE PLUMB UNDER FULL DEAD LOAD.
2. THE CONTRACTOR IS RESPONSIBLE FOR THE ENTIRE ERECTION OF THE BRIDGE. THE CONTRACTOR SHALL SUBMIT DRAWINGS SEALED BY A PROFESSIONAL ENGINEER REGISTERED IN THE STATE OF DELAWARE, ILLUSTRATING FULLY THE PROPOSED METHOD OF ERECTION. THE DRAWINGS SHALL SHOW DETAILS OF ALL TEMPORARY SHORING, FALSEWORK, BRACING, GUYS, DEAD-MEN, LIFTING DEVICES, HOLD-DOWN DEVICES AND ATTACHMENTS TO THE BRIDGE MEMBERS. THE DRAWINGS SHALL ALSO INCLUDE THE SEQUENCE OF ERECTION, LOCATION OF CRANES, CRANE CAPACITIES, LOCATION OF LIFTING POINTS ON THE BRIDGE MEMBERS AND WEIGHTS OF MEMBERS. THE PLAN AND DRAWINGS SHALL BE COMPLETE IN DETAIL FOR ALL ANTICIPATED PHASES AND CONDITIONS DURING ERECTION. CALCULATIONS SEALED BY A PROFESSIONAL ENGINEER REGISTERED IN THE STATE OF DELAWARE ARE REQUIRED TO DEMONSTRATE THAT ALLOWABLE STRESSES ARE NOT EXCEEDED AND THAT MEMBER CAPACITIES AND FINAL GEOMETRY WILL BE CORRECT.
3. THERE SHALL BE NO FIELD WELDING TO THE TOP FLANGE, EXCEPT FOR SHEAR STUDS, IN THE TENSION AND STRESS REVERSAL REGIONS.
4. CROSS FRAME CONNECTION PLATE SPACING NOT SHOWN. FOR LOCATION OF CROSS FRAME CONNECTION PLATES, SEE DWG. NO. FR-01.
5. GIRDER ENDS AND ALL BEARING STIFFENERS, INCLUDING BEARING STIFFENERS AT PIER, SHALL BE VERTICAL UNDER FULL DEAD LOAD.
6. FOR BEARING STIFFENER AND CONNECTION PLATE DETAILS, SEE DWG. NOS. BM-02 AND BM-03.
7. FOR SHOP FLANGE SPLICE DETAILS, SEE DWG. NO. BM-04.
8. FOR FIELD SPLICE DETAILS, SEE DWG. NO. BM-04.
9. FOR SHEAR STUD DETAILS, SEE DWG. NO. SD-01.

BR1-7S
BM-01

DELAWARE DEPARTMENT OF TRANSPORTATION

ADDENDUMS / REVISIONS

SCALE: AS NOTED

US 301, SR 896 TO SR 1

CONTRACT	BRIDGE NO.	1-460S
T200911308	DESIGNED BY: M.P.U.	
COUNTY		
NEW CASTLE	CHECKED BY: P.S.D.	

GIRDER ELEVATION

SHEET NO. 471
TOTAL SHTS. 875

r:\31653-000\contract 1a\cadd\bridge\br_no7\BR_No7S\BM01_br1-7S.dgn
10/24/2012 11:51:09 PM

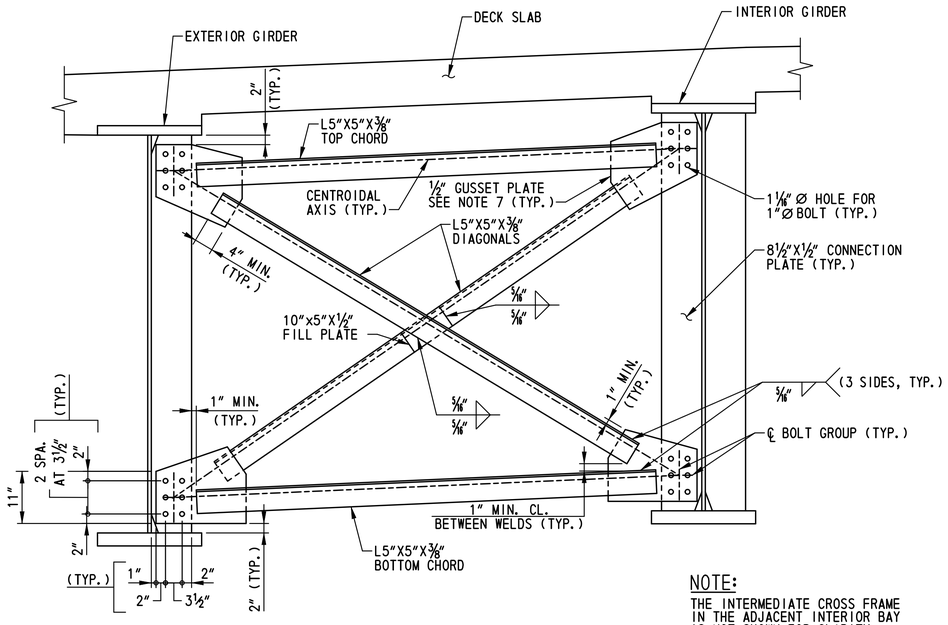

NOTE:
THE INTERMEDIATE CROSS FRAME IN THE ADJACENT INTERIOR BAY IS NOT SHOWN FOR CLARITY.

INTERMEDIATE CROSS FRAME DETAIL

SCALE: 3/4"=1'-0"

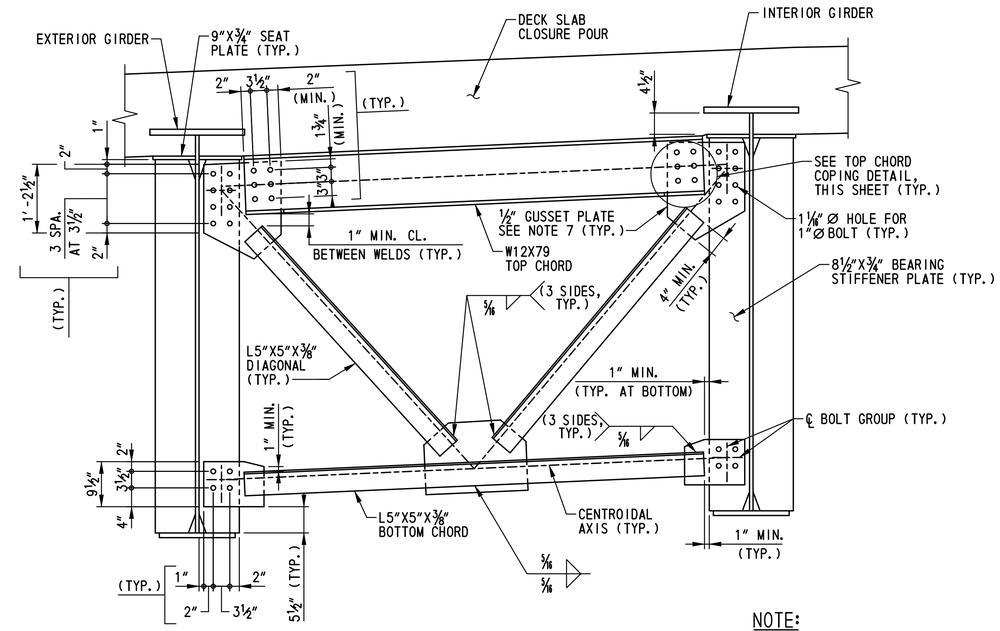

NOTE:
THE ABUTMENT CROSS FRAME IN THE ADJACENT INTERIOR BAY IS NOT SHOWN FOR CLARITY.

ABUTMENT CROSS FRAME DETAIL

SCALE: 3/4"=1'-0"

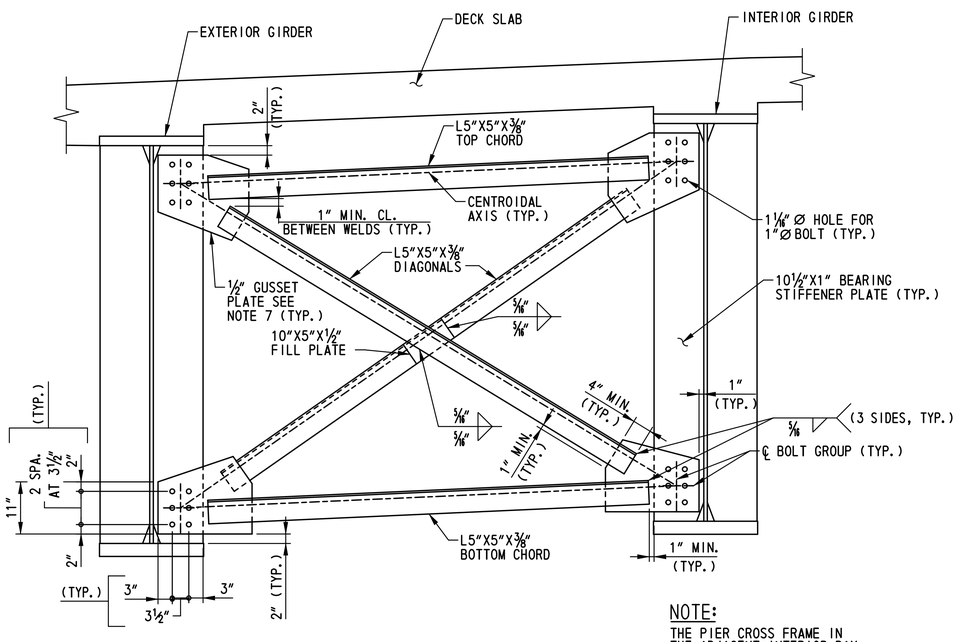

NOTE:
THE PIER CROSS FRAME IN THE ADJACENT INTERIOR BAY IS NOT SHOWN FOR CLARITY.

PIER CROSS FRAME DETAIL

SCALE: 3/4"=1'-0"

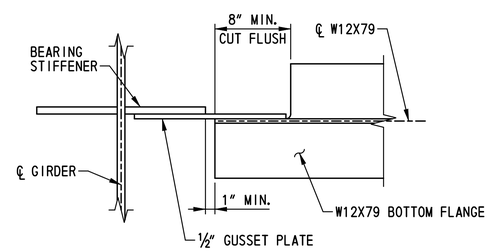

TOP CHORD COPING DETAIL

SCALE: 1 1/2"=1'-0"

NOTES:

1. FOR LOCATIONS OF CROSS FRAMES, SEE DWG. NO. FR-01.
2. ALL BOLTS SHALL BE 1" Ø HIGH STRENGTH BOLTS IN CONFORMANCE WITH A 325, TYPE 3. ALL BOLTS SHALL BE FABRICATED WITH THREADS EXCLUDED FROM THE SHEAR PLANE.
3. ALL BOLT HOLES IN CROSS FRAME GUSSET PLATES, BEARING STIFFENERS, AND CONNECTION PLATES SHALL BE 1 1/16 "Ø .
4. THE MINIMUM ACCEPTABLE EDGE DISTANCE FOR ANY BOLT HOLE SHALL BE 1 3/4 ".
5. FOR BEARING STIFFENER AND CONNECTION PLATE DETAILS, SEE DWG. NO. BM-03.
6. ALL CROSS FRAMES SHALL BE COMPLETELY CONNECTED TO GIRDERS PRIOR TO PLACING THE DECK SLAB.
7. CONTRACTOR HAS THE OPTION OF FABRICATING RECTANGULAR GUSSET PLATES IN LIEU OF THE CLIPPED PLATES SHOWN. THE MINIMUM DIMENSION REQUIREMENTS SHOWN SHALL BE MAINTAINED. NO ADDITIONAL COMPENSATION WILL BE MADE TO THE CONTRACTOR WHICHEVER ALTERNATIVE IS SELECTED.
8. THE GIRDERS ARE REQUIRED TO BE PLUMB UNDER FULL DEAD LOAD.

BR1-7S
BM-02

DELAWARE DEPARTMENT OF TRANSPORTATION	ADDENDUMS / REVISIONS	SCALE: AS NOTED	US 301, SR 896 TO SR 1	CONTRACT T200911308	BRIDGE NO. 1-460S	CROSS FRAME DETAILS
				COUNTY NEW CASTLE	DESIGNED BY: K.M.L.	SHEET NO. 472
					CHECKED BY: P.S.D.	TOTAL SHTS. 875

rt\33653-000\contract 1a\cadd\bridge\br_no7\BR_No7S\BM02_BR17S.dgn
10/24/2012 1:51:11 PM

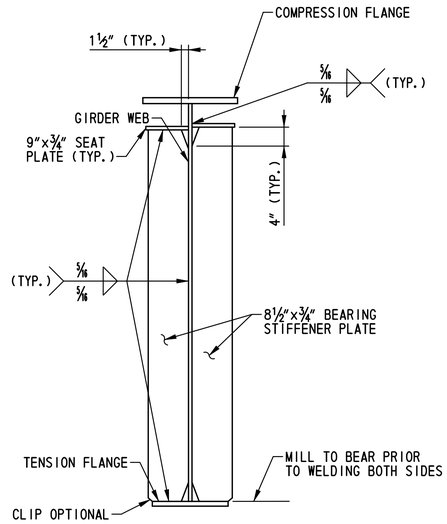

ABUTMENT BEARING STIFFENERS/
CROSS FRAME CONNECTION PLATES
SCALE: ¾"=1'-0"

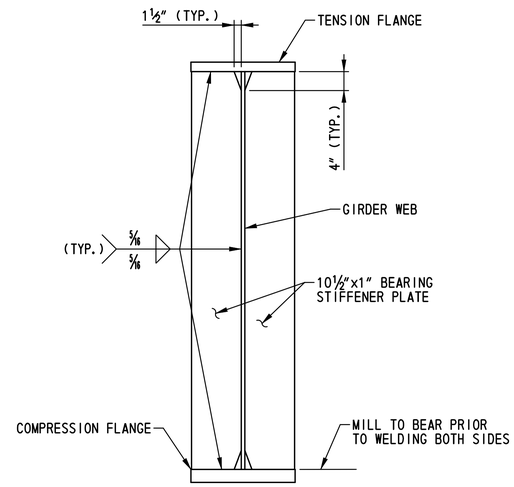

PIER BEARING STIFFENERS/
CROSS FRAME CONNECTION PLATES
SCALE: ¾"=1'-0"

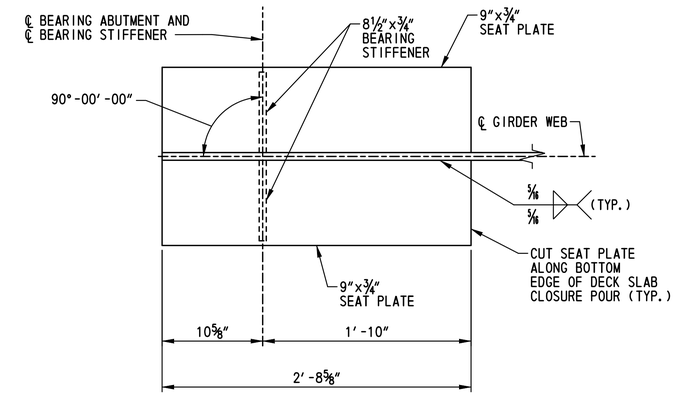

SEAT PLATE DETAIL
SCALE: 1½"=1'-0"

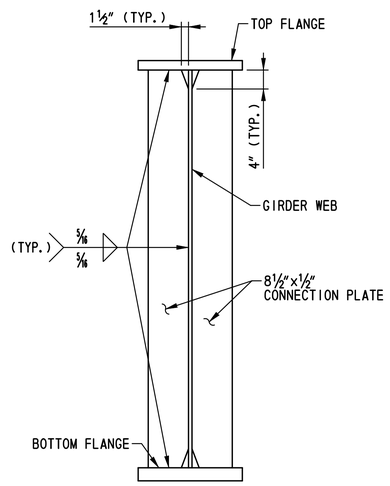

INTERMEDIATE
CROSS FRAME CONNECTION PLATES
SCALE: ¾"=1'-0"

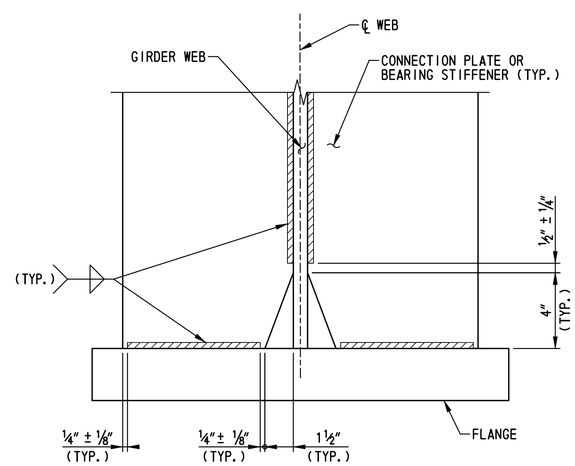

WELD TERMINATION DETAIL
SCALE: 3"=1'-0"

NOTES:

1. FOR LOCATION OF CROSS FRAMES, SEE DWG. NO. FR-01.
2. FOR ADDITIONAL BEARING STIFFENER INFORMATION, SEE DWG. NO. BM-01.
3. CONNECTION PLATES SHALL BE NORMAL TO THE GIRDER FLANGE.
4. THE GIRDERS ARE REQUIRED TO BE PLUMB UNDER FULL DEAD LOAD.

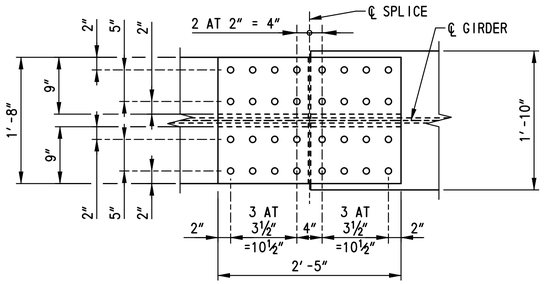

TOP FLANGE

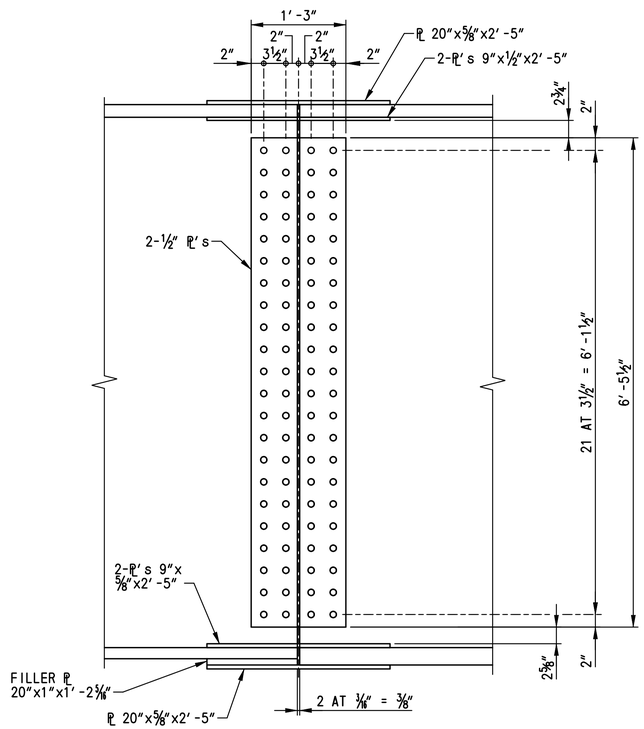

WEB

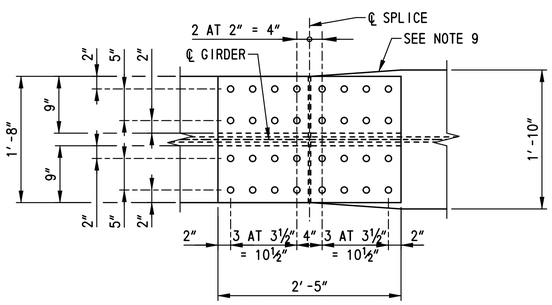

BOTTOM FLANGE

FIELD SPLICE DETAIL - TYPE I

SCALE: 1"=1'-0"

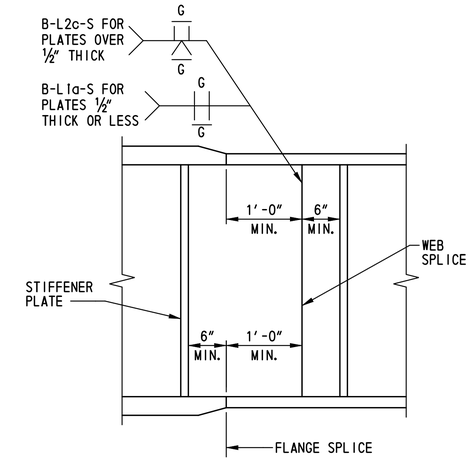

ELEVATION OF GIRDER

NOT TO SCALE

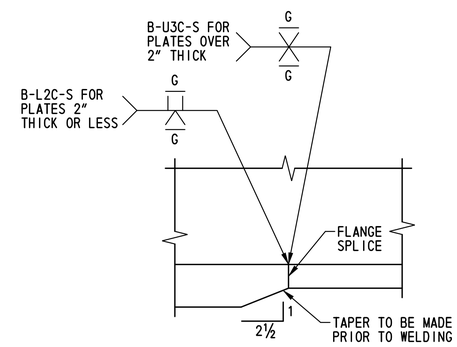

FLANGE THICKNESS TRANSITION SHOP SPLICE

SCALE: 3"=1'-0"

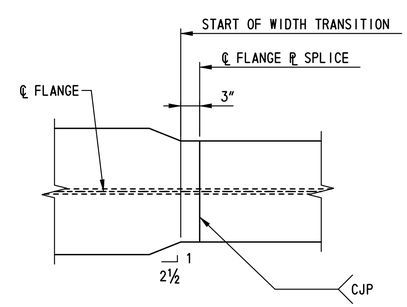

FLANGE WIDTH TRANSITION SHOP SPLICE

SCALE: 1"=1'-0"

SPLICE NOTES:

1. FOR LOCATIONS OF FIELD AND SHOP SPLICES, SEE DWG. NOS. FR-01 AND BM-01.
2. ALL BOLTS TO BE 1" Ø HIGH STRENGTH BOLTS CONFORMING TO A 325, TYPE 3. ALL BOLT HOLES SHALL BE 1⅛" Ø . ALL BOLTS SHALL BE FABRICATED WITH THREADS EXCLUDED FROM THE SHEAR PLANE.
3. FIELD SPLICE DESIGNED AS A SLIP-CRITICAL CONNECTION WITH CLASS A SURFACE CONDITIONS.
4. THE MINIMUM ACCEPTABLE EDGE DISTANCE FOR ANY HOLE SHALL BE 1¾".
5. BOLT HEADS SHALL BE ON THE EXTERIOR FACE OF THE EXTERIOR GIRDERS AND THE BOTTOM OF THE BOTTOM FLANGES.
6. BOLTS NOT SHOWN IN SPLICE FOR CLARITY.
7. SPACE SHEAR STUDS TO MISS TOP FLANGE SPLICE BOLTS.
8. ON EACH SIDE OF THE ℄ OF SPLICE, A MINIMUM OF 50 PERCENT OF THE WEB, TOP FLANGE, AND BOTTOM FLANGE SPLICE BOLTS SHALL BE IN PLACE BEFORE THE GIRDER IS LEFT UNSUPPORTED.
9. WHEN FLANGE IS LARGER THAN ADJACENT FLANGE BY MORE THAN 2", THE LARGER FLANGE SHALL BE TAPERED TO SMALLER FLANGE WIDTH IN A DISTANCE OF ½ LENGTH OF SPLICE PLATE (BOTTOM FLANGE ONLY).
10. FIELD SPLICES SHALL BE COMPLETELY SHOP ASSEMBLED AND MATCH MARKED AFTER ALL SHOP WELDING HAS BEEN COMPLETED. CONTACT SURFACES SHALL BE FREE OF ALL OIL AND DIRT.
11. ALL SPLICE PLATES ARE SUBJECT TO CHARPY V-NOTCH REQUIREMENTS.
12. BUTT WELDS OF FLANGE SPLICE PLATES TO BE GROUND FLUSH PRIOR TO ATTACHING WEB PLATES.

BR1-7S
BM-04

DELAWARE DEPARTMENT OF TRANSPORTATION	ADDENDUMS / REVISIONS	SCALE: AS NOTED	US 301, SR 896 TO SR 1	CONTRACT T200911308	BRIDGE NO. 1-460S	SPLICE DETAILS	SHEET NO. 474
				COUNTY NEW CASTLE	DESIGNED BY: M.P.U.		TOTAL SHTS. 875
					CHECKED BY: P.S.D.		

n:\31653-000\contract 1a\cadd\bridge\br_no7\BR_No7S\BM04_br1-7S.dgn
10/24/2012 1:51:14 PM

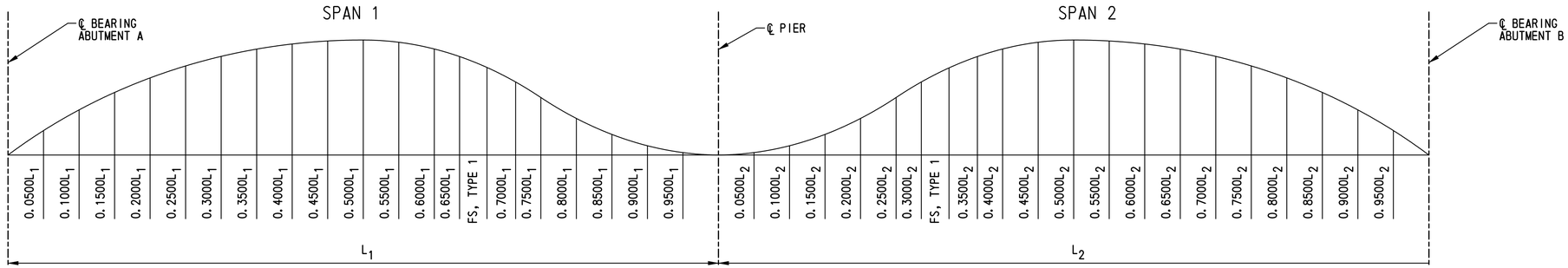

CAMBER DIAGRAM

NOT TO SCALE

DEFLECTION AND TOTAL CAMBERS (IN.)

	LOCATION	℄ BRG. ABUT. A	0.0500L1	0.1000L1	0.1500L1	0.2000L1	0.2500L1	0.3000L1	0.3500L1	0.4000L1	0.4500L1	0.5000L1	0.5500L1	0.6000L1	0.6500L1	FS, TYPE 1	0.7000L1	0.7500L1	0.8000L1	0.8500L1	0.9000L1	0.9500L1	℄ PIER	0.0500L2	0.1000L2	0.1500L2	0.2000L2	0.2500L2	0.3000L2	FS, TYPE 1	0.3500L2	0.4000L2	0.4500L2	0.5000L2	0.5500L2	0.6000L2	0.6500L2	0.7000L2	0.7500L2	0.8000L2	0.8500L2	0.9000L2	0.9500L2	℄ BRG. ABUT. B
GIRDERS 1 AND 5	DLS	0	1/4	1/2	11/16	7/8	1	1 1/8	1 3/16	1 1/4	1 3/8	1 3/16	1 1/8	15/16	13/16	3/4	11/16	1/2	3/8	1/4	1/8	1/16	0	1/16	1/8	1/4	3/8	1/2	11/16	3/4	13/16	15/16	1 1/16	1 3/16	1 3/16	1 1/4	1 3/16	1 1/8	1	7/8	11/16	1/2	1/4	0
	DLC	0	11/16	1 3/8	1 15/16	2 1/2	2 7/8	3 1/16	3 3/8	3 1/2	3 3/8	3 1/4	3	2 11/16	2 1/4	2 1/16	1 13/16	1 3/8	15/16	5/8	1/4	1/8	0	1/8	1/4	5/8	15/16	1 3/8	1 13/16	2 1/16	2 1/4	2 11/16	3	3 1/4	3 3/8	3 1/2	3 3/8	3 1/16	2 7/8	2 1/2	1 15/16	1 3/8	11/16	0
	SDL	0	3/16	5/16	7/16	5/8	11/16	3/4	13/16	13/16	13/16	13/16	3/4	5/8	9/16	1/2	7/16	5/16	1/4	1/8	1/16	1/16	0	1/16	1/16	1/8	1/4	5/16	7/16	1/2	9/16	5/8	3/4	13/16	13/16	13/16	13/16	3/4	11/16	5/8	7/16	5/16	3/16	0
	TD&C	0	1 1/8	2 3/16	3 1/16	4	4 9/16	5 1/16	5 3/8	5 5/16	5 3/8	5 1/4	4 13/16	4 1/4	3 5/8	3 3/8	2 15/16	2 3/16	1 9/16	1	7/16	1/4	0	1/4	7/16	1	1 9/16	2 3/16	2 15/16	3 3/8	3 5/8	4 1/4	4 13/16	5 1/4	5 3/8	5 5/16	5 3/8	5 1/16	4 9/16	4	3 1/16	2 3/16	1 1/8	0
	VCO	0	1/8	1/8	3/16	3/16	3/16	5/16	3/8	3/8	3/8	3/8	3/8	3/16	5/16	5/16	3/16	3/16	5/16	1/8	1/8	0	0	1/8	3/16	7/16	5/16	11/16	3/4	13/16	7/8	1	1 1/16	1 3/16	1 3/16	1 5/16	1 3/16	1 1/4	1	7/8	5/8	1/2	1/4	0
	TRC	0	1 1/4	2 5/16	3 1/4	4 3/16	4 7/8	5 3/8	5 3/4	5 15/16	5 3/4	5 5/8	5 1/16	4 9/16	3 15/16	3 11/16	3 1/4	2 1/2	1 7/8	1 1/8	5/16	1/4	0	3/8	3/4	1 7/16	2 1/8	2 7/8	3 11/16	13/16	4 1/2	5 1/4	5 7/8	6 7/16	6 9/16	6 7/8	6 11/16	6 5/16	5 9/16	4 7/8	3 11/16	2 11/16	1 3/8	0

	LOCATION	℄ BRG. ABUT. A	0.0500L1	0.1000L1	0.1500L1	0.2000L1	0.2500L1	0.3000L1	0.3500L1	0.4000L1	0.4500L1	0.5000L1	0.5500L1	0.6000L1	0.6500L1	FS, TYPE 1	0.7000L1	0.7500L1	0.8000L1	0.8500L1	0.9000L1	0.9500L1	℄ PIER	0.0500L2	0.1000L2	0.1500L2	0.2000L2	0.2500L2	0.3000L2	FS, TYPE 1	0.3500L2	0.4000L2	0.4500L2	0.5000L2	0.5500L2	0.6000L2	0.6500L2	0.7000L2	0.7500L2	0.8000L2	0.8500L2	0.9000L2	0.9500L2	℄ BRG. ABUT. B
GIRDERS 2-4	DLS	0	1/4	1/2	3/4	15/16	1 1/16	1 1/16	1 1/4	1 5/16	1 1/4	1 1/4	1 1/8	1	7/8	13/16	11/16	9/16	3/8	1/4	1/8	1/16	0	1/16	1/8	1/4	3/8	9/16	11/16	13/16	7/8	1	1 1/8	1 1/4	1 1/4	1 5/16	1 1/4	1 3/16	1 1/16	15/16	3/4	1/2	1/4	0
	DLC	0	13/16	1 5/8	2 5/16	2 15/16	3 3/8	3 13/16	4	4 1/8	4	3 7/8	3 3/16	3 3/16	2 11/16	2 1/2	2 3/16	1 5/8	1 1/8	11/16	5/16	1/8	0	1/8	5/16	11/16	1 1/8	1 5/8	2 3/16	2 1/2	2 11/16	3 3/16	3 3/16	3 7/8	4	4 1/8	4	3 11/16	3 3/8	2 15/16	2 5/16	1 5/8	13/16	0
	SDL	0	1/8	3/16	7/16	9/16	5/8	3/4	3/4	13/16	3/4	3/4	11/16	5/8	1/2	1/2	7/16	5/16	1/4	1/8	1/16	0	0	0	1/16	1/8	1/4	3/16	7/16	1/2	1/2	5/8	11/16	3/4	3/4	13/16	3/4	3/4	5/8	5/16	7/16	3/16	1/8	0
	TD&C	0	1 3/16	2 7/16	3 1/2	4 7/16	5 1/16	5 3/4	6	6 1/4	6	5 7/8	5 3/8	4 13/16	4 1/16	3 3/4	3 5/16	2 1/2	1 3/4	1 1/16	1/2	3/16	0	3/16	1/2	1 1/16	1 3/4	2 1/2	3 5/16	3 3/4	4 1/16	4 13/16	5 3/8	5 7/8	6	6 1/4	6	5 3/4	5 1/16	4 7/16	3 1/2	2 7/16	1 3/16	0
	VCO	0	1/8	1/8	3/16	3/16	5/16	5/16	3/8	3/8	3/8	3/8	3/8	5/16	5/16	5/16	5/16	5/16	5/16	1/8	1/8	0	0	1/8	5/16	7/16	9/16	11/16	3/4	13/16	7/8	1	1 1/16	1 3/16	1 3/16	1 5/16	1 3/16	1 1/4	1	7/8	5/8	1/2	1/4	0
	TRC	0	1 5/16	2 9/16	3 11/16	4 5/8	5 3/8	6 1/16	6 3/8	6 5/8	6 3/8	6 1/4	5 3/4	5 1/8	4 3/8	4 1/16	3 5/8	2 13/16	2 1/16	1 3/16	5/8	3/16	0	5/16	13/16	1 1/2	2 5/16	3 3/16	4 1/16	4 9/16	4 15/16	5 13/16	6 7/16	7 1/16	7 3/16	7 5/16	7 3/16	7	6 1/16	5 3/16	4 1/8	2 15/16	1 7/16	0

NOTES:

1. ALL GIRDERS OF ALL SPANS SHALL BE CAMBERED FOR DEAD LOAD DEFLECTION TO THE DIMENSIONS SHOWN ON THIS PLAN. THE CAMBER TOLERANCE IS NOTHING UNDER TO 3/4 INCH OVER.
2. CAMBERS ARE SHOWN IN INCHES.
3. POSITIVE DEFLECTIONS ARE MEASURED IN THE DOWNWARD DIRECTION. POSITIVE VERTICAL CURVE ORDINATE AND POSITIVE CAMBER ARE MEASURED IN THE UPWARD DIRECTION.

LEGEND:

DLS - DENOTES DEFLECTION DUE TO WEIGHT OF STRUCTURAL STEEL INCLUDING CROSS FRAMES

DLC - DENOTES DEFLECTION DUE TO CONCRETE SLAB, HAUNCHES, AND STAY-IN-PLACE FORMS

SDL - DENOTES DEFLECTION DUE TO CONCRETE PARAPET AND FUTURE WEARING SURFACE

TD&C - DENOTES TOTAL DEAD LOAD DEFLECTION AND CAMBER

VCO - DENOTES CAMBER FOR VERTICAL CURVE ORDINATE DUE TO ROADWAY PROFILE

TRC - TOTAL REQUIRED CAMBER = TD&C + VCO

FS - FIELD SPLICE

BR1-7S
CT-01

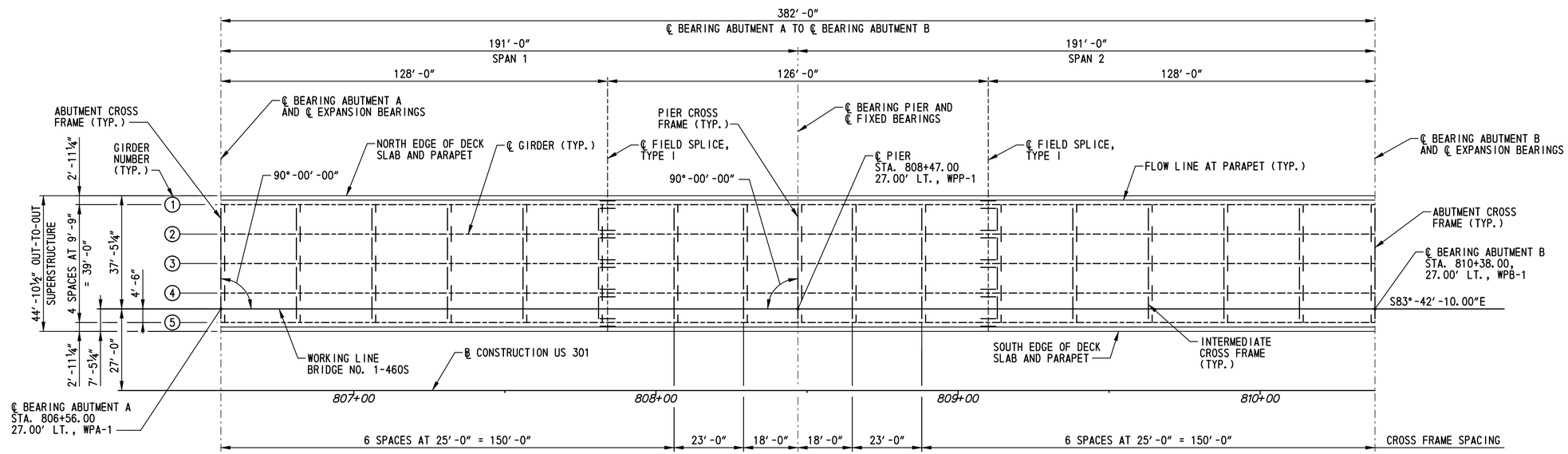

FRAMING PLAN

SCALE: 1″=20′-0″

NOTES:

1. FOR GIRDER ELEVATION, SEE DWG. NO. BM-01.
2. FOR CROSS FRAME DETAILS, SEE DWG. NO. BM-02.
3. FOR FIELD SPLICE DETAILS, SEE DWG. NO. BM-04.

BR1-7S
FR-01

DELAWARE DEPARTMENT OF TRANSPORTATION	ADDENDUMS / REVISIONS	SCALE: AS NOTED	US 301, SR 896 TO SR 1	CONTRACT T200911308	BRIDGE NO. 1-460S	FRAMING PLAN	SHEET NO. 476
				COUNTY NEW CASTLE	DESIGNED BY: M.P.U.		TOTAL SHTS. 875
					CHECKED BY: P.S.D.		

n:\33653-000\contract 1a\cadd\bridge\br_no7\BR_No7SVFR01_br1-7S.dgn
10/24/2012 1:51:36 PM

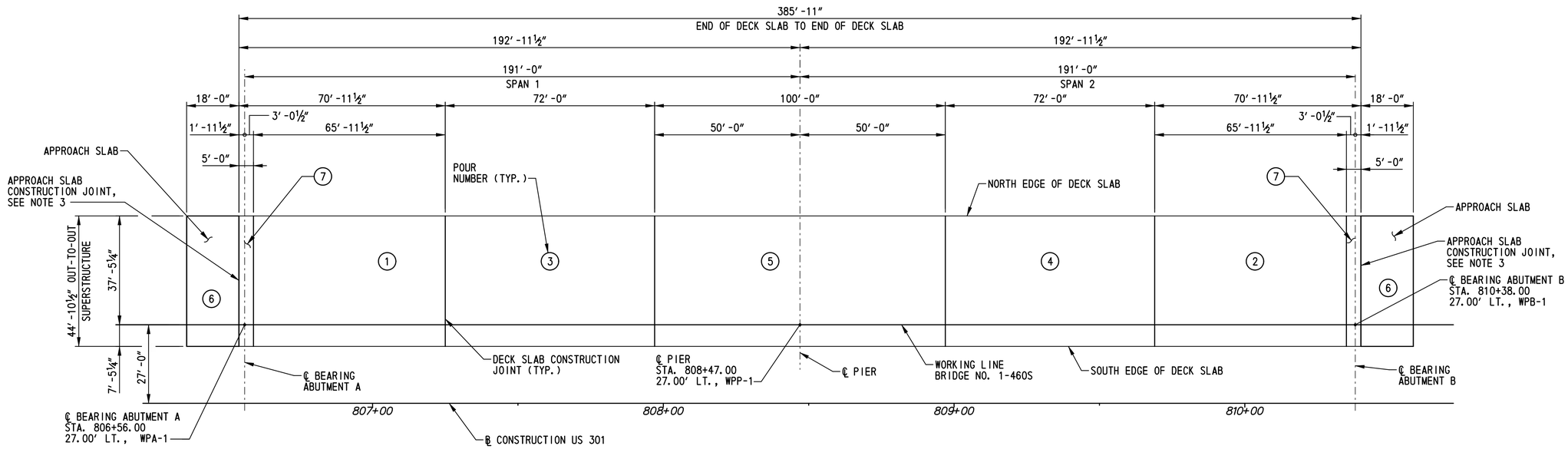

DECK SLAB POURING SEQUENCE PLAN

SCALE: 1″=20′-0″

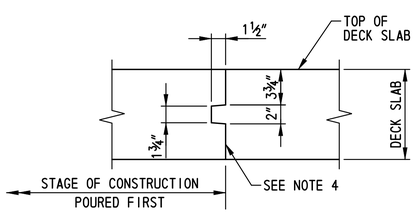

DECK SLAB CONSTRUCTION JOINT DETAIL

SCALE: 1½″=1′-0″

NOTES:

1. THE CONTRACTOR SHALL FOLLOW THE POURING SEQUENCE SHOWN ON THESE PLANS. NO OTHER ALTERNATE POURING SEQUENCE WILL BE ALLOWED FOR THIS PROJECT.
2. THE POURING SEQUENCE FOR THE DECK SLAB SHALL BE MADE IN THE NUMBERED ORDER INDICATED. THERE MUST BE AT LEAST FORTY (40) HOURS BETWEEN THE COMPLETION OF ONE NUMBERED POUR AND THE START OF THE NEXT NUMBERED POUR. THE CONTRACTOR MAY REVERSE THE ORDER OF POURS NUMBERED 1 AND 2, AND POURS NUMBERED 3 AND 4. THE CONTRACTOR MAY PLACE THE POUR 6 SECTIONS AS SOON AS THE POUR 1 AND POUR 2 SECTIONS HAVE BEEN PLACED. THE POUR 7 SECTIONS SHALL BE PLACED STARTING AT THE BRIDGE DECK AND WORKING TOWARD THE APPROACH SLAB.
3. MAKE A 3″ DEEP SAWCUT AT THE APPROACH SLAB CONSTRUCTION JOINT NO LATER THAN 36 HOURS AFTER PLACEMENT OF POUR 7 SECTIONS. SEAL THIS SAWCUT WITH AN APPROVED COLD APPLIED SILICONE SEALER PLACED IN A CLEAN AIR-BLOWN NOTCH FREE OF MOISTURE. COST SHALL BE INCIDENTAL TO ITEM 602014 - PORTLAND CEMENT CONCRETE MASONRY, APPROACH SLAB, CLASS D.
4. ENTIRE FACE OF CONSTRUCTION JOINT SHALL BE COATED WITH AN APPROVED EPOXY BONDING COMPOUND. COST SHALL BE INCIDENTAL TO ITEM 602013 - PORTLAND CEMENT CONCRETE MASONRY, SUPERSTRUCTURE, CLASS D.
5. FOR FINISHED ROADWAY ELEVATIONS, SEE DWG. NOS. FD-01 AND FD-02.
6. FOR DECK SLAB REINFORCEMENT, SEE DWG. NOS. DK-02 THRU DK-04.

BR1-7S
DK-01

DELAWARE DEPARTMENT OF TRANSPORTATION	ADDENDUMS / REVISIONS	SCALE: AS NOTED	US 301, SR 896 TO SR 1	CONTRACT T200911308	BRIDGE NO. 1-460S	DECK SLAB POURING SEQUENCE	SHEET NO. 477
				COUNTY NEW CASTLE	DESIGNED BY: M.P.U.		TOTAL SHTS. 875
					CHECKED BY: P.S.D.		

pt\31653-000\contract 1a\cadd\bridge\br_no7\BR_No7SVDK01_br1-7S.dgn
10/24/2012 1:59:24 PM

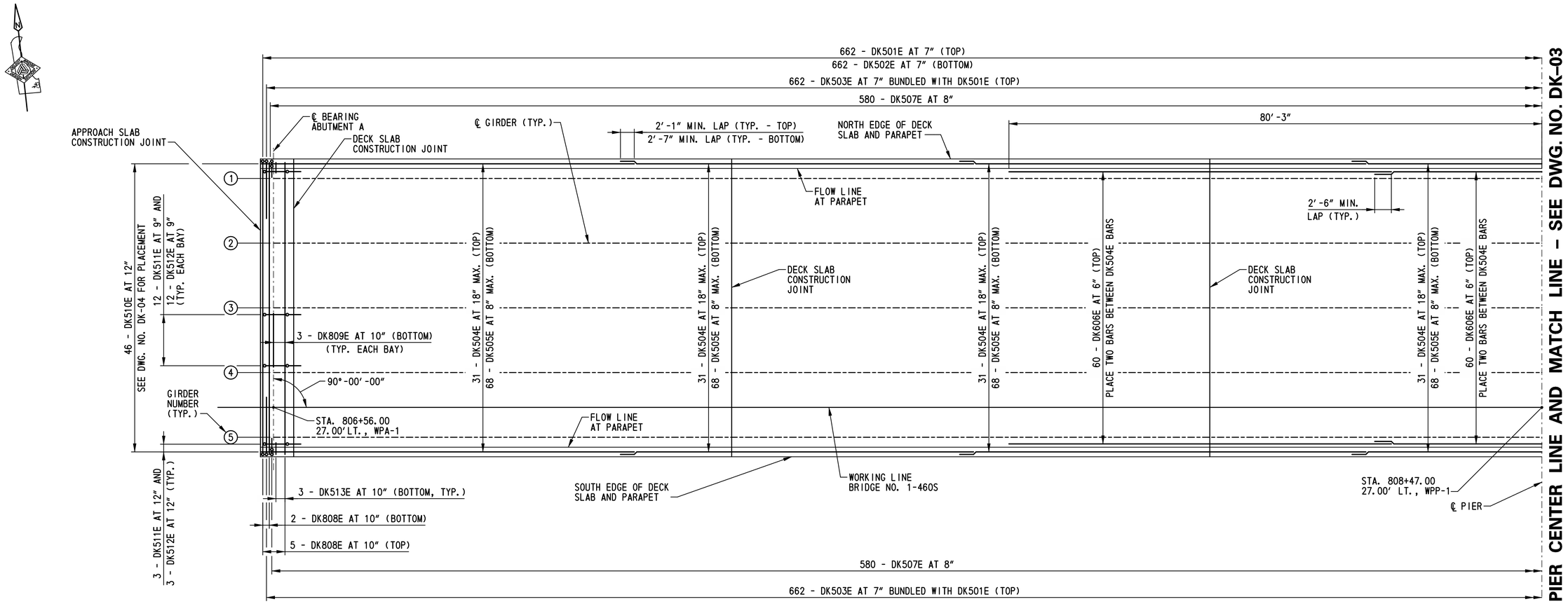

DECK SLAB REINFORCEMENT PLAN - SPAN 1

SCALE: 1/8 "=1'-0"

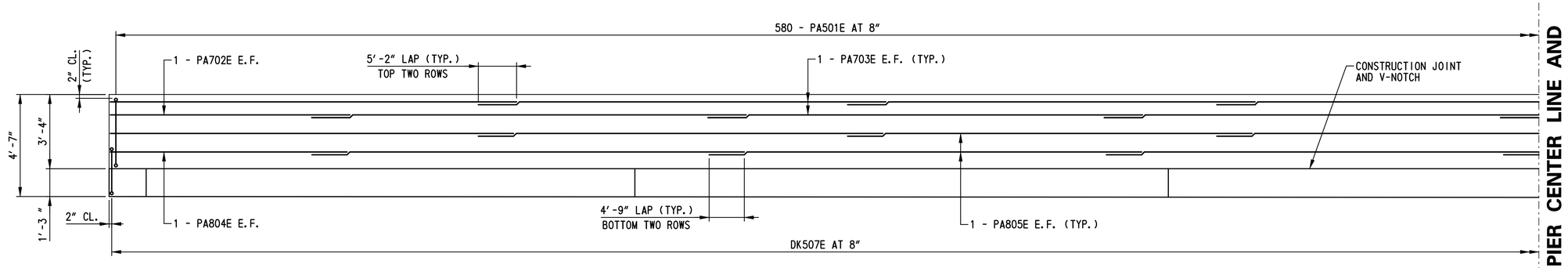

PARAPET REINFORCEMENT ELEVATION - SPAN 1

HORIZONTAL SCALE: 1/8"=1'-0"
VERTICAL SCALE: 3/8"=1'-0"

NOTES:

1. FOR ADDITIONAL INFORMATION ON PLACEMENT OF DK507E AND DK606E, AND FOR ADDITIONAL DECK SLAB AND PARAPET REINFORCEMENT DETAILS, SEE DWG. NO. DK-04.
2. FOR DECK SLAB CONSTRUCTION JOINT LOCATIONS AND DECK SLAB POURING SEQUENCE, SEE DWG. NO. DK-01.
3. FOR PARAPET CONTROL JOINT LOCATIONS, SEE DWG. NO. PE-01. FOR PARAPET CONTROL JOINT DETAILS, SEE DWG. NO. SD-01.

NOTE:

SOUTH PARAPET SHOWN LOOKING NORTH, NORTH PARAPET SIMILAR LOOKING SOUTH.

BR1-7S
DK-02

DELAWARE DEPARTMENT OF TRANSPORTATION	ADDENDUMS / REVISIONS	SCALE: AS NOTED	US 301, SR 896 TO SR 1	CONTRACT T200911308 / COUNTY NEW CASTLE	BRIDGE NO. 1-460S / DESIGNED BY: M.P.U. / CHECKED BY: P.S.D.
DECK SLAB AND PARAPET REINFORCEMENT - SPAN 1	SHEET NO. 478 / TOTAL SHTS. 875				

n:\33653-000\contract 1a\cadd\bridge\br_no7\BR_No7S\DK02_br1-7S.dgn
10/24/2012 1:51:26 PM

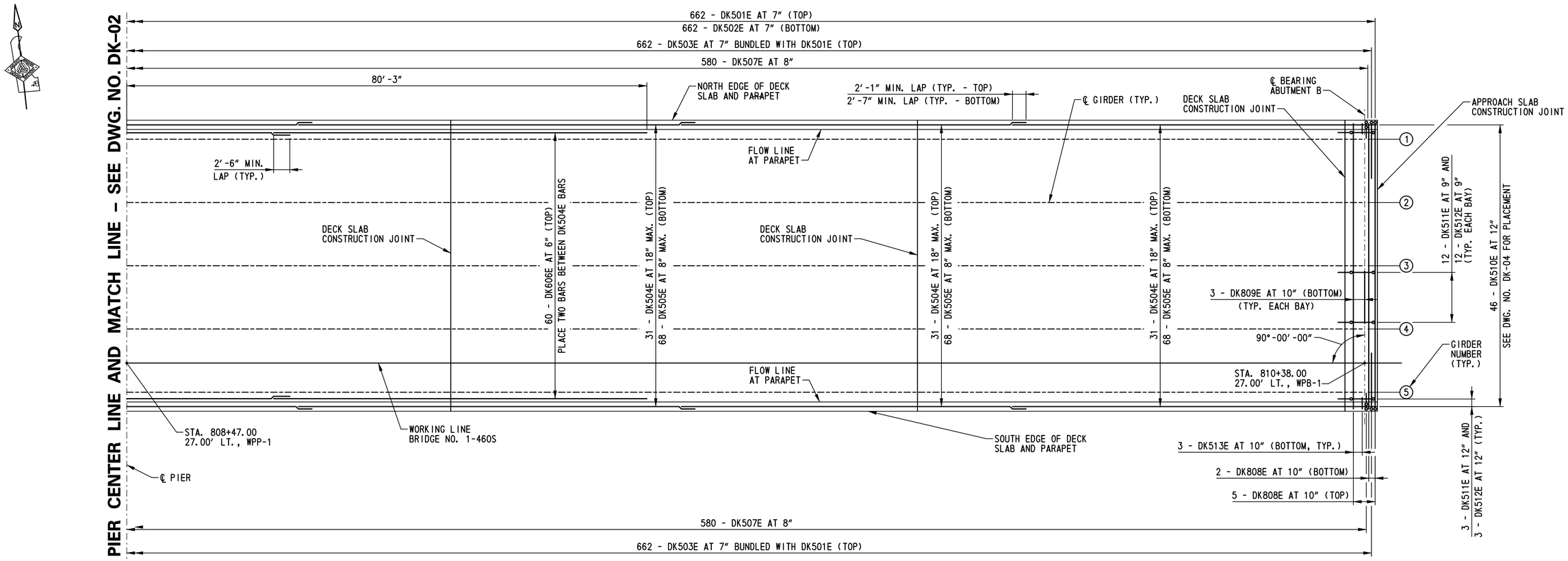

DECK SLAB REINFORCEMENT PLAN - SPAN 2

SCALE: 1/8"=1'-0"

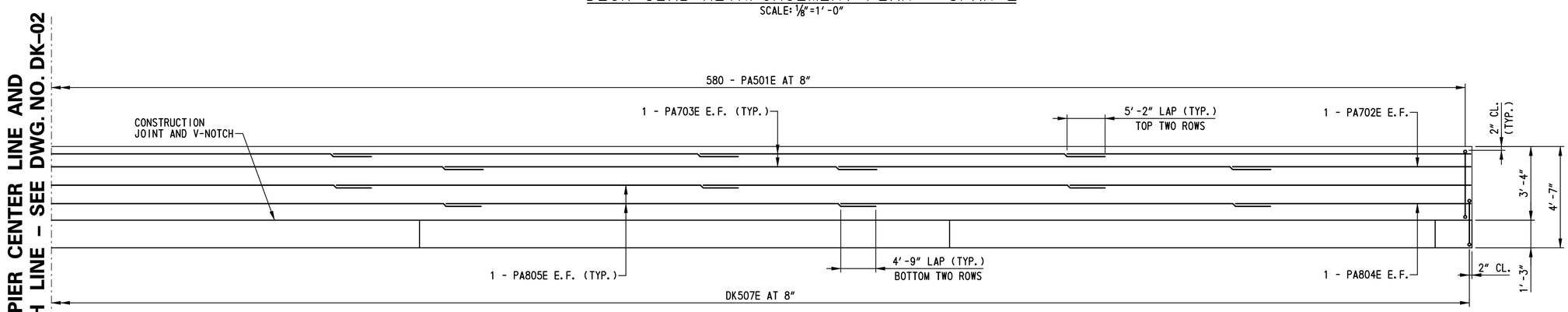

PARAPET REINFORCEMENT ELEVATION - SPAN 2

HORIZONTAL SCALE: 1/8"=1'-0"
VERTICAL SCALE: 3/8"=1'-0"

NOTE:
SOUTH PARAPET SHOWN LOOKING NORTH, NORTH PARAPET SIMILAR LOOKING SOUTH.

NOTES:

1. FOR ADDITIONAL INFORMATION ON PLACEMENT OF DK507E AND DK606E, AND FOR ADDITIONAL DECK SLAB AND PARAPET REINFORCEMENT DETAILS, SEE DWG. NO. DK-04.
2. FOR DECK SLAB CONSTRUCTION JOINT LOCATIONS AND DECK SLAB POURING SEQUENCE, SEE DWG. NO. DK-01.
3. FOR PARAPET CONTROL JOINT LOCATIONS, SEE DWG. NO. PE-01. FOR PARAPET CONTROL JOINT DETAILS, SEE DWG. NO. SD-01.

BR1-7S
DK-03

DELAWARE DEPARTMENT OF TRANSPORTATION	ADDENDUMS / REVISIONS	SCALE: AS NOTED	US 301, SR 896 TO SR 1	CONTRACT T200911308	BRIDGE NO. 1-460S	DECK SLAB AND PARAPET REINFORCEMENT - SPAN 2	SHEET NO. 479
				COUNTY NEW CASTLE	DESIGNED BY: M.P.U.		TOTAL SHTS. 875
					CHECKED BY: P.S.D.		

rt\33653-000\contract 1a\cadd\bridge\br_no7\BR_No7S\DK03_br1-7S.dgn
10/24/2012 1:51:27 PM

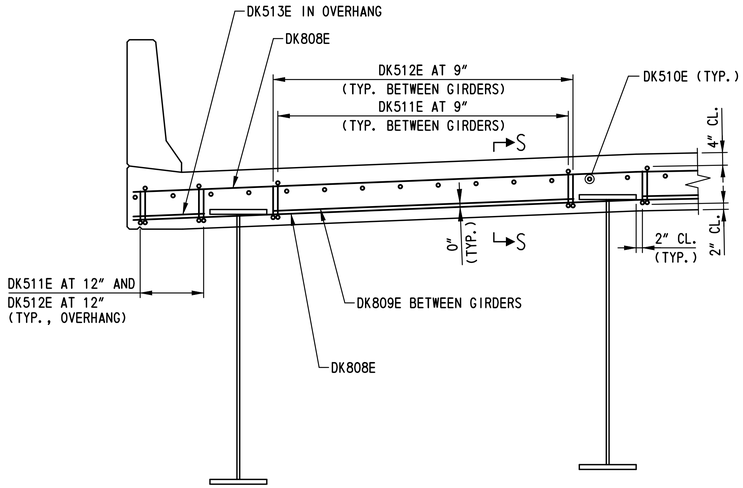

NOTE:
NORMAL SLAB AND PARAPET REINFORCEMENT NOT SHOWN FOR CLARITY.

CONCRETE END HAUNCH TYPICAL REINFORCEMENT SECTION

SCALE: ½"=1'-0"

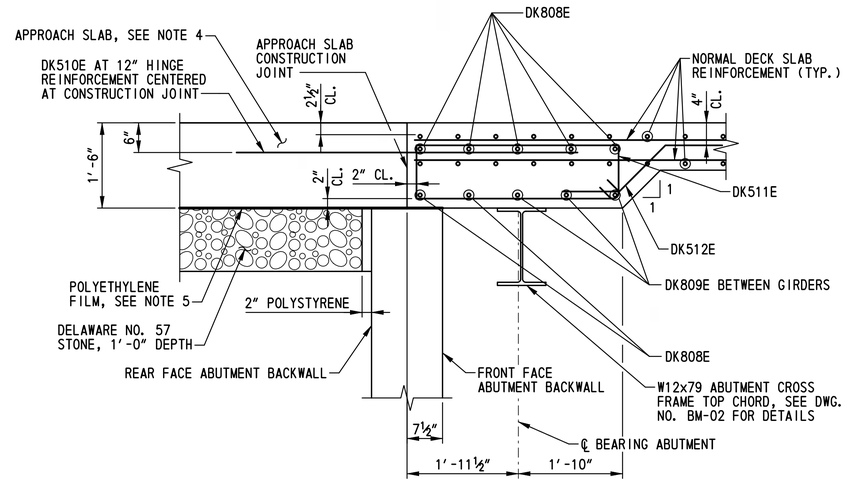

SECTION S-S

SCALE: ¾"=1'-0"

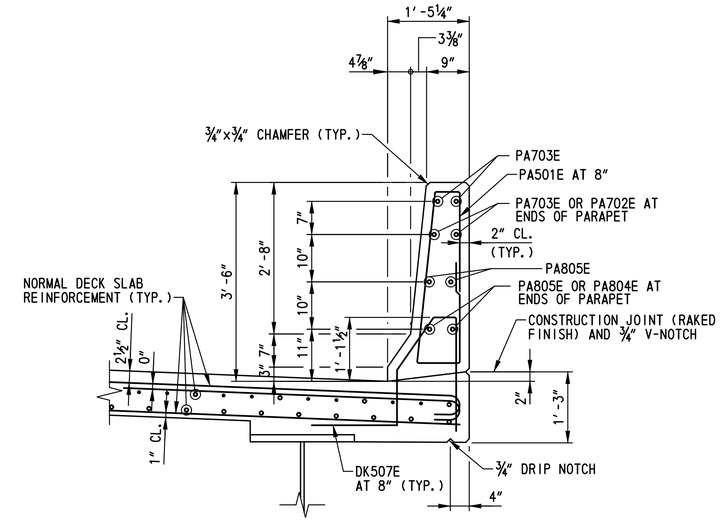

PARAPET TYPICAL REINFORCEMENT SECTION

SCALE: ¾"=1'-0"

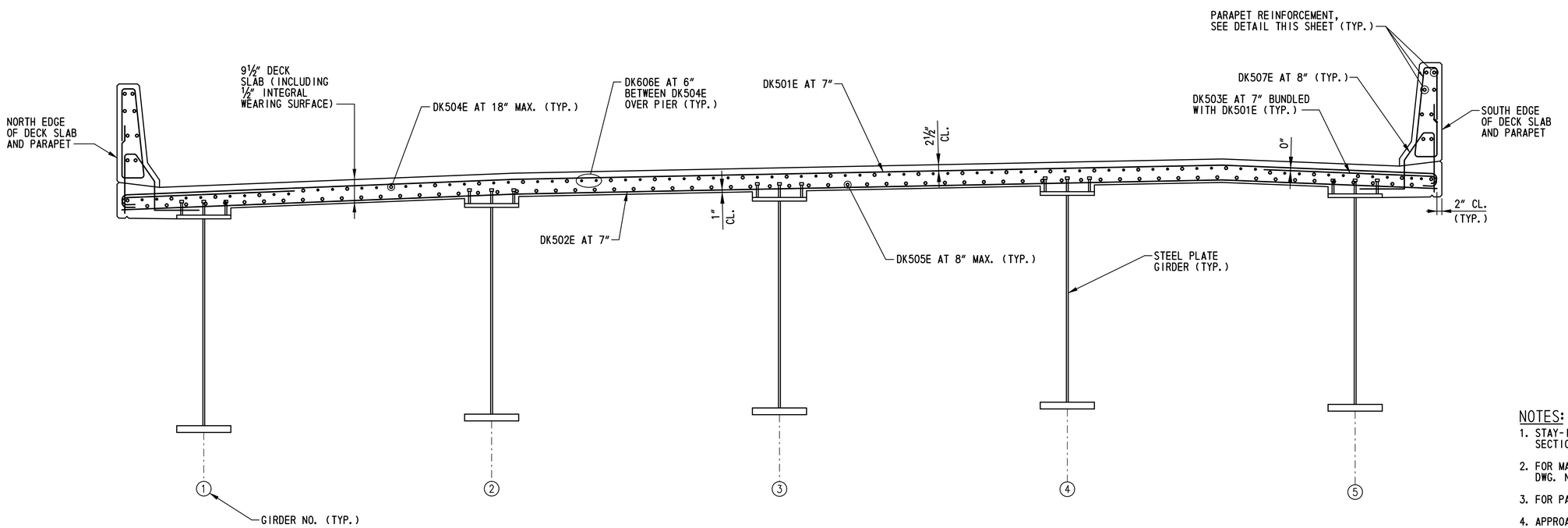

DECK SLAB TYPICAL REINFORCEMENT SECTION

SCALE: ½"=1'-0"

NOTE:
TYPICAL SECTION SHOWN LOOKING STATIONS AHEAD.

NOTES:

1. STAY-IN-PLACE FORMS NOT SHOWN ON TYPICAL REINFORCEMENT SECTION FOR CLARITY. SEE DWG. NO. SD-01.
2. FOR MAIN LONGITUDINAL AND TRANSVERSE REINFORCEMENT, SEE DWG. NOS. DK-02 AND DK-03.
3. FOR PARAPET CONTROL JOINT DETAILS, SEE DWG. NO. SD-01.
4. APPROACH SLAB REINFORCEMENT NOT SHOWN FOR CLARITY.
5. FOR POLYETHYLENE FILM INFORMATION, SEE DWG. NO. AS-07.

BR1-7S
DK-04

DELAWARE DEPARTMENT OF TRANSPORTATION	ADDENDUMS / REVISIONS	SCALE: AS NOTED	US 301, SR 896 TO SR 1	CONTRACT T200911308	BRIDGE NO. 1-460S	DECK SLAB AND PARAPET REINFORCEMENT DETAILS
				COUNTY NEW CASTLE	DESIGNED BY: M.P.U.	SHEET NO. 480
					CHECKED BY: P.S.D.	TOTAL SHTS. 875

n:\31653-000\contract 1a\cadd\bridge\br_no7\BR_No7S\DK04_br1-7S.dgn
10/24/2012 11:51:28 PM

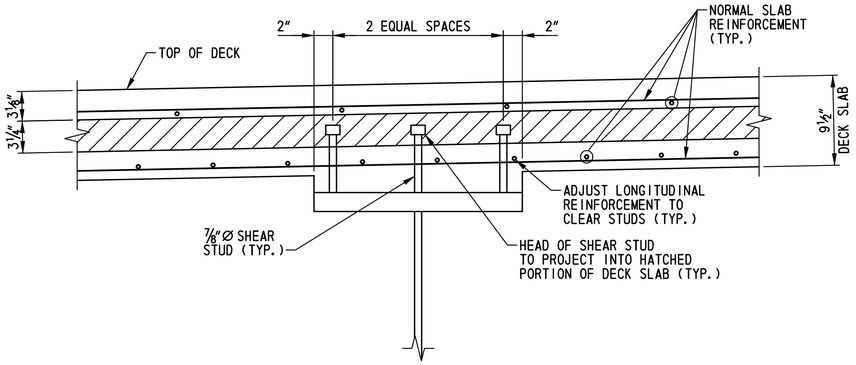

SHEAR STUD DETAIL

SCALE: 1½"=1'-0"

NOTES:

1. S.I.P. FORMS NOT SHOWN FOR CLARITY.
2. FOR LONGITUDINAL SPACING OF SHEAR STUDS SEE DWG. NO. BM-01.

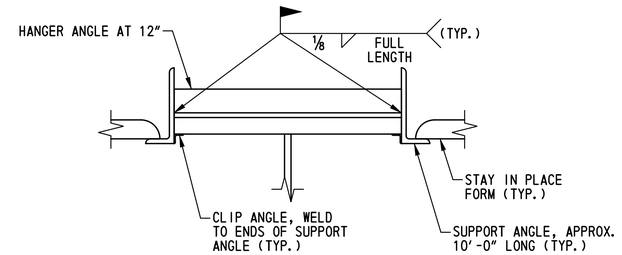

TENSION FLANGE S.I.P. FORM ATTACHMENT DETAIL

SCALE: 1½"=1'-0"

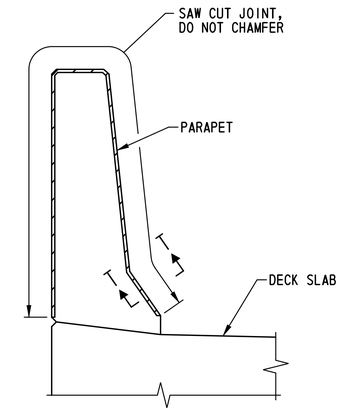

PARAPET CONTROL JOINT DETAIL

SCALE: 1"=1'-0"

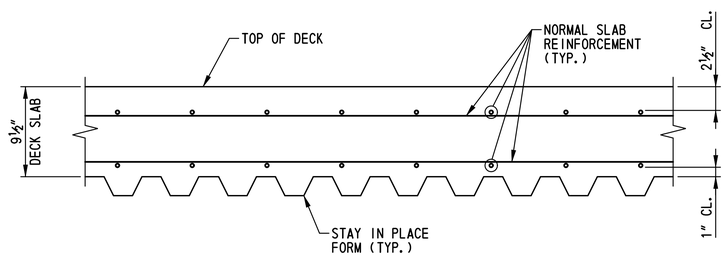

S.I.P. FORM PLACEMENT DETAIL

SCALE: 1½"=1'-0"

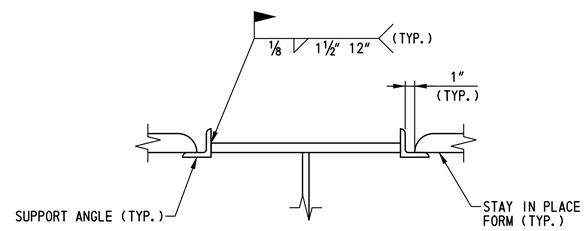

COMPRESSION FLANGE S.I.P. FORM ATTACHMENT DETAIL

SCALE: 1½"=1'-0"

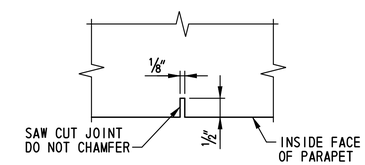

SECTION T-T

SCALE: 6"=1'-0"

NOTE:

SAW CUT CONTROL JOINT SHALL BE SAWED SAME DAY AS CONCRETE IS POURED.

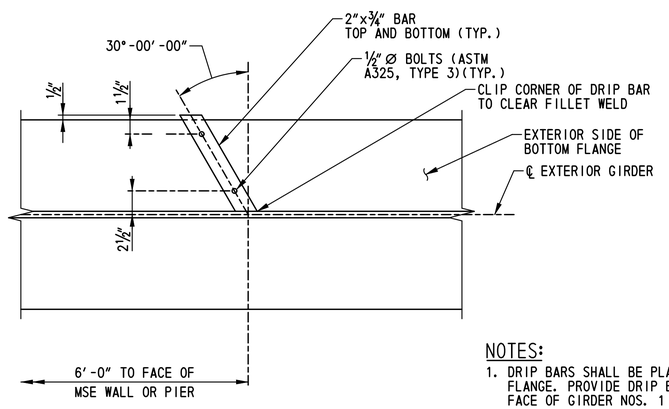

DRIP BAR DETAIL

SCALE: 1½"=1'-0"

NOTES:

1. DRIP BARS SHALL BE PLACED ON BOTTOM FLANGE. PROVIDE DRIP BAR FOR EXTERIOR FACE OF GIRDER NOS. 1 AND 5 ONLY.
2. DRIP BARS ARE PLACED ADJACENT TO SUPPORTS TO PREVENT WATER FLOW ONTO SUPPORT.
3. DRIP BARS SHALL BE CAULKED AGAINST FLANGE, WEB AND FILLET WELD WITH AN APPROVED NON-HARDENING CAULKING COMPOUND.
4. DRIP BARS SHALL CONFORM TO ASTM A 709 GRADE 50W STRUCTURAL STEEL.

STAY IN PLACE FORM NOTES:

1. STAY IN PLACE FORMS SHALL CONFORM TO 602.03.
2. NO WELDING OF STAY IN PLACE FORMS TO TENSION FLANGES IS PERMITTED. SEE GIRDER ELEVATION ON DWG. NO. BM-01.
3. STAY IN PLACE FORMS SHALL BE VERTICALLY ADJUSTED TO ATTAIN FINISHED LINES AND GRADES REQUIRED ON THE PLANS.
4. ANY PERMANENTLY EXPOSED FORM METAL WHERE THE GALVANIZED COATING HAS BEEN DAMAGED SHALL BE THOROUGHLY CLEANED, WIRE BRUSHED, AND PAINTED WITH TWO COATS OF ZINC-OXIDE DUST PRIMER, FEDERAL SPECIFICATION TT-P-641D, TYPE II, NO COLOR ADDED, TO THE SATISFACTION OF THE ENGINEER. MINOR HEAT DISCOLORATION IN AREAS OF WELDS NEED NOT BE TOUCHED UP.

BR1-7S
SD-01

DELAWARE DEPARTMENT OF TRANSPORTATION	ADDENDUMS / REVISIONS	SCALE: AS NOTED	US 301, SR 896 TO SR 1	CONTRACT T200911308	BRIDGE NO. 1-460S	SUPERSTRUCTURE DETAILS	SHEET NO. 481
				COUNTY NEW CASTLE	DESIGNED BY: M.P.U.		TOTAL SHTS. 875
					CHECKED BY: P.S.D		

n:\31653-000\contract to\cadd\bridge\br_no7\BR_No7S\SD01_br1-7S.dgn
10/24/2012 11:53:31 AM

(1) ANY MARK NUMBER WITH SUFFIX 'E' DENOTES EPOXY COATED REINFORCING STEEL.

(2) ALL MARK 'LOCATION PREFIXES' SHALL CONSIST OF TWO LETTERS AND ARE AS FOLLOWS: AB = ABUTMENT, AS = APPROACH SLAB, BC = BOX CULVERT, BW = BACKWALL, CL = COLUMN, DK = DECK, DL = DOWEL, FT = FOOTING, HW = HEADWALL, MS = MISC. BARS, PA = PARAPET, PR = PIER, SC = SHEETPILE CAP, SL = SLAB, TW = TOEWALL, WL = WALL (UNIQUE LOCATION), WW = WINGWALL

SPECIFICATIONS					BENDING DIMENSIONS (FEET-INCHES /QUARTER INCH)										
QTY.	SIZE	LENGTH	MARK	TYPE	A	B	C	D	E	F/R	G	H	J	K	O
DECK															
662	5	45-08 2	DK501E	1	0-07 0	44-06 2					0-07 0		0-05 0		
662	5	44-06 2	DK502E	STR		44-06 2									
1324	5	8-09 1	DK503E	1	0-07 0	8-02 1							0-05 0		
217	5	56-11 0	DK504E	STR		56-11 0									
476	5	57-04 0	DK505E	STR		57-04 0									
180	6	55-02 0	DK606E	STR		55-02 0									
1160	5	5-07 0	DK507E	T15		2-00 0	0-05 2	1-01 2	1-00 0	1-00 0		1-00 0	0-07 3	0-11 0	1-01 1
14	8	44-06 2	DK808E	STR		44-06 2									
24	8	7-09 0	DK809E	STR		7-09 0									
92	5	6-00 0	DK510E	STR		6-00 0									
108	5	10-01 0	DK511E	T1	0-05 2	1-00 1	3-06 3	1-00 1	3-06 3		0-05 2				
108	5	3-09 1	DK512E	6		1-03 0	1-03 1	1-03 0				0-10 2		0-10 2	3-04 2
12	5	1-10 0	DK513E	STR		1-10 0									
PARAPET															
1160	5	8-00 3	PA501E	PA		2-06 2	0-09 0	3-00 1	0-05 0	2-06 2		3-00 0		0-04 0	
8	7	32-04 0	PA702E	STR		32-04 0									
52	7	59-07 0	PA703E	STR		59-07 0									
8	8	31-11 2	PA804E	STR		31-11 2									
52	8	59-01 3	PA805E	STR		59-01 3									

SPECIFICATIONS					BENDING DIMENSIONS (FEET-INCHES /QUARTER INCH)										
QTY.	SIZE	LENGTH	MARK	TYPE	A	B	C	D	E	F/R	G	H	J	K	O

SPECIFICATIONS					BENDING DIMENSIONS (FEET-INCHES /QUARTER INCH)										
QTY.	SIZE	LENGTH	MARK	TYPE	A	B	C	D	E	F/R	G	H	J	K	O

ASTM STANDARD ENGLISH REINFORCING BARS

	NOMINAL DIMENSIONS			RECOMMENDED END HOOKS, APPLICABLE TO ALL GRADES				STIRRUP AND TIE HOOKS, APPLICABLE TO ALL GRADES			
				180° HOOKS		90° HOOKS		90° HOOK		135° HOOK	
BAR SIZE	DIAMETER (INCHES)	AREA (INCHES²)	WEIGHT (LBS./FT.)	D	A OR G	J	A OR G	D	A OR G	A OR G	A OR G
3	0.375	0.110	0.376	2¼″	5″	3″	6″	1½″	4″	4″	2½″
4	0.500	0.200	0.668	3″	6″	4″	8″	2″	4½″	4½″	3″
5	0.625	0.310	1.043	3¾″	7″	5″	10″	2½″	6″	5½″	3¾″
6	0.750	0.440	1.502	4½″	8″	6″	1-0″	4½″	1-0″	8″	4½″
7	0.875	0.600	2.044	5¼″	10″	7″	1-2″	5¼″	1-2″	9″	5¼″
8	1.000	0.790	2.670	6″	11″	8″	1-4″	6″	1-4″	10½″	6″
9	1.128	1.000	3.400	9½″	1-3″	11¾″	1-7″				
10	1.270	1.270	4.303	10¾″	1-5″	1-1¼″	1-10″				
11	1.410	1.560	5.313	1-0″	1-7″	1-2¾″	2-0″				
14	1.693	2.250	7.650	1-6¼″	2-3″	1-9¾″	2-7″				
18	2.257	4.000	13.600	2-0″	3-0″	2-4½″	3-5″				

NOTES:

1. FIGURES SHOWN IN CIRCLES REPRESENT BAR BEND TYPES.
2. STANDARD BAR BENDS INCLUDE ONLY THOSE TYPES BELOW, INDICATED AS SUCH.
3. ALL DIMENSIONS OUT-TO-OUT, EXCEPT "A" AND "G" ON STD. 180° AND 135° HOOKS.
4. "J" DIMENSIONS ON 180° HOOKS TO BE SHOWN ONLY WHERE NECESSARY TO RESTRICT HOOK SIZE, OTHERWISE STANDARD 'ACI' HOOKS ARE TO BE USED.
5. WHERE "J" IS NOT SHOWN, "J" WILL BE KEPT EQUAL TO OR LESS THAN "H" ON TYPES 3, 5 AND 22. WHERE "J" CAN EXCEED "H", IT SHALL BE SHOWN.
6. "H" DIMENSIONS OF STIRRUPS TO BE SHOWN AS NEEDED TO FIT WITHIN THE CONCRETE.
7. UNLESS OTHERWISE NOTED, DIAMETER "D" IS THE SAME FOR ALL BENDS AND HOOKS ON A BAR (EXCEPT FOR BEND TYPES 11 AND 13).
8. WHERE SLOPE DIFFERS FROM 45° OFFSET, "H" AND "K" MUST BE SHOWN.
9. WHERE BARS ARE TO BE BENT MORE ACCURATELY THAN STANDARD BENDING TOLERANCES, BENDING DIMENSIONS REQUIRING CLOSER FABRICATION SHOULD HAVE LIMITS INDICATED.
10. FOR RECOMMENDED DIAMETER "D", OF BENDS, HOOKS, ETC., REFER TO TABLE ABOVE, 'CRSI' OR 'ACI' TABLES WHERE APPLICABLE AND REQUIRED.
11. TYPE S1-S6, S11, T1-T3 AND T6-T9 APPLICABLE TO BAR SIZES #3 THROUGH #8.

STANDARD BAR BENDS

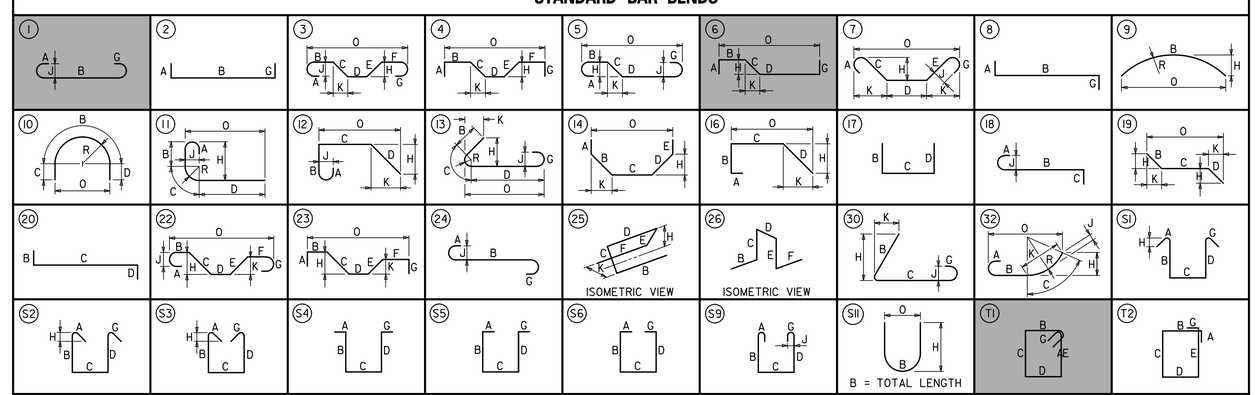

SPECIAL BAR BENDS

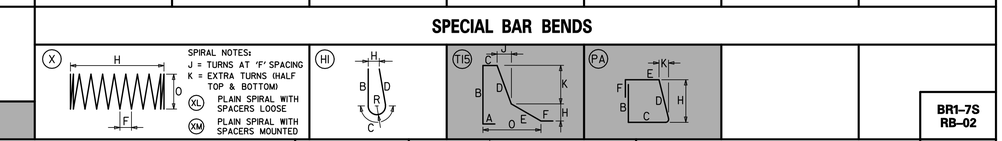

STIRRUP AND TIE HOOKS

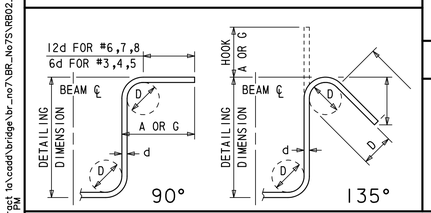

180° AND 90° END HOOKS

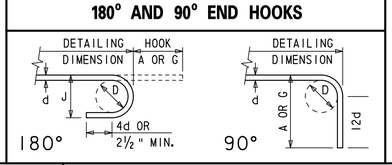

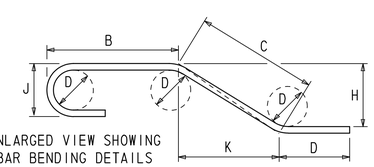

n:\3653-000\contract 1\cadd\bridge\br_no7\BR_No7S\RB02_br1-7S.dgn
10/24/2012 1:53:19 PM

DELAWARE DEPARTMENT OF TRANSPORTATION

ADDENDUMS / REVISIONS

US 301, SR 896 TO SR 1

CONTRACT	BRIDGE NO.	1-460S
T200911308	DESIGNED BY: M.P.U.	
COUNTY		
NEW CASTLE	CHECKED BY: P.S.D.	

SUPERSTRUCTURE REINFORCEMENT LIST

BR1-7S
RB-02

SHEET NO. 482
TOTAL SHTS. 875

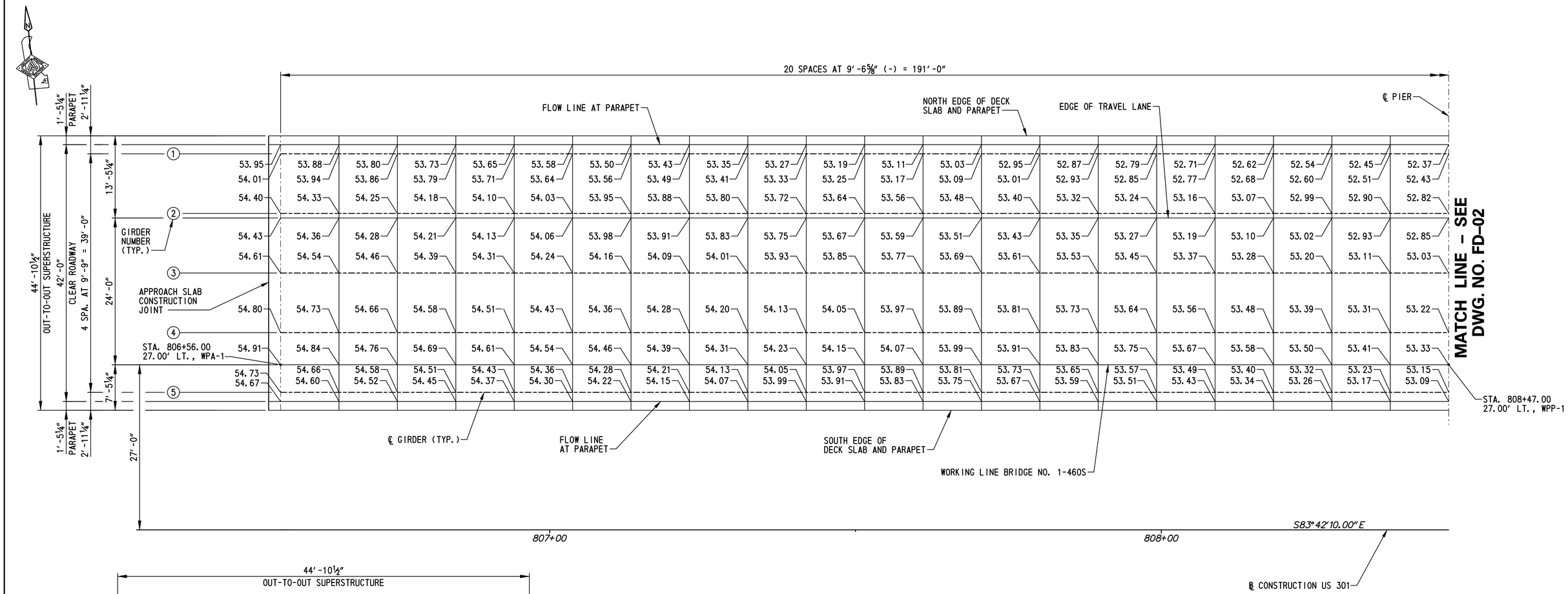

FINISHED BRIDGE DECK ELEVATIONS - SPAN 1

SCALE: ⅛"=1'-0"

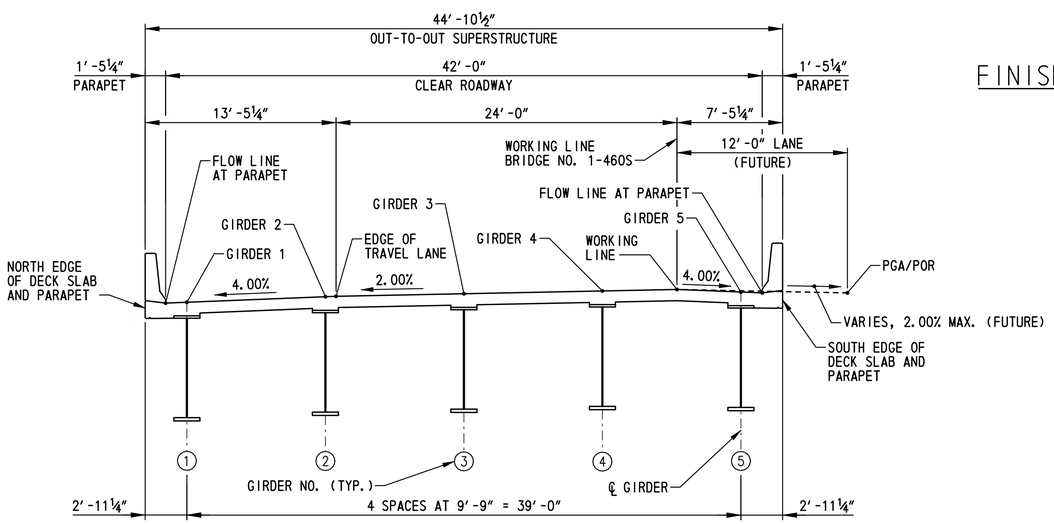

LOCATIONS OF FINISHED BRIDGE DECK ELEVATIONS

SCALE: 1/16"=1'-0"

NOTES:

1. FINISHED BRIDGE DECK ELEVATIONS SHOWN ARE TOP OF PROPOSED CONCRETE DECK SLAB.
2. FOR VERTICAL CURVE DATA, SEE DWG. NO. PE-01.
3. FOR SUPERELEVATION TRANSITION DATA, SEE DWG. NO. GG-15.
4. FOR CAMBER DIAGRAM, SEE DWG. NO. CT-01.

BR1-7S FD-01

DELAWARE DEPARTMENT OF TRANSPORTATION	ADDENDUMS / REVISIONS	SCALE: AS NOTED	US 301, SR 896 TO SR 1	CONTRACT T200911308	BRIDGE NO. 1-460S	FINISHED BRIDGE DECK ELEVATIONS – SPAN 1	SHEET NO. 483
				COUNTY NEW CASTLE	DESIGNED BY: L.M.B.		TOTAL SHTS. 875
					CHECKED BY: P.S.D.		

r:\31653-000\contract 1a\cadd\bridge\br_no7\BR_No7SVFD01_br1-7S.dgn
10/24/2012 1:51:32 PM

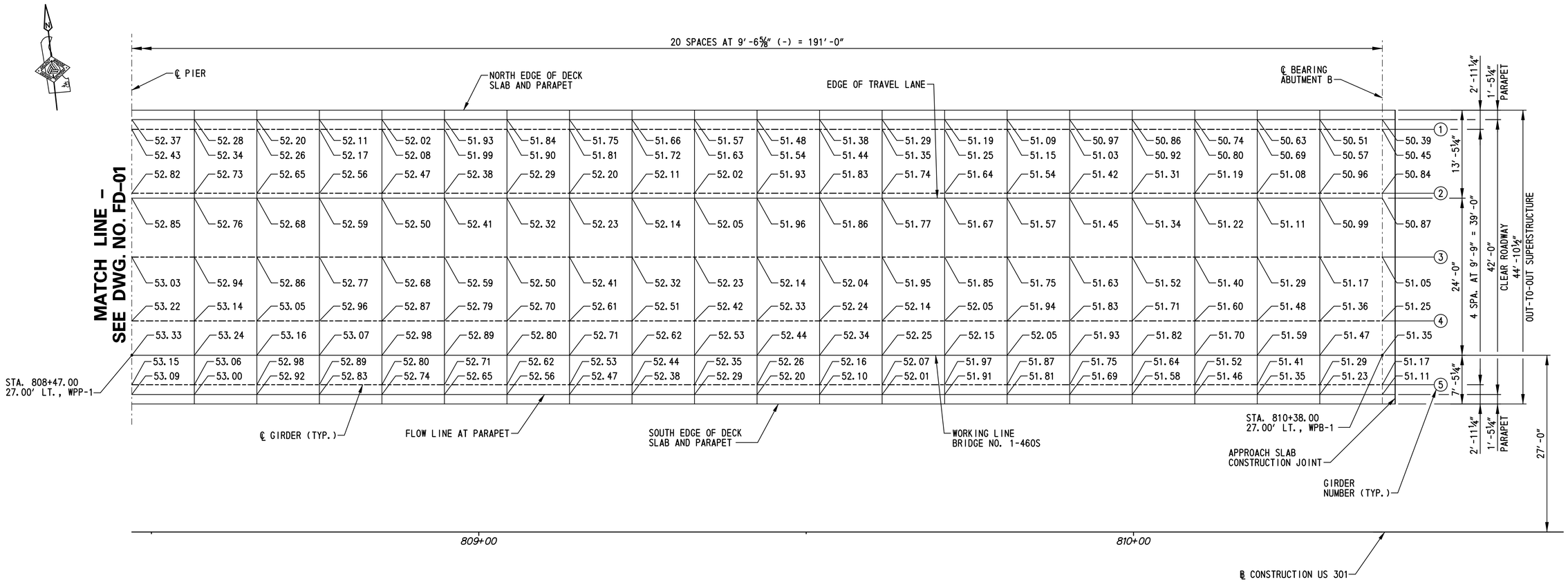

FINISHED BRIDGE DECK ELEVATIONS - SPAN 2

SCALE: ⅛"=1'-0"

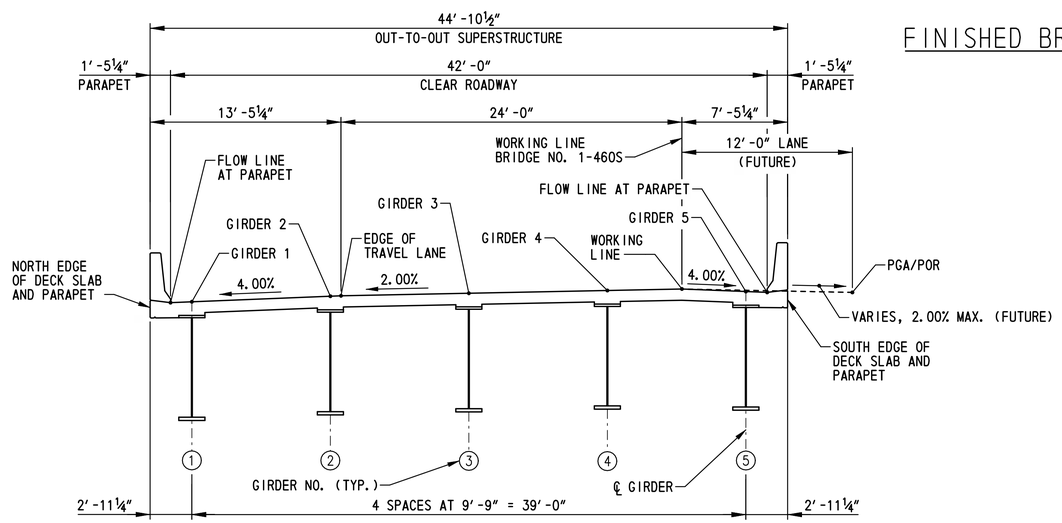

LOCATIONS OF FINISHED BRIDGE DECK ELEVATIONS

SCALE: 3/16"=1'-0"

NOTES:

1. FINISHED BRIDGE DECK ELEVATIONS SHOWN ARE TOP OF PROPOSED CONCRETE DECK SLAB.
2. FOR VERTICAL CURVE DATA, SEE DWG. NO. PE-01.
3. FOR SUPERELEVATION TRANSITION DATA, SEE DWG. NO. GG-15.
4. FOR CAMBER DIAGRAM, SEE DWG. NO. CT-01.

BR1-7S FD-02

DELAWARE DEPARTMENT OF TRANSPORTATION	ADDENDUMS / REVISIONS	SCALE: AS NOTED	US 301, SR 896 TO SR 1	CONTRACT T200911308	BRIDGE NO. 1-460S	FINISHED BRIDGE DECK ELEVATIONS - SPAN 2	SHEET NO. 484
				COUNTY NEW CASTLE	DESIGNED BY: L.M.B.		TOTAL SHTS. 875
					CHECKED BY: P.S.D.		

n:\31653-000\contract 1a\cadd\bridge\br_no7\BR_No7SFD02_br1-7S.dgn
10/24/2012 11:51:34 PM

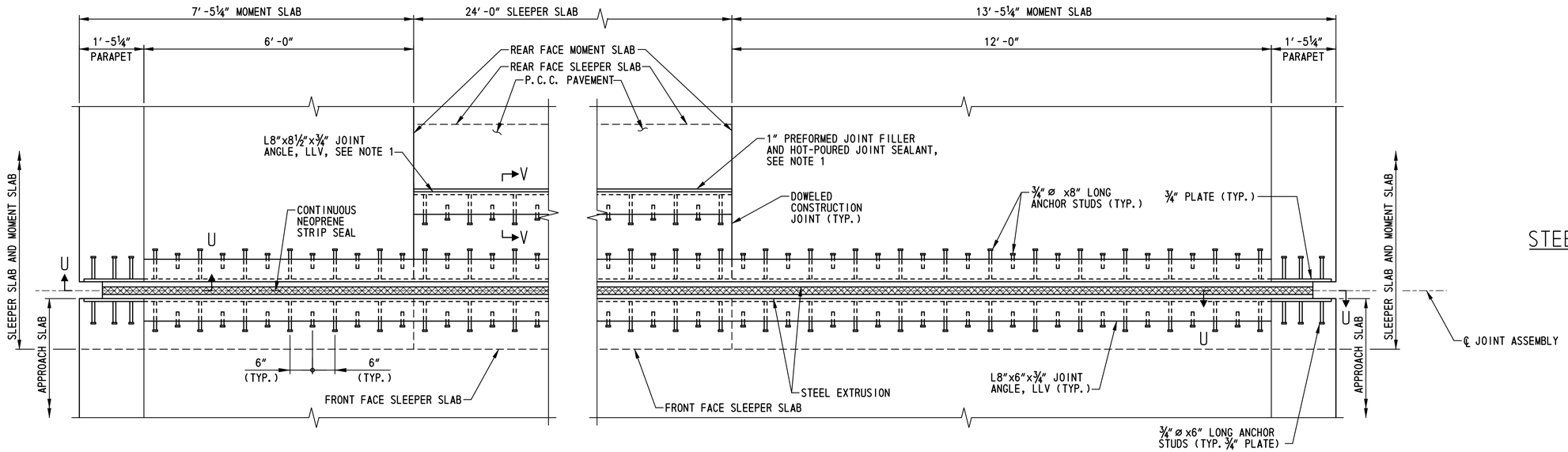

ARMORED STRIP SEAL JOINT PLAN

SCALE: ¾"=1'-0"

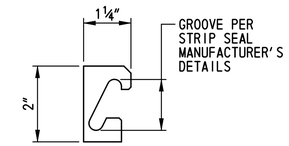

STEEL EXTRUSION DETAIL

NOT TO SCALE

NOTE:

MOMENT SLAB A, APPROACH SLAB A AND SLEEPER SLAB A SHOWN, MOMENT SLAB B, APPROACH SLAB B AND SLEEPER SLAB B SIMILAR.

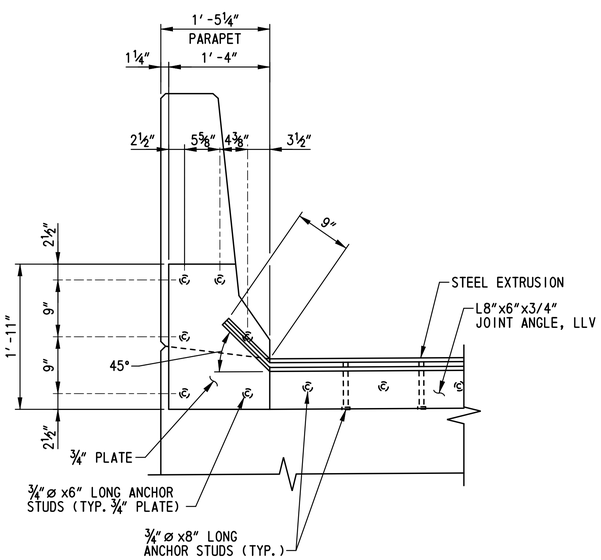

SECTION U-U

SCALE: 1"=1'-0"

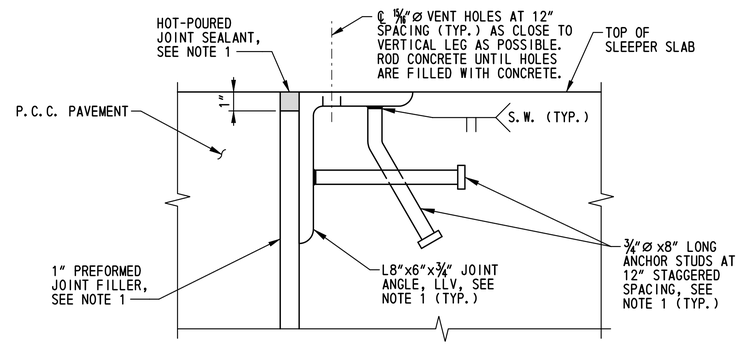

SECTION V-V

SCALE: 3"=1'-0"

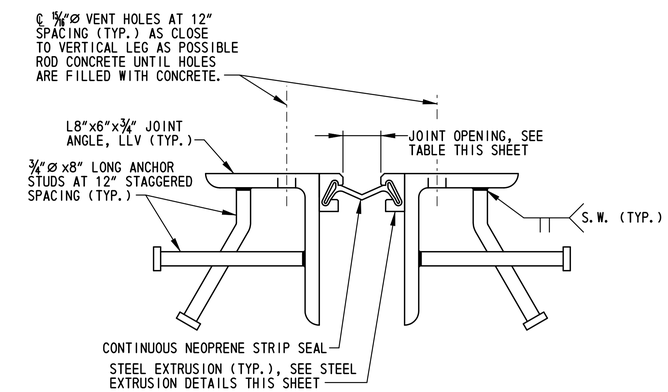

ARMORED STRIP SEAL JOINT ASSEMBLY DETAIL

SCALE: 3"=1'-0"

JOINT OPENING TABLE

LOCATION	TEMPERATURE (°F)												
	0	10	20	30	40	50	60	70	80	90	100	110	120
APPROACH SLAB A AND B	2¾"	2⅝"	2½"	2⅜"	2¼"	2⅛"	2"	1⅞"	1¾"	1⅝"	1½"	1⅜"	1¼"

NOTES:

1. PAYMENT FOR JOINT ANGLES AT APPROACH PAVEMENT EDGE OF SLEEPER SLAB, PREFORMED JOINT FILLER, AND HOT-POURED JOINT SEALANT SHALL BE INCIDENTAL TO ITEM 602018 - PORTLAND CEMENT CONCRETE MASONRY, CLASS D.
2. FOR APPROACH SLAB AND SLEEPER SLAB TYPICAL SECTIONS, SEE DWG. NO. AS-07.
3. FOR MOMENT SLAB DETAILS, SEE DWG. NO. AS-08.

BR1-7S
EX-01

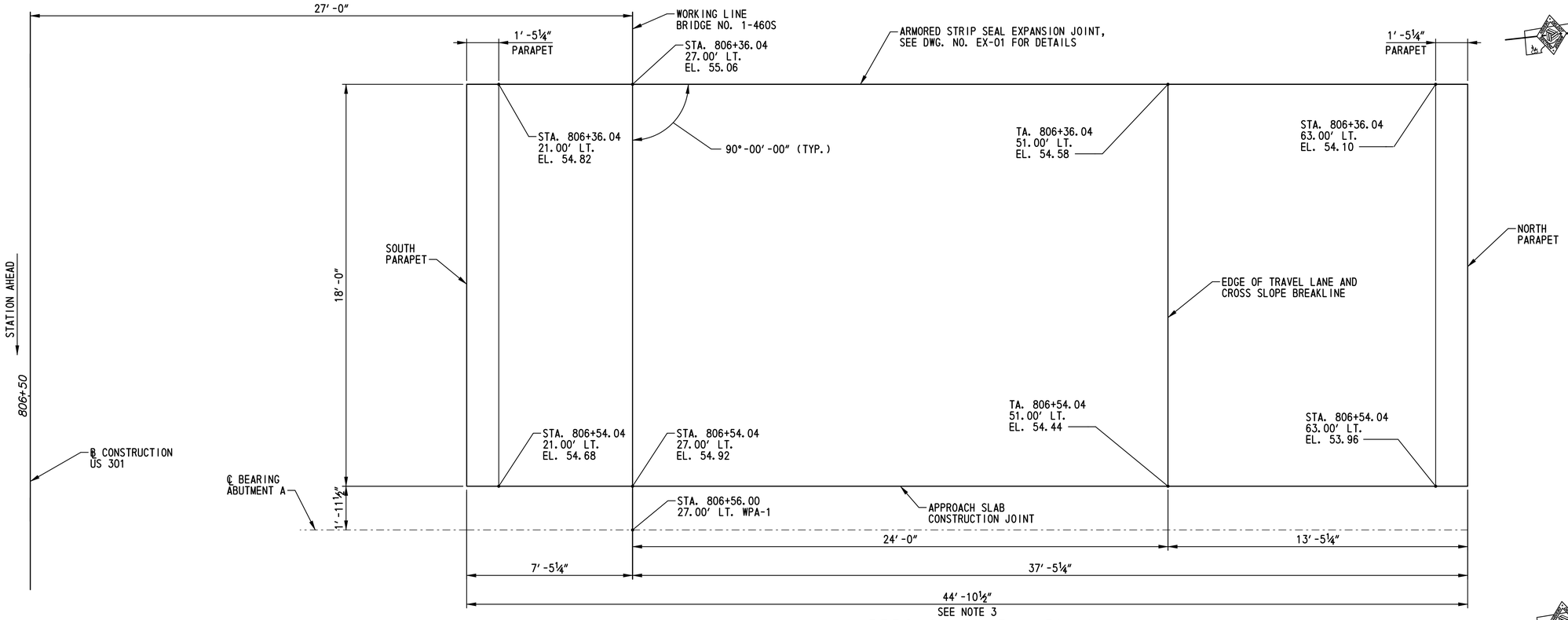

APPROACH SLAB A PLAN

SCALE: ⅜″=1′-0″

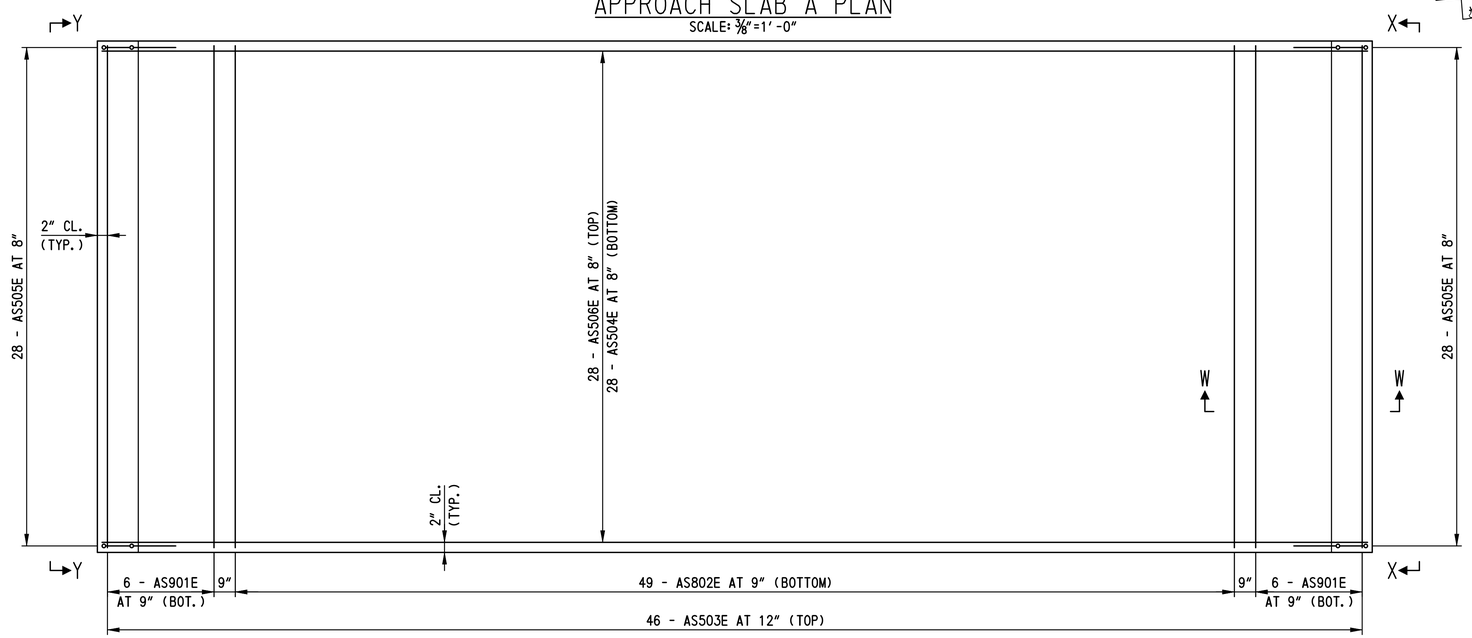

APPROACH SLAB A REINFORCEMENT PLAN

SCALE: ⅜″=1′-0″

NOTES:

1. FOR APPROACH SLAB A TYPICAL SECTION AND REINFORCEMENT SECTION, SEE DWG. NO. AS-07.
2. FOR SECTION W-W AND VIEWS X-X AND Y-Y, SEE DWG. NO. AS-07.
3. RUMBLE STRIPS SHALL BE LOCATED IN THE APPROACH SLAB AT EACH SHOULDER. FOR LANE AND SHOULDER CONFIGURATION AND ADDITIONAL REQUIREMENTS, SEE DWG. NO. TS-01. FOR RUMBLE STRIP DETAIL, SEE DWG. NO. DT-01. RUMBLE STRIPS SHALL BE PAID FOR UNDER ITEM 760015, RUMBLE STRIPS, CONCRETE, SHALLOW DEPTH.

BR1-7S
AS-01

DELAWARE DEPARTMENT OF TRANSPORTATION	ADDENDUMS / REVISIONS	SCALE: AS NOTED	US 301, SR 896 TO SR 1	CONTRACT T200911308	BRIDGE NO. 1-460S	APPROACH SLAB A PLAN AND REINFORCEMENT PLAN	SHEET NO. 486
				COUNTY NEW CASTLE	DESIGNED BY: L.M.B.		TOTAL SHTS. 875
					CHECKED BY: P.S.D.		

N:\31653-000\CONTRACT 1A\CADD\Bridge\Br_No7\BR_No7S\AS01_br1-7S.dgn
7/16/2015 3:27:28 PM

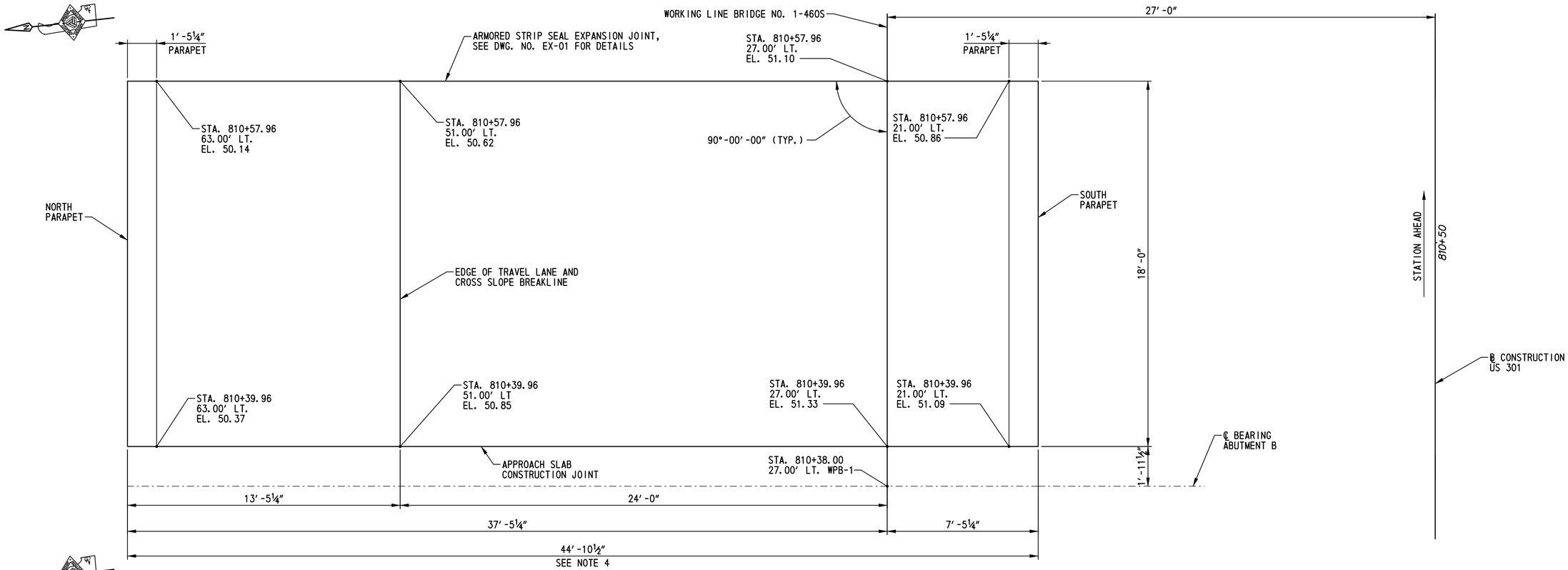

APPROACH SLAB B PLAN

SCALE: ⅜″=1′-0″

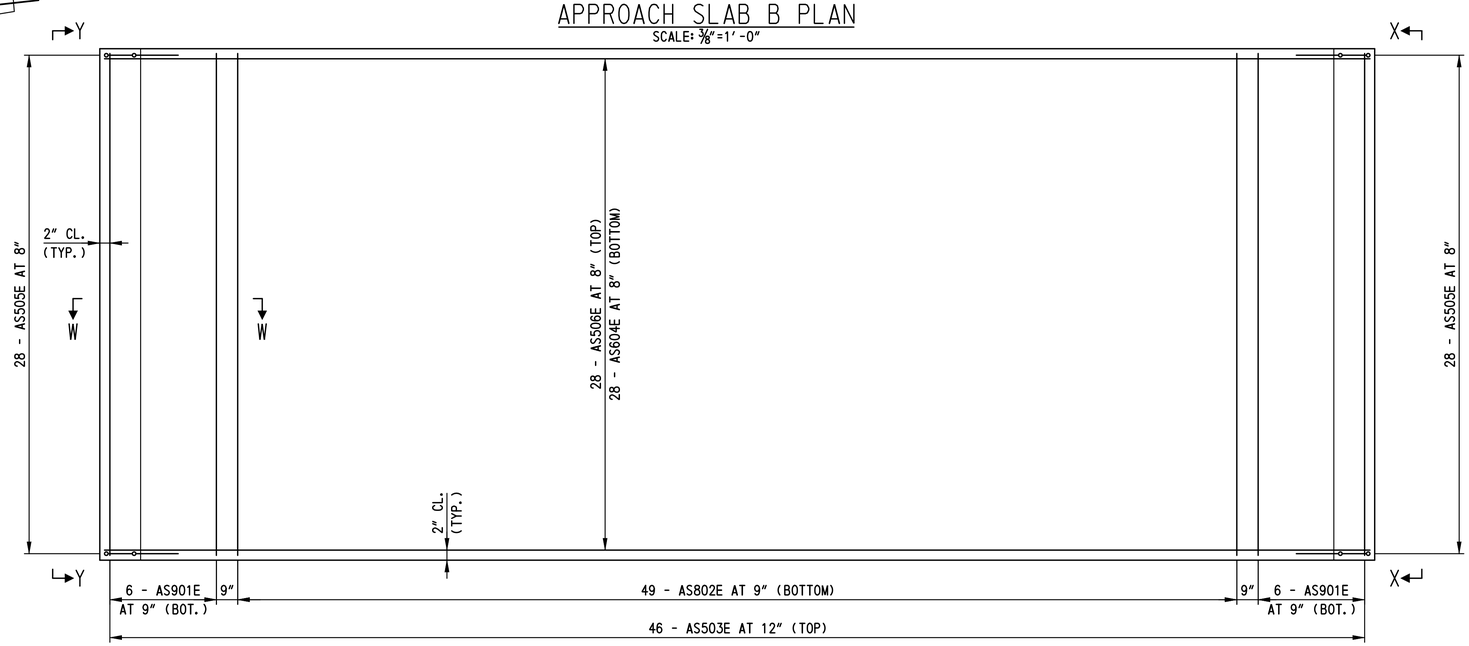

APPROACH SLAB B REINFORCEMENT PLAN

SCALE: ⅜″=1′-0″

NOTES:

1. FOR APPROACH SLAB B TYPICAL SECTION AND REINFORCEMENT SECTION, SEE DWG. NO. AS-07.
2. FOR SECTION W-W AND VIEWS X-X AND Y-Y, SEE DWG. NO. AS-07.
3. FOR SUPERELEVATION TRANSITION INFORMATION, SEE DWG. NO. GG-15.
4. RUMBLE STRIPS SHALL BE LOCATED IN THE APPROACH SLAB AT EACH SHOULDER. FOR LANE AND SHOULDER CONFIGURATION AND ADDITIONAL REQUIREMENTS, SEE DWG. NO. TS-01. FOR RUMBLE STRIP DETAIL, SEE DWG. NO. DT-01. RUMBLE STRIPS SHALL BE PAID FOR UNDER ITEM 760015, RUMBLE STRIPS, CONCRETE, SHALLOW DEPTH.

BR1-7S
AS-02

DELAWARE DEPARTMENT OF TRANSPORTATION

ADDENDUMS / REVISIONS

SCALE: AS NOTED

US 301, SR 896 TO SR 1

CONTRACT	BRIDGE NO.	1-460S
T200911308	DESIGNED BY: L.M.B.	
COUNTY		
NEW CASTLE	CHECKED BY: P.S.D.	

APPROACH SLAB B PLAN AND REINFORCEMENT PLAN

SHEET NO. 487
TOTAL SHTS. 875

N:\31653-000\CONTRACT 1A\CADD\Bridge\Br_No7\BR_No7S\AS02_br1-7S.dgn
7/16/2015 3:23:32 PM

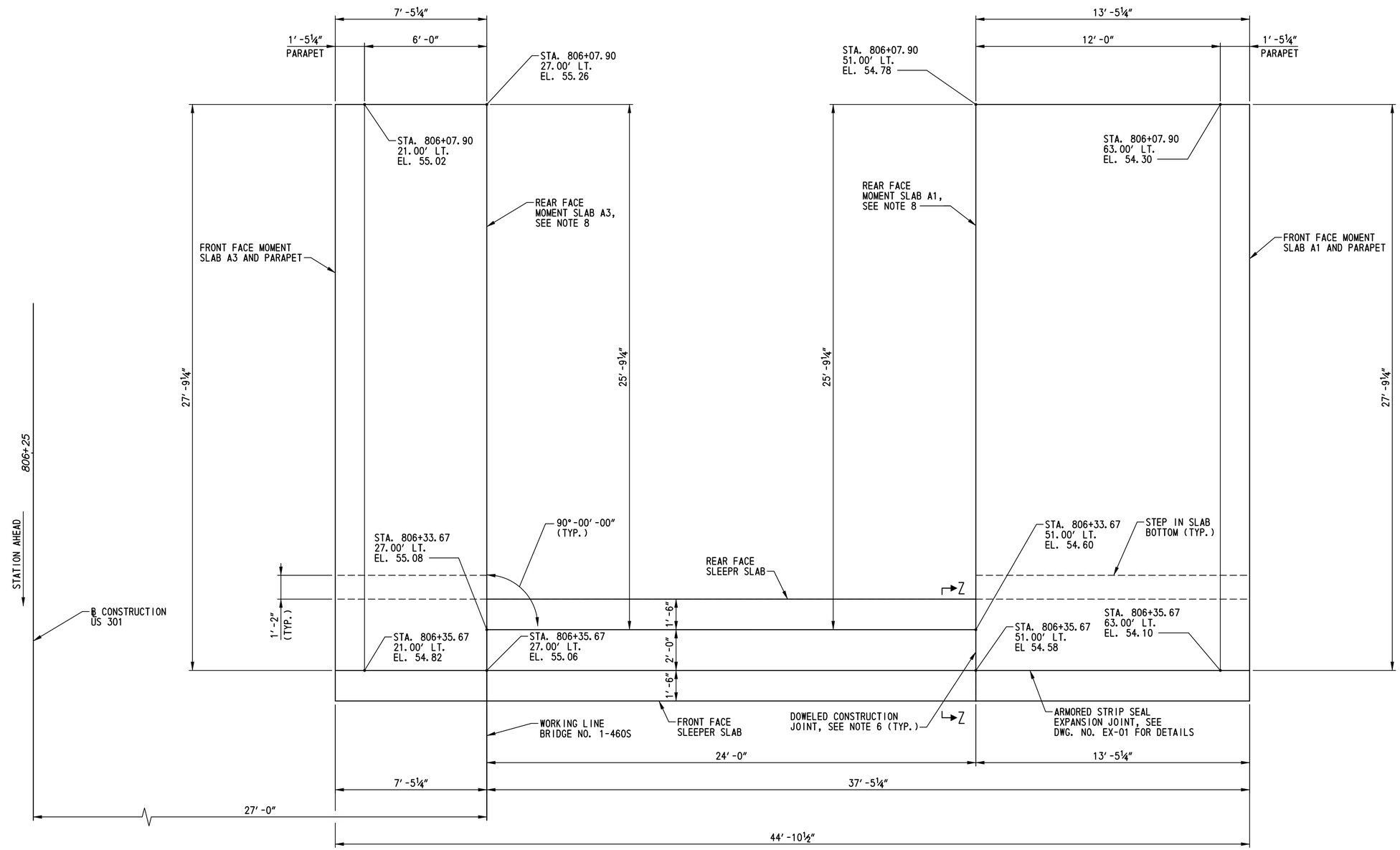

MOMENT SLAB A PLAN

SCALE: ⅜″=1′-0″

NOTES:

1. PAYMENT FOR CONSTRUCTION OF MOMENT SLABS AND SLEEPER SLABS WILL BE MADE UNDER ITEM 602018-PORTLAND CEMENT CONCRETE MASONRY CLASS D. PAYMENT FOR DOWEL BARS SHALL BE INCIDENTAL TO THIS ITEM.
2. FOR MOMENT SLAB A TYPICAL SECTION, SEE DWG. NO. AS-08.
3. FOR SLEEPER SLAB TYPICAL SECTIONS, SEE DWG. NO. AS-07.
4. FOR REINFORCEMENT PLAN, SEE DWG. NO. AS-04.
5. FOR REINFORCEMENT DETAILS, SEE DWG. NO. AS-08.
6. DOWEL BARS SHALL CONFORM TO SECTION 824.02(G). SEE SECTION Z-Z ON DWG. NO. AS-07.
7. RUMBLE STRIPS SHALL BE LOCATED IN THE MOMENT SLABS AT EACH SHOULDER. FOR RUMBLE STRIP DETAIL, SEE DWG. NO. DT-01. FOR ADDITIONAL REQUIREMENTS, SEE DWG. NO. TS-01. RUMBLE STRIPS SHALL BE PAID UNDER ITEM 760015, RUMBLE STRIPS, CONCRETE, SHALLOW DEPTH.
8. PRIOR TO PLACING MOMENT SLAB CONCRETE ADJACENT TO EXISTING CONCRETE PAVEMENT, OR PRIOR TO PLACING CONCRETE PAVEMENT ADJACENT TO EXISTING MOMENT SLAB CONCRETE, AN APPROVED BOND BREAKER SHALL BE APPLIED TO THE EXISTING CONCRETE VERTICAL FACE. THIS LONGITUDINAL JOINT AT THE INTERFACE BETWEEN THE CONCRETE PAVEMENT AND THE MOMENT SLAB CONCRETE SHALL NOT BE SEALED. VERTICAL CRACKS IN THE EXISTING CONCRETE FACE SHALL BE COVERED OR SEALED AS APPROVED BY THE ENGINEER TO PREVENT INTRUSION OF THE NEW CONCRETE INTO THE EXISTING CONCRETE. ALL WORK SHALL BE INCIDENTAL TO ITEM NO. 602014 - PORTLAND CEMENT CONCRETE MASONRY, CLASS D.

N:\31653-000\CONTRACT 1A\CADD\Bridge\Br_No7\BR_No7SVAS03_br1-7S.dgn
7/16/2015 3:21:21 PM

DELAWARE DEPARTMENT OF TRANSPORTATION	ADDENDUMS / REVISIONS	SCALE: AS NOTED	US 301, SR 896 TO SR 1	CONTRACT T200911308	BRIDGE NO. 1-460S	MOMENT SLAB A PLAN	BR1-7S AS-03
				COUNTY NEW CASTLE	DESIGNED BY: L.M.B.		SHEET NO. 488
					CHECKED BY: P.S.D.		TOTAL SHTS. 875

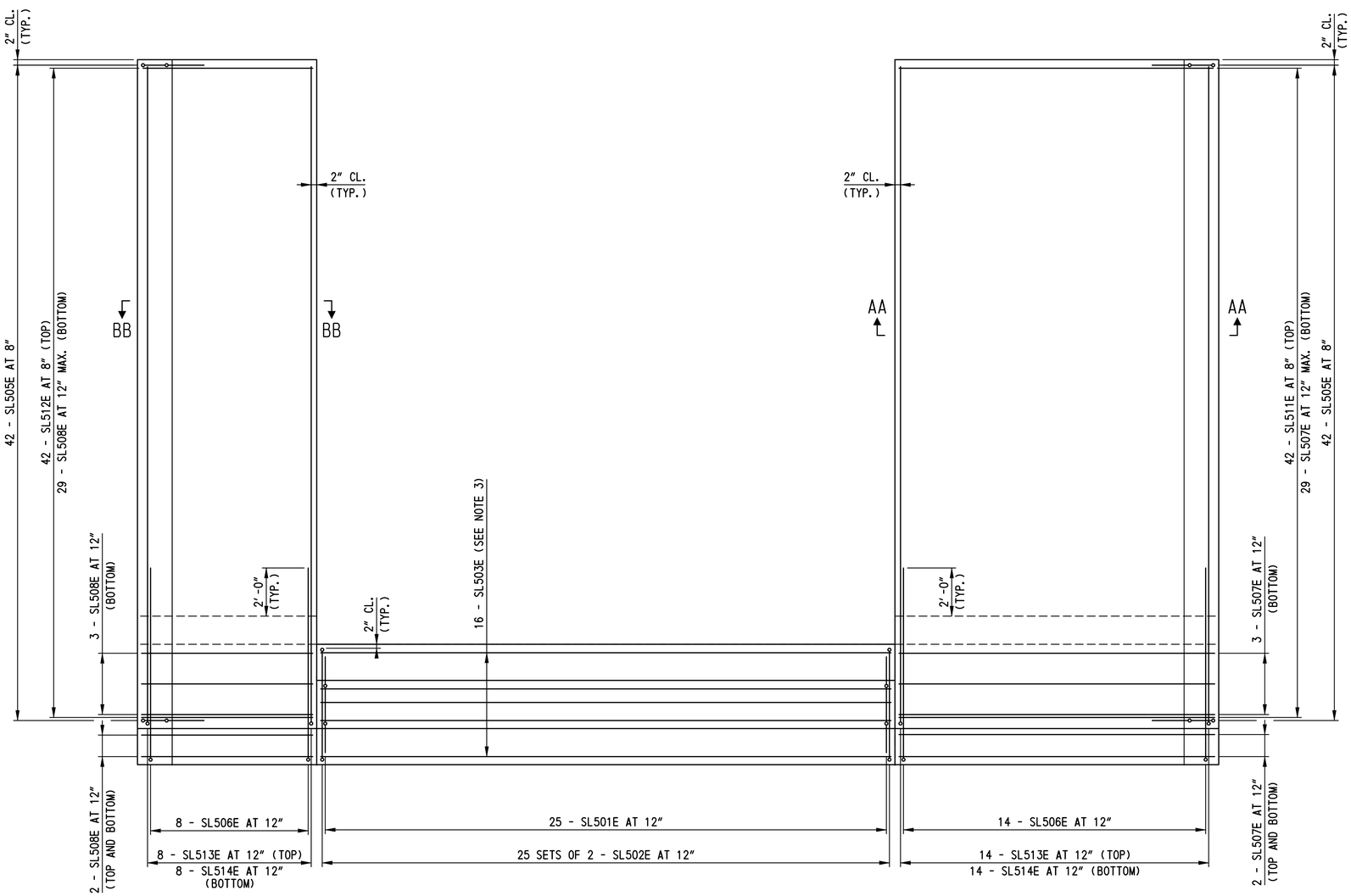

MOMENT SLAB A REINFORCEMENT PLAN

SCALE: 3/8"=1'-0"

NOTES:

1. FOR MOMENT SLAB A PLAN, SEE DWG. NO. AS-03.
2. FOR SECTIONS AA-AA AND BB-BB, SEE DWG. NO. AS-08.
3. FOR SLEEPER SLAB TYPICAL SECTIONS, SEE DWG. NO. AS-07.
4. FOR ADDITIONAL REINFORCEMENT DETAILS, SEE DWG.NOS. AS-07 AND AS-08.

BR1-7S
AS-04

DELAWARE DEPARTMENT OF TRANSPORTATION	ADDENDUMS / REVISIONS	SCALE: AS NOTED	US 301, SR 896 TO SR 1	CONTRACT T200911308	BRIDGE NO. 1-460S	MOMENT SLAB A REINFORCEMENT PLAN
				COUNTY NEW CASTLE	DESIGNED BY: L.M.B.	SHEET NO. 489
					CHECKED BY: P.S.D.	TOTAL SHTS. 875

rt\33653-000\contract 1a\cadd\bridge\br_no7\BR_No7S\AS04_br1-7S.dgn
10/24/2012 1:50:47 PM

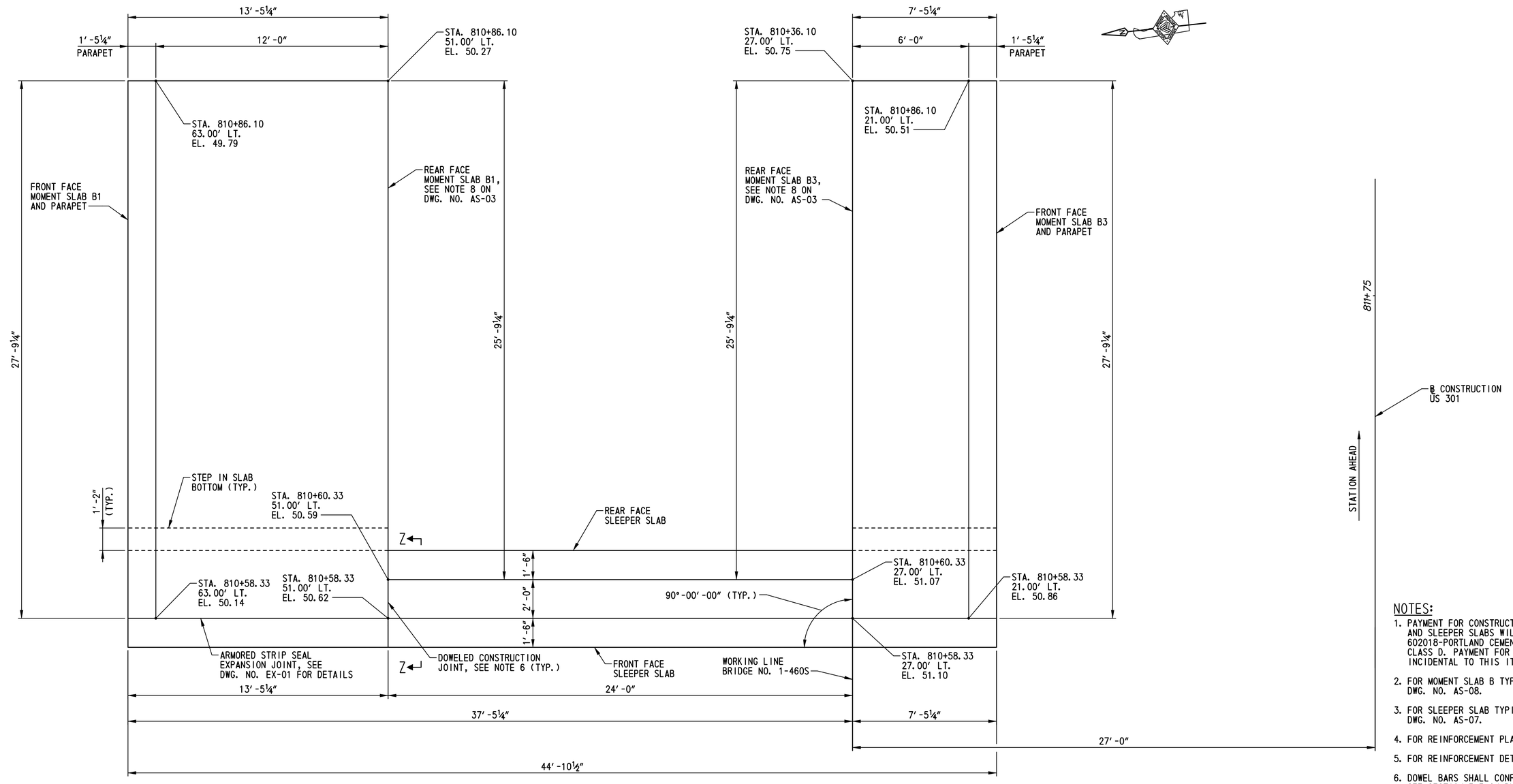

MOMENT SLAB B PLAN

SCALE: ⅜″=1′-0″

NOTES:

1. PAYMENT FOR CONSTRUCTION OF MOMENT SLABS AND SLEEPER SLABS WILL BE MADE UNDER ITEM 602018-PORTLAND CEMENT CONCRETE MASONRY CLASS D. PAYMENT FOR DOWEL BARS SHALL BE INCIDENTAL TO THIS ITEM.
2. FOR MOMENT SLAB B TYPICAL SECTION, SEE DWG. NO. AS-08.
3. FOR SLEEPER SLAB TYPICAL SECTIONS, SEE DWG. NO. AS-07.
4. FOR REINFORCEMENT PLAN, SEE DWG. NO. AS-06.
5. FOR REINFORCEMENT DETAILS, SEE DWG. NO. AS-08.
6. DOWEL BARS SHALL CONFORM TO SECTION 824.02(G). SEE SECTION Z-Z ON DWG. NO. AS-07.
7. RUMBLE STRIPS SHALL BE LOCATED IN THE MOMENT SLABS AT EACH SHOULDER. FOR RUMBLE STRIP DETAIL, SEE DWG. NO. DT-01. FOR ADDITIONAL REQUIREMENTS, SEE DWG. NO. TS-01. RUMBLE STRIPS SHALL BE PAID UNDER ITEM 760015, RUMBLE STRIPS, CONCRETE, SHALLOW DEPTH.

BR1-7S
AS-05

DELAWARE DEPARTMENT OF TRANSPORTATION	ADDENDUMS / REVISIONS	SCALE: AS NOTED	US 301, SR 896 TO SR 1	CONTRACT T200911308	BRIDGE NO. 1-460S	MOMENT SLAB B PLAN	SHEET NO. 490
				COUNTY NEW CASTLE	DESIGNED BY: L.M.B.		TOTAL SHTS. 875
					CHECKED BY: P.S.D.		

N:\31653-000\CONTRACT 1A\CADD\Bridge\Br_No7\BR_No7S\AS05_br1-7S.dgn
7/16/2015 3:19:01 PM

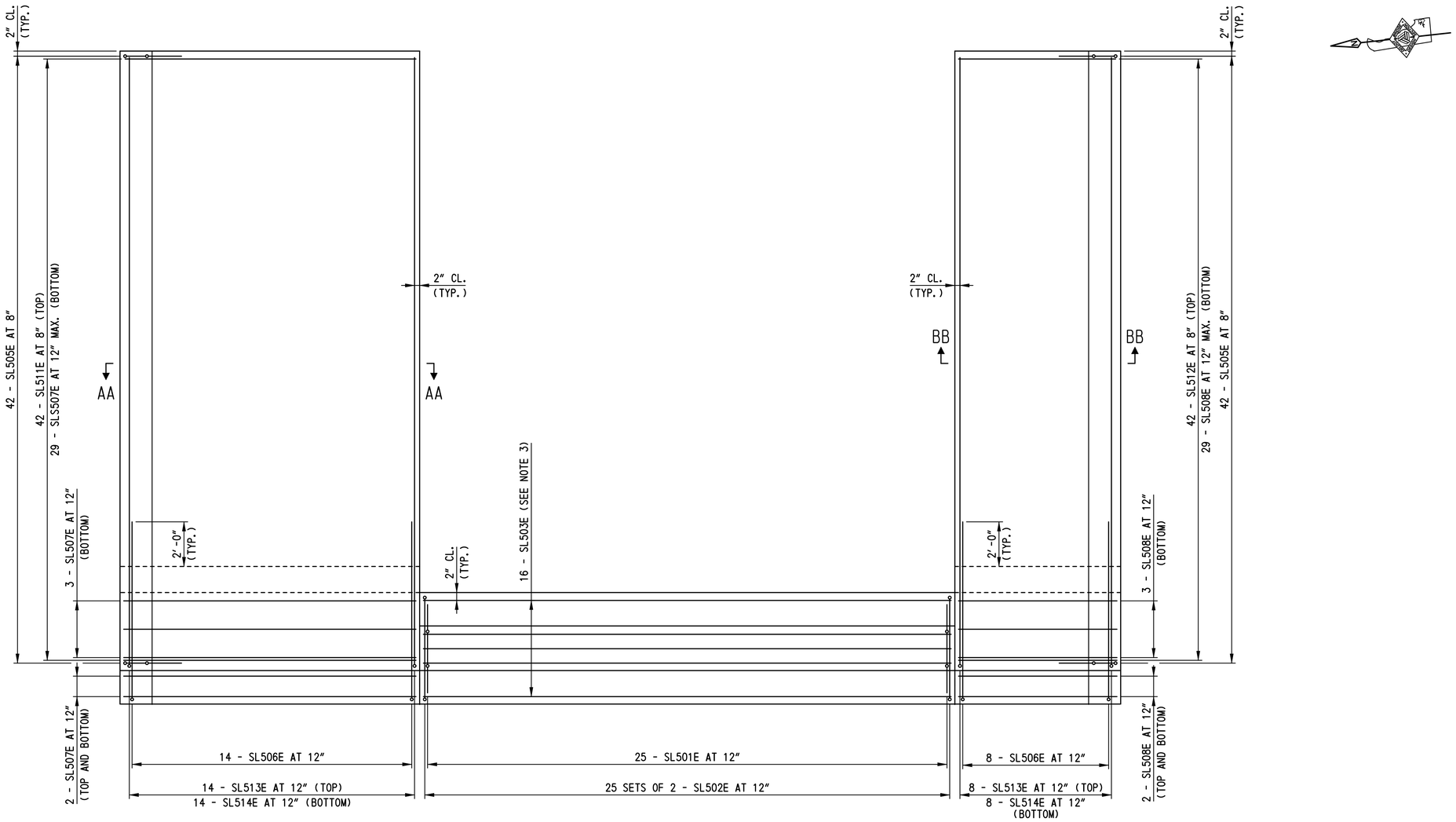

MOMENT SLAB B REINFORCEMENT PLAN

SCALE: 3/8"=1'-0"

NOTES:

1. FOR MOMENT SLAB B PLAN, SEE DWG. NO. AS-05.
2. FOR SECTIONS AA-AA AND BB-BB, SEE DWG. NO. AS-08.
3. FOR SLEEPER SLAB TYPICAL SECTIONS, SEE DWG. NO. AS-07.
4. FOR ADDITIONAL REINFORCEMENT DETAILS, SEE DWG. NOS. AS-07 AND AS-08.

DELAWARE DEPARTMENT OF TRANSPORTATION	ADDENDUMS / REVISIONS	SCALE: AS NOTED	US 301, SR 896 TO SR 1	CONTRACT T200911308	BRIDGE NO. 1-460S	MOMENT SLAB B REINFORCEMENT PLAN	BR1-7S AS-06
				COUNTY NEW CASTLE	DESIGNED BY: L.M.B.		SHEET NO. 491
					CHECKED BY: P.S.D.		TOTAL SHTS. 875

n:\31653-000\contract to\cadd\bridge\br_no7\BR_No7S\AS06_br1-7S.dgn
10/24/2012 11:50:50 PM

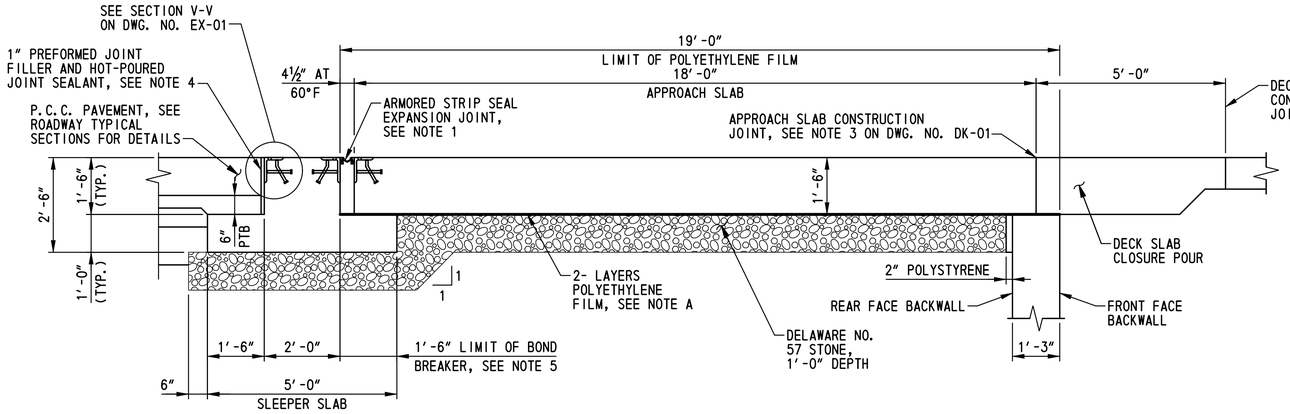

APPROACH SLAB AND SLEEPER SLAB TYPICAL SECTION

SCALE: ½"=1'-0"

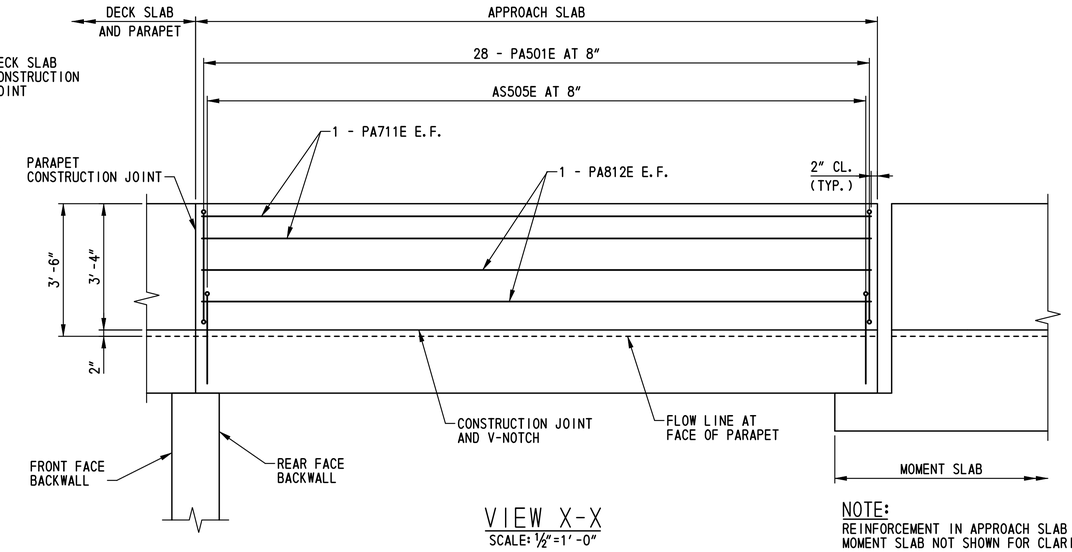

VIEW X-X

SCALE: ½"=1'-0"

NOTE:
REINFORCEMENT IN APPROACH SLAB AND MOMENT SLAB NOT SHOWN FOR CLARITY.

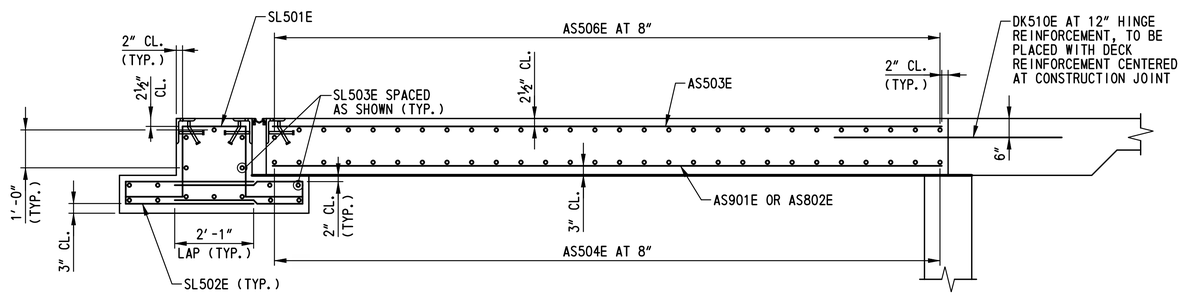

APPROACH SLAB AND SLEEPER SLAB TYPICAL REINFORCEMENT SECTION

SCALE: ½"=1'-0"

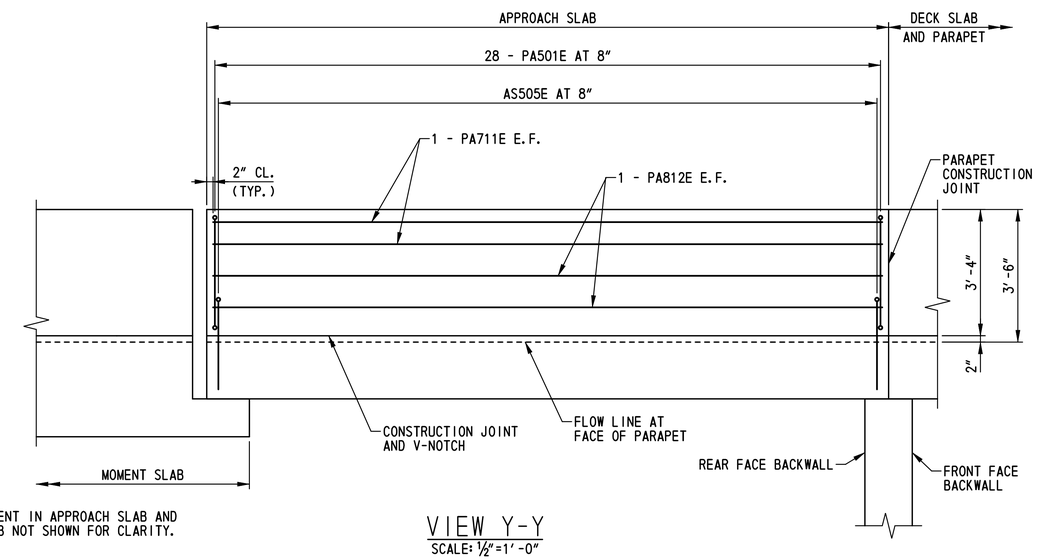

NOTE:
REINFORCEMENT IN APPROACH SLAB AND MOMENT SLAB NOT SHOWN FOR CLARITY.

VIEW Y-Y

SCALE: ½"=1'-0"

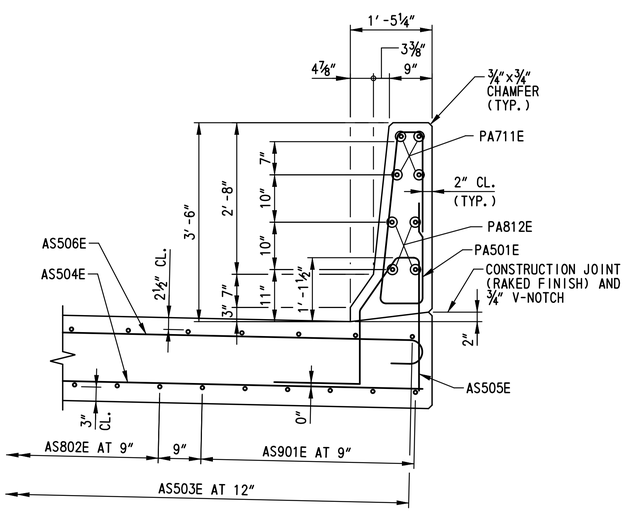

SECTION W-W

SCALE: ¾"=1'-0"

NOTE A:
THE TOP SURFACE OF THE DELAWARE NO. 57 STONE SHALL BE ACCURATELY CONTROLLED TO FOLLOW AND BE PARALLEL TO THE PROPOSED APPROACH SLAB GRADE AND CROSS SLOPE. TWO LAYERS OF WHITE OPAQUE POLYETHYLENE FILM SHALL BE PLACED ON THE FINISHED SUBGRADE FOR THE FULL WIDTH AND LENGTH OF THE APPROACH SLAB PRIOR TO PLACING ANY REINFORCEMENT. THE WHITE OPAQUE POLYETHYLENE FILM SHALL BE PLACED WITH 2'-0" MINIMUM LAPS AND SHALL EXTEND TO THE FRONT FACE OF BACKWALL. COST SHALL BE INCIDENTAL TO ITEM 602014 - PORTLAND CEMENT CONCRETE MASONRY, APPROACH SLAB, CLASS D.

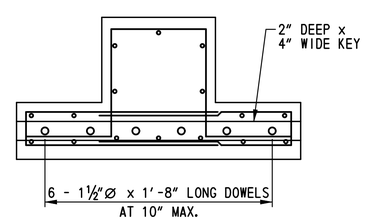

SECTION Z-Z

SCALE: ¾"=1'-0"

NOTES:

1. FOR ARMORED STRIP SEAL EXPANSION JOINT DETAILS, SEE DWG. NO. EX-01.
2. FOR ADDITIONAL APPROACH SLAB REINFORCEMENT DETAILS, SEE DWG. NOS. AS-01 AND AS-02.
3. SLEEPER SLAB SHALL BE CAREFULLY PLACED AFTER COMPACTION OF THE MSE WALL BACKFILL MATERIAL IN CONFORMANCE WITH ITEM 602772-MECHANICALLY STABILIZED EARTH WALLS.
4. PAYMENT FOR INSTALLATION OF 1" PREFORMED JOINT FILLER, HOT-POURED JOINT SEALER, AND JOINT ANGLES AND STUDS AT APPROACH PAVEMENT EDGE OF SLEEPER SLAB WILL BE INCIDENTAL TO ITEM NO. 602018 - PORTLAND CEMENT CONCRETE MASONRY, CLASS D.
5. STEEL TROWEL FINISH SLEEPER SLAB AND APPLY 30 MIL. NOMINAL THICKNESS OF ASPHALT BOND BREAKER. COST SHALL BE INCIDENTAL TO ITEM 602018 - PORTLAND CEMENT CONCRETE MASONRY, CLASS D.
6. FOR PARAPET CONTROL JOINT LOCATIONS, SEE DWG. NO. PE-01. FOR PARAPET CONTROL JOINT DETAILS, SEE DWG. NO. SD-01.

BR1-7S
AS-07

DELAWARE DEPARTMENT OF TRANSPORTATION

ADDENDUMS / REVISIONS

SCALE: AS NOTED

US 301, SR 896 TO SR 1

CONTRACT	BRIDGE NO.	1-460S
T200911308	DESIGNED BY: L.M.B.	
COUNTY		
NEW CASTLE	CHECKED BY: P.S.D.	

APPROACH SLAB AND SLEEPER SLAB DETAILS

SHEET NO. 492
TOTAL SHTS. 875

n:\31653-000\contract to\cadd\bridge\br_no7\BR_No7S\AS07_br1-7S.dgn
10/24/2012 1:50:51 PM

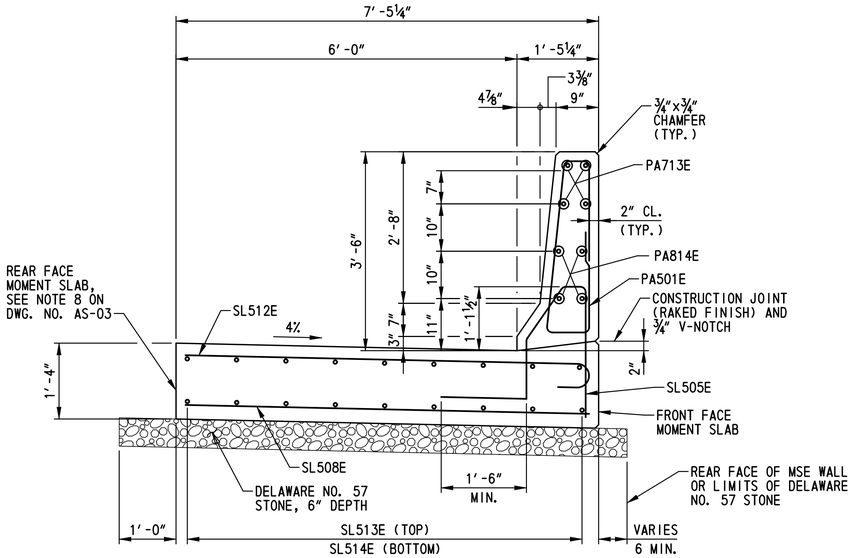

SECTION BB-BB

SCALE: ¾″=1′-0″

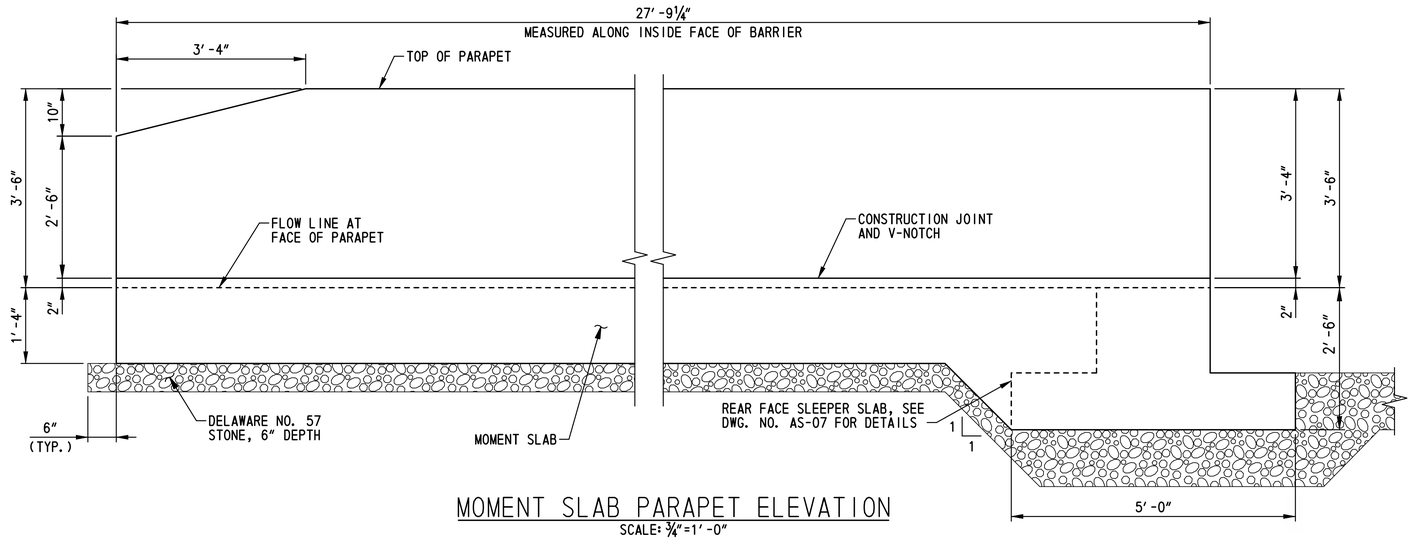

MOMENT SLAB PARAPET ELEVATION

SCALE: ¾″=1′-0″

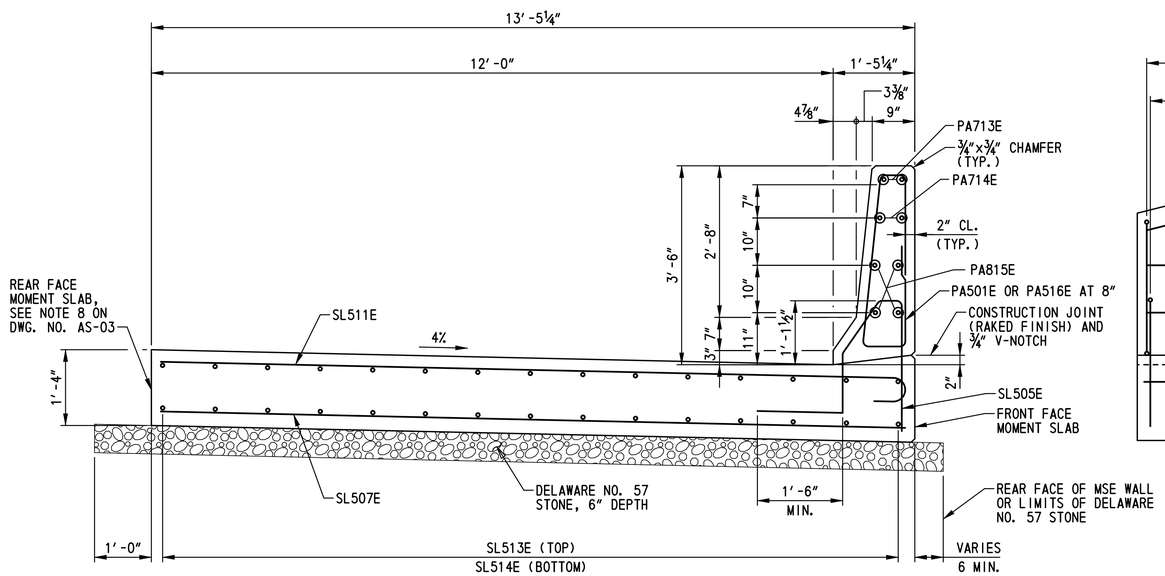

SECTION AA-AA

SCALE: ¾″=1′-0″

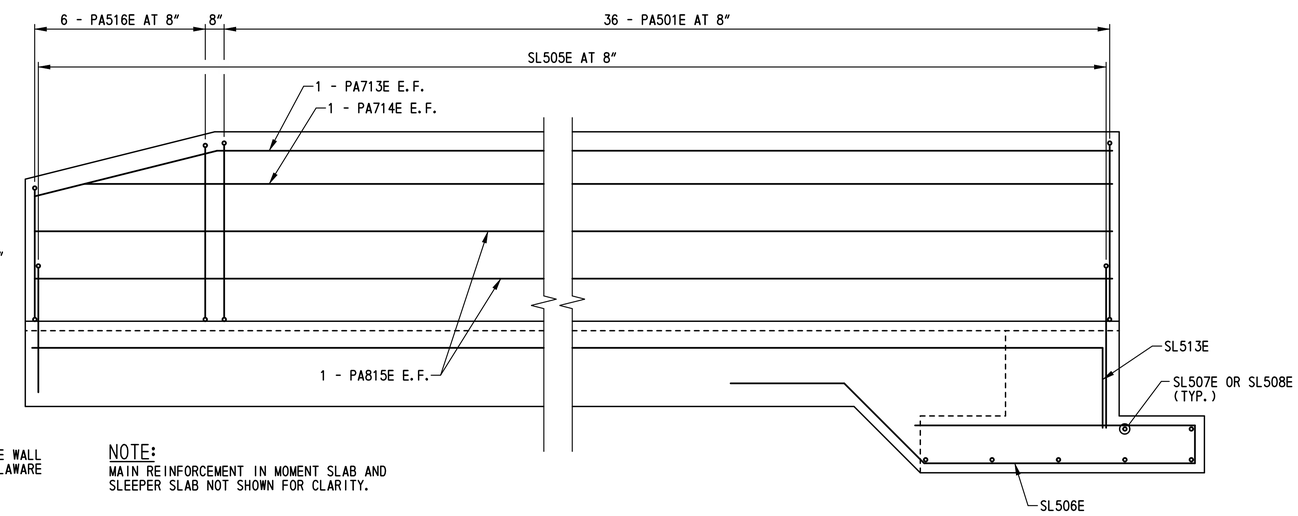

NOTE:
MAIN REINFORCEMENT IN MOMENT SLAB AND SLEEPER SLAB NOT SHOWN FOR CLARITY.

MOMENT SLAB PARAPET REINFORCEMENT ELEVATION

SCALE: ¾″=1′-0″

NOTES:

1. FOR PARAPET CONTROL JOINT LOCATIONS, SEE DWG. NO. PE-01. FOR PARAPET CONTROL JOINT DETAILS, SEE DWG. NO. SD-01.
2. ADDITIONAL REINFORCEMENT IN MOMENT SLAB AND SLEEPER SLAB NOT SHOWN FOR CLARITY. SEE DWG. NOS. AS-04 AND AS-06 FOR DETAILS.

BR1-7S
AS-08

DELAWARE DEPARTMENT OF TRANSPORTATION	ADDENDUMS / REVISIONS	SCALE: AS NOTED	US 301, SR 896 TO SR 1	CONTRACT T200911308 / COUNTY NEW CASTLE	BRIDGE NO. 1-460S / DESIGNED BY: L.M.B. / CHECKED BY: P.S.D.	MOMENT SLAB DETAILS	SHEET NO. 493 / TOTAL SHTS. 875

n:\31653-000\contract 1a\cadd\bridge\br_no7\BR_No7S\AS08_br17S.dgn
10/24/2012 1:50:52 PM

① ANY MARK NUMBER WITH SUFFIX 'E' DENOTES EPOXY COATED REINFORCING STEEL.

② ALL MARK 'LOCATION PREFIXES' SHALL CONSIST OF TWO LETTERS AND ARE AS FOLLOWS: AB = ABUTMENT, AS = APPROACH SLAB, BC = BOX CULVERT, BW = BACKWALL, CL = COLUMN, DK = DECK, DL = DOWEL, FT = FOOTING, HW = HEADWALL, MS = MISC. BARS, PA = PARAPET, PR = PIER, SC = SHEETPILE CAP, SL = SLAB, TW = TOEWALL, WL = WALL (UNIQUE LOCATION), WW = WINGWALL

SPECIFICATIONS					BENDING DIMENSIONS (FEET-INCHES /QUARTER INCH)											
QTY.	SIZE	LENGTH	MARK	TYPE	A	B	C	D	E	F/R	G	H	J	K	O
APPROACH SLAB A															
12	9	17-08 0	AS901E	STR		17-08 0									
49	8	17-08 0	AS802E	STR		17-08 0									
46	5	17-08 0	AS503E	STR		17-08 0									
28	5	44-06 2	AS504E	STR		44-06 2									
56	5	6-00 2	AS505E	T15		2-00 0	0-05 0	1-01 2	1-00 0	1-06 0		1-00 0	0-07 3	0-11 0	
28	5	45-01 2	AS506E	1	0-07 0	44-06 2							0-05 0		
56	5	9-02 2	PA501E	PA		2-06 1	0-09 0	3-00 0	0-05 0	2-06 1		3-00 0		0-04 0	
8	7	17-08 0	PA711E	STR		17-08 0									
8	8	17-08 0	PA812E	STR		17-08 0									
MOMENT SLAB A															
25	5	8-09 0	SL501E	S4	1-06 0	2-00 2	1-08 0	2-00 2			1-06 0				
50	5	7-04 0	SL502E	17		3-04 2	0-07 0	3-04 2							
16	5	23-08 0	SL503E	STR		23-08 0									
84	5	6-00 2	SL505E	T15		2-00 0	0-05 0	1-01 2	1-00 0	1-06 0		1-00 0	0-07 3	0-11 0	
22	5	13-10 2	SL506E	31		2-00 0	1-08 3	4-08 3	0-07 0	4-10 0		1-02 3	1-02 3		
36	5	13-01 1	SL507E	STR		13-01 1									
36	5	7-01 1	SL508E	STR		7-01 1									
42	5	13-08 1	SL511E	1	0-07 0	13-01 1							0-05 0		
42	5	7-08 1	SL512E	1	0-07 0	7-01 1							0-05 0		
22	5	29-05 1	SL513E	2	2-00 0	27-05 1									
22	5	27-05 1	SL514E	STR		27-05 1									
72	5	9-02 2	PA501E	PA		2-06 1	0-09 0	3-00 0	0-05 0	2-06 1		3-00 0		0-04 0	
4	7	27-06 1	PA713E	3		24-03 1	3-03 0					0-09 2		3-01 3	
4	7	26-06 3	PA714E	STR		26-06 3									
8	8	27-05 1	PA815E	STR		27-05 1									
12*	5	7-08 1	PA516E	PA		2-01 3	0-09 0	2-02 3	0-05 0	2-01 3		2-02 2		0-04 0	
		T0				T0		T0		T0		T0			
		9-02 1				2-06 1		2-11 3		2-06 1		2-11 2			
			*2 SETS OF 6												

SPECIFICATIONS					BENDING DIMENSIONS (FEET-INCHES /QUARTER INCH)											
QTY.	SIZE	LENGTH	MARK	TYPE	A	B	C	D	E	F/R	G	H	J	K	O
APPROACH SLAB B															
12	9	17-08 0	AS901E	STR		17-08 0									
49	8	17-08 0	AS802E	STR		17-08 0									
46	5	17-08 0	AS503E	STR		17-08 0									
28	5	44-06 2	AS504E	STR		44-06 2									
56	5	6-00 2	AS505E	T15		2-00 0	0-05 0	1-01 2	1-00 0	1-06 0		1-00 0	0-07 3	0-11 0	
28	5	45-01 2	AS506E	1	0-07 0	44-06 2							0-05 0		
56	5	9-02 2	PA501E	PA		2-06 1	0-09 0	3-00 0	0-05 0	2-06 1		3-00 0		0-04 0	
8	7	17-08 0	PA711E	STR		17-08 0									
8	8	17-08 0	PA812E	STR		17-08 0									
MOMENT SLAB B															
25	5	8-09 0	SL501E	S4	1-06 0	2-00 2	1-08 0	2-00 2			1-06 0				
50	5	7-04 0	SL502E	17		3-04 2	0-07 0	3-04 2							
16	5	23-08 0	SL503E	STR		23-08 0									
84	5	6-00 2	SL505E	T15		2-00 0	0-05 0	1-01 2	1-00 0	1-06 0		1-00 0	0-07 3	0-11 0	
22	5	13-10 2	SL506E	31		2-00 0	1-08 3	4-08 3	0-07 0	4-10 0		1-02 3	1-02 3		
36	5	13-01 1	SL507E	STR		13-01 1									
36	5	7-01 1	SL508E	STR		7-01 1									
42	5	13-08 1	SL511E	1	0-07 0	13-01 1							0-05 0		
42	5	7-08 1	SL512E	1	0-07 0	7-01 1							0-05 0		
22	5	29-05 1	SL513E	2	2-00 0	27-05 1									
22	5	27-05 1	SL514E	STR		27-05 1									
72	5	9-02 2	PA501E	PA		2-06 1	0-09 0	3-00 0	0-05 0	2-06 1		3-00 0		0-04 0	
4	7	27-06 1	PA713E	3		24-03 1	3-03 0					0-09 2		3-01 3	
4	7	26-06 3	PA714E	STR		26-06 3									
8	8	27-05 1	PA815E	STR		27-05 1									
12*	5	7-08 1	PA516E	PA		2-01 3	0-09 0	2-02 3	0-05 0	2-01 3		2-02 2		0-04 0	
		T0				T0		T0		T0		T0			
		9-02 1				2-06 1		2-11 3		2-06 1		2-11 2			
			*2 SETS OF 6												

SPECIFICATIONS					BENDING DIMENSIONS (FEET-INCHES /QUARTER INCH)											
QTY.	SIZE	LENGTH	MARK	TYPE	A	B	C	D	E	F/R	G	H	J	K	O

ASTM STANDARD ENGLISH REINFORCING BARS

	NOMINAL DIMENSIONS			RECOMMENDED END HOOKS, APPLICABLE TO ALL GRADES				STIRRUP AND TIE HOOKS, APPLICABLE TO ALL GRADES			
					180° HOOKS		90° HOOKS		90° HOOK	135° HOOK	
BAR SIZE	DIAMETER (INCHES)	AREA (INCHES²)	WEIGHT (LBS./FT.)	D	A OR G	J	A OR G	D	A OR G	A OR G	A OR G
3	0.375	0.110	0.376	2¼"	5"	3"	6"	1½"	4"	4"	2½"
4	0.500	0.200	0.668	3"	6"	4"	8"	2"	4½"	4½"	3"
5	0.625	0.310	1.043	3¾"	7"	5"	10"	2½"	6"	5½"	3¾"
6	0.750	0.440	1.502	4½"	8"	6"	1-0"	4½"	1-0"	8"	4½"
7	0.875	0.600	2.044	5¼"	10"	7"	1-2"	5¼"	1-2"	9"	5¼"
8	1.000	0.790	2.670	6"	11"	8"	1-4"	6"	1-4"	10½"	6"
9	1.128	1.000	3.400	9½"	1-3"	11¾"	1-7"				
10	1.270	1.270	4.303	10¾"	1-5"	1-1¼"	1-10"				
11	1.410	1.560	5.313	1-0"	1-7"	1-2¾"	2-0"				
14	1.693	2.250	7.650	1-6¼"	2-3"	1-9¾"	2-7"				
18	2.257	4.000	13.600	2-0"	3-0"	2-4½"	3-5"				

NOTES:

1. FIGURES SHOWN IN CIRCLES REPRESENT BAR BEND TYPES.
2. STANDARD BAR BENDS INCLUDE ONLY THOSE TYPES BELOW, INDICATED AS SUCH.
3. ALL DIMENSIONS OUT-TO-OUT, EXCEPT "A" AND "G" ON STD. 180° AND 135° HOOKS.
4. "J" DIMENSIONS ON 180° HOOKS TO BE SHOWN ONLY WHERE NECESSARY TO RESTRICT HOOK SIZE, OTHERWISE STANDARD 'ACI' HOOKS ARE TO BE USED.
5. WHERE "J" IS NOT SHOWN, "J" WILL BE KEPT EQUAL TO OR LESS THAN "H" ON TYPES 3, 5 AND 22. WHERE "J" CAN EXCEED "H", IT SHALL BE SHOWN.
6. "H" DIMENSIONS OF STIRRUPS TO BE SHOWN AS NEEDED TO FIT WITHIN THE CONCRETE.
7. UNLESS OTHERWISE NOTED, DIAMETER "D" IS THE SAME FOR ALL BENDS AND HOOKS ON A BAR (EXCEPT FOR BEND TYPES 11 AND 13).
8. WHERE SLOPE DIFFERS FROM 45° OFFSET, "H" AND "K" MUST BE SHOWN.
9. WHERE BARS ARE TO BE BENT MORE ACCURATELY THAN STANDARD BENDING TOLERANCES, BENDING DIMENSIONS REQUIRING CLOSER FABRICATION SHOULD HAVE LIMITS INDICATED.
10. FOR RECOMMENDED DIAMETER "D", OF BENDS, HOOKS, ETC., REFER TO TABLE ABOVE, 'CRSI' OR 'ACI' TABLES WHERE APPLICABLE AND REQUIRED.
11. TYPE S1-S6, S11, T1-T3 AND T6-T9 APPLICABLE TO BAR SIZES #3 THROUGH #8.

STANDARD BAR BENDS

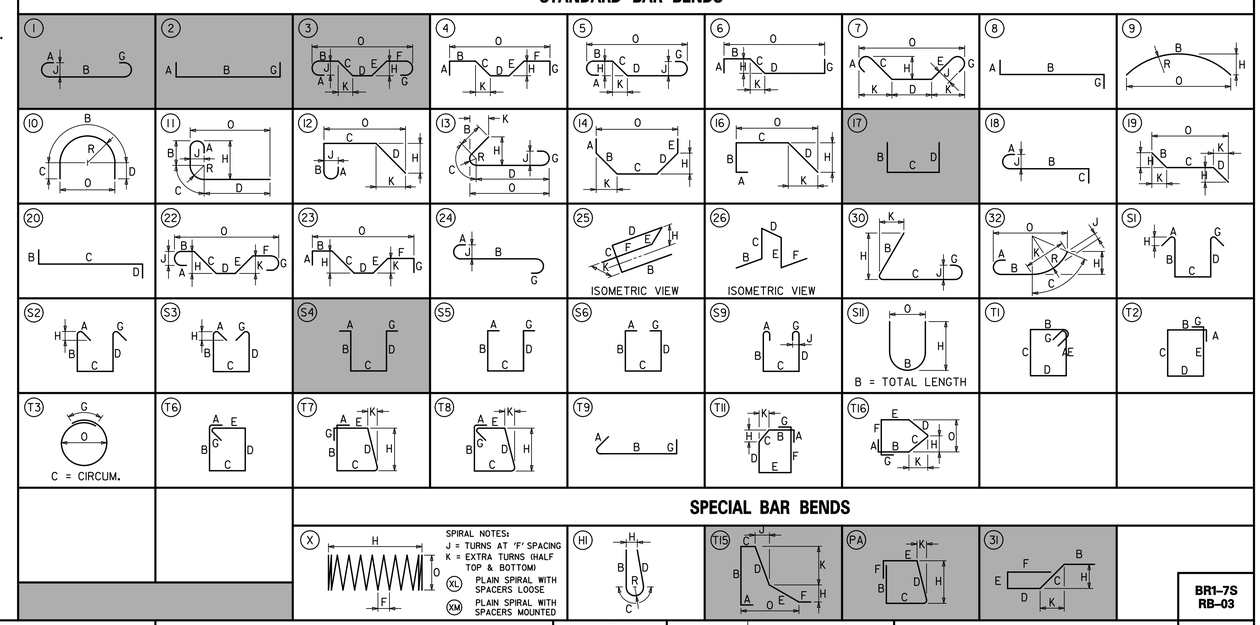

SPECIAL BAR BENDS

STIRRUP AND TIE HOOKS

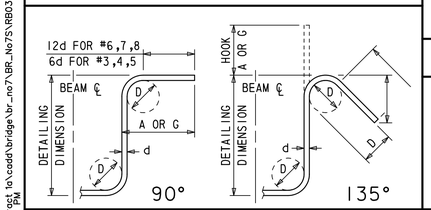

180° AND 90° END HOOKS

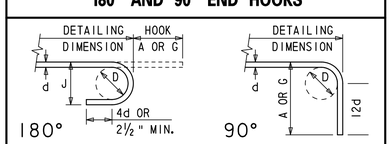

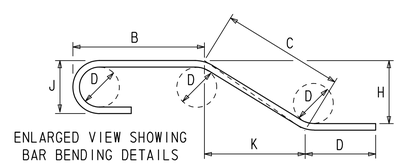

ENLARGED VIEW SHOWING BAR BENDING DETAILS

ADDENDUMS / REVISIONS

DELAWARE DEPARTMENT OF TRANSPORTATION

US 301, SR 896 TO SR 1

CONTRACT	BRIDGE NO.	1-460S
T200911308	DESIGNED BY: M.P.U.	
COUNTY		
NEW CASTLE	CHECKED BY: P.S.D.	

APPROACH SLAB AND MOMENT SLAB REINFORCEMENT LIST

BR1-7S
RB-03

SHEET NO. 494
TOTAL SHTS. 875

n:\3653-000\contract to\cadd\bridge\br_no7\BR_No7S\RB03_br1-7S.dgn
10/24/2012 1:53:22 PM

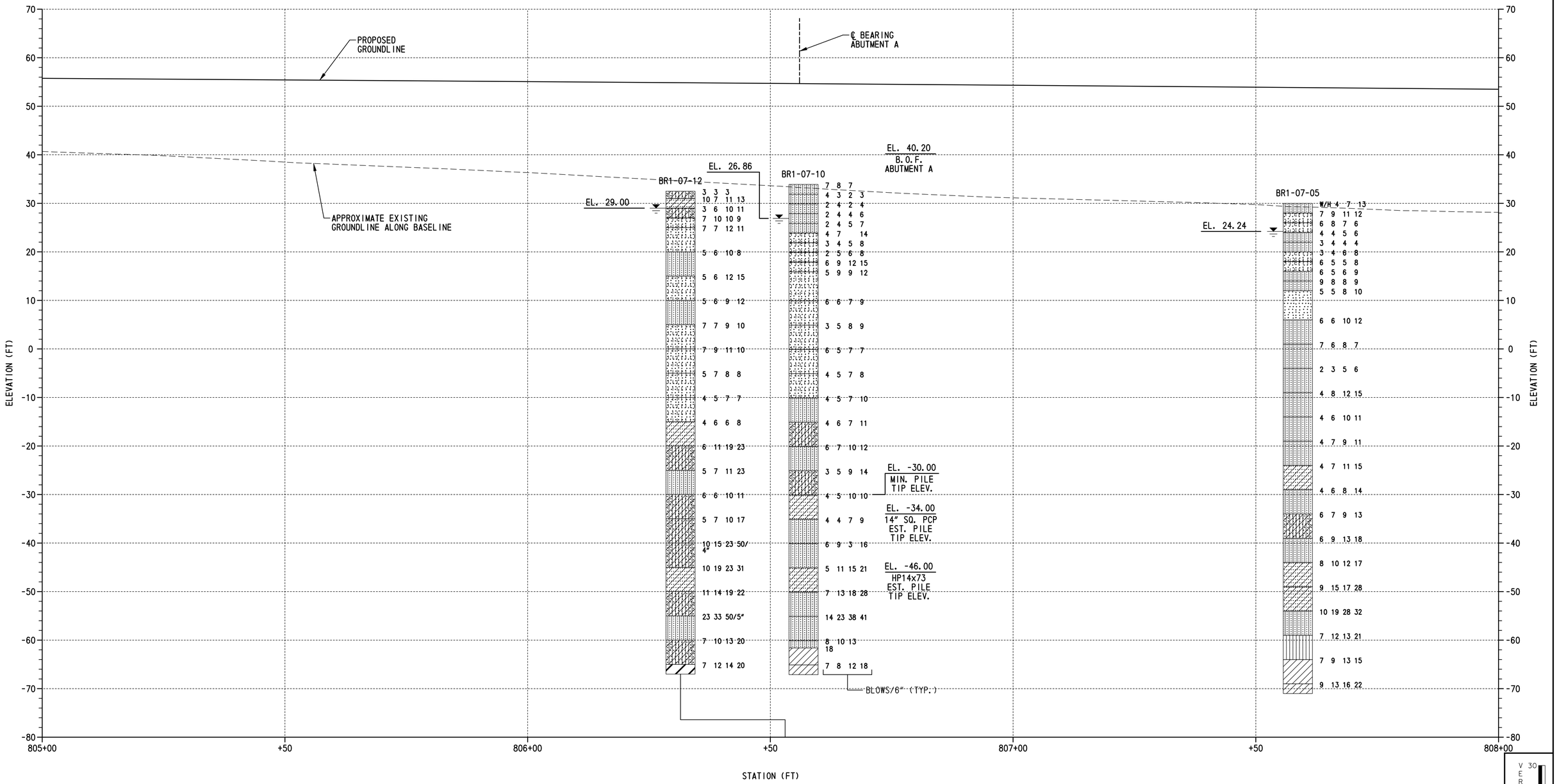

LEGEND:

- SILTY SAND
- CLAYEY SAND
- LOW PLASTICITY CLAY
- SILTY LOW PLASTICITY CLAY
- POORLY GRADED SAND
- POORLY GRADED SAND WITH SILT
- POORLY GRADED CLAYEY SILTY SAND
- WELL GRADED SAND WITH SILT
- SILT
- POORLY GRADED GRAVEL
- WELL GRADED SAND
- HIGH PLASTICITY CLAY

W/R = WEIGHT OF ROD
W/H = WEIGHT OF HAMMER

WATER TABLE AT BORING COMPLETION

BORING PROFILE

SCALE: 1"=10'-0"

TEST BORINGS				
BORING DESIGNATION	STATION	OFFSET	NORTHING	EASTING
BR1-07-05	807+58.66	72.72' LT.	555424	585752
BR1-07-10	806+56.83	65.51' LT.	555428	585650
BR1-07-12	806+53.04	17.80' LT.	555381	585641

NOTES:

1. FOR BORING LOCATIONS, SEE DWG. NO. PE-01.
2. BORING BR1-07-12 IS SHOWN OFFSET AS INDICATED FOR CLARITY.
3. RESULTS CONDUCTED ON SAMPLES RECOVERED ARE REPORTED ON THE BORING LOGS. LOGS AND LABORATORY TESTING ARE INCLUDED AS PART OF THE CONTRACT DOCUMENTS, SEE CD.

VERTICAL SCALE FEET 0 10 20 30

BR1-7S
BO-01

m:\31653-000\contract 1a\cadd\bridge\br_no7\BR_No7S\B001_br1-7S.dgn
10/24/2012 1:51:16 PM

DELAWARE DEPARTMENT OF TRANSPORTATION

ADDENDUMS / REVISIONS

SCALE 0 10 20 30 FEET

US 301, SR 896 TO SR 1

CONTRACT T200911308
COUNTY NEW CASTLE
BRIDGE NO. 1-460S
DESIGNED BY: M.P.U.
CHECKED BY: P.S.D.

BORING PROFILE – 1

SHEET NO. 495
TOTAL SHTS. 875

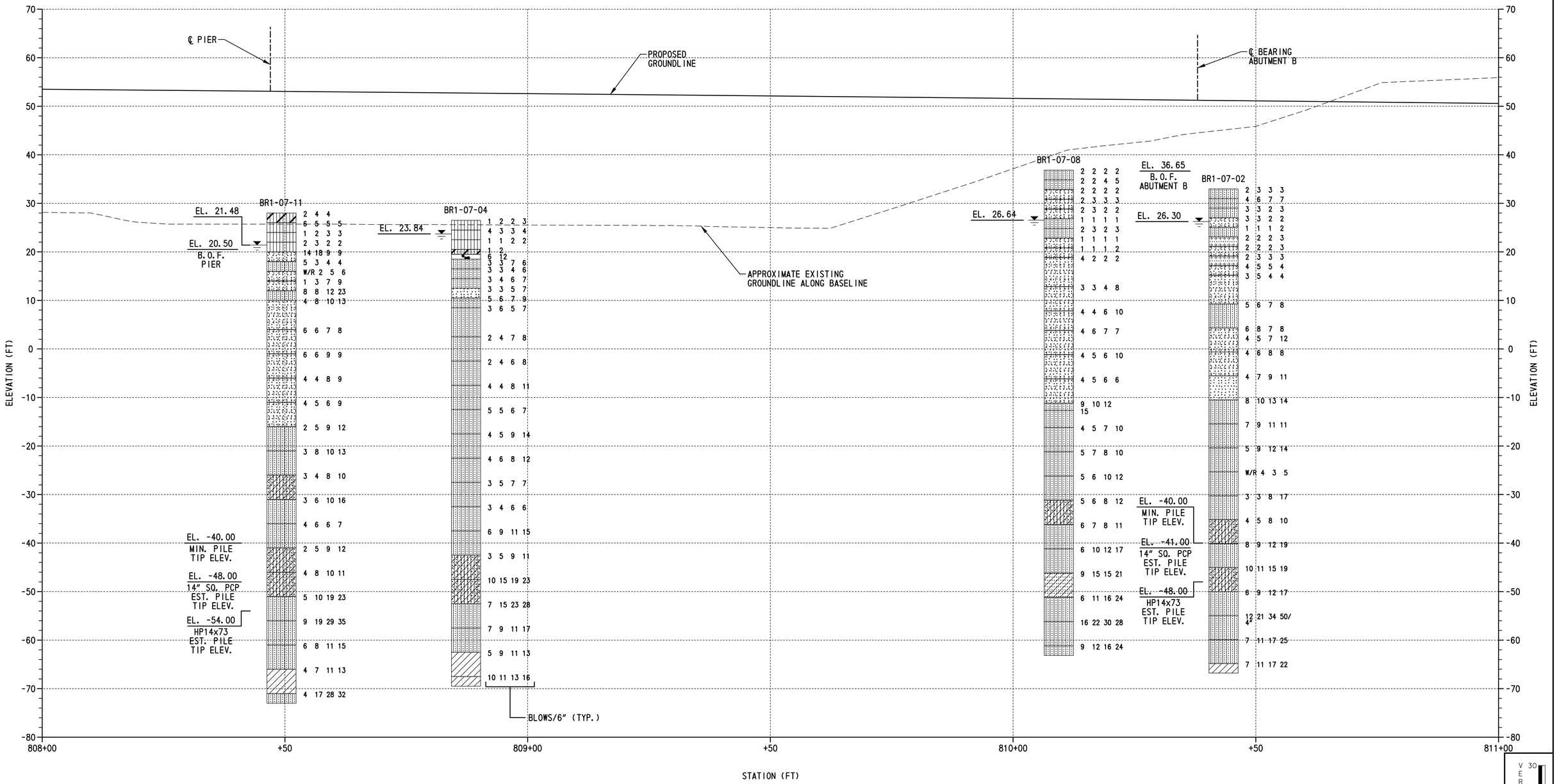

LEGEND:

- SILTY SAND
- CLAYEY SAND
- LOW PLASTICITY CLAY
- SILTY LOW PLASTICITY CLAY
- POORLY GRADED SAND
- POORLY GRADED SAND WITH SILT
- POORLY GRADED CLAYEY SILTY SAND
- WELL GRADED SAND WITH SILT
- SILT
- POORLY GRADED GRAVEL
- WELL GRADED SAND
- HIGH PLASTICITY CLAY

W/R = WEIGHT OF ROD
W/H = WEIGHT OF HAMMER

WATER TABLE AT BORING COMPLETION

BORING PROFILE

SCALE: 1"=10'-0"

TEST BORINGS				
BORING DESIGNATION	STATION	OFFSET	NORTHING	EASTING
BR1-07-02	810+43.35	72.95' LT.	555393	586035
BR1-07-04	808+87.30	55.73' LT.	555393	585878
BR1-07-08	810+09.42	33.99' LT.	555358	585997
BR1-07-11	808+49.29	26.38' LT.	555411	585862

NOTES:

1. FOR BORING LOCATIONS, SEE DWG. NO. PE-01.
2. RESULTS CONDUCTED ON SAMPLES RECOVERED ARE REPORTED ON THE BORING LOGS. LOGS AND LABORATORY TESTING ARE INCLUDED AS PART OF THE CONTRACT DOCUMENTS, SEE CD.

VERTICAL SCALE FEET 0 10 20 30

BR1-7S
BO-02

rt\3653-000\contract 1a\cadd\bridge\br_no7\BR_No7S\B002_br1-7S.dgn
10/24/2012 1:51:19 PM

DELAWARE DEPARTMENT OF TRANSPORTATION

ADDENDUMS / REVISIONS

SCALE 0 10 20 30 FEET

US 301, SR 896 TO SR 1

CONTRACT	BRIDGE NO.	1-460S
T200911308	DESIGNED BY: M.P.U.	
COUNTY		
NEW CASTLE	CHECKED BY: P.S.D.	

BORING PROFILE - 2

SHEET NO. 496
TOTAL SHTS. 875