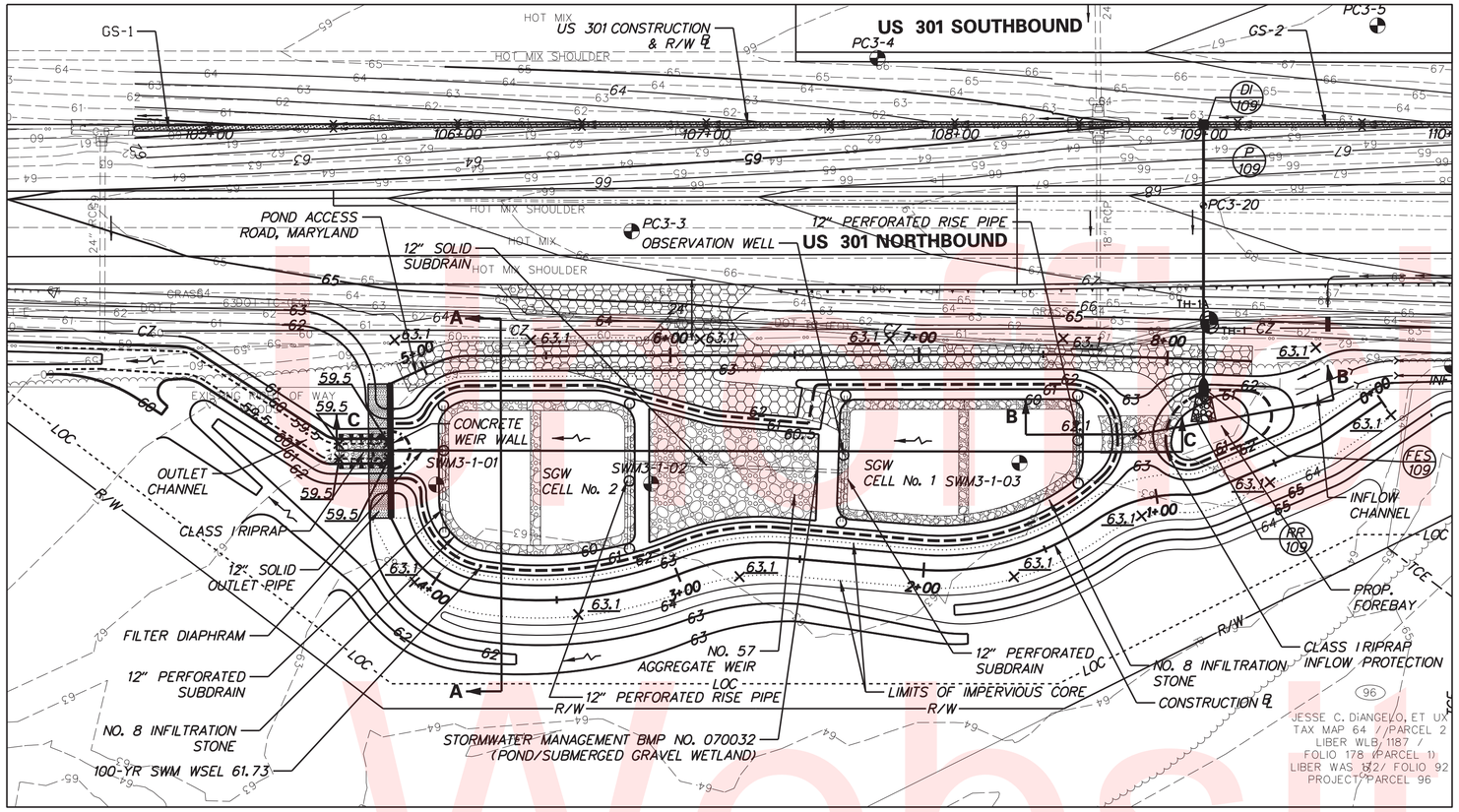

MATCHLINE 110+00 – SEE SHEET SW-02

LEGEND	
EXISTING CONTOUR	68
PROPOSED CONTOUR	65
POND ACCESS ROAD, MARYLAND	
STATE LINE	
EXISTING WETLAND BUFFER	B
GRASS SWALE	
WET SWALE	
CHECK DAM	

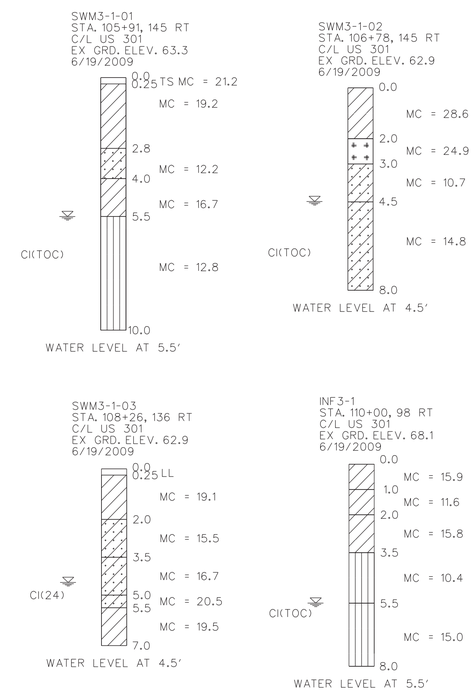

PLAN – STORMWATER MANAGEMENT POND/SGW – SHA BMP NO. 070032 – (STA. 104+00 N)
(US 301 STA. 105+72 TO STA. 109+37), TYPE: SUBMERGED GRAVEL WETLAND
– GRASS SWALE – GS–1 – (STA. 104+50)
(US 301 STA. 104+70 TO STA. 108+98), TYPE: GRASS SWALE
– GRASS SWALE – GS–2 – (STA. 109+00)
(US 301 STA. 109+02 TO STA. 110+00), TYPE: GRASS SWALE

NOTES:

1. SEE GEOTECHNICAL DATA REPORT: "SECTION 3, US 301 MAINLINE INFILTRATION AND SWM BORINGS, CECIL COUNTY, MARYLAND" DATED SEPTEMBER, 2009 FOR BORING LOG DATA.
2. THE FACILITY SHALL REMAIN OFFLINE UNTIL ALL AREAS DRAINING TO THE FACILITY ARE PERMANENTLY STABILIZED.
3. PIGMENTAL COLOR SANDBLASTING FINISH IS TO BE APPLIED TO WEIR WALL FOR VISUAL QUALITY. REFER TO THE SPECIAL PROVISION FOR INTEGRAL CONCRETE COLOR.

ITEM 712552, RIPRAP SLOPE PROTECTION, MARYLAND

STATION/OFFSET	AREA
STA. 105+52, 131.5' RT. TO STA. 105+72, 131.4' RT.	32 SY
STA. 108+59, 124.3' RT. TO STA. 108+88, 124.3' RT.	49 SY

ITEM 202569, POND ACCESS ROAD, MARYLAND

STATION/OFFSET	AREA
STA. 105+78, 102.0' RT. TO STA. 109+20, 95.2' RT.	738 SY

ITEM 272511, POND OUTLET STRUCTURE, CONCRETE, MARYLAND

ITEM	QUANTITY
CONCRETE WEIR WALL	1 EA
MD SHA NO. 2 STONE	6 TON
CLASS SE GEOTEXTILE	13 SY

PREVIOUS 6" SCH. 40 PVC PIPE ITEM IS REPLACED WITH ITEM 612505 AND ITEM 715004. QUANTITIES ARE SHOWN ON SHEET SW-02.

NOTE: SEE SHEETS SW-03, SW-04, SW-07, AND SW-08 FOR STORMWATER MANAGEMENT POND/SGW BMP NO. 070032 DETAILS
SEE SHEET SW-05 FOR MEDIAN GRASS SWALE GS-1 DETAILS.
SEE SHEET SW-06 FOR MEDIAN GRASS SWALE GS-2 DETAILS.

FACILITY DESIGN SUMMARY FOR STORMWATER MANAGEMENT BMP NO. 070032

DESIGN STORM	FACILITY INFLOW (CFS)	FACILITY DISCHARGE (CFS)	WATER SURFACE ELEVATION (FT.)	STORAGE VOLUME (AC.FT.)
2-YEAR	6.52	0.0	59.67	0.00
10-YEAR	14.03	3.88	61.31	0.408
100-YEAR	23.94	14.79	61.73	0.569

POND CODE 378 NOT APPLICABLE: EMBANKMENT HEIGHT IS LESS THAN 4'.
DRAINAGE AREA TO FACILITY: 4.28 ACRES
MANAGEMENT PROVIDED BY FACILITY: WATER QUALITY, ESD, AND CPV. WATER QUANTITY FOR 2-YEAR AND 10-YEAR STORM EVENTS.

POND SUMMARY FOR STORMWATER MANAGEMENT BMP NO. 070032

BOTTOM OF POND/TOP OF SGW	60.0
BOTTOM OF SGW	56.67
BOTTOM OF FOREBAY	61.0
TOP OF POND	63.1
OVERFLOW WEIR CREST	61.17
1 INCH DRAWDOWN INVERT	59.67
NO. 57 AGGREGATE WEIR CREST	60.5

"AS-BUILT" CERTIFICATION

"I hereby certify that the stormwater best management practice (practices) shown on the plans and individually identified below has (have) been constructed in accordance with the plans included under the Maryland Department of the Environment Approval, Number 10-SF-0061, except as noted in red on the "AS BUILT" drawings."

Name _____ Signature _____

Maryland Registration No. _____ Date _____

BMP NO. 070032

Facility Identification

MDE NO.: 10-SF-0061

SW-01

Initial Website Copy

E:\2814 DEL ROUTE 301\001,3,4,5,6 (DESIGN)\CAD\SB_301AET_000_MD_STR.DGN

DELAWARE DEPARTMENT OF TRANSPORTATION

ADDENDUMS / REVISIONS

SCALE 0 30 60 90 FEET

US 301 MARYLAND STATE LINE TO LEVELS ROAD

CONTRACT	BRIDGE NO.	
T200811301	DESIGNED BY:	JZS/CB/PC
COUNTY		
CECIL	CHECKED BY:	MB

STORMWATER MANAGEMENT PLAN

SHEET NO. 338 TOTAL SHTS. 850

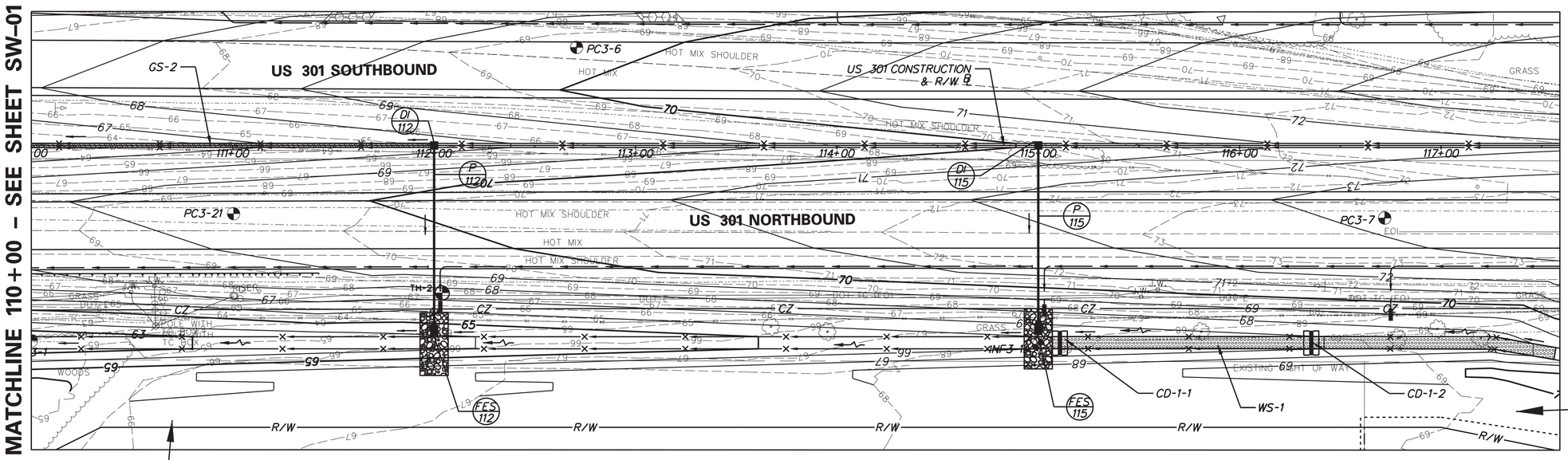

LEGEND	
EXISTING CONTOUR	68
PROPOSED CONTOUR	65
POND ACCESS ROAD, MARYLAND	
STATE LINE	
EXISTING WETLAND BUFFER	B
GRASS SWALE	
WET SWALE	
CHECK DAM	

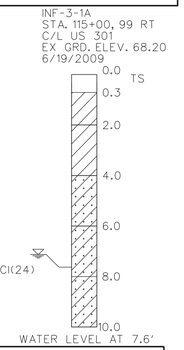

PLAN – WET SWALE – WS–1 – (STA. 115+00 N) (US 301 STA. 115+07 TO STA. 117+57), TYPE: WET SWALE – GRASS SWALE – GS–2 – (STA. 109+00) (US 301 STA. 109+50 TO STA. 111+98), TYPE: GRASS SWALE

ITEM 910500, BIORETENTION SOIL, MIX I

STATION/OFFSET	VOLUME
STA. 105+72, 131.1' RT TO STA. 108+51, 124.5' RT	169 CY

ITEM 302012, DEL NO. 57 STONE

STATION/OFFSET	WEIGHT
STA. 105+72, 131.1' RT TO STA. 108+51, 124.5' RT	1,576 TON
STA. 105+67, 126.375' RT TO STA. 105+72, 126.375' RT	26 TON

ITEM 910002, INFILTRATION STONE, NO. 8

STATION/OFFSET	WEIGHT
STA. 105+72, 131.1' RT TO STA. 108+51, 124.5' RT	437 TON

ITEM 713003, GEOTEXTILES

STATION/OFFSET	AREA
STA. 105+72, 131.1' RT TO STA. 108+51, 124.5' RT	1,681 SY

ITEM 612505, PVC PIPE, 12"

STATION/OFFSET	LENGTH
STA. 105+72, 131.1' RT TO STA. 108+51, 124.5' RT	131 LF

ITEM 715004, PERFORATED PIPE UNDERDRAIN 12"

STATION/OFFSET	LENGTH
STA. 105+72, 131.1' RT TO STA. 108+51, 124.5' RT	222 LF

ITEM 756000, SAND

STATION/OFFSET	WEIGHT
STA. 105+72, 131.1' RT TO STA. 108+51, 124.5' RT	57 TON
STA. 105+67, 126.375' RT TO STA. 105+72, 126.375' RT	11 TON

NOTES: SEE SHEET SW-04 FOR WET SWALE WS-1 DETAILS.

ITEM 908001, TOPSOIL

STATION/OFFSET	QUANTITY
FROM STA. 115+07, 98.2' RT TO 115+21, 98.2' RT	4.4 TON
FROM STA. 116+32, 98.2' RT TO 116+46, 98.2' RT	4.4 TON

WET SWALE WS–1 2 YEAR AND 10 YEAR ELEVATIONS

CHECK DAM	ESD ELEV. (FT)	2 YEAR ELEV. OVER WEIR (FT)	10 YEAR ELEV. OVER WEIR (FT)	2 YEAR FREEBOARD (FT)	10 YEAR FREEBOARD (FT)
CD-1-1	67.2	67.3	67.4	1.4	1.3
CD-1-2	68.3	68.4	68.5	1.4	1.3

AS–BUILT INSPECTION TABULATIONS/CHECKLIST FOR BMP NUMBER: TBD
MDE NO.:10–SF–0061

ACCEPTED BY MDE:

NAME _____ DATE _____

"AS-BUILT" CERTIFICATION

"I hereby certify that the stormwater best management practice (practices) shown on the plans and individually identified below has (have) been constructed in accordance with the plans included under the Maryland Department of the Environment Approval, Number 10-SF-0061, except as noted in red on the "AS BUILT" drawings."

Name _____ Signature _____

Maryland Registration No. _____ Date _____

WET SWALE WS-1

Facility Identification

WET SWALE WS–1 CONSTRUCTION CHECKLIST

ACTIVITY	ON SITE INSPECTION DATE	INSPECTOR INITIALS	ACCEPTANCE DATE
RUNOFF DIVERTED			
DRAINAGE AREA STABILIZED PRIOR TO INSTALLATION			
FACILITY AREA CLEARED / SUBGRADE PREPARED			
FACILITY LOCATION STAKED OUT			
EXCAVATED TO PROPER SIZE AND LOCATION*			
STABLE SIDE SLOPES			
LATERAL SLOPES FINISHED AS PER PLANS			
SUBSOILS NOT COMPACTED DURING CONSTRUCTION			
TOPSOIL ADEQUATE IN COMPOSITION AND PLACEMENT (50% LOAM, 50% SAND, K=0.5 FT/DAY)			
CHECK DAMS CONSTRUCTED TO PROPER DIMENSIONS AND SPACING*			
DIAPHRAGMS OR WEIRS INSTALLED AS DESIGNED, IF APPLICABLE*			
BOTTOM WIDTH, 2 FT MIN., 8 FT MAX.			
SOIL PERMEABILITY TESTED (DOCUMENTATION CHECKED)			
FINAL GRADING AND PERMANENT STABILIZATION COMPLETED*			
AS-BUILT DOCUMENTATION			

*AS-BUILT INSPECTOR REQUIRED TO PERFORM INSPECTION ON SITE FOR THESE STEPS AS REQUIRED BY COMAR 26.17.02.10

AS–BUILT DATA FOR WET SWALE WS–1 MDE NO.: 10–SF–0061

ACTIVITY	DESIGNED	AS-BUILT	DIFFERENCE	INSPECTOR INITIALS	ACCEPTANCE DATE
AS-BUILT SURVEY	N/A				
ESD VOLUME (CF)	1288				
BOTTOM WIDTH (FT)	6				
RIGHT SIDE SLOPE	6:1				
LEFT SIDE SLOPE	4:1				
TOTAL LENGTH (FT)	250				
NUMBER OF CHECK DAMS / WEIRS	2				
CD-1-1 WEIR ELEVATION (FT)	67.2				
CD-1-1 WEIR LENGTH (FT)	1				
CD-1-2 WEIR ELEVATION (FT)	68.3				
CD-1-2 WEIR LENGTH (FT)	1				
2 YEAR DISCHARGE (CFS)	1.0				
10 YEAR DISCHARGE (CFS)	2.0				
MAXIMUM CHANNEL SLOPE	111:1				

MDE NO.: 10–SF–0061

SW–02

DELAWARE DEPARTMENT OF TRANSPORTATION

ADDENDUMS / REVISIONS

SCALE 0 30 60 90 FEET

US 301 MARYLAND STATE LINE TO LEVELS ROAD

CONTRACT	BRIDGE NO.	
T200811301	DESIGNED BY:	JZS/CB/PC
COUNTY	CHECKED BY:	MB
CECIL		

STORMWATER MANAGEMENT PLAN

SHEET NO. 339 TOTAL SHTS. 850

E:\2814 DEL ROUTE 301\001,3,4,5,6 (DESIGN)\CAD\SB_301AET_000_MD_STR.DGN

LEGEND	
CENTERLINE OF DITCH	
PROPOSED CONTOUR	65
POND ACCESS ROAD, MARYLAND	
BASELINE OF CONSTRUCTION CONTROL COORDINATES	8
GRADING CONTROL POINTS	8
BOTTOM OF POOL	BOP
BOTTOM OF FOREBAY	BOF
BOTTOM OF SWALE	BOS
EDGE OF WEIR	EOW

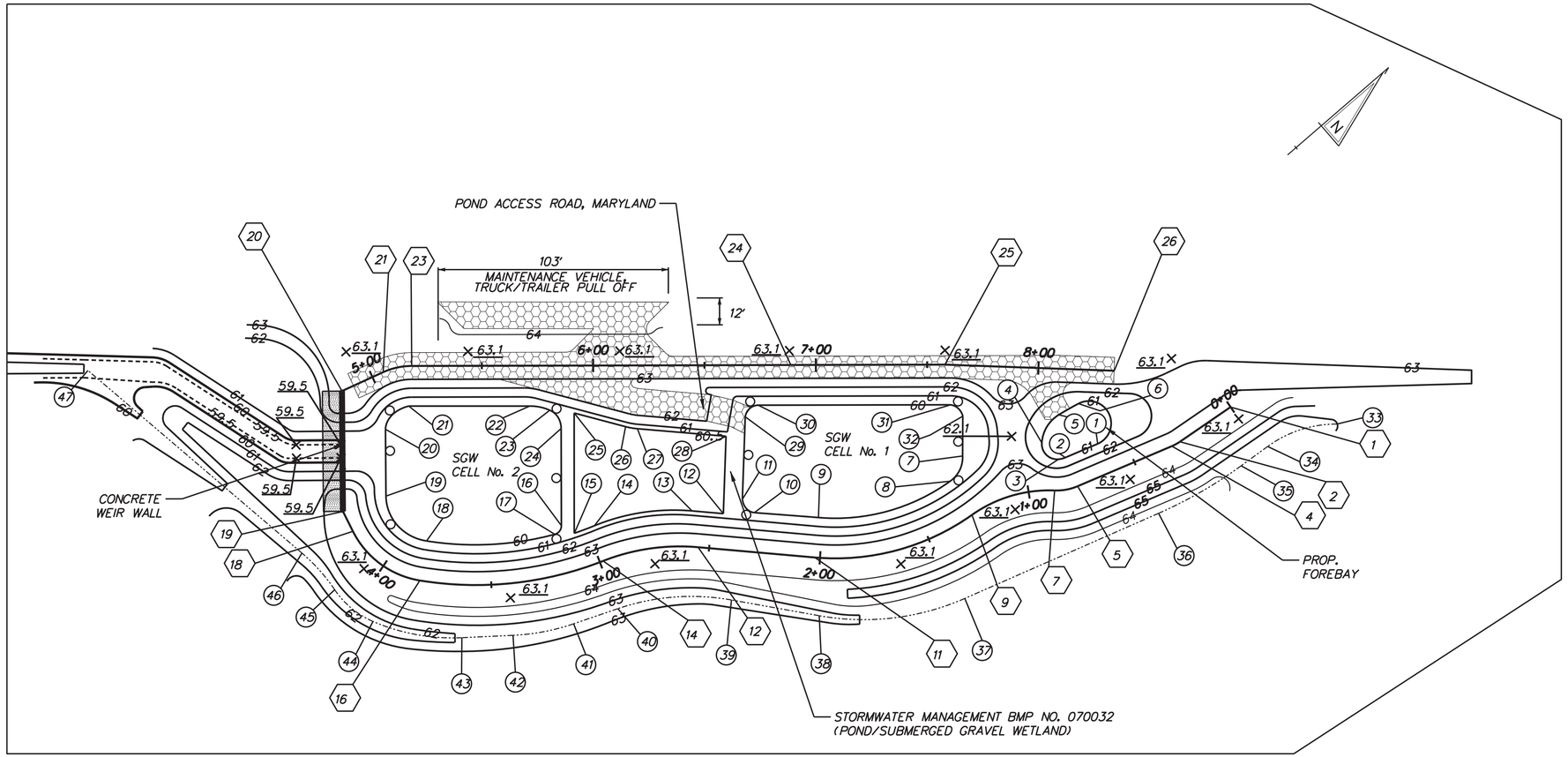

PLAN – STORMWATER MANAGEMENT POND/SUBMERGED GRAVEL WETLAND – SHA BMP NO. 070032 – (STA. 104+00 N)

GRADING CONTROL POINTS

	NORTHING	EASTING	ELEVATION	NOTE
1	513, 165. 7938	555, 541. 5315	61. 00	BOF
2	513, 150. 8152	555, 536. 7198	61. 00	BOF
3	513, 147. 8953	555, 535. 2153	61. 00	BOF
4	513, 147. 0954	555, 524. 8500	61. 00	BOF
5	513, 161. 1444	555, 520. 2739	61. 00	BOF
6	513, 171. 1343	555, 522. 2745	61. 00	BOF
7	513, 116. 3963	555, 505. 9863	60. 00	BOP
8	513, 104. 8064	555, 510. 9311	60. 00	BOP
9	513, 049. 2918	555, 484. 5540	60. 00	BOP
10	513, 028. 9003	555, 464. 0245	60. 00	BOP
11	513, 028. 9131	555, 455. 9504	60. 00	BOP
12	513, 018. 1461	555, 455. 3375	60. 50	EOW
13	513, 008. 3167	555, 445. 2107	60. 50	EOW
14	512, 970. 6469	555, 421. 5234	60. 50	EOW
15	512, 961. 7292	555, 418. 2037	60. 50	EOW
16	512, 959. 5898	555, 411. 8569	60. 00	BOP
17	512, 954. 8457	555, 412. 8720	60. 00	BOP
18	512, 909. 2485	555, 377. 3933	60. 00	BOP
19	512, 908. 7141	555, 350. 2589	60. 00	BOP
20	512, 928. 1353	555, 327. 4526	60. 00	BOP
21	512, 942. 8466	555, 326. 4362	60. 00	BOP
22	512, 983. 8094	555, 361. 8504	60. 00	BOP
23	512, 989. 5099	555, 369. 1755	60. 00	BOP
24	512, 988. 0823	555, 378. 7261	60. 00	BOP

GRADING CONTROL POINTS

	NORTHING	EASTING	ELEVATION	NOTE
25	512, 996. 9883	555, 392. 7711	60. 50	EOW
26	513, 010. 4286	555, 397. 0547	60. 50	EOW
27	513, 013. 8516	555, 401. 2359	60. 50	EOW
28	513, 041. 7792	555, 429. 8486	60. 50	EOW
29	513, 054. 0158	555, 428. 8764	60. 00	BOP
30	513, 061. 8836	555, 428. 8033	60. 00	BOP
31	513, 127. 3097	555, 485. 0671	60. 00	BOP
32	513, 128. 1566	555, 492. 4998	60. 00	BOP
33	513, 252. 9020	555, 605. 0354	65. 00	BOS
34	513, 222. 7891	555, 592. 2926	64. 42	BOS
35	513, 208. 1030	555, 591. 0763	64. 17	BOS
36	513, 166. 1040	555, 582. 9616	63. 81	BOS
37	513, 075. 2870	555, 554. 9590	63. 27	BOS
38	513, 020. 7622	555, 518. 0851	62. 90	BOS
39	512, 995. 5658	555, 486. 9674	62. 68	BOS
40	512, 954. 4132	555, 456. 5453	62. 39	BOS
41	512, 934. 9516	555, 448. 7040	62. 28	BOS
42	512, 910. 9756	555, 434. 8218	62. 13	BOS
43	512, 892. 9157	555, 420. 6116	62. 00	BOS
44	512, 867. 4753	555, 388. 9954	61. 70	BOS
45	512, 863. 7771	555, 366. 9810	61. 53	BOS
46	512, 863. 4051	555, 344. 9083	61. 35	BOS
47	512, 844. 2989	555, 220. 0739	59. 05	BOS

BASELINE OF CONSTRUCTION CONTROL COORDINATES

	STATION		NORTHING	EASTING
1	POB	STA. 0+00. 00	513, 221. 7862	555, 568. 0854
2	PC	STA. 0+27. 54	513, 194. 4151	555, 564. 9973
	PI	STA. 0+29. 64	513, 192. 3374	555, 564. 7629
4	PT	STA. 0+31. 71	513, 190. 3467	555, 564. 1234
5	PC	STA. 0+77. 73	513, 146. 5334	555, 550. 0490
	PI	STA. 0+83. 13	513, 141. 3976	555, 548. 3992
7	PRC	STA. 0+88. 34	513, 137. 4618	555, 544. 7105
	PI	STA. 1+08. 78	513, 122. 5538	555, 530. 7387
9	PRC	STA. 1+27. 73	513, 102. 2173	555, 528. 7688
	PI	STA. 1+66. 65	513, 063. 4813	555, 525. 0165
11	PT	STA. 2+02. 32	513, 036. 3757	555, 497. 0908
12	PC	STA. 2+55. 00	512, 999. 6905	555, 459. 2958
	PI	STA. 2+77. 12	512, 984. 2836	555, 443. 4228
14	PRC	STA. 2+98. 45	512, 963. 4149	555, 436. 0864
	PI	STA. 3+41. 39	512, 922. 8986	555, 421. 8429
16	PCC	STA. 3+82. 26	512, 895. 3811	555, 388. 8696
	PI	STA. 4+03. 20	512, 881. 9678	555, 372. 7968
18	PT	STA. 4+20. 98	512, 887. 1213	555, 352. 5065
19	PI	STA. 4+30. 94	512, 889. 5736	555, 342. 8517
20	PI	STA. 4+84. 94	512, 924. 5439	555, 301. 7047
21	PC	STA. 5+05. 25	512, 944. 0407	555, 307. 3875
	PI	STA. 5+11. 96	512, 950. 4874	555, 309. 2666
23	PT	STA. 5+18. 47	512, 955. 5787	555, 313. 6449
24	PI	STA. 6+88. 75	513, 084. 6815	555, 424. 6681
25	PI	STA. 7+57. 88	513, 137. 0992	555, 469. 7452
26	POE	STA. 8+34. 00	513, 192. 8623	555, 521. 5590

MDE NO.: 10-SF-0061

SW-03

DELAWARE DEPARTMENT OF TRANSPORTATION

ADDENDUMS / REVISIONS

SCALE 0 30 60 90 FEET

US 301 MARYLAND STATE LINE TO LEVELS ROAD

CONTRACT	BRIDGE NO.	
T200811301	DESIGNED BY:	JZS/CB/PC
COUNTY	CHECKED BY:	MB
CECIL		

STORMWATER MANAGEMENT PLAN

SHEET NO.
340
TOTAL SHTS.
850

E:\2814 DEL ROUTE 301\001,3,4,5,6 (DESIGN)\CAD\SB_301AET_000_MD_STR.DGN

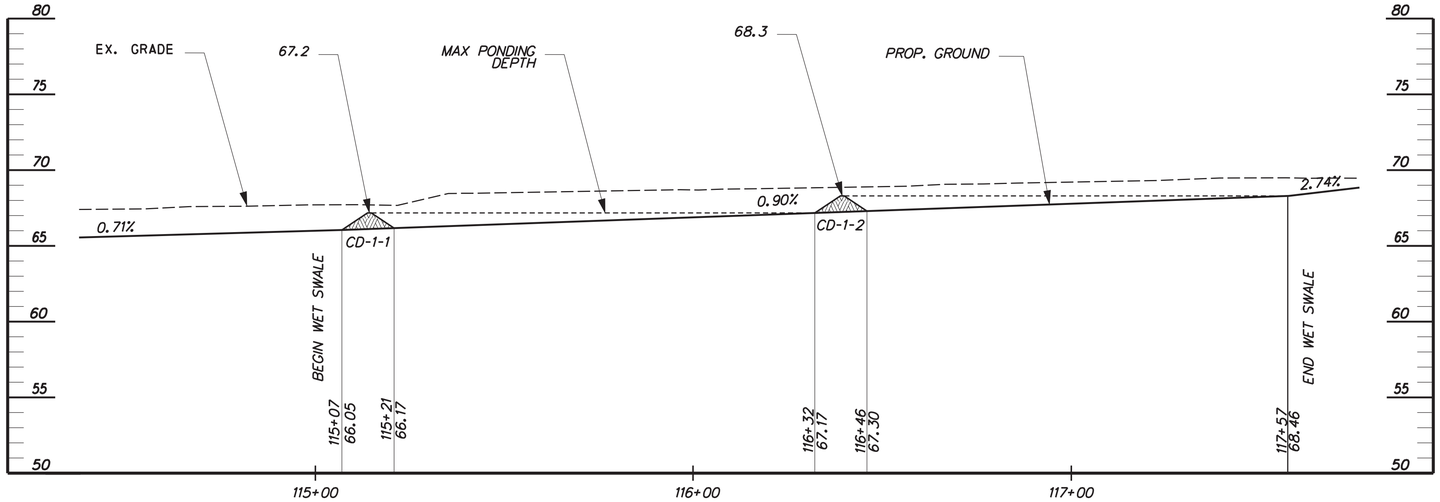

PROFILE ALONG ℄ OF WET SWALE WS-1

SCALE: HORIZ. 1"=20'
VERT. 1"=5'

NOTE:
- WET SWALE STATIONS ARE REFERENCED TO THE ROADWAY CONSTRUCTION BASELINE.
- FOR CHECK DAM DETAILS, REFER TO SW-100.

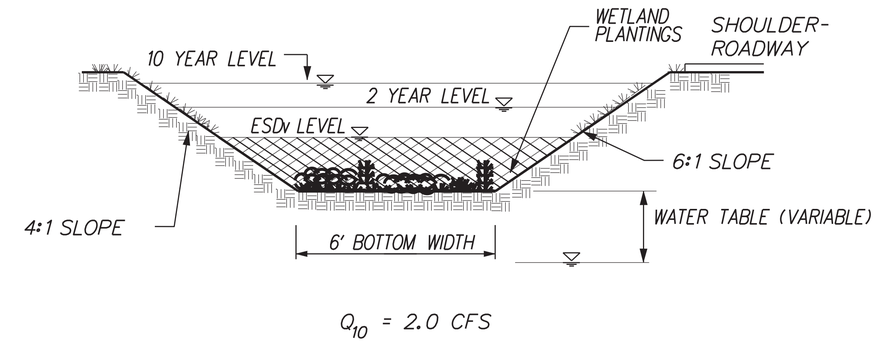

CROSS SECTION WET SWALE WS-1

NOT TO SCALE

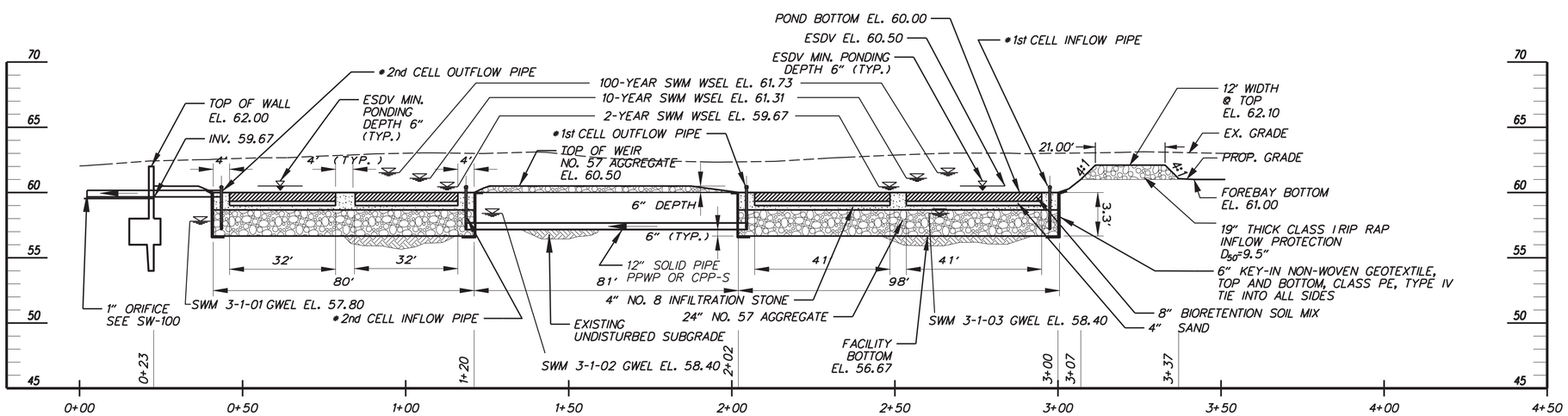

CROSS SECTION C-C PF POND/SGW #070032

SCALE: HORIZ. 1"=20'
VERT. 1"=5'

*NOTE: SEE SGW MISC. DETAILS ON SHEET SW-100.

*NOTE: DRAIN GRATE TOP ELEV. = 60.50

MDE NO.: 10-SF-0061

SW-04

DELAWARE DEPARTMENT OF TRANSPORTATION	ADDENDUMS / REVISIONS	SCALE: AS SHOWN	US 301 MARYLAND STATE LINE TO LEVELS ROAD	CONTRACT T200811301	BRIDGE NO.	STORMWATER MANAGEMENT PLAN	SHEET NO. 341
				COUNTY CECIL	DESIGNED BY: JZS/CB/PRC		TOTAL SHTS. 850
					CHECKED BY: MB		

E:\2814 DEL ROUTE 301\001,3,4,5,6 (DESIGN)\CAD\SB_301AET_000_MD_STR.DGN

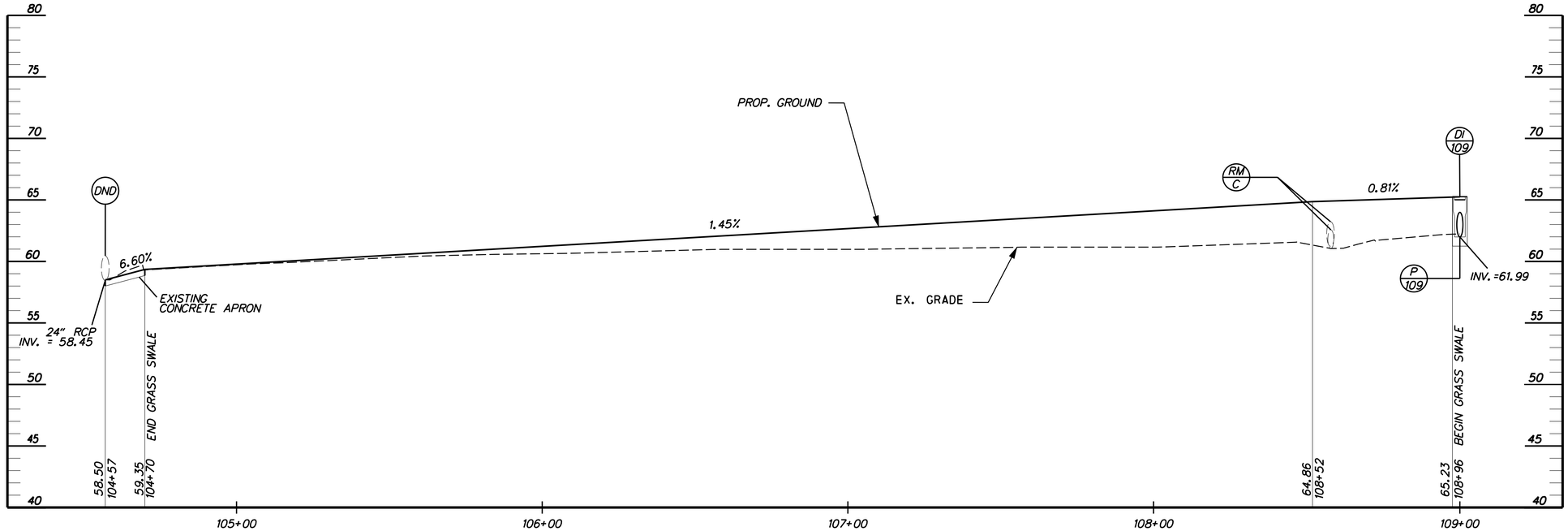

MEDIAN GRASS SWALE GS-1

STA. 104+70 TO STA. 108+98
SCALE: HORIZ. 1"=20'
VERT. 1"=5'

NOTES:
- GRASS SWALE STATIONS ARE REFERENCED TO THE ROADWAY CONSTRUCTION BASELINE.
- A DENSE COVER OF WATER TOLERANT, EROSION RESISTANT GRASS SHOULD BE ESTABLISHED AT THE BOTTOM AND SIDE SLOPES OF SWALE WITHIN PROPOSED GRASS SWALE LIMITS AFTER CONSTRUCTION.

AS-BUILT DATA FOR GRASS SWALE GS-1
MDE NO.: 10-SF-0061

ACTIVITY	DESIGNED	AS-BUILT	DIFFERENCE	INSPECTOR INITIALS	ACCEPTANCE DATE
AS-BUILT SURVEY	N/A				
ESD VOLUME (CF)	132				
BOTTOM WIDTH (FT)	2				
RIGHT SIDE SLOPE	5:1				
LEFT SIDE SLOPE	5:1				
TOTAL LENGTH (FT)	426				
NUMBER OF CHECK DAMS / WEIRS	0				
2 YEAR DISCHARGE (CFS)	1.1				
10 YEAR DISCHARGE (CFS)	2.1				
MAXIMUM CHANNEL SLOPE	69:1				

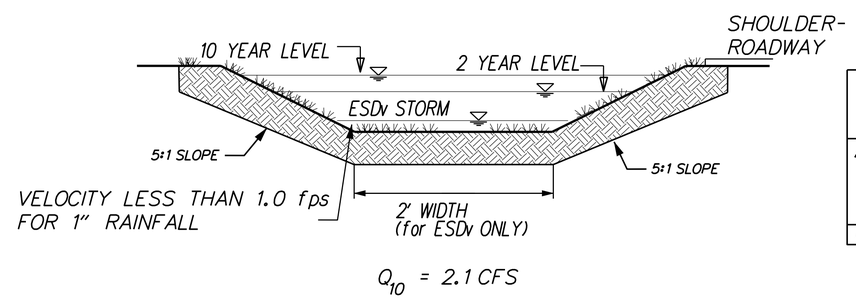

Q_{10} = 2.1 CFS

CROSS SECTION GRASS SWALE GS-1

NOT TO SCALE

AS-BUILT INSPECTION TABULATIONS/CHECKLIST for BMP Number: TBD
MDE No.: 10-SF-0061

Accepted by MDE:

Name _____ Date _____

GRASS SWALE GS-1 CONSTRUCTION CHECKLIST

ACTIVITY	ON SITE INSPECTION DATE	INSPECTOR INITIALS	ACCEPTANCE DATE
RUNOFF DIVERTED			
DRAINAGE AREA STABILIZED PRIOR TO INSTALLATION			
FACILITY AREA CLEARED / SUBGRADE PREPARED			
FACILITY LOCATION STAKED OUT			
EXCAVATED TO PROPER SIZE AND LOCATION*			
STABLE SIDE SLOPES			
LATERAL SLOPES FINISHED AS PER PLANS			
SUBSOILS NOT COMPACTED DURING CONSTRUCTION			
TOPSOIL ADEQUATE IN COMPOSITION AND PLACEMENT (50% LOAM, 50% SAND, K=0.5 FT/DAY)			
BOTTOM WIDTH, 2 FT MIN., 8 FT MAX.			
SOIL PERMEABILITY TESTED (DOCUMENTATION CHECKED)			
FINAL GRADING AND PERMANENT STABILIZATION COMPLETED*			
AS-BUILT DOCUMENTATION			

*AS-BUILT INSPECTOR REQUIRED TO PERFORM INSPECTION ON SITE FOR THESE STEPS AS REQUIRED BY COMAR 26.17.02.10

"AS-BUILT" CERTIFICATION

"I hereby certify that the stormwater best management practice (practices) shown on the plans and individually identified below has (have) been constructed in accordance with the plans included under the Maryland Department of the Environment Approval, Number 10-SF-0061, except as noted in red on the "AS BUILT" drawings."

Name _____ Signature _____

Maryland Registration No. _____ Date _____

GRASS SWALE GS-1

Facility Identification

MDE NO.: 10-SF-0061

SW-05

DELAWARE DEPARTMENT OF TRANSPORTATION	ADDENDUMS / REVISIONS	US 301 MARYLAND STATE LINE TO LEVELS ROAD	CONTRACT T200811301	BRIDGE NO.	STORMWATER MANAGEMENT PLAN
			COUNTY CECIL	DESIGNED BY: JZS/CB/PC	SHEET NO. 342
				CHECKED BY: MB	TOTAL SHTS. 850

E:\2814 DEL ROUTE 301\001,3,4,5,6 (DESIGN)\CAD\SB_301AET_000_MD_STR.DGN

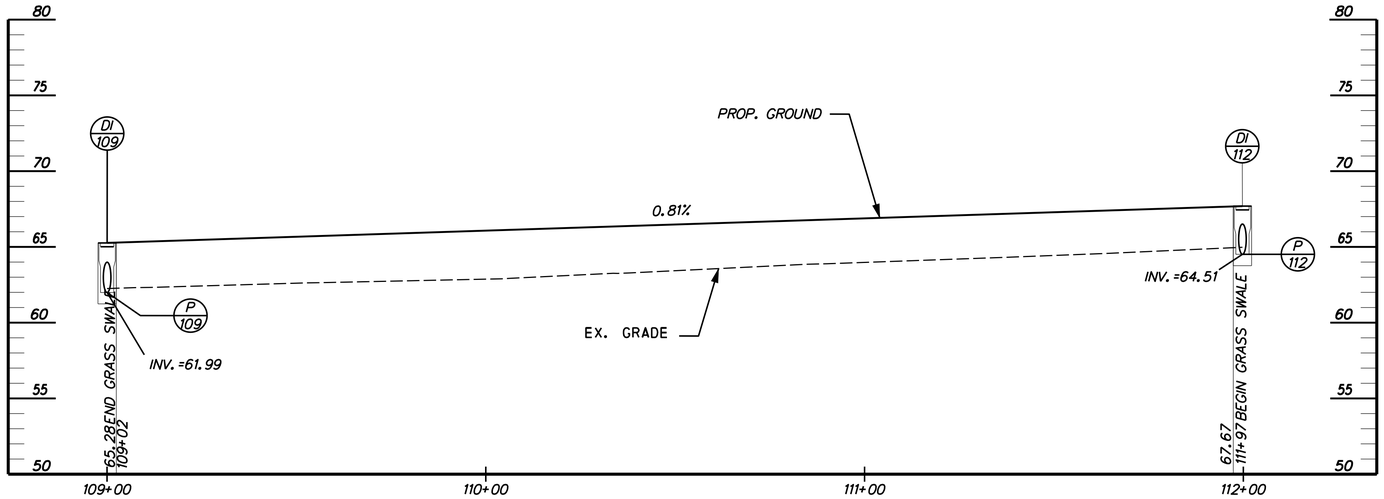

MEDIAN GRASS SWALE GS-2

STA. 109+02 TO STA. 111+98
SCALE: HORIZ. 1"=20'
VERT. 1"=5'

NOTES:
- GRASS SWALE STATIONS ARE REFERENCED TO THE ROADWAY CONSTRUCTION BASELINE.
- A DENSE COVER OF WATER TOLERANT, EROSION RESISTANT GRASS SHOULD BE ESTABLISHED AT THE BOTTOM AND SIDE SLOPES OF SWALE WITHIN PROPOSED GRASS SWALE LIMITS AFTER CONSTRUCTION.

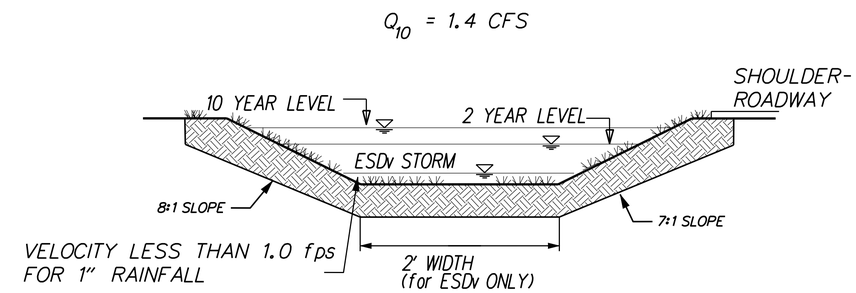

CROSS SECTION GRASS SWALE GS-2

NOT TO SCALE

AS-BUILT DATA FOR GRASS SWALE GS-2
MDE NO.: 10-SF-0061

ACTIVITY	DESIGNED	AS-BUILT	DIFFERENCE	INSPECTOR INITIALS	ACCEPTANCE DATE
AS-BUILT SURVEY	N/A				
ESD VOLUME (CF)	1,449				
BOTTOM WIDTH (FT)	2				
RIGHT SIDE SLOPE	7:1				
LEFT SIDE SLOPE	8:1				
TOTAL LENGTH (FT)	295				
NUMBER OF CHECK DAMS / WEIRS	0				
2 YEAR DISCHARGE (CFS)	0.7				
10 YEAR DISCHARGE (CFS)	1.4				
MAXIMUM CHANNEL SLOPE	125:1				

"AS-BUILT" CERTIFICATION

"I hereby certify that the stormwater best management practice (practices) shown on the plans and individually identified below has (have) been constructed in accordance with the plans included under the Maryland Department of the Environment Approval, Number 10-SF-0061, except as noted in red on the "AS BUILT" drawings."

Name _____ Signature _____

Maryland Registration No. _____ Date _____

GRASS SWALE GS-2

_____

_____

Facility Identification

GRASS SWALE GS-2 CONSTRUCTION CHECKLIST

ACTIVITY	ON SITE INSPECTION DATE	INSPECTOR INITIALS	ACCEPTANCE DATE
RUNOFF DIVERTED			
DRAINAGE AREA STABILIZED PRIOR TO INSTALLATION			
FACILITY AREA CLEARED / SUBGRADE PREPARED			
FACILITY LOCATION STAKED OUT			
EXCAVATED TO PROPER SIZE AND LOCATION*			
STABLE SIDE SLOPES			
LATERAL SLOPES FINISHED AS PER PLANS			
SUBSOILS NOT COMPACTED DURING CONSTRUCTION			
TOPSOIL ADEQUATE IN COMPOSITION AND PLACEMENT (50% LOAM, 50% SAND, K=0.5 FT/DAY)			
BOTTOM WIDTH, 2 FT MIN., 8 FT MAX.			
SOIL PERMEABILITY TESTED (DOCUMENTATION CHECKED)			
FINAL GRADING AND PERMANENT STABILIZATION COMPLETED*			
AS-BUILT DOCUMENTATION			

*AS-BUILT INSPECTOR REQUIRED TO PERFORM INSPECTION ON SITE FOR THESE STEPS AS REQUIRED BY COMAR 26.17.02.10

AS-BUILT INSPECTION TABULATIONS/CHECKLIST for BMP Number: TBD
MDE No.: 10-SF-0061

Accepted by MDE:

Name _____ Date _____

MDE NO.: 10-SF-0061

SW-06

E:\2814 DEL ROUTE 301\001,3,4,5,6 (DESIGN)\CAD\SB_301AET_000_MD_STR.DGN

DELAWARE DEPARTMENT OF TRANSPORTATION

ADDENDUMS / REVISIONS

US 301 MARYLAND STATE LINE TO LEVELS ROAD

CONTRACT	BRIDGE NO.	
T200811301	DESIGNED BY:	JZS/CB/PC
COUNTY	CHECKED BY:	MB
CECIL		

STORMWATER MANAGEMENT PLAN

SHEET NO. 343
TOTAL SHTS. 850

AS-BUILT DATA FOR BMP NO. 070032
MDE NO.: 10-SF-0061

ACTIVITY	DESIGNED	AS-BUILT	DIFFERENCE	INSPECTOR'S INITIALS	ACCEPTANCE DATE
AS-BUILT SURVEY	N/A				
ESD ELEVATION	60.50				
ESD VOLUME	5097 cf				
CPv STORAGE ELEVATION	N/A				
CPv STORAGE VOLUME	N/A				
CPv DISCHARGE (CFS) *	N/A				
CPv CONTROL OPENING/ELEVATION	N/A				
2 YR STORAGE ELEVATION	59.67				
2 YR STORAGE VOLUME	0.00 ac-ft				
2 YR DISCHARGE (CFS) *	0.00				
2 YR CONTROL OPENING/ELEVATION	1" DIA./59.67				
10 YR STORAGE ELEVATION	61.31				
10 YR STORAGE VOLUME	0.408 ac-ft				
10 YR DISCHARGE (CFS) *	3.88				
10 YR CONTROL OPENING/ELEVATION	12'/61.17				
100 YR STORAGE ELEVATION	61.73				
100 YR STORAGE VOLUME	0.569 ac-ft				
100 YR DISCHARGE (CFS) *	11.5				
100 YR CONTROL OPENING/ELEVATION	12'/61.17				
PRINCIPAL SPILLWAY: ELEV. OUT/DIAM./GRADE	N/A (WEIR WALL)				
WEIR: WIDTH/LENGTH/ELEVATION	1.5'/12.0'/61.17				
FOREBAY: WIDTH/LENGTH/ELEVATION	31'/57'/61.00				
EMERGENCY SPILLWAY: WIDTH / LENGTH / ELEVATION	N/A				
EMBANKMENT: ELEVATION	63.00				
POND BOTTOM: ELEVATION	60.00				
OUTLET PROTECTION: LENGTH/WIDTH/STONE SIZE	20'/22'/CLASS I				
LOW FLOW DEWATERING DEVICE EL./DIAM.	59.67/1" DIA.				

* AS-BUILT DISCHARGES ARE NOT REQUIRED IF TOLERANCES AND FREEBOARD ARE MET.

DATE AS-BUILT ACCEPTED BY MDE: _____

AS-BUILT INSPECTION TABULATIONS/CHECKLIST FOR BMP NUMBER: TBD
MDE NO.: 10-SF-0061

ACCEPTED BY MDE:

NAME _____ DATE _____

M-2 SUBMERGED GRAVEL WETLAND TABULATIONS

ACTIVITY	DESIGNED	AS-BUILT	DIFFERENCE	INSPECTOR INITIALS	ACCEPTANCE DATE
AS-BUILT SURVEY	N/A				
INFLOW OPENING SIZE	N/A				
INFLOW INVERT ELEVATION	N/A				
DIVERSION OPENING SIZE	N/A				
DIVERSION INVERT ELEVATION	N/A				
BYPASS WEIR LENGTH (ft)	54				
BYPASS WEIR HEIGHT (ft)	2				
BYPASS WEIR ELEVATION	62.00				
BYPASS OPENING SIZE (ft)	12				
BYPASS OPENING ELEVATION	61.17				
FOREBAY AREA (ac)	0.023				
FOREBAY VOLUME (ac-ft)	0.013				
FILTER BED AREA (L X W)(sy)	753				
FILTER BED SURFACE ELEVATION	60.00				
FILTER INLET PIPE SIZE (in)	12				
FILTER INLET PIPE ELEVATION	60.50				
FILTER INLET PIPE INVERT	57.17				
OUTLET PIPE (SUBDRAIN) SIZE (in)	12				
OUTLET PIPE (SUBDRAIN)ELEVATION	59.67				
OBSERVATION WELL INSTALLED ACCORDING TO PLANS					

POND CONSTRUCTION CHECKLIST

ACTIVITY	ON SITE INSPECTION DATE	INSPECTOR'S INITIAL	ACCEPTANCE DATE
1. RUNOFF DIVERTED			
2. DRAINAGE AREA STABILIZED PRIOR TO CONVERSION FROM SEDIMENT BASIN, IF APPLICABLE			
2. FACILITY AREA CLEARED/SUBGRADE PREPARED			
3. FACILITY LOCATION STAKED OUT			
4. PIPE SPILLWAY INSTALLED PROPERLY WITH CORRECT ELEVATION, GRADE AND INSTALLATION OF WATERTIGHT CONNECTIONS AS PER SPECIAL PROVISIONS*			
5. CORE TRENCH (IF REQUIRED) HAS CORRECT DIMENSIONS AND COMPACTION RATE AS PER SPECIAL PROVISIONS*			
6. ANTI-SEEP COLLARS OR DIAPHRAMS PROPERLY INSTALLED*			
7. RISER LOCATED WITHIN EMBANKMENT			
8. RISER PLACED ON DRY AND STABLE SUBGRADE TO DESIGN ELEVATION			
9. DIAMETER AND MATERIAL OF PIPE AS DESIGNED*			
10. REQUIRED DIMENSIONS BETWEEN WATER CONTROL STRUCTURES (ORIFICES, WEIRS, ETC.) AS DESIGNED			
11. LOW-FLOW ORIFICE ADEQUATELY PROTECTED FROM CLOGGING BY AN EXTERNAL TRASH RACK OR OTHER DEVICE.			
12. DIAMETER MAY BE REDUCED BY 1" IF INTERNAL ORIFICE IS USED.			
13. PROPER FILL MATERIAL AND COMPACTION CONSTRUCTED FOR EMBANKMENT AS PER SPECIFICATIONS*			
14. EMBANKMENT HAS CORRECT SIDE SLOPES, TOP WIDTH, AND DESIGN ELEVATION (PLUS ALLOWANCE FOR SETTLEMENT)*			
15. INLET PIPES HAVE OUTFALL PROTECTIONS			
16. FOREBAY(S) CONSTRUCTED AS DESIGNED			
17. 2 POND BENCHES CONSTRUCTED WITH COMBINED MINIMUM WIDTH OF 15' (AS SHOWN ON THE PLANS)			
18. EMERGENCY SPILLWAY CONSTRUCTED TO PROPER CROSS-SECTION, SIDE SLOPES, BOTTOM WIDTH AND DESIGN ELEV.			
19. OUTFALL SECURELY IN PLACE AND PROPERLY BACKFILLED*			
20. FILTER FABRIC IN PLACE (CLASS "SE" OR BETTER)			
21. APRON/CHANNEL EXCAVATED TO DESIGN CROSS-SECTION			
22. RIPRAP PLACED AS DESIGNED WITH PROPER SIZE AND THICKNESS			
23. TRASH RACK DEVICE SECURED TO OUTLET STRUCTURE			
24. RISER OPENINGS DO NOT PERMIT UNAUTHORIZED ACCESS			
25. ACCESS ROAD CONSTRUCTED ACCORDING TO PLAN AND DETAILS			
26. NO WOODY VEGETATION INSTALLED ON EMBANKMENT OR WITHIN 15 FT. OF EMBANKMENT TOE			
27. NO WOODY VEGETATION INSTALLED WITHIN 25 FT. OF RISER OR WEIR STRUCTURE			
28. PROPER LANDSCAPING AS DESIGNATED ON PLANS			
29. POND DRAIN INSTALLED (WAIVED FOR LOWER EASTERN SHORE)			
30. FINAL GRADING AND PERMANENT STABILIZATION COMPLETED*			
31. AS-BUILT DOCUMENTATION			
32. MINIMUM 50% SURVIVAL RATE OF WETLAND PLANTINGS 1 YEAR AFTER INSTALLATION (710.03.06)*			

*AS-BUILT INSPECTOR REQUIRED TO PERFORM INSPECTION ON SITE FOR THESE STEPS AS REQUIRED BY COMAR 26.17.02.10

AS-BUILT INSPECTION TABULATIONS/CHECKLIST FOR BMP NUMBER: TBD
BMP NO.: 10-SF-0061

ACCEPTED BY MDE:

NAME _____ DATE _____

M-2 SUBMERGED GRAVEL WETLAND CONSTRUCTION CHECKLIST

ACTIVITY	ON SITE INSPECTION DATE	INSPECTOR INITIALS	ACCEPTANCE DATE
EXCAVATED TO PROPER SIZE AND LOCATION			
SUBDRAIN SYSTEM AND/OR OBSERVATION WELL INSTALLED ACCORDING TO PLANS			
PLACEMENT OF GEOTEXTILES, FILTER FABRIC, AND/OR LINERS ACCORDING TO PLANS			
WETLAND PLANTING			
APPURTENANT CONVEYANCE SYSTEMS (DIVERSION STRUCTURES, PRE-FILTERS, FILTERS, INLETS, OUTLETS, ORIFICES AND FLOW DISTRIBUTION STRUCTURES) INSTALLED ACCORDING TO PLAN			
COMPOSITION OF FILTER MEDIA			

AB INSPECTOR REQUIRED TO PERFORM INSPECTION ON SITE FOR THESE STEPS AS REQUIRED BY COMAR 26.17.02.10
THE AS-BUILT INSPECTOR IS TO VERIFY THE CONSTRUCTION ACTIVITIES WHILE ACTIVITY IS PERFORMED AS LISTED ABOVE

MDE NO.: 10-SF-0061

POND DATA - STORMWATER MANAGEMENT POND/SGW - SHA BMP NO. 070032 - (STA. 104+00 N)

SW-07

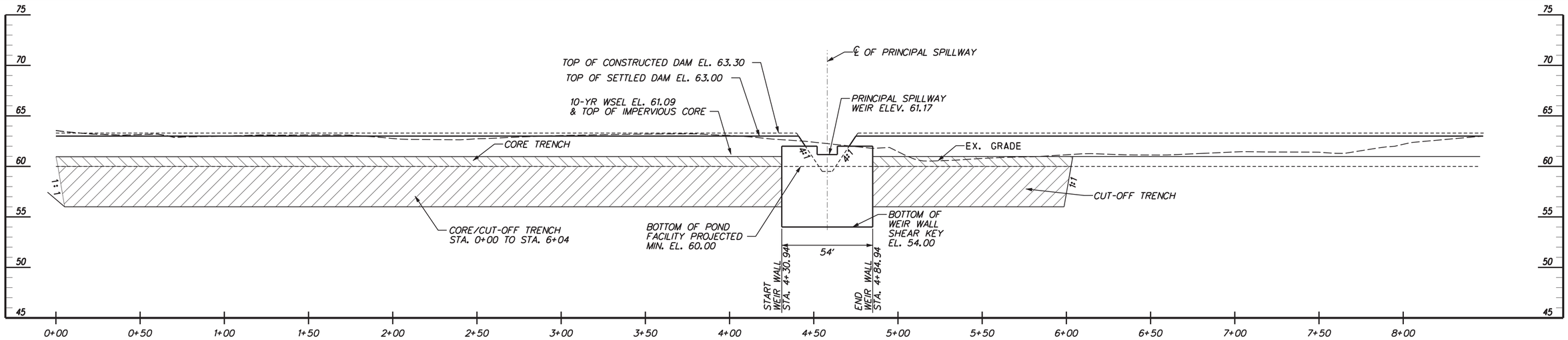

PROFILE ALONG ℄ OF EMBANKMENT

SCALE: HORIZ. 1"=30'
VERT. 1"=5'

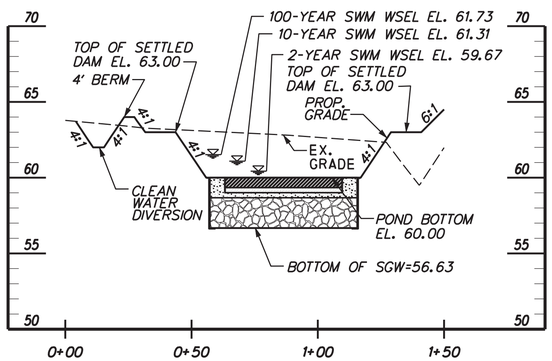

CROSS SECTION A-A

SCALE: HORIZ. 1"=30'
VERT. 1"=5'

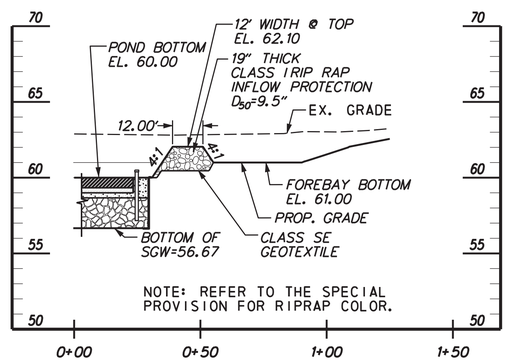

CROSS SECTION B-B

SCALE: HORIZ. 1"=30'
VERT. 1"=5'

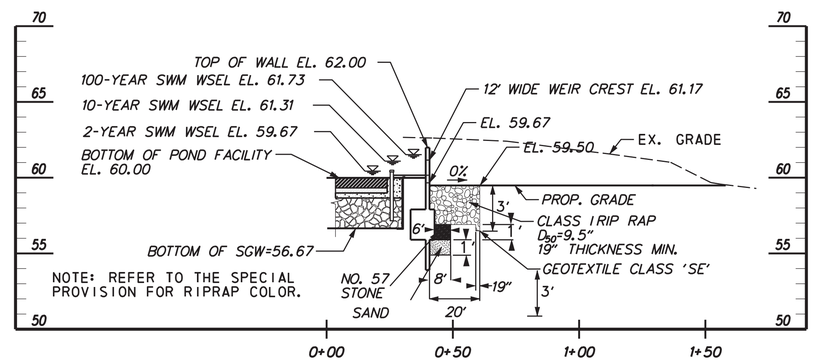

PROFILE ALONG ℄ OF PRINCIPAL SPILLWAY

SCALE: HORIZ. 1"=30'
VERT. 1"=5'

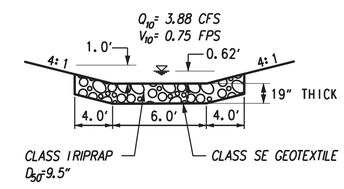

TYPICAL OUTFALL
CHANNEL CROSS SECTION

NOT TO SCALE

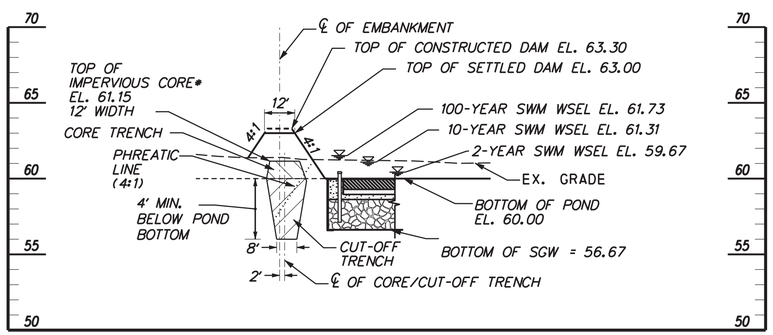

* SEE GENERAL POND DETAILS SHEET FOR TYPICAL CORE/CUT-OFF TRENCH DETAIL.

TYPICAL EMBANKMENT CROSS SECTION

SCALE: HORIZ. 1"=30'
VERT. 1"=5'

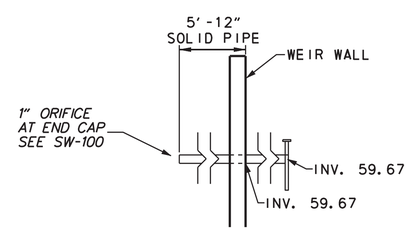

NOTE: SEE GENERAL POND DETAILS SHEET FOR TYPICAL CONCRETE ANCHOR DETAIL.

DRAW DOWN DEVICE

NOT TO SCALE

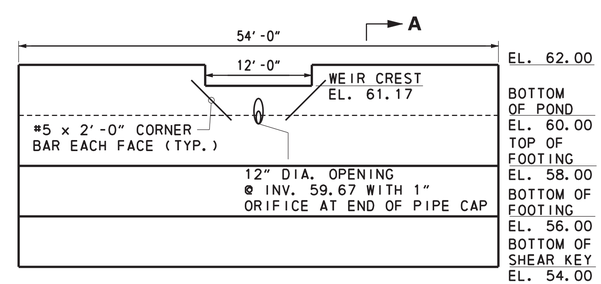

ELEVATION

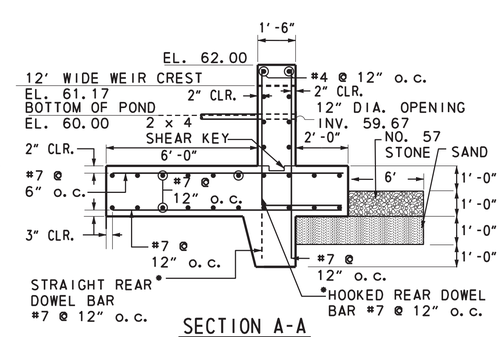

SECTION A-A

* ALTERNATE HOOKED BARS W/STRAIGHT BARS

CONCRETE WEIR WALL DETAIL

NOT TO SCALE (SEE NOTE 3 ON SW-01)

MDE NO.: 10-SF-0061

DETAILS – STORMWATER MANAGEMENT POND/SUBMERGED GRAVEL WETLAND – SHA BMP NO. 070032 – (STA. 104+00 N)

SW-08

DELAWARE DEPARTMENT OF TRANSPORTATION	ADDENDUMS / REVISIONS	SCALE: AS SHOWN	US 301 MARYLAND STATE LINE TO LEVELS ROAD	CONTRACT T200811301 / COUNTY CECIL	BRIDGE NO. / DESIGNED BY: JZS/CB/PC / CHECKED BY: MB	STORMWATER MANAGEMENT PLAN	SHEET NO. 345 / TOTAL SHTS. 850

E:\2814 DEL ROUTE 301\001,3,4,5,6 (DESIGN)\CAD\SB_301AET_000_MD_STR.DGN

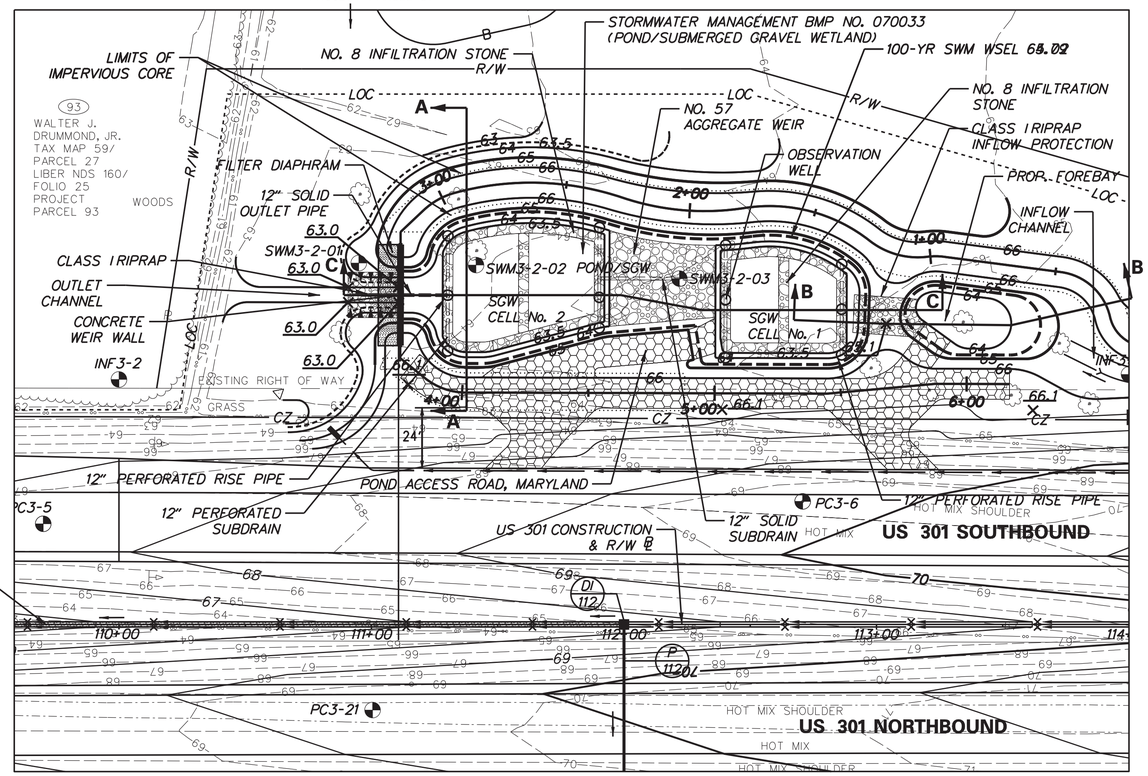

PLAN – STORMWATER MANAGEMENT POND/SGW – SHA BMP NO. 070033 – (STA. 110+50 S) (US 301 STA. 111+11 TO STA. 113+70), TYPE: SUBMERGED GRAVEL WETLAND

LEGEND	
EXISTING CONTOUR	68
PROPOSED CONTOUR	65
POND ACCESS ROAD, MARYLAND	
STATE LINE	
EXISTING WETLAND BUFFER	B
GRASS SWALE	
WET SWALE	
CHECK DAM	

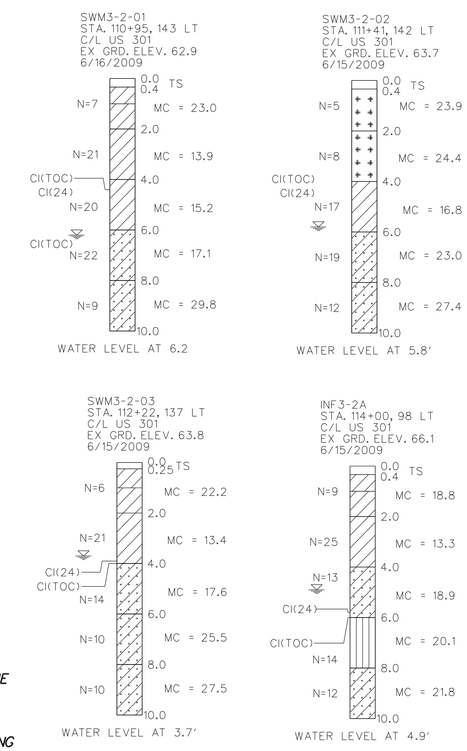

NOTES:

1. SEE GEOTECHNICAL DATA REPORT: "SECTION 3, US 301 MAINLINE INFILTRATION AND SWM BORINGS, CECIL COUNTY, MARYLAND" DATED SEPTEMBER, 2009 FOR BORING LOG DATA.
2. THE FACILITY SHALL REMAIN OFFLINE UNTIL ALL AREAS DRAINING TO THE FACILITY ARE PERMANENTLY STABILIZED.
3. PIGMENTAL COLOR SANDBLASTING FINISH IS TO BE APPLIED TO WEIR WALL FOR VISUAL QUALITY. REFER TO THE SPECIAL PROVISION FOR INTEGRAL CONCRETE COLOR.

NOTES: SEE SHEETS SW-11, SW-12, SW-13, AND SW-14 FOR STORMWATER MANAGEMENT POND/SGW BMP NO. 070033 DETAILS.

ITEM 712552 – RIPRAP SLOPE PROTECTION, MARYLAND

STATION/OFFSET	AREA
STA. 110+91, 130.5' LT. TO STA. 111+11, 130.4' LT.	40 SY
STA. 112+91, 123.1' LT. TO STA. 113+17, 121.1' LT.	44 SY

ITEM 202569 – POND ACCESS ROAD, MARYLAND

STATION/OFFSET	AREA
STA. 111+15, 102.3' LT. TO STA. 113+53, 95.1' LT.	713 SY

ITEM 272511, POND OUTLET STRUCTURE, CONCRETE, MARYLAND

ITEM	QUANTITY
CONCRETE WEIR WALL	1 EA
MD SHA NO. 2 STONE	6 TON
CLASS SE GEOTEXTILE	13 SY

PREVIOUS 6" SCH. 40 PVC PIPE ITEM IS REPLACED WITH ITEM 612505 AND ITEM 715004. QUANTITIES ARE SHOWN ON SHEET SW-10.

FACILITY DESIGN SUMMARY FOR STORMWATER MANAGEMENT BMP NO. 070033

DESIGN STORM	FACILITY INFLOW (CFS)	FACILITY DISCHARGE (CFS)	WATER SURFACE ELEVATION (FT.)	STORAGE VOLUME (AC.FT.)
2-YEAR	3.17	0.00	63.17	0.00
10-YEAR	6.43	1.73	64.67	0.190
100-YEAR	10.65	5.62	65.02	2.61

POND CODE 378 NOT APPLICABLE: EMBANKMENT HEIGHT IS LESS THAN 4'.

DRAINAGE AREA TO FACILITY: 1.77 ACRES

MANAGEMENT PROVIDED BY FACILITY: WATER QUALITY, ESD, AND CPV. WATER QUANTITY FOR 2-YEAR AND 10-YEAR STORM EVENTS.

POND SUMMARY FOR STORMWATER MANAGEMENT BMP NO. 070032

BOTTOM OF POND/TOP OF SGW	63.5
BOTTOM OF SGW	60.17
BOTTOM OF FOREBAY	64.0
TOP OF POND	66.0
OVERFLOW WEIR CREST	64.67
1 INCH DRAWDOWN INVERT	63.17
NO. 57 AGGREGATE WEIR CREST	64.0

"AS-BUILT" CERTIFICATION

"I hereby certify that the stormwater best management practice (practices) shown on the plans and individually identified below has (have) been constructed in accordance with the plans included under the Maryland Department of the Environment Approval, Number 10-SF-0061, except as noted in red on the "AS BUILT" drawings."

Name _____ Signature _____

Maryland Registration No. _____ Date _____

BMP NO. 070033

Facility Identification

MDE NO.: 10-SF-0061

SW-09

DELAWARE DEPARTMENT OF TRANSPORTATION

ADDENDUMS / REVISIONS

SCALE 0 30 60 90 FEET

US 301 MARYLAND STATE LINE TO LEVELS ROAD

CONTRACT	BRIDGE NO.	
T200811301	DESIGNED BY:	JZS/CB/PC
COUNTY	CHECKED BY:	MB
CECIL		

STORMWATER MANAGEMENT PLAN

SHEET NO. 346 TOTAL SHTS. 850

E:\2814 DEL ROUTE 301\001,3,4,5,6 (DESIGN)\CAD\SB_301AET_000_MD_STR.DGN

MATCHLINE 114+00 – SEE SHEET SW–09

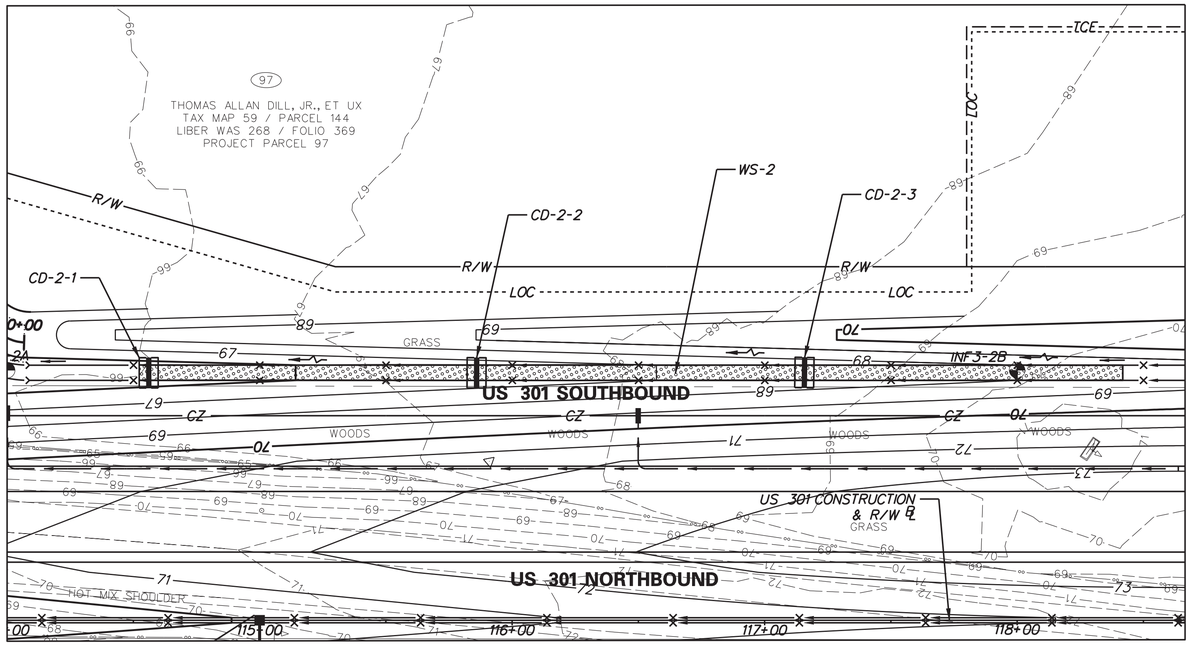

PLAN – WET SWALE – WS–2 – (STA. 114+00 N)
(US 301 STA. 114+00 TO STA. 118+54), TYPE: WET SWALE

N

AS–BUILT INSPECTION TABULATIONS/CHECKLIST FOR BMP NUMBER: TBD
MDE NO.: 10–SF–0061

ACCEPTED BY MDE:

NAME _____ DATE _____

LEGEND

EXISTING CONTOUR	68
PROPOSED CONTOUR	65
POND ACCESS ROAD, MARYLAND	
STATE LINE	
EXISTING WETLAND BUFFER	B
GRASS SWALE	
WET SWALE	
CHECK DAM	

"AS-BUILT" CERTIFICATION

"I hereby certify that the stormwater best management practice (practices) shown on the plans and individually identified below has (have) been constructed in accordance with the plans included under the Maryland Department of the Environment Approval, Number 10-SF-0061, except as noted in red on the "AS BUILT" drawings."

Name _____ Signature _____

Maryland Registration No. _____ Date _____

WET SWALE WS-2

Facility Identification

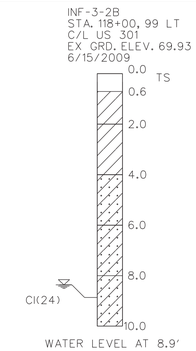

AS–BUILT DATA FOR WET SWALE WS–2
MDE NO.: 10–SF–0061

ACTIVITY	DESIGNED	AS-BUILT	DIFFERENCE	INSPECTOR INITIALS	ACCEPTANCE DATE
AS-BUILT SURVEY	N/A				
ESD VOLUME (CF)	1567.5				
BOTTOM WIDTH (FT)	6				
RIGHT SIDE SLOPE	4:1				
LEFT SIDE SLOPE	6:1				
TOTAL LENGTH (FT)	390				
NUMBER OF CHECK DAMS / WEIRS	3				
CD-2-1 WEIR ELEVATION (FT)	66.5				
CD-2-1 WEIR LENGTH (FT)	1				
CD-2-2 WEIR ELEVATION (FT)	67.4				
CD-2-2 WEIR LENGTH (FT)	1				
CD-2-3 WEIR ELEVATION (FT)	68.3				
CD-2-3 WEIR LENGTH (FT)	1				
2 YEAR DISCHARGE (CFS)	1.7				
10 YEAR DISCHARGE (CFS)	3.0				
MAXIMUM CHANNEL SLOPE	143:1				

ITEM 910500, BIORETENTION SOIL, MIX I

STATION/OFFSET	VOLUME
STA. 111+11, 130.4' LT TO STA. 112+88, 124.6' LT	79 CY

ITEM 302012, DEL NO. 57 STONE

STATION/OFFSET	WEIGHT
STA. 111+11, 130.4' LT TO STA. 112+88, 124.6' LT	827 TON
STA. 111+05, 133.7' LT TO STA. 111+10, 133.7' LT	24 TON

ITEM 910002, INFILTRATION STONE, NO. 8

STATION/OFFSET	WEIGHT
STA. 111+11, 130.4' LT TO STA. 112+88, 124.6' LT	264 TON

ITEM 713003, GEOTEXTILES, RIPRAP

STATION/OFFSET	AREA
STA. 111+11, 130.4' LT TO STA. 112+88, 124.6' LT	940 SY

ITEM 612505, PVC PIPE, 12"

STATION/OFFSET	LENGTH
STA. 111+11, 130.4' LT TO STA. 112+88, 124.6' LT	127 LF

ITEM 715004, PERFORATED PIPE UNDERDRAIN 12"

STATION/OFFSET	LENGTH
STA. 111+11, 130.4' LT TO STA. 112+88, 124.6' LT	191 LF

ITEM 756000, SAND

STATION/OFFSET	WEIGHT
STA. 111+11, 130.4' LT TO STA. 112+88, 124.6' LT	27 TON
STA. 105+67, 126.375' LT TO STA. 105+72, 126.375' LT	10 TON

ITEM 908001, TOPSOIL

STATION/OFFSET	QUANTITY
FROM STA. 114+52, 98.0' LT TO STA. 114+64, 98.0' LT	2.7 TON
FROM STA. 115+82, 98.0' LT TO STA. 115+94, 98.0' LT	2.7 TON
FROM STA. 117+12, 98.1' LT TO STA. 117+23, 98.1' LT	2.7 TON

NOTE: SEE SHEET SW-12 FOR WET SWALE WS-2 DETAILS.

WET SWALE WS–2 CONSTRUCTION CHECKLIST

ACTIVITY	ON SITE INSPECTION DATE	INSPECTOR INITIALS	ACCEPTANCE DATE
RUNOFF DIVERTED			
DRAINAGE AREA STABILIZED PRIOR TO INSTALLATION			
FACILITY AREA CLEARED / SUBGRADE PREPARED			
FACILITY LOCATION STAKED OUT			
EXCAVATED TO PROPER SIZE AND LOCATION*			
STABLE SIDE SLOPES			
LATERAL SLOPES FINISHED AS PER PLANS			
SUBSOILS NOT COMPACTED DURING CONSTRUCTION			
TOPSOIL ADEQUATE IN COMPOSITION AND PLACEMENT (50% LOAM, 50% SAND, K=0.5 FT/DAY)			
CHECK DAMS CONSTRUCTED TO PROPER DIMENSIONS AND SPACING*			
DIAPHRAGMS OR WEIRS INSTALLED AS DESIGNED, IF APPLICABLE*			
BOTTOM WIDTH, 2 FT MIN., 8 FT MAX.			
SOIL PERMEABILITY TESTED (DOCUMENTATION CHECKED)			
FINAL GRADING AND PERMANENT STABILIZATION COMPLETED*			
AS-BUILT DOCUMENTATION			

*AS-BUILT INSPECTOR REQUIRED TO PERFORM INSPECTION ON SITE FOR THESE STEPS AS REQUIRED BY COMAR 26.17.02.10

WET SWALE WS–2 2 YEAR AND 10 YEAR ELEVATIONS

CHECK DAM	ESD ELEV. (FT)	2 YEAR ELEV. OVER WEIR (FT)	10 YEAR ELEV. OVER WEIR (FT)	2 YEAR FREEBOARD (FT)	10 YEAR FREEBOARD (FT)
CD-2-1	66.5	66.7	66.8	1.5	1.4
CD-2-2	67.4	67.6	67.7	1.5	1.4
CD-2-3	68.3	68.5	68.6	1.5	1.4

MDE NO.: 10–SF–0061

SW–10

E:\2814 DEL ROUTE 301\001,3,4,5,6 (DESIGN)\CAD\SB_301AET_000_MD_STR.DGN

DELAWARE DEPARTMENT OF TRANSPORTATION

ADDENDUMS / REVISIONS

SCALE 0 30 60 90 FEET

US 301 MARYLAND STATE LINE TO LEVELS ROAD

CONTRACT	BRIDGE NO.	
T200811301	DESIGNED BY:	JZS/CB/PC
COUNTY	CHECKED BY:	MB
CECIL		

STORMWATER MANAGEMENT PLAN

SHEET NO. 347 TOTAL SHTS. 850

LEGEND	
PROPOSED CONTOUR	65
POND ACCESS ROAD, MARYLAND	
BASELINE OF CONSTRUCTION CONTROL COORDINATES	8
GRADING CONTROL POINTS	8
BOTTOM OF POOL	BOP
BOTTOM OF FOREBAY	BOF
BOTTOM OF TOE	BOT
EDGE OF WEIR	EOW

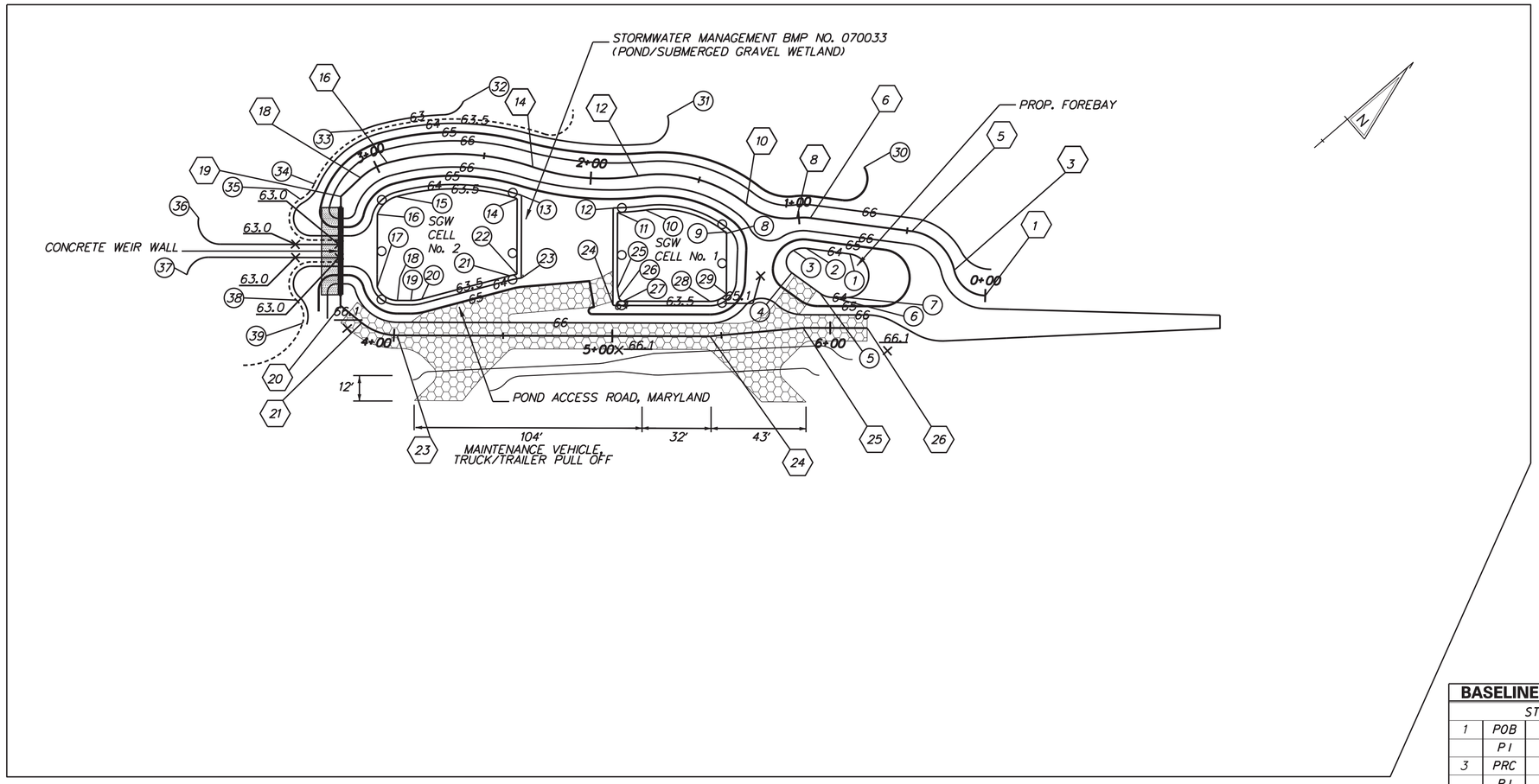

PLAN – STORMWATER MANAGEMENT POND/SUBMERGED GRAVEL WETLAND – SHA BMP NO. 070033 – (STA. 110+50 S)

GRADING CONTROL POINTS				
	NORTHING	EASTING	ELEVATION	NOTE
1	513, 661. 1969	555, 629. 8624	64. 00	BOF
2	513, 647. 8109	555, 614. 8455	64. 00	BOF
3	513, 642. 7301	555, 611. 7879	64. 00	BOF
4	513, 635. 4574	555, 618. 9818	64. 00	BOF
5	513, 639. 0962	555, 634. 5347	64. 00	BOF
6	513, 642. 2714	555, 639. 8026	64. 00	BOF
7	513, 647. 1703	555, 644. 0625	64. 00	BOF
8	513, 603. 6419	555, 585. 7774	63. 50	BOP
9	513, 624. 7306	555, 584. 7816	63. 50	BOP
10	513, 624. 5929	555, 553. 5233	63. 50	BOP
11	513, 593. 1309	555, 545. 9185	63. 50	BOP
12	513, 592. 9637	555, 543. 0628	64. 00	EOW
13	513, 564. 9922	555, 511. 2232	64. 00	EOW
14	513, 562. 5100	555, 511. 0297	63. 50	BOP
15	513, 521. 3247	555, 474. 2055	63. 50	BOP
16	513, 509. 3545	555, 474. 6241	63. 50	BOP
17	513, 487. 5522	555, 499. 6964	63. 50	BOP
18	513, 490. 4637	555, 510. 4449	63. 50	BOP
19	513, 495. 1296	555, 514. 5022	63. 50	BOP
20	513, 499. 2652	555, 517. 2404	63. 50	BOP

GRADING CONTROL POINTS				
	NORTHING	EASTING	ELEVATION	NOTE
21	513, 536. 8732	555, 535. 5907	63. 50	BOP
22	513, 539. 7582	555, 537. 1939	63. 50	BOP
23	513, 540. 1113	555, 539. 8359	64. 00	EOW
24	513, 563. 8461	555, 576. 5477	64. 00	EOW
25	513, 570. 3452	555, 572. 1218	63. 50	BOP
26	513, 568. 1362	555, 575. 7967	63. 50	BOP
27	513, 568. 5380	555, 578. 3363	63. 50	BOP
28	513, 598. 5764	555, 604. 4569	63. 50	BOP
29	513, 606. 4259	555, 606. 8276	63. 50	BOP
30	513, 692. 2218	555, 604. 0304	65. 00	BOT
31	513, 639. 4798	555, 527. 3547	64. 00	BOT
32	513, 573. 0363	555, 461. 2225	63. 00	BOT
33	513, 528. 5045	555, 440. 2994	63. 00	BOT
34	513, 496. 6198	555, 445. 2115	63. 50	BOT
35	513, 487. 2143	555, 446. 3239	63. 50	BOT
36	513, 446. 3476	555, 422. 3521	63. 00	BOT
37	513, 425. 3041	555, 438. 5085	63. 00	BOT
38	513, 455. 5933	555, 480. 0586	63. 50	BOT
39	513, 450. 8306	555, 489. 9322	63. 50	BOT

BASELINE OF CONSTRUCTION CONTROL COORDINATES				
	STATION		NORTHING	EASTING
1	POB	STA. 0+00. 00	513, 695. 6675	555, 684. 8645
	PI	STA. 0+11. 67	513, 687. 0576	555, 676. 9912
3	PRC	STA. 0+19. 83	513, 692. 5697	555, 666. 7083
	PI	STA. 0+35. 91	513, 700. 1652	555, 652. 5388
5	PT	STA. 0+47. 89	513, 689. 4675	555, 640. 5376
6	PC	STA. 0+94. 79	513, 658. 2616	555, 605. 5298
	PI	STA. 0+97. 91	513, 656. 1879	555, 603. 2035
8	PRC	STA. 1+00. 99	513, 653. 5889	555, 601. 4839
	PI	STA. 1+14. 00	513, 642. 7418	555, 594. 3072
10	PRC	STA. 1+25. 62	513, 640. 2626	555, 581. 5393
	PI	STA. 1+51. 81	513, 635. 2699	555, 555. 8264
12	PRC	STA. 1+75. 34	513, 611. 8007	555, 539. 4189
	PI	STA. 2+03. 51	513, 590. 4670	555, 525. 0385
14	PRC	STA. 2+30. 93	513, 577. 3978	555, 504. 7278
	PI	STA. 2+63. 60	513, 557. 6976	555, 473. 7823
16	PCC	STA. 2+94. 56	513, 528. 1948	555, 459. 7555
	PI	STA. 3+01. 76	513, 521. 6872	555, 456. 6616
18	PT	STA. 3+08. 68	513, 514. 4884	555, 456. 9733
19	PI	STA. 3+21. 15	513, 502. 0372	555, 457. 5124
20	PI	STA. 3+71. 15	513, 469. 2281	555, 495. 2425
21	PC	STA. 3+83. 61	513, 471. 4374	555, 507. 5079
	PI	STA. 3+92. 76	513, 473. 0595	555, 516. 5138
23	PT	STA. 4+01. 21	513, 479. 9648	555, 522. 5185
24	PI	STA. 5+44. 48	513, 588. 0775	555, 616. 5305
25	PI	STA. 5+87. 27	513, 622. 8529	555, 641. 4696
26	POE	STA. 6+16. 67	513, 645. 0386	555, 660. 7617

MDE NO.: 10-SF-0061

SW-11

E:\2814 DEL ROUTE 301\001,3,4,5,6 (DESIGN)\CAD\SB_301AET_000_MD_STR.DGN

DELAWARE DEPARTMENT OF TRANSPORTATION

ADDENDUMS / REVISIONS

SCALE 0 30 60 90 FEET

US 301 MARYLAND STATE LINE TO LEVELS ROAD

CONTRACT	BRIDGE NO.	
T200811301	DESIGNED BY:	JZS/CB/PC
COUNTY	CHECKED BY:	MB
CECIL		

STORMWATER MANAGEMENT PLAN

SHEET NO. 348

TOTAL SHTS. 850

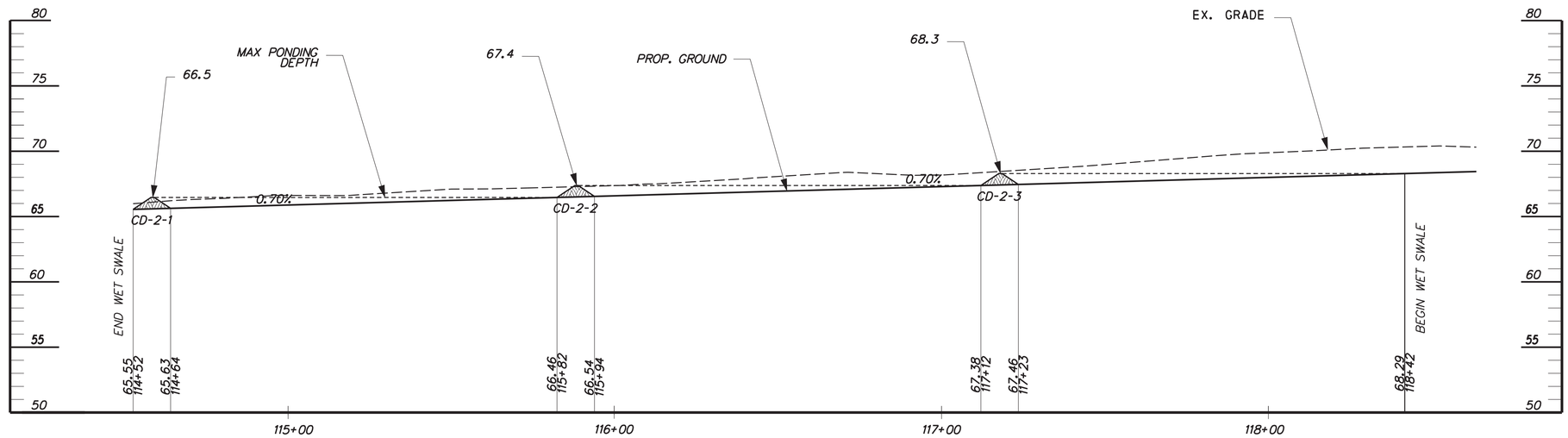

PROFILE ALONG ℄ OF WET SWALE WS-2

SCALE: HORIZ. 1"=20'
VERT. 1"=5'

NOTE:
- WET SWALE STATIONS ARE REFERENCED TO THE ROADWAY CONSTRUCTION BASELINE.
- FOR CHECK DAM DETAILS, REFER TO SW-100.

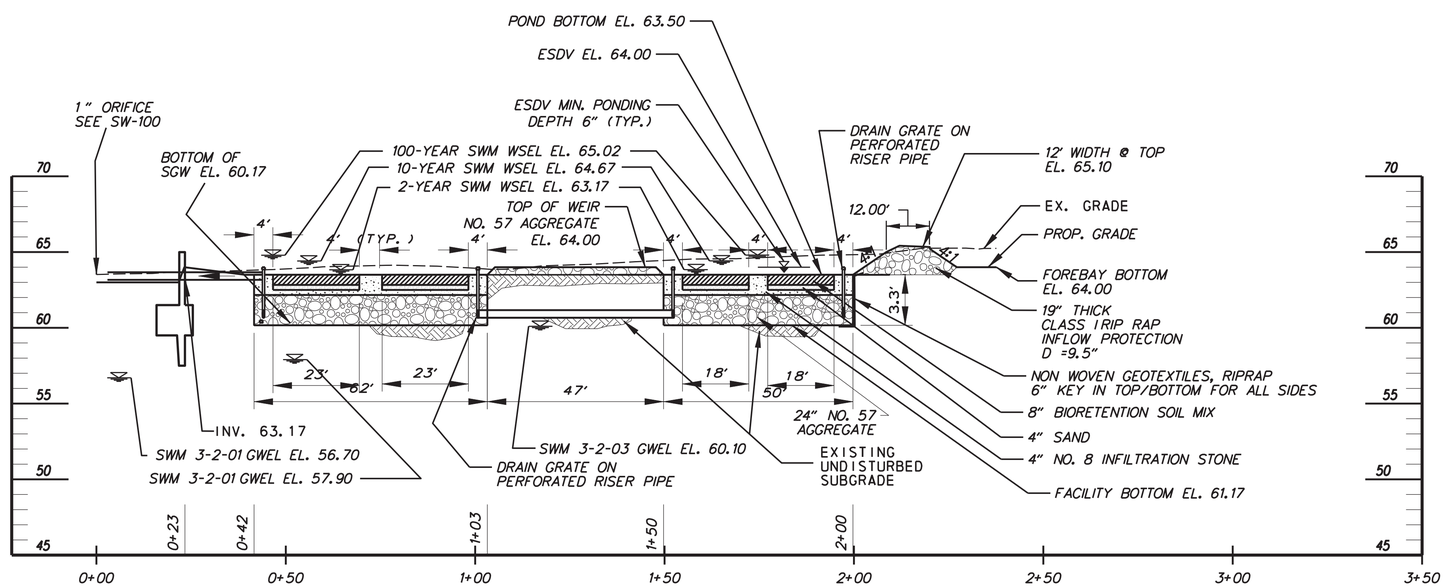

CROSS SECTION C-C FOR POND/SGW #070033

SCALE: HORIZ. 1"=20'
VERT. 1"=5'

*NOTE: SEE SGW MISC. DETAILS ON SHEET SW-100.

*NOTE: DRAIN GRATE TOP ELEV. = 64.00

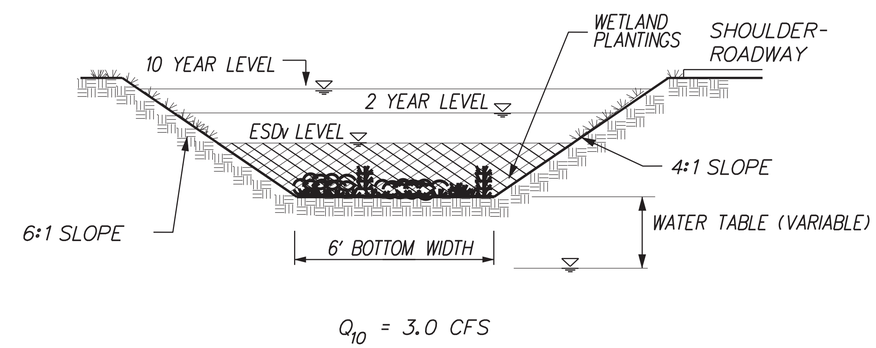

CROSS SECTION WET SWALE WS-2

NOT TO SCALE

MDE NO.: 10-SF-0061

SW-12

E:\2814 DEL ROUTE 301\001,3,4,5,6 (DESIGN)\CAD\SB_301AET_000_MD_STR.DGN

DELAWARE DEPARTMENT OF TRANSPORTATION	ADDENDUMS / REVISIONS	SCALE: AS SHOWN	US 301 MARYLAND STATE LINE TO LEVELS ROAD	CONTRACT T200811301	BRIDGE NO.	STORMWATER MANAGEMENT PLAN	SHEET NO. 349
				COUNTY CECIL	DESIGNED BY: JZS/CB/PC		TOTAL SHTS. 850
					CHECKED BY: MB		

AS–BUILT DATA FOR – BMP NO. 070033
MDE NO.: 10–SF–0061

ACTIVITY	DESIGNED	AS-BUILT	DIFFERENCE	INSPECTOR'S INITIALS	ACCEPTANCE DATE
AS-BUILT SURVEY	N/A				
ESD ELEVATION	64.00				
ESD VOLUME	2688 cf				
CPv STORAGE ELEVATION	N/A				
CPv STORAGE VOLUME	N/A				
CPv DISCHARGE (CFS) *	N/A				
CPv CONTROL OPENING/ELEVATION	N/A				
2 YR STORAGE ELEVATION	63.17				
2 YR STORAGE VOLUME	0.00 ac-ft				
2 YR DISCHARGE (CFS) *	0.0				
2 YR CONTROL OPENING/ELEVATION	1" DIA./63.17				
10 YR STORAGE ELEVATION	64.67				
10 YR STORAGE VOLUME	0.190 ac-ft				
10 YR DISCHARGE (CFS) *	1.73				
10 YR CONTROL OPENING/ELEVATION	10'/64.67				
100 YR STORAGE ELEVATION	65.02				
100 YR STORAGE VOLUME	0.261 ac-ft				
100 YR DISCHARGE (CFS) *	5.62				
100 YR CONTROL OPENING/ELEVATION	10'/64.67				
PRINCIPAL SPILLWAY: ELEV. OUT/DIAM./GRADE	N/A (WEIR WALL)				
WEIR: WIDTH/LENGTH/ELEVATION	1.5'/12'/64.67				
FOREBAY: WIDTH/LENGTH/ELEVATION	63'/31'/64.00				
EMERGENCY SPILLWAY: WIDTH / LENGTH / ELEVATION	N/A				
EMBANKMENT: ELEVATION	66.02				
POND BOTTOM: ELEVATION	63.50				
OUTLET PROTECTION: LENGTH/WIDTH/STONE SIZE	20'/30'/CLASS I				
LOW FLOW DEWATERING DEVICE EL./DIAM.	63.17/1" DIA.				

* AS-BUILT DISCHARGES ARE NOT REQUIRED IF TOLERANCES AND FREEBOARD ARE MET.

DATE AS-BUILT ACCEPTED BY MDE: _____

AS–BUILT INSPECTION TABULATIONS/CHECKLIST FOR BMP NUMBER: TBD
MDE NO.: 10–SF–0061

ACCEPTED BY MDE:

NAME _____ DATE _____

M–2 SUBMERGED GRAVEL WETLAND TABULATIONS

ACTIVITY	DESIGNED	AS-BUILT	DIFFERENCE	INSPECTOR INITIALS	ACCEPTANCE DATE
AS-BUILT SURVEY	N/A				
INFLOW OPENING SIZE	N/A				
INFLOW INVERT ELEVATION	N/A				
DIVERSION OPENING SIZE	N/A				
DIVERSION INVERT ELEVATION	N/A				
BYPASS WEIR LENGTH (ft)	50				
BYPASS WEIR HEIGHT (ft)	1.5				
BYPASS WEIR ELEVATION	65.00				
BYPASS OPENING SIZE (ft)	10				
BYPASS OPENING ELEVATION	64.67				
FOREBAY AREA (ac)	0.014				
FOREBAY VOLUME (ac-ft)	0.025				
FILTER BED AREA (L X W)(sy)	349				
FILTER BED SURFACE ELEVATION	63.50				
FILTER INLET PIPE SIZE (in)	12				
FILTER INLET PIPE ELEVATION	64.00				
FILTER INLET PIPE INVERT	60.67				
OUTLET PIPE (SUBDRAIN) SIZE (in)	12				
OUTLET PIPE (SUBDRAIN)ELEVATION	63.17				
OBSERVATION WELL INSTALLED ACCORDING TO PLANS					

POND CONSTRUCTION CHECKLIST

ACTIVITY	ON SITE INSPECTION DATE	INSPECTOR'S INITIAL	ACCEPTANCE DATE
1. RUNOFF DIVERTED			
2. DRAINAGE AREA STABILIZED PRIOR TO CONVERSION FROM SEDIMENT BASIN, IF APPLICABLE			
3. FACILITY AREA CLEARED/SUBGRADE PREPARED			
4. FACILITY LOCATION STAKED OUT			
5. PIPE SPILLWAY INSTALLED PROPERLY WITH CORRECT ELEVATION, GRADE AND INSTALLATION OF WATERTIGHT CONNECTIONS AS PER SPECIAL PROVISIONS*			
6. CORE TRENCH (IF REQUIRED) HAS CORRECT DIMENSIONS AND COMPACTION RATE AS PER SPECIAL PROVISIONS*			
7. ANTI-SEEP COLLARS OR DIAPHRAMS PROPERLY INSTALLED*			
8. RISER LOCATED WITHIN EMBANKMENT			
9. RISER PLACED ON DRY AND STABLE SUBGRADE TO DESIGN ELEVATION			
10. DIAMETER AND MATERIAL OF PIPE AS DESIGNED*			
11. REQUIRED DIMENSIONS BETWEEN WATER CONTROL STRUCTURES (ORIFICES, WEIRS, ETC.) AS DESIGNED			
12. LOW-FLOW ORIFICE ADEQUATELY PROTECTED FROM CLOGGING BY AN EXTERNAL TRASH RACK OR OTHER DEVICE.			
13. DIAMETER MAY BE REDUCED BY 1" IF INTERNAL ORIFICE IS USED.			
14. PROPER FILL MATERIAL AND COMPACTION CONSTRUCTED FOR EMBANKMENT AS PER SPECIFICATIONS*			
15. EMBANKMENT HAS CORRECT SIDE SLOPES, TOP WIDTH, AND DESIGN ELEVATION (PLUS ALLOWANCE FOR SETTLEMENT)*			
16. INLET PIPES HAVE OUTFALL PROTECTIONS			
17. FOREBAY(S) CONSTRUCTED AS DESIGNED			
18. 2 POND BENCHES CONSTRUCTED WITH COMBINED MINIMUM WIDTH OF 15' (AS SHOWN ON THE PLANS)			
19. EMERGENCY SPILLWAY CONSTRUCTED TO PROPER CROSS-SECTION, SIDE SLOPES, BOTTOM WIDTH AND DESIGN ELEV.			
20. OUTFALL SECURELY IN PLACE AND PROPERLY BACKFILLED*			
21. FILTER FABRIC IN PLACE (CLASS "SE" OR BETTER)			
22. APRON/CHANNEL EXCAVATED TO DESIGN CROSS-SECTION			
23. RIPRAP PLACED AS DESIGNED WITH PROPER SIZE AND THICKNESS			
24. TRASH RACK DEVICE SECURED TO OUTLET STRUCTURE			
25. RISER OPENINGS DO NOT PERMIT UNAUTHORIZED ACCESS			
26. ACCESS ROAD CONSTRUCTED ACCORDING TO PLAN AND DETAILS			
27. NO WOODY VEGETATION INSTALLED ON EMBANKMENT OR WITHIN 15 FT. OF EMBANKMENT TOE			
28. NO WOODY VEGETATION INSTALLED WITHIN 25 FT. OF RISER OR WEIR STRUCTURE			
29. PROPER LANDSCAPING AS DESIGNATED ON PLANS			
30. POND DRAIN INSTALLED (WAIVED FOR LOWER EASTERN SHORE)			
31. FINAL GRADING AND PERMANENT STABILIZATION COMPLETED*			
32. AS-BUILT DOCUMENTATION			
33. MINIMUM 50% SURVIVAL RATE OF WETLAND PLANTINGS 1 YEAR AFTER INSTALLATION (710.03.06)*			

*AS-BUILT INSPECTOR REQUIRED TO PERFORM INSPECTION ON SITE FOR THESE STEPS AS REQUIRED BY COMAR 26.17.02.10

AS–BUILT INSPECTION TABULATIONS/CHECKLIST FOR BMP NUMBER: TBD
MDE NO.: 10–SF–0061

ACCEPTED BY MDE:

NAME _____ DATE _____

M–2 SUBMERGED GRAVEL WETLAND CONSTRUCTION CHECKLIST

ACTIVITY	ON SITE INSPECTION DATE	INSPECTOR INITIALS	ACCEPTANCE DATE
EXCAVATED TO PROPER SIZE AND LOCATION			
SUBDRAIN SYSTEM AND/OR OBSERVATION WELL INSTALLED ACCORDING TO PLANS			
PLACEMENT OF GEOTEXTILES, FILTER FABRIC, AND/OR LINERS ACCORDING TO PLANS			
WETLAND PLANTING			
APPURTENANT CONVEYANCE SYSTEMS (DIVERSION STRUCTURES, PRE-FILTERS, FILTERS, INLETS, OUTLETS, ORIFICES AND FLOW DISTRIBUTION STRUCTURES) INSTALLED ACCORDING TO PLAN			
COMPOSITION OF FILTER MEDIA			

AB INSPECTOR REQUIRED TO PERFORM INSPECTION ON SITE FOR THESE STEPS AS REQUIRED BY COMAR 26.17.02.10
THE AS-BUILT INSPECTOR IS TO VERIFY THE CONSTRUCTION ACTIVITIES WHILE ACTIVITY IS PERFORMED AS LISTED ABOVE

MDE NO.: 10–SF–0061

POND DATA – STORMWATER MANAGEMENT POND/SGW – SHA BMP NO. 070033 – (STA. 110+50 S)

SW–13

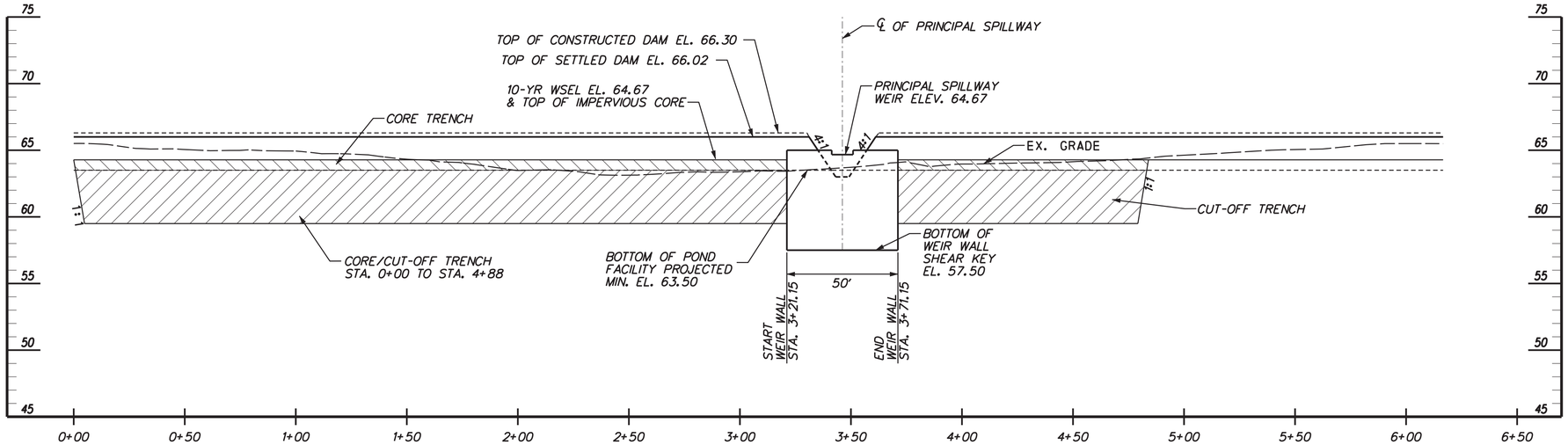

PROFILE ALONG ℄ OF EMBANKMENT

SCALE: HORIZ. 1"=30'
VERT. 1"=5'

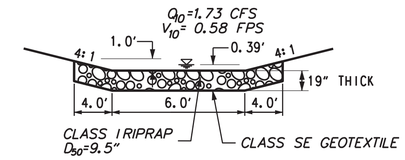

TYPICAL OUTFALL CHANNEL CROSS SECTION

NOT TO SCALE

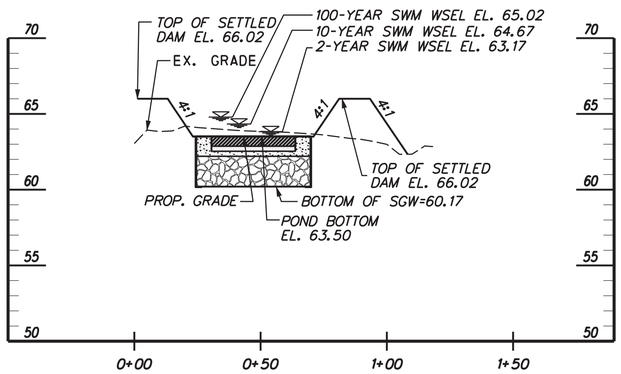

CROSS SECTION A-A

SCALE: HORIZ. 1"=30'
VERT. 1"=5'

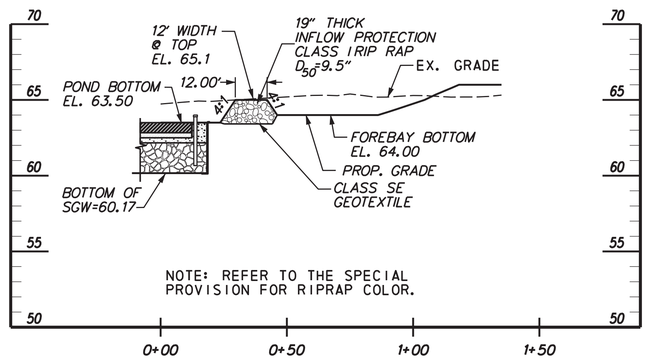

CROSS SECTION B-B

SCALE: HORIZ. 1"=30'
VERT. 1"=5'

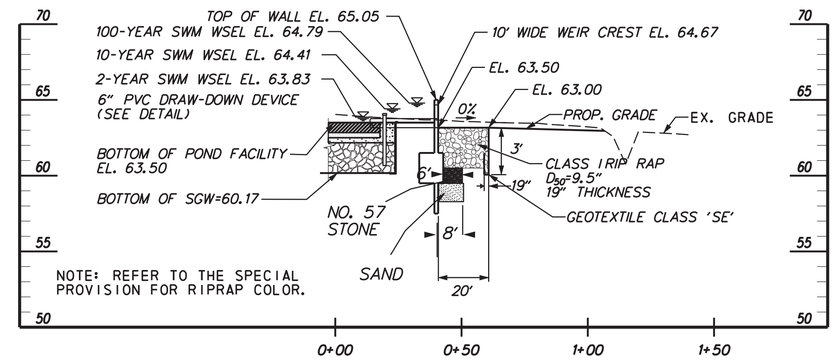

PROFILE ALONG ℄ OF PRINCIPAL SPILLWAY

SCALE: HORIZ. 1"=30'
VERT. 1"=5'

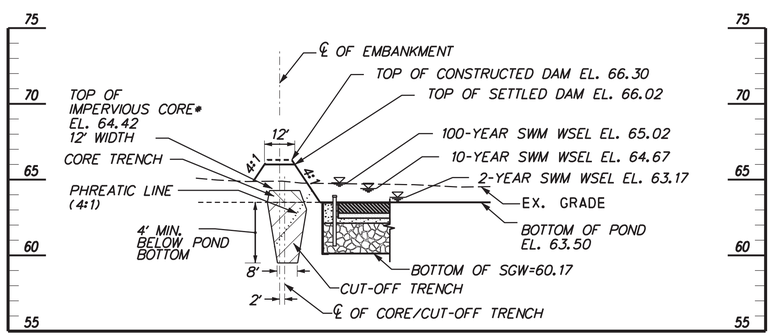

* SEE GENERAL POND DETAILS SHEET FOR TYPICAL CORE/CUT-OFF TRENCH DETAIL.

TYPICAL EMBANKMENT CROSS SECTION

SCALE: HORIZ. 1"=30'
VERT. 1"=5'

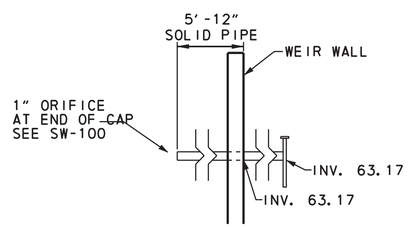

NOTE: SEE GENERAL POND DETAILS SHEET FOR TYPICAL CONCRETE ANCHOR DETAIL.

DRAW DOWN DEVICE

NOT TO SCALE

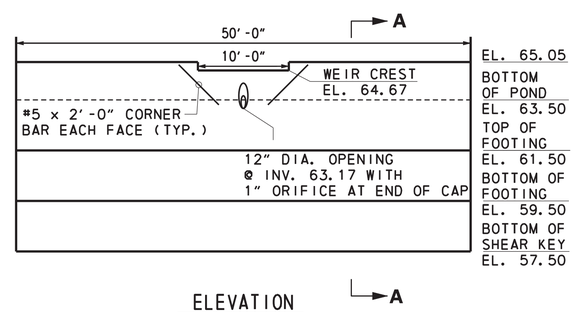

ELEVATION

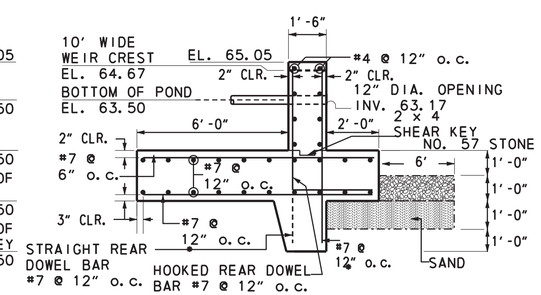

SECTION A-A

• ALTERNATE HOOKED BARS W/STRAIGHT BARS

CONCRETE WEIR WALL DETAIL

NOT TO SCALE

MDE NO.: 10-SF-0061

DETAILS – STORMWATER MANAGEMENT POND/SGW – SHA BMP NO. 070033 – (STA. 110+50 S)

SW-14

DELAWARE DEPARTMENT OF TRANSPORTATION	ADDENDUMS / REVISIONS	SCALE: AS SHOWN	US 301 MARYLAND STATE LINE TO LEVELS ROAD	CONTRACT T200811301	BRIDGE NO.	STORMWATER MANAGEMENT PLAN	SHEET NO. 351
				COUNTY CECIL	DESIGNED BY: JZS/CB/PC		TOTAL SHTS. 850
					CHECKED BY: MB		

E:\2814 DEL ROUTE 301\001,3,4,5,6 (DESIGN)\CAD\SB_301AET_000_MD_STR.DGN

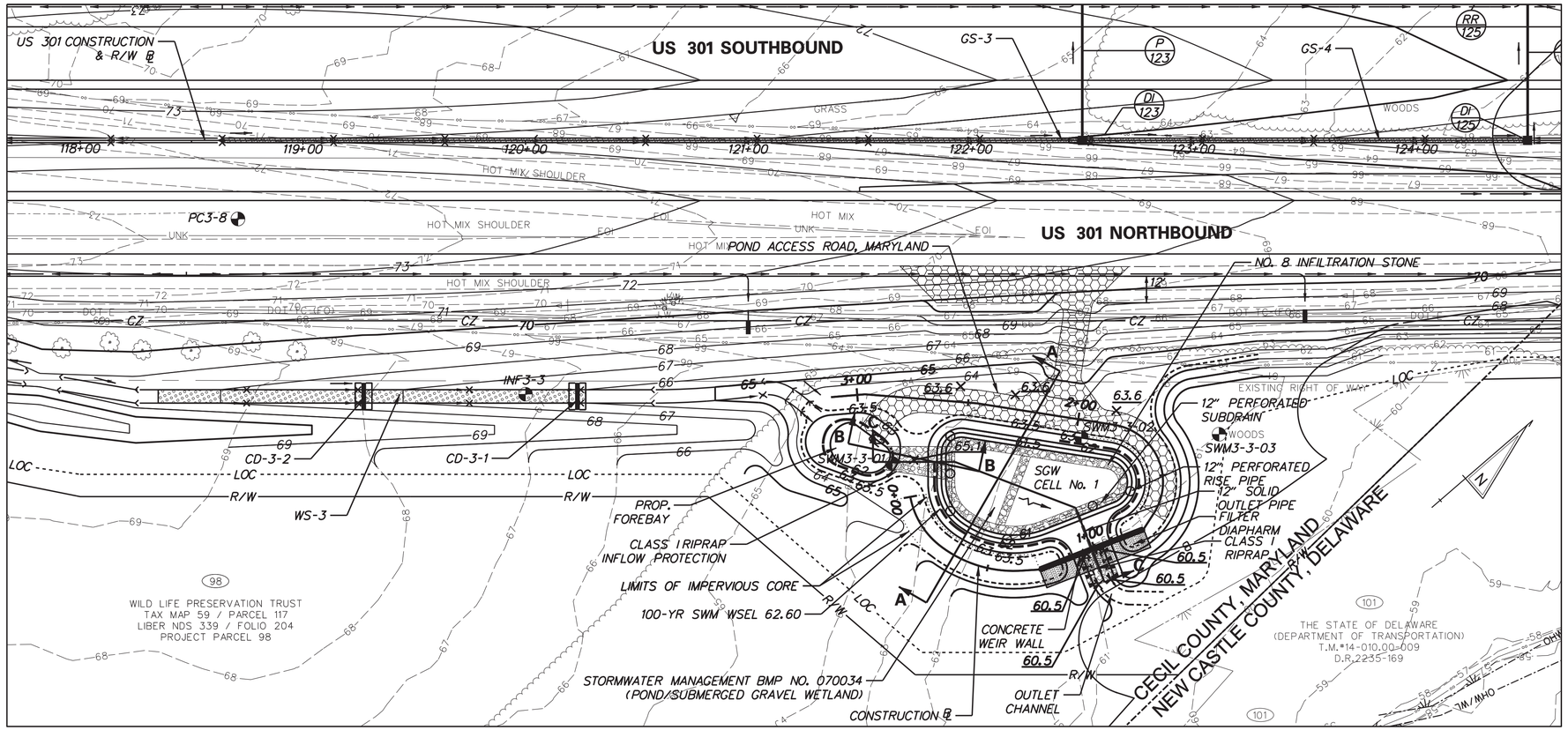

LEGEND	
EXISTING CONTOUR	68
PROPOSED CONTOUR	65
POND ACCESS ROAD, MARYLAND	
STATE LINE	
EXISTING WETLAND BUFFER	B
GRASS SWALE	
WET SWALE	
CHECK DAM	

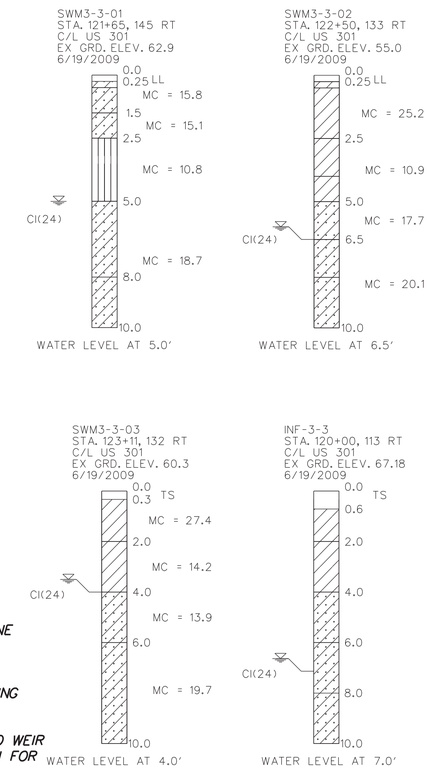

PLAN – STORMWATER MANAGEMENT POND/SGW – SHA BMP NO. 070034 – (STA. 123+00 N)
(US 301 STA. 121+25 TO STA. 122+55), TYPE: SUBMERGED GRAVEL WETLAND
– WET SWALE – WS–3 – (STA. 121+00 N)
(US 301 STA. 117+98 TO STA. 121+22), TYPE: WET SWALE
– GRASS SWALE – GS–3 – (STA. 122+50)
(US 301 STA. 118+64 TO STA. 122+48), TYPE: GRASS SWALE
– GRASS SWALE – GS–4 – (STA. 124+00)
(US 301 STA. 122+52 TO STA. 124+48), TYPE: GRASS SWALE

NOTES:

1. SEE GEOTECHNICAL DATA REPORT: "SECTION 3, US 301 MAINLINE INFILTRATION AND SWM BORINGS, CECIL COUNTY, MARYLAND" DATED SEPTEMBER, 2009 FOR BORING LOG DATA.
2. THE FACILITY SHALL REMAIN OFFLINE UNTIL ALL AREAS DRAINING TO THE FACILITY ARE PERMANENTLY STABILIZED.
3. PIGMENTAL COLOR SANDBLASTING FINISH IS TO BE APPLIED TO WEIR WALL FOR VISUAL QUALITY. REFER TO THE SPECIAL PROVISION FOR INTEGRAL CONCRETE COLOR.

ITEM 712552, RIPRAP SLOPE PROTECTION, MARYLAND

STATION/OFFSET	AREA
STA. 121+64, 142.9' RT. TO STA. 121+89, 144.9' RT.	38 SY
STA. 122+55, 184.4' RT. TO STA. 122+60, 198.4' RT.	24 SY

ITEM 202569, POND ACCESS ROAD, MARYLAND

STATION/OFFSET	AREA
STA. 121+55, 132.7' RT. TO STA. 122+82, 167.6' RT.	462 SY

ITEM 272511, POND OUTLET STRUCTURE, CONCRETE, MARYLAND

ITEM	QUANTITY
CONCRETE WEIR WALL	1 EA
MD SHA NO. 2 STONE	6 TON
CLASS SE GEOTEXTILE	13 SY

PREVIOUS 6" SCH. 40 PVC PIPE ITEM IS REPLACED WITH ITEM 612505 AND ITEM 715004. QUANTITIES ARE SHOWN ON SHEET SW-19.

NOTES: SEE SHEETS SW-16, SW-19, SW-20, AND SW-21 FOR STORMWATER MANAGEMENT POND/SGW BMP NO. 070034 DETAILS.
SEE SHEET SW-17 FOR WET SWALE WS-3 DETAILS.
SEE SHEET SW-18 FOR MEDIAN GRASS SWALE GS-3 AND GS-4 DETAILS.

FACILITY DESIGN SUMMARY FOR STORMWATER MANAGEMENT BMP NO. 070034

DESIGN STORM	FACILITY INFLOW (CFS)	FACILITY DISCHARGE (CFS)	WATER SURFACE ELEVATION (FT.)	STORAGE VOLUME (AC.FT.)
2-YEAR	1.84	0.00	60.67	0.00
10-YEAR	4.05	1.59	62.25	0.101
100-YEAR	6.99	5.03	62.60	0.134

POND CODE 378 NOT APPLICABLE: EMBANKMENT HEIGHT IS LESS THAN 4'.
DRAINAGE AREA TO FACILITY: 1.28 ACRES
MANAGEMENT PROVIDED BY FACILITY: WATER QUALITY, ESD, AND CPV. WATER QUANTITY FOR 2-YEAR AND 10-YEAR STORM EVENTS.

POND SUMMARY FOR STORMWATER MANAGEMENT BMP NO. 070034

BOTTOM OF POND/TOP OF SGW	61.0
BOTTOM OF SGW	57.67
BOTTOM OF FOREBAY	62.0
TOP OF POND	63.5
OVERFLOW WEIR CREST	62.17
6 INCH DRAWDOWN INVERT	60.67

"AS-BUILT" CERTIFICATION

"I hereby certify that the stormwater best management practice (practices) shown on the plans and individually identified below has (have) been constructed in accordance with the plans included under the Maryland Department of the Environment Approval, Number 10-SF-0061, except as noted in red on the "AS BUILT" drawings."

Name _____ Signature _____

Maryland Registration No. _____ Date _____

BMP NO. 070034

Facility Identification

MDE NO.: 10-SF-0061

SW-15

DELAWARE DEPARTMENT OF TRANSPORTATION

ADDENDUMS / REVISIONS

SCALE 0 30 60 90 FEET

US 301 MARYLAND STATE LINE TO LEVELS ROAD

CONTRACT	BRIDGE NO.	
T200811301	DESIGNED BY:	JZS/CB/PC
COUNTY	CHECKED BY:	MB
CECIL		

STORMWATER MANAGEMENT PLAN

SHEET NO. 352
TOTAL SHTS. 850

E:\2814 DEL ROUTE 301\001,3,4,5,6 (DESIGN)\CAD\SB_301AET_000_MD_STR.DGN

LEGEND	
PROPOSED CONTOUR	65
POND ACCESS ROAD, MARYLAND	
BASELINE OF CONSTRUCTION CONTROL COORDINATES	8
GRADING CONTROL POINTS	8
BOTTOM OF POOL	BOP
BOTTOM OF FOREBAY	BOF
BOTTOM OF TOE	BOT
EDGE OF WEIR	EOW

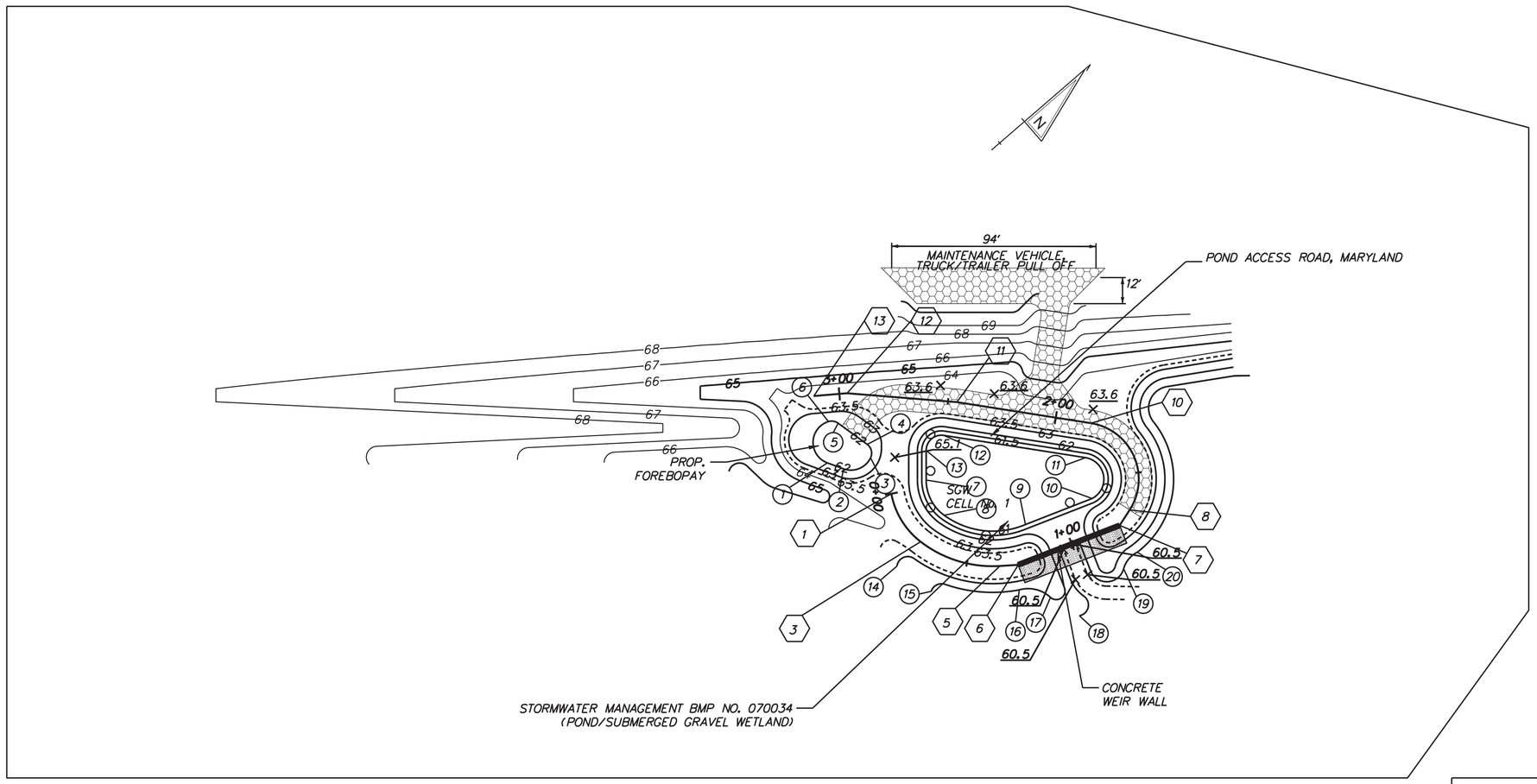

PLAN – STORMWATER MANAGEMENT POND/SUBMERGED GRAVEL WETLAND – SHA BMP NO. 070034 – (STA. 123+00 N)

BASELINE OF CONSTRUCTION CONTROL COORDINATES

STATION			NORTHING	EASTING
1	POB	STA. 0+00.00	514,098.5964	556,390.2088
	PI	STA. 0+13.78	514,091.6200	556,402.0867
3	PCC	STA. 0+26.31	514,094.3548	556,415.5878
	PI	STA. 0+46.63	514,098.3883	556,435.5008
5	PT	STA. 0+65.18	514,114.5478	556,447.8163
6	PI	STA. 0+73.60	514,121.2421	556,452.9181
7	PI	STA. 1+23.60	514,168.3469	556,469.6852
8	PC	STA. 1+32.01	514,176.4262	556,467.3253
	PI	STA. 1+72.02	514,214.8281	556,456.1083
10	PT	STA. 1+83.73	514,188.9822	556,425.5711
11	PI	STA. 2+45.98	514,148.7638	556,378.0525
12	PI	STA. 2+96.51	514,113.3144	556,342.0398
13	POE	STA. 3+11.82	514,100.9363	556,333.0319

GRADING CONTROL POINTS

	NORTHING	EASTING	ELEVATION	NOTE
1	514,085.6255	556,360.2995	62.00	BOF
2	514,089.4232	556,367.1883	62.00	BOF
3	514,102.1006	556,371.5601	62.00	BOF
4	514,105.0095	556,365.8229	62.00	BOF
5	514,101.2555	556,349.7533	62.00	BOF
6	514,098.3902	556,346.3097	62.00	BOF
7	514,114.7959	556,395.8959	61.00	BOP
8	515,110.4375	556,413.4632	61.00	BOP
9	514,135.8503	556,441.1148	61.00	BOP
10	514,166.8412	556,452.1012	61.00	BOP
11	514,176.7694	556,435.9077	61.00	BOP
12	514,134.2850	556,385.7119	61.00	BOP
13	514,123.6459	556,385.6567	61.00	BOP
14	514,078.8857	556,416.9833	63.00	BOT
15	514,083.1876	556,436.0207	62.00	BOT
16	514,114.1022	556,461.9220	62.00	BOT
17	514,122.7151	556,473.8490	62.00	BOT
18	514,127.2295	556,488.9171	61.00	BOT
19	514,156.6576	556,485.9511	61.00	BOT
20	514,166.3843	556,484.2779	61.00	BOT

MDE NO.: 10-SF-0061

SW-16

E:\2814 DEL ROUTE 301\001,3,4,5,6 (DESIGN)\CAD\SB_301AET_000_MD_STR.DGN

DELAWARE DEPARTMENT OF TRANSPORTATION

ADDENDUMS / REVISIONS

SCALE 0 30 60 90 FEET

US 301 MARYLAND STATE LINE TO LEVELS ROAD

CONTRACT	BRIDGE NO.	
T200811301	DESIGNED BY:	JZS/CB/PC
COUNTY	CHECKED BY:	MB
CECIL		

STORMWATER MANAGEMENT PLAN

SHEET NO. 353 TOTAL SHTS. 850

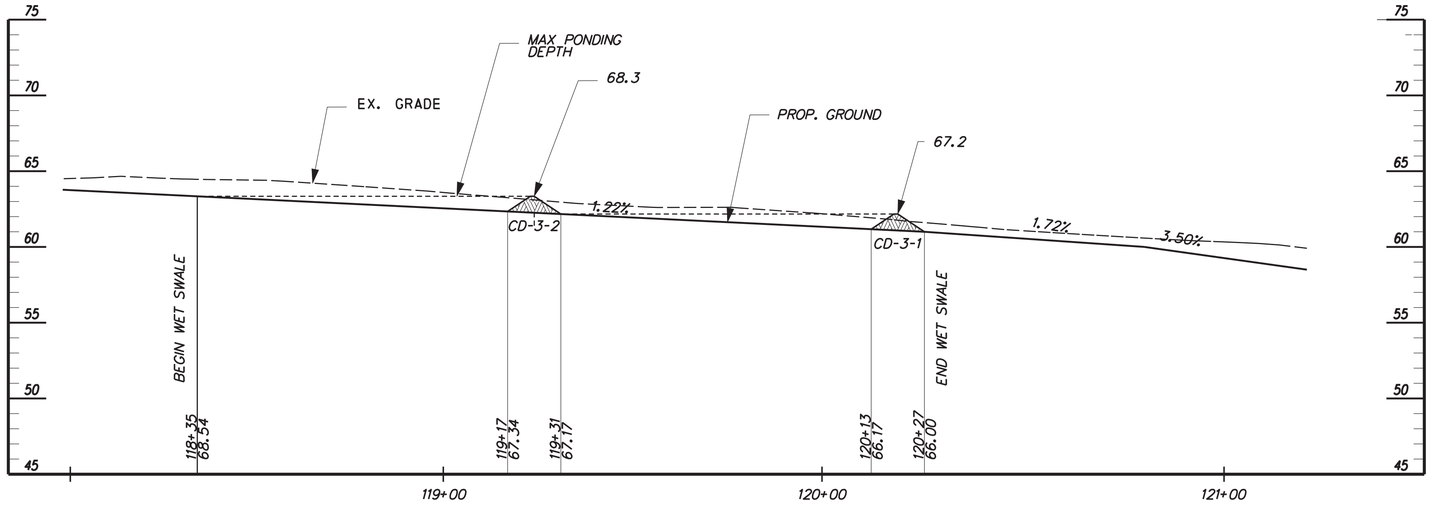

PROFILE ALONG ℄ OF WET SWALE WS-3

SCALE: HORIZ. 1"=20'
VERT. 1"=5'

NOTE:
- WET SWALE STATIONS ARE REFERENCED TO THE ROADWAY CONSTRUCTION BASELINE.
- FOR CHECK DAM DETAILS, REFER TO SW-100.

"AS-BUILT" CERTIFICATION

"I hereby certify that the stormwater best management practice (practices) shown on the plans and individually identified below has (have) been constructed in accordance with the plans included under the Maryland Department of the Environment Approval, Number 10-SF-0061, except as noted in red on the "AS BUILT" drawings."

Name _____ Signature _____

Maryland Registration No. _____ Date _____

WET SWALE WS-3

Facility Identification

118+00

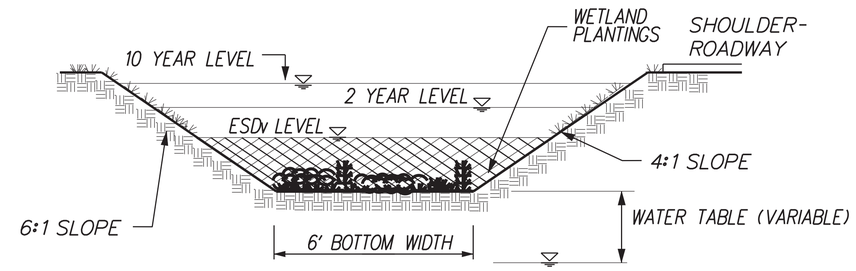

Q_{10} = 1.6 CFS

CROSS SECTION WET SWALE WS-3

NOT TO SCALE

WET SWALE WS-3 MDE TABULATIONS

ACTIVITY	DESIGNED	AS-BUILT	DIFFERENCE	INSPECTOR INITIALS	ACCEPTANCE DATE
AS-BUILT SURVEY	N/A				
ESD VOLUME (CF)	968				
BOTTOM WIDTH (FT)	6				
RIGHT SIDE SLOPE (FT/FT)	4:1				
LEFT SIDE SLOPE (FT/FT)	6:1				
TOTAL LENGTH (FT)	192				
NUMBER OF CHECK DAMS / WEIRS	2				
CD-3-1 WEIR ELEVATION (FT)	67.2				
CD-3-1 WEIR LENGTH (FT)	1				
CD-3-2 WEIR ELEVATION (FT)	68.3				
CD-3-2 WEIR LENGTH (FT)	1				
2 YEAR DISCHARGE (CFS)	0.8				
10 YEAR DISCHARGE (CFS)	1.6				
MAXIMUM CHANNEL SLOPE (FT/FT)	82:1				

ITEM 908001, TOPSOIL

STATION/OFFSET	QUANTITY
FROM STA. 120+13, 115.0' RT TO STA. 120+27, 115.0' RT	4.4 TON
FROM STA. 119+17, 115.0' RT TO STA. 119+31, 115.0' RT	4.4 TON

WET SWALE WS-3 YEAR AND 10 YEAR ELEVATIONS

CHECK DAM	ESD ELEV. (FT)	2 YEAR ELEV. OVER WEIR (FT)	10 YEAR ELEV. OVER WEIR (FT)	2 YEAR FREEBOARD (FT)	10 YEAR FREEBOARD (FT)
CD-3-1	67.2	67.3	67.4	1.4	1.3
CD-3-2	68.3	68.4	68.5	1.4	1.3

WET SWALE WS-3 CONSTRUCTION CHECKLIST

ACTIVITY	ON SITE INSPECTION DATE	INSPECTOR INITIALS	ACCEPTANCE DATE
RUNOFF DIVERTED			
DRAINAGE AREA STABILIZED PRIOR TO INSTALLATION			
FACILITY AREA CLEARED / SUBGRADE PREPARED			
FACILITY LOCATION STAKED OUT			
EXCAVATED TO PROPER SIZE AND LOCATION*			
STABLE SIDE SLOPES			
LATERAL SLOPES FINISHED AS PER PLANS			
SUBSOILS NOT COMPACTED DURING CONSTRUCTION			
TOPSOIL ADEQUATE IN COMPOSITION AND PLACEMENT (50% LOAM, 50% SAND, K=0.5 FT/DAY)			
CHECK DAMS CONSTRUCTED TO PROPER DIMENSIONS AND SPACING*			
DIAPHRAGMS OR WEIRS INSTALLED AS DESIGNED, IF APPLICABLE*			
BOTTOM WIDTH, 2 FT MIN., 8 FT MAX.			
SOIL PERMEABILITY TESTED (DOCUMENTATION CHECKED)			
FINAL GRADING AND PERMANENT STABILIZATION COMPLETED*			
AS-BUILT DOCUMENTATION			

*AS-BUILT INSPECTOR REQUIRED TO PERFORM INSPECTION ON SITE FOR THESE STEPS AS REQUIRED BY COMAR 26.17.02.10

AS-BUILT INSPECTION TABULATIONS/CHECKLIST for BMP Number: TBD
MDE No.: 10-SF-0061

Accepted by MDE:

Name _____ Date _____

MDE NO.: 10-SF-0061

SW- 17

E:\2814 DEL ROUTE 301\001,3,4,5,6 (DESIGN)\CAD\SW_301AET_017_SE.DGN

DELAWARE DEPARTMENT OF TRANSPORTATION

ADDENDUMS / REVISIONS

SCALE: AS SHOWN

US 301 MARYLAND STATE LINE TO LEVELS ROAD

CONTRACT	BRIDGE NO.	
T200811301	DESIGNED BY:	JZS/CB/PC
COUNTY	CHECKED BY:	MB
CECIL		

STORMWATER MANAGEMENT PLAN

SHEET NO. 354
TOTAL SHTS. 850

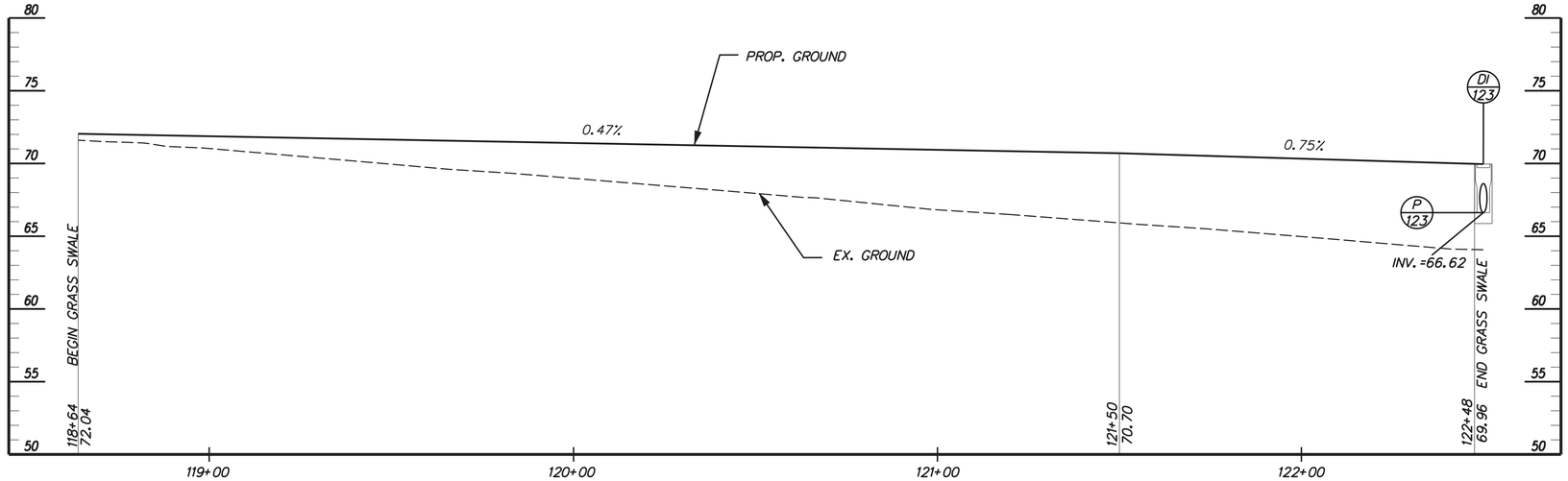

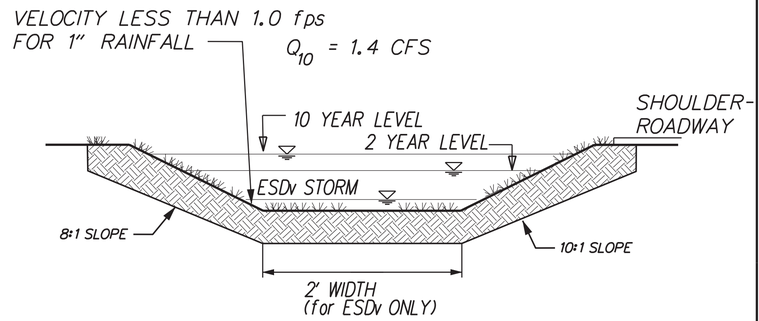

CROSS SECTION GRASS SWALE GS-3

NOT TO SCALE

NOTES:
- GRASS SWALE STATIONS ARE REFERENCED TO THE ROADWAY CONSTRUCTION BASELINE.
- A DENSE COVER OF WATER TOLERANT, EROSION RESISTANT GRASS SHOULD BE ESTABLISHED AT THE BOTTOM AND SIDE SLOPES OF SWALE WITHIN PROPOSED GRASS SWALE LIMITS AFTER CONSTRUCTION.

MEDIAN GRASS SWALE GS-3

STA. 118+64 TO STA. 122+48

SCALE: HORIZ. 1"=20'

VERT. 1"=5'

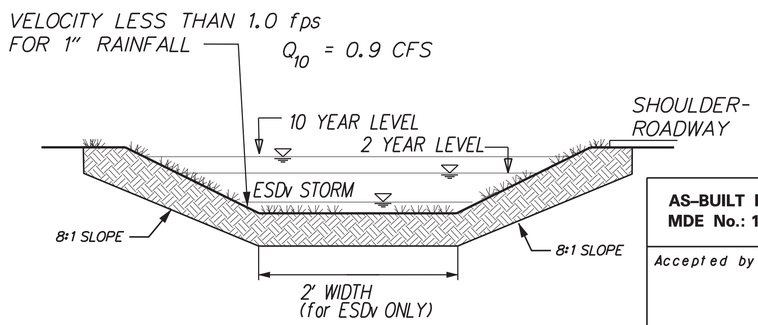

AS-BUILT INSPECTION TABULATIONS/CHECKLIST for BMP Number: TBD
MDE No.: 10-SF-0061

Accepted by MDE:

Name Date

CROSS SECTION GRASS SWALE GS-4

NOT TO SCALE

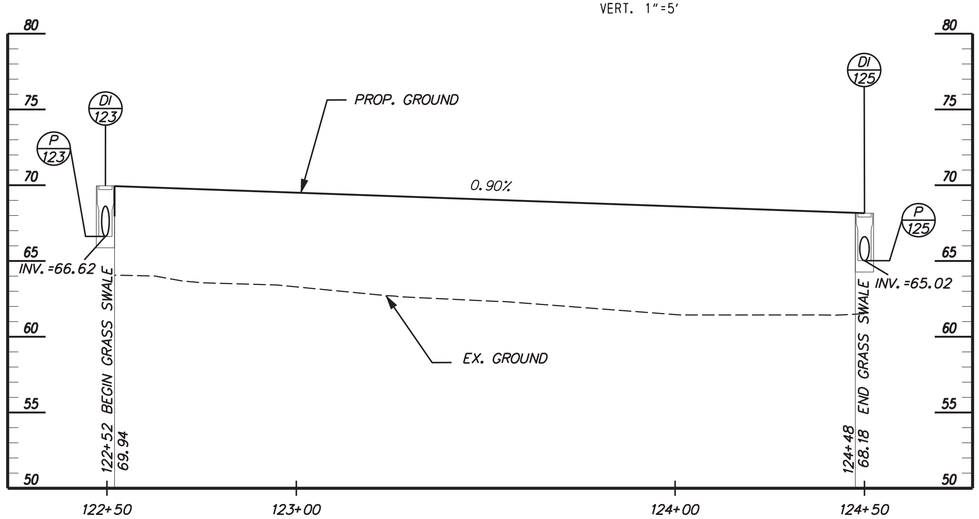

MEDIAN GRASS SWALE GS-4

STA. 122+52 TO STA. 124+48

SCALE: HORIZ. 1"=20'

VERT. 1"=5'

AS-BUILT INSPECTION TABULATIONS/CHECKLIST for BMP Number: TBD
MDE No.: 10-SF-0061

Accepted by MDE:

Name Date

NOTES:
- GRASS SWALE STATIONS ARE REFERENCED TO THE ROADWAY CONSTRUCTION BASELINE.
- A DENSE COVER OF WATER TOLERANT, EROSION RESISTANT GRASS SHOULD BE ESTABLISHED AT THE BOTTOM AND SIDE SLOPES OF SWALE WITHIN PROPOSED GRASS SWALE LIMITS AFTER CONSTRUCTION.

"AS-BUILT" CERTIFICATION

"I hereby certify that the stormwater best management practice (practices) shown on the plans and individually identified below has (have) been constructed in accordance with the plans included under the Maryland Department of the Environment Approval, Number 10-SF-0061, except as noted in red on the "AS BUILT" drawings."

Name Signature

Maryland Registration No. Date

GRASS SWALE GS-4

Facility Identification

"AS-BUILT" CERTIFICATION

"I hereby certify that the stormwater best management practice (practices) shown on the plans and individually identified below has (have) been constructed in accordance with the plans included under the Maryland Department of the Environment Approval, Number 10-SF-0061, except as noted in red on the "AS BUILT" drawings."

Name Signature

Maryland Registration No. Date

GRASS SWALE GS-3

Facility Identification

MDE NO.: 10-SF-0061

SW-18

DELAWARE DEPARTMENT OF TRANSPORTATION

ADDENDUMS / REVISIONS

US 301 MARYLAND STATE LINE TO LEVELS ROAD

CONTRACT	BRIDGE NO.		STORMWATER MANAGEMENT PLAN	SHEET NO.
T200811301	DESIGNED BY:	JZS/CB/PC		355
COUNTY	CHECKED BY:	MB		TOTAL SHTS.
CECIL				850

E:\2814 DEL ROUTE 301\001,3,4,5,6 (DESIGN)\CAD\SB_301AET_000_MD_STR.DGN

AS-BUILT DATA FOR GRASS SWALE GS-3
MDE NO.: 10-SF-0061

ACTIVITY	DESIGNED	AS-BUILT	DIFFERENCE	INSPECTOR INITIALS	ACCEPTANCE DATE
AS-BUILT SURVEY	N/A				
ESD VOLUME (CF)	776				
BOTTOM WIDTH (FT)	2				
RIGHT SIDE SLOPE	10:1				
LEFT SIDE SLOPE	8:1				
TOTAL LENGTH (FT)	384				
NUMBER OF CHECK DAMS / WEIRS	0				
2 YEAR DISCHARGE (CFS)	0.5				
10 YEAR DISCHARGE (CFS)	1.2				
MAXIMUM CHANNEL SLOPE	133:1				

AS-BUILT DATA FOR GRASS SWALE GS-4
MDE NO.: 10-SF-0061

ACTIVITY	DESIGNED	AS-BUILT	DIFFERENCE	INSPECTOR INITIALS	ACCEPTANCE DATE
AS-BUILT SURVEY	N/A				
ESD VOLUME (CF)	933				
BOTTOM WIDTH (FT)	2				
RIGHT SIDE SLOPE	8: 1				
LEFT SIDE SLOPE	8: 1				
TOTAL LENGTH (FT)	196				
NUMBER OF CHECK DAMS / WEIRS	0				
2 YEAR DISCHARGE (CFS)	0. 4				
10 YEAR DISCHARGE (CFS)	0. 9				
MAXIMUM CHANNEL SLOPE	111: 1				

GRASS SWALE GS-3 CONSTRUCTION CHECKLIST

ACTIVITY	ON SITE INSPECTION DATE	INSPECTOR INITIALS	ACCEPTANCE DATE
RUNOFF DIVERTED			
DRAINAGE AREA STABILIZED PRIOR TO INSTALLATION			
FACILITY AREA CLEARED / SUBGRADE PREPARED			
FACILITY LOCATION STAKED OUT			
EXCAVATED TO PROPER SIZE AND LOCATION*			
STABLE SIDE SLOPES			
LATERAL SLOPES FINISHED AS PER PLANS			
SUBSOILS NOT COMPACTED DURING CONSTRUCTION			
TOPSOIL ADEQUATE IN COMPOSITION AND PLACEMENT (50% LOAM, 50% SAND, K=0.5 FT/DAY)			
BOTTOM WIDTH, 2 FT MIN., 8 FT MAX.			
SOIL PERMEABILITY TESTED (DOCUMENTATION CHECKED)			
FINAL GRADING AND PERMANENT STABILIZATION COMPLETED*			
AS-BUILT DOCUMENTATION			

GRASS SWALE GS-4 CONSTRUCTION CHECKLIST

ACTIVITY	ON SITE INSPECTION DATE	INSPECTOR INITIALS	ACCEPTANCE DATE
RUNOFF DIVERTED			
DRAINAGE AREA STABILIZED PRIOR TO INSTALLATION			
FACILITY AREA CLEARED / SUBGRADE PREPARED			
FACILITY LOCATION STAKED OUT			
EXCAVATED TO PROPER SIZE AND LOCATION*			
STABLE SIDE SLOPES			
LATERAL SLOPES FINISHED AS PER PLANS			
SUBSOILS NOT COMPACTED DURING CONSTRUCTION			
TOPSOIL ADEQUATE IN COMPOSITION AND PLACEMENT (50% LOAM, 50% SAND, K=0.5 FT/DAY)			
BOTTOM WIDTH, 2 FT MIN., 8 FT MAX.			
SOIL PERMEABILITY TESTED (DOCUMENTATION CHECKED)			
FINAL GRADING AND PERMANENT STABILIZATION COMPLETED*			
AS-BUILT DOCUMENTATION			

*AS-BUILT INSPECTOR REQUIRED TO PERFORM INSPECTION ON SITE FOR THESE STEPS AS REQUIRED BY COMAR 26.17.02.10

ITEM 910500, BIORETENTION SOIL, MIX I

STATION/OFFSET	VOLUME
STA. 121+89, 148.3' RT TO STA. 122+70, 151.9' RT	42 CY

ITEM 302012, DEL NO. 57 STONE

STATION/OFFSET	WEIGHT
STA. 121+89, 148.3' RT TO STA. 122+70, 151.9' RT	416 TON
STA. 122+51, 183.17' RT TO STA. 122+57, 183.17' RT	24 TON

ITEM 910002, INFILTRATION STONE, NO. 8

STATION/OFFSET	WEIGHT
STA. 121+89, 148.3' RT TO STA. 122+70, 151.9' RT	143 TON

ITEM 713003, GEOTEXTILES, RIPRAP

STATION/OFFSET	AREA
STA. 121+89, 148.3' RT TO STA. 122+70, 151.9' RT	389 SY

ITEM 612505, PVC PIPE, 12"

STATION/OFFSET	LENGTH
STA. 121+89, 148.3' RT TO STA. 122+70, 151.9' RT	33 LF

ITEM 715004, PERFORATED PIPE UNDERDRAIN 12"

STATION/OFFSET	LENGTH
STA. 121+89, 148.3' RT TO STA. 122+70, 151.9' RT	107 LF

ITEM 756000, SAND

STATION/OFFSET	WEIGHT
STA. 121+89, 148.3' RT TO STA. 122+70, 151.9' RT	15 TON
STA. 122+51, 183.17' RT TO STA. 122+57, 183.17' RT	10 TON

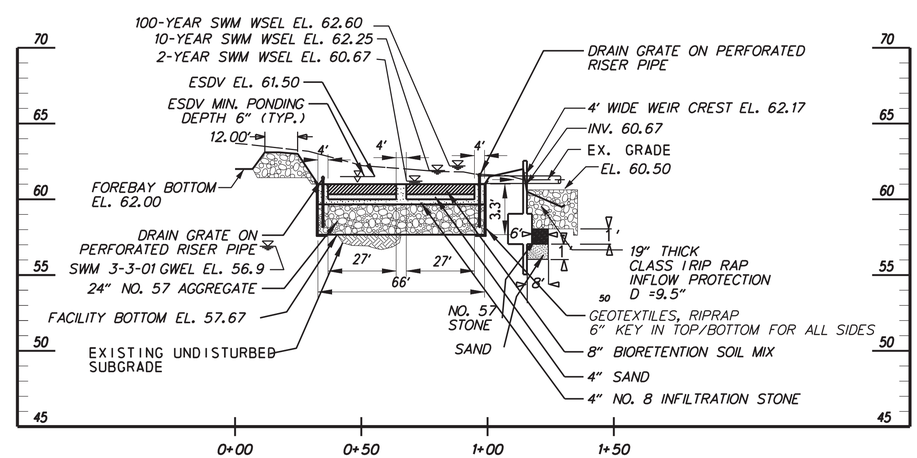

CROSS SECTION C-C FOR POND/SGW #070034

SCALE: HORIZ. 1"=30'
VERT. 1"=5'

*NOTE: SEE SGW MISC. DETAILS ON SHEET SW-100.

*NOTE: DRAIN GRATE TOP ELEV. = 61.50

MDE NO.: 10-SF-0061

SW-19

DELAWARE DEPARTMENT OF TRANSPORTATION

ADDENDUMS / REVISIONS

US 301 MARYLAND STATE LINE TO LEVELS ROAD

CONTRACT	BRIDGE NO.	
T200811301	DESIGNED BY:	JZS/CB/PC
COUNTY	CHECKED BY:	MB
CECIL		

STORMWATER MANAGEMENT PLAN

SHEET NO. 356

TOTAL SHTS. 850

E:\2814 DEL ROUTE 301\001,3,4,5,6 (DESIGN)\CAD\SB_301AET_000_MD_STR.DGN

AS–BUILT DATA FOR BMP NO. 070034
MDE NO.: 10–SF–0061

ACTIVITY	DESIGNED	AS-BUILT	DIFFERENCE	INSPECTOR'S INITIALS	ACCEPTANCE DATE
AS-BUILT SURVEY	N/A				
ESD ELEVATION	61.50				
ESD VOLUME	1439 cf				
CPv STORAGE ELEVATION	N/A				
CPv STORAGE VOLUME	N/A				
CPv DISCHARGE (CFS) *	N/A				
CPv CONTROL OPENING/ELEVATION	N/A				
2 YR STORAGE ELEVATION	60.67				
2 YR STORAGE VOLUME	0.00 ac-ft				
2 YR DISCHARGE (CFS) *	0.0				
2 YR CONTROL OPENING/ELEVATION	1" DIA./60.67				
10 YR STORAGE ELEVATION	62.25				
10 YR STORAGE VOLUME	0.101 ac-ft				
10 YR DISCHARGE (CFS) *	1.59				
10 YR CONTROL OPENING/ELEVATION	6'/62.17				
100 YR STORAGE ELEVATION	62.50				
100 YR STORAGE VOLUME	0.134 ac-ft				
100 YR DISCHARGE (CFS) *	5.03				
100 YR CONTROL OPENING/ELEVATION	6'/62.17				
PRINCIPAL SPILLWAY: ELEV. OUT/DIAM./GRADE	N/A (WEIR WALL)				
WEIR: WIDTH/LENGTH/ELEVATION	1.5'/6.0'/62.17				
FOREBAY: WIDTH/LENGTH/ELEVATION	29'/43'/62.00				
EMERGENCY SPILLWAY: WIDTH / LENGTH / ELEVATION	N/A				
EMBANKMENT: ELEVATION	63.60				
POND BOTTOM: ELEVATION	61.00				
OUTLET PROTECTION: LENGTH/WIDTH/STONE SIZE	15'/30'/CLASS I				
LOW FLOW DEWATERING DEVICE EL./DIAM.	60.67/1" DIA.				

* AS-BUILT DISCHARGES ARE NOT REQUIRED IF TOLERANCES AND FREEBOARD ARE MET.

DATE AS-BUILT ACCEPTED BY MDE: _____

AS–BUILT INSPECTION TABULATIONS/CHECKLIST FOR BMP NUMBER: TBD
MDE NO.: 10–SF–0061

ACCEPTED BY MDE:

NAME _____ DATE _____

M–2 SUBMERGED GRAVEL WETLAND TABULATIONS

ACTIVITY	DESIGNED	AS-BUILT	DIFFERENCE	INSPECTOR INITIALS	ACCEPTANCE DATE
AS-BUILT SURVEY	N/A				
INFLOW OPENING SIZE	N/A				
INFLOW INVERT ELEVATION	N/A				
DIVERSION OPENING SIZE	N/A				
DIVERSION INVERT ELEVATION	N/A				
BYPASS WEIR LENGTH (ft)	50				
BYPASS WEIR HEIGHT (ft)	1.5				
BYPASS WEIR ELEVATION	62.50				
BYPASS OPENING SIZE (ft)	6				
BYPASS OPENING ELEVATION	62.17				
FOREBAY AREA (ac)	0.009				
FOREBAY VOLUME (ac-ft)	0.016				
FILTER BED AREA (L X W)(sy)	187				
FILTER BED SURFACE ELEVATION	61.00				
FILTER INLET PIPE SIZE (In)	12				
FILTER INLET PIPE ELEVATION	61.00				
FILTER INLET PIPE INVERT	58.17				
OUTLET PIPE (SUBDRAIN) SIZE (In)	12				
OUTLET PIPE (SUBDRAIN)ELEVATION	60.67				
OBSERVATION WELL INSTALLED ACCORDING TO PLANS					

POND CONSTRUCTION CHECKLIST

ACTIVITY	ON SITE INSPECTION DATE	INSPECTOR'S INITIAL	ACCEPTANCE DATE
1. RUNOFF DIVERTED			
2. DRAINAGE AREA STABILIZED PRIOR TO CONVERSION FROM SEDIMENT BASIN, IF APPLICABLE			
3. FACILITY AREA CLEARED/SUBGRADE PREPARED			
4. FACILITY LOCATION STAKED OUT			
5. PIPE SPILLWAY INSTALLED PROPERLY WITH CORRECT ELEVATION, GRADE AND INSTALLATION OF WATERTIGHT CONNECTIONS AS PER SPECIAL PROVISIONS*			
6. CORE TRENCH (IF REQUIRED) HAS CORRECT DIMENSIONS AND COMPACTION RATE AS PER SPECIAL PROVISIONS*			
7. ANTI-SEEP COLLARS OR DIAPHRAMS PROPERLY INSTALLED*			
8. RISER LOCATED WITHIN EMBANKMENT			
9. RISER PLACED ON DRY AND STABLE SUBGRADE TO DESIGN ELEVATION			
10. DIAMETER AND MATERIAL OF PIPE AS DESIGNED*			
11. REQUIRED DIMENSIONS BETWEEN WATER CONTROL STRUCTURES (ORIFICES, WEIRS, ETC.) AS DESIGNED			
12. LOW-FLOW ORIFICE ADEQUATELY PROTECTED FROM CLOGGING BY AN EXTERNAL TRASH RACK OR OTHER DEVICE.			
13. DIAMETER MAY BE REDUCED BY 1" IF INTERNAL ORIFICE IS USED.			
14. PROPER FILL MATERIAL AND COMPACTION CONSTRUCTED FOR EMBANKMENT AS PER SPECIFICATIONS*			
15. EMBANKMENT HAS CORRECT SIDE SLOPES, TOP WIDTH, AND DESIGN ELEVATION (PLUS ALLOWANCE FOR SETTLEMENT)*			
16. INLET PIPES HAVE OUTFALL PROTECTIONS			
17. FOREBAY(S) CONSTRUCTED AS DESIGNED			
18. 2 POND BENCHES CONSTRUCTED WITH COMBINED MINIMUM WIDTH OF 15' (AS SHOWN ON THE PLANS)			
19. EMERGENCY SPILLWAY CONSTRUCTED TO PROPER CROSS-SECTION, SIDE SLOPES, BOTTOM WIDTH AND DESIGN ELEV.			
20. OUTFALL SECURELY IN PLACE AND PROPERLY BACKFILLED*			
21. FILTER FABRIC IN PLACE (CLASS "SE" OR BETTER)			
22. APRON/CHANNEL EXCAVATED TO DESIGN CROSS-SECTION			
23. RIPRAP PLACED AS DESIGNED WITH PROPER SIZE AND THICKNESS			
24. TRASH RACK DEVICE SECURED TO OUTLET STRUCTURE			
25. RISER OPENINGS DO NOT PERMIT UNAUTHORIZED ACCESS			
26. ACCESS ROAD CONSTRUCTED ACCORDING TO PLAN AND DETAILS			
27. NO WOODY VEGETATION INSTALLED ON EMBANKMENT OR WITHIN 15 FT. OF EMBANKMENT TOE			
28. NO WOODY VEGETATION INSTALLED WITHIN 25 FT. OF RISER OR WEIR STRUCTURE			
29. PROPER LANDSCAPING AS DESIGNATED ON PLANS			
30. POND DRAIN INSTALLED (WAIVED FOR LOWER EASTERN SHORE)			
31. FINAL GRADING AND PERMANENT STABILIZATION COMPLETED*			
32. AS-BUILT DOCUMENTATION			
33. MINIMUM 50% SURVIVAL RATE OF WETLAND PLANTINGS 1 YEAR AFTER INSTALLATION (710.03.06)*			

*AS-BUILT INSPECTOR REQUIRED TO PERFORM INSPECTION ON SITE FOR THESE STEPS AS REQUIRED BY COMAR 26.17.02.10

AS–BUILT INSPECTION TABULATIONS/CHECKLIST FOR BMP NUMBER: TBD
MDE NO.: 10–SF–0061

ACCEPTED BY MDE:

NAME _____ DATE _____

M–2 SUBMERGED GRAVEL WETLAND CONSTRUCTION CHECKLIST

ACTIVITY	ON SITE INSPECTION DATE	INSPECTOR INITIALS	ACCEPTANCE DATE
EXCAVATED TO PROPER SIZE AND LOCATION			
SUBDRAIN SYSTEM AND/OR OBSERVATION WELL INSTALLED ACCORDING TO PLANS			
PLACEMENT OF GEOTEXTILES, FILTER FABRIC, AND/OR LINERS ACCORDING TO PLANS			
WETLAND PLANTING			
APPURTENANT CONVEYANCE SYSTEMS (DIVERSION STRUCTURES, PRE-FILTERS, FILTERS, INLETS, OUTLETS, ORIFICES AND FLOW DISTRIBUTION STRUCTURES) INSTALLED ACCORDING TO PLAN			
COMPOSITION OF FILTER MEDIA			

AB INSPECTOR REQUIRED TO PERFORM INSPECTION ON SITE FOR THESE STEPS AS REQUIRED BY COMAR 26.17.02.10
THE AS-BUILT INSPECTOR IS TO VERIFY THE CONSTRUCTION ACTIVITIES WHILE ACTIVITY IS PERFORMED AS LISTED ABOVE

MDE NO.: 10–SF–0061

POND DATA – STORMWATER MANAGEMENT POND/SGW – SHA BMP NO. 070034 – (STA. 123+00 N)

SW–20

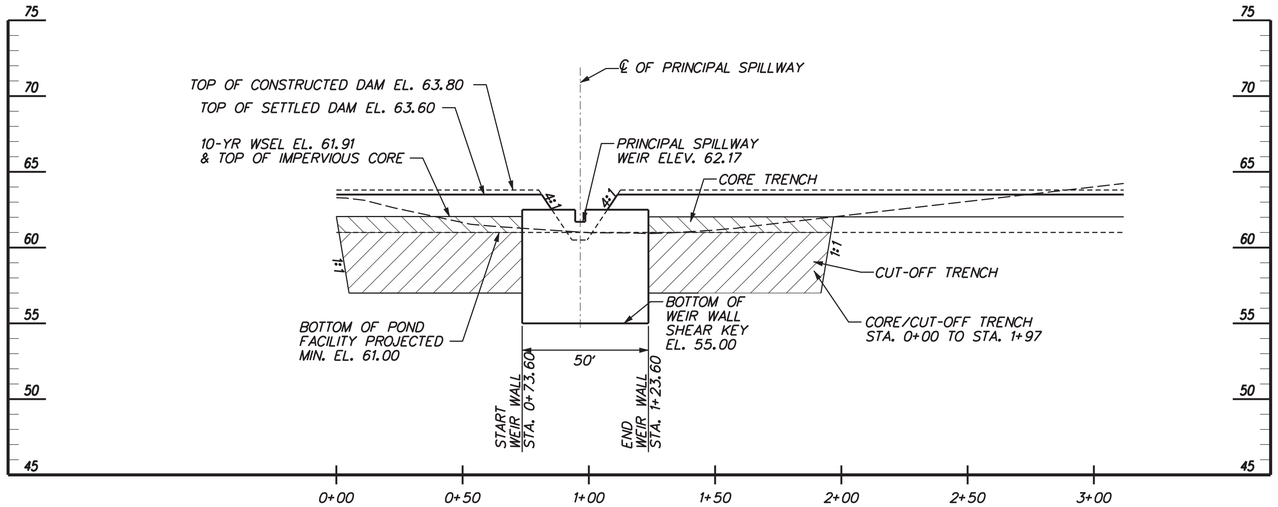

PROFILE ALONG ℄ OF EMBANKMENT

SCALE: HORIZ. 1"=30'
VERT. 1"=5'

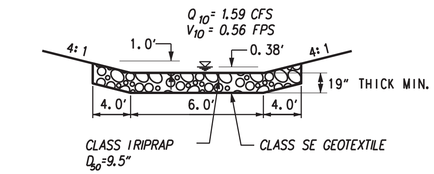

TYPICAL OUTFALL CHANNEL CROSS SECTION

NOT TO SCALE

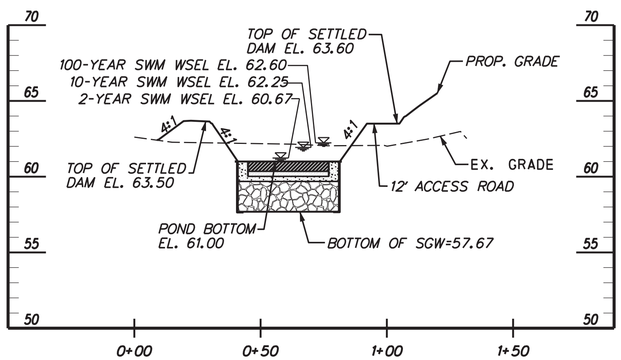

CROSS SECTION A-A

SCALE: HORIZ. 1"=30'
VERT. 1"=5'

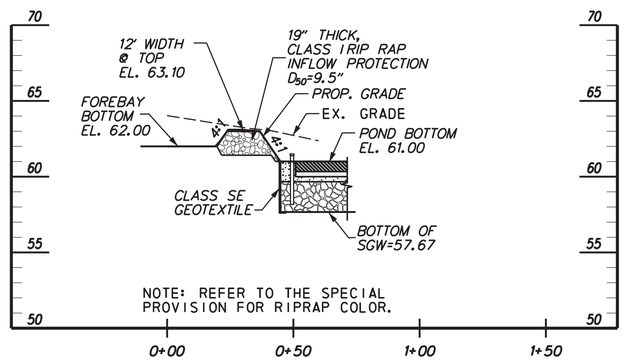

CROSS SECTION B-B

SCALE: HORIZ. 1"=30'
VERT. 1"=5'

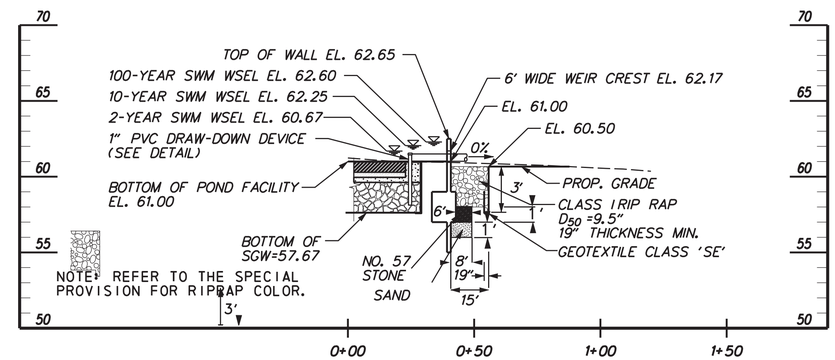

PROFILE ALONG ℄ OF PRINCIPAL SPILLWAY

SCALE: HORIZ. 1"=30'
VERT. 1"=5'

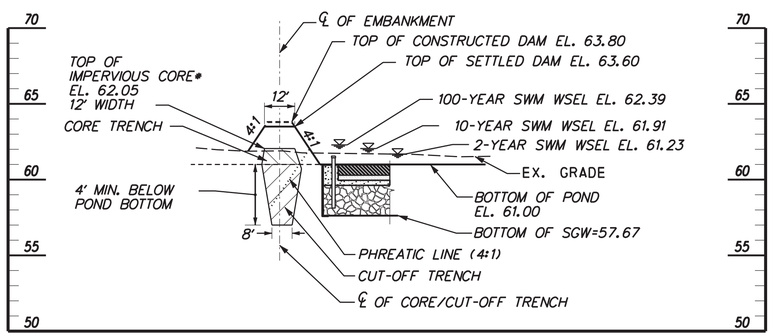

* SEE GENERAL POND DETAIL SHEET FOR TYPICAL CORE/CUT-OFF TRENCH DETAIL.

TYPICAL EMBANKMENT CROSS SECTION

SCALE: HORIZ. 1"=30'
VERT. 1"=5'

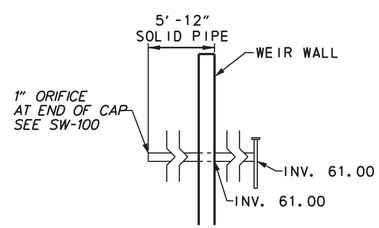

NOTE: SEE GENERAL POND DETAILS SHEET FOR TYPICAL CONCRETE ANCHOR DETAIL.

DRAW DOWN DEVICE

NOT TO SCALE

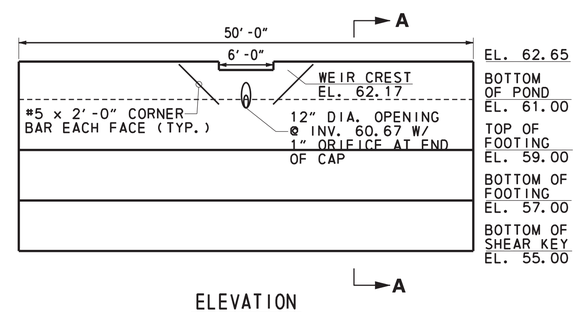

ELEVATION

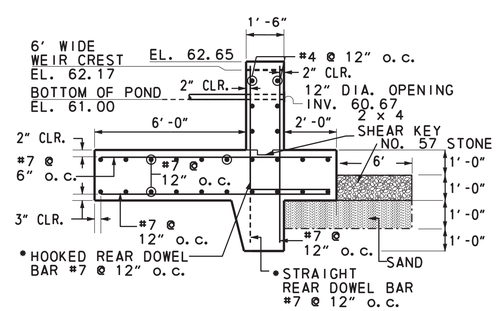

SECTION A-A

CONCRETE WEIR WALL DETAIL

NOT TO SCALE

• ALTERNATE HOOKED BARS W/STRAIGHT BARS

MDE NO.: 10-SF-0061

DETAILS – STORMWATER MANAGEMENT POND/SGW – SHA BMP NO. 070034 – (STA. 122+00 N)

SW-21

DELAWARE DEPARTMENT OF TRANSPORTATION	ADDENDUMS / REVISIONS	SCALE: AS SHOWN	US 301 MARYLAND STATE LINE TO LEVELS ROAD	CONTRACT T200811301 / COUNTY CECIL	BRIDGE NO. / DESIGNED BY: JZS/CB/PC / CHECKED BY: MB	STORMWATER MANAGEMENT PLAN	SHEET NO. 358 / TOTAL SHTS. 850

E:\2814 DEL ROUTE 301\001,3,4,5,6 (DESIGN)\CAD\SB_301AET_000_MD_STR.DGN

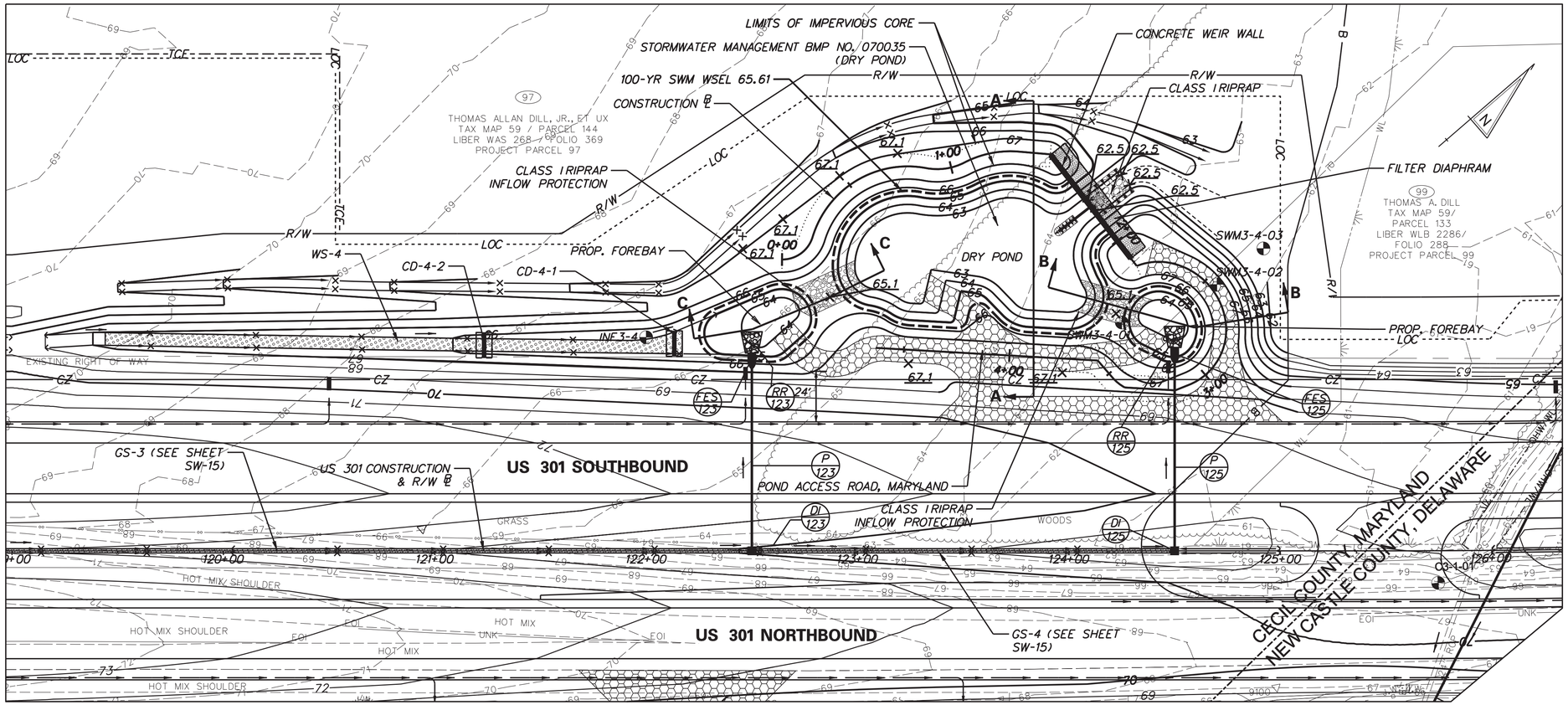

LEGEND

EXISTING CONTOUR	68
PROPOSED CONTOUR	65
POND ACCESS ROAD, MARYLAND	
STATE LINE	
EXISTING WETLAND BUFFER	B
GRASS SWALE	
WET SWALE	
CHECK DAM	

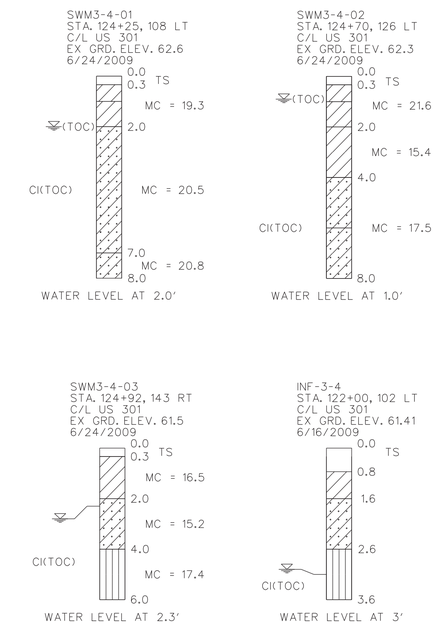

PLAN – STORMWATER MANAGEMENT POND – SHA BMP NO. 070035 – (STA. 126+00 S) (US 301 STA. 122+23 TO STA. 124+84), TYPE: DRY POND – WET SWALE – WS–4 – (STA. 122+00 S) (US 301 STA. 119+44 TO STA. 122+17), TYPE: WET SWALE

NOTES:

1. SEE GEOTECHNICAL DATA REPORT: "SECTION 3, US 301 MAINLINE INFILTRATION AND SWM BORINGS, CECIL COUNTY, MARYLAND" DATED SEPTEMBER, 2009 FOR BORING LOG DATA.
2. THE FACILITY SHALL REMAIN OFFLINE UNTIL ALL AREAS DRAINING TO THE FACILITY ARE PERMANENTLY STABILIZED.
3. PIGMENTAL COLOR SANDBLASTING FINISH IS TO BE APPLIED TO WEIR WALL FOR VISUAL QUALITY. REFER TO THE SPECIAL PROVISION FOR INTEGRAL CONCRETE COLOR.

ITEM 712552, RIPRAP SLOPE PROTECTION, MARYLAND

STATION/OFFSET	AREA
STA. 122+71, 114.5' LT. TO STA. 123+00, 129.3' LT.	54 SY
STA. 124+09, 119.9' LT. TO STA. 124+33, 112.5' LT.	48 SY
STA. 124+11, 163.3' LT. TO STA. 124+27, 175.5' LT.	32 SY

ITEM 202569, POND ACCESS ROAD, MARYLAND

STATION/OFFSET	AREA
STA. 122+65, 104.1' LT. TO STA. 124+75, 123.3' LT.	689 SY

ITEM 272511, POND OUTLET STRUCTURE, CONCRETE, MARYLAND

ITEM	QUANTITY
CONCRETE WEIR WALL	1 EA
6" SCH. 40 PVC PIPE	20 LF
MD SHA NO. 2 STONE	6 TON
CLASS SE GEOTEXTILE	13 SY

FOR DRAWDOWN PIPE, SEE SHEET SW-26.

NOTES: SEE SHEETS SW-23, SW-25, AND SW-26 FOR STORMWATER MANAGEMENT POND BMP NO. 070035 DETAILS. SEE SHEET SW-24 FOR WET SWALE WS-4 DETAILS.

FACILITY DESIGN SUMMARY FOR STORMWATER MANAGEMENT BMP NO. 070035

DESIGN STORM	FACILITY INFLOW (CFS)	FACILITY DISCHARGE (CFS)	WATER SURFACE ELEVATION (FT.)	STORAGE VOLUME (AC.FT.)
2-YEAR	3.60	0.73	63.73	0.083
10-YEAR	7.75	2.97	64.31	0.167
100-YEAR	13.22	7.33	64.82/65.61*	0.258

HAZARD CLASSIFICATION: CLASS 'A' AS PER POND CODE 378.
DRAINAGE AREA TO FACILITY: 2.37 ACRES
MANAGEMENT PROVIDED BY FACILITY: WATER QUANTITY FOR 2-YEAR AND 10-YEAR STORM EVENTS.
* 100-YR ELEVATION DUE TO BACKWATER EFFECTS FROM US 301 CULVERT 1.

POND SUMMARY FOR STORMWATER MANAGEMENT BMP NO. 070035

BOTTOM OF POND	63.0
BOTTOM OF FOREBAY	64.0
TOP OF BERM/WEIR	67.0
WEIR CREST	63.9
6 INCH ORIFICE INVERT	63.0

"AS-BUILT" CERTIFICATION

"I hereby certify that the stormwater best management practice (practices) shown on the plans and individually identified below has (have) been constructed in accordance with the plans included under the Maryland Department of the Environment Approval, Number 10-SF-0016, except as noted in red on the "AS BUILT" drawings."

Name _____ Signature _____

Maryland Registration No. _____ Date _____

BMP NO. 070035

Facility Identification

MDE NO.: 10-SF-0061

SW-22

E:\2814 DEL ROUTE 301\001,3,4,5,6 (DESIGN)\CAD\SB_301AET_000_MD_STR.DGN

DELAWARE DEPARTMENT OF TRANSPORTATION

ADDENDUMS / REVISIONS

SCALE 0 30 60 90 FEET

US 301 MARYLAND STATE LINE TO LEVELS ROAD

CONTRACT	BRIDGE NO.	
T200811301	DESIGNED BY:	JZS/CB/PC
COUNTY		
CECIL	CHECKED BY:	MB

STORMWATER MANAGEMENT PLAN

SHEET NO.
359
TOTAL SHTS.
850

LEGEND	
CENTERLINE OF DITCH	
PROPOSED CONTOUR	65
POND ACCESS ROAD, MARYLAND	
BASELINE OF CONSTRUCTION CONTROL COORDINATES	8
GRADING CONTROL POINTS	8
BOTTOM OF POND	BOP
BOTTOM OF FOREBAY	BOF
BOTTOM OF SWALE	BOS

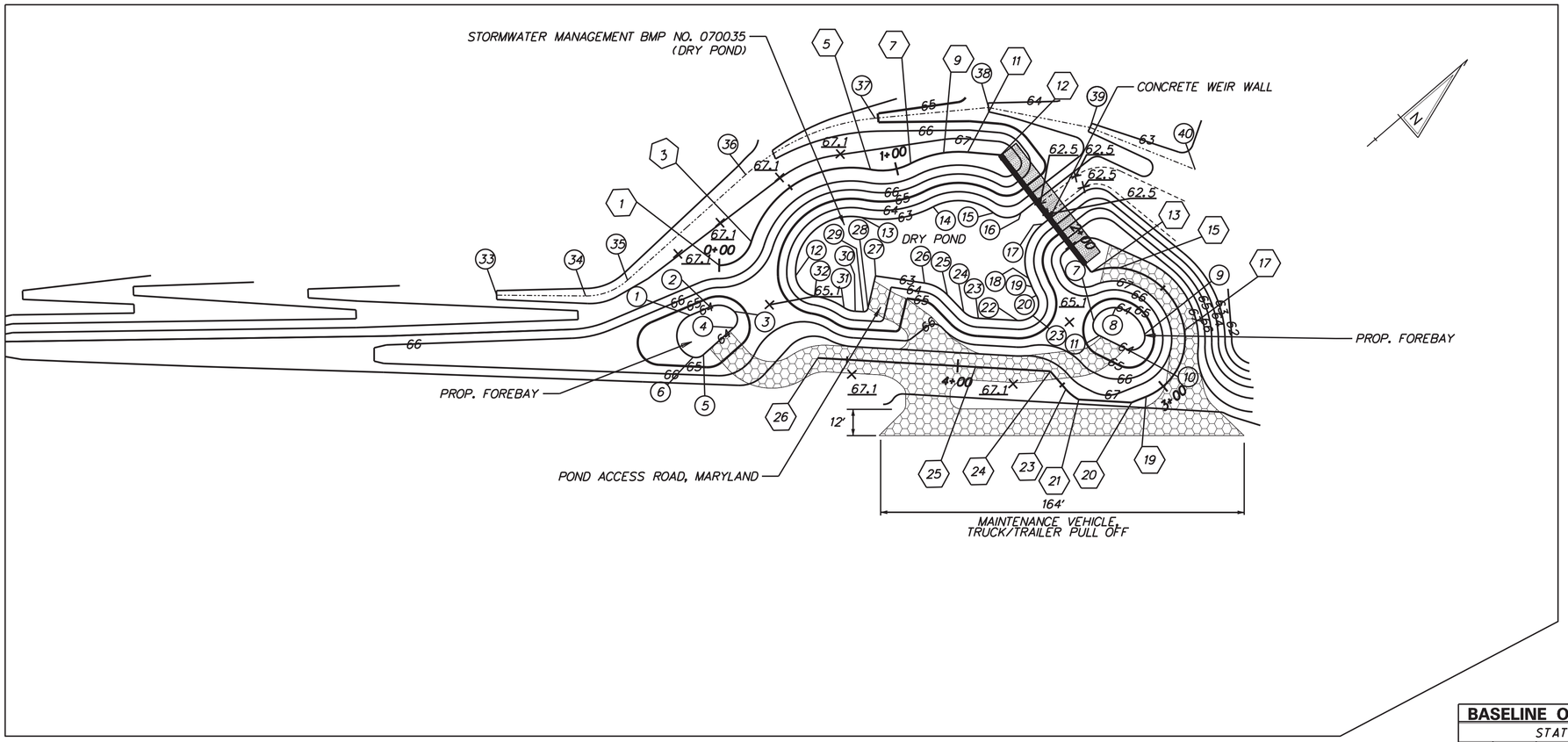

PLAN – STORMWATER MANAGEMENT POND – SHA BMP NO. 070035 – (STA. 126+00 S)

GRADING CONTROL POINTS

	NORTHING	EASTING	ELEVATION	NOTE
1	514, 337. 9902	556, 233. 1452	64. 00	BOF
2	514, 347. 1833	556, 236. 1230	64. 00	BOF
3	514, 354. 0644	556, 244. 7068	64. 00	BOF
4	514, 349. 1576	556, 250. 1721	64. 00	BOF
5	514, 330. 8243	556, 250. 4338	64. 00	BOF
6	514, 326. 5878	556, 248. 2004	64. 00	BOF
7	514, 473. 9253	556, 354. 1930	64. 00	BOF
8	514, 485. 4033	556, 355. 9726	64. 00	BOF
9	514, 487. 4864	556, 373. 5225	64. 00	BOF
10	514, 476. 7220	556, 372. 9041	64. 00	BOF
11	514, 471. 5602	556, 360. 5937	64. 00	BOF
12	514, 385. 6929	556, 250. 6539	63. 00	BOP
13	514, 425. 2225	556, 250. 1853	63. 00	BOP
14	514, 452. 8294	556, 267. 7506	63. 00	BOP
15	514, 471. 6318	556, 287. 5226	63. 00	BOP
16	514, 480. 9262	556, 295. 6878	63. 00	BOP
17	514, 485. 3323	556, 305. 9399	63. 00	BOP
18	514, 464. 3958	556, 319. 9220	63. 00	BOP
19	514, 462. 9642	556, 324. 1691	63. 00	BOP
20	514, 461. 9248	556, 328. 3907	63. 00	BOP

GRADING CONTROL POINTS

	NORTHING	EASTING	ELEVATION	NOTE
21	514, 454. 7766	556, 334. 2874	63. 00	BOP
22	514, 448. 1532	556, 331. 4743	63. 00	BOP
23	514, 435. 3608	556, 319. 0776	63. 00	BOP
24	514, 432. 3360	556, 312. 4627	63. 00	BOP
25	514, 431. 7385	556, 301. 9294	63. 00	BOP
26	514, 427. 3727	556, 291. 1635	63. 00	BOP
27	514, 412. 7967	556, 274. 3365	63. 00	BOP
28	514, 400. 6442	556, 283. 1335	63. 00	BOP
29	514, 398. 0797	556, 282. 9496	63. 00	BOP
30	514, 395. 4034	556, 280. 3562	63. 00	BOP
31	514, 392. 7155	556, 275. 8084	63. 00	BOP
32	514, 386. 0456	556, 263. 1514	63. 00	BOP
33	514, 277. 8346	556, 169. 1047	67. 00	BOS
34	514, 307. 9325	556, 195. 5834	66. 84	BOS
35	514, 326. 8997	556, 202. 5693	66. 68	BOS
36	514, 398. 3802	556, 201. 4449	66. 36	BOS
37	514, 459. 1427	556, 220. 3401	65. 05	BOS
38	514, 501. 0301	556, 250. 1622	64. 00	BOS
39	514, 529. 7811	556, 286. 9538	63. 00	BOS
40	514, 553. 2428	556, 332. 2638	62. 52	BOS

BASELINE OF CONSTRUCTION CONTROL COORDINATES

	STATION		NORTHING	EASTING
1	POB	STA. 0+00. 00	514, 362. 5873	556, 224. 6024
	PI	STA. 0+11. 23	514, 371. 0213	556, 232. 0114
3	PCC	STA. 0+19. 27	514, 380. 5077	556, 226. 0087
	PI	STA. 0+61. 51	514, 416. 2005	556, 203. 4233
5	PRC	STA. 0+88. 09	514, 442. 4559	556, 236. 5101
	PI	STA. 0+97. 79	514, 448. 4827	556, 244. 1050
7	PCC	STA. 1+06. 76	514, 457. 9157	556, 246. 3466
	PI	STA. 1+14. 67	514, 465. 6086	556, 248. 1747
9	PCC	STA. 1+22. 43	514, 472. 2799	556, 252. 4194
	PI	STA. 1+27. 89	514, 476. 8927	556, 255. 3544
11	PT	STA. 1+33. 31	514, 480. 7087	556, 259. 2699
12	PI	STA. 1+48. 25	514, 491. 1367	556, 269. 9701
13	PC	STA. 2+15. 04	514, 487. 5404	556, 336. 6555
	PI	STA. 2+21. 57	514, 493. 7157	556, 338. 7838
15	PCC	STA. 2+27. 87	514, 498. 3119	556, 343. 4248
	PI	STA. 2+53. 69	514, 516. 1152	556, 362. 1296
17	PCC	STA. 2+71. 69	514, 502. 2398	556, 383. 9080
	PI	STA. 2+93. 76	514, 490. 3803	556, 402. 5224
19	PCC	STA. 3+09. 07	514, 469. 5110	556, 395. 3379
20	PT	STA. 3+16. 15	514, 462. 8226	556, 393. 0353
21	PC	STA. 3+40. 01	514, 445. 6856	556, 376. 4285
	PI	STA. 3+43. 82	514, 444. 3462	556, 372. 8600
23	PT	STA. 3+47. 55	514, 444. 3462	556, 369. 0485
24	PI	STA. 3+58. 18	514, 444. 3462	556, 358. 4203
25	PI	STA. 3+92. 01	514, 420. 0507	556, 334. 8763
26	POE	STA. 4+63. 29	514, 368. 8614	556, 285. 2704

MDE NO.: 10-SF-0061

SW-23

DELAWARE DEPARTMENT OF TRANSPORTATION

ADDENDUMS / REVISIONS

SCALE 0 30 60 90 FEET

US 301 MARYLAND STATE LINE TO LEVELS ROAD

CONTRACT	BRIDGE NO.	
T200811301	DESIGNED BY:	JZS/CB/PC
COUNTY	CHECKED BY:	MB
CECIL		

STORMWATER MANAGEMENT PLAN

SHEET NO. 360

TOTAL SHTS. 850

E:\2814 DEL ROUTE 301\001,3,4,5,6 (DESIGN)\CAD\SB_301AET_000_MD_STR.DGN

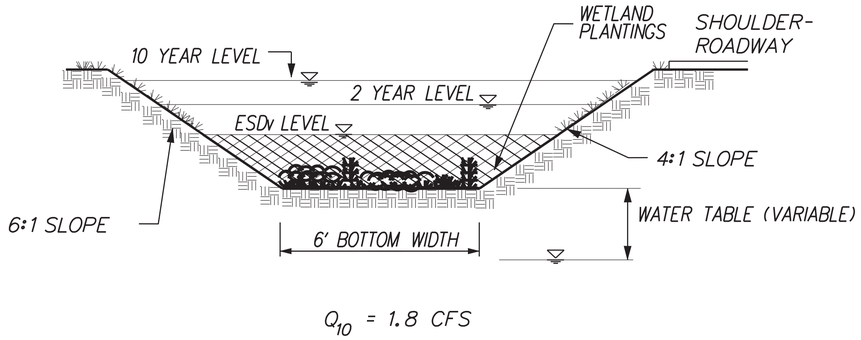

CROSS SECTION WET SWALE WS-4

NOT TO SCALE

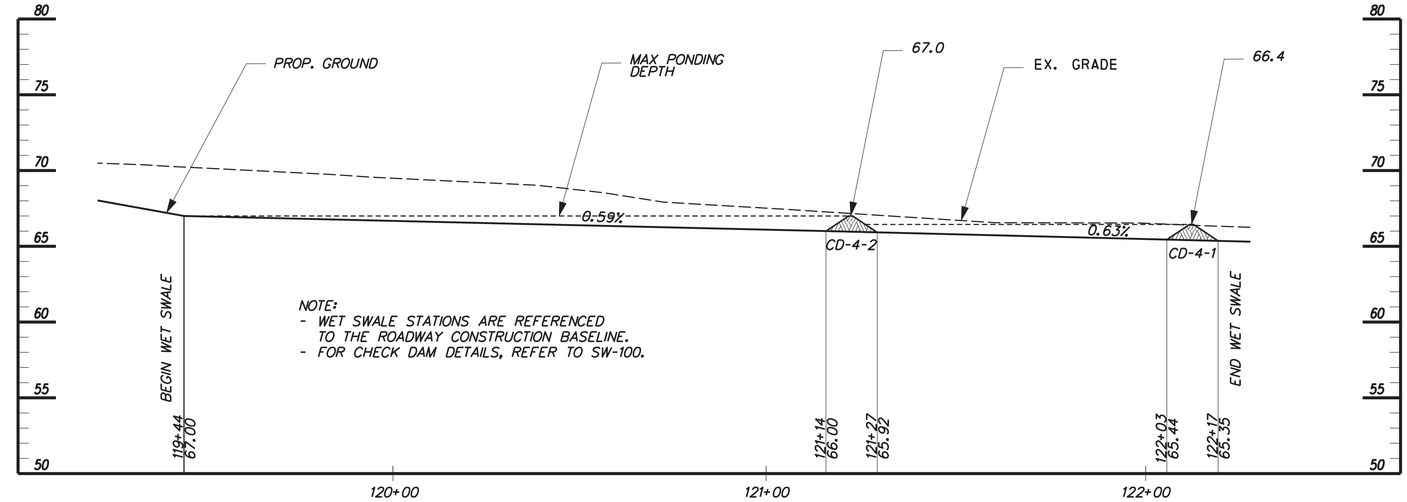

PROFILE ALONG ℄ OF WET SWALE WS-4

SCALE: HORIZ. 1"=20'
VERT. 1"=5'

WET SWALE WS-4 CONSTRUCTION CHECKLIST

ACTIVITY	ON SITE INSPECTION DATE	INSPECTOR INITIALS	ACCEPTANCE DATE
RUNOFF DIVERTED			
DRAINAGE AREA STABILIZED PRIOR TO INSTALLATION			
FACILITY AREA CLEARED / SUBGRADE PREPARED			
FACILITY LOCATION STAKED OUT			
EXCAVATED TO PROPER SIZE AND LOCATION*			
STABLE SIDE SLOPES			
LATERAL SLOPES FINISHED AS PER PLANS			
SUBSOILS NOT COMPACTED DURING CONSTRUCTION			
TOPSOIL ADEQUATE IN COMPOSITION AND PLACEMENT (50% LOAM, 50% SAND, K=0.5 FT/DAY)			
CHECK DAMS CONSTRUCTED TO PROPER DIMENSIONS AND SPACING*			
DIAPHRAGMS OR WEIRS INSTALLED AS DESIGNED, IF APPLICABLE*			
BOTTOM WIDTH, 2 FT MIN., 8 FT MAX.			
SOIL PERMEABILITY TESTED (DOCUMENTATION CHECKED)			
FINAL GRADING AND PERMANENT STABILIZATION COMPLETED*			
AS-BUILT DOCUMENTATION			

*AS-BUILT INSPECTOR REQUIRED TO PERFORM INSPECTION ON SITE FOR THESE STEPS AS REQUIRED BY COMAR 26.17.02.10

ITEM 908001, TOPSOIL

STATION/OFFSET	QUANTITY
FROM STA. 122+03, 97.0' LT TO STA. 122+17, 98.0' LT	4.4 TON
FROM STA. 121+14, 97.3' LT TO STA. 121+27, 97.3' LT	4.4 TON

WET SWALE WS-4 2 YEAR AND 10 YEAR ELEVATIONS

CHECK DAM	ESD ELEV. (FT)	2 YEAR ELEV. OVER WEIR (FT)	10 YEAR ELEV. OVER WEIR (FT)	2 YEAR FREEBOARD (FT)	10 YEAR FREEBOARD (FT)
CD-4-1	66.4	66.6	66.7	1.4	1.3
CD-4-2	67.0	67.1	67.2	1.4	1.3

AS-BUILT DATA FOR WET SWALE WS-4
MDE NO.: 10-SF-0061

ACTIVITY	DESIGNED	AS-BUILT	DIFFERENCE	INSPECTOR INITIALS	ACCEPTANCE DATE
AS-BUILT SURVEY	N/A				
ESD VOLUME (CF)	965				
BOTTOM WIDTH (FT)	6				
LEFT SIDE SLOPE	6:1				
RIGHT SIDE SLOPE	4:1				
TOTAL LENGTH (FT)	307				
NUMBER OF CHECK DAMS / WEIRS	1				
CD-1 WEIR ELEVATION (FT)	66.4				
CD-1 WEIR LENGTH (FT)	1				
CD-2 WEIR ELEVATION (FT)	67.0				
CD-2 WEIR LENGTH (FT)	1				
2 YEAR DISCHARGE (CFS)	0.9				
10 YEAR DISCHARGE (CFS)	1.8				
MAXIMUM CHANNEL SLOPE	170:1				

"AS-BUILT" CERTIFICATION

"I hereby certify that the stormwater best management practice (practices) shown on the plans and individually identified below has (have) been constructed in accordance with the plans included under the Maryland Department of the Environment Approval, Number 10-SF-0061, except as noted in red on the "AS BUILT" drawings."

Name _____ Signature _____

Maryland Registration No. _____ Date _____

WET SWALE WS-4

Facility Identification

AS-BUILT INSPECTION TABULATIONS/CHECKLIST for BMP Number: TBD
MDE No.: 10-SF-0061

Accepted by MDE:

Name _____ Date _____

MDE NO.: 10-SF-0061

SW- 24

DELAWARE DEPARTMENT OF TRANSPORTATION

ADDENDUMS / REVISIONS

SCALE: AS SHOWN

US 301
MARYLAND STATE LINE
TO LEVELS ROAD

CONTRACT	BRIDGE NO.	
T200811301	DESIGNED BY:	JZS/CB/PC
COUNTY	CHECKED BY:	MB
CECIL		

STORMWATER MANAGEMENT PLAN

SHEET NO. 361
TOTAL SHTS. 850

E:\2814 DEL ROUTE 301\001,3,4,5,6 (DESIGN)\CAD\SB_301AET_000_MD_STR.DGN

AS-BUILT DATA FOR POND BMP NO. 070035
MDE NO.: 10-SF-0061

ACTIVITY	DESIGNED	AS-BUILT	DIFFERENCE	INSPECTOR'S INITIAL	ACCEPTANCE DATE
AS-BUILT SURVEY					
ESD ELEVATION	N/A				
ESD VOLUME	N/A				
CPv STORAGE ELEVATION	63.00				
CPv STORAGE VOLUME	0.00				
CPv DISCHARGE (CFS) *	0.00				
CPv CONTROL OPENING/ELEVATION	6"DIA./63.00				
2 YR STORAGE ELEVATION	63.73				
2 YR STORAGE VOLUME	0.083 ac-ft				
2 YR DISCHARGE (CFS) *	0.73				
2 YR CONTROL OPENING/ELEVATION	6" DIA./63.00				
10 YR STORAGE ELEVATION	64.31				
10 YR STORAGE VOLUME	0.167 ac-ft				
10 YR DISCHARGE (CFS) *	2.97				
10 YR CONTROL OPENING/ELEVATION	2.5'/63.92				
100 YR STORAGE ELEVATION	64.82/65.61				
100 YR STORAGE VOLUME	0.258 ac-ft				
100 YR DISCHARGE (CFS) *	7.33				
100 YR CONTROL OPENING/ELEVATION	2.5'/63.90				
PRINCIPAL SPILLWAY: ELEV. OUT/DIAM./GRADE	N/A (WEIR WALL)				
WEIR: WIDTH/LENGTH/ELEVATION	1.5'/2.5'/63.90				
FOREBAY #1: WIDTH/LENGTH/WIDTH	29'/51'/64.00				
FOREBAY #2: WIDTH/LENGTH/WIDTH	28'/33'/64.00				
EMERGENCY SPILLWAY: WIDTH / LENGTH / ELEVATION	N/A				
EMBANKMENT: ELEVATION	67.00				
POND BOTTOM: ELEVATION	63.00				
OUTLET PROTECTION: LENGTH/WIDTH/STONE SIZE	20'/30'/CLASS I				
LOW FLOW DEWATERING DEVICE EL./DIAM.	63.00/6" DIA.				

* AS-BUILT DISCHARGES ARE NOT REQUIRED IF TOLERANCES AND FREEBOARD ARE MET.

DATE AS-BUILT ACCEPTED BY MDE: _____

POND CONSTRUCTION CHECKLIST

ACTIVITY	ON SITE INSPECTION DATE	INSPECTOR'S INITIAL	ACCEPTANCE DATE
1. RUNOFF DIVERTED			
2. DRAINAGE AREA STABILIZED PRIOR TO CONVERSION FROM SEDIMENT BASIN, IF APPLICABLE			
3. FACILITY AREA CLEARED/SUBGRADE PREPARED			
4. FACILITY LOCATION STAKED OUT			
5. PIPE SPILLWAY INSTALLED PROPERLY WITH CORRECT ELEVATION, GRADE AND INSTALLATION OF WATERTIGHT CONNECTIONS AS PER SPECIAL PROVISIONS*			
6. CORE TRENCH (IF REQUIRED) HAS CORRECT DIMENSIONS AND COMPACTION RATE AS PER SPECIAL PROVISIONS*			
7. ANTI-SEEP COLLARS OR DIAPHRAMS PROPERLY INSTALLED*			
8. RISER LOCATED WITHIN EMBANKMENT			
9. RISER PLACED ON DRY AND STABLE SUBGRADE TO DESIGN ELEVATION			
10. DIAMETER AND MATERIAL OF PIPE AS DESIGNED*			
11. REQUIRED DIMENSIONS BETWEEN WATER CONTROL STRUCTURES (ORIFICES, WEIRS, ETC.) AS DESIGNED			
12. LOW-FLOW ORIFICE ADEQUATELY PROTECTED FROM CLOGGING BY AN EXTERNAL TRASH RACK OR OTHER DEVICE.			
13. DIAMETER MAY BE REDUCED BY 1" IF INTERNAL ORIFICE IS USED.			
14. PROPER FILL MATERIAL AND COMPACTION CONSTRUCTED FOR EMBANKMENT AS PER SPECIFICATIONS*			
15. EMBANKMENT HAS CORRECT SIDE SLOPES, TOP WIDTH, AND DESIGN ELEVATION (PLUS ALLOWANCE FOR SETTLEMENT)*			
16. INLET PIPES HAVE OUTFALL PROTECTIONS			
17. FOREBAY(S) CONSTRUCTED AS DESIGNED			
18. 2 POND BENCHES CONSTRUCTED WITH COMBINED MINIMUM WIDTH OF 15' (AS SHOWN ON THE PLANS)			
19. EMERGENCY SPILLWAY CONSTRUCTED TO PROPER CROSS-SECTION, SIDE SLOPES, BOTTOM WIDTH AND DESIGN ELEV.			
20. OUTFALL SECURELY IN PLACE AND PROPERLY BACKFILLED*			
21. FILTER FABRIC IN PLACE (CLASS "SE" OR BETTER)			
22. APRON/CHANNEL EXCAVATED TO DESIGN CROSS-SECTION			
23. RIPRAP PLACED AS DESIGNED WITH PROPER SIZE AND THICKNESS			
24. TRASH RACK DEVICE SECURED TO OUTLET STRUCTURE			
25. RISER OPENINGS DO NOT PERMIT UNAUTHORIZED ACCESS			
26. ACCESS ROAD CONSTRUCTED ACCORDING TO PLAN AND DETAILS			
27. NO WOODY VEGETATION INSTALLED ON EMBANKMENT OR WITHIN 15 FT. OF EMBANKMENT TOE			
28. NO WOODY VEGETATION INSTALLED WITHIN 25 FT. OF RISER OR WEIR STRUCTURE			
29. PROPER LANDSCAPING AS DESIGNATED ON PLANS			
30. POND DRAIN INSTALLED (WAIVED FOR LOWER EASTERN SHORE)			
31. FINAL GRADING AND PERMANENT STABILIZATION COMPLETED*			
32. AS-BUILT DOCUMENTATION			
33. MINIMUM 50% SURVIVAL RATE OF WETLAND PLANTINGS 1 YEAR AFTER INSTALLATION (710.03.06)*			

*AS-BUILT INSPECTOR REQUIRED TO PERFORM INSPECTION ON SITE FOR THESE STEPS AS REQUIRED BY COMAR 26.17.02.10

ITEM 302012, DEL NO. 57 STONE

STATION/OFFSET	WEIGHT
STA. 124+09, 167.07' LT TO STA. 124+09, 167.07' LT	30 TON

ITEM 756000, SAND

STATION/OFFSET	WEIGHT
STA. 124+09, 167.07' LT TO STA. 124+09, 167.07' LT	13 TON

POND DATA - STORMWATER MANAGEMENT POND - SHA BMP NO. 070035 - (STA. 126+00 S)

MDE NO.: 10-SF-0061

SW-25

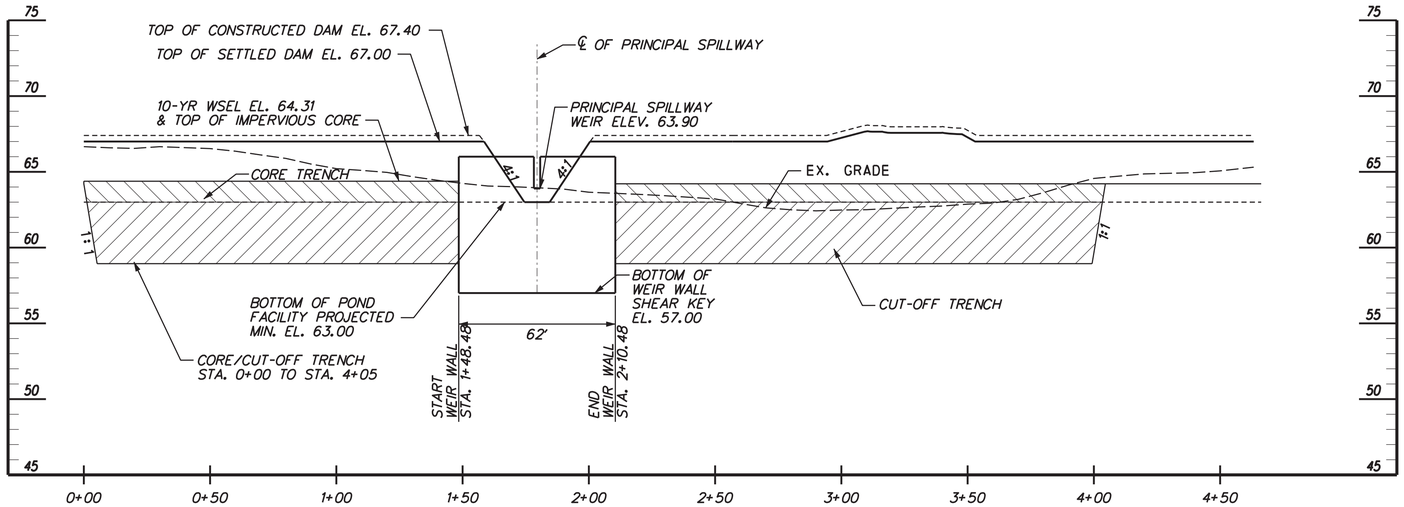

PROFILE ALONG ℄ OF EMBANKMENT

SCALE: HORIZ. 1"=30'
VERT. 1"=5'

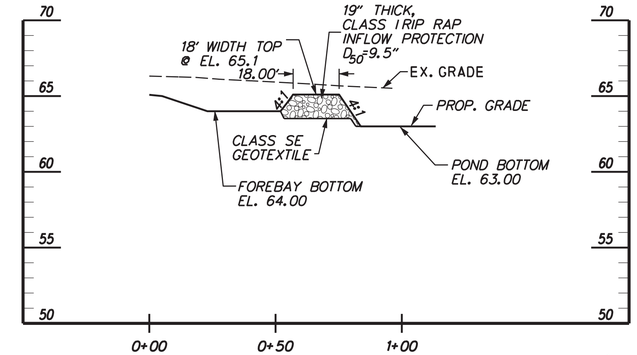

CROSS SECTION C-C

SCALE: HORIZ. 1"=30'
VERT. 1"=5'

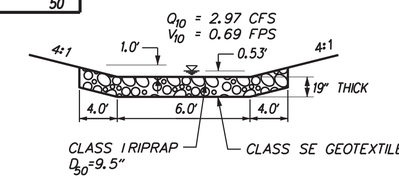

TYPICAL OUTFALL CHANNEL CROSS SECTION

NOT TO SCALE

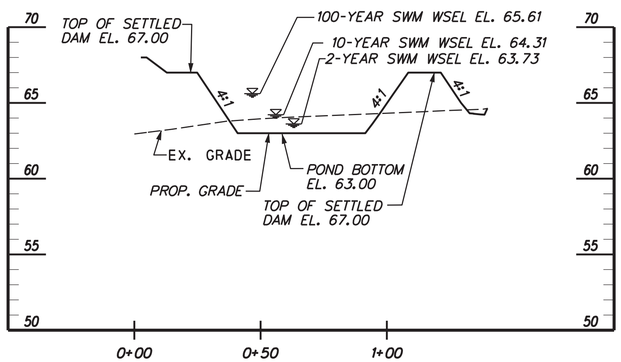

CROSS SECTION A-A

SCALE: HORIZ. 1"=30'
VERT. 1"=5'

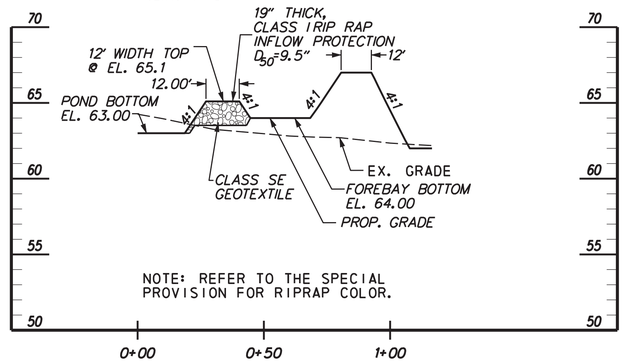

NOTE: REFER TO THE SPECIAL PROVISION FOR RIPRAP COLOR.

CROSS SECTION B-B

SCALE: HORIZ. 1"=30'
VERT. 1"=5'

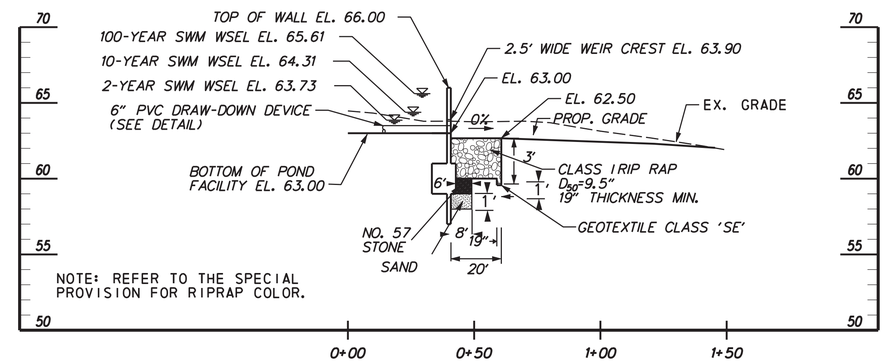

NOTE: REFER TO THE SPECIAL PROVISION FOR RIPRAP COLOR.

PROFILE ALONG L OF PRINCIPAL SPILLWAY

SCALE: HORIZ. 1"=30'
VERT. 1"=5'

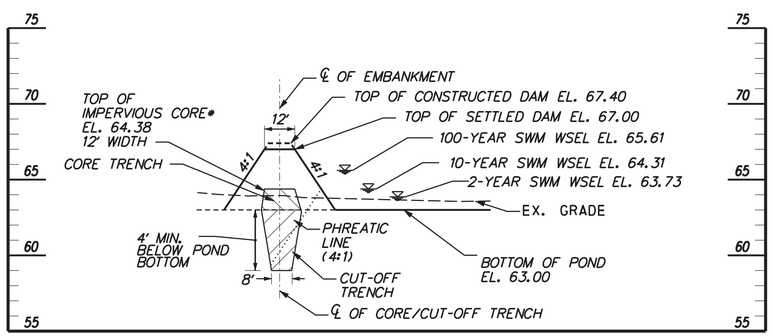

* SEE GENERAL POND DETAILS SHEET FOR TYPICAL CORE/CUT-OFF TRENCH DETAIL.

TYPICAL EMBANKMENT CROSS SECTION

SCALE: HORIZ. 1"=30'
VERT. 1"=5'

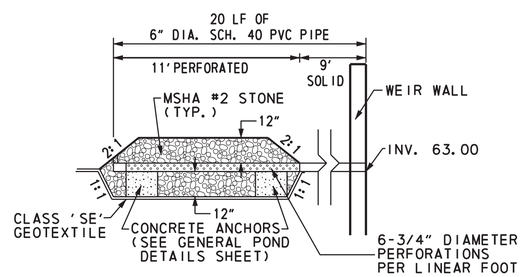

NOTE: CONTRACTOR TO WRAP PERFORATED PIPE WITH 1/4" GALVANIZED HARDWARE CLOTH THEN WITH NONWOVEN GEOTEXTILE SOCK. CLOTH AND SOCK SHALL NOT BE MEASURED BUT SHALL BE INCIDENTAL TO THE COST OF THE PERFORATED PIPE.

NOTE: SEE GENERAL POND DETAILS SHEET FOR TYPICAL CONCRETE ANCHOR DETAIL.

DRAW DOWN DEVICE

NOT TO SCALE

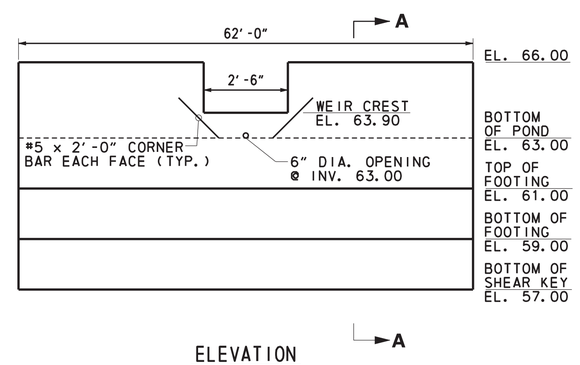

ELEVATION

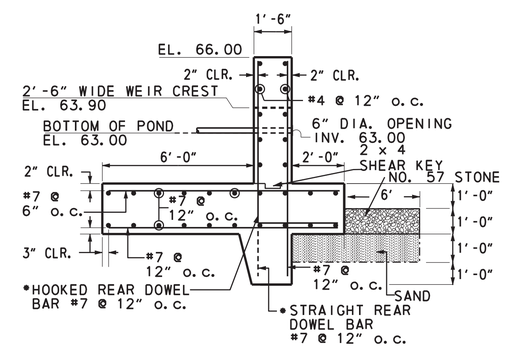

SECTION A-A

* ALTERNATE HOOKED BARS W/STRAIGHT BARS

CONCRETE WEIR WALL DETAIL

NOT TO SCALE

MDE NO.: 10-SF-0061

DETAILS – STORMWATER MANAGEMENT POND – SHA BMP NO. 070035 – (STA. 126+00 S)

SW-26

DELAWARE DEPARTMENT OF TRANSPORTATION	ADDENDUMS / REVISIONS	SCALE: AS SHOWN	US 301 MARYLAND STATE LINE TO LEVELS ROAD	CONTRACT T200811301 / COUNTY CECIL	BRIDGE NO. / DESIGNED BY: JZS/CB/PC / CHECKED BY: MB	STORMWATER MANAGEMENT PLAN	SHEET NO. 363 / TOTAL SHTS. 850

E:\2814 DEL ROUTE 301\001,3,4,5,6 (DESIGN)\CAD\SB_301AET_000_MD_STR.DGN

LEGEND	
EXISTING CONTOUR	68
PROPOSED CONTOUR	65
POND MAINTENANCE ACCESS	
STATE LINE	

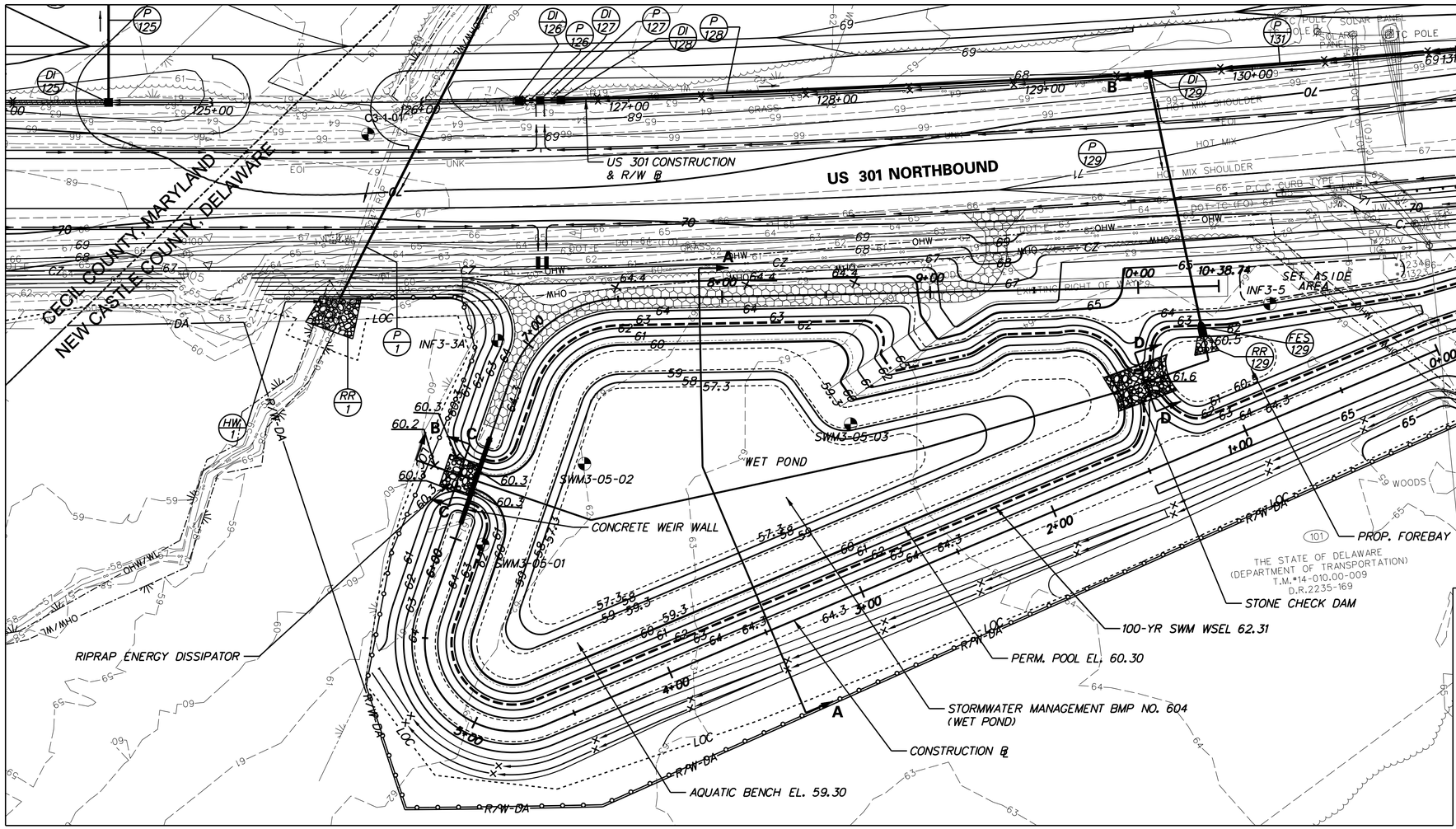

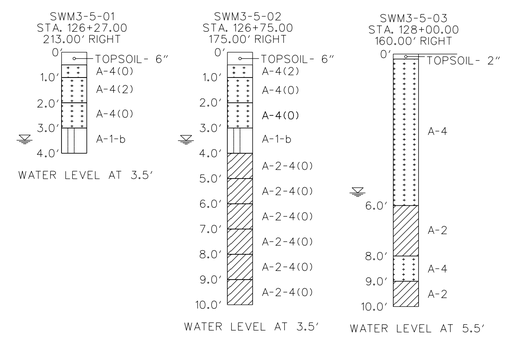

PLAN – STORMWATER MANAGEMENT POND – BMP NO. 604 – (STA. 127+00 N) (US 301 STA. 126+10 TO STA. 131+53), TYPE: WET POND

NOTE: SEE SHEETS SW-28 TO SW-31 FOR STORMWATER MANAGEMENT POND BMP NO. 604 DETAILS.

FACILITY DESIGN SUMMARY FOR STORMWATER MANAGEMENT BMP NO. 604

DESIGN STORM	FACILITY INFLOW (CFS)	FACILITY DISCHARGE (CFS)	WATER SURFACE ELEVATION (FT.)	STORAGE VOLUME (AC.FT.)
1-YEAR	3.78	0.33	60.71	0.295
10-YEAR	11.28	1.37	61.34	0.800
100-YEAR	24.09	3.73	62.31	1.673

HAZARD CLASSIFICATION: CLASS 'A' AS PER POND CODE 378
PERMANENT POOL VOLUME: 1.312 AC.FT.
DRAINAGE AREA TO FACILITY 6.731 ACRES
MANAGEMENT PROVIDED BY FACILITY: WATER QUALITY BY EXTENDED DETENTION FOR 1-YEAR STORM, AND WATER QUANTITY FOR 10-YEAR AND 100-YEAR STORMS.

DELAWARE DEPARTMENT OF TRANSPORTATION

ADDENDUMS / REVISIONS

SCALE 0 30 60 90 FEET

US 301 MARYLAND STATE LINE TO LEVELS ROAD

CONTRACT	BRIDGE NO.	
T200811301	DESIGNED BY:	DSM/ACF
COUNTY	CHECKED BY:	JZS
NEW CASTLE		

STORMWATER MANAGEMENT PLAN

SHEET NO. 364
TOTAL SHTS. 850

E:\2814 DEL ROUTE 301\001,3,4,5,6 (DESIGN)\CAD\SB_301AET_000_STR.DGN

POND CONSTRUCTION SEQUENCE AND NOTES

THE STORMWATER MANAGEMENT POND SHALL FUNCTION AS A SEDIMENT BASIN DURING ROADWAY CONSTRUCTION AND SHALL BE CONSTRUCTED IN ACCORDANCE WITH THE FOLLOWING SECTIONS OF THE STANDARD SPECIFICATIONS:

SECTION 910-STORMWATER MANAGEMENT FACILITIES
- STORMWATER MANAGEMENT POND
- POND OUTLET STRUCTURE, CONCRETE
- CLAY BORROW

1. INSTALL STABILIZED CONSTRUCTION ENTRANCE.

2. CLEAR AND GRUB FOR INSTALLATION OF PERIMETER EROSION AND SEDIMENT CONTROLS.

3. INSTALL PERIMETER SEDIMENT CONTROLS AS SHOWN ON EROSION & SEDIMENT CONTROL SHEETS.

4. CLEAR AND GRUB REMAINING AREA FOR POND CONSTRUCTION.

5. CONSTRUCT POND OUTLET STRUCTURE, RIPRAP ENERGY DISSIPATOR AT END OF PRINCIPAL SPILLWAY AND PARTIAL EMBANKMENT AS NEEDED TO INSTALL POND OUTLET STUCTURE. INSTALL POND OUTLET STRUCTURE. INSTALL SKIMMER DEWATERING DEVICE. DE-WATER FOUNDATION AS NEEDED IN ACCORDANCE WITH SECTION 111 AND USE SUMP PIT FOR PUMPING. (SEE EROSION & SEDIMENT CONTROL DETAILS FOR SKIMMER DEWATERING DEVICE INSTALLATION).

6. EXCAVATE THE POND AND COMPLETE THE EMBANKMENT TO LINES, GRADES AND DETAILS SHOWN IN THE CONSTRUCTION PLANS. DURING EXCAVATION, THE CONTRACTOR SHALL SALVAGE AND STOCKPILE SOILS TO BE USED TO CONSTRUCT EMBANKMENT. THE SOILS REQUIRED FOR THE EMBANKMENT MAY BE OBTAINED FROM ELSEWHERE WITHIN THE PROJECT LIMITS. EXCAVATE POND BOTTOM TO ELEVATION 56.30 AS SHOWN FOR SEDIMENT STORAGE DURING CONSTRUCTION.

7. STABILIZE ALL BARE AREAS.

NOTE: SEE CONSTRUCTION SEQUENCE PLANS FOR LOCATION OF EROSION AND SEDIMENT CONTROL MEASURES.

MAINTENANCE OF POND AS A SEDIMENT BASIN

1. CONTRACTOR SHALL INSPECT THE BASIN IMMEDIATELY AFTER EVERY RAIN AND MAKE REPAIRS AS NEEDED.

2. CONTRACTOR SHALL CLEARLY MARK THE CLEANOUT ELEVATION ON A STAKE DRIVEN INTO THE GROUND AT A LOCATION CLEARLY VISIBLE FROM THE EMBANKMENT. SEDIMENT SHALL BE REMOVED WHEN CLEANOUT ELEVATION IS REACHED AND DISPOSED OF AT A LOCATION APPROVED BY THE ENGINEER.

CONVERSION TO PERMANENT STORMWATER MANAGEMENT POND

1. CONVERT THE BASIN INTO THE PERMANENT STORMWATER MANAGEMENT POND AND GROUT 4" DIA. ORIFICE AT EL. 60.30 AFTER ALL AREAS DRAINING TO THE POND HAVE BEEN PERMANENTLY STABILIZED AND THE ENGINEER HAS APPROVED THE CONVERSION.

2. REMOVE ACCUMULATED SEDIMENT TO ELEVATION 57.30 AND DISPOSE SEDIMENT AT A LOCATION APPROVED BY THE ENGINEER.

3. COMPLETE STABILIZATION OF ALL BARE AREAS. REMOVE EROSION AND SEDIMENT CONTROL MEASURES AND DEACTIVATE SKIMMER DEWATER DEVICE.

AS-BUILT DRAWINGS OF STORMWATER MANAGEMENT FACILITIES

THE CONTRACTOR SHALL PROVIDE 'AS-BUILT' DRAWINGS OF ALL STORMWATER MANAGEMENT FACILITIES, SUCH AS PONDS, INFILTRATION BASINS, BIOFILTRATION SWALES, ETC. 'AS-BUILT' DRAWINGS SHALL SHOW THE ACTUAL FINISH GROUND CONTOURS, OUTLET STRUCTURES DIMENSIONS AND ELEVATIONS, ETC. AS THEY EXIST AT THE COMPLETION OF THE PROJECT. THESE DRAWINGS SHALL BE SIGNED AND SEALED BY A PROFESSIONAL ENGINEER OR LAND SURVEYOR.

ITEM 712005, RIPRAP, R-4

STATION/OFFSET	AREA
STA 129+24, 151.8' RT. TO STA 129+50, 144.5' RT.	57 SY

ITEM 712006, RIPRAP, R-5

STATION/OFFSET	AREA
STA 126+10, 177.0' RT. TO STA 126+23, 182.0' RT.	27 SY

ITEM 302011, DELAWARE NO. 3 STONE

STATION/OFFSET	WEIGHT
STA 126+33, 156.8' RT. TO STA 128+87, 61.1' RT.	88 TON

ITEM 713002, GEOTEXTILES, SEPARATION

STATION/OFFSET	AREA
STA 126+33, 156.8' RT. TO STA 128+87, 61.1' RT.	460 SY

ITEM 713003, GEOTEXTILES, RIPRAP

STATION/OFFSET	AREA
STA 129+24, 151.8' RT. TO STA 129+50, 144.5' RT.	68 SY
STA 126+10, 177.0' RT. TO STA 126+23, 182.0' RT.	34 SY

ITEM 910007, OUTLET STRUCTURE

ITEM	QUANTITY
CONCRETE WEIR WALL	1 EA

TEMPORARY SEDIMENT BASIN DETAILS

SKIMMER ORIFICE SIZE (IN)	SKIMMER INVERT	CLEANOUT ELEVATION	*EMERGENCY SPILLWAY ELEVATION
4	60.30	61.15	62.30

* BLOCK OUTLET STRUCTURE TO THIS ELEVATION IN TEMPORARY CONDITIONS

NOTES - STORMWATER MANAGEMENT POND - BMP NO. 604 - (STA. 127+00 N)

SW-28

DELAWARE DEPARTMENT OF TRANSPORTATION

ADDENDUMS / REVISIONS

SCALE 0 30 60 90 FEET

US 301 MARYLAND STATE LINE TO LEVELS ROAD

CONTRACT	BRIDGE NO.	
T200811301	DESIGNED BY:	DSM/ACF
COUNTY		
NEW CASTLE	CHECKED BY:	JZS

STORMWATER MANAGEMENT PLAN

SHEET NO. 365

TOTAL SHTS. 850

E:\2814 DEL ROUTE 301\001,3,4,5,6 (DESIGN)\CAD\SB_301AET_000_STR.DGN

NOTES:

1. THE POND, BETWEEN ELEVATIONS 59.3 AND 64.3, INCLUDING THE BENCH AT ELEVATION 59.3 SHALL RECEIVE TOPSOILING, 6" DEPTH (ITEM 908010).
2. THE POND, BETWEEN ELEVATIONS 57.3 AND 61.3, NOT INCLUDING THE POND BOTTOM AND FOREBAY BOTTOM, SHALL RECEIVE PERMANENT GRASS SEEDING - WET GROUND (ITEM 908015).
3. THE REMAINDER OF THE EMBANKMENT AREA ABOVE ELEVATION 61.3 SHALL RECEIVE PERMANENT GRASS SEEDING - DRY GROUND (ITEM 908014).
4. WET GROUND SEEDING AREA = 2,665 SY, DRY GROUND SEEDING AREA = 3,780 SY.

LEGEND	
CENTERLINE OF DITCH	-·-·-·-·-
PROPOSED CONTOUR	—65—
POND MAINTENANCE ACCESS	
BASELINE OF CONSTRUCTION CONTROL COORDINATES	8
GRADING CONTROL POINTS	8
BOTTOM OF POND	BOP
BOTTOM OF FOREBAY	BOF
BOTTOM OF SWALE	BOS
BOTTOM OF TOE	BOT

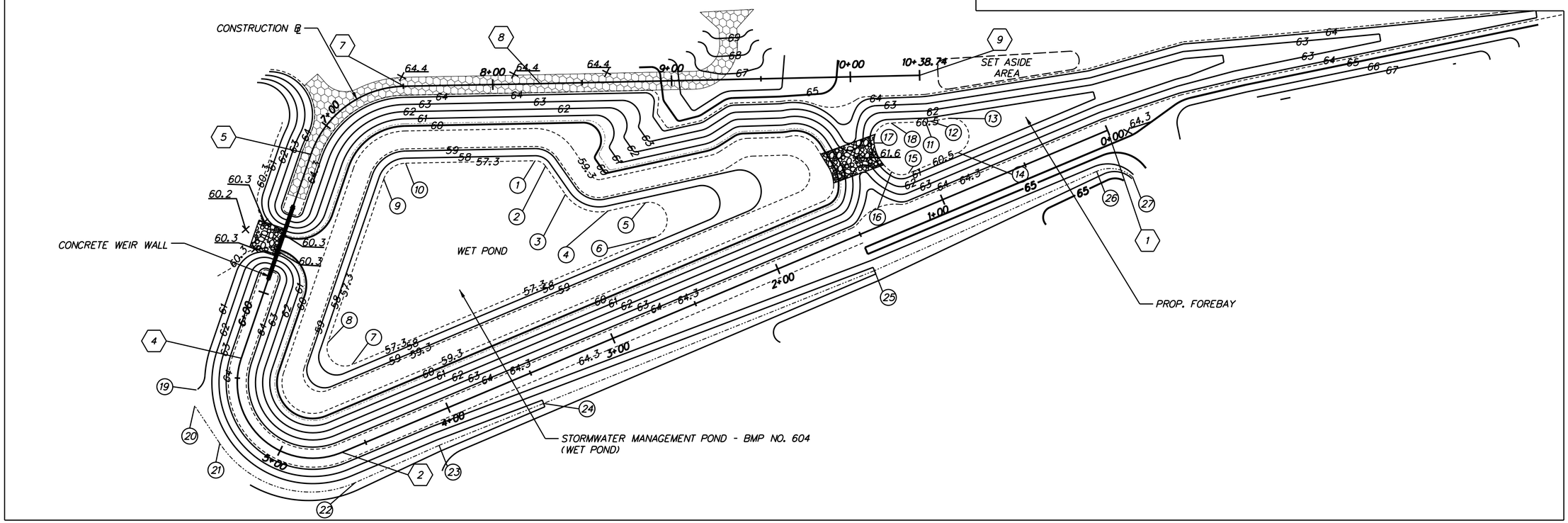

PLAN – STORMWATER MANAGEMENT POND – BMP NO. 604 – (STA. 127+00 N)

BASELINE OF CONSTRUCTION CONTROL COORDINATES

	STATION		NORTHING	EASTING
1	POB	STA. 0+00.00	514,818.4125	556,957.8813
2	PC	STA. 4+64.33	514,376.9075	556,814.0860
	PI	STA. 5+58.37	514,287.4923	556,784.9640
4	PT	STA. 5+61.31	514,368.6872	556,737.5240
5	PC	STA. 6+81.75	514,472.6853	556,676.7606
	PI	STA. 7+21.14	514,506.6953	556,656.8894
7	PT	STA. 7+50.47	514,536.9774	556,682.0795
8	PI	STA. 8+26.55	514,595.4673	556,730.7341
9	POE	STA. 10+38.74	514,759.0169	556,865.9307

GRADING CONTROL POINTS

	NORTHING	EASTING	ELEVATION	NOTE
1	514,565.1182	556,761.4209	57.30	BOP
2	514,567.6058	556,767.5089	57.30	BOP
3	514,565.6552	556,786.7337	57.30	BOP
4	514,577.5911	556,809.2834	57.30	BOP
5	514,596.5212	556,819.5277	57.30	BOP
6	514,588.6650	556,837.8308	57.30	BOP
7	514,413.1066	556,780.6526	57.30	BOP
8	514,411.1588	556,762.5099	57.30	BOP
9	514,494.3786	556,713.8883	57.30	BOP
10	514,509.4791	556,715.1377	57.30	BOP
11	514,744.5362	556,887.6409	60.50	BOF
12	514,746.8348	556,889.2649	60.50	BOF
13	514,755.4264	556,894.6083	60.50	BOF
14	514,747.0483	556,912.6084	60.50	BOF

GRADING CONTROL POINTS

	NORTHING	EASTING	ELEVATION	NOTE
15	514,718.4715	556,903.3011	60.50	BOF
16	514,711.9185	556,896.4161	60.50	BOF
17	514,715.0297	556,877.8540	60.50	BOF
18	514,729.5358	556,875.6654	60.50	BOF
19	514,338.1038	556,734.5268	61.00	BOT
20	514,331.5789	556,740.6000	61.29	BOS
21	514,328.4636	556,765.6137	61.37	BOS
22	514,371.4024	556,831.7264	61.64	BOS
23	514,420.5306	556,846.6480	61.80	BOS
24	514,480.0283	556,867.1318	62.00	BOS
25	514,668.5341	556,931.9911	63.00	BOS
26	514,798.8030	556,971.2582	63.99	BOS
27	514,811.9574	556,986.8921	64.10	BOS

SW-29

DELAWARE DEPARTMENT OF TRANSPORTATION

ADDENDUMS / REVISIONS

SCALE 0 30 60 90 FEET

US 301 MARYLAND STATE LINE TO LEVELS ROAD

CONTRACT	BRIDGE NO.	
T200811301	DESIGNED BY:	DSM/ACF
COUNTY		
NEW CASTLE	CHECKED BY:	JZS

DETAILS FOR SWM POND BMP NO. 604

SHEET NO. 366 TOTAL SHTS. 850

E:\2814 DEL ROUTE 301\001,3,4,5,6 (DESIGN)\CAD\SB_301AET_000_STR.DGN

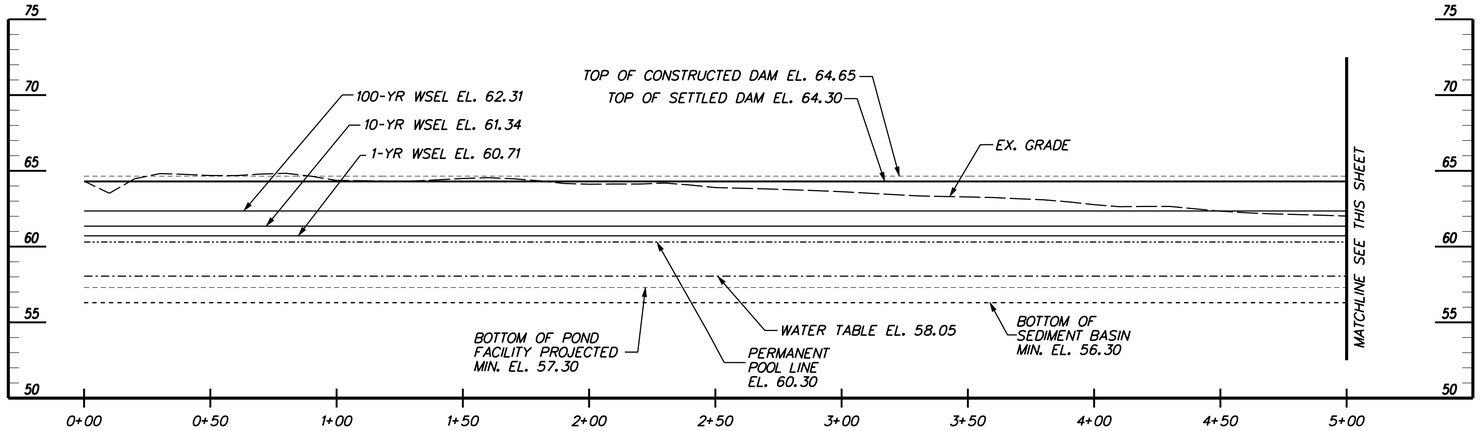

PROFILE ALONG ℄ OF EMBANKMENT

SCALE: HORIZ. 1"=30'
VERT. 1"=5'

POND MAINTENANCE ACCESS	
6" TOPSOIL, PERM. SEEDING	
6" DELAWARE NO. 3 STONE	

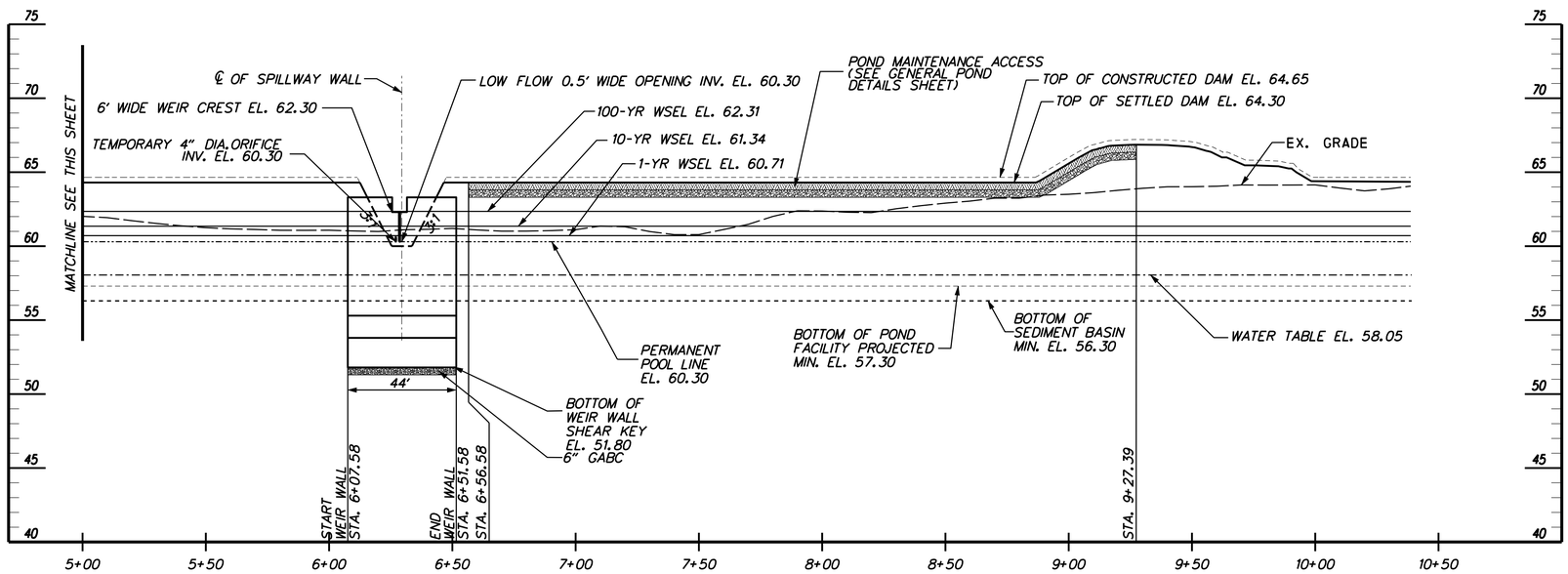

PROFILE ALONG ℄ OF EMBANKMENT

SCALE: HORIZ. 1"=30'
VERT. 1"=5'

DETAILS – STORMWATER MANAGEMENT POND – BMP NO. 604 – (STA. 127+00 N)

SW-30

DELAWARE DEPARTMENT OF TRANSPORTATION	ADDENDUMS / REVISIONS	SCALE: AS SHOWN	US 301 MARYLAND STATE LINE TO LEVELS ROAD	CONTRACT T200811301	BRIDGE NO.	DETAILS FOR SWM POND BMP NO. 604	SHEET NO. 367
				COUNTY NEW CASTLE	DESIGNED BY: DSM/ACF		TOTAL SHTS. 850
					CHECKED BY: JZS		

E:\2814 DEL ROUTE 301\001,3,4,5,6 (DESIGN)\CAD\SB_301AET_000_STR.DGN

POND MAINTENANCE ACCESS	
6" TOPSOIL, PERM. SEEDING	
6" DELAWARE NO. 3 STONE	

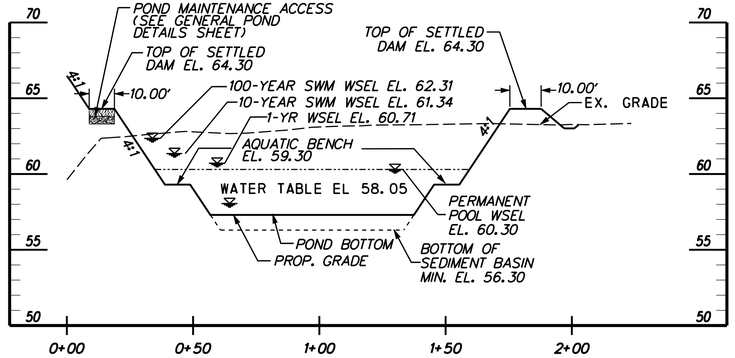

CROSS SECTION A-A

SCALE: HORIZ. 1"=30'
VERT. 1"=5'

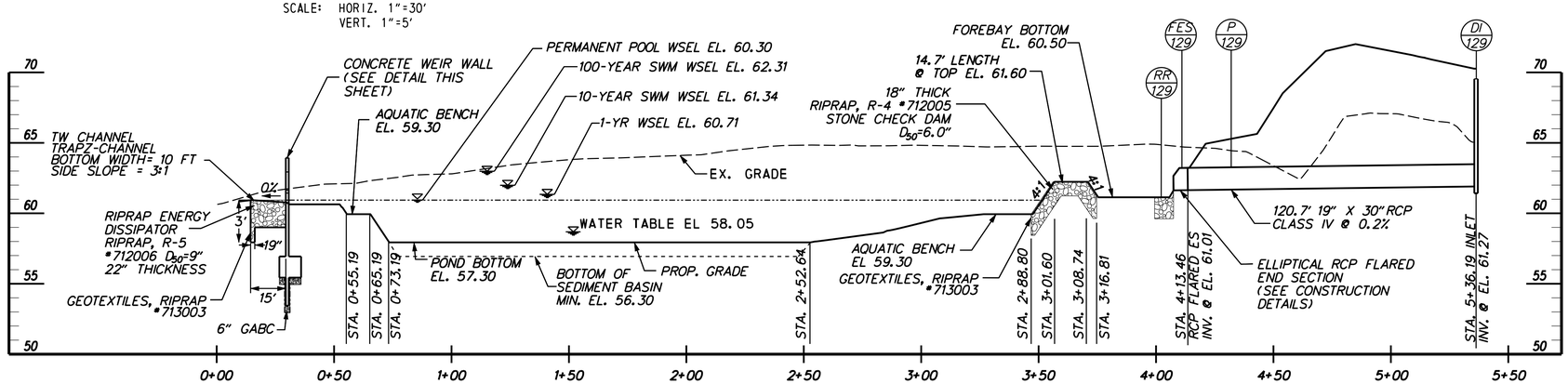

CROSS SECTION B-B

SCALE: HORIZ. 1"=30'
VERT. 1"=5'

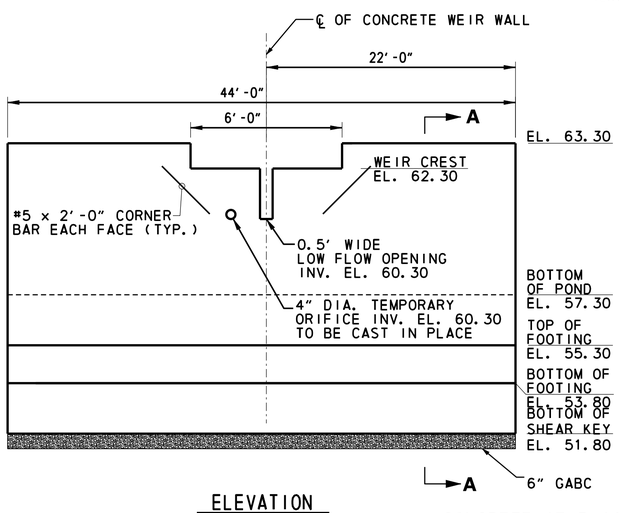

ELEVATION

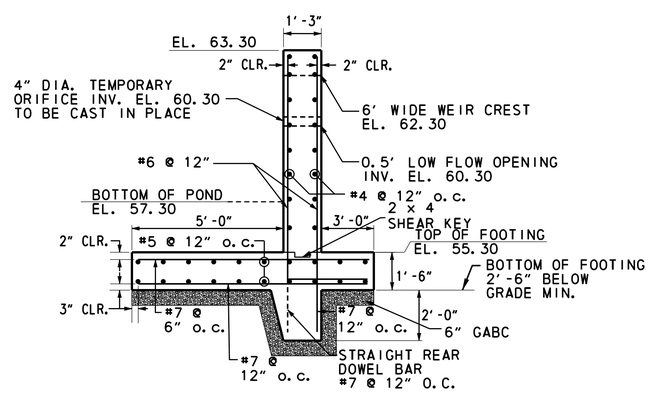

SECTION A-A

CONCRETE WEIR WALL DETAIL

NOT TO SCALE

• ALTERNATE HOOKED BARS W/STRAIGHT BARS

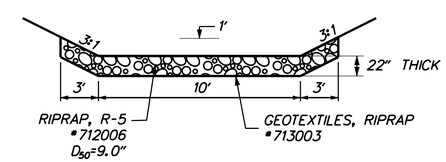

RIPRAP ENERGY DISSIPATOR
CROSS SECTION C-C

NOT TO SCALE

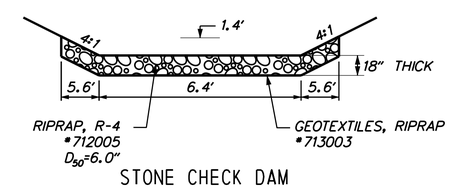

STONE CHECK DAM
CROSS SECTION D-D

NOT TO SCALE

DETAILS – STORMWATER MANAGEMENT POND – BMP NO. 604 – (STA. 127+00 N)

SW-31

DELAWARE DEPARTMENT OF TRANSPORTATION	ADDENDUMS / REVISIONS	SCALE: AS SHOWN	US 301 MARYLAND STATE LINE TO LEVELS ROAD	CONTRACT T200811301	BRIDGE NO.	DETAILS FOR SWM POND – BMP NO. 604	SHEET NO. 368
				COUNTY NEW CASTLE	DESIGNED BY: DSM/ACF		TOTAL SHTS. 850
					CHECKED BY: JZS		

E:\2814 DEL ROUTE 301\001,3,4,5,6 (DESIGN)\CAD\SB_301AET_000_STR.DGN

LEGEND	
EXISTING CONTOUR	— — 68 — —
PROPOSED CONTOUR	——65——
POND MAINTENANCE ACCESS	
STATE LINE	

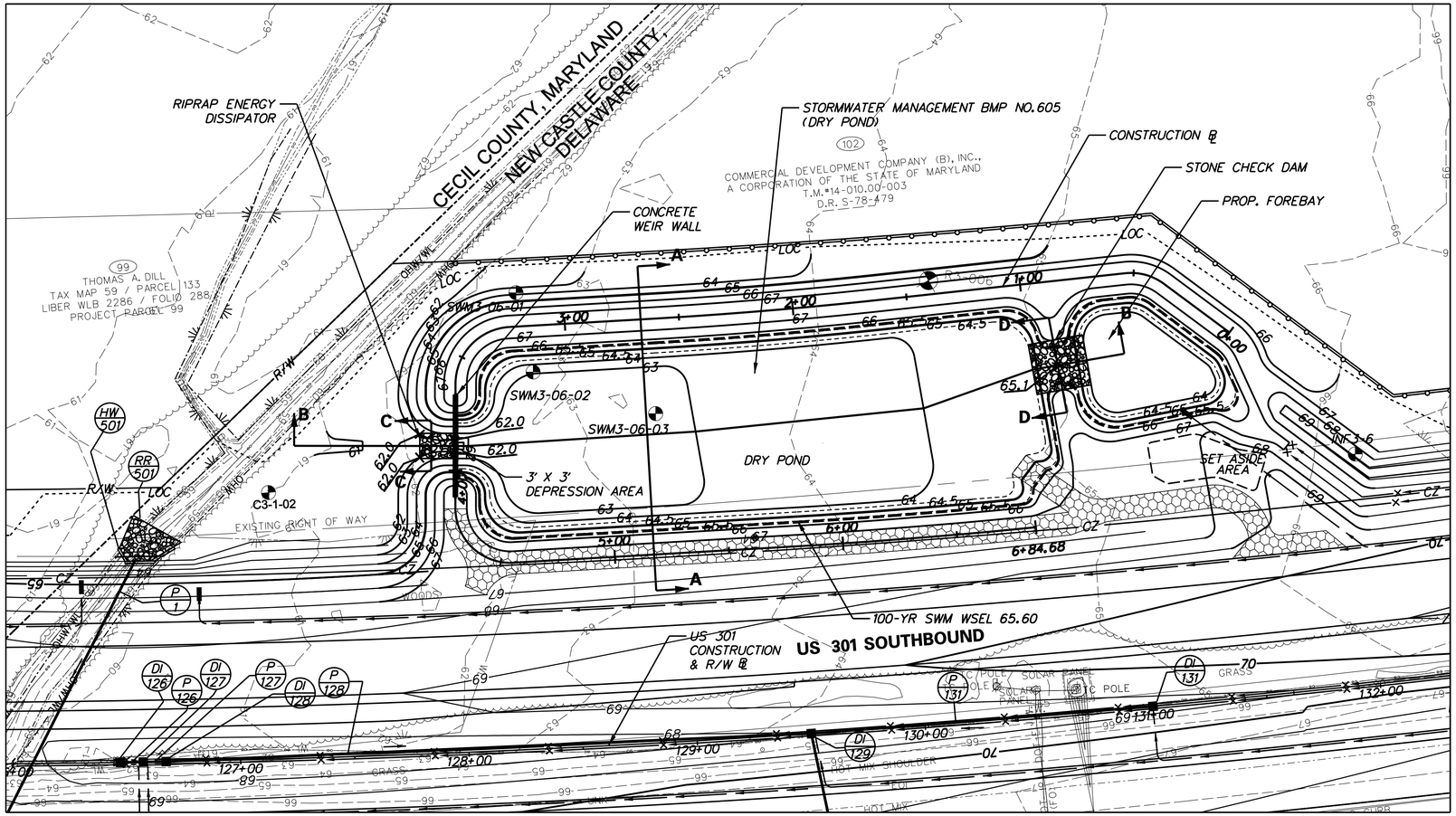

PLAN – STORMWATER MANAGEMENT POND – BMP NO. 605 – (STA. 127+00 S) (US 301 STA. 127+73 TO STA. 131+66), TYPE: DRY POND

NOTE: SEE SHEETS SW-33 TO SW-35 FOR STORMWATER MANAGEMENT POND BMP NO. 605 DETAILS.

FACILITY DESIGN SUMMARY FOR STORMWATER MANAGEMENT POND NO. 605				
DESIGN STORM	FACILITY INFLOW (CFS)	FACILITY DISCHARGE (CFS)	WATER SURFACE ELEVATION (FT.)	STORAGE VOLUME (AC. FT.)
1-YEAR	1.69	0.41	63.03	0.051
10-YEAR	5.42	1.25	63.61	0.181
100-YEAR	11.94	3.62	65.60	1.025

HAZARD CLASSIFICATION: CLASS 'A' AS PER POND CODE 378
DRAINAGE AREA TO FACILITY 2.339 ACRES
MANAGEMENT PROVIDED BY FACILITY: WATER QUANTITY FOR 10-YEAR AND 100-YEAR STORMS.

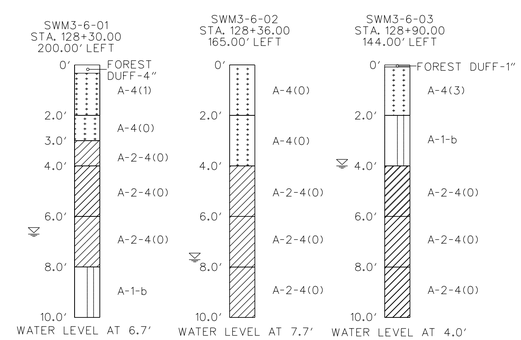

SW-32

DELAWARE DEPARTMENT OF TRANSPORTATION	ADDENDUMS / REVISIONS	SCALE 0 30 60 90 FEET	US 301 MARYLAND STATE LINE TO LEVELS ROAD	CONTRACT T200811301	BRIDGE NO.	STORMWATER MANAGEMENT PLAN	SHEET NO. 369
				COUNTY NEW CASTLE	DESIGNED BY: DSM/ACF		TOTAL SHTS. 850
					CHECKED BY: JZS		

E:\2814 DEL ROUTE 301\001,3,4,5,6 (DESIGN)\CAD\SB_301AET_000_STR.DGN

POND CONSTRUCTION SEQUENCE AND NOTES

THE STORMWATER MANAGEMENT POND SHALL FUNCTION AS A SEDIMENT BASIN DURING ROADWAY CONSTRUCTION AND SHALL BE CONSTRUCTED IN ACCORDANCE WITH THE FOLLOWING SECTIONS OF THE STANDARD SPECIFICATIONS:

SECTION 910 STORMWATER MANAGEMENT FACILITIES
- STORMWATER MANAGEMENT POND
- POND OUTLET STRUCTURE, CONCRETE
- CLAY BORROW

1. INSTALL STABILIZED CONSTRUCTION ENTRANCE.

2. CLEAR AND GRUB FOR INSTALLATION OF PERIMETER EROSION AND SEDIMENT CONTROLS.

3. INSTALL PERIMETER SEDIMENT CONTROLS AS SHOWN ON EROSION AND SEDIMENT CONTROL SHEETS.

4. CLEAR AND GRUB REMAINING AREA FOR POND CONSTRUCTION.

5. CONSTRUCT POND OUTLET STRUCTURE, RIPRAP ENERGY DISSIPATOR AT END OF PRINCIPAL SPILLWAY AND PARTIAL EMBANKMENT AS NEEDED TO INSTALL POND OUTLET STUCTURE. INSTALLPOND OUTLET STRUCTURE. INSTALL SKIMMER DEWATERING DEVICE. DE-WATER FOUNDATION AS NEEDED IN ACCORDANCE WITH SECTION 111 AND USE SUMP PIT FOR PUMPING. (SEE EROSION AND SEDIMENT CONTROLS FOR SKIMMER DEWATERING DEVICE INSTALLATION).

6. EXCAVATE THE POND AND COMPLETE THE EMBANKMENT TO LINES, GRADES AND DETAILS SHOWN IN THE CONSTRUCTION PLANS. DURING EXCAVATION, THE CONTRACTOR SHALL SALVAGE AND STOCKPILE SOILS TO BE USED TO CONSTRUCT EMBANKMENT. THE SOILS REQUIRED FOR THE EMBANKMENT MAY BE OBTAINED FROM ELSEWHERE WITHIN THE PROJECT LIMITS. OVEREXCAVATE POND BOTTOM TO ELEVATION 60.65 AS SHOWN FOR SEDIMENT STORAGE DURING CONSTRUCTION.

7. STABILIZE ALL BARE AREAS.

NOTE: SEE CONSTRUCTION SEQUENCE PLANS FOR LOCATION OF EROSION AND SEDIMENT CONTROL MEASURES.

MAINTENANCE OF POND AS A SEDIMENT BASIN

1. CONTRACTOR SHALL INSPECT THE BASIN IMMEDIATELY AFTER EVERY RAIN AND MAKE REPAIRS AS NEEDED.

2. CONTRACTOR SHALL CLEARLY MARK THE CLEANOUT ELEVATION ON A STAKE DRIVEN INTO THE GROUND AT A LOCATION CLEARLY VISIBLE FROM THE EMBANKMENT. SEDIMENT SHALL BE REMOVED WHEN CLEANOUT ELEVATION IS REACHED AND DISPOSED OF AT A LOCATION APPROVED BY THE ENGINEER.

CONVERSION TO PERMANENT STORMWATER MANAGEMENT POND

1. CONVERT THE BASIN INTO THE PERMANENT STORMWATER MANAGEMENT POND AND GROUT TEMPORARY 4" DIA. ORIFICE AT EL. 62.00 AFTER ALL AREAS DRAINING TO THE POND HAVE BEEN PERMANENTLY STABILIZED AND THE ENGINEER HAS APPROVED THE CONVERSION.

2. REMOVE ACCUMULATED SEDIMENT TO ELEVATION 62.00 AND DISPOSE SEDIMENT AT A LOCATION APPROVED BY THE ENGINEER.

3. COMPLETE STABILIZATION OF ALL BARE AREAS. REMOVE EROSION AND SEDIMENT CONTROL MEASURES AND DEACTIVATE SKIMMER DEWATER DEVICE.

AS-BUILT DRAWINGS OF STORMWATER MANAGEMENT FACILITIES

THE CONTRACTOR SHALL PROVIDE 'AS-BUILT' DRAWINGS OF ALL STORMWATER MANAGEMENT FACILITIES, SUCH AS PONDS, INFILTRATION BASINS, BIOFILTRATION SWALES, ETC. 'AS-BUILT' DRAWINGS SHALL SHOW THE ACTUAL FINISH GROUND CONTOURS, OUTLET STRUCTURES DIMENSIONS AND ELEVATIONS, ETC. AS THEY EXIST AT THE COMPLETION OF THE PROJECT. THESE DRAWINGS SHALL BE SIGNED AND SEALED BY A PROFESSIONAL ENGINEER OR LAND SURVEYOR.

ITEM 712005, RIPRAP, R-4

STATION/OFFSET	AREA
STA 130+61, 151.5' LT. TO STA 130+85, 153.7' LT.	60 SY

ITEM 712006, RIPRAP, R-5

STATION/OFFSET	AREA
STA 127+84, 134.8' LT. TO STA 127+99, 134.2' LT.	19 SY

ITEM 302011, DELAWARE NO. 3 STONE

STATION/OFFSET	WEIGHT
STA 128+01, 86.6' LT. TO STA 131+88, 65.0' LT.	117 TON

ITEM 713003, GEOTEXTILES, RIPRAP

STATION/OFFSET	AREA
STA 130+61, 151.5' LT. TO STA 130+85, 153.7' LT.	70 SY
STA 127+84, 134.8' LT. TO STA 127+99, 134.2' LT.	25 SY

ITEM 713002, GEOTEXTILES, SEPARATION

STATION/OFFSET	AREA
STA 128+01, 86.6' LT. TO STA 131+88, 65.0' LT.	615 SY

ITEM 910007, OUTLET STRUCTURE

ITEM	QUANTITY
CONCRETE WEIR WALL	1 EA

TEMPORARY SEDIMENT BASIN DETAILS

SKIMMER ORIFICE SIZE (IN)	SKIMMER INVERT	CLEANOUT ELEVATION	*EMERGENCY SPILLWAY ELEVATION
4	62.00	63.50	64.00

* BLOCK OUTLET STRUCTURE TO THIS ELEVATION IN TEMPORARY CONDITIONS

NOTES - STORMWATER MANAGEMENT POND - BMP NO. 605 - (STA. 127+00 S)

SW-33

DELAWARE DEPARTMENT OF TRANSPORTATION

ADDENDUMS / REVISIONS

US 301 MARYLAND STATE LINE TO LEVELS ROAD

CONTRACT	BRIDGE NO.	
T200811301	DESIGNED BY:	DSM/ACF
COUNTY		
NEW CASTLE	CHECKED BY:	JZS

STORMWATER MANAGEMENT PLAN

SHEET NO. 370

TOTAL SHTS. 850

E:\2814 DEL ROUTE 301\001,3,4,5,6 (DESIGN)\CAD\SB_301AET_000_STR.DGN

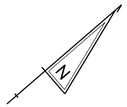

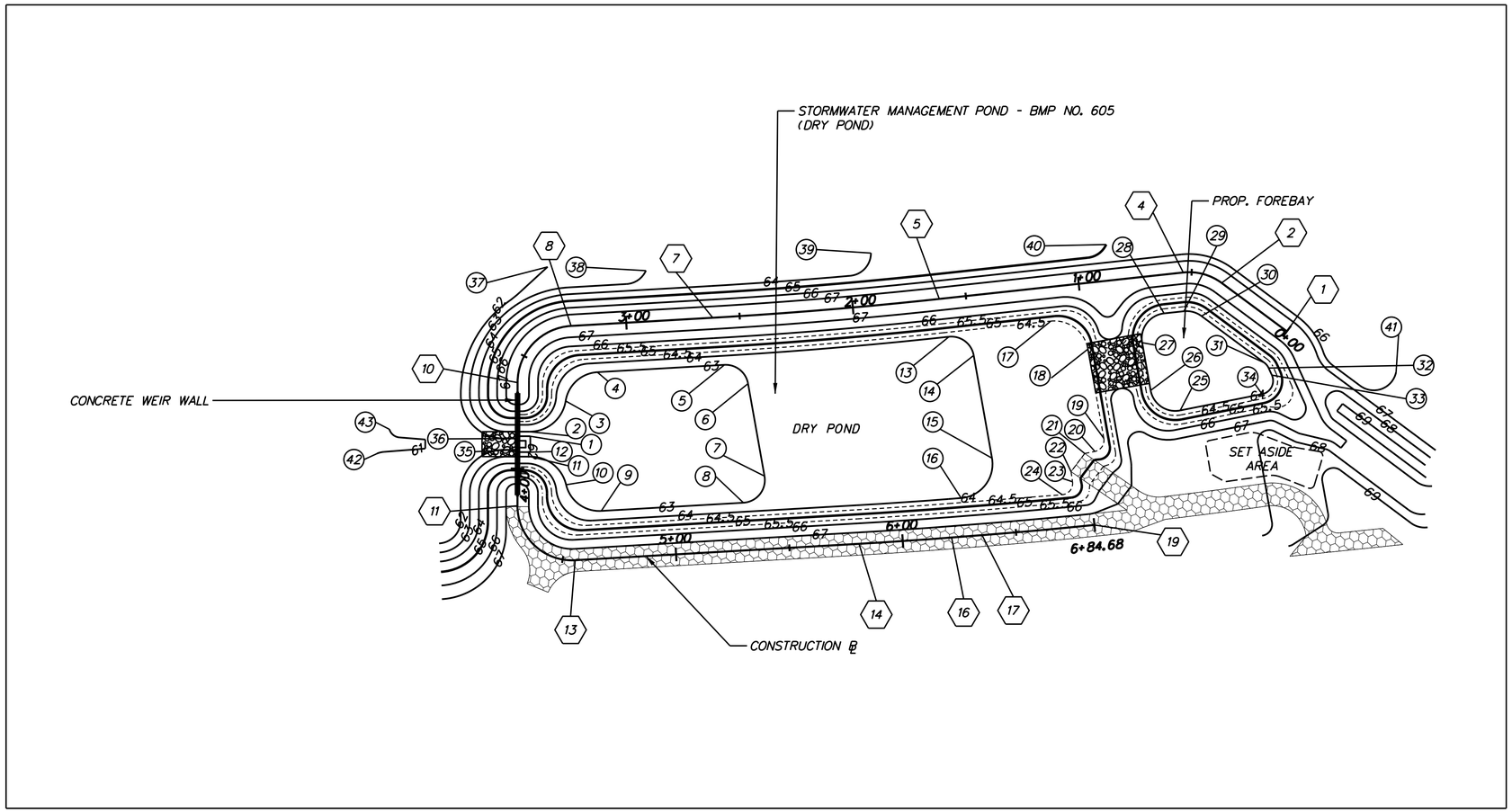

LEGEND

PROPOSED CONTOUR	65
POND MAINTENANCE ACCESS	
BASELINE OF CONSTRUCTION CONTROL COORDINATES	8
GRADING CONTROL POINTS	8
BOTTOM OF POND	BOP
BOTTOM OF FOREBAY	BOF
BOTTOM OF TOE	BOT

PLAN – STORMWATER MANAGEMENT POND – BMP NO. 605 – (STA. 127+00 S)

BASELINE OF CONSTRUCTION CONTROL COORDINATES

		STATION	NORTHING	EASTING
1	POB	STA. 0+00.00	515,053.1506	556,753.7753
2	PC	STA. 0+35.80	515,045.3538	556,718.8348
	PI	STA. 0+45.20	515,043.3070	556,709.6620
4	PT	STA. 0+53.72	515,035.5755	556,704.3184
5	PC	STA. 1+61.75	514,946.6996	556,642.8917
	PI	STA. 2+11.81	514,905.5236	556,614.4328
7	PT	STA. 2+61.84	514,865.8296	556,583.9408
8	PC	STA. 3+24.33	514,816.2741	556,545.8735
	PI	STA. 3+47.90	514,797.5793	556,531.5126
10	PI	STA. 3+62.13	514,782.1464	556,549.3328
11	PC	STA. 4+16.38	514,746.6340	556,590.3386
	PI	STA. 4+41.83	514,729.9718	556,609.5983
13	PT	STA. 4+55.48	514,750.1558	556,625.0831
14	PC	STA. 5+80.70	514,849.4544	556,701.3618
	PI	STA. 6+01.12	514,865.6457	556,713.7996
16	PT	STA. 6+21.53	514,882.0864	556,725.9057
17	PC	STA. 6+34.99	514,892.9223	556,733.8847
	PI	STA. 6+59.83	514,912.9294	556,748.6169
19	POE	STA. 6+84.68	514,933.2965	556,762.8473

GRADING CONTROL POINTS

	NORTHING	EASTING	ELEVATION	NOTE
1	514,770.9336	556,570.8724	62.00	BOP
2	514,772.0471	556,569.1910	63.00	BOP
3	514,792.8688	556,569.3002	63.00	BOP
4	514,811.7070	556,568.8459	63.00	BOP
5	514,856.1251	556,602.9668	63.00	BOP
6	514,858.6275	556,616.0097	63.00	BOP
7	514,837.4698	556,651.5756	63.00	BOP
8	514,822.7837	556,654.3933	63.00	BOP
9	514,773.0406	556,616.1819	63.00	BOP
10	514,768.8912	556,597.3259	63.00	BOP
11	514,765.1926	556,577.8065	63.00	BOP
12	514,766.3510	556,576.1639	62.00	BOP
13	514,939.0149	556,658.2456	64.00	BOP
14	514,941.9235	556,671.5846	64.00	BOP
15	514,918.4188	556,711.0959	64.00	BOP
16	514,896.6332	556,715.5057	64.00	BOP
17	514,977.4251	556,682.3617	64.50	BOP
18	514,981.7880	556,702.3701	64.50	BOP
19	514,961.3676	556,736.6967	64.50	BOP
20	514,954.6160	556,738.4966	64.50	BOP
21	514,950.6463	556,736.2599	64.50	BOP
22	514,940.8617	556,738.3674	64.50	BOP
23	514,938.4530	556,742.1524	64.50	BOP

GRADING CONTROL POINTS

	NORTHING	EASTING	ELEVATION	NOTE
24	514,931.2700	556,743.4941	64.50	BOP
25	514,994.8086	556,749.3813	64.00	BOF
26	514,990.7840	556,734.1906	64.00	BOF
27	515,001.6953	556,715.8489	64.00	BOF
28	515,017.4032	556,712.4238	64.00	BOF
29	515,024.6213	556,717.4126	64.00	BOF
30	515,029.1030	556,724.0660	64.00	BOF
31	515,036.6146	556,757.7287	64.00	BOF
32	515,036.5186	556,760.7154	64.00	BOF
33	515,035.5556	556,764.0173	64.00	BOF
34	515,026.8343	556,767.5556	64.00	BOF
35	514,762.2811	556,571.3164	62.00	BOT
36	514,765.5544	556,567.5367	62.00	BOT
37	514,825.4779	556,519.4245	62.00	BOT
38	514,857.1351	556,548.9872	63.00	BOT
39	514,937.1491	556,607.9182	64.00	BOT
40	515,017.9910	556,672.8064	65.00	BOT
41	515,077.6822	556,798.8701	66.00	BOT
42	514,714.8121	556,532.4892	61.00	BOT
43	514,725.9962	556,527.9749	61.00	BOT

NOTES:

1. THE SLOPED PORTION OF THE EMBANKMENT SHALL RECEIVE TOPSOILING, 6" DEPTH (ITEM 908010).
2. THE ENTIRE POND SHALL RECEIVE PERMANENT GRASS SEEDING - DRY GROUND (ITEM 908014).
3. DRY GROUND SEEDING AREA = 4,089 SY.

SW-34

DELAWARE DEPARTMENT OF TRANSPORTATION

ADDENDUMS / REVISIONS

SCALE 0 30 60 90 FEET

US 301 MARYLAND STATE LINE TO LEVELS ROAD

CONTRACT	BRIDGE NO.	
T200811301	DESIGNED BY:	DSM/ACF
COUNTY	CHECKED BY:	JZS
NEW CASTLE		

DETAILS FOR SWM POND BMP NO. 605

SHEET NO. 371 TOTAL SHTS. 850

E:\2814 DEL ROUTE 301\001,3,4,5,6 (DESIGN)\CAD\SB_301AET_000_STR.DGN

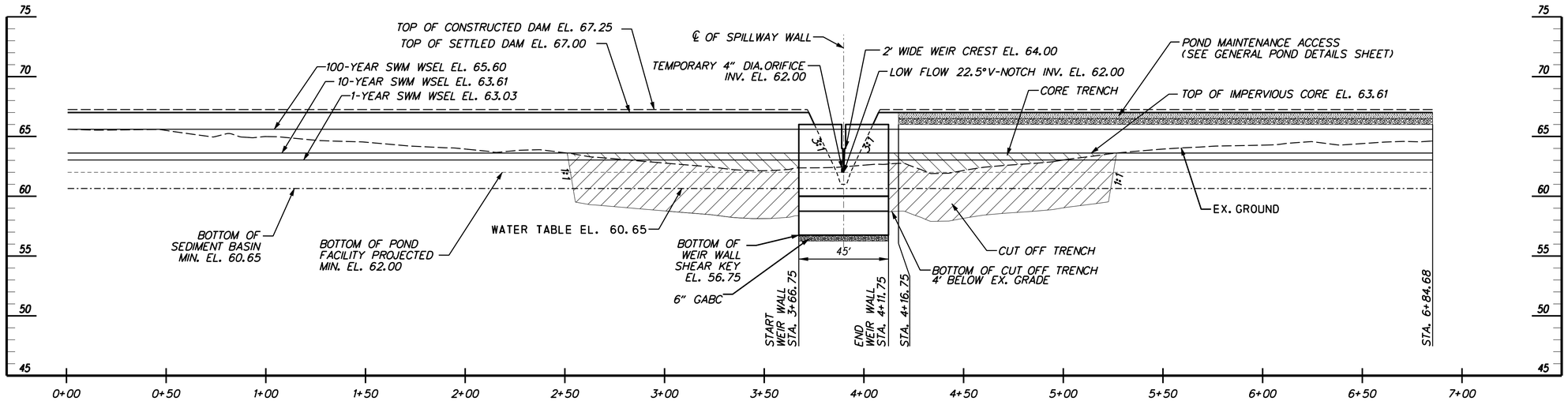

POND MAINTENANCE ACCESS

- 6" TOPSOIL, PERM. SEEDING
- 6" DELAWARE NO. 3 STONE

PROFILE ALONG ℄ OF EMBANKMENT

SCALE: HORIZ. 1"=30'
VERT. 1"=5'

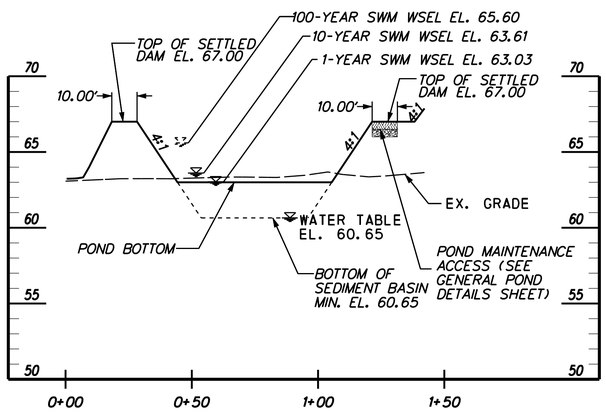

CROSS SECTION A-A

SCALE: HORIZ. 1"=30'
VERT. 1"=5'

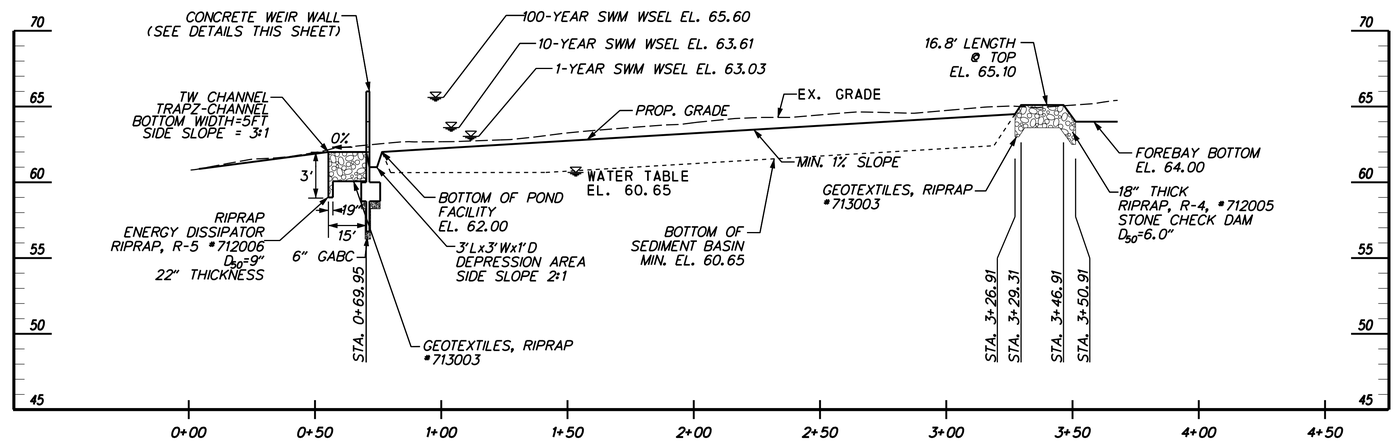

CROSS SECTION B-B

SCALE: HORIZ. 1"=30'
VERT. 1"=5'

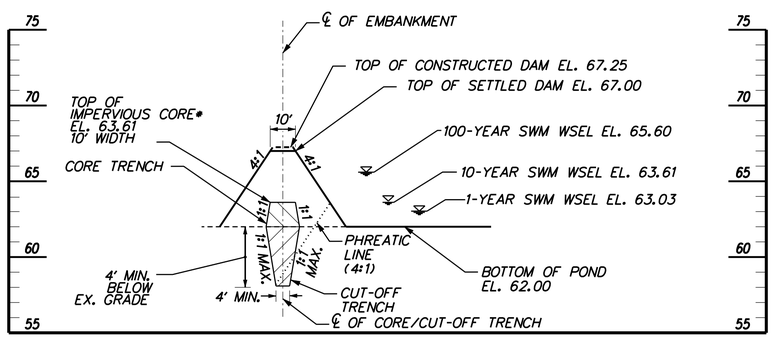

* SEE GENERAL POND DETAILS SHEET FOR TYPICAL CORE/CUT-OFF TRENCH DETAIL.

TYPICAL EMBANKMENT CROSS SECTION

SCALE: HORIZ. 1"=30'
VERT. 1"=5'

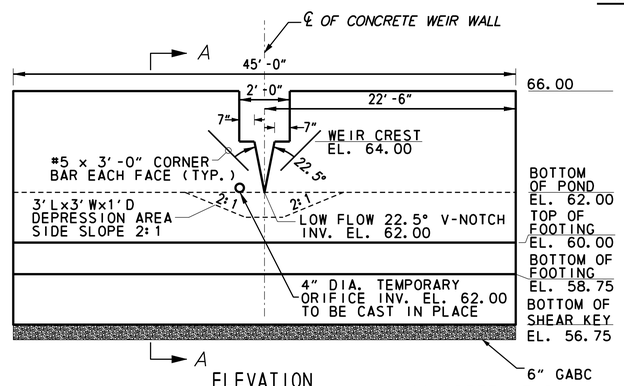

ELEVATION

CONCRETE WEIR WALL DETAIL

NOT TO SCALE

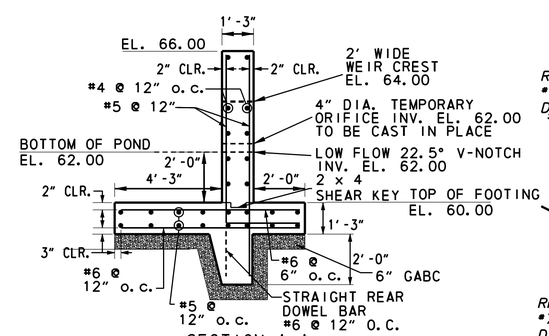

SECTION A-A

*ALTERNATE HOOKED BARS W/STRAIGHT BARS

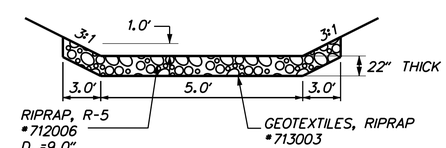

CROSS-SECTION C-C

NOT TO SCALE

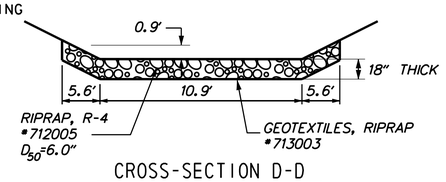

CROSS-SECTION D-D

NOT TO SCALE

DETAILS – STORMWATER MANAGEMENT POND – BMP NO. 605 – (STA. 127+00 S)

SW-35

DELAWARE DEPARTMENT OF TRANSPORTATION	ADDENDUMS / REVISIONS	SCALE: AS SHOWN	US 301 MARYLAND STATE LINE TO LEVELS ROAD	CONTRACT T200811301	BRIDGE NO.	DETAILS FOR SWM POND BMP NO. 605	SHEET NO. 372
				COUNTY NEW CASTLE	DESIGNED BY: DSM/ACF		TOTAL SHTS. 850
					CHECKED BY: JZS		

E:\2814 DEL ROUTE 301\001,3,4,5,6 (DESIGN)\CAD\SB_301AET_000_STR.DGN

LEGEND	
EXISTING CONTOUR	68
PROPOSED CONTOUR	65
POND MAINTENANCE ACCESS	
STATE LINE	

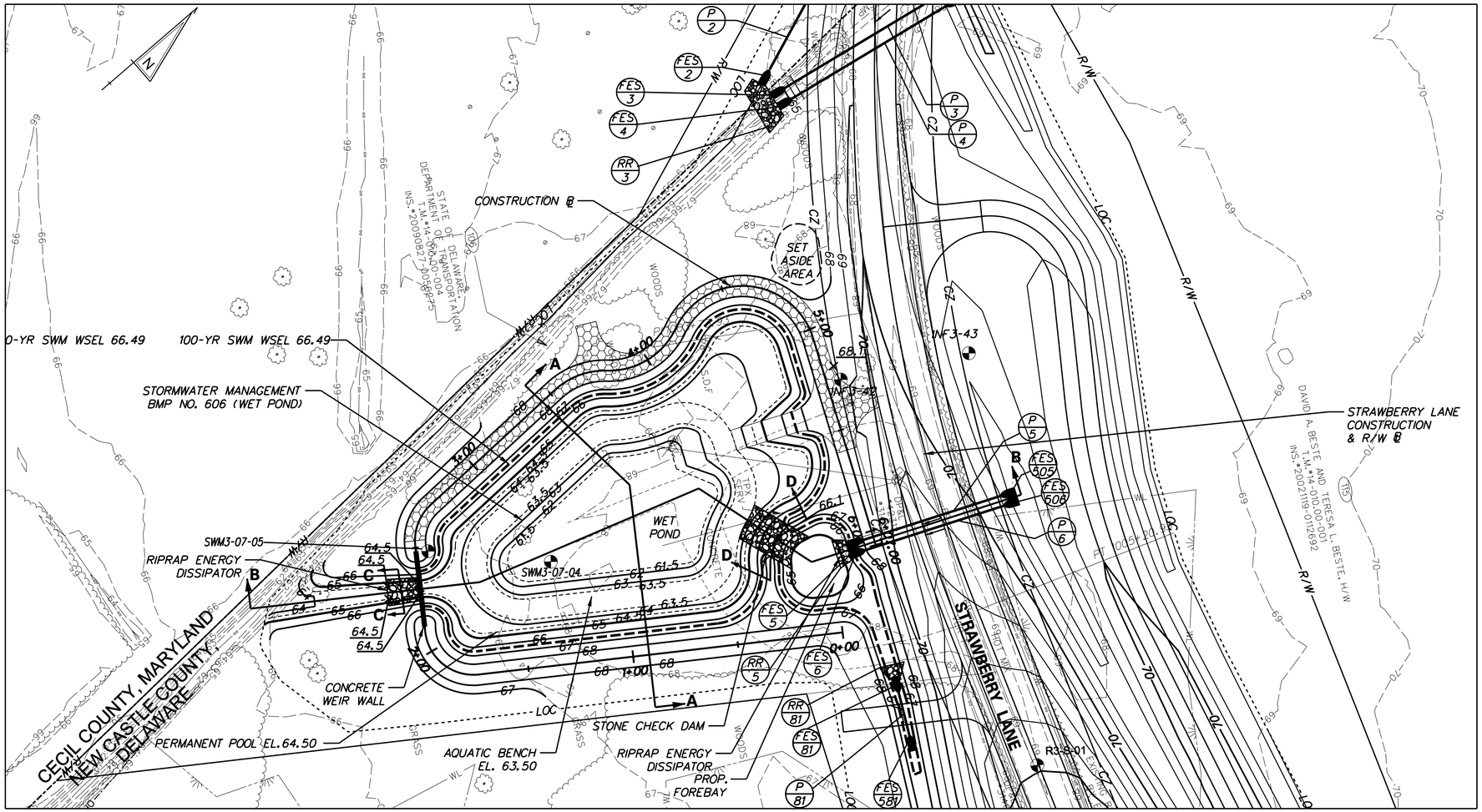

PLAN – STORMWATER MANAGEMENT POND – BMP NO. 606 – (STA. 1005+00 W) (STRAWBERRY LANE STA. 1003+48 TO STA. 1005+08), TYPE: WET POND

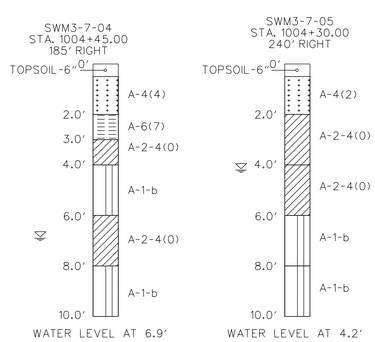

NOTE: SEE SHEETS SW-37 TO SW-39 FOR STORMWATER MANAGEMENT POND BMP NO. 606 DETAILS.

FACILITY DESIGN SUMMARY FOR STORMWATER MANAGEMENT POND NO. 606				
DESIGN STORM	FACILITY INFLOW (CFS)	FACILITY DISCHARGE (CFS)	WATER SURFACE ELEVATION (FT.)	STORAGE VOLUME (AC. FT.)
1-YEAR	2.76	0.22	65.10	0.213
10-YEAR	8.21	1.58	65.82	0.502
100-YEAR	17.51	8.11	66.49	0.811

HAZARD CLASSIFICATION : CLASS 'A' PER POND 378
PERMANENT POOL VOLUME: 0.519 AC-FT.
DRAINAGE AREA TO FACILITY: 4.669 ACRES
MANAGEMENT PROVIDED BY FACILITY: WATER QUALITY BY EXTENDED DETENTION FOR 1-YR STORM, WATER QUANTITY FOR 10 AND 100-YEAR STORMS.

SW-36

DELAWARE DEPARTMENT OF TRANSPORTATION

ADDENDUMS / REVISIONS

SCALE 0 30 60 90 FEET

US 301 MARYLAND STATE LINE TO LEVELS ROAD

CONTRACT	BRIDGE NO.	
T200811301	DESIGNED BY:	DSM/ACF
COUNTY	CHECKED BY:	JZS
NEW CASTLE		

STORMWATER MANAGEMENT PLAN

SHEET NO. 373
TOTAL SHTS. 850

E:\2814 DEL ROUTE 301\001,3,4,5,6 (DESIGN)\CAD\SB_301AET_000_STR.DGN

POND CONSTRUCTION SEQUENCE AND NOTES

THE STORMWATER MANAGEMENT POND SHALL FUNCTION AS A SEDIMENT BASIN DURING ROADWAY CONSTRUCTION AND SHALL BE CONSTRUCTED IN ACCORDANCE WITH THE FOLLOWING SECTIONS OF THE STANDARD SPECIFICATIONS:

SECTION 910 STORMWATER MANAGEMENT FACILITIES
- STORMWATER MANAGEMENT POND
- POND OUTLET STRUCTURE, CONCRETE
- CLAY BORROW

1. INSTALL STABILIZED CONSTRUCTION ENTRANCE.

2. CLEAR AND GRUB FOR INSTALLATION OF PERIMETER EROSION AND SEDIMENT CONTROLS SHEETS.

3. INSTALL PERIMETER SEDIMENT CONTROLS AS SHOWN ON EROSION AND & SEDIMENT CONTROL SHEETS.

4. CLEAR AND GRUB REMAINING AREA FOR POND CONSTRUCTION.

5. CONSTRUCT POND OUTLET STRUCTURE, RIPRAP ENERGY DISSIPATOR AT END OF PRINCIPAL SPILLWAY AND PARTIAL EMBANKMENT AS NEEDED TO INSTALL POND OUTLET STUCTURE. INSTALL POND OUTLET STRUCTURE. INSTALL SKIMMER DEWATERING DEVICE. DE-WATER FOUNDATION AS NEEDED IN ACCORDANCE WITH SECTION 111 AND USE SUMP PIT FOR PUMPING. (SEE E&S DETAILS FOR SKIMMER DEWATERING DEVICE INSTALLATION).

6. EXCAVATE THE POND AND COMPLETE THE EMBANKMENT TO LINES, GRADES AND DETAILS SHOWN IN THE CONSTRUCTION PLANS. DURING EXCAVATION, THE CONTRACTOR SHALL SALVAGE AND STOCKPILE SOILS TO BE USED TO CONSTRUCT EMBANKMENT. THE SOILS REQUIRED FOR THE EMBANKMENT MAY BE OBTAINED FROM ELSEWHERE WITHIN THE PROJECT LIMITS. EXCAVATE POND BOTTOM TO ELEVATION 60.50 AS SHOWN FOR SEDIMENT STORAGE DURING CONSTRUCTION.

7. STABILIZE ALL BARE AREAS.

NOTE: SEE CONSTRUCTION SEQUENCE PLANS FOR LOCATION OF EROSION AND SEDIMENT CONTROL MEASURES.

MAINTENANCE OF POND AS A SEDIMENT BASIN

1. CONTRACTOR SHALL INSPECT THE BASIN IMMEDIATELY AFTER EVERY RAIN AND MAKE REPAIRS AS NEEDED.

2. CONTRACTOR SHALL CLEARLY MARK THE CLEANOUT ELEVATION ON A STAKE DRIVEN INTO THE GROUND AT A LOCATION CLEARLY VISIBLE FROM THE EMBANKMENT. SEDIMENT SHALL BE REMOVED WHEN CLEANOUT ELEVATION IS REACHED AND DISPOSED OF AT A LOCATION APPROVED BY THE ENGINEER.

CONVERSION TO PERMANENT STORMWATER MANAGEMENT POND

1. CONVERT THE BASIN INTO THE PERMANENT STORMWATER MANAGEMENT POND AND GROUT TEMPORARY 4" DIA. ORIFICE AT EL. 64.50 AFTER ALL AREAS DRAINING TO THE POND HAVE BEEN PERMANENTLY STABILIZED AND THE ENGINEER HAS APPROVED THE CONVERSION.

2. REMOVE ACCUMULATED SEDIMENT TO ELEVATION 61.50 AND DISPOSE SEDIMENT AT A LOCATION APPROVED BY THE ENGINEER.

3. COMPLETE STABILIZATION OF ALL BARE AREAS. REMOVE EROSION AND SEDIMENT CONTROL MEASURES AND DEACTIVATE SKIMMER DEWATER DEVICE.

AS-BUILT DRAWINGS OF STORMWATER MANAGEMENT FACILITIES

THE CONTRACTOR SHALL PROVIDE 'AS-BUILT' DRAWINGS OF ALL STORMWATER MANAGEMENT FACILITIES, SUCH AS PONDS, INFILTRATION BASINS, BIOFILTRATION SWALES, ETC. 'AS-BUILT' DRAWINGS SHALL SHOW THE ACTUAL FINISH GROUND CONTOURS, OUTLET STRUCTURES DIMENSIONS AND ELEVATIONS, ETC. AS THEY EXIST AT THE COMPLETION OF THE PROJECT. THESE DRAWINGS SHALL BE SIGNED AND SEALED BY A PROFESSIONAL ENGINEER OR LAND SURVEYOR.

ITEM 712005, RIPRAP, R-4

STATION/OFFSET	AREA
STA 1004+55, 95.9' RT. TO STA 1004+65, 63.9' RT.	53 SY

ITEM 712006, RIPRAP, R-5

STATION/OFFSET	AREA
STA 1004+37, 255.3' RT. TO STA 1004+46, 257.1' RT.	20 SY

ITEM 302011, DELAWARE NO. 3 STONE

STATION/OFFSET	WEIGHT
STA 1004+25, 244.9' RT. TO STA 1003+59, 44.8' RT.	93 TON

ITEM 713003, GEOTEXTILES, RIPRAP

STATION/OFFSET	AREA
STA 1004+55, 95.9' RT. TO STA 1004+65, 63.9' RT.	63 SY
STA 1004+37, 255.3' RT. TO STA 1004+46, 257.1' RT.	27 SY

ITEM 713002, GEOTEXTILES, SEPARATION

STATION/OFFSET	AREA
STA 1004+25, 244.9' RT. TO STA 1003+59, 44.8' RT.	476 SY

ITEM 910007, OUTLET STRUCTURE

ITEM	QUANTITY
CONCRETE WEIR WALL	1 EA

TEMPORARY SEDIMENT BASIN DETAILS

SKIMMER ORIFICE SIZE (IN)	SKIMMER INVERT	CLEANOUT ELEVATION	*EMERGENCY SPILLWAY ELEVATION
4	64.50	65.25	66.00

* ALL OTHER DIMENSIONS IN ACCORDANCE WITH DELDOT STANDARD CONSTRUCTION DETAILS
** BLOCK OUTLET STRUCTURE TO THIS ELEVATION IN TEMPORARY CONDITIONS

NOTES - STORMWATER MANAGEMENT POND - BMP NO. 606 - (STA. 1005+00 W)

SW-37

LEGEND	
PROPOSED CONTOUR	65
POND MAINTENANCE ACCESS	
BASELINE OF CONSTRUCTION CONTROL COORDINATES	8
GRADING CONTROL POINTS	8
BOTTOM OF POND	BOP
BOTTOM OF FOREBAY	BOF
BOTTOM OF TOE	BOT

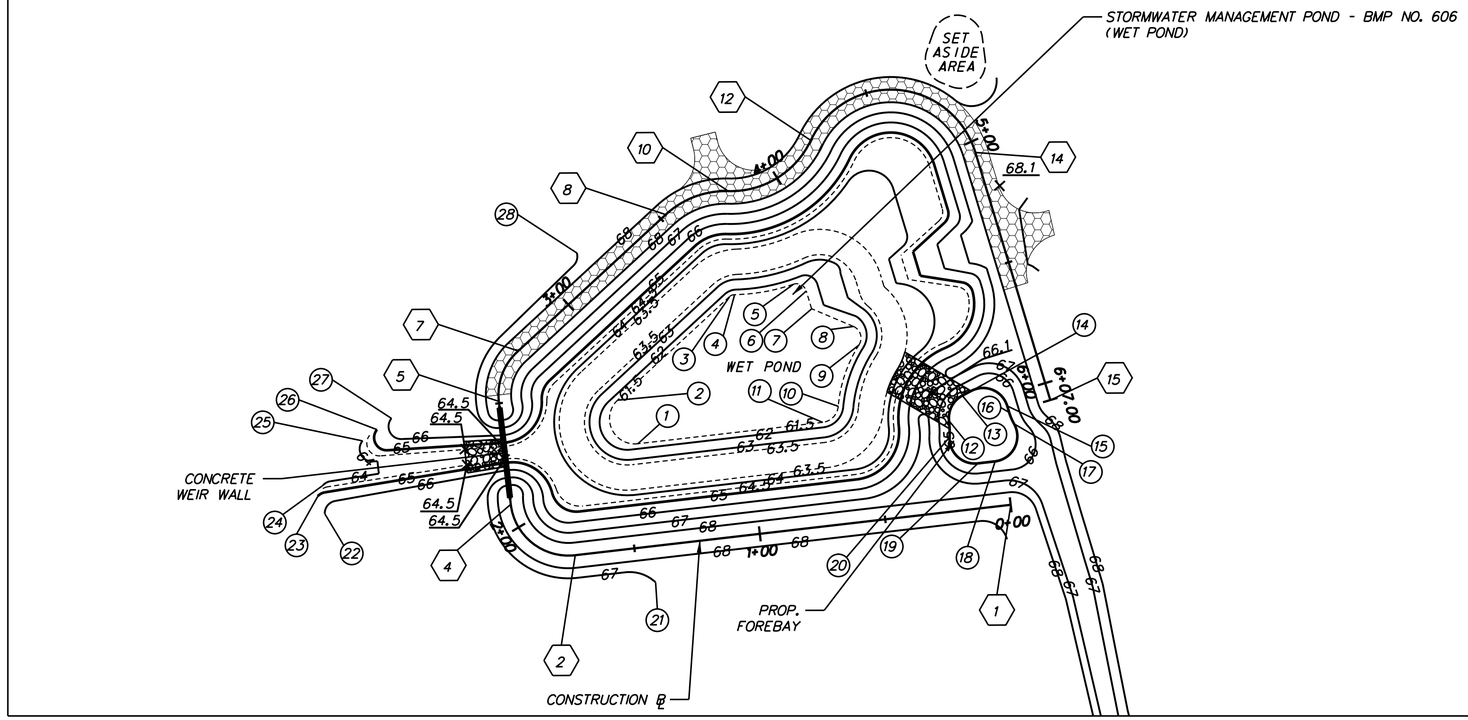

PLAN – STORMWATER MANAGEMENT POND – BMP NO. 606 – (STA. 1005+00 W)

BASELINE OF CONSTRUCTION CONTROL COORDINATES

STATION			NORTHING	EASTING
1	POB	STA. 0+00.00	515,717.7620	556,647.7046
2	PC	STA. 1+73.64	515,574.2107	556,550.0063
	PI	STA. 1+96.64	515,555.1964	556,537.0655
4	PT	STA. 2+09.77	515,568.1372	556,518.0513
5	PC	STA. 2+50.77	515,591.2056	556,484.1566
	PI	STA. 2+62.84	515,597.9964	556,474.1787
7	PT	STA. 2+73.00	515,610.0656	556,474.0979
8	PC	STA. 3+52.56	515,689.5778	556,471.4380
	PI	STA. 3+66.84	515,703.8508	556,470.9605
10	PRC	STA. 3+79.68	515,714.3835	556,480.6044
	PI	STA. 4+02.60	515,731.2914	556,496.0854
12	PRC	STA. 4+20.27	515,752.2387	556,486.7717
	PI	STA. 5+11.38	515,835.4950	556,449.7538
14	PT	STA. 5+04.55	515,798.4320	556,532.9900
15	POE	STA. 6+07.00	515,756.7590	556,626.5791

GRADING CONTROL POINTS

	NORTHING	EASTING	ELEVATION	NOTE
1	515,621.8177	556,532.8121	61.50	BOP
2	515,627.1097	556,514.5506	61.50	BOP
3	515,687.4066	556,512.5336	61.50	BOP
4	515,689.4251	556,513.2252	61.50	BOP
5	515,709.7282	556,525.3285	61.50	BOP
6	515,711.8934	556,530.6682	61.50	BOP
7	515,708.8914	556,537.4100	61.50	BOP
8	515,716.8168	556,553.4953	61.50	BOP
9	515,713.7695	556,560.4940	61.50	BOP
10	515,691.6140	556,573.5359	61.50	BOP
11	515,682.7906	556,574.3091	61.50	BOP
12	515,721.0272	556,606.5920	65.00	BOF
13	515,731.5396	556,602.4676	65.00	BOF
14	515,735.4421	556,603.3653	65.00	BOF
15	515,742.3357	556,617.1785	65.00	BOF

GRADING CONTROL POINTS

	NORTHING	EASTING	ELEVATION	NOTE
16	515,741.2290	556,619.6639	65.00	BOF
17	515,739.7505	556,624.3156	65.00	BOF
18	515,724.3167	556,630.6293	65.00	BOF
19	515,718.6098	556,626.7453	65.00	BOF
20	515,717.0028	556,611.5733	65.00	BOF
21	515,591.2946	556,578.9114	67.00	BOT
22	515,509.9161	556,472.7559	66.00	BOT
23	515,512.3831	556,465.6650	65.00	BOT
24	515,516.8599	556,463.7427	64.00	BOT
25	515,540.1345	556,460.6890	64.00	BOT
26	515,547.3783	556,461.0709	65.00	BOT
27	515,554.6043	556,461.4523	66.00	BOT
28	515,652.9885	556,459.9012	67.00	BOT

NOTES:

1. THE POND, BETWEEN ELEVATIONS 63.5 AND 68.0, INCLUDING THE BENCH AT ELEVATION 63.5 SHALL RECEIVE TOPSOILING, 6" DEPTH (ITEM 908010).
2. THE POND, BETWEEN ELEVATIONS 61.5 AND 65.5, NOT INCLUDING THE POND BOTTOM AND FOREBAY BOTTOM, SHALL RECEIVE PERMANENT GRASS SEEDING - WET GROUND (ITEM 908015).
3. THE REMAINDER OF THE EMBANKMENT AREA ABOVE ELEVATION 65.5 SHALL RECEIVE PERMANENT GRASS SEEDING - DRY GROUND (ITEM 908014).
4. WET GROUND SEEDING AREA = 1,466 SY,
   DRY GROUND SEEDING AREA = 1,946 SY.

SW-38

DELAWARE DEPARTMENT OF TRANSPORTATION

ADDENDUMS / REVISIONS

SCALE 0 30 60 90 FEET

US 301 MARYLAND STATE LINE TO LEVELS ROAD

CONTRACT	BRIDGE NO.	
T200811301	DESIGNED BY:	DSM/ACF
COUNTY	CHECKED BY:	JZS
NEW CASTLE		

DETAILS FOR SWM POND BMP NO. 606

SHEET NO. 375
TOTAL SHTS. 850

E:\2814 DEL ROUTE 301\001,3,4,5,6 (DESIGN)\CAD\SB_301AET_000_STR.DGN

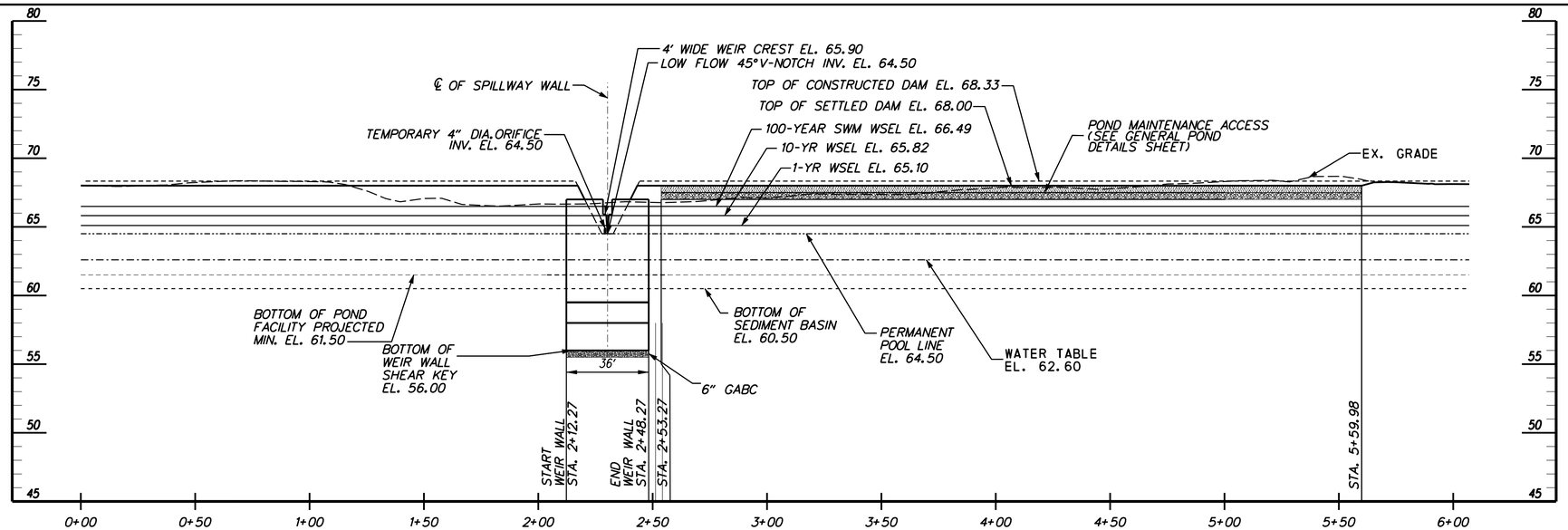

PROFILE ALONG ℄ OF EMBANKMENT

SCALE: HORIZ. 1"=30'
VERT. 1"=5'

POND MAINTENANCE ACCESS

6" TOPSOIL, PERM. SEEDING
6" DELAWARE NO. 3 STONE

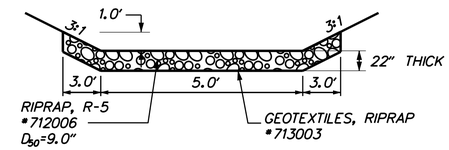

CROSS-SECTION C-C

NOT TO SCALE

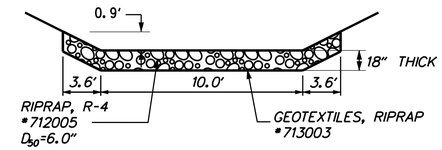

CROSS-SECTION D-D

NOT TO SCALE

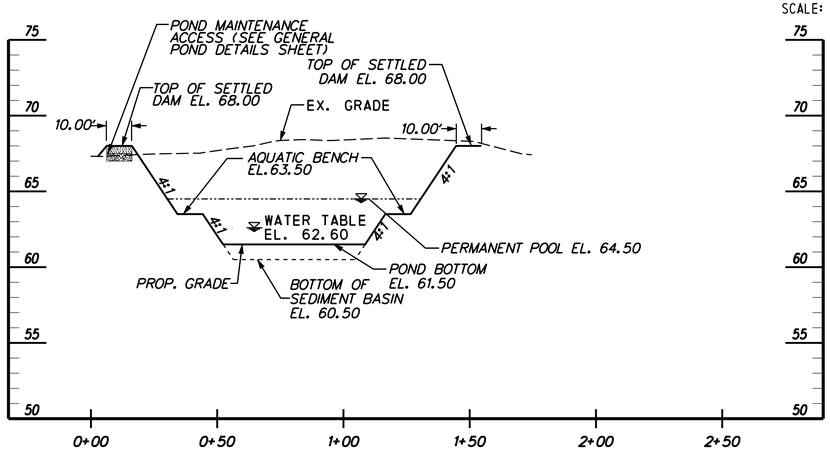

CROSS SECTION A-A

SCALE: HORIZ. 1"=30'
VERT. 1"=5'

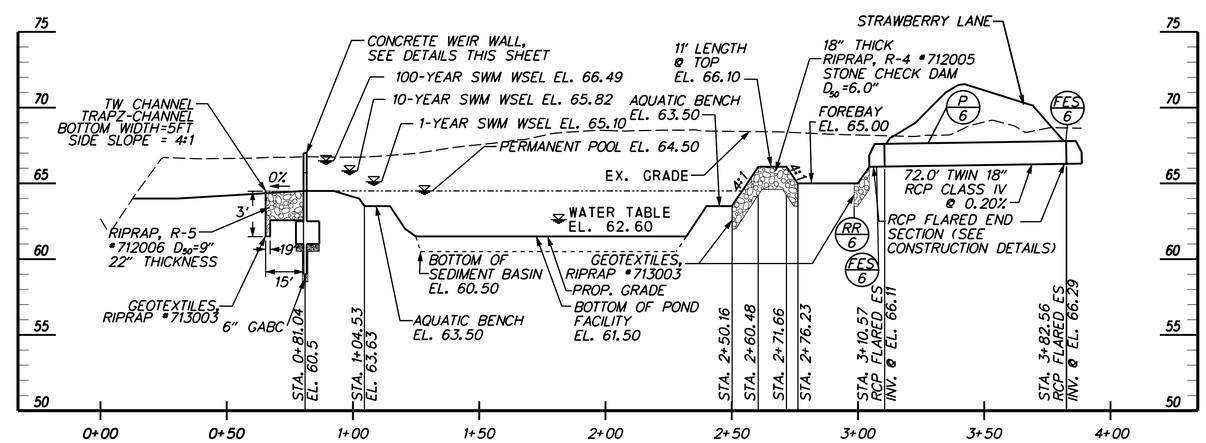

CROSS SECTION B-B

SCALE: HORIZ. 1"=30'
VERT. 1"=5'

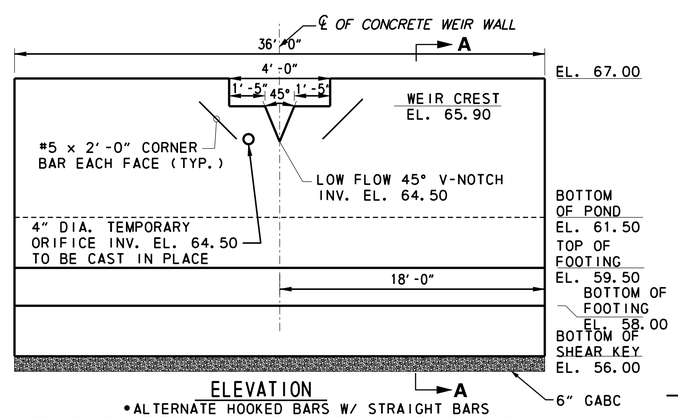

ELEVATION

•ALTERNATE HOOKED BARS W/ STRAIGHT BARS

CONCRETE WEIR WALL DETAIL

NOT TO SCALE

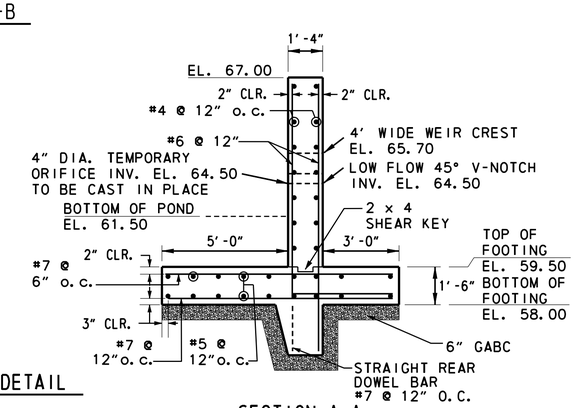

SECTION A-A

DETAILS – STORMWATER MANAGEMENT POND – BMP NO. 606 – (STA. 1005+00 W)

SW-39

DELAWARE DEPARTMENT OF TRANSPORTATION	ADDENDUMS / REVISIONS	SCALE: AS SHOWN	US 301 MARYLAND STATE LINE TO LEVELS ROAD	CONTRACT T200811301 / COUNTY NEW CASTLE	BRIDGE NO. / DESIGNED BY: DSM/ACF / CHECKED BY: JZS	DETAILS FOR SWM POND BMP NO. 606	SHEET NO. 376 / TOTAL SHTS. 850

E:\2814 DEL ROUTE 301\001,3,4,5,6 (DESIGN)\CAD\SB_301AET_000_STR.DGN

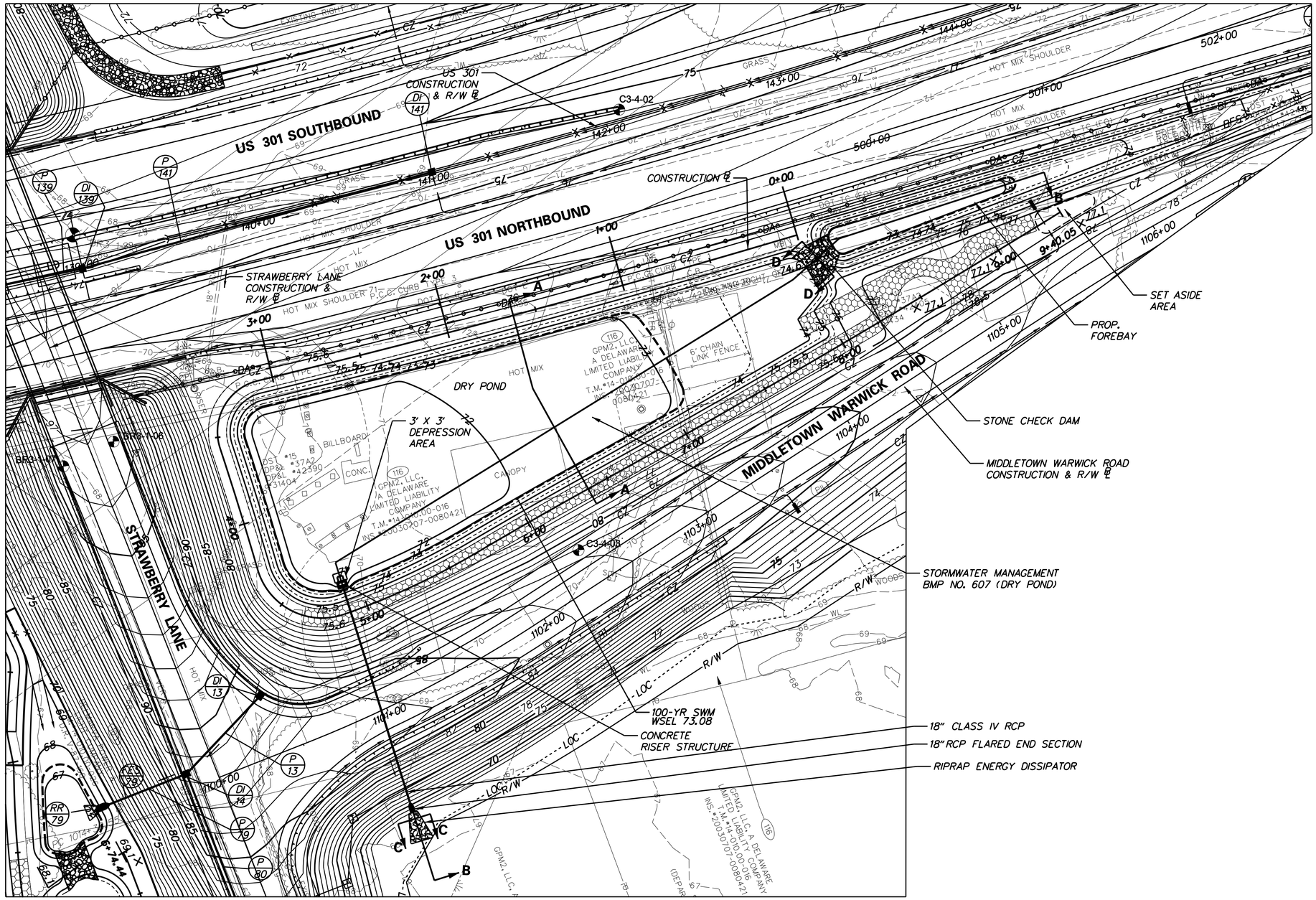

LEGEND	
EXISTING CONTOUR	68
PROPOSED CONTOUR	65
POND MAINTENANCE ACCESS	

PLAN – STORMWATER MANAGEMENT POND – BMP NO. 607 – (STA. 140+00 N) (US 301 STA. 139+49 TO STA. 145+02), TYPE: DRY POND

NOTE: SEE SHEETS SW-41 TO SW-45 FOR STORMWATER MANAGEMENT POND BMP NO. 607 DETAILS.

FACILITY DESIGN SUMMARY FOR STORMWATER MANAGEMENT POND NO. 607

DESIGN STORM	FACILITY INFLOW (CFS)	FACILITY DISCHARGE (CFS)	WATER SURFACE ELEVATION (FT.)	STORAGE VOLUME (AC. FT.)
1-YEAR	2.09	0.20	71.86	0.056
10-YEAR	7.25	0.57	72.52	0.240
100-YEAR	16.51	4.08	73.08	0.474

HAZARD CLASSIFICATION: CLASS 'A' AS PER POND CODE 378
DRAINAGE AREA TO FACILITY 2.831 ACRES
MANAGEMENT PROVIDED BY FACILITY: WATER QUANTITY FOR 10-YEAR AND 100-YEAR STORMS.

SW-40

DELAWARE DEPARTMENT OF TRANSPORTATION

ADDENDUMS / REVISIONS

SCALE 0 30 60 90 FEET

US 301 MARYLAND STATE LINE TO LEVELS ROAD

CONTRACT	BRIDGE NO.	
T200811301	DESIGNED BY:	DSM/ACF
COUNTY	CHECKED BY:	JZS
NEW CASTLE		

STORMWATER MANAGEMENT PLAN

SHEET NO. 377
TOTAL SHTS. 850

E:\2814 DEL ROUTE 301\001,3,4,5,6 (DESIGN)\CAD\SB_301AET_000_STR.DGN

POND CONSTRUCTION SEQUENCE AND NOTES

1. PRIOR TO DISTURBANCE OF THE SITE UPSTREAM OF THE BASIN, INSTALL FENCE AROUND THE BASIN AREA TO PREVENT CONSTRUCTION EQUIPMENT AND STOCKPILED MATERIALS FROM ENTERING THE BASIN AREA AND COMPACTING THE SUBGRADE SOILS.

2. CONSTRUCT BASIN AFTER ALL AREAS DRAINING TO THE BASIN HAVE BEEN PERMANENTLY STABILIZED AND THE ENGINEER HAS APPROVED THE CONSTRUCTION. IF BASIN CONSTRUCTION CANNOT BE DELAYED UNTIL ITS DRAINAGE AREA IS STABILIZED, DIVERSION BERMS OR OTHER SUITABLE MEASURES SHOULD BE PLACED AROUND THE BASIN'S PERIMETER DURING ALL PHASES OF CONSTRUCTION TO DIVERT ALL RUNOFF AND SEDIMENT AWAY FROM THE BASIN. THESE DIVERSION MEASURES SHOULD NOT BE REMOVED UNTIL ALL CONSTRUCTION WITHIN THE BASIN'S DRAINAGE AREA IS COMPLETED AND THE DRAINAGE AREA STABILIZED.

3. CONSTRUCT THE BASIN WITHOUT COMPACTING THE BASIN'S SUBGRADE SOILS. EXCAVATION SHALL BE PERFORMED BY CONSTRUCTION EQUIPMENT PLACED OUTSIDE THE BASIN, WHERE POSSIBLE. ALL EXCAVATION SHALL BE PERFORMED WITH THE LIGHTEST PRACTICAL EXCAVATION EQUIPMENT.

4. CONSTRUCT POND OUTLET STRUCTURE, RIPRAP ENGERGY DISSIPATOR AT THE END OF PRINCIPAL SPILLWAY AND PARTIAL EMBANKMENT AS NEEDED TO INSTALL POND OUTLET STRUCTURE. DE-WATER FOUNDATION AS NEEDED IN ACCORDANCE WITH SECTION 111 AND USE SUMP PIT FOR PUMPING.

5. EXCAVATE THE POND AND COMPLETE THE EMBANKMENT, GRADES AND DETAILS SHOWN IN THE CONSTRUCTION PLANS.

   A. DURING EXCAVATION, THE CONTRACTOR SHALL SALVAGE AND STOCKPILE SOILS CLASSIFIED AS CH, CL, CH AND GM PER THE UNIFIED SOIL CLASSIFICATION SYSTEM TO BE USED TO CONSTRUCT EMBANKMENT. THE ABOVE CLASSIFIED SOILS MAY BE OBTAINED FROM ELSEWHERE WITHIN THE PROJECT LIMITS, IF NECESSARY.

   B. DURING EXCAVATION, THE CONTRACTOR SHALL SALVAGE AND STOCKPILE SOILS CLASSIFIED AS SW AND SP PER THE UNIFIED SOIL CLASSIFICATION SYSTEM TO BE USED TO FILL THE BASIN BOTTOM WHERE OVEREXCAVATED FOR REMOVAL OF UNSUITABLE SOIL. THE ABOVE CLASSIFIED SOILS MAY BE OBTAINED FROM ELSEWHERE WITHIN THE PROEJCT LIMITS, IF NECESSARY.

6. STABILIZE BASIN EMBANKMENT AND BOTTOM WITH PERMANENT SEEDING.

7. REMOVE EROSION AND SEDIMENT CONTROLS, WATER DIVERSION PRACTICES AND FENCE UPON FINAL STABILIZATION AND APPROVAL FROM INSPECTOR.

   NOTE: SEE CONSTRUCTION SEQUENCE PLANS FOR LOCATION OF EROSION AND SEDIMENT CONTROL MEASURES.

AS-BUILT DRAWINGS OF STORMWATER MANAGEMENT FACILITIES

THE CONTRACTOR SHALL PROVIDE 'AS-BUILT' DRAWINGS OF ALL STORMWATER MANAGEMENT FACILITIES, SUCH AS PONDS, INFILTRATION BASINS, BIOFILTRATION SWALES, ETC. 'AS-BUILT' DRAWINGS SHALL SHOW THE ACTUAL FINISH GROUND CONTOURS, OUTLET STRUCTURES DIMENSIONS AND ELEVATIONS, ETC. AS THEY EXIST AT THE COMPLETION OF THE PROJECT. THESE DRAWINGS SHALL BE SIGNED AND SEALED BY A PROFESSIONAL ENGINEER OR LAND SURVEYOR.

ITEM 713002, GEOTEXTILES, SEPARATION

STATION/OFFSET	AREA
STA 139+72, 224.5' RT. TO STA 143+80, 148.0' RT.	708 SY

ITEM 713003, GEOTEXTILES, RIPRAP

STATION/OFFSET	AREA
STA 142+77, 99.6' RT. TO STA 143+03, 104.2' RT.	52 SY
STA 140+00, 349.2' RT. TO STA 140+11, 348.5' RT.	20 SY

ITEM 712005, RIPRAP,R-4

STATION/OFFSET	AREA
STA 142+77, 99.6' RT. TO STA 143+03, 104.2' RT.	43 SY

ITEM 712006, RIPRAP,R-5

STATION/OFFSET	AREA
STA 140+00, 349.2' RT. TO STA 140+11, 348.5' RT.	16 SY

ITEM 302011, DELAWARE NO. 3 STONE

STATION/OFFSET	WEIGHT
STA 139+72, 224.5' RT. TO STA 143+80, 148.0' RT.	134 TON

ITEM 910007, OUTLET STRUCTURE

ITEM	QUANTITY
CONCRETE RISER STRUCTURE	1 EA
18" CLASS IV RCP	124 LF
18" RCP FLARED END SECTION	1 EA
CONCRETE CRADLE	16 CY
ANTI-SEEP COLLAR	1 EA
DELAWARE NO. 57 STONE	6 TON

NOTES - STORMWATER MANAGEMENT POND - BMP NO. 607 - (STA. 140+00 N)

SW-41

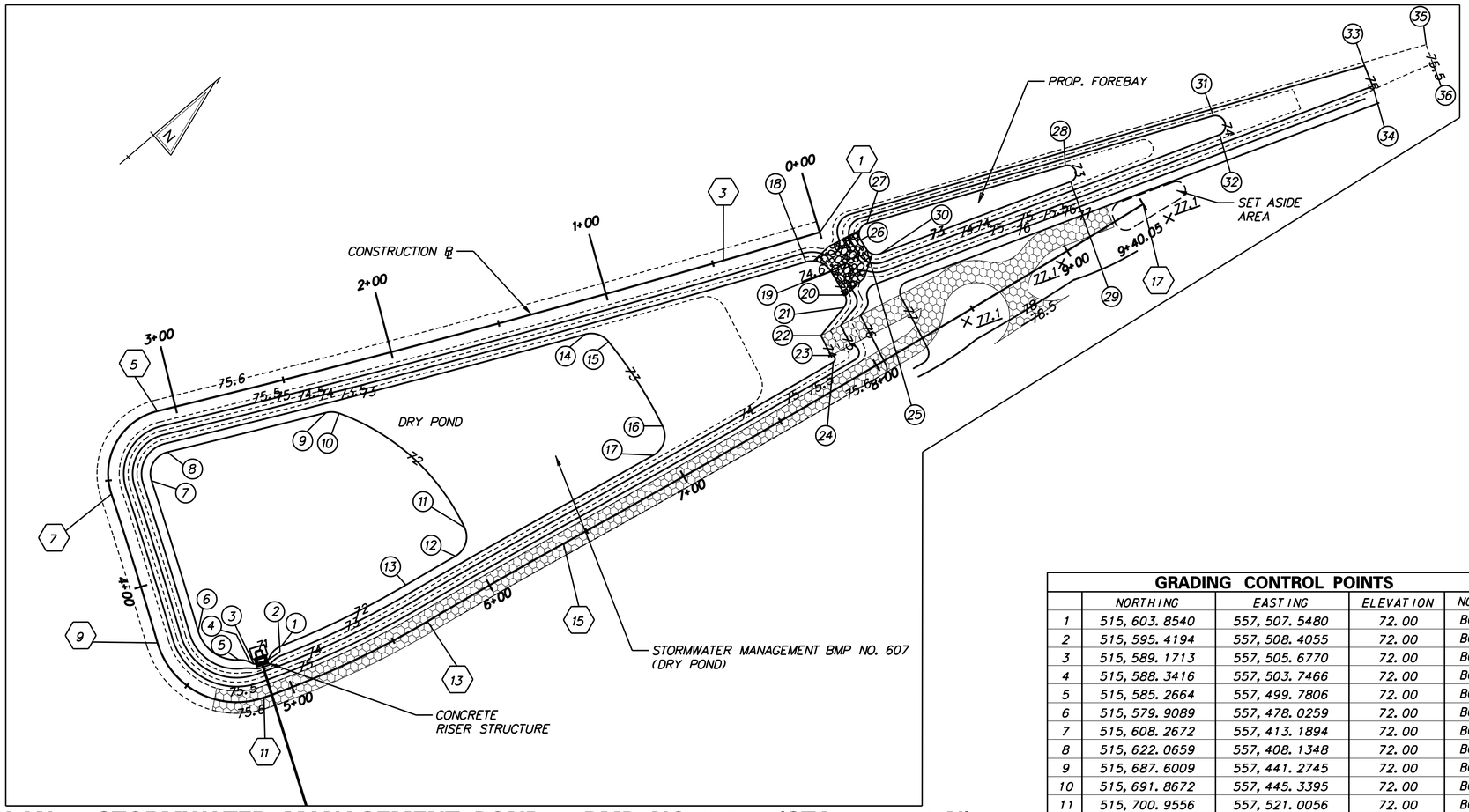

PLAN – STORMWATER MANAGEMENT POND – BMP NO. 607 – (STA. 140+00 N)

LEGEND	
PROPOSED CONTOUR	—65—
POND MAINTENANCE ACCESS	
BASELINE OF CONSTRUCTION CONTROL COORDINATES	8
GRADING CONTROL POINTS	8
BOTTOM OF POND	BOP
BOTTOM OF FOREBAY	BOF
BOTTOM OF TOE	BOT

BASELINE OF CONSTRUCTION CONTROL COORDINATES

STATION			NORTHING	EASTING
1	POB	STA. 0+00.00	515,908.4969	557,525.0157
	PI	STA. 0+22.56	515,887.9343	557,515.7453
3	PCC	STA. 0+45.11	515,867.4409	557,506.3229
	PI	STA. 1+76.74	515,747.8471	557,451.3359
5	PRC	STA. 3+08.33	515,630.7417	557,391.2312
	PI	STA. 3+39.74	515,602.7944	557,376.8872
7	PRC	STA. 3+56.20	515,590.7254	557,405.8896
	PI	STA. 3+91.25	515,577.2602	557,438.2474
9	PRC	STA. 4+26.29	515,562.6408	557,470.1005
	PI	STA. 4+65.40	515,546.3230	557,505.6542
11	PCC	STA. 4+86.46	515,582.7297	557,519.9683
	PI	STA. 5+27.19	515,620.6336	557,534.8711
13	PRC	STA. 5+67.66	515,660.7115	557,542.1206
	PI	STA. 6+02.88	515,695.3673	557,548.3894
15	PRC	STA. 6+38.09	515,729.8277	557,555.6557
	PI	STA. 7+89.10	515,877.5883	557,586.8127
17	POE	STA. 9+40.05	516,026.7294	557,610.4957

GRADING CONTROL POINTS

	NORTHING	EASTING	ELEVATION	NOTE
1	515,603.8540	557,507.5480	72.00	BOP
2	515,595.4194	557,508.4055	72.00	BOP
3	515,589.1713	557,505.6770	72.00	BOP
4	515,588.3416	557,503.7466	72.00	BOP
5	515,585.2664	557,499.7806	72.00	BOP
6	515,579.9089	557,478.0259	72.00	BOP
7	515,608.2672	557,413.1894	72.00	BOP
8	515,622.0659	557,408.1348	72.00	BOP
9	515,687.6009	557,441.2745	72.00	BOP
10	515,691.8672	557,445.3395	72.00	BOP
11	515,700.9556	557,521.0056	72.00	BOP
12	515,689.4385	557,528.1459	72.00	BOP
13	515,664.0934	557,523.4240	72.00	BOP
14	515,798.8101	557,490.8502	73.00	BOP
15	515,804.5260	557,500.1876	73.00	BOP
16	515,798.1245	557,544.7389	73.00	BOP
17	515,786.4753	557,552.0151	73.00	BOP
18	515,895.0791	557,531.0241	74.00	BOP
19	515,900.8283	557,541.7179	74.00	BOP
20	515,898.6398	557,553.7785	74.00	BOP
21	515,894.6041	557,557.7102	74.00	BOP
22	515,878.5383	557,560.5309	74.00	BOP
23	515,876.1847	557,570.2500	74.00	BOP
24	515,874.8843	557,573.1920	74.00	BOP
25	515,919.4085	557,544.5863	73.00	BOF
26	515,920.1509	557,539.7065	73.00	BOF
27	515,927.1972	557,535.8815	73.00	BOF
28	516,011.5714	557,574.5090	73.00	BOF
29	516,008.6891	557,581.5350	73.00	BOF
30	515,922.6288	557,550.0726	73.00	BOF
31	516,076.2621	557,600.9312	74.00	BOF
32	516,072.8308	557,609.2432	74.00	BOF
33	516,142.7287	557,628.4658	75.00	BOF
34	516,139.4796	557,637.8680	75.00	BOF
35	516,169.8481	557,639.4034	75.50	BOF
36	516,166.6223	557,647.7758	75.50	BOF

NOTES:

1. THE SLOPED PORTION OF THE EMBANKMENT SHALL RECEIVE TOPSOILING, 6" DEPTH (ITEM 908010).
2. THE ENTIRE POND SHALL RECEIVE PERMANENT GRASS SEEDING - DRY GROUND (ITEM 908014).
3. DRY GROUND SEEDING AREA = 3,101 SY.

SW-42

DELAWARE DEPARTMENT OF TRANSPORTATION

ADDENDUMS / REVISIONS

SCALE 0 30 60 90 FEET

US 301 MARYLAND STATE LINE TO LEVELS ROAD

CONTRACT	BRIDGE NO.	
T200811301	DESIGNED BY:	DSM/ACF
COUNTY	CHECKED BY:	JZS
NEW CASTLE		

DETAILS FOR SWM POND BMP NO. 607

SHEET NO. 379 TOTAL SHTS. 850

E:\2814 DEL ROUTE 301\001,3,4,5,6 (DESIGN)\CAD\SB_301AET_000_STR.DGN

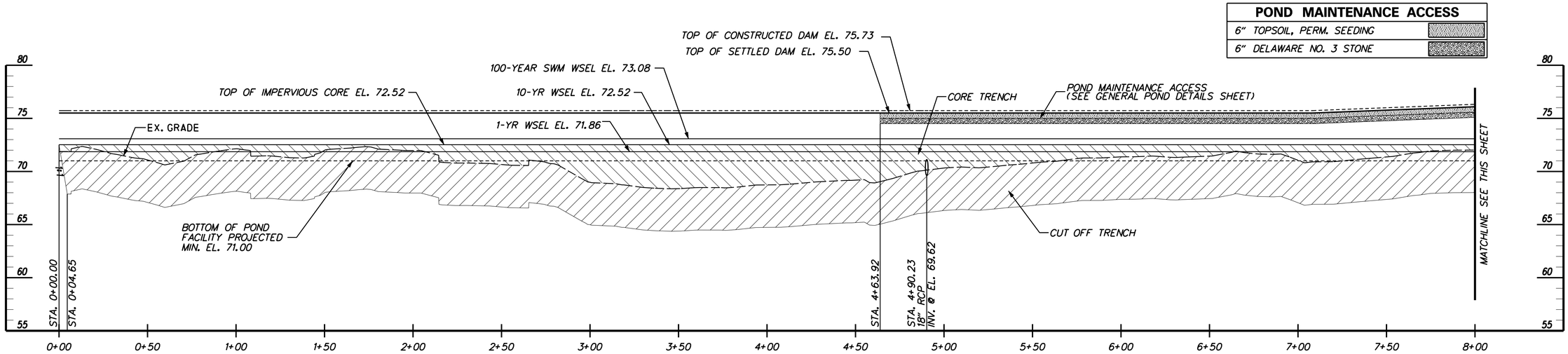

PROFILE ALONG ℄ OF EMBANKMENT

SCALE: HORIZ. 1"=30'
VERT. 1"=5'

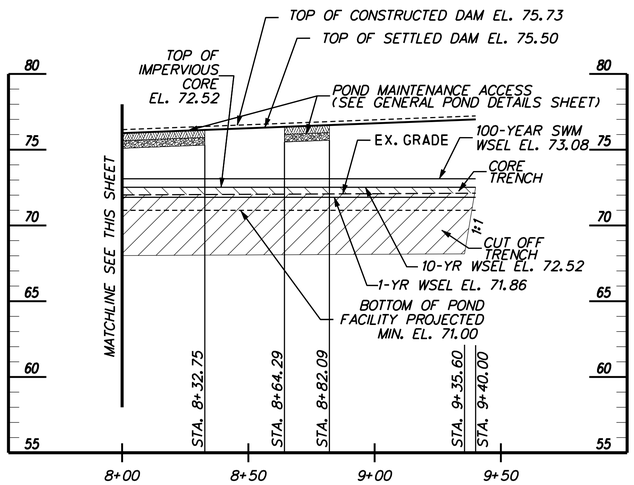

PROFILE ALONG ℄ OF EMBANKMENT

SCALE: HORIZ. 1"=30'
VERT. 1"=5'

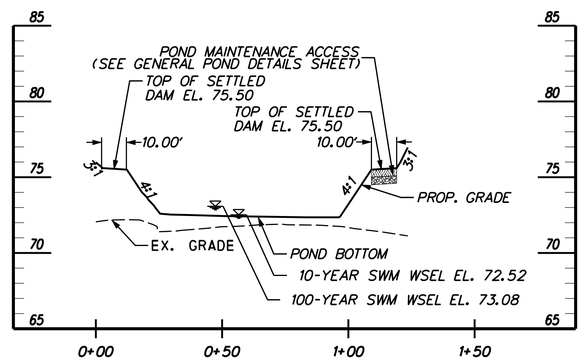

CROSS SECTION A-A

SCALE: HORIZ. 1"=30'
VERT. 1"=5'

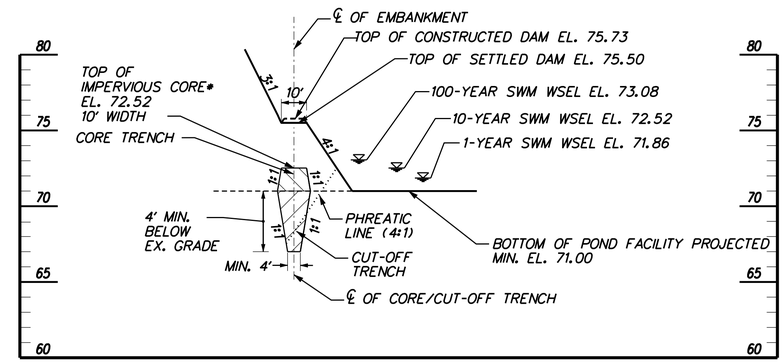

* SEE GENERAL POND DETAILS SHEET FOR TYPICAL CORE/CUT-OFF TRENCH DETAIL.

TYPICAL EMBANKMENT CROSS SECTION

SCALE: HORIZ. 1"=30'
VERT. 1"=5'

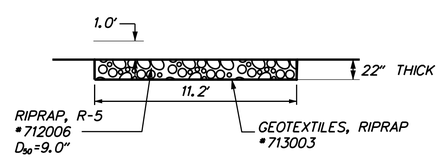

RIPRAP ENERGY DISSIPATOR
CROSS SECTION C-C

NOT TO SCALE

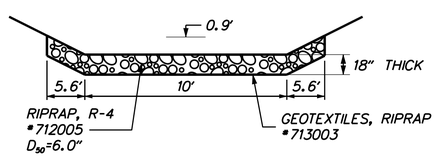

STONE CHECK DAM
CROSS SECTION D-D

NOT TO SCALE

DETAILS – STORMWATER MANAGEMENT POND – BMP NO. 607 – (STA. 140+00 N)

SW-43

DELAWARE DEPARTMENT OF TRANSPORTATION	ADDENDUMS / REVISIONS	SCALE: AS SHOWN	US 301 MARYLAND STATE LINE TO LEVELS ROAD	CONTRACT T200811301 / COUNTY NEW CASTLE	BRIDGE NO. / DESIGNED BY: DSM/ACF / CHECKED BY: JZS	DETAILS FOR SWM POND BMP NO. 607	SHEET NO. 380 / TOTAL SHTS. 850

E:\2814 DEL ROUTE 301\001,3,4,5,6 (DESIGN)\CAD\SB_301AET_000_STR.DGN

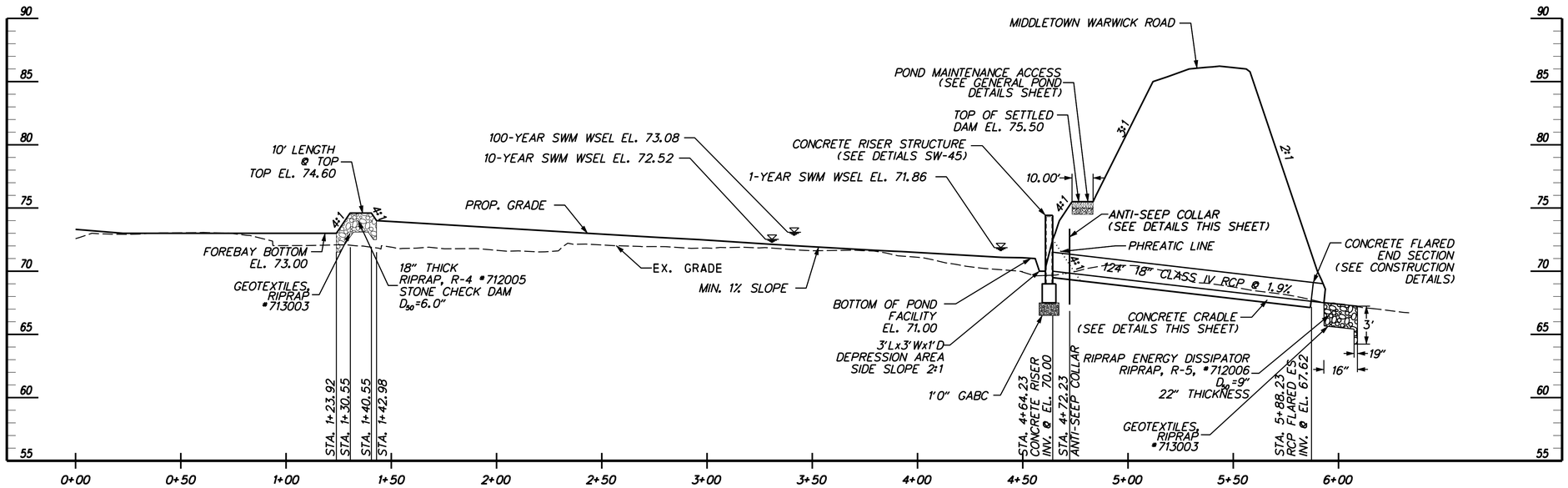

CROSS SECTION B-B

SCALE: HORIZ. 1"=30'
VERT. 1"=5'

POND MAINTENANCE ACCESS	
6" TOPSOIL, PERM. SEEDING	
6" DELAWARE NO. 3 STONE	

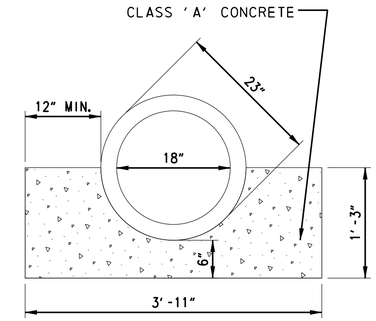

CONCRETE CRADLE

NOT TO SCALE

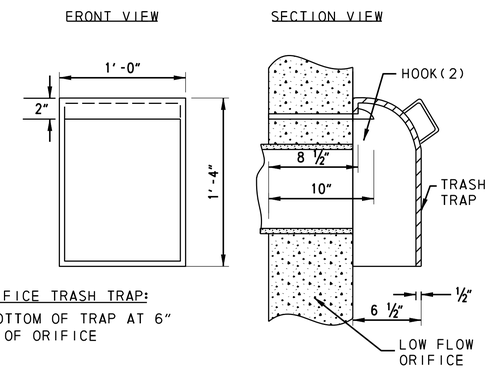

NOTES FOR ORIFICE TRASH TRAP:

LOCATE THE BOTTOM OF TRAP AT 6" BELOW INVERT OF ORIFICE

TYPICAL CONFIGURATIONS AND DETAILS FOR LOW FLOW ORIFICE TRASH TRAP

NOT TO SCALE

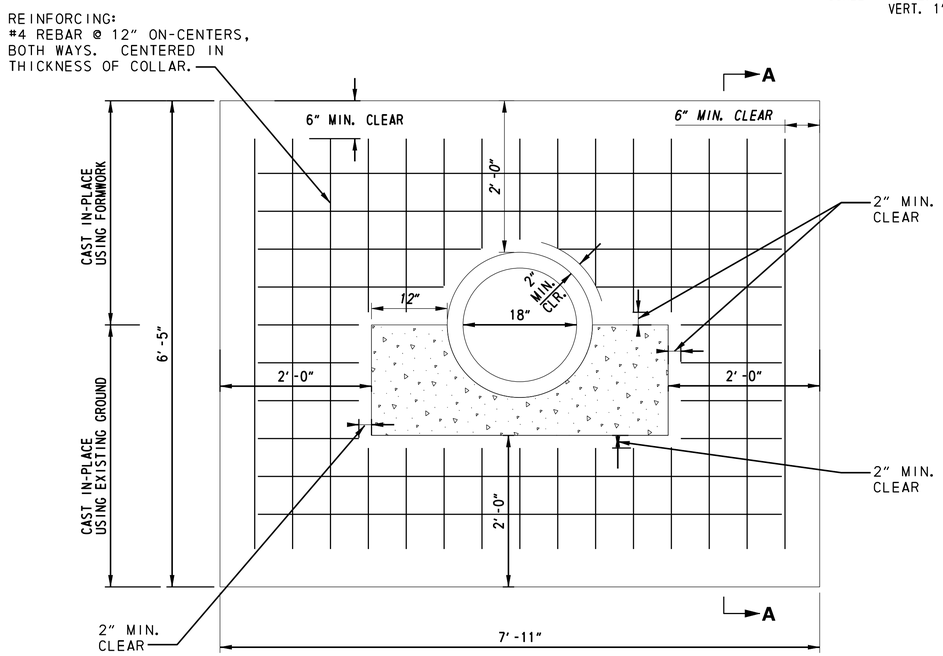

ELEVATION

SECTION A-A

CONCRETE ANTI-SEEP COLLAR

NOT TO SCALE

NOTES:

1) CAST ANTI-SEEP COLLAR IN TWO PARTS.

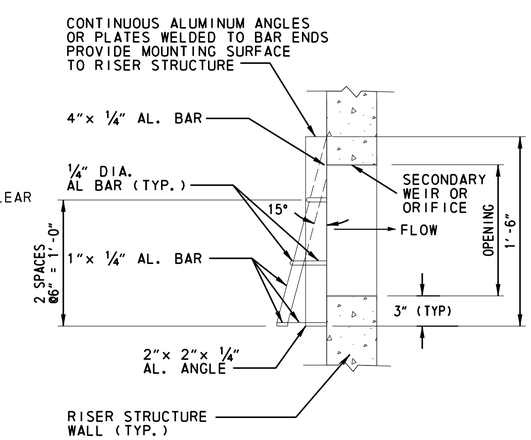

TRIANGULAR RACK

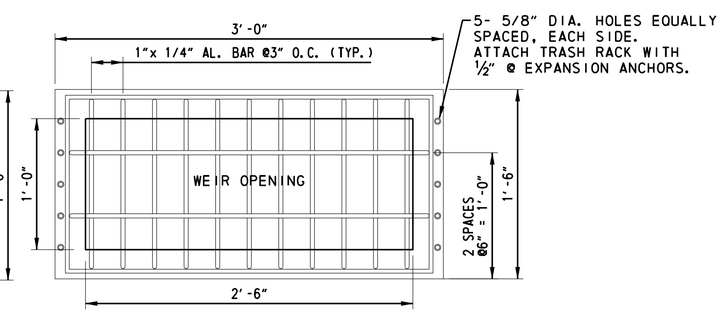

NOTES FOR WEIR TRASH RACK:

1. EXPANSION ANCHORS SHALL CONFORM TO ASTM A510 AND SHALL HAVE A MINIMUM EMBEDMENT DEPTH OF 4" UNLESS NOTED OTHERWISE.
2. EXPANSION ANCHORS SHALL BE ZINC PLATED IN CONFORMANCE WITH ASTM B633, TYPE III FE/ZN 5.
3. ALUMINUM ANGLES SHALL CONFORM TO ASTM B308 ALLOY 6061-T6. REMAINING ALUMINUM SHALL CONFORM TO ASTM B211 ALLOY 606-T6.

TYPICAL CONFIGURATIONS AND DETAILS FOR HIGH FLOW WEIR TRASH RACKS

NOT TO SCALE

DETAILS – STORMWATER MANAGEMENT POND – BMP NO. 607 – (STA. 140+00 N)

SW-44

DELAWARE DEPARTMENT OF TRANSPORTATION	ADDENDUMS / REVISIONS	SCALE: AS SHOWN	US 301 MARYLAND STATE LINE TO LEVELS ROAD	CONTRACT T200811301	BRIDGE NO.	DETAILS FOR SWM POND BMP NO. 607	SHEET NO. 381
				COUNTY NEW CASTLE	DESIGNED BY: DSM/ACF		TOTAL SHTS. 850
					CHECKED BY: JZS		

E:\2814 DEL ROUTE 301\001,3,4,5,6 (DESIGN)\CAD\SB_301AET_000_STR.DGN

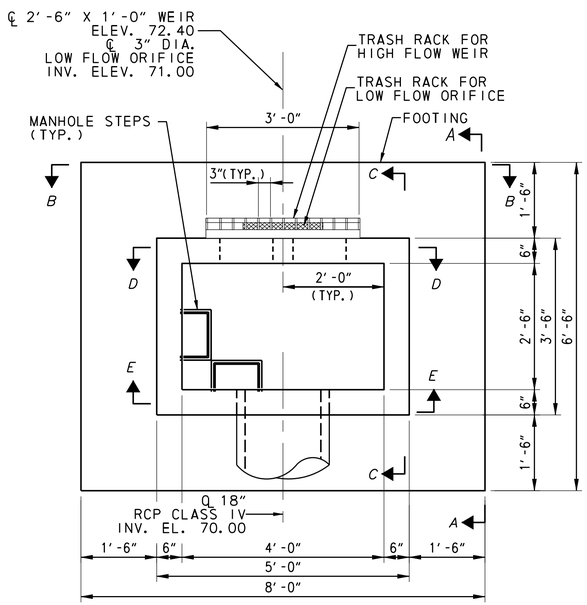

RISER STRUCTURE - PLAN

NOT TO SCALE

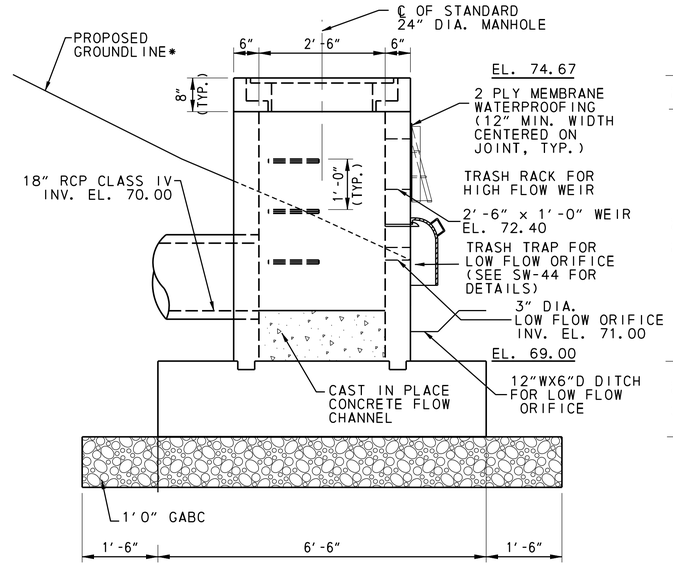

VIEW A-A

NOT TO SCALE

*PROPOSED GROUNDLINE SHOWN IS BEYOND PRINCIPAL SPILLWAY PROVIDED MIN. 0.5' OF COVER OVER PRINCIPAL SPILLWAY PIPE.

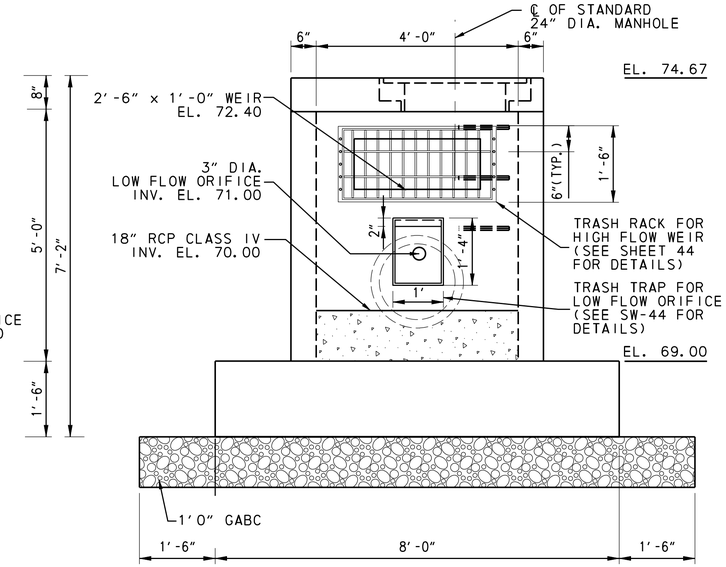

VIEW B-B

NOT TO SCALE

1. SEE DELDOT STANDARD CONSTRUCTION DETAILS D-6(2001)-3 FOR MANHOLE FRAME AND COVER DETAILS.
2. SEE GENERAL POND DETAILS SHEET FOR MANHOLE STEP DETAILS.
3. TOP SLAB, TRASH RACKS, AND MANHOLE STEPS NOT SHOWN IN SECTION FOR CLARITY.
4. E.F. =EACH FACE
   F.F. =FRONT FACE
   R.F. =REAR FACE
   T&B=TOP AND BOTTOM

MARK	BAR SIZE	SHAPE
D503E	3	C
D504F	3	D
E517E	3	A
F501E	4	A
F502E	4	A
S526E	3	A
S528E	3	A
S529E	3	B
S530E	3	A
S531E	3	A
S532E	3	A
W505E	3	A
W506E	3	A
W507E	3	A
W508E	3	A
W509E	3	B
W510E	3	C
W511E	3	B
W512E	3	A
W513E	3	B
W514E	3	A
W515E	3	B
W516E	3	A
W518E	3	A
W519E	3	A
W520E	3	A
W512E	3	A
W522E	3	A
W523E	3	C
W524E	3	D
W525E	3	A
W526E	3	E

REBAR TYPE

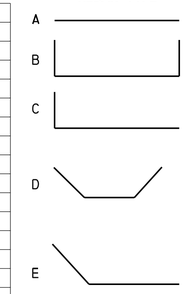

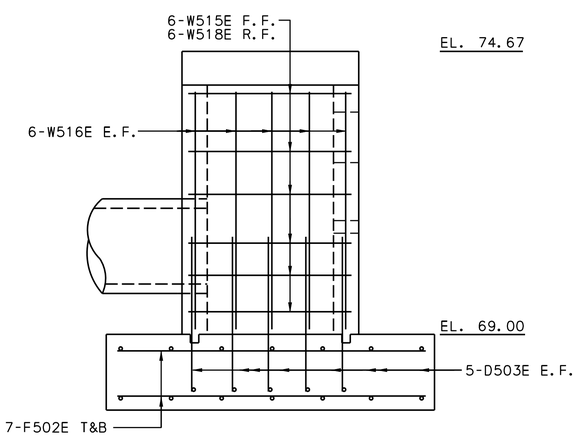

SECTION C-C

NOT TO SCALE

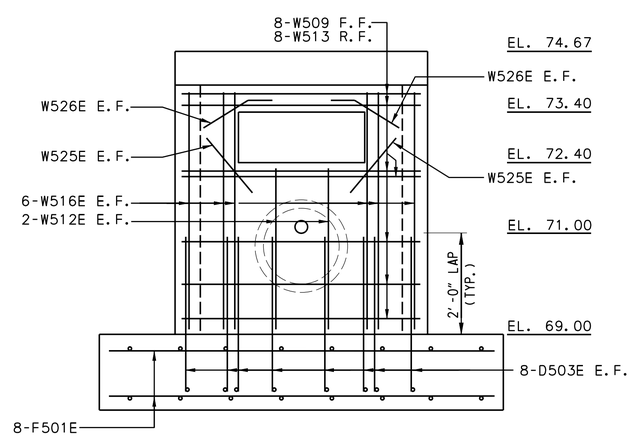

SECTION D-D

NOT TO SCALE

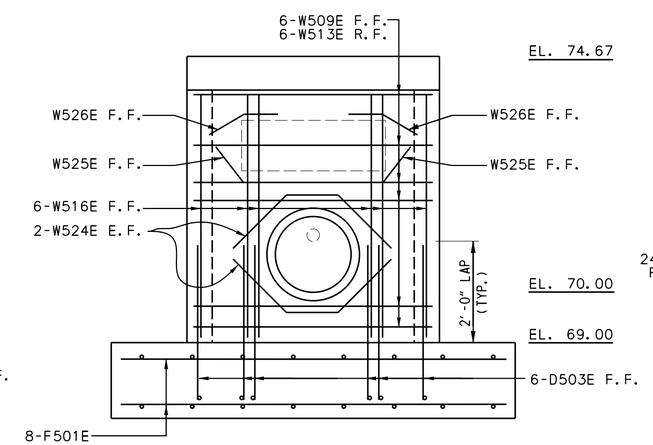

SECTION E-E

NOT TO SCALE

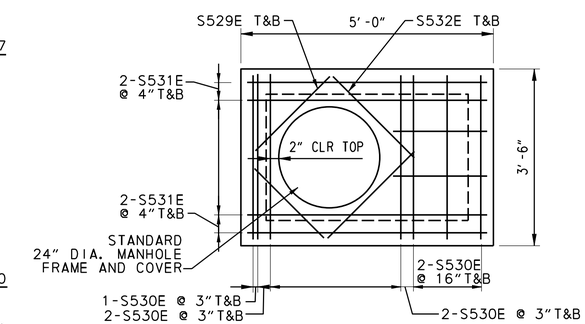

TOP SLAB - REINFORCEMENT PLAN

NOT TO SCALE

DETAILS – STORMWATER MANAGEMENT POND – BMP NO. 607 – (STA. 140+00 N)

SW-45

DELAWARE DEPARTMENT OF TRANSPORTATION	ADDENDUMS / REVISIONS	SCALE: AS SHOWN	US 301 MARYLAND STATE LINE TO LEVELS ROAD	CONTRACT T200811301 / COUNTY NEW CASTLE	BRIDGE NO. / DESIGNED BY: RLA / CHECKED BY: JZS	RISER DETAILS FOR SWM BMP NO. 607	SHEET NO. 382 / TOTAL SHTS. 850

E:\2814 DEL ROUTE 301\001,3,4,5,6 (DESIGN)\CAD\SB_301AET_000_STR.DGN

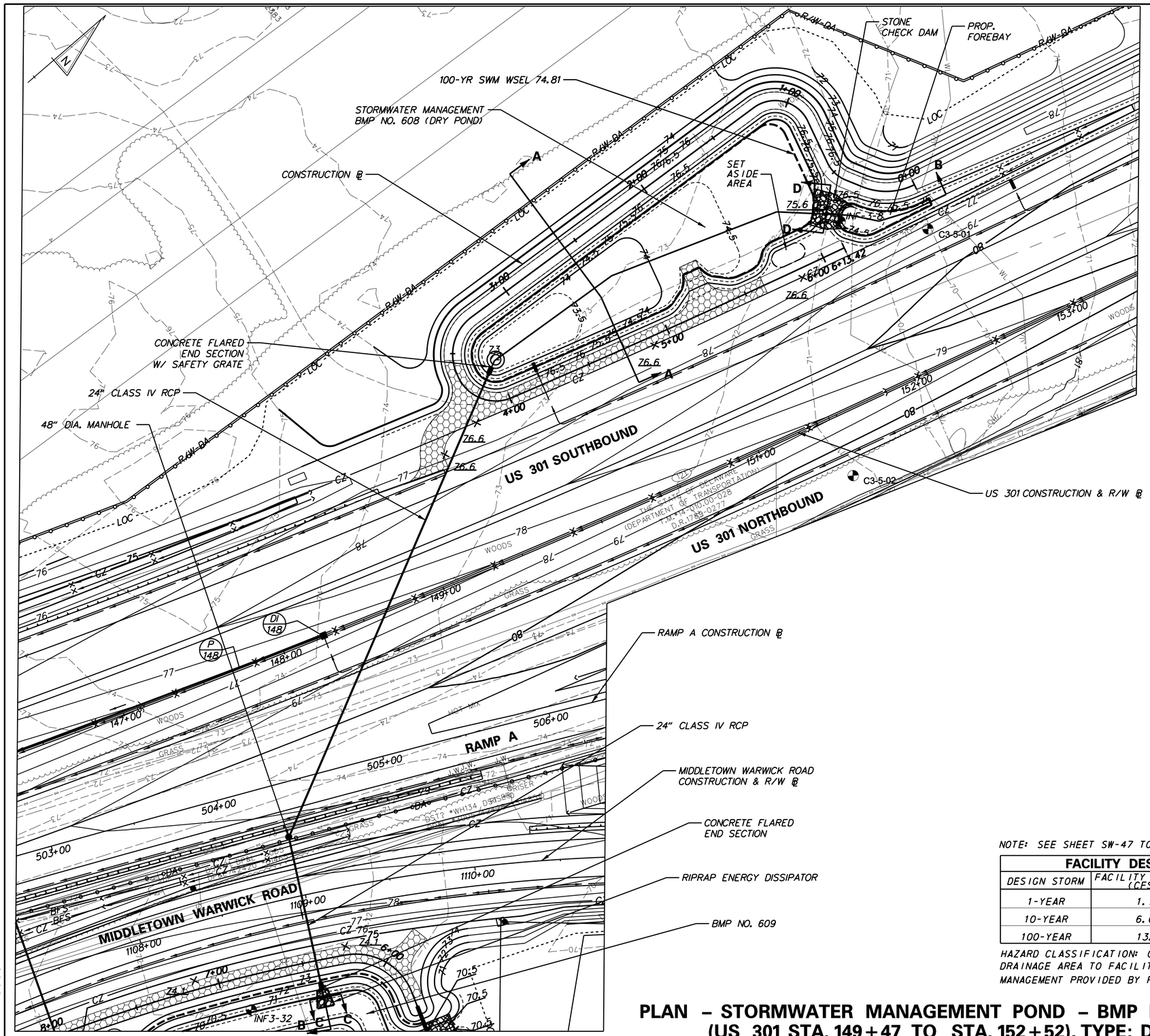

LEGEND	
EXISTING CONTOUR	— — 68 — —
PROPOSED CONTOUR	—— 65 ——
POND MAINTENANCE ACCESS	

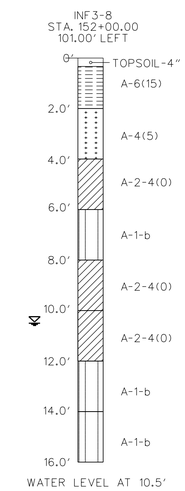

NOTE: SEE SHEET SW-47 TO SW-49 FOR STORMWATER MANAGEMENT POND BMP NO. 608 DETAILS.

FACILITY DESIGN SUMMARY FOR STORMWATER MANAGEMENT BMP NO. 608

DESIGN STORM	FACILITY INFLOW (CFS)	FACILITY DISCHARGE (CFS)	WATER SURFACE ELEVATION (FT.)	STORAGE VOLUME (AC. FT.)
1-YEAR	1.79	1.51	73.65	0.013
10-YEAR	6.05	4.79	74.20	0.055
100-YEAR	13.71	9.90	74.81	0.155

HAZARD CLASSIFICATION: CLASS 'A' AS PER POND CODE 378
DRAINAGE AREA TO FACILITY: 3.107 ACRES
MANAGEMENT PROVIDED BY FACILITY: PROVIDES SUPPLEMENTAL STORAGE FOR BMP NO. 609 (STA. 147+00 N).

PLAN – STORMWATER MANAGEMENT POND – BMP NO. 608 – (STA. 147+00 S) (US 301 STA. 149+47 TO STA. 152+52), TYPE: DRY POND

SW-46

E:\2814 DEL ROUTE 301\001,3,4,5,6 (DESIGN)\CAD\SB_301AET_000_STR.DGN

DELAWARE DEPARTMENT OF TRANSPORTATION	ADDENDUMS / REVISIONS	SCALE 0 30 60 90 FEET	US 301 MARYLAND STATE LINE TO LEVELS ROAD	CONTRACT T200811301	BRIDGE NO.	STORMWATER MANAGEMENT PLAN	SHEET NO. 383
				COUNTY NEW CASTLE	DESIGNED BY: DSM/ACF		TOTAL SHTS. 850
					CHECKED BY: JZS		

POND CONSTRUCTION SEQUENCE AND NOTES

1. PRIOR TO DISTURBANCE OF THE SITE UPSTREAM OF THE BASIN, INSTALL FENCE AROUND THE BASIN AREA TO PREVENT CONSTRUCTION EQUIPMENT AND STOCKPILED MATERIALS FROM ENTERING THE BASIN AREA AND COMPACTING THE SUBGRADE SOILS.

2. CONSTRUCT BASIN AFTER ALL AREAS DRAINING TO THE BASIN HAVE BEEN PERMANENTLY STABILIZED AND THE ENGINEER HAS APPROVED THE CONSTRUCTION. IF BASIN CONSTRUCTION CANNOT BE DELAYED UNTIL ITS DRAINAGE AREA IS STABILIZED, DIVERSION BERMS OR OTHER SUITABLE MEASURES SHOULD BE PLACED AROUND THE BASIN'S PERIMETER DURING ALL PHASES OF CONSTRUCTION TO DIVERT ALL RUNOFF AND SEDIMENT AWAY FROM THE BASIN. THESE DIVERSION MEASURES SHOULD NOT BE REMOVED UNTIL ALL CONSTRUCTION WITHIN THE BASIN'S DRAINAGE AREA IS COMPLETED AND THE DRAINAGE AREA STABILIZED.

3. CONSTRUCT THE BASIN WITHOUT COMPACTING THE BASIN'S SUBGRADE SOILS. EXCAVATION SHALL BE PERFORMED BY CONSTRUCTION EQUIPMENT PLACED OUTSIDE THE BASIN, WHERE POSSIBLE. ALL EXCAVATION SHALL BE PERFORMED WITH THE LIGHTEST PRACTICAL EXCAVATION EQUIPMENT.

4. CONSTRUCT POND OUTLET STRUCTURE, RIPRAP ENERGY DISSIPATOR AT THE END OF PRINCIPAL SPILLWAY AND PARTIAL EMBANKMENT AS NEEDED TO INSTALL POND OUTLET STRUCTURE. DE-WATER FOUNDATION AS NEEDED IN ACCORDANCE WITH SECTION 111 AND USE SUMP PIT FOR PUMPING.

5. EXCAVATE THE POND AND COMPLETE THE EMBANKMENT, GRADES AND DETAILS SHOWN IN THE CONSTRUCTION PLANS.
   - A. DURING EXCAVATION, THE CONTRACTOR SHALL SALVAGE AND STOCKPILE SOILS CLASSIFIED AS CH, CL, CH AND GM PER THE UNIFIED SOIL CLASSIFICATION SYSTEM TO BE USED TO CONSTRUCT EMBANKMENT. THE ABOVE CLASSIFIED SOILS MAY BE OBTAINED FROM ELSEWHERE WITHIN THE PROJECT LIMITS, IF NECESSARY.
   - B. DURING EXCAVATION, THE CONTRACTOR SHALL SALVAGE AND STOCKPILE SOILS CLASSIFIED AS SW AND SP PER THE UNIFIED SOIL CLASSIFICATION SYSTEM TO BE USED TO FILL THE BASIN BOTTOM WHERE OVEREXCAVATED FOR REMOVAL OF UNSUITABLE SOIL. THE ABOVE CLASSIFIED SOILS MAY BE OBTAINED FROM ELSEWHERE WITHIN THE PROJECT LIMITS, IF NECESSARY.

6. STABILIZE BASIN EMBANKMENT AND BOTTOM WITH PERMANENT SEEDING.

7. REMOVE EROSION AND SEDIMENT CONTROLS, WATER DIVERSION PRACTICES AND FENCE UPON FINAL STABILIZATION AND APPROVAL FROM INSPECTOR. NOTE: SEE CONSTRUCTION SEQUENCE PLANS FOR LOCATION OF EROSION AND SEDIMENT CONTROL MEASURES.

AS-BUILT DRAWINGS OF STORMWATER MANAGEMENT FACILITIES

THE CONTRACTOR SHALL PROVIDE 'AS-BUILT' DRAWINGS OF ALL STORMWATER MANAGEMENT FACILITIES, SUCH AS PONDS, INFILTRATION BASINS, BIOFILTRATION SWALES, ETC. 'AS-BUILT' DRAWINGS SHALL SHOW THE ACTUAL FINISH GROUND CONTOURS, OUTLET STRUCTURES DIMENSIONS AND ELEVATIONS, ETC. AS THEY EXIST AT THE COMPLETION OF THE PROJECT. THESE DRAWINGS SHALL BE SIGNED AND SEALED BY A PROFESSIONAL ENGINEER OR LAND SURVEYOR.

ITEM 712006, RIPRAP, R-5

STATION/OFFSET	AREA
STA. 147+44, 200.9' LT. TO STA. 147+54, 202.4' LT.	9 SY

ITEM 713002, GEOTEXTILES, SEPARATION

STATION/OFFSET	AREA
STA. 149+02, 63.8' LT. TO STA. 151+43, 86' LT.	432 SY

ITEM 712005, RIPRAP, R-4

STATION/OFFSET	AREA
STA. 151+82, 107.5' LT. TO STA. 152+11, 104.8' LT.	42 SY

ITEM 713003, GEOTEXTILES, RIPRAP

STATION/OFFSET	AREA
STA. 151+82, 107.5' LT. TO STA. 152+11, 104.8' LT.	53 SY
STA. 147+44, 200.9' RT. TO STA. 147+54, 202.4' RT.	13 SY

ITEM 302011, DELAWARE NO. 3 STONE

STATION/OFFSET	WEIGHT
STA. 149+02, 63.8' LT. TO STA. 151+43, 86' LT.	84 TON

ITEM 910007, OUTLET STRUCTURE

ITEM	QUANTITY
24" CLASS IV RCP	374 LF
48" DIA. MANHOLE	1 EA
RCP 24" FLARED END SECTION	2 EA
SAFETY GRATE	1 EA

NOTES - STORMWATER MANAGEMENT POND - BMP NO. 608 - (STA. 147+00 S)

SW-47

GRADING CONTROL POINTS

	NORTHING	EASTING	ELEVATION	NOTE
1	516,630.1627	557,591.6415	72.00	BOP
2	516,625.9231	557,588.0703	72.00	BOP
3	516,633.7090	557,589.7326	73.00	BOP
4	516,626.4822	557,584.5384	73.00	BOP
5	516,626.6649	557,595.6499	73.50	BOP
6	516,622.1131	557,586.8522	73.50	BOP
7	516,622.7539	557,584.8416	73.50	BOP
8	516,633.0270	557,577.9060	73.50	BOP
9	516,675.7606	557,581.0998	73.50	BOP
10	516,684.6231	557,593.8454	73.50	BOP
11	516,682.1764	557,602.3214	73.50	BOP
12	516,669.6162	557,609.1023	73.50	BOP
13	516,727.2698	557,582.9439	74.00	BOP
14	516,736.1322	557,595.6895	74.00	BOP
15	516,729.4601	557,618.8036	74.00	BOP
16	516,716.9812	557,625.6092	74.00	BOP
17	516,778.7789	557,584.7881	74.50	BOP
18	516,787.6413	557,597.5336	74.50	BOP
19	516,777.4591	557,632.8078	74.50	BOP
20	516,760.4684	557,636.7793	74.50	BOP
21	516,758.2980	557,634.4035	74.50	BOP
22	516,755.7429	557,628.7705	74.50	BOP
23	516,754.8937	557,621.1800	74.50	BOP
24	516,745.0785	557,618.3467	74.50	BOP
25	516,740.4646	557,624.1917	74.50	BOP
26	516,735.1964	557,627.6570	74.50	BOP
27	516,728.2394	557,629.5156	74.50	BOP
28	516,722.7980	557,629.4367	74.50	BOP
29	516,837.6216	557,587.1803	75.00	BOP
30	516,846.5108	557,599.8316	75.00	BOP
31	516,838.3758	557,629.0765	75.00	BOP
32	516,836.1083	557,633.1546	75.00	BOP
33	516,824.7932	557,645.0534	75.00	BOP
34	516,814.8386	557,647.7887	75.00	BOP
35	516,795.6547	557,642.3571	75.00	BOP
36	516,785.6307	557,644.4584	75.00	BOP
37	516,774.6583	557,646.7402	75.00	BOP
38	516,767.2991	557,644.6123	75.00	BOP
39	516,845.0476	557,675.9741	74.50	BOF
40	516,848.8076	557,676.9222	74.50	BOF
41	516,852.7132	557,670.3179	74.50	BOF
42	516,844.6912	557,658.4157	74.50	BOF
43	516,836.5365	557,657.0836	74.50	BOF
44	516,834.5315	557,659.1919	74.50	BOF
45	516,833.9831	557,665.3937	74.50	BOF
46	516,837.3800	557,670.5350	74.50	BOF
47	516,881.0626	557,683.0123	75.00	BOF
48	516,879.9815	557,686.8635	75.00	BOF
49	516,943.5602	557,700.8768	75.50	BOS
50	516,942.6078	557,704.5375	75.50	BOS
51	517,006.0579	557,718.7412	76.00	BOS
52	517,004.9768	557,722.5923	76.00	BOS
53	517,126.5783	557,751.9110	76.50	BOS
54	517,125.4973	557,755.7616	76.50	BOS
55	516,888.9911	557,633.6019	71.00	BOT
56	516,879.6458	557,580.2928	72.00	BOT
57	516,835.9446	557,545.0961	73.00	BOT
58	516,579.9239	557,536.5551	74.00	BOT
59	516,514.3398	557,528.1297	75.00	BOT
60	516,502.6197	557,562.1688	76.00	BOT

BASELINE OF CONSTRUCTION CONTROL COORDINATES

		STATION	NORTHING	EASTING
1	POB	STA. 0+00.00	516,879.8667	557,671.3324
	PI	STA. 0+16.66	516,863.7274	557,667.1832
3	PT	STA. 0+31.31	516,856.1387	557,652.3473
4	PC	STA. 0+41.74	516,851.3913	557,643.0662
	PI	STA. 0+49.54	516,847.8376	557,636.1186
6	PT	STA. 0+56.62	516,849.9283	557,628.6002
7	PC	STA. 0+83.42	516,857.1087	557,602.7786
	PI	STA. 1+09.02	516,863.9660	557,578.1185
9	PT	STA. 1+20.54	516,838.4415	557,576.2109
10	PC	STA. 3+25.25	516,634.2940	557,560.9533
	PI	STA. 3+46.58	516,613.0312	557,559.3641
12	PT	STA. 3+61.35	516,606.5566	557,579.6794
13	PC	STA. 3+63.46	516,605.9158	557,581.6901
	PI	STA. 3+87.49	516,598.6193	557,604.5840
15	PCC	STA. 4+01.19	516,621.5219	557,611.8533
	PI	STA. 5+07.31	516,722.6749	557,643.9589
17	POE	STA. 6+13.42	516,824.9145	557,672.4147

NOTES:

1. THE SLOPED PORTION OF THE EMBANKMENT SHALL RECEIVE TOPSOILING, 6" DEPTH (ITEM 908010)
2. THE ENTIRE POND SHALL RECEIVE PERMANENT GRASS SEEDING - DRY GROUND (ITEM 908014).
3. DRY GROUND SEEDING AREA = 2,782 SY.

LEGEND

PROPOSED CONTOUR	—65—
POND MAINTENANCE ACCESS	
BASELINE OF CONSTRUCTION CONTROL COORDINATES	(8)
GRADING CONTROL POINTS	(8)
BOTTOM OF POND	BOP
BOTTOM OF FOREBAY	BOF
BOTTOM OF SWALE	BOS
BOTTOM OF TOE	BOT

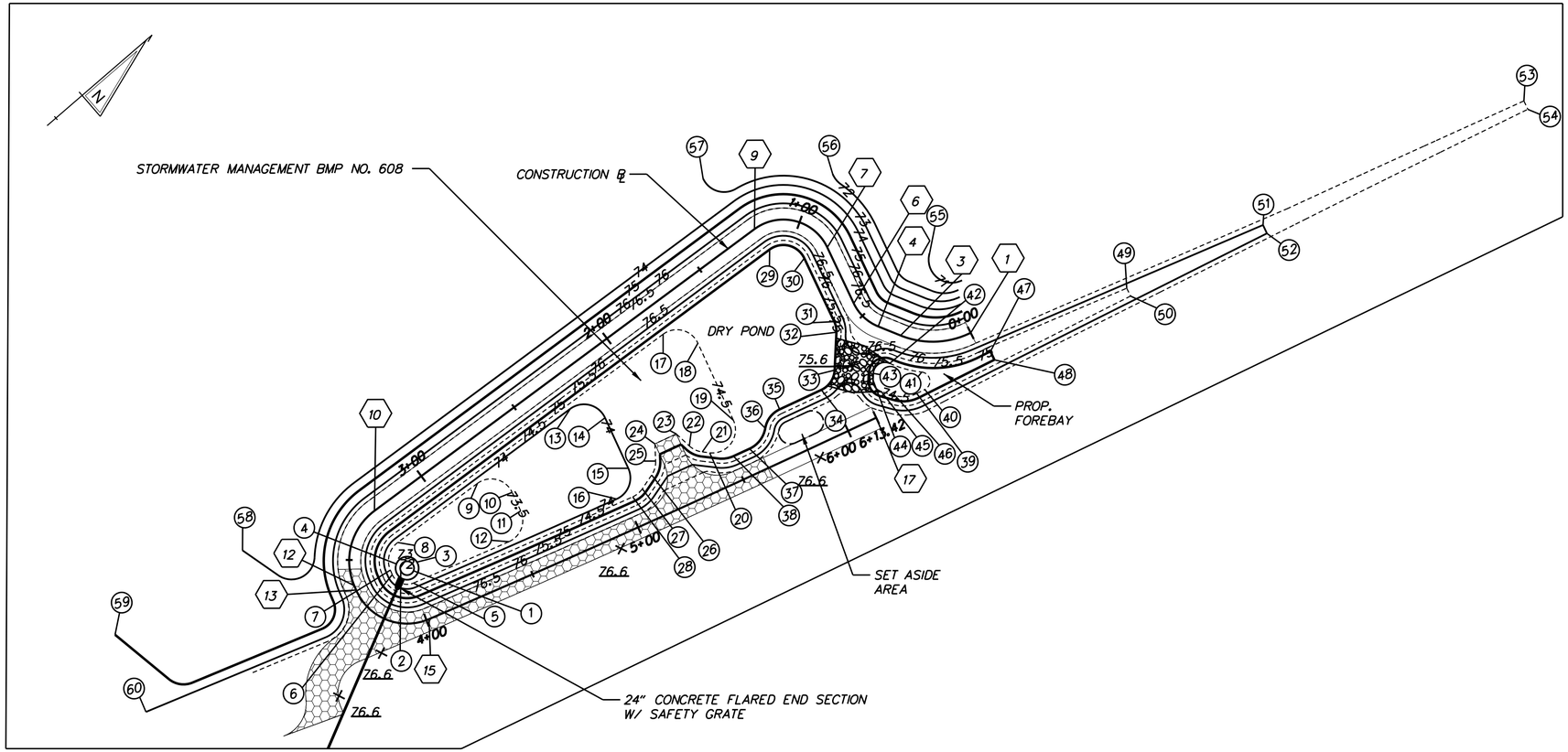

PLAN – STORMWATER MANAGEMENT POND – BMP NO. 608 – (STA. 147+00 S)

SW-48

DELAWARE DEPARTMENT OF TRANSPORTATION	ADDENDUMS / REVISIONS	SCALE 0 30 60 90 FEET	US 301 MARYLAND STATE LINE TO LEVELS ROAD	CONTRACT T200811301 / COUNTY NEW CASTLE	BRIDGE NO. / DESIGNED BY: DSM/ACF / CHECKED BY: JZS	DETAILS FOR SWM POND BMP NO. 608	SHEET NO. 385 / TOTAL SHTS. 850

E:\2814 DEL ROUTE 301\001,3,4,5,6 (DESIGN)\CAD\SB_301AET_000_STR.DGN

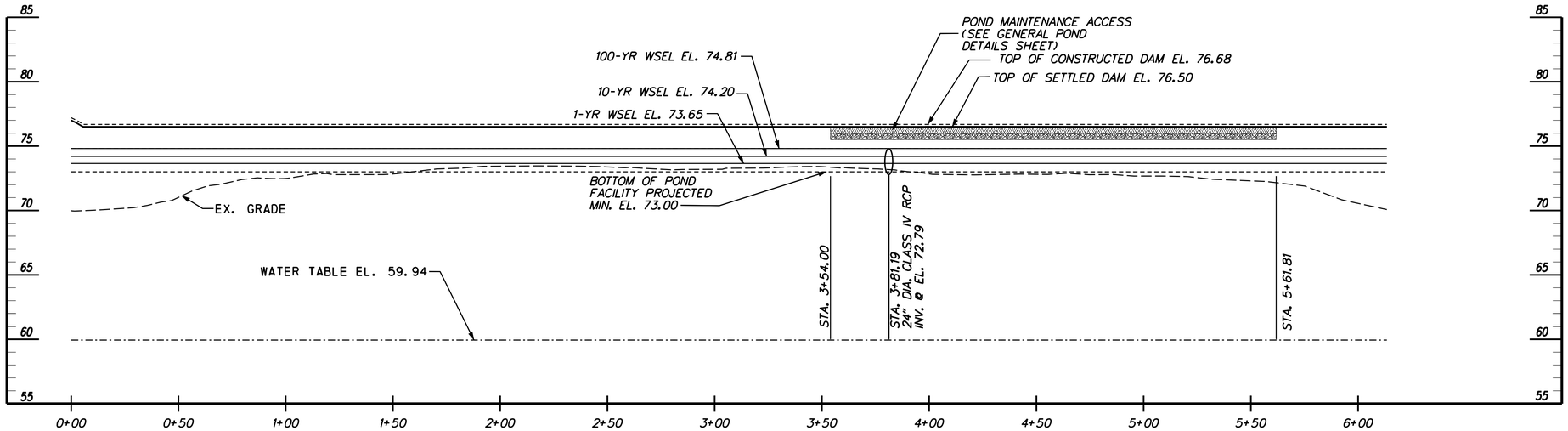

PROFILE ALONG ℄ OF EMBANKMENT

SCALE: HORIZ. 1"=30'
VERT. 1"=5'

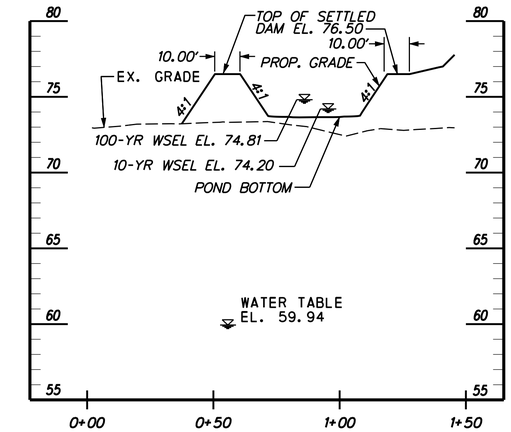

CROSS SECTION A-A

SCALE: HORIZ. 1"=30'
VERT. 1"=5'

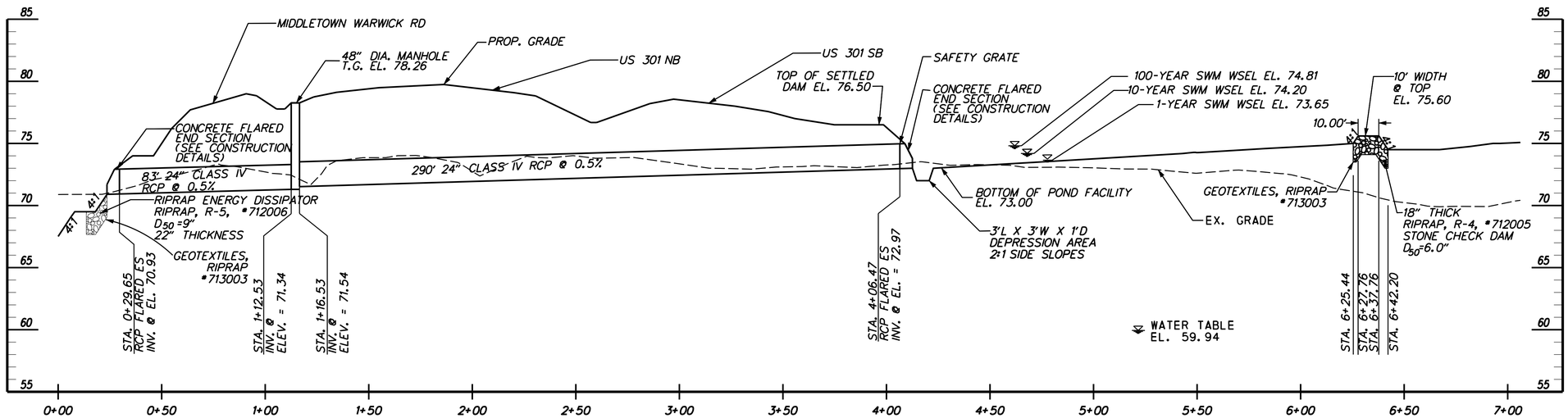

CROSS SECTION B-B

SCALE: HORIZ. 1"=30'
VERT. 1"=5'

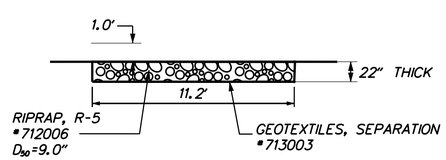

RIPRAP ENERGY DISSIPATOR
CROSS SECTION C-C

NOT TO SCALE

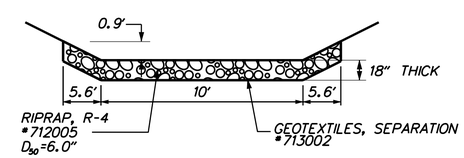

STONE CHECK DAM
CROSS SECTION D-D

NOT TO SCALE

POND MAINTENANCE ACCESS	
6" TOPSOIL, PERM. SEEDING	
6" DELAWARE NO. 3 STONE	

DETAILS – STORMWATER MANAGEMENT POND – BMP NO. 608 – (STA. 147+00 S)

SW-49

DELAWARE DEPARTMENT OF TRANSPORTATION	ADDENDUMS / REVISIONS	SCALE: AS SHOWN	US 301 MARYLAND STATE LINE TO LEVELS ROAD	CONTRACT T200811301	BRIDGE NO.	DETAILS FOR SWM POND BMP NO. 608	SHEET NO. 386
				COUNTY NEW CASTLE	DESIGNED BY: DSM/ACF		TOTAL SHTS. 850
					CHECKED BY: JZS		

E:\2814 DEL ROUTE 301\001,3,4,5,6 (DESIGN)\CAD\SB_301AET_000_STR.DGN

LEGEND	
EXISTING CONTOUR	68
PROPOSED CONTOUR	65
POND MAINTENANCE ACCESS	

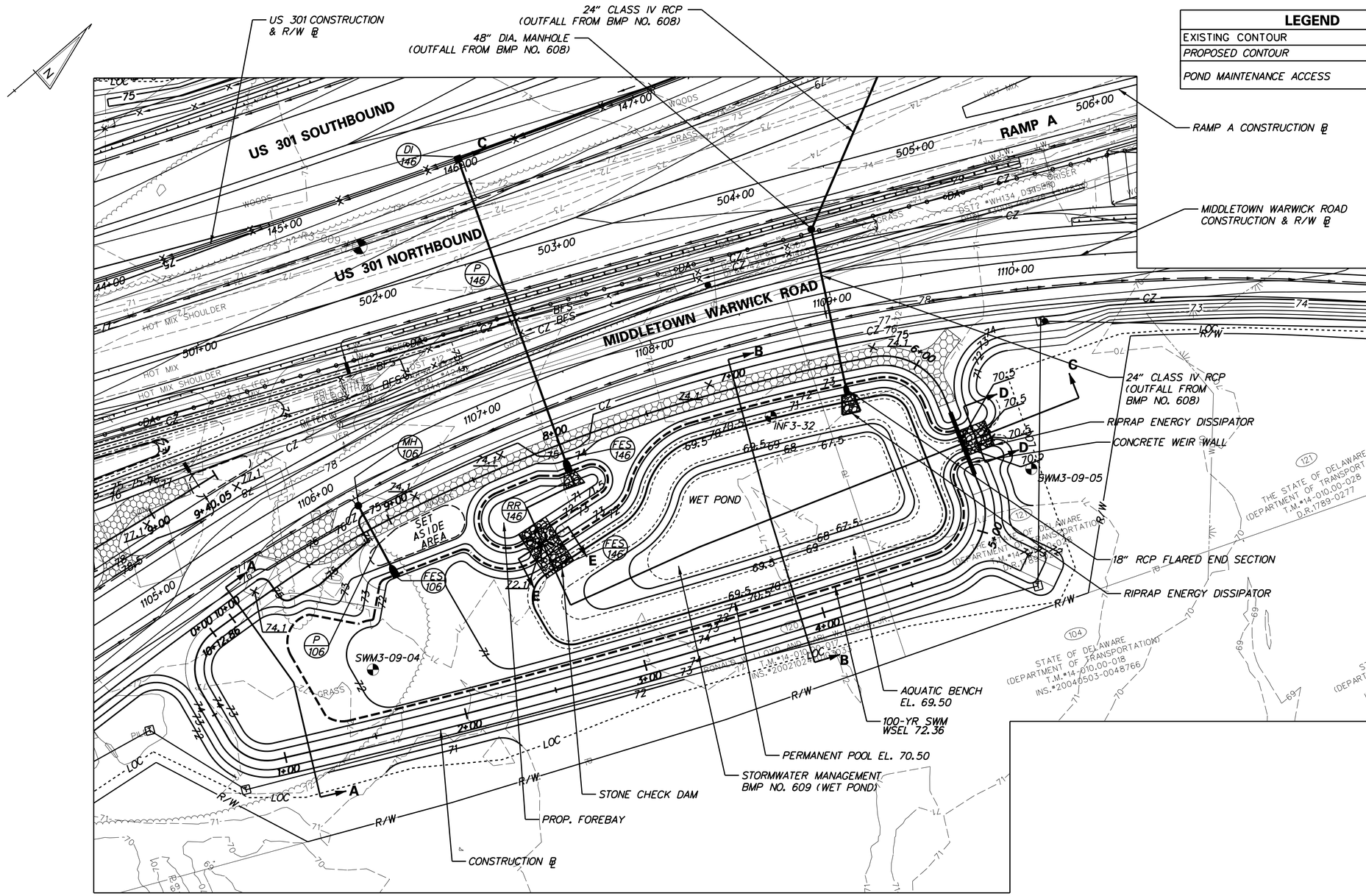

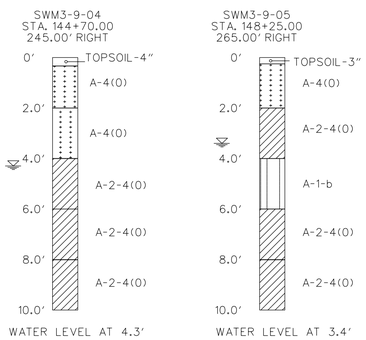

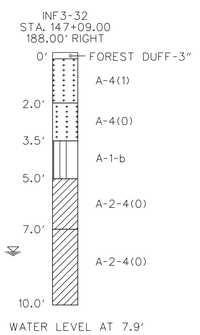

PLAN – STORMWATER MANAGEMENT POND – BMP NO. 609 – (STA. 147+00 N) (MIDDLETOWN WARWICK ROAD STA. 1104+85 TO STA. 1109+75), TYPE: WET POND

NOTE: SEE SHEETS SW-51 TO SW-54 FOR STORMWATER MANAGEMENT POND BMP NO. 609 DETAILS.

FACILITY DESIGN SUMMARY FOR STORMWATER MANAGEMENT BMP NO. 609

DESIGN STORM	FACILITY INFLOW (CFS)	FACILITY DISCHARGE (CFS)	WATER SURFACE ELEVATION (FT.)	STORAGE VOLUME (AC. FT.)
1-YEAR	3.35	0.32	70.99	0.219
10-YEAR	10.63	2.86	71.61	0.556
100-YEAR	22.60	10.05	72.36	1.047

HAZARD CLASSIFICATION: CLASS 'A' AS PER POND CODE 378
PERMANENT POOL STORAGE VOLUME: 0.728 AC.FT
DRAINAGE AREA TO FACILITY: 3.311 ACRES (DIRECT TO FACILITY), 6.418 ACRES (INCLUDING DRAINAGE AREA FROM BMP NO. 608 (147+00 S)).
MANAGEMENT PROVIDED BY FACILITY: WATER QUALITY BY EXTENDED DETENTION FOR 1-YEAR STORM AND WATER QUANTITY FOR 10-YEAR AND 100-YEAR STORMS.

SW-50

DELAWARE DEPARTMENT OF TRANSPORTATION

ADDENDUMS / REVISIONS

SCALE 0 30 60 90 FEET

US 301 MARYLAND STATE LINE TO LEVELS ROAD

CONTRACT	BRIDGE NO.	
T200811301	DESIGNED BY:	DSM/ACF
COUNTY		
NEW CASTLE	CHECKED BY:	JZS

STORMWATER MANAGEMENT PLAN

SHEET NO.
387
TOTAL SHTS.
850

E:\2814 DEL ROUTE 301\001,3,4,5,6 (DESIGN)\CAD\SB_301AET_000_STR.DGN

POND CONSTRUCTION SEQUENCE AND NOTES

THE STORMWATER MANAGEMENT POND SHALL FUNCTION AS A SEDIMENT BASIN DURING ROADWAY CONSTRUCTION AND SHALL BE CONSTRUCTED IN ACCORDANCE WITH THE FOLLOWING SECTIONS OF THE STANDARD SPECIFICATIONS:

SECTION 910 STORMWATER MANAGEMENT FACILITIES
- STORMWATER MANAGEMENT POND
- POND OUTLET STRUCTURE, CONCRETE
- CLAY BORROW

1. INSTALL STABILIZED CONSTRUCTION ENTRANCE.

2. CLEAR AND GRUB FOR INSTALLATION OF PERIMETER EROSION AND SEDIMENT CONTROLS.

3. INSTALL PERIMETER SEDIMENT CONTROLS AS SHOWN ON EROSION & SEDIMENT CONTROL SHEETS.

4. CLEAR AND GRUB REMAINING AREA FOR POND CONSTRUCTION.

5. CONSTRUCT POND OUTLET STRUCTURE, RIPRAP ENERGY DISSIPATOR AT END OF PRINCIPAL SPILLWAY AND PARTIAL EMBANKMENT AS NEEDED TO INSTALL POND OUTLET STUCTURE. INSTALL POND OUTLET STRUCTURE. INSTALL SKIMMER DEWATERING DEVICE. DE-WATER FOUNDATION AS NEEDED IN ACCORDANCE WITH SECTION 111 AND USE SUMP PIT FOR PUMPING. (SEE EROSION & SEDIMENT CONTROL DETAILS FOR SKIMMER DEWATERING DEVICE INSTALLATION).

6. EXCAVATE THE POND AND COMPLETE THE EMBANKMENT TO LINES, GRADES AND DETAILS SHOWN IN THE CONSTRUCTION PLANS. DURING EXCAVATION, THE CONTRACTOR SHALL SALVAGE AND STOCKPILE SOILS TO BE USED TO CONSTRUCT EMBANKMENT. THE SOILS REQUIRED FOR THE EMBANKMENT MAY BE OBTAINED FROM ELSEWHERE WITHIN THE PROJECT LIMITS. EXCAVATE POND BOTTOM TO ELEVATION 66.50 AS SHOWN FOR SEDIMENT STORAGE DURING CONSTRUCTION.

7. STABILIZE ALL BARE AREAS. SEE CONSTRUCTION SEQUENCE PLANS FOR LOCATION OF EROSION AND SEDIMENT CONTROL MEASURES.

MAINTENANCE OF POND AS A SEDIMENT BASIN

1. CONTRACTOR SHALL INSPECT THE BASIN IMMEDIATELY AFTER EVERY RAIN AND MAKE REPAIRS AS NEEDED.

2. CONTRACTOR SHALL CLEARLY MARK THE CLEANOUT ELEVATION ON A STAKE DRIVEN INTO THE GROUND AT A LOCATION CLEARLY VISIBLE FROM THE EMBANKMENT. SEDIMENT SHALL BE REMOVED WHEN CLEANOUT ELEVATION IS REACHED AND DISPOSED OF AT A LOCATION APPROVED BY THE ENGINEER.

CONVERSION TO PERMANENT STORMWATER MANAGEMENT POND

1. CONVERT THE BASIN INTO THE PERMANENT STORMWATER MANAGEMENT POND AND GROUT TEMPORARY 4" DIA. ORIFICE AT EL. 70.50 AFTER ALL AREAS DRAINING TO THE POND HAVE BEEN PERMANENTLY STABILIZED AND THE ENGINEER HAS APPROVED THE CONVERSION.

2. REMOVE ACCUMULATED SEDIMENT TO ELEVATION 67.50 AND DISPOSE SEDIMENT AT A LOCATION APPROVED BY THE ENGINEER.

3. COMPLETE STABILIZATION OF ALL BARE AREAS. REMOVE EROSION AND SEDIMENT CONTROL MEASURES AND DEACTIVATE SKIMMER DEWATER DEVICE.

AS-BUILT DRAWINGS OF STORMWATER MANAGEMENT FACILITIES

THE CONTRACTOR SHALL PROVIDE 'AS-BUILT' DRAWINGS OF ALL STORMWATER MANAGEMENT FACILITIES, SUCH AS PONDS, INFILTRATION BASINS, BIOFILTRATION SWALES, ETC. 'AS-BUILT' DRAWINGS SHALL SHOW THE ACTUAL FINISH GROUND CONTOURS, OUTLET STRUCTURES DIMENSIONS AND ELEVATIONS, ETC. AS THEY EXIST AT THE COMPLETION OF THE PROJECT. THESE DRAWINGS SHALL BE SIGNED AND SEALED BY A PROFESSIONAL ENGINEER OR LAND SURVEYOR.

ITEM 712005, RIPRAP, R-4

STATION/OFFSET	AREA
STA. 1106+93, 72.4' RT. TO STA. 1107+16, 97.1' RT.	54 SY

ITEM 712006, RIPRAP, R-5

STATION/OFFSET	AREA
STA. 1109+77, 96.7' RT. TO STA. 1109+57, 86.4' RT.	24 SY

ITEM 713002, GEOTEXTILES, SEPARATION

STATION/OFFSET	AREA
STA. 1105+57, 16.0' RT. TO STA. 1109+66, 38.1' RT.	596 SY

ITEM 302011, DELAWARE NO. 3 STONE

STATION/OFFSET	WEIGHT
STA. 1105+57, 16.0' RT. TO STA. 1109+66, 38.1' RT.	115 TON

ITEM 713003, GEOTEXTILES, RIPRAP

STATION/OFFSET	AREA
STA. 1106+93, 72.4' RT. TO STA. 1107+16, 97.1' RT.	65 SY
STA. 1109+77, 96.7' RT. TO STA. 1109+57, 86.4' RT.	31 SY

ITEM 910007, OUTLET STRUCTURE

ITEM	QUANTITY
CONCRETE WEIR WALL	1

TEMPORARY SEDIMENT BASIN DETAILS

SKIMMER ORIFICE SIZE (IN)	SKIMMER INVERT	*MIN. PVC LENGTH (FT)	CLEANOUT ELEVATION	**EMERGENCY SPILLWAY ELEVATION
4	70.50	3.54	71.20	71.90

* ALL OTHER DIMENSIONS IN ACCORDANCE WITH DELDOT STANDARD CONSTRUCTION DETAILS.
** BLOCK OUTLET STRUCTURE TO THIS ELEVATION IN TEMPORARY CONDITIONS

NOTES- STORMWATER MANAGEMENT POND - BMP NO. 609 - (STA. 147+00 N)

SW-51