PANEL DESIGNATION	SHEET NUMBER	QUANTITY	LEGEND	SIZE AREA	SIZE HEIGHT	SIZE WIDTH	COLOR LEGEND	COLOR BCKGRND	BORDER WIDTH	BORDER RADIUS	ARROW	SHIELD	REMARKS
C-1	SSC-4	1	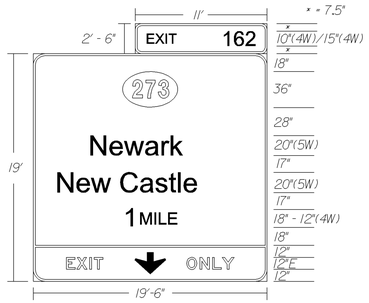	398□	2'-6"	11'-0"	W	G	2"	6"	-	-	- EXTRUDED ALUMINUM - FOR INFORMATIONAL PURPOSES ONLY
					16'-0"	19'-6"	W	G	2"	12"	-	M1-5 36"	
					3'-0"	19'-6"	B	Y	2"	12"	DOWN 22"	-	
C-2	SSC-7	1	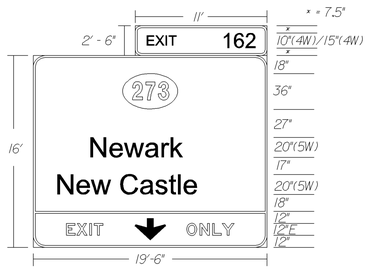	339.5□	2'-6"	11'-0"	W	G	2"	6"	-	-	- EXTRUDED ALUMINUM - FOR INFORMATIONAL PURPOSES ONLY
					13'-0"	19'-6"	W	G	2"	12"	-	M1-5 36"	
					3'-0"	19'-6"	B	Y	2"	12"	DOWN 22"	-	
C-3	SSC-11	1	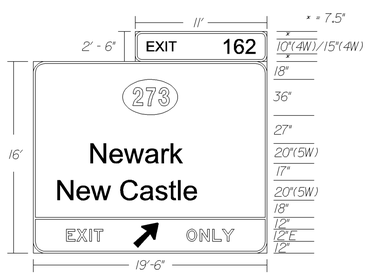	339.5□	2'-6"	11'-0"	W	G	2"	6"	-	-	- EXTRUDED ALUMINUM - FOR INFORMATIONAL PURPOSES ONLY
					13'-0"	19'-6"	W	G	2"	12"	-	M1-5 36"	
					3'-0"	19'-6"	B	Y	2"	12"	TYPE A @45° 28"	-	

NOTES: 1. COLORS: B=BLACK, BL=BLUE, BR=BROWN, G=GREEN, W=WHITE/SILVER, Y=YELLOW.
2. THE CONTRACTOR WILL FURNISH AND INSTALL ALL SIGNS SHOWN ON THIS SHEET.

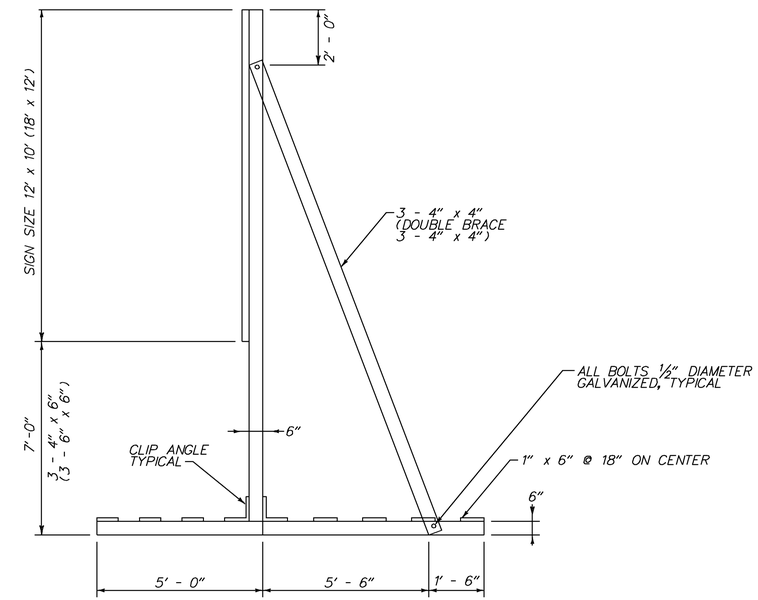

NOTES:
1. "SMALL" SUPPORT FOR SIGNS LESS THAN OR EQUAL TO 120 SF.
"LARGE" SUPPORT FOR SIGNS GREATER THAN 120 SF BUT LESS THAN 216 SF.
2. "LARGE" MODIFICATIONS DENOTED BY ALTERNATIONS IN (PARENTHESES).
3. SAND BAGS ARE TO BE PLACED ON 1" x 6" BEAMS. MIN 15 BAGS. (MAX. 25 BAGS).
4. ALL WORK AND MATERIALS NECESSARY TO FURNISH, INSTALL, RELOCATE AND REMOVE TEMPORARY SKIDS USED FOR TEMPORARY SIGNING WILL NOT BE MEASURED AND PAID FOR BUT WILL BE INCIDENTAL TO ITEM NO. 763500 - MAINTENANCE OF TRAFFIC.

SKID FOR NON-BREAKAWAY SYSTEM TEMPORARY SIGNING

5/22/2015 10:09:09 AM
\\BALSRV02\V2011\2011\11009_TYBOUTS\SR1WIDE_ NBAUXLANE\CADD\CONTRACT\PLANS\CP_SSC14_NBAUXLN.DGN

DELAWARE DEPARTMENT OF TRANSPORTATION	ADDENDUMS / REVISIONS	NOT TO SCALE	SR 1 NORTHBOUND AUXILIARY LANE US 40 TO SR 273	CONTRACT T201511001	BRIDGE NO. 1-319N	GUIDE SIGN DETAILS	SS-14
				COUNTY NEW CASTLE	DESIGNED BY: SM		SHEET NO. 75
					CHECKED BY: JCR		TOTAL SHTS. 77