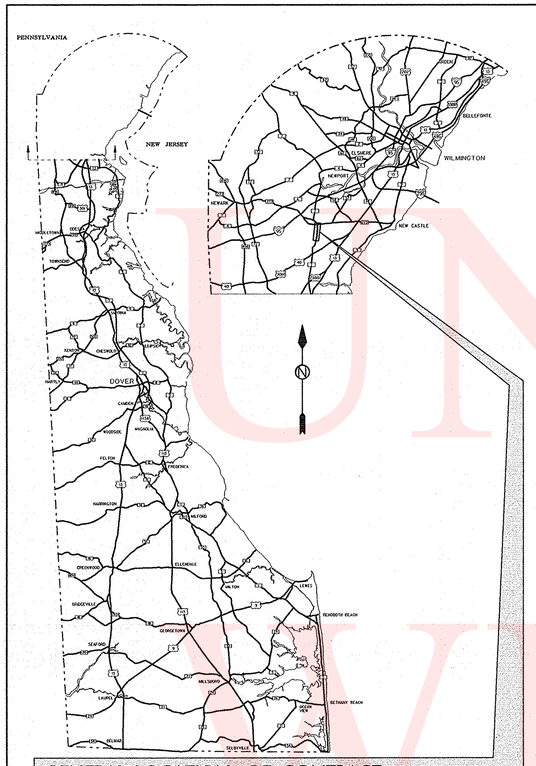

GENERAL LOCATION OF CONTRACT

THE STATE OF DELAWARE
DEPARTMENT OF TRANSPORTATION

U.S. CUSTOMARY UNITS

CONSTRUCTION PLANS FOR:

SR 7,
NEWTOWN ROAD TO SR 273

CONTRACT NUMBER T200312601
FEDERAL AID PROJECT NUMBER N/A

FROM MILE POST 4.66 TO MILE POST 5.64

END
CONTRACT T200312601
STATION 130+00.00

LIMIT OF CONSTRUCTION
STATION 14+51.00

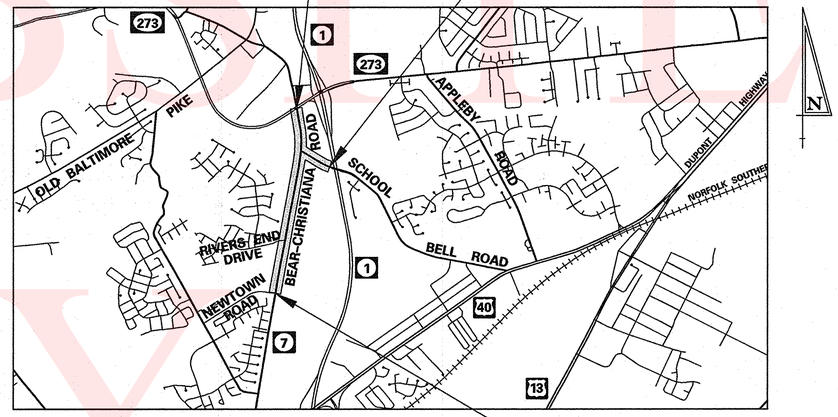

LOCATION MAP
NOT TO SCALE

BEGIN
CONTRACT T200312601
STATION 78+00.00

COUNTY	M.R. NO.		SHEET NUMBER	TOTAL SHEETS
NEW CASTLE	5		1	115

DESIGN DESIGNATION

FUNCTIONAL CLASS: MAJOR COLLECTOR
TYPE OF CONSTRUCTION: 4-R
A.A.D.T. CURRENT: 21,484 YEAR: 2007
A.A.D.T. PROJECTED: 43,616 YEAR: 2025
D.H.V. PROJECTED: 4,623 YEAR: 2025
DESIGN SPEED: 45 M.P.H.
TRUCKS: 7 %
DIRECTION OF DISTRIBUTION: 59 %

INDEX OF SHEETS

SHEET №	TABLE OF CONTENTS
1	TITLE SHEET
2	PLAN SHEET INDEX
3	NOTES AND LEGEND
4	PROJECT NOTES
5-10	TYPICAL SECTIONS
11-12	HORIZONTAL AND VERTICAL CONTROL
13-20	CONSTRUCTION PLANS
21-30	PROFILES
31-40	GRADES AND GEOMETRICS
41-46	STORMWATER MANAGEMENT PLANS AND DETAILS
47-50	CONSTRUCTION DETAILS
51-58	RETAINING WALL PLANS
59-79	CONSTRUCTION PHASING, MOT AND EROSION CONTROL
80	ENVIRONMENTAL COMPLIANCE
81-89	LANDSCAPING PLANS AND DETAILS
90-94	LIGHTING PLANS AND DETAILS
95-97	UTILITY RELOCATION PLANS
98-105	SIGNING, STRIPING AND CONDUIT PLANS
106-115	SIGNALIZATION PLANS

APPROVED DESIGN EXCEPTIONS DATE: 6/6/2005

DESIGN PARAMETER	REQUIRED	PROVIDED
WIDTH OF THROUGH LANES	12 FT	11 FT
WIDTH OF AUXILIARY LANES	12 FT	11 FT
WIDTH OF OUTSIDE SHOULDER	8 FT	7 FT. MIN.

ADDENDA & REVISIONS

DESCRIPTION	NAME & DATE

PREPARED BY
THE CONSULTING FIRM OF
WHITMAN, REQUARDT & ASSOCIATES, LLP
ENGINEERS

JEFFREY R. RIEGNER REGISTERED No. 9840 DELAWARE PROFESSIONAL ENGINEER
SEAL

RECOMMENDED — DATE 1/7/11

RECOMMENDED

SQUAD MANAGER, CONSTRUCTION — DATE 2/16/11

GROUP ENGINEER, CONSTRUCTION — DATE 2/16/11

ASSISTANT DIRECTOR, TRANSPORTATION SOLUTIONS (CONSTRUCTION) — DATE 2-21-11

DEPARTMENT OF TRANSPORTATION

RECOMMENDED
STORMWATER ENGINEER
DATE 7MAR2011
VINCENT W. DAVIS REGISTERED No. 12898 DELAWARE PROFESSIONAL ENGINEER
SEAL

RECOMMENDED
SQUAD MANAGER, TRANSPORTATION SOLUTIONS (PROJECT DEVELOPMENT OR BRIDGE DESIGN)
DATE 3/7/11
MATTHEW JOSEPH VINCENT LICENSED No. 16686 DELAWARE PROFESSIONAL ENGINEER
SEAL

RECOMMENDED
BRIDGE DESIGN ENGINEER
DATE
SEAL

RECOMMENDED
GROUP ENGINEER, PROJECT DEVELOPMENT
DATE 3/7/11
MARK CHRISTOPHER TUDOR REGISTERED No. 10803 DELAWARE PROFESSIONAL ENGINEER
SEAL

RECOMMENDED
ASSISTANT DIRECTOR, TRANSPORTATION SOLUTIONS
DATE 3/8/11
DREW A. BOYCE REGISTERED No. 9870 DELAWARE PROFESSIONAL ENGINEER
SEAL

APPROVED
CHIEF ENGINEER
DATE 3/9/11
NATALIE D. BARNHART REGISTERED No. 9820 DELAWARE PROFESSIONAL ENGINEER
SEAL

APR. 1, 2003

UNOFFICIAL WEBSITE COPY

CONTRACT	COUNTY	F.A.P. NO.	SHEET NO.	TOTAL SHTS.
T200312601	NEW CASTLE	SEE TITLE SHEET	2	115

SR 7, NEWTOWN ROAD TO SR 273

REVISIONS

PLAN SHEET INDEX

SCALE

0 200 400 600

FEET

N

LEGEND

- CONSTRUCTION PLAN SHEET NUMBER
- ROADWAY PROFILES SHEET NUMBER
- GRADES AND GEOMETRICS PLAN SHEET NUMBER
- CONSTRUCTION PHASING, MOT AND EROSION CONTROL SHEET NUMBER
- LANDSCAPING PLANS AND DETAILS SHEET NUMBER
- ENVIRONMENTAL COMPLIANCE PLAN SHEET NUMBER
- LIGHTING PLAN SHEET NUMBER
- SIGNING, STRIPING AND CONDUIT PLAN SHEET NUMBER

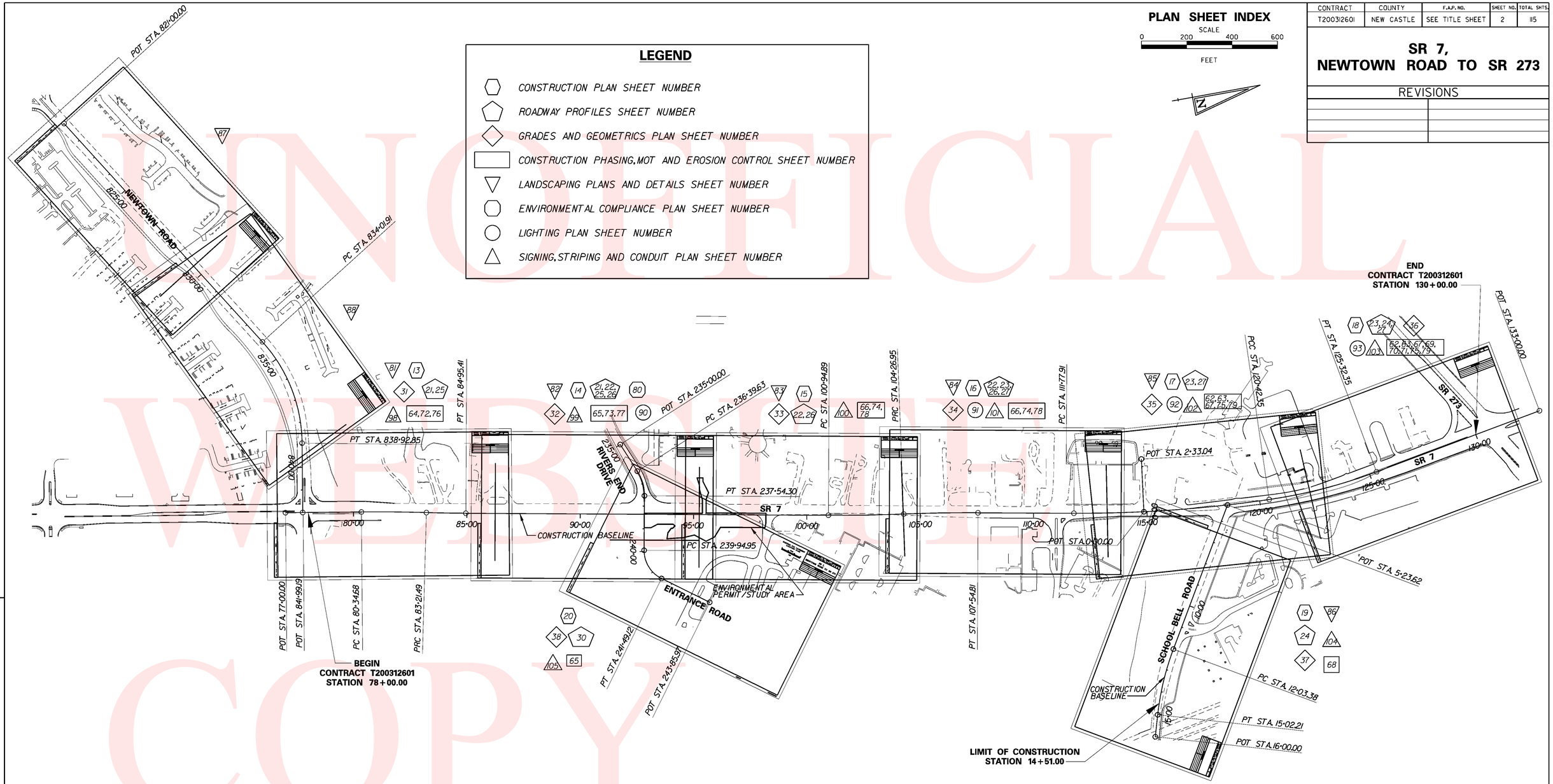

UNOFFICIAL WEB SITE COPY

PREL. TRACING SJB DESIGN KGM-A CHKD. JRR

11:50:49 AM

m:\31131-04\st01sr7.plf

CONTRACT	COUNTY	F.A.P. NO.	SHEET NO.	TOTAL SHTS.
T200312601	NEW CASTLE	SEE TITLE SHEET	3	115

SR 7, NEWTOWN ROAD TO SR 273

REVISIONS

NOTES & LEGEND

SYMBOLS SHOWN ON THIS SHEET DO NOT NECESSARILY APPEAR IN THIS CONTRACT.

UNOFFICIAL WEBSITE COPY

GENERAL NOTES

1. THIS PROJECT IS TO BE CONSTRUCTED IN ACCORDANCE WITH THE DELAWARE DEPARTMENT OF TRANSPORTATION "STANDARD SPECIFICATIONS", DATED AUGUST 2001 AND THE DELAWARE DEPARTMENT OF TRANSPORTATION "STANDARD CONSTRUCTION DETAILS", DATED 2001, INCLUDING ALL REVISIONS UP TO THE DATE OF ADVERTISEMENT.

2. THE CONTRACTOR SHALL GIVE TWO (2) WEEKS NOTICE TO THE PROPERTY OWNER WHEN ANY FIXTURE, SHRUB OR OTHER OBJECT MUST BE REMOVED FROM THE RIGHT OF WAY OR EASEMENT AREA. IF THE OWNER HAS NOT ATTEMPTED TO SALVAGE THIS PROPERTY, THE CONTRACTOR SHALL REMOVE IT WITHOUT OBLIGATION. COMPENSATION SHALL BE INCIDENTAL TO THE CONTRACT.

3. THE ENDS OF ALL CURBS SHALL BE DEPRESSED FLUSH WITH THE PAVEMENT AT A RATIO OF TWELVE TO ONE (12:1) UNLESS OTHERWISE DIRECTED BY THE ENGINEER.

4. THE CONTRACTOR SHALL PROVIDE AND INSTALL PVC SLEEVES (4" INSIDE MINIMUM DIAMETER, 6" INSIDE MAXIMUM DIAMETER) IN PROPOSED CONCRETE SIDEWALKS, ISLANDS, AND MEDIANS FOR FUTURE TRAFFIC SIGN POSTS AS DIRECTED BY THE ENGINEER. THE LOWER END OF THE SLEEVE SHALL SIT ON THE TOP OF THE SUBBASE MATERIAL. THE COST SHALL BE INCIDENTAL TO THE CONTRACT.

5. STAGING AREAS - PROPER EROSION AND SEDIMENT CONTROL MEASURES AS DETERMINED BY THE ENGINEER SHALL BE INSTALLED IN ALL STAGING AREAS. ALL AREAS USED BY THE CONTRACTOR FOR STAGING OPERATIONS SHALL BE FULLY RESTORED BY THE CONTRACTOR UPON COMPLETION OF THE CONTRACT. IF THE STAGING AREA IS PAVED, IT SHALL BE RESTORED TO ITS ORIGINAL CONDITION. IF THE AREA IS UNPAVED, IT SHALL BE RE-GRADED, TOPSOILED, SEEDED AND MULCHED IN ACCORDANCE WITH DELAWARE STANDARD SPECIFICATIONS 732, 734 AND 735, FOR TOPSOIL, SEED AND MULCH RESPECTIVELY, TO THE SATISFACTION OF THE ENGINEER. THE SEED SHALL ADHERE TO THE SPECIFICATIONS OF SECTION 734 FOR PERMANENT GRASS SEEDING - DRY GROUND. ALL COSTS ASSOCIATED WITH RESTORATION OF THE STAGING AREA SHALL BE AT THE CONTRACTOR'S EXPENSE. IF THE ENGINEER DETERMINES THAT A SATISFACTORY STAND OF GRASS DOES NOT EXIST AT THE TIME OF FINAL INSPECTION, ALL COSTS ASSOCIATED WITH REESTABLISHING A SATISFACTORY STAND OF GRASS SHALL BE AT THE CONTRACTOR'S EXPENSE.

6. SITE REVIEWER - AN EROSION CONTROL SITE REVIEWER SHALL BE A PERSON FROM THE CONTRACTOR'S STAFF ASSIGNED TO EROSION AND SEDIMENT CONTROL IMPLEMENTATION AND MAINTENANCE AND SHALL BE REQUIRED ON SPECIFIC PROJECTS. THE NAME AND DNREC CERTIFICATION NUMBER OF EACH SITE REVIEWER SO REQUIRED SHALL BE SUBMITTED TO THE DEPARTMENT AT THE TIME OF BID. THE NAME OF THE DELAWARE REGISTERED PROFESSIONAL ENGINEER PROVIDING DIRECTION AND SUPERVISION OF THE SITE REVIEWER, AS REQUIRED IN SECTION 12.3 OF THE DELAWARE SEDIMENT AND STORMWATER REGULATIONS, SHALL ALSO BE SUBMITTED TO THE DEPARTMENT AT THE TIME OF BID. THE SITE REVIEWER REQUIREMENTS IN EFFECT ON THIS PROJECT SHALL BE MARKED WITH AN "X" BELOW:

EROSION POTENTIAL FOR THIS PROJECT	SITE REVIEWER REQUIREMENT
( ) INSIGNIFICANT	NONE
( ) MINOR	CONTRACTOR CERTIFICATION COURSE TRAINING ONLY, AS DEFINED IN SECTION 13 OF THE DELAWARE SEDIMENT AND STORMWATER REGULATIONS.
( ) MEDIUM	AT THE TIME OF BID OF THE CONTRACT, EITHER THE SUPERINTENDENT OR A SEPARATE INDIVIDUAL FROM THE CONTRACTOR'S STAFF SHALL BE A CERTIFIED CONSTRUCTION REVIEWER (CCR), AS DEFINED IN SECTION 12 OF THE DELAWARE SEDIMENT AND STORMWATER REGULATIONS.
(X) MAJOR	SUPERINTENDENT AND AN INDIVIDUAL FROM CONTRACTOR'S STAFF SHALL BE CCR. ONE INDIVIDUAL FROM THE CONTRACTOR'S STAFF MUST BE A CCR AT THE TIME OF BID OF THE CONTRACT. THE SUPERINTENDENT MUST BECOME A CCR WITHIN ONE YEAR AFTER THE AWARD OF CONTRACT.

7. ELECTRONIC PROJECT FILES THAT WILL BE MADE AVAILABLE TO THE CONTRACTOR INCLUDE:

( )	NONE
(X)	ASCII DATA FILES WITH COORDINATES AND ELEVATIONS FOR PROPOSED POINTS AS SELECTED BY THE ENGINEER.
(X)	RASTER FILES, IN .CAL FILE FORMAT, FOR ALL PLAN SHEETS.
( )	EXISTING DIGITAL TERRAIN MODEL, IN .DTM FILE FORMAT, COMPATIBLE WITH SOFTWARE CURRENTLY USED BY DELDOT.
( )	PROPOSED DIGITAL TERRAIN MODEL, IN .DTM FILE FORMAT, COMPATIBLE WITH SOFTWARE CURRENTLY USED BY DELDOT.
( )	DESIGN FILE, IN .DGN FILE FORMAT, CONTAINING ONLY THE PROPOSED 3D TRIANGLES OF THE PROPOSED DIGITAL TERRAIN MODEL (DTM).

NOTE: THE DOCUMENT ENTITLED "RELEASE FOR DELIVERY OF DOCUMENTS IN ELECTRONIC FORM TO A CONTRACTOR" MUST BE SIGNED BY ALL PARTIES PRIOR TO THE DELIVERY OF ANY ELECTRONIC PROJECT FILES.

8. AMERICAN TRAFFIC SAFETY SERVICES ASSOCIATION (ATSSA) CERTIFIED TRAFFIC CONTROL SUPERVISOR REQUIREMENT FOR THIS PROJECT.

( )	THE CONTRACTOR SHALL NOT BE REQUIRED TO HAVE AN ATSSA SUPERVISOR ASSIGNED TO THIS PROJECT.
(X)	THE CONTRACTOR SHALL HAVE AN ATSSA SUPERVISOR ASSIGNED TO THIS PROJECT. THE CONTRACTOR'S GENERAL SUPERINTENDENT FOR THIS PROJECT OR ANOTHER ATSSA CERTIFIED MEMBER OF THE CONTRACTOR'S PROJECT STAFF MAY BE THE ATSSA SUPERVISOR.
( )	THE CONTRACTOR SHALL HAVE AN ATSSA SUPERVISOR ASSIGNED TO THIS PROJECT. THE ATSSA SUPERVISOR'S SOLE JOB SHALL BE SUPERVISION OF THE INSTALLATION, OPERATION AND MAINTENANCE OF TRAFFIC CONTROL DEVICES FOR THIS PROJECT. THE CONTRACTOR'S GENERAL SUPERINTENDENT FOR THIS PROJECT SHALL NOT BE THE ATSSA SUPERVISOR.

9. THE DISTURBED AREA FOR THIS PROJECT IS 22.5 ACRES.

10. THE CONTRACTOR SHALL BE RESPONSIBLE FOR ADHERING TO THE CONSTRUCTION SITE POLLUTION PREVENTION SPECIFICATIONS AS DETAILED IN SECTION 3.6 OF THE "DELAWARE EROSION AND SEDIMENT CONTROL HANDBOOK". ALL COSTS ASSOCIATED WITH ADHERING TO THE STANDARDS SHALL BE INCIDENTAL TO THE OVERALL CONTRACT COSTS.

11. THE EROSION AND SEDIMENT CONTROL PLANS HAVE BEEN APPROVED BY DELDOT'S STORMWATER ENGINEER UNDER DELDOT'S DELEGATED AUTHORITY. THE EROSION AND SEDIMENT CONTROL PLANS ARE VALID FOR A THREE YEAR PERIOD, BEGINNING ON THE DATE THE STORMWATER ENGINEER SIGNED THE CONSTRUCTION TITLE SHEET. IF THE FINAL ACCEPTANCE OF THE PROJECT IS ANTICIPATED TO EXTEND BEYOND THE THREE YEARS, THE CONTRACTOR SHALL INFORM THE ENGINEER THREE MONTHS PRIOR TO THE EXPIRATION OF THE EROSION AND SEDIMENT CONTROL PLAN APPROVAL. DELDOT WILL REVIEW THE CURRENT EROSION AND SEDIMENT CONTROL PLAN AND ISSUE AN EXTENSION WITH ANY APPROPRIATE MODIFICATIONS.

CONSTRUCTION

MILL AND OVERLAY
FULL-DEPTH PAVEMENT
4" P.C.C. SIDEWALK 4" GABC, TYPE B
6" P.C.C. SIDEWALK 6" GABC, TYPE B
BUTT JOINT
PAVEMENT PATCH
2" SUPERPAVE, TYPE C 8" GABC, TYPE B
6" PATTERNED PCC SIDEWALK 6" GABC, TYPE B
REMOVAL OF EXISTING PAVEMENT (OUTSIDE LIMITS OF NEW PAVEMENT TEMPLATE); TOPSOIL, SEED & MULCH
RIPRAP
DRAINAGE INLET
DI — DRAINAGE INLET IDENTIFIER
MANHOLE
MH — MANHOLE IDENTIFIER
DRAINAGE PIPE & FLOW ARROW
P — PIPE IDENTIFIER
FLARED END SECTION
FE — FLARED END SECTION IDENTIFIER
JUNCTION BOX
JB — JUNCTION BOX IDENTIFIER
CJB — CONVERT TO JB IDENTIFIER
UNDERDRAIN
UD — UNDERDRAIN IDENTIFIER
UNDERDRAIN OUTLET STRUCTURE
DITCH
BFS — BIOFILTRATION SWALE

INTEGRAL P.C.C. CURB AND GUTTER TYPE 1
P.C.C. CURB TYPE 1 &/OR 3
P.C.C. CURB TYPE 2
INTEGRAL P.C.C. CURB AND GUTTER TYPE 2
INTEGRAL P.C.C. CURB AND GUTTER TYPE 3
CURB (BY OTHERS)
C — CURB IDENTIFIER
C/O — CURB OPENING
CR — CURB ACCESS RAMP IDENTIFIER WITH TYPE NUMBER
CONCRETE SAFETY BARRIER
B — BARRIER IDENTIFIER
STEEL BEAM GUARDRAIL
GUARDRAIL END SECTION
GR — GUARDRAIL IDENTIFIER
METAL FENCE
WOOD FENCE
DND — DO NOT DISTURB IDENTIFIER
M — R/W MONUMENT IDENTIFIER
RL/C — RELOCATE BY CONTRACTOR
A/C — ADJUST BY CONTRACTOR
RM/C — REMOVE BY CONTRACTOR
RL/O — RELOCATE BY OTHERS
A/O — ADJUST BY OTHERS
RM/O — REMOVE BY OTHERS
C/MH — CONVERT TO MANHOLE

CONSTRUCTION PHASING

STONE CHECK DAM
INLET SEDIMENT CONTROL
PERIMETER DIKE SWALE
TEMPORARY SWALE
ED — EARTH DIKE
S-B — SAND BAG DIVERSION
EROSION CONTROL FABRIC
ST — SEDIMENT TRAP
TRAFFIC CONTROL PLASTIC DRUMS
ROAD WORK 1500 FT — CONSTRUCTION WARNING SIGNS
EXISTING CONTOURS
PROPOSED CONTOURS
CRASH CUSHION (SAND BARRELS)

PST — PORTABLE SEDIMENT TANK
SF — SILT FENCE
RSF — REINFORCED SILT FENCE
SF — SILT FENCE IDENTIFIER
SW — STILLING WELL
SP — SUMP PIT
DWB — DEWATERING BASIN
ST — SEDIMENT TRAP PIPE OUTLET
TSD — TEMPORARY SLOPE DRAIN
SBD — SAND BAG DIKE
TYPE 3 BARRICADE
PHASE — TRAFFIC FLOW ARROW
PORTABLE CONCRETE SAFETY BARRIER
STABILIZED CONSTRUCTION ENTRANCE

SIGNING, STRIPING AND CONDUITS

PAVE — CONDUITS UNDER PAVEMENT
SOD — CONDUITS IN TRENCH
CONDUIT JUNCTION WELL
PAVEMENT MARKINGS
LANE STRIPING
NO TURN ON RED — TRAFFIC SIGN AND POST (BY STATE FORCES)

RIGHT OF WAY

RW — PROPOSED RIGHT-OF-WAY
RW&DA — PROPOSED RIGHT OF WAY AND DENIAL OF ACCESS
DA — PROPOSED DENIAL OF ACCESS
PE — PROPOSED PERMANENT EASEMENT
UE — PROPOSED UTILITY EASEMENT
TCE — PROPOSED TEMPORARY CONSTRUCTION EASEMENT
100 — HISTORIC R/W CENTERLINE OR BASELINE
100 — PROPOSED RIGHT OF WAY BASELINE
EXISTING RIGHT-OF-WAY LINE
PL — EXISTING PROPERTY LINE
R/W MONUMENT

PROPOSED LANDSCAPING

CONIFEROUS TREE
SHRUB
DECIDUOUS TREE

MISCELLANEOUS SYMBOLS

LOC — LIMIT OF CONSTRUCTION
N — NORTH ARROW
CZ — CLEAR ZONE
100 — CONSTRUCTION BASELINE
PROPOSED UTILITY POLE
PROPOSED LUMINAIRE ON NEW POLE
PROPOSED LUMINAIRE ON EXISTING POLE
P — PROPOSED ELECTRICAL SERVICE
W/2 — IMPACT AREA INDENTIFIER
RR/1 — RIPRAP IDENTIFIER
F/1 — FENCE IDENTIFIER
AB/O — ABANDON BY OTHERS
LS/1 — PROPOSED LIGHTING STANDARD IDENTIFIER
PB/6 — PROPOSED LIGHTING POLE BASE IDENTIFIER

UTILITIES

AT A MINIMUM, THE FOLLOWING UTILITIES EXIST WITHIN THE PROJECT LIMITS:

EXISTING		PROPOSED	
AW	ARTESIAN WATER	AW	ARTESIAN WATER
DPLE	DELMARVA POWER ELECTRIC	DPLE	DELMARVA POWER ELECTRIC
DPLG	DELMARVA POWER GAS	DPLG	DELMARVA POWER GAS
COM	COMCAST CABLE	COM	COMCAST CABLE
NCC	NEW CASTLE COUNTY SANITARY SEWER	VER	VERIZON DELAWARE TELEPHONE
VER	VERIZON DELAWARE TELEPHONE	NCC	NEW CASTLE COUNTY SANITARY SEWER
DELDOT	DELDOT COMMUNICATION CABLE CONDUIT		

EXISTING DETAIL

SURVEY TRAVERSE POINT
POINT OF INTERSECTION - TANGENTS
POINT OF TANGENCY & CURVATURE
T.P. — SURVEY TIE POINT LOCATION
B.M. — BENCH MARK LOCATION
A-4(4) A-2(4) — SOIL BORING LOG - PROFILE VIEW
SOIL BORING LOCATION - PLAN VIEW
GnB2 GnB3 — SOIL TYPE AND BOUNDARY LINE
MARSH OR WET AREAS
LAWN
SMALL BUSH OR ORNAMENTAL SHRUB
CONIFEROUS TREE - 6" AND LARGER
DECIDUOUS TREE - 6" AND LARGER
HEDGEROW OR THICKET
WOODS LINE
TREE STUMP
UTILITY TEST HOLE LOCATION
G — GAS MANHOLE
S — SANITARY SEWER MANHOLE
T — TELEPHONE MANHOLE
E — ELECTRIC MANHOLE
F.H. — FIRE HYDRANT
B — TELEPHONE BOOTH
UTILITY POLE GUY WIRE ANCHOR
G.V. — GAS VALVE
W.V. — WATER VALVE
WOOD POLE
W.M. — WATER METER
VENT — SANITARY SEWER VENT
S.V. — SANITARY SEWER SURFACE FIXTURE
T — TELEPHONE TEST POINT
G.M. — GAS METER
POLE MOUNTED LUMINAIRE
LAMP — RESIDENTIAL STREET LAMP AND POST
F.P. — FLAG POLE
M.B. — MAIL BOX

(TYPE LABEL) — CURB
(TYPE LABEL) — INTEGRAL CURB & GUTTER
FLEXIBLE PAVEMENT EDGE
RIGID PAVEMENT EDGE
STEEL BEAM GUARD RAIL
WOOD POST AND CABLE GUARD RAIL
C.B. — STORM DRAINAGE SURFACE INLET
D — STORM DRAINAGE MANHOLE
J.B. — STORM DRAINAGE JUNCTION BOX
(SIZE/TYPE LABEL) — EXISTING DRAINAGE PIPE AND FLOW ARROW
DRAINAGE PIPE HEADWALL
EROSION CONTROL STONE
STREAM, DITCH OR POND BOUNDARY
STREAM FLOW DIRECTION ARROW
TRAFFIC CONTROL SIGN POST
TRAFFIC SIGNAL SUPPORT BASE
TRAFFIC SIGNAL CONTROL BOX AND/OR BASE
J.W. — TRAFFIC SIGNAL CONDUIT JUNCTION WELL
E — ELECTRIC TRANSFORMER
TV — CABLE TELEVISION DISTRIBUTION BOX
C.M. — CONCRETE MONUMENT OR PROPERTY MARKER
I.P. — PROPERTY LINE MARKER - IRON PIPE
R/C — PROPERTY LINE MARKER - REBAR AND CAP
STONE PILLAR - CONC. BLOCK OR POURED
STRAND OR WOVEN WIRE FENCE
WOODEN FENCE
LUMINAIRE SUPPORT POLE AND/OR BASE
G.P. — SERVICE STATION FUEL PUMP
WELL — WELL HEAD
S.D.F. — SEPTIC DRAIN FIELD
STONE WALL
BLOCK WALL
RAILROAD TRACKS
WL — DELINEATED WETLANDS
OHW — ORDINARY HIGH WATER

PREL. TRACING | SJB | DESIGN | KGM-A | CHKD. | JRR

CONTRACT	COUNTY	F.A.P. NO.	SHEET NO.	TOTAL SHTS.
T200312601	NEW CASTLE	SEE TITLE SHEET	4	115

SR 7, NEWTOWN ROAD TO SR 273

REVISIONS

PROJECT NOTES

SECTION 100

1. ANY DAMAGE TO ITEMS NOTED TO BE RELOCATED OR RESET BY THE CONTRACTOR,AT THE DISCRETION OF THE ENGINEER,SHALL BE REPAIRED AND/OR REPLACED IN KIND AT THE CONTRACTOR'S EXPENSE.

2. UNLESS OTHERWISE NOTED ON THE PLANS,THE CONTRACTOR SHALL,AS PART OF HIS PROJECT SCHEDULE,SUBMIT TO THE ENGINEER AN ESTIMATE OF THE MONTHLY PAYMENTS EXPECTED TO BE RECEIVED ON THE CONTRACT.THIS WILL BE REFERENCED AS THE "MONTHLY PAYMENT CHART".

   A CHART IN MICROSOFT EXCEL,MICROSOFT WORD,OR HAND WRITTEN FORMAT WILL BE ACCEPTABLE FOR THIS PURPOSE.THE CHART SHOULD INCLUDE,AS A MINIMUM,COLUMNS FOR MONTH,YEAR AND ESTIMATED MONTHLY PAYMENTS.THE TOTAL OF ALL ESTIMATED MONTHLY PAYMENTS SHOULD EQUAL THE AWARDED CONTRACT TOTAL BID PRICE.

   THE ENGINEER MAY REQUEST AN UPDATED "MONTHLY PAYMENT CHART" AT HIS DISCRETION, DEPENDING ON THE ACCURACY OF THE INITIAL ESTIMATES AND ACCORDING TO THE OVERALL NEEDS OF THE DEPARTMENT.

   THE "MONTHLY PAYMENT CHART" WILL NOT BE CONSIDERED A BINDING DOCUMENT BY EITHER THE CONTRACTOR OR THE DEPARTMENT AND IS CONSIDERED SOLELY INFORMATIONAL.

   ON PROJECTS REQUIRING CPM SCHEDULES,THE CONTRACTOR MAY,BUT IS NOT REQUIRED TO, "COST LOAD" THE CPM SCHEDULE IN ORDER TO GENERATE THE MONTHLY SPEND PAYMENT CHART.

   COSTS TO PREPARE AND/OR UPDATE THE "MONTHLY PAYMENT CHART" ARE ADDRESSED AS FOLLOWS:
   A. ON CONTRACTS REQUIRING CPM SCHEDULES AND UPDATES,PREPARATION OF THE INITIAL CHART SHALL BE INCIDENTAL TO ITEM 763508.UPDATES SHALL BE INCIDENTAL TO ITEM 763509.

   B. ON CONTRACTS NOT REQUIRING CPM SCHEDULES,THE COST TO PREPARE AND UPDATE THE "MONTHLY PAYMENT CHART" SHALL BE INCLUDED IN ITEM 763000 - INITIAL EXPENSE."

SECTION 200

3. THE CONTRACTOR SHALL REMOVE AND RESET ALL MAILBOXES TO MAINTAIN MAIL SERVICE AS DIRECTED BY THE ENGINEER.THE CONTRACTOR SHALL RELOCATE MAILBOXES AS REQUIRED BY THE PROPOSED GEOMETRICS AND AS DIRECTED BY THE ENGINEER.WHEN RELOCATING MAILBOXES IN CURBED SECTIONS,THE FACE OF THE MAILBOX SHALL BE FLUSH WITH THE BACK EDGE OF CURB.WHEN RELOCATING MAILBOXES IN OPEN SECTIONS,THE FACE OF THE MAILBOX SHALL SET BACK 8 INCHES FROM THE EDGE OF THE PAVED SHOULDER. THE BOTTOM OF THE MAILBOX SHALL BE SET 46 INCHES ABOVE THE ROADWAY SURFACE. MAILBOXES LOCATED AT DRIVEWAY ENTRANCES SHALL BE PLACED ON THE FAR SIDE OF THE DRIVEWAY IN THE DIRECTION OF TRAVEL.POSTS BEING RESET IN CONCRETE SIDEWALK SHALL BE PLACED IN AN APPROPRIATE SIZE PVC SLEEVE. COST FOR ALL WORK AND MATERIALS SHALL BE PAID UNDER ITEM 201000 - CLEARING AND GRUBBING.

4. IN AREAS WHERE TREES OR SHRUBS WILL BE OVERHANGING THE PROPOSED SIDEWALK, PRUNING MAY BE NECESSARY TO ACHIEVE A VERTICAL CLEAR SPACE OF 10 FEET ABOVE THE PROPOSED SIDEWALK ELEVATION. THE CONTRACTOR SHALL PRUNE EXISTING TREE AND SHRUB BRANCHES,WHICH OVERHANG THE SIDEWALK,IN ACCORDANCE WITH I.S.A. STANDARDS. THE CONTRACTOR SHALL NOTIFY DELDOT'S ROADSIDE ENVIRONMENTALIST ADMINISTRATOR,EUGENE 'CHIP' ROSAN,JR.(302) 760-2185 AND/OR HIS DESIGNEE,AT LEAST TWO (2) DAYS PRIOR TO THE PRUNING OPERATION. ALL COSTS ASSOCIATED WITH THE ABOVE WORK TO BE PAID UNDER ITEM 201000 - CLEARING AND GRUBBING.

5. THE ENGINEER MAY REQUIRE THE CONTRACTOR TO EXCAVATE TEST PITS ALONG PROPOSED DRAINAGE RUNS,AT POINTS OF POSSIBLE UTILITY CONFLICTS,TO DETERMINE IF A CONFLICT EXISTS. ANY CONFLICTS SHALL BE COORDINATED BY THE CONTRACTOR,WITH THE ENGINEER AND THE UTILITY COMPANY INVOLVED.THE ENGINEER SHALL ULTIMATELY DETERMINE THE SOLUTION TO THE UTILITY CONFLICT.TEST HOLES SHALL BE MEASURED AND PAID FOR IN ACCORDANCE WITH ITEM 208000,BUT ONLY TO THE ACTUAL DEPTH EXCAVATED.

6. ITEMS TO BE REMOVED UNDER ITEM 211000 - REMOVAL OF STRUCTURES AND OBSTRUCTIONS SHALL INCLUDE,BUT NOT BE LIMITED TO THE FOLLOWING:
   - CONCRETE SUPPORT FOUNDATIONS FOR FENCES AND MISCELLANEOUS SMALL STRUCTURES
   - DRAINAGE STURCTURES AND FLARED END SECTIONS
   - EXISTING BRICK OR BLOCK MAILBOXES AND MISCELLANEOUS LANDSCAPE STRUCTURES

7. THIS PROJECT IS COVERED UNDER AN NPDES GENERAL PERMIT FOR CONSTRUCTION.UNDER THE GENERAL PERMIT,COMPLIANCE WITH DELDOT'S APPROVED SEDIMENT AND STORMWATER MANAGEMENT PLANS WILL CONSTITUTE COMPLIANCE WITH THE NPDES INDUSTRIAL PERMITTING REQUIREMENTS FOR THIS CONSTRUCTION PROJECT. A COPY OF THE NPDES GENERAL PERMIT AND NOI IS KEPT ON FILE IN EACH OF THE CONSTRUCTION OFFICES AND THE DEPARTMENT'S TEAM SUPPORT SECTION. A COPY OF THE GENERAL PERMIT OR THE NOI CAN BE OBTAINED UPON REQUEST FROM EITHER THE DEPARTMENT'S STORMWATER ENGINEER OR THE APPROPRIATE CONSTRUCTION ENGINEER.

SECTION 300

8. A. THE CONTRACTOR MAY ELECT TO USE ANY OF THE FOLLOWING MATERIALS TO MEET THE REQUIREMENTS OF ITEM 302007 - GRADED AGGREGATE BASE COURSE,TYPE 'B':
   a. CRUSHED STONE (PER STANDARD SPECIFICATION 821)
   b. CRUSHED CONCRETE (PER STANDARD SPECIFICATION 821)
   c. HOT-MIX MILLINGS (PER SPECIAL PROVISION 302514 MILLED HOT-MIX BASE COURSE)

   THE CONTRACTOR WILL NOT BE ALLOWED TO MIX DIFFERENT MATERIALS (OR SIMILAR MATERIALS FROM DIFFERENT SOURCES) TO MEET THE REQUIREMENTS OF ITEM 302007 - GRADED AGGREGATE BASE COURSE,TYPE 'B'.

   ALL OF THE ABOVE LISTED MATERIALS ARE PERMITTED FOR USE ON THE JOB, PROVIDED THEY ARE SEPARATED INTO APPROVED AREAS.EACH AREA OF BASE COURSE MUST BE CONSTRUCTED USING MATERIALS FROM A SINGULAR SOURCE.FULL DEPTH,IN ORDER THAT PROPER TESTING MAY BE ACCOMPLISHED.THE CONTRACTOR AND DELDOT'S PROJECT ENGINEER SHALL AGREE ON THE LIMITS OF EACH SOURCE OF MATERIAL PRIOR TO PLACEMENT.

SECTION 300

B. THE QUANTITY USED FOR BASE OF EACH OF THE ABOVE LISTED MATERIALS WILL BE THE CONTRACTOR'S CHOICE,WITH THE TOTAL MEETING THE ADVERTISED QUANTITY OF ITEM 302007 - GRADED AGGREGATE BASE COURSE,TYPE 'B'.

C. THE CONTRACTOR MAY ALSO ELECT TO RECYCLE MILLINGS FOR USE IN HOT-MIX AS PERMITTED BY THE STANDARD SPECIFICATIONS.THE CHOICE OF THE QUANTITY OF MILLINGS USED FOR THIS PURPOSE,OR FOR BASE COURSE,LIES WITH THE CONTRACTOR.ALL MILLING MATERIAL SHALL BECOME PROPERTY OF THE CONTRACTOR.

D. HOT-MIX MILLINGS MAY BE GENERATED FROM THE FOLLOWING SOURCES:
   a. MATERIAL MADE AVAILABLE WHEN MILLED ON THIS CONTRACT UNDER ITEM 760502.
   b. MATERIAL MILLED ON THIS CONTRACT AT THE CONTRACTOR'S CHOICE UNDER ITEM 202000.
   c. MILLED MATERIAL FURNISHED ON THE JOB FROM THE CONTRACTOR'S YARD OR OTHER OUTSIDE SOURCE.ALL MILLED MATERIALS SHALL MEET THE MATERIAL REQUIREMENTS OF ITEM 302514 MILLED HOT-MIX BASE COURSE.

E. PAYMENT CLARIFICATION:
   a. SHOULD THE CONTRACTOR ELECT TO MILL PORTIONS OF HOT-MIX SHOWN ON THE PLANS TO BE REMOVED UNDER ITEM 202000 - EXCAVATION AND EMBANKMENT THE COST OF MILLING THIS HOT-MIX WILL BE PAID AS ITEM 202000 EXCAVATION AND EMBANKMENT. THE MILLINGS GENERATED MAY BE RECYCLED INTO HOT-MIX,UTILIZED FOR BASE COURSE, OR DISPOSED OF TO AN APPROVED SITE.HAULING COSTS FOR DISPOSAL AND/OR RECYCLING ARE INCIDENTAL TO ITEM 202000 - EXCAVATION AND EMBANKMENT.

   b. MILLINGS GENERATED UNDER ITEM 760502 - PAVEMENT MILLINGS,TAPERCUT MAY BE RECYCLED INTO HOT-MIX,UTILIZED FOR BASE COURSE OR DISPOSED OF BY THE CONTRACTOR TO AN APPROVED SITE. NO SEPARATE PAYMENT WILL BE MADE FOR TRANSPORTING MILLINGS ON SITE OR TO AN APPROVED DISPOSAL SITE.

   c. SHOULD THE CONTRACTOR ELECT TO TEMPORARILY STOCKPILE MILLINGS ON THE JOB SITE FOR LATER USE,ALL COSTS FOR STOCKPILING AND SUBSEQUENT REHANDLING SHALL BE INCIDENTAL TO ITEM 202000 - EXCAVATION AND EMBANKMENT.

   d. MILLINGS USED FOR BASE COURSE SHALL BE PLACED IN ACCORDANCE WITH THE REQUIREMENTS OF SPECIAL PROVISION 302514 - MILLED HOT-MIX BASE COURSE.NO SEPARATE PAYMENT WILL BE MADE TO FURNISH MILLINGS FROM AN OUTSIDE SOURCE OR TRANSPORT MILLINGS WITHIN THE PROJECT LIMITS. MILLINGS USED FOR BASE COURSE WILL BE PAID IN PLACE AT THE UNIT BID PRICE FOR ITEM 302007 - GRADED AGGREGATE BASE COURSE,TYPE 'B'.

   e. ALL COSTS TO UTILIZE MILLINGS IN RECYCLED HOT-MIX WILL BE INCIDENTAL TO THE UNIT PRICE BID FOR THE HOT-MIX ITEM USING THE RECYCLED MATERIAL.

   f. SPECIAL PROVISION 302514 MILLED HOT-MIX BASE COURSE IS PROVIDED TO SPECIFY THE MEANS OF LAY DOWN AND COMPACTION AS WELL AS THE MATERIAL REQUIREMENTS FOR MILLINGS USED AS BASE COURSE. ALL COSTS TO BRING THE MILLINGS INTO COMPLIANCE WITH THE REQUIREMENTS OF 302514 MILLED HOT-MIX BASE COURSE ARE INCIDENTAL TO ITEM 302007 - GRADED AGGREGATE BASE COURSE,TYPE 'B'. NO PAYMENT WILL BE MADE FOR ITEM 302514 - MILLED HOT-MIX BASE COURSE. THE QUANTITY OF MILLINGS USED FOR BASE COURSE WILL BE PAID FOR UNDER ITEM 302007 - GRADED AGGREGATE BASE COURSE.

SECTION 400

9. THE PAVEMENT SECTION FOR HOT-MIX RESIDENTIAL DRIVEWAYS SHALL BE 2" HOT-MIX, TYPE C OVER 8" GRADED AGGREGATE BASE COURSE,TYPE B ,UNLESS OTHERWISE NOTED ON THE PLANS.

SECTION 600

10. THE DEPARTMENT AND THE CONTRACTOR SHALL INSPECT ALL EXISTING PIPES AND DRAINAGE STRUCTURES TO BE USED IN THE FINAL DRAINAGE SYSTEM AND AGREE ON THE CONDITION PRIOR TO THE START OF CONSTRUCTION.EXISTING PIPES AND DRAINAGE STRUCTURES DAMAGED DUE TO CONTRACTOR OPERATIONS SHALL BE REPAIRED OR REPLACED IN-KIND AT THE CONTRACTOR'S EXPENSE.THE CONTRACTOR IS REQUIRED TO VIDEO INSPECT NEW PIPE RUNS TO CONFIRM CONDITION PRIOR TO ACCEPTANCE.PAYMENT FOR VIDEO INSPECTION OF NEW PIPES WILL BE MADE UNDER ITEM 612529 - VIDEO INSPECTION.

SECTION 700

11. IN AREAS WHERE PROPOSED CURB MEETS EXISTING CURB AND THE TWO CURB TYPES ARE NOT SIMILAR,THE PROPOSED CURB SHALL BE TRANSITIONED IN 10 LINEAR FEET,UNLESS OTHERWISE DIRECTED BY THE ENGINEER.PAYMENT FOR THIS WORK,INCLUDING SAW CUTTING EXISTING CURB SHALL BE INCIDENTAL TO THE PROPOSED CURB ITEM.

12. WHERE PROPOSED CONCRETE SIDEWALK IS CONSTRUCTED TO MEET EXISTING SIDEWALK,THE EXISTING SIDEWALK SHALL BE SAWCUT AT THE TIE-IN POINT OR MEET THE NEAREST EXISTING SIDEWALK JOINT. ALL SAW CUTTING SHALL BE FULL DEPTH,UNLESS OTHERWISE NOTED ON THE PLANS OR DIRECTED BY THE ENGINEER AND SHALL BE PAID FOR UNDER ITEM 762002 - SAWCUTTING,CONCRETE,FULL DEPTH.

13. PORTLAND CEMENT CONCRETE CHANNELIZING ISLANDS THAT ARE LESS THAN 75 SQ FT MAY BE POURED MONOLITHICALLY,OR AS DIRECTED BY THE ENGINEER.

14. STATION AND ELEVATION DATA GIVEN FOR DRAINAGE STRUCTURES ARE TO BE APPLIED TO THE CENTER OF THE GRATE FOR INLETS,AND TO THE CENTER OF THE STRUCTURE FOR JUNCTION BOXES AND MANHOLES.

SECTION 700

15. THE NEW CASTLE COUNTY DEPARTMENT OF PUBLIC WORKS SHALL SUPPLY AND THE STATE'S CONTRACTOR SHALL INSTALL NEW SELF SEALING MANHOLE FRAMES AND COVERS ON ALL COUNTY SEWER MANHOLES,THAT ARE NOT BEING RELOCATED,WITHIN THE PROJECT LIMITS IN ACCORDANCE WITH THE COUNTY'S STANDARD SPECIFICATIONS.THE EXISTING MANHOLE FRAMES AND COVERS THAT ARE REMOVED SHALL BECOME THE PROPERTY OF THE STATE'S CONTRACTOR.PAYMENT SHALL BE INCIDENTAL TO ITEM 710506 - ADJUST AND REPAIR EXISTING SANITARY SEWER MANHOLE.

16. THE CONTRACTOR SHALL DELIVER ALL MILLED MATERIAL TO THE DELAWARE DEPARTMENT OF TRANSPORTATION'S CANAL DISTRICT MAINTENANCE YARD.THE MATERIAL SHALL BE NEATLY STOCKPILED AT THE YARD.COSTS FOR THIS WORK SHALL BE INCIDENTAL TO ITEM 760507 - PROFILE MILLING,HOT-MIX.

17. ALL PAVED AREAS TO BE RECONSTRUCTED OR WIDENED SHALL BE SAWCUT AT THE POINT WHERE THE NEW PAVEMENT IS TO TIE INTO THE EXISTING PAVEMENT.

18. ALL HOT-MIX SAW CUTTING SHALL BE FULL DEPTH,UNLESS OTHERWISE NOTED ON THE PLANS, OR AS DIRECTED BY THE ENGINEER.

MISCELLANEOUS

19. SEE ENVIRONMENTAL COMPLIANCE PLANS FOR ENVIRONMENTAL RESTRICTIONS/GUIDANCE ASSOCIATED WITH THIS PROJECT.

20. RIGHT-OF-WAY PLANS FOR RIGHT-OF-WAY OR EASEMENT STAKEOUT PURPOSES ARE AVAILABLE FROM DELDOT.

21. CROSS SECTIONS USED IN THE PREPARATION OF THIS CONTRACT ARE AVAILABLE FROM DELDOT.

22. NO CONSTRUCTION,STAGING,STOCKPILING OR OTHER ACTIVITY SHALL OCCUR ON PARCEL 5-R, OLD FORT U.A.M.E.CHURCH (TAX PARCEL NO.10-028.00-029).THE EXISTING CEMETERY LOCATED ON THIS PARCEL REQUIRES PROTECTION DURING CONSTRUCTION.CONSTRUCTION FENCE SHALL BE PLACED ALONG THE PROPERTY LINE AND REMAIN IN PLACE FOR THE DURATION OF ALL CONSTRUCTION ACTIVITY ASSOCIATED WITH THE PROJECT. COST FOR ALL WORK AND MATERIALS SHALL BE PAID FOR UNDER ITEM 727014 - CONSTRUCTION SAFETY FENCE.THE LIMITS OF THE CEMETERY ARE NOT FULLY KNOWN. IN THE UNLIKELY EVENT THAT REMAINS ARE FOUND DURING THE PROJECT,THE CONTRACTOR SHALL CEASE ALL ACTIVITY IN THE AREA OF THE DISCOVERY,AND SHALL IMMEDIATELY CONTACT DELDOT AND THE STATE HISTORIC PRESERVATION OFFICE,IN COMPLIANCE WITH STATE LAW (DEL.CODE TITLE 7 CHAPTER 54).

23. THE CONTRACTOR SHALL PLACE A WEDGE OF HOT-MIX AT 20J AROUND CONSTRUCTED DRAINAGE INLETS PRIOR TO PLACEMENT OF FINAL HOT-MIX TYPE C PAVING. THE CONTRACTOR SHALL NOTCH DRAINAGE INLETS TO MAINTAIN POSITIVE DRAINAGE CONDITIONS ALONG THE ROADWAY PRIOR TO PLACEMENT OF TYPE C FINAL HOT-MIX PAVING, NOTCHES SHALL BE REPAIRED TO PROPER CONDITION PRIOR TO OVERLAY. COST OF THIS WORK SHALL BE INCIDENTAL TO ITEM 710001- ADJUSTING AND REPAIRING EXISTING DRAINAGE INLET.

24. THE CONTRACTOR SHALL CONTACT MICHAEL ELLER,THE CHIEF OF SCHEDULING FOR DART FIRST STATE,14 DAYS PRIOR TO THE START OF CONSTRUCTION AT 302-576-6061.

25. THE CONTRACTOR SHALL CONTACT LOCAL POLICE AND FIRE EMERGENCY SERVICES FOURTEEN (14) DAYS PRIOR TO THE START OF CONSTRUCTION.SR 7 IS A PRIMARY EMERGENCY ROUTE AND ACCESS FOR EMERGENCY VEHICLES MUST BE MAINTAINED AT ALL TIMES.THE CONTRACTOR SHALL NOTIFY EMERGENCY SERVICES WITH ANY LANE CLOSURES DURING CONSTRUCTION.

26. THE CONTRACTOR SHALL MAINTAIN ACCESS TO THE SAINT ELIZABETH ANN SETON R.C. CHURCH AT ALL TIMES DURING CONSTRUCTION.THE CONTRACTOR SHALL NOT DO ANY WEEKEND WORK DURING THE ANNUAL CARNIVAL WHICH OCCURS EACH YEAR DURING THE MONTH OF JULY.

27. THE PROPOSED LANDSCAPING PLAN ON PARCEL 4-R HAS BEEN COORDINATED WITH THE LAND OWNER. A AGREEMENT IS IN PLACE TO PERFORM THIS WORK BUT A TEMPORARY CONSTRUCTION EASEMENT IS NOT SHOWN ON THE PLANS.ANY WORK OUTSIDE OF THE PERMANENT EASEMENT SHOWN ON THE PLANS SHALL BE COORDINATED DIRECTLY WITH THE PROPERTY OWNER.

28. THE DEPARTMENT HAS SECURED A NATIONWIDE PERMIT #14 (NWP 14) FOR WORK AREAS ON THIS CONTRACT THAT ARE REGULATED BY THE U.S.ARMY CORPS OF ENGINEERS (USACE). THESE REGULATED AREAS,AS DENOTED BY AN OHW AND/OR WL LINE,AND THEIR ASSOCIATED CONSTRUCTION IMPACTS ARE SHOWN ON THE CONTRACT'S ENVIRONMENTAL COMPLIANCE PLAN SHEETS. ALL CONTRACTED WORK IN THE AREAS PERMITTED BY NWP 14 MUST BE COMPLETED BEFORE MARCH 18,2013. NO CONTRACT TIME EXTENSIONS OR MONETARY COMPENSATION FOR ANY ADDITIONAL WORK WILL BE GRANTED BY THE DEPARTMENT IF THE CONTRACTOR DOES NOT COMPLETE THE WORK BEFORE MARCH 18,2013.

ASSOCIATED CONTRACTS

CONTRACT NO.	CONTRACT NAME
20-126-01	SR 7,U.S.RTE.40 TO NEWTOWN ROAD
23-119-05	SCHOOL BELL ROAD,RTE.1 TO U.S.RTE.40
CN-16	SR 7,BEAR TO CHRISTIANA
521	SR 7,WIDENING BEAR TO CHRISTIANA

FOR INFORMATION ONLY

EARTHWORK SUMMARY

EXCAVATION	
FROM CROSS SECTIONS	23,467 C.Y.
FROM OTHER SOURCES (SEE NOTE 1)	+2,933 C.Y.
TOTAL EXCAVATION (ITEM 202000)	26,400 C.Y.
EXCAVATION AVAILABLE FOR EMBANKMENT	
TOTAL EXCAVATION (ITEM 202000)	26,400 C.Y.
PLUS EXCAVATION FROM SWM (ITEM 271000)	+4,858 C.Y.
PLUS EXCAVATION FROM PIPE TRENCHES (ITEM 208000)	+1,454 C.Y.
LESS UNSUITABLE MATERIAL (SEE NOTE 2)	-19,077 C.Y.
SUBTOTAL	13,635 C.Y.
LESS 0.85 SHRINKAGE FACTOR	-2,045 C.Y.
SUBTOTAL	11,590 C.Y.
LESS 18% DENSIFICATION	-2,086 C.Y.
EXCAVATION AVAILABLE FOR EMBANKMENT	9,504 C.Y.
TOTAL EXCAVATION AVAILABLE FOR EMBANKMENT	
EXCAVATION MEETING BORROW TYPE 'A'	0 C.Y.
EXCAVATION MEETING BORROW TYPE 'F'	9,504 C.Y.
EMBANKMENT REQUIREMENTS	
BORROW TYPE 'A'	
FROM CROSS SECTIONS	4,154 C.Y.
PLUS UNDERCUT AREAS	+1,002 C.Y.
PLUS 30% COMPACTION	+1,547 C.Y.
TOTAL BORROW TYPE A REQUIRED	6,703 C.Y.
BORROW TYPE 'F'	
FROM CROSS SECTIONS	3,372 C.Y.
REFILL TOPSOIL AND BITUMINOUS AREAS	+1,988 C.Y.
PLUS 30% COMPACTION	+1,608 C.Y.
TOTAL BORROW TYPE F REQUIRED	6,968 C.Y.
CUT / FILL BALANCE (+ = EXCESS, - = NEED)	
BORROW TYPE 'A'	-6,703 C.Y.
BORROW TYPE 'F'	+2,536 C.Y.
TOPSOIL BALANCE (+ = EXCESS, - = NEED)	
TOPSOIL REMOVED FROM SITE (IN CUT & FILL)	5,988 C.Y.
LESS UNSUITABLE TOPSOIL (80%)	-4,790 C.Y.
AVAILABLE TOPSOIL FOR REUSE (@ 6" DEPTH) (733000)	1,198 C.Y. =7,186 S.Y.
TOPSOIL REQUIRED	-21,543 S.Y.
TOPSOIL BALANCE (732002)	-14,357 S.Y.

EARTHWORK NOTES:

1. OTHER SOURCES OF EXCAVATION MAY INCLUDE EXCAVATION FOR TOPSOIL IN CUT AREAS,TOPSOIL STRIPPING IN FILL AREAS, EXCAVATION FOR MOT,ETC.

2. UNSUITABLE MATERIALS INCLUDE TOPSOIL,UNDERCUT SOILS, BITUMINOUS PAVEMENT,ETC.

3. THE VALUES LISTED IN THE EARTHWORK SUMMARY ARE APPROXIMATE AND ARE NOT TO BE USED AS A BASIS OF PAYMENT. THE EARTHWORK SUMMARY IS CONSIDERED FOR INFORMATION ONLY.

PRELI. TRACING SJB DESIGN KGM-A CHKD. JRR

OFFICIAL COPY

CONTRACT	COUNTY	F.A.P. NO.	SHEET NO.	TOTAL SHTS.
T2003126 01	NEW CASTLE	SEE TITLE SHEET	5	115

SR 7, NEWTOWN ROAD TO SR 273

REVISIONS

TYPICAL SECTIONS

SCALE: NONE

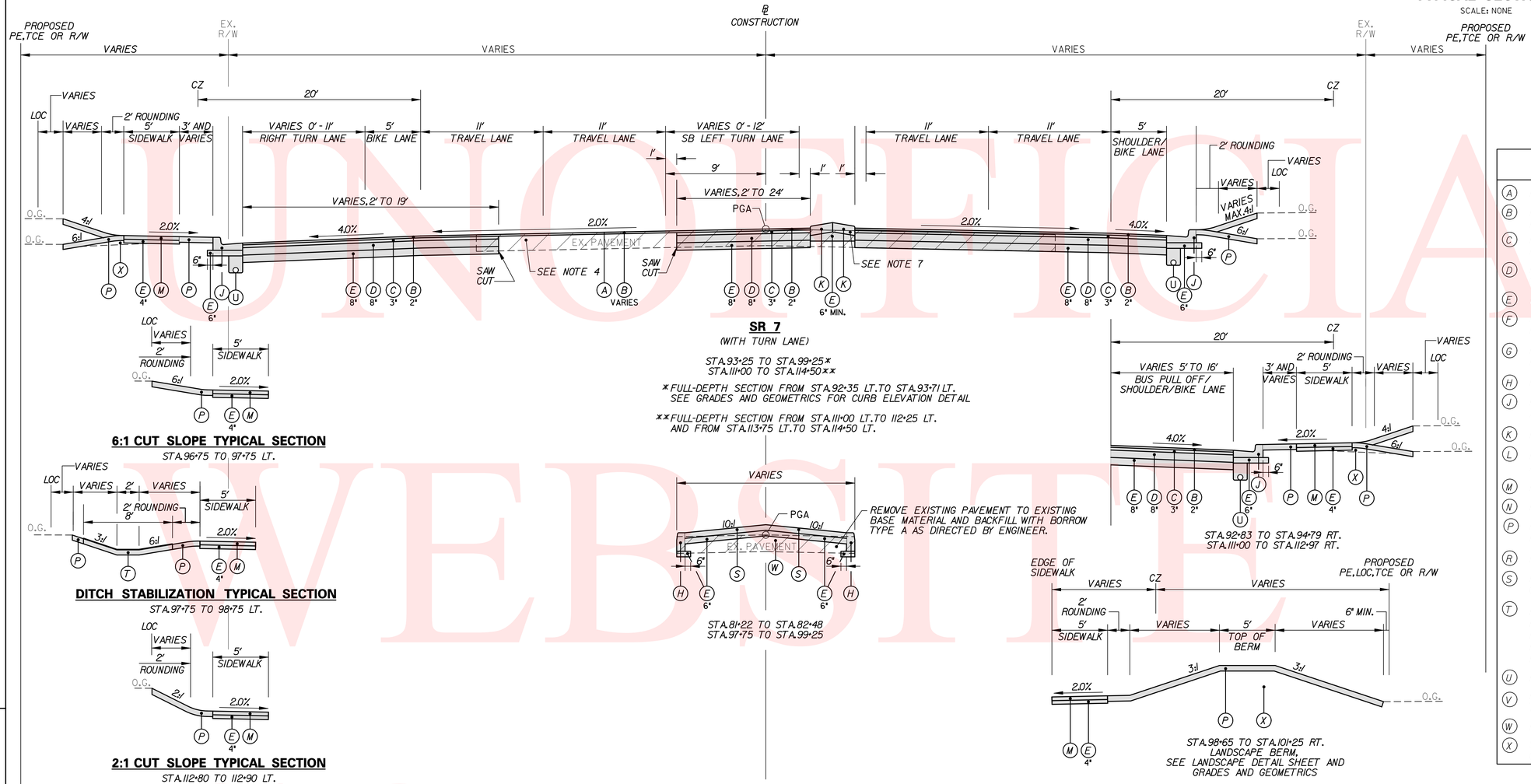

SR 7
(WITH TURN LANE)

STA.93+25 TO STA.99+25*
STA.111+00 TO STA.114+50**

*FULL-DEPTH SECTION FROM STA.92+35 LT.TO STA.93+71 LT.
SEE GRADES AND GEOMETRICS FOR CURB ELEVATION DETAIL

**FULL-DEPTH SECTION FROM STA.111+00 LT.TO 112+25 LT.
AND FROM STA.113+75 LT.TO STA.114+50 LT.

6:1 CUT SLOPE TYPICAL SECTION
STA.96+75 TO 97+75 LT.

DITCH STABILIZATION TYPICAL SECTION
STA.97+75 TO 98+75 LT.

2:1 CUT SLOPE TYPICAL SECTION
STA.112+80 TO 112+90 LT.

REMOVE EXISTING PAVEMENT TO EXISTING BASE MATERIAL AND BACKFILL WITH BORROW TYPE A AS DIRECTED BY ENGINEER.

STA.81+22 TO STA.82+48
STA.97+75 TO STA.99+25

STA.92+83 TO STA.94+79 RT.
STA.111+00 TO STA.112+97 RT.

STA.98+65 TO STA.101+25 RT.
LANDSCAPE BERM,
SEE LANDSCAPE DETAIL SHEET AND GRADES AND GEOMETRICS

LEGEND

- (A) ITEM 760507 - PROFILE MILLING,HOT-MIX
- (B) ITEM 401830 - WMA,SUPERPAVE,TYPE C HOT-MIX,160 GYRATIONS, PG 70-22 (NON-CARBONATE STONE)
- (C) ITEM 401813 - WMA,SUPERPAVE,TYPE B HOT-MIX,160 GYRATIONS, PG 70-22
- (D) ITEM 401819 - WMA,SUPERPAVE,BITUMINOUS CONCRETE BASE COURSE 160 GYRATIONS,PG 64-22
- (E) ITEM 302007 - GRADED AGGREGATE BASE COURSE,TYPE B
- (F) ITEM 401821 - WMA,SUPERPAVE,TYPE C HOT-MIX,160 GYRATIONS, PG 64-22 PATCHING
- (G) ITEM 401822 - WMA,SUPERPAVE,TYPE B HOT-MIX,160 GYRATIONS, PG 64-22 PATCHING
- (H) ITEM 701010 - PORTLAND CEMENT CONCRETE CURB,TYPE 1
- (J) ITEM 701020 - INTEGRAL PORTLAND CEMENT CONCRETE CURB AND GUTTER,TYPE 1
- (K) ITEM 701011 - PORTLAND CEMENT CONCRETE CURB,TYPE 2
- (L) ITEM 701022 - INTEGRAL PORTLAND CEMENT CONCRETE CURB AND GUTTER,TYPE 3
- (M) ITEM 705001 - P.C.C. SIDEWALK,4" DEPTH
- (N) ITEM 705002 - P.C.C. SIDEWALK,6" DEPTH
- (P) ITEM 732002 - TOPSOIL,6" DEPTH
  ITEM 734013 - PERMANENT GRASS SEEDING,DRY GROUND
- (R) ITEM 602615 - MODULAR BLOCK RETAINING WALL
- (S) ITEM 705519- PATTERNED PORTLAND CEMENT CONCRETE SIDEWALK 6"
- (T) DITCH STABILIZATION
  ITEM 732002 - TOPSOIL,6" DEPTH OR
  ITEM 733002 - TOPSOILING,6" DEPTH
  ITEM 734013 - PERMANENT GRASS SEEDING,DRY GROUND
  ITEM 735535 - SOIL RETENTION BLANKET MULCH,TYPE 5
- (U) ITEM 715001 - PERFORATED PIPE UNDERDRAIN,6"
- (V) ITEM 701027 - PORTLAND CEMENT CONCRETE CURB, TYPE 1,MODIFIED
- (W) ITEM 209001 - BORROW,TYPE A
- (X) SUITABLE EXCAVATED MATERIAL MEETING REQUIREMENTS OF BORROW,TYPE F

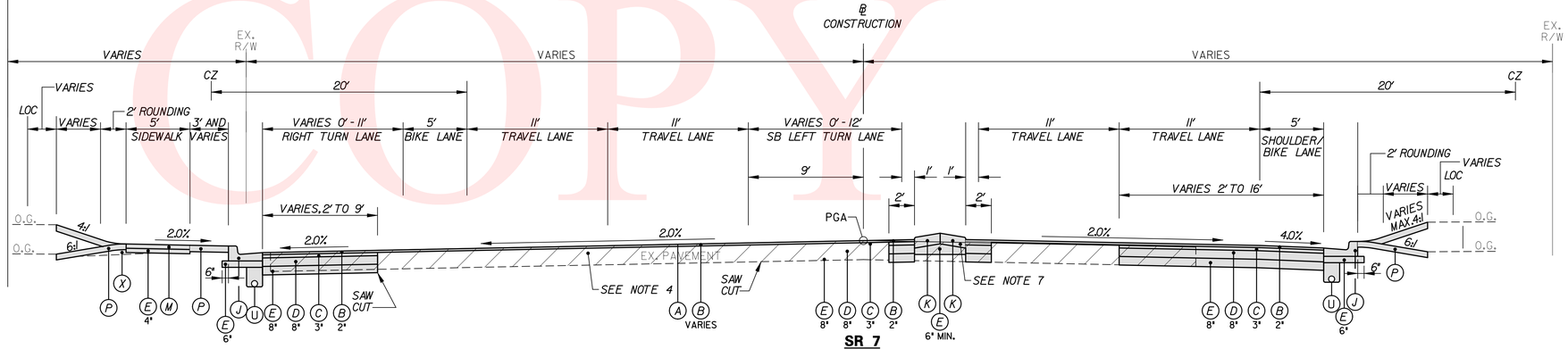

SR 7
(WITH TURN LANE)

STA.80+25 TO STA.83+00**
**SEE GRADES AND GEOMETRICS SHEETS FOR CURB ELEVATION DETAIL

NOTES:

1. THE PGA IS APPLIED TO THE TOP OF THE FINAL PAVEMENT SURFACE. IN AREAS WHERE THE PGA IS LOCATED WITHIN THE RAISED MEDIAN,ITS VERTICAL LOCATION SHALL BE THE TOP OF ADJACENT PAVEMENT ELEVATION PROJECTED AT THE PROPOSED CROSS SLOPE TO THE CONSTRUCTION BASELINE.
2. THE MAXIMUM LIFTS FOR THE INDIVIDUAL PAVING MATERIALS ARE AS FOLLOWS:
   SUPERPAVE, TYPE C HOT-MIX - 2"
   SUPERPAVE, TYPE B HOT-MIX - 3"
   SUPERPAVE BIT. CONC. BASE COURSE - 4"
   GRADED AGGREGATE BASE COURSE - 8"
3. SUPERPAVE,BITUMINOUS CONCRETE BASE COURSE SHALL BE PLACED IN TWO EQUAL LIFTS.
4. EXISTING MAINLINE PAVEMENT IS VARIABLE-DEPTH HOT-MIX OVER 7" TO 7½" REINFORCED CONCRETE PAVEMENT. SEE CORE SUMMARY ON PLANS FOR HOT-MIX THICKNESS. BASED ON EXISTING PLAN INFORMATION AND PAVEMENT CORE DATA, EXISTING P.C.C.PAVEMENT EXTENDS APPROXIMATELY 8' TO THE EAST AND 12' TO THE WEST OF THE EXISTING CENTERLINE ON AVERAGE.
5. THE MILL AND OVERLAY REPRESENTS THE LIMIT OF WHERE PROFILE MILLING IS REQUIRED. AT A MINIMUM,THE CONTRACTOR IS REQUIRED TO PROFILE MILL 2" BELOW THE EXISTING GRADE AND PLACE A MINIMUM OF 2" OF TYPE C HOT MIX.WHEN THE PROPOSED GRADE IS MORE THAN 2" HIGHER THAN THE EXISTING GRADE,TYPE B HOT MIX SHALL BE USED UNDER THE TYPE C HOT MIX TO MAKE UP THE GRADE DIFFERENCE.
6. HORIZONTAL CLEARANCE IS 2' BEHIND FACE OF CURB UNLESS OTHERWISE NOTED ON THE PLANS.
7. SEE CONSTRUCTION DETAILS FOR TYPE 2 CURB MODIFICATIONS AT LOCATIONS IN MEDIAN WHERE TYPE 2 CURB IS BACK TO BACK.

PRELIM. TRACING SJB DESIGN KGM-A CHKD. JRR

UNOFFICIAL WEBSITE COPY

CONTRACT	COUNTY	F.A.P. NO.	SHEET NO.	TOTAL SHTS.
T200312601	NEW CASTLE	SEE TITLE SHEET	6	115

SR 7, NEWTOWN ROAD TO SR 273

REVISIONS

TYPICAL SECTIONS

SCALE: NONE

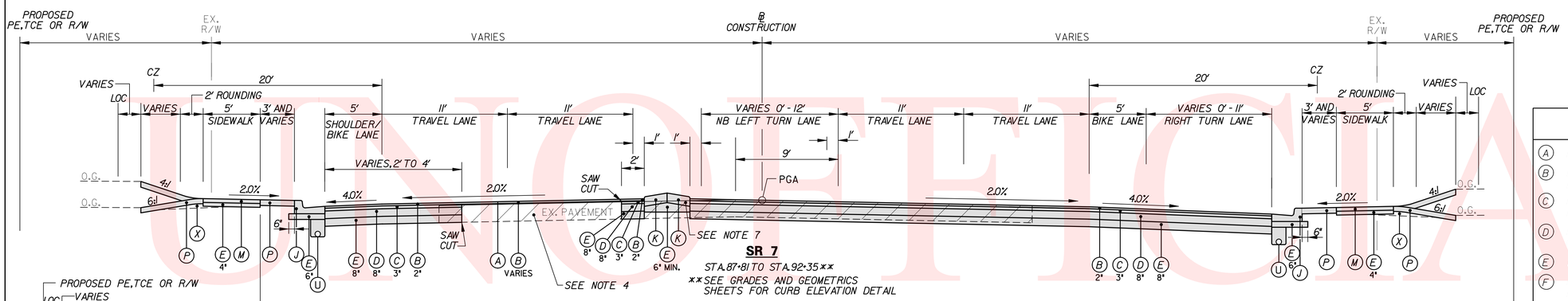

SR 7

STA.87+81 TO STA.92+35 **

** SEE GRADES AND GEOMETRICS SHEETS FOR CURB ELEVATION DETAIL

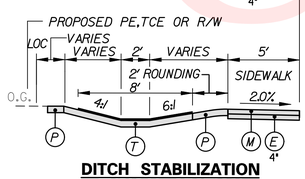

DITCH STABILIZATION TYPICAL SECTION

STA.87+81 TO STA.92+83 LT.

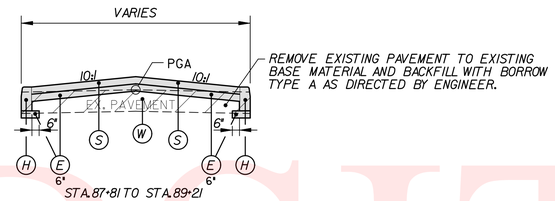

STA.87+81 TO STA.89+21

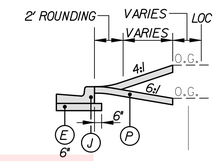

STA.87+81 TO 92+83 RT.

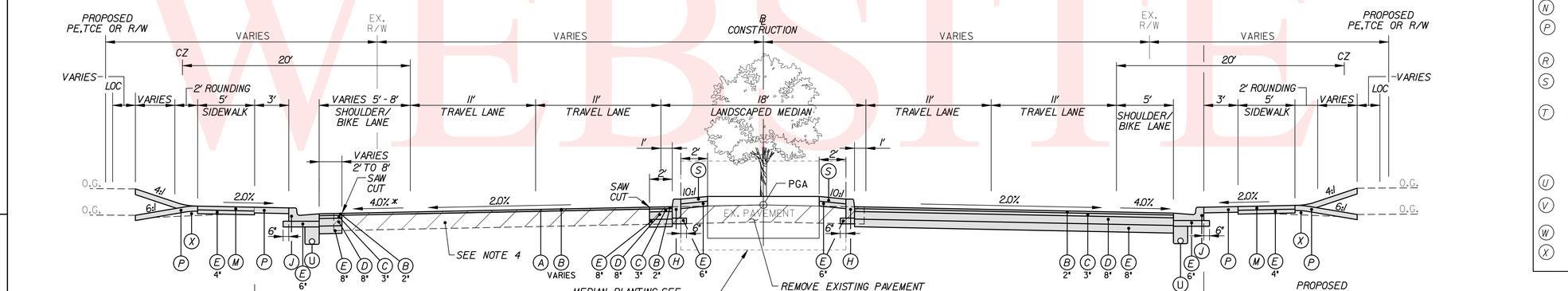

SR 7

STA.83+00 TO STA.87+81 **

STA.99+25 TO STA.104+25 **

* 2% SHOULDER FROM STA.83+00 LT.TO STA.87+50 LT.

** SEE GRADES AND GEOMETRICS SHEETS FOR CURB ELEVATION DETAIL FROM STA.83+00 TO STA.87+81 AND FROM STA.99+25 TO 130+50

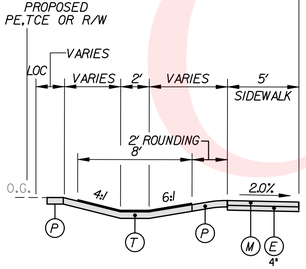

DITCH STABILIZATION TYPICAL SECTION

STA.87+50 TO STA.87+81 LT.

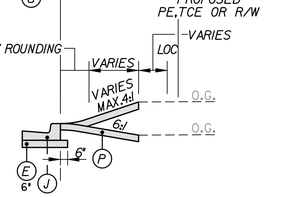

STA.82+48 TO STA.87+81 RT.

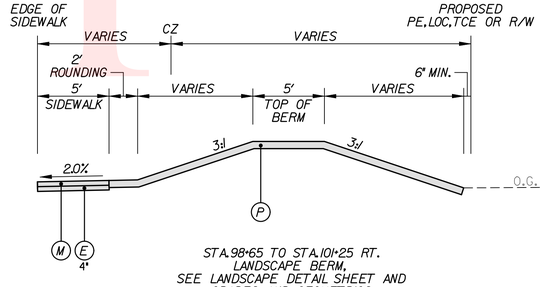

STA.98+65 TO STA.101+25 RT.
LANDSCAPE BERM.
SEE LANDSCAPE DETAIL SHEET AND GRADES AND GEOMETRICS

LEGEND

- (A) ITEM 760507 - PROFILE MILLING,HOT-MIX
- (B) ITEM 401830 - WMA,SUPERPAVE,TYPE C HOT-MIX,160 GYRATIONS, PG 70-22 (NON-CARBONATE STONE)
- (C) ITEM 401813 - WMA,SUPERPAVE,TYPE B HOT-MIX,160 GYRATIONS, PG 70-22
- (D) ITEM 401819 - WMA,SUPERPAVE,BITUMINOUS CONCRETE BASE COURSE 160 GYRATIONS,PG 64-22
- (E) ITEM 302007 - GRADED AGGREGATE BASE COURSE,TYPE B
- (F) ITEM 401821 - WMA,SUPERPAVE,TYPE C HOT-MIX,160 GYRATIONS, PG 64-22 PATCHING
- (G) ITEM 401822 - WMA,SUPERPAVE,TYPE B HOT-MIX,160 GYRATIONS, PG 64-22 PATCHING
- (H) ITEM 701010 - PORTLAND CEMENT CONCRETE CURB,TYPE 1
- (J) ITEM 701020 - INTEGRAL PORTLAND CEMENT CONCRETE CURB AND GUTTER,TYPE 1
- (K) ITEM 701011 - PORTLAND CEMENT CONCRETE CURB,TYPE 2
- (L) ITEM 701022 - INTEGRAL PORTLAND CEMENT CONCRETE CURB AND GUTTER,TYPE 3
- (M) ITEM 705001 - P.C.C. SIDEWALK,4" DEPTH
- (N) ITEM 705002 - P.C.C. SIDEWALK,6" DEPTH
- (P) ITEM 732002 - TOPSOIL,6" DEPTH
  ITEM 734013 - PERMANENT GRASS SEEDING,DRY GROUND
- (R) ITEM 602615 - MODULAR BLOCK RETAINING WALL
- (S) ITEM 705519- PATTERNED PORTLAND CEMENT CONCRETE SIDEWALK 6"
- (T) DITCH STABILIZATION
  ITEM 732002 - TOPSOIL,6" DEPTH OR
  ITEM 733002 - TOPSOILING,6" DEPTH
  ITEM 734013 - PERMANENT GRASS SEEDING,DRY GROUND
  ITEM 735535 - SOIL RETENTION BLANKET MULCH,TYPE 5
- (U) ITEM 715001 - PERFORATED PIPE UNDERDRAIN,6"
- (V) ITEM 701027 - PORTLAND CEMENT CONCRETE CURB, TYPE 1,MODIFIED
- (W) ITEM 209001 - BORROW,TYPE A
- (X) SUITABLE EXCAVATED MATERIAL MEETING REQUIREMENTS OF BORROW,TYPE F

NOTES:

1. THE PGA IS APPLIED TO THE TOP OF THE FINAL PAVEMENT SURFACE. IN AREAS WHERE THE PGA IS LOCATED WITHIN THE RAISED MEDIAN,IT'S VERTICAL LOCATION SHALL BE THE TOP OF ADJACENT PAVEMENT ELEVATION PROJECTED AT THE PROPOSED CROSS SLOPE TO THE CONSTRUCTION BASELINE.
2. THE MAXIMUM LIFTS FOR THE INDIVIDUAL PAVING MATERIALS ARE AS FOLLOWS:
   SUPERPAVE, TYPE C HOT-MIX - 2"
   SUPERPAVE, TYPE B HOT-MIX - 3"
   SUPERPAVE BIT. CONC. BASE COURSE - 4"
   GRADED AGGREGATE BASE COURSE - 8"
3. SUPERPAVE,BITUMINOUS CONCRETE BASE COURSE SHALL BE PLACED IN TWO EQUAL LIFTS.
4. EXISTING MAINLINE PAVEMENT IS VARIABLE-DEPTH HOT-MIX OVER 7" TO 7½" REINFORCED CONCRETE PAVEMENT. SEE CORE SUMMARY ON PLANS FOR HOT-MIX THICKNESS. BASED ON EXISTING PLAN INFORMATION AND PAVEMENT CORE DATA, EXISTING P.C.C. PAVEMENT EXTENDS APPROXIMATELY 8' TO THE EAST AND 12' TO THE WEST OF THE EXISTING CENTERLINE ON AVERAGE.
5. THE MILL AND OVERLAY REPRESENTS THE LIMIT OF WHERE PROFILE MILLING IS REQUIRED. AT A MINIMUM,THE CONTRACTOR IS REQUIRED TO PROFILE MILL 2" BELOW THE EXISTING GRADE AND PLACE A MINIMUM OF 2" OF TYPE C HOT MIX.WHEN THE PROPOSED GRADE IS MORE THAN 2" HIGHER THAN THE EXISTING GRADE,TYPE B HOT MIX SHALL BE USED UNDER THE TYPE C HOT MIX TO MAKE UP THE GRADE DIFFERENCE.
6. HORIZONTAL CLEARANCE IS 2' BEHIND FACE OF CURB UNLESS OTHERWISE NOTED ON THE PLANS.
7. SEE CONSTRUCTION DETAILS FOR TYPE 2 CURB MODIFICATIONS AT LOCATIONS IN MEDIAN WHERE TYPE 2 CURB IS BACK TO BACK.

PREL. TRACING S.JB DESIGN KGM-A CHKD. JRR

UNOFFICIAL WEBSITE COPY

CONTRACT	COUNTY	F.A.P. NO.	SHEET NO.	TOTAL SHTS.
T200312601	NEW CASTLE	SEE TITLE SHEET	7	115

SR 7, NEWTOWN ROAD TO SR 273

REVISIONS

TYPICAL SECTIONS

SCALE: NONE

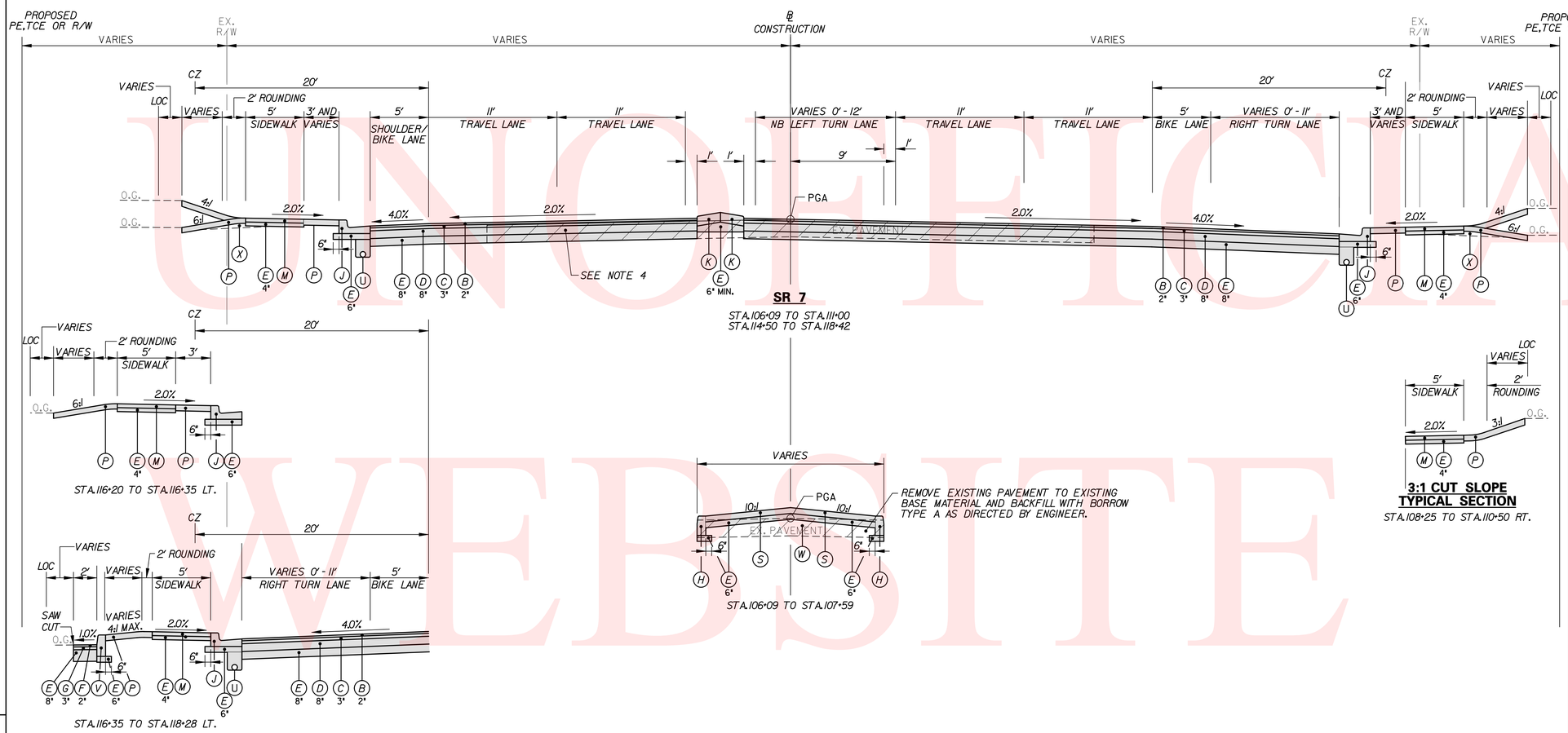

SR 7

STA.106+09 TO STA.111+00
STA.114+50 TO STA.118+42

STA.116+20 TO STA.116+35 LT.

STA.116+35 TO STA.118+28 LT.

REMOVE EXISTING PAVEMENT TO EXISTING BASE MATERIAL AND BACKFILL WITH BORROW TYPE A AS DIRECTED BY ENGINEER.

STA.106+09 TO STA.107+59

3:1 CUT SLOPE TYPICAL SECTION

STA.108+25 TO STA.110+50 RT.

LEGEND

- (A) ITEM 760507 - PROFILE MILLING, HOT-MIX
- (B) ITEM 401830 - WMA, SUPERPAVE, TYPE C HOT-MIX, 160 GYRATIONS, PG 70-22 (NON-CARBONATE STONE)
- (C) ITEM 401813 - WMA, SUPERPAVE, TYPE B HOT-MIX, 160 GYRATIONS, PG 70-22
- (D) ITEM 401819 - WMA, SUPERPAVE, BITUMINOUS CONCRETE BASE COURSE 160 GYRATIONS, PG 64-22
- (E) ITEM 302007 - GRADED AGGREGATE BASE COURSE, TYPE B
- (F) ITEM 401821 - WMA, SUPERPAVE, TYPE C HOT-MIX, 160 GYRATIONS, PG 64-22 PATCHING
- (G) ITEM 401822 - WMA, SUPERPAVE, TYPE B HOT-MIX, 160 GYRATIONS, PG 64-22 PATCHING
- (H) ITEM 701010 - PORTLAND CEMENT CONCRETE CURB, TYPE 1
- (J) ITEM 701020 - INTEGRAL PORTLAND CEMENT CONCRETE CURB AND GUTTER, TYPE 1
- (K) ITEM 701011 - PORTLAND CEMENT CONCRETE CURB, TYPE 2
- (L) ITEM 701022 - INTEGRAL PORTLAND CEMENT CONCRETE CURB AND GUTTER, TYPE 3
- (M) ITEM 705001 - P.C.C. SIDEWALK, 4" DEPTH
- (N) ITEM 705002 - P.C.C. SIDEWALK, 6" DEPTH
- (P) ITEM 732002 - TOPSOIL, 6" DEPTH
  ITEM 734013 - PERMANENT GRASS SEEDING, DRY GROUND
- (R) ITEM 602615 - MODULAR BLOCK RETAINING WALL
- (S) ITEM 705519 - PATTERNED PORTLAND CEMENT CONCRETE SIDEWALK 6"
- (T) DITCH STABILIZATION
  ITEM 732002 - TOPSOIL, 6" DEPTH OR
  ITEM 733002 - TOPSOILING, 6" DEPTH
  ITEM 734013 - PERMANENT GRASS SEEDING, DRY GROUND
  ITEM 735535 - SOIL RETENTION BLANKET MULCH, TYPE 5
- (U) ITEM 715001 - PERFORATED PIPE UNDERDRAIN, 6"
- (V) ITEM 701027 - PORTLAND CEMENT CONCRETE CURB, TYPE 1, MODIFIED
- (W) ITEM 209001 - BORROW, TYPE A
- (X) SUITABLE EXCAVATED MATERIAL MEETING REQUIREMENTS OF BORROW, TYPE F

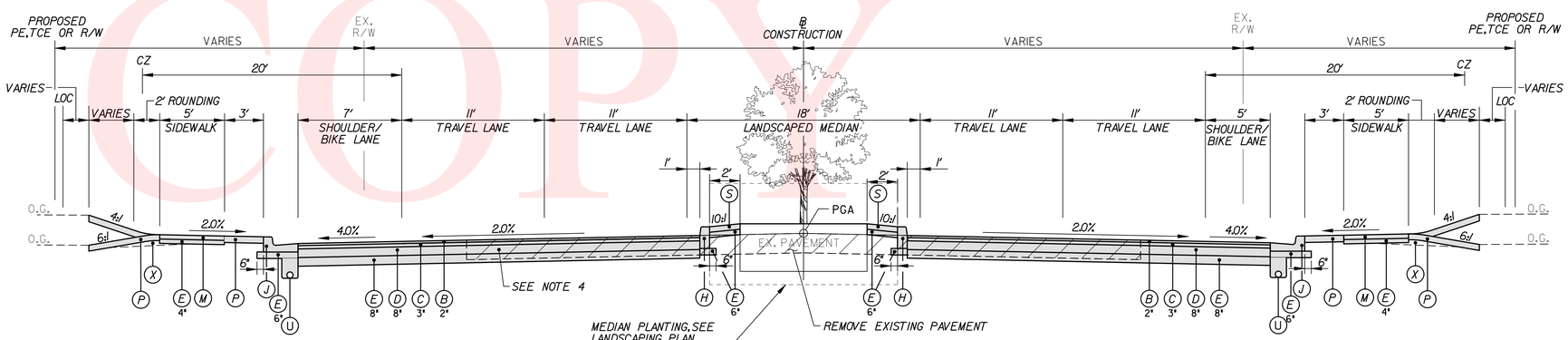

MEDIAN PLANTING, SEE LANDSCAPING PLAN FOR DETAILS

REMOVE EXISTING PAVEMENT

SR 7

(NO TURN LANE)
STA.104+25 TO STA.106+09

NOTES:

1. THE PGA IS APPLIED TO THE TOP OF THE FINAL PAVEMENT SURFACE. IN AREAS WHERE THE PGA IS LOCATED WITHIN THE RAISED MEDIAN, ITS VERTICAL LOCATION SHALL BE THE TOP OF ADJACENT PAVEMENT ELEVATION PROJECTED AT THE PROPOSED CROSS SLOPE TO THE CONSTRUCTION BASELINE.
2. THE MAXIMUM LIFTS FOR THE INDIVIDUAL PAVING MATERIALS ARE AS FOLLOWS:
   SUPERPAVE, TYPE C HOT-MIX - 2"
   SUPERPAVE, TYPE B HOT-MIX - 3"
   SUPERPAVE BIT. CONC. BASE COURSE - 4"
   GRADED AGGREGATE BASE COURSE - 8"
3. SUPERPAVE, BITUMINOUS CONCRETE BASE COURSE SHALL BE PLACED IN TWO EQUAL LIFTS.
4. EXISTING MAINLINE PAVEMENT IS VARIABLE-DEPTH HOT-MIX OVER 7" TO 7½" REINFORCED CONCRETE PAVEMENT. SEE CORE SUMMARY ON PLANS FOR HOT-MIX THICKNESS. BASED ON EXISTING PLAN INFORMATION AND PAVEMENT CORE DATA, EXISTING P.C.C. PAVEMENT EXTENDS APPROXIMATELY 8' TO THE EAST AND 12' TO THE WEST OF THE EXISTING CENTERLINE ON AVERAGE.
5. THE MILL AND OVERLAY REPRESENTS THE LIMIT OF WHERE PROFILE MILLING IS REQUIRED. AT A MINIMUM, THE CONTRACTOR IS REQUIRED TO PROFILE MILL 2" BELOW THE EXISTING GRADE AND PLACE A MINIMUM OF 2" OF TYPE C HOT MIX. WHEN THE PROPOSED GRADE IS MORE THAN 2" HIGHER THAN THE EXISTING GRADE, TYPE B HOT MIX SHALL BE USED UNDER THE TYPE C HOT MIX TO MAKE UP THE GRADE DIFFERENCE.
6. HORIZONTAL CLEARANCE IS 2' BEHIND FACE OF CURB UNLESS OTHERWISE NOTED ON THE PLANS.
7. SEE CONSTRUCTION DETAILS FOR TYPE 2 CURB MODIFICATIONS AT LOCATIONS IN MEDIAN WHERE TYPE 2 CURB IS BACK TO BACK.

PREL. TRACING ____ SJB ____ DESIGN ____ KGM-A ____ CHKD. ____ JRR

UNOFFICIAL WEBSITE COPY

CONTRACT	COUNTY	F.A.P. NO.	SHEET NO.	TOTAL SHTS.
T200312601	NEW CASTLE	SEE TITLE SHEET	8	115

SR 7, NEWTOWN ROAD TO SR 273

REVISIONS

TYPICAL SECTIONS

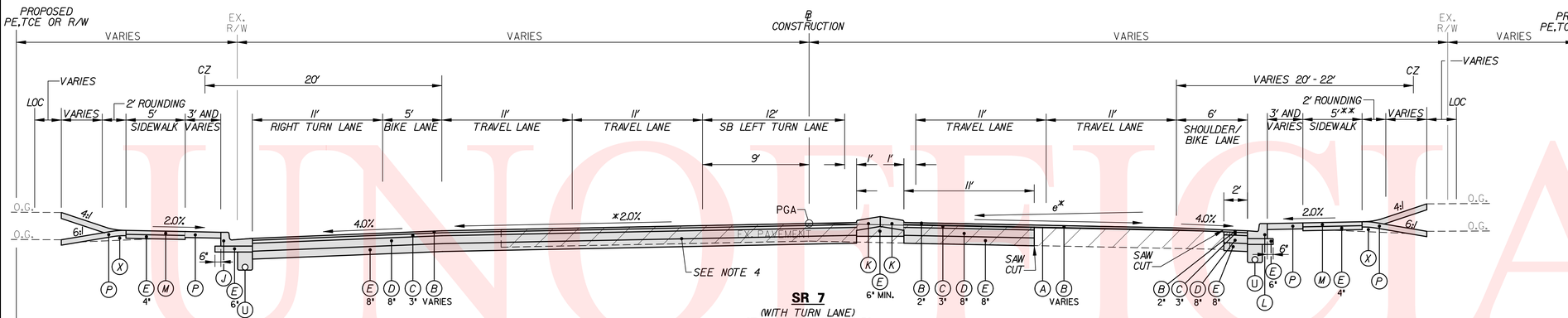

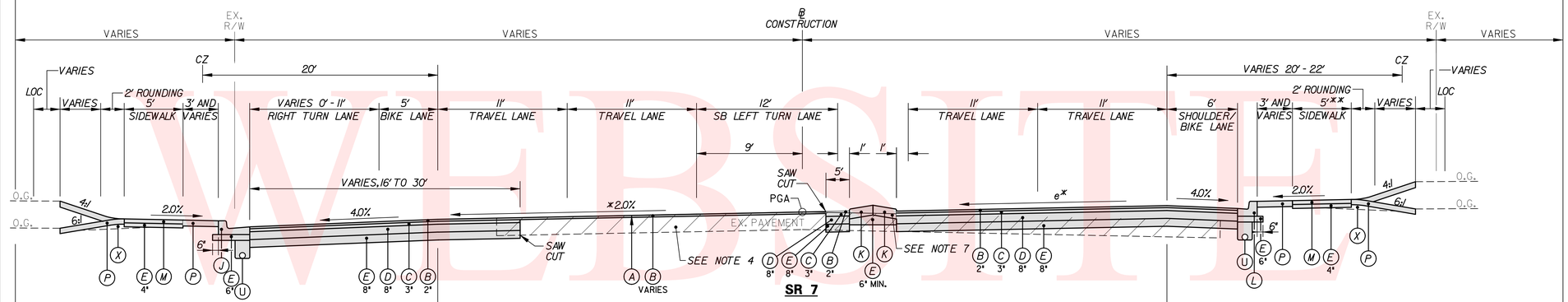

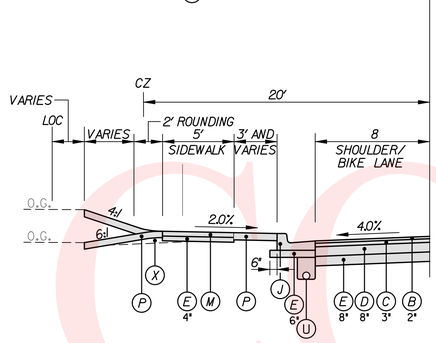

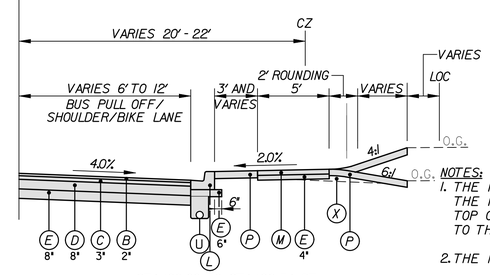

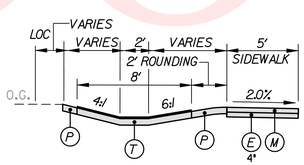

DITCH STABILIZATION TYPICAL SECTION

STA.115+25 TO STA.116+20 LT.

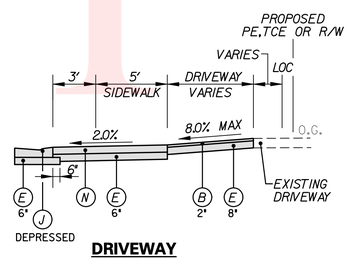

DRIVEWAY TYPICAL SECTION

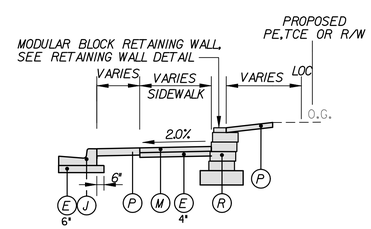

RETAINING WALL TYPICAL SECTION

STA.101+15 TO STA.104+00 RT.
STA.111+40 TO STA.113+15 RT.
STA.121+38 TO STA.121+94 RT.

LEGEND

- (A) ITEM 760507 - PROFILE MILLING,HOT-MIX
- (B) ITEM 401830 - WMA,SUPERPAVE,TYPE C HOT-MIX,160 GYRATIONS, PG 70-22 (NON-CARBONATE STONE)
- (C) ITEM 401813 - WMA,SUPERPAVE,TYPE B HOT-MIX,160 GYRATIONS, PG 70-22
- (D) ITEM 401819 - WMA,SUPERPAVE,BITUMINOUS CONCRETE BASE COURSE 160 GYRATIONS,PG 64-22
- (E) ITEM 302007 - GRADED AGGREGATE BASE COURSE,TYPE B
- (F) ITEM 401821 - WMA,SUPERPAVE,TYPE C HOT-MIX,160 GYRATIONS, PG 64-22 PATCHING
- (G) ITEM 401822 - WMA,SUPERPAVE,TYPE B HOT-MIX,160 GYRATIONS, PG 64-22 PATCHING
- (H) ITEM 701010 - PORTLAND CEMENT CONCRETE CURB,TYPE 1
- (J) ITEM 701020 - INTEGRAL PORTLAND CEMENT CONCRETE CURB AND GUTTER,TYPE 1
- (K) ITEM 701011 - PORTLAND CEMENT CONCRETE CURB,TYPE 2
- (L) ITEM 701022 - INTEGRAL PORTLAND CEMENT CONCRETE CURB AND GUTTER,TYPE 3
- (M) ITEM 705001 - P.C.C. SIDEWALK,4" DEPTH
- (N) ITEM 705002 - P.C.C. SIDEWALK,6" DEPTH
- (P) ITEM 732002 - TOPSOIL,6" DEPTH
ITEM 734013 - PERMANENT GRASS SEEDING,DRY GROUND
- (R) ITEM 602615 - MODULAR BLOCK RETAINING WALL
- (S) ITEM 705519- PATTERNED PORTLAND CEMENT CONCRETE SIDEWALK 6"
- (T) DITCH STABILIZATION
ITEM 732002 - TOPSOIL,6" DEPTH OR
ITEM 733002 - TOPSOILING,6" DEPTH
ITEM 734013 - PERMANENT GRASS SEEDING,DRY GROUND
ITEM 735535 - SOIL RETENTION BLANKET MULCH,TYPE 5
- (U) ITEM 715001 - PERFORATED PIPE UNDERDRAIN,6"
- (V) ITEM 701027 - PORTLAND CEMENT CONCRETE CURB, TYPE 1,MODIFIED
- (W) ITEM 209001 - BORROW,TYPE A
- (X) SUITABLE EXCAVATED MATERIAL MEETING REQUIREMENTS OF BORROW,TYPE F

NOTES:

1. THE PGA IS APPLIED TO THE TOP OF THE FINAL PAVEMENT SURFACE. IN AREAS WHERE THE PGA IS LOCATED WITHIN THE RAISED MEDIAN,ITS VERTICAL LOCATION SHALL BE THE TOP OF ADJACENT PAVEMENT ELEVATION PROJECTED AT THE PROPOSED CROSS SLOPE TO THE CONSTRUCTION BASELINE.
2. THE MAXIMUM LIFTS FOR THE INDIVIDUAL PAVING MATERIALS ARE AS FOLLOWS:
   - SUPERPAVE, TYPE C HOT-MIX - 2"
   - SUPERPAVE, TYPE B HOT-MIX - 3"
   - SUPERPAVE BIT. CONC. BASE COURSE - 4"
   - GRADED AGGREGATE BASE COURSE - 8"
3. SUPERPAVE,BITUMINOUS CONCRETE BASE COURSE SHALL BE PLACED IN TWO EQUAL LIFTS.
4. EXISTING MAINLINE PAVEMENT IS VARIABLE-DEPTH HOT-MIX OVER 7" TO 7½" REINFORCED CONCRETE PAVEMENT. SEE CORE SUMMARY ON PLANS FOR HOT-MIX THICKNESS. BASED ON EXISTING PLAN INFORMATION AND PAVEMENT CORE DATA, EXISTING P.C.C. PAVEMENT EXTENDS APPROXIMATELY 8' TO THE EAST AND 12' TO THE WEST OF THE EXISTING CENTERLINE ON AVERAGE.
5. THE MILL AND OVERLAY REPRESENTS THE LIMIT OF WHERE PROFILE MILLING IS REQUIRED. AT A MINIMUM,THE CONTRACTOR IS REQUIRED TO PROFILE MILL 2" BELOW THE EXISTING GRADE AND PLACE A MINIMUM OF 2" OF TYPE C HOT MIX.WHEN THE PROPOSED GRADE IS MORE THAN 2" HIGHER THAN THE EXISTING GRADE,TYPE B HOT MIX SHALL BE USED UNDER THE TYPE C HOT MIX TO MAKE UP THE GRADE DIFFERENCE.
6. HORIZONTAL CLEARANCE IS 2' BEHIND FACE OF CURB UNLESS OTHERWISE NOTED ON THE PLANS.
7. SEE CONSTRUCTION DETAILS FOR TYPE 2 CURB MODIFICATIONS AT LOCATIONS IN MEDIAN WHERE TYPE 2 CURB IS BACK TO BACK.

PREL. TRACING ____ S.JB ____ DESIGN ____ KGM-A ____ CHKD. ____ JRR

UNOFFICIAL WEBSITE COPY

CONTRACT	COUNTY	F.A.P. NO.	SHEET NO.	TOTAL SHTS.
T200312601	NEW CASTLE	SEE TITLE SHEET	9	115

SR 7, NEWTOWN ROAD TO SR 273

REVISIONS

TYPICAL SECTIONS

SCALE: NONE

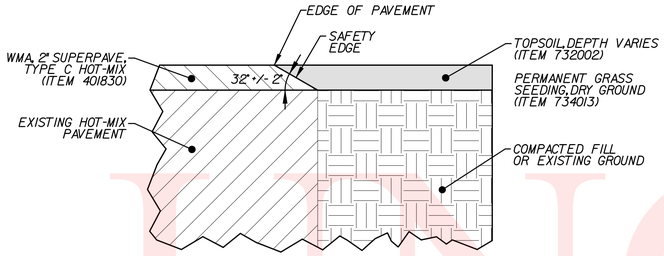

SAFTEY EDGE – BITUMINOUS PAVEMENT AND OVERLAYS

NOT TO SCALE

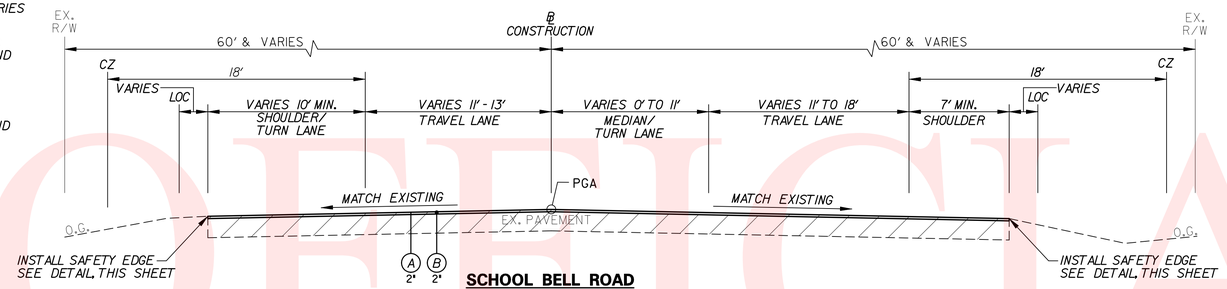

SCHOOL BELL ROAD

STA. 5+64 TO STA. 14+51

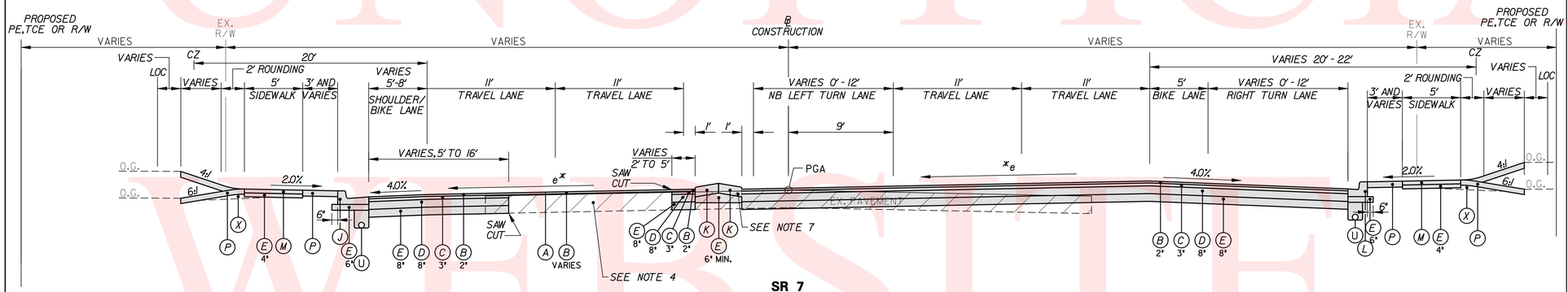

SR 7

STA. 123+02 TO STA. 125+50

* SUPERELEVATION FROM STA. 123+02 TO STA. 125+50 (e = 2.7% MAX.), SEE GRADES AND GEOMETRICS DETAILS

** SEE GRADES AND GEOMETRICS SHEETS FOR CURB ELEVATION DETAIL

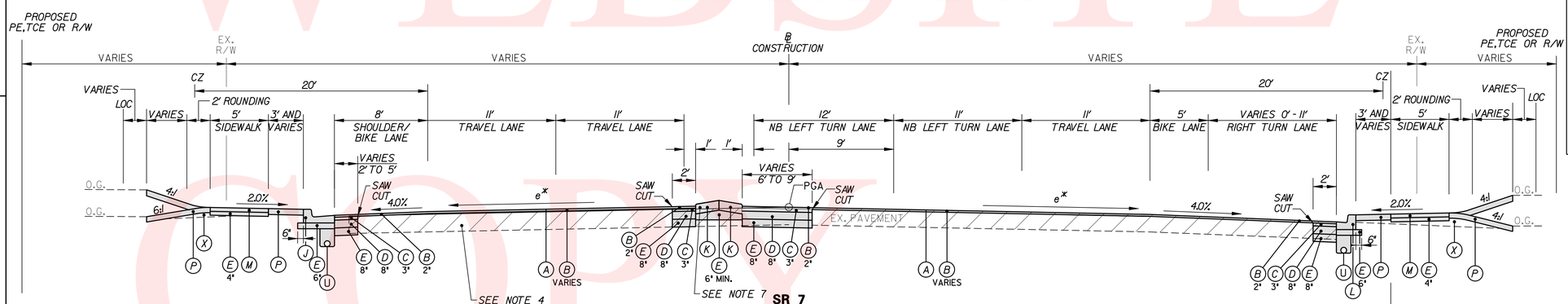

SR 7

STA. 125+50 TO STA. 129+95

* SUPERELEVATION FROM STA. 125+50 TO STA. 126+41 (e = 2.7% MAX.), SEE GRADES AND GEOMETRICS DETAILS

2:1 CUT SLOPE TYPICAL SECTION

STA. 124+50 TO STA. 125+75 RT.

LEGEND

- (A) ITEM 760507 - PROFILE MILLING, HOT-MIX
- (B) ITEM 401830 - WMA, SUPERPAVE, TYPE C HOT-MIX, 160 GYRATIONS, PG 70-22 (NON-CARBONATE STONE)
- (C) ITEM 401813 - WMA, SUPERPAVE, TYPE B HOT-MIX, 160 GYRATIONS, PG 70-22
- (D) ITEM 401819 - WMA, SUPERPAVE, BITUMINOUS CONCRETE BASE COURSE 160 GYRATIONS, PG 64-22
- (E) ITEM 302007 - GRADED AGGREGATE BASE COURSE, TYPE B
- (F) ITEM 401821 - WMA, SUPERPAVE, TYPE C HOT-MIX, 160 GYRATIONS, PG 64-22 PATCHING
- (G) ITEM 401822 - WMA, SUPERPAVE, TYPE B HOT-MIX, 160 GYRATIONS, PG 64-22 PATCHING
- (H) ITEM 701010 - PORTLAND CEMENT CONCRETE CURB, TYPE 1
- (J) ITEM 701020 - INTEGRAL PORTLAND CEMENT CONCRETE CURB AND GUTTER, TYPE 1
- (K) ITEM 701011 - PORTLAND CEMENT CONCRETE CURB, TYPE 2
- (L) ITEM 701022 - INTEGRAL PORTLAND CEMENT CONCRETE CURB AND GUTTER, TYPE 3
- (M) ITEM 705001 - P.C.C. SIDEWALK, 4" DEPTH
- (N) ITEM 705002 - P.C.C. SIDEWALK, 6" DEPTH
- (P) ITEM 732002 - TOPSOIL, 6" DEPTH
ITEM 734013 - PERMANENT GRASS SEEDING, DRY GROUND
- (R) ITEM 602615 - MODULAR BLOCK RETAINING WALL
- (S) ITEM 705519 - PATTERNED PORTLAND CEMENT CONCRETE SIDEWALK 6"
- (T) DITCH STABILIZATION
ITEM 732002 - TOPSOIL, 6" DEPTH OR
ITEM 733002 - TOPSOILING, 6" DEPTH
ITEM 734013 - PERMANENT GRASS SEEDING, DRY GROUND
ITEM 735535 - SOIL RETENTION BLANKET MULCH, TYPE 5
- (U) ITEM 715001 - PERFORATED PIPE UNDERDRAIN, 6"
- (V) ITEM 701027 - PORTLAND CEMENT CONCRETE CURB, TYPE 1, MODIFIED
- (W) ITEM 209001 - BORROW, TYPE A
- (X) SUITABLE EXCAVATED MATERIAL MEETING REQUIREMENTS OF BORROW, TYPE F

NOTES:

1. THE PGA IS APPLIED TO THE TOP OF THE FINAL PAVEMENT SURFACE. IN AREAS WHERE THE PGA IS LOCATED WITHIN THE RAISED MEDIAN, ITS VERTICAL LOCATION SHALL BE THE TOP OF ADJACENT PAVEMENT ELEVATION PROJECTED AT THE PROPOSED CROSS SLOPE TO THE CONSTRUCTION BASELINE.

2. THE MAXIMUM LIFTS FOR THE INDIVIDUAL PAVING MATERIALS ARE AS FOLLOWS:
   - SUPERPAVE, TYPE C HOT-MIX - 2"
   - SUPERPAVE, TYPE B HOT-MIX - 3"
   - SUPERPAVE BIT. CONC. BASE COURSE - 4"
   - GRADED AGGREGATE BASE COURSE - 8"

3. SUPERPAVE, BITUMINOUS CONCRETE BASE COURSE SHALL BE PLACED IN TWO EQUAL LIFTS.

4. EXISTING MAINLINE PAVEMENT IS VARIABLE-DEPTH HOT-MIX OVER 7" TO 7½" REINFORCED CONCRETE PAVEMENT. SEE CORE SUMMARY ON PLANS FOR HOT-MIX THICKNESS. BASED ON EXISTING PLAN INFORMATION AND PAVEMENT CORE DATA, EXISTING P.C.C. PAVEMENT EXTENDS APPROXIMATELY 8' TO THE EAST AND 12' TO THE WEST OF THE EXISTING CENTERLINE ON AVERAGE.

NOTES:

5. THE MILL AND OVERLAY REPRESENTS THE LIMIT OF WHERE PROFILE MILLING IS REQUIRED. AT A MINIMUM, THE CONTRACTOR IS REQUIRED TO PROFILE MILL 2" BELOW THE EXISTING GRADE AND PLACE A MINIMUM OF 2" OF TYPE C HOT MIX. WHEN THE PROPOSED GRADE IS MORE THAN 2" HIGHER THAN THE EXISTING GRADE, TYPE B HOT MIX SHALL BE USED UNDER THE TYPE C HOT MIX TO MAKE UP THE GRADE DIFFERENCE.

6. HORIZONTAL CLEARANCE IS 2' BEHIND FACE OF CURB UNLESS OTHERWISE NOTED ON THE PLANS.

7. SEE CONSTRUCTION DETAILS FOR TYPE 2 CURB MODIFICATIONS AT LOCATIONS IN MEDIAN WHERE TYPE 2 CURB IS BACK TO BACK.

PRELIM. TRACING ____ SUB ____ DESIGN ____ KGM-A ____ CHKD. ____ JRR

UNOFFICIAL WEBSITE COPY

CONTRACT	COUNTY	F.A.P. NO.	SHEET NO.	TOTAL SHTS.
T200312601	NEW CASTLE	SEE TITLE SHEET	10	115

SR 7, NEWTOWN ROAD TO SR 273

REVISIONS

TYPICAL SECTIONS

SCALE: NONE

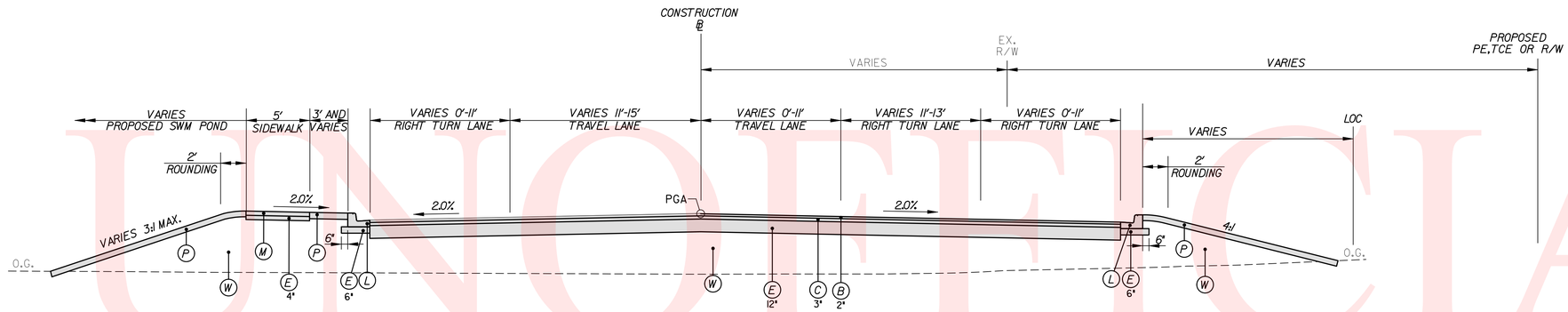

ENTRANCE ROAD

STA.239+95 TO STA.242+75

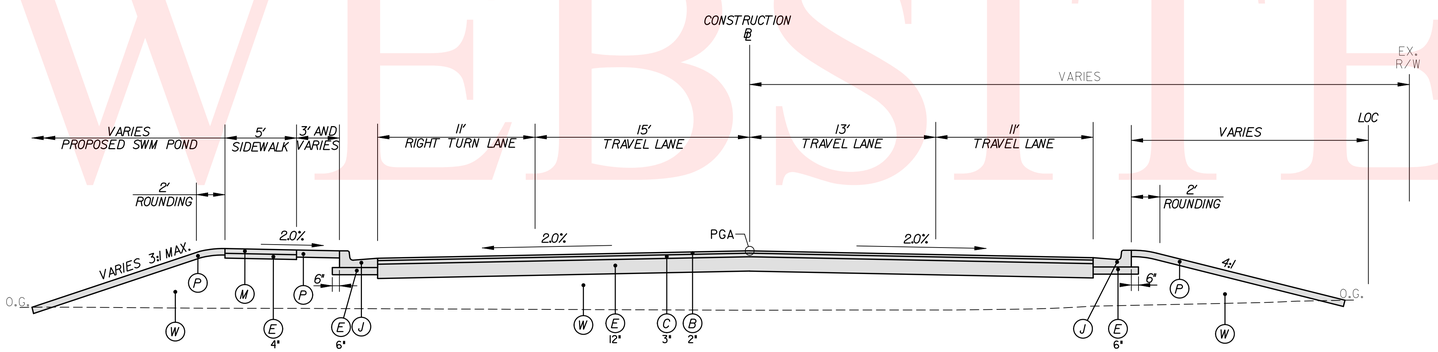

ENTRANCE ROAD

STA.239+13 TO STA.239+73

LEGEND

- (A) ITEM 760507 - PROFILE MILLING,HOT-MIX
- (B) ITEM 401830 - WMA,SUPERPAVE,TYPE C HOT-MIX,160 GYRATIONS, PG 70-22 (NON-CARBONATE STONE)
- (C) ITEM 401813 - WMA,SUPERPAVE,TYPE B HOT-MIX,160 GYRATIONS, PG 70-22
- (D) ITEM 401819 - WMA,SUPERPAVE,BITUMINOUS CONCRETE BASE COURSE 160 GYRATIONS,PG 64-22
- (E) ITEM 302007 - GRADED AGGREGATE BASE COURSE,TYPE B
- (F) ITEM 401821 - WMA,SUPERPAVE,TYPE C HOT-MIX,160 GYRATIONS, PG 64-22 PATCHING
- (G) ITEM 401822 - WMA,SUPERPAVE,TYPE B HOT-MIX,160 GYRATIONS, PG 64-22 PATCHING
- (H) ITEM 701010 - PORTLAND CEMENT CONCRETE CURB,TYPE 1
- (J) ITEM 701020 - INTEGRAL PORTLAND CEMENT CONCRETE CURB AND GUTTER,TYPE 1
- (K) ITEM 701011 - PORTLAND CEMENT CONCRETE CURB,TYPE 2
- (L) ITEM 701022 - INTEGRAL PORTLAND CEMENT CONCRETE CURB AND GUTTER,TYPE 3
- (M) ITEM 705001 - P.C.C. SIDEWALK,4" DEPTH
- (N) ITEM 705002 - P.C.C. SIDEWALK,6" DEPTH
- (P) ITEM 732002 - TOPSOIL,6" DEPTH
ITEM 734013 - PERMANENT GRASS SEEDING,DRY GROUND
- (R) ITEM 602615 - MODULAR BLOCK RETAINING WALL
- (S) ITEM 705519- PATTERNED PORTLAND CEMENT CONCRETE SIDEWALK 6"
- (T) DITCH STABILIZATION
ITEM 732002 - TOPSOIL,6" DEPTH OR
ITEM 733002 - TOPSOILING,6" DEPTH
ITEM 734013 - PERMANENT GRASS SEEDING,DRY GROUND
ITEM 735535 - SOIL RETENTION BLANKET MULCH,TYPE 5
- (U) ITEM 715001 - PERFORATED PIPE UNDERDRAIN,6"
- (V) ITEM 701027 - PORTLAND CEMENT CONCRETE CURB, TYPE 1,MODIFIED
- (W) ITEM 209001 - BORROW,TYPE A
- (X) SUITABLE EXCAVATED MATERIAL MEETING REQUIREMENTS OF BORROW,TYPE F

NOTES:

1. THE PGA IS APPLIED TO THE TOP OF THE FINAL PAVEMENT SURFACE. IN AREAS WHERE THE PGA IS LOCATED WITHIN THE RAISED MEDIAN,ITS VERTICAL LOCATION SHALL BE THE TOP OF ADJACENT PAVEMENT ELEVATION PROJECTED AT THE PROPOSED CROSS SLOPE TO THE CONSTRUCTION BASELINE.

2. THE MAXIMUM LIFTS FOR THE INDIVIDUAL PAVING MATERIALS ARE AS FOLLOWS:
   SUPERPAVE, TYPE C HOT-MIX - 2"
   SUPERPAVE, TYPE B HOT-MIX - 3"
   SUPERPAVE BIT. CONC. BASE COURSE - 4"
   GRADED AGGREGATE BASE COURSE - 8"

3. SUPERPAVE,BITUMINOUS CONCRETE BASE COURSE SHALL BE PLACED IN TWO EQUAL LIFTS.

4. EXISTING MAINLINE PAVEMENT IS VARIABLE-DEPTH HOT-MIX OVER 7" TO 7½" REINFORCED CONCRETE PAVEMENT. SEE CORE SUMMARY ON PLANS FOR HOT-MIX THICKNESS. BASED ON EXISTING PLAN INFORMATION AND PAVEMENT CORE DATA, EXISTING P.C.C. PAVEMENT EXTENDS APPROXIMATELY 8' TO THE EAST AND 12' TO THE WEST OF THE EXISTING CENTERLINE ON AVERAGE.

5. THE MILL AND OVERLAY REPRESENTS THE LIMIT OF WHERE PROFILE MILLING IS REQUIRED. AT A MINIMUM,THE CONTRACTOR IS REQUIRED TO PROFILE MILL 2" BELOW THE EXISTING GRADE AND PLACE A MINIMUM OF 2" OF TYPE C HOT MIX.WHEN THE PROPOSED GRADE IS MORE THAN 2" HIGHER THAN THE EXISTING GRADE,TYPE B HOT MIX SHALL BE USED UNDER THE TYPE C HOT MIX TO MAKE UP THE GRADE DIFFERENCE.

6. HORIZONTAL CLEARANCE IS 2' BEHIND FACE OF CURB UNLESS OTHERWISE NOTED ON THE PLANS.

7. SEE CONSTRUCTION DETAILS FOR TYPE 2 CURB MODIFICATIONS AT LOCATIONS IN MEDIAN WHERE TYPE 2 CURB IS BACK TO BACK.

PREL. TRACING SJB DESIGN KGM-A CHKD. JRR

UNOFFICIAL WEBSITE COPY

CONTRACT	COUNTY	F.A.P. NO.	SHEET NO.	TOTAL SHTS.
T200312601	NEW CASTLE	SEE TITLE SHEET	11	115

SR 7, NEWTOWN ROAD TO SR 273

REVISIONS

HORIZONTAL AND VERTICAL CONTROL

SCALE 0 200 400 600 FEET

DATUM REFERENCE:
HORIZONTAL - THIS PROJECT IS REFERENCED TO THE DELAWARE STATE PLANE COORDINATE SYSTEM (NAD 83/91).
VERTICAL - THIS PROJECT IS REFERENCED TO NAVD 88. BASED ON NGS CONTROL STATION JU4138 - ELEV. 93.53 FEET.

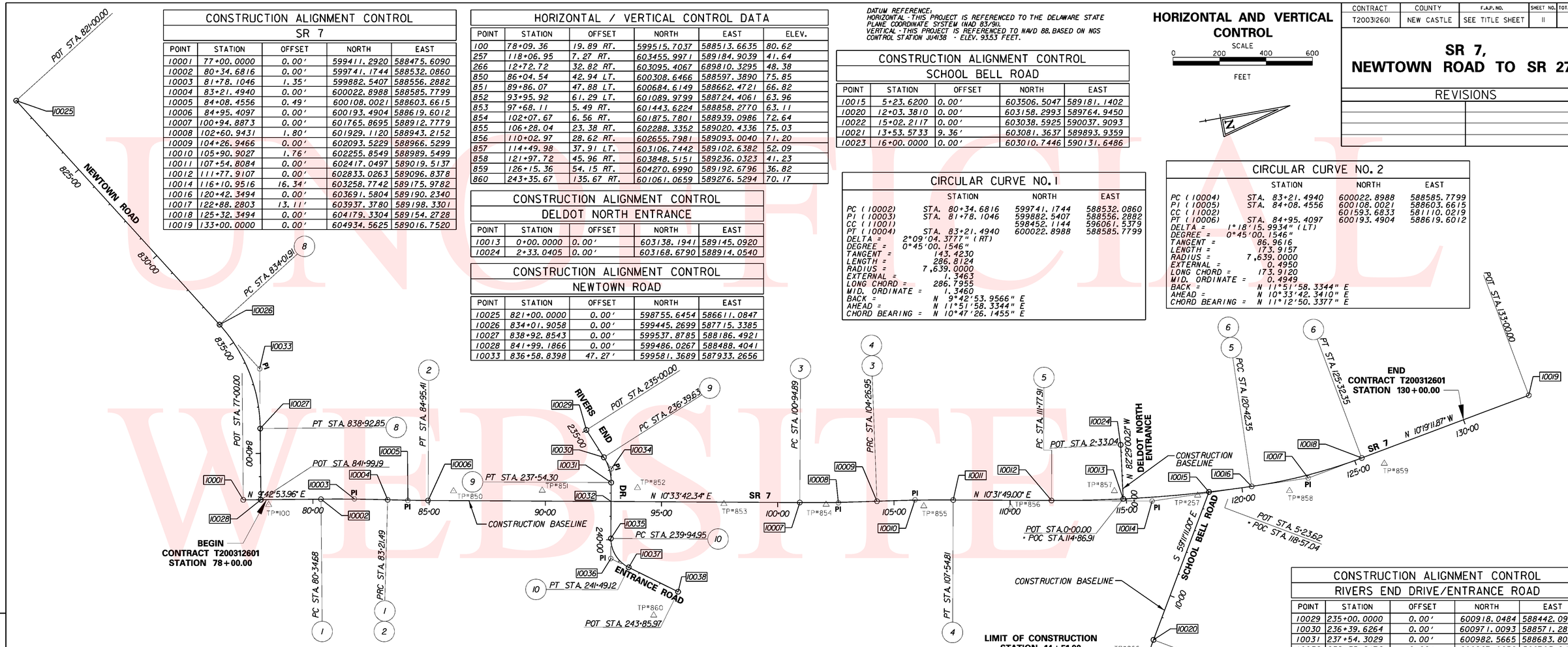

CONSTRUCTION ALIGNMENT CONTROL
SR 7

POINT	STATION	OFFSET	NORTH	EAST
10001	77+00.0000	0.00'	599411.2920	588475.6090
10002	80+34.6816	0.00'	599741.1744	588532.0860
10003	81+78.1046	1.35'	599882.5407	588556.2882
10004	83+21.4940	0.00'	600022.8988	588585.7799
10005	84+08.4556	0.49'	600108.0021	588603.6615
10006	84+95.4097	0.00'	600193.4904	588619.6012
10007	100+94.8873	0.00'	601765.8695	588912.7779
10008	102+60.9431	1.80'	601929.1120	588943.2152
10009	104+26.9466	0.00'	602093.5229	588966.5299
10010	105+90.9027	1.76'	602255.8549	588989.5499
10011	107+54.8084	0.00'	602417.0497	589019.5137
10012	111+77.9107	0.00'	602833.0263	589096.8378
10014	116+10.9516	16.34'	603258.7742	589175.9782
10016	120+42.3494	0.00'	603691.5804	589190.2340
10017	122+88.2803	13.11'	603937.3780	589198.3301
10018	125+32.3494	0.00'	604179.3304	589154.2728
10019	133+00.0000	0.00'	604934.5625	589016.7520

HORIZONTAL / VERTICAL CONTROL DATA

POINT	STATION	OFFSET	NORTH	EAST	ELEV.
100	78+09.36	19.89 RT.	599515.7037	588513.6635	80.62
257	118+06.95	7.27 RT.	603455.9971	589184.9039	41.64
266	12+72.72	32.82 RT.	603095.4067	689810.3295	48.38
850	86+04.54	42.94 LT.	600308.6466	588597.3890	75.85
851	89+86.07	47.88 LT.	600684.6149	588662.4721	66.82
852	93+95.92	61.29 LT.	601089.9799	588724.4061	63.96
853	97+68.11	5.49 RT.	601443.6224	588858.2770	63.11
854	102+07.67	6.56 RT.	601875.7801	588939.0986	72.64
855	106+28.04	23.38 RT.	602288.3352	589020.4336	75.03
856	110+02.97	28.62 RT.	602655.7981	589093.0040	71.20
857	114+49.98	37.91 LT.	603106.7442	589102.6382	52.09
858	121+97.72	45.96 RT.	603848.5151	589236.0323	41.23
859	126+15.36	54.15 RT.	604270.6990	589192.6796	36.82
860	243+35.67	135.67 RT.	601061.0659	589276.5294	70.17

CONSTRUCTION ALIGNMENT CONTROL
DELDOT NORTH ENTRANCE

POINT	STATION	OFFSET	NORTH	EAST
10013	0+00.0000	0.00'	603138.1941	589145.0920
10024	2+33.0405	0.00'	603168.6790	588914.0540

CONSTRUCTION ALIGNMENT CONTROL
NEWTOWN ROAD

POINT	STATION	OFFSET	NORTH	EAST
10025	821+00.0000	0.00'	598755.6454	586611.0847
10026	834+01.9058	0.00'	599445.2699	587715.3385
10027	838+92.8543	0.00'	599537.8785	588186.4921
10028	841+99.1866	0.00'	599486.0267	588488.4041
10033	836+58.8398	47.27'	599581.3689	587933.2656

CONSTRUCTION ALIGNMENT CONTROL
SCHOOL BELL ROAD

POINT	STATION	OFFSET	NORTH	EAST
10015	5+23.6200	0.00'	603506.5047	589181.1402
10020	12+03.3810	0.00'	603158.2993	589764.9450
10022	15+02.2117	0.00'	603038.5925	590037.9093
10021	13+53.5733	9.36'	603081.3637	589893.9359
10023	16+00.0000	0.00'	603010.7446	590131.6486

CONSTRUCTION ALIGNMENT CONTROL
RIVERS END DRIVE/ENTRANCE ROAD

POINT	STATION	OFFSET	NORTH	EAST
10029	235+00.0000	0.00'	600918.0484	588442.0958
10030	236+39.6264	0.00'	600971.0093	588571.2882
10031	237+54.3029	0.00'	600982.5665	588683.8083
10032	238+35.8176	0.00'	600967.6252	588763.9419
10034	236+98.5890	8.51'	600993.3741	588625.8446
10035	239+94.9457	0.00'	600938.4576	588920.3740
10036	240+81.1967	24.74'	600922.6481	589005.1637
10037	241+49.1206	0.00'	600991.9364	589056.5288
10038	243+85.9733	0.00'	601182.2080	589197.5817

CIRCULAR CURVE NO. 1

	STATION	NORTH	EAST
PC (10002)	STA. 80+34.6816	599741.1744	588532.0860
PI (10003)	STA. 81+78.1046	599882.5407	588556.2882
CC (11001)		598452.1144	596061.5379
PT (10004)	STA. 83+21.4940	600022.8988	588585.7799

DELTA = 2°09'04.3777" (RT)
DEGREE = 0°45'00.1546"
TANGENT = 143.4230
LENGTH = 286.8124
RADIUS = 7,639.0000
EXTERNAL = 1.3463
LONG CHORD = 286.7955
MID. ORDINATE = 1.3460
BACK = N 9°42'53.9566" E
AHEAD = N 11°51'58.3344" E
CHORD BEARING = N 10°47'26.1455" E

CIRCULAR CURVE NO. 2

	STATION	NORTH	EAST
PC (10004)	STA. 83+21.4940	600022.8988	588585.7799
PI (10005)	STA. 84+08.4556	600108.0021	588603.6615
CC (11002)		601593.6833	581110.0219
PT (10006)	STA. 84+95.4097	600193.4904	588619.6012

DELTA = 1°18'15.9934" (LT)
DEGREE = 0°45'00.1546"
TANGENT = 86.9616
LENGTH = 173.9157
RADIUS = 7,639.0000
EXTERNAL = 0.4950
LONG CHORD = 173.9120
MID. ORDINATE = 0.4949
BACK = N 11°51'58.3344" E
AHEAD = N 10°33'42.3410" E
CHORD BEARING = N 11°12'50.3377" E

CIRCULAR CURVE NO. 3

	STATION	NORTH	EAST
PC (10007)	STA. 100+94.8873	601765.8695	588912.7779
PI (10008)	STA. 102+60.9431	601929.1120	588943.2152
CC (11003)		603166.0624	581403.1987
PT (10009)	STA. 104+26.9466	602093.5229	588966.5299

DELTA = 2°29'26.1153" (LT)
DEGREE = 0°45'00.1546"
TANGENT = 166.0558
LENGTH = 332.0593
RADIUS = 7,639.0000
EXTERNAL = 1.8046
LONG CHORD = 332.0332
MID. ORDINATE = 1.8042
BACK = N 10°33'42.3410" E
AHEAD = N 8°04'16.2257" E
CHORD BEARING = N 9°18'59.2833" E

CIRCULAR CURVE NO. 4

	STATION	NORTH	EAST
PC (10009)	STA. 104+26.9466	602093.5229	588966.5299
PI (10010)	STA. 105+90.9027	602255.8549	588989.5499
CC (11003)		601020.9835	596529.8612
PT (10011)	STA. 107+54.8084	602417.0497	589019.5137

DELTA = 2°27'32.7740" (RT)
DEGREE = 0°45'00.1546"
TANGENT = 163.9560
LENGTH = 327.8618
RADIUS = 7,639.0000
EXTERNAL = 1.7593
LONG CHORD = 327.8366
MID. ORDINATE = 1.7589
BACK = N 8°04'16.2257" E
AHEAD = N10°31'48.9996" E
CHORD BEARING = N 9°18'02.6126" E

CIRCULAR CURVE NO. 5

	STATION	NORTH	EAST
PC (10012)	STA. 111+77.9107	602833.0263	589096.8378
PI (10014)	STA. 116+10.9516	603258.7742	589175.9782
CC (11005)		603880.2130	583463.3398
PT (10016)	STA. 120+42.3494	603691.5804	589190.2340

DELTA = 8°38'37.5012" (LT)
DEGREE = 0°59'59.7348"
TANGENT = 433.0410
LENGTH = 864.4387
RADIUS = 5,730.0000
EXTERNAL = 16.3401
LONG CHORD = 863.6192
MID. ORDINATE = 16.2936
BACK = N 10°31'48.9996" E
AHEAD = N 1°53'11.4985" E
CHORD BEARING = N 6°12'30.2490" E

CIRCULAR CURVE NO. 6

	STATION	NORTH	EAST
PC (10016)	STA. 120+42.3494	603691.5804	589190.2340
PI (10017)	STA. 122+88.2803	603937.3780	589198.3301
CC (11006)		603767.2968	586891.4806
PT (10018)	STA. 125+32.3494	604179.3304	589154.2728

DELTA = 12°12'23.3718" (LT)
DEGREE = 2°29'28.0351"
TANGENT = 245.9309
LENGTH = 490.0000
RADIUS = 2,300.0000
EXTERNAL = 13.1109
LONG CHORD = 489.0739
MID. ORDINATE = 13.0366
BACK = N 1°53'11.4985" E
AHEAD = N 10°19'11.8733" W
CHORD BEARING = N 4°13'00.1874" W

CIRCULAR CURVE NO. 7

	STATION	NORTH	EAST
PC (10020)	STA. 12+03.3810	603158.2993	589764.9450
PI (10021)	STA. 13+53.5733	603081.3637	589893.9359
CC (11007)		604188.9052	590379.6412
PT (10022)	STA. 15+02.2117	603038.5925	590037.9093

DELTA = 14°16'05.2050" (LT)
DEGREE = 4°46'28.7339"
TANGENT = 150.1923
LENGTH = 298.8306
RADIUS = 1,200.0000
EXTERNAL = 9.3625
LONG CHORD = 298.0591
MID. ORDINATE = 9.2900
BACK = S 59°11'11.0017" E
AHEAD = S 73°27'16.2067" E
CHORD BEARING = S 66°19'13.6042" E

CIRCULAR CURVE NO. 8

	STATION	NORTH	EAST
PC (10026)	STA. 834+01.9058	599445.2699	587715.3385
PI (10033)	STA. 836+58.8398	599581.3689	587933.2656
CC (11010)		598873.5371	588072.3950
PT (10027)	STA. 838+92.8546	599537.8785	588186.4921

DELTA = 41°43'50.2519" (RT)
DEGREE = 8°30'00.0000"
TANGENT = 256.9341
LENGTH = 490.9485
RADIUS = 674.0680
EXTERNAL = 47.3076
LONG CHORD = 480.1688
MID. ORDINATE = 44.2052
BACK = N 58°00'52.3829" E
AHEAD = N 80°15'17.3652" E
CHORD BEARING = N 78°52'47.5088" E

CIRCULAR CURVE NO. 9

	STATION	NORTH	EAST
PC (10030)	STA. 236+39.6264	600971.0093	588571.2882
PI (10034)	STA. 236+98.5890	600993.3741	588625.8446
CC (11011)		600785.9549	588647.1490
PT (10031)	STA. 237+54.3029	600982.5665	588683.8083

DELTA = 32°51'08.6625" (RT)
DEGREE = 28°38'52.4031"
TANGENT = 58.9626
LENGTH = 114.6765
RADIUS = 200.0000
EXTERNAL = 8.5104
LONG CHORD = 113.1121
MID. ORDINATE = 8.1630
BACK = N 67°42'33.8300" E
AHEAD = S 79°26'17.5075" E
CHORD BEARING = N 84°08'08.1612" E

CIRCULAR CURVE NO. 10

	STATION	NORTH	EAST
PC (10035)	STA. 239+94.9457	600938.4576	588920.3740
PI (10036)	STA. 240+81.1967	600922.6481	589005.1637
CC (11012)		601074.1196	588945.6689
PT (10037)	STA. 241+49.1206	600991.9364	589056.5288

DELTA = 64°00'40.9599" (LT)
DEGREE = 41°31'07.2509"
TANGENT = 86.2510
LENGTH = 154.1749
RADIUS = 138.0000
EXTERNAL = 24.7367
LONG CHORD = 146.2810
MID. ORDINATE = 20.9766
BACK = S 79°26'17.5075" E
AHEAD = N 36°33'01.5326" E
CHORD BEARING = N 68°33'22.0125" E

PRELIM. TRACING SJB DESIGN KGM-A CHKD. JRR

UNOFFICIAL WEBSITE COPY

CONTRACT	COUNTY	F.A.P. NO.	SHEET NO.	TOTAL SHTS.
T200312601	NEW CASTLE	SEE TITLE SHEET	12	115

SR 7, NEWTOWN ROAD TO SR 273

REVISIONS

HORIZONTAL AND VERTICAL CONTROL

NOT TO SCALE

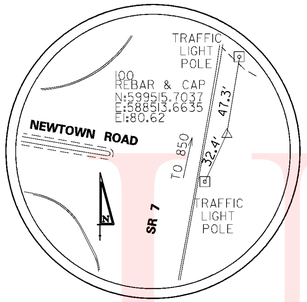

TRAVERSE POINT #100

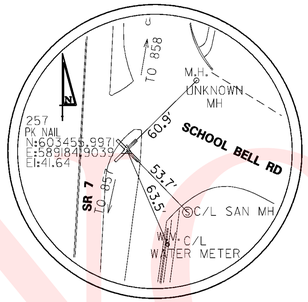

TRAVERSE POINT #257

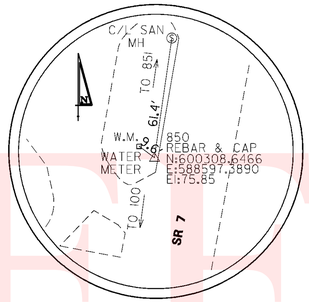

TRAVERSE POINT #850

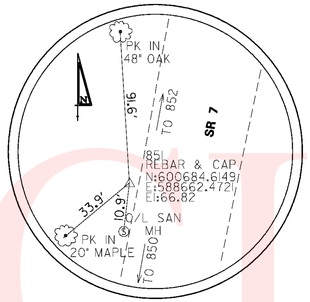

TRAVERSE POINT #851

HORIZONTAL / VERTICAL CONTROL DATA					
POINT	STATION	OFFSET	NORTH	EAST	ELEV.
100	78+09.36	19.89 RT.	599515.7037	588513.6635	80.62
257	118+06.95	7.27 RT.	603455.9971	589184.9039	41.64
266	12+72.72	32.82 RT.	603095.4067	589810.3295	48.38
850	86+04.54	42.94 LT.	600308.6466	588597.3890	75.85
851	89+86.07	47.88 LT.	600684.6149	588662.4721	66.82
852	93+95.92	61.29 LT.	601089.9799	588724.4061	63.96
853	97+68.11	5.49 RT.	601443.6224	588858.2770	63.11
854	102+07.67	6.56 RT.	601875.7801	588939.0986	72.64
855	106+28.04	23.38 RT.	602288.3352	589020.4336	75.03
856	110+02.97	28.62 RT.	602655.7981	589093.0040	71.20
857	114+49.98	37.91 LT.	603106.7442	589102.6382	52.09
858	121+97.72	45.96 RT.	603848.5151	589236.0323	41.23
859	126+15.36	54.15 RT.	604270.6990	589192.6796	36.82
860	243+35.67	135.67 RT.	601061.0659	589276.5294	70.17

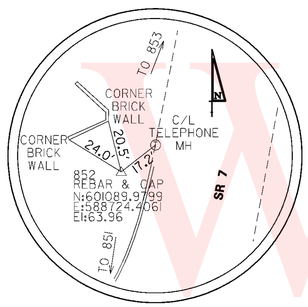

TRAVERSE POINT #852

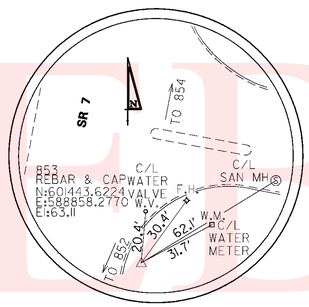

TRAVERSE POINT #853

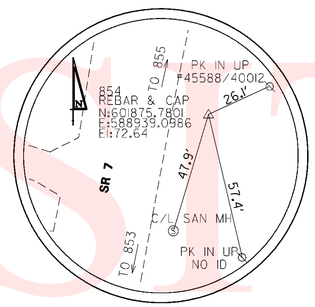

TRAVERSE POINT #854

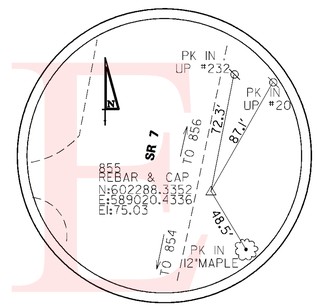

TRAVERSE POINT #855

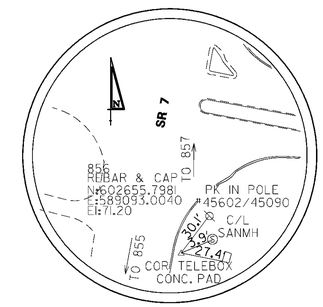

TRAVERSE POINT #856

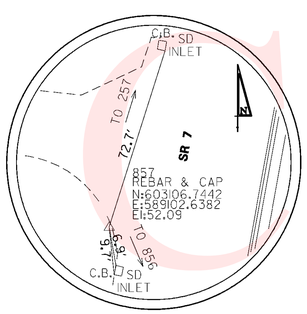

TRAVERSE POINT #857

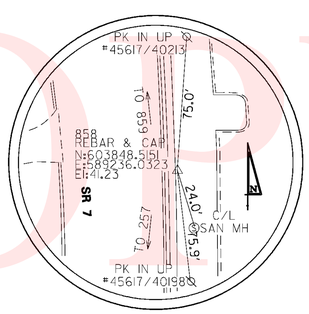

TRAVERSE POINT #858

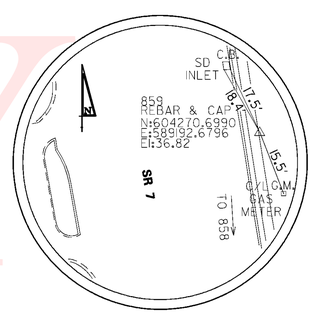

TRAVERSE POINT #859

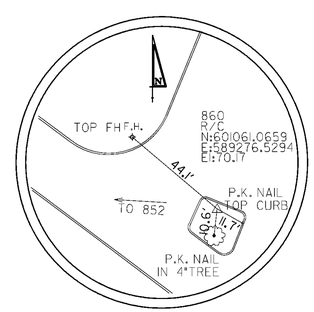

TRAVERSE POINT #860

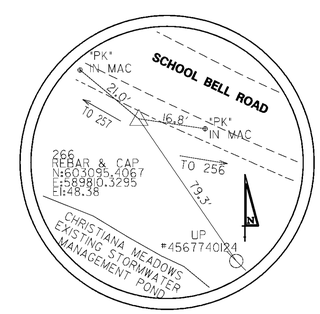

TRAVERSE POINT #266

PREL. TRACING ____ SJB ____ DESIGN ____ KGM-A ____ CHKD. ____ JRR

UNOFFICIAL WEBSITE COPY

CONTRACT	COUNTY	F.A.P. NO.	SHEET NO.	TOTAL SHTS.
T200312601	NEW CASTLE	SEE TITLE SHEET	13	115

SR 7, NEWTOWN ROAD TO SR 273

REVISIONS

CURB SCHEDULE

NO.	TYPE	LENGTH
1	INTEGRAL PCC CURB AND GUTTER TYPE 1	591'
2	PCC CURB TYPE 1	503'
3	PCC CURB TYPE 1	503'
4	INTEGRAL PCC CURB AND GUTTER TYPE 1	590'
85	PCC CURB TYPE 2	98'
86	PCC CURB TYPE 2	98'

UNDERDRAIN SCHEDULE

NO.	SIZE/TYPE	DIS. INV.	LENGTH
1	6" PEP	#	60'
2	6" PEP	#	116'
3	6" PEP	#	301'
5	6" PEP	#	175'
6	6" PEP	#	301'

TO BE SET IN FIELD. SEE UNDERDRAIN DETAIL.

ROADWAY CORE SUMMARY

C NO.	STA.	OFFSET	DESCRIPTION
1	83+25	19' LT.	3 1/2" HOT-MIX ASPHALT ON 7" PCC PAVEMENT ON SELECT

PIPE SCHEDULE

NO.	SIZE/TYPE	LENGTH	SLOPE	INT. INV.	DIS. INV.
105	15" RCP, CL. IV	126.6	0.02	73.05	70.52
107	15" RCP, CL. IV	63.0	0.008	78.57	78.07

DRAINAGE INLET SCHEDULE

NO.	BOX	GRATE	T.G. EL.	INV. EL.	STATION	OFFSET
104	3'-4' x 2'-4'	1	+	73.05	88+46.9	++
105	3'-4' x 2'-4'	1	+	78.57	90+01	++

+ MATCH FLOWLINE OF PROPOSED CURB AND GUTTER.
++ MATCH PROPOSED CURBLINE

CONSTRUCTION

SCALE 0 30 60 90 FEET

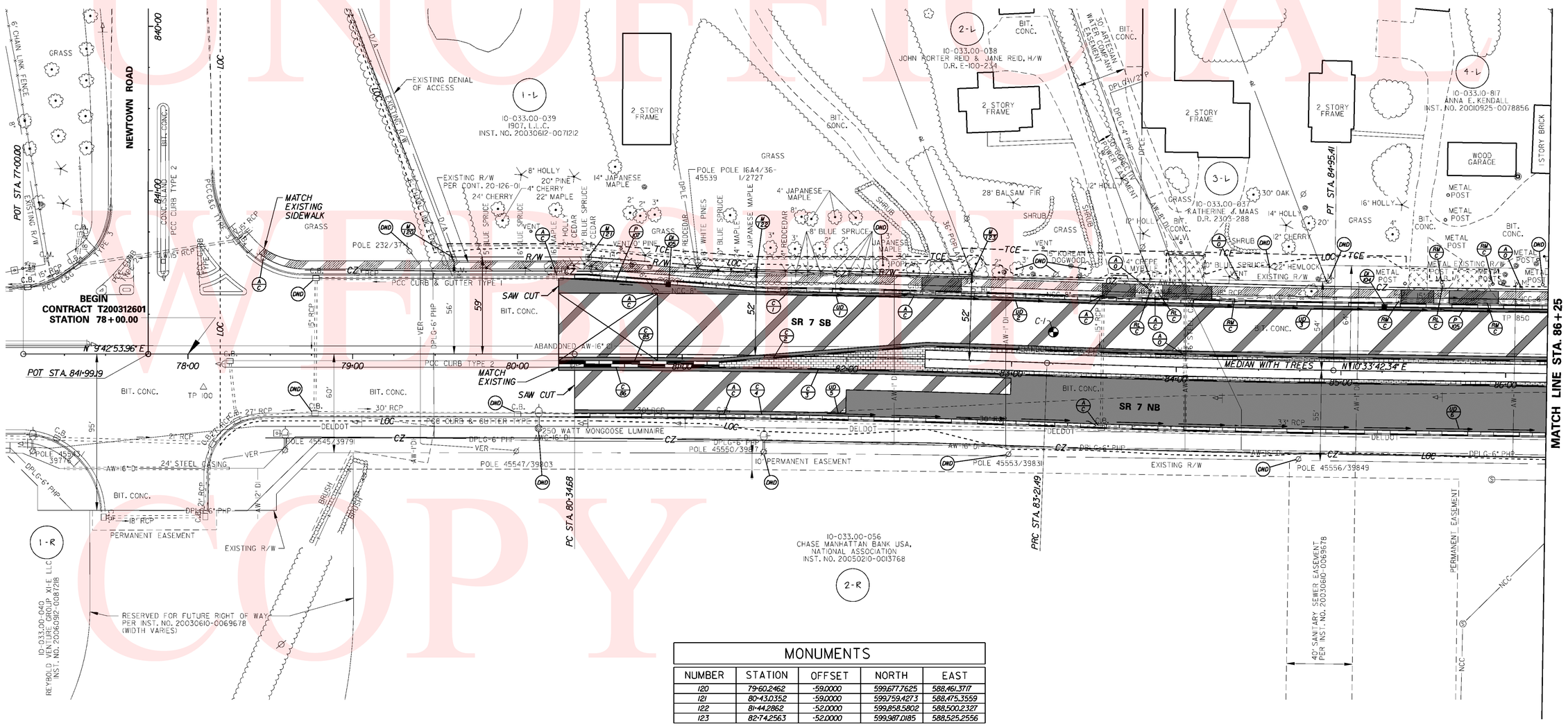

UNOFFICIAL WEB COPY

PREL. TRACING SJB DESIGN KGM-A CHKD. JRR

10:24:31 AM m:\31131-04\ps01sr7.pif

CONTRACT	COUNTY	F.A.P. NO.	SHEET NO.	TOTAL SHTS
T2003126 01	NEW CASTLE	SEE TITLE SHEET	14	115

SR 7, NEWTOWN ROAD TO SR 273

REVISIONS

CURB SCHEDULE

NO.	TYPE	LENGTH
5	INTEGRAL PCC CURB AND GUTTER TYPE I	807'
6	PCC CURB TYPE I	296'
7	PCC CURB TYPE I	297'
8	INTEGRAL PCC CURB AND GUTTER TYPE I	671'
9	15" PCC CURB TYPE 2	313'
10	PCC CURB TYPE 2	313'
11	PCC CURB TYPE 2	49'
12	PCC CURB TYPE 2	68'
13	PCC CURB TYPE 2	35'
14	PCC CURB TYPE 2	8'
15	INTEGRAL PCC CURB AND GUTTER TYPE I	259'
16	PCC CURB TYPE 2	47'
17	PCC CURB TYPE 2	105'
18	PCC CURB TYPE 2	37'
19	PCC CURB TYPE 2	40'
20	PCC CURB TYPE 2	58'
21	PCC CURB TYPE 2	88'
22	INTEGRAL PCC CURB AND GUTTER TYPE I	274'
23	PCC CURB TYPE 2	243'
24	PCC CURB TYPE 2	203'

PIPE SCHEDULE

NO.	SIZE/TYPE	LENGTH	SLOPE	INT. INV.	DIS. INV.
1	18" RCP, CL.IV	150.1	0.03	65.93	61.43
2	15" RCP, CL.V	154.4	0.002	61.23	60.92
3	18" RCP, CL.IV	73.3	0.002	60.92	60.77
4	18" RCP, CL.IV	74.0	0.003	60.77	60.55
5	15" RCP, CL. IV	54.7	0.005	58.75	58.48
6	15" RCP, CL.IV	132.4	0.003	58.28	57.88
7	15" RCP, CL.IV	106.5	0.003	57.90	57.58
8	15" RCP, CL.IV	67.3	0.02	58.35	57.00
11	15" RCP, CL.IV	10.0	0.005	56.40	56.35
12	18" RCP, CL.IV	39.2	0.010	59.31	58.92
13	18" RCP, CL.IV	23.6	0.010	58.82	58.58
14	18" RCP, CL.IV	54.7	0.011	58.12	57.50
15	21" RCP, CL. IV	90.9	0.002	57.40	57.22
16	18" RCP, CL. IV	89.0	0.002	57.80	57.62
17	18" RCP, CL. IV	79.9	0.002	57.62	57.46
18	18" RCP, CL.IV	32.2	0.002	57.46	57.40
82	15" RCP, CL. IV	50.0	0.005	59.20	58.95
84	18" RCP, CL. IV	26.4	0.010	58.48	58.22

DRAINAGE INLET SCHEDULE

NO.	BOX	GRATE	T.G. EL.	INV. EL.	STATION	OFFSET
1	48" x 30"	I	+	65.93	88+46.9	++
2	48" x 30"	I	+	60.92	90+01.1	++
3	34" x 24"	I	+	61.23	91+58.9	++
4	34" x 24"	I	+	60.77	91+01.1	++
5	34" x 24"	I	+	58.75	93+01.8	++
6	48" x 30"	I	+	58.28	93+56.9	++
7	72" x 24"	I	+	57.90	95+20.7	++
8	34" x 24"	I	62.00	58.35	92+07.9	77.3 LT.
9	48" x 30"	I	61.00	57.00	92+13.9	147.2 LT.
11	34" x 24"	I	+	56.40	92+05.7	++
12	48" x 30"	I	+	59.31	91+76.7	++
13	48" x 30"	I	+	58.82	92+14.9	++
14	72" x 24"	I	+	58.12	92+58.4	++
15	48" x 48"	I	+	57.40	93+13.0	++
16	72" x 24"	I	+	57.80	95+20.7	++
17	48" x 30"	I	+	57.62	94+27.8	++
18	48" x 48"	I	+	57.46	93+43.8	++
81	34" x 24"	I	+	70.21	86+65.0	++
82	34" x 24"	I	+	59.20	92+49.4	++
84	72" x 48"	I	+	58.48	92+34.2	++

\+ MATCH FLOWLINE OF PROPOSED CURB AND GUTTER.
++ MATCH PROPOSED CURBLINE

RIPRAP SCHEDULE

NO.	TYPE	AREA
1	R-4	17 SY

FLARED END SECTION SCHEDULE

NO.	TYPE	SLOPE	STATION	OFFSET
3	15"	0.003	94+53.1	146.6' LT.
4	15"	0.003	94+83.8	148.4' LT.
9	18"	0.003	90+00.4	125.0' RT.

CONVERT TO JUNCTION BOX SCHEDULE

NO.	TYPE	INV. EL.	STATION	OFFSET
2	*	**	92+21.1	145.2' LT.

* SIZE OF BOX TO MATCH EXISTING
** MATCH EXISTING PIPE INVERTS

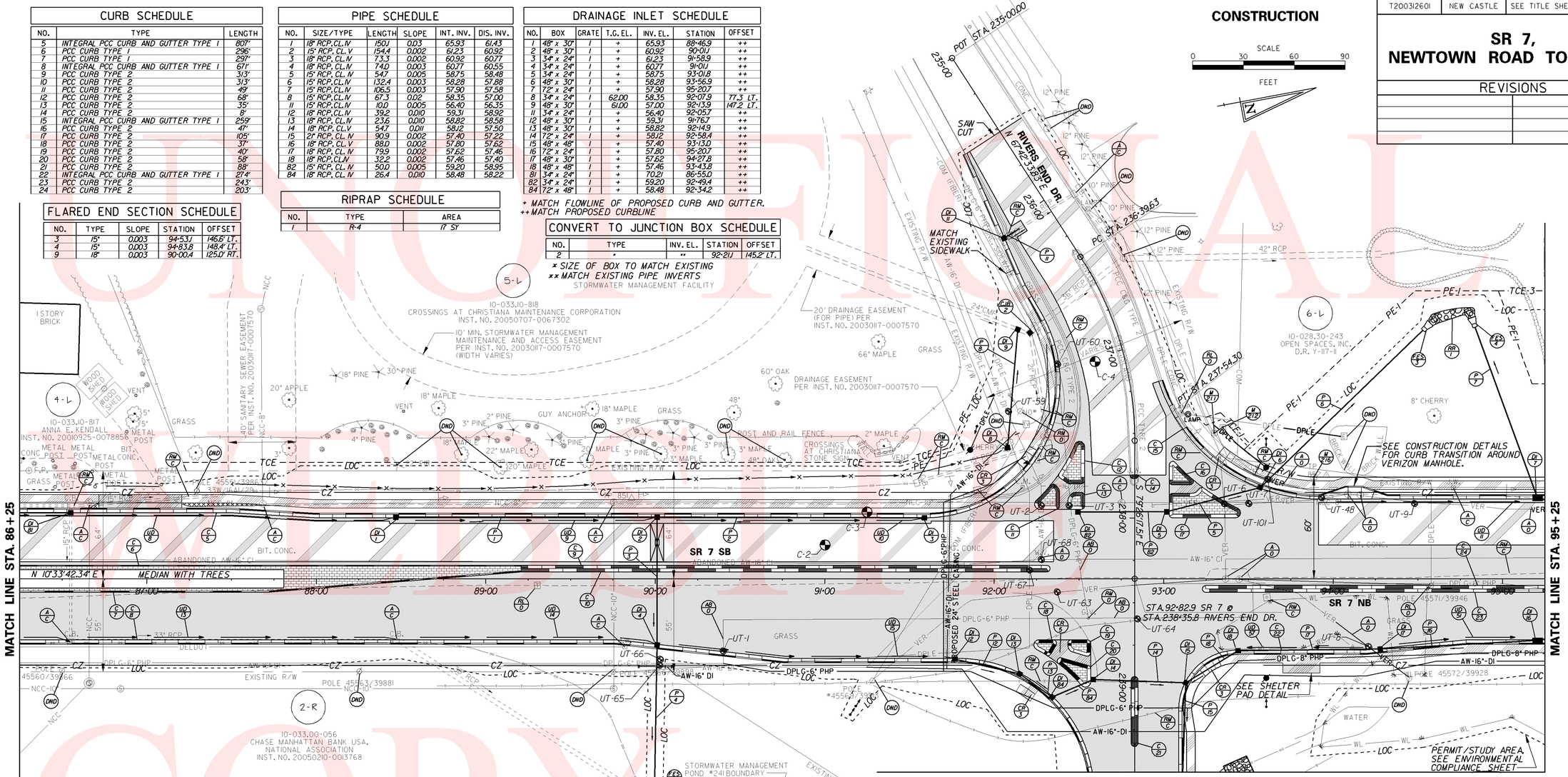

MONUMENTS

NUMBER	STATION	OFFSET	NORTH	EAST
211	93+34.8491	-89.4296	601,035.1000	588,685.5520
212	93+29.8467	-85.8823	601,029.5321	588,688.1223
216	93+88.6168	-60.0000	601,082.5624	588,724.3384

UTILITY TEST HOLES

NO.	UTILITY	STATION	OFFSET	GR. EL.	COVER	O.D. & MATERIAL
UT-1	DPLG	90+40.1	42.6' RT	65.9	3.78'	6 1/2" PLASTIC GAS LINE
UT-2	AW	92+27.7	43.4' LT	64.1	4.20'	24" STEEL CASING PIPE.FOR 16" DI.WATER LINE
UT-3	DPLG	92+44.2	43.2' LT	64.0	8.77'	12 1/2" STEEL CASING PIPE FOR 6" PLASTIC GAS LINE
UT-6	VER	93+35.8	44.3' LT	63.11	5.95'	2.0' +/- WIDE RPC MASS,(3) 4 1/2 PLASTIC TELE.CONDUITS
UT-7	VER	93+50.2	44.4' LT	63.1	3.74'	(15) 4 1/2" PLASTIC TELE.CONDUITS
UT-8	VER	94+20.9	40.0' RT	61.9	4.60'	(1) 4 1/2" PLASTIC TELE.CONDUITS
UT-9	VER	94+48.0	44.5' LT	62.4	4.98'	(12) 4 1/2" PLASTIC TELE.CONDUITS
UT-48	VER	93+93.1	47.9' LT	62.7	4.28'	(12) 4 1/2" PLASTIC TELE.CONDUITS
UT-59	AW	92+08.4	98.8' LT	63.4	4.56'	17 1/2" METALLIC WATER LINE
UT-60	DPLG	92+37.4	126.7' LT	61.7	3.60'	6 1/2" PLAS.GAS LINE,(3)2" ELEC.CABLES,1 1/4" UNK.FUNC.CABLE
UT-63	VER	92+37.2	7.8' RT	63.8	4.72'	(2) 4 1/2" AND (4) 2 1/4" PLASTIC TELE.CONDUITS
UT-64	DPLG	92+84.5	23.6' RT	62.5	4.60'	8 5/8" PLASTIC GAS LINE
UT-65	DPLG	90+02.5	51.1' RT	66.7	4.56'	6 1/2" PLASTIC GAS LINE
UT-66	AW	90+03.0	47.5' RT	66.5	4.04'	17" DI.WATER LINE
UT-67	DPLE	92+20.8	5.2' LT	63.8	6.35'	4 1/2" PLASTIC ELECTRIC CONDUIT
UT-68	AW	92+27.8	11.4' LT	64.2	4.10'	17" x 13" CI WATER MECHANICAL TEE
UT-101	VER	93+61.5	58.7' LT	63.3	5.29'	(4) 4 1/2" PLASTIC TELE.CONDUITS

UNDERDRAIN SCHEDULE

NO.	SIZE/TYPE	DIS. INV.	LENGTH
8	6" PEP	#	193'
9	6" PEP	#	153'
10	6" PEP	#	157'
11	6" PEP	#	129'
13	6" PEP	#	192'
14	6" PEP	#	151'
15	6" PEP	#	17.4'
51	6" PEP	#	93'
57	6" PEP	#	84'

\# TO BE SET IN FIELD BY THE CONTRACTOR. SEE UNDERDRAIN DETAIL.

ROADWAY CORE SUMMARY

C NO.	STA.	OFFSET	DESCRIPTION
2	91+00	20' LT.	4 1/2" HOT-MIX ASPHALT ON 7 1/2" PCC PAVEMENT ON SELECT
3	91+25	39' LT.	5 1/2" HOT-MIX ASPHALT ON SELECT
4	92+60	128' LT.	10" HOT-MIX ASPHALT ON CRUSHER RUN

PRELIM. TRACING SJB DESIGN KGM-A CHK'D. JRR

UNOFFICIAL COPY

1:53:12 PM M:\31131-04\ps02sr7.pif

CONTRACT	COUNTY	F.A.P. NO.	SHEET NO.	TOTAL SHTS
T200312601	NEW CASTLE	SEE TITLE SHEET	15	115

SR 7, NEWTOWN ROAD TO SR 273

REVISIONS

PIPE SCHEDULE

NO.	SIZE/TYPE	LENGTH	SLOPE	INT. INV.	DIS. INV.
20	36" RCP,CL.V	130.2	0.003	56.39	56.00
21	18" RCP,CL.V	101.0	0.003	57.88	57.58
22	15" RCP,CL.IV	69.7	0.008	58.33	57.78
23	18" RCP,CL.IV	5.5	0.005	57.58	57.55
24	18" RCP,CL.IV	243.1	0.005	59.05	57.84
25	18" RCP,CL.IV	240.3	0.02	64.06	59.25
26	18" RCP,CL.IV	136.4	0.01	59.37	58.00
27	18" RCP,CL.IV	249.9	0.013	62.82	59.57
28	15" RCP,CL.IV	15.0	0.003	59.41	59.37
29	18" RCP,CL.IV	212.2	0.015	66.20	63.02
30	18" RCP,CL.IV	100.3	0.002	57.80	57.60
31	24" RCP,CL.IV	73.3	0.002	57.55	57.40
32	24" RCP,CL.IV	30.7	0.005	57.40	57.22
33	36" RCP,CL.IV	113.4	0.002	56.47	56.24
34	36" RCP,CL.V	44.6	0.002	56.24	56.15
83	15" RCP,CL.IV	32.4	0.003	59.51	59.41
106	36" RCP,CL.V	75.7	0.002	56.15	56.00

CURB SCHEDULE

NO.	TYPE	LENGTH
25	INTEGRAL PCC CURB AND GUTTER TYPE 1	899'
26	PCC CURB TYPE 2	250'
27	PCC CURB TYPE 1	65'
28	PCC CURB TYPE 2	250'
29	PCC CURB TYPE 1	65'
30	INTEGRAL PCC CURB AND GUTTER TYPE 1	380'
31	INTEGRAL PCC CURB AND GUTTER TYPE 1	644'

RIPRAP SCHEDULE

NO.	TYPE	AREA
2	R-4	36 SY
9	R-4	31 SY
10	R-4	23 SY

JUNCTION BOX SCHEDULE

NO.	BOX	INV. EL.	STATION	OFFSET
10	48" x 48"	56.15	95+52.9	1.9' LT.

DRAINAGE INLET SCHEDULE

NO.	BOX	GRATE	T.G. EL.	INV. EL.	STATION	OFFSET
20	72" x 48"	1	62.13	56.39	95+42.9	50.5' RT.
21	48" x 30"	1	+	57.88	96+00.0	++
22	48" x 30"	1	+	57.58	97+05.0	++
23	34" x 24"	1	62.38	58.33	97+75.0	68.6' LT.
24	48" x 30"	1	+	59.05	99+52.0	++
25	48" x 30"	1	+	64.06	101+96.9	++
26	66" x 30"	1	+	57.40	97+05.0	++
27	48" x 30"	1	+	59.37	98+46.1	++
28	48" x 30"	1		62.82	101+00.0	++
29	48" x 30"	1		66.20	103+15.2	++
30	34" x 24"	1	64.00	59.41	98+49.1	52.9' RT.
31	48" x 30"	1	+	57.80	96+00.0	++
83	34" x 24"	1	+	59.51	98+15.2	++

+ MATCH FLOWLINE OF PROPOSED CURB AND GUTTER.
++ MATCH PROPOSED CURBLINE

UNDERDRAIN SCHEDULE

NO.	SIZE/TYPE	DIS. INV.	LENGTH
17	6" PEP	#	79'
18	6" PEP	#	104'
19	6" PEP	#	247'
20	6" PEP	#	291'
22	6" PEP	#	79'
23	6" PEP	#	104'
24	6" PEP	#	244'
25	6" PEP	#	215'
26	6" PEP	#	259'
53	6" PEP	#	114'
54	6" PEP	#	242'

TO BE SET IN FIELD BY THE CONTRACTOR. SEE UNDERDRAIN DETAIL.

MANHOLE SCHEDULE

NO.	TYPE	TOP EL.	INV. EL.	STATION	OFFSET
7	48"x30"	+++	57.55	97+05.0	39.4' LT.
8	66"x30"	+++	56.24	95+52.9	41.8' RT.

+++ MATCH PROPOSED ROADWAY AND SIDEWALK GRADE.

FLARED END SECTION SCHEDULE

NO.	TYPE	SLOPE	STATION	OFFSET
1	36"	0.003	95+42.9	79.7' LT.
2	36"	0.002	95+50.9	79.7' LT.
6	24"	0.005	97+5.0	76.0' RT.
8	21"	-	97+73.7	103.4' RT.

CONSTRUCTION

SCALE 0 30 60 90 FEET

FENCE SCHEDULE

NO.	QTY.	UNIT	DESCRIPTION	NOTES
1	20	LF	CHAIN-LINK FENCE,6 FT.HIGH (ITEM 727004)	BEG. STA. 102+99, 48' RT. +/- END STA. 102+99, 68' RT. +/-
2	263	LF	DECORATIVE FENCE,6 FT.HIGHT (ITEM 727522)	BEG. STA. 101+28, 49' RT. +/- END STA. 103+90, 49' RT. +/-

NOTES:

1. THE EXISTING 6' HIGH CHAIN-LINK FENCE SHALL BE REMOVED BACK TO THE NEW DECORATIVE FENCE. THE INTENT IS TO TERMINATE THE EXISTING 6' HIGH CHAIN-LINK FENCE DIRECTLY BEHIND NEW DECORATIVE FENCE. SET NEW TERMINAL POST FOR 6' HIGH CHAIN LINK FENCE AS DIRECTED BY THE ENGINEER. ALL WORK REQUIRED TO REMOVE, ADJUST AND REPAIR EXISTING FENCE INCLUDING NEW TERMINAL POST AND POST FOUNDATION SHALL BE INCIDENTAL TO ITEM 211000 -REMOVAL OF STRUCTURES AND OBSTRUCTIONS.
2. A CONSTRUCTION TRESPASS AGREEMENT HAS BEEN EXECUTED, WITH THE OWNER, FOR THE CONTRACTOR TO INSTALL THE LANDSCAPING OUTSIDE OF THE RIGHT-OF-WAY.

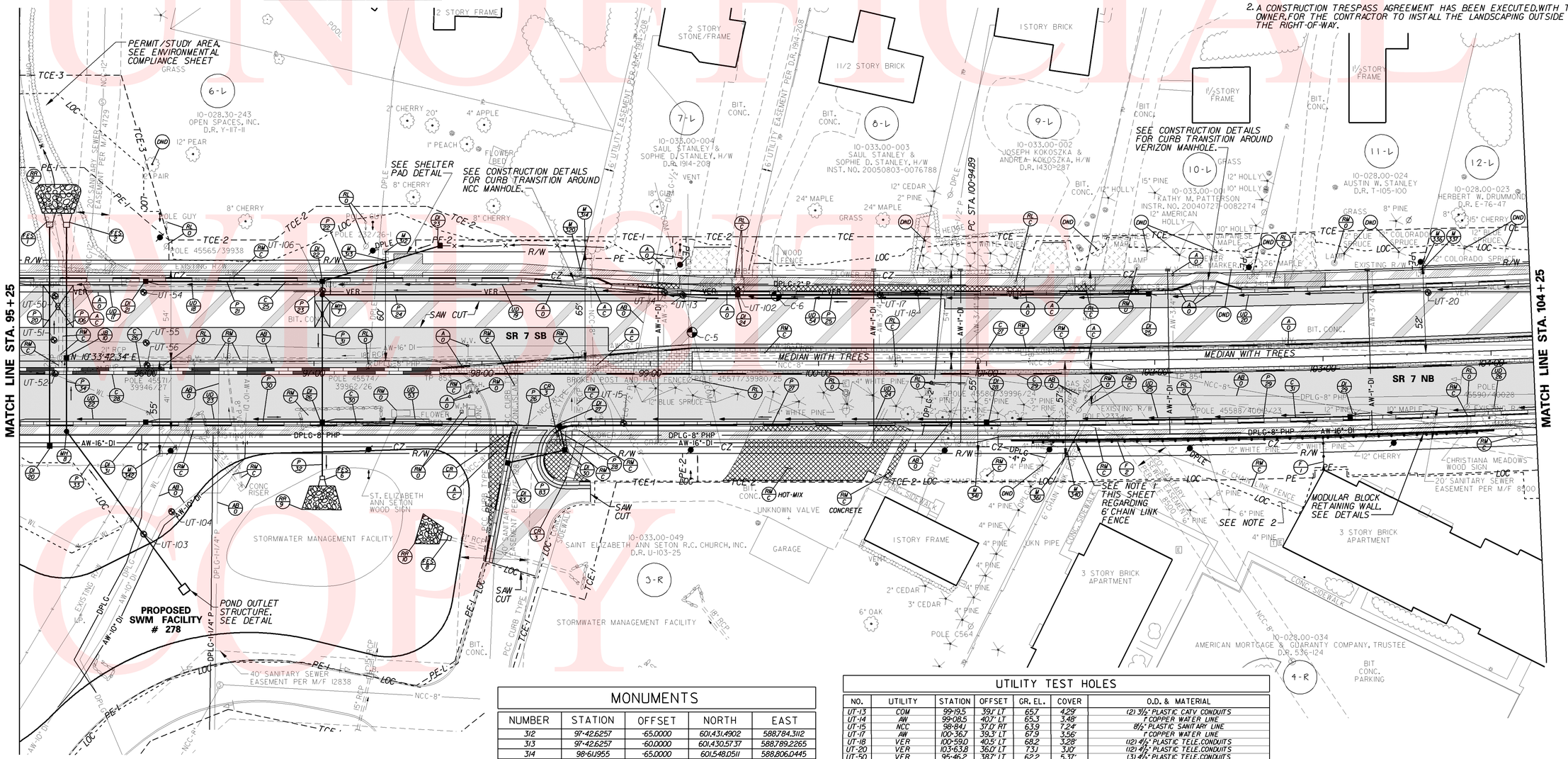

MONUMENTS

NUMBER	STATION	OFFSET	NORTH	EAST
312	97+42.6257	-65.0000	601,431.4902	588,784.3112
313	97+42.6257	-60.0000	601,430.5737	588,789.2265
314	98+61.955	-65.0000	601,548.0511	588,806.0445
320	98+58.6277	-53.9385	601,543.4994	588,816.4480
336	103+61.2365	-52.0000	602,036.2477	588,905.6041
337	103+60.6008	-49.6226	602,035.2692	588,907.8610
340	101+47.5788	55.0000	601,807.9932	588,976.3938
341	100+94.8873	55.0000	601,755.7883	588,966.8461
342	96+08.2202	55.0000	601,277.3664	588,877.6423
361	101+46.5754	57.0000	601,806.6451	588,978.1839

ROADWAY CORE SUMMARY

C NO.	STA.	OFFSET	DESCRIPTION
5	99+25	18' RT.	4½" HOT-MIX ASPHALT ON 7" PCC PAVEMENT ON SELECT
6	99+75	39' LT.	7" HOT-MIX ASPHALT ON SELECT

UTILITY TEST HOLES

NO.	UTILITY	STATION	OFFSET	GR. EL.	COVER	O.D. & MATERIAL
UT-13	COM	99+19.5	39.1' LT	65.7	4.29'	(2) 3½" PLASTIC CATV CONDUITS
UT-14	AW	99+08.5	40.7' LT	65.3	3.48'	1" COPPER WATER LINE
UT-15	NCC	98+84.1	37.0' RT	63.9	7.24'	8½" PLASTIC SANITARY LINE
UT-17	AW	100+36.3	39.3' LT	67.9	3.56'	1" COPPER WATER LINE
UT-18	VER	100+59.0	40.5' LT	68.2	3.28'	(12) 4½" PLASTIC TELE.CONDUITS
UT-20	VER	103+63.8	36.0' LT	73.1	3.10'	(12) 4½" PLASTIC TELE.CONDUITS
UT-50	VER	95+46.2	38.7' LT	62.2	5.37'	(3) 4½" PLASTIC TELE.CONDUITS
UT-51	AW	95+45.5	12.5' LT	62.2	5.88'	1" C.I.WATER LINE
UT-52	DPLG	95+46.1	7.4' RT	59.2	4.72'	8¾" PLASTIC GAS LINE
UT-54	VER	96+00.0	40.9' RT	62.1	3.60'	(12) 4½" PLASTIC TELE.CONDUITS
UT-55	AW	96+00.0	10.9' LT	61.9	4.20'	1" C.I.WATER LINE
UT-56	DPLG	96+00.8	2.5' RT	61.2	3.76'	8¾" PLASTIC GAS LINE
UT-102	VER	99+51.6	42.5' LT	65.7	3.28'	(12) 4½" PLASTIC TELE.CONDUITS
UT-103	DPLG	95+98.8	102.9' RT	63.9	5.43'	1½" PLASTIC GAS LINE
UT-104	AW	96+15.4	89.6' RT	64.1	4.14'	10" D.I.WATER LINE
UT-106	VER	97+05.0	41.9' LT	62.3	2.86'	(12) 4½" PLASTIC TELE.CONDUITS

PRELIM. TRACING ____ SJB DESIGN ____ KGM-A CHK'D. ____ JRR

3:22:27 PM M:\31131-04\ps03sr7.plf

UNOFFICIAL WORKING COPY

CONTRACT	COUNTY	F.A.P. NO.	SHEET NO.	TOTAL SHTS
T200312601	NEW CASTLE	SEE TITLE SHEET	16	115

SR 7, NEWTOWN ROAD TO SR 273

REVISIONS

CURB SCHEDULE

NO.	TYPE	LENGTH
33	INTEGRAL PCC CURB AND GUTTER TYPE 1	76'
34	PCC CURB TYPE 1	335'
35	PCC CURB TYPE 1	335'
36	INTEGRAL PCC CURB AND GUTTER TYPE 1	658'
37	PCC CURB TYPE 2	303'
38	PCC CURB TYPE 2	303'
39	PCC CURB TYPE 1	39'
40	INTEGRAL PCC CURB AND GUTTER TYPE 1	235'
41	PCC CURB TYPE 2	6'
42	PCC CURB TYPE 2	33'
43	PCC CURB TYPE 2	61'
44	PCC CURB TYPE 2	23'
45	PCC CURB TYPE 1	29'
46	PCC CURB TYPE 2	175'
47	PCC CURB TYPE 2	175'
48	INTEGRAL PCC CURB AND GUTTER TYPE 1	219'

PIPE SCHEDULE

NO.	SIZE/TYPE	LENGTH	SLOPE	INT. INV.	DIS. INV.
35	18" RCP.CL.IV	298.2	0.01	70.00	67.02
36	18" RCP.CL.IV	254.5	0.01	66.82	64.27
37	18" RCP.CL.IV	78.4	0.02	64.07	62.51
38	15" RCP.CL.IV	15.7	0.005	62.25	62.17
39	15" RCP.CL.IV	46.4	0.01	63.11	62.65
40	15" RCP.CL.IV	72.7	0.005	62.81	62.45
41	18" RCP.CL.IV	86.7	0.05	61.72	57.38
42	18" RCP.CL.IV	196.2	0.045	57.18	48.35
54	18" RCP.CL.IV	220.3	0.01	70.93	68.73
55	18" RCP.CL.IV	237.5	0.02	68.53	63.78
56	18" RCP.CL.IV	21.0	0.038	63.58	62.78
57	15" RCP.CL.IV	17.0	0.01	63.15	62.98
58	18" RCP.CL.IV	166.3	0.04	62.58	55.93
59	18" RCP.CL.IV	238.1	0.04	55.73	46.20
90	8" PVC	89.3	0.045	##	65.98

MATCH ELEVATION OF EXISTING 8" PVC

DRAINAGE INLET SCHEDULE

NO.	BOX	GRATE	T.G. EL.	INV. EL.	STATION	OFFSET
32	48" x 30"	/	+	70.00	104+89.2	++
33	48" x 30"	/	+	66.82	107+90.0	++
34	48" x 30"	/	+	64.07	110+48.5	++
35	66" x 30"	/	+	61.72	111+30.1	++
36	48" x 30"	/	+	62.25	111+31.0	++
37	34" x 24"	/	+	63.11	110+84.7	++
38	34" x 24"	/	+	62.81	111+55.9	++
39	48" x 30"	/	+	57.18	112+20.0	++
51	48" x 30"	/	+	70.93	105+75.0	++
52	48" x 30"	/	+	68.53	108+00.1	++
53	48" x 30"	/	+	63.58	110+41.6	++
54	34" x 24"	/	+	63.15	110+73.4	++
55	48" x 30"	/	+	55.73	112+35.8	++

+ MATCH FLOWLINE OF PROPOSED CURB AND GUTTER.
++ MATCH PROPOSED CURBLINE.

UNDERDRAIN SCHEDULE

NO.	SIZE/TYPE	DIS. INV.	LENGTH
21	6" PEP	#	145'
28	6" PEP	#	149'
29	6" PEP	#	248'
30	6" PEP	#	199'
32	6" PEP	#	159'
33	6" PEP	#	241'
34	6" PEP	#	74'
35	6" PEP	#	241'
58	6" PEP	#	62'

TO BE SET IN FIELD BY THE CONTRACTOR. SEE UNDERDRAIN DETAIL.

MANHOLE SCHEDULE

NO.	TYPE	TOP EL.	INV. EL.	STATION	OFFSET
9	48"x30"	+++	62.58	110+66.6	46.7' RT.

+++ MATCH PROPOSED GRADE

CONSTRUCTION

SCALE 0 30 60 90 FEET

NOTES:

1. A CONSTRUCTION TRESPASS AGREEMENT HAS BEEN EXECUTED WITH THE OWNER FOR THE CONTRACTOR TO INSTALL THE LANDSCAPING OUTSIDE OF THE RIGHT-OF-WAY.

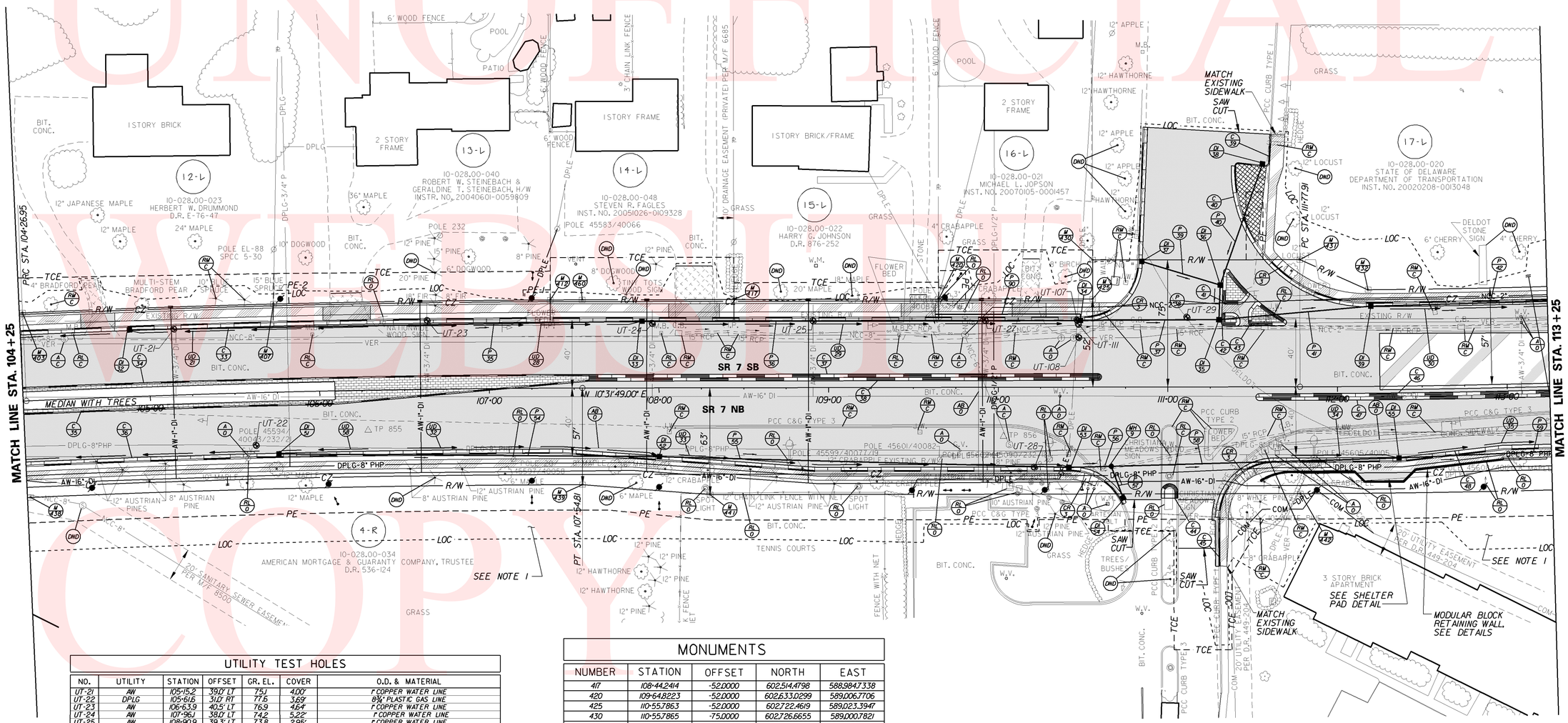

UTILITY TEST HOLES

NO.	UTILITY	STATION	OFFSET	GR. EL.	COVER	O.D. & MATERIAL
UT-21	AW	105+15.2	39.0' LT	75.1	4.00'	1" COPPER WATER LINE
UT-22	DPLG	105+61.6	31.0' RT	77.6	3.69'	8¾" PLASTIC GAS LINE
UT-23	AW	106+63.9	40.5' LT	76.9	4.64'	1" COPPER WATER LINE
UT-24	AW	107+96.1	38.0' LT	74.2	5.22'	1" COPPER WATER LINE
UT-25	AW	108+90.9	39.3' LT	73.8	2.95'	1" COPPER WATER LINE
UT-27	AW	109+92.5	39.3' LT	73.4	4.46'	1" COPPER WATER LINE
UT-28	VER	110+21.2	47.2' RT	73.9	2.62'	(21) 4¼" PLASTIC TELE.CONDUITS
UT-29	DELDOT	111+11.3	41.1' LT	67.4	2.62'	4¼" PLASTIC DOT CONDUIT
UT-107	DPLE	110+46.5	39.6' LT	69.6	18.04'	(3) 4¼" PLASTIC ELEC.CONDUITS
UT-108	VER	110+47.5	29.3' LT	69.0	7.36'	(12) 4¼" PLASTIC TELE.CONDUITS
UT-111	NCC	110+47.3	37.1' LT	69.1	3.07'	2½" PLASTIC SANITARY FORCE MAIN

MONUMENTS

NUMBER	STATION	OFFSET	NORTH	EAST
417	108+44.2414	-52.0000	602,514.4798	588,984.7338
420	109+64.8223	-52.0000	602,633.0299	589,006.7706
425	110+57.863	-52.0000	602,722.4619	589,023.3947
430	110+57.865	-75.0000	602,726.6655	589,000.7821
431	111+77.9107	-75.0000	602,847.328	589,023.1019
432	112+18.5077	-57.0000	602,882.9852	589,048.0032
403	104+26.9466	-52.0000	602,100.8239	588,915.0450
407	105+73.9861	-52.0000	602,247.1887	588,937.2397
412	107+36.0561	-52.0000	602,407.9868	588,964.9618
460	107+54.8084	-52.0000	602,426.5530	588,968.3895
438	104+26.9466	57.0000	602,085.5199	589,022.9653
439	107+54.8084	57.0000	602,406.6327	589,075.5537
441	108+29.9883	63.0000	602,479.4499	589,095.1922
442	111+77.9107	63.0000	602,821.5127	589,158.7768

UNOFFICIAL WEB COPY

PRELIM. TRACING SJB DESIGN KGM-A CHKD. JRR

3:23:58 PM M:\31131-04\ps04sr7.plf

CONTRACT	COUNTY	F.A.P. NO.	SHEET NO.	TOTAL SHTS.
T2003126O1	NEW CASTLE	SEE TITLE SHEET	17	115

SR 7, NEWTOWN ROAD TO SR 273

REVISIONS

CURB SCHEDULE

NO.	TYPE	LENGTH
49	INTEGRAL PCC CURB AND GUTTER TYPE 1	215'
50	PCC CURB TYPE 2	460'
51	PCC CURB TYPE 2	46'
52	INTEGRAL PCC CURB AND GUTTER TYPE 1	498'
53	PCC CURB TYPE 2	96'
54	INTEGRAL PCC CURB AND GUTTER TYPE 1	409'
55	PCC CURB TYPE 2	53'
56	PCC CURB TYPE 2	78'
57	PCC CURB TYPE 2	78'
58	INTEGRAL PCC CURB AND GUTTER TYPE 3	82'
59	INTEGRAL PCC CURB AND GUTTER TYPE 3	306'
60	PCC CURB TYPE 2	327'
61	PCC CURB TYPE 2	327'
62	INTEGRAL PCC CURB AND GUTTER TYPE 1	337'
63	PCC CURB TYPE 1	34'
64	PCC CURB TYPE 1, MODIFIED	206'
85	PCC CURB TYPE 1	109'
86	PCC CURB TYPE 2	53'
87	PCC CURB TYPE 2	67'
90	PCC CURB TYPE 2	51'

PIPE SCHEDULE

NO.	SIZE/TYPE	LENGTH	SLOPE	INT. INV.	DIS. INV.
43	18" RCP, CL.IV	93.3	0.04	48.15	44.42
44	15" RCP, CL.IV	41.5	0.03	46.90	45.66
45	18" RCP, CL.IV	96.1	0.042	44.22	40.19
46	15" RCP, CL.IV	22.8	0.005	40.12	40.01
47	21" RCP, CL.IV	94.0	0.02	39.56	37.68
48	30" RCP, CL.IV	73.4	0.01	35.93	35.20
49	15" RCP, CL.IV	12.1	0.005	36.25	36.31
50	30" RCP, CL.IV	111.3	0.008	35.00	34.11
51	24"x38" RCP, CL.IV	85.1	0.007	30.56	29.97
52	18" RCP, CL.IV	215.5	0.005	32.26	31.18
60	18" RCP, CL.IV	242.2	0.034	46.00	37.77
61	24" RCP, CL.V	84.4	0.005	37.05	36.63
62	24" RCP, CL.V	20.2	0.027	37.33	36.78
63	24" RCP, CL.V	30.6	0.002	36.78	36.72
66	36" RCP, CL.IV	11.4	0.005	29.97	29.91
67	18" RCP, CL.V	54.0	0.005	31.23	30.96
68	18" RCP, CL.IV	294.2	0.005	32.90	31.43
86	15" RCP, CL.IV	16.9	0.03	45.46	44.95
104	15" RCP, CL.IV	27.6	0.005	36.65	36.51

DRAINAGE INLET SCHEDULE

NO.	BOX	GRATE	T.G. EL.	INV. EL.	STATION	OFFSET
40	48" x 30"	/	+	48.15	114+21.9	++
41	54" x 24"	/	+	46.90	114+65.7	++
42	48" x 30"	/	+	39.56	116+20.4	++
43	54" x 24"	/	44.31	40.12	116+05.7	67.8' LT.
44	48" x 48"	/	+	35.93	117+18.8	++
45	48" x 48"	/	+	35.00	117+86.63	++
46	48" x 30"	/	+	36.65	118+25.2	++
47	48" x 48"	/	+	31.33	119+12.2	++
48	72" x 48"	/	+	29.97	120+03.0	++
56	48" x 30"	/	+	46.00	114+75.0	++
57	48" x 30"	/	+	37.05	117+19.2	++
58	48" x 30"	/	+	36.78	117+63.0	++
59	72" x 24"	/	+	31.23	120+03.0	++
80	48" x 30"	/	+	45.46	115+09.8	++
103	48" x 30"	/	+	36.31	117+96.6	++

\+ MATCH FLOWLINE OF PROPOSED CURB AND GUTTER.
++ MATCH PROPOSED CURBLINE.

FLARED END SECTION SCHEDULE

NO.	TYPE	SLOPE	STATION	OFFSET
11	24"	0.027	117+44.9	86.5' RT.

UNDERDRAIN SCHEDULE

NO.	SIZE/TYPE	DIS. INV.	LENGTH
36	6" PEP	#	97'
37	6" PEP	#	97'
38	6" PEP	#	104'
39	6" PEP	#	92'
40	6" PEP	#	170'
42	6" PEP	#	248'
49	6" PEP	#	148'
56	6" PEP	#	118'

\# TO BE SET IN FIELD BY THE CONTRACTOR. SEE UNDERDRAIN DETAIL.

CONVERT TO MANHOLE

NO.	STATION	OFFSET	INV. EL.	TOP EL.
1	118+98.2	23.3' LT.	**	++

** MATCH EXISTING PIPE INVERTS
++ TO BE SET IN FIELD BY ENGINEER

MANHOLE SCHEDULE

NO.	TYPE	TOP EL.	INV. EL.	STATION	OFFSET
10	48"x30"	*	44.29	115+19.2	48.2' LT.
11	48"x30"	*	36.72	117+92.5	61.3' RT.

* MATCH PROPOSED GRADE

RIPRAP SCHEDULE

NO.	TYPE	AREA
4	R-4	15 SY

ROADWAY CORE SUMMARY

C NO.	STA.	OFFSET	DESCRIPTION
7	117+25	10' LT.	7½" HOT-MIX ASPHALT ON SELECT
8	117+25	23' RT.	7" HOT-MIX ASPHALT ON 7¼" PCC PAVEMENT ON SELECT
9	6+25	7' LT.	12" HOT-MIX ASPHALT ON SELECT

CONSTRUCTION

SCALE 0 30 60 90 FEET

NOTES:

1. PROPOSED IMPROVEMENTS (AND OUTFALL LOCATION) ON PARCELS 19-L AND 20-L WILL BE ADJUSTED AS NECESSARY FOLLOWING THE RECORD PLAN APPROVAL FOR THE CHRISTIANA SELF STORAGE MAJOR LAND DEVELOPMENT PLAN.
2. SEE PROJECT NOTES CONCERNING CONSTRUCTION ACTIVITY RESTRICTION ON PARCEL 5-R - 10-028.00-029, OLD FORT U.A.M.E. CHURCH.
3. A CONSTRUCTION TRESPASS AGREEMENT HAS BEEN EXECUTED, WITH THE OWNER, FOR THE CONTRACTOR TO INSTALL THE LANDSCAPING OUTSIDE OF THE RIGHT-OF-WAY.

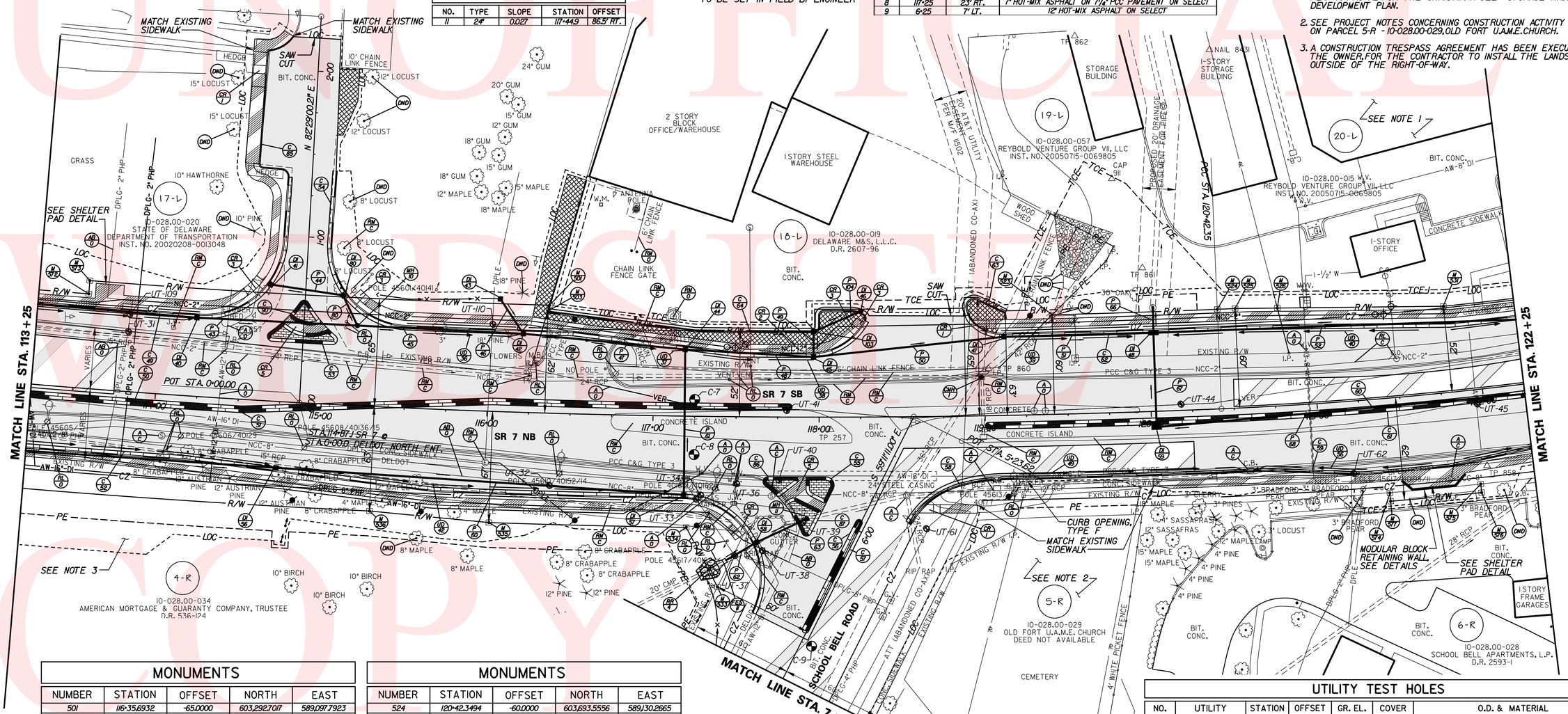

MONUMENTS

NUMBER	STATION	OFFSET	NORTH	EAST
501	116+35.6932	-65.0000	603,292.7017	589,097.7923
503	116+34.7649	-61.4735	603,291.4226	589,101.2045
523	119+41.7726	-60.0000	603,594.1198	589,126.1174

MONUMENTS

NUMBER	STATION	OFFSET	NORTH	EAST
524	120+42.3494	-60.0000	603,693.5556	589,130.2665
525	120+53.3614	-60.0000	603,704.2753	589,130.5939
526	120+79.4780	-58.9418	603,729.6863	589,132.2232
531	121+81.6931	-52.0000	603,829.4643	589,138.6209
533	117+39.9126	102.6264	603,380.9255	589,274.5567
534	117+20.9033	67.0000	603,364.8170	589,237.3831
535	116+03.3749	67.0000	603,246.5020	589,225.5979
536	115+32.0778	63.0000	603,175.3411	589,213.2967
572	113+55.3369	-57.0000	603,016.6156	589,070.2220
573	113+55.3369	-65.0000	603,017.8334	589,062.3152
574	121+39.1927	56.7918	603,788.9310	589,248.1732
575	121+92.8662	56.8447	603,843.9184	589,247.0795
576	121+92.8662	62.0000	603,844.0860	589,252.2321
577	121+39.1927	62.0000	603,788.9789	589,253.3811

UTILITY TEST HOLES

NO.	UTILITY	STATION	OFFSET	GR. EL.	COVER	O.D. & MATERIAL
UT-31	DPLG	113+81.2	36.1' LT	54.6	2.92'	2½" PLASTIC GAS LINE
UT-32	DPLG	116+38.8	43.5' RT	44.3	4.47'	8⅝" PLASTIC GAS LINE
UT-33	DPLG	117+26.6	49.9' RT	40.9	4.50'	8⅝" PLASTIC GAS LINE, 4½" PLASTIC DOT F/O CONDUIT
UT-34	NCC	117+29.3	47.4' RT	41.2	4.29'	4⅝" PLASTIC SANITARY FORCE MAIN
UT-36	AW	117+50.8	40.3' RT	42.4	1.58'	
UT-37	DELDOT	117+49.9	83.6' RT	40.3	3.47'	4½" PLASTIC DOT CONDUIT
UT-38	AW	117+66.4	80.6' RT	37.4	3.09'	12⅝" DI.WATER LINE
UT-39	DPLG	117+90.3	63.3' RT	40.6	5.04'	8⅝" PLASTIC GAS LINE
UT-40	AW	117+75.9	38.0' RT	41.3	6.78'	17" DI.WATER LINE WITH 24" STEEL CASING
UT-41	VER	117+80.3	4.0' LT	41.8	4.20'	(12) 4¼" PLASTIC TELE.CONDUITS
UT-44	VER	120+18.1	3.8' LT	41.3	3.98'	(9) 4¼" PLAS.TELE.CONDUITS, (2) 2⅝" UNK.FUNC.CABLES
UT-45	AW	121+95.9	8.7' RT	40.9	3.46'	1" COPPER WATER LINE
UT-61	DPLG	118+63.9	67.5' RT	40.4	3.95'	8⅝" PLASTIC GAS LINE
UT-62	DPLG	121+19.0	43.5' RT	41.4	6.14'	8⅝" PLASTIC GAS LINE WITH A 2½" PLASTIC TAP
UT-109	DPLG	113+81.1	46.6' LT	56.6	1.96'	2" PLASTIC GAS LINE
UT-110	DPLE	116+01.7	52.5' LT	43.95	4.85'	2" RPC ELECTRIC DUCT

PREL. TRACING ____ S.J.B. ____ DESIGN ____ KGM-A ____ CHKD. ____ JRR

$DATE$

M:\31131-04\ps05sr7.plf

UNOFFICIAL VERSION COPY

CONTRACT	COUNTY	F.A.P. NO.	SHEET NO.	TOTAL SHTS.
T200312601	NEW CASTLE	SEE TITLE SHEET	18	115

SR 7, NEWTOWN ROAD TO SR 273

REVISIONS

DRAINAGE INLET SCHEDULE

NO.	BOX	GRATE	T.G. EL.	INV. EL.	STATION	OFFSET
49	48" x 30"	I	+	32.46	122+26.8	++
50	48" x 30"	I	+	33.30	124+02.4	++
60	48" x 30"	I	+	32.90	123+00.2	++
61	48" x 30"	I	+	33.83	124+49.9	++
62	34" x 24"	I	+	29.7	126+33.7	++
63	34" x 24"	I	+	27.33	127+52.7	++
64	72" x 24"	I	+	23.95	128+53.4	++
66	72" x 24"	I	+	23.57	129+20.3	++
67	72" x 24"	I	+	23.47	128+99.7	++
68	34" x 24"	I	+	28.79	129+40.0	++
69	48" x 30"	I	+	28.53	129+50.1	++
70	48" x 30"	I	+	28.92	129+43.4	++
71	66" x 30"	I	+	23.20	129+10.2	++

\+ MATCH FLOWLINE OF PROPOSED CURB AND GUTTER.
++ MATCH PROPOSED CURBLINE.

PIPE SCHEDULE

NO.	SIZE/TYPE	LENGTH	SLOPE	INT. INV.	DIS. INV.
53	18" RCP, CL.IV	168.1	0.005	33.30	32.46
69	18" RCP, CL.IV	146.4	0.005	33.83	33.10
70	15" RCP, CL.IV	4.0	0.012	27.33	27.28
71	30" RCP, CL.IV	3.0	0.025	23.95	24.03
72	36" RCP, CL.IV	3.0	0.015	23.57	23.62
73	15" RCP, CL.IV	24.2	0.01	28.53	28.29
74	15" RCP, CL.IV	43.0	0.01	28.92	28.49

UNDERDRAIN SCHEDULE

NO.	SIZE/TYPE	DIS. INV.	LENGTH
43	6" PEP	#	463'
44	6" PEP	#	117'
45	6" PEP	#	124'
46	6" PEP	#	100'
47	6" PEP	#	229'
48	6" PEP	#	101'

\# TO BE SET IN FIELD BY THE CONTRACTOR. SEE UNDERDRAIN DETAIL.

CURB SCHEDULE

NO.	TYPE	LENGTH
65	INTEGRAL PCC CURB AND GUTTER TYPE 1	285'
66	PCC CURB TYPE 1	18'
67	PCC CURB TYPE 1	4'
68	INTEGRAL PCC CURB AND GUTTER TYPE 1	68'
69	PCC CURB TYPE 1	6'
70	PCC CURB TYPE 1	13'
71	INTEGRAL PCC CURB AND GUTTER TYPE 1	408'
74	PCC CURB TYPE 2	132'
75	PCC CURB TYPE 2	89'
76	PCC CURB TYPE 2	745'
77	PCC CURB TYPE 2	745'
78	INTEGRAL PCC CURB AND GUTTER TYPE 3	431'
79	INTEGRAL PCC CURB AND GUTTER TYPE 3	20'
80	PCC CURB TYPE 1	45'
85	INTEGRAL PCC CURB AND GUTTER TYPE 1	55'

CURB SCHEDULE

NO.	TYPE	LENGTH
81	INTEGRAL PCC CURB AND GUTTER TYPE 3	16'
82	PCC CURB TYPE 2	79'
83	PCC CURB TYPE 2	76'
84	INTEGRAL PCC CURB AND GUTTER TYPE 3	17'

CONSTRUCTION

SCALE
0 30 60 90
FEET

NOTES:

1. EXISTING TOPOGRAPHY DEVELOPED FROM RECORD PLAN PER INST.NO.200306020066170 FOR ANIMAL VETERINARY CENTER.
2. PROPOSED IMPROVEMENTS ON PARCEL 20-L WILL BE ADJUSTED AS NECESSARY FOLLOWING THE RECORD PLAN APPROVAL FOR THE CHRISTIANA SELF STORAGE MAJOR LAND DEVELOPMENT PLAN.

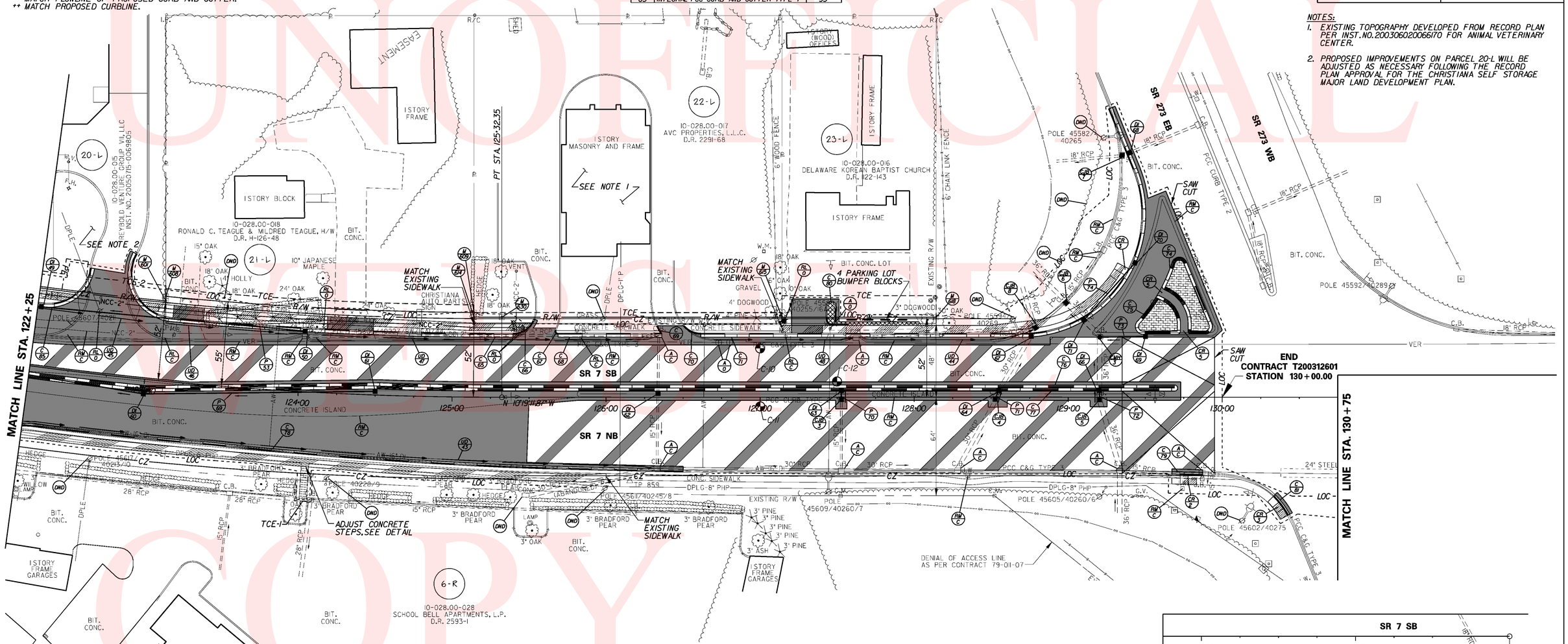

CONVERT TO MANHOLE

NO.	STATION	OFFSET	INV. EL.	TOP EL.
3	129+20.5	39.1' LT.	xx	++

xx MATCH EXISTING PIPE INVERTS
++ TO BE SET IN FIELD BY ENGINEER

MONUMENTS

NUMBER	STATION	OFFSET	NORTH	EAST
601	123+08.8193	-52.0000	603,953.5106	589,131.7548
608	123+08.5197	-55.0000	603,952.9707	589,128.7893
609	125+13.7739	-55.0000	604,151.6265	589,103.3386
614	125+13.7988	-52.0000	604,152.1640	589,106.2902
615	127+14.2182	-52.0000	604,348.9415	589,070.5331
616	127+14.2183	-48.0000	604,349.6582	589,074.4684
617	127+14.2181	-55.0000	604,348.4039	589,067.5817
618	128+14.2174	-52.0000	604,447.3230	589,052.6188
630	125+32.3494	-52.0000	604,170.0149	589,103.1140

ROADWAY CORE SUMMARY

C NO.	STA.	OFFSET	DESCRIPTION
10	127+00	32' LT.	7" HOT-MIX ASPHALT ON SELECT
11	127+00	6' RT.	7" HOT-MIX ASPHALT ON SELECT
12	127+50	10' LT.	7" HOT-MIX ASPHALT ON SELECT

CONVERT TO JUNCTION BOX SCHEDULE

NO.	TYPE	INV. EL.	STATION	OFFSET
3	x	xx	127+52.7	1.4' RT.
4	x	xx	128+52.6	1.2' RT.
5	x	xx	129+20.3	1.8' RT.
6	x	xx	128+98.7	61.4' LT.
7	x	xx	129+34.8	151.3' LT.
8	x	xx	128+78.8	45.2' LT.

* SIZE OF BOX TO MATCH EXISTING
xx MATCH EXISTING PIPE INVERTS

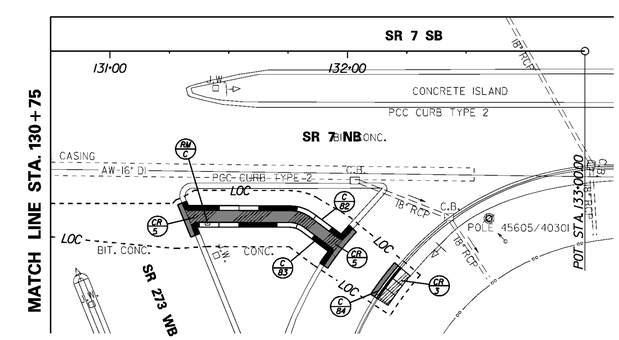

JRR
KGM-A
SJB
PRELIM. TRACING

UNOFFICIAL COPY

CONTRACT	COUNTY	F.A.P. NO.	SHEET NO.	TOTAL SHTS.
T200312601	NEW CASTLE	SEE TITLE SHEET	19	115

SR 7, NEWTOWN ROAD TO SR 273

REVISIONS

CONSTRUCTION

SCALE 0 30 60 90 FEET

CURB SCHEDULE		
NO.	TYPE	LENGTH
90	PCC CURB TYPE 1	8'
91	PCC CURB TYPE 1	9'

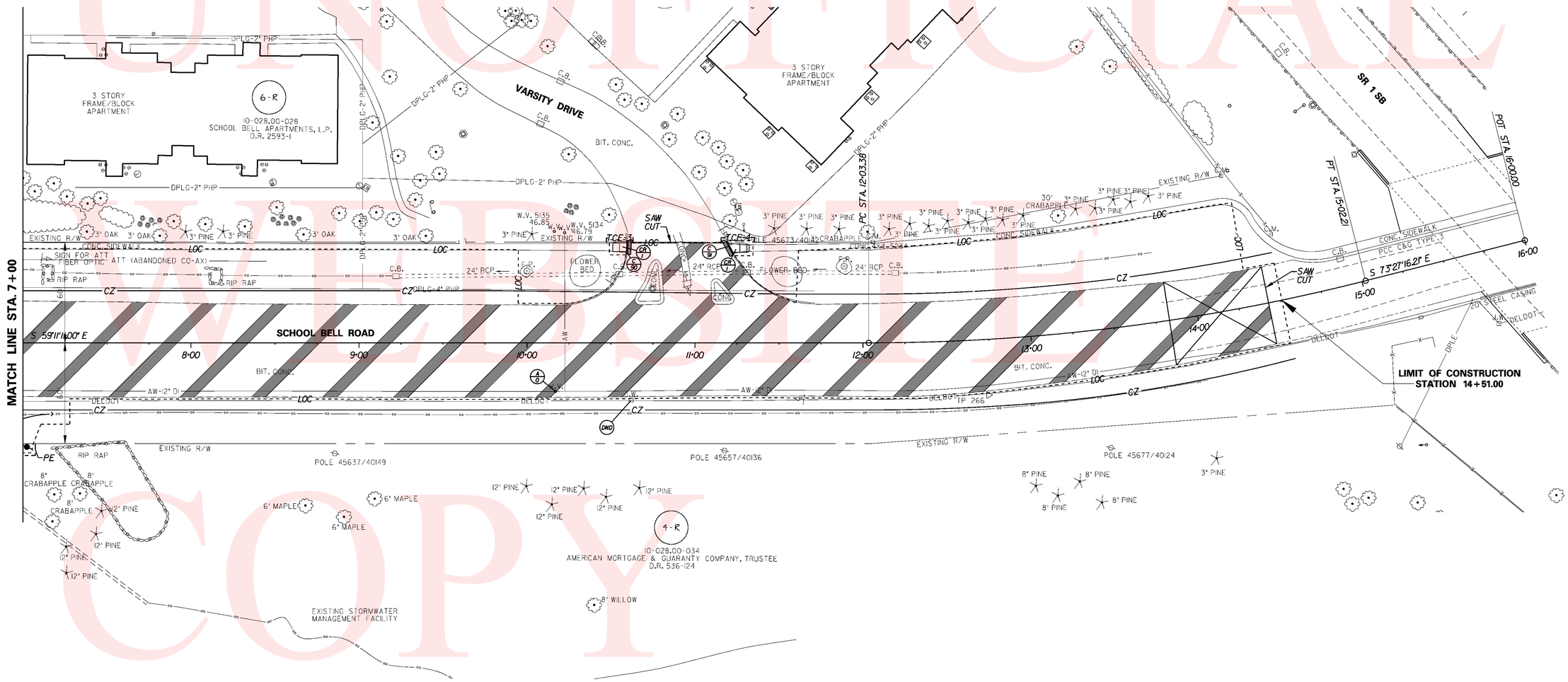

PREL. TRACING	DESIGN	CHKD.
SJB	KGM-A	JRR

UNOFFICIAL WEBSITE COPY

CONTRACT	COUNTY	F.A.P. NO.	SHEET NO.	TOTAL SHTS.
T200312601	NEW CASTLE	SEE TITLE SHEET	20	115

SR 7, NEWTOWN ROAD TO SR 273

REVISIONS

CONSTRUCTION

SCALE 0 30 60 90 FEET

PIPE SCHEDULE

NO.	SIZE / TYPE	LENGTH	SLOPE	INT. INV.	DIS. INV.
19	36" RCP, CL.IV	47.1	0.002	57.22	57.13
100	24" RCP, CL.IV	141.4	0.01	60.35	58.94
101	24" RCP, CL.IV	46.8	0.01	58.84	58.37
102	24" RCP, CL.IV	85.4	0.01	58.27	57.42
103	18" RCP, CL.IV	52.6	0.05	60.13	57.5
104	19"x30" RCP ELIP.CL.V	96.0	0.005	61.67	61.19
105	19"X30" RCP ELIP.CL.V	96.0	0.005	61.67	61.19
108	24" RCP, CL.IV	25.0	0.01	60.70	60.45

RIPRAP SCHEDULE

NO.	TYPE	AREA
8	R-4	31 SY
20	R-4	24 SY
21	R-4	24 SY

FLARED END SECTION SCHEDULE

NO.	TYPE	SLOPE	STATION	OFFSET
5	36"	0.002	239+97.2	73.9' LT.
20	19"x30"	0.005	239+52.2	48.3' LT.
21	19"x30"	0.005	239+58.5	51.1' LT.
22	19"x30"	0.005	239+91.1	39.4' RT.
23	19"x30"	0.005	239+96.9	36.6' RT.

CURB SCHEDULE

NO.	TYPE	LENGTH
100	INTEGRAL PCC CURB AND GUTTER TYPE 3	247'
101	INTEGRAL PCC CURB AND GUTTER TYPE 3	323'
102	PCC CURB TYPE 1	21'
103	PCC CURB TYPE 1	24'
104	INTEGRAL PCC CURB AND GUTTER TYPE 1	23'
105	INTEGRAL PCC CURB AND GUTTER TYPE 1	23'
106	INTEGRAL PCC CURB AND GUTTER TYPE 3	142'

MONUMENTS

NUMBER	STATION	OFFSET	NORTH	EAST
250	240+43.1811	29.7258	600,908.6771	588,973.2503
252	242+42.3657	45.0000	601,040.0445	589,148.2091
264	241+49.0760	45.0000	600,965.0901	589,092.6436
265	240+49.2419	45.0391	600,895.0678	589,983.6663

DRAINAGE INLET SCHEDULE

NO.	BOX	GRATE	T.G. EL.	INV. EL.	STATION	OFFSET
19	48" x 48"	I	+	57.22	239+92.1	++
99	48" x 30"	I	64.70	60.70	242+24.0	48.00' RT.
100	48" x 48"	I	+	58.84	240+93.6	++
101	48" x 48"	I	+	58.27	240+93.7	++
102	36" x 24"	I	+	61.83	239+98.5	++
106	48" x 48"	I	+	60.35	242+24.0	++

+ MATCH FLOWLINE OF PROPOSED CURB AND GUTTER.
++ MATCH PROPOSED CURBLINE

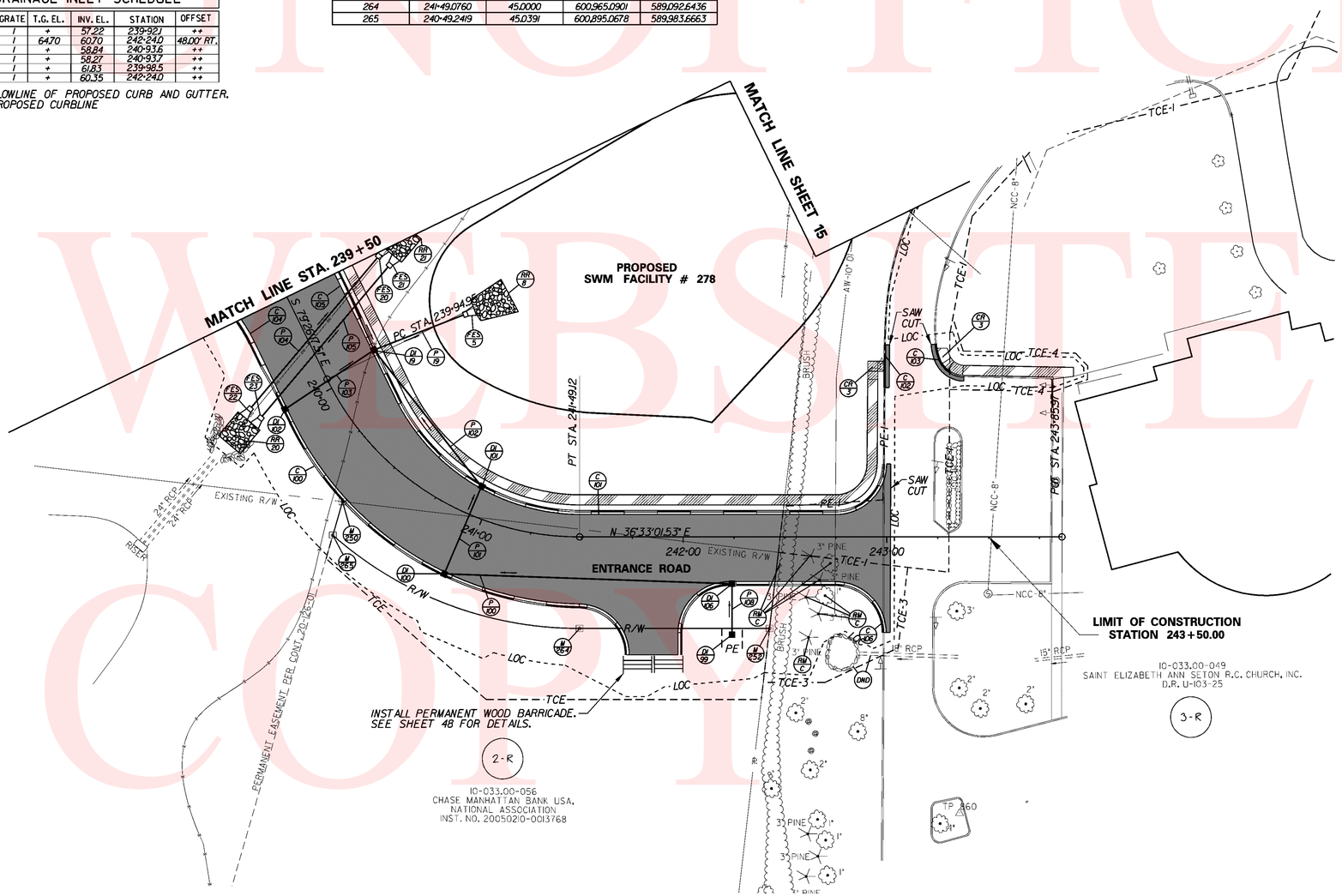

PREL. TRACING SJB DESIGN KGM-A CHKD. JRR

UNOFFICIAL WEBSITE COPY

CONTRACT	COUNTY	F.A.P. NO.	SHEET NO.	TOTAL SHTS.
T2003126101	NEW CASTLE	SEE TITLE SHEET	21	115

SR 7, NEWTOWN ROAD TO SR 273

REVISIONS

PROFILES

SCALE
0 30 60 90
FEET

10 5 0
FEET

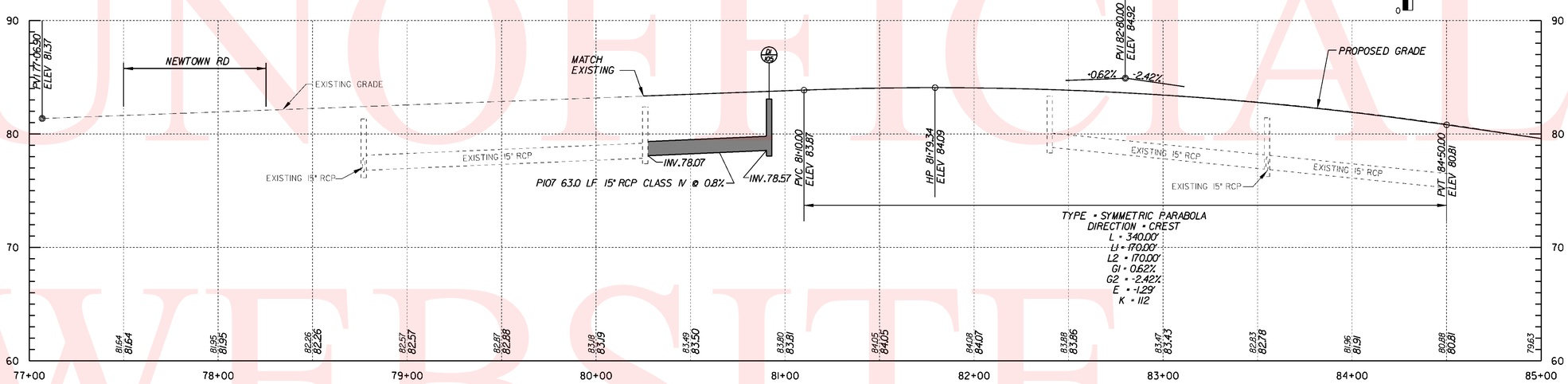

SR 7

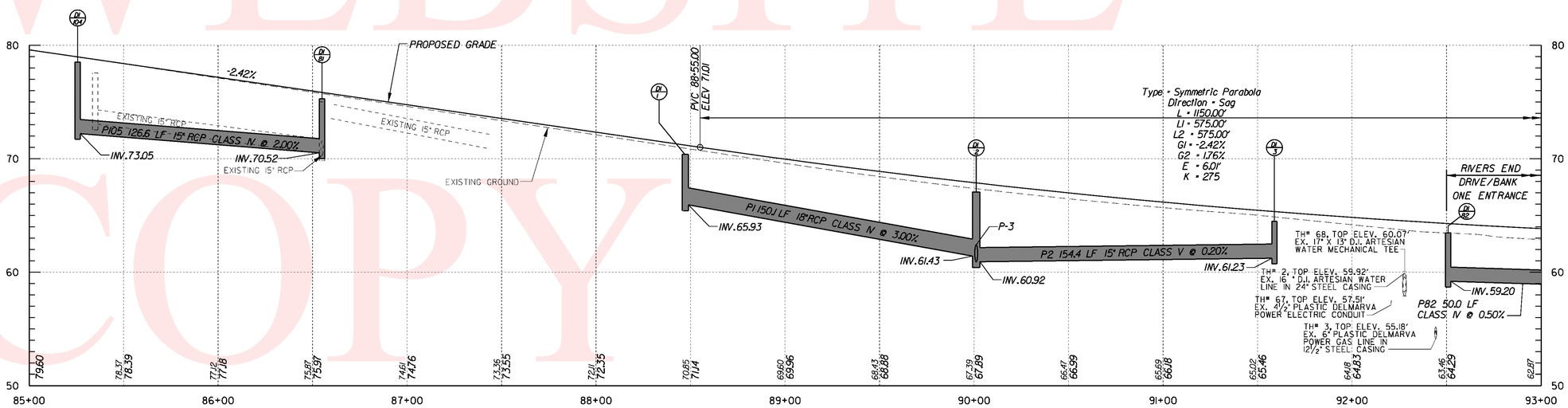

SR 7

PREL. TRACING ____ S.JB ____ DESIGN ____ KGM-A ____ CHKD. ____ JRR

10:24:55 AM

m:\31131-04\pr01sr7.plf

UNOFFICIAL WEBSITE COPY

CONTRACT	COUNTY	F.A.P. NO.	SHEET NO.	TOTAL SHTS.
T2003(260)	NEW CASTLE	SEE TITLE SHEET	22	115

SR 7, NEWTOWN ROAD TO SR 273

REVISIONS

PROFILES

SCALE
0 30 60 90
FEET

10 5 0 FEET

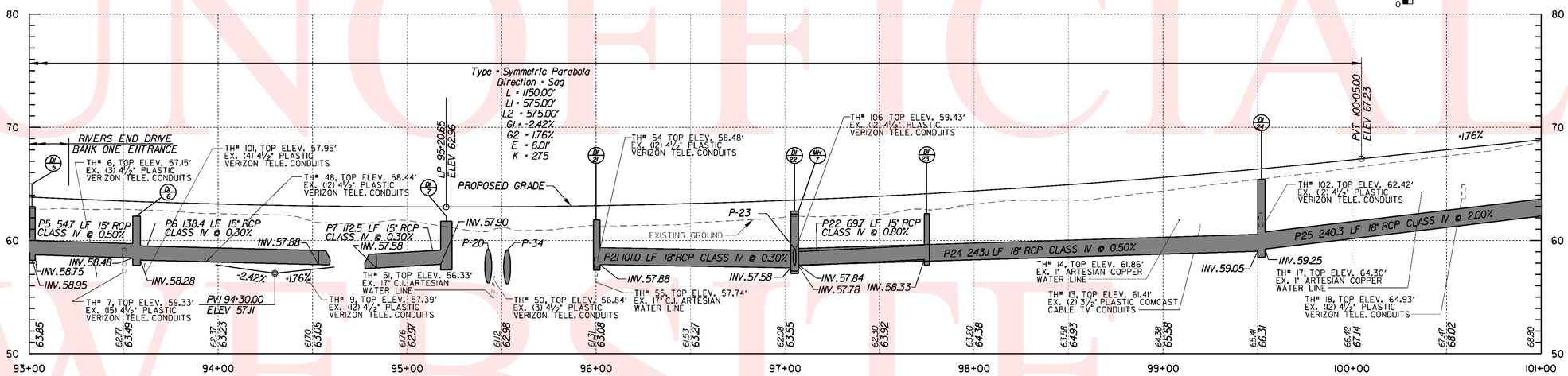

SR 7

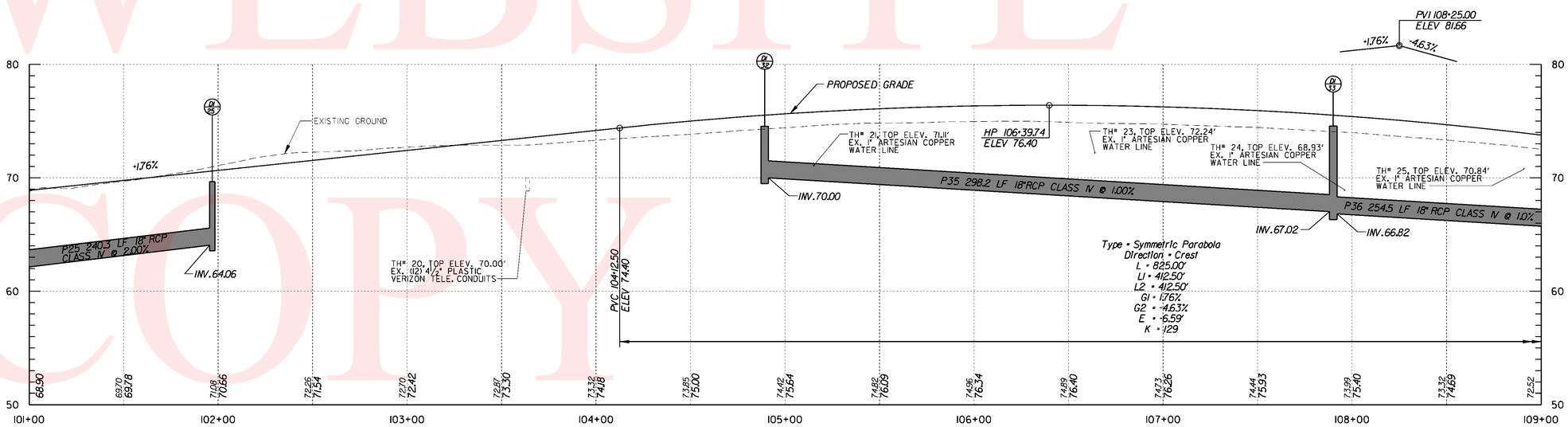

SR 7

UNOFFICIAL WEBSITE COPY

PREL. TRACING S.JB DESIGN KGM-A CHKD. JRR

10:24:56 AM m:\31131-04\pr02sr7.plf

CONTRACT	COUNTY	F.A.P. NO.	SHEET NO.	TOTAL SHTS.
T2003126.01	NEW CASTLE	SEE TITLE SHEET	23	115

SR 7, NEWTOWN ROAD TO SR 273

REVISIONS

PROFILES

SCALE
0 30 60 90
FEET

10 5 0
FEET

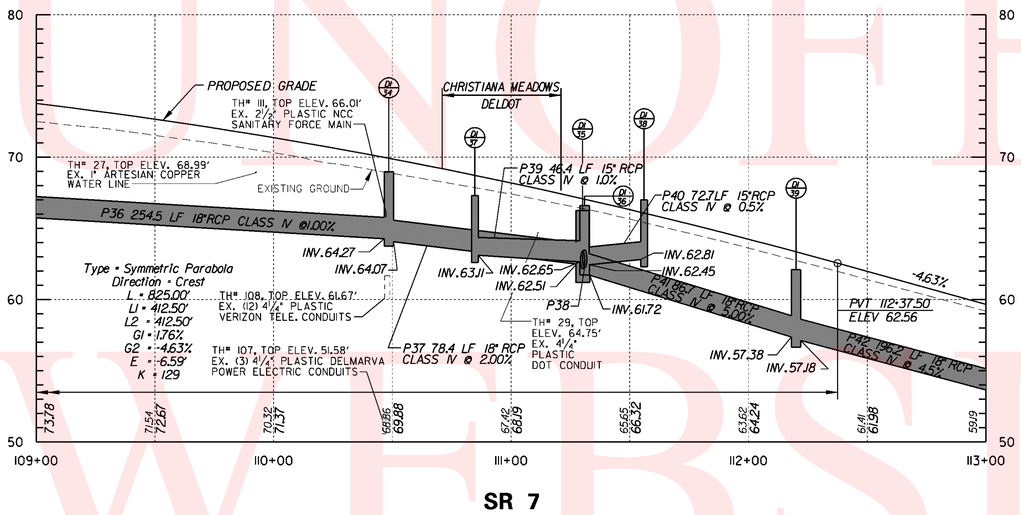

SR 7

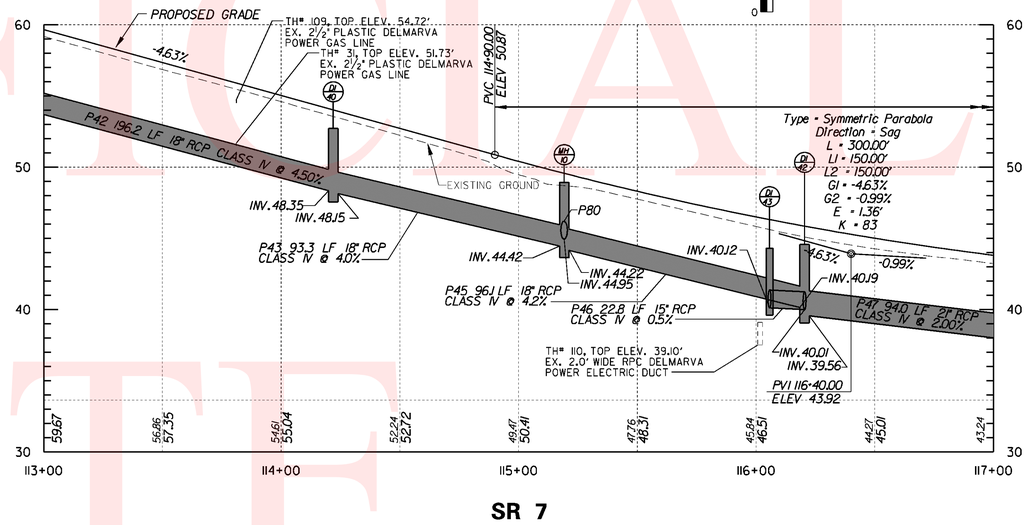

SR 7

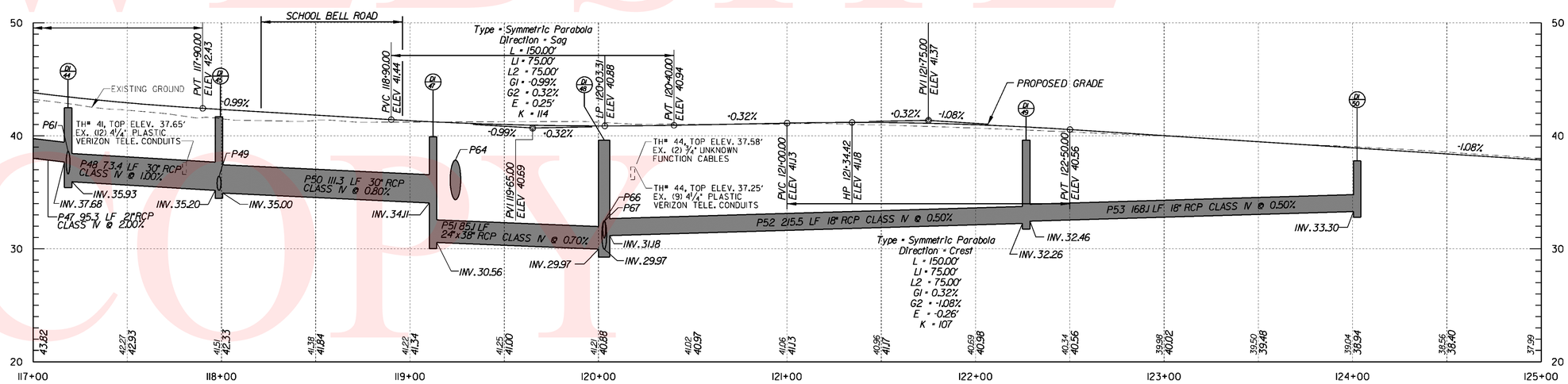

SR 7

UNOFFICIAL WEBSITE COPY

PREL. TRACING S.J.B. DESIGN KGM-A CHKD. JRR

10:24:56 AM m:\31131-04\pr03sr7.plf

CONTRACT	COUNTY	F.A.P. NO.	SHEET NO.	TOTAL SHTS.
T200312601	NEW CASTLE	SEE TITLE SHEET	24	115

SR 7, NEWTOWN ROAD TO SR 273

REVISIONS

PROFILES

SCALE
0 30 60 90
FEET

10 5 0 FEET

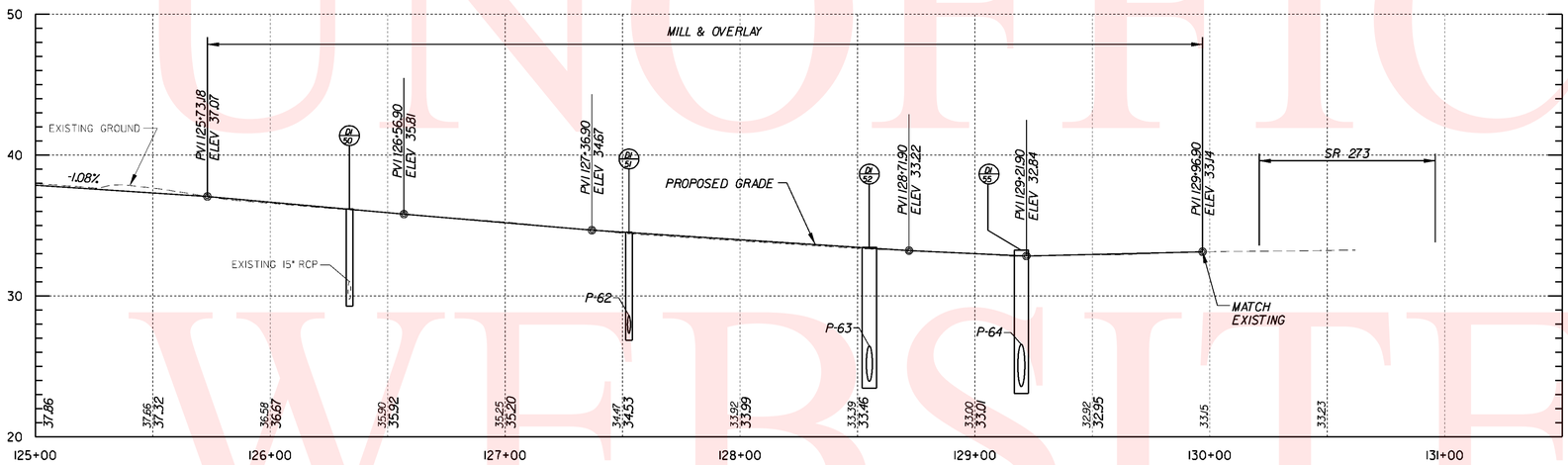

SR 7

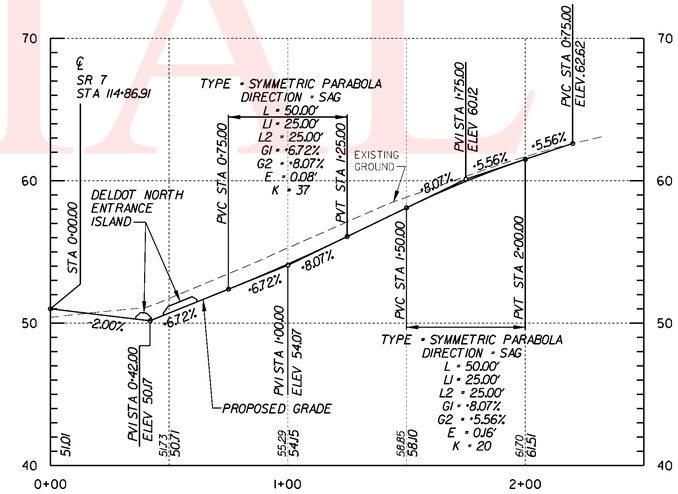

DELDOT NORTH ENTRANCE

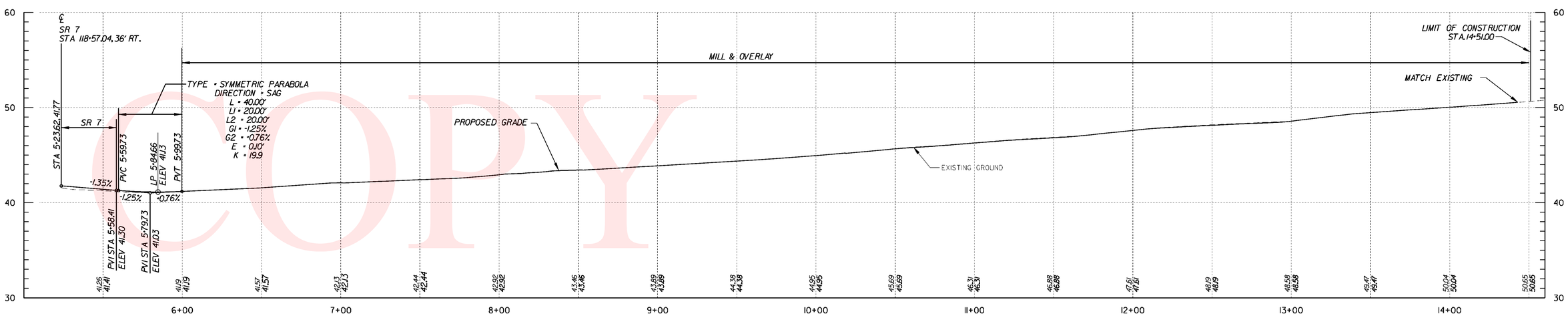

SCHOOL BELL ROAD

PREL. TRACING S.J.B. DESIGN KGM-A CHKD. JRR

10:24:57 AM m:\31131-04\pr04sr7.plf

UNOFFICIAL WEBSITE COPY

CONTRACT	COUNTY	F.A.P. NO.	SHEET NO.	TOTAL SHTS.
T2003126.01	NEW CASTLE	SEE TITLE SHEET	25	115

SR 7, NEWTOWN ROAD TO SR 273

REVISIONS

PROFILES

SCALE
0 30 60 90
FEET

10 5 0
FEET

NOTES:
1. THIS SHEET IS PROVIDED TO DEMONSTRATE THE PROPOSED STORM SEWER PROFILE ALONG THE RIGHT SIDE OF THE CONSTRUCTION BASELINE. THE ROADWAY PROFILE INFORMATION IS IDENTICAL TO THE PREVIOUS PROFILE SHEET CORRESPONDING TO THE STATION RANGE ON THIS SHEET. THE ROADWAY PROFILE INFORMATION PROVIDED ON THIS SHEET IS FOR REFERENCE ONLY.

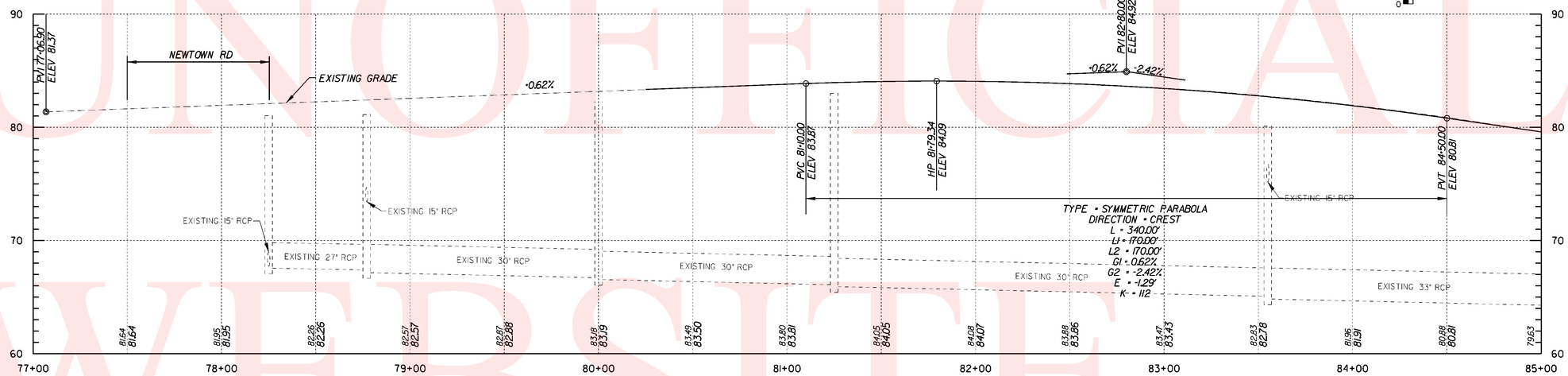

SR 7

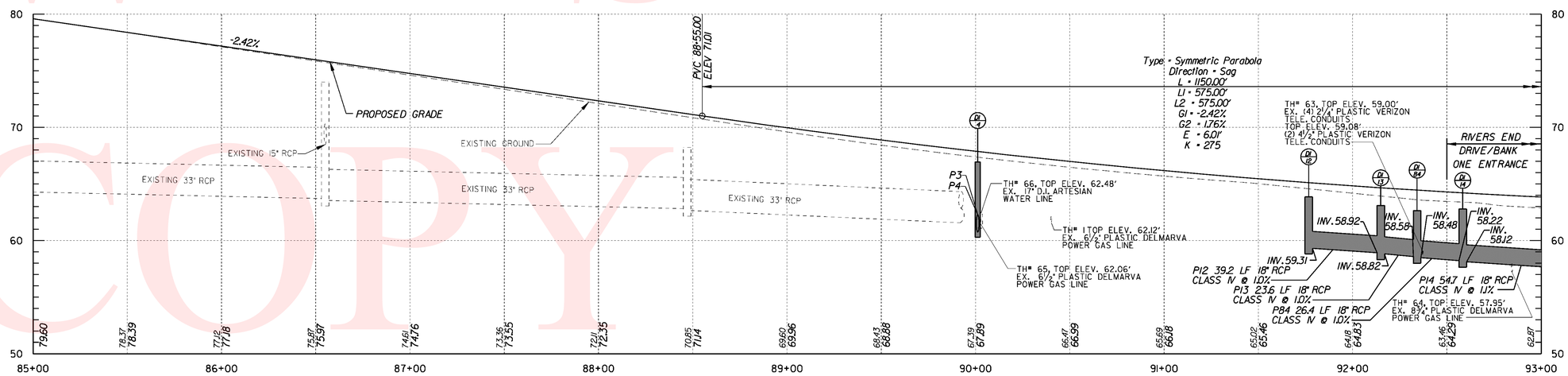

SR 7

UNOFFICIAL WEBSITE COPY

PREL. TRACING S.JB DESIGN KGM-A CHKD. JRR

10:24:58 AM m:\31131-04\pr05sr7.plf

CONTRACT	COUNTY	F.A.P. NO.	SHEET NO.	TOTAL SHTS.
T2003126 01	NEW CASTLE	SEE TITLE SHEET	26	115

SR 7, NEWTOWN ROAD TO SR 273

REVISIONS

PROFILES

SCALE
0 30 60 90
FEET

10 5 0 FEET

NOTES:
1. THIS SHEET IS PROVIDED TO DEMONSTRATE THE PROPOSED STORM SEWER PROFILE ALONG THE RIGHT SIDE OF THE CONSTRUCTION BASELINE. THE ROADWAY PROFILE INFORMATION IS IDENTICAL TO THE PREVIOUS PROFILE SHEET CORRESPONDING TO THE STATION RANGE ON THIS SHEET. THE ROADWAY PROFILE INFORMATION PROVIDED ON THIS SHEET IS FOR REFERENCE ONLY.

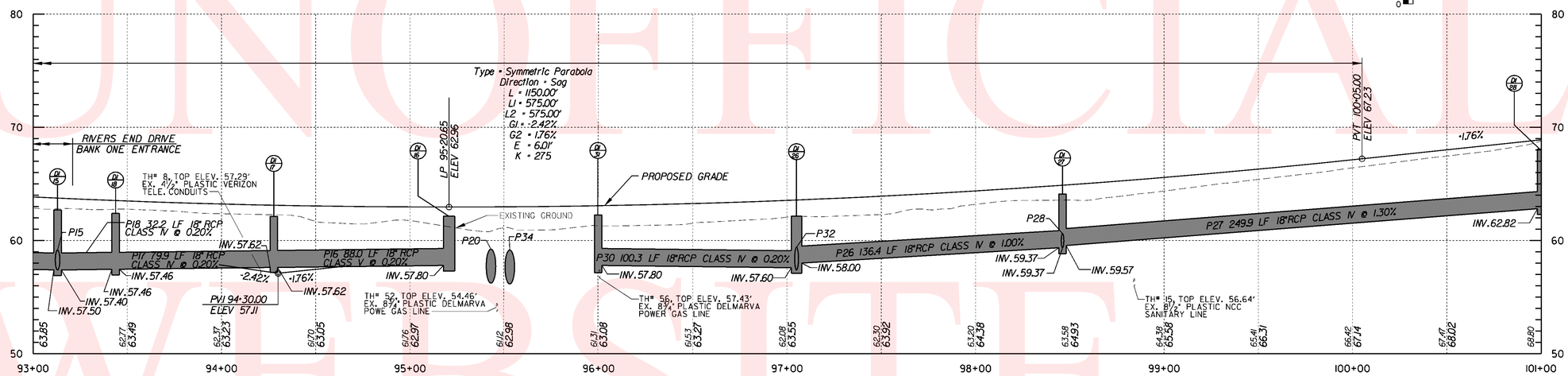

SR 7

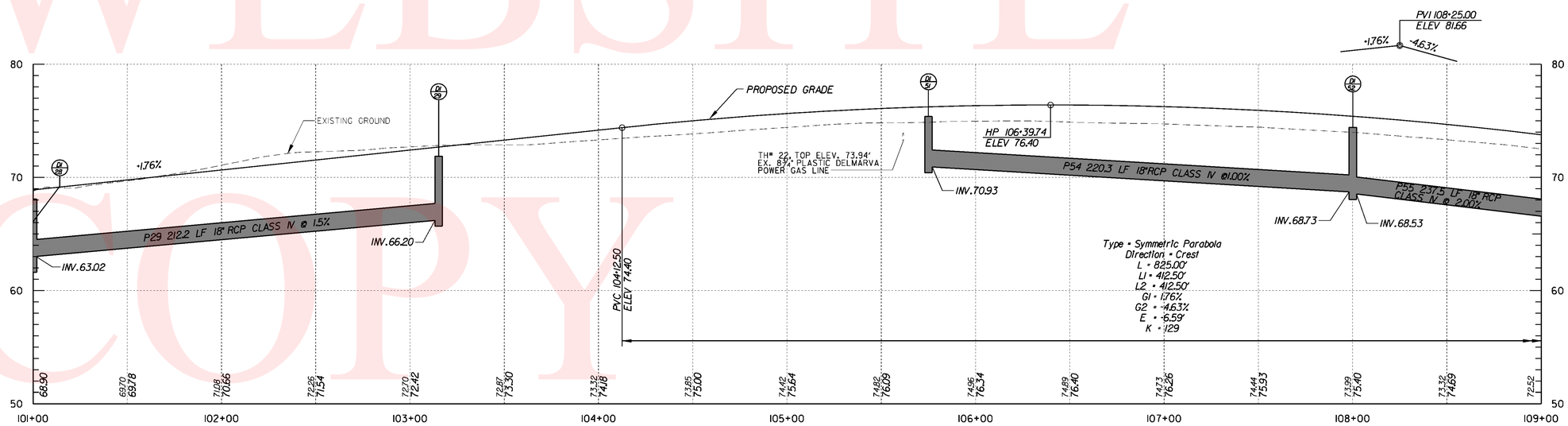

SR 7

PREL. TRACING S.JB DESIGN KGM-A CHKD. JRR

10:24:58 AM m:\31131-04\pr06sr7.plf

UNOFFICIAL WEBSITE COPY

CONTRACT	COUNTY	F.A.P. NO.	SHEET NO.	TOTAL SHTS.
T2003126 01	NEW CASTLE	SEE TITLE SHEET	27	115

SR 7, NEWTOWN ROAD TO SR 273

REVISIONS

PROFILES

SCALE
0 30 60 90
FEET

10 5 0 FEET

NOTES:
1. THIS SHEET IS PROVIDED TO DEMONSTRATE THE PROPOSED STORM SEWER PROFILE ALONG THE RIGHT SIDE OF THE CONSTRUCTION BASELINE. THE ROADWAY PROFILE INFORMATION IS IDENTICAL TO THE PREVIOUS PROFILE SHEET CORRESPONDING TO THE STATION RANGE ON THIS SHEET. THE ROADWAY PROFILE INFORMATION PROVIDED ON THIS SHEET IS FOR REFERENCE ONLY.

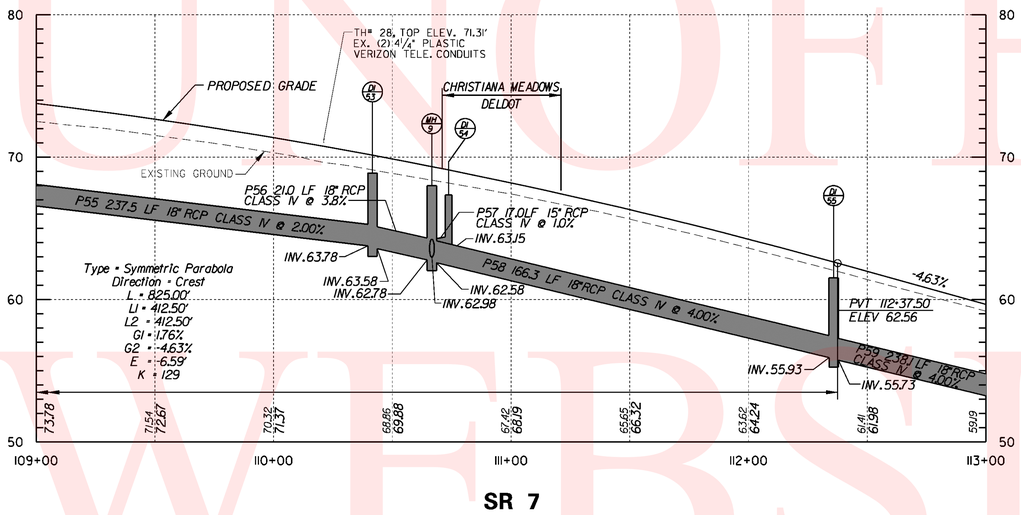

SR 7

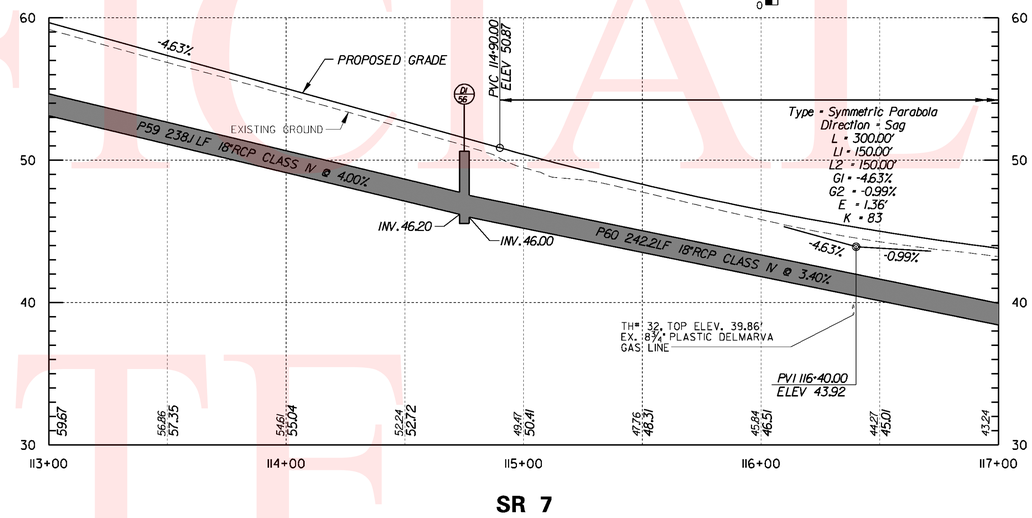

SR 7

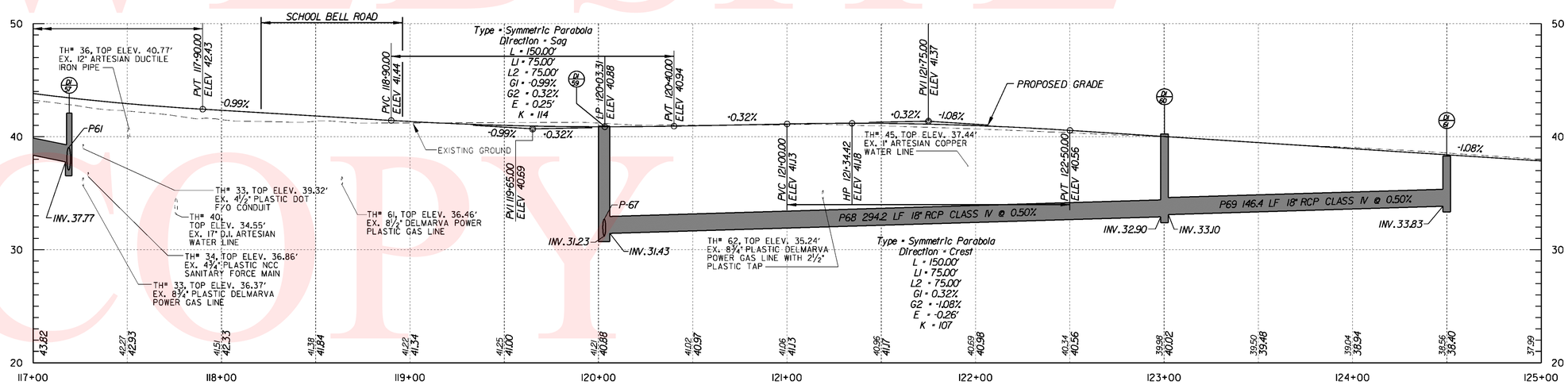

SR 7

UNOFFICIAL WEBSITE COPY

PREL. TRACING S.JB DESIGN KGM-A CHKD. JRR

10:24:59 AM m:\31131-04\pr07sr7.plf

CONTRACT	COUNTY	F.A.P. NO.	SHEET NO.	TOTAL SHTS.
T2003126 01	NEW CASTLE	SEE TITLE SHEET	28	115

STORM DRAIN PROFILES

SR 7, NEWTOWN ROAD TO SR 273

REVISIONS

SCALE
0 30 60 90
FEET

10 5 0 FEET

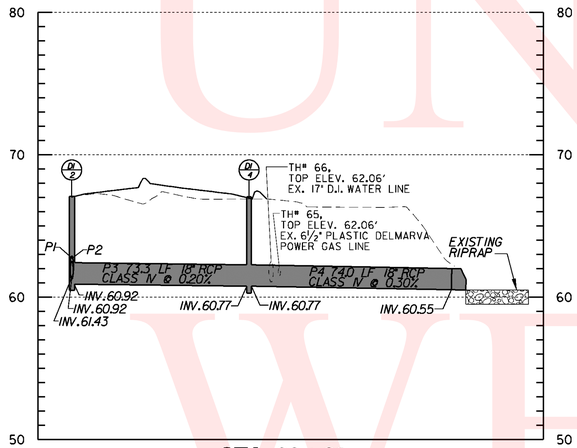

STA. 90+01
DI 2 TO SWM POND #241

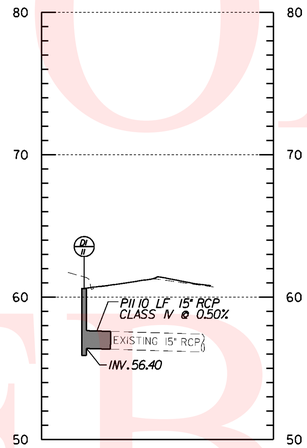

STA. 92+06
DI 11 TO EX. 15" RCP

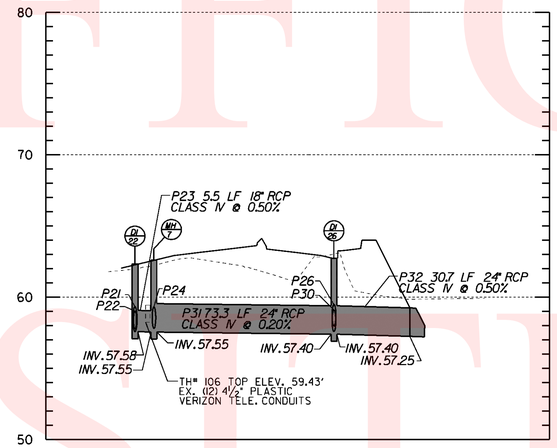

STA. 97+05
DI 22 TO SWM #278

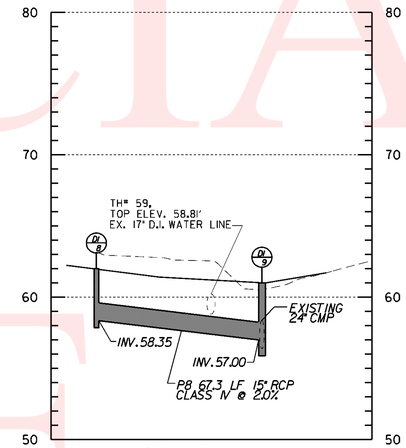

STA. 92+10
P8

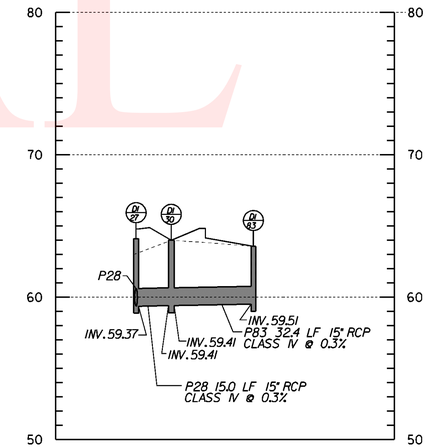

STA. 98+49
DI 27 TO DI 83

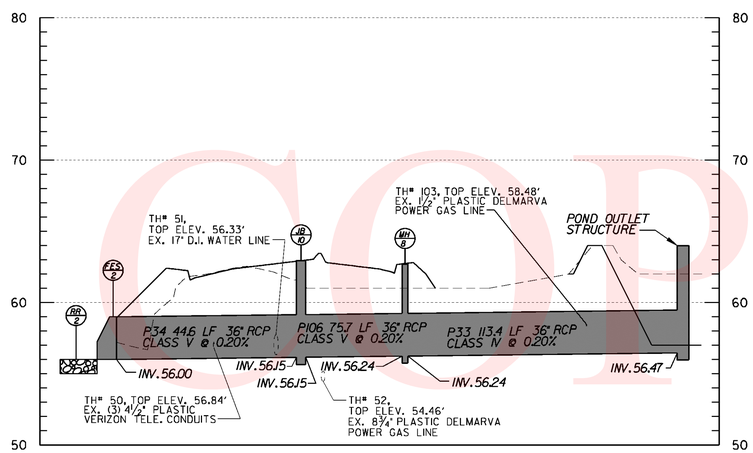

STA. 95+53
P33, P34 TO POND OUTLET STRUCTURE

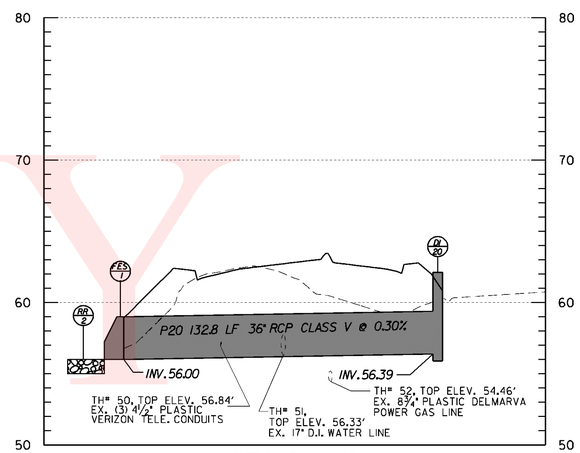

STA. 95+43
P20

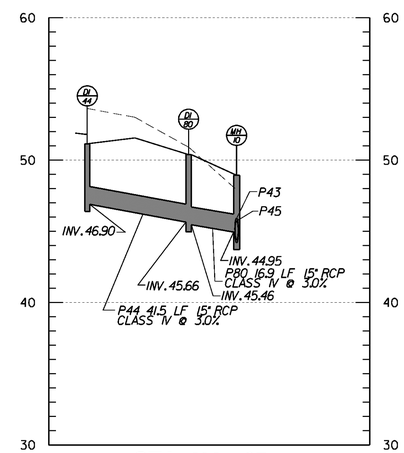

STA. 114+65
P44

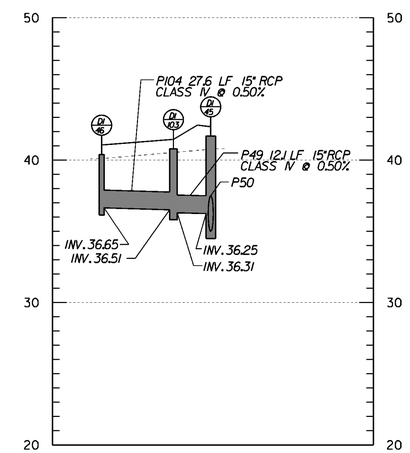

STA. 118+00
P104 TO P49

PREL. TRACING S.JB DESIGN KGM-A CHKD. JRR

UNOFFICIAL WEBSITE COPY

CONTRACT	COUNTY	F.A.P. NO.	SHEET NO.	TOTAL SHTS.
T200312601	NEW CASTLE	SEE TITLE SHEET	29	115

SR 7, NEWTOWN ROAD TO SR 273

REVISIONS

STORM DRAIN PROFILES

SCALE
0 30 60 90
FEET

10 5 0 FEET

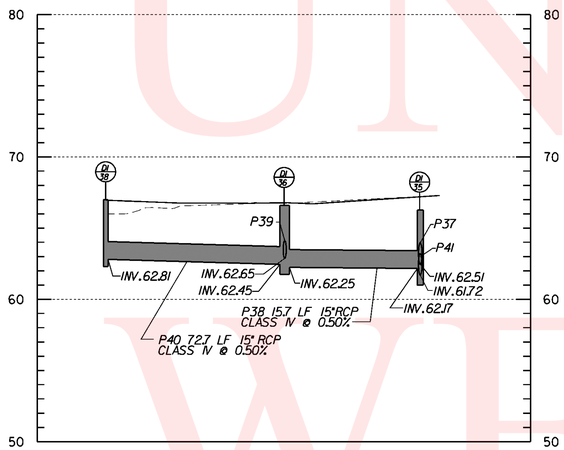

STA. 111+30
P38

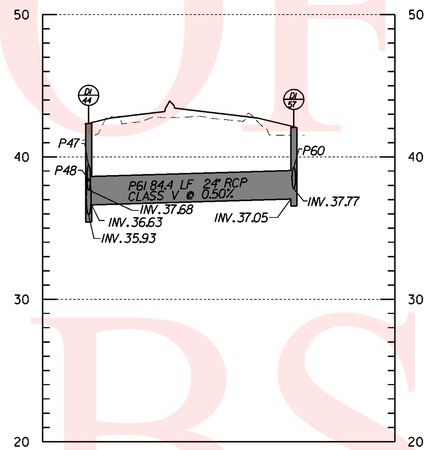

STA. 117+19
P61

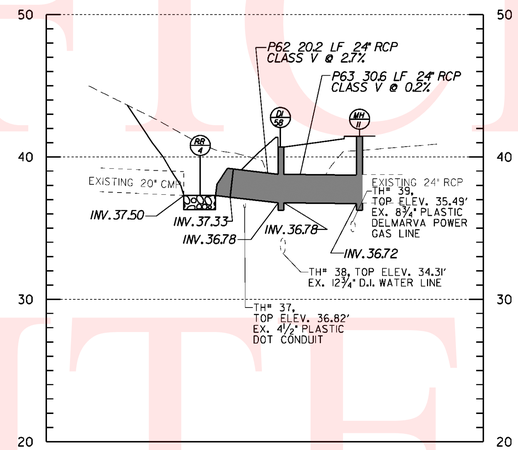

STA. 117+85
P62, P63

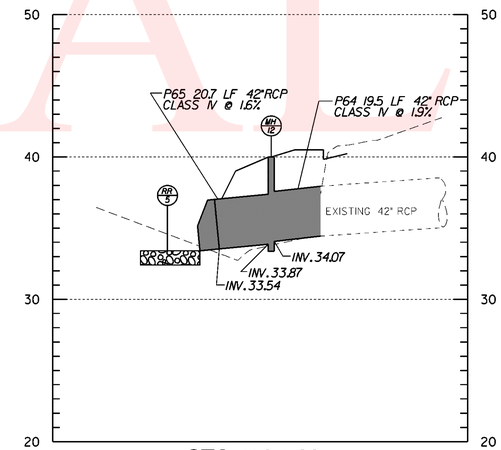

STA. 119+00
P47 TO P48

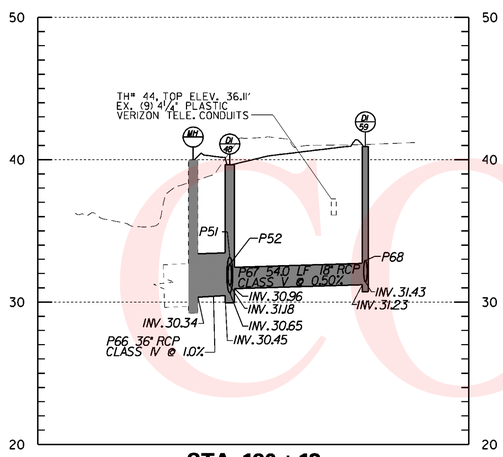

STA. 120+18
P66, P67

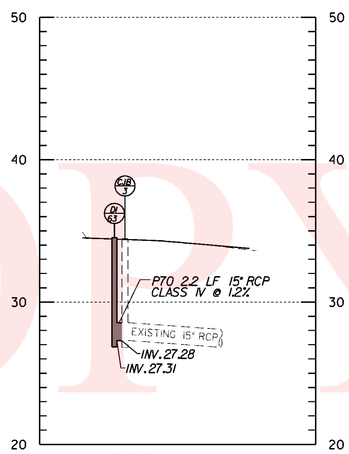

STA. 127+53
P70

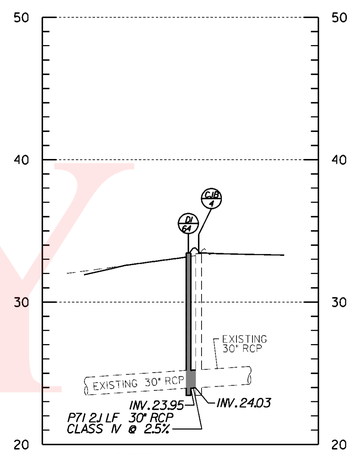

STA. 127+53
P71

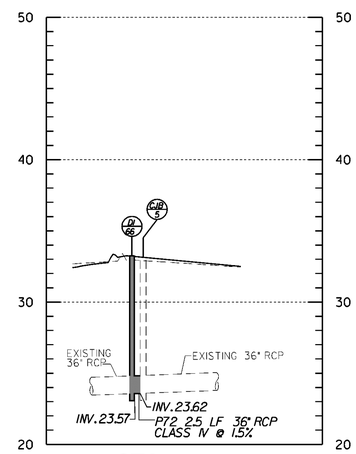

STA. 127+53
P72

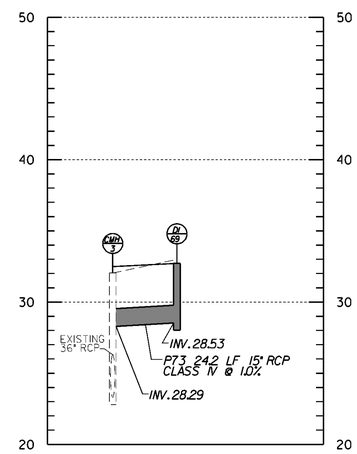

STA. 129+36
P73

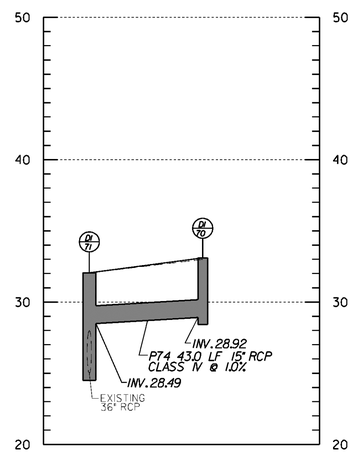

STA. 129+34
P74

UNOFFICIAL WEBSITE COPY

PREL. TRACING SJB DESIGN KGM-A CHKD. JRR

10:25:00 AM m:\31131-04\pr09sr7.pif

CONTRACT	COUNTY	F.A.P. NO.	SHEET NO.	TOTAL SHTS.
T2003126 01	NEW CASTLE	SEE TITLE SHEET	30	115

SR 7, NEWTOWN ROAD TO SR 273

REVISIONS

PROFILES

SCALE 0 30 60 90 FEET

10 5 0 FEET

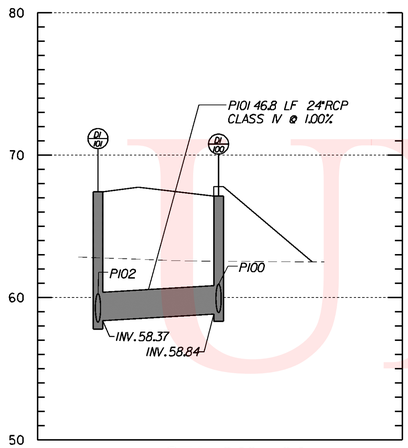

STA. 240+94
P101

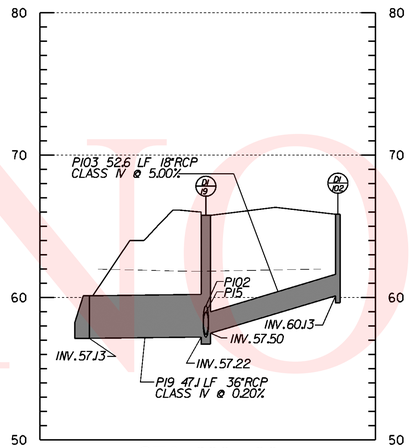

STA. 239+96
P103 TO P19

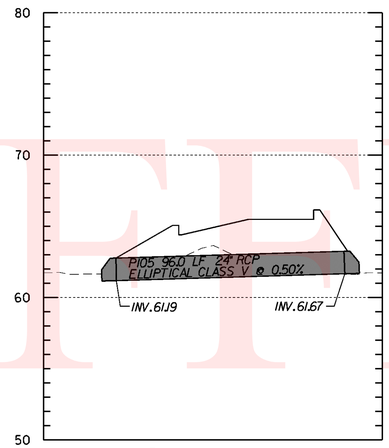

STA. 239+81
P105

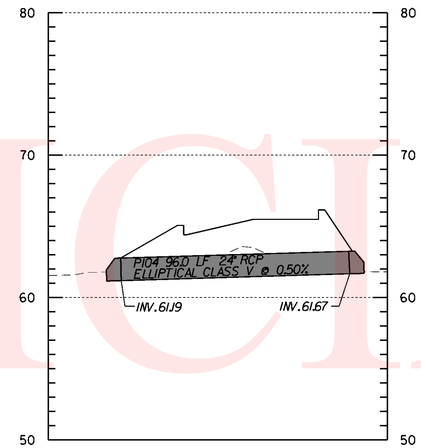

STA. 239+74
P104

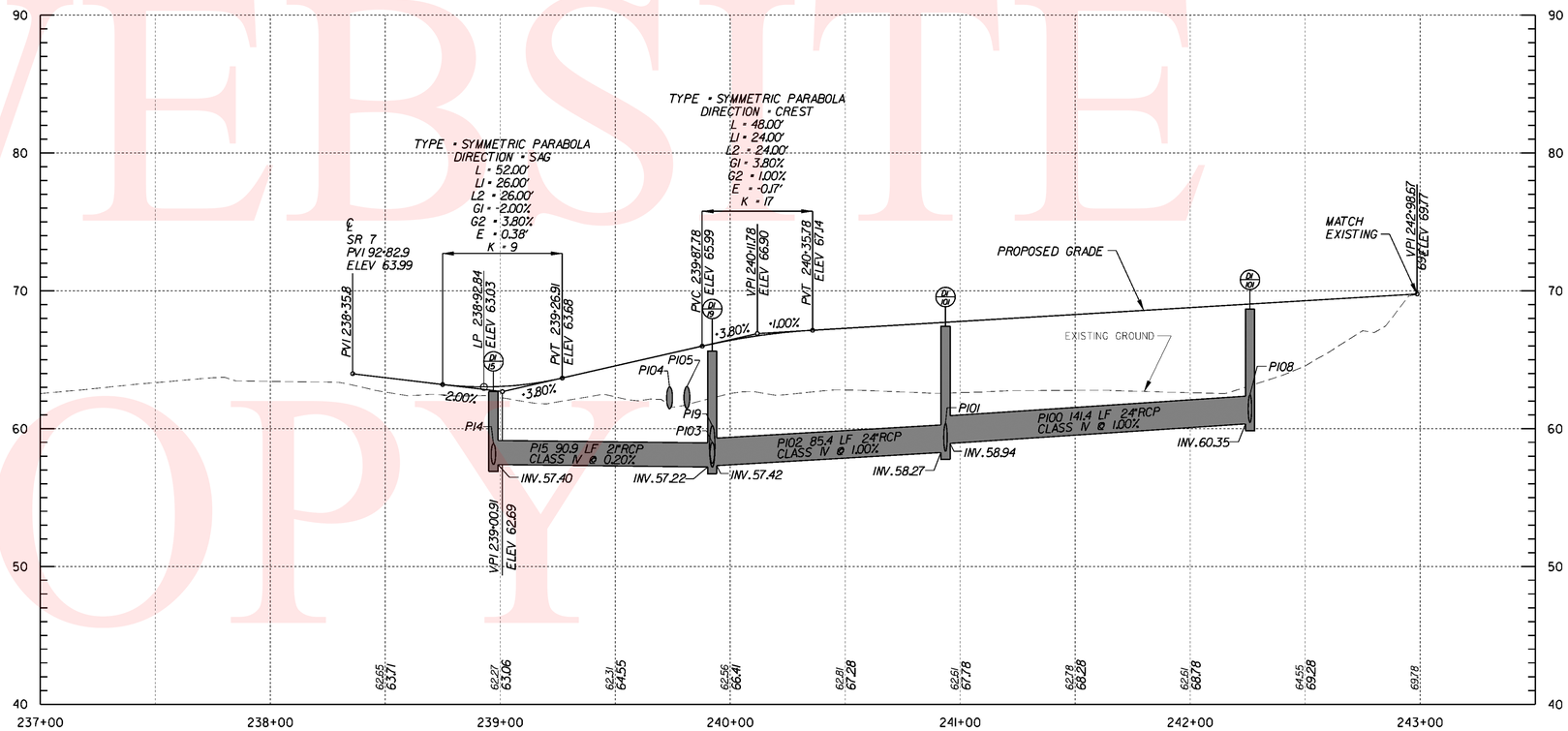

ENTRANCE ROAD

PREL. TRACING ____ SUB ____ DESIGN KGM-A CHKD. JRR

UNOFFICIAL WEBSITE COPY

CONTRACT	COUNTY	F.A.P. NO.	SHEET NO.	TOTAL SHTS.
T200312601	NEW CASTLE	SEE TITLE SHEET	31	115

SR 7, NEWTOWN ROAD TO SR 273

REVISIONS

GRADES AND GEOMETRICS

SCALE 0 30 60 90
FEET

GEOMETRY LAYOUT				
POINT NO.	BASELINE STATION	OFFSET	NORTH	EAST
7101	78+43.3127	-60.9821	599,562.8404	588,439.6854
7102	78+71.0015	-51.6667	599,588.5602	588,453.5397
7103	80+34.6816	-46.0000	599,748.9368	588,486.7457
7104	80+42.6551	-46.0000	599,756.8426	588,488.1034
7109	81+43.9875	-39.0000	599,855.9077	588,512.9586
7110	82+44.1600	-39.0000	599,954.7709	588,532.0155
7111	82+49.2041	-59.1754	599,963.7040	588,513.2267
7112	82+61.8436	-59.5016	599,976.2559	588,515.4184
7113	82+68.0297	-39.0000	599,978.2912	588,536.7476
7114	83+21.4940	-39.0000	600,030.9183	588,547.6133
7115	83+53.5531	-39.0000	600,062.1458	588,554.0863
7116	83+58.5179	-54.6666	600,070.1314	588,539.7529
7117	83+68.5899	-54.7079	600,079.9370	588,541.7148
7118	83+73.6626	-39.0000	600,081.7475	588,558.1123
7119	83+90.3181	-39.0000	600,097.9903	588,561.3911
7120	83+95.3461	-54.6686	600,105.9686	588,547.0098
7121	84+15.4902	-54.6414	600,125.5799	588,550.9337
7122	84+20.4827	-39.0000	600,127.4256	588,567.2391
7123	84+95.4097	-39.0000	600,200.6389	588,581.2619
7124	85+35.7389	-39.0000	600,240.2849	588,588.6541
7125	85+40.7389	-54.6667	600,248.0718	588,574.1693
7126	85+50.7389	-54.6667	600,257.9024	588,576.0022
7127	85+55.7389	-39.0000	600,259.9460	588,592.3200
7128	85+63.0429	-39.0000	600,267.1263	588,593.6588
7129	85+68.0229	-54.7320	600,274.9055	588,579.0662
7130	85+88.0212	-54.4692	600,294.5168	588,583.0301
7131	85+92.8534	-39.0000	600,296.4317	588,599.1229
7132	80+24.9518	-36.9938	599,737.8268	588,493.9808
7137	83+21.4940	-8.0000	600,024.5438	588,577.9508
7138	84+95.4097	-8.0000	600,194.9568	588,611.7367

GEOMETRY LAYOUT				
POINT NO.	BASELINE STATION	OFFSET	NORTH	EAST
7140	83+21.4940	8.0000	600,021.2538	588,593.6089
7141	84+95.4097	8.0000	600,192.0241	588,627.4657
7142	80+34.6816	36.0000	599,735.0995	588,567.5697
7143	83+21.4940	36.0000	600,015.4962	588,621.0106
7144	84+95.4097	36.0000	600,186.8918	588,654.9913
7145	80+25.0038	4.0061	599,730.9594	588,534.4016
7146	80+25.0089	8.0061	599,730.2894	588,538.3451
7147	81+22.3695	4.0000	599,826.7978	588,551.3135
7148	82+47.4350	-8.0000	599,951.9188	588,563.0583
7149	82+49.1316	-49.6667	599,961.7653	588,522.5360
7150	80+34.6816	-10.0000	599,739.4869	588,541.9426
7151	82+47.4350	-5.3333	599,951.3958	588,565.6732
7152	82+47.4350	5.3333	599,949.3037	588,576.1326
7153	82+63.0412	-49.6667	599,975.4903	588,525.2973
7154	83+58.5420	-49.6667	600,069.1504	588,544.6557
7155	83+68.5962	-49.6667	600,078.9370	588,546.6558
7156	83+95.3458	-49.6667	600,104.9872	588,551.9144
7157	84+15.4768	-49.6667	600,124.6039	588,555.8117
7158	85+40.7389	-49.6667	600,247.1553	588,579.0846
7159	85+50.7389	-49.6667	600,256.9859	588,580.9175
7160	85+67.9563	-49.6667	600,273.9116	588,584.0734
7161	85+87.9580	-49.6667	600,293.5745	588,587.7396
7162	82+00.000	-20.0000	599,900.0067	588,581.3795
7163	83+00.0000	-20.0000	599,997.8005	588,600.9738

NOTES:

1. OFFSETS SHOWN IN THE GEOMETRY TABLES WITH A MINUS SIGN ARE TO THE LEFT OF THE SR 7 CONSTRUCTION BASELINE.
2. UNLESS OTHERWISE NOTED, POINT GEOMETRY ADJACENT TO CURB AND CURB AND GUTTER IS GIVEN TO EDGE OF PAVEMENT.
3. RADII ARE GIVEN TO EDGE OF PAVEMENT.
4. UNLESS OTHERWISE NOTED, EDGE OF GUTTER ELEVATIONS ARE GIVEN AT 10 FOOT INTERVALS ALONG RADII AND 50 FOOT INTERVALS ALONG TANGENTS.
5. ALL WORK REQUIRED FOR CALCULATING AND STAKING OF GRADES SHALL BE PAID FOR UNDER ITEM 763501 - CONSTRUCTION ENGINEERING.

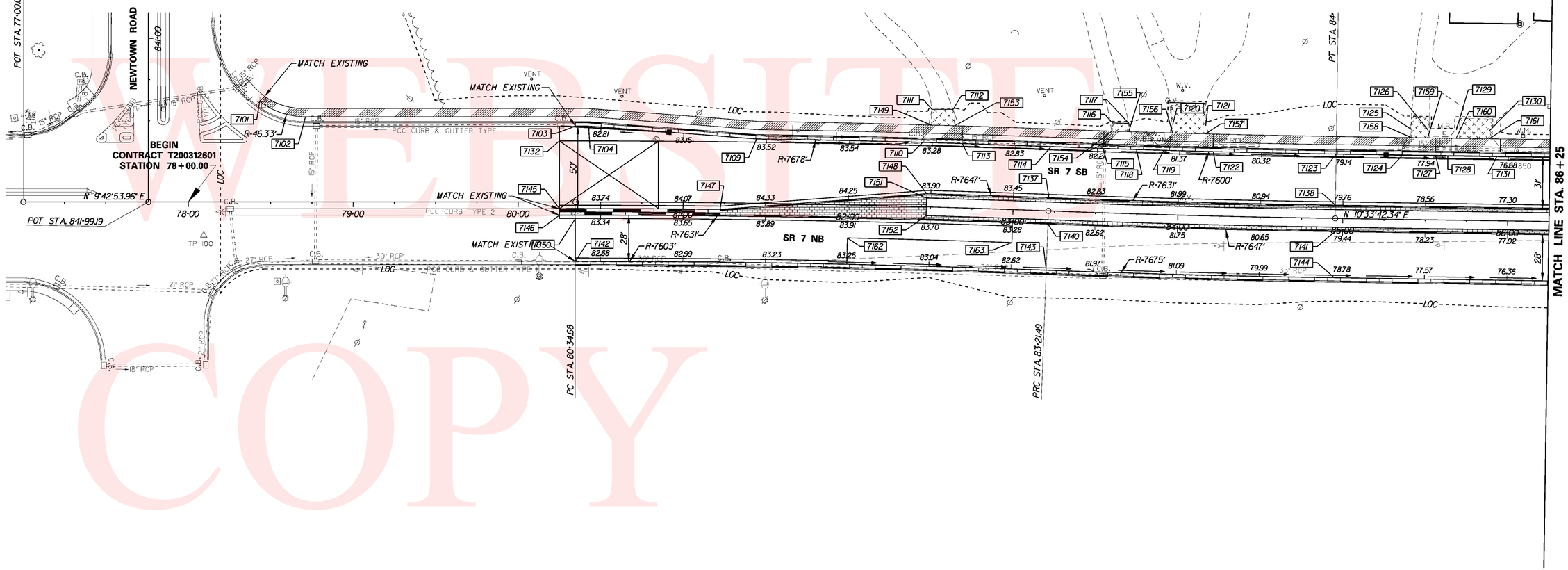

UNOFFICIAL WEBSITE COPY

PREL. TRACING SJB DESIGN KGM-A CHKD. JRR

10:25:04 AM m:\31131-04\gg01sr7.plt

CONTRACT	COUNTY	F.A.P. NO.	SHEET NO.	TOTAL SHTS.
T2003126 01	NEW CASTLE	SEE TITLE SHEET	32	115

SR 7, NEWTOWN ROAD TO SR 273

REVISIONS

GRADES AND GEOMETRICS

SCALE 0 30 60 90 FEET

GEOMETRY LAYOUT

POINT NO.	BASELINE STATION	OFFSET	NORTH	EAST
7201	86+71.7309	-39.0000	600,373.9729	588,613.5808
7202	86+76.8489	-54.7977	600,381.8998	588,598.9889
7203	87+06.8463	-54.4035	600,411.3167	588,604.8748
7204	87+20.7186	-39.0000	600,422.1307	588,622.5600
7205	87+50.0000	-39.0000	600,450.9159	588,627.9271
7206	88+00.0000	-36.0000	600,499.5189	588,640.0411
7207	91+58.8716	-36.0000	600,852.3106	588,705.8206
7208	91+58.8717	-115.9998	600,866.9741	588,627.1761
7209	92+21.3780	-70.4654	600,920.0752	588,683.3962
7210	235+52.0096	23.1279	600,916.3762	588,498.9914
7211	236+35.8734	36.4623	600,935.8482	588,581.6460
7212	236+54.3005	36.7802	600,941.1096	588,596.4763
7213	236+65.6772	36.5800	600,943.9330	588,605.3280
7214	236+31.9349	25.5094	600,944.4887	588,573.8473
7215	92+58.3261	-61.1527	600,954.6904	588,699.3236
7216	92+80.0904	-61.1527	600,976.0859	588,703.3129
7217	92+85.0904	-61.1527	600,981.0012	588,704.2294
7218	93+01.3261	-61.1334	600,996.9583	588,707.2242
7219	237+21.9082	-17.0376	601,002.9382	588,652.0026
7221	93+32.5976	-70.1595	601,029.3545	588,704.0830
7222	93+91.4193	-20.0000	601,077.9857	588,764.1743
7223	93+71.4193	-45.0000	601,062.9069	588,735.9320
7224	93+92.3229	-146.9998	601,102.1524	588,639.4919
7225	93+92.3229	-47.0000	601,083.8229	588,737.7975
7226	94+00.2205	-57.6667	601,093.5418	588,728.7591
7227	94+06.2205	-59.6667	601,099.8068	588,727.8927
7228	94+18.0885	-59.6667	601,111.4737	588,730.0681
7229	92+30.9681	-7.9647	600,918.0468	588,746.5959
7230	92+34.9742	-10.0000	600,922.3581	588,745.3293
7232	93+24.8261	4.0000	601,008.1215	588,775.5616

GEOMETRY LAYOUT

POINT NO.	BASELINE STATION	OFFSET	NORTH	EAST
7234	87+70.9695	8.0000	600,462.9153	588,677.9745
7235	89+20.9695	-4.0000	600,612.5735	588,693.6721
7236	92+30.9682	-3.9647	600,917.3137	588,750.5281
7237	93+24.8261	8.0000	601,007.3883	588,779.4938
7238	89+76.7454	36.0000	600,660.0726	588,743.2178
7239	90+76.7453	47.0000	600,756.3621	588,772.3610
7240	91+78.8259	47.0000	600,856.7132	588,791.0719
7241	92+23.8670	64.1370	600,897.8501	588,816.1744
7246	239+32.8175	2.0598	600,947.8205	588,858.9209
7247	238+95.4528	2.0598	600,954.6693	588,822.1892
7248	238+95.4532	-1.9402	600,958.6015	588,822.9227
7249	239+32.8173	-1.9402	600,951.7528	588,859.6539
7251	239+12.8176	-26.0000	600,979.0709	588,844.4030
7253	93+26.3073	49.8240	601,001.1783	588,820.8807
7254	93+43.8261	77.0002	601,013.4190	588,850.8076
7255	93+43.8261	42.0000	601,019.8344	588,816.4004
7256	93+70.3018	49.6710	601,044.4555	588,828.7943
7257	94+18.8261	42.0000	601,093.5637	588,830.1475
7258	93+92.3018	49.6710	601,066.0828	588,832.8268
7260	94+78.8261	36.0000	601,153.6470	588,835.2469
7261	94+24.0885	-57.6667	601,117.0055	588,733.1340
7262	237+28.4446	25.5296	600,960.1610	588,656.7482
7263	87+80.8261	-5.3333	600,475.0488	588,666.6737
7264	87+80.8261	5.3333	600,473.0936	588,677.1596
7265	88+43.0137	-32.6355	600,541.1872	588,651.2328
7266	89+99.5857	125.0355	600,666.2062	588,834.9314

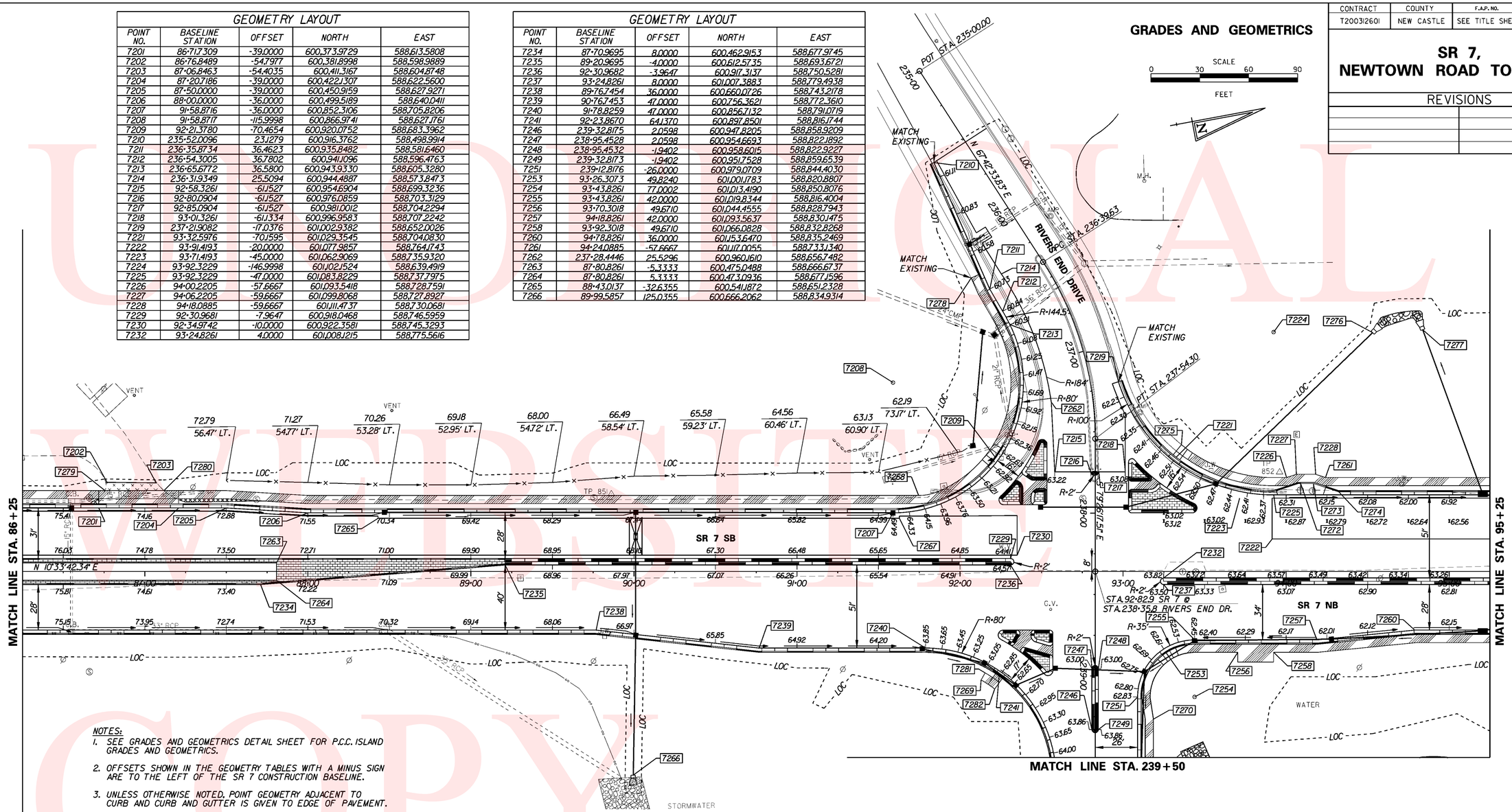

NOTES:

1. SEE GRADES AND GEOMETRICS DETAIL SHEET FOR P.C.C. ISLAND GRADES AND GEOMETRICS.
2. OFFSETS SHOWN IN THE GEOMETRY TABLES WITH A MINUS SIGN ARE TO THE LEFT OF THE SR 7 CONSTRUCTION BASELINE.
3. UNLESS OTHERWISE NOTED, POINT GEOMETRY ADJACENT TO CURB AND CURB AND GUTTER IS GIVEN TO EDGE OF PAVEMENT.
4. RADII ARE GIVEN TO EDGE OF PAVEMENT.
5. UNLESS OTHERWISE NOTED, EDGE OF GUTTER ELEVATIONS ARE GIVEN AT 10 FOOT INTERVALS ALONG RADII AND 50 FOOT INTERVALS ALONG TANGENTS.
6. ALL WORK REQUIRED FOR CALCULATING AND STAKING OF GRADES SHALL BE PAID FOR UNDER ITEM 763501 - CONSTRUCTION ENGINEERING.

GEOMETRY LAYOUT

POINT NO.	BASELINE STATION	OFFSET	NORTH	EAST
7267	91+62.7885	-32.6351	600,855.5442	588,709.8464
7268	91+74.5241	-46.6667	600,869.6530	588,698.2036
7269	92+12.8740	66.6026	600,886.5914	588,816.5832
7270	239+26.4572	-35.6667	600,986.0737	588,859.5834
7272	94+07.1401	-53.9997	601,099.6721	588,733.6323
7273	94+17.1689	-53.9997	601,109.5309	588,735.4705
7274	94+23.1689	-49.0000	601,123.3604	588,743.1349
7275	93+35.7647	-77.8508	601,033.8777	588,697.1024
7276	94+53.0636	-146.6399	601,161.7980	588,650.9792
7277	94+83.8232	-148.4225	601,192.3633	588,654.8649
7278	236+23.9355	42.3275	600,925.8932	588,572.8249
7279	86+75.5102	-49.6667	600,379.6433	588,603.7875
7280	87+11.6072	-49.6667	600,415.1287	588,610.4039
7281	92+15.3294	62.2470	600,889.8036	588,812.7515
7282	92+21.2135	72.1328	600,893.7760	588,823.5483

PRELIM. TRACING	
S.J.B.	DESIGN
KGM-A	CHKD.
JRR	

UNOFFICIAL WEBSITE COPY

CONTRACT	COUNTY	F.A.P. NO.	SHEET NO.	TOTAL SHTS.
T200312601	NEW CASTLE	SEE TITLE SHEET	33	115

SR 7, NEWTOWN ROAD TO SR 273

REVISIONS

GRADES AND GEOMETRICS

SCALE 0 30 60 90 FEET

NOTES:

1. SEE GRADES AND GEOMETRICS DETAIL SHEET FOR P.C.C. ISLAND GRADES AND GEOMETRICS.
2. OFFSETS SHOWN IN THE GEOMETRY TABLES WITH A MINUS SIGN ARE TO THE LEFT OF THE SR 7 CONSTRUCTION BASELINE.
3. UNLESS OTHERWISE NOTED, POINT GEOMETRY ADJACENT TO CURB AND CURB AND GUTTER IS GIVEN TO EDGE OF PAVEMENT.
4. RADII ARE GIVEN TO EDGE OF PAVEMENT.
5. UNLESS OTHERWISE NOTED, EDGE OF GUTTER ELEVATIONS ARE GIVEN AT 10 FOOT INTERVALS ALONG RADII AND 50 FOOT INTERVALS ALONG TANGENTS.
6. ALL WORK REQUIRED FOR CALCULATING AND STAKING OF GRADES SHALL BE PAID FOR UNDER ITEM 763501 - CONSTRUCTION ENGINEERING.

GEOMETRY LAYOUT

POINT NO.	BASELINE STATION	OFFSET	NORTH	EAST
7301	95+54.8890	-45.0000	601,243.2682	588,769.5612
7302	95+56.8890	-42.0000	601,244.6844	588,772.8769
7303	97+00.4691	-42.0000	601,385.8320	588,799.1945
7304	97+00.4691	-35.6362	601,384.6655	588,805.4505
7306	97+47.6255	-57.6667	601,435.0610	588,792.4368
7307	97+64.6255	-57.6667	601,451.7730	588,795.5528
7308	97+64.6255	-49.6667	601,450.3067	588,803.4173
7309	98+24.2349	-47.0000	601,508.4174	588,816.9649
7310	99+16.9471	-40.2011	601,598.3127	588,840.6423
7311	99+25.8463	-67.7040	601,612.1023	588,815.2366
7312	99+33.3258	-39.0000	601,614.1937	588,844.8252
7313	99+47.5483	-67.7040	601,633.4366	588,819.2144
7314	99+48.7044	-39.0000	601,629.3118	588,847.6440
7315	99+55.7874	-39.0000	601,636.2747	588,848.9423
7316	99+61.3493	-57.9830	601,645.2219	588,831.3004
7317	99+71.4821	-57.9830	601,655.1831	588,833.1577
7318	99+75.7874	-39.0000	601,655.9359	588,852.6082
7319	100+94.8873	-39.0000	601,773.0180	588,874.4387
7320	101+22.7147	-39.0043	601,800.2443	588,879.4595
7321	101+33.6085	-70.4495	601,816.5143	588,850.4583
7322	101+47.4881	-70.4485	601,830.0476	588,852.8991
7323	101+52.8984	-39.0000	601,829.7947	588,884.8020
7324	101+64.9776	-39.0000	601,841.6267	588,886.9056
7325	101+72.0716	-66.9610	601,853.4243	588,860.5947
7326	101+84.1774	-65.9238	601,865.0657	588,863.6873
7327	101+87.0856	-39.0081	601,863.2908	588,890.7073
7328	102+25.4882	-51.6672	601,903.0567	588,884.6715
7329	102+19.5182	-49.6667	601,896.8757	588,885.6545
7330	102+37.5377	-51.6662	601,914.8592	588,886.6554
7331	102+43.6012	-49.6667	601,920.4715	588,889.5186
7332	102+78.4813	-39.0000	601,952.9651	588,905.7579
7333	102+84.4765	-66.2133	601,963.1762	588,879.8399
7334	102+96.5842	-66.8310	601,975.1253	588,881.1270

GEOMETRY LAYOUT

POINT NO.	BASELINE STATION	OFFSET	NORTH	EAST
7335	103+02.6137	-39.0000	601,976.6726	588,909.5528
7336	100+75.0000	-31.0000	601,752.0013	588,878.6579
7337	97+74.8261	4.0000	601,450.4976	588,858.0444
7338	98+75.0753	-20.0001	601,553.4475	588,852.8262
7339	98+75.0227	-6.0221	601,550.8337	588,866.5577
7340	99+24.8261	-8.0000	601,600.1558	588,873.7420
7341	100+94.8873	-8.0000	601,767.3359	588,904.9135
7342	98+17.9796	36.0000	601,487.0545	588,897.4121
7343	98+20.7095	40.2439	601,488.9604	588,902.0845
7344	98+17.4238	41.1667	601,485.5612	588,902.3894
7345	98+18.0014	48.6768	601,484.7524	588,909.8781
7346	98+04.0683	119.6198	601,458.0519	588,977.0654
7347	98+64.3883	73.8709	601,525.7355	588,943.1479
7348	98+49.7394	74.0036	601,511.3104	588,940.5933
7349	98+34.8847	56.1135	601,499.9866	588,920.2835
7350	98+49.6035	59.0042	601,513.9262	588,925.8231
7351	98+55.2891	56.0000	601,520.0660	588,923.9119
7352	98+35.6640	52.1457	601,501.4799	588,916.5257
7353	98+42.6239	44.1667	601,509.7845	588,909.9577
7354	98+55.2884	36.0000	601,523.7313	588,904.2507
7359	100+94.8873	36.0000	601,759.2709	588,948.1680
7360	100+94.8873	8.0000	601,764.4031	588,920.6424
7361	98+54.4024	46.7495	601,520.8900	588,914.6557
7362	98+55.7502	49.2362	601,521.7591	588,917.3473
7363	98+65.4600	46.6667	601,531.7754	588,916.6011
7364	98+60.6670	50.2430	601,526.4081	588,919.2382
7368	98+51.7989	71.3178	601,513.8273	588,938.3305
7369	95+42.8890	-79.6793	601,237.8280	588,733.2698
7370	95+52.8890	-79.6793	601,247.6586	588,735.1028
7371	96+21.3901	133.6756	601,275.8923	588,957.3989
7372	97+04.9693	68.3562	601,370.0281	588,908.5059
7373	99+23.3089	-50.5392	601,606.4616	588,831.6455
7374	99+45.2993	-49.6667	601,627.9195	588,836.5339

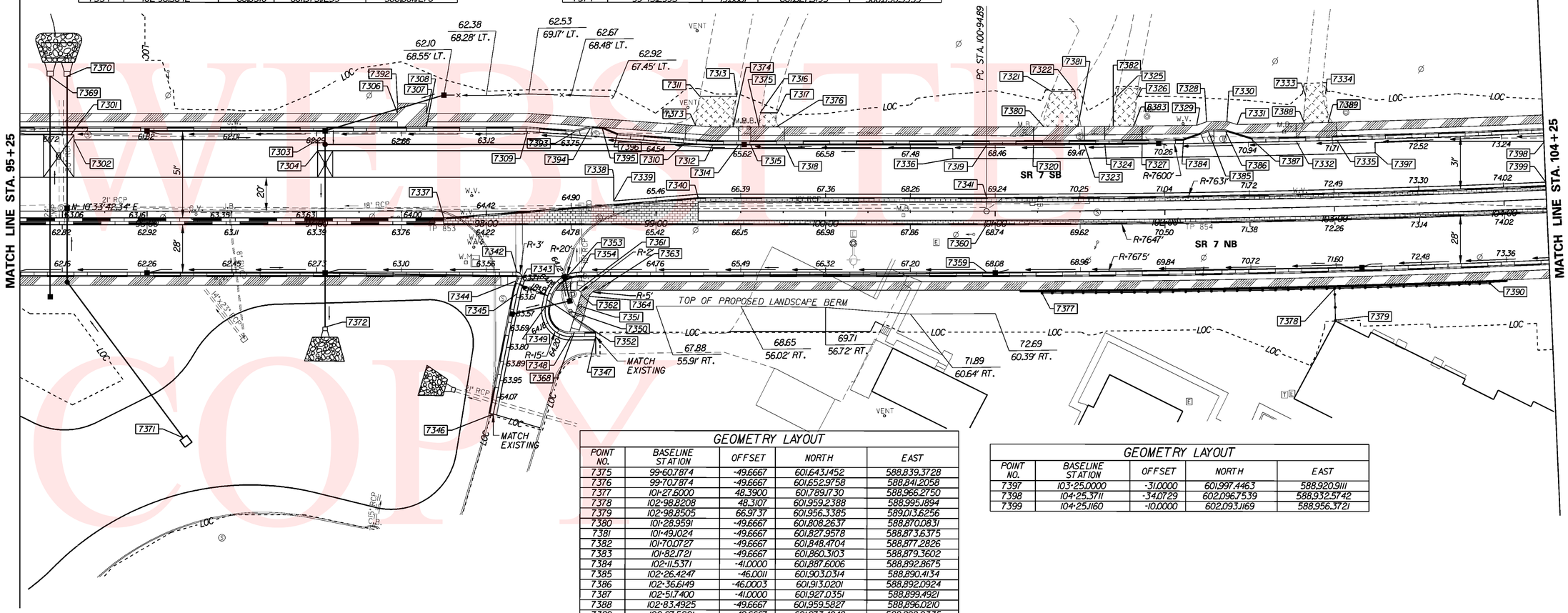

GEOMETRY LAYOUT

POINT NO.	BASELINE STATION	OFFSET	NORTH	EAST
7375	99+60.7874	-49.6667	601,643.1452	588,839.3728
7376	99+70.7874	-49.6667	601,652.9758	588,841.2058
7377	101+27.6000	48.3900	601,789.1730	588,966.2750
7378	102+98.8208	48.3107	601,959.2388	588,995.1894
7379	102+98.8505	66.9737	601,956.3385	589,013.6256
7380	101+28.9591	-49.6667	601,808.2637	588,870.0831
7381	101+49.1024	-49.6667	601,827.9578	588,873.6375
7382	101+70.0727	-49.6667	601,848.4704	588,877.2826
7383	101+82.1721	-49.6667	601,860.3103	588,879.3602
7384	102+11.5371	-41.0000	601,887.6006	588,892.8675
7385	102+26.4247	-46.0011	601,903.0314	588,890.4134
7386	102+36.6149	-46.0003	601,913.0201	588,892.0924
7387	102+51.7400	-41.0000	601,927.0351	588,899.4921
7388	102+83.4925	-49.6667	601,959.5827	588,896.0210
7389	102+97.5821	-49.6667	601,973.4048	588,898.2335
7390	103+89.7000	48.3500	602,049.7340	589,009.0610
7392	97+47.6255	-63.6667	601,436.1608	588,786.5384
7393	98+52.1620	-46.9574	601,535.8635	588,822.1257
7394	98+61.3573	-49.2911	601,545.3308	588,821.5170
7395	98+68.3486	-48.7784	601,552.1097	588,823.3024
7396	98+77.1051	-45.1282	601,560.0487	588,828.4958

GEOMETRY LAYOUT

POINT NO.	BASELINE STATION	OFFSET	NORTH	EAST
7397	103+25.0000	-31.0000	601,997.4463	588,920.9111
7398	104+25.3711	-34.0729	602,096.7539	588,932.5742
7399	104+25.1160	-10.0000	602,093.1169	588,956.3721

PREL. TRACING ____ SJB DESIGN ____ KGM-A CHKD. ____ JRR

10:25:11 AM m:\31131-04\gg03sr7.plf

UNOFFICIAL WEB SITE COPY

CONTRACT	COUNTY	F.A.P. NO.	SHEET NO.	TOTAL SHTS.
T200312601	NEW CASTLE	SEE TITLE SHEET	34	115

SR 7, NEWTOWN ROAD TO SR 273

REVISIONS

GRADES AND GEOMETRICS

SCALE 0 30 60 90 FEET

N

NOTES:

1. SEE GRADES AND GEOMETRICS DETAIL SHEET FOR P.C.C. ISLAND GRADES AND GEOMETRICS.
2. OFFSETS SHOWN IN THE GEOMETRY TABLES WITH A MINUS SIGN ARE TO THE LEFT OF THE SR 7 CONSTRUCTION BASELINE.
3. UNLESS OTHERWISE NOTED, POINT GEOMETRY ADJACENT TO CURB AND CURB AND GUTTER IS GIVEN TO EDGE OF PAVEMENT.
4. RADII ARE GIVEN TO EDGE OF PAVEMENT.
5. UNLESS OTHERWISE NOTED, EDGE OF GUTTER ELEVATIONS ARE GIVEN AT 10 FOOT INTERVALS ALONG RADII AND 50 FOOT INTERVALS ALONG TANGENTS.
6. ALL WORK REQUIRED FOR CALCULATING AND STAKING OF GRADES SHALL BE PAID FOR UNDER ITEM 763501-CONSTRUCTION ENGINEERING.

GEOMETRY LAYOUT

POINT NO.	BASELINE STATION	OFFSET	NORTH	EAST
7401	104+26.9466	-39.0000	602,098.9986	588,927.9163
7402	104+60.9121	-38.9906	602,132.7872	588,932.7939
7403	104+65.0310	-58.7293	602,139.7521	588,913.8654
7404	104+74.1676	-62.6305	602,149.4321	588,911.3498
7405	104+80.8036	-38.9940	602,152.5662	588,935.7114
7406	106+02.8201	-38.9954	602,273.7171	588,954.7525
7407	106+07.8059	-54.6667	602,281.2279	588,940.1121
7408	106+25.6780	-54.6628	602,298.9807	588,943.0852
7409	106+30.6632	-38.9923	602,301.3184	588,959.3720
7410	107+54.8084	-39.0000	602,424.1771	588,981.1705
7411	108+05.7752	-39.0000	602,474.2856	588,990.4850
7412	108+10.0723	-71.9044	602,484.5237	588,958.9201
7413	108+31.7320	-71.9044	602,505.8187	588,962.8785
7414	108+35.7752	-39.0000	602,503.7803	588,995.9676
7415	109+43.0060	-39.0000	602,609.2052	589,015.5646
7416	109+48.0060	-54.6667	602,616.9841	589,001.0755
7417	109+58.0060	-54.6667	602,626.8157	589,002.9031
7418	109+63.0060	-39.0000	602,628.8683	589,019.2197
7419	110+08.3422	-39.0000	602,673.4410	589,027.5051
7420	110+14.6061	-75.8172	602,686.3280	588,992.4527
7421	110+24.6179	-75.6933	602,696.7485	588,994.4043
7422	110+28.3422	-39.0000	602,693.1042	589,031.1602
7423	110+50.0203	-39.0000	602,714.4172	589,035.1220
7424	110+50.0203	-74.0000	602,720.8136	589,000.7114
7425	110+68.0526	-47.1620	602,733.6375	589,030.3929
7426	110+84.9901	-72.5473	602,754.9290	589,008.5306
7429	110+88.3403	-153.1958	602,772.9617	588,929.8526
7431	111+37.6794	-130.4610	602,817.3149	588,961.2215
7432	111+39.6729	-130.2590	602,819.2380	588,961.7844
7433	111+41.9011	-132.1826	602,821.7802	588,960.3004
7434	111+57.3284	-130.4028	602,836.6224	588,964.8696
7435	111+59.5444	-132.1604	602,839.1223	588,963.5466
7436	111+60.5121	-149.0640	602,843.1629	588,947.1046
7437	111+66.3422	-69.2478	602,834.3080	589,026.6420
7438	112+18.5107	-127.0002	602,895.2931	588,979.0935
7439	112+18.5107	-47.0000	602,881.2303	589,057.8480

GEOMETRY LAYOUT

POINT NO.	BASELINE STATION	OFFSET	NORTH	EAST
7440	104+26.9466	-8.0000	602,094.6461	588,958.6092
7441	107+54.8084	-8.0000	602,418.5117	589,011.6484
7442	110+49.7498	-30.1773	602,712.5389	589,043.7466
7443	110+58.8962	-8.0000	602,717.4782	589,067.2220
7444	111+48.8962	2.0000	602,804.1349	589,093.5016
7445	111+53.8437	4.0000	602,808.6363	589,096.3726
7446	111+77.9107	4.0000	602,832.2952	589,100.7704
7447	104+26.9466	8.0000	602,092.3997	588,974.4507
7448	106+08.9648	8.0000	602,272.1049	589,002.1221
7449	107+58.8959	-4.0000	602,421.7994	589,016.3281
7450	110+58.8959	-4.0000	602,716.7469	589,071.1546
7451	111+48.8962	20.0000	602,800.8453	589,111.1984
7452	111+53.8462	8.0000	602,807.9050	589,100.3051
7453	111+77.9107	8.0000	602,831.5642	589,104.7031
7454	104+26.9466	36.0000	602,088.4684	589,002.1733
7455	107+43.0674	36.0000	602,398.9800	589,052.7806
7456	108+93.1167	47.0000	602,544.4392	589,090.9987
7457	110+43.1167	47.0000	602,691.9129	589,118.4120
7458	110+50.0299	20.0000	602,703.6441	589,093.1301
7459	110+57.0861	52.8402	602,704.5798	589,126.7068
7460	110+43.1166	82.0000	602,685.5164	589,152.8225
7461	110+75.2757	68.1872	602,719.5582	589,145.1195
7462	110+95.8813	62.0589	602,741.0368	589,142.8603
7463	110+95.8813	65.5676	602,740.3956	589,146.3099
7464	111+05.8813	65.5682	602,750.2270	589,148.1380
7465	111+05.8813	62.0589	602,750.8684	589,144.6878
7466	111+27.4991	66.4741	602,771.3152	589,152.9794
7467	111+29.9061	105.7635	602,766.5013	589,192.0470
7468	111+27.9292	76.8904	602,769.8344	589,163.2988
7469	111+44.4351	50.4587	602,790.8928	589,140.3288
7470	111+62.9291	76.9807	602,804.2284	589,169.7840
7471	111+63.0194	41.9808	602,810.7136	589,135.3901
7472	112+31.8027	54.6537	602,876.5738	589,160.2624
7473	112+37.1903	42.0000	602,884.1144	589,148.7396
7474	111+64.4408	-118.5439	602,841.4478	588,977.8287
7475	112+96.7537	36.0000	602,944.2409	589,152.8663
7476	111+68.0645	-129.3524	602,846.9857	588,967.8645
7477	111+62.3826	-82.5921	602,832.8538	589,012.7988
7478	111+63.6440	-78.9771	602,833.4334	589,016.5835

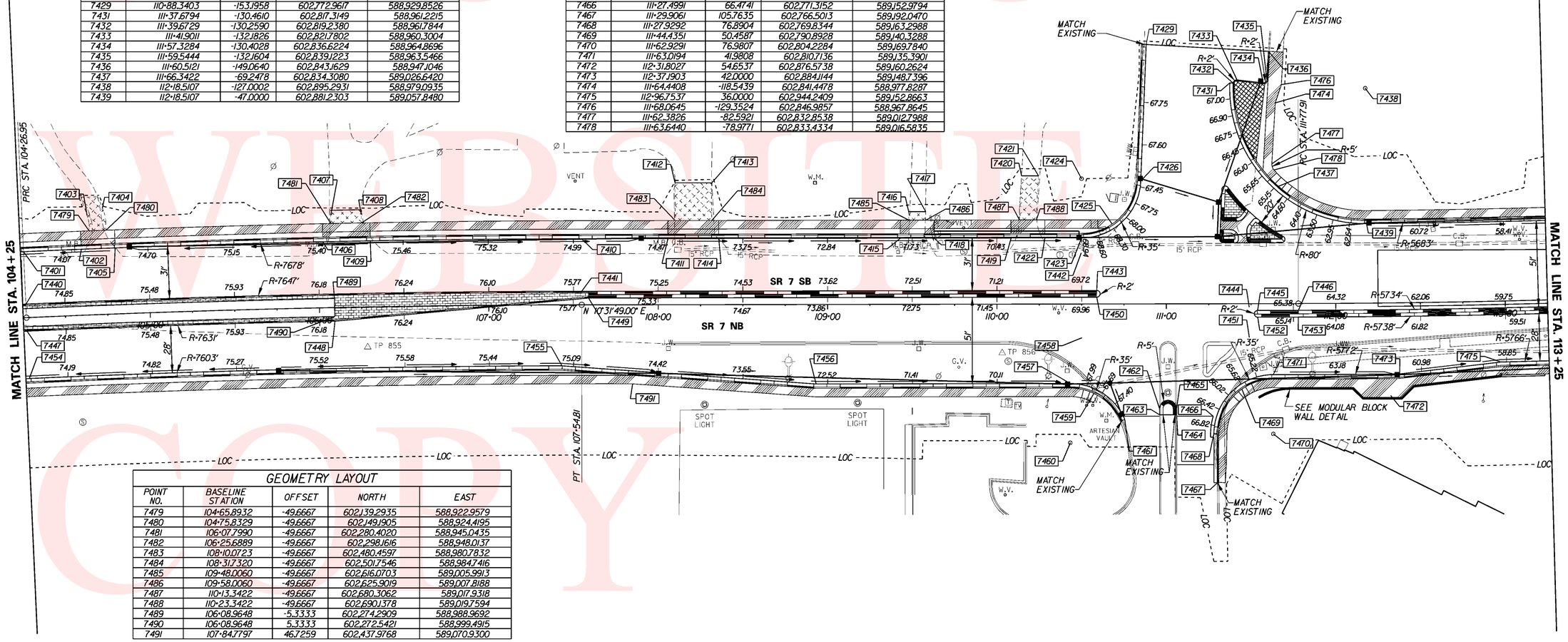

GEOMETRY LAYOUT

POINT NO.	BASELINE STATION	OFFSET	NORTH	EAST
7479	104+65.8932	-49.6667	602,139.2935	588,922.9579
7480	104+75.8329	-49.6667	602,149.1905	588,924.4195
7481	106+07.7990	-49.6667	602,280.4020	588,945.0435
7482	106+25.6889	-49.6667	602,298.1616	588,948.0137
7483	108+10.0723	-49.6667	602,480.4597	588,980.7832
7484	108+31.7320	-49.6667	602,501.7546	588,984.7416
7485	109+48.0060	-49.6667	602,616.0703	589,005.9913
7486	109+58.0060	-49.6667	602,625.9019	589,007.8188
7487	110+13.3422	-49.6667	602,680.3062	589,017.9318
7488	110+23.3422	-49.6667	602,690.1378	589,019.7594
7489	106+08.9648	-5.3333	602,274.2909	588,988.9692
7490	106+08.9648	5.3333	602,272.5421	588,999.4915
7491	107+84.7797	46.7259	602,437.9768	589,070.9300

PRELIM. TRACING ____ SJB ____ DESIGN ____ KGM-A ____ CHKD. ____ JRR

UNOFFICIAL WEBSITE COPY

CONTRACT	COUNTY	F.A.P. NO.	SHEET NO.	TOTAL SHTS
T2003I2601	NEW CASTLE	SEE TITLE SHEET	35	115

SR 7, NEWTOWN ROAD TO SR 273

REVISIONS

GRADES AND GEOMETRICS

SCALE 0 30 60 90 FEET

NOTES:

1. SEE GRADES AND GEOMETRICS DETAIL SHEET FOR P.C.C. ISLAND GRADES AND GEOMETRICS.
2. OFFSETS SHOWN IN THE GEOMETRY TABLES WITH A MINUS SIGN ARE TO THE LEFT OF THE SR 7 CONSTRUCTION BASELINE.
3. UNLESS OTHERWISE NOTED, POINT GEOMETRY ADJACENT TO CURB AND CURB AND GUTTER IS GIVEN TO EDGE OF PAVEMENT.
4. RADII ARE GIVEN TO EDGE OF PAVEMENT.
5. UNLESS OTHERWISE NOTED, EDGE OF GUTTER ELEVATIONS ARE GIVEN AT 10 FOOT INTERVALS ALONG RADII AND 50 FOOT INTERVALS ALONG TANGENTS.
6. ALL WORK REQUIRED FOR CALCULATING AND STAKING OF GRADES SHALL BE PAID FOR UNDER ITEM 763501 - CONSTRUCTION ENGINEERING.

GEOMETRY LAYOUT

POINT NO.	BASELINE STATION	OFFSET	NORTH	EAST
7501	113+59.3770	-54.6667	603,020.2155	589,073.1359
7502	113+76.5680	-57.6667	603,037.4954	589,072.7241
7503	113+76.5454	-49.6668	603,036.2847	589,080.6319
7504	114+23.4704	-47.0000	603,081.9399	589,089.9950
7505	114+23.4704	-97.0000	603,088.9633	589,040.4907
7506	114+59.0939	-65.2706	603,119.3900	589,076.7440
7507	1+35.1621	-13.8629	603,142.1313	589,009.2779
7508	1+40.2434	-18.7803	603,137.9210	589,003.5970
7509	1+40.4238	-29.7788	603,127.0406	589,001.9794
7510	1+42.4563	-31.7457	603,125.3564	588,999.7070
7511	0+96.4423	-12.4978	603,138.4197	589,047.8435
7512	0+98.2393	11.5349	603,162.4809	589,049.2058
7513	1+40.6606	12.2307	603,168.7201	589,007.2402
7514	2+10.5561	-30.6287	603,135.3723	588,932.3385
7515	115+16.1825	-63.0612	603,175.0789	589,086.2377
7516	115+49.6280	-97.0000	603,211.9374	589,056.5586
7517	115+49.6280	-47.0000	603,206.0056	589,106.2055
7518	116+35.6566	-62.8656	603,292.4443	589,099.9115
7519	116+35.4356	-60.8774	603,292.0206	589,101.8662
7520	116+50.4550	-47.0000	603,305.3986	589,117.1949
7521	117+24.6000	-51.5000	603,379.0016	589,119.6769
7522	117+51.2820	-36.0000	603,404.0497	589,137.3952
7523	117+89.6710	-38.6667	603,442.2795	589,137.7991
7524	117+94.3845	-36.0000	603,446.7445	589,140.8164
7525	117+96.6660	-51.5000	603,450.7189	589,125.5331
7526	117+99.6949	-54.4987	603,453.3975	589,122.7694
7527	117+99.6996	-61.2356	603,453.9089	589,116.0519
7528	117+94.3845	-76.0000	603,449.7895	589,100.9325
7529	118+02.7358	-64.2327	603,457.1279	589,113.2883
7530	118+20.0218	-64.1858	603,474.1709	589,114.5857

GEOMETRY LAYOUT

POINT NO.	BASELINE STATION	OFFSET	NORTH	EAST
7531	118+24.1354	-63.3005	603,478.1653	589,115.7588
7532	118+26.8016	-62.1083	603,480.7114	589,117.1344
7533	118+28.2152	-57.9421	603,481.8136	589,121.3888
7534	118+29.9898	-56.9862	603,483.4990	589,122.4655
7535	118+25.7657	-55.2497	603,479.2047	589,123.9036
7536	118+90.8004	-56.5193	603,543.5510	589,126.8230
7537	118+88.7698	-60.2751	603,541.7682	589,122.9542
7538	118+90.6930	-60.8910	603,543.7043	589,122.4527
7539	118+89.5788	-64.2964	603,542.8067	589,118.9878
7540	118+96.6403	-70.3132	603,550.1278	589,113.3928
7541	119+13.4341	-62.0412	603,566.2304	589,122.5952
7542	119+10.6539	-72.0000	603,564.0411	589,112.4989
7544	118+94.3910	-65.8341	603,547.6469	589,117.7341
7545	119+10.6539	-47.0000	603,562.6441	589,137.4599
7546	120+42.3494	-47.0000	603,693.1277	589,143.2595
7547	120+62.1386	-47.0000	603,712.5045	589,143.8143
7548	121+84.7671	-39.0000	603,832.8445	589,151.5303
7549	114+01.0246	-27.8932	603,057.1472	589,105.7315
7550	114+52.7043	4.0000	603,103.7507	589,144.5247
7551	116+02.5997	-8.0000	603,253.9312	589,150.9627
7552	117+81.7216	-8.0005	603,432.0055	589,167.7581
7553	119+02.0716	4.0000	603,551.2197	589,187.8938
7554	120+42.3494	4.0000	603,691.4487	589,194.2318
7555	120+50.4419	-17.4273	603,700.1814	589,173.0664
7556	120+50.0252	-1.0000	603,699.2820	589,189.4743
7557	114+52.8902	8.0000	603,103.3935	589,148.5131
7558	116+02.8745	-4.0094	603,253.7674	589,154.9594

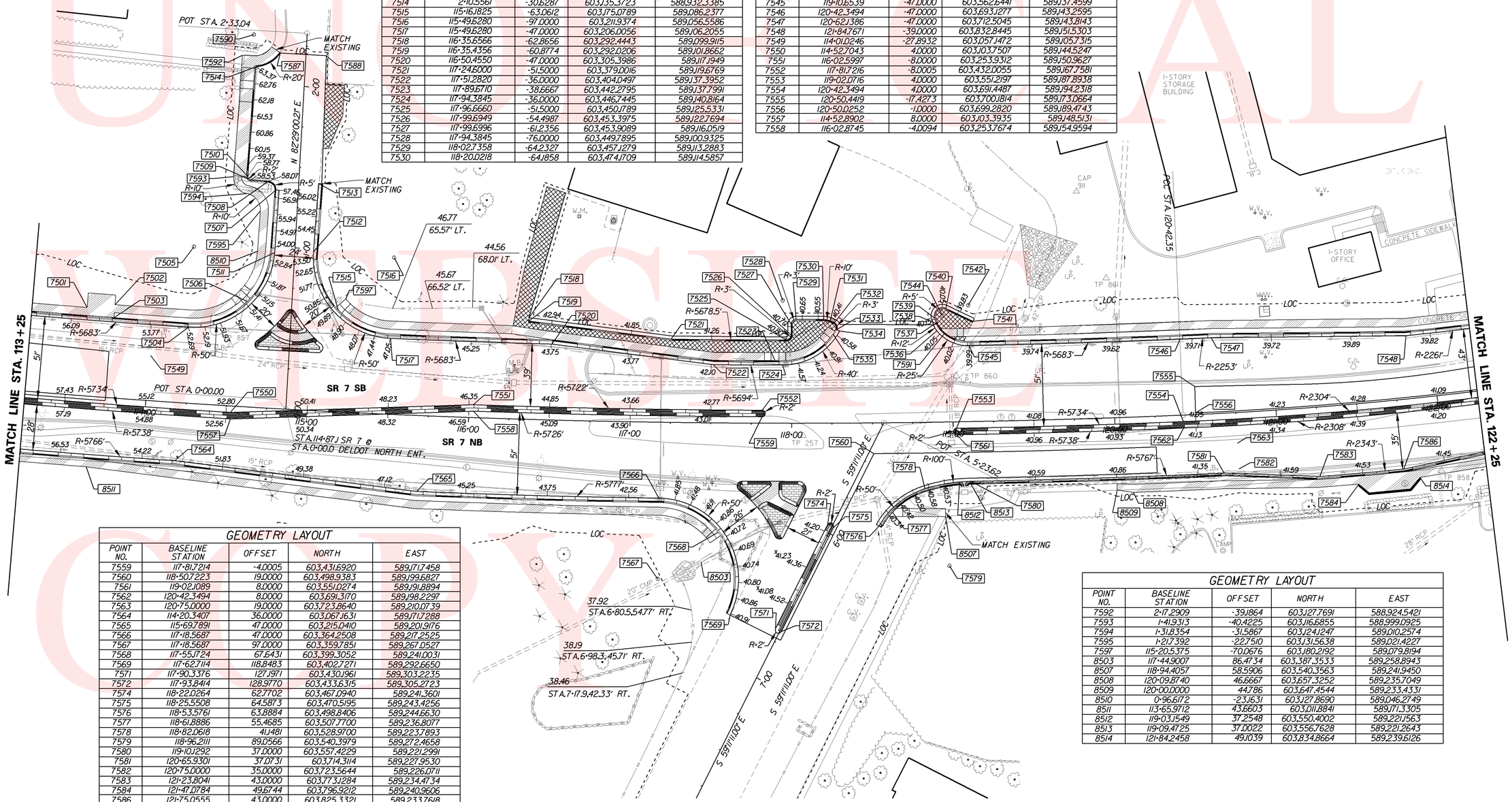

GEOMETRY LAYOUT

POINT NO.	BASELINE STATION	OFFSET	NORTH	EAST
7559	117+81.7214	-4.0005	603,431.6920	589,171.7458
7560	118+50.7223	19.0000	603,498.9383	589,199.6827
7561	119+02.1089	8.0000	603,551.0274	589,191.8894
7562	120+42.3494	8.0000	603,691.3170	589,198.2297
7563	120+75.0000	19.0000	603,723.8640	589,210.0739
7564	114+20.3407	36.0000	603,067.1631	589,171.7288
7565	115+69.7891	47.0000	603,215.0410	589,201.9176
7566	117+18.5687	47.0000	603,364.2508	589,217.2525
7567	117+18.5687	97.0000	603,359.7851	589,267.0527
7568	117+55.1724	67.6431	603,399.3052	589,241.0031
7569	117+62.7114	118.8483	603,402.7271	589,292.6650
7571	117+90.3376	127.1971	603,430.1961	589,303.2235
7572	117+93.8414	128.9770	603,433.6315	589,305.2723
7574	118+22.0264	62.7702	603,467.0940	589,241.3601
7575	118+25.5508	64.5873	603,470.5195	589,243.4256
7576	118+53.5761	63.8884	603,498.8406	589,244.6630
7577	118+61.8886	55.4685	603,507.7700	589,236.8077
7578	118+82.0618	41.1481	603,528.9700	589,223.7893
7579	118+96.2111	89.0566	603,540.3979	589,272.4658
7580	119+10.1292	37.0000	603,557.4229	589,221.2991
7581	120+65.9301	37.0731	603,714.3114	589,227.9530
7582	120+75.0000	35.0000	603,723.5644	589,226.0711
7583	121+23.8041	43.0000	603,773.1284	589,234.4734
7584	121+47.0784	49.6744	603,796.9212	589,240.9606
7586	121+75.0555	43.0000	603,825.3321	589,233.7618
7587	2+19.9600	-15.8778	603,151.2265	588,924.9451
7588	2+19.9130	12.6267	603,179.4800	588,928.7205
7590	2+30.4300	-32.9254	603,135.6977	588,912.3412
7591	118+95.8150	-55.1643	603,548.4283	589,128.4682

GEOMETRY LAYOUT

POINT NO.	BASELINE STATION	OFFSET	NORTH	EAST
7592	2+17.2909	-39.1864	603,127.7691	588,924.5421
7593	1+41.9313	-40.4225	603,116.6855	588,999.0925
7594	1+31.8354	-31.5867	603,124.1247	589,010.2574
7595	1+21.7392	-22.7510	603,131.5638	589,021.4227
7597	115+20.5375	-70.0676	603,180.2192	589,079.8194
8503	117+44.9007	86.4734	603,387.3533	589,258.8943
8507	118+94.4057	58.5906	603,540.3563	589,241.9450
8508	120+09.8740	46.6667	603,657.3252	589,235.7049
8509	120+00.0000	44.786	603,647.4544	589,233.4331
8510	0+96.6172	-23.1631	603,127.8690	589,046.2749
8511	113+65.9712	43.6603	603,011.8841	589,171.3305
8512	119+03.1549	37.2548	603,550.4002	589,221.1563
8513	119+09.4725	37.0022	603,556.7628	589,221.2643
8514	121+84.2458	49.1039	603,834.8664	589,239.6126

UNOFFICIAL WEBSITE COPY

PRELIM. TRACING ____ SJB ____ DESIGN ____ KGM-A ____ CHKD. ____ JRR

3:53:00 PM M:\31131-04\gg05sr7.plf

CONTRACT	COUNTY	F.A.P. NO.	SHEET NO.	TOTAL SHTS.
T200312601	NEW CASTLE	SEE TITLE SHEET	36	115

SR 7, NEWTOWN ROAD TO SR 273

REVISIONS

GRADES AND GEOMETRICS

SCALE 0 30 60 90 FEET

GEOMETRY LAYOUT

POINT NO.	BASELINE STATION	OFFSET	NORTH	EAST
7601	122+54.5145	-17.3660	603,902.6223	589,170.0997
7602	123+14.5115	-39.0100	603,960.1625	589,144.2298
7603	123+19.5626	-54.6667	603,963.7396	589,128.2041
7604	123+29.8061	-54.6754	603,973.6985	589,127.2984
7605	123+34.8804	-39.0011	603,980.1060	589,142.4423
7606	124+16.7517	-39.0017	604,060.0799	589,133.4422
7607	124+21.7806	-54.6691	604,062.9184	589,117.2656
7608	124+42.2677	-54.6758	604,082.7315	589,114.5375
7609	124+47.3031	-39.0061	604,089.8330	589,129.3510
7610	125+13.9374	-48.2198	604,152.9449	589,109.9913
7611	125+32.3494	-39.0000	604,172.3437	589,115.9037
7612	125+39.6041	-39.0000	604,179.4811	589,114.6041
7613	125+39.6041	-40.9959	604,179.1236	589,112.6405
7614	123+29.4632	-1.0000	603,978.2913	589,180.7780
7615	125+53.5835	-50.6138	604,191.1538	589,100.6738
7616	125+66.9754	-43.7876	604,205.5519	589,104.9905
7617	125+68.8138	-41.0000	604,207.8600	589,107.4036
7618	125+68.8138	-39.0000	604,208.2182	589,109.3713
7619	126+36.1749	-39.0000	604,274.4897	589,097.3039
7620	126+33.4022	-46.4768	604,270.4223	589,090.4448
7621	126+36.1749	-41.5056	604,274.0408	589,094.8388
7622	126+50.2874	-46.0337	604,287.1137	589,087.8558
7623	126+69.6335	-63.4265	604,303.0311	589,067.2786
7624	126+61.4978	-41.0000	604,299.0446	589,090.7998
7625	126+61.4978	-39.0000	604,299.4029	589,092.7674
7626	126+61.4977	-55.9998	604,296.3574	589,076.0426
7627	127+20.9373	-39.0000	604,357.8808	589,082.1191
7628	127+20.4506	-63.9462	604,352.9330	589,057.6637
7629	127+57.2619	-46.6667	604,392.2443	589,068.0691
7630	127+46.9285	-46.6668	604,382.0781	589,069.9201

GEOMETRY LAYOUT

POINT NO.	BASELINE STATION	OFFSET	NORTH	EAST
7631	127+40.9373	-39.0000	604,377.5573	589,078.5362
7633	128+70.3130	-119.0000	604,490.5084	588,976.6534
7634	128+70.3130	-39.0000	604,504.8400	589,055.3592
7635	128+48.8080	-41.6667	604,483.2052	589,056.5882
7636	129+31.9759	-87.3016	604,556.8524	588,996.7924
7637	129+44.4702	-149.0118	604,558.0895	588,933.8422
7638	129+28.5469	-188.3571	604,535.3753	588,897.9859
7639	129+37.9541	-81.5152	604,563.7705	589,001.4142
7646	129+95.0000	-39.0000	604,627.5099	589,033.0221
7647	123+01.5229	4.0000	603,950.8646	589,188.1563
7648	124+51.2625	-8.0000	604,098.1609	589,159.4738
7649	125+32.3492	-8.0003	604,177.8970	589,146.4020
7650	129+69.0355	-8.0000	604,607.5189	589,068.1721
7651	123+01.7476	8.0000	603,951.4080	589,192.1256
7652	124+51.3577	-4.0000	604,098.8323	589,163.4182
7653	125+32.3494	-4.0000	604,178.6138	589,150.3375
7654	125+49.8258	4.8140	604,197.3865	589,155.8781
7655	125+81.3903	2.0000	604,227.9363	589,147.4550
7656	129+69.0355	-4.0000	604,608.2355	589,072.1074
7657	122+33.7485	37.0000	603,884.7771	589,225.5259
7658	123+48.2920	36.9996	604,000.8224	589,216.7834
7659	125+82.4521	45.2765	604,236.7336	589,189.8412
7660	125+90.0000	55.1165	604,245.9222	589,198.1698
7661	126+00.0000	53.3881	604,255.4508	589,194.6780
7662	126+50.0000	46.8987	604,303.4794	589,179.3363
7663	129+67.3138	48.4680	604,615.9410	589,124.0350
7664	129+75.2613	50.4088	604,624.1077	589,124.5206
7665	129+87.3055	49.0984	604,635.7223	589,121.0738
7670	127+42.9285	-50.6667	604,377.4262	589,066.7015
7671	127+42.9285	-59.8830	604,375.7752	589,057.6343
7672	127+44.9341	-61.8774	604,377.3911	589,055.3129
7673	127+47.2675	-61.8709	604,379.6879	589,054.9013
7674	127+49.2619	-59.8709	604,382.0083	589,056.5117
7675	127+49.2619	-49.0067	604,383.9546	589,067.2001

GEOMETRY LAYOUT

POINT NO.	BASELINE STATION	OFFSET	NORTH	EAST
7676	122+28.2711	-39.0000	603,875.5786	589,149.8863
7677	123+13.6245	-39.0000	603,959.2946	589,144.3139
7678	122+59.1739	-67.9733	603,904.1356	589,119.3088
7679	122+83.8048	-81.3737	603,927.0205	589,104.3500
7680	122+44.7517	-46.8866	603,891.3241	589,141.1778
7681	122+96.7736	-46.9118	603,942.1702	589,137.7722
7682	125+49.3330	-45.4902	604,187.8899	589,106.4759

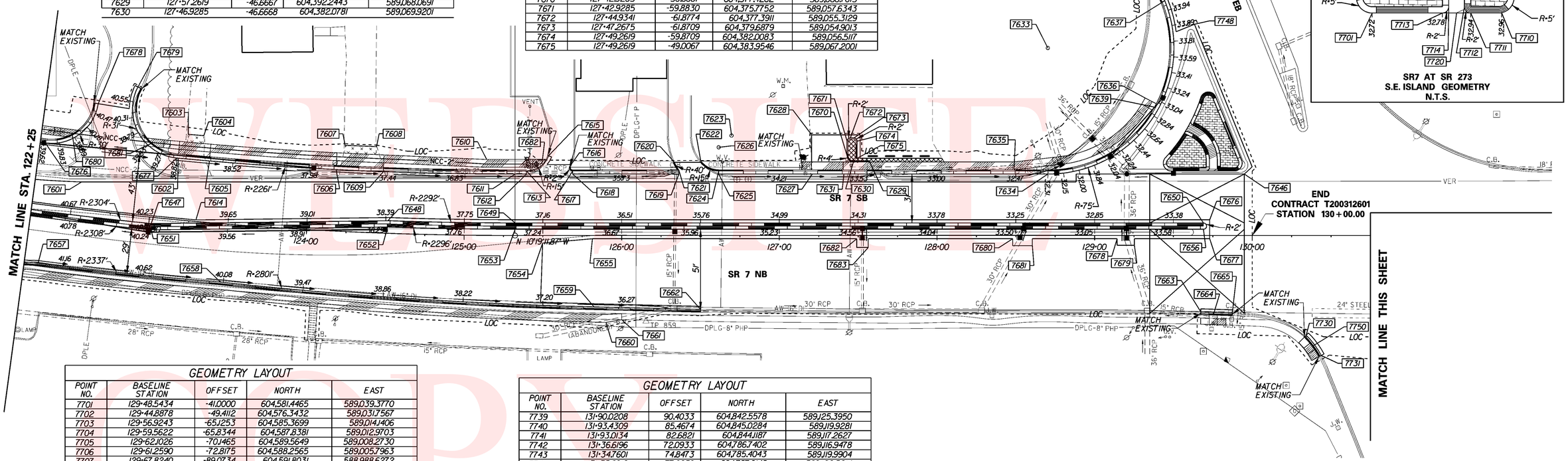

GEOMETRY LAYOUT

POINT NO.	BASELINE STATION	OFFSET	NORTH	EAST
7701	129+48.5434	-41.0000	604,581.4465	589,039.3770
7702	129+44.8878	-49.4112	604,576.3432	589,031.7567
7703	129+56.9243	-65.1253	604,585.3699	589,014.1406
7704	129+59.5622	-65.8344	604,587.8381	589,012.9703
7705	129+62.1026	-70.1465	604,589.5649	589,008.2730
7706	129+61.2590	-72.8175	604,588.2565	589,005.7963
7707	129+67.8240	-89.0734	604,591.8031	588,988.6272
7708	129+76.7610	-88.0109	604,600.7859	588,988.0715
7709	129+93.1984	-47.8958	604,624.1438	589,024.5930
7710	129+89.6524	-41.0000	604,621.8905	589,032.0125
7711	129+79.8251	-41.0140	604,612.2197	589,033.7592
7712	129+77.8251	-43.0140	604,609.8938	589,032.1499
7713	129+70.8250	-41.0000	604,603.3677	589,035.3853
7714	129+72.8250	-42.9930	604,604.9783	589,033.0663
7715	129+72.8401	-47.2897	604,604.2234	589,028.8363
7716	129+62.7670	-64.1287	604,591.2967	589,014.0743
7717	129+79.8400	-47.2653	604,611.1145	589,027.6064
7718	129+66.0565	-70.3077	604,593.4260	589,007.4060
7719	129+59.1749	-68.9245	604,586.9035	589,009.9997
7720	129+75.3216	-41.0000	604,607.7915	589,034.5798
7730	130+34.2190	63.2103	604,684.4049	589,126.5531
7731	130+43.7348	76.0080	604,696.0594	589,137.4390
7732	131+30.3372	63.9820	604,779.1065	589,110.0932
7733	131+31.0913	65.8344	604,780.1802	589,111.7805
7734	131+75.7347	67.2304	604,824.3514	589,105.1563
7735	131+84.6505	70.2066	604,833.6561	589,106.4872
7736	131+96.2369	78.8488	604,846.6034	589,112.9139
7737	131+98.9439	78.5558	604,849.2140	589,112.1407
7738	132+02.3053	74.8550	604,851.8581	589,107.8976

GEOMETRY LAYOUT

POINT NO.	BASELINE STATION	OFFSET	NORTH	EAST
7739	131+90.0208	90.4033	604,842.5578	589,125.3950
7740	131+93.4309	85.4674	604,845.0284	589,119.9281
7741	131+93.0134	82.6821	604,844.1187	589,117.2627
7742	131+36.6196	72.0933	604,786.7402	589,116.9478
7743	131+34.7601	74.8473	604,785.4043	589,119.9904
7744	131+35.8912	77.6259	604,787.0148	589,122.5214
7745	132+11.4105	103.5358	604,865.9540	589,134.4833
7746	132+21.3124	90.4413	604,873.3500	589,119.8266
7747	131+32.9367	67.0803	604,782.2189	589,112.6757
7748	129+63.2866	-134.0493	604,579.2819	588,945.1918
7749	132+17.4929	97.8194	604,870.9139	589,127.7696
7750	130+38.1057	70.2569	604,689.4911	589,132.7894

NOTES:

1. OFFSETS SHOWN IN THE GEOMETRY TABLES WITH A MINUS SIGN ARE TO THE LEFT OF THE SR 7 CONSTRUCTION BASELINE.
2. UNLESS OTHERWISE NOTED, POINT GEOMETRY ADJACENT TO CURB AND CURB AND GUTTER IS GIVEN TO EDGE OF PAVEMENT.
3. RADII ARE GIVEN TO EDGE OF PAVEMENT.
4. UNLESS OTHERWISE NOTED, EDGE OF GUTTER ELEVATIONS ARE GIVEN AT 10 FOOT INTERVALS ALONG RADII AND 50 FOOT INTERVALS ALONG TANGENTS.
5. ALL WORK REQUIRED FOR CALCULATING AND STAKING OF GRADES SHALL BE PAID FOR UNDER ITEM 763501 - CONSTRUCTION ENGINEERING.

PRELIM. TRACING SJB DESIGN KGM-A CHKD. JRR

WEBSITE COPY

CONTRACT	COUNTY	F.A.P. NO.	SHEET NO.	TOTAL SHTS.
T200312601	NEW CASTLE	SEE TITLE SHEET	37	115

SR 7, NEWTOWN ROAD TO SR 273

REVISIONS

GRADES AND GEOMETRICS

SCALE 0 30 60 90 FEET

GEOMETRY LAYOUT				
POINT NO.	BASELINE STATION	OFFSET	NORTH	EAST
7780	10+22.0166	-58.5971	603,301.5281	589,639.1985
7781	10+59.9466	-60.9035	603,284.0794	589,672.9556
7782	10+59.3115	-56.9035	603,280.9694	589,670.3612
7783	10+59.5877	-52.9035	603,277.3926	589,668.5494
7784	11+18.4362	-60.4063	603,253.6912	589,722.9340
7785	11+21.2747	-56.4063	603,248.8018	589,723.3229
7786	11+22.6073	-52.4063	603,244.6838	589,722.4184
7787	14+42.9218	-21.8831	603,077.5174	589,988.7747
7788	14+42.9218	24.8577	603,033.4240	589,973.2674

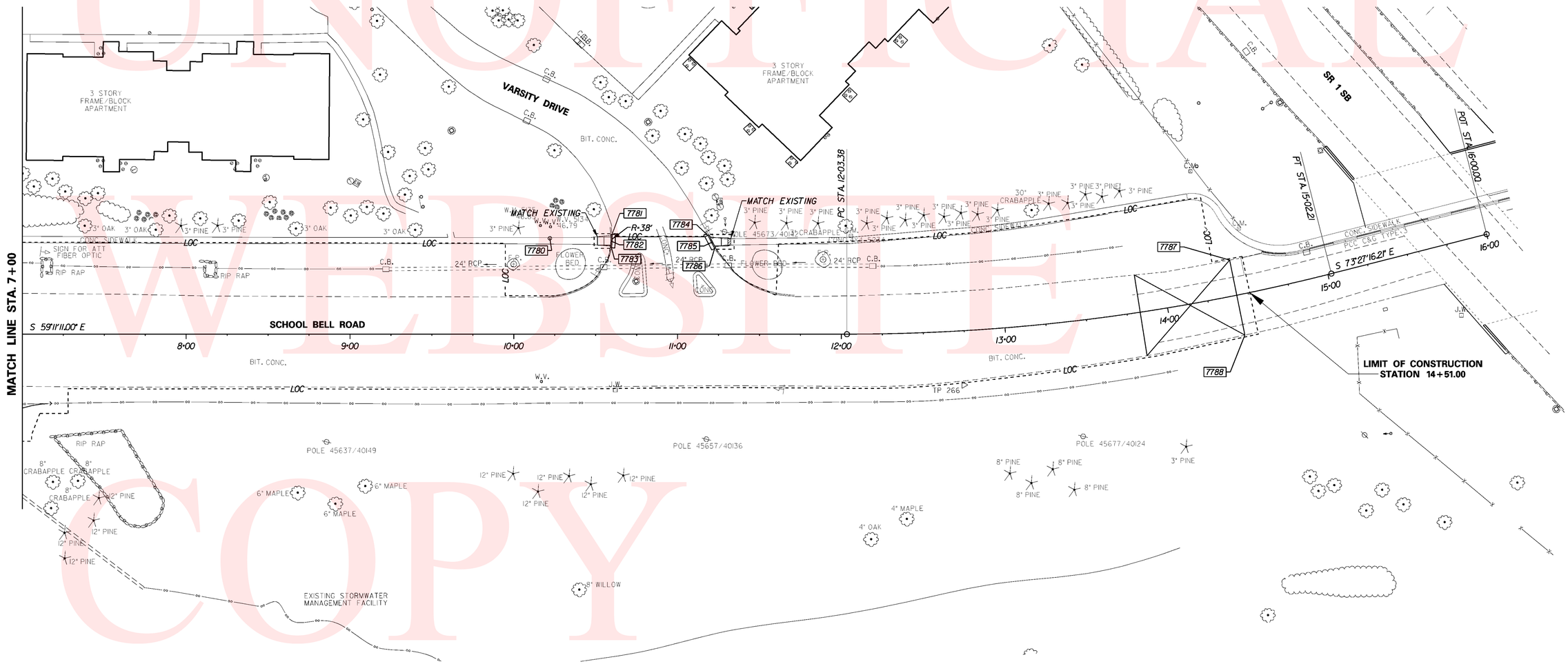

UNOFFICIAL WEBSITE COPY

PREL. TRACING SJB DESIGN KGM-A CHKD. JRR

10:25:32 AM m:\31131-04\gg07sr7.pif

CONTRACT	COUNTY	F.A.P. NO.	SHEET NO.	TOTAL SHTS.
T2003126 01	NEW CASTLE	SEE TITLE SHEET	38	115

SR 7, NEWTOWN ROAD TO SR 273

REVISIONS

GRADES AND GEOMETRICS

SCALE 0 30 60 90 FEET

N

GEOMETRY LAYOUT				
POINT NO.	BASELINE STATION	OFFSET	NORTH	EAST
7242	91+78.8261	127.0000	600,842.0498	588,869.7166
7252	239+85.0000	-26.0000	600,965.8401	588,915.3625
7271	239+97.0598	-73.9656	601,010.9976	588,934.8973
8101	239+96.8673	36.6410	600,902.0083	588,916.0515
8102	239+91.0746	39.4198	600,900.4152	588,909.3430
8103	239+58.4526	-51.1312	600,995.4115	588,893.8713
8104	239+52.1497	-48.3355	600,993.8185	588,887.1628
8105	240+22.8203	-23.6757	600,959.8131	588,947.6868
8106	240+04.4961	24.4486	600,912.7464	588,927.0071
8107	241+50.1830	-11.0000	600,999.3407	589,048.3249
8108	241+48.9825	32.9672	600,972.1660	589,082.9105
8109	242+90.6396	-86.4083	601,157.0821	589,071.3930
8110	242+99.3434	-94.3333	601,168.7936	589,070.2100
8111	242+99.1615	-73.3341	601,156.1419	589,086.9710
8112	243+37.8359	-78.5749	601,190.3314	589,105.7926
8113	242+74.8695	-36.0000	601,114.3938	589,102.4961
8114	242+74.8695	-11.0000	601,099.5055	589,122.5794
8115	242+99.8690	-35.8324	601,134.3768	589,117.5186
8116	242+74.6977	22.0001	601,079.7150	589,148.9871
8117	242+99.6446	47.0530	601,084.8358	589,183.9696
8118	242+74.6447	47.0000	601,064.7841	589,169.0388
8119	239+62.8176	24.0598	600,920.6944	588,884.3802
8120	243+23.6851	-94.7057	601,188.5700	589,084.4070
8121	243+91.7088	-83.3056	601,236.4265	589,134.0752
8600	241+73.4429	58.0000	600,976.9349	589,117.6064
8601	241+97.4429	58.0000	600,996.2148	589,131.8991
8602	241+97.4429	47.0000	601,002.7654	589,123.0629
8603	242+22.4429	22.0000	601,037.7370	589,117.8678
8604	239+85.0000	24.0598	600,916.6285	588,906.1868

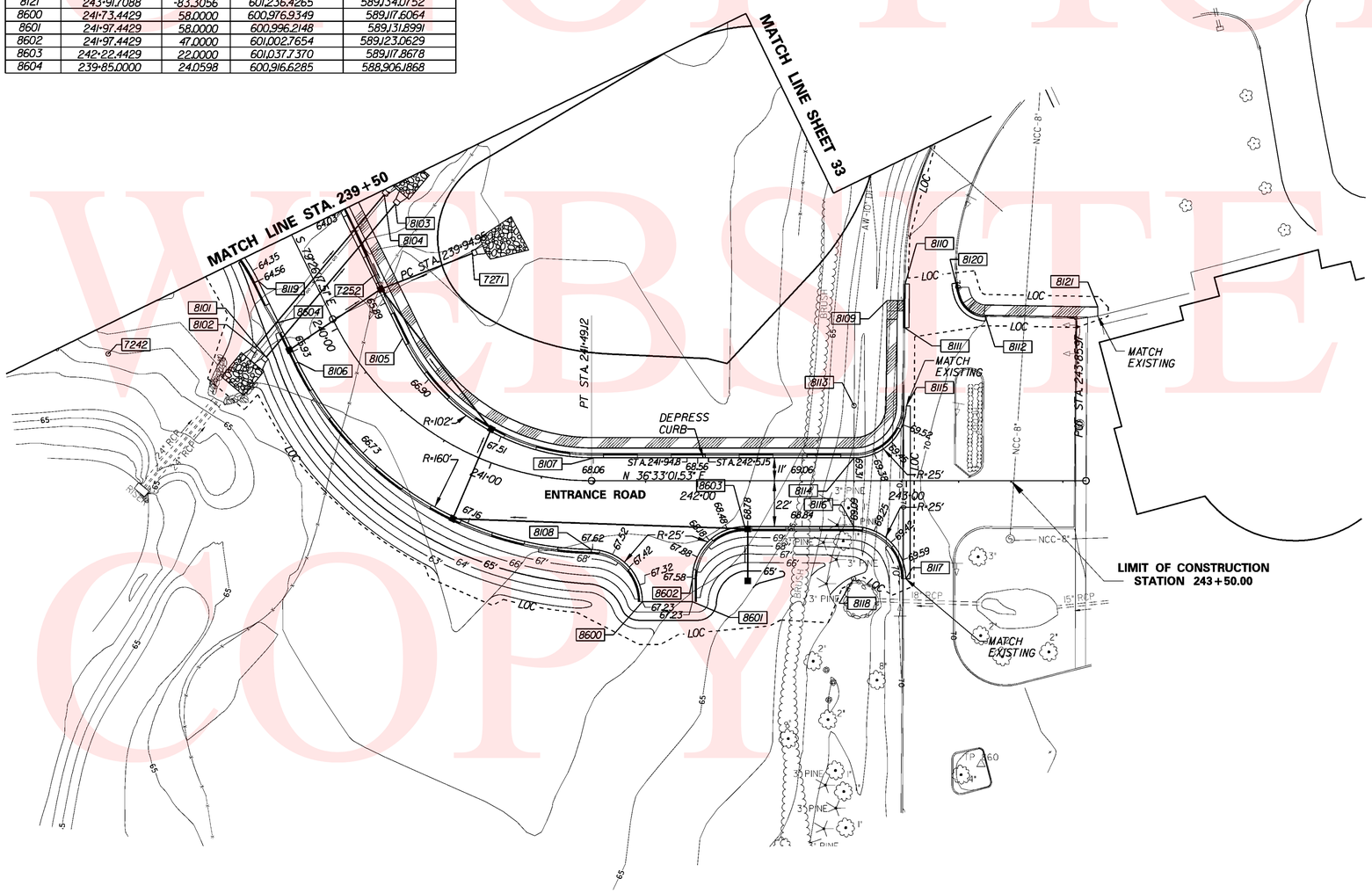

NOTES:

1. SEE GRADES AND GEOMETRICS DETAIL SHEET FOR P.C.C. ISLAND GRADES AND GEOMETRICS.
2. OFFSETS SHOWN IN THE GEOMETRY TABLES WITH A MINUS SIGN ARE TO THE LEFT OF THE SR 7 CONSTRUCTION BASELINE.
3. UNLESS OTHERWISE NOTED, POINT GEOMETRY ADJACENT TO CURB AND CURB AND GUTTER IS GIVEN TO EDGE OF PAVEMENT.
4. RADII ARE GIVEN TO EDGE OF PAVEMENT.
5. UNLESS OTHERWISE NOTED, EDGE OF GUTTER ELEVATIONS ARE GIVEN AT 10 FOOT INTERVALS ALONG RADII AND 50 FOOT INTERVALS ALONG TANGENTS.
6. ALL WORK REQUIRED FOR CALCULATING AND STAKING OF GRADES SHALL BE PAID FOR UNDER ITEM 763501 - CONSTRUCTION ENGINEERING.

PREL. TRACING SJB DESIGN KGM-A CHKD. JRR

OFFICIAL WEBSITE COPY

CONTRACT	COUNTY	F.A.P. NO.	SHEET NO.	TOTAL SHTS.
T2003126101	NEW CASTLE	SEE TITLE SHEET	39	115

SR 7, NEWTOWN ROAD TO SR 273

REVISIONS

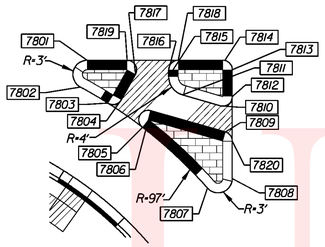

SR 7 AT RIVERS END DRIVE
S.E. ISLAND GEOMETRY
STA. 92+40, 46' RT.
N.T.S.

NOTES:
1. EDGE OF CURB RADII EQUAL 2 FEET UNLESS OTHERWISE NOTED IN DETAIL.

GEOMETRY LAYOUT

POINT NO.	BASELINE STATION	OFFSET	NORTH	EAST	ELEV.
7801	92+26.3234	36.0000	600,905.4223	588,788.9643	63.82
7802	92+24.8985	41.6400	600,902.9877	588,794.2476	63.70
7803	92+30.7073	45.0406	600,908.0748	588,798.6553	63.57
7804	92+33.5265	44.3199	600,910.9783	588,798.4636	63.60
7805	92+37.9742	50.1202	600,914.2875	588,804.9809	63.40
7806	92+39.7444	46.6124	600,916.6707	588,801.8569	63.45
7807	92+51.6341	62.9064	600,925.3723	588,820.0542	62.82
7808	92+56.8859	60.9241	600,930.8985	588,819.0681	62.78
7809	92+55.4366	51.1067	600,931.2732	588,809.1514	62.90
7810	92+54.3305	45.5823	600,931.1985	588,803.5179	63.05
7811	92+46.3828	43.2850	600,923.8065	588,799.8027	63.35
7812	92+56.8859	43.6610	600,934.0627	588,802.0975	62.95
7813	92+56.8859	38.0000	600,935.1004	588,796.5324	63.10
7814	92+54.8859	36.0000	600,933.5009	588,794.1997	63.40
7815	92+43.4935	39.4423	600,921.6705	588,795.4956	63.52
7816	92+43.4935	38.0000	600,921.9349	588,794.0776	63.55
7817	92+36.4907	38.9692	600,914.8730	588,793.7468	63.65
7818	92+45.4935	36.0000	600,924.2676	588,792.4781	63.61
7819	92+34.7412	36.0000	600,913.6974	588,790.5073	63.73
7820	92+56.8859	53.0294	600,932.3455	588,811.3072	63.85

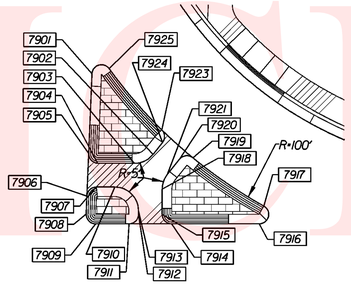

SR 7 AT DELDOT SOUTH ENTRANCE
ISLAND GEOMETRY
STA. 111+45, 36' LT.
N.T.S.

NOTES:
1. EDGE OF CURB RADII EQUAL 2 FEET UNLESS OTHERWISE NOTED IN DETAIL.

GEOMETRY LAYOUT

POINT NO.	BASELINE STATION	OFFSET	NORTH	EAST	ELEV.
7901	111+32.8275	-67.6359	602,801.0632	589,022.1018	66.78
7902	111+45.6754	-50.6440	602,810.5893	589,041.1555	65.99
7903	111+41.7600	-48.7645	602,806.3964	589,042.2878	66.03
7904	111+34.0459	-48.7795	602,798.8150	589,040.8633	66.30
7905	111+32.1307	-50.8608	602,797.3123	589,038.4670	66.40
7906	111+31.7568	-41.8614	602,795.3001	589,047.2465	66.34
7907	111+33.7586	-43.7784	602,797.6185	589,045.7276	66.26
7908	111+31.5999	-38.0830	602,794.4553	589,050.9326	66.34
7909	111+33.5982	-36.0000	602,796.0392	589,053.3457	66.24
7910	111+37.6143	-43.7716	602,801.4080	589,046.4390	66.11
7911	111+40.6041	-36.0000	602,802.9272	589,054.6261	65.96
7912	111+42.6041	-37.9965	602,805.2584	589,053.0287	65.91
7913	111+42.6055	-38.7631	602,805.3998	589,052.2753	65.92
7914	111+49.6007	-36.0000	602,811.7722	589,056.2703	65.61
7915	111+47.6041	-38.0015	602,810.1751	589,053.9376	65.71
7916	111+68.0328	-36.0000	602,829.8939	589,059.6389	64.87
7917	111+69.0049	-39.7479	602,831.5346	589,056.1318	64.93
7918	111+47.6134	-43.3156	602,811.1553	589,048.7147	65.75
7919	111+54.0851	-49.9103	602,818.7233	589,043.4138	65.71
7920	111+51.2699	-49.6362	602,815.9055	589,043.1688	65.78
7921	111+48.7066	-46.4275	602,812.7989	589,045.8551	65.76
7923	111+47.5137	-55.8213	602,813.3429	589,036.4014	66.09
7924	111+47.6745	-53.1467	602,813.0121	589,039.0603	66.00
7925	111+36.4490	-68.7213	602,804.8220	589,021.6965	66.54

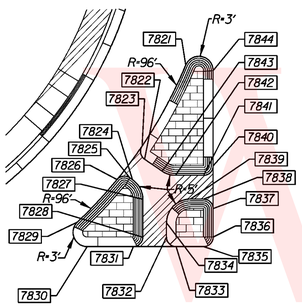

SR 7 AT RIVERS END DRIVE
S.W. ISLAND GEOMETRY
STA. 92+39, 60' LT.
N.T.S.

NOTES:
1. EDGE OF CURB RADII EQUAL 2 FEET UNLESS OTHERWISE NOTED IN DETAIL.

GEOMETRY LAYOUT

POINT NO.	BASELINE STATION	OFFSET	NORTH	EAST	ELEV.
7821	92+47.5547	-79.2398	600,947.4168	588,679.5686	62.60
7822	92+38.8989	-59.4089	600,935.2727	588,697.4769	63.08
7823	92+38.3685	-62.1831	600,935.2598	588,694.6525	63.03
7824	92+36.3396	-55.1024	600,931.9674	588,701.2413	63.22
7825	92+35.7628	-55.4952	600,931.4724	588,700.7495	63.20
7826	92+33.0908	-55.1107	600,928.7752	588,700.6377	63.22
7827	92+38.5252	-50.9638	600,933.3574	588,705.7104	63.34
7828	92+38.5157	-42.9976	600,931.8879	588,713.5399	63.56
7829	92+24.6111	-46.1818	600,918.9500	588,707.8885	63.53
7830	92+26.8201	-41.0000	600,920.0243	588,713.3599	63.71
7831	92+36.5157	-41.0000	600,929.5556	588,715.1371	63.61
7832	92+43.5157	-43.0024	600,936.8041	588,714.4517	63.50
7833	92+45.5134	-41.0000	600,938.4008	588,716.7863	63.52
7834	92+43.5193	-46.0160	600,937.3600	588,711.4898	63.41
7835	92+51.3261	-41.0000	600,944.1151	588,717.8517	63.47
7836	92+53.3261	-43.0000	600,946.4478	588,716.2522	63.45
7837	92+53.3261	-49.0068	600,947.5488	588,710.3472	63.44
7838	92+51.3284	-51.0068	600,945.9516	588,708.0150	63.42
7839	92+48.5252	-51.0101	600,943.1965	588,707.4979	63.30
7840	92+53.3261	-58.0044	600,949.1980	588,701.5020	63.46
7841	92+51.3237	-56.0068	600,946.8634	588,703.0988	63.41
7842	92+45.4191	-56.0138	600,941.0602	588,702.0096	63.27
7843	92+42.6107	-56.8811	600,938.4583	588,700.6422	62.69
7844	92+53.3261	-78.0910	600,952.8798	588,681.7557	62.77

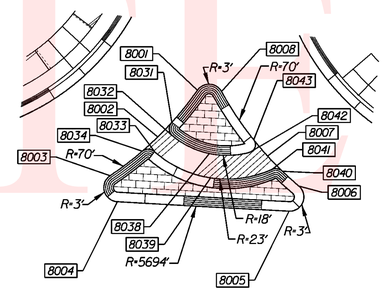

SR 7 AT DELDOT NORTH ENTRANCE
ISLAND GEOMETRY
STA. 114+87, 50' LT.
N.T.S.

GEOMETRY LAYOUT

POINT NO.	BASELINE STATION	OFFSET	NORTH	EAST	ELEV.
8001	114+83.9737	-60.4036	603,143.1379	589,084.8203	51.44
8002	114+76.1137	-50.1018	603,134.0741	589,094.0165	51.56
8003	114+66.5063	-41.3904	603,123.4755	589,101.3915	51.80
8004	114+68.3318	-36.0000	603,124.5564	589,106.9750	51.15
8005	115+04.7666	-36.0000	603,160.4570	589,111.6658	49.48
8006	115+06.5921	-41.3904	603,162.9363	589,106.5475	49.84
8007	114+99.6340	-47.3690	603,156.8451	589,099.7424	50.49
8008	114+89.1247	-60.4036	603,148.1916	589,085.4806	51.37
8031	114+78.9217	-53.3493	603,137.2586	589,091.1618	51.52
8032	114+79.2272	-50.5372	603,137.1907	589,093.9895	51.65
8033	114+75.5917	-46.9965	603,133.1530	589,097.0268	51.55
8034	114+73.0199	-46.9381	603,130.6168	589,096.7489	51.64
8038	114+87.2522	-47.2304	603,144.6493	589,098.3035	51.11
8039	114+87.7903	-42.1268	603,144.5184	589,103.4333	50.00
8040	115+02.9447	-44.3297	603,159.7168	589,103.1741	50.14
8041	115+00.6987	-44.5963	603,157.5400	589,102.6269	50.28
8042	114+95.8138	-47.9589	603,153.1629	589,098.6737	50.69
8043	114+96.5222	-50.6101	603,154.1985	589,096.1342	50.58

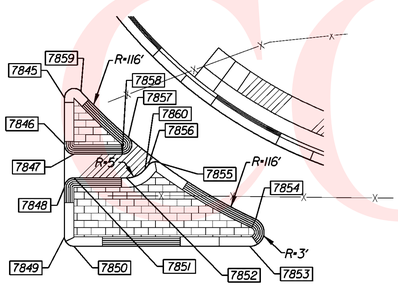

SR 7 AT RIVERS END DRIVE
N.W. ISLAND GEOMETRY
STA. 93+24, 52' LT.
N.T.S.

NOTES:
1. EDGE OF CURB RADII EQUAL 2 FEET UNLESS OTHERWISE NOTED IN DETAIL.

GEOMETRY LAYOUT

POINT NO.	BASELINE STATION	OFFSET	NORTH	EAST	ELEV.
7845	93+03.3261	-67.2783	601,000.0508	588,701.5500	62.91
7846	93+03.3261	-57.4427	600,998.2479	588,711.2190	63.02
7847	93+05.3237	-55.4427	600,999.8451	588,713.5512	62.98
7848	93+03.3261	-48.4451	600,996.5987	588,720.0641	63.00
7849	93+03.3261	-38.0000	600,994.6842	588,730.3323	63.06
7850	93+05.3261	-36.0000	600,996.2837	588,732.6650	63.07
7851	93+05.3284	-50.4427	600,998.9333	588,718.4674	62.96
7852	93+16.4361	-50.4295	601,009.8504	588,720.5163	62.89
7853	93+42.3529	-36.0000	601,032.6833	588,739.4518	62.94
7854	93+43.6127	-41.7227	601,034.9706	588,734.0570	62.88
7855	93+23.7370	-53.4480	601,017.5809	588,718.8872	62.84
7856	93+21.0145	-53.1112	601,014.8428	588,718.7193	62.86
7857	93+16.8048	-58.9488	601,011.7744	588,712.2090	62.81
7858	93+15.5004	-55.4307	601,009.8473	588,715.4284	62.86
7859	93+06.8006	-68.6296	601,003.7141	588,700.8585	62.75
7860	93+20.2919	-52.2392	601,013.9726	588,719.4440	62.87

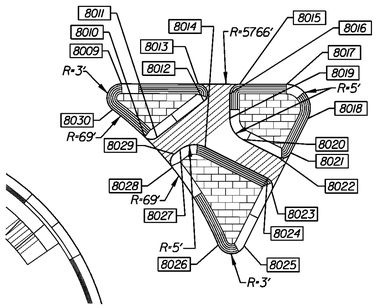

SR 7 AT SCHOOL BELL ROAD
S.E. ISLAND GEOMETRY
STA. 117+87, 51' RT.
N.T.S.

NOTES:
1. EDGE OF CURB RADII EQUAL 2 FEET UNLESS OTHERWISE NOTED IN DETAIL.

GEOMETRY LAYOUT

POINT NO.	BASELINE STATION	OFFSET	NORTH	EAST	ELEV.
8009	117+69.4634	36.0000	603,416.2626	589,210.6440	41.94
8010	117+74.3726	47.1071	603,420.3026	589,222.1112	41.66
8011	117+76.9688	47.2441	603,422.9011	589,222.4556	41.68
8012	117+86.7468	39.5795	603,433.3231	589,215.5860	41.73
8013	117+85.5282	36.0000	603,432.3777	589,211.9222	41.77
8014	117+87.0269	49.2666	603,432.8544	589,225.2659	41.61
8015	117+94.1748	36.0000	603,441.0529	589,212.5914	41.68
8016	117+92.1880	37.9997	603,438.9064	589,214.4326	41.66
8017	118+04.0209	36.0000	603,450.9327	589,213.3375	41.57
8018	118+08.4603	43.2362	603,454.8546	589,220.8849	41.40
8019	117+92.1880	43.1692	603,438.5109	589,219.5870	41.62
8020	117+94.9399	47.6475	603,440.9350	589,224.2638	41.53
8021	118+04.8967	50.4200	603,450.7402	589,227.7832	41.33
8022	118+02.2374	51.3156	603,447.9980	589,228.4764	41.38
8023	118+00.9141	58.4721	603,446.1300	589,235.5128	41.28
8024	118+00.0259	55.7897	603,445.4368	589,232.7706	41.33
8025	117+95.2171	70.0346	603,439.5127	589,246.6074	41.25
8026	117+89.8312	69.8628	603,434.0901	589,246.0193	41.36
8027	117+81.7847	49.7995	603,427.5414	589,225.3854	41.58
8028	117+80.2191	53.5631	603,425.6713	589,229.0135	41.53
8029	117+80.5657	50.7563	603,426.2405	589,226.2429	41.55
8030	117+67.5898	41.4104	603,414.0466	589,215.8928	41.90

PREL. TRACING S.JB DESIGN KGM-A CHKD. JRR

UNOFFICIAL COPY

CONTRACT	COUNTY	F.A.P. NO.	SHEET NO.	TOTAL SHTS.
T2003126 01	NEW CASTLE	SEE TITLE SHEET	40	115

SR 7, NEWTOWN ROAD TO SR 273

REVISIONS

GRADES AND GEOMETRICS

SCALE
0 30 60 90
FEET

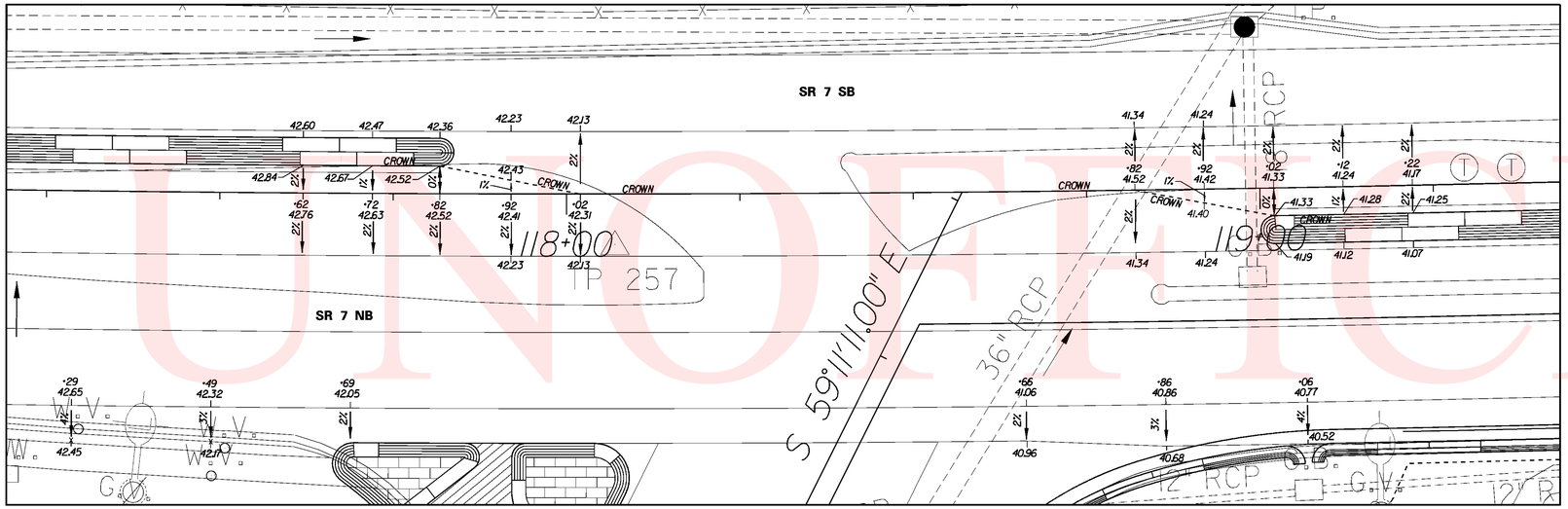

SUPERELEVATION DETAIL

SCALE 1"=10'

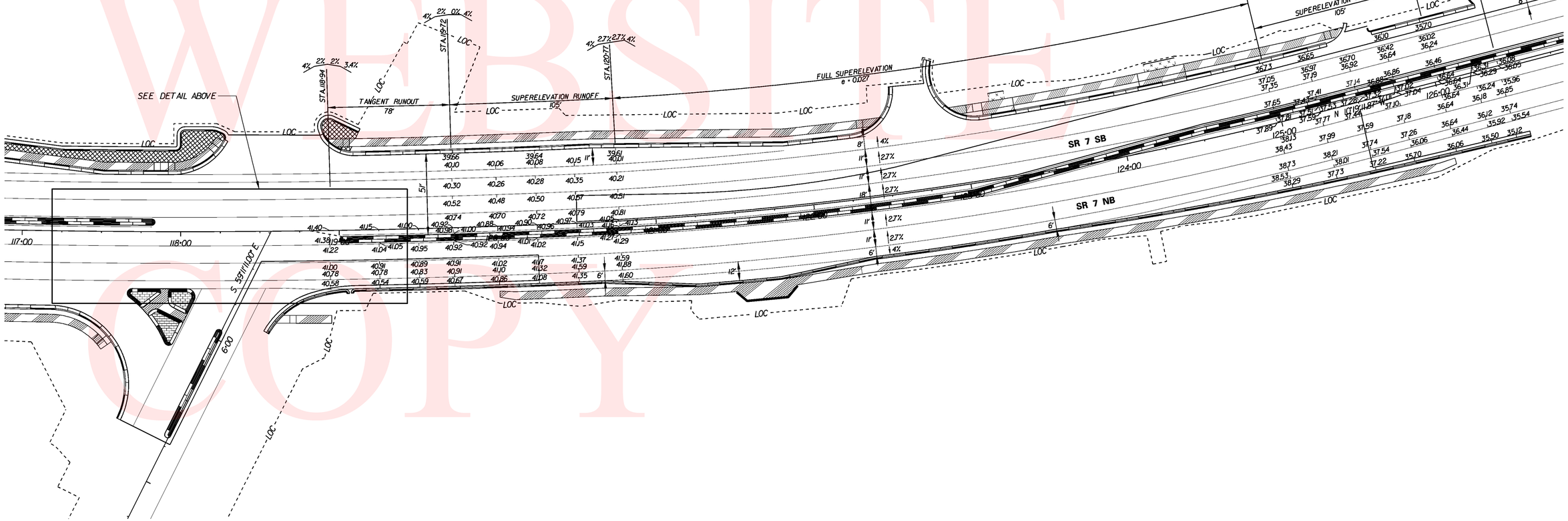

UNOFFICIAL WEBSITE COPY

PREL. TRACING ____ SJB ____ DESIGN ____ KGM-A ____ CHKD. ____ JRR

10:28:10 AM m:\31131-04\gg10sr7.plf

CONTRACT	COUNTY	F.A.P. NO.	SHEET NO.	TOTAL SHTS.
T200312601	NEW CASTLE	SEE TITLE SHEET	41	115

SR 7, NEWTOWN ROAD TO SR 273

REVISIONS

STORMWATER MANAGEMENT DETAILS SWM FACILITY NO. 278

SCALE 0 30 60 90 FEET

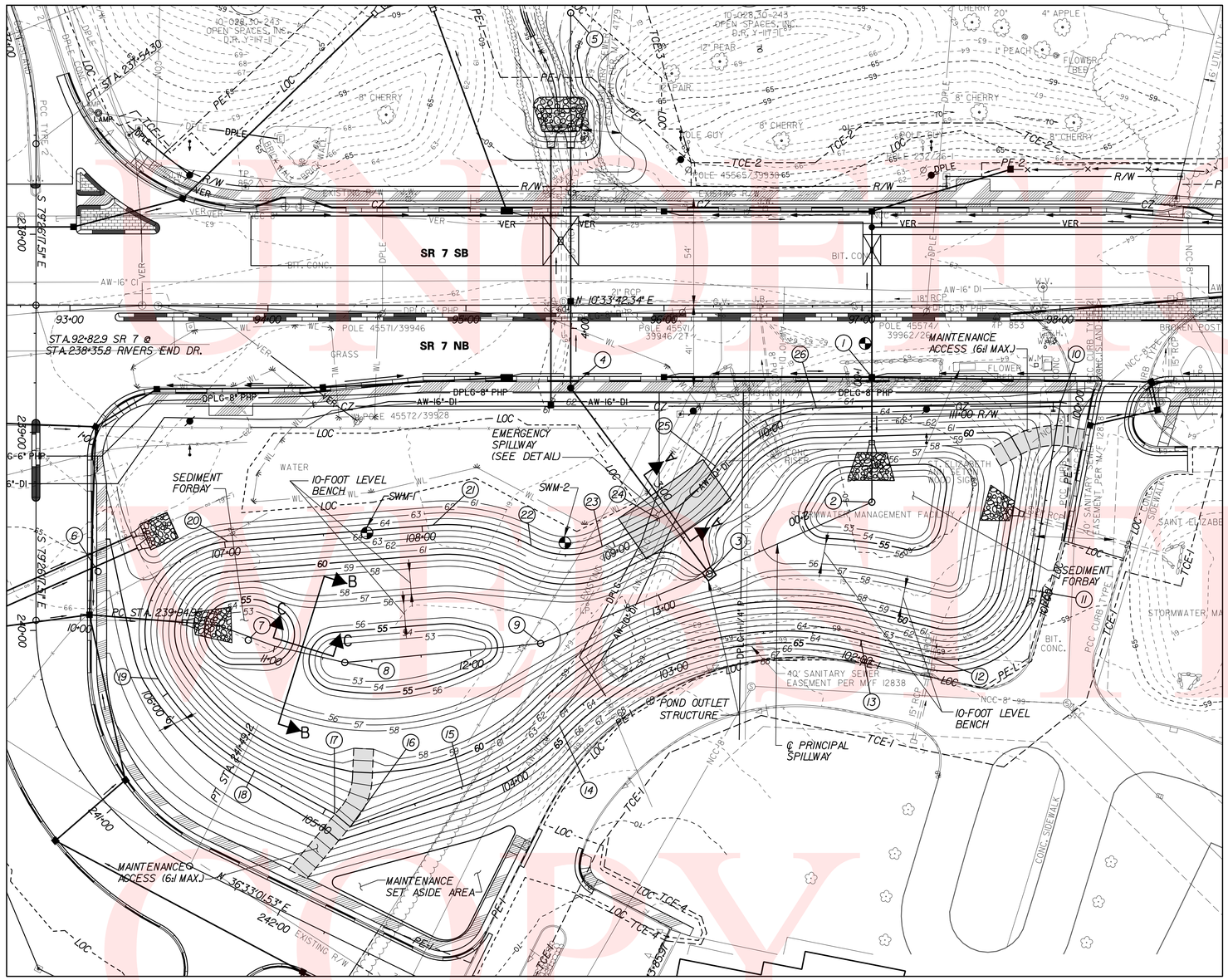

PLAN – SWM FACILITY NO. 278

STORMWATER MANAGEMENT NOTES:

1. THE CONTRACTOR SHALL COORDINATE CONSTRUCTION OF EACH STORMWATER MANAGEMENT FACILITY SHOWN IN THE PLANS WITH THE INSPECTION STAFF IN ORDER THAT AN INSPECTOR CAN COMPLETE THE APPROPRIATE CONSTRUCTION CHECKLIST AT THE TIME OF CONSTRUCTION. THE CURRENT VERSION OF THE APPROPRIATE CONSTRUCTION CHECKLIST CAN BE OBTAINED FROM THE STORMWATER ENGINEER.

2. THE CONTRACTOR SHALL PROVIDE "AS-BUILT" DRAWING OF ALL STORMWATER MANAGEMENT FACILITIES, SUCH AS PONDS, BIO-FILTRATION SWALES, BIO-RETENTION AREAS, ETC. THE "AS-BUILT" DRAWINGS SHALL SHOW THE ACTUAL FINISHED GROUND CONTOURS, OUTLET STRUCTURE DIMENSIONS AND ELEVATIONS, ETC., AS THEY EXIST AT THE COMPLETION OF THE PROJECT. THESE DRAWINGS SHALL BE SIGNED AND SEALED BY A PROFESSIONAL ENGINEER OR LAND SURVEYOR REGISTERED IN THE STATE OF DELAWARE. ALL COSTS SHALL BE INCLUDED UNDER ITEM 763501, CONSTRUCTION ENGINEERING.

3. STORMWATER MANAGEMENT PONDS SERVING AS TEMPORARY SEDIMENT BASINS DURING CONSTRUCTION SHALL HAVE SEDIMENT REMOVED AT TIMES DETERMINED BY THE ENGINEER AND AT THE CONCLUSION OF THE PROJECT AFTER ALL AREAS DRAINING TO THE POND HAVE BEEN VEGETATIVELY STABILIZED. COST FOR SEDIMENT REMOVAL SHALL BE PAID FOR UNDER ITEM 250000, SEDIMENT REMOVAL. ACCESS SHALL BE MAINTAINED TO ALL SEDIMENT CONTROL DEVICES REQUIRING MAINTENANCE UNTIL CONSTRUCTION PHASING AND VEGETATIVE STABILIZATION ALLOW THE REMOVAL OF THOSE CONTROLS THAT ARE NO LONGER REQUIRED. (SEE SECTION 250 OF STANDARD SPECIFICATIONS FOR MORE DETAILS).

POND CONSTRUCTION SEQUENCE AND NOTES:

THE STORMWATER MANAGEMENT POND SHALL FUNCTION AS A SEDIMENT BASIN DURING ROADWAY CONSTRUCTION AND SHALL BE CONSTRUCTED IN ACCORDANCE WITH THE FOLLOWING SECTIONS OF THE STANDARD SPECIFICATIONS:

SECTION 271 - STORMWATER MANAGEMENT POND
SECTION 272 - POND OUTLET STRUCTURE, CONCRETE
SECTION 274 - CLAY BORROW, STORMWATER MANAGEMENT POND

1. INSTALL STABILIZED CONSTRUCTION ENTRANCE, SEE PHASE 1C MAINTENANCE OF TRAFFIC PLANS.
2. CLEAR AND GRUB FOR INSTALLATION OF PERIMETER EROSION AND SEDIMENT CONTROLS.
3. INSTALL PERIMETER SEDIMENT CONTROLS AS SHOWN, SEE PHASE 1A MAINTENANCE OF TRAFFIC PLANS.
4. CLEAR AND GRUB REMAINING AREA FOR POND CONSTRUCTION.
5. CONSTRUCT OUTFALL PIPE CROSSING SR 7, POND OUTLET STRUCTURE, RIPRAP ENERGY DISSIPATOR AT END OF PRINCIPAL SPILLWAY AND PARTIAL EMBANKMENT AS NEEDED TO INSTALL POND OUTLET STRUCTURE. INSTALL SKIMMER DEWATERING DEVICE. DE-WATER FOUNDATION AS NEEDED IN ACCORDANCE WITH SECTION 1103 AND USE SUMP PIT FOR PUMPING. (SEE STANDARD CONSTRUCTION DETAILS FOR SKIMMER DEWATERING DEVICE INSTALLATION).
6. EXCAVATE THE POND AND COMPLETE THE EMBANKMENT, EMERGENCY SPILLWAY AND BASIN TO LINES, GRADES AND DETAILS AS SHOWN ON THIS PLANS. DURING EXCAVATION, THE CONTRACTOR SHALL SALVAGE AND STOCKPILE SOILS CLASSIFIED AS CH, CL, CH AND GM PER THE UNIFIED SOIL CLASSIFICATION SYSTEM TO BE USED TO CONSTRUCT THE POND EMBANKMENT. THE ABOVE CLASSIFIED SOILS MAY BE OBTAINED FROM ELSEWHERE WITHIN THE PROJECT LIMITS. OVER EXCAVATE POND BOTTOM TO ELEVATION 53.0' AS SHOWN FOR SEDIMENT STORAGE DURING CONSTRUCTION.
7. STABILIZE WORK AREAS: FROM ELEVATION 54.0 TO ELEVATION 59.0, SEED WITH PERMANENT SEED - WET GROUND (ITEM 734015). FROM ELEVATION 59.0 TO THE TOP OF SLOPE, SEED WITH PERMANENT SEED - DRY GROUND (734013). ALL DISTURBED AREAS WITHIN THE LIMITS OF CONSTRUCTION SHALL BE COVERED WITH SIX (6) INCHES OF TOPSOIL PRIOR TO PLACING SEED AND BLANKET MULCH.

MAINTENANCE OF POND AS A SEDIMENT BASIN

1. CONTRACTOR SHALL INSPECT THE BASIN IMMEDIATELY AFTER EVERY RAIN AND MAKE REPAIRS AS NEEDED.
2. CONTRACTOR SHALL CLEARLY MARK THE CLEANOUT ELEVATION AT 56.0 ON A STAKE DRIVEN INTO THE GROUND AT A LOCATION CLEARLY VISIBLE FROM THE EMBANKMENT. SEDIMENT SHALL BE REMOVED WHEN CLEANOUT ELEVATION IS REACHED AND DISPOSED OF AT A LOCATION APPROVED BY THE ENGINEER.

CONVERSION TO PERMANENT STORMWATER MANAGEMENT POND

1. CONVERT THE BASIN INTO THE PERMANENT STORMWATER MANAGEMENT POND AFTER ALL AREAS DRAINING TO THE POND HAVE BEEN PERMANENTLY STABILIZED AND THE ENGINEER HAS APPROVED THE CONVERSION.
2. REMOVE ACCUMULATED SEDIMENT TO ELEVATION 54.0 AND DISPOSE SEDIMENT AT A LOCATION APPROVED BY THE ENGINEER.
3. COMPLETE STABILIZATION OF ALL BARE AREAS. REMOVE EROSION AND SEDIMENT CONTROL MEASURES AND DEACTIVATE SKIMMER DEWATERING DEVICE.

POND DESIGN SUMMARY - SWM FACILITY NO. 278

DESIGN STORM	FACILITY INFLOW	FACILITY BYPASS	FACILITY DISCHARGE	WATER SURFACE ELEVATION	STORAGE VOLUME (AC.FT.)	COMMENTS
QUALITY STORM (1")	12.0 CFS	N/A	0.6 CFS	58.19 FT	0.58	EXT. DETENTION = 24 HRS.
2 YEAR	29.5 CFS	N/A	5.7 CFS	59.07 FT	1.16	
10 YEAR	55.7 CFS	N/A	24.0 CFS	59.87 FT	1.73	
100 YEAR	111.2 CFS	N/A	47.9 CFS	61.80 FT	3.25	

HAZARD CLASSIFICATION: CLASS B AS PER POND CODE 378

DRAINAGE AREA TO FACILITY: 20.92 ACRES

MANAGEMENT PROVIDED BY FACILITY: WATER QUALITY BY EXTENDED DETENTION FOR FIRST 1.0" OF RUNOFF
WATER QUANTITY FOR 2, 10 AND 100 YEAR STORMS.

PRELIM. TRACING ____ S.JB ____ DESIGN ____ KGM-A ____ CHK'D. ____ JRR

UNOFFICIAL COPY

CONTRACT	COUNTY	F.A.P. NO.	SHEET NO.	TOTAL SHTS.
T200312601	NEW CASTLE	SEE TITLE SHEET	42	115

STORMWATER MANAGEMENT DETAILS
SWM FACILITY NO. 278

SCALE : NONE

SR 7, NEWTOWN ROAD TO SR 273

REVISIONS

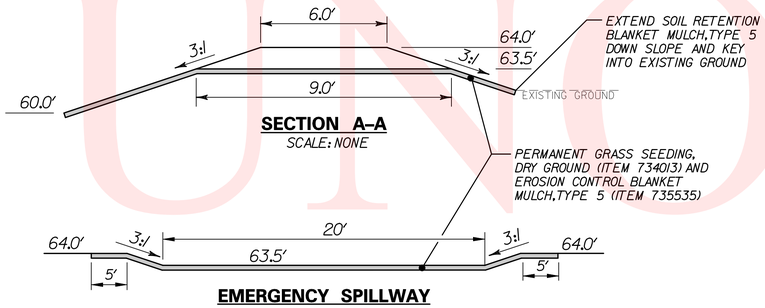

SECTION A–A
SCALE: NONE

EMERGENCY SPILLWAY

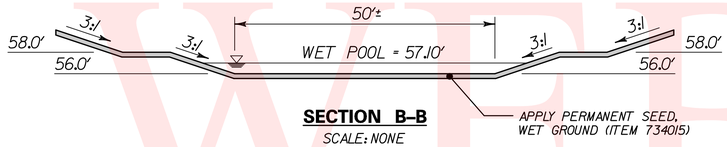

SECTION B–B
SCALE: NONE

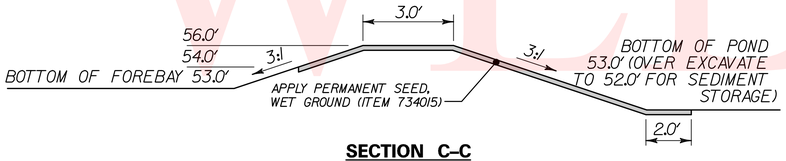

SECTION C–C
SCALE: NONE

SEDIMENT FOREBAY

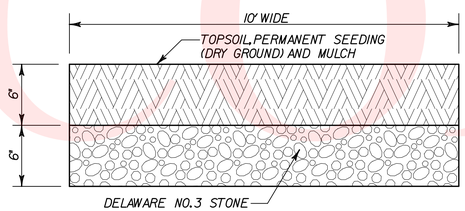

POND MAINTENANCE ACCESS
SCALE: NONE

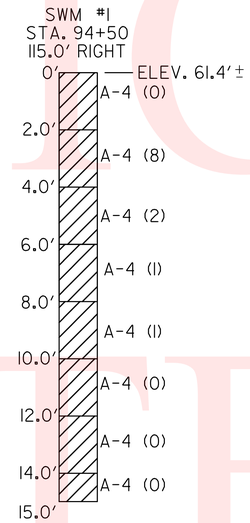

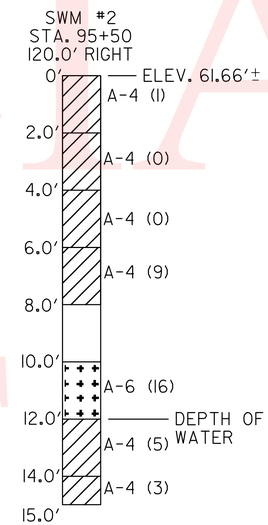

℄ PRINCIPAL SPILLWAY			
STATION		NORTHING	EASTING
1	POB STA. 1+00.0	601375.8881	588877.0775
2	PI STA. 1+63.1	601364.3288	588939.0730
3	PI STA. 2+52.8	601276.9939	588959.6431
4	PI STA. 3+69.9	601225.3923	588854.5222
5	POE STA. 5+59.3	601260.1151	588668.2955

℄ OUTFALL			
STATION		NORTHING	EASTING
6	POB STA. 10+00.0	600970.3405	588901.5914
7	PI STA. 10+91.9	601047.1069	588952.0516
8	PI STA. 11+36.3	601087.8369	588969.9039
9	PI STA. 12+35.7	601186.8028	588978.5672
3	POE STA. 13+27.8	601276.9939	588959.6431

STA.2+52.8 ℄ PRINCIPAL SPILLWAY = STA.13+24.9 ℄ OUTFALL

PRELIM. TRACING SJB DESIGN KGM-A CHKD. JRR

UNOFFICIAL WEBSITE COPY

CONTRACT	COUNTY	F.A.P. NO.	SHEET NO.	TOTAL SHTS.
T200312601	NEW CASTLE	SEE TITLE SHEET	43	115

SR 7,
NEWTOWN ROAD TO SR 273

REVISIONS

STORMWATER MANAGEMENT DETAILS
SWM FACILITY NO. 278

SCALE
0 30 60 90
FEET

6 3 0 FEET

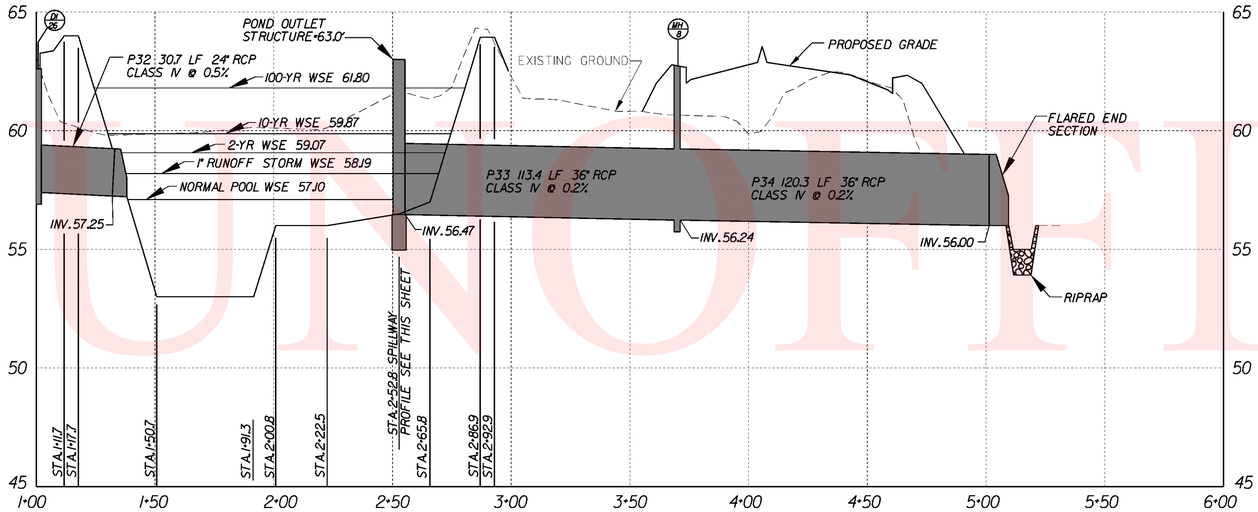

SPILLWAY PROFILE FOR BMP NO. 278

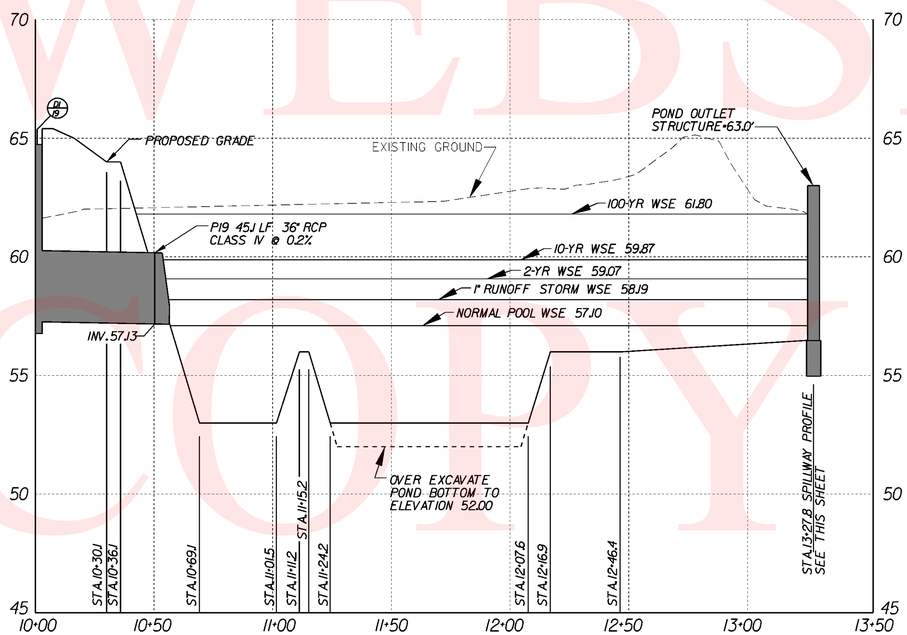

OUTFALL PROFILE FOR BMP NO. 278

NOTES:

1. 12" CLAY LINER TO BE PLACED IN AREAS WHERE EMBANKMENT IS CONSTRUCTED IN FILL AS SHOWN. LIMITS EXTEND FROM STA.104+73.5 TO STA.111+55.4 ON EMBANKMENT PROFILE.

UNOFFICIAL WEBSITE COPY

PREL. TRACING SJB DESIGN KGM-A CHKD. JRR

CONTRACT	COUNTY	F.A.P. NO.	SHEET NO.	TOTAL SHTS.
T200312601	NEW CASTLE	SEE TITLE SHEET	44	115

SR 7, NEWTOWN ROAD TO SR 273

REVISIONS

STORMWATER MANAGEMENT DETAILS
SWM FACILITY NO. 278

SCALE

0 30 60 90 FEET

0 3 6 FEET

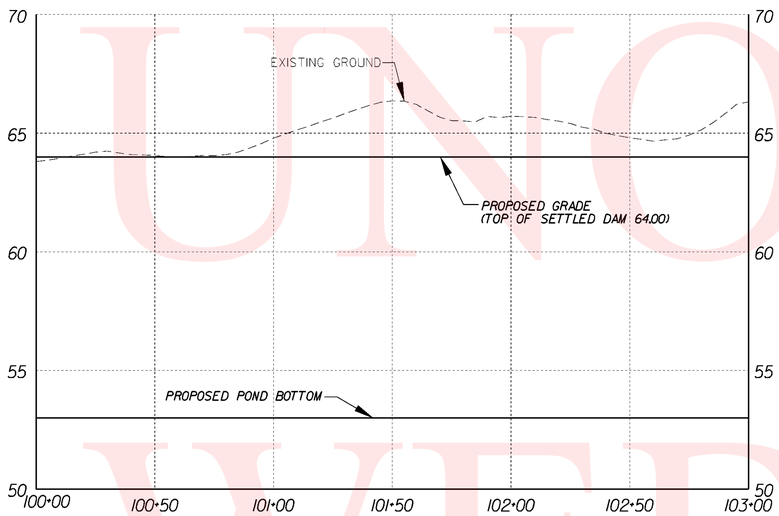

℄ EMBANKMENT			
	STATION	NORTHING	EASTING
10	POB STA. 100+00.0	601467.2857	588907.0040
11	PC STA. 100+95.8	601435.0127	588997.2654
12	PT STA. 101+64.9	601378.4241	589021.2253
13	PC STA. 102+00.5	601346.0246	589006.5082
14	PCC STA. 103+66.0	601188.4614	589020.8271
15	PT STA. 104+23.9	601135.1197	589042.3464
16	PI STA. 104+84.5	601075.3250	589051.9516
17	PI STA. 104+94.8	601068.7750	589044.0001
18	PC STA. 105+40.7	601033.1393	589015.1153
19	PT STA. 106+08.7	600993.7162	588960.6937
20	PC STA. 107+01.7	601041.0974	588899.0536
21	PCC STA. 108+05.5	601144.3155	588909.8351
22	PT STA. 108+56.9	601191.2137	588929.0707
23	PC STA. 108+94.2	601226.3690	588936.1486
24	PCC STA. 109+25.5	601256.5269	588927.5731
25	PT STA. 109+65.4	601289.9484	588906.6890
26	PT STA. 110+26.9	601345.4723	588887.1082

NOTES:

1. 12" CLAY LINER TO BE PLACED IN AREAS WHERE EMBANKMENT IS CONSTRUCTED IN FILL AS SHOWN. LIMITS EXTEND FROM STA.104+73.5 TO STA.111+55.4 ON EMBANKMENT PROFILE.

2. COST FOR ANTI-SEEP COLLAR SHALL BE MADE INCIDENTAL TO ITEM 272000 - POND OUTLET STRUCTURE, CONCRETE #1.

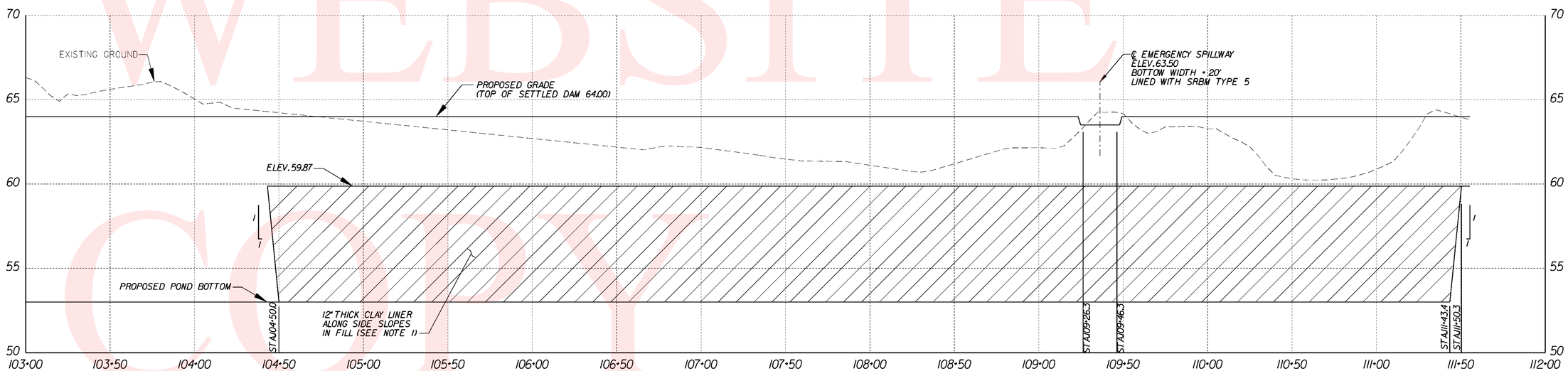

EMBANKMENT PROFILE FOR BMP NO. 278

PREL. TRACING SJB DESIGN KGM-A CHKD. JRR

UNOFFICIAL WEBSITE COPY

10:25:42 AM m:\31131-04\sw04sr7.pif

STORMWATER MANAGEMENT DETAILS
SWM FACILITY NO. 278

CONTRACT	COUNTY	F.A.P. NO.	SHEET NO.	TOTAL SHTS.
T200312601	NEW CASTLE	SEE TITLE SHEET	45	115

SR 7, NEWTOWN ROAD TO SR 273

REVISIONS

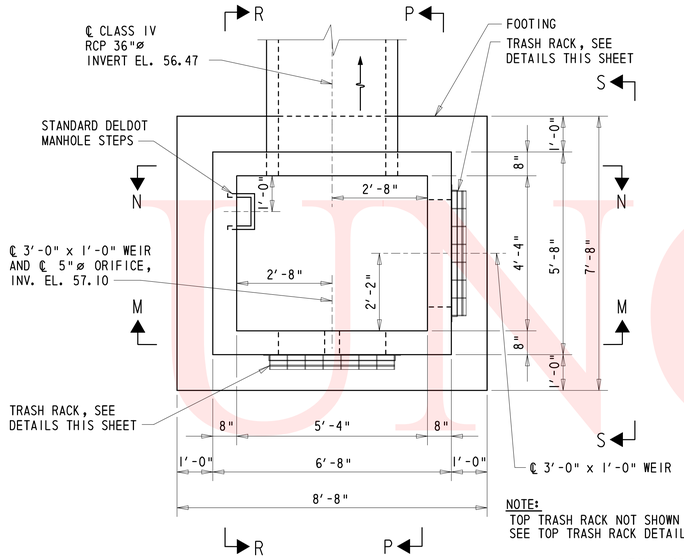

NOTE:
TOP TRASH RACK NOT SHOWN FOR CLARITY, SEE TOP TRASH RACK DETAIL, THIS SHEET.

SWM RISER-PLAN
NOT TO SCALE

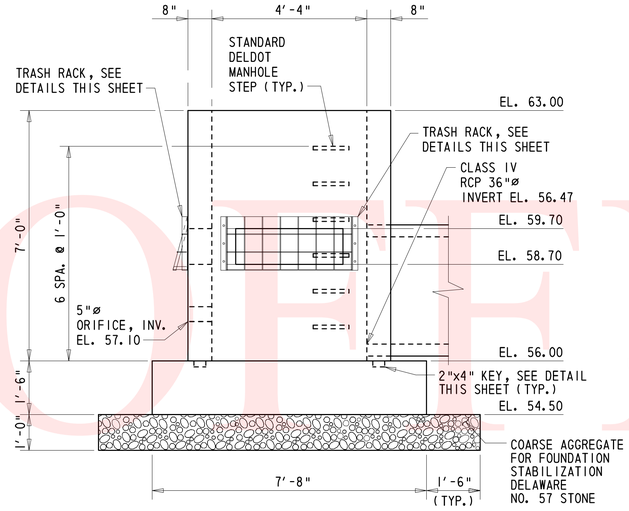

VIEW S-S
NOT TO SCALE

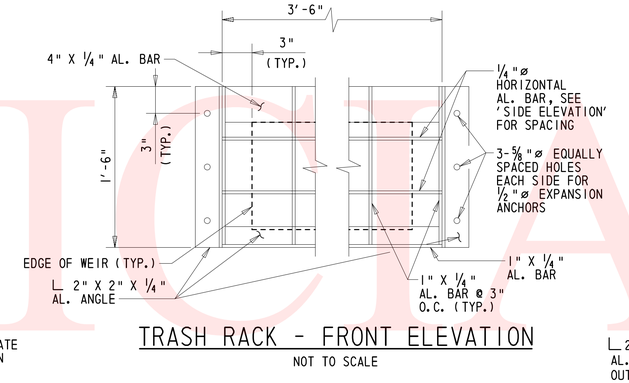

TRASH RACK - FRONT ELEVATION
NOT TO SCALE

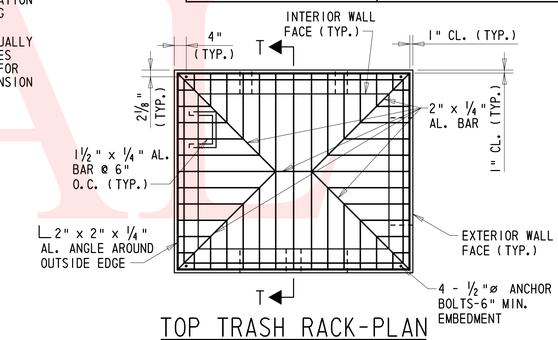

TOP TRASH RACK-PLAN
NOT TO SCALE

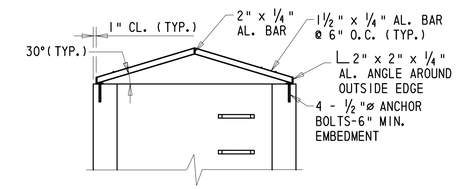

TOP TRASH RACK-SECTION T-T
NOT TO SCALE

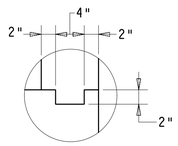

KEY DETAIL
NOT TO SCALE

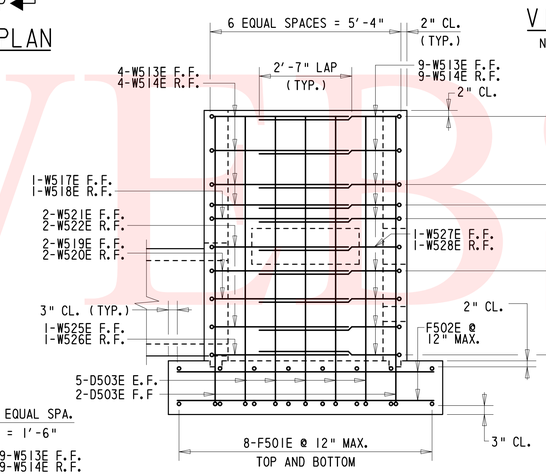

SECTION R-R
NOT TO SCALE

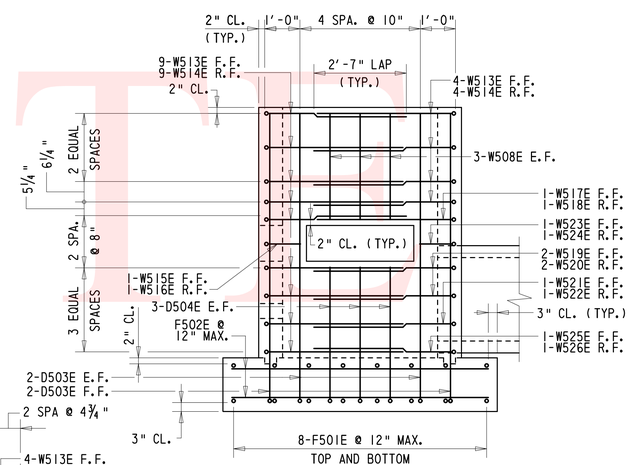

SECTION P-P
NOT TO SCALE

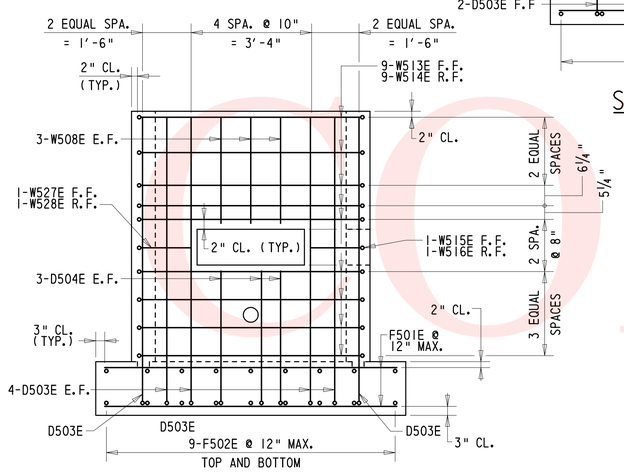

SECTION M-M
NOT TO SCALE

NOTE:
CLASS IV RCP 36"ø NOT SHOWN FOR CLARITY.

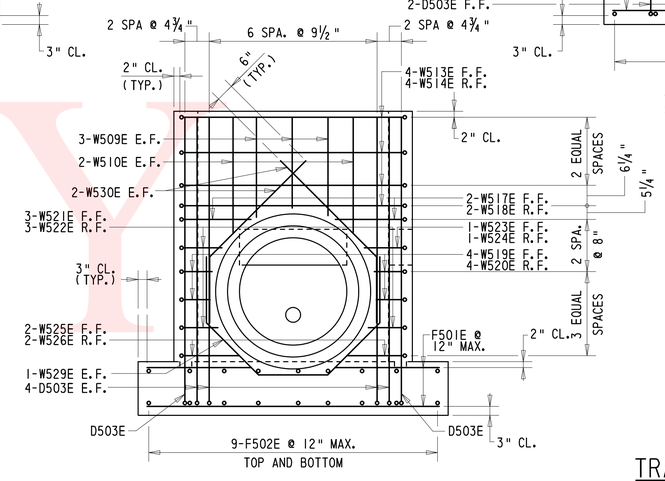

SECTION N-N
NOT TO SCALE

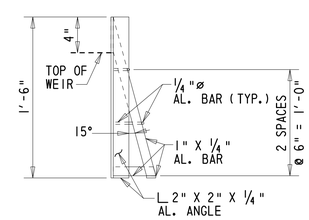

TRASH RACK - SIDE ELEVATION
NOT TO SCALE

NOTES:
1. SEE REINFORCING BAR LIST ON SHEET 42 FOR REINFORCING BAR DETAILS.
2. E.F. = EACH FACE
   F.F. = FRONT FACE
   R.F. = REAR FACE
   O.C. = ON CENTER
3. MANHOLE STEPS NOT SHOWN IN SECTION VIEWS FOR CLARITY. SEE STANDARD CONSTRUCTION DETAILS FOR MANHOLE STEP DETAILS.
4. ALL WORK SHALL BE INCIDENTAL TO ITEM 272000 POND OUTLET STRUCTURE, CONCRETE, NO. 1.

TRASH RACK NOTES:
1. EXPANSION ANCHORS SHALL CONFORM TO ASTM A510 AND SHALL HAVE A MINIMUM EMBEDMENT DEPTH OF 4" UNLESS NOTED OTHERWISE.
2. EXPANSION ANCHORS SHALL BE ZINC PLATED IN CONFORMANCE WITH ASTM B633, TYPE III FE/ZN 5.
3. ALUMINUM ANGLES SHALL CONFORM TO ASTM B308 ALLOY 6061-T6. REMAINING ALUMINUM SHALL CONFORM TO ASTM B221 ALLOY 6061-T6.

SKIMMER DEWATERING NOTE:
4" DIAMETER HDPE FLEXIBLE DRAIN PIPE OF SKIMMER DEWATERING DEVICE TO ATTACH TO 5" DIAMETER ORIFICE THROUGH FLANGE WITH RUBBER GASKET AND BE MADE WATERTIGHT AROUND PERIMETER OF FLEXIBLE PIPE. DEVICE TO ATTACH TO STRUCTURE WITH CONCRETE SCREWS OR OTHER SUITABLE ATTACHMENT AS APPROVED BY ENGINEER. FOLLOWING POND CONVERSION, SKIMMER DEWATERING DEVICE SHALL BE REMOVED. COST OF SKIMMER ATTACHMENT AND REMOVAL SHALL BE INCIDENTAL TO ITEM 272500 - SKIMMER DEWATERING DEVICE.

UNOFFICIAL WEBSITE COPY

PREL. TRACING WRA DESIGN CLW CHKD. DAN

REINFORCING BAR LIST

CONTRACT	COUNTY	F.A.P. NO.	SHEET NO.	TOTAL SHTS.
T2003I2601	NEW CASTLE	SEE TITLE SHEET	46	115

SR 7, NEWTOWN ROAD TO SR 273

REVISIONS

(1) MARK NUMBER WITH SUFFIX 'E' DENOTES EPOXY COATED REINFORCING STEEL.

(2) MARK 'LOCATION PREFIXES' ARE AS FOLLOWS: (X)A = ABUTMENT, (X)AS = APPROACH SLAB, (X)D = DOWEL, (X)F = FOOTING, (X)H = HEADWALL, (X)M = MISC. BARS, (X)PA = PARAPET, (X)P = PIER, (X)S = SLAB, (X)T = TOEWALL, (X)W = WALL - WHERE (X) DENOTES SPECIFIC LOCATION (IF APPLICABLE).

(3) FIRST NUMERICAL DIGIT OF BAR MARK INDICATES BAR SIZE, SECOND AND THIRD DIGITS INDICATE BAR NUMBER.

SPECIFICATIONS					BENDING DIMENSIONS										
QTY.	SIZE	LENGTH	MARK	TYPE	A	B	C	D	E	F/R	G	H	J	K	O
SWM RISER															
16	5	8-02.0	F501E	STR		8-02.0									
18	5	7-02.0	F502E	STR		7-02.0									
34	5	8-10.0	D503E	2		0-10.0	8-00.0								
12	5	4-06.6	D504E	2		0-10.0	3-08.6								
12	5	2-11.4	W508E	STR		2-11.4									
6	5	2-06.4	W509E	STR		2-06.4									
4	5	3-03.0	W510E	STR		3-03.0									
13	5	14-03.0	W513E	17		3-11.4	6-04.0	3-11.4							
13	5	13-02.2	W514E	17		3-08.4	5-09.2	3-08.4							
1	5	2-06.0	W515E	17		1-06.0	1-00.0								
1	5	1-11.2	W516E	17		1-02.5	0-08.5								
2	5	5-11.4	W517E	17		3-11.4	2-00.0								
2	5	5-05.0	W518E	17		3-08.4	1-08.4								
4	5	4-09.4	W519E	17		3-11.4	0-10.0								
4	5	4-04.0	W520E	17		3-08.4	0-07.4								
3	5	5-01.4	W521E	17		3-11.4	1-02.0								
3	5	4-07.2	W522E	17		3-08.4	0-10.6								
1	5	2-02.0	W523E	17		1-00.0	1-02.0								
1	5	1-07.4	W524E	17		0-08.6	0-10.6								
2	5	5-07.4	W525E	17		3-11.4	1-08.0								
2	5	5-01.0	W526E	17		3-08.4	1-04.4								
1	5	5-05.4	W527E	17		3-11.4	1-06.0								
1	5	4-11.1	W528E	17		3-08.4	1-02.5								
2	5	9-05.0	W529E	14	1-10.0	1-11.0	1-11.0	1-11.0	1-10.0						
4	5	5-01.0	W530E	14	1-10.0	3-03.0									

NOTE:
BAR NOS. 05, 06, 07, 11, AND 12 WERE NOT USED.

SPECIFICATIONS					BENDING DIMENSIONS										
QTY.	SIZE	LENGTH	MARK	TYPE	A	B	C	D	E	F/R	G	H	J	K	O

* DENOTES AVERAGE LENGTH

NOTES:

1. STANDARD BAR BENDS INCLUDE ONLY TYPES 1-32, S1-S12, AND T1-T16.
2. ALL DIMENSIONS ARE OUT-TO-OUT OF BAR EXCEPT "A" AND "G" ON STANDARD 180° AND 135° HOOKS.
3. "J" DIMENSIONS ON 180° HOOKS TO BE SHOWN ONLY WHERE NECESSARY TO RESTRICT HOOK SIZE, OTHERWISE STANDARD HOOKS ARE TO BE USED.
4. WHERE "J" IS NOT SHOWN, "J" WILL BE KEPT EQUAL TO OR LESS THAN "H" ON TRUSS BARS. WHERE "J" CAN EXCEED "H", IT SHOULD BE SHOWN.
5. "H" DIMENSIONS STIRRUPS TO BE SHOWN WHERE NECESSARY TO FIT WITHIN CONCRETE.
6. UNLESS OTHERWISE NOTED, DIAMETER "D" IS THE SAME FOR ALL BENDS AND HOOKS ON A BAR.
7. WHERE SLOPE DIFFERS FROM 45° DIMENSIONS, "H" AND "K" MUST BE SHOWN.
8. WHERE BARS ARE TO BE BENT MORE ACCURATELY THAN STANDARD BENDING TOLERANCES, BENDING DIMENSIONS WHICH REQUIRE CLOSER FABRICATION SHOULD HAVE LIMITS INDICATED.
9. FIGURES IN CIRCLES SHOW TYPES.
10. FOR RECOMMENDED DIAMETER "D", OF BENDS, HOOKS, ETC., SEE 'CRSI' OR 'ACI' TABLES.
11. TYPE S1-S12, T1-T16 APPLY TO BAR SIZES #3 THROUGH #6.

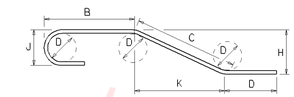

STANDARD BAR BENDS

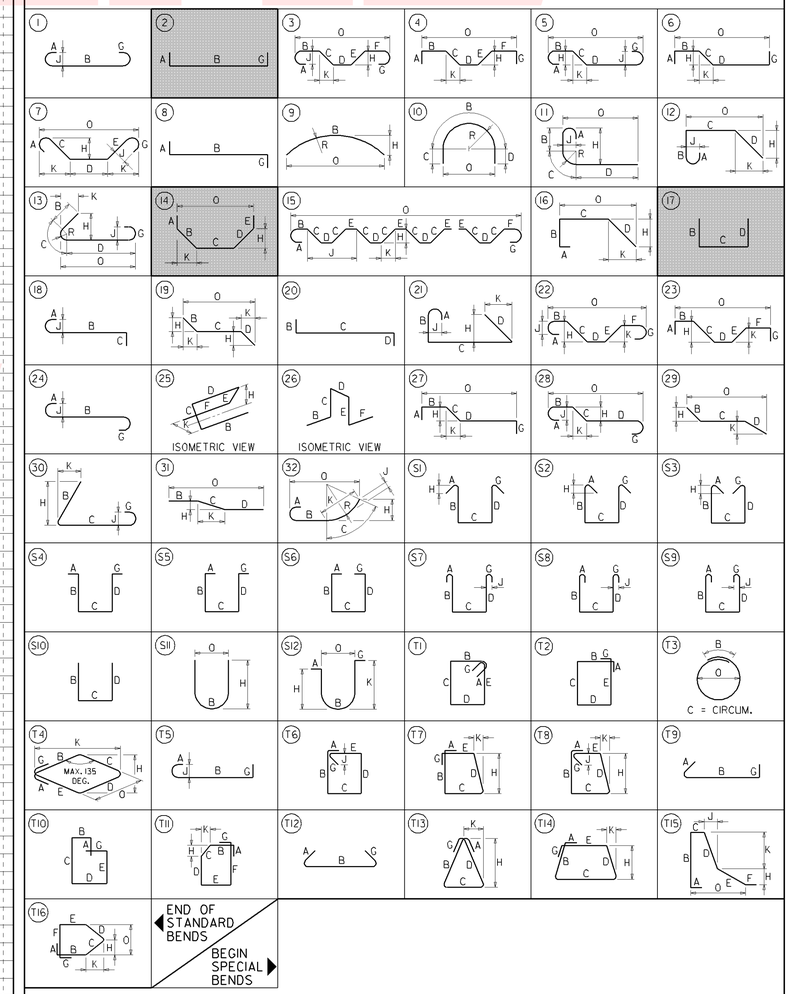

PRELI. TRACING ____ WRA ____ DESIGN ____ CLW ____ CHKD. ____ DAN

UNOFFICIAL WEBSITE COPY

CONSTRUCTION DETAILS

SCALE: AS SHOWN

CONTRACT	COUNTY	F.A.P. NO.	SHEET NO.	TOTAL SHTS.
T200312601	NEW CASTLE	SEE TITLE SHEET	47	115

SR 7, NEWTOWN ROAD TO SR 273

REVISIONS

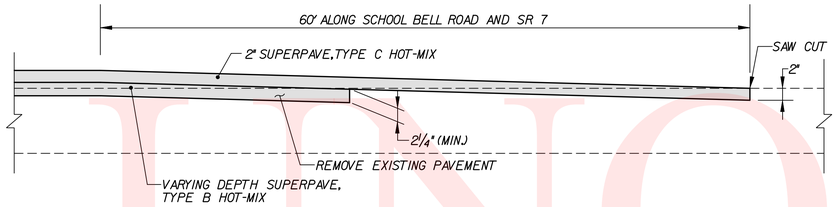

BUTT JOINT DETAIL

SCALE: NONE

NOTE: HOT-MIX USED IN TAPER TO BE PAID FOR UNDER THE PERTINENT HOT-MIX ITEMS, ITEM 401830 - WMA, SUPERPAVE, TYPE C HOT-MIX (NON-CARBONATE STONE) AND ITEM 401813 - WMA, SUPERPAVE, TYPE B HOT-MIX. ALL OTHER WORK NECESSARY FOR THE COMPLETION OF THE WORK IS TO BE INCLUDED UNDER ITEM 761001 - BUTT JOINTS, HOT-MIX.

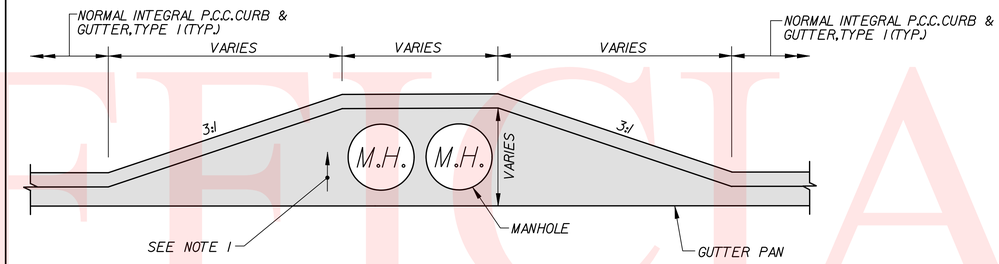

CURB BUMPOUT FOR MANHOLE

SCALE: NONE
STA. 94+12, LT.
STA. 98+65, LT.
STA. 102+32, LT.

NOTES:

1. WIDENED GUTTER PAN AREA TO BE BUILT AT NORMAL GUTTER CROSS SLOPE.
2. MODIFIED GUTTER PAN AROUND MANHOLE SHALL BE POURED TO CONFORM TO THE DIMENSIONS OF THE MANHOLE STACK BELOW GRADE.
3. WORK ASSOCIATED WITH CURB BUMPOUT SHALL BE INCIDENTAL TO ITEM 701020 - INTEGRAL P.C.C. CURB AND GUTTER, TYPE 1.

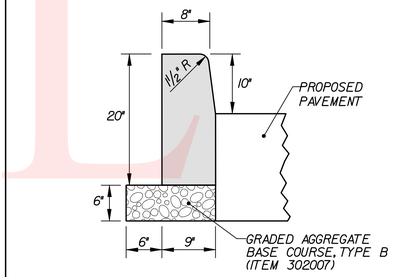

P.C.C. CURB, TYPE 1, MODIFIED DETAIL

SCALE: NONE

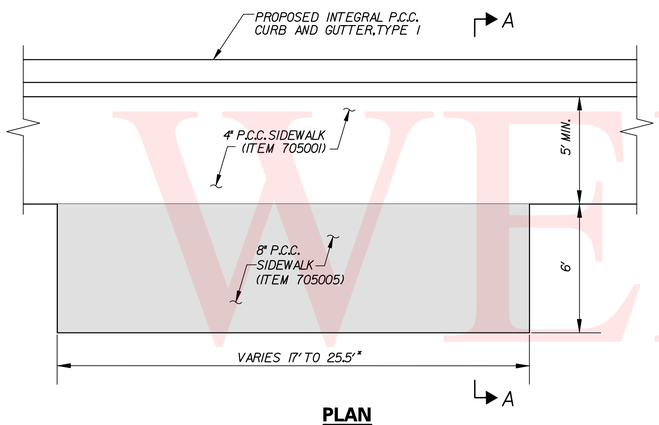

PLAN

SCALE: NONE

*NOTE: SEE CONSTRUCTION PLANS AND GRADES AND GEOMETRICS

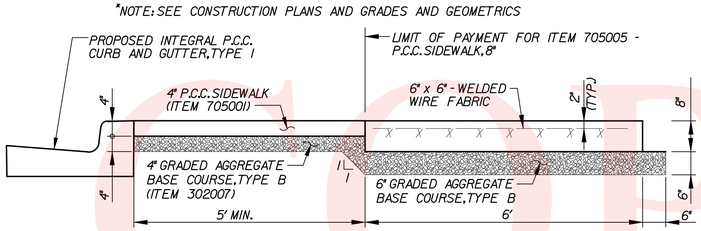

SECTION A–A

SCALE: NONE

SHELTER PAD DETAIL

NOTES:

1. THE CROSS SLOPE OF THE SHELTER AND LANDING PAD SHALL BE A MAXIMUM OF 2%.
2. THE PROPOSED WELDED WIRE FABRIC SHALL BE INCIDENTAL TO ITEM 705005 - P.C.C. SIDEWALK, 8".
3. THE PROPOSED BUS SHELTER WILL BE INSTALLED BY OTHERS.

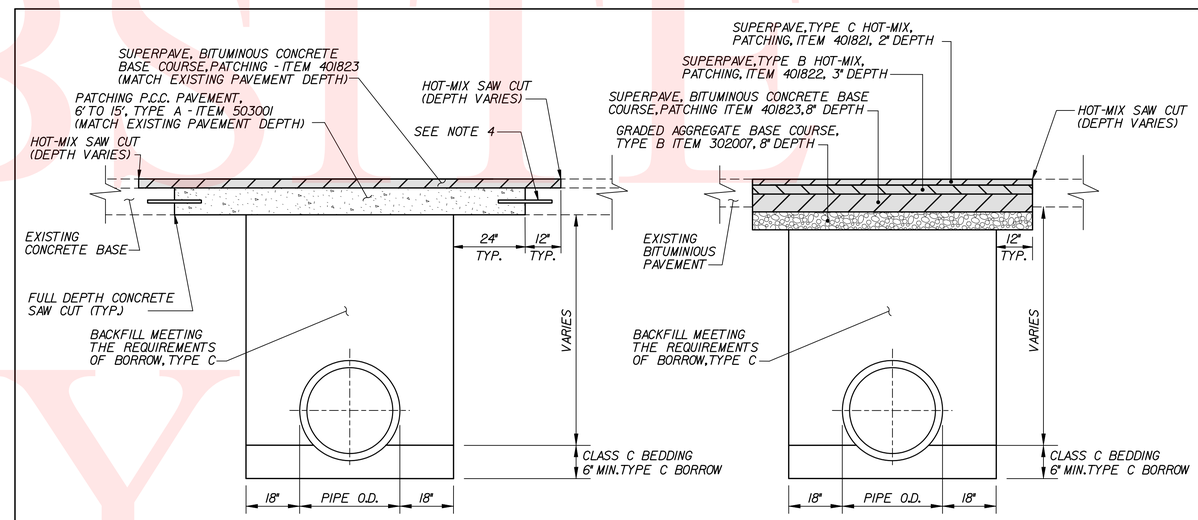

COMPOSITE PAVEMENT

FLEXIBLE PAVEMENT

PAVEMENT PATCH AND PIPE TRENCH

NOT TO SCALE

NOTES:

1. EXISTING HOT-MIX PAVEMENT MAY BE REMOVED BY A MILLING OPERATION. ALL HOT-MIX MATERIAL MUST BE REMOVED TO THE SAW CUT JOINTS PRIOR TO HOT-MIX PATCHING.
2. TOP PORTION OF BCBC PLACED IN PATCH AREA TO BE REMOVED DURING SUBSEQUENT MILLING OPERATION (COMPOSITE PAVEMENT ONLY).
3. SEE STANDARD DETAILS FOR PIPE BEDDING.
4. PCC PAVEMENT PATCH SHALL BE DOWELED INTO ADJACENT CONCRETE PER STANDARD DETAILS.
5. THESE DETAILS SHOW MINIMUM PAVEMENT PATCH REQUIREMENTS. IF EXISTING ROADWAY HAS A HEAVIER CROSS SECTION, PROPOSED PAVEMENT PATCH WILL MATCH HEAVIER CROSS SECTION, OR AS DIRECTED BY THE ENGINEER.
6. NO ADDITIONAL PAYMENT SHALL BE MADE FOR PLACING GABC IN FLEXIBLE PAVEMENT SECTION BEYOND THAT MADE UNDER ITEM 302007 - GRADED AGGREGATE BASE COURSE, TYPE B.

UNOFFICIAL WEBSITE COPY

PREL. TRACING ____ SJB ____ DESIGN ____ KGM-A ____ CHKD. ____ JRR

CONTRACT	COUNTY	F.A.P. NO.	SHEET NO.	TOTAL SHTS.
T200312601	NEW CASTLE	SEE TITLE SHEET	48	115

CONSTRUCTION DETAILS

SCALE: AS SHOWN

SR 7, NEWTOWN ROAD TO SR 273

REVISIONS

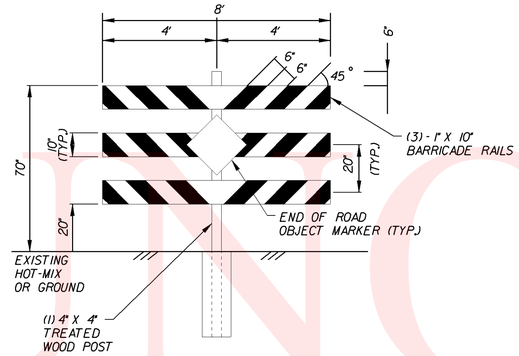

1 – POST PERMANENT WOOD BARRICADE DETAIL

SCALE: NONE

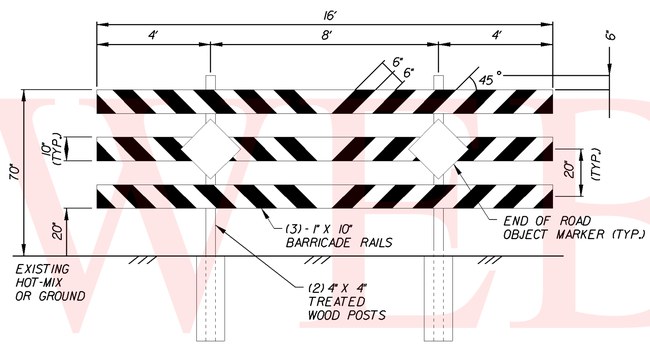

2 – POST PERMANENT WOOD BARRICADE DETAIL

SCALE: NONE

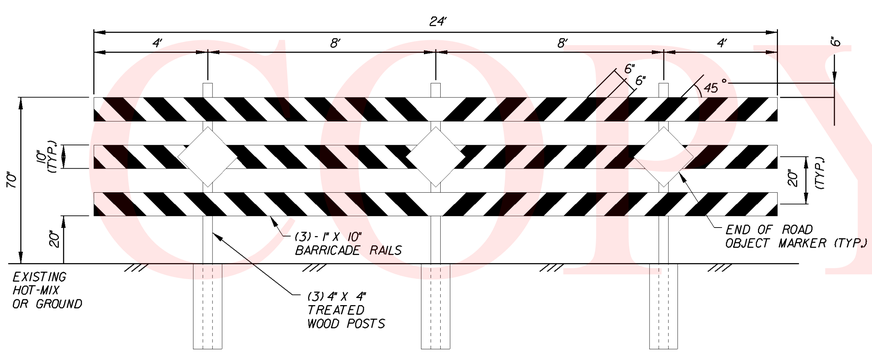

3 – POST PERMANENT WOOD BARRICADE DETAIL

SCALE: NONE

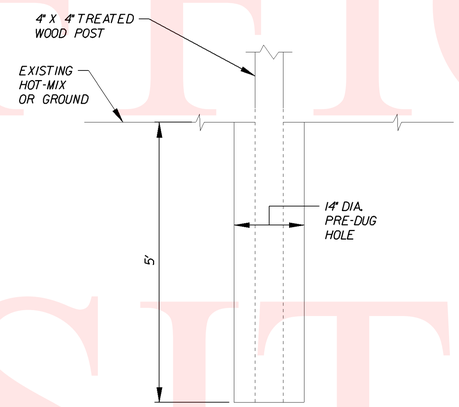

FOOTING DETAIL

SCALE: NONE

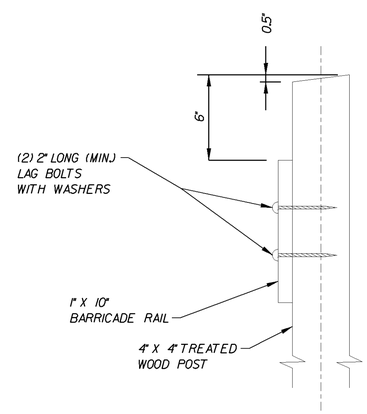

CONNECTION DETAIL

SCALE: NONE

NOTES:

1. BARRICADES SHALL BE PLACED COMPLETELY ACROSS THE ROADWAY FROM EDGE OF ROAD TO EDGE OF ROAD. IF NECESSARY, THE BARRICADE OVERHANG BEYOND THE OUTSIDE POSTS (TYPICALLY 4') MAY BE REDUCED IF OBSTACLES ARE PRESENT BEYOND THE ROADWAY EDGE.
2. MARKINGS FOR BARRICADE RAILS SHALL BE ALTERNATING FLUORESCENT RED AND WHITE STRIPES, SLOPING DOWNWARD AT AN ANGLE OF 45 DEGREES, USING PRISMATIC RETROREFLECTIVE SHEETING. STRIPES SHALL SLOPE DOWNWARD TOWARDS THE CENTER OF THE CLOSURE.
3. ATTACH BARRICADE RAIL AND OBJECT MARKER TO THE 4"X4" PRESSURE TREATED WOOD POST USING LAG BOLTS (2" LONG, MINIMUM) WITH WASHERS. TWO BOLTS PER RAIL PER POST SHALL BE REQUIRED.
4. ALL WOOD SHALL BE PRESSURE TREATED.
5. THE END OF ROAD OBJECT MARKER (MUTCD CODE OM4-3) SHALL BE 18" X 18" WITH RED PRISMATIC, RETROREFLECTIVE SHEETING.
6. TREATED WOOD POST SHALL BE PLACED IN PRE-DUG HOLE, BACKFILLED USING SUITABLE MATERIAL, AND TAMPERED THOROUGHLY TO PROVIDE A RIGID SUB-SURFACE CONDITION AROUND THE POST.
7. BARRICADE RAILS MAY BE CONSTRUCTED USING PLASTIC OR WOOD AND SHOULD NOT BE METAL.

WOOD BARRICADE POST CHART

Roadway Width (ft)	Number of Barricades	Type of Post ***	Outside ** Overhang (ft)
4	1	1 - Post	2
6	1	1 - Post	3
8	1	1 - Post	4
10	1	2 - Post	1
12	1	2 - Post	2
14	1	2 - Post	3
16	1	2 - Post	4
18	1	3 - Post	1
20	1	3 - Post	2
22	1	3 - Post	3
24	1	3 - Post	4
26	2	2 - Post	1
28	2	2 - Post	2
30	2	2 - Post	3
32	2	2 - Post	4
34	2	2 - Post 3 - Post	1
36	2	2 - Post 3 - Post	2
38	2	2 - Post 3 - Post	3
40	2	2 - Post 3 - Post	4
42	2	3 - Post	1
44	2	3 - Post	2
46	2	3 - Post	3
48	2	3 - Post	4
50	3	(2) 2-Post <Ends> (1) 3-Post <Center>	1

** ONLY REDUCE OVERHANG IF NEEDED DUE TO OBSTACLES OUTSIDE OF ROADWAY EDGE

*** LONGER WIDTH CLOSURES CAN BE ACCOMMODATED BY VARIOUS COMBINATIONS OF 2-POST AND 3-POST BARRICADES

PREL. TRACING ____ SJB ____ DESIGN ____ KGM-A ____ CHKD. ____ JRR

UNOFFICIAL WEBSITE COPY

CONTRACT	COUNTY	F.A.P. NO.	SHEET NO.	TOTAL SHTS.
T2003126 01	NEW CASTLE	SEE TITLE SHEET	49	115

CONSTRUCTION DETAILS

SCALE 0 20 40 60 FEET

SR 7, NEWTOWN ROAD TO SR 273

REVISIONS

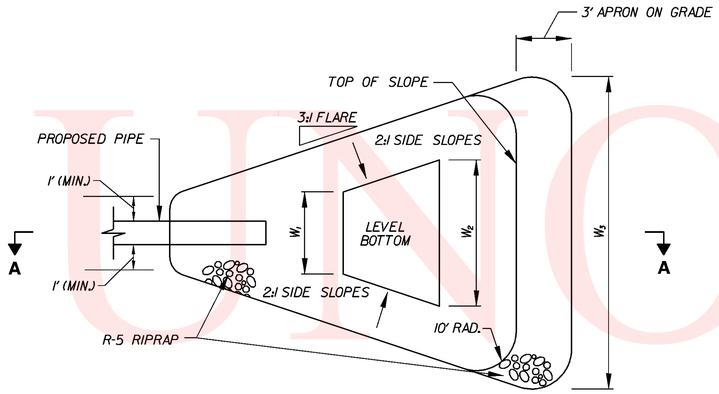

PLAN VIEW

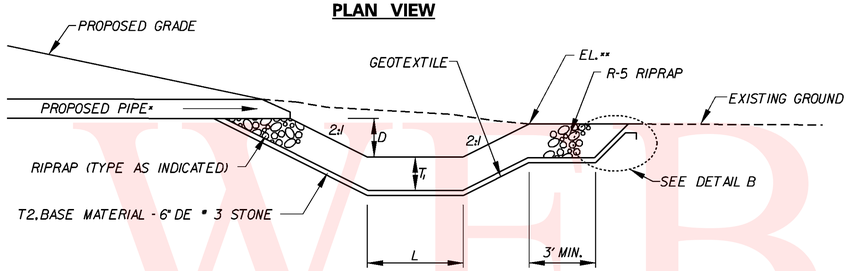

SECTION A–A

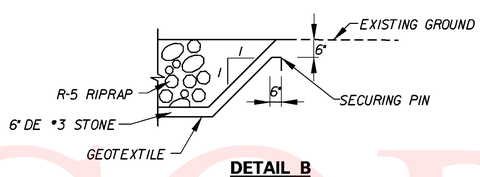

DETAIL B

PIPE ENERGY DISSIPATOR

SCALE: NONE

*PLACE RIPRAP BEFORE PLACING PIPE. CHOKE RIPRAP WITH NO.3 STONE UNDER PIPE.

NOTES:

1. ALL MATERIALS, LABOR, AND INCIDENTALS NECESSARY TO COMPLETE ENERGY DISSIPATOR, EXCEPT FOR GEOTEXTILE RIPRAP - ITEM 713003, SHALL BE INCIDENTAL TO THE RESPECTIVE RIPRAP PAY ITEM.
2. RIPRAP SHALL BE PLACED NO HIGHER THAN TOP OF PIPE (SEE PLANS FOR PIPE SPECIFICATIONS).

LOCATION	RIPRAP SIZE	D	T_1	T_2*	W_1	W_2	W_3	L
STA. 94+57 LT.	R-5	8"	18"	6"	3.5'	6'	8.6'	3.3'
STA. 94+82 LT.	R-5	8"	18"	6"	3.5'	6'	8.6'	3.3'
STA. 95+50 LT.	R-5	1.3'	18"	6"	15.0'	21.0'	30.2'	9.0'
STA. 117+33 RT.	R-5	1'	18"	6"	3.7'	7.7'	15.2'	6.0'
STA. 119+75 LT.	R-5	2.2'	26"	6"	9.5'	9.5'	17.1'	19.3'

*3 STONE

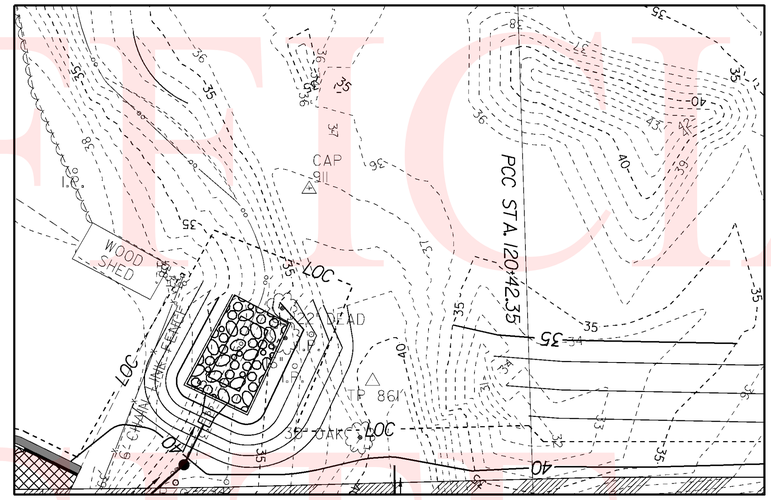

GRADING DETAIL FOR PIPE ENERGY DISSIPATOR P65 @ STA. 119+75 LT.

SCALE: NONE

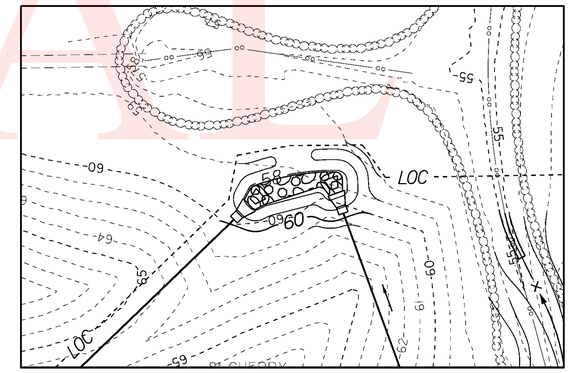

GRADING DETAIL FOR PIPE ENERGY DISSIPATOR P6 AND P7 @ STA. 94+57 LT. AND STA. 94+82 LT.

SCALE: NONE

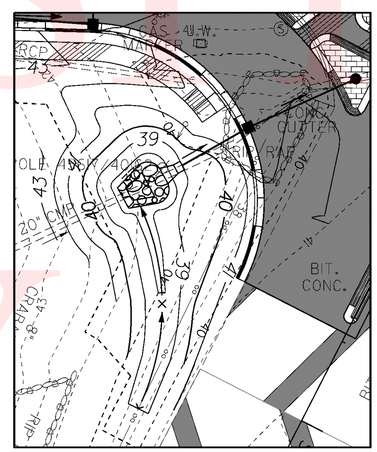

GRADING DETAIL FOR PIPE ENERGY DISSIPATOR P62 @ STA. 117+33 RT.

SCALE: NONE

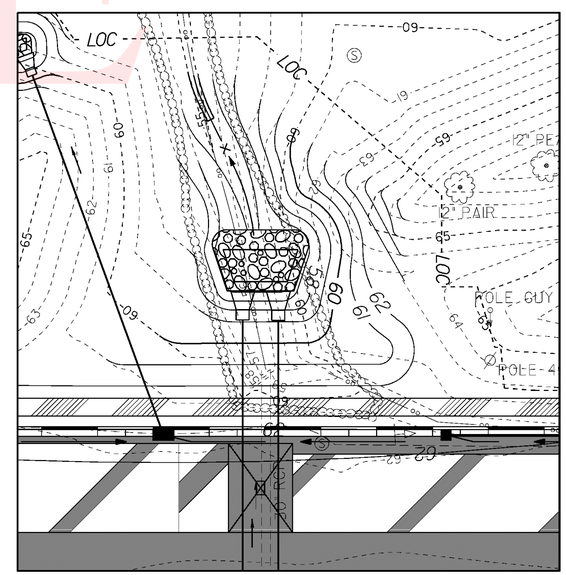

GRADING DETAIL FOR PIPE ENERGY DISSIPATOR P20 AND P34@ STA. 95+50 LT.

SCALE: NONE

PREL. TRACING S.JB DESIGN KGM-A CHKD. JRR

UNOFFICIAL WEBSITE COPY

CONSTRUCTION DETAILS

SCALE: AS SHOWN

CONTRACT	COUNTY	F.A.P. NO.	SHEET NO.	TOTAL SHTS.
T200312601	NEW CASTLE	SEE TITLE SHEET	50	115

SR 7, NEWTOWN ROAD TO SR 273

REVISIONS

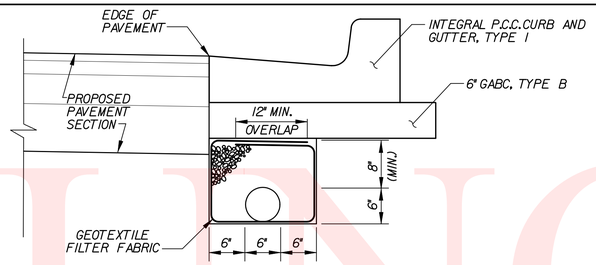

SECTION A – WITHOUT UNDERCUT

STANDARD UNDERDRAIN PLACEMENT

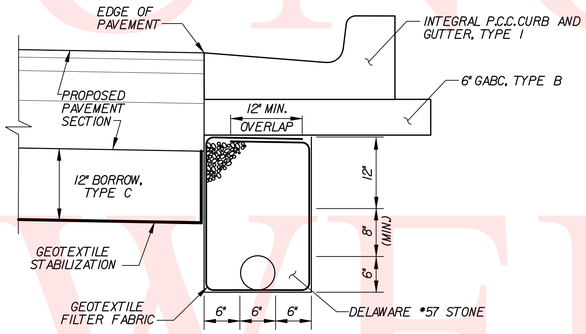

SECTION B – WITH UNDERCUT

STANDARD UNDERDRAIN PLACEMENT

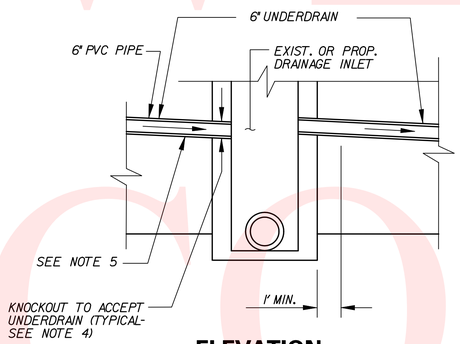

ELEVATION

NOTES:

1. THE PERFORATED PIPE UNDERDRAIN SHALL BE LOCATED AS SHOWN ON THE TYPICAL SECTIONS.
2. GEOTEXTILE FILTER FABRIC SHALL BE PLACED ENTIRELY OVER THE TOP OF UNDERDRAIN TRENCH AND LAPPED AS SHOWN.
3. SLOPE OF UNDERDRAINS SHALL MATCH ROADWAY GRADE, UNLESS OTHERWISE DIRECTED BY THE ENGINEER.
4. OUTLET PIPE CONFIGURATIONS SHALL USE 45 DEGREE ELBOWS OR SHALL USE STRAIGHT PIPE WITH A MINIMUM RADIUS OF 3 FEET TO DIRECT UNDERDRAIN PIPE INTO SIDE OF DRAINAGE INLET OR TO POSITIVE GRADE. PIPE SHALL ALSO BE NON-PERFORATED AND HAVE A SMOOTH INTERIOR.
5. WHEN TWO LINES OF PIPE UNDERDRAIN DRAIN TO A LOW POINT, EACH PIPE MUST HAVE ITS OWN OUTLET.

PERFORATED PIPE UNDERDRAIN DETAIL

SCALE: NONE

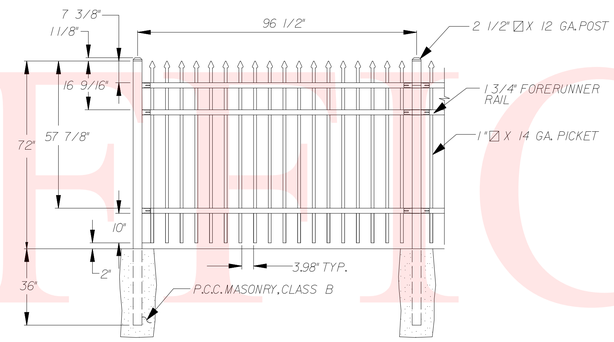

DECORATIVE FENCE DETAIL

SCALE: NONE

NOTES:

1. THIS DETAIL SHOWS THE 6'-0" HIGH ALUMINUM DECORATIVE FENCE TO BE INSTALLED DIRECTLY BEHIND THE RETAINING WALL FROM STATION 101+49 TO STATION 102+07, RIGHT. SEE RETAINING WALL DETAILS FOR ADDITIONAL INFORMATION. ALL WORK AND MATERIALS NECESSARY FOR THE COMPLETION OF THE DECORATIVE FENCE SHALL BE PAID UNDER ITEM 727522 - DECORATIVE FENCE. REFER TO SPECIAL PROVISION FOR DETAIL SPECIFICATIONS.

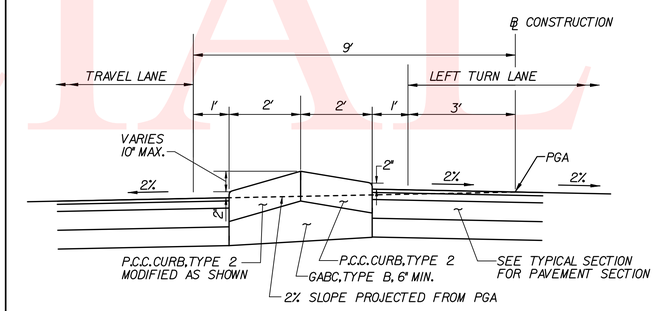

MEDIAN ISLAND DETAIL

SCALE: NONE

NOTES:

1. THIS DETAIL SHOWS THE SOUTHBOUND LEFT TURN LANE CONDITION. FOR THE NORTHBOUND LEFT TURN LANE CONDITION, MIRROR THE DETAIL ABOUT THE BASELINE OF CONSTRUCTION.
2. THE VARIABLE CURB HEIGHT DIMENSION APPLIES WHEN THE CENTER OF THE MEDIAN IS 6' FROM THE PGA AND THE CROSS SLOPES ARE AS SHOWN. THE DIMENSION VARIES BASED ON CROSS SLOPE AND DISTANCE BETWEEN THE MEDIAN ISLAND AND THE PGA. NOTE THAT 2" CURB REVEAL SHOULD BE MAINTAINED ON BOTH SIDES OF THE MEDIAN.

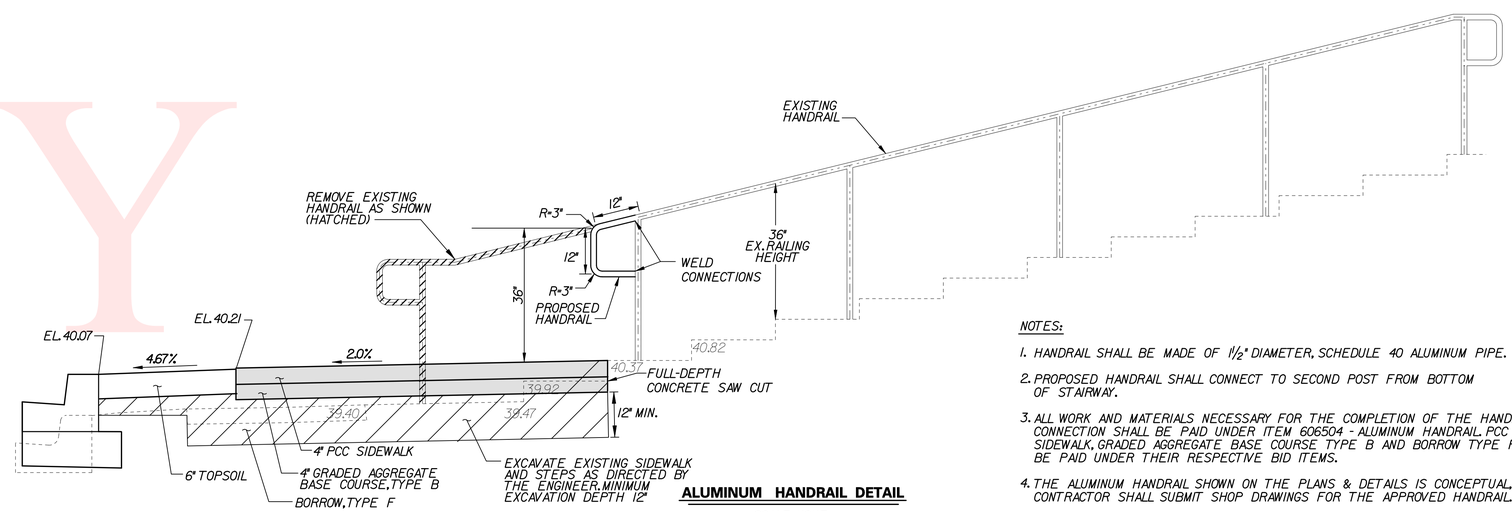

ALUMINUM HANDRAIL DETAIL

SCALE: NONE
STA. 124+07 RT.

NOTES:

1. HANDRAIL SHALL BE MADE OF 1½" DIAMETER, SCHEDULE 40 ALUMINUM PIPE.
2. PROPOSED HANDRAIL SHALL CONNECT TO SECOND POST FROM BOTTOM OF STAIRWAY.
3. ALL WORK AND MATERIALS NECESSARY FOR THE COMPLETION OF THE HANDRAIL CONNECTION SHALL BE PAID UNDER ITEM 606504 - ALUMINUM HANDRAIL. PCC SIDEWALK, GRADED AGGREGATE BASE COURSE TYPE B AND BORROW TYPE F SHALL BE PAID UNDER THEIR RESPECTIVE BID ITEMS.
4. THE ALUMINUM HANDRAIL SHOWN ON THE PLANS & DETAILS IS CONCEPTUAL. THE CONTRACTOR SHALL SUBMIT SHOP DRAWINGS FOR THE APPROVED HANDRAIL.
5. SEE ITEM 606504 - ALUMINUM HANDRAIL FOR ADDITIONAL INFORMATION

PREL. TRACING SJB DESIGN KGM-A CHK'D. JRR

UNOFFICIAL WEBSITE COPY

RETAINING WALL 1 – GENERAL PLAN AND ELEVATION

CONTRACT	COUNTY	F.A.P. NO.	SHEET NO.	TOTAL SHTS.
T200312601	NEW CASTLE	SEE TITLE SHEET	51	115

SR 7, NEWTOWN ROAD TO SR 273

REVISIONS

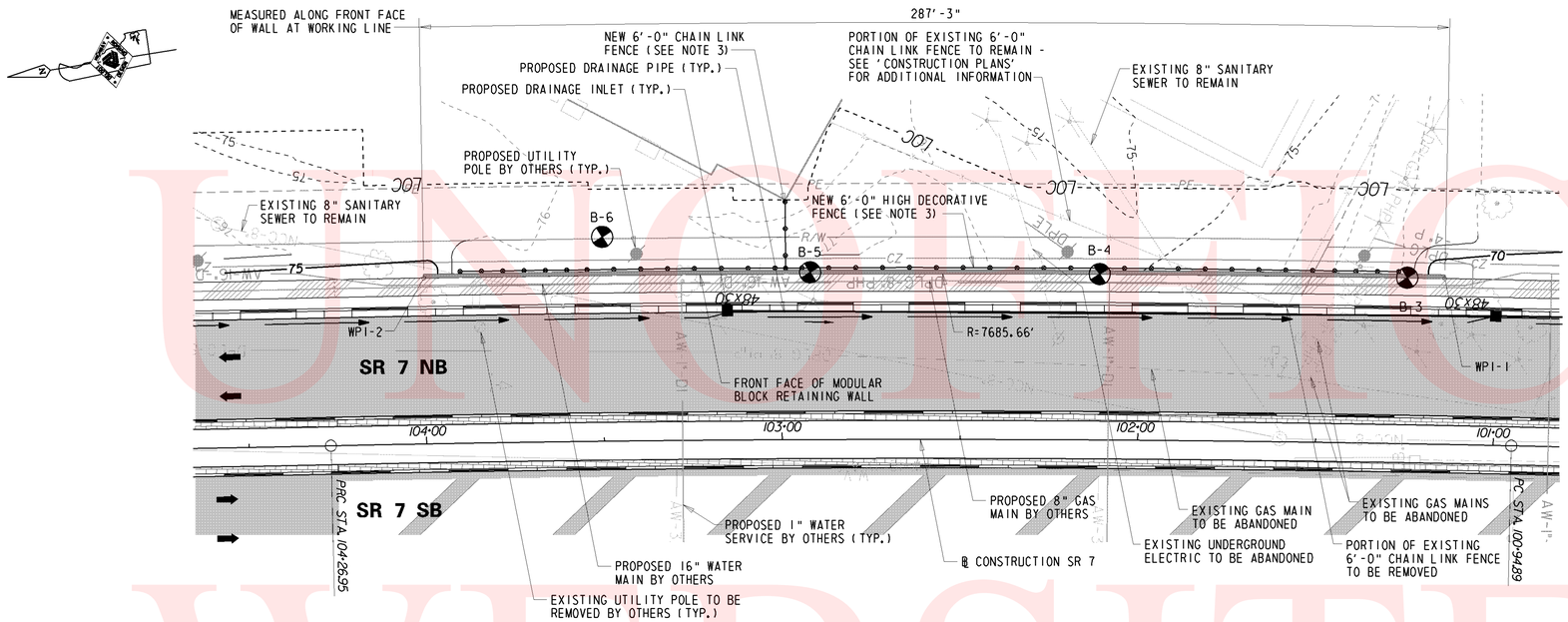

PLAN

SCALE: 1"=20'

NOTE:
ORIENTATION OF MODULAR BLOCK RETAINING WALL DOES NOT MATCH THE ORIENTATION SHOWN ON THE CONSTRUCTION PLANS.

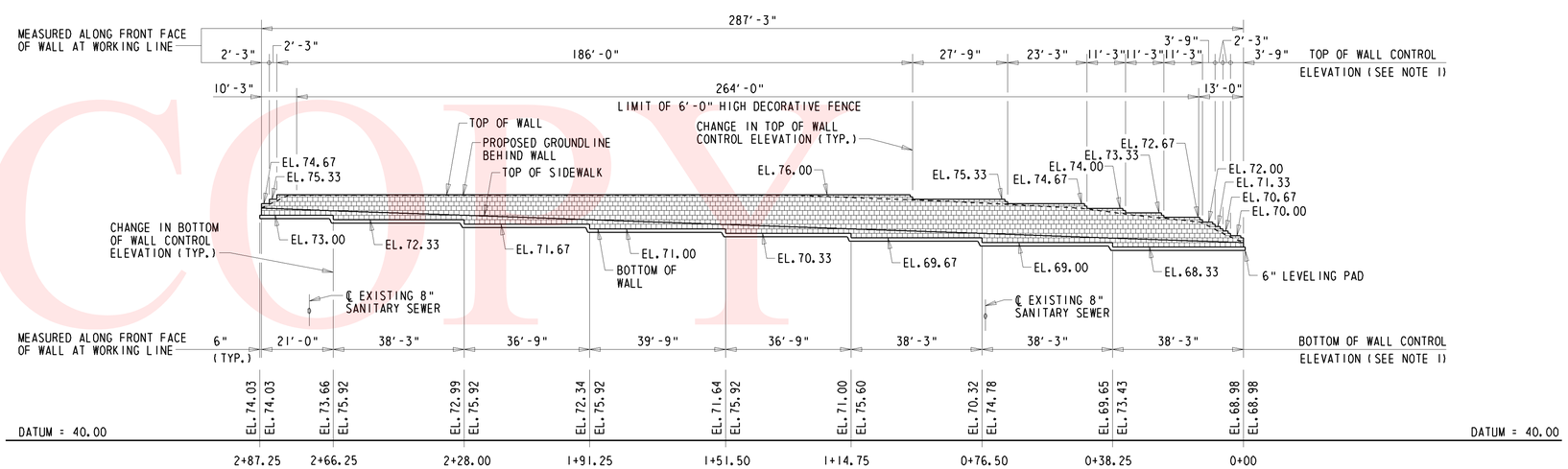

ELEVATION

SCALE: HORIZ.: 1"=20'
VERT.: 1"=10'

PROJECT NOTES:

1. LOCATION

   CONSTRUCTION OF A MODULAR BLOCK RETAINING WALL ALONG THE EAST SIDE OF SR 7 BETWEEN STA. 101+14 AND STA. 104+00, IN NEW CASTLE COUNTY, DELAWARE.

2. ELEVATION

   VERTICAL DATUM IS NAVD 88.

3. DESIGN CRITERIA

   CURRENT EDITION OF THE NATIONAL CONCRETE MASONRY ASSOCIATION'S (NCMA) DESIGN MANUAL FOR SEGMENTAL RETAINING WALLS. DESIGN OF WALL SHALL INCLUDE RETAINED EARTH LOADING, SLOPED BACKFILL LOADING AND 100 PSF LIVE LOAD SURCHARGE.

4. FOUNDATIONS

   FOUNDATION DESIGN AND QUANTITIES ARE BASED ON A STUDY OF SUB-SOIL BORINGS MADE AT THE SITE. THIS BORING INFORMATION, THE ACCURACY OF WHICH THE STATE DOES NOT GUARANTEE, IS PRESENTED ON THESE PLANS TO THE CONTRACTOR FOR HIS INFORMATION ONLY. THE CONTRACTOR MUST HAVE HIS OWN DETERMINATION OF SUB-SOIL CONDITIONS, WHICH MAY EFFECT METHOD OR COST OF CONSTRUCTION. ALLOWABLE BEARING CAPACITY = 2000 PSF.

5. ALL AREAS DISTURBED BY THE CONTRACTOR'S OPERATIONS OUTSIDE THE LIMITS OF CONSTRUCTION SHALL BE TOPSOILED, SEEDED AND MULCHED AT THE CONTRACTOR'S EXPENSE.

6. SEE SPECIAL PROVISIONS FOR ADDITIONAL INFORMATION REGARDING THE MODULAR BLOCK RETAINING WALL.

WORKING POINT SCHEDULE

WORKING POINT	STATION	OFFSET	NORTHING	EASTING
WPI-1	101+14.48	46.67' RT.	601776.6963	588962.2419
WPI-2	103+99.98	46.67' RT.	602060.1182	589008.8781

NOTE:
STATIONS AND OFFSETS ARE FROM ℄ CONSTRUCTION SR 7.

NOTES:

1. ELEVATIONS SHOWN FOR TOP AND BOTTOM OF THE WALL ARE CONTROL ELEVATIONS. THE TOP OF THE WALL SHALL BE NO LOWER THAN THE TOP OF WALL CONTROL ELEVATIONS SHOWN ON THIS SHEET. THE BOTTOM OF THE WALL SHALL BE NO HIGHER THAN THE BOTTOM OF WALL CONTROL ELEVATIONS SHOWN ON THIS SHEET.
2. FOR LOCATION OF WORKING POINT APPLICATION, SEE TYPICAL SECTION.
3. REFER TO CONSTRUCTION PLANS FOR ADDITIONAL INFORMATION ON THE NEW 6'-0" HIGH CHAIN LINK FENCE AND NEW 6'-0" HIGH DECORATIVE FENCE.
4. REFER TO CONSTRUCTION PLANS FOR THE DISPOSITION OF EXISTING TOPOGRAPHICAL FEATURES ADJACENT TO THE PROPOSED RETAINING WALL.
5. DECORATIVE FENCE NOT SHOWN IN ELEVATION FOR CLARITY.

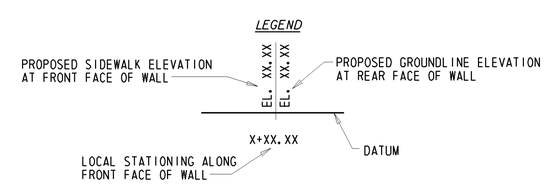

PRELIM. TRACING K.P.L. DESIGN J.T.L. CHKD. W.A.C.

UNOFFICIAL WEBSITE COPY

RETAINING WALL TYPICAL SECTIONS

CONTRACT	COUNTY	F.A.P. NO.	SHEET NO.	TOTAL SHTS.
T2003126 01	NEW CASTLE	SEE TITLE SHEET	52	115

SR 7, NEWTOWN ROAD TO SR 273

REVISIONS

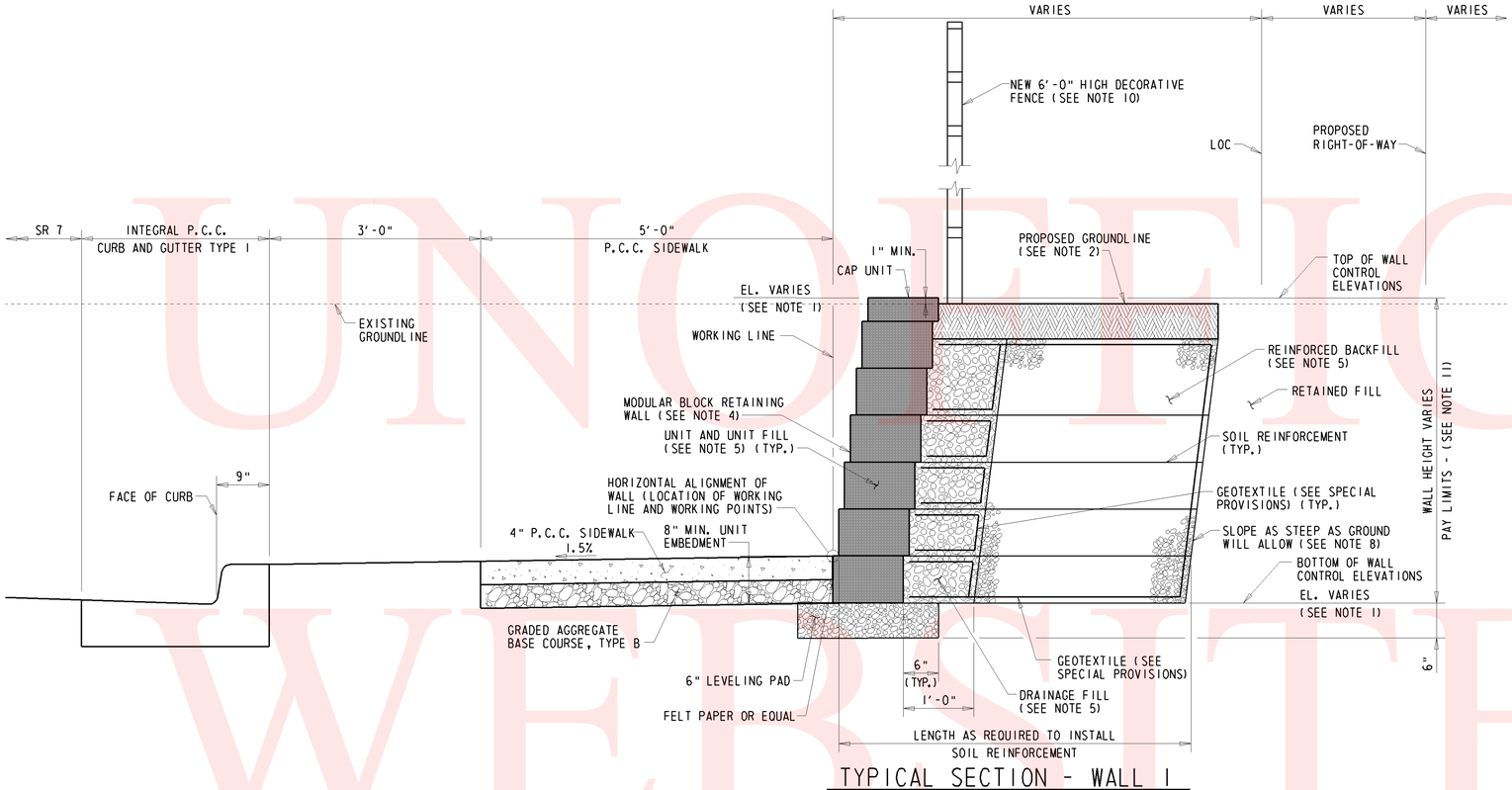

TYPICAL SECTION - WALL 1

SCALE: 1"=1'-0"

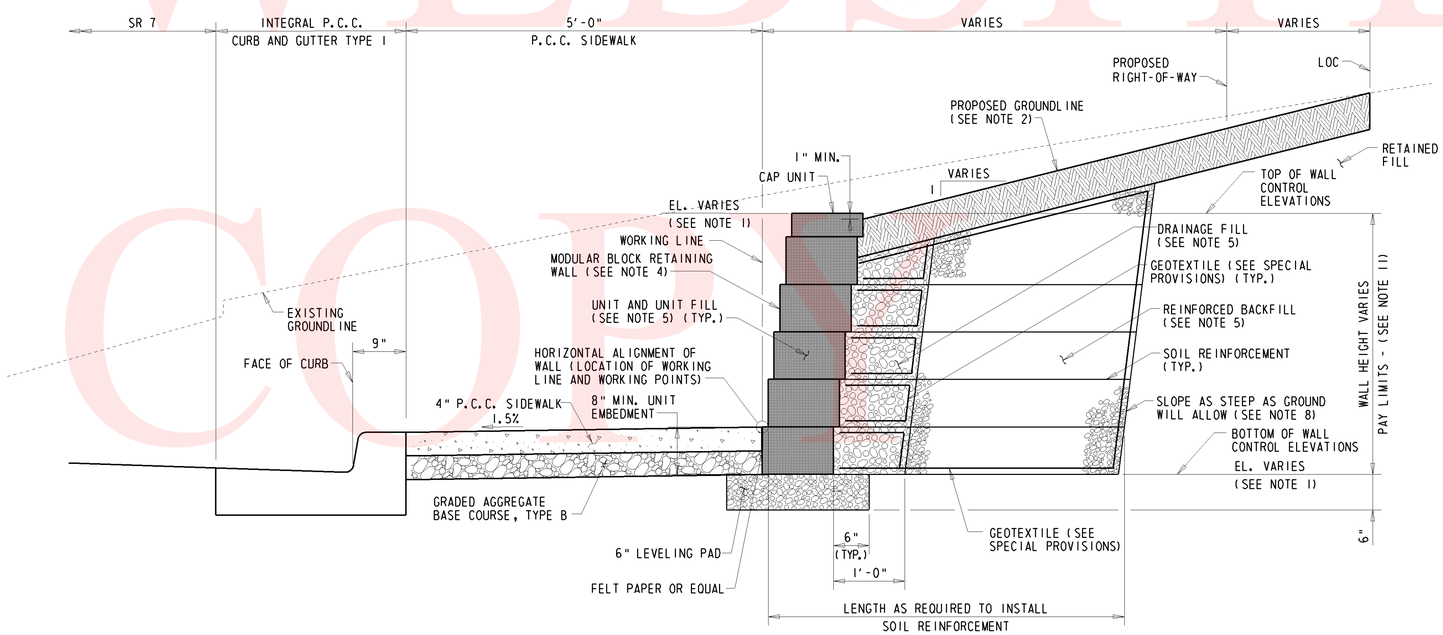

TYPICAL SECTION - WALLS 2 AND 3

SCALE: 1"=1'-0"

NOTES:

1. FOR TOP AND BOTTOM ELEVATIONS OF MODULAR BLOCK RETAINING WALL, SEE GENERAL PLAN AND ELEVATION.
2. FOR PROPOSED AND EXISTING CONTOURS BEHIND THE RETAINING WALL, SEE GENERAL PLAN AND ELEVATION. THE STEEPEST BACKSLOPE SHALL BE LIMITED TO 4H:1V FOR WALLS 1 AND 2. THE STEEPEST BACKSLOPE SHALL BE LIMITED TO 3 1/2H:1V FOR WALL 3. REFER TO GENERAL PLAN AND ELEVATION FOR PROPOSED CONTOURS.
3. MODULAR BLOCK RETAINING WALL SHOWN GRAPHICALLY FOR INFORMATIONAL PURPOSES ONLY. SEE SPECIAL PROVISIONS.
4. MODULAR BLOCK RETAINING WALL SHALL BE CONSTRUCTED WITH A SETBACK FACE TO MINIMIZE LENGTH OF SOIL REINFORCEMENT.
5. FOR REQUIREMENTS OF REINFORCED BACKFILL, UNIT FILL, LEVELING PAD AND DRAINAGE FILL, SEE SPECIAL PROVISIONS.
6. EXISTING AND PROPOSED UTILITIES NOT SHOWN, SEE GENERAL PLAN AND ELEVATION.
7. NUMBER AND LENGTH OF SOIL REINFORCEMENT SHOWN FOR GRAPHICAL PURPOSES ONLY.
8. CUT SLOPE BEHIND REINFORCED BACKFILL SHALL BE LAID BACK AS STEEP AS GROUND WILL ALLOW TO MINIMIZE IMPACT TO ADJACENT PROPERTY. TEMPORARY SHORING SHALL BE REQUIRED FOR EXCAVATIONS THAT EXCEED 5 FEET IN HEIGHT.
9. A DRAINAGE SYSTEM (NOT SHOWN) FOR THE MODULAR BLOCK RETAINING WALL SYSTEM SHALL BE INSTALLED IF REQUIRED BY DESIGN OR BY THE MANUFACTURER OF THE SELECTED MODULAR BLOCK RETAINING WALL SYSTEM. COST FOR THE DRAINAGE SYSTEM, IF REQUIRED, SHALL BE INCIDENTAL TO ITEM 602615 - MODULAR BLOCK RETAINING WALL.
10. REFER TO CONSTRUCTION PLANS FOR ADDITIONAL INFORMATION ON THE NEW 6'-0" HIGH DECORATIVE FENCE.
11. THE PAY LIMITS FOR ITEM 602615 - MODULAR BLOCK RETAINING WALL SHALL BE BASED ON THE TOP OF WALL AND BOTTOM OF WALL CONTROL ELEVATIONS AND THE LOCATION OF THE CHANGE IN CONTROL ELEVATIONS SHOWN ON THE GENERAL PLAN AND ELEVATION. REFER TO THE SPECIAL PROVISIONS FOR WORK INCLUDED IN ITEM 602615 - MODULAR BLOCK RETAINING WALL.
12. PAYMENT FOR CLASS B CONCRETE FOR DECORATIVE FENCE WILL BE INCLUDED UNDER ITEM 727522 - DECORATIVE FENCE.

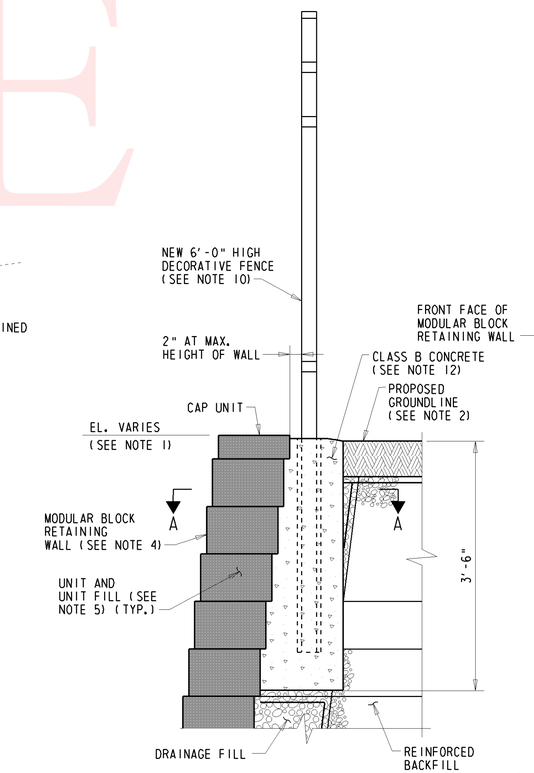

TYPICAL SECTION - WALL 1 (AT POST)

SCALE: 1"=1'-0"

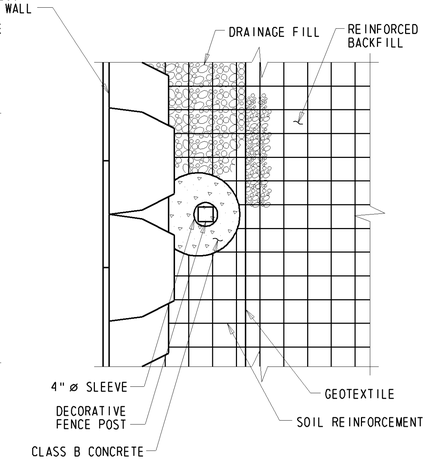

SECTION A-A

SCALE: 1"=1'-0"

PREL. TRACING ____ W.R.A. ____ DESIGN ____ J.T.L. ____ CHKD. ____ W.A.G. ____

1/6/2011

M:\311310\4\Wall\ww02sr7.dgn

UNOFFICIAL WEBSITE COPY

CONTRACT	COUNTY	F.A.P. NO.	SHEET NO.	TOTAL SHTS.
T200312601	NEW CASTLE	SEE TITLE SHEET	53	115

SR 7, NEWTOWN ROAD TO SR 273

REVISIONS

RETAINING WALL 2 – GENERAL PLAN AND ELEVATION

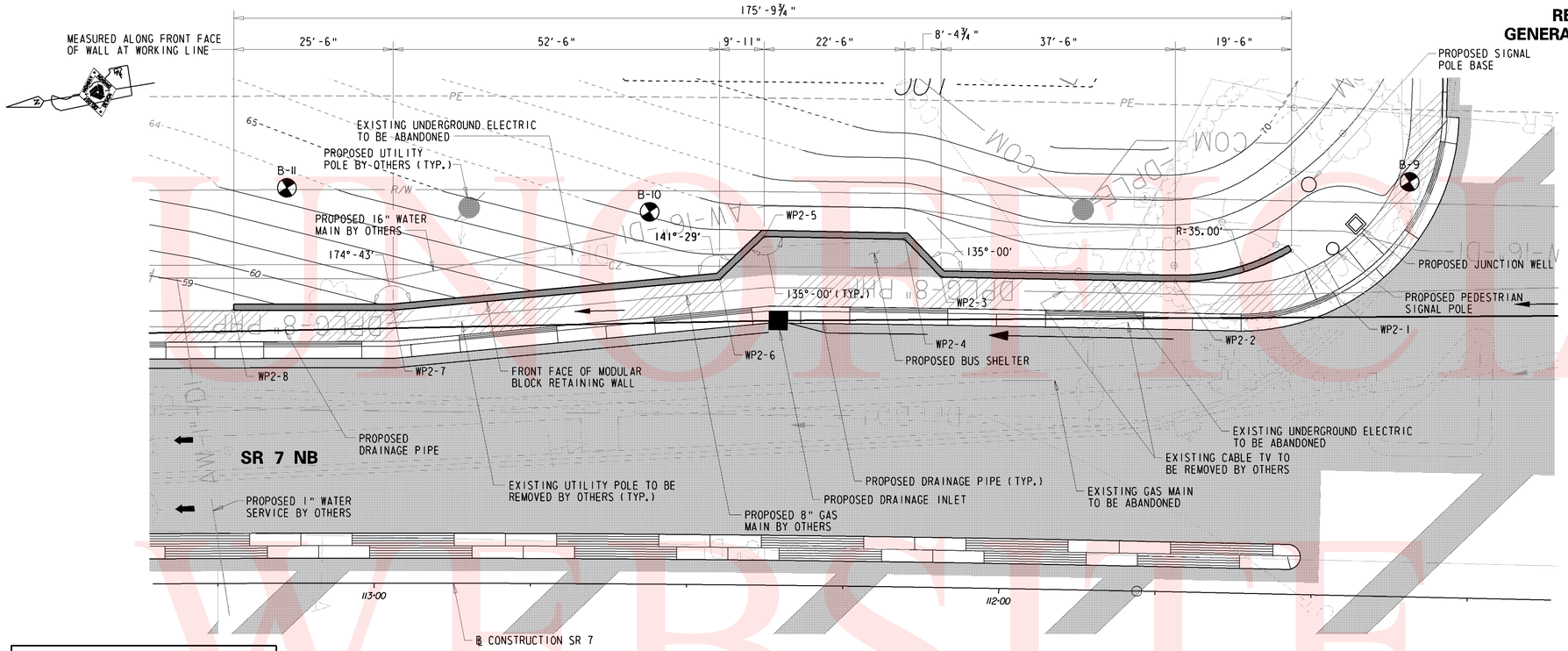

PLAN

SCALE: 1"=10'

NOTE:
ORIENTATION OF MODULAR BLOCK RETAINING WALL DOES NOT MATCH THE ORIENTATION SHOWN ON THE CONSTRUCTION PLANS.

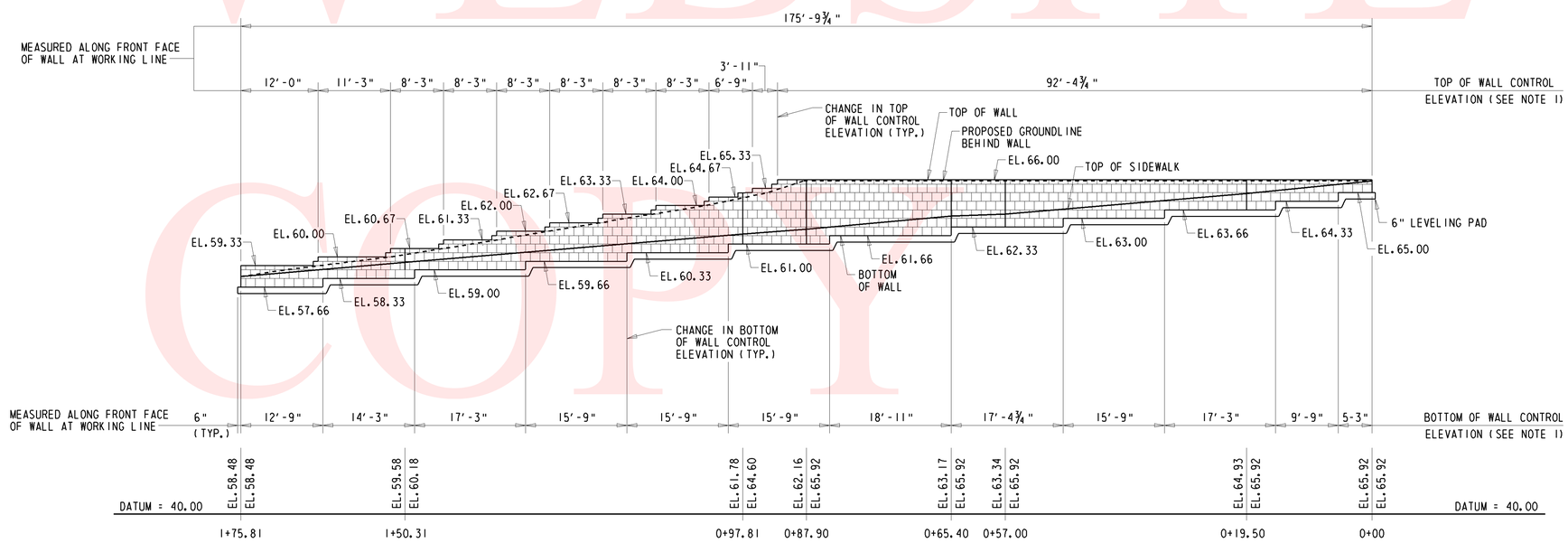

ELEVATION

SCALE: HORIZ.: 1"=10'
VERT.: 1"=5'

PROJECT NOTES:

1. LOCATION

   CONSTRUCTION OF A MODULAR BLOCK RETAINING WALL ALONG THE EAST SIDE OF SR 7 BETWEEN STA. 111+54 AND 113+23, IN NEW CASTLE COUNTY, DELAWARE.

2. ELEVATION

   VERTICAL DATUM IS NAVD 88.

3. DESIGN CRITERIA

   CURRENT EDITION OF THE NATIONAL CONCRETE MASONRY ASSOCIATION'S (NCMA) DESIGN MANUAL FOR SEGMENTAL RETAINING WALLS. DESIGN OF WALL SHALL INCLUDE RETAINED EARTH LOADING, SLOPED BACKFILL LOADING AND 100 PSF LIVE LOAD SURCHARGE.

4. FOUNDATIONS

   FOUNDATION DESIGN AND QUANTITIES ARE BASED ON A STUDY OF SUB-SOIL BORINGS MADE AT THE SITE. THIS BORING INFORMATION, THE ACCURACY OF WHICH THE STATE DOES NOT GUARANTEE, IS PRESENTED ON THESE PLANS TO THE CONTRACTOR FOR HIS INFORMATION ONLY. THE CONTRACTOR MUST HAVE HIS OWN DETERMINATION OF SUB-SOIL CONDITIONS, WHICH MAY EFFECT METHOD OR COST OF CONSTRUCTION. ALLOWABLE BEARING CAPACITY = 2000 PSF.

5. ALL AREAS DISTURBED BY THE CONTRACTOR'S OPERATIONS OUTSIDE THE LIMITS OF CONSTRUCTION SHALL BE TOPSOILED, SEEDED AND MULCHED AT THE CONTRACTOR'S EXPENSE.

6. SEE SPECIAL PROVISIONS FOR ADDITIONAL INFORMATION REGARDING THE MODULAR BLOCK RETAINING WALL.

WORKING POINT SCHEDULE

WORKING POINT	STATION	OFFSET	NORTHING	EASTING
WP2-1	111+54.28	55.02' RT.	602799.7352	589146.6100
WP2-2	111+72.82	49.69' RT.	602818.8940	589144.7502
WP2-3	112+09.99	49.70' RT.	602855.7760	589151.5304
WP2-4	112+15.85	55.67' RT.	602860.5420	589158.4435
WP2-5	112+38.14	55.81' RT.	602882.6712	589162.5116
WP2-6	112+45.14	48.87' RT.	602890.8319	589156.8854
WP2-7	112+96.97	43.68' RT.	602943.2087	589160.4802
WP2-8	113+22.28	43.68' RT.	602968.3802	589164.5601

NOTE:
STATIONS AND OFFSETS ARE FROM ℄ CONSTRUCTION SR 7.

NOTES:

1. ELEVATIONS SHOWN FOR TOP AND BOTTOM OF THE WALL ARE CONTROL ELEVATIONS. THE TOP OF THE WALL SHALL BE NO LOWER THAN THE TOP OF WALL CONTROL ELEVATIONS SHOWN ON THIS SHEET. THE BOTTOM OF THE WALL SHALL BE NO HIGHER THAN THE BOTTOM OF WALL CONTROL ELEVATIONS SHOWN ON THIS SHEET.
2. FOR LOCATION OF WORKING POINT APPLICATION, SEE TYPICAL SECTION.
3. REFER TO CONSTRUCTION PLANS FOR THE DISPOSITION OF EXISTING TOPOGRAPHICAL FEATURES ADJACENT TO THE PROPOSED RETAINING WALL.

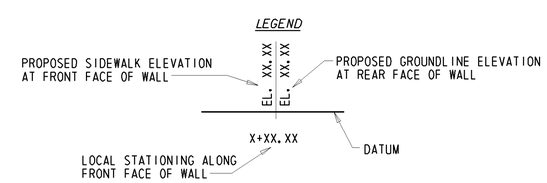

PRELIM. TRACING K.P.L. DESIGN J.T.L. CHK'D. W.A.G.

1/6/2011

M:\311310\Wall\pe02_sr7.dgn

UNOFFICIAL WEBSITE COPY

CONTRACT	COUNTY	F.A.P. NO.	SHEET NO.	TOTAL SHTS.
T200312601	NEW CASTLE	SEE TITLE SHEET	54	115

RETAINING WALL 3 – GENERAL PLAN AND ELEVATION

SR 7, NEWTOWN ROAD TO SR 273

REVISIONS

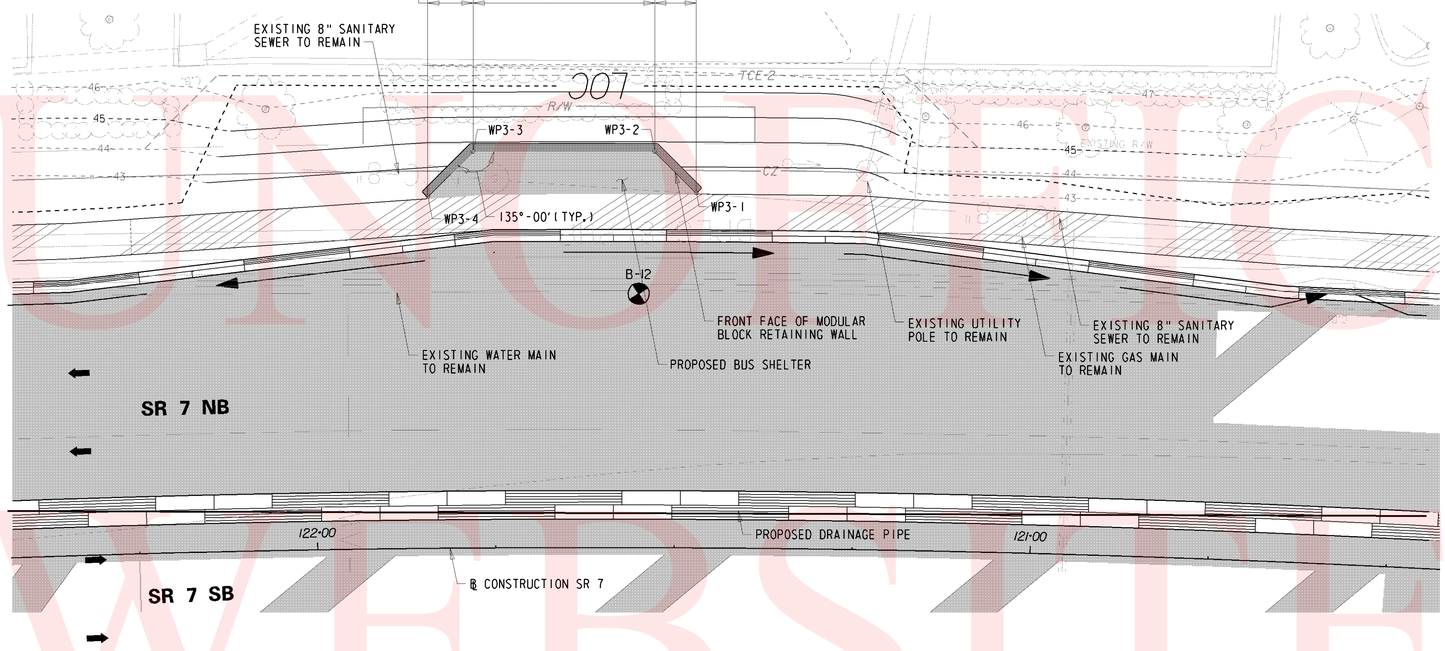

NOTE:
ORIENTATION OF MODULAR BLOCK RETAINING WALL DOES NOT MATCH THE ORIENTATION SHOWN ON THE CONSTRUCTION PLANS.

PLAN
SCALE: 1"=10'

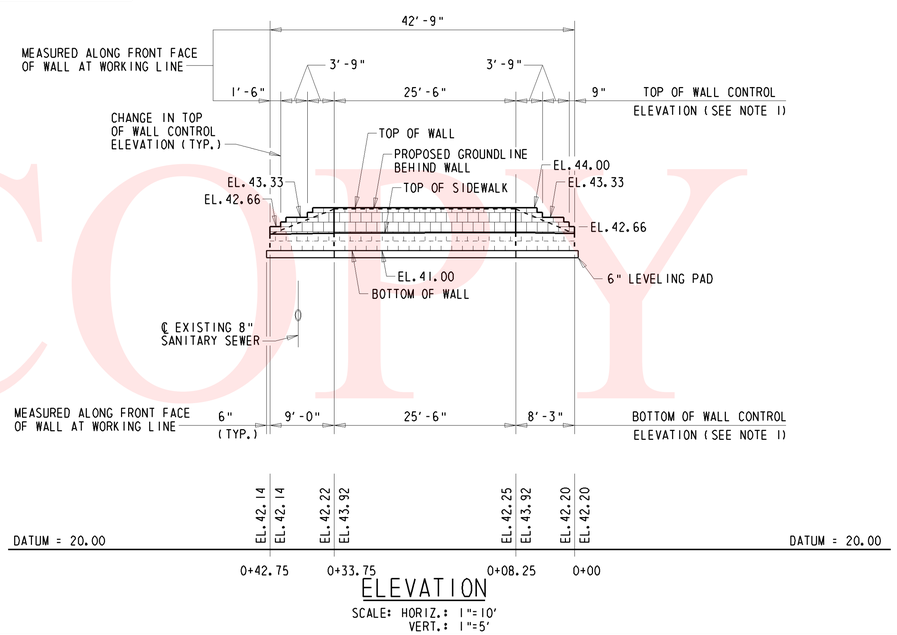

ELEVATION
SCALE: HORIZ.: 1"=10'
VERT.: 1"=5'

PROJECT NOTES:

1. LOCATION

   CONSTRUCTION OF A MODULAR BLOCK RETAINING WALL ALONG THE EAST SIDE OF SR 7 BETWEEN STA. 121+47 AND STA. 121+85, IN NEW CASTLE COUNTY, DELAWARE.

2. ELEVATION

   VERTICAL DATUM IS NAVD 88.

3. DESIGN CRITERIA

   CURRENT EDITION OF THE NATIONAL CONCRETE MASONRY ASSOCIATION'S (NCMA) DESIGN MANUAL FOR SEGMENTAL RETAINING WALLS. DESIGN OF WALL SHALL INCLUDE RETAINED EARTH LOADING, SLOPED BACKFILL LOADING AND 100 PSF LIVE LOAD SURCHARGE.

4. FOUNDATIONS

   FOUNDATION DESIGN AND QUANTITIES ARE BASED ON A STUDY OF SUB-SOIL BORINGS MADE AT THE SITE. THIS BORING INFORMATION, THE ACCURACY OF WHICH THE STATE DOES NOT GUARANTEE, IS PRESENTED ON THESE PLANS TO THE CONTRACTOR FOR HIS INFORMATION ONLY. THE CONTRACTOR MUST HAVE HIS OWN DETERMINATION OF SUB-SOIL CONDITIONS, WHICH MAY EFFECT METHOD OR COST OF CONSTRUCTION. ALLOWABLE BEARING CAPACITY = 2000 PSF.

5. ALL AREAS DISTURBED BY THE CONTRACTOR'S OPERATIONS OUTSIDE THE LIMITS OF CONSTRUCTION SHALL BE TOPSOILED, SEEDED AND MULCHED AT THE CONTRACTOR'S EXPENSE.

6. SEE SPECIAL PROVISIONS FOR ADDITIONAL INFORMATION REGARDING THE MODULAR BLOCK RETAINING WALL.

WORKING POINT SCHEDULE

WORKING POINT	STATION	OFFSET	NORTHING	EASTING
WP3-1	121+47.16	49.87' RT.	603797.0060	589241.1661
WP3-2	121+52.89	55.68' RT.	603802.9483	589246.8887
WP3-3	121+77.79	55.72' RT.	603828.4438	589246.4095
WP3-4	121+84.06	49.41' RT.	603834.6870	589239.9274

NOTE:
STATIONS AND OFFSETS ARE FROM ℄ CONSTRUCTION SR 7.

NOTES:

1. ELEVATIONS SHOWN FOR TOP AND BOTTOM OF THE WALL ARE CONTROL ELEVATIONS. THE TOP OF THE WALL SHALL BE NO LOWER THAN THE TOP OF WALL CONTROL ELEVATIONS SHOWN ON THIS SHEET. THE BOTTOM OF THE WALL SHALL BE NO HIGHER THAN THE BOTTOM OF WALL CONTROL ELEVATIONS SHOWN ON THIS SHEET.
2. FOR LOCATION OF WORKING POINT APPLICATION, SEE TYPICAL SECTION.
3. REFER TO CONSTRUCTION PLANS FOR THE DISPOSITION OF EXISTING TOPOGRAPHICAL FEATURES ADJACENT TO THE PROPOSED RETAINING WALL.

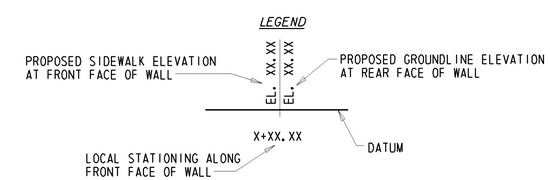

PREL. TRACING K.P.L. DESIGN J.T.L. CHKD. W.A.G.

UNOFFICIAL WEBSITE COPY

RETAINING WALL 1 – BORING LOGS 1

CONTRACT	COUNTY	F.A.P. NO.	SHEET NO.	TOTAL SHTS.
T2003126 01	NEW CASTLE	SEE TITLE SHEET	55	115

SR 7, NEWTOWN ROAD TO SR 273

REVISIONS

B–3

STATION: 101+25 ±
OFFSET: 46.7'±RT
EXISTING GROUND SURFACE ELEVATION: 72.3 ±
DATE: 11-11-04

SAMPLE NO.	DEPTH	BLOWS/6"	SAMPLE DESCRIPTION	REMARKS	CLASS
1	0.7' 2.0'	1-2-6-8	WET STIFF BROWN FINE SANDY SILT W/ SOME COARSE SAND AND GRAVEL, TRACE OF CLAY.		A-4 (0)
2	2.0' 4.0'	6-8-8-9	NO SIEVE ANALYSIS - INDICATION OF FINE TO COARSE SAND AND GRAVEL.		-
3	4.0' 6.0'	8-8-10-12	WET MEDIUM DENSE REDDISH BROWN COARSE SANDY GRAVEL W/ SOME FINE SAND AND CLAY.		A-2-4 (0)
4	6.0' 8.0'	11-17-23-20	WET DENSE REDDISH BROWN COARSE TO FINE SAND AND GRAVEL W/ SOME CLAY.		A-2-4 (0)
5	8.0' 10.0'	8-14-15-13	WET MEDIUM DENSE REDDISH BROWN GRAVEL W/ SOME COARSE TO FINE SAND AND CLAY.		A-2-4 (0)
6	10.0' 12.0'	9-9-8-9	WET MEDIUM DENSE REDDISH BROWN COARSE TO FINE SAND W/ SOME SILT, TRACE OF GRAVEL.		A-1-b (0)
7	12.0' 14.0'	3-7-9-13	WET MEDIUM DENSE BROWN COARSE TO FINE SANDY GRAVEL W/ SOME SILT.		A-1-b (0)
8	14.0' 16.0'	6-5-6-5	WET MEDIUM DENSE BROWN COARSE TO FINE SAND W/ SOME GRAVEL AND SILT.		A-1-b (0)
9	16.0' 18.0'	3-4-5-9	WET LOOSE BROWN FINE SAND W/ TRACE OF SILT.		A-3 (0)
10	18.0' 20.0'	8-6-11-12	WET MEDIUM DENSE BROWN FINE SAND W/ SOME SILT, TRACE OF COARSE SAND AND GRAVEL.		A-2-4 (0)
11	20.0' 22.0'	5-9-12-16	WET MEDIUM DENSE BROWN SILTY FINE SAND W/ TRACE OF COARSE SAND AND GRAVEL.		A-2-4 (0)
12	22.0' 24.0'	8-15-17-20	WET DENSE BROWN FINE SAND W/ SOME SILT AND COARSE SAND.		A-2-4 (0)
13	24.0' 26.0'	12-19-18-15	WET DENSE BROWN FINE SAND W/ SOME SILT.		A-2-4 (0)
14	26.0' 28.0'	13-11-11-10	WET VERY STIFF BROWN FINE SANDY SILT.		A-4 (0)
15	28.0' 30.0'	4-5-6-8	SATURATED STIFF BROWN FINE SANDY SILT W/ SOME CLAY.		A-4 (0)
16	30.0' 32.0'	16-13-16-19	SATURATED VERY STIFF BROWN FINE SANDY SILT.		A-4 (0)
17	32.0' 34.0'	9-13-12-13	SATURATED VERY STIFF BROWN FINE SANDY SILT.		A-4 (0)
18	34.0' 36.0'	6-13-15-14	SATURATED VERY STIFF BROWN FINE SANDY SILT.		A-4 (0)
19 19A	36.0' 38.0'	14-10-15-12	SATURATED MEDIUM DENSE BROWN FINE SAND W/ SOME SILT, TRACE OF COARSE SAND. (12" SPL) SATURATED VERY STIFF BROWN FINE SANDY SILT W/ SOME CLAY. (12" SPL)		A-2-4 (0) A-4 (1)
20	38.0' 40.0'	6-12-16-20	SATURATED MEDIUM DENSE BROWN FINE SAND W/ SOME SILT, TRACE OF COARSE SAND.		A-2-4 (0)
21	40.0' 42.0'	22-20-25-27	SATURATED DENSE BROWN FINE SAND W/ SOME COARSE SAND, TRACE OF SILT.		A-3 (0)
22	42.0' 44.0'	12-22-23-22	SATURATED DENSE BROWN FINE SAND W/ SOME SILT AND COARSE SAND.		A-2-4 (0)
23	44.0' 46.0'	14-25-34-40	SATURATED VERY DENSE BROWN FINE TO COARSE SAND W/ TRACE OF GRAVEL AND SILT.		A-3 (0)
24	46.0' 48.0'	25-32-22-24	SATURATED VERY DENSE BROWN COARSE TO FINE SAND W/ SOME GRAVEL, TRACE OF SILT.		A-1-b (0)
25	48.0' 50.0'	14-24-28-32	SATURATED VERY DENSE BROWN COARSE TO FINE SAND W/ SOME GRAVEL AND SILT.		A-1-b (0)

B–4

STATION: 102+11 ±
OFFSET: 46.7'±RT
EXISTING GROUND SURFACE ELEVATION: 74.9 ±
DATE: 11-16-04

SAMPLE NO.	DEPTH	BLOWS/6"	SAMPLE DESCRIPTION	REMARKS	CLASS
1	0.5' 2.0'	3-5-10-11	WET VERY STIFF BROWN GRAVELLY SILT W/ SOME FINE SAND AND CLAY, TRACE OF COARSE SAND.		A-4 (1)
2	2.0' 4.0'	11-10-15-15	WET VERY STIFF REDDISH BROWN GRAVELLY SILT W/ SOME FINE TO COARSE SAND AND CLAY.		A-4 (0)
3	4.0' 6.0'	3-7-8-10	WET MEDIUM DENSE REDDISH BROWN FINE TO COARSE SANDY GRAVEL W/ SOME CLAY.		A-2-4 (0)
4	6.0' 8.0'	11-12-17-17	WET MEDIUM DENSE BROWN GRAVEL W/ SOME FINE TO COARSE SAND AND SILT.		A-1-a (0)
5	8.0' 10.0'	4-7-9-11	WET MEDIUM DENSE BROWN COARSE TO FINE SANDY GRAVEL W/ SOME SILT.		A-1-b (0)
6	10.0' 12.0'	11-10-10-12	WET MEDIUM DENSE BROWN GRAVELLY COARSE TO FINE SAND W/ SOME SILT.		A-1-b (0)
7 7A	12.0' 14.0'	7-7-8-10	WET MEDIUM DENSE BROWN COARSE SAND W/ SOME FINE SAND, SILT AND GRAVEL. (12" SPL) WET MEDIUM DENSE BROWN FINE SAND W/ SOME SILT, TRACE OF GRAVEL. (12" SPL)		A-1-b (0) A-2-4 (0)
8	14.0' 16.0'	6-7-10-9	WET MEDIUM DENSE BROWN SILTY FINE SAND W/ TRACE OF COARSE SAND.		A-2-4 (0)
9	16.0' 18.0'	10-18-19-20	WET DENSE BROWN SILTY FINE SAND W/ TRACE OF COARSE SAND.		A-2-4 (0)
10	18.0' 20.0'	8-14-11-12	WET VERY STIFF BROWN FINE SANDY SILT.		A-4 (0)
11	20.0' 22.0'	13-14-7-9	WET MEDIUM DENSE BROWN SILTY FINE SAND W/ TRACE OF COARSE SAND.		A-2-4 (0)
12	22.0' 24.0'	8-14-13-13	WET MEDIUM DENSE BROWN SILTY FINE SAND W/ TRACE OF COARSE SAND.		A-2-4 (0)
13	24.0' 26.0'	9-9-7-9	WET MEDIUM DENSE BROWN SILTY FINE SAND W/ TRACE OF COARSE SAND.		A-2-4 (0)
14	26.0' 28.0'	10-15-11-14	WET MEDIUM DENSE BROWN SILTY FINE SAND W/ TRACE OF COARSE SAND.		A-2-4 (0)
15	28.0' 30.0'	4-5-8-11	WET STIFF REDDISH GRAY SILT W/ SOME FINE SAND AND CLAY.		A-4 (6)
16	30.0' 32.0'	10-14-14-17	WET VERY STIFF REDDISH GRAY SILT W/ SOME CLAY, TRACE OF FINE SAND.		A-4 (7)
17	32.0' 34.0'	5-5-9-13	WET STIFF BROWNISH GRAY SILT W/ SOME CLAY, TRACE OF FINE SAND.		A-4 (7)
18	34.0' 36.0'	8-11-15-13	WET MEDIUM DENSE BROWN SILTY FINE TO COARSE SAND.		A-2-4 (0)
19	36.0' 38.0'	10-11-11-10	WET VERY STIFF GRAY FINE SANDY SILT W/ TRACE OF COARSE SAND AND CLAY		A-4 (0)
20	38.0' 40.0'	5-10-15-14	WET VERY STIFF GRAY FINE SANDY SILT W/ TRACE OF COARSE SAND.		A-4 (0)
21	40.0' 42.0'	7-7-10-7	WET VERY STIFF GRAY SILT W/ SOME FINE TO COARSE SAND, TRACE OF CLAY.		A-4 (0)
22	42.0' 44.0'	10-18-35-30	WET VERY DENSE BROWN FINE SAND. W/ TRACE OF SILT.		A-3 (0)
23	44.0' 46.0'	8-16-22-23	WET DENSE BROWN FINE SAND W/ TRACE OF COARSE SAND AND SILT.		A-3 (0)
24	46.0' 48.0'	24-26-26-35	WET VERY DENSE BROWN FINE TO COARSE SAND W/ TRACE OF SILT.		A-3 (0)
25	48.0' 50.0'	10-12-12-22	WET MEDIUM DENSE BROWN COARSE TO FINE SAND W/ SOME SILT AND GRAVEL.		A-1-b (0)

NOTES:

1. THE INFORMATION SHOWN ON THIS SHEET IS BASED ON LIMITED INVESTIGATIONS, AND IS IN NO WAY WARRANTED TO BE INDICATIVE OF ACTUAL CONDITIONS WHICH MAY BE ENCOUNTERED DURING CONSTRUCTION.
2. BORINGS OBTAINED BY WALTON CORPORATION AS A RESULT OF THEIR SUBSURFACE EXPLORATIONS ON NOVEMBER 11 AND 16, 2004.
3. LOCATIONS OF BORINGS REFERENCED TO BASELINE OF CONSTRUCTION FOR SR 7.
4. CASING: 3¼" DIA. HOLLOW AUGER.
5. SOIL SAMPLING: 2" DIA. SPLIT SPOON SAMPLER, DRIVEN WITH A 140 LB. HAMMER FALLING 30" ("W/H" DENOTES WEIGHT OF HAMMER).
6. REFERENCE: FOR LOCATIONS OF THE STRUCTURAL BORINGS, REFER TO THE GENERAL PLAN AND ELEVATION SHEETS. STRUCTURAL BORINGS ARE DENOTED THUS: B-X
7. BOTTOM OF FOOTING ELEVATIONS NOT SHOWN. SEE GENERAL PLAN AND ELEVATION.

NOT OFFICIAL WEBSITE

PRELIM. TRACING W.R.A. DESIGN J.T.L. CHKD. W.A.G.

CONTRACT	COUNTY	F.A.P. NO.	SHEET NO.	TOTAL SHTS.
T2003126 01	NEW CASTLE	SEE TITLE SHEET	56	115

RETAINING WALL 1 – BORING LOGS 2

SR 7, NEWTOWN ROAD TO SR 273

REVISIONS

B-5

STATION: 102+92 ±
OFFSET: 47.1'±RT
EXISTING GROUND SURFACE ELEVATION: 76.7'±
DATE: 11-17-04

SAMPLE NO.	DEPTH	BLOWS/6"	SAMPLE DESCRIPTION	REMARKS	CLASS
1	0.4' 2.0'	3-3-4-16	WET VERY STIFF BROWN GRAVELLY FINE SANDY SILT W/ SOME COARSE SAND AND CLAY.		A-4 (0)
2	2.0' 4.0'	16-13-13-12	WET VERY STIFF BROWN GRAVELLY SILT W/ SOME FINE TO COARSE SAND AND CLAY.		A-4 (0)
3	4.0' 6.0'	3-7-8-9	WET MEDIUM DENSE BROWN SILTY FINE TO COARSE SAND W/ TRACE OF GRAVEL.		A-2-4 (0)
4	6.0' 8.0'	13-15-25-22	NO SAMPLE RECOVERY		-
5	8.0' 10.0'	14-18-12-8	NO SAMPLE RECOVERY		-
6	10.0' 12.0'	10-16-23-16	WET DENSE BROWN FINE TO COARSE SANDY GRAVEL W/ SOME SILT.		A-1-b (0)
7	12.0' 14.0'	8-7-14-14	WET MEDIUM DENSE BROWN GRAVEL W/ SOME FINE TO COARSE SAND AND SILT.		A-1-b (0)
8	14.0' 16.0'	10-6-8-11	WET STIFF REDDISH GRAY CLAYEY SILT W/ SOME FINE SAND, TRACE OF COARSE SAND.		A-4 (8)
9	16.0' 18.0'	13-15-12-10	WET VERY STIFF REDDISH BROWN FINE SANDY SILT.		A-4 (0)
10	18.0' 20.0'	7-10-8-14	WET VERY STIFF BROWN FINE SANDY SILT W/ TRACE OF COARSE SAND.		A-4 (0)
11	20.0' 22.0'	11-12-12-14	WET VERY STIFF BROWN FINE SANDY SILT W/ TRACE OF COARSE SAND.		A-4 (0)
12	22.0' 24.0'	8-8-7-6	WET MEDIUM DENSE BROWN SILTY FINE SAND W/ SOME COARSE SAND.		A-2-4 (0)
13	24.0' 26.0'	6-8-12-14	WET VERY STIFF BROWNISH GRAY SILT W/ SOME FINE TO COARSE SAND AND CLAY.		A-4 (2)
14	26.0' 28.0'	13-13-13-14	WET VERY STIFF BROWNISH GRAY FINE SANDY SILT W/ SOME CLAY, TRACE OF COARSE SAND.		A-4 (0)
15	28.0' 30.0'	5-11-12-21	WET MEDIUM DENSE BROWN SILTY FINE SAND W/ SOME COARSE SAND.		A-2-4 (0)
16	30.0' 32.0'	15-18-26-28	WET DENSE BROWN FINE SAND W/ SOME SILT, TRACE OF COARSE SAND.		A-2-4 (0)
17	32.0' 34.0'	14-16-22-25	WET DENSE BROWN FINE SAND W/ SOME SILT, TRACE OF COARSE SAND.		A-2-4 (0)
18	34.0' 36.0'	10-10-10-10	WET VERY STIFF BROWN FINE SANDY SILT W/ TRACE OF COARSE SAND.		A-4 (0)
19	36.0' 38.0'	6-13-16-20	WET VERY STIFF BROWN FINE SANDY SILT W/ SOME COARSE SAND.		A-4 (0)
20	38.0' 40.0'	7-7-6-7	WET STIFF GRAY FINE SANDY SILT W/ SOME CLAY, TRACE OF COARSE SAND.		A-4 (0)
21	40.0' 42.0'	21-28-25-23	WET VERY DENSE BROWN FINE SAND W/ SOME SILT AND COARSE SAND.		A-2-4 (0)
22	42.0' 43.5'	12-28-50	WET VERY DENSE BROWN SILTY FINE TO COARSE SAND W/ TRACE OF GRAVEL.		A-2-4 (0)
23	43.5' 45.5'	28-48-58	WET VERY DENSE BROWN FINE SAND W/ TRACE OF SILT.		A-3 (0)
24	45.5' 47.0'	48-50	WET VERY DENSE BROWN FINE SAND W/ TRACE OF SILT.		A-3 (0)
25	48.0' 50.0'	18-25-35-40	WET VERY DENSE BROWN FINE TO COARSE SAND W/ TRACE OF SILT AND GRAVEL.		A-3 (0)

B-6

STATION: 103+50 ±
OFFSET: 57.5'±RT
EXISTING GROUND SURFACE ELEVATION: 75.6'±
DATE: 11-18-04

SAMPLE NO.	DEPTH	BLOWS/6"	SAMPLE DESCRIPTION	REMARKS	CLASS
1	0.3' 2.0'	2-4-9-19	WET STIFF BROWN SILT W/ SOME FINE TO COARSE SAND, GRAVEL AND CLAY.		A-4 (0)
2	2.0' 4.0'	12-12-9-10	WET MEDIUM DENSE BROWN FINE SANDY GRAVEL W/ SOME COARSE SAND AND CLAY.		A-1-b (0)
3	4.0' 6.0'	6-9-9-7	NO SAMPLE RECOVERY		-
4	6.0' 8.0'	8-10-9-14	WET MEDIUM DENSE BROWN GRAVEL W/ SOME FINE TO COARSE SAND AND CLAY.		A-2-4 (0)
5	8.0' 10.0'	8-12-11-10	WET MEDIUM DENSE BROWN COARSE SANDY GRAVEL W/ SOME SILT, TRACE OF FINE SAND.		A-1-a (0)
6	10.0' 12.0'	12-16-12-11	WET MEDIUM DENSE BROWN COARSE SAND AND GRAVEL W/ SOME FINE SAND AND SILT.		A-1-b (0)
7	12.0' 14.0'	10-20-22-17	WET DENSE BROWN COARSE TO FINE SANDY GRAVEL W/ SOME SILT.		A-1-b (0)
8	14.0' 16.0'	4-9-11-18	WET VERY STIFF BROWN SILT W/ SOME FINE SAND.		A-4 (0)
9	16.0' 18.0'	20-22-30-25	WET VERY DENSE BROWN SILTY FINE SAND.		A-2-4 (0)
10	18.0' 20.0'	17-23-18-26	WET DENSE BROWN FINE SAND W/ SOME SILT		A-2-4 (0)
11	20.0' 22.0'	28-28-30-35	WET VERY DENSE BROWN FINE SAND W/ SOME SILT.		A-2-4 (0)
12	22.0' 24.0'	14-21-22-14	WET DENSE BROWN FINE SAND W/ TRACE OF SILT.		A-3 (0)
13	24.0' 26.0'	6-9-17-17	WET VERY STIFF BROWN FINE SANDY SILT W/ SOME COARSE SAND.		A-4 (0)
14	26.0' 28.0'	30-28-25-20	WET VERY DENSE BROWN FINE SAND W/ SOME SILT, TRACE OF COARSE SAND.		A-2-4 (0)
15	28.0' 30.0'	8-10-12-12	WET MEDIUM DENSE BROWN SILTY FINE SAND W/ TRACE OF COARSE SAND.		A-2-4 (0)
16	30.0' 32.0'	20-25-25-25	WET DENSE BROWN FINE SAND W/ SOME SILT, TRACE OF COARSE SAND.		A-2-4 (0)
17	32.0' 33.5'	20-31-50	WET VERY DENSE BROWN FINE SAND W/ TRACE OF SILT AND COARSE SAND.		A-3 (0)
18	34.0' 36.0'	25-45-32-46	WET VERY DENSE BROWN FINE SAND W/ TRACE OF SILT.		A-3 (0)
19	36.0' 38.0'	18-19-17-16	WET DENSE BROWN SILTY FINE SAND.		A-2-4 (0)
20	38.0' 40.0'	8-12-18-15	WET MEDIUM DENSE BROWN SILTY FINE SAND W/ SOME COARSE SAND, TRACE OF GRAVEL.		A-2-4 (0)
21	40.0' 42.0'	17-32-38-54	WET VERY DENSE BROWN SILTY FINE SAND W/ TRACE OF COARSE SAND.		A-2-4 (0)
22	42.0' 44.0'	17-41-48-58	WET VERY DENSE BROWN SILTY FINE SAND.		A-2-4 (0)
23	44.0' 44.8	30-50/0.4"	WET VERY DENSE BROWN FINE SAND W/ SOME SILT.		A-2-4 (0)
24	46.0' 47.3'	26-48-50/0.4"	WET VERY DENSE BROWN FINE SAND W/ SOME SILT, TRACE OF COARSE SAND AND GRAVEL.		A-2-4 (0)
25	48.0' 48.4'	50/0.5"	WET VERY DENSE BROWN FINE SAND W/ SOME COARSE SAND, TRACE OF SILT AND GRAVEL.		A-3 (0)

NOTES:

1. THE INFORMATION SHOWN ON THIS SHEET IS BASED ON LIMITED INVESTIGATIONS, AND IS IN NO WAY WARRANTED TO BE INDICATIVE OF ACTUAL CONDITIONS WHICH MAY BE ENCOUNTERED DURING CONSTRUCTION.
2. BORINGS OBTAINED BY WALTON CORPORATION AS A RESULT OF THEIR SUBSURFACE EXPLORATIONS ON NOVEMBER 17 AND 18, 2004.
3. LOCATIONS OF BORINGS REFERENCED TO BASELINE OF CONSTRUCTION FOR SR 7.
4. CASING: 3¼" DIA. HOLLOW AUGER.
5. SOIL SAMPLING: 2" DIA. SPLIT SPOON SAMPLER, DRIVEN WITH A 140 LB. HAMMER FALLING 30" ("W/H" DENOTES WEIGHT OF HAMMER).
6. REFERENCE: FOR LOCATIONS OF THE STRUCTURAL BORINGS, REFER TO THE GENERAL PLAN AND ELEVATION SHEETS. STRUCTURAL BORINGS ARE DENOTED THUS: B-X
7. BOTTOM OF FOOTING ELEVATIONS NOT SHOWN. SEE GENERAL PLAN AND ELEVATION.

PRELIM. TRACING ____ W.R.A. ____ DESIGN ____ J.T.L. ____ CHKD. ____ W.A.G.

UNOFFICIAL WEB SITE COPY

RETAINING WALLS 2 AND 3 – BORING LOGS 3

CONTRACT	COUNTY	F.A.P. NO.	SHEET NO.	TOTAL SHTS.
T2003126 01	NEW CASTLE	SEE TITLE SHEET	57	115

SR 7, NEWTOWN ROAD TO SR 273

REVISIONS

B–9

STATION: 111+36 ±
OFFSET: 66.4' ± RT.
EXISTING GROUND SURFACE ELEVATION: 67 ±
DATE: 01-13-10

SAMPLE NO.	DEPTH	BLOWS/6"	SAMPLE DESCRIPTION	REMARKS	CLASS
1	1.0' 2.0'	16-14	NO SIEVE ANALYSIS	ASPHALT - 12"	-
2	2.0' 4.0'	23-17-14-15	MOIST DENSE BROWN COARSE SANDY FINE GRAVEL W/ SOME FINE SAND AND SILT.		A-1-a
3	4.0' 6.0'	6-11-12-13	MOIST MEDIUM DENSE BROWN COARSE SANDY FINE GRAVEL W/ SOME FINE SAND AND SILT.		A-1-a
4	6.0' 8.0'	17-12-14-13	MOIST MEDIUM DENSE BROWN FINE GRAVEL W/ SOME COARSE TO FINE SAND, TRACE OF SILT.		A-1-a
5	8.0' 10.0'	5-8-12-10	MOIST MEDIUM DENSE BROWN FINE GRAVELLY FINE SAND W/ SOME SILT AND COARSE SAND.		A-2-4(0)
6	10.0' 12.0'	15-14-15-16	MOIST MEDIUM DENSE GRAYISH BROWN SILTY FINE SAND.		A-2-4(0)
7	12.0' 14.0'	17-11-10-11	MOIST MEDIUM DENSE GRAYISH BROWN SILTY FINE SAND.		A-2-4(0)
8	14.0' 16.0'	6-12-15-18	MOIST MEDIUM DENSE GRAYISH BROWN FINE SAND W/ SOME SILT.		A-2-4(0)
9	16.0' 18.0'	18-15-16-17	MOIST DENSE GRAYISH BROWN FINE SAND W/ TRACE OF SILT.		A-3
10	18.0' 20.0'	19-17-23-23	MOIST DENSE GRAYISH BROWN SILTY FINE SAND		A-2-4(0)
11	24.0' 26.0'	10-16-21-18	MOIST DENSE GRAYISH BROWN SILTY FINE SAND		A-2-4(0)
12	29.0' 31.0'	7-15-24-28	MOIST DENSE GRAYISH BROWN SILTY FINE SAND		A-2-4(0)
13	34.0' 36.0'	11-14-19-20	MOIST MEDIUM DENSE GRAYISH BROWN FINE SAND W/ TRACE OF SILT AND COARSE SAND.		A-3
14	39.0' 41.0'	15-46-50/4"	MOIST VERY DENSE GRAYISH BROWN FINE SAND W/ TRACE OF SILT AND COARSE SAND.		A-3
15	44.0' 46.0'	31-50/4"	SATURATED VERY DENSE GRAYISH BROWN FINE TO COARSE SAND W/ TRACE OF SILT.		A-3
16	48.0' 50.0'	8-9-17-19	SATURATED VERY STIFF GRAYISH BROWN SILT W/ SOME FINE SAND.		A-4(0)

B–10

STATION: 112+56 ±
OFFSET: 59.6' ± RT.
EXISTING GROUND SURFACE ELEVATION: 66 ±
DATE: 01-14-10

SAMPLE NO.	DEPTH	BLOWS/6"	SAMPLE DESCRIPTION	REMARKS	CLASS
1	0.5' 2.0'	9-6-7	MOIST MEDIUM DENSE BROWN CLAYEY FINE GRAVEL W/ SOME FINE SAND, TRACE OF COARSE SAND AND SILT	TOPSOIL - 6"	A-1-b
2	2.0' 4.0'	6-10-11-11	MOIST VERY STIFF DARK BROWN CLAYEY SILT W/ TRACE OF FINE TO COARSE SAND AND FINE GRAVEL.		A-4(3)
3	4.0' 6.0'	4-11-16-16	MOIST VERY STIFF BROWN FINE GRAVELLY FINE SANDY SILT W/ SOME CLAY, TRACE OF COARSE SAND.		A-4(0)
4	6.0' 8.0'	13-17-13-15	MOIST MEDIUM DENSE BROWN FINE GRAVELLY COARSE SAND W/ SOME FINE SAND, TRACE OF SILT.		A-1-a
5	8.0' 10.0'	5-8-7-10	MOIST MEDIUM DENSE BROWN SILTY FINE SAND.		A-2-4(0)
6	10.0' 12.0'	9-10-11-10	MOIST MEDIUM DENSE LIGHT BROWN FINE SAND W/ TRACE OF SILT.		A-3
7	12.0' 14.0'	9-12-11-12	MOIST MEDIUM DENSE LIGHT BROWN FINE SAND W/ SOME SILT.		A-2-4(0)
8	14.0' 16.0'	7-7-7-9	MOIST MEDIUM DENSE BROWN SILTY FINE SAND W/ TRACE OF COARSE SAND AND FINE GRAVEL.		A-2-4(0)
9	16.0' 18.0'	9-7-10-7	MOIST MEDIUM DENSE REDDISH BROWN FINE SAND W/ SOME SILT, TRACE OF FINE GRAVEL.		A-2-4(0)
10	18.0' 20.0'	7-8-11-11	MOIST MEDIUM DENSE LIGHT BROWN FINE SAND W/ SOME SILT, TRACE OF FINE GRAVEL.		A-2-4(0)
11	24.0' 26.0'	3-4-7-8	WET STIFF LIGHT GRAYISH BROWN CLAYEY FINE SANDY SILT W/ TRACE OF COARSE SAND.		A-4(2)
12	29.0' 31.0'	5-8-8-10	WET VERY STIFF LIGHT GRAYISH BROWN FINE SANDY SILT W/ SOME COARSE SAND.		A-4(0)
13	34.0' 36.0'	3-6-13-12	WET VERY STIFF LIGHT GRAYISH BROWN FINE SANDY SILT W/ TRACE OF COARSE SAND.		A-4(0)
14	39.0' 41.0'	7-9-13-23	WET MEDIUM DENSE LIGHT BROWN FINE TO COARSE SAND W/ SOME SILT, TRACE OF FINE GRAVEL.		A-2-4(0)
15	44.0' 46.0'	3-3-7-10	WET STIFF LIGHT RED SILTY CLAY W/ TRACE OF FINE TO COARSE SAND.		A-7-6(19)
16	48.0' 50.0'	5-5-8-9	WET STIFF LIGHT GRAY SILTY CLAY W/ TRACE OF FINE SAND.		A-6(13)

NOTES:

1. THE INFORMATION SHOWN ON THIS SHEET IS BASED ON LIMITED INVESTIGATIONS, AND IS IN NO WAY WARRANTED TO BE INDICATIVE OF ACTUAL CONDITIONS WHICH MAY BE ENCOUNTERED DURING CONSTRUCTION.
2. BORINGS OBTAINED BY WALTON CORPORATION AS A RESULT OF THEIR SUBSURFACE EXPLORATIONS ON JANUARY 13 AND 14, 2010.
3. LOCATIONS OF BORINGS REFERENCED TO BASELINE OF CONSTRUCTION FOR SR 7.
4. CASING: 3¼" DIA. HOLLOW AUGER.
5. SOIL SAMPLING: 2" DIA. SPLIT SPOON SAMPLER, DRIVEN WITH A 140 LB. HAMMER FALLING 30" ("W/H" DENOTES WEIGHT OF HAMMER).
6. REFERENCE: FOR LOCATIONS OF THE STRUCTURAL BORINGS, REFER TO THE GENERAL PLAN AND ELEVATION SHEETS. STRUCTURAL BORINGS ARE DENOTED THUS: B-X
7. BOTTOM OF FOOTING ELEVATIONS NOT SHOWN. SEE GENERAL PLAN AND ELEVATION.

UNOFFICIAL WEB SITE COPY

PREL. TRACING _____ W.R.A. _____ DESIGN _____ J.T.L. _____ CHKD. _____ W.A.G. _____

RETAINING WALLS 2 AND 3 – BORING LOGS 4

CONTRACT	COUNTY	F.A.P. NO.	SHEET NO.	TOTAL SHTS.
T2003126 01	NEW CASTLE	SEE TITLE SHEET	58	115

SR 7, NEWTOWN ROAD TO SR 273

REVISIONS

B–11

STATION: 113+14 ±
OFFSET: 63.3' ± RT.
EXISTING GROUND SURFACE ELEVATION: 64 ±
DATE: 01-15-10

SAMPLE NO.	DEPTH	BLOWS/6"	SAMPLE DESCRIPTION	REMARKS	CLASS
1	1.0' 2.0'	6-6	MOIST LOOSE BROWN CLAYEY FINE GRAVEL W/ SOME COARSE TO FINE SAND, TRACE OF SILT.	TOPSOIL - 8"	A-2-6(0)
2	2.0' 4.0'	8-6-8-8	MOIST STIFF BROWN CLAYEY SILT W/ SOME FINE SAND, TRACE OF COARSE SAND AND FINE GRAVEL.		A-4(2)
3	4.0' 6.0'	11-10-11-10	MOIST MEDIUM DENSE BROWN SILTY FINE SAND W/ SOME FINE GRAVEL, TRACE OF COARSE SAND.		A-2-4(0)
4	6.0' 8.0'	11-10-9-14	MOIST MEDIUM DENSE BROWN SILTY FINE SAND W/ TRACE OF COARSE SAND AND FINE GRAVEL.		A-2-4(0)
5	8.0' 10.0'	8-11-13-11	MOIST MEDIUM DENSE LIGHT BROWN SILTY FINE SAND W/ TRACE OF FINE GRAVEL.		A-2-4(0)
6	10.0' 12.0'	11-10-12-12	MOIST MEDIUM DENSE ORANGEISH BROWN SILTY FINE SAND W/ TRACE OF FINE GRAVEL.		A-2-4(0)
7	12.0' 14.0'	9-13-12-15	MOIST VERY STIFF LIGHT GRAYISH BROWN SILTY CLAY W/ SOME FINE SAND.		A-6(11)
8	14.0' 16.0'	7-8-10-14	MOIST VERY STIFF LIGHT GRAYISH BROWN FINE SANDY SILT W/ SOME CLAY.		A-4(1)
9	16.0' 18.0'	15-14-15-11	MOIST MEDIUM DENSE LIGHT BROWN FINE SAND W/ SOME SILT.		A-2-4(0)
10	18.0' 20.0'	11-12-13-15	MOIST MEDIUM DENSE LIGHT BROWN SILTY FINE SAND		A-2-4(0)
11	24.0' 26.0'	2-4-4-5	MOIST FIRM LIGHT GRAY CLAYEY FINE SANDY SILT.		A-4(4)
12	29.0' 31.0'	2-6-13-12	MOIST VERY STIFF LIGHT GRAYISH BROWN FINE SANDY SILT W/ TRACE OF COARSE SAND.		A-4(0)
13	34.0' 36.0'	4-17-20-20	MOIST DENSE LIGHT GRAYISH BROWN SILTY FINE SAND W/ TRACE OF COARSE SAND.		A-2-4(0)
14	39.0' 41.0'	19-19-20-19	WET DENSE LIGHT GRAYISH BROWN FINE SAND W/ TRACE OF SILT AND COARSE SAND.		A-3
15	44.0' 46.0'	8-11-12-16	WET VERY STIFF LIGHT GRAY FINE SANDY SILT.		A-4(0)
16	48.0' 50.0'	19-26-37-42	WET VERY DENSE BROWN FINE TO COARSE SAND W/ TRACE OF SILT.		A-3

B–12

STATION: 121+55 ±
OFFSET: 35.7' ± RT.
EXISTING GROUND SURFACE ELEVATION: 41 ±
DATE: 01-20-10

SAMPLE NO.	DEPTH	BLOWS/6"	SAMPLE DESCRIPTION	REMARKS	CLASS
1	1.5' 2.0'	9	MOIST MEDIUM DENSE GRAYISH BROWN COARSE SANDY FINE GRAVEL W/ SOME FINE GRAVEL AND CLAY, TRACE OF SILT	ASPHALT - 6" STONE BASE - 12"	A-1-b
2	2.0' 4.0'	5-5-8-9	MOIST MEDIUM DENSE GRAYISH BROWN COARSE SAND W/ SOME FINE SAND, TRACE OF FINE GRAVEL AND SILT		A-1-b
3	4.0' 6.0'	19-9-10-8	MOIST MEDIUM DENSE GRAYISH BROWN CLAYEY FINE SAND W/ SOME COARSE SAND AND FINE GRAVEL, TRACE OF SILT.		A-2-4(0)
4	6.0' 8.0'	7-21-13-10	MOIST DENSE BROWN SILTY FINE GRAVELLY FINE SAND W/ TRACE OF COARSE SAND		A-2-4(0)
5	8.0' 10.0'	6-6-6-8	MOIST MEDIUM DENSE BROWN FINE SAND W/ SOME SILT, TRACE OF COARSE SAND.		A-2-4(0)
6	10.0' 12.0'	4-6-6-8	MOIST MEDIUM DENSE BROWN SILTY FINE SAND W/ TRACE OF COARSE SAND.		A-2-4(0)
7	12.0' 14.0'	4-5-7-7	WET MEDIUM DENSE BROWN SILTY FINE SAND W/ TRACE OF COARSE SAND.		A-2-4(0)
8	14.0' 16.0'	6-7-7-5	WET MEDIUM DENSE BROWN FINE SAND W/ TRACE OF SILT		A-3
9	16.0' 18.0'	6-7-8-8	WET MEDIUM DENSE LIGHT GRAY SILTY FINE SAND W/ SOME COARSE SAND.		A-2-4(0)
10	18.0' 20.0'	11-7-8-8	WET MEDIUM DENSE LIGHT GRAYISH BROWN FINE SAND W/ SOME SILT, TRACE OF COARSE SAND.		A-2-4(0)
11	24.0' 26.0'	6-17-18-22	SATURATED DENSE LIGHT GRAYISH BROWN FINE SAND W/ TRACE OF SILT.		A-3
12	29.0' 31.0'	3-6-6-4	SATURATED MEDIUM DENSE LIGHT GRAYISH BROWN SILTY FINE SAND W/ TRACE OF COARSE SAND.		A-2-4(0)
13	34.0' 36.0'	2-2-4-6	NO SIEVE ANALYSIS - INDICATION OF WET LIGHT GRAY SANDY CLAY.		A-2-4(0)
14	39.0' 41.0'	5-8-10-12	SATURATED MEDIUM DENSE BROWN FINE SAND W/ TRACE OF SILT AND COARSE SAND.		A-3
15	44.0' 46.0'	22-31-44-48	SATURATED VERY DENSE LIGHT GRAYISH BROWN FINE SAND W/ SOME SILT, TRACE OF COARSE SAND.		A-2-4(0)
16	48.0' 50.0'	16-11-20-19	SATURATED DENSE LIGHT GRAYISH BROWN FINE SAND W/ TRACE OF SILT AND COARSE SAND.		A-3

NOTES:

1. THE INFORMATION SHOWN ON THIS SHEET IS BASED ON LIMITED INVESTIGATIONS, AND IS IN NO WAY WARRANTED TO BE INDICATIVE OF ACTUAL CONDITIONS WHICH MAY BE ENCOUNTERED DURING CONSTRUCTION.
2. BORINGS OBTAINED BY WALTON CORPORATION AS A RESULT OF THEIR SUBSURFACE EXPLORATIONS ON JANUARY 15 AND 20, 2010.
3. LOCATIONS OF BORINGS REFERENCED TO BASELINE OF CONSTRUCTION FOR SR 7.
4. CASING: 3¼" DIA. HOLLOW AUGER.
5. SOIL SAMPLING: 2" DIA. SPLIT SPOON SAMPLER, DRIVEN WITH A 140 LB. HAMMER FALLING 30" ("W/H" DENOTES WEIGHT OF HAMMER).
6. REFERENCE: FOR LOCATIONS OF THE STRUCTURAL BORINGS, REFER TO THE GENERAL PLAN AND ELEVATION SHEETS. STRUCTURAL BORINGS ARE DENOTED THUS: B-X
7. BOTTOM OF FOOTING ELEVATIONS NOT SHOWN. SEE GENERAL PLAN AND ELEVATION.

NOT OFFICIAL WEBSITE COPY

PRELI. TRACING _____ W.R.A. _____ DESIGN _____ J.T.L. _____ CHKD. _____ W.A.G. _____