CONTRACT	COUNTY	F.A.P. NO.	SHEET NO.	TOTAL SHTS.
T200411210	SUSSEX	SEE TITLE SHEET	81	589

SR 26, ATLANTIC AVENUE FROM CLARKSVILLE TO ASSAWOMAN CANAL

REVISIONS

STRATA SYMBOLS

- SAND
- SILTY SAND
- SILT
- LOW PLASTICITY CLAY

PROFILES

H: 0 30 60 120

V: 6 3 2 1 0

UNOFFICIAL WEBSITE COPY

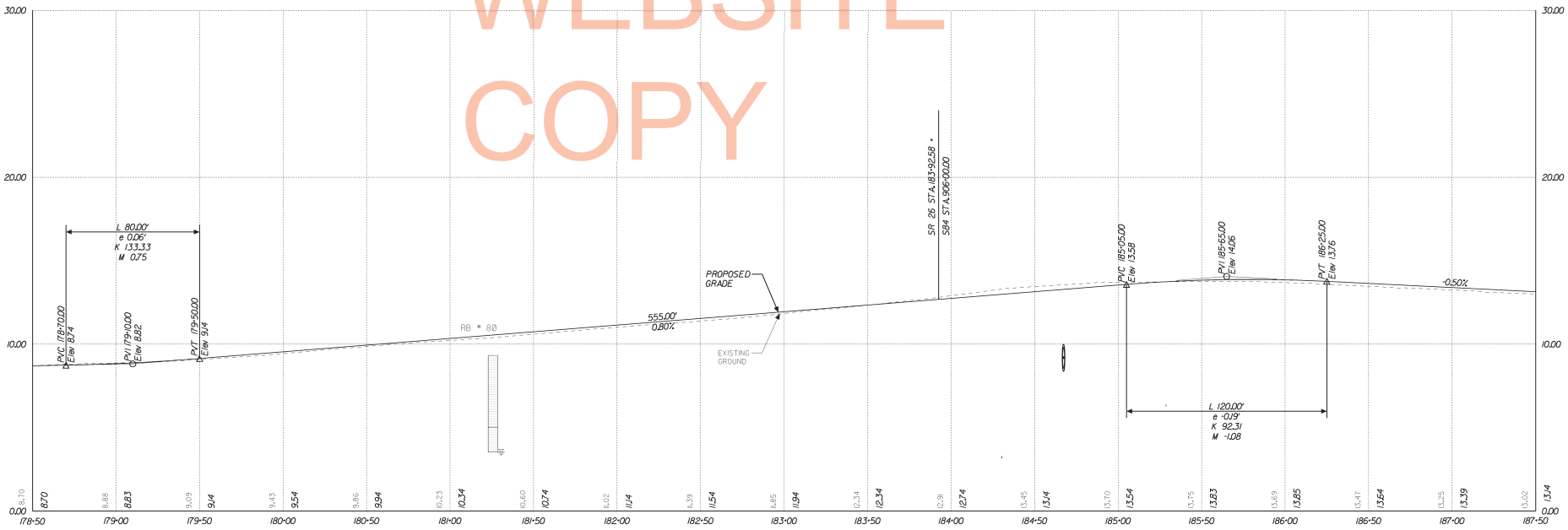

SR 26 STA. 178+50 TO 187+50

PREL. TRACING ____ DESIGN ____ CHKD. ____

7/14/2013
I:\PROJECTS\sr26mainline\Survey\pr20m126.dgn
5:49:15

CONTRACT	COUNTY	F.A.P. NO.	SHEET NO.	TOTAL SHTS.
T200411210	SUSSEX	SEE TITLE SHEET	82	589

SR 26, ATLANTIC AVENUE FROM CLARKSVILLE TO ASSAWOMAN CANAL

REVISIONS

PROFILES

H: 0 30 60 120

V: 6 3 2 1 0

STRATA SYMBOLS

- SAND
- SILTY SAND
- SILT
- LOW PLASTICITY CLAY

NOTE: ALIGNMENT SHIFT SHOWN FOR CONSTRUCTION BASELINE FROM STATION 196+21.08 TO STATION 200+15.34. SEE CURVE DATA AND GRADES & GEOMETRIC SHEET FOR LAYOUT AND COORDINATE POINT DATA.

UNOFFICIAL WEBSITE COPY

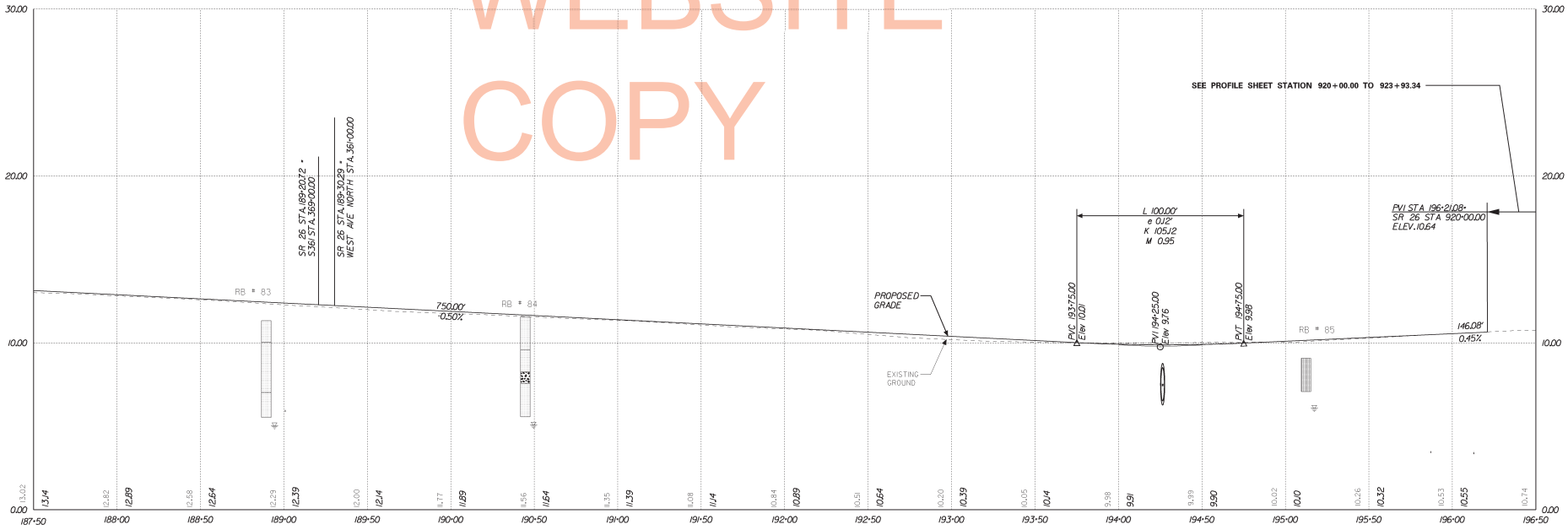

SR 26 STA. 187+50 TO 196+50

PREL. TRACING _____ DESIGN _____ CHKD. _____

7/14/2013
I:\PROJECTS\sr26mainline\Survey\pr21m126.dgn
5:49:49

CONTRACT	COUNTY	F.A.P. NO.	SHEET NO.	TOTAL SHTS.
T200411210	SUSSEX	SEE TITLE SHEET	83	589

SR 26, ATLANTIC AVENUE FROM CLARKSVILLE TO ASSAWOMAN CANAL

REVISIONS

STRATA SYMBOLS

- SAND
- SILTY SAND
- SILT
- LOW PLASTICITY CLAY

NOTE: ALIGNMENT SHIFT SHOWN FOR CONSTRUCTION BASELINE FROM STATION 196+21.08 TO STATION 200+15.34. SEE CURVE DATA AND GRADES & GEOMETRIC SHEET FOR LAYOUT AND COORDINATE POINT DATA.

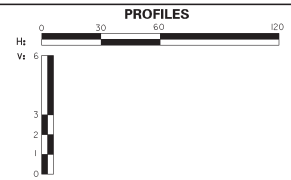

UNOFFICIAL WEBSITE COPY

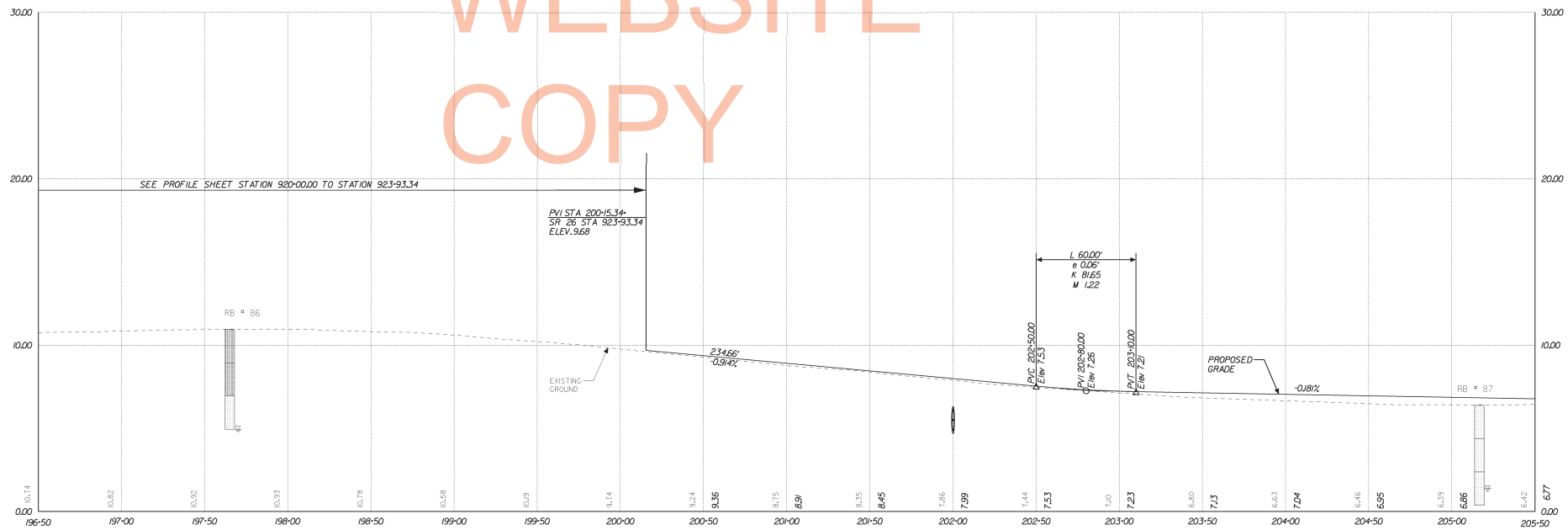

SR 26 STA. 196+50 TO 205+50

PREL. TRACING ____ DESIGN ____ CHKD. ____

7/14/2013
J:\PROJECTS\sr26mainline\Survey\pr22m126.dgn
15:50:23

CONTRACT	COUNTY	F.A.P. NO.	SHEET NO.	TOTAL SHTS.
T200411210	SUSSEX	SEE TITLE SHEET	84	589

SR 26, ATLANTIC AVENUE FROM CLARKSVILLE TO ASSAWOMAN CANAL

REVISIONS

STRATA SYMBOLS

SAND

SILTY SAND

SILT

LOW PLASTICITY CLAY

NOTE: ALIGNMENT SHIFT SHOWN FOR CONSTRUCTION BASELINE FROM STATION 196+21.08 TO STATION 200+15.34. SEE CURVE DATA AND GRADES & GEOMETRIC SHEET FOR LAYOUT AND COORDINATE POINT DATA.

UNOFFICIAL WEBSITE COPY

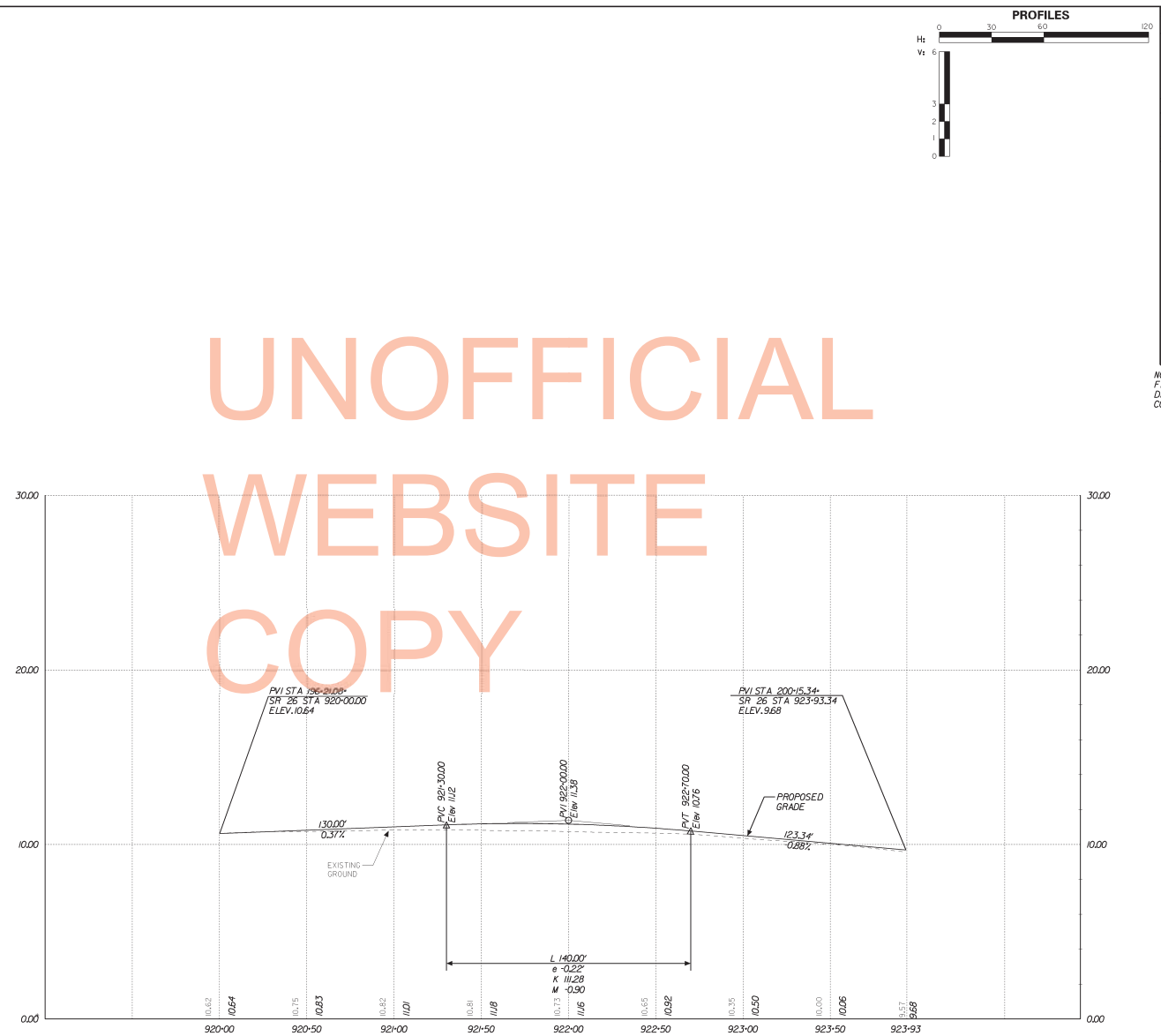

SR 26 STA. 920+00 TO 923+93

PREL. TRACING _____ DESIGN _____ CHKD. _____

7/14/2013
I:\PROJECTS\sr26mainline\Survey\pr22am126.dgn
15:50:57

CONTRACT	COUNTY	F.A.P. NO.	SHEET NO.	TOTAL SHTS.
T200411210	SUSSEX	SEE TITLE SHEET	85	589

SR 26, ATLANTIC AVENUE FROM CLARKSVILLE TO ASSAWOMAN CANAL

REVISIONS

STRATA SYMBOLS

- SAND
- SILTY SAND
- SILT
- LOW PLASTICITY CLAY

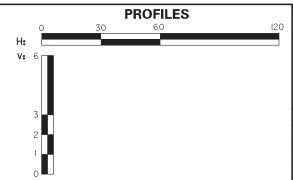

UNOFFICIAL WEBSITE COPY

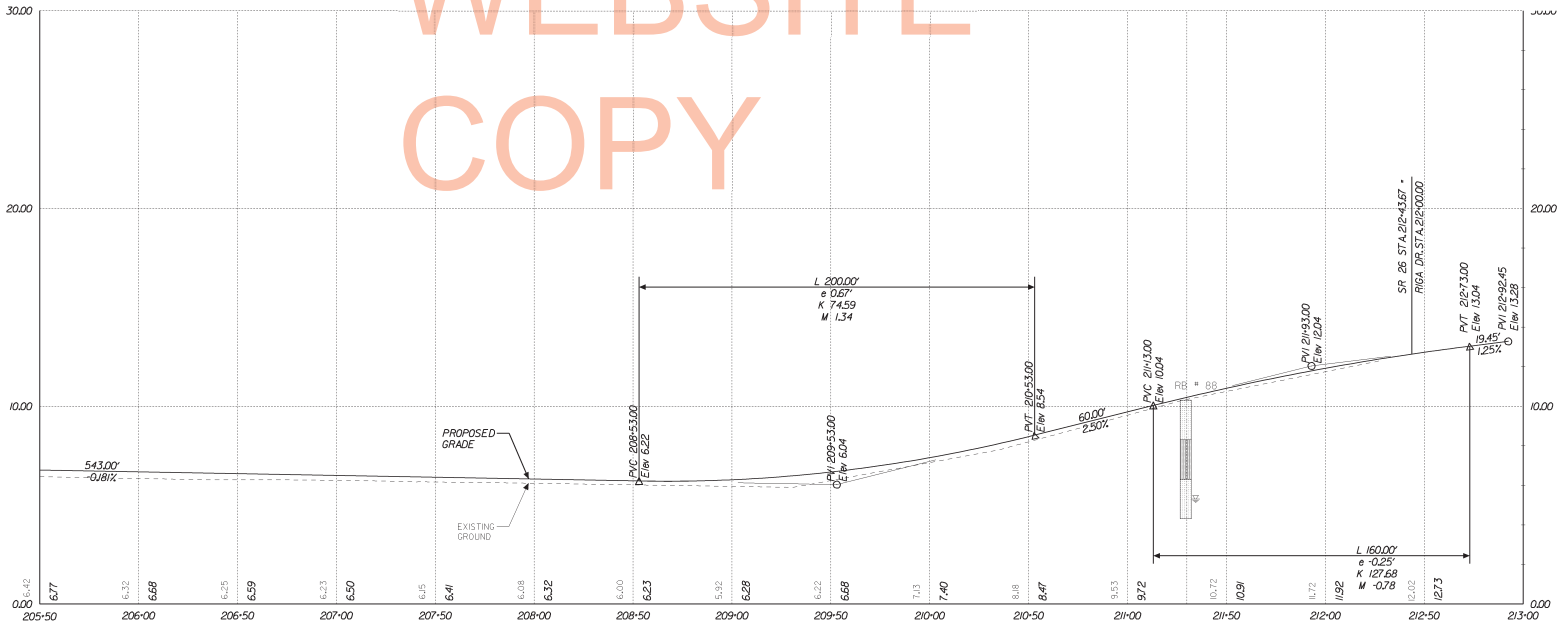

SR 26 STA. 205+50 TO 213+00

PREL. TRACING _____ DESIGN _____ CHKD. _____

7/14/2013
J:\PROJECTS\sr26mainline\Survey\pr23m126.dgn
15:51:31

CONTRACT	COUNTY	F.A.P. NO.	SHEET NO.	TOTAL SHTS.
T200411210	SUSSEX	SEE TITLE SHEET	86	589

SR 26, ATLANTIC AVENUE FROM CLARKSVILLE TO ASSAWOMAN CANAL

REVISIONS

STRATA SYMBOLS

- SAND
- SILTY SAND
- SILT
- LOW PLASTICITY CLAY

PROFILES

H: 0 30 60 120

V: 6 3 2 1 0

UNOFFICIAL WEBSITE COPY

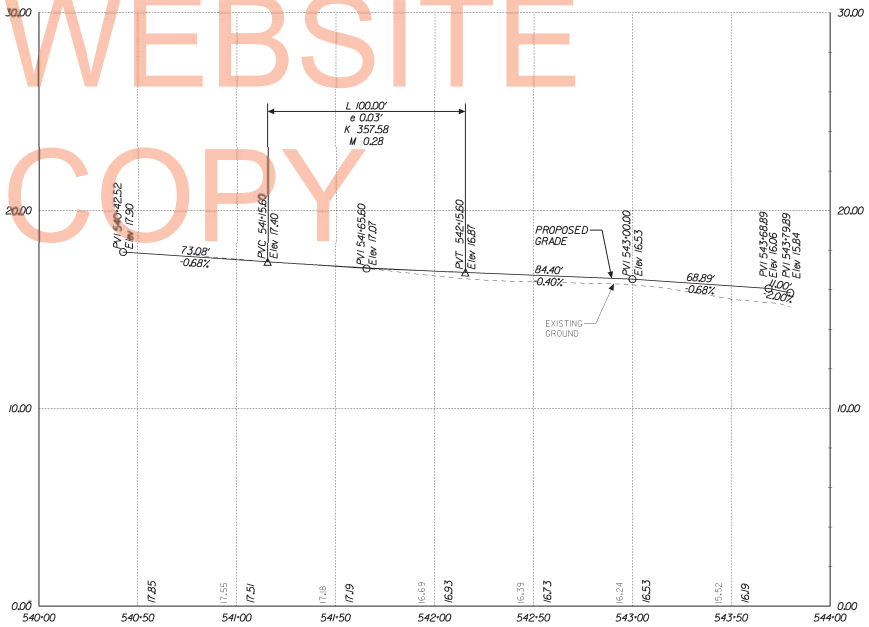

S54 STA. 540+42.52 TO STA. 543+79.89

OMAR ROAD

PREL. TRACING _____ DESIGN _____ CHKD. _____

7/14/2013
I:\PROJECTS\sr26mainline\Survey\pr54.dgn
15:51:54

CONTRACT	COUNTY	F.A.P. NO.	SHEET NO.	TOTAL SHTS.
T200411210	SUSSEX	SEE TITLE SHEET	87	589

SR 26, ATLANTIC AVENUE FROM CLARKSVILLE TO ASSAWOMAN CANAL

REVISIONS

STRATA SYMBOLS

- SAND
- SILTY SAND
- SILT
- LOW PLASTICITY CLAY

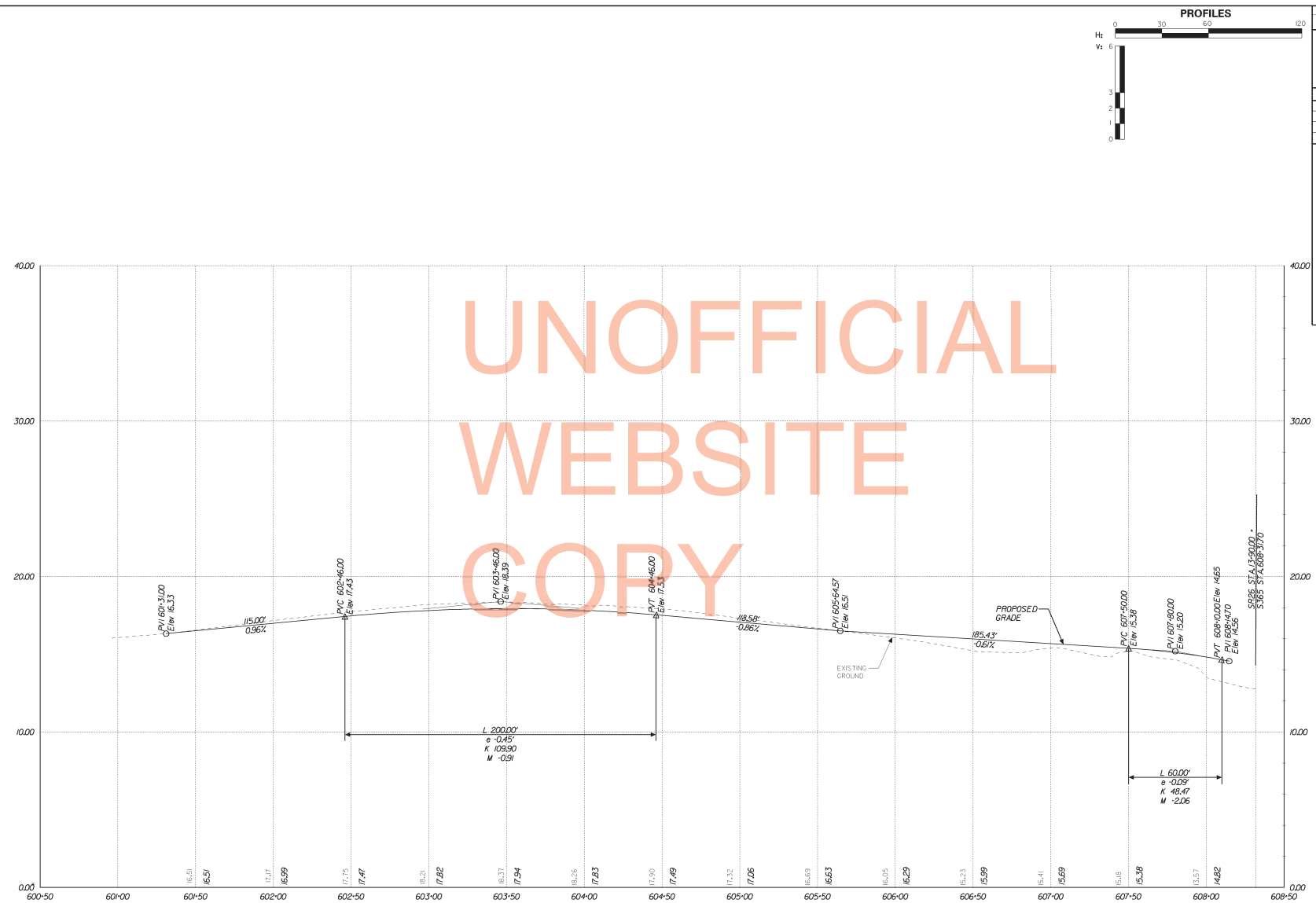

S365 STA. 601+31.00 TO STA. 608+14.70

POWELL FARM ROAD

UNOFFICIAL WEBSITE COPY

PREL. TRACING ____ DESIGN ____ CHKD. ____

7/14/2013
I:\PROJECTS\sr26mainline\Survey\pr365.dgn
15:52:35

CONTRACT	COUNTY	F.A.P. NO.	SHEET NO.	TOTAL SHTS.
T200411210	SUSSEX	SEE TITLE SHEET	88	589

SR 26, ATLANTIC AVENUE FROM CLARKSVILLE TO ASSAWOMAN CANAL

REVISIONS

STRATA SYMBOLS

SAND

SILTY SAND

SILT

LOW PLASTICITY CLAY

PROFILES

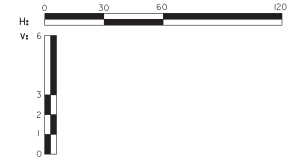

UNOFFICIAL WEBSITE COPY

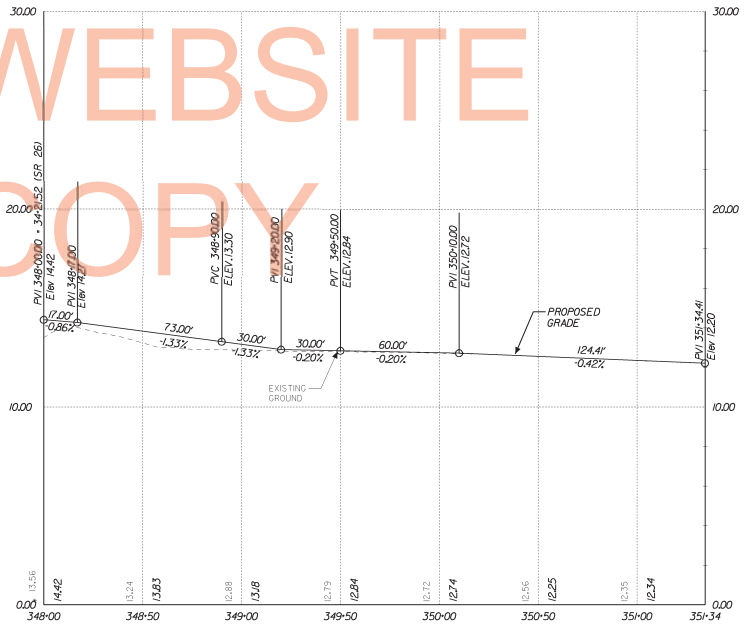

S348 STA. 348+00.00 TO STA. 351+34.41

IRONS LANE

PREL. TRACING _____ DESIGN _____ CHKD. _____

7/14/2013
J:\PROJECTS\sr26mainline\Survey\pr_irons.dgn
6x53x08

CONTRACT	COUNTY	F.A.P. NO.	SHEET NO.	TOTAL SHTS.
T200411210	SUSSEX	SEE TITLE SHEET	89	589

SR 26, ATLANTIC AVENUE FROM CLARKSVILLE TO ASSAWOMAN CANAL

REVISIONS

STRATA SYMBOLS

- SAND
- SILTY SAND
- SILT
- LOW PLASTICITY CLAY

UNOFFICIAL WEBSITE COPY

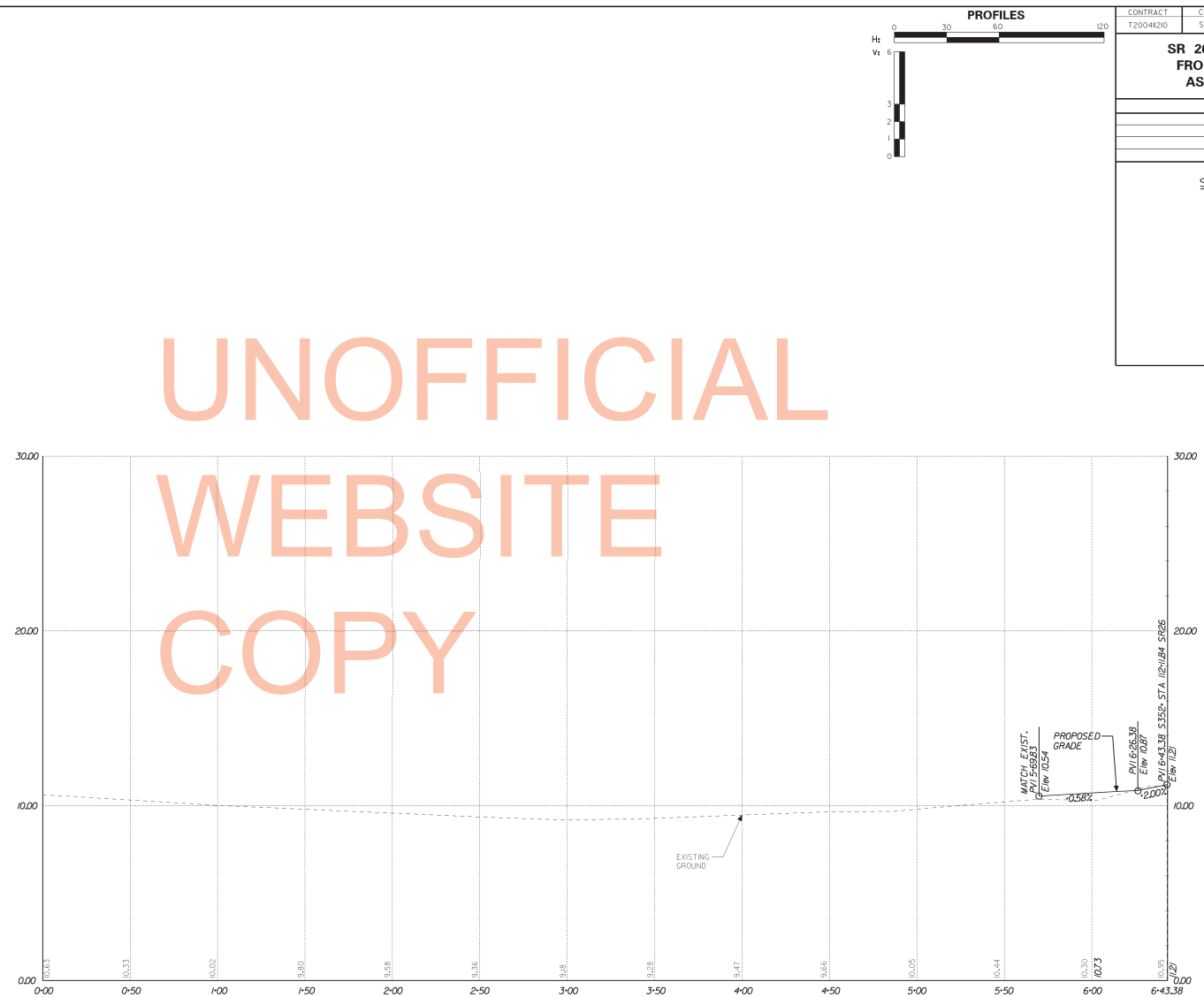

S352 STA. 5+69.83 TO STA. 6+43.38

PREL. TRACING _____ DESIGN _____ CHKD. _____

7/14/2013
I:\PROJECTS\sr26mainline\Survey\pr_windmill.dgn
15:53:40

CONTRACT	COUNTY	F.A.P. NO.	SHEET NO.	TOTAL SHTS.
T200411210	SUSSEX	SEE TITLE SHEET	90	589

SR 26, ATLANTIC AVENUE FROM CLARKSVILLE TO ASSAWOMAN CANAL

REVISIONS

STRATA SYMBOLS

SAND

SILTY SAND

SILT

LOW PLASTICITY CLAY

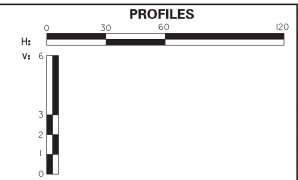

UNOFFICIAL WEBSITE COPY

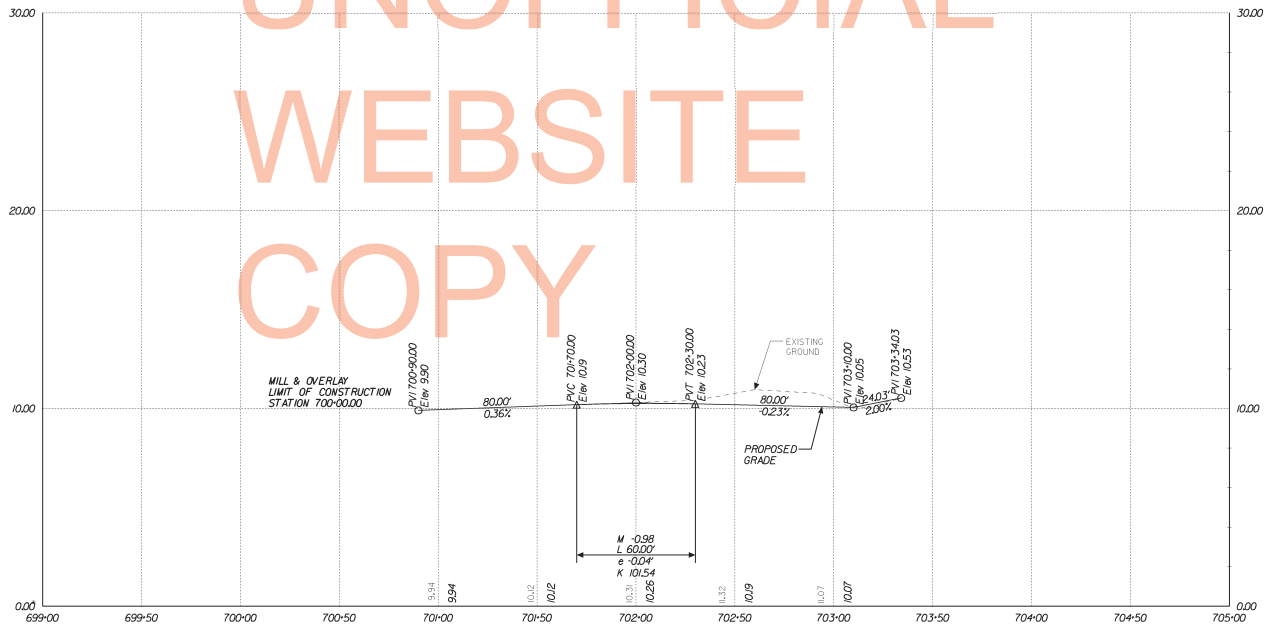

S349A STA. 700+90.00 TO STA. 703+34.03

CEDAR AVENUE

PREL. TRACING _____ DESIGN _____ CHKD. _____

7/14/2013
I:\PROJECTS\sr26mainline\Survey\pr_cedar.dgn
15:54:21

CONTRACT	COUNTY	F.A.P. NO.	SHEET NO.	TOTAL SHTS.
T200411210	SUSSEX	SEE TITLE SHEET	91	589

SR 26, ATLANTIC AVENUE FROM CLARKSVILLE TO ASSAWOMAN CANAL

REVISIONS

STRATA SYMBOLS

- SAND
- SILTY SAND
- SILT
- LOW PLASTICITY CLAY

PROFILES

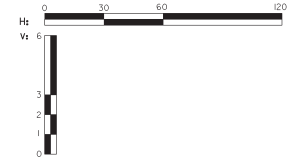

UNOFFICIAL WEBSITE COPY

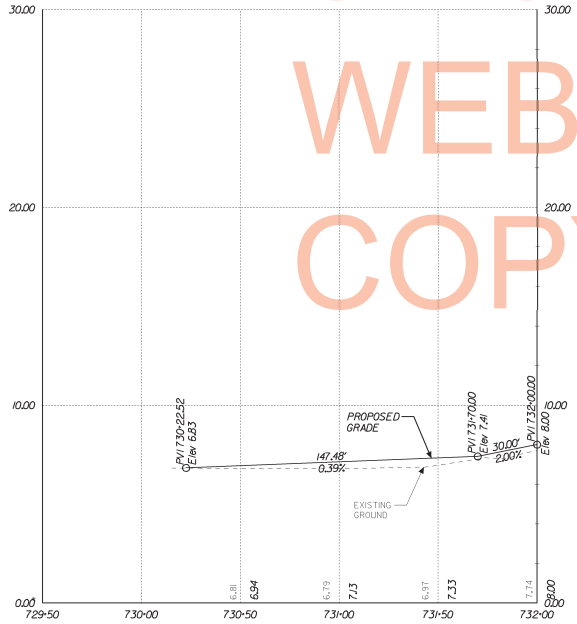

WOODLAND AVE STA. 730+22.52 TO STA. 732+00.00

SOUTH OF SR 26

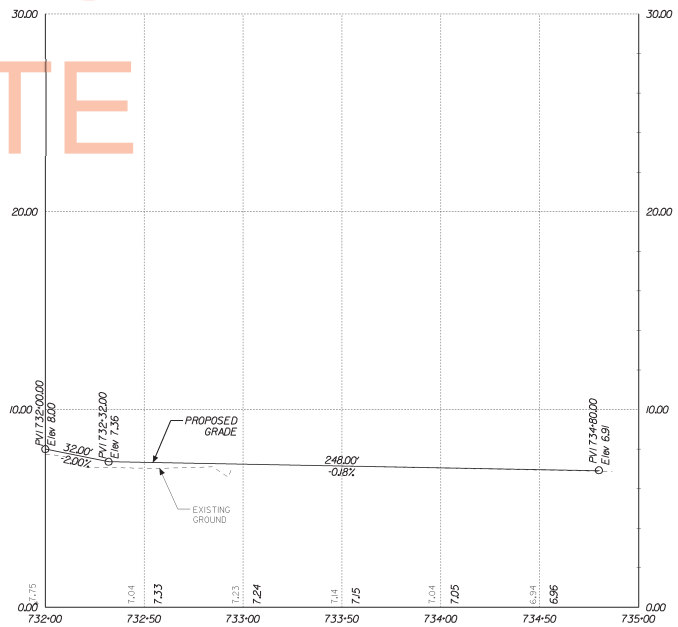

WOODLAND AVE STA. 732+00.00 TO STA. 734+80.00

NORTH OF SR 26

PREL. TRACING _____ DESIGN _____ CHKD. _____

7/14/2013
I:\PROJECTS\sr26mainline\Survey\pr_woodland.dgn
15:54:43

CONTRACT	COUNTY	F.A.P. NO.	SHEET NO.	TOTAL SHTS.
T200411210	SUSSEX	SEE TITLE SHEET	92	589

SR 26, ATLANTIC AVENUE FROM CLARKSVILLE TO ASSAWOMAN CANAL

REVISIONS

STRATA SYMBOLS

- SAND
- SILTY SAND
- SILT
- LOW PLASTICITY CLAY

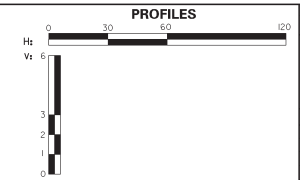

UNOFFICIAL WEBSITE COPY

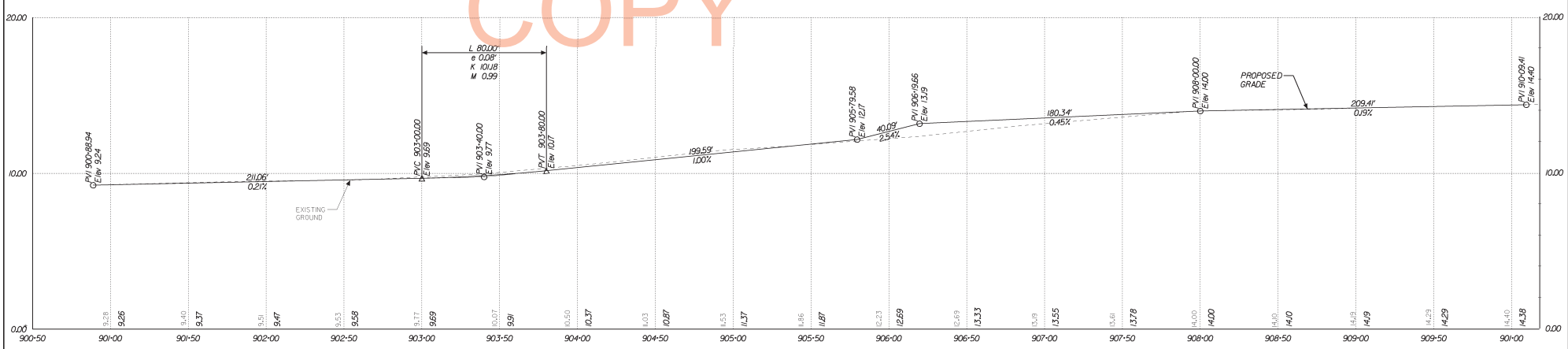

S84/S357 STA. 900+88.94 TO STA. 901+09.41

CENTRAL AVENUE

PREL. TRACING ____ DESIGN ____ CHKD. ____

7/14/2013
I:\PROJECTS\sr26mainline\Survey\pr_central.dgn
15:05:26

CONTRACT	COUNTY	F.A.P. NO.	SHEET NO.	TOTAL SHTS.
T200411210	SUSSEX	SEE TITLE SHEET	93	589

SR 26, ATLANTIC AVENUE FROM CLARKSVILLE TO ASSAWOMAN CANAL

REVISIONS

STRATA SYMBOLS

SAND

SILTY SAND

SILT

LOW PLASTICITY CLAY

PROFILES

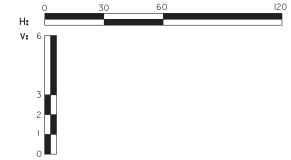

UNOFFICIAL WEBSITE COPY

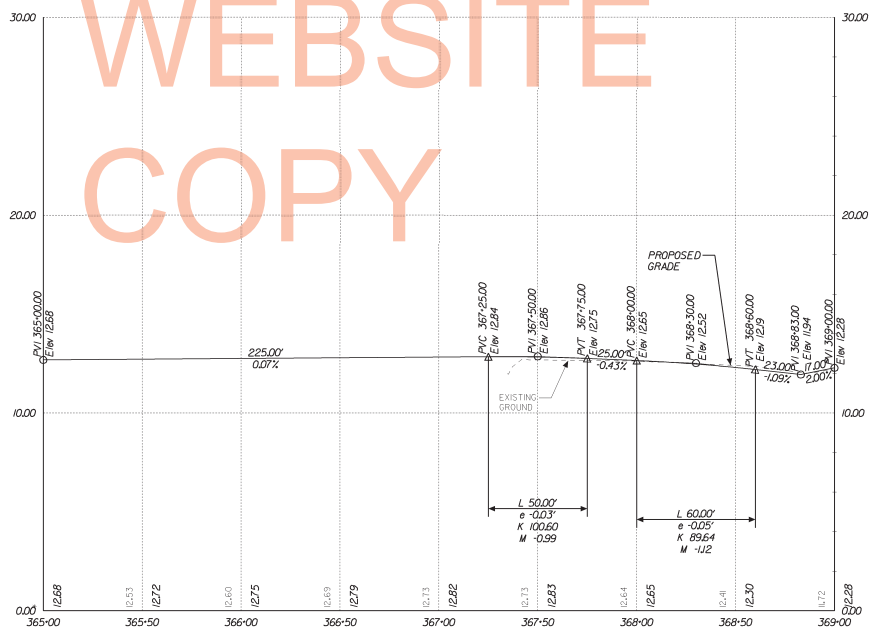

S361 STA. 365+00 TO STA. 369+00

PREL. TRACING _____ DESIGN _____ CHKD. _____

7/14/2013
I:\PROJECTS\sr26mainline\Survey\pr_west.dgn
6/28/08

CONTRACT	COUNTY	F.A.P. NO.	SHEET NO.	TOTAL SHTS.
T200411210	SUSSEX	SEE TITLE SHEET	94	589

SR 26, ATLANTIC AVENUE FROM CLARKSVILLE TO ASSAWOMAN CANAL

REVISIONS

PIPE PROFILES

HORIZ. 0 30 60 90 120

VERT. 0 10 20

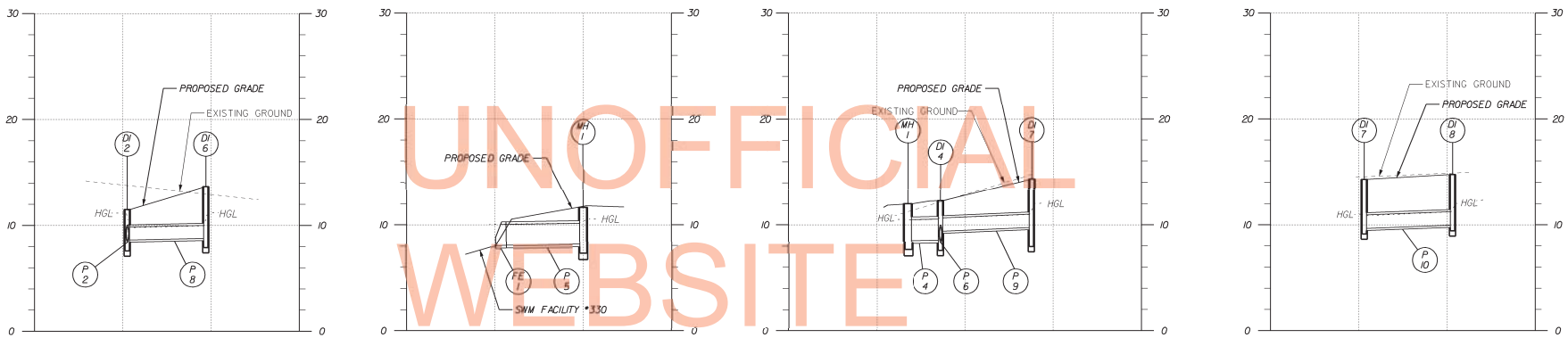

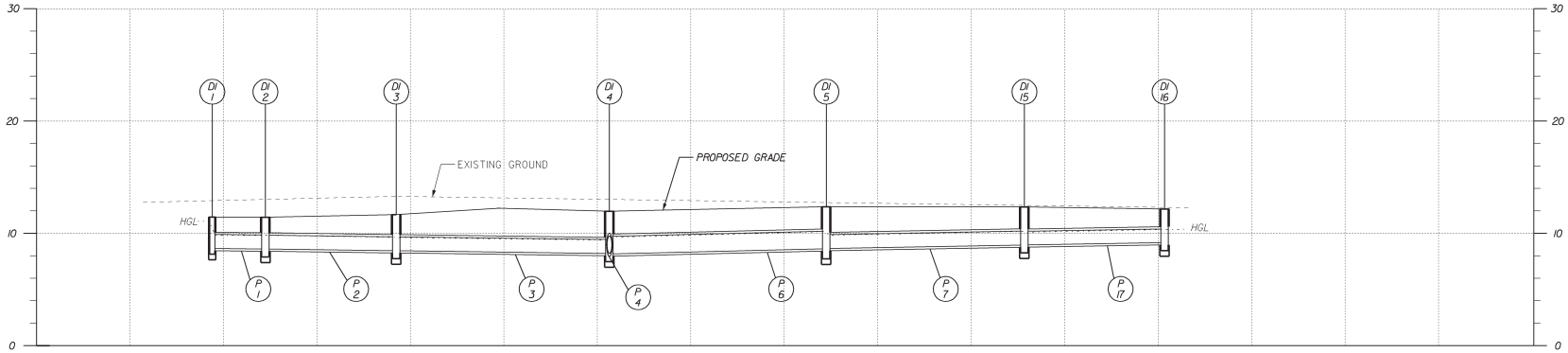

UNOFFICIAL WEBSITE COPY

PREL. TRACING ____ DESIGN ____ CHKD. ____

7/19/2013
H:\PROJECTS\sr26mainline\Survey\Pipeprofiles_26ML.dgn
08ds47

CONTRACT	COUNTY	F.A.P. NO.	SHEET NO.	TOTAL SHTS.
T200411210	SUSSEX	SEE TITLE SHEET	95	589

SR 26, ATLANTIC AVENUE FROM CLARKSVILLE TO ASSAWOMAN CANAL

REVISIONS

PIPE PROFILES

HORIZ. 0 30 60 90 120

VERT. 0 10 20

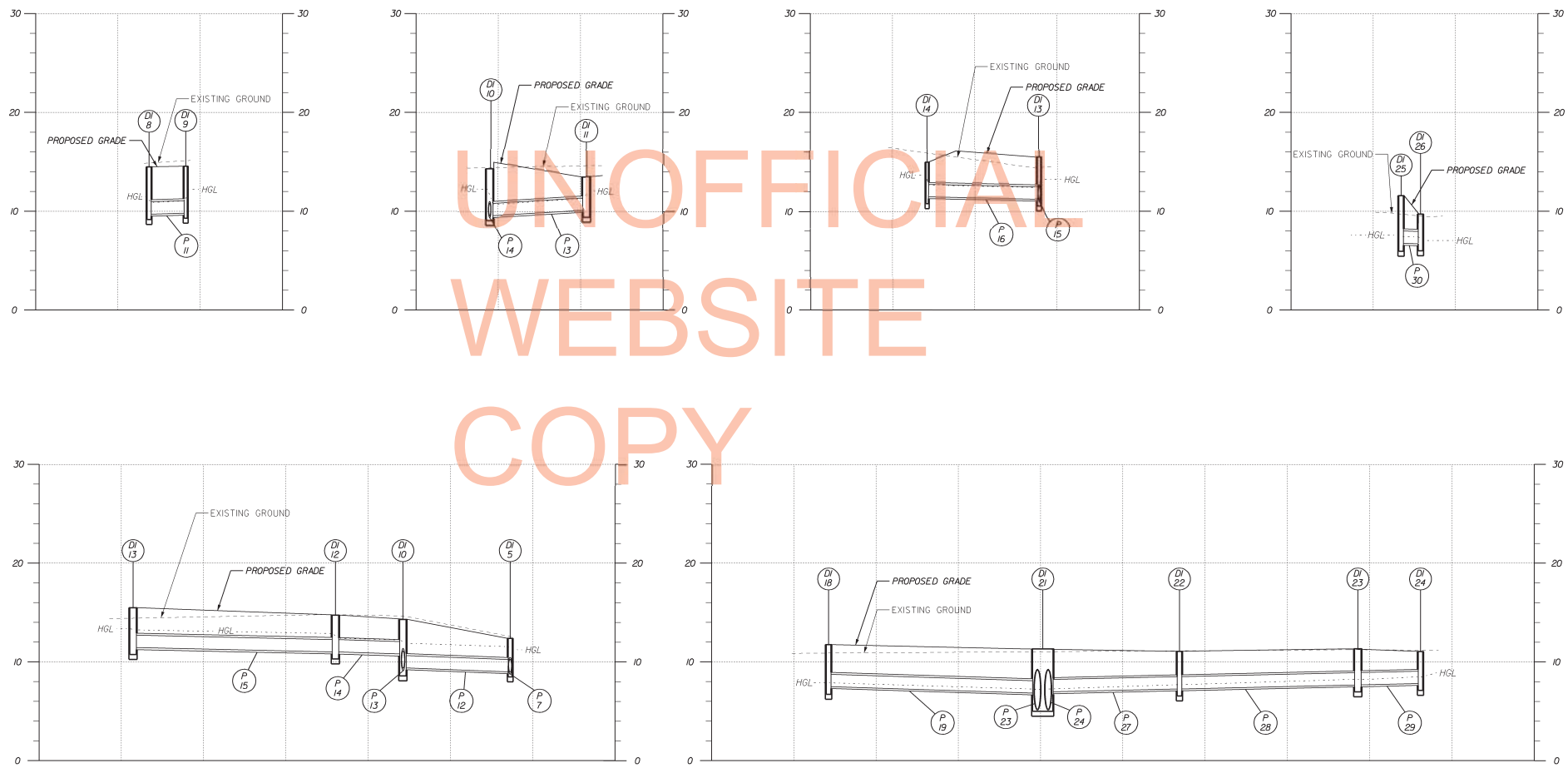

UNOFFICIAL WEBSITE COPY

PREL. TRACING ____ DESIGN ____ CHKD. ____

7/19/2013
H:\PROJECTS\sr26mainline\Survey\Pipeprofiles_26ML.dgn
08:12:01

CONTRACT	COUNTY	F.A.P. NO.	SHEET NO.	TOTAL SHTS.
T200411210	SUSSEX	SEE TITLE SHEET	96	589

SR 26, ATLANTIC AVENUE FROM CLARKSVILLE TO ASSAWOMAN CANAL

REVISIONS

PIPE PROFILES

HORIZ. 0 30 60 90 120

VERT. 0 10 20

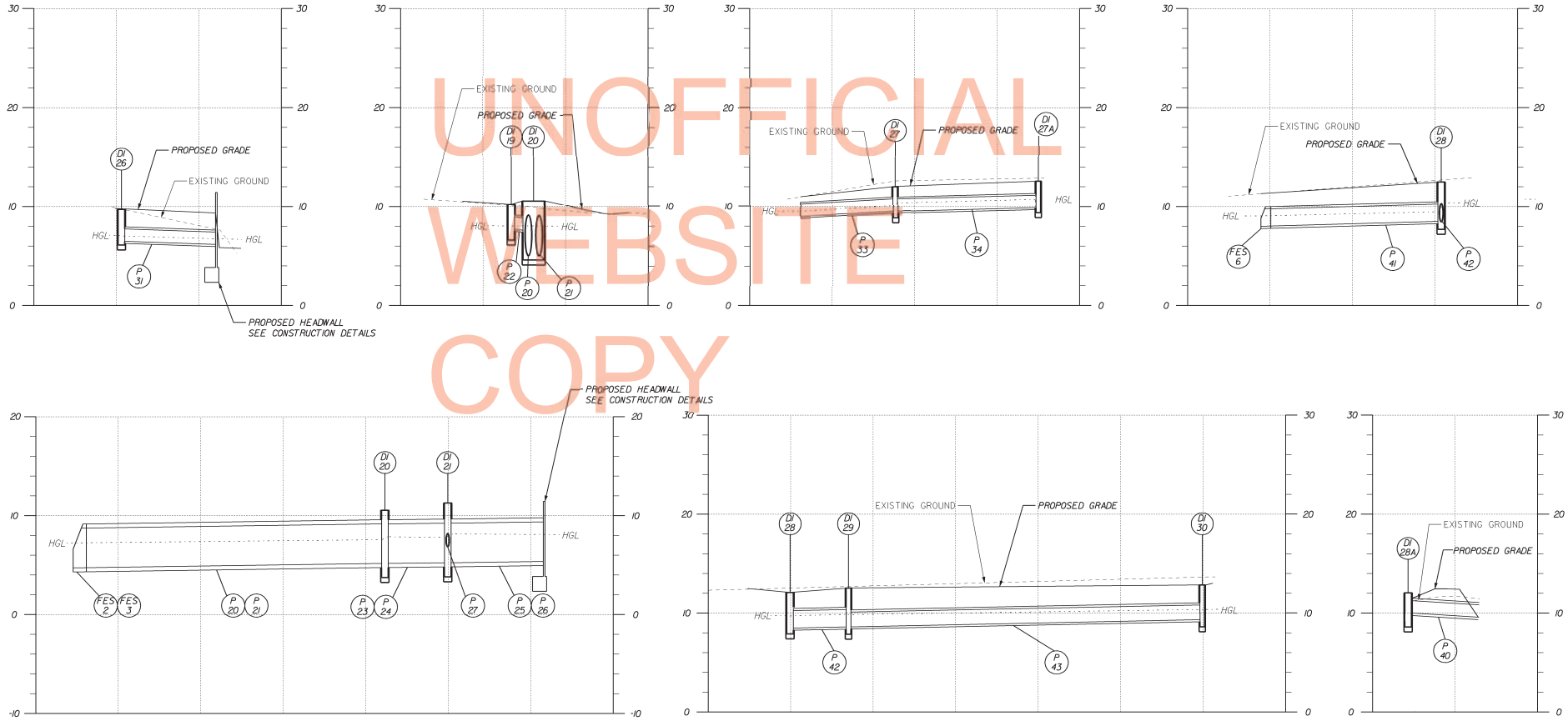

UNOFFICIAL WEBSITE COPY

PREL. TRACING ____ DESIGN ____ CHKD. ____

7/19/2013
H:\PROJECTS\sr26mainline\Survey\Pipeprofiles_26ML.dgn
08a2e9

CONTRACT	COUNTY	F.A.P. NO.	SHEET NO.	TOTAL SHTS.
T200411210	SUSSEX	SEE TITLE SHEET	97	589

SR 26, ATLANTIC AVENUE FROM CLARKSVILLE TO ASSAWOMAN CANAL

REVISIONS

PIPE PROFILES

HORIZ. 0 30 60 90 120

VERT. 0 10 20

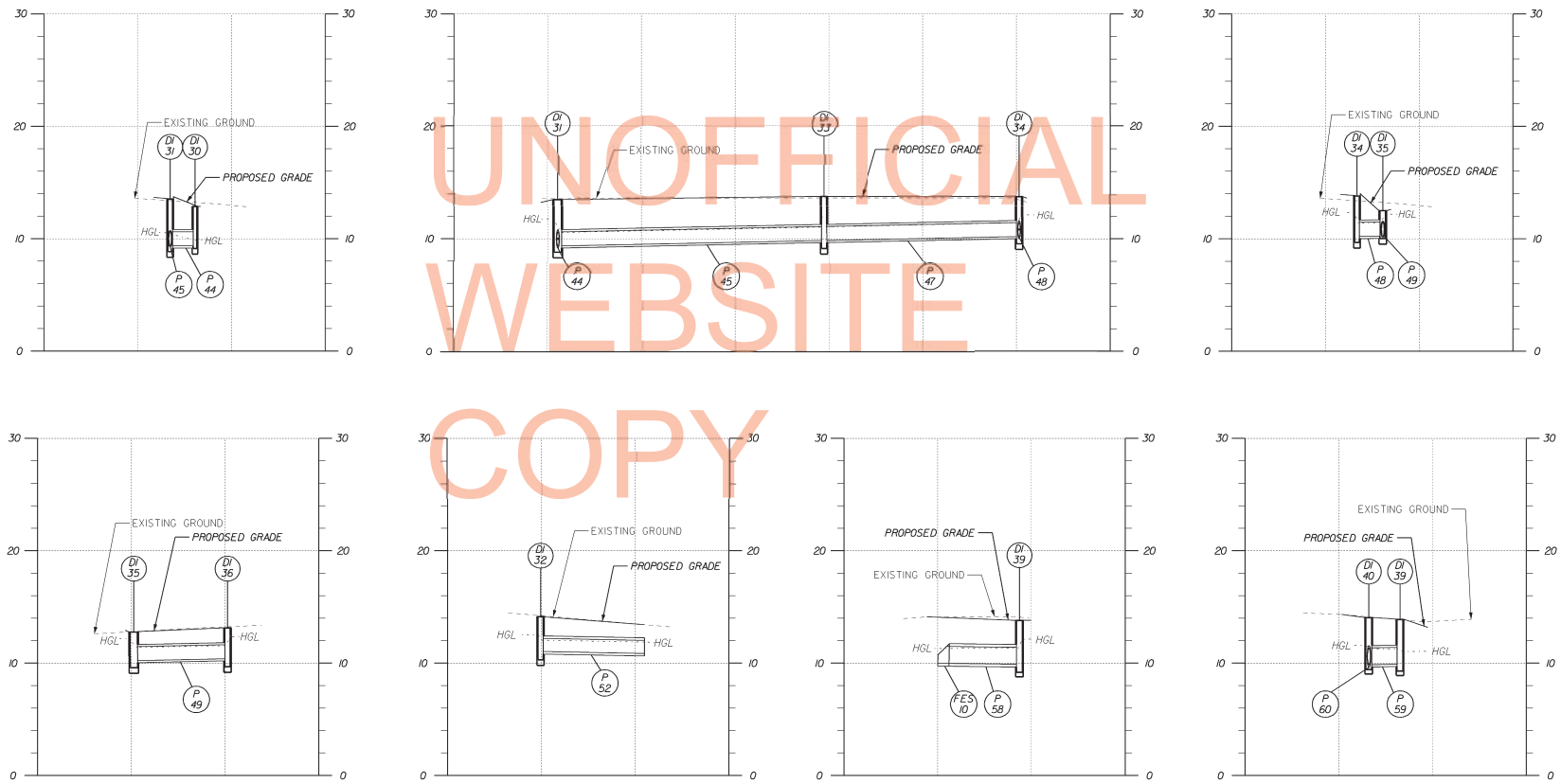

UNOFFICIAL WEBSITE COPY

PREL. TRACING ____ DESIGN ____ CHKD. ____

7/19/2013
J:\PROJECTS\sr26mainline\Survey\Pipeprofiles_26ML.dgn
08s2142

CONTRACT	COUNTY	F.A.P. NO.	SHEET NO.	TOTAL SHTS.
T200411210	SUSSEX	SEE TITLE SHEET	98	589

SR 26, ATLANTIC AVENUE FROM CLARKSVILLE TO ASSAWOMAN CANAL

REVISIONS

PIPE PROFILES

HORIZ. 0 30 60 90 120

VERT. 0 10 20

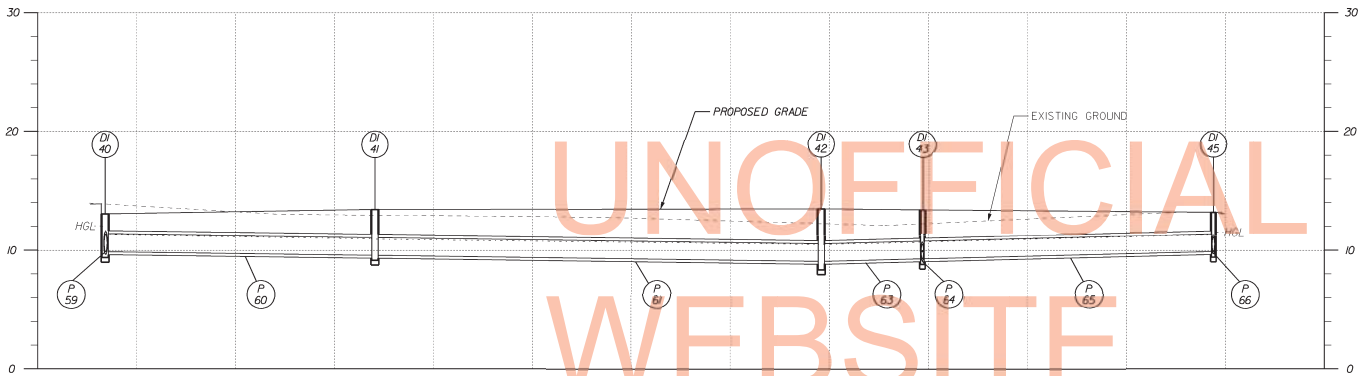

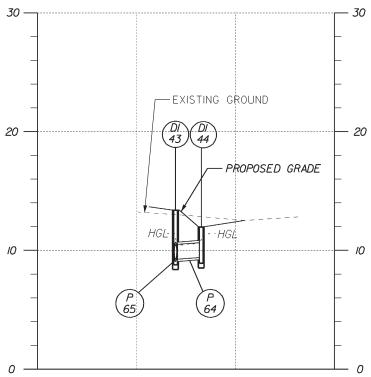

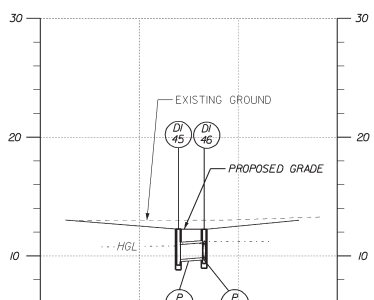

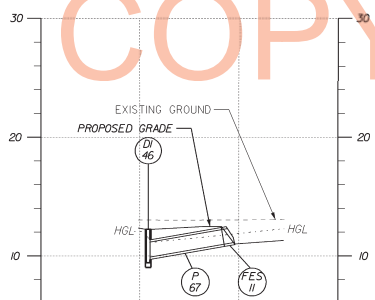

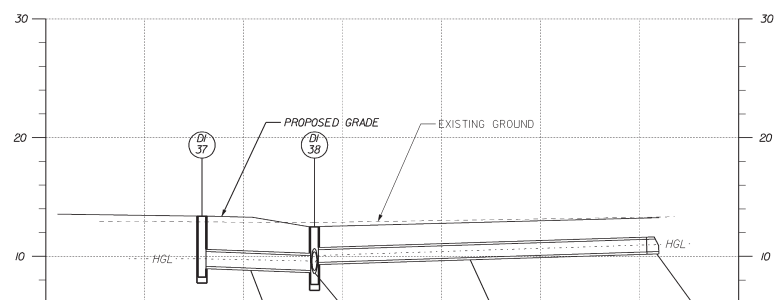

UNOFFICIAL WEBSITE COPY

PREL. TRACING _____ DESIGN _____ CHKD. _____

7/19/2013
J:\PROJECTS\sr26mainline\Survey\Pipeprofiles_26ML.dgn
08s2s7

CONTRACT	COUNTY	F.A.P. NO.	SHEET NO.	TOTAL SHTS.
T200411210	SUSSEX	SEE TITLE SHEET	99	589

SR 26, ATLANTIC AVENUE FROM CLARKSVILLE TO ASSAWOMAN CANAL

REVISIONS

PIPE PROFILES

HORIZ. 0 30 60 90 120

VERT. 0 10 20

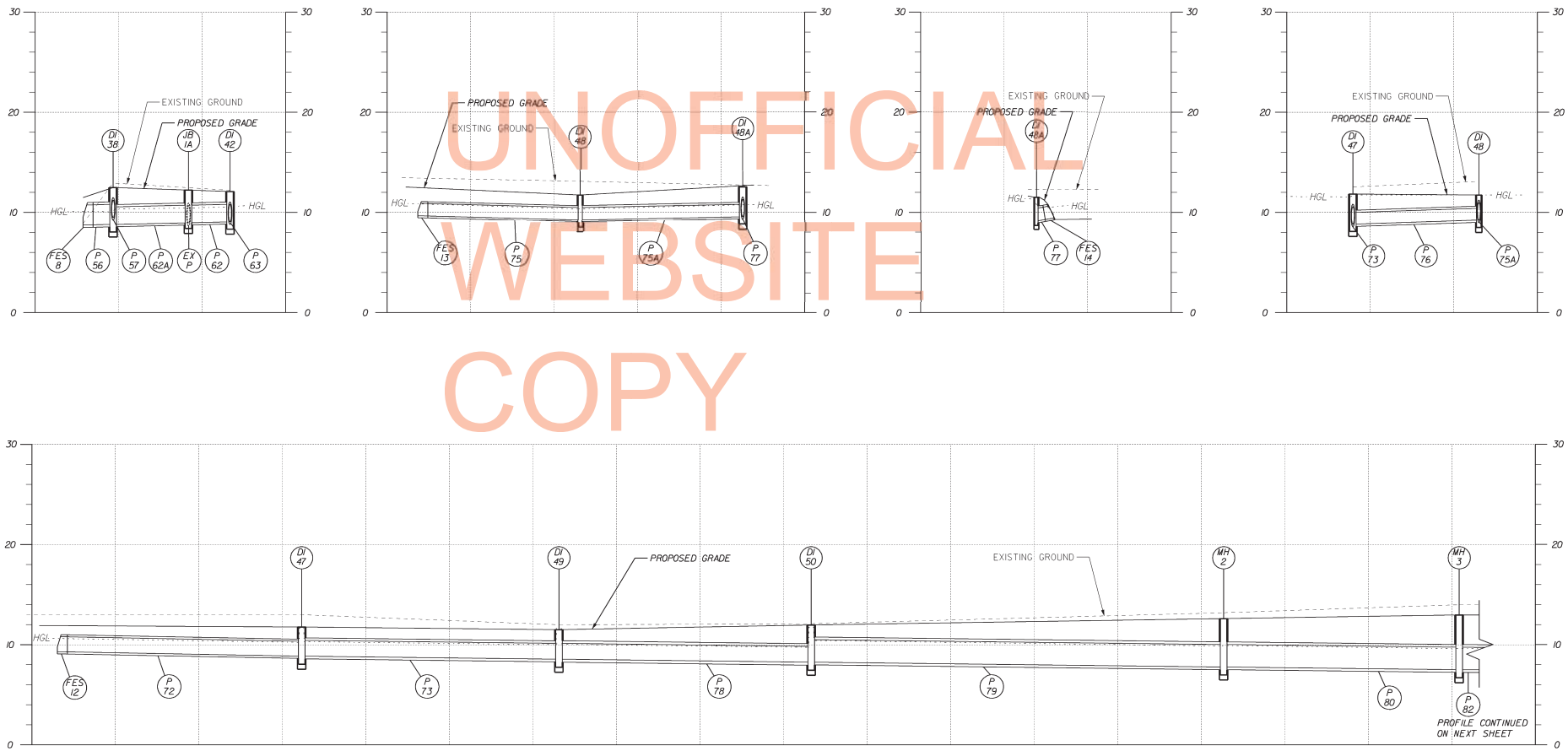

UNOFFICIAL WEBSITE COPY

PREL. TRACING ____ DESIGN ____ CHKD. ____

7/19/2013
I:\PROJECTS\sr26mainline\Survey\Pipeprofiles_26ML.dgn
08a3a9

CONTRACT	COUNTY	F.A.P. NO.	SHEET NO.	TOTAL SHTS.
T200411210	SUSSEX	SEE TITLE SHEET	100	589

SR 26, ATLANTIC AVENUE FROM CLARKSVILLE TO ASSAWOMAN CANAL

REVISIONS

PIPE PROFILES

HORIZ. 0 30 60 90 120

VERT. 0 10 20

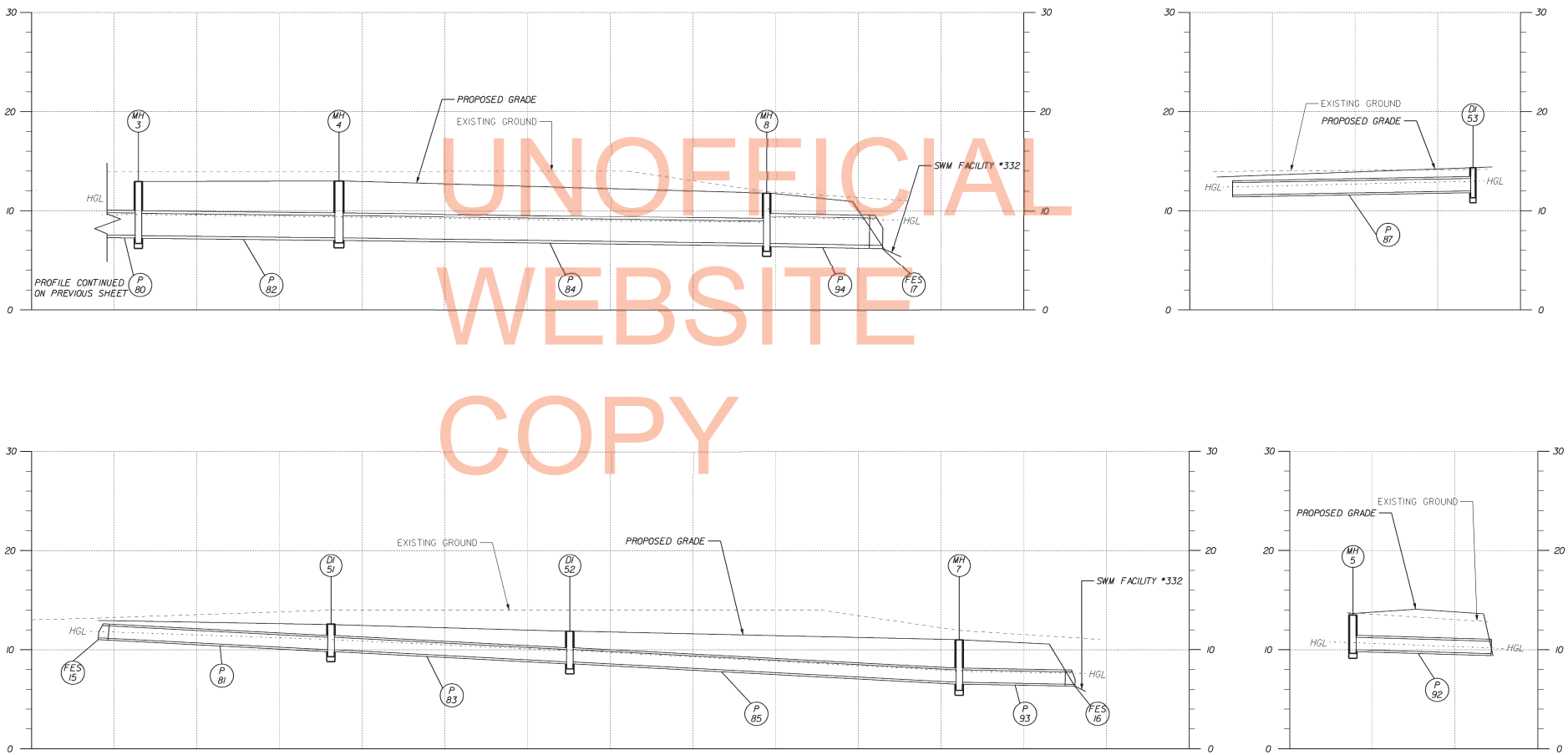

UNOFFICIAL WEBSITE COPY

PREL. TRACING ____ DESIGN ____ CHKD. ____

7/19/2013
J:\PROJECTS\sr26mainline\Survey\Pipeprofiles_26ML.dgn
08a1328

CONTRACT	COUNTY	F.A.P. NO.	SHEET NO.	TOTAL SHTS.
T200411210	SUSSEX	SEE TITLE SHEET	101	589

SR 26, ATLANTIC AVENUE FROM CLARKSVILLE TO ASSAWOMAN CANAL

REVISIONS

PIPE PROFILES

HORIZ. 0 30 60 90 120

VERT. 0 10 20

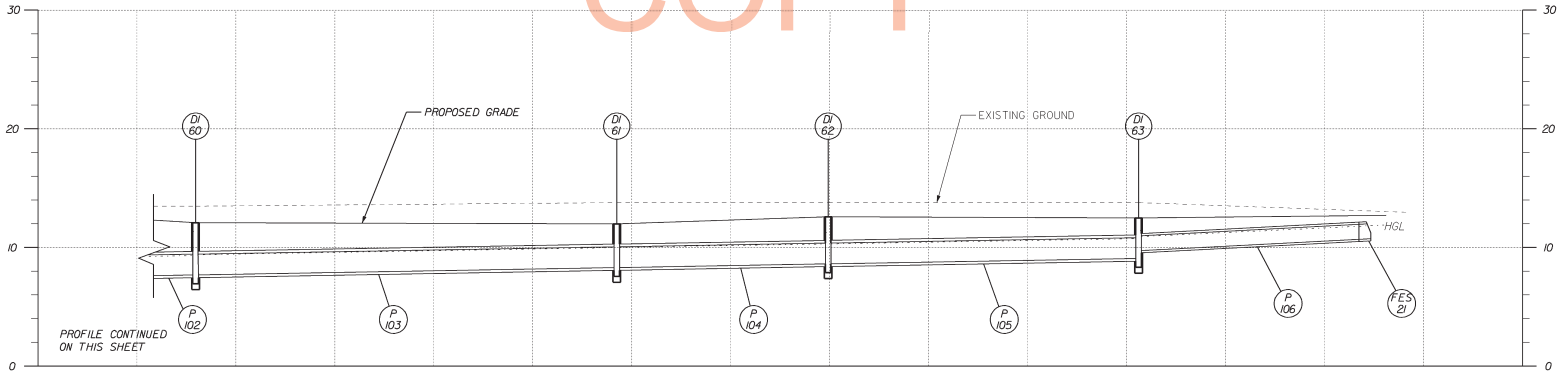

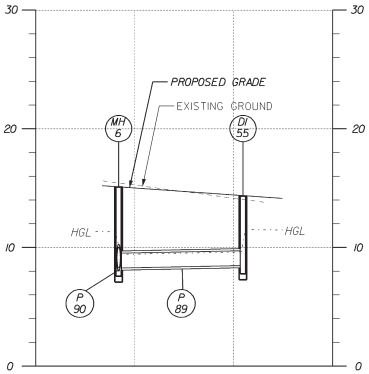

PREL. TRACING ____ DESIGN ____ CHKD. ____

7/19/2013
I:\PROJECTS\sr26mainline\Survey\Pipeprofiles_26ML.dgn
08:35:51

UNOFFICIAL WEBSITE COPY

CONTRACT	COUNTY	F.A.P. NO.	SHEET NO.	TOTAL SHTS.
T200411210	SUSSEX	SEE TITLE SHEET	102	589

SR 26, ATLANTIC AVENUE FROM CLARKSVILLE TO ASSAWOMAN CANAL

REVISIONS

PIPE PROFILES

HORIZ. 0 30 60 90 120

VERT. 0 10 20

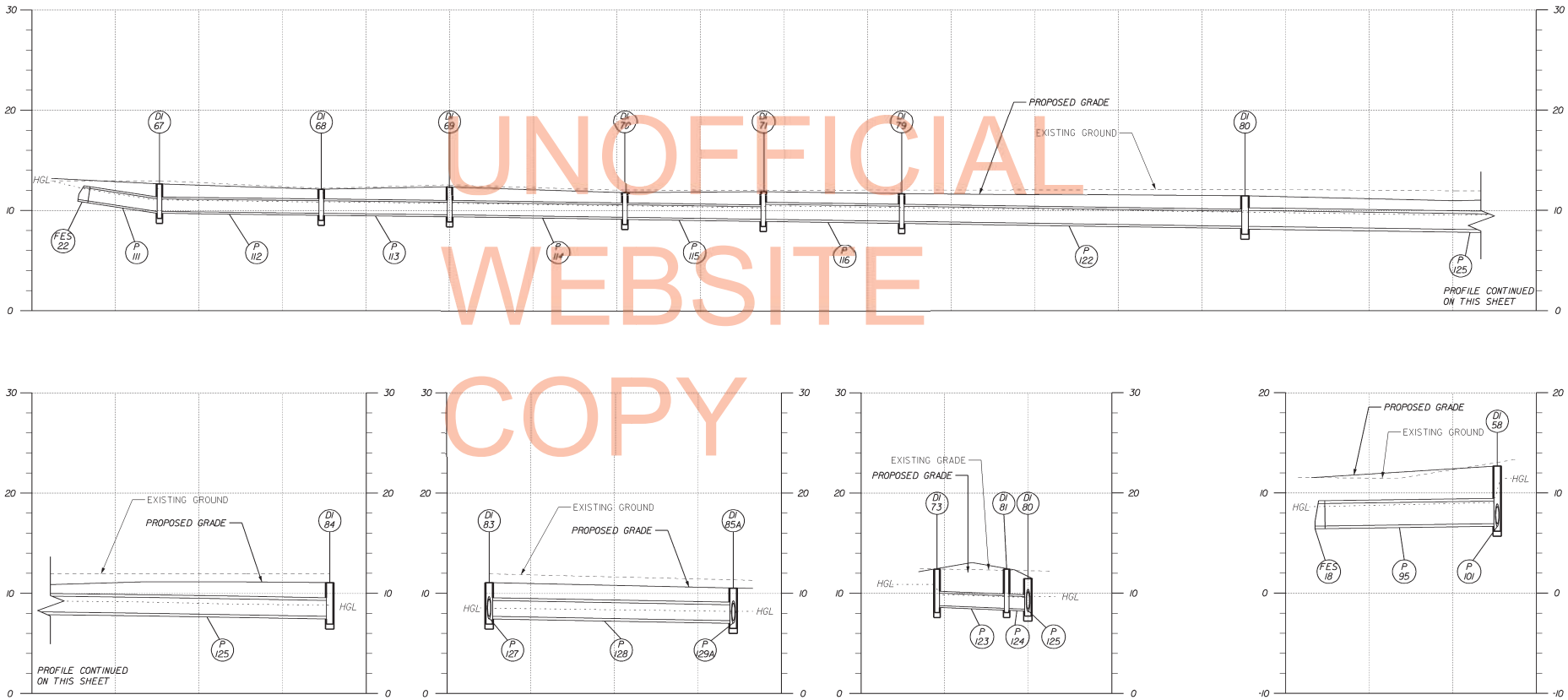

UNOFFICIAL WEBSITE COPY

PREL. TRACING ____ DESIGN ____ CHKD. ____

7/19/2013
J:\PROJECTS\sr26mainline\Survey\Pipeprofiles_26ML.dgn
08:41:34

CONTRACT	COUNTY	F.A.P. NO.	SHEET NO.	TOTAL SHTS.
T200411210	SUSSEX	SEE TITLE SHEET	103	589

SR 26, ATLANTIC AVENUE FROM CLARKSVILLE TO ASSAWOMAN CANAL

REVISIONS

PIPE PROFILES

HORIZ. 0 30 60 90 120

VERT. 0 10 20

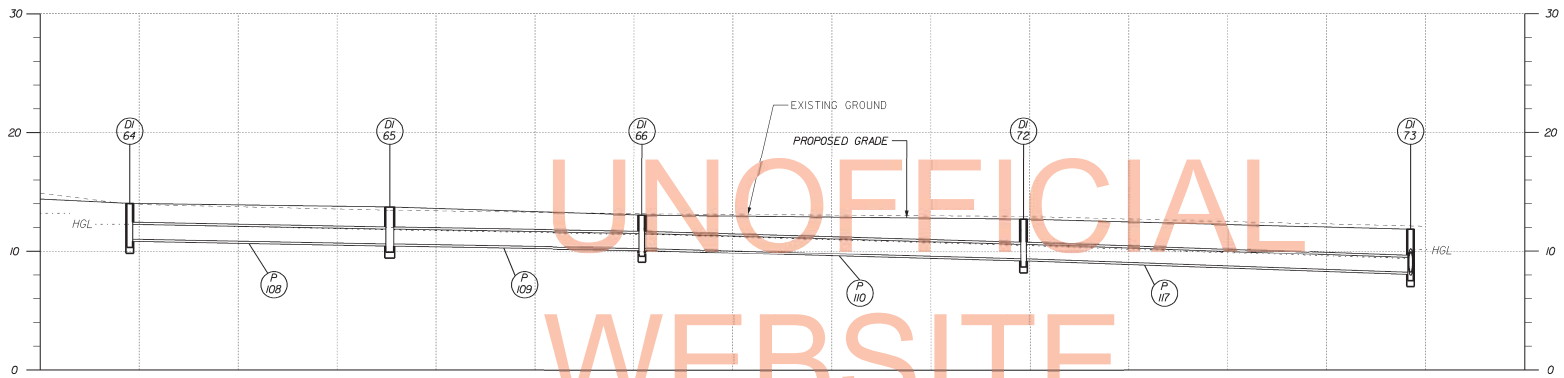

UNOFFICIAL WEBSITE COPY

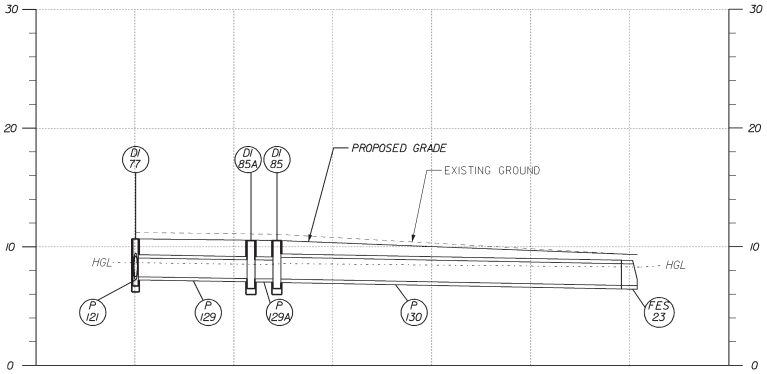

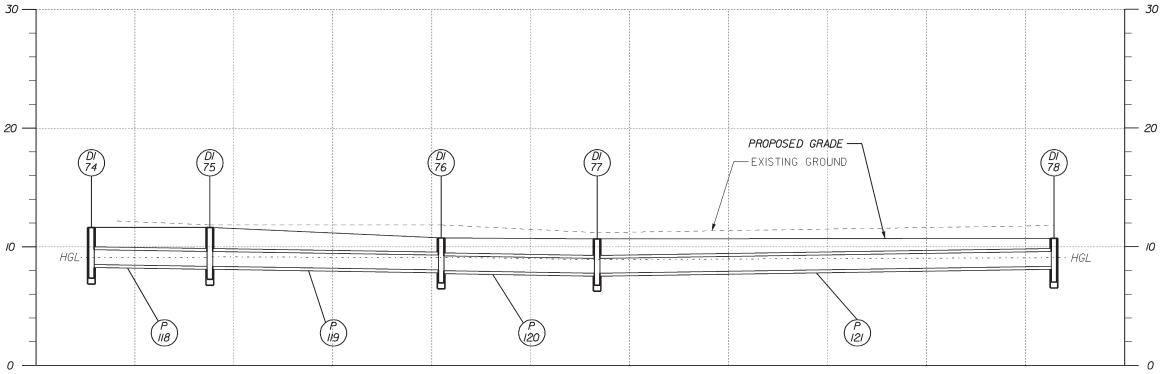

PREL. TRACING ____ DESIGN ____ CHKD. ____

7/19/2013
I:\PROJECTS\sr26mainline\Survey\Pipeprofiles_26ML.dgn
08:44:19

CONTRACT	COUNTY	F.A.P. NO.	SHEET NO.	TOTAL SHTS.
T200411210	SUSSEX	SEE TITLE SHEET	104	589

SR 26, ATLANTIC AVENUE FROM CLARKSVILLE TO ASSAWOMAN CANAL

REVISIONS

PIPE PROFILES

HORIZ. 0 30 60 90 120

VERT. 0 10 20

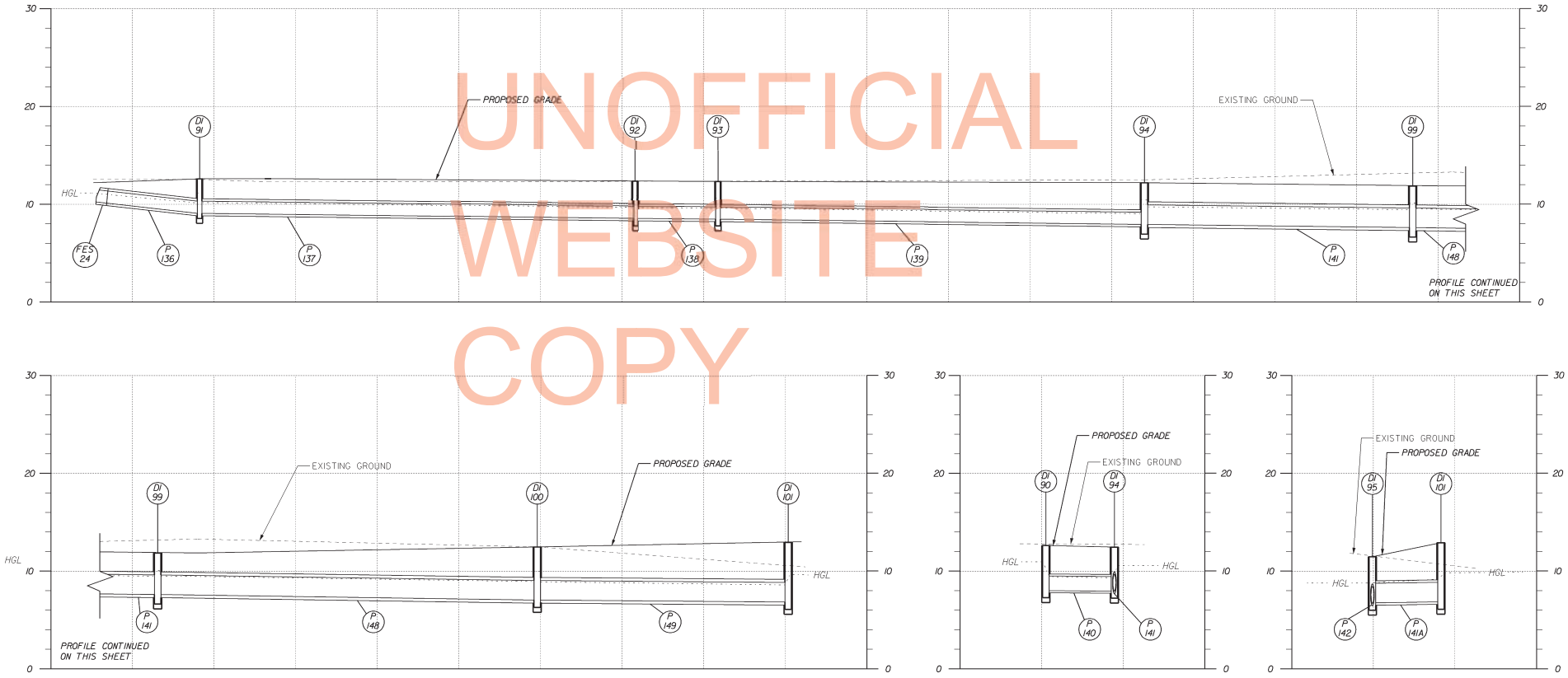

UNOFFICIAL WEBSITE COPY

PREL. TRACING ____ DESIGN ____ CHKD. ____

7/19/2013
J:\PROJECTS\ar26mainline\Survey\Pipeprofiles_26ML.dgn
08453

CONTRACT	COUNTY	F.A.P. NO.	SHEET NO.	TOTAL SHTS.
T200411210	SUSSEX	SEE TITLE SHEET	105	589

SR 26, ATLANTIC AVENUE FROM CLARKSVILLE TO ASSAWOMAN CANAL

REVISIONS

PIPE PROFILES

HORIZ. 0 30 60 90 120

VERT. 0 10 20

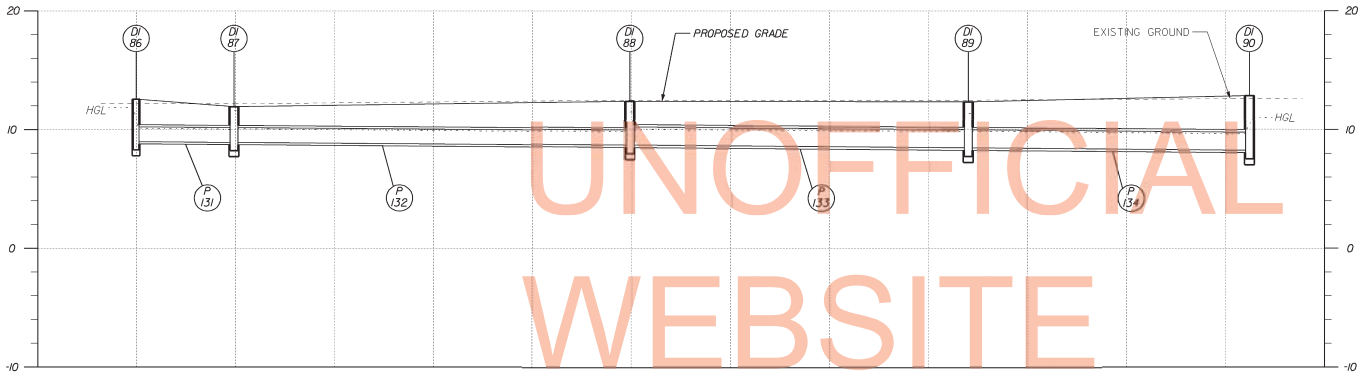

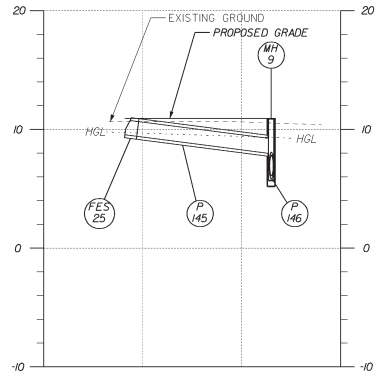

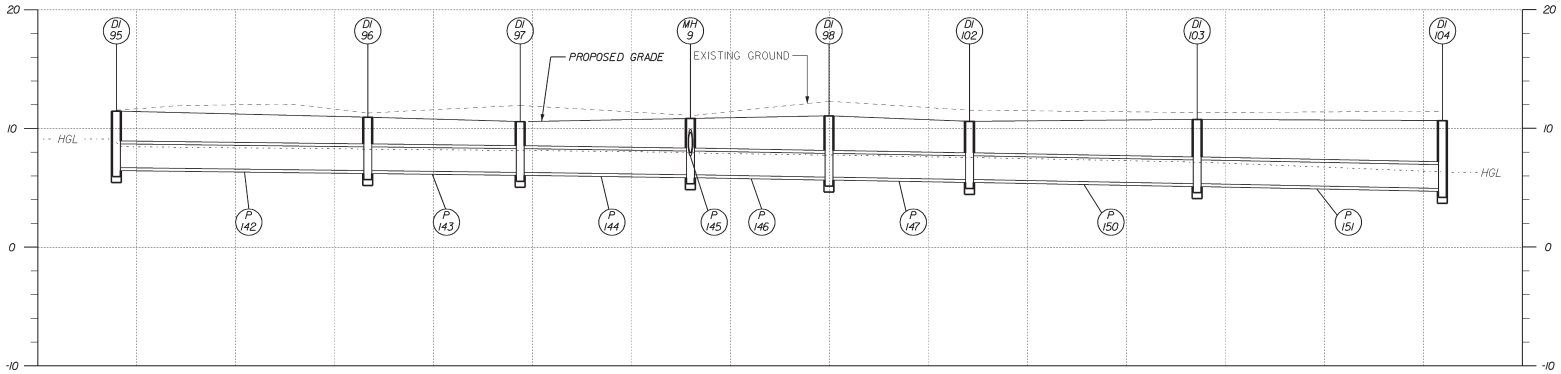

UNOFFICIAL WEBSITE COPY

PREL. TRACING ____ DESIGN ____ CHKD. ____

7/19/2013
I:\PROJECTS\sr26mainline\Survey\Pipeprofiles_26ML.dgn
08e5o3

CONTRACT	COUNTY	F.A.P. NO.	SHEET NO.	TOTAL SHTS.
T200411210	SUSSEX	SEE TITLE SHEET	106	589

SR 26, ATLANTIC AVENUE FROM CLARKSVILLE TO ASSAWOMAN CANAL

REVISIONS

PIPE PROFILES

HORIZ. 0 30 60 90 120

VERT. 0 10 20

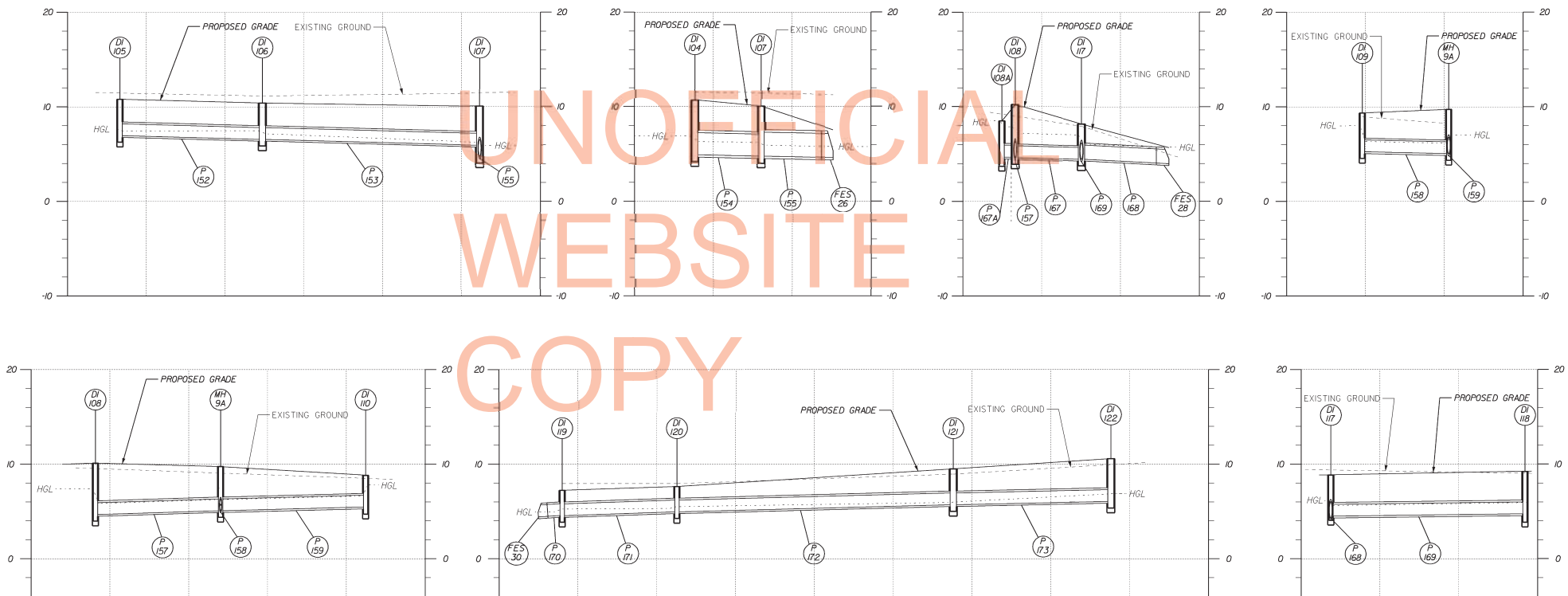

UNOFFICIAL WEBSITE COPY

PREL. TRACING ____ DESIGN ____ CHKD. ____

7/19/2013
H:\PROJECTS\sr26mainline\Survey\Pipeprofiles_26ML.dgn
08:55:20

CONTRACT	COUNTY	F.A.P. NO.	SHEET NO.	TOTAL SHTS.
T200411210	SUSSEX	SEE TITLE SHEET	107	589

SR 26, ATLANTIC AVENUE FROM CLARKSVILLE TO ASSAWOMAN CANAL

REVISIONS

PIPE PROFILES

HORIZ. 0 30 60 90 120

VERT. 0 10 20

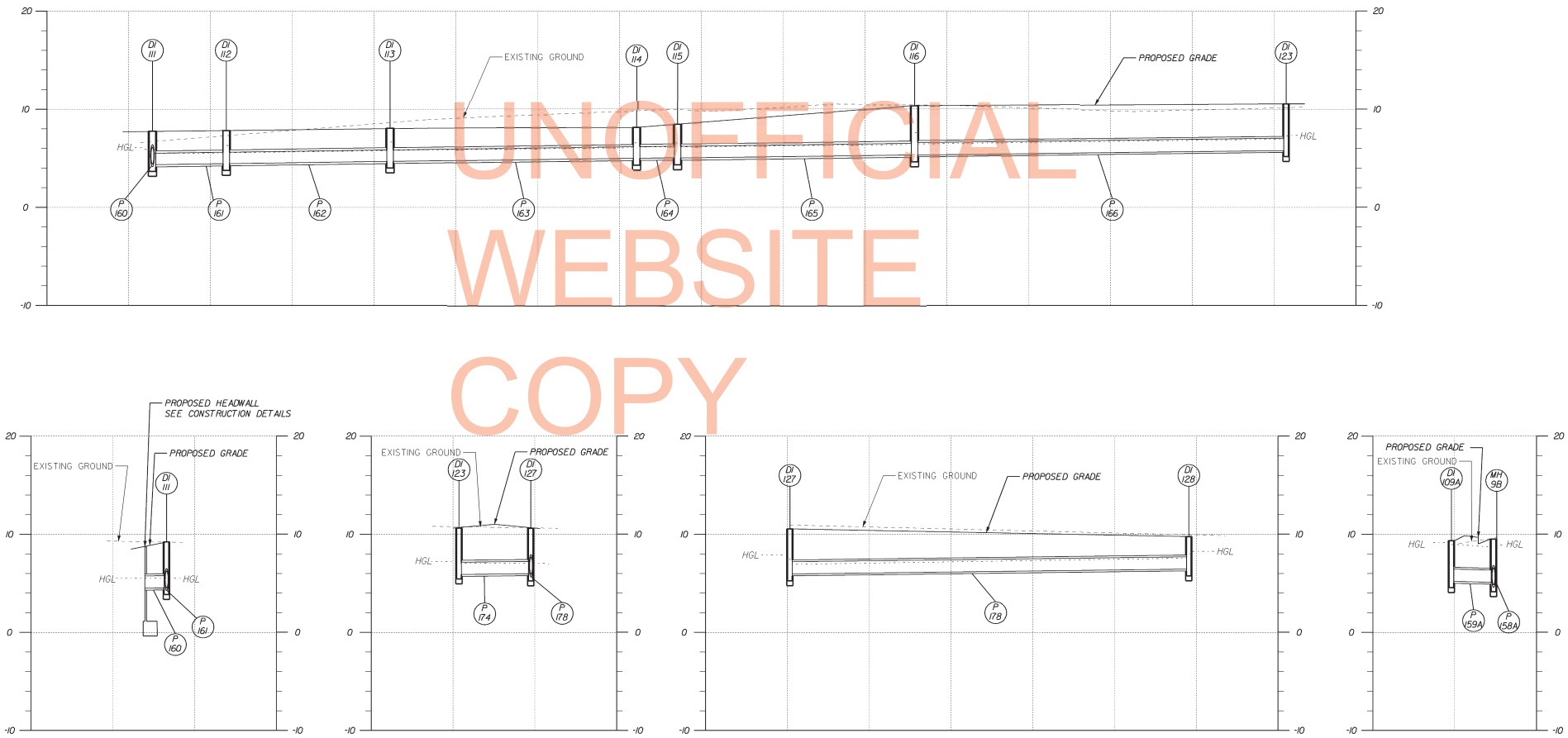

UNOFFICIAL WEBSITE COPY

PREL. TRACING ____ DESIGN ____ CHKD. ____

7/19/2013
H:\PROJECTS\sr26mainline\Survey\Pipeprofiles_26ML.dgn
08:05:15

CONTRACT	COUNTY	F.A.P. NO.	SHEET NO.	TOTAL SHTS.
T200411210	SUSSEX	SEE TITLE SHEET	108	589

SR 26, ATLANTIC AVENUE FROM CLARKSVILLE TO ASSAWOMAN CANAL

REVISIONS

PIPE PROFILES

HORIZ. 0 30 60 90 120

VERT. 0 10 20

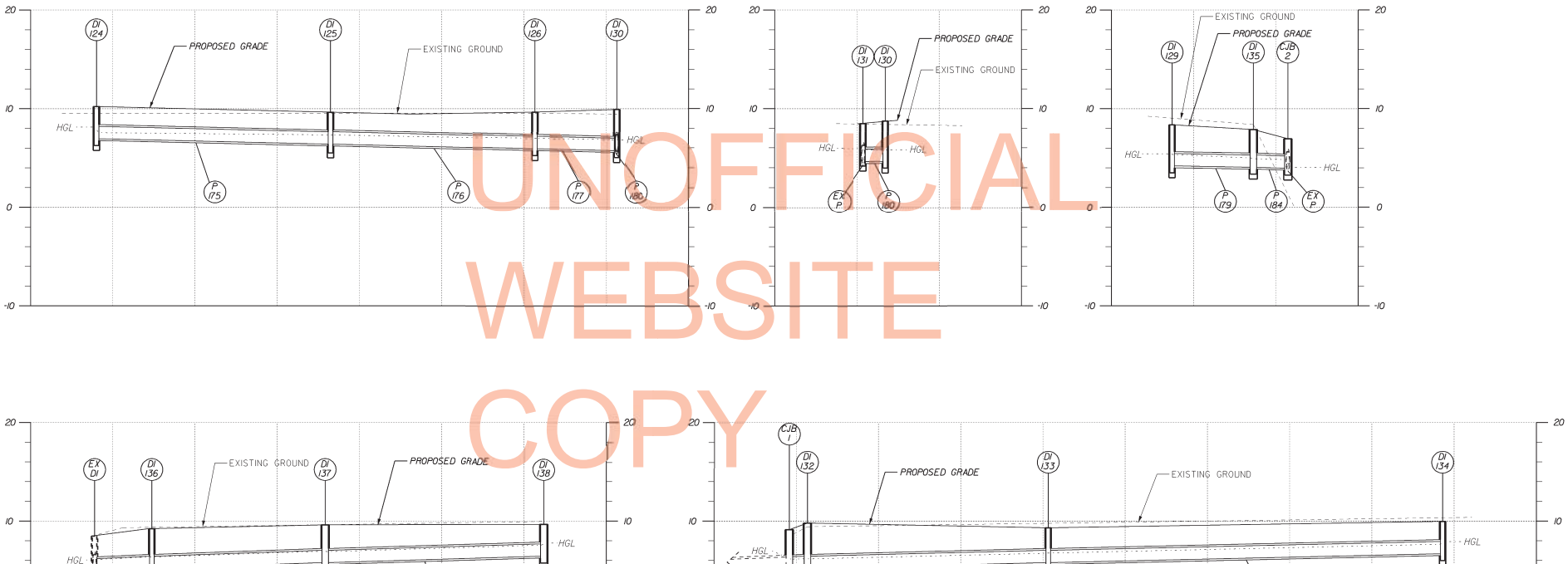

UNOFFICIAL WEBSITE COPY

PREL. TRACING ____ DESIGN ____ CHKD. ____

7/19/2013
J:\PROJECTS\sr26mainline\Survey\Pipeprofiles_26ML.dgn
08:55:40

CONTRACT	COUNTY	F.A.P. NO.	SHEET NO.	TOTAL SHTS.
T200411210	SUSSEX	SEE TITLE SHEET	109	589

SR 26, ATLANTIC AVENUE FROM CLARKSVILLE TO ASSAWOMAN CANAL

REVISIONS

PIPE PROFILES

HORIZ. 0 30 60 90 120

VERT. 0 10 20

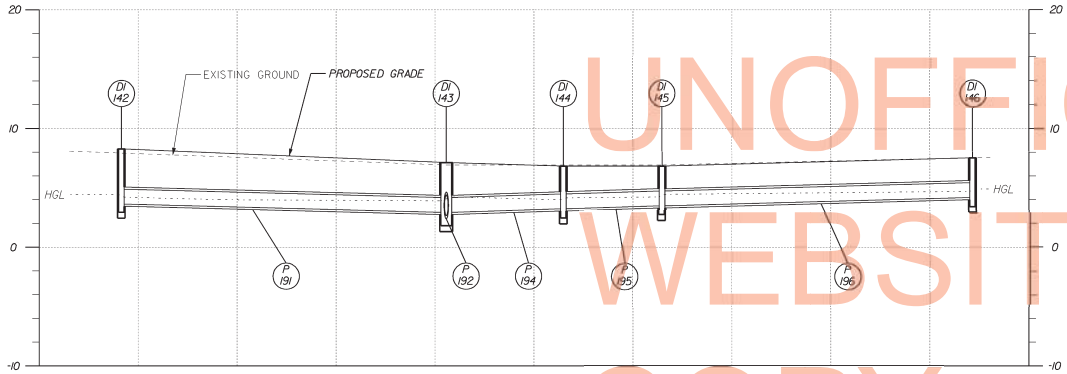

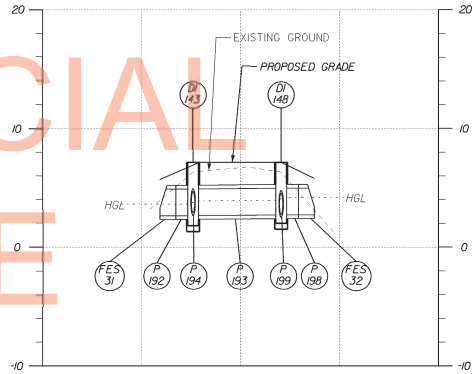

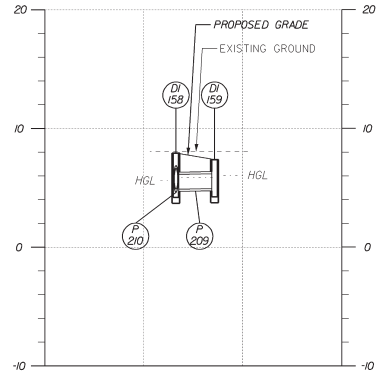

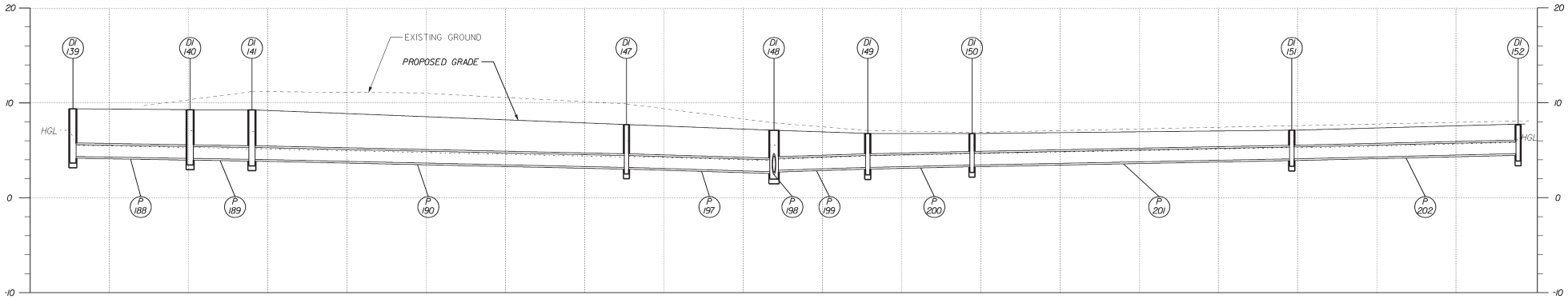

UNOFFICIAL WEBSITE COPY

PREL. TRACING _____ DESIGN _____ CHKD. _____

7/19/2013
J:\PROJECTS\sr26mainline\Survey\Pipeprofiles_26ML.dgn
08e5d1

CONTRACT	COUNTY	F.A.P. NO.	SHEET NO.	TOTAL SHTS.
T200411210	SUSSEX	SEE TITLE SHEET	110	589

SR 26, ATLANTIC AVENUE FROM CLARKSVILLE TO ASSAWOMAN CANAL

REVISIONS

PIPE PROFILES

HORIZ. 0 30 60 90 120

VERT. 0 10 20

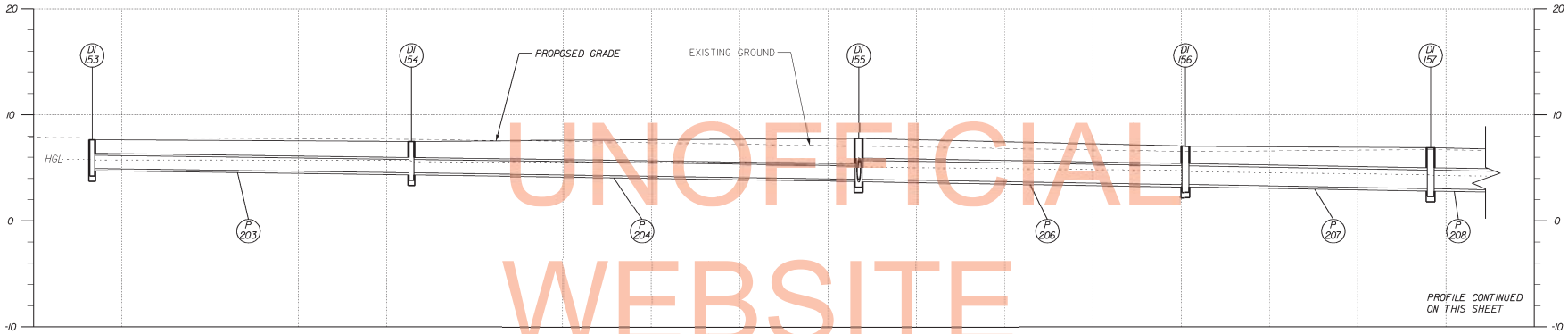

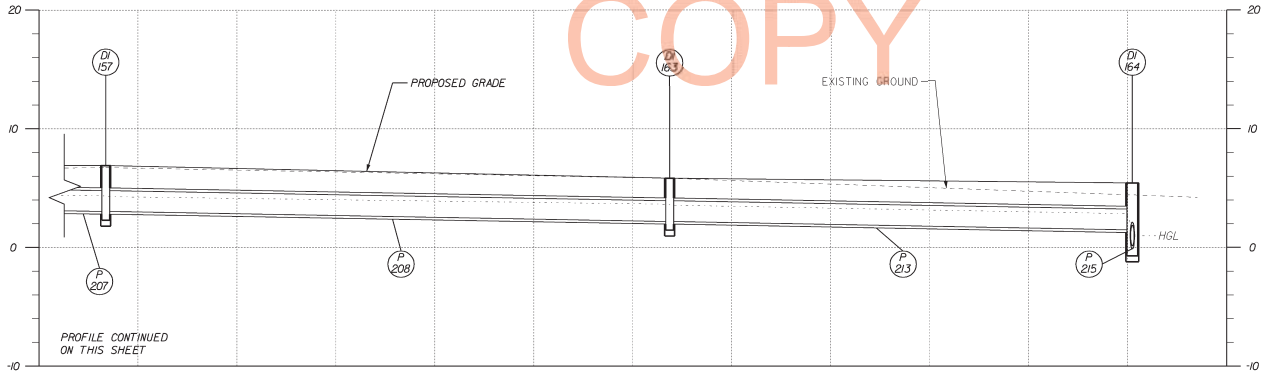

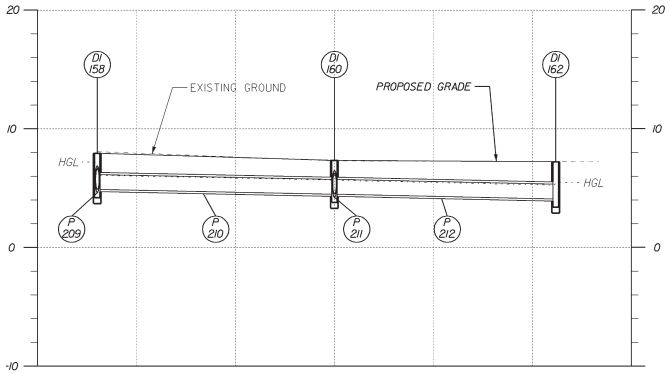

UNOFFICIAL WEBSITE COPY

PREL. TRACING _____ DESIGN _____ CHKD. _____

7/19/2013
I:\PROJECTS\sr26mainline\Survey\Pipeprofiles_26ML.dgn
08a6s24

CONTRACT	COUNTY	F.A.P. NO.	SHEET NO.	TOTAL SHTS.
T200411210	SUSSEX	SEE TITLE SHEET	III	589

SR 26, ATLANTIC AVENUE FROM CLARKSVILLE TO ASSAWOMAN CANAL

REVISIONS

PIPE PROFILES

HORIZ. 0 30 60 90 120

VERT. 0 10 20

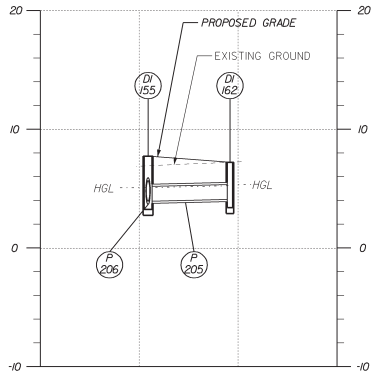

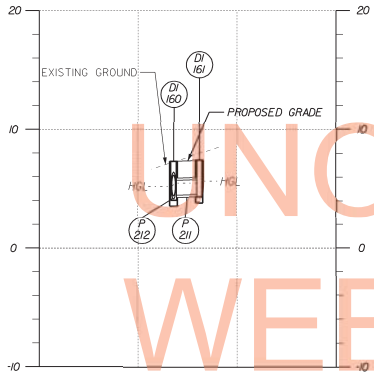

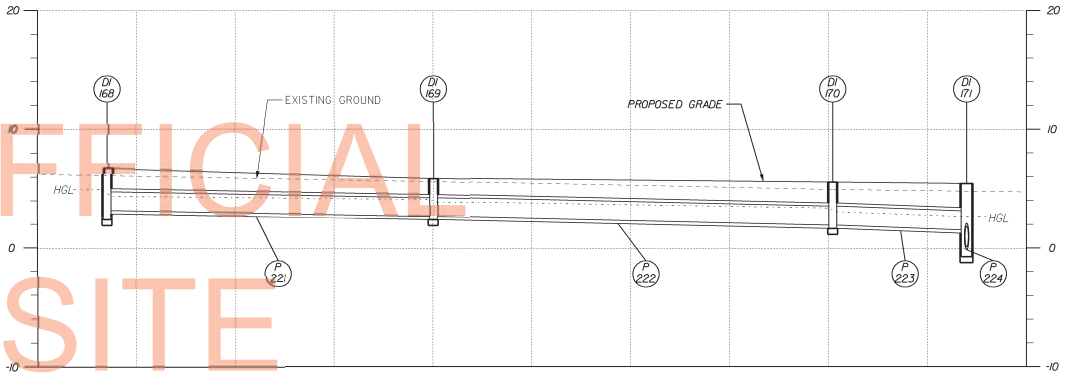

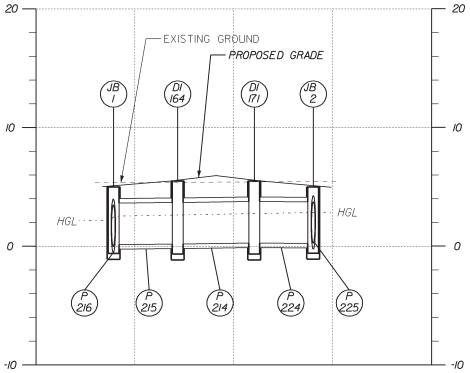

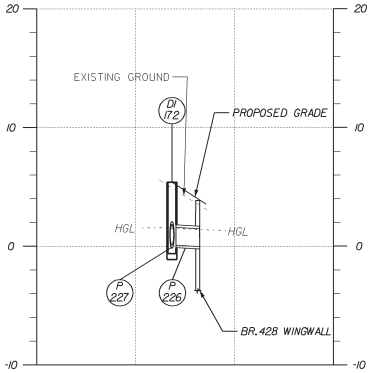

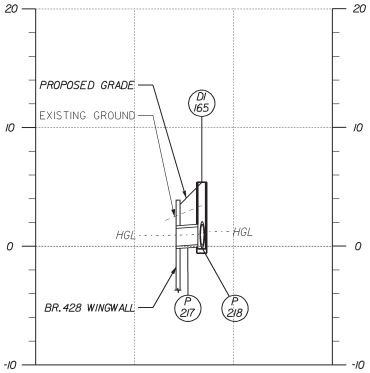

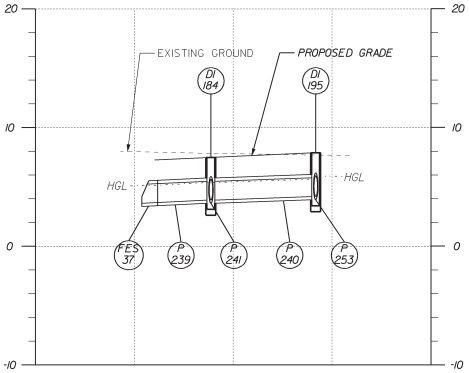

UNOFFICIAL WEBSITE COPY

CHKD. _____ DESIGN _____ PREL. TRACING _____

7/19/2013
J:\PROJECTS\sur26mainline\Survey\Pl\paprofiles_26ML.dgn
08/24/05

CONTRACT	COUNTY	F.A.P. NO.	SHEET NO.	TOTAL SHTS.
T200411210	SUSSEX	SEE TITLE SHEET	112	589

SR 26, ATLANTIC AVENUE FROM CLARKSVILLE TO ASSAWOMAN CANAL

REVISIONS

PIPE PROFILES

HORIZ. 0 30 60 90 120

VERT. 0 10 20

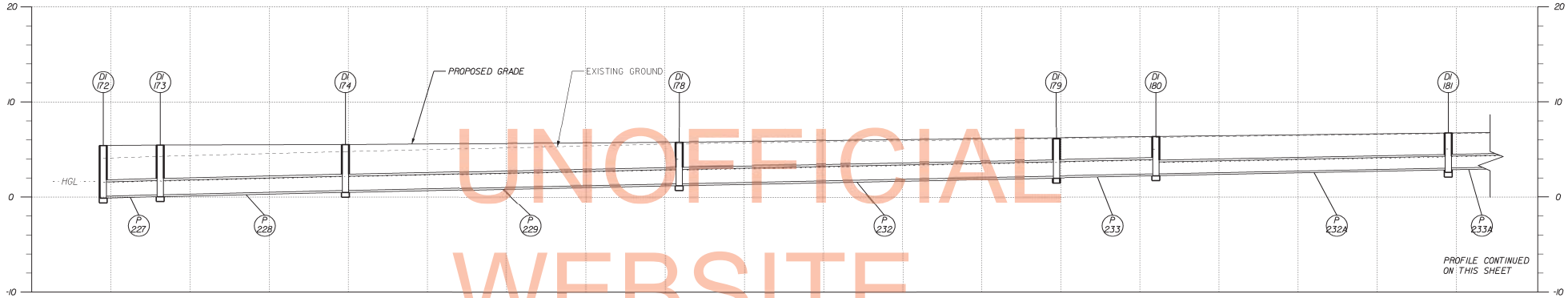

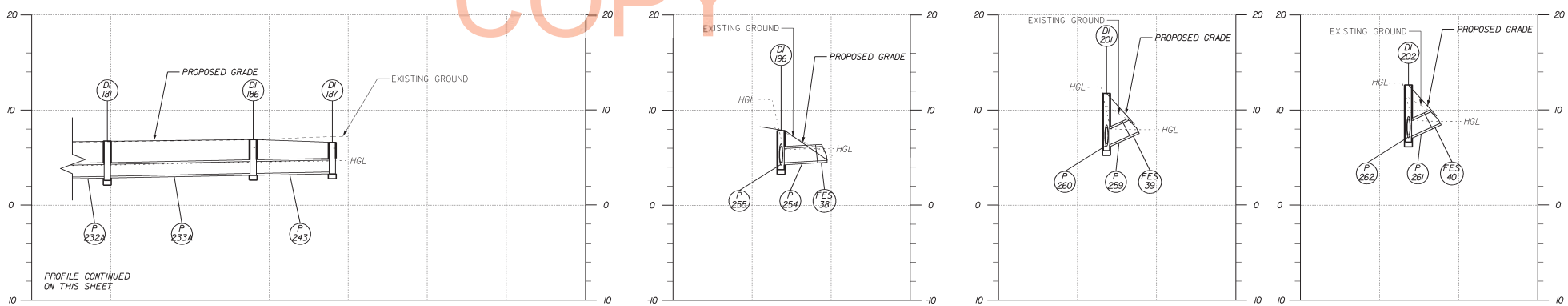

UNOFFICIAL WEBSITE COPY

PREL. TRACING ____ DESIGN ____ CHKD. ____

7/19/2013
H:\PROJECTS\sr26mainline\Survey\Pipeprofiles_26ML.dgn
08:24:54

CONTRACT	COUNTY	F.A.P. NO.	SHEET NO.	TOTAL SHTS.
T200411210	SUSSEX	SEE TITLE SHEET	113	589

SR 26, ATLANTIC AVENUE FROM CLARKSVILLE TO ASSAWOMAN CANAL

REVISIONS

PIPE PROFILES

HORIZ. 0 30 60 90 120

VERT. 0 10 20

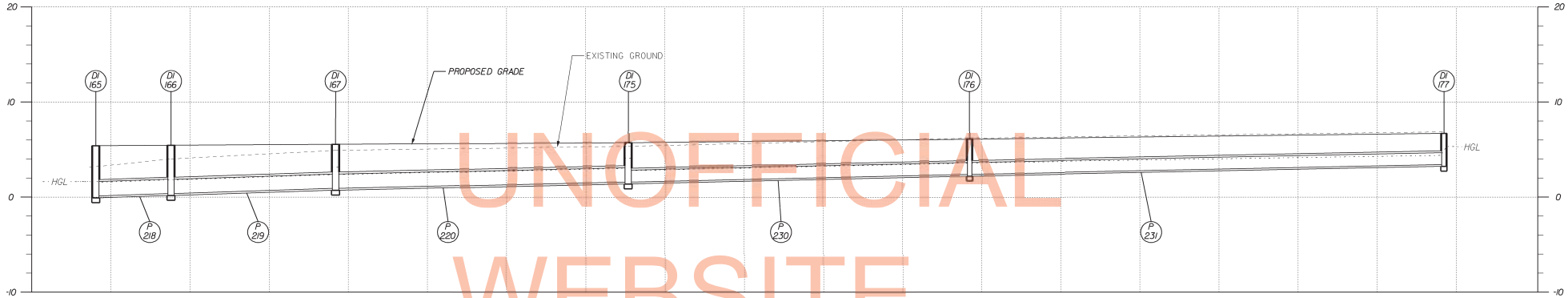

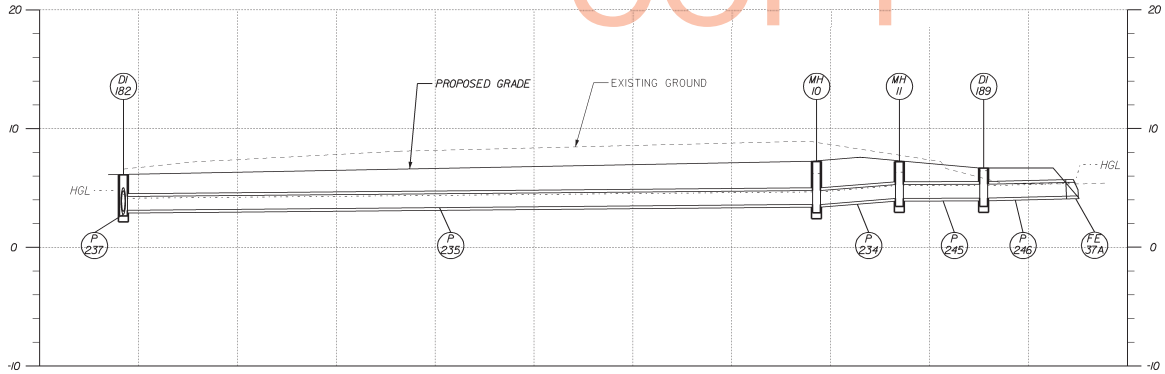

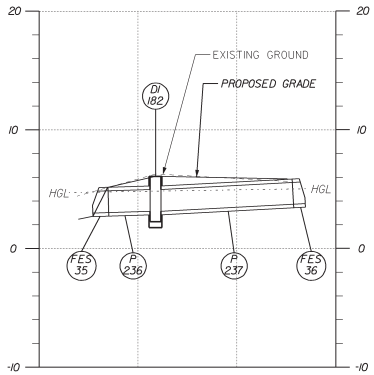

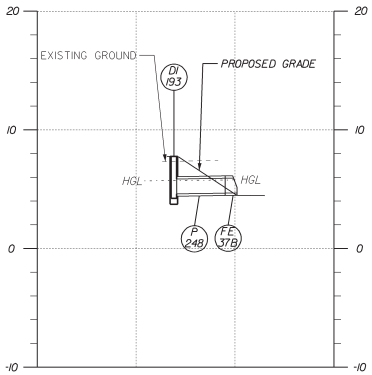

UNOFFICIAL WEBSITE COPY

PREL. TRACING _____ DESIGN _____ CHKD. _____

7/19/2013
H:\PROJECTS\sr26mainline\Survey\Pipeprofiles_26ML.dgn
08:25:09

CONTRACT	COUNTY	F.A.P. NO.	SHEET NO.	TOTAL SHTS.
T200411210	SUSSEX	SEE TITLE SHEET	114	589

SR 26, ATLANTIC AVENUE FROM CLARKSVILLE TO ASSAWOMAN CANAL

REVISIONS

PIPE PROFILES

HORIZ. 0 30 60 90 120

VERT. 0 10 20

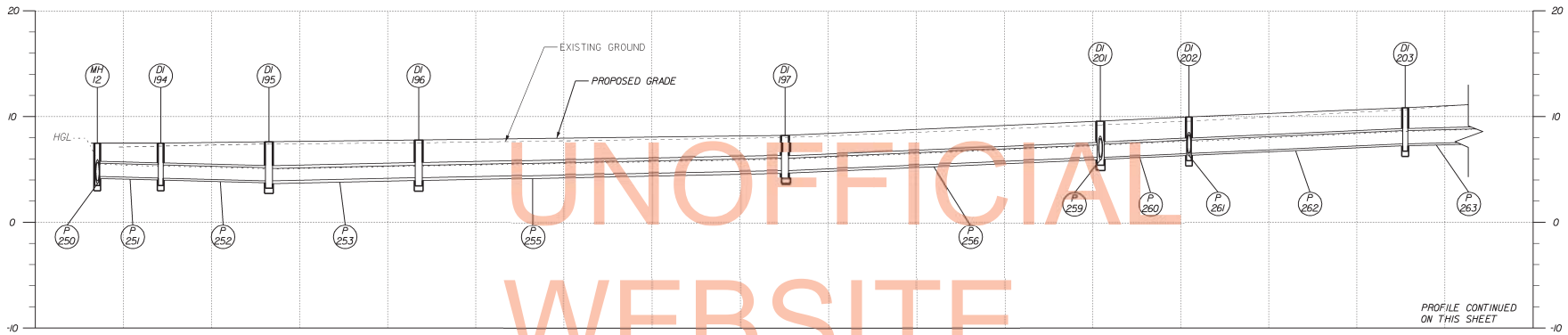

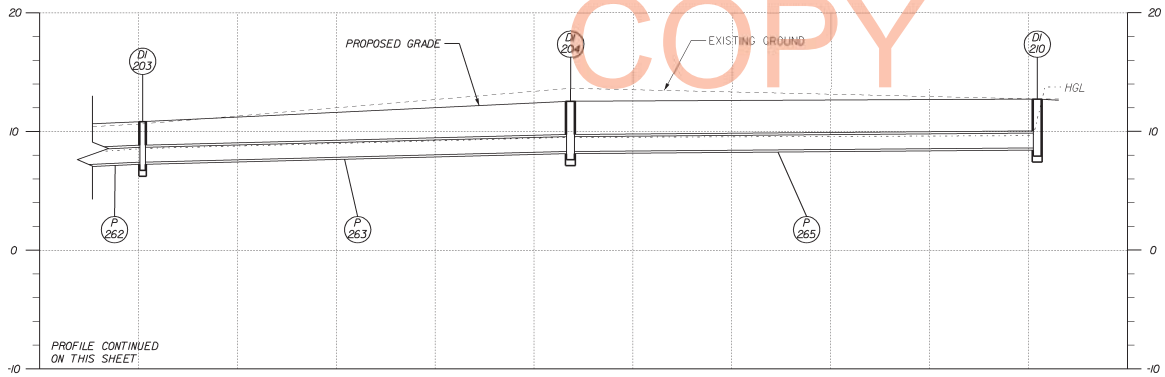

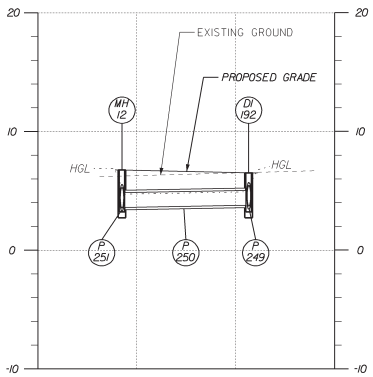

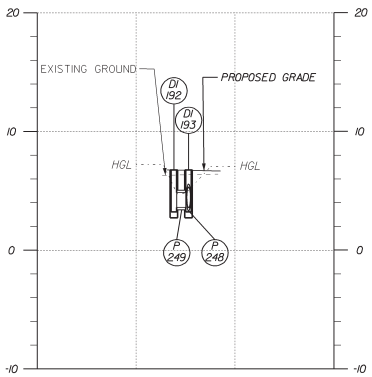

UNOFFICIAL WEBSITE COPY

PREL. TRACING _____ DESIGN _____ CHKD. _____

7/19/2013
H:\PROJECTS\sr26mainline\Survey\Pipeprofiles_26ML.dgn
08:25:18

CONTRACT	COUNTY	F.A.P. NO.	SHEET NO.	TOTAL SHTS.
T200411210	SUSSEX	SEE TITLE SHEET	115	589

SR 26, ATLANTIC AVENUE FROM CLARKSVILLE TO ASSAWOMAN CANAL

REVISIONS

PIPE PROFILES

HORIZ. 0 30 60 90 120

VERT. 0 10 20

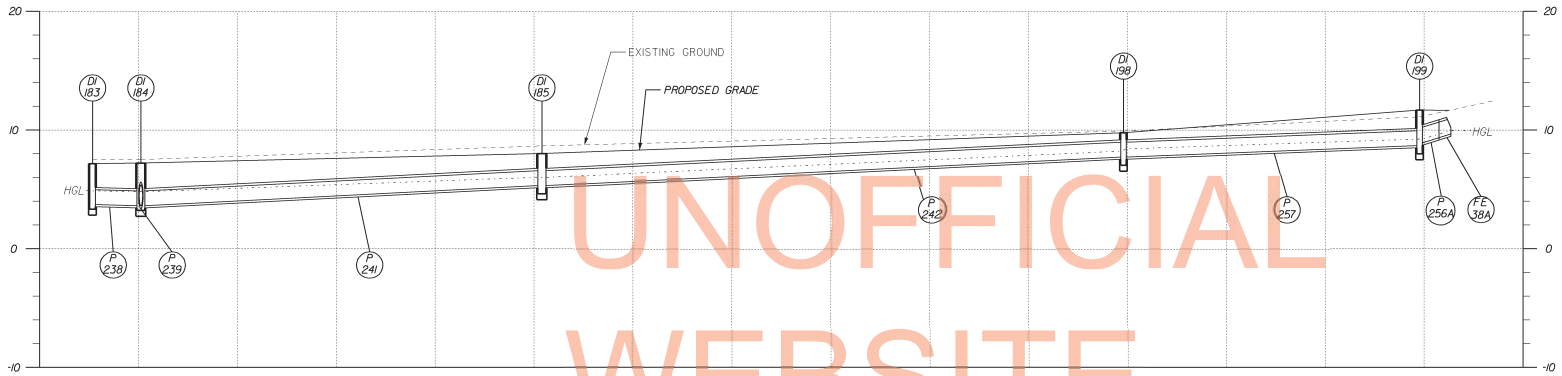

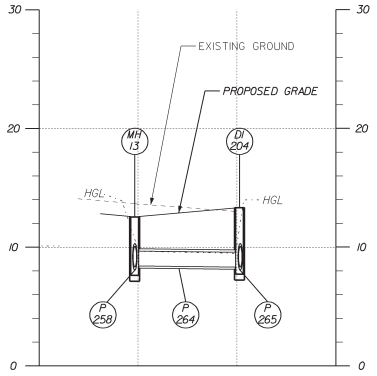

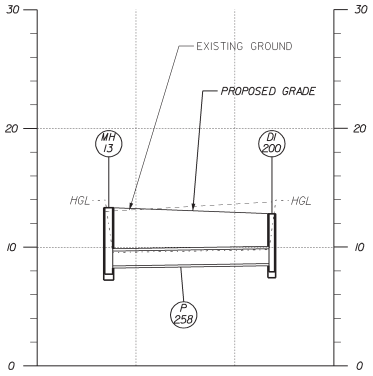

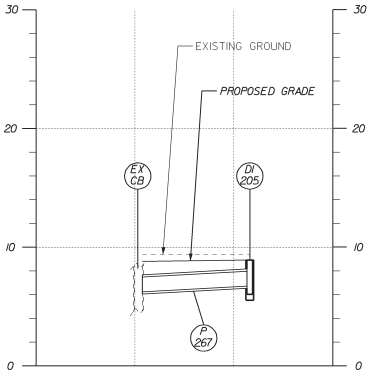

UNOFFICIAL WEBSITE COPY

PREL. TRACING ____ DESIGN ____ CHKD. ____

7/19/2013
H:\PROJECTS\sr26mainline\Survey\Pipeprofiles_26ML.dgn
08:25:32

CONTRACT	COUNTY	F.A.P. NO.	SHEET NO.	TOTAL SHTS.
T200411210	SUSSEX	SEE TITLE SHEET	116	589

SR 26, ATLANTIC AVENUE FROM CLARKSVILLE TO ASSAWOMAN CANAL

REVISIONS

PIPE PROFILES

HORIZ. 0 30 60 90 120

VERT. 0 10 20

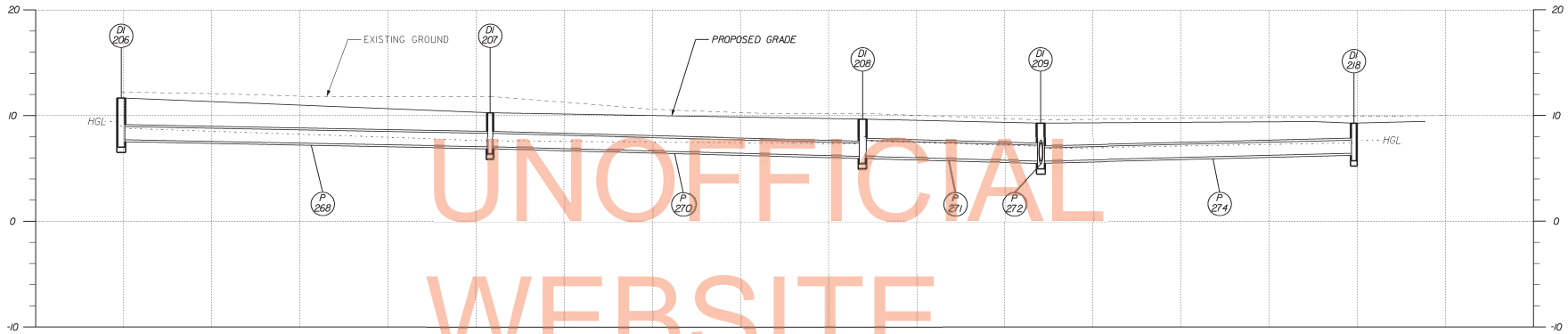

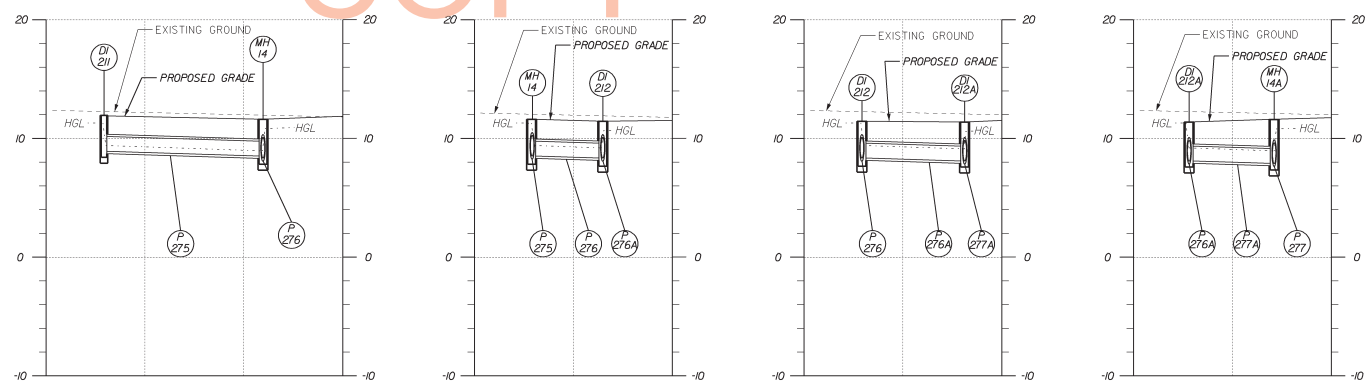

UNOFFICIAL WEBSITE COPY

PREL. TRACING ____ DESIGN ____ CHKD. ____

7/19/2013
H:\PROJECTS\sr26mainline\Survey\Pipeprofiles_26ML.dgn
08:25:48

CONTRACT	COUNTY	F.A.P. NO.	SHEET NO.	TOTAL SHTS.
T200411210	SUSSEX	SEE TITLE SHEET	117	589

SR 26, ATLANTIC AVENUE FROM CLARKSVILLE TO ASSAWOMAN CANAL

REVISIONS

PIPE PROFILES

HORIZ. 0 30 60 90 120

VERT. 0 10 20

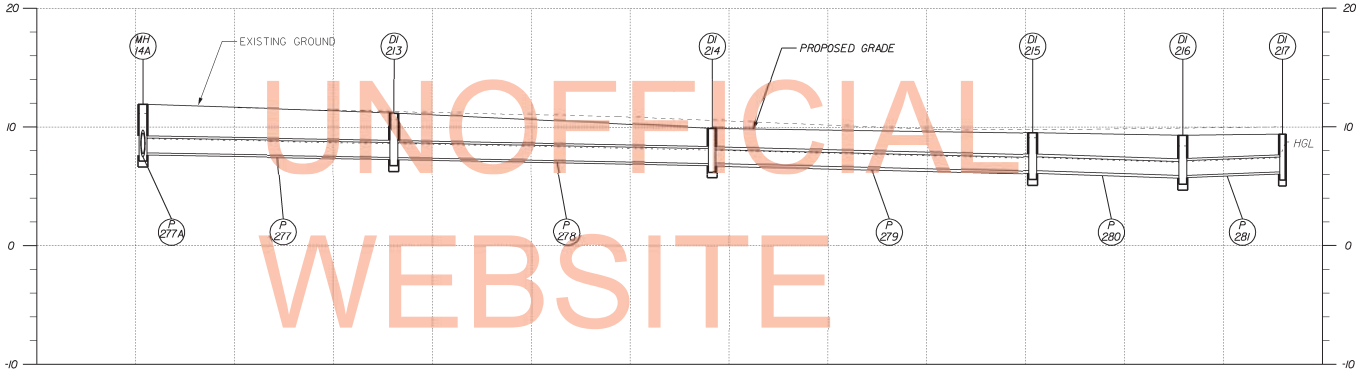

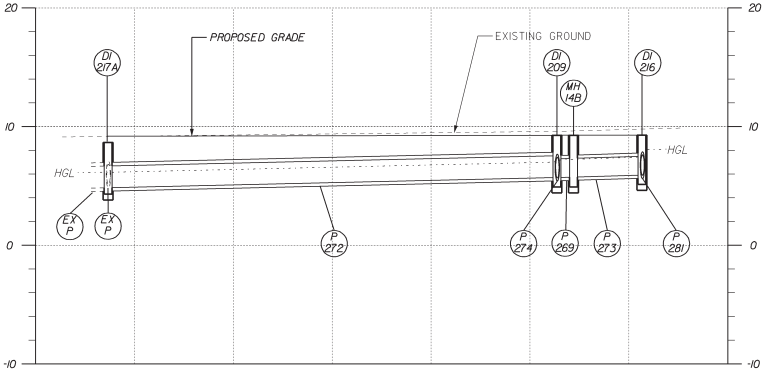

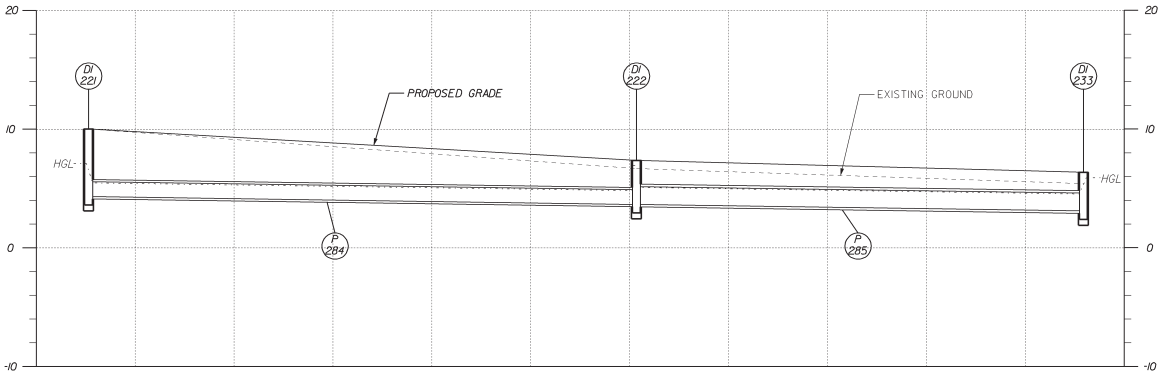

UNOFFICIAL WEBSITE COPY

PREL. TRACING ____ DESIGN ____ CHKD. ____

7/19/2013
H:\PROJECTS\sr26mainline\Survey\Pipeprofiles_26ML.dgn
08:25:52

CONTRACT	COUNTY	F.A.P. NO.	SHEET NO.	TOTAL SHTS.
T200411210	SUSSEX	SEE TITLE SHEET	118	589

SR 26, ATLANTIC AVENUE FROM CLARKSVILLE TO ASSAWOMAN CANAL

REVISIONS

PIPE PROFILES

HORIZ. 0 30 60 90 120

VERT. 0 10 20

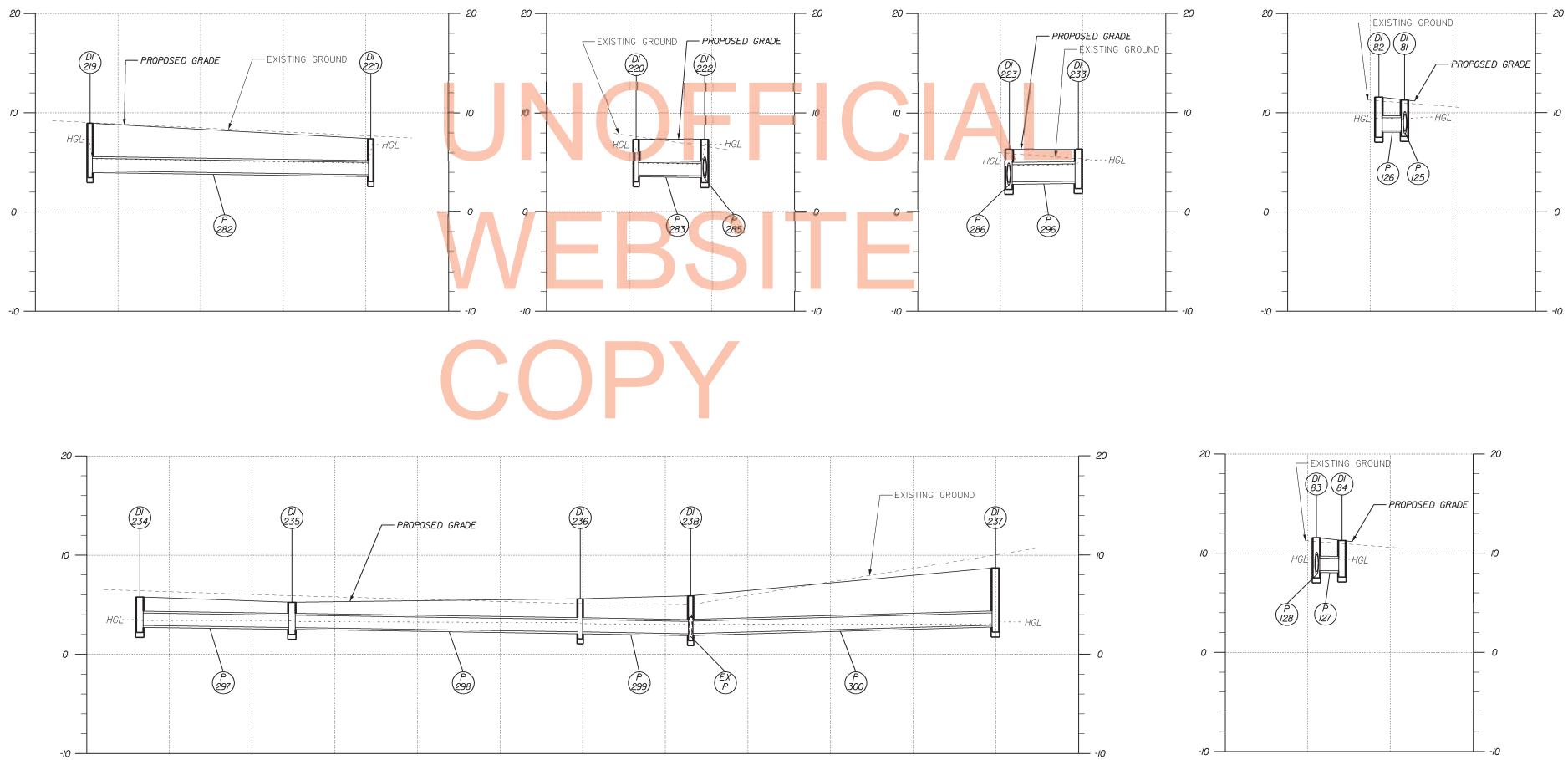

UNOFFICIAL WEBSITE COPY

PREL. TRACING ____ DESIGN ____ CHKD. ____

7/19/2013
H:\PROJECTS\sr26mainline\Survey\Pipeprofiles_26ML.dgn
08:26:06

CONTRACT	COUNTY	F.A.P. NO.	SHEET NO.	TOTAL SHTS.
T200411210	SUSSEX	SEE TITLE SHEET	119	589

SR 26, ATLANTIC AVENUE FROM CLARKSVILLE TO ASSAWOMAN CANAL

REVISIONS

PIPE PROFILES

HORIZ. 0 30 60 90 120

VERT. 0 10 20

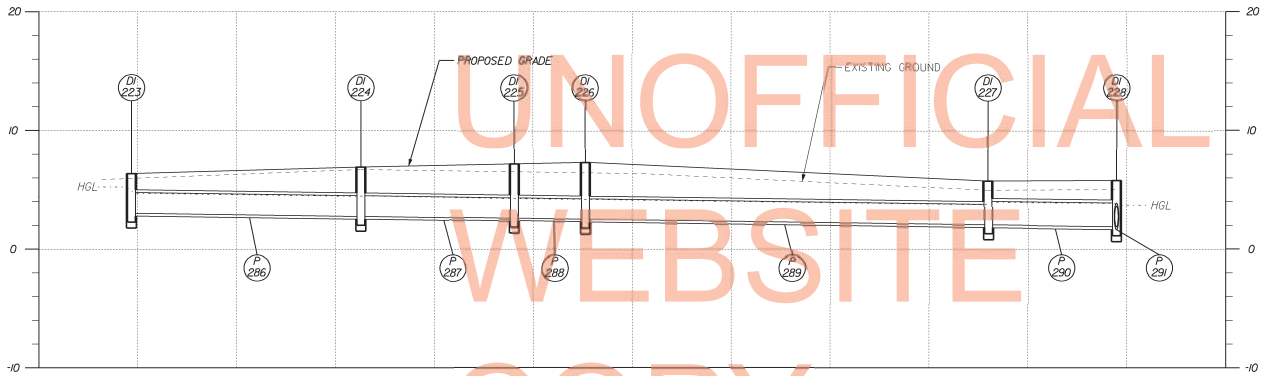

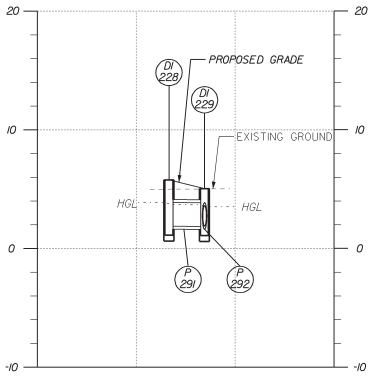

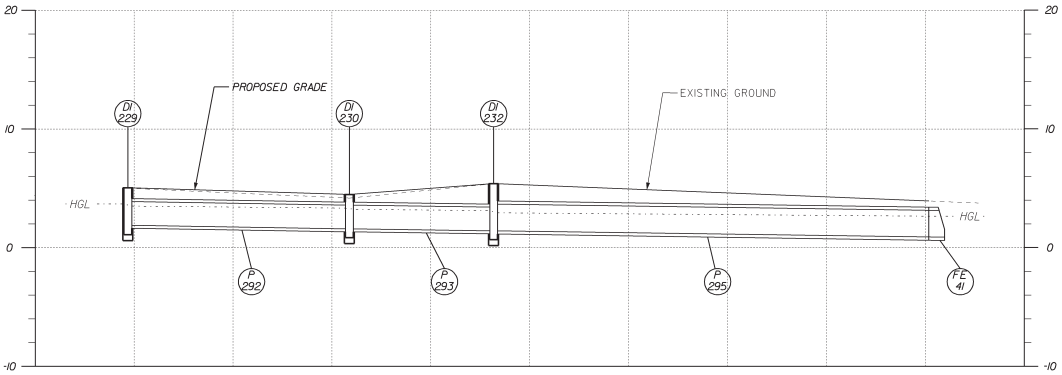

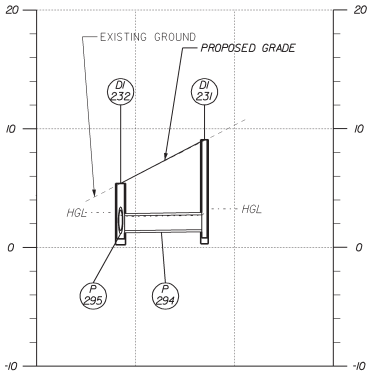

UNOFFICIAL WEBSITE COPY

PREL. TRACING _____ DESIGN _____ CHKD. _____

7/19/2013
I:\PROJECTS\sr26mainline\Survey\Pipeprofiles_26ML.dgn
08:26:21

CONTRACT	COUNTY	F.A.P. NO.	SHEET NO.	TOTAL SHTS.
T200411210	SUSSEX	SEE TITLE SHEET	120	589

SR 26, ATLANTIC AVENUE FROM CLARKSVILLE TO ASSAWOMAN CANAL

REVISIONS

GRADES & GEOMETRICS

0 30 60 120

N

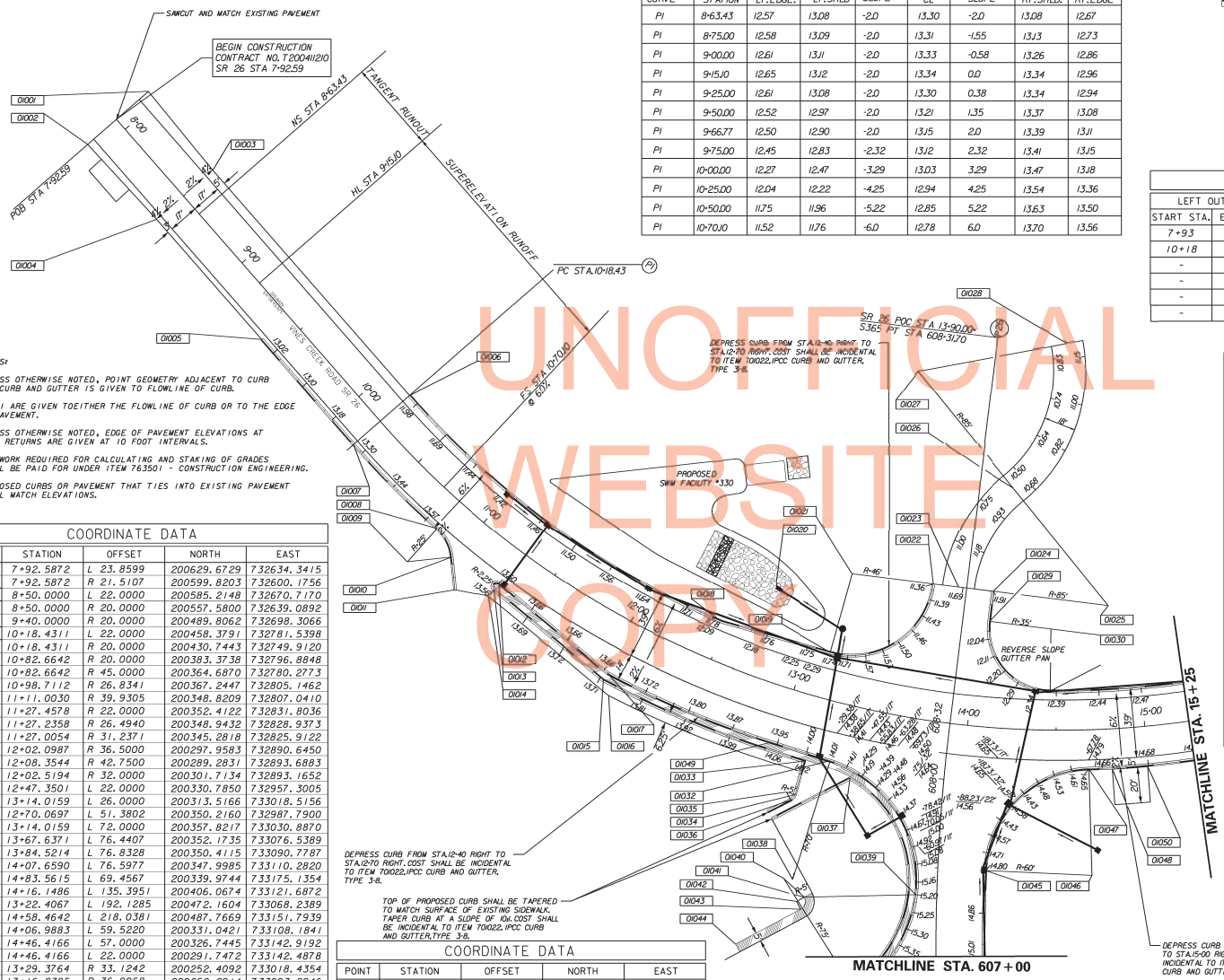

NOTES:

1. UNLESS OTHERWISE NOTED, POINT GEOMETRY ADJACENT TO CURB AND CURB AND GUTTER IS GIVEN TO FLOWLINE OF CURB.
2. RADII ARE GIVEN TOEITHER THE FLOWLINE OF CURB OR TO THE EDGE OF PAVEMENT.
3. UNLESS OTHERWISE NOTED, EDGE OF PAVEMENT ELEVATIONS AT CURB RETURNS ARE GIVEN AT 10 FOOT INTERVALS.
4. ALL WORK REQUIRED FOR CALCULATING AND STAKING OF GRADES SHALL BE PAID FOR UNDER ITEM 763501 - CONSTRUCTION ENGINEERING.
5. PROPOSED CURBS OR PAVEMENT THAT TIES INTO EXISTING PAVEMENT SHALL MATCH ELEVATIONS.

SUPERELEVATED PAVEMENT GRADES

CURVE *	STATION	LT.EDGE.	LT.SHLD	SLOPE	CL	SLOPE	RT.SHLD.	RT.EDGE
PI	8+63.43	12.57	13.08	-2.0	13.30	-2.0	13.08	12.67
PI	8+75.00	12.58	13.09	-2.0	13.31	-1.55	13.13	12.73
PI	9+00.00	12.61	13.11	-2.0	13.33	-0.58	13.26	12.86
PI	9+15.10	12.65	13.12	-2.0	13.34	0.0	13.34	12.96
PI	9+25.00	12.61	13.08	-2.0	13.30	0.38	13.34	12.94
PI	9+50.00	12.52	12.97	-2.0	13.21	1.35	13.37	13.08
PI	9+66.77	12.50	12.90	-2.0	13.15	2.0	13.39	13.11
PI	9+75.00	12.45	12.83	-2.32	13.12	2.32	13.41	13.15
PI	10+00.00	12.27	12.47	-3.29	13.03	3.29	13.47	13.18
PI	10+25.00	12.04	12.22	-4.25	12.94	4.25	13.54	13.36
PI	10+50.00	11.75	11.96	-5.22	12.85	5.22	13.63	13.50
PI	10+70.10	11.52	11.76	-6.0	12.78	6.0	13.70	13.56

TYPICAL SECTION APPLICATION TABLE

LEFT OUTSIDE TREATMENT			SR 26			RIGHT OUTSIDE TREATMENT		
START STA.	END STA.	SECTION	START STA.	END STA.	SECTION	START STA.	END STA.	SECTION
7+93	10+18	L3	7+93	8+63	T	7+93	9+40	R3
10+18	16+94	L2	8+63	9+34	V	9+40	11+27	R2
-	-	-	9+34	10+18	L	11+27	13+84	R4
-	-	-	10+18	11+28	O	13+84	19+50	R2
-	-	-	11+28	13+90	O	-	-	-
-	-	-	13+90	18+32	O	-	-	-

SUPERELEVATED PAVEMENT GRADES

CURVE *	STATION	LT.EDGE.	LT.SHLD	SLOPE	CL	SLOPE	RT.SHLD.	RT.EDGE
PI	10+75.00	11.50	11.75	-6.0	12.77	6.0	13.70	13.63
PI	11+00.00	11.48	11.72	-6.0	12.74	6.0	13.71	N/A
PI	11+25.00	11.49	11.74	-6.0	12.75	6.0	13.75	13.71
PI	11+50.00	11.56	11.80	-6.0	12.82	6.0	13.84	13.72
PI	11+75.00	11.62	11.87	-6.0	12.89	6.0	13.91	13.72
PI	12+00.00	11.70	11.95	-6.0	12.97	6.0	13.99	13.72
PI	12+25.00	11.77	12.02	-6.0	13.04	6.0	14.06	13.78
PI	12+50.00	11.85	12.10	-6.0	13.12	6.0	14.14	13.86
PI	12+75.00	11.95	12.17	-6.0	13.19	6.0	14.21	13.93
PI	13+00.00	12.00	12.25	-6.0	13.27	6.0	14.29	14.01
PI	13+25.00	N/A	12.32	-6.0	13.34	6.0	14.36	14.06
PI	13+50.00	N/A	N/A	-6.0	13.42	6.0	N/A	N/A
PI	13+75.00	N/A	N/A	-6.0	13.49	6.0	N/A	N/A
PI	14+00.00	N/A	N/A	-6.0	13.57	6.0	N/A	N/A
PI	14+25.00	N/A	N/A	-6.0	13.64	6.0	N/A	N/A
PI	14+50.00	12.45	12.70	-6.0	13.72	6.0	14.74	14.53
PI	14+75.00	12.50	12.77	-6.0	13.79	6.0	14.81	14.71
PI	15+00.00	12.53	12.78	-6.0	13.80	6.0	14.82	14.72
PI	15+25.00	12.44	12.74	-6.0	13.76	6.0	14.78	14.68

COORDINATE DATA

POINT	STATION	OFFSET	NORTH	EAST
01001	7+92.5872	L 23.8599	200629.6729	732634.3415
01002	7+92.5872	R 21.5107	200599.8203	732600.1756
01003	8+50.0000	L 22.0000	200585.2148	732670.7170
01004	8+50.0000	R 20.0000	200557.5800	732639.0892
01005	9+40.0000	R 20.0000	200489.8062	732698.3066
01006	10+18.4311	L 22.0000	200458.3791	732781.5398
01007	10+18.4311	R 20.0000	200430.7443	732749.9120
01008	10+82.6642	R 20.0000	200383.3738	732796.8848
01009	10+82.6642	R 45.0000	200364.6870	732780.2773
01010	10+98.7112	R 26.8341	200367.2447	732805.1462
01011	11+11.0030	R 39.9305	200348.8209	732807.0410
01012	11+27.4578	R 22.0000	200352.4122	732831.8036
01013	11+27.2358	R 26.4940	200348.9432	732828.9373
01014	11+27.0054	R 31.2371	200345.2818	732825.9122
01015	12+02.0987	R 36.5000	200297.9583	732890.6450
01016	12+08.3544	R 42.7500	200289.2831	732893.6883
01017	12+02.5194	R 32.0000	200301.7134	732893.1652
01018	12+47.3501	L 22.0000	200330.7850	732957.3005
01019	13+14.0159	L 26.0000	200313.5166	733018.5156
01020	12+70.0697	L 51.3802	200350.2160	732987.7900
01021	13+14.0159	L 72.0000	200357.8217	733030.8870
01022	13+67.6371	L 76.4407	200352.1735	733076.5389
01023	13+84.5214	L 76.8328	200350.4115	733090.7787
01024	14+07.6590	L 76.5977	200347.9985	733110.2820
01025	14+83.5615	L 69.4567	200339.9744	733175.1354
01026	14+16.1486	L 135.3951	200406.0674	733121.6872
01027	13+22.4067	L 192.1285	200472.1604	733068.2389
01028	14+58.4642	L 218.0381	200487.7669	733151.7939
01029	14+06.9883	L 59.5220	200331.0421	733108.1841
01030	14+46.4166	L 57.0000	200326.7445	733142.9192
01031	14+46.4166	L 22.0000	200291.7472	733142.4878
01032	13+29.3764	R 33.1242	200252.4092	733018.4354
01033	13+16.2385	R 36.9068	200252.2914	733003.8946
01034	13+16.2385	R 56.4082	200233.4858	732998.7319
01035	13+11.7372	R 56.4303	200234.8095	732993.9103
01036	13+14.7969	R 60.0874	200230.3668	732996.2043
01037	13+41.7010	R 40.1045	200242.6012	733029.7062
01038	607+40.5699	L 81.4633	200185.6721	732997.3128
01039	607+34.5312	L 11.7479	200177.0674	733066.7820
01040	607+40.9727	L 86.4444	200186.2867	732992.3508
01041	607+31.4087	L 74.5274	200175.6136	733003.9352

COORDINATE DATA

POINT	STATION	OFFSET	NORTH	EAST
01042	607+29.1097	L 78.8760	200173.2597	732999.5239
01043	607+25.0549	L 76.4213	200168.8485	733001.8778
01044	607+06.6895	L 112.8751	200149.2679	732965.1828
01045	607+49.6767	R 27.0000	200190.6447	733106.0633
01046	14+67.7778	R 82.0000	200187.9694	733166.0036
01047	14+67.7778	R 22.0000	200247.9431	733164.2269
01048	14+80.4277	R 22.7500	200247.7488	733177.4521
01049	12+96.5810	R 32.0000	200262.9416	732985.1581
01050	14+99.5723	R 22.7500	200249.2123	733197.3971

SUPERELEVATED ROADWAY PAVEMENT ELEVATIONS ARE LISTED IN THE CHARTS ACCORDING TO ABOVE TYPICAL SECTION.
CURB FLOWLINE ELEVATIONS ARE TAGGED ON THE CURBLINE EVERY 25' WHERE APPPLICABLE AND EVERY 10' AT INTERSECTIONS.

GENERAL NOTE FOR ALL GRADES AND GEOMETRIC SHEETS

PRELIM. TRACING ____ DESIGN ____ CHKD. ____

7/18/2013
J:\PROJECTS\surfaceminline\Survey\ggbhl26.dgn
62334

UNOFFICIAL WEBSITE COPY