CURB SCHEDULE

NO.	ITEM DESCRIPTION / TYPE	LENGTH
103	INTEGRAL PCC CURB AND GUTTER, TYPE 3-8	689
104	P.C.C. CURB, TYPE 2	69
105	P.C.C. CURB, TYPE 2	78

FLARED END SECTION SCHEDULE

NO.	SIZE / TYPE	SLOPE	SAFETY GRATE
131	18" RCP	0.003	YES
132	15" RCP	0.005	NO

DRAINAGE PIPE SCHEDULE

NO.	SIZE / TYPE	CLASS	LENGTH	SLOPE	INT. EL.	DIS. EL.
251	18" RCP	IV	60.3	0.003	34.18	34.00
262	15" RCP	IV	53.3	0.005	33.06	32.79

MANHOLE SCHEDULE

NO.	STATION	OFFSET	TYPE/SIZE	T.G. EL.	INV. EL.
104	709+42.6	91.9' LT	ROUND	37.75	34.95

UNDERDRAIN OUTLETS

NO.	LENGTH	DIS. EL.
56	12.5	33.01
57	12.5	32.93

RIPRAP SCHEDULE

NO.	TYPE	AREA (SY)
47	R-4	8
48	R-4	8

RIGHT-OF-WAY MONUMENT SCHEDULE

NO.	TYPE	STATION	OFFSET	NORTHING	EASTING
M091	CONCRETE	415+69.35	-50.0000	411225.4563	618914.8065
M092	CONCRETE	416+93.49	-55.0000	411280.9720	618780.9613
M093	REBAR	707+05.22	65.0000	411270.9456	618731.3994
M102	CONCRETE	415+69.35	-55.0000	411220.5768	618913.7150

DRAINAGE INLET SCHEDULE

NO.	STATION	OFFSET	BOX SIZE	GRATE	T.G. EL.	INV. EL.
243	416+45.0	15.8' LT	34" x 24"	1	36.41	33.06

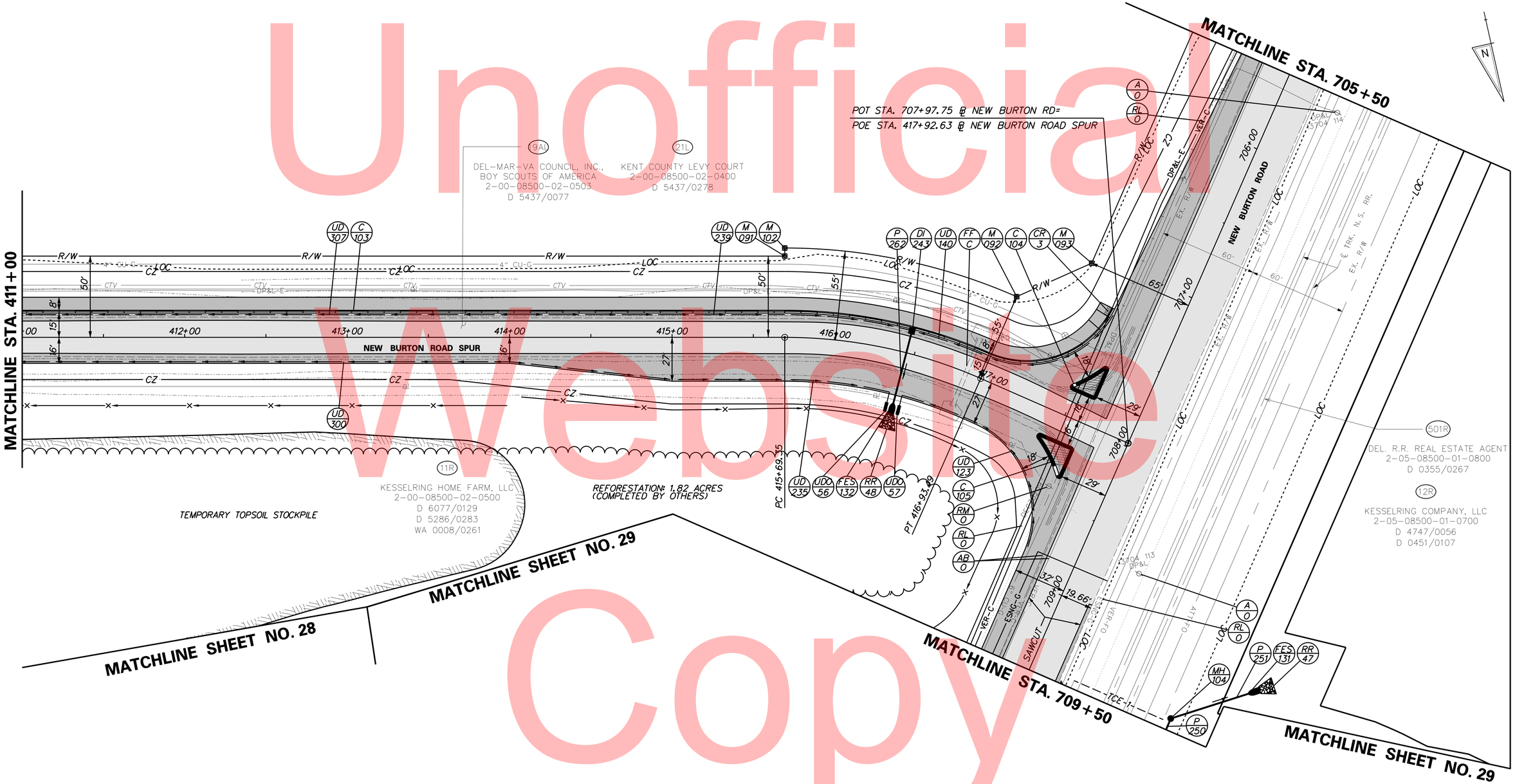

Unofficial Website Copy

DELAWARE DEPARTMENT OF TRANSPORTATION

ADDENDUMS / REVISIONS

SCALE: 1"=30'
0 30 60 90
FEET

WEST DOVER CONNECTOR

CONTRACT	BRIDGE NO.
T200411701	DESIGNED BY: BP,JW
COUNTY	CHECKED BY: JF
KENT	

CONSTRUCTION PLANS

SHEET NO. 51
TOTAL SHTS. 320

4/3/2014 deinlein
J:\BRIDGE_HIGHWAYS\6061_DelDOT_WEST_DOVER_CONN\Civil\Civ_Sheets\04_Plans\CP32.dgn

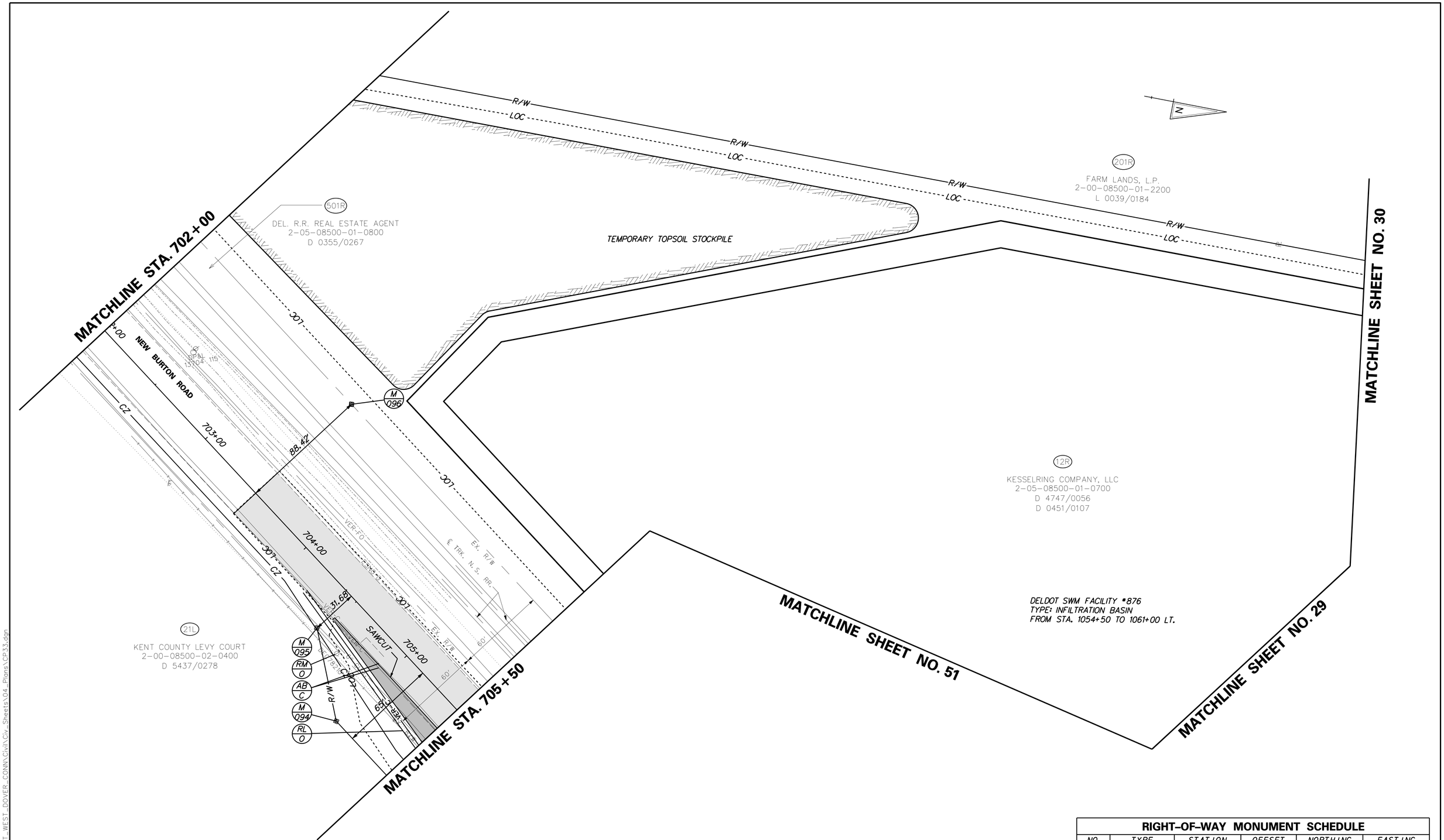

RIGHT-OF-WAY MONUMENT SCHEDULE					
NO.	TYPE	STATION	OFFSET	NORTHING	EASTING
M094	REBAR	705+00.00	65.0000	411105.4028	618610.1147
M095	REBAR	704+45.01	31.6819	411080.7342	618550.7380
M096	REBAR	703+50.00	-88.4151	411075.0715	618397.7090

DELAWARE
DEPARTMENT OF TRANSPORTATION

ADDENDUMS / REVISIONS

SCALE: 1"=30'
0 30 60 90
FEET

WEST DOVER CONNECTOR

CONTRACT	BRIDGE NO.	CONSTRUCTION PLANS	SHEET NO.
T200411701	DESIGNED BY: BP,JW		52
COUNTY			TOTAL SHTS.
KENT	CHECKED BY: JF		320

4/3/2014 deinlein
J:\BRIDGE_HIGHWAYS\6061_DelDOT_WEST_DOVER_CONN\Civil\Civ_Sheets\04_Plans\CP33.dgn

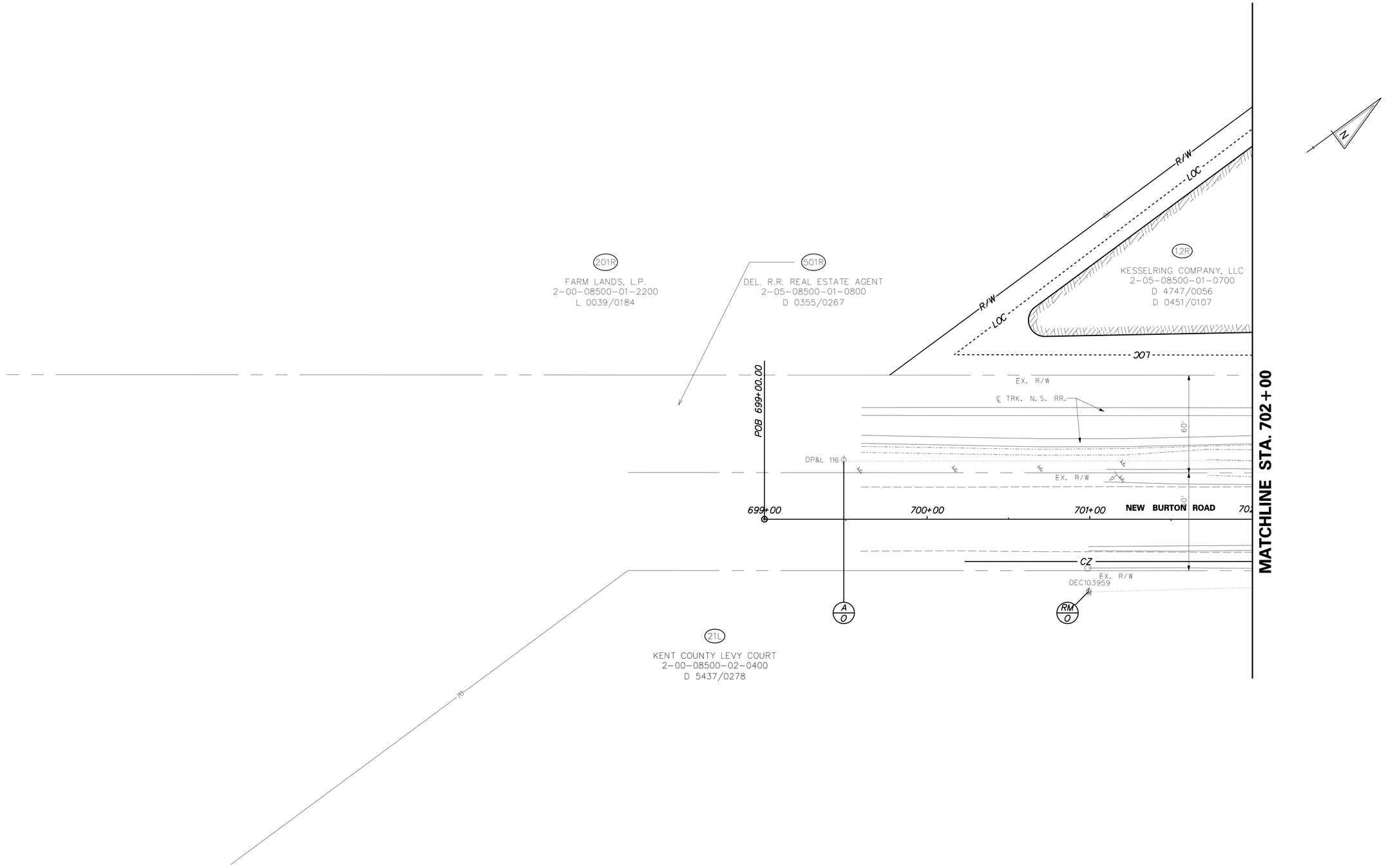

DELAWARE
DEPARTMENT OF TRANSPORTATION

ADDENDUMS / REVISIONS

SCALE: 1"=30'
0 30 60 90
FEET

WEST DOVER CONNECTOR

CONTRACT	BRIDGE NO.	CONSTRUCTION PLANS	SHEET NO.
T200411701	DESIGNED BY: BP,JW		53
COUNTY			TOTAL SHTS.
KENT	CHECKED BY: JF		320

4/3/2014 deinlein
J:\BRIDGE_HIGHWAYS\6061_DelDOT_WEST_DOVER_CONN\Civil\Civ_Sheets\04_Plans\CP34.dgn

RIGHT-OF-WAY MONUMENT SCHEDULE					
NO.	TYPE	STATION	OFFSET	NORTHING	EASTING
M066	REBAR	1112+40.00	-405.0000	415972.7243	620980.4111
M069	CONCRETE	1115+31.42	-405.0000	416242.2004	621091.3559

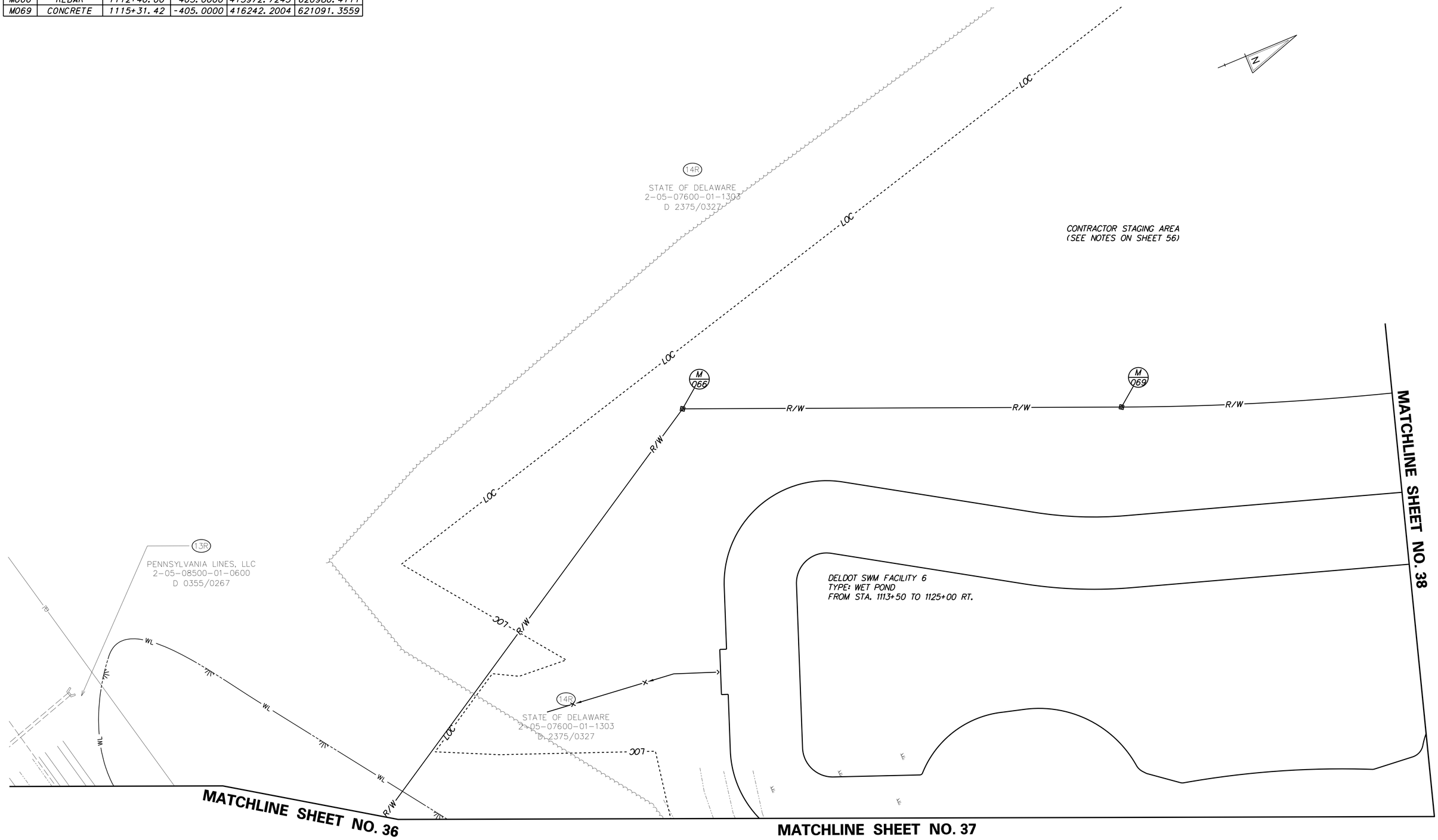

DELAWARE
DEPARTMENT OF TRANSPORTATION

ADDENDUMS / REVISIONS

SCALE: 1"=30'
0 30 60 90
FEET

WEST DOVER CONNECTOR

CONTRACT	BRIDGE NO.	
T200411701	DESIGNED BY: BP,JW	
COUNTY		
KENT	CHECKED BY: JF	

CONSTRUCTION PLANS

SHEET NO.
54
TOTAL SHTS.
320

7/17/2014 PerryR
J:\BRIDGE_HIGHWAYS\6061_DelDOT_WEST_DOVER_CONN\Civil\Civ_Sheets\04_Plans\CP35.dgn

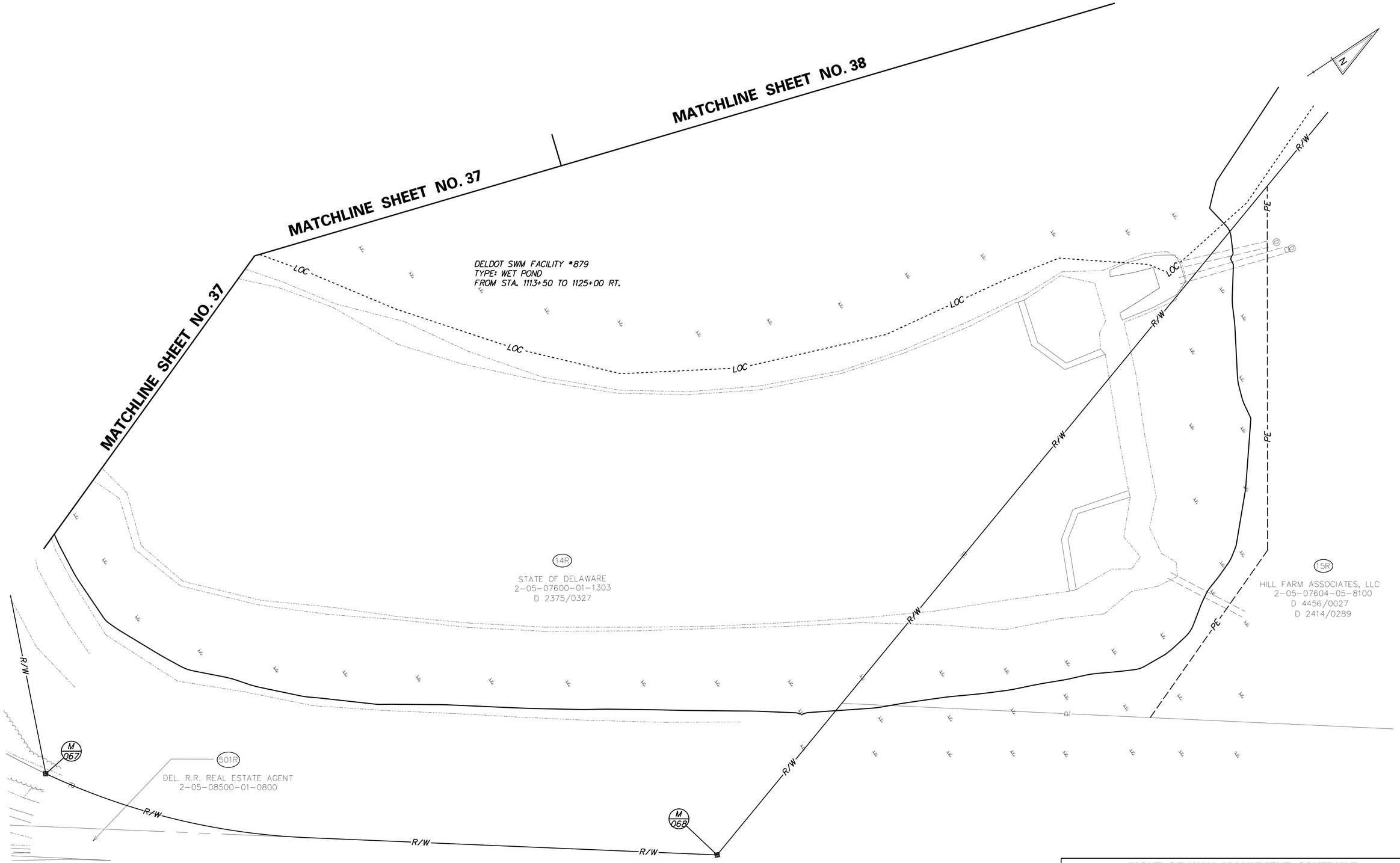

RIGHT-OF-WAY MONUMENT SCHEDULE

NO.	TYPE	STATION	OFFSET	NORTHING	EASTING
M067	REBAR	1113+50.00	429.6062	415756.7039	621794.0466
M068	REBAR	1117+24.57	578.0622	416095.2509	622082.9478

DELAWARE DEPARTMENT OF TRANSPORTATION

ADDENDUMS / REVISIONS

SCALE: 1"=30'
0 30 60 90
FEET

WEST DOVER CONNECTOR

CONTRACT	BRIDGE NO.		SHEET NO.
T200411701	DESIGNED BY: BP,JW	CONSTRUCTION PLANS	55
COUNTY			TOTAL SHTS.
KENT	CHECKED BY: JF		320

7/17/2014 PerryR
J:\BRIDGE_HIGHWAYS\6061_DelDOT_WEST_DOVER_CONN\Civil\Civ_Sheets\04_Plans\CP36.dgn

14R
STATE OF DELAWARE
2-05-07600-01-1303
D 2375/0327

20L
GENERAL FOODS CORPORATION
2-05-07600-01-1200
Z 0022/0437
PARCEL 1

MINIMUM 25' OFFSET TREELINE

LOC

CONTRACTOR STAGING AREA

INSET SEE BELOW

INSET SEE ABOVE

N

14R
STATE OF DELAWARE
2-05-07600-01-1303
D 2375/0327

20L
GENERAL FOODS CORPORATION
2-05-07600-01-1200
Z 0022/0437
PARCEL 1

CONTRACTOR STAGING AREA

EXISTING STOCKPILE

MATCHLINE SHEET NO. 38

MATCHLINE SHEET NO. 39

NOTES:

1. THE EXISTING STOCKPILE SHOWN ON THIS SHEET SHALL BE UTILIZED BY THE CONTRACTOR FOR ROADWAY EMBANKMENT/TOPSOIL. CONTRACTOR SHALL BID PROJECT ACCORDINGLY.

2. DISTURBED "CONTRACTOR STAGING AREAS" SHALL BE RESTORED UPON COMPLETION OF THE PROJECT.

7/17/2014 PerryR
J:\BRIDGE_HIGHWAYS\6061_DelDOT_WEST_DOVER_CONN\Civil\Civ_Sheets\04_Plans\CP37.dgn

DELAWARE DEPARTMENT OF TRANSPORTATION	ADDENDUMS / REVISIONS	SCALE: 1"=30' 0 30 60 90 FEET	WEST DOVER CONNECTOR	CONTRACT T200411701	BRIDGE NO.	CONSTRUCTION PLANS	SHEET NO. 56
				COUNTY KENT	DESIGNED BY: BP,JW		TOTAL SHTS. 320
					CHECKED BY: JF		

GENERAL NOTES

1. CONSTRUCTION OF THIS CONTRACT SHALL CONFORM TO DELAWARE DEPARTMENT OF TRANSPORTATION STANDARD SPECIFICATIONS DATED AUGUST 2001 AS AMENDED BY THE SUPPLEMENTAL SPECIFICATIONS, THE SPECIAL PROVISIONS, THE MOST RECENT STANDARD CONSTRUCTION DETAILS, DELAWARE MANUAL ON UNIFORM TRAFFIC CONTROL DEVICES AND THESE PLANS.

2. THE PURPOSE OF THIS CONTRACT IS TO MAKE GENERAL IMPROVEMENTS TO ROADS AND/OR STREETS WITHIN THE DISTRICT HEREIN SPECIFIED. DEPENDING ON FUND AVAILABILITY, THE DEPARTMENT RESERVES THE RIGHT TO ADD OR DELETE LOCATIONS AND/OR QUANTITIES FOR THIS CONTRACT. SUCH LOCATION OR QUANTITY ADDITIONS OR DELETIONS SHALL NOT BE CAUSE FOR AN INCREASE OR DECREASE IN ANY CONTRACT UNIT BID PRICES. NO ITEM PRICES ARE TO BE RENEGOTIATED DUE TO EITHER AN INCREASE OR DECREASE IN QUANTITY USAGE RESULTING FROM SAID ADDITIONS OR DELETIONS.

3. THE CONTRACTOR SHALL PROVIDE ALL RESIDENTS AND BUSINESSES WHO LIVE ADJACENT TO THE WORK ZONE A MINIMUM 48 HR. PRIOR WRITTEN NOTICE FOR THE START OF CONSTRUCTION WORK. THIS NOTIFICATION SHALL INCLUDE THE SCOPE OF WORK, WORKING HOURS, ANTICIPATED START AND COMPLETION DATES, CONTRACTOR NAME & ADDRESS, AND DELDOT CONTACT NUMBERS. FAILURE TO GIVE PROPER NOTICE WILL RESULT IN A SUSPENSION OF WORK REQUIRING NOTICE, UNTIL PROPER NOTICE IS PROVIDED. ACCESS TO ALL BUSINESSES AND RESIDENCES WITHIN THE PROJECT LIMITS SHALL BE MAINTAINED THROUGHOUT THE DURATION OF THIS CONTRACT. ANY TEMPORARY CLOSURE OF A DRIVEWAY FOR TIE-IN PURPOSES SHALL BE COORDINATED WITH THE ENGINEER AND/OR PROPERTY OWNER IN ADVANCE OF THE CLOSURE.

4. THE CONTRACTOR SHALL SUBMIT THE REQUIRED COPIES OF A DETAILED PROGRESS SCHEDULE (PSC) AS OUTLINED IN STANDARD SPECIFICATION 108.04 PRIOR TO OR AT THE PRECONSTRUCTION MEETING. DETAILS SHALL INCLUDE A DESCRIPTION OF EACH WORK ACTIVITY, THE PLANNED DAYS OF WORK, MULTIPLE CREWS OR SHIFTS, AND SCHEDULED WORKING HOURS. DURING THE CONTRACT, THE CONTRACT SHALL SUBMIT TWO-WEEK (OR AS REQUIRED) "LOOK AHEAD" SCHEDULES TO THE AREA ENGINEER/ MANAGER NO LATER THAN NOON OF EACH THURSDAY. FAILURE TO COMPLY WILL RESULT IN A SUSPENSION OF ALL CONTRACT WORK WITH TIME CHARGES CONTINUING TO BE ASSESSED.

MAINTENANCE OF TRAFFIC

5. THE CONTRACTOR SHALL BE REQUIRED TO SHOW PROOF THAT HE HAS SUFFICIENT APPROVED STRIPING MATERIALS ON HAND TO ENSURE STRIPING IS COMPLETED PRIOR TO FULL OPENING ROADWAY TO TRAFFIC.

6. AT THE END OF EACH DAY'S OPERATION AND BEFORE TRAFFIC IS RETURNED TO UNRESTRICTED ROADWAY USE, TEMPORARY STRIPING SHALL BE UTILIZED AT LOCATIONS THAT REQUIRE PERMANENT STRIPING, SHALL BE INSTALLED IN ACCORDANCE WITH THE TEMPORARY STRIPING POLICY. TEMPORARY PAVEMENT STRIPING MUST MATCH PERMANENT PAVEMENT STRIPING IN ALL REGARDS. TEMPORARY PAVEMENT MARKINGS SHALL BE PAID AT THE APPLICABLE CONTRACT UNIT PRICE. THE CONTRACTOR IS RESPONSIBLE FOR MAINTAINING THE TEMPORARY MARKINGS IN GOOD CONDITION SUCH THAT THE PAVEMENT IS PROPERLY DELINEATED AT ALL TIMES. ANY REFRESHING OF THE TEMPORARY MARKINGS WILL BE AT THE CONTRACTOR'S EXPENSE.

7. ALL WORK SHALL BE PERFORMED IN A MANNER THAT WILL REASONABLY PROVIDE THE LEAST PRACTICABLE OBSTRUCTION TO ALL ROAD USERS, INCLUDING VEHICULAR, PEDESTRIAN AND BICYCLE TRAFFIC, AND SHALL CONFORM TO THE REQUIREMENTS OF THE 2011 DELAWARE MANUAL ON UNIFORM TRAFFIC CONTROL DEVICES, PART 6, INCLUDING ALL REVISIONS UP TO THE DATE OF ADVERTISEMENT FOR BIDS.

8. THE CONTRACTOR SHALL MAINTAIN ACCESS TO AND ALONG PEDESTRIAN FACILITIES AT ALL TIMES DURING CONSTRUCTION. EARTH, STONE AND GRAVEL SURFACES ARE NOT ACCEPTABLE FOR PROVIDING PEDESTRIAN ACCESS. WHERE PEDESTRIAN ROUTES ARE CLOSED OR BLOCKED, ALTERNATE PEDESTRIAN ACCESS SHALL BE PROVIDED USING TA-28 AND/OR TA-29 OF THE 2011 DELAWARE MANUAL ON UNIFORM TRAFFIC CONTROL DEVICES OR TO THE SATISFACTION OF THE ENGINEER. PEDESTRIAN DETOUR ROUTES OR ALTERNATE PEDESTRIAN FACILITIES SHALL CONSIST OF ADA COMPLIANT FACILITIES TO THE LEVEL OF WHICH EXISTS ON THE PEDESTRIAN ROUTE. THE COST FOR ANY PROVISIONS SHALL BE INCIDENTAL TO ITEM 763XXX - MAINTENANCE OF TRAFFIC.

   PEDESTRIAN MAINTENANCE OF TRAFFIC: THIS WORK SHALL CONSIST OF PROVIDING AND MAINTAINING AN ACCESSIBLE PEDESTRIAN ROUTE THROUGHOUT THE PROJECT•S LIMITS IN ACCORDANCE WITH THE AMERICANS WITH DISABILITIES ACT OF 1990 (ADA) TITLE II, PARAGRAPH 35.130.

   THE CONTRACTOR SHALL BE REQUIRED TO REVIEW EACH CURB RAMP LOCATION AND SUBMIT THE APPROPRIATE MAINTENANCE OF TRAFFIC DETAIL AND DEVICES TO THE ENGINEER FOR EACH LOCATION AT LEAST 2 WEEKS BEFORE CONSTRUCTION FOR REVIEW, COMMENT, AND APPROVAL.
   THE FOLLOWING CONSIDERATIONS SHALL BE TAKEN INTO ACCOUNT WHEN ADDRESSING ACCESSIBLE PEDESTRIAN MAINTENANCE OF TRAFFIC:
   - ALL PEDESTRIANS, INCLUDING PERSONS WITH DISABILITIES, SHALL BE PROVIDED WITH A REASONABLY SAFE, CONVENIENT AND ACCESSIBLE PATH THAT REPLICATES AS MUCH AS PRACTICABLE THE EXISTING PEDESTRIAN FACILITIES.
   - MAINTAIN ACCESS TO ALL BUSINESSES AND RESIDENCES AT ALL TIMES.
   - PROVIDE PEDESTRIAN ACCESS THROUGH OR AROUND THE WORK ZONE. IF A DETOUR IS CHOSEN THE CONTRACTOR MUST SUBMIT THE DETOUR ROUTE TO THE ENGINEER FOR REVIEW AND APPROVAL. THE DETOUR ROUTE MUST MEET OR EXCEED THE CURRENT CONDITIONS.
   - WORK SHOULD BE PHASED SO THAT ALL AREAS OF AN INTERSECTION/SIDEWALK PATH ARE NOT UNDER CONSTRUCTION AT THE SAME TIME UNLESS A CLEAR PATH IS PROVIDED AND IDENTIFIED.
   - TRAFFIC CONTROL DEVICES AND OTHER CONSTRUCTION MATERIALS AND FEATURES SHALL NOT INTRUDE INTO THE USABLE WIDTH OF THE SIDEWALK, TEMPORARY PATHWAY OR OTHER PEDESTRIAN FACILITY.
   - SIGNS AND OTHER DEVICES MOUNTED LOWER THAN 7 FT ABOVE THE TEMPORARY PEDESTRIAN PATHWAY SHALL NOT PROJECT MORE THAN 4 IN. INTO ACCESSIBLE PEDESTRIAN ROUTE.

   A SMOOTH, CONTINUOUS HARD SURFACE SHALL BE PROVIDED THROUGHOUT THE ENTIRE LENGTH AND WIDTH OF THE PEDESTRIAN ROUTE THROUGHOUT CONSTRUCTION. THERE SHALL BE NO CURBS OR VERTICAL ELEVATION CHANGES GREATER THAN ¾ IN. IN GRADE OR TERRAIN THAT COULD CAUSE TRIPPING OR BE A BARRIER TO WHEELCHAIR USE.

9. AN AMERICAN TRAFFIC SAFETY SERVICES ASSOCIATION (ATSSA) CERTIFIED TRAFFIC CONTROL SUPERVISOR SHALL BE REQUIRED FOR ALL LOCATIONS SPECIFIED IN THE CONTRACT PLANS. A COPY OF THE CERTIFICATION CARD FOR THE ATSSA TRAFFIC CONTROL SUPERVISOR SHALL BE SUBMITTED AT THE PRECONSTRUCTION MEETING. THE PAPER CERTIFICATE IS NOT ACCEPTABLE.

PAVEMENT MARKINGS

10. AT THE PRECONSTRUCTION MEETING, THE CONTRACTOR SHALL SUBMIT DETAILED DRAWINGS (INCLUDING BUT NOT LIMITED TO EXISTING STRIPING LENGTHS, LANE AND SHOULDER WIDTHS, TURN LANE LENGTHS, LOCATIONS OF STOP BARS, TURN ARROWS, CROSSWALKS AND RAILROAD CROSSINGS) THAT DEPICT THE EXISTING PAVEMENT MARKINGS FOR EACH PROJECT LOCATION. THESE DRAWINGS WILL BE REVIEWED BY THE DEPARTMENT'S TRAFFIC SECTION TO DETERMINE IF ANY CHANGES TO THE FINAL PAVEMENT MARKINGS ARE REQUIRED. FINAL PAVEMENT MARKINGS SHALL CONFORM TO ALL EXISTING PATTERNS UNLESS OTHERWISE DIRECTED BY THE ENGINEER.

    THE DEPARTMENT WILL PROVIDE STRIPING LAYOUT AT LOCATIONS WHERE NO PAVEMENT MARKINGS PREVIOUSLY EXISTED. IF DEPARTMENT FORCES PROVIDE STRIPING LAYOUT ON LOCATIONS WHERE MARKINGS PREVIOUSLY EXISTED, THEN THE CONTRACTOR SHALL REIMBURSE THE DEPARTMENT FOR THE LAYOUT COSTS.

    UNLESS OTHERWISE DIRECTED BY THE ENGINEER, WHITE EDGE LINES SHALL WRAP AROUND THE RADIUS OF ALL SIDE STREETS AND MAJOR COMMERCIAL ENTRANCES TO A TANGENT POINT. YELLOW CENTERLINES SHALL BE CONTINUOUS AROUND MEDIAN ISLANDS. ALL DOUBLE YELLOW CENTERLINES SHALL BE PLACED IN A 5-6-5 CONFIGURATION (2 EACH, 5" YELLOW STRIPES WITH A 6" GAP BETWEEN).

11. ANY ERRONEOUS MARKING WILL NOT BE PAID FOR AND SHALL BE CORRECTED IMMEDIATELY AT THE CONTRACTORS EXPENSE. ERRONEOUS MARKINGS OR SHADOWS THAT EXCEED ONE (1) INCH IN WIDTH SHALL BE REMOVED BY EITHER SAND OR WATER BLASTING AS DIRECTED BY THE ENGINEER. NO OTHER REMOVAL METHODS WILL BE ALLOWED. A FLAT BLACK PAINT OR DRIVEWAY SEALER SHALL BE APPLIED IN THE AREA OF THE REMOVED MARKING TO MASK THE REPAIR. ANY DAMAGE TO THE PAVEMENT CAUSED BY REMOVAL OF ERRONEOUS MARKINGS SHALL BE REPAIRED / REPLACED TO THE SATISFACTION OF THE ENGINEER AT THE CONTRACTORS EXPENSE.

12. STOP LINES "BARS" SHALL BE INSTALLED IN ACCORDANCE WITH SECTION 3B.16 OF THE 2011 DELAWARE MUTCD.

13. ALL CROSSWALKS SHALL BE INSTALLED IN ACCORDANCE WITH SECTION 3B.18 OF THE 2011 DELAWARE MUTCD.

TRAFFIC SIGNAL NOTES

14. TRAFFIC DETECTION LOOPS SHALL BE PLACED IN THE FINAL WEARING SURFACE UNLESS OTHERWISE DIRECTED BY THE ENGINEER.

15. TRAFFIC DETECTION LOOPS THAT ARE CURRENTLY 5'x7' SHALL BE REPLACED WITH LOOPS THAT ARE 6'x6' AT THE SAME LOCATION. STOP BAR DETECTION LOOPS SHALL BE THE SAME SIZE AS CURRENTLY EXISTING, AND SHOULD BE PLACED STARTING TWO FEET BEHIND THE STOP BAR, UNLESS OTHERWISE DIRECTED BY THE ENGINEER. IF SEPARATE SIGNAL PLANS HAVE BEEN DEVELOPED, THE PLANS SUPERSEDE THIS NOTE.

    PROJECT NOTES

16. UNLESS SPECIFIED, OVERLAY WIDTHS SHALL MATCH EXISTING WIDTHS.

17. THE COST OF CLIPPING BACK THE EDGES OF THE ROADWAY, SHOULDERS, AND THE FIRST 3' OF UNPAVED DRIVEWAY ENTRANCES, PICKING UP AND DISPOSING OF WASTE AND EXCESS MATERIAL, AND CLEANING THE EXISTING PAVEMENT PRIOR TO OVERLAY SHALL BE INCIDENTAL TO SECTION 401( ). PREPARING UNPAVED DRIVEWAY ENTRANCES BEYOND THE FIRST 3' SHALL BE PAID UNDER THE APPROPRIATE CONTRACT ITEMS: 202000 AND/OR 30200X.

18. BUTT JOINTS SHALL BE PLACED AT ALL INTERSECTING HOT MIX ROADS AND ANY OTHER LOCATIONS AS DIRECTED BY THE ENGINEER. BUTT JOINTS AT DRAINAGE STRUCTURES NOT TO BE RESURFACED SHALL BE AS PER THE INCLUDED PLAN DETAIL OR LOCATION NOTES. BUTT JOINTS CUT PRIOR TO THE DAY OF THE PAVEMENT OVERLAY SHALL BE RAMPED WITH HOT MIX TRM. IN MILLING AREAS, THERE WILL BE NO SEPARATE PAYMENT FOR BUTT JOINTS. AFTER PAVEMENT MILLING, ALL TRANSVERSE VERTICAL DIFFERENCES, RAISED EDGES OF MANHOLES, CATCH BASINS, WATER VALVE BOXES, ETC...SHALL BE RAMPED WITH HOT-MIX TRM AT A 20:1 OR FLATTER SLOPE PRIOR TO OPENING THE ROADWAY TO TRAFFIC. PAVEMENT MILLINGS WILL NOT BE ALLOWED FOR USE AS RAMPING MATERIAL.

19. TAPER MILLING IS INTENDED FOR MILLING IN THE AREA OF FIXED STRUCTURES (I.E. CURBS GUARDRAIL, ETC.) THE MILLED DEPTH AT THE STRUCTURE SHALL BE THE DEPTH OF THE PROPOSED OVERLAY AND 0" AT A DISTANCE OF +/- 6.5' FROM THE STRUCTURE. THE COMPUTED DEPTH FOR PAYMENT PURPOSES IS THE AVERAGE OF THE TWO DEPTHS.

20. ALL MILLED MATERIAL SHALL REMAIN THE PROPERTY OF THE CONTRACTOR UNLESS OTHERWISE STATED.

21. EXCAVATION FOR P.C.C. CURBS, SIDEWALK OR VALLEY GUTTER SHALL BE INCIDENTAL TO THE BID PRICE FOR THESE RESPECTIVE ITEMS. EXCAVATED MATERIAL, NOT NEEDED ON THE PROJECT, SHALL BE REMOVED FROM THE CONTRACT AT THE CONTRACTORS EXPENSE. ITEM 732XXX, TOPSOIL, SHALL BE USED AS BACKFILL MATERIAL FOR CURB AND SIDEWALK AS DIRECTED BY THE ENGINEER. TOPSOIL SHALL BE SCREENED/SIFTED SO AS NO MATERIAL GREATER THAN .5" IS PRESENT IN MATERIAL USED FOR BACKFILL. AT EACH LOCATION, BACKFILLING SHALL BE PERFORMED IMMEDIATELY UPON REMOVAL OF FORMS FOR CURB OR SIDEWALK WORK. COMPLETE RESTORATION, TOPSOIL, SEEDING, AND REMOVAL OF ALL MATERIALS FOR CURB & GUTTER OR SIDEWALK; SEALING OF VALLEY GUTTERS AND PARGING OF CATCH BASINS, SHALL BE COMPLETED WITHIN SEVEN (7) CALENDAR DAYS OF COMPLETION OF THE ITEM OF WORK. FAILURE TO COMPLY WILL RESULT IN A SUSPENSION OF ALL OTHER CONTRACT WORK WITH TIME CHARGES CONTINUING TO BE ASSESSED.

22. ALL ADJUSTMENTS SHALL BE MADE NO MORE THAN SEVEN (7) CALENDAR DAYS PRIOR TO THE PLACEMENT OF THE FINAL COURSE OF HOT MIX UNLESS OTHERWISE APPROVED BY THE ENGINEER. FAILURE TO COMPLY WILL RESULT IN A SUSPENSION OF ALL OTHER CONTRACT WORK WITH TIME CHARGES CONTINUING TO BE ASSESSED.

23. ALL PAVING, INCLUDING TURN LANES, SHOULDERS AND INTERSECTIONS, IS TO BE COMPLETED WITHIN SEVEN (7) CALENDAR DAYS FROM THE TIME THE AREA WAS MILLED. FAILURE TO COMPLY WILL RESULT IN A SUSPENSION OF ALL OTHER CONTRACT WORK WITH TIME CHARGES CONTINUING TO BE ASSESSED.

24. THE CONTRACTOR SHALL TAKE CARE IN REMOVING PAVEMENT AROUND UTILITIES, BUTT JOINTS, CURBING, ETC. SO THAT EXISTING PAVEMENT BEYOND THE SPECIFIED DEPTHS IS NOT DAMAGED. ANY DAMAGE CAUSED BY THE CONTRACTOR'S OPERATIONS MAY RESULT IN PLACING LEVELING COURSES AT THE CONTRACTOR'S EXPENSE. THE REMOVAL AND CLEAN UP OF THE HOT MIX RESIDUE WEDGE REMAINING AFTER MILLING OPERATIONS SHALL BE INCIDENTAL TO THE MILLING ITEM. THE REMOVAL OF EXISTING RAISED PAVEMENT MARKERS (RPM'S) SHALL BE INCIDENTAL TO THE APPLICABLE MILLING AND/OR RECLAMATION ITEMS.

25. ALL PORTLAND CEMENT CONCRETE MUST BE RECEIVED FROM AN APPROVED PRODUCTION PLANT UNLESS OTHERWISE APPROVED BY THE ENGINEER. ONLY CALIBRATED VOLUMETRIC CONCRETE TRUCKS WILL BE PERMITTED TO PROVIDE ON-SITE MIXTURES. THIS PERTAINS TO BOTH WORK OCCURRING DURING NORMAL WORKING HOURS AND NIGHTTIME RESTRICTED WORK.

TRAFFIC SIGNAL NOTES (CONTINUED)

26. DRAINAGE INLETS, WHICH ARE 4' GREATER IN DEPTH AND ARE SLATED FOR REPAIR WILL HAVE STEPS INSTALLED IN ACCORDANCE WITH SECTION 708.07 OF THE STANDARD SPECIFICATIONS. PAYMENT SHALL BE INCIDENTAL TO THE UNIT PRICE BID FOR ITEM 710001.

27. THE PORTLAND CEMENT CONCRETE USED WITHIN ITEM 701002 - ADJUST AND REPAIR EXISTING MAN HOLES AND ITEM 750000 - ADJUST WATER VALVE BOX SHALL CONFORM TO THE REQUIREMENTS OF CLASS A CONCRETE AS STATED WITHIN SECTION 503.02 OF THE DEPARTMENT'S STANDARD SPECIFICATIONS.

MATERIAL ESTIMATE FOR W. NORTH ST PAVEMENT REHABILITATION

ITEM NO.	ITEM DESCRIPTION	QUANTITY
302006	GRADED AGGREGATE BASE COURSE, TYPE B, PATCHING	87 TON
401577	PAVER LAID ULTRATHIN HOT-MIX	27666 SY
503006	DOWEL BARS	528 EA
503008	PCC PATCHING, EARLY STRENGTH	192 SY
503521	JOINT REPLACEMENT, TRANVERSE	864 LF
705007	SIDEWALK SURFACE DETECTABLE WARNING SYSTEM	60 SF
705008	CURB RAMP - TYPE 1	100 SF
705009	CURB RAMP - TYPE 2, 3, AND/OR 4	200 SF
710001	ADJUSTING AND REPAIRING EXISTING DRAINAGE INLET	13 EA
710002	ADJUSTING AND REPAIRING EXISTING MANHOLE	3 EA
744544	ADJUST OR REPAIR EXISTING CONDUIT JUNCTION WELL	3 EA
750000	ADJUST WATER VALVE BOXES	3 EA
760502	PAVEMENT MILLING, TAPER CUT	3067 SY-IN
762002	SAW CUTTING, CONCRETE, FULL DEPTH	864 LF

NOTES:

1. THESE ITEMS ARE SPECIFIC TO THE PAVEMENT REHABILITATION SHOWN ON THIS CONSTRUCTION PLAN. THESE QUANTITIES ARE INCLUDED IN THE OVERALL PROJECT COST ESTIMATE.
2. THIS PLAN IS INTENDED TO SHOW PAVEMENT REHABILITATION WORK NOT SHOWN ON THE CONSTRUCTION PLANS.

4/3/2014 deinlein
J:\BRIDGE_HIGHWAYS\6061_DelDOT_WEST_DOVER_CONN\Civil\Civ_Sheets\04_Plans-Pvmt\CP91.dgn

DELAWARE DEPARTMENT OF TRANSPORTATION

ADDENDUMS / REVISIONS

SCALE 1"=200'
0 200 400 600
FEET

WEST DOVER CONNECTOR

CONTRACT	BRIDGE NO.
T200411701	DESIGNED BY: SE
COUNTY	CHECKED BY: TH
KENT	

W. NORTH STREET PAVEMENT & REHABILITATION

SHEET NO.
58
TOTAL SHTS.
320

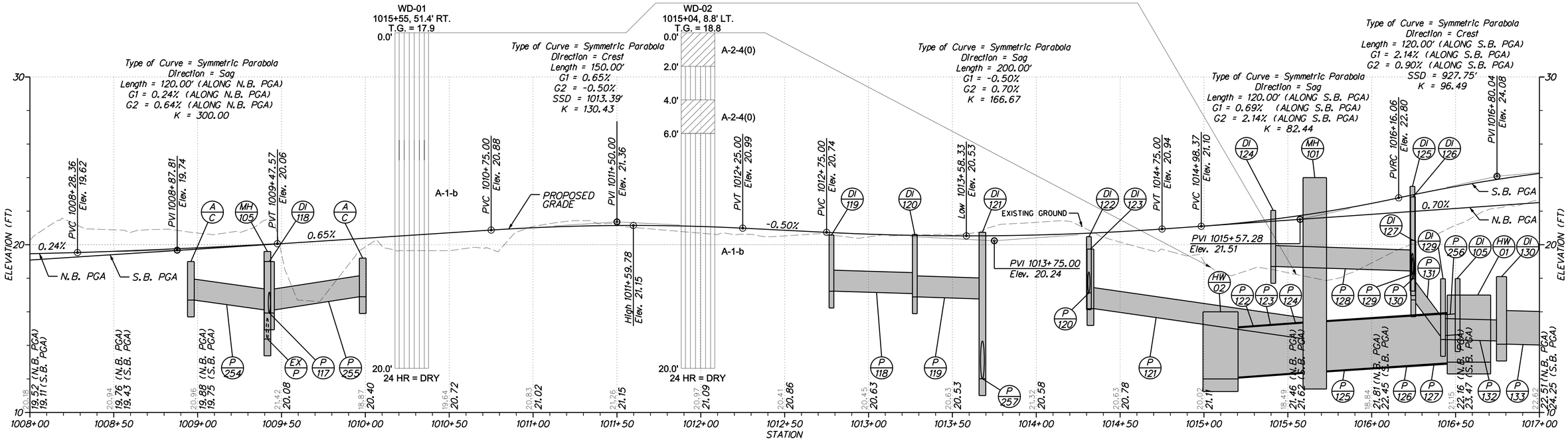

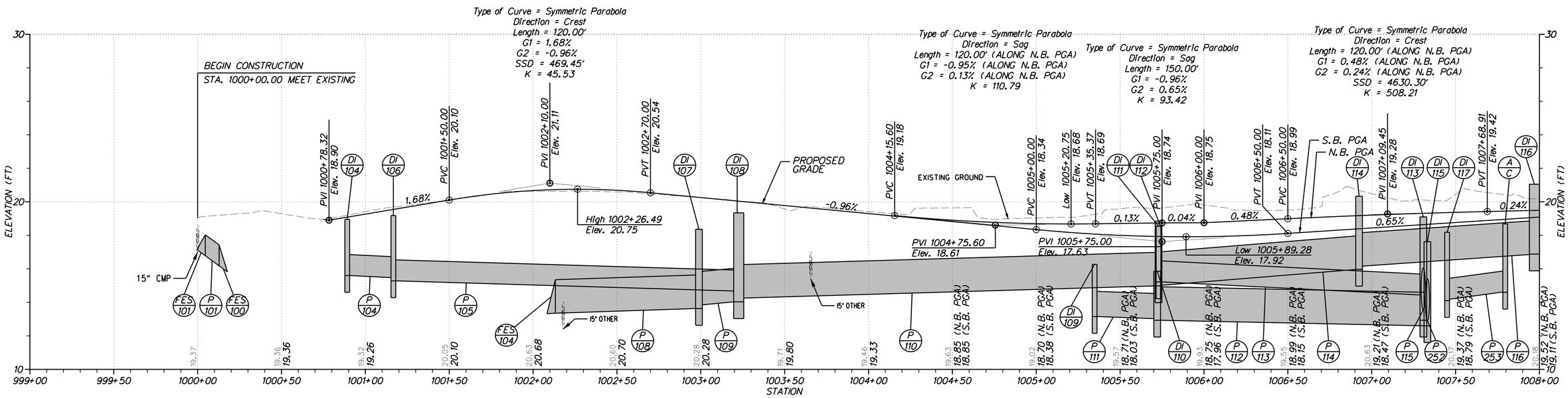

PROFILE
WEST DOVER CONNECTOR

DELAWARE DEPARTMENT OF TRANSPORTATION

ADDENDUMS / REVISIONS

SCALE HORIZ: 1"= 30'
VERT: 1"= 3'
0 30 60 90
0 3 6 9
FEET

WEST DOVER CONNECTOR

CONTRACT	BRIDGE NO.		SHEET NO.
T200411701	DESIGNED BY: RP	**PROFILES**	59
COUNTY			TOTAL SHTS.
KENT	CHECKED BY: BP		320

7/17/2014 PerryR
J:\BRIDGE_HIGHWAYS\6061_DelDOT_WEST_DOVER_CONN\Civil\Civ_Sheets\05_Profiles\PF01.dgn

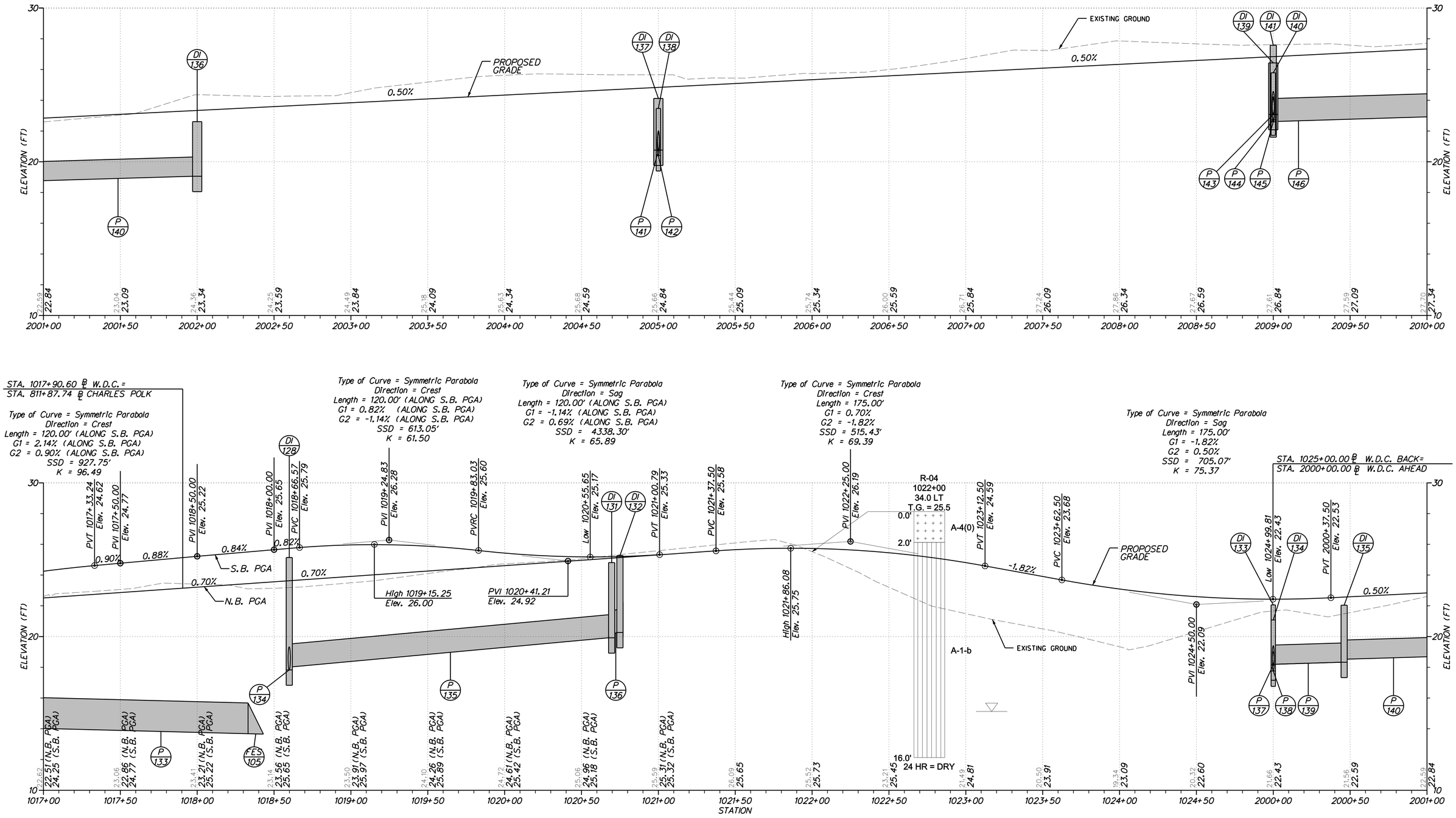

PROFILE
WEST DOVER CONNECTOR

DELAWARE DEPARTMENT OF TRANSPORTATION	ADDENDUMS / REVISIONS	SCALE HORIZ: 1"= 30' VERT: 1"= 3' (0 30 60 90; 0 3 6 9 FEET)	WEST DOVER CONNECTOR	CONTRACT T200411701 / COUNTY KENT	BRIDGE NO. / DESIGNED BY: RP / CHECKED BY: BP	PROFILES	SHEET NO. 60 / TOTAL SHTS. 320

4/3/2014 deinlein
J:\BRIDGE_HIGHWAYS\6061_DelDOT_WEST_DOVER_CONN\Civil\Civ_Sheets\05_Profiles\PF02.dgn

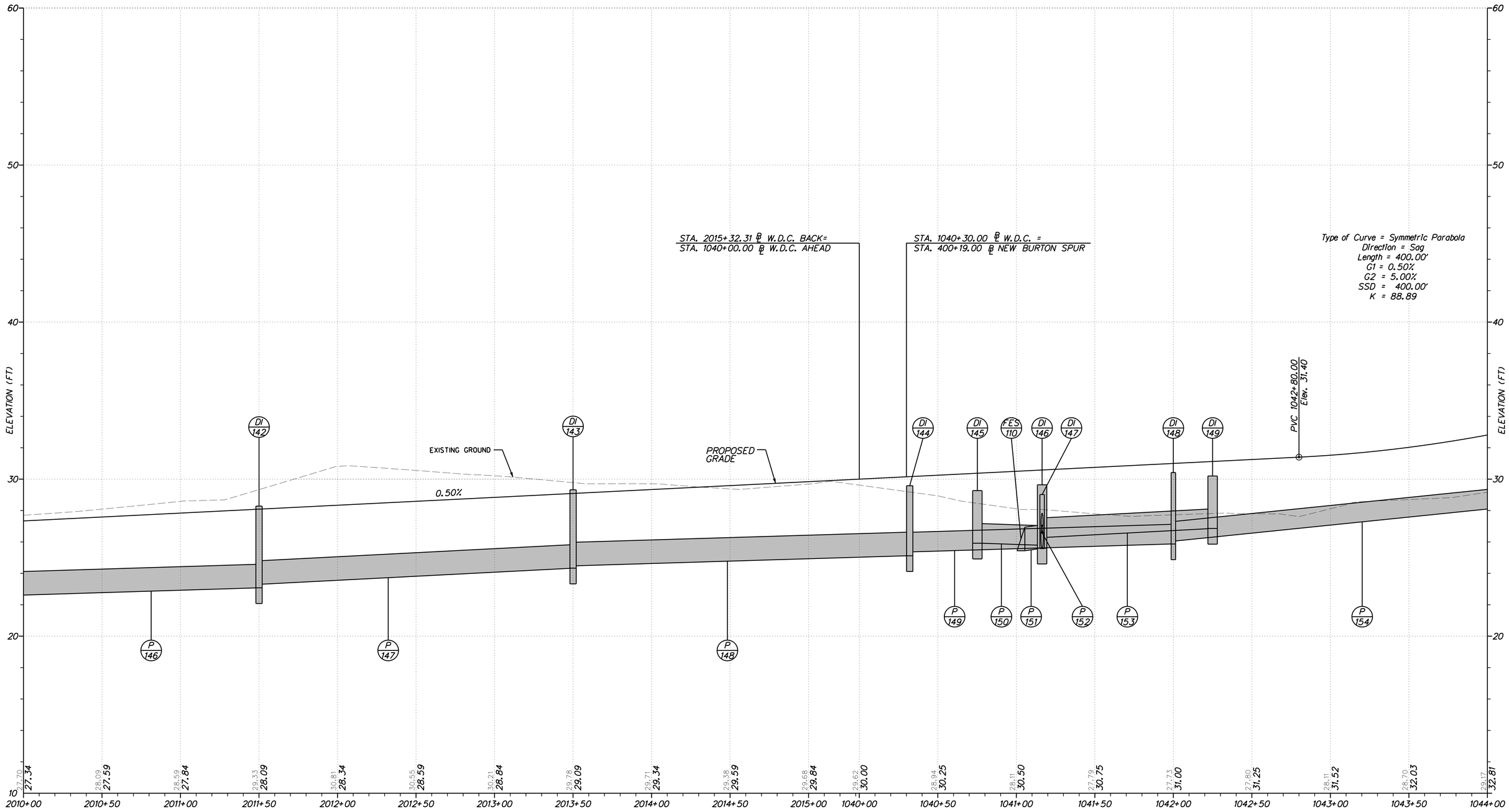

PROFILE
WEST DOVER CONNECTOR

DELAWARE DEPARTMENT OF TRANSPORTATION	ADDENDUMS / REVISIONS	SCALE HORIZ: 1"= 30' VERT: 1"= 3' (0 30 60 90; 0 3 6 9 FEET)	**WEST DOVER CONNECTOR**	CONTRACT T200411701	BRIDGE NO.	**PROFILES**	SHEET NO. 61
				COUNTY KENT	DESIGNED BY: RP		TOTAL SHTS. 320
					CHECKED BY: BP		

4/3/2014 deinlein
J:\BRIDGE_HIGHWAYS\6061_DelDOT_WEST_DOVER_CONN\Civil\Civ_Sheets\05_Profiles\PF03.dgn

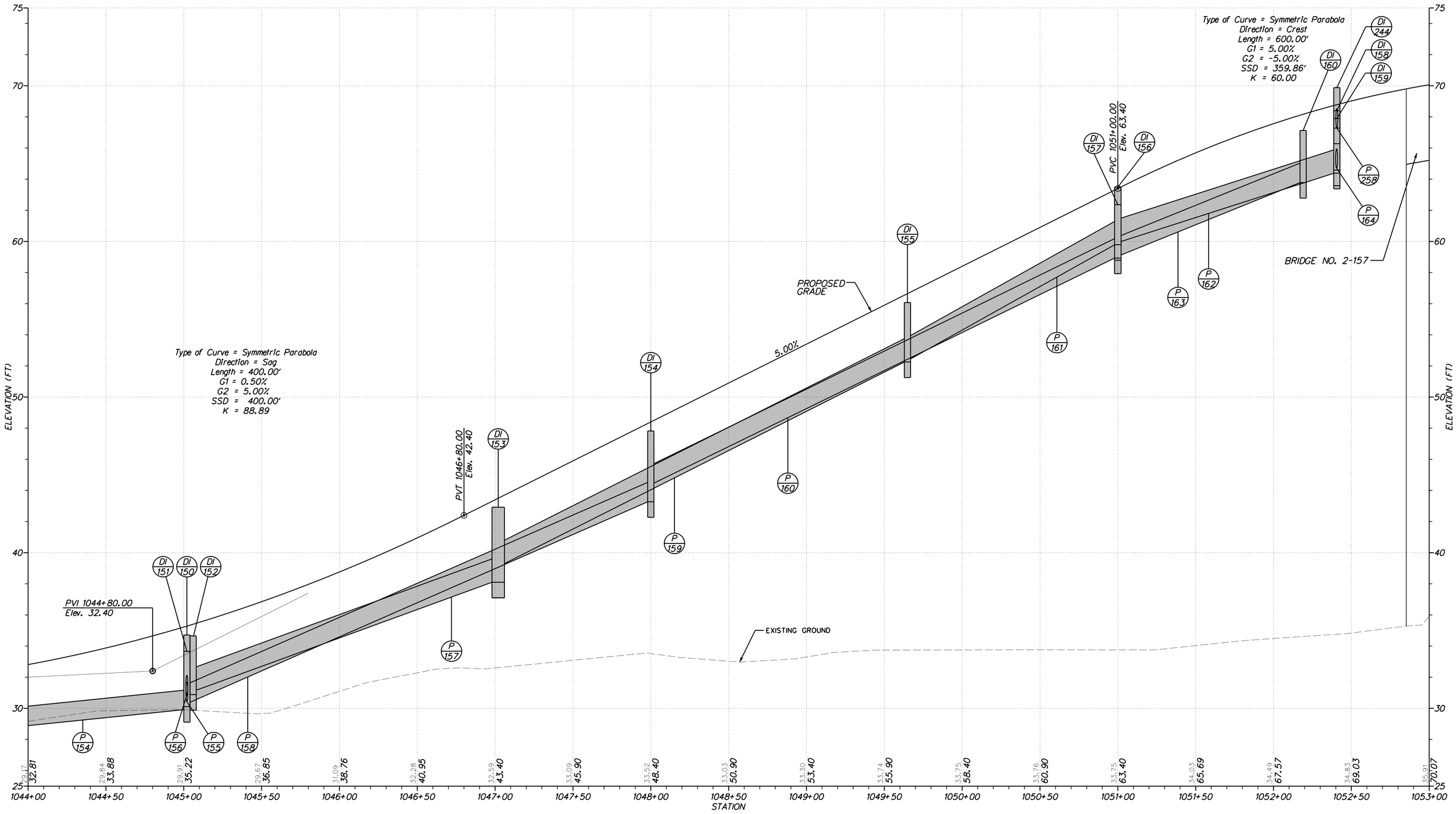

PROFILE
WEST DOVER CONNECTOR

DELAWARE DEPARTMENT OF TRANSPORTATION	ADDENDUMS / REVISIONS	SCALE HORIZ: 1"= 30' VERT: 1"= 3' (0, 30, 60, 90 / 0, 3, 6, 9 FEET)	**WEST DOVER CONNECTOR**	CONTRACT T200411701	BRIDGE NO.	**PROFILES**	SHEET NO. 62
				COUNTY KENT	DESIGNED BY: RP		TOTAL SHTS. 320
					CHECKED BY: BP		

4/3/2014 deinlein
J:\BRIDGE_HIGHWAYS\6061_DelDOT_WEST_DOVER_CONN\Civil\Civ_Sheets\05_Profiles\PF04.dgn

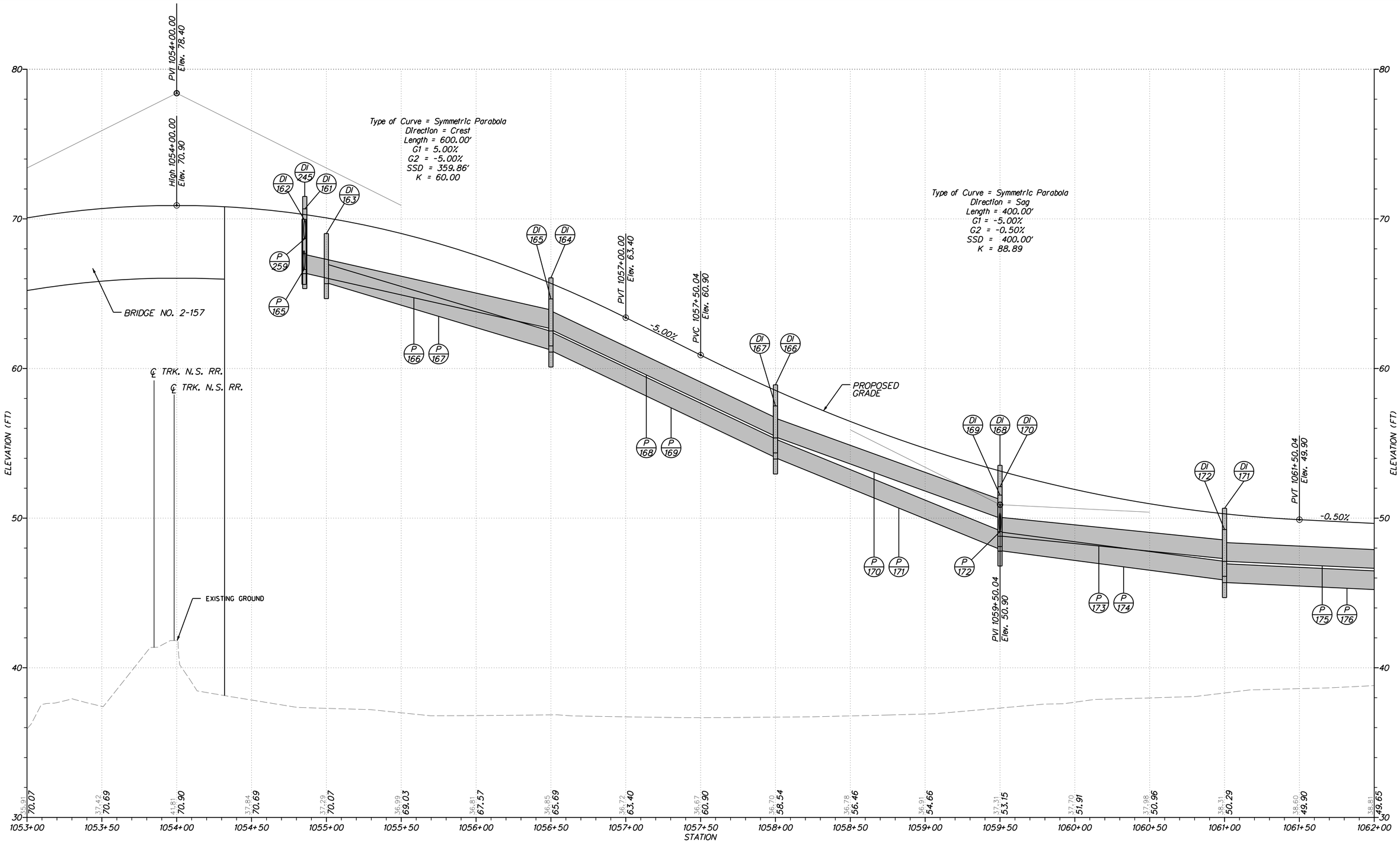

PROFILE
WEST DOVER CONNECTOR

DELAWARE DEPARTMENT OF TRANSPORTATION	ADDENDUMS / REVISIONS	SCALE HORIZ: 1"= 30' VERT: 1"= 3' (0 30 60 90; 0 3 6 9 FEET)	**WEST DOVER CONNECTOR**	CONTRACT T200411701	BRIDGE NO.	**PROFILES**	SHEET NO. 63
				COUNTY KENT	DESIGNED BY: RP		TOTAL SHTS. 320
					CHECKED BY: BP		

4/3/2014 deinlein
J:\BRIDGE_HIGHWAYS\6061_DelDOT_WEST_DOVER_CONN\Civil\Civ_Sheets\05_Profiles\PF05.dgn

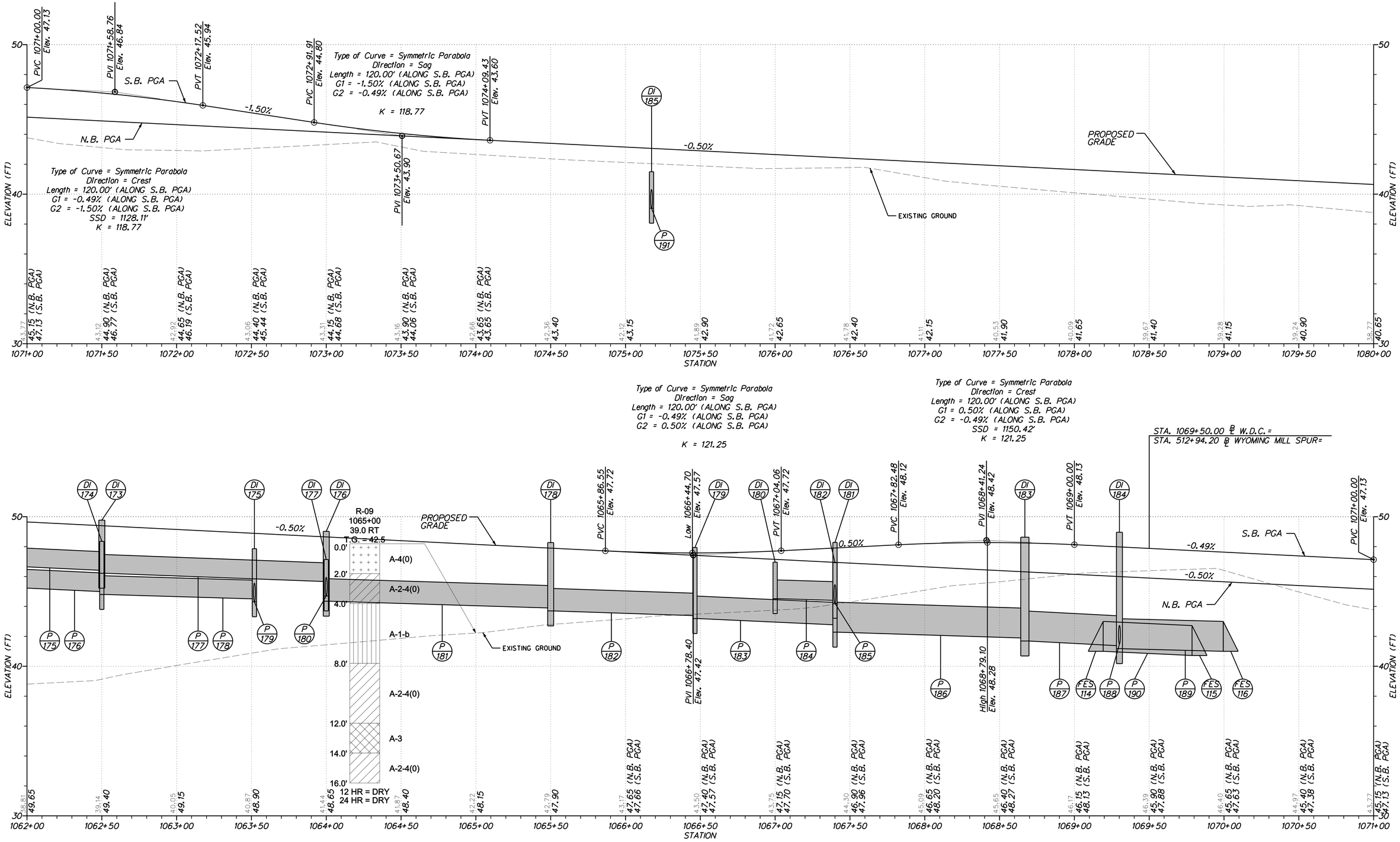

PROFILE
WEST DOVER CONNECTOR

DELAWARE DEPARTMENT OF TRANSPORTATION	ADDENDUMS / REVISIONS	SCALE HORIZ: 1"= 30' VERT: 1"= 3' (0 30 60 90; 0 3 6 9 FEET)	WEST DOVER CONNECTOR	CONTRACT T200411701 / COUNTY KENT	BRIDGE NO. / DESIGNED BY: RP / CHECKED BY: BP	PROFILES	SHEET NO. 64 / TOTAL SHTS. 320

4/3/2014 deinleinj
J:\BRIDGE_HIGHWAYS\60611_DelDOT_WEST_DOVER_CONN\Civil\Civ_Sheets\05_Profiles\PF06.dgn

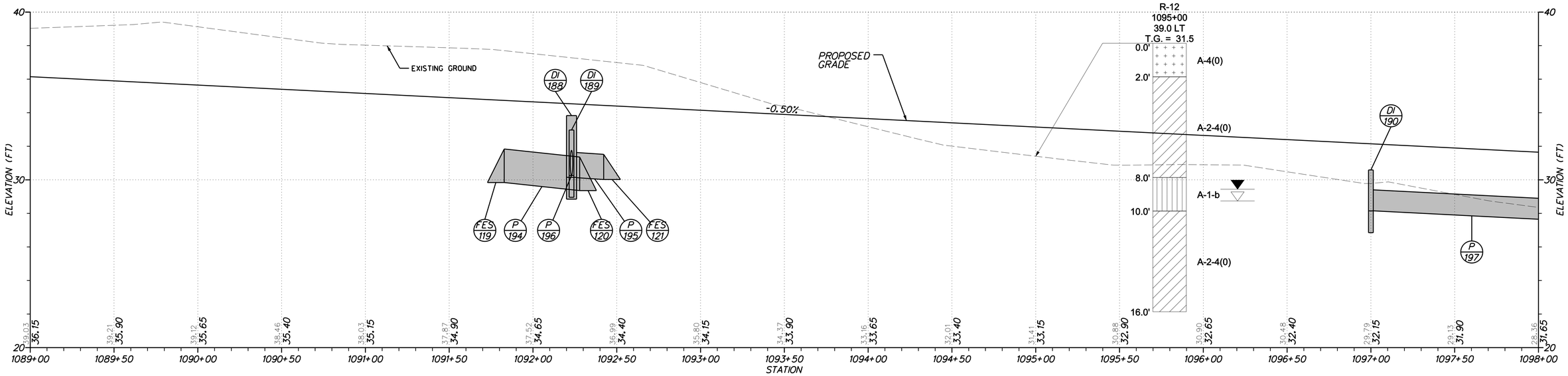

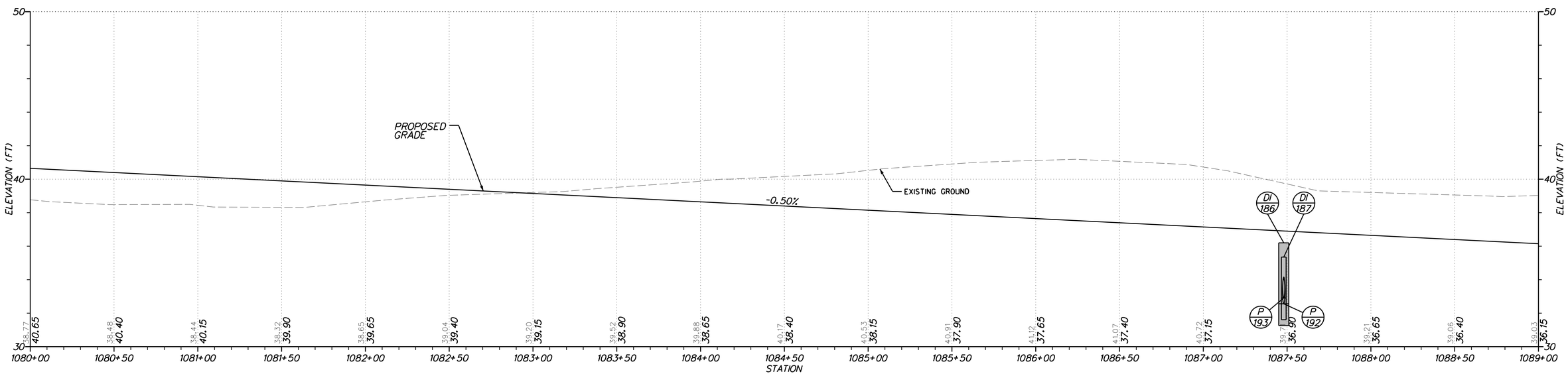

PROFILE
WEST DOVER CONNECTOR

DELAWARE DEPARTMENT OF TRANSPORTATION

ADDENDUMS / REVISIONS

SCALE HORIZ: 1"= 30'
VERT: 1"= 3'
0 30 60 90
0 3 6 9
FEET

WEST DOVER CONNECTOR

CONTRACT	BRIDGE NO.		SHEET NO.
T200411701	DESIGNED BY: RP	**PROFILES**	65
COUNTY			TOTAL SHTS.
KENT	CHECKED BY: BP		320

4/3/2014 deinlein
J:\BRIDGE_HIGHWAYS\6061_DelDOT_WEST_DOVER_CONN\Civil\Civ_Sheets\05_Profiles\PF07.dgn

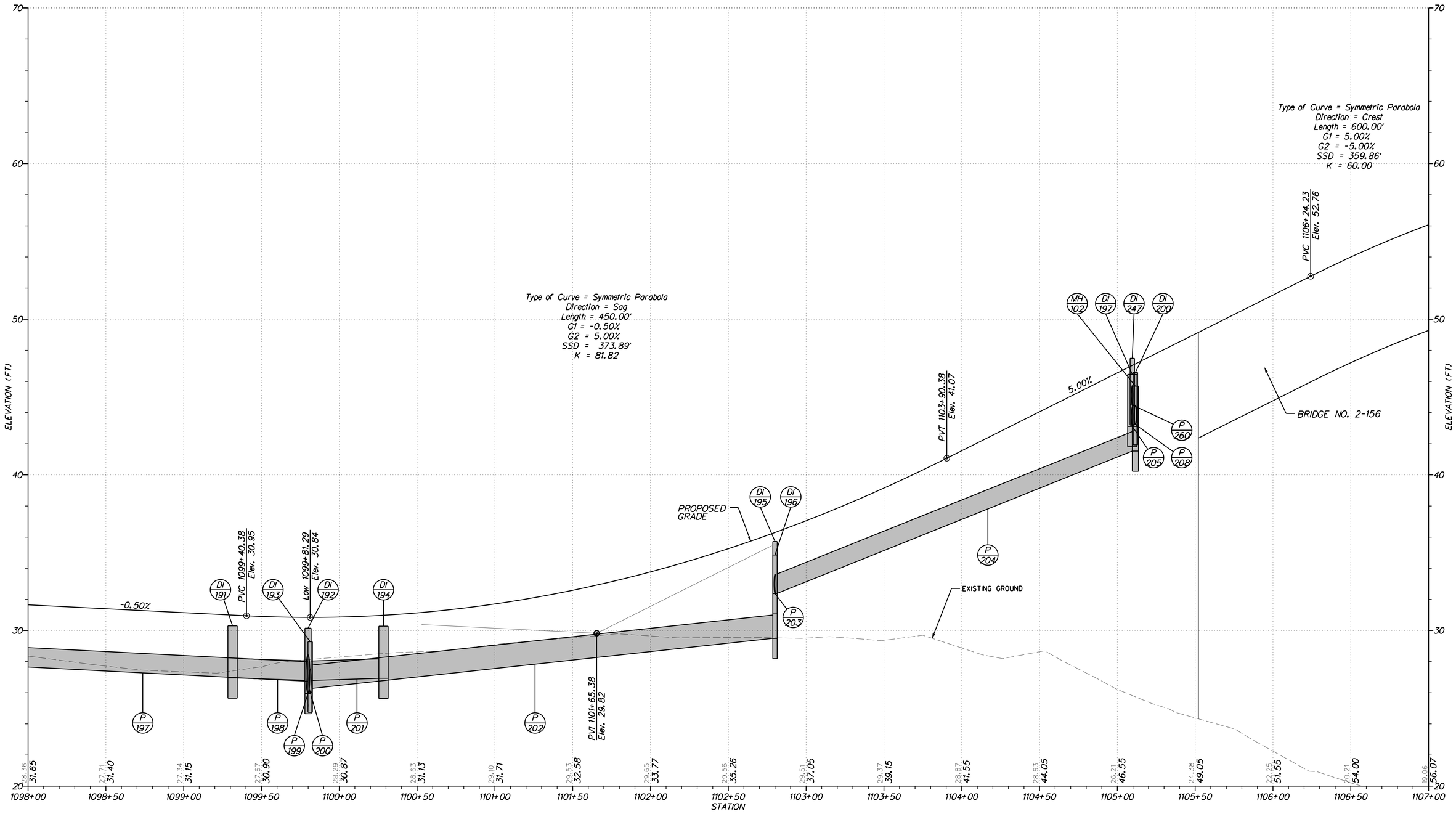

PROFILE
WEST DOVER CONNECTOR

DELAWARE DEPARTMENT OF TRANSPORTATION	ADDENDUMS / REVISIONS	SCALE HORIZ: 1"= 30' VERT: 1"= 3' (0 30 60 90; 0 3 6 9 FEET)	**WEST DOVER CONNECTOR**	CONTRACT T200411701 / COUNTY KENT	BRIDGE NO. / DESIGNED BY: RP / CHECKED BY: BP	**PROFILES**	SHEET NO. 66 / TOTAL SHTS. 320

4/3/2014 deinlein
J:\BRIDGE_HIGHWAYS\6061_DelDOT_WEST_DOVER_CONN\Civil\Civ_Sheets\05_Profiles\PF08.dgn

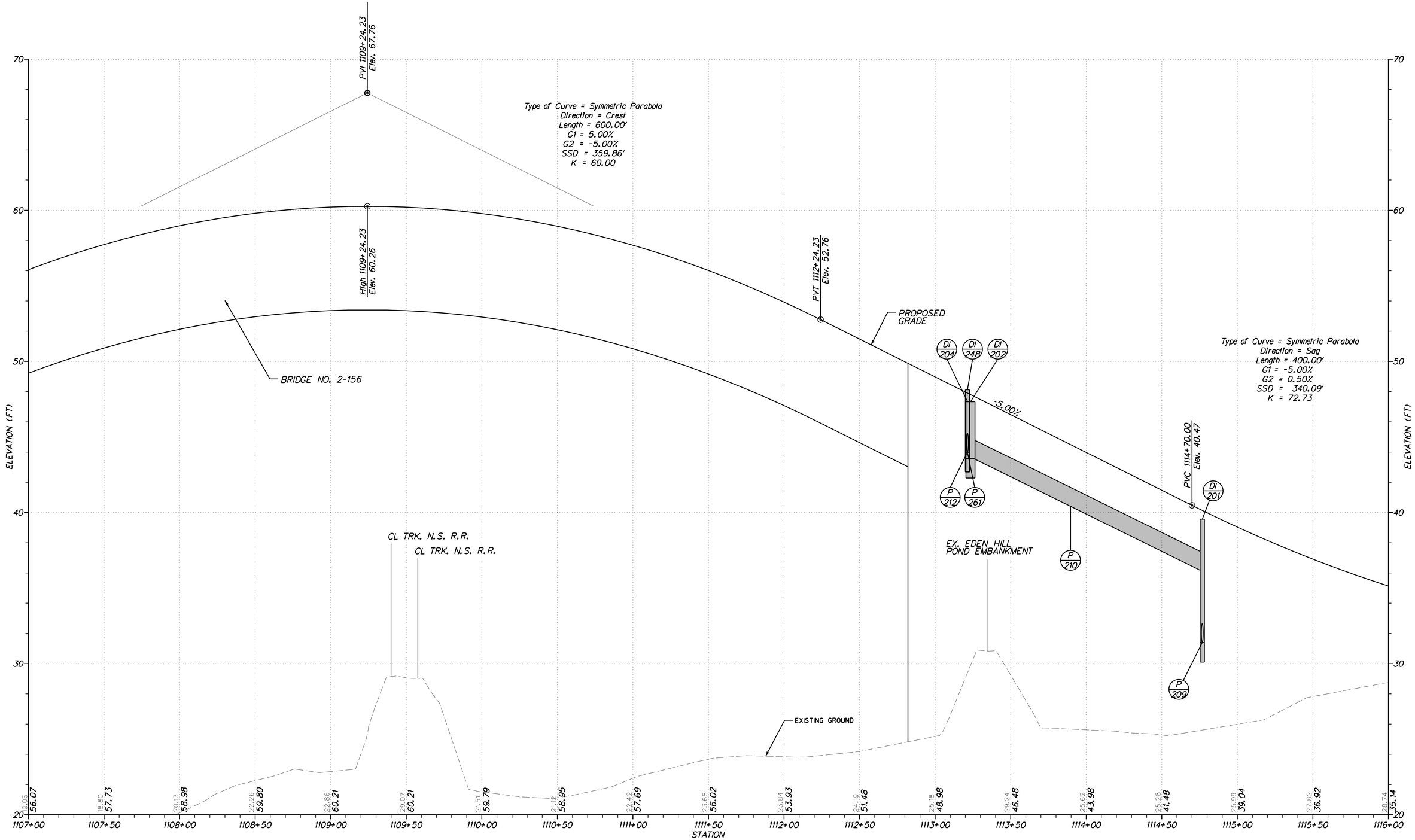

PROFILE
WEST DOVER CONNECTOR

DELAWARE DEPARTMENT OF TRANSPORTATION	ADDENDUMS / REVISIONS	SCALE HORIZ: 1"= 30' VERT: 1"= 3' (0, 30, 60, 90 / 0, 3, 6, 9 FEET)	**WEST DOVER CONNECTOR**	CONTRACT T200411701	BRIDGE NO.	**PROFILES**	SHEET NO. 67
				COUNTY KENT	DESIGNED BY: RP		TOTAL SHTS. 320
					CHECKED BY: BP		

4/3/2014 deinlein
J:\BRIDGE_HIGHWAYS\6061_DelDOT_WEST_DOVER_CONN\Civil\Civ_Sheets\05_Profiles\PF09.dgn

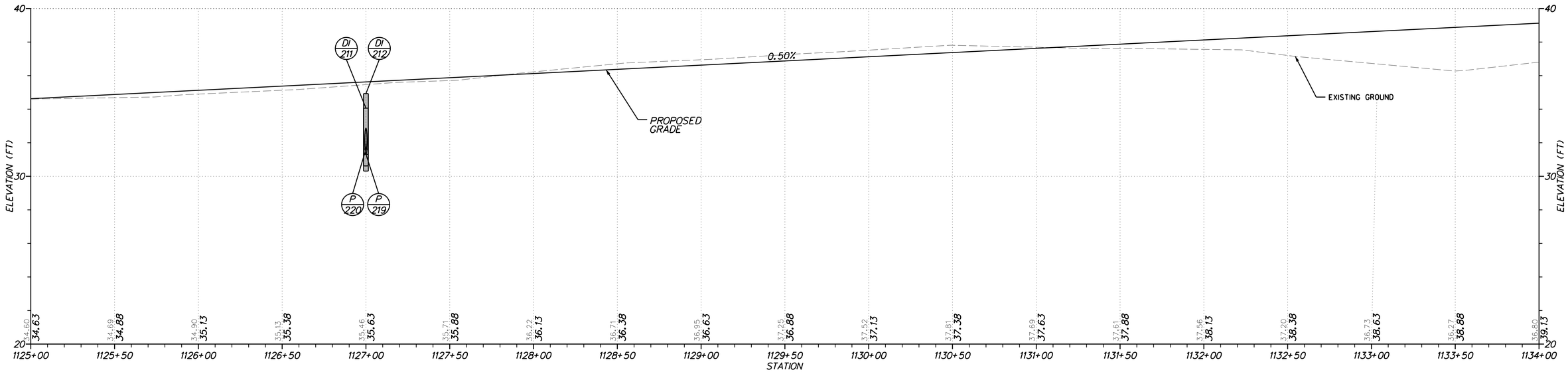

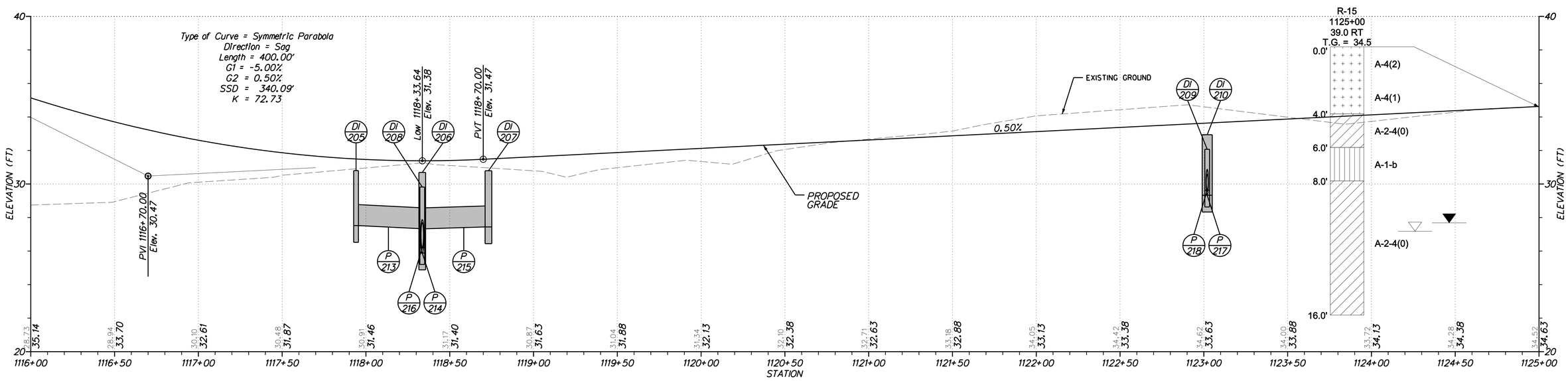

PROFILE
WEST DOVER CONNECTOR

DELAWARE DEPARTMENT OF TRANSPORTATION	ADDENDUMS / REVISIONS	SCALE HORIZ: 1"= 30' VERT: 1"= 3' (0 30 60 90; 0 3 6 9 FEET)	**WEST DOVER CONNECTOR**	CONTRACT T200411701 / COUNTY KENT	BRIDGE NO. / DESIGNED BY: RP / CHECKED BY: BP	**PROFILES**	SHEET NO. 68 / TOTAL SHTS. 320

4/3/2014 deinlein
J:\BRIDGE_HIGHWAYS\16061_DelDOT_WEST_DOVER_CONN\Civil\Civ_Sheets\05_Profiles\PF10.dgn

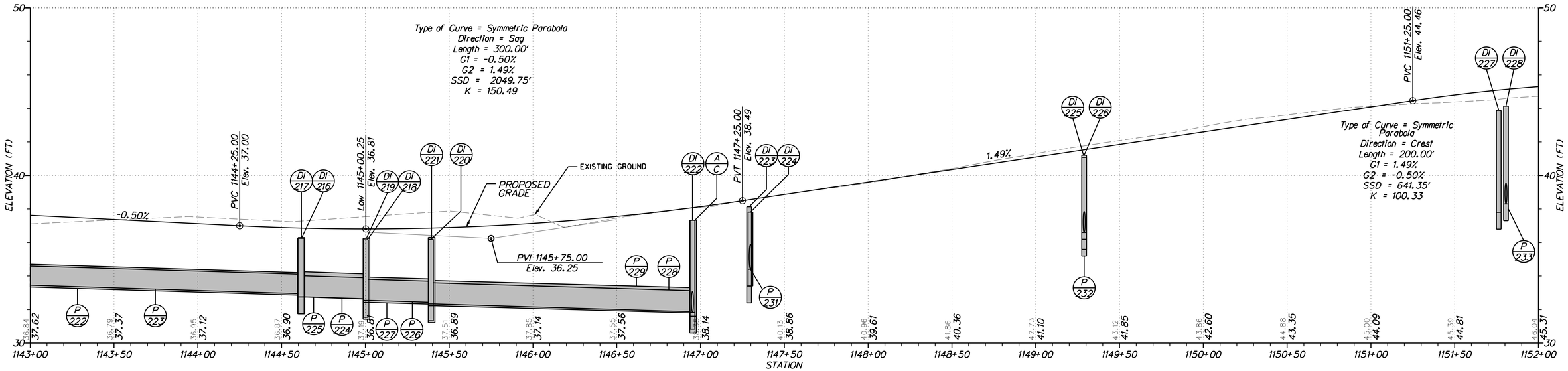

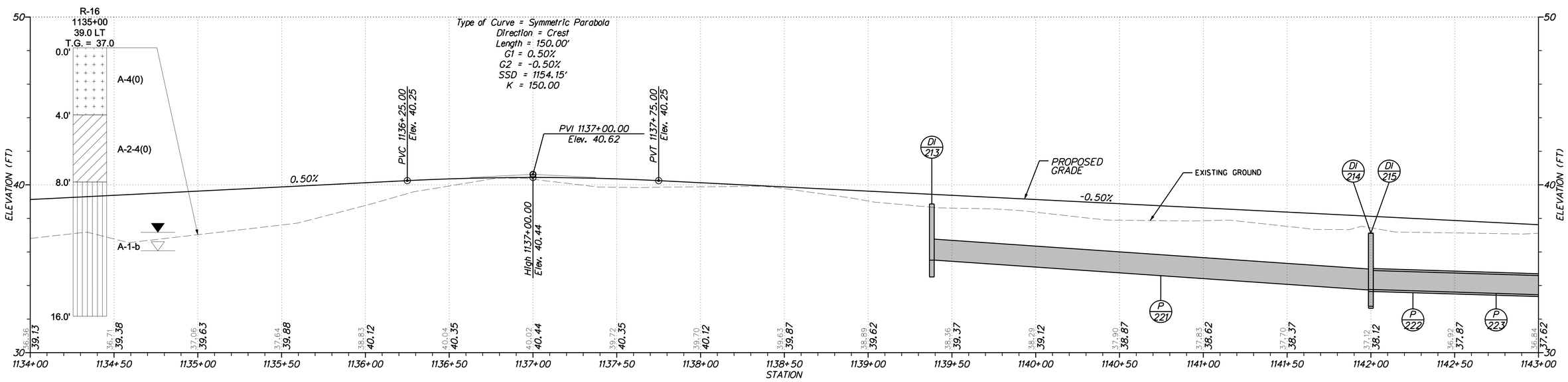

PROFILE
WEST DOVER CONNECTOR

DELAWARE DEPARTMENT OF TRANSPORTATION	ADDENDUMS / REVISIONS	SCALE HORIZ: 1"= 30' VERT: 1"= 3' (FEET)	WEST DOVER CONNECTOR	CONTRACT T200411701 / COUNTY KENT	BRIDGE NO. / DESIGNED BY: RP / CHECKED BY: BP	PROFILES	SHEET NO. 69 / TOTAL SHTS. 320

4/3/2014 deinlein
J:\BRIDGE_HIGHWAYS\6061_DelDOT_WEST_DOVER_CONN\Civil\Civ_Sheets\05_Profiles\PF11.dgn

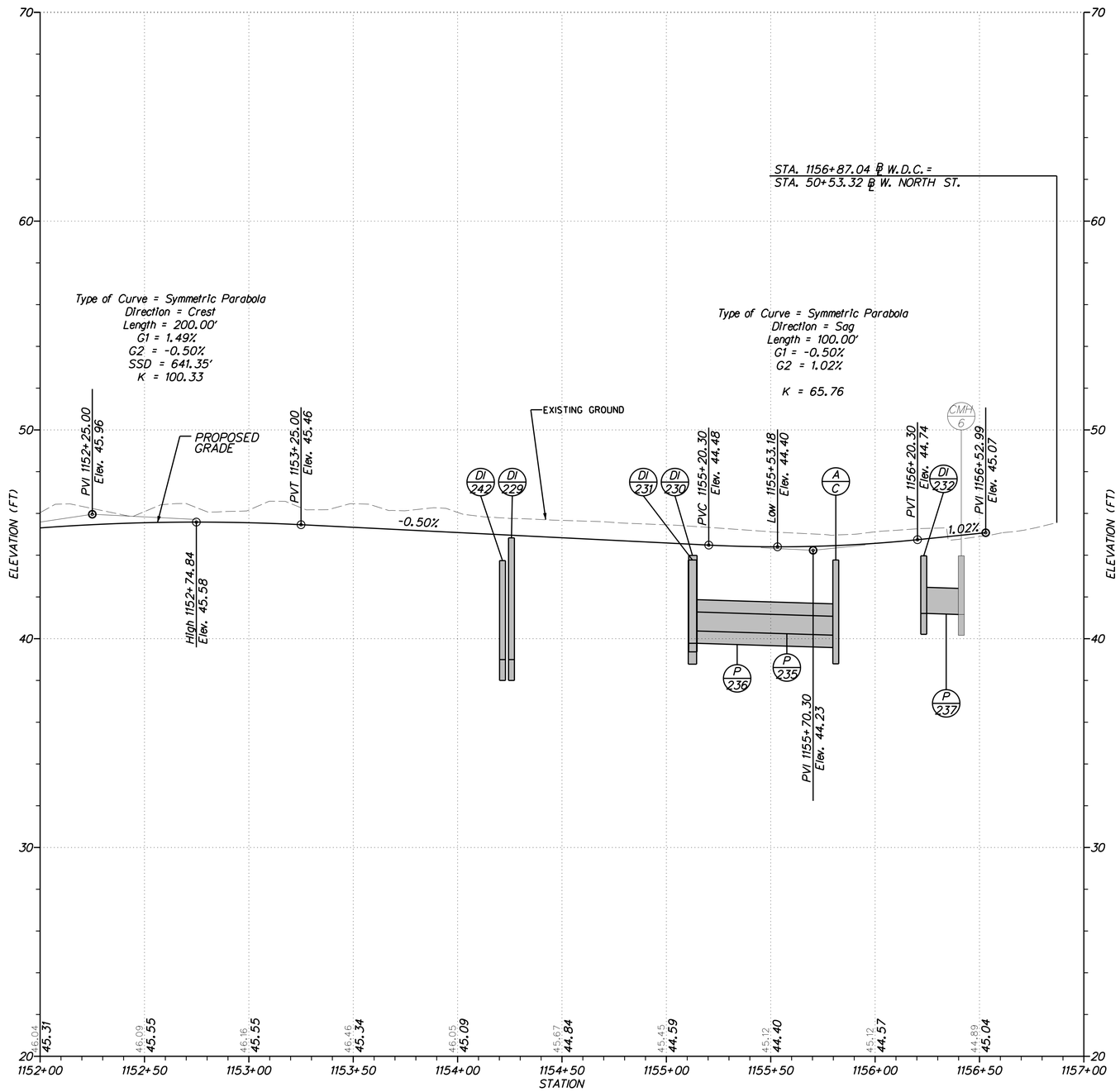

PROFILE
WEST DOVER CONNECTOR

DELAWARE DEPARTMENT OF TRANSPORTATION	ADDENDUMS / REVISIONS	SCALE HORIZ: 1"= 30' VERT: 1"= 3' (0 30 60 90; 0 3 6 9 FEET)	WEST DOVER CONNECTOR	CONTRACT T200411701	BRIDGE NO.	PROFILES	SHEET NO. 70
				COUNTY KENT	DESIGNED BY: RP		TOTAL SHTS. 320
					CHECKED BY: BP		

4/3/2014 deinlein
J:\BRIDGE_HIGHWAYS\6061_DelDOT_WEST_DOVER_CONN\Civil\Civ_Sheets\05_Profiles\PF12.dgn

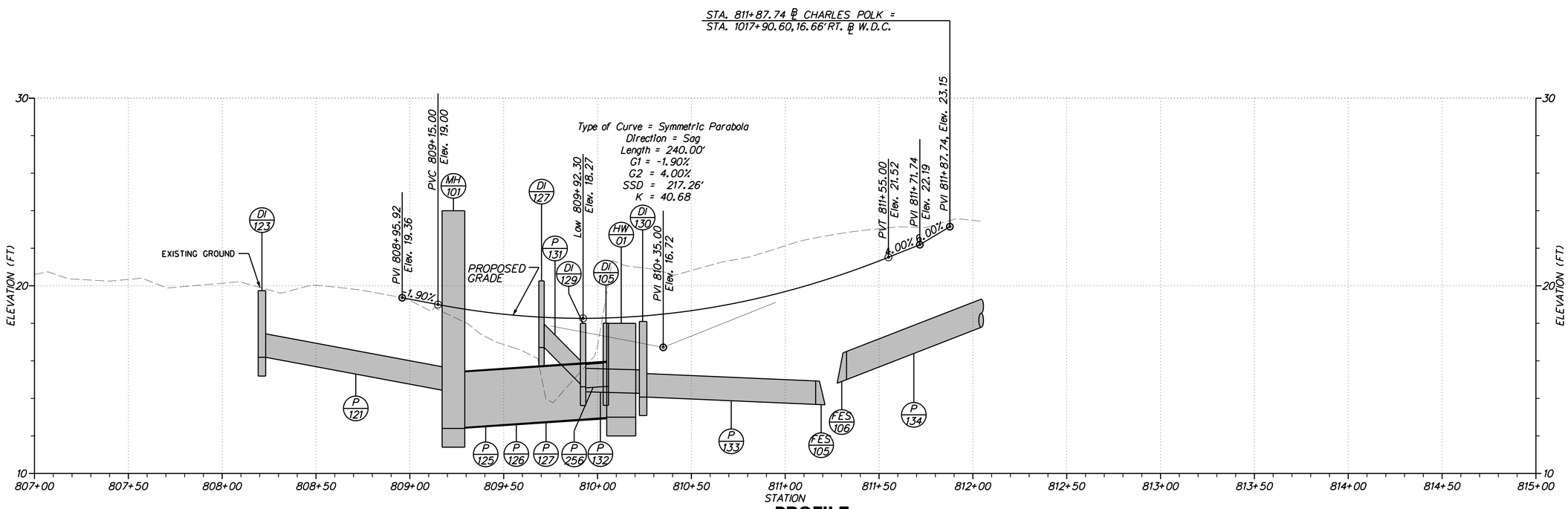

PROFILE
CHARLES POLK ROAD

DELAWARE DEPARTMENT OF TRANSPORTATION	ADDENDUMS / REVISIONS	SCALE HORIZ: 1"= 30' VERT: 1"= 3' (0 30 60 90; 0 3 6 9 FEET)	**WEST DOVER CONNECTOR**	CONTRACT T200411701 / COUNTY KENT	BRIDGE NO. / DESIGNED BY: RP / CHECKED BY: BP	**PROFILES**	SHEET NO. 71 / TOTAL SHTS. 320

4/3/2014 deinlein
J:\BRIDGE_HIGHWAYS\6061_DelDOT_WEST_DOVER_CONN\Civil\Civ_Sheets\05_Profiles\PF13.dgn

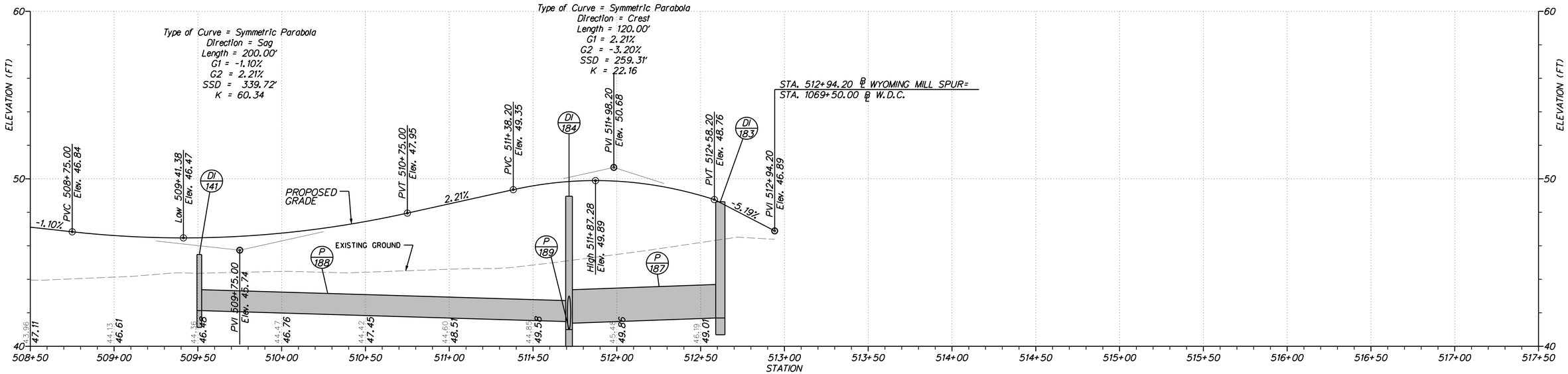

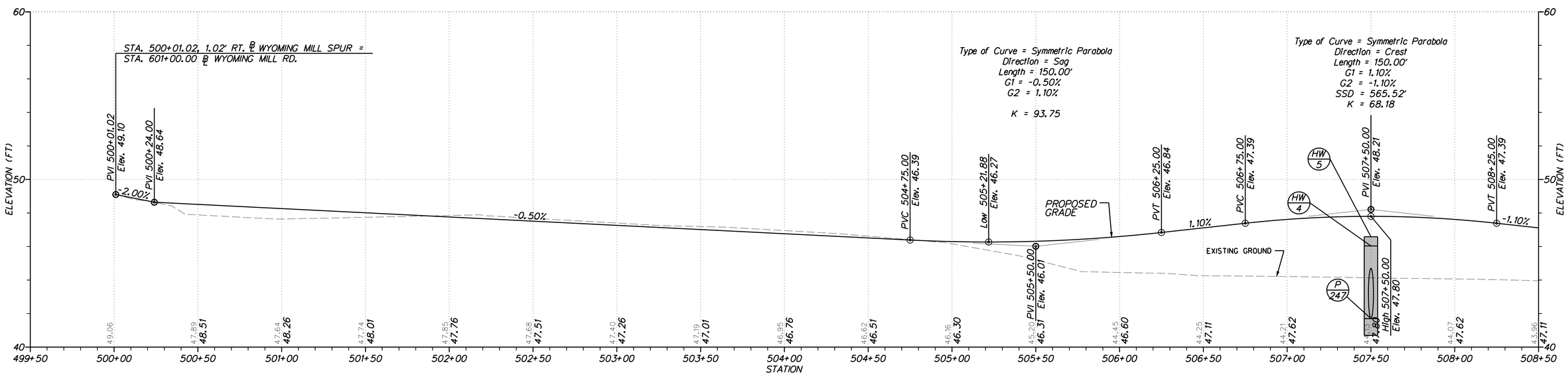

PROFILE
WYOMING MILL ROAD SPUR

DELAWARE DEPARTMENT OF TRANSPORTATION

ADDENDUMS / REVISIONS

SCALE HORIZ: 1"= 30'
VERT: 1"= 3'
0 30 60 90
0 3 6 9
FEET

WEST DOVER CONNECTOR

CONTRACT	BRIDGE NO.		SHEET NO.
T200411701	DESIGNED BY: RP	**PROFILES**	72
COUNTY			TOTAL SHTS.
KENT	CHECKED BY: BP		320

4/3/2014 deinlein
J:\BRIDGE_HIGHWAYS\16061_DelDOT_WEST_DOVER_CONN\Civil\Civ_Sheets\05_Profiles\PF16.dgn

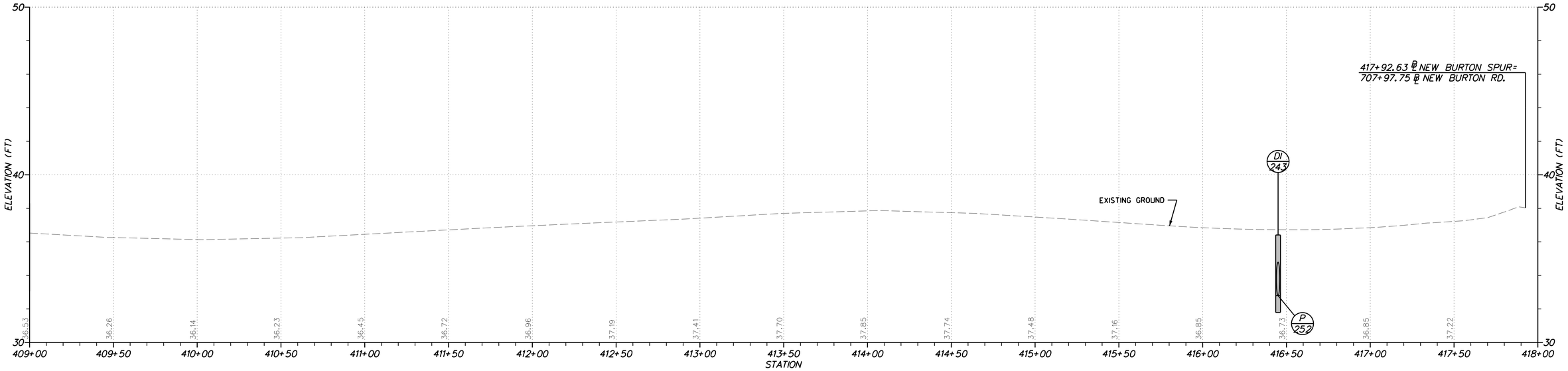

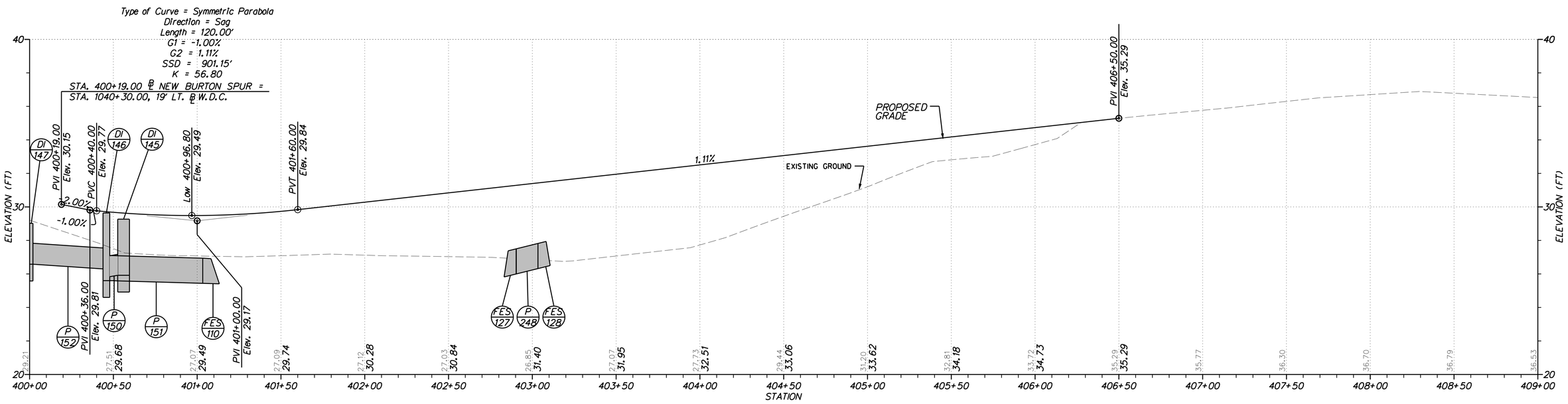

PROFILE
NEW BURTON ROAD SPUR

DELAWARE DEPARTMENT OF TRANSPORTATION

ADDENDUMS / REVISIONS

SCALE HORIZ: 1"= 30'
VERT: 1"= 3'
0 30 60 90
0 3 6 9
FEET

WEST DOVER CONNECTOR

CONTRACT	BRIDGE NO.		SHEET NO.
T200411701	DESIGNED BY: RP	**PROFILES**	73
COUNTY			TOTAL SHTS.
KENT	CHECKED BY: BP		320

4/3/2014 deinlein
J:\BRIDGE_HIGHWAYS\6061_DelDOT_WEST_DOVER_CONN\Civil\Civ_Sheets\05_Profiles\PF17.dgn

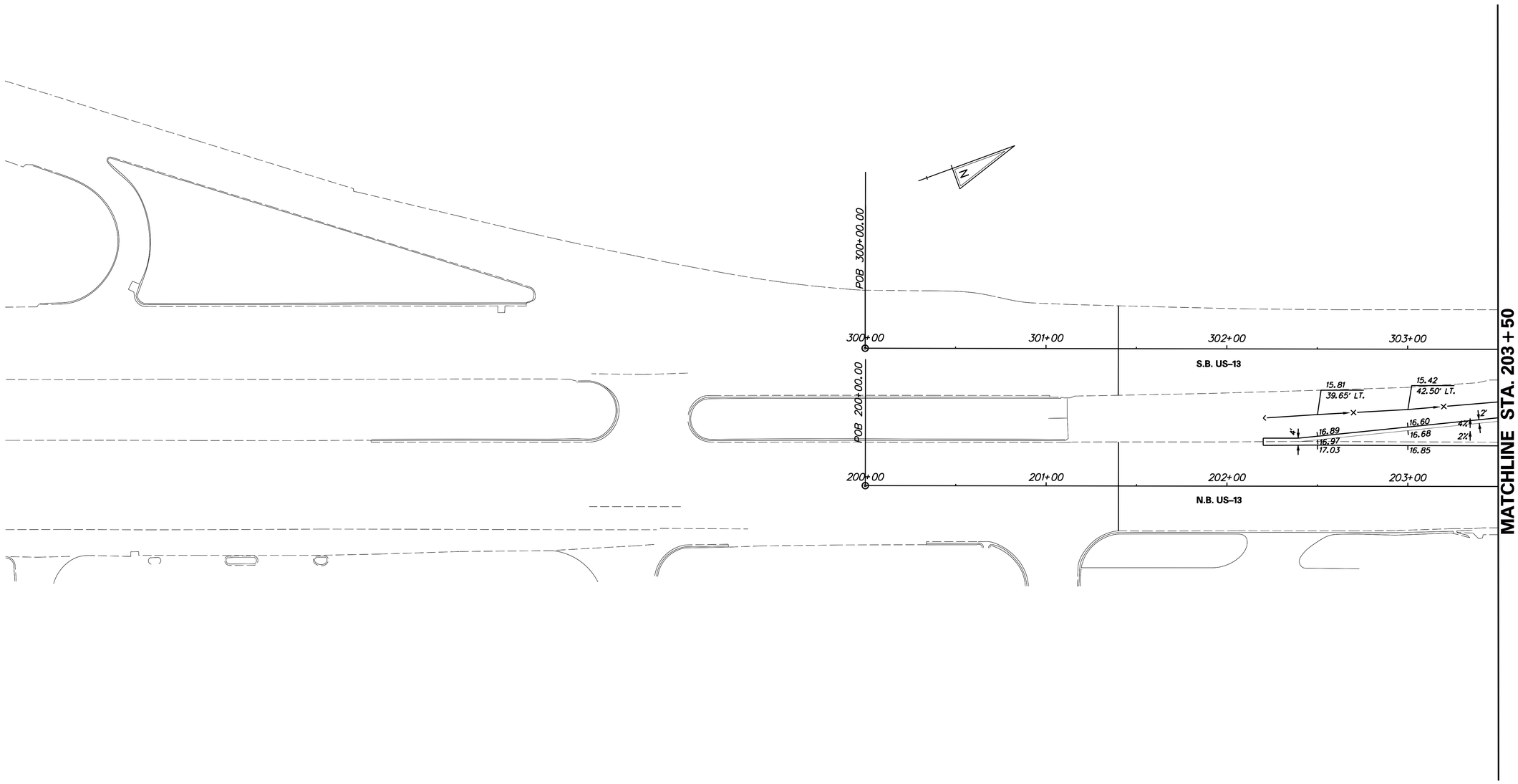

DELAWARE DEPARTMENT OF TRANSPORTATION	ADDENDUMS / REVISIONS	SCALE: 1"=30' (0, 30, 60, 90 FEET)	WEST DOVER CONNECTOR	CONTRACT T200411701	BRIDGE NO.	GRADES AND GEOMETRICS	SHEET NO. 74
				COUNTY KENT	DESIGNED BY: RP, KM		TOTAL SHTS. 320
					CHECKED BY: BP		

4/3/2014 deinlein
J:\BRIDGE_HIGHWAYS\6061_DelDOT_WEST_DOVER_CONN\Civil\Civ_Sheets\06_Grade_Geo\GG01.dgn

NOTES:

1. OFFSETS SHOWN IN THE GEOMETRY TABLES WITH A MINUS SIGN ARE TO THE LEFT OF THE CONSTRUCTION & R/W BASELINE.
2. UNLESS OTHERWISE NOTED, POINT GEOMETRY ADJACENT TO CURB AND CURB AND GUTTER IS GIVEN TO THE EDGE OF PAVEMENT.
3. RADII ARE GIVEN TO EDGE OF PAVEMENT.
4. UNLESS OTHERWISE NOTED, EDGE OF PAVEMENT ELEVATIONS AT CURB RETURNS ARE GIVEN AT 10 FOOT INTERVALS.
5. ALL WORK REQUIRED FOR CALCULATING AND STAKING OF GRADES SHALL BE PAID FOR UNDER ITEM 763501 - CONSTRUCTION ENGINEERING.
6. PROPOSED CURBS OR PAVEMENT THAT TIE INTO EXISTING OR CURBS SHALL MATCH THE EXISTING PAVEMENT OR CURB ELEVATIONS.

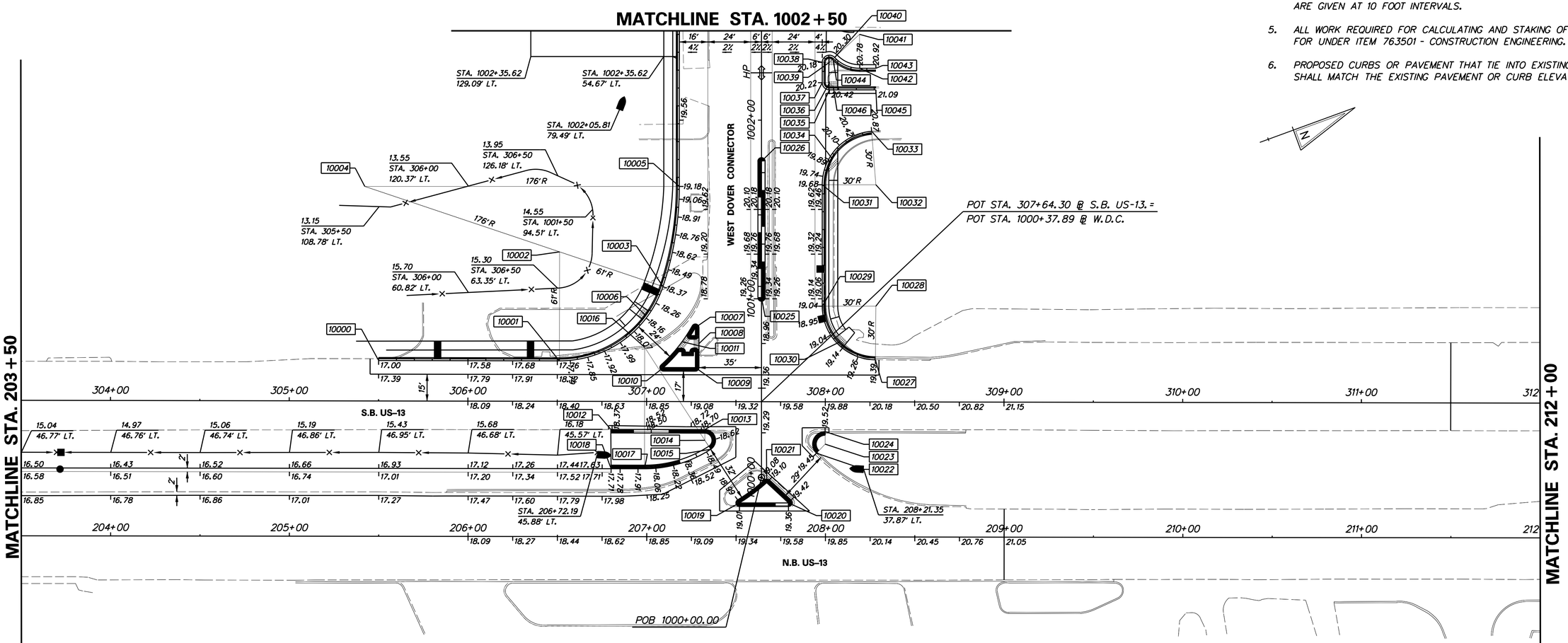

COORDINATE LIST

POINT NO.	STATION	OFFSET	NORTHING	EASTING
10000	305+50.00	-22.65	409464.5378	623319.8375
10001	306+51.16	-22.65	409559.4782	623354.7743
10002	306+51.16	-83.65	409580.5443	623297.5272
10003	1001+06.86	-55.16	409628.1735	623335.6384
10004	1001+62.90	-222.00	409490.7516	623225.6783
10005	1001+62.90	-46.00	409656.0349	623286.1550
10006	1000+91.07	-65.22	409613.3052	623347.0105
10007	1000+83.90	-37.00	409637.3420	623363.4384
10008	1000+74.92	-35.00	409636.1340	623372.5602
10009	307+27.27	-19.00	409629.6418	623384.4832
10010	307+09.41	-19.00	409612.8809	623378.3154
10011	1000+75.99	-44.44	409627.6353	623368.3049
10012	306+80.00	15.67	409573.3119	623400.6932
10013	307+32.63	15.67	409622.7071	623418.8699
10014	307+32.63	21.67	409620.6350	623424.5008
10015	307+35.90	26.70	409621.9641	623430.3517

COORDINATE LIST

POINT NO.	STATION	OFFSET	NORTHING	EASTING
10016	306+98.86	-30.33	409606.9009	623364.0411
10017	306+98.90	37.67	409583.4477	623427.8686
10018	306+80.20	37.68	409565.8994	623421.4205
10019	207+51.86	-18.95	409626.7833	623464.0845
10020	207+79.29	-18.99	409652.5411	623473.5074
10021	207+67.08	-30.32	409644.9890	623458.6629
10022	307+95.12	28.76	409676.8311	623452.7415
10023	307+99.96	23.70	409683.1175	623449.6622
10024	307+99.94	16.70	409685.5184	623443.0869
10025	1001+00.63	0.00	409677.8371	623360.4424
10026	1001+76.98	0.00	409704.0730	623288.7397
10027	308+27.99	-23.56	409725.7461	623414.9851
10028	1000+95.87	64.00	409736.3045	623386.9045
10029	1000+95.87	34.00	409708.1312	623376.5960
10030	308+08.04	-33.66	409710.5065	623398.6196
10031	1001+63.84	34.00	409731.4877	623312.7625

COORDINATE LIST

POINT NO.	STATION	OFFSET	NORTHING	EASTING
10032	1001+63.84	64.00	409759.6610	623323.0710
10033	1001+93.75	61.62	409767.7013	623294.1685
10034	1001+78.31	39.64	409741.7531	623301.1148
10035	1002+16.96	38.00	409753.4985	623264.2476
10036	1002+20.96	38.00	409754.8730	623260.4911
10037	1002+20.96	34.00	409751.1165	623259.1167
10038	1002+32.36	34.00	409755.0307	623248.4192
10039	1002+32.36	38.00	409758.7872	623249.7937
10040	1002+35.08	40.93	409762.4732	623248.2403
10041	1002+48.03	54.84	409779.9820	623240.8618
10042	1002+29.03	54.98	409773.5920	623258.7550
10043	1002+29.03	64.01	409782.0708	623261.8574
10044	1002+33.47	40.17	409761.2042	623249.4933
10045	1002+16.96	64.01	409777.9259	623273.1855
10046	1002+18.63	40.17	409756.1059	623263.4269

DELAWARE DEPARTMENT OF TRANSPORTATION

ADDENDUMS / REVISIONS

SCALE: 1"=30'
0 30 60 90
FEET

WEST DOVER CONNECTOR

CONTRACT	BRIDGE NO.
T200411701	DESIGNED BY: RP, KM
COUNTY	CHECKED BY: BP
KENT	

GRADES AND GEOMETRICS

SHEET NO.
75
TOTAL SHTS.
320

7/17/2014 PerryR
J:\BRIDGE_HIGHWAYS\6061_DelDOT_WEST_DOVER_CONN\Civil\Civ_Sheets\06_Grade_Geo\GG02.dgn

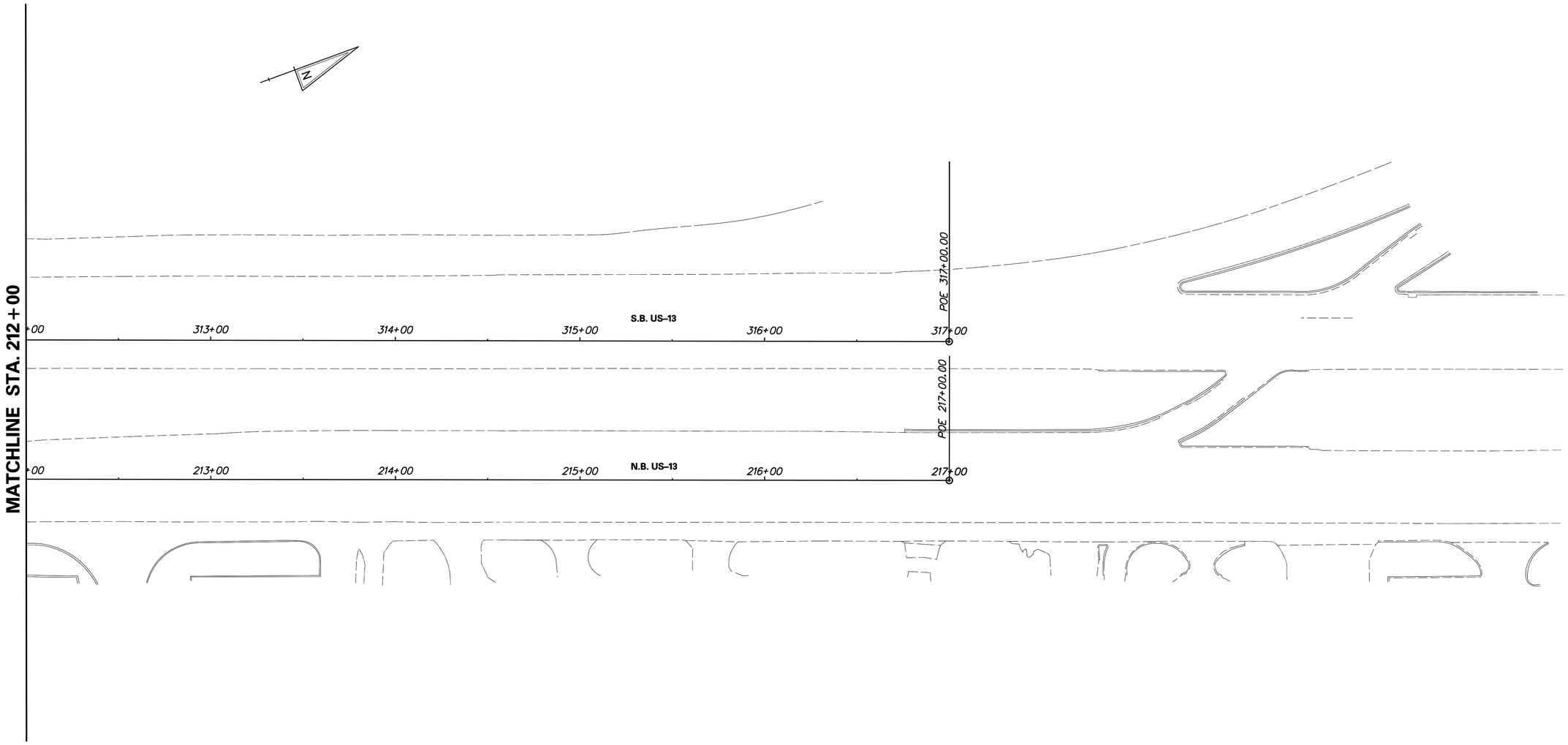

4/3/2014 deinlein
J:\BRIDGE_HIGHWAYS\6061_DelDOT_WEST_DOVER_CONN\Civil\Civ_Sheets\06_Grade_Geo\GG03.dgn

DELAWARE DEPARTMENT OF TRANSPORTATION	ADDENDUMS / REVISIONS	SCALE: 1"=30' 0 30 60 90 FEET	**WEST DOVER CONNECTOR**	CONTRACT T200411701	BRIDGE NO.	**GRADES AND GEOMETRICS**	SHEET NO. 76
				COUNTY KENT	DESIGNED BY: RP, KM		TOTAL SHTS. 320
					CHECKED BY: BP		

COORDINATE LIST

POINT NO.	STATION	OFFSET	NORTHING	EASTING
11000	1002+51.12	49.70	409776.2226	623236.1905
11001	1002+67.12	50.00	409782.0017	623221.2707
11002	1002+67.12	34.00	409766.9759	623215.7729
11003	1002+56.69	40.17	409769.1838	623227.6849
11004	1002+69.41	0.00	409735.8330	623201.9395
11005	1004+25.00	-2.00	409798.1783	623059.4904
11006	1004+25.00	2.00	409801.6284	623061.5145
11007	1005+00.00	-3.00	409835.2670	622994.2951
11008	1005+00.00	3.00	409840.4421	622997.3312
11009	1005+75.00	-3.00	409870.7142	622928.5191
11010	1005+75.00	0.00	409873.4206	622929.8135
11011	1005+75.00	3.00	409876.1272	622931.1074
11012	1005+81.41	35.00	409907.8651	622938.8456
11013	1005+81.41	50.00	409921.4524	622945.2006

COORDINATE LIST

POINT NO.	STATION	OFFSET	NORTHING	EASTING
11014	1005+95.46	48.86	409926.6274	622931.1215
11015	1005+94.05	51.47	409928.3989	622933.5484
11016	1006+50.00	-3.00	409899.5566	622859.6457
11017	1006+50.00	0.00	409902.3782	622860.6646
11018	1006+50.00	3.00	409905.1999	622861.6835
11019	1006+21.11	74.59	409961.1609	622915.6653
11020	1006+34.77	74.14	409960.2507	622901.5552
11021	1006+32.34	59.38	409951.5251	622898.6992
11022	1006+25.25	65.79	409954.6803	622908.1811
11023	1008+00.00	47.00	409985.6930	622722.5259
11024	800+96.84	48.00	410045.9081	622823.2316
11025	800+94.73	29.24	410027.6974	622818.1952
11026	800+96.26	27.75	410026.9294	622816.1281
11027	801+34.15	28.00	410040.9509	622778.6662
11028	801+34.15	-12.00	410002.9053	622766.3160

COORDINATE LIST

POINT NO.	STATION	OFFSET	NORTHING	EASTING
11029	801+16.79	54.54	410059.9354	622805.0693
11030	801+16.84	49.57	410055.2831	622803.3234
11031	801+48.62	51.00	410067.5292	622770.5357
11032	801+48.62	16.00	410033.9406	622760.6968
11033	801+25.12	29.92	410039.7396	622788.3324
11034	802+90.20	16.00	410054.7474	622616.5623
11035	802+90.20	51.00	410089.7474	622616.6246
11036	803+25.06	49.74	410088.4650	622581.6481
11037	803+14.42	28.71	410067.4452	622592.3019
11038	803+83.14	16.00	410054.6881	622523.5853
11039	803+83.14	51.00	410089.6881	622523.5624
11040	803+48.16	49.74	410088.4499	622558.5404
11041	803+60.79	26.73	410065.4296	622545.9344
11042	1009+14.40	-3.00	409944.7391	622601.5361
11043	1009+14.40	3.00	409950.7391	622601.5332

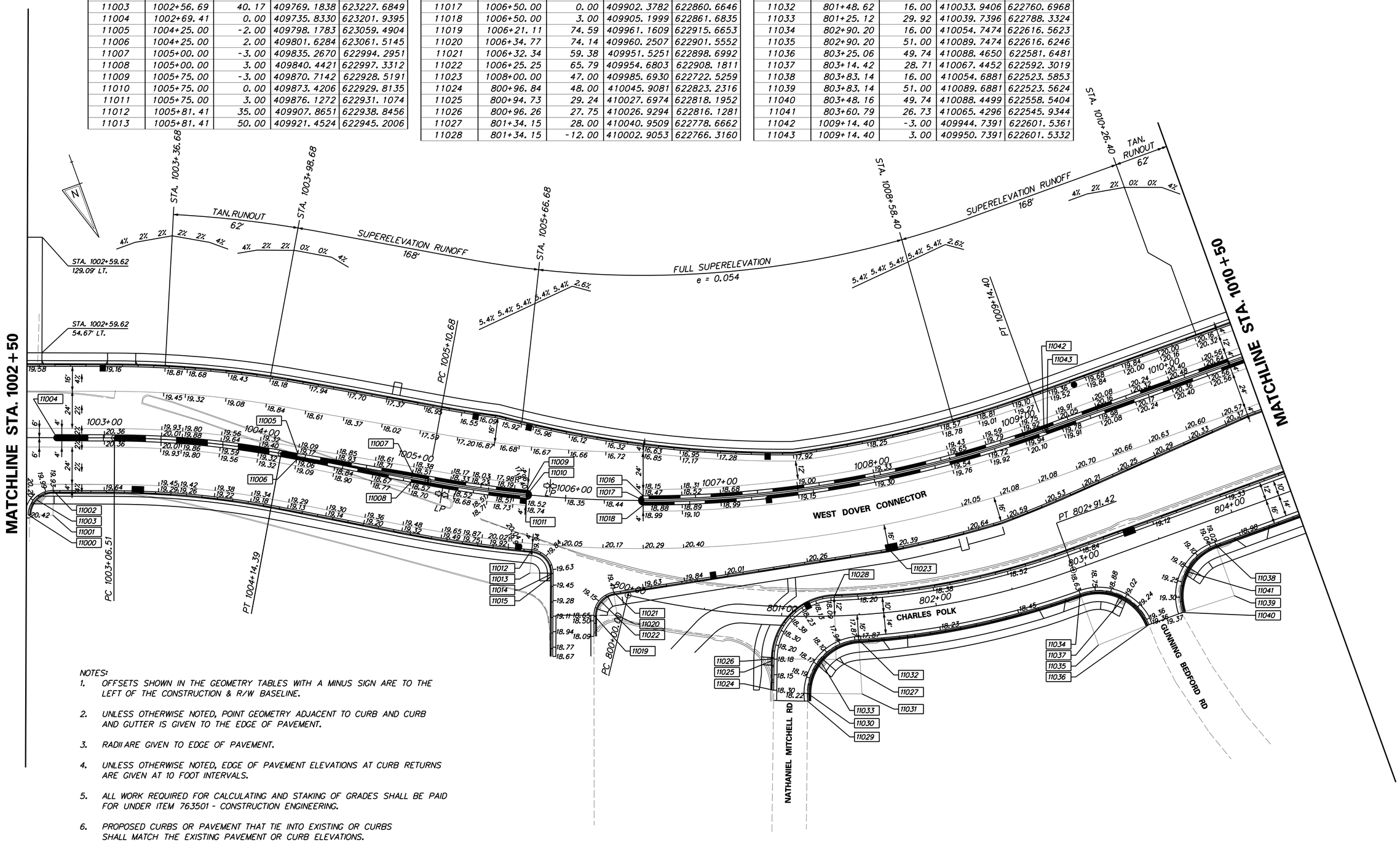

NOTES:

1. OFFSETS SHOWN IN THE GEOMETRY TABLES WITH A MINUS SIGN ARE TO THE LEFT OF THE CONSTRUCTION & R/W BASELINE.
2. UNLESS OTHERWISE NOTED, POINT GEOMETRY ADJACENT TO CURB AND CURB AND GUTTER IS GIVEN TO THE EDGE OF PAVEMENT.
3. RADII ARE GIVEN TO EDGE OF PAVEMENT.
4. UNLESS OTHERWISE NOTED, EDGE OF PAVEMENT ELEVATIONS AT CURB RETURNS ARE GIVEN AT 10 FOOT INTERVALS.
5. ALL WORK REQUIRED FOR CALCULATING AND STAKING OF GRADES SHALL BE PAID FOR UNDER ITEM 763501 - CONSTRUCTION ENGINEERING.
6. PROPOSED CURBS OR PAVEMENT THAT TIE INTO EXISTING OR CURBS SHALL MATCH THE EXISTING PAVEMENT OR CURB ELEVATIONS.

4/3/2014 deinleinj
J:\BRIDGE_HIGHWAYS\6061_DelDOT_WEST_DOVER_CONN\Civil\Civ_Sheets\06_Grade_Geo\GG04.dgn

DELAWARE DEPARTMENT OF TRANSPORTATION

ADDENDUMS / REVISIONS

SCALE: 1"=30'
0 30 60 90
FEET

WEST DOVER CONNECTOR

CONTRACT	BRIDGE NO.	
T200411701	DESIGNED BY: RP, KM	
COUNTY	CHECKED BY: BP	
KENT		

GRADES AND GEOMETRICS

SHEET NO.
77
TOTAL SHTS.
320

COORDINATE LIST

POINT NO.	STATION	OFFSET	NORTHING	EASTING
12000	805+85.96	16.00	410054.5554	622320.7693
12001	805+85.96	51.00	410089.5554	622320.7464
12002	806+20.81	47.82	410086.3565	622285.8929
12003	806+09.79	28.17	410066.7124	622296.9309
12004	806+43.57	46.49	410085.0083	622263.1374
12005	806+78.28	51.00	410089.4950	622228.4262
12006	806+78.28	16.00	410054.4950	622228.4491
12007	806+56.77	25.97	410064.4817	622249.9513
12008	808+37.56	16.00	410054.4725	622069.6299
12009	808+37.56	51.00	410089.4588	622070.6079
12010	808+82.50	46.39	410089.4992	622035.6079
12011	808+80.60	48.83	410091.5327	622037.6103
12012	809+11.10	47.57	410097.2942	622014.6440
12013	809+39.06	36.59	410096.8274	621989.6484
12014	809+40.85	11.64	410075.7531	621976.1994
12015	809+11.05	40.83	410091.0011	622012.2426

COORDINATE LIST

POINT NO.	STATION	OFFSET	NORTHING	EASTING
12016	810+79.25	-12.00	410128.5675	621848.3037
12017	810+79.25	-37.00	410106.0148	621837.5161
12018	1017+37.40	43.79	410085.5198	621823.1997
12019	811+33.38	12.00	410144.1468	621795.0550
12020	811+33.38	57.00	410180.3352	621768.3080
12021	1018+52.88	37.52	410148.8680	621736.1393
12022	1018+49.18	39.27	410147.6775	621739.8255
12023	1013+64.78	3.00	409950.4444	622151.1523
12024	1014+00.13	-3.26	409944.4212	622115.7153
12025	1014+12.41	-23.78	409924.4125	622102.3640
12026	1017+36.19	-11.57	410038.8573	621793.3786
12027	1017+37.17	38.42	410080.9348	621820.3875

COORDINATE LIST

POINT NO.	STATION	OFFSET	NORTHING	EASTING
12028	1017+63.91	-4.31	410060.9243	621774.5663
12029	1017+60.39	1.74	410063.7258	621780.9813
12030	1017+63.15	8.18	410070.5424	621782.5733
12031	1017+44.66	-38.09	410021.8526	621771.2020
12032	1017+43.83	11.90	410062.5706	621800.2200

COORDINATE LIST

POINT NO.	STATION	OFFSET	NORTHING	EASTING
12033	1018+50.90	-5.39	410117.0562	621707.2737
12034	1018+43.94	-5.30	410112.2128	621712.3593
12035	1018+44.47	46.70	410149.9364	621748.1500
12036	1018+24.67	-1.69	410101.5990	621728.9798
12037	1018+27.14	4.86	410108.1060	621731.5604
12038	1018+25.27	11.61	410111.8518	621737.4739
12039	1018+38.25	-38.67	410084.0262	621693.5452
12040	1018+37.60	13.32	410121.3154	621729.7876
12041	1018+50.65	13.49	410130.3078	621720.7289
12042	1018+51.02	-39.86	410092.6432	621682.9510

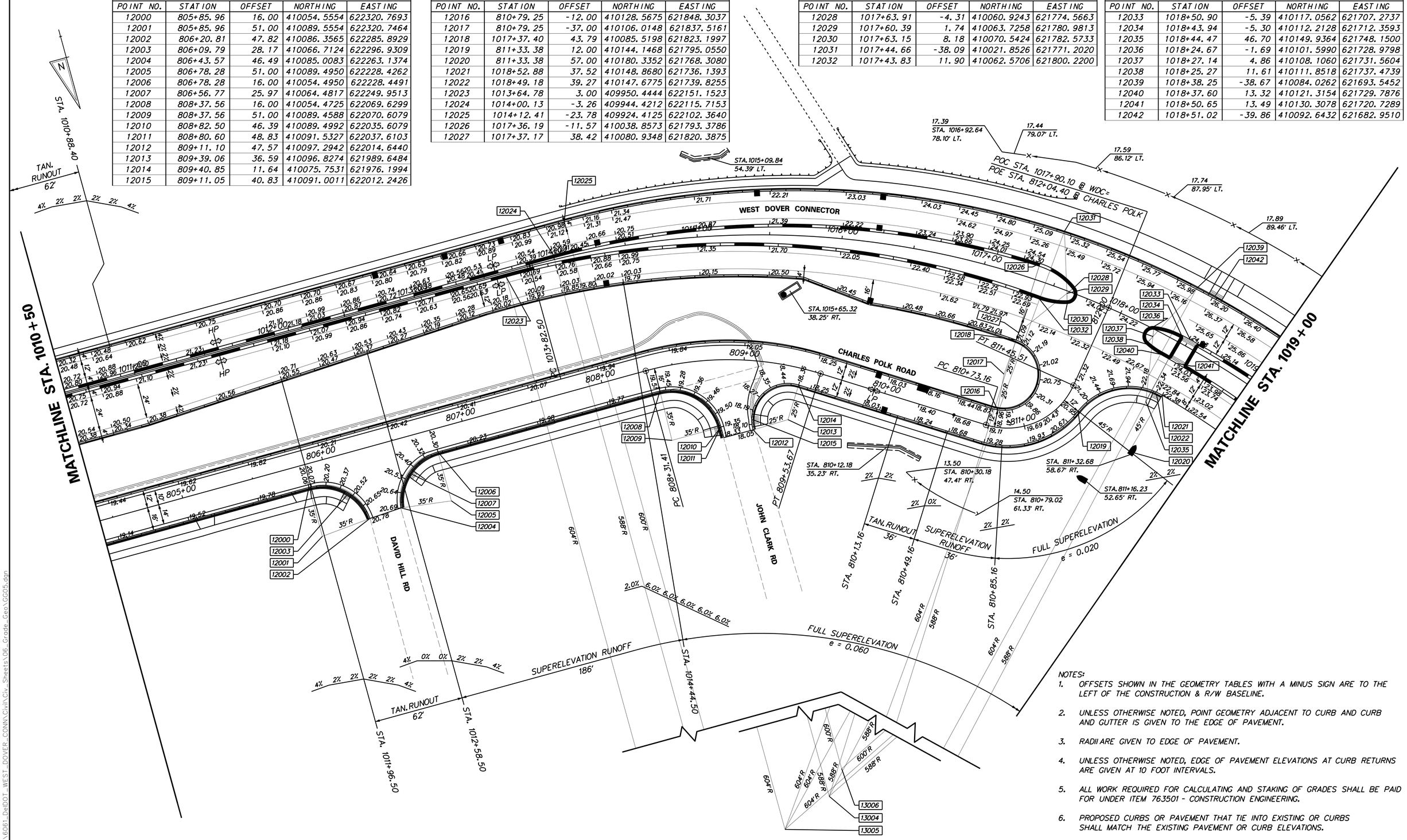

NOTES:

1. OFFSETS SHOWN IN THE GEOMETRY TABLES WITH A MINUS SIGN ARE TO THE LEFT OF THE CONSTRUCTION & R/W BASELINE.
2. UNLESS OTHERWISE NOTED, POINT GEOMETRY ADJACENT TO CURB AND CURB AND GUTTER IS GIVEN TO THE EDGE OF PAVEMENT.
3. RADII ARE GIVEN TO EDGE OF PAVEMENT.
4. UNLESS OTHERWISE NOTED, EDGE OF PAVEMENT ELEVATIONS AT CURB RETURNS ARE GIVEN AT 10 FOOT INTERVALS.
5. ALL WORK REQUIRED FOR CALCULATING AND STAKING OF GRADES SHALL BE PAID FOR UNDER ITEM 763501 - CONSTRUCTION ENGINEERING.
6. PROPOSED CURBS OR PAVEMENT THAT TIE INTO EXISTING OR CURBS SHALL MATCH THE EXISTING PAVEMENT OR CURB ELEVATIONS.

REFER TO SHEET 79 FOR COORDINATES 13004, 13005, AND 13006.

COORDINATE LIST				
POINT NO.	STATION	OFFSET	NORTHING	EASTING
13000	1020+53.06	15.00	410290.9488	621607.2628
13001	1020+55.93	-7.00	410283.9014	621586.2303
13002	1021+50.00	-7.00	410368.5490	621545.1914
13003	1021+50.00	15.00	410378.1465	621564.9875
13004	1020+55.93	581.00	410540.4211	622115.3253
13005	1013+64.78	607.00	410554.4443	622150.7571
13006	1019+42.77	561.33	410524.4124	622101.9715
13007	1020+47.78	-38.04	410262.6604	621562.0771

NOTES:

1. OFFSETS SHOWN IN THE GEOMETRY TABLES WITH A MINUS SIGN ARE TO THE LEFT OF THE CONSTRUCTION & R/W BASELINE.
2. UNLESS OTHERWISE NOTED, POINT GEOMETRY ADJACENT TO CURB AND CURB AND GUTTER IS GIVEN TO THE EDGE OF PAVEMENT.
3. RADII ARE GIVEN TO EDGE OF PAVEMENT.
4. UNLESS OTHERWISE NOTED, EDGE OF PAVEMENT ELEVATIONS AT CURB RETURNS ARE GIVEN AT 10 FOOT INTERVALS.
5. ALL WORK REQUIRED FOR CALCULATING AND STAKING OF GRADES SHALL BE PAID FOR UNDER ITEM 763501 - CONSTRUCTION ENGINEERING.
6. PROPOSED CURBS OR PAVEMENT THAT TIE INTO EXISTING OR CURBS SHALL MATCH THE EXISTING PAVEMENT OR CURB ELEVATIONS.

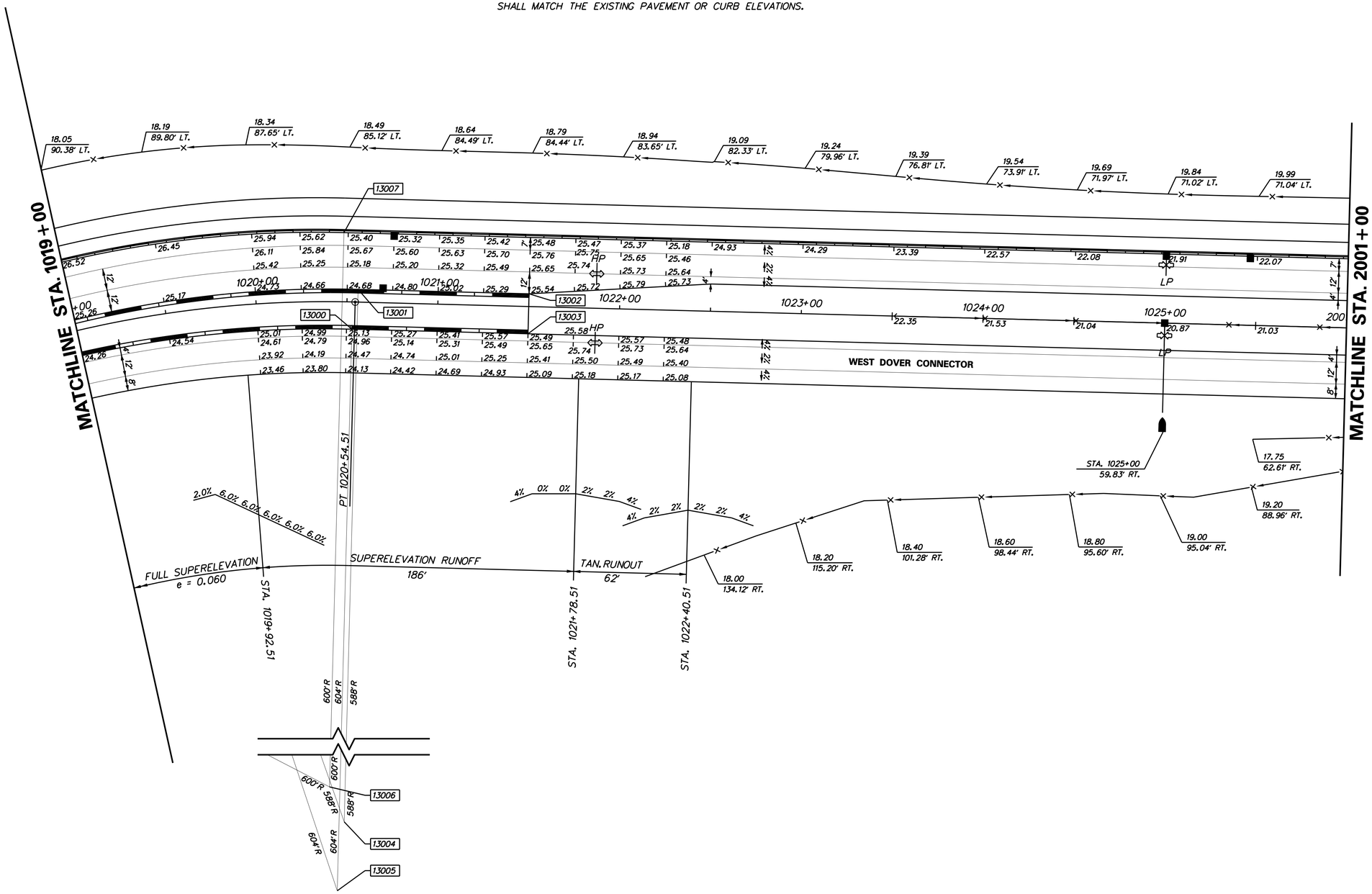

DELAWARE DEPARTMENT OF TRANSPORTATION	ADDENDUMS / REVISIONS	SCALE: 1"=30' 0 30 60 90 FEET	WEST DOVER CONNECTOR	CONTRACT T200411701 / COUNTY KENT	BRIDGE NO. / DESIGNED BY: RP, KM / CHECKED BY: BP	GRADES AND GEOMETRICS	SHEET NO. 79 / TOTAL SHTS. 320

4/3/2014 deinlein
J:\BRIDGE_HIGHWAYS\6061_DelDOT_WEST_DOVER_CONN\Civil\Civ_Sheets\06_Grade_Geo\GG06.dgn

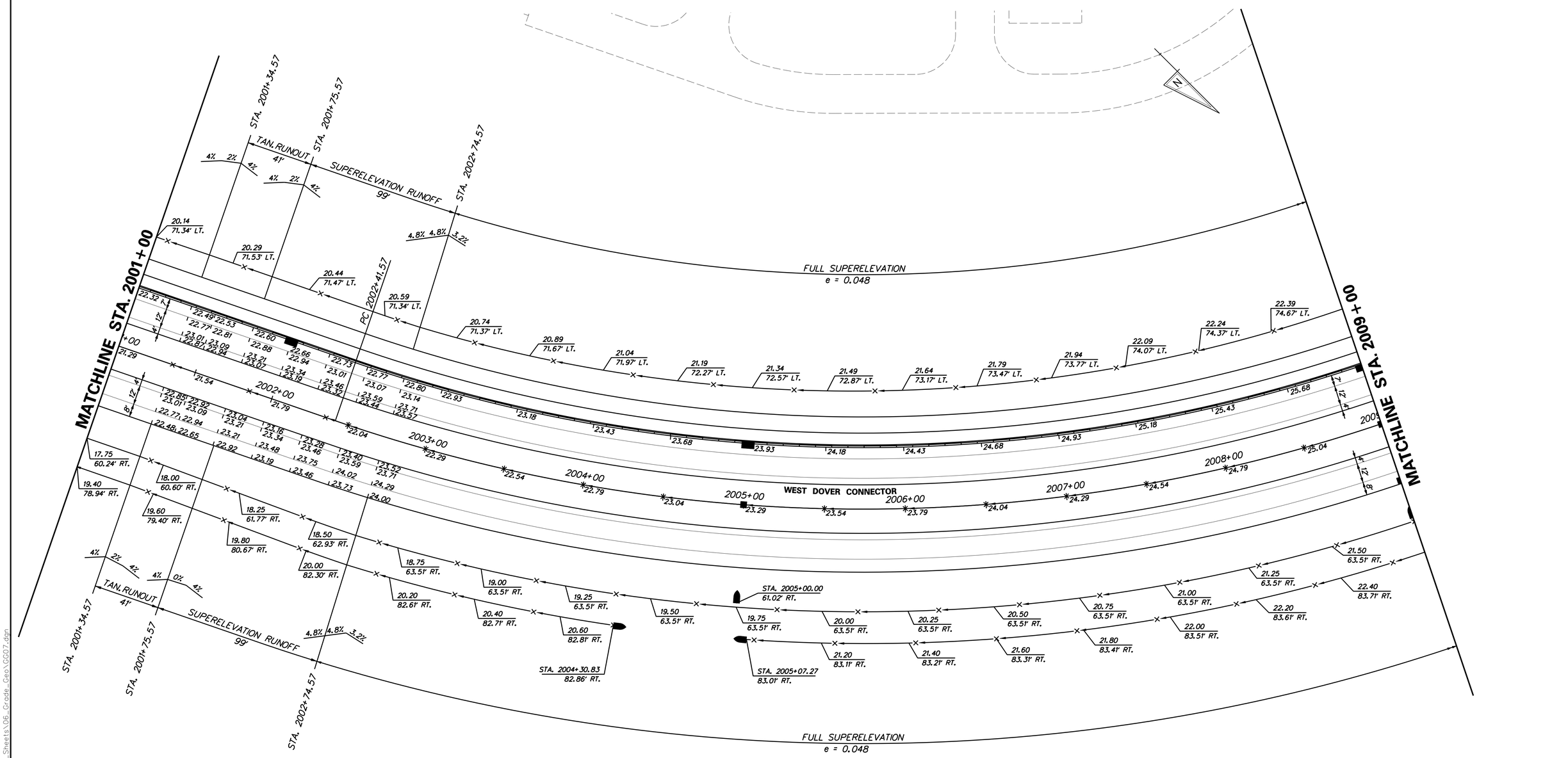

DELAWARE DEPARTMENT OF TRANSPORTATION	ADDENDUMS / REVISIONS	SCALE: 1"=30' 0 30 60 90 FEET	WEST DOVER CONNECTOR	CONTRACT T200411701	BRIDGE NO.	GRADES AND GEOMETRICS	SHEET NO. 80
				COUNTY KENT	DESIGNED BY: RP, KM		TOTAL SHTS. 320
					CHECKED BY: BP		

4/3/2014 deinlein
J:\BRIDGE_HIGHWAYS\6061_DelDOT_WEST_DOVER_CONN\Civil\Civ_Sheets\06_Grade_Geo\GG07.dgn

COORDINATE LIST

POINT NO.	STATION	OFFSET	NORTHING	EASTING
24000	1039+44.00	-38.00	411440.5596	620275.9156
24001	1039+44.00	-98.00	411380.7130	620271.6268
24002	400+98.00	-26.00	411385.0018	620211.7803
24003	1039+89.97	-59.44	411422.4568	620228.5286
24004	401+07.00	16.00	411379.0269	620169.2444
24005	1041+06.00	-107.00	411383.3157	620109.3979
24006	1041+06.00	-47.00	411443.1622	620113.6866
24007	1040+67.22	-61.22	411426.2115	620151.3497
24008	1039+96.92	-38.00	411444.3419	620223.1359
24009	1040+03.39	-47.44	411435.3889	620215.9982
24010	400+55.83	-18.00	411427.6302	620206.8288
24011	400+45.00	-16.00	411438.5798	620205.6054
24012	1040+11.99	-38.00	411445.4195	620208.0981
24013	400+51.91	18.00	411434.1130	620171.2088
24014	1040+55.00	-47.99	411438.5332	620164.4890
24015	1040+65.52	-38.00	411449.2454	620152.7110
24016	1040+47.99	-38.00	411447.9927	620172.1908
24017	400+44.96	16.00	411440.9105	620173.6906
24018	1039+48.60	4.00	411482.7806	620274.3343
24019	1039+48.52	-79.00	411399.9877	620268.4738
24020	1039+77.76	-1.32	411479.5585	620244.8624

COORDINATE LIST

POINT NO.	STATION	OFFSET	NORTHING	EASTING
24021	1039+76.00	-6.00	411474.7650	620246.2848
24022	1039+77.76	-10.68	411470.2234	620244.1934
24023	1039+48.52	67.00	411545.6143	620278.9097
24024	1039+48.60	-16.00	411462.8318	620272.9048
24025	1041+12.02	-16.00	411474.5131	620109.8986
24026	1041+12.02	67.00	411557.3008	620115.8320
24027	1040+69.50	-4.28	411483.1610	620153.1454
24028	1040+72.06	0.01	411487.6272	620150.8976
24029	1040+69.50	4.31	411491.7289	620153.7570
24030	1041+11.98	-67.00	411423.6409	620106.2910
24031	1041+11.98	16.00	411506.4286	620112.2238

NOTES:

1. OFFSETS SHOWN IN THE GEOMETRY TABLES WITH A MINUS SIGN ARE TO THE LEFT OF THE CONSTRUCTION & R/W BASELINE.
2. UNLESS OTHERWISE NOTED, POINT GEOMETRY ADJACENT TO CURB AND CURB AND GUTTER IS GIVEN TO THE EDGE OF PAVEMENT.
3. RADII ARE GIVEN TO EDGE OF PAVEMENT.
4. UNLESS OTHERWISE NOTED, EDGE OF PAVEMENT ELEVATIONS AT CURB RETURNS ARE GIVEN AT 10 FOOT INTERVALS.
5. ALL WORK REQUIRED FOR CALCULATING AND STAKING OF GRADES SHALL BE PAID FOR UNDER ITEM 763501 - CONSTRUCTION ENGINEERING.
6. PROPOSED CURBS OR PAVEMENT THAT TIE INTO EXISTING OR CURBS SHALL MATCH THE EXISTING PAVEMENT OR CURB ELEVATIONS.

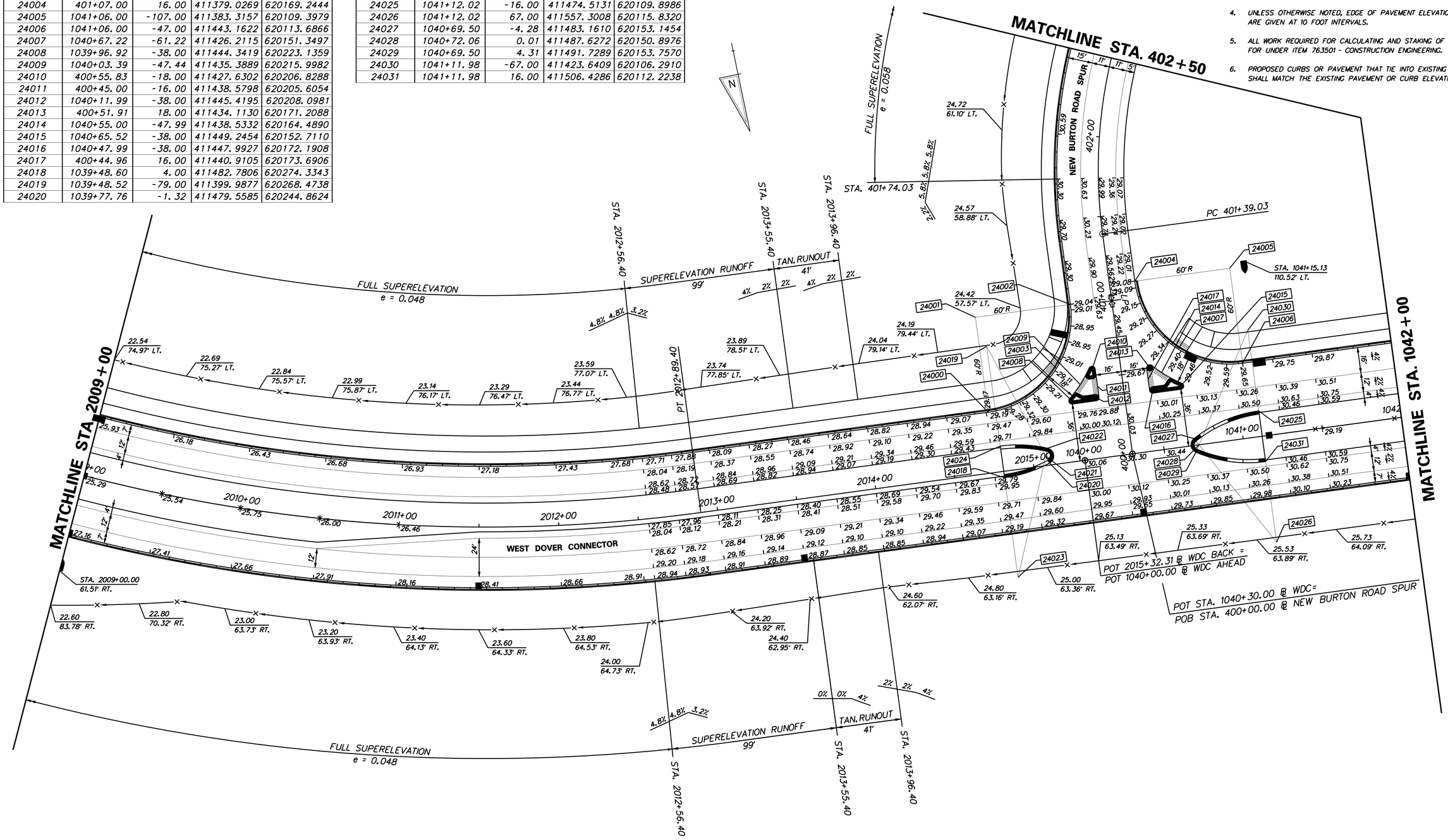

DELAWARE DEPARTMENT OF TRANSPORTATION	ADDENDUMS / REVISIONS	SCALE: 1"=30' (0, 30, 60, 90 FEET)	WEST DOVER CONNECTOR	CONTRACT T200411701	BRIDGE NO.	GRADES AND GEOMETRICS	SHEET NO. 81
				COUNTY KENT	DESIGNED BY: RP, KM		TOTAL SHTS. 320
					CHECKED BY: BP		

4/3/2014 deinlein
J:\BRIDGE_HIGHWAYS\6061_DelDOT_WEST_DOVER_CONN\Civil\Civ_Sheets\06_Grade_Geo\GG08.dgn

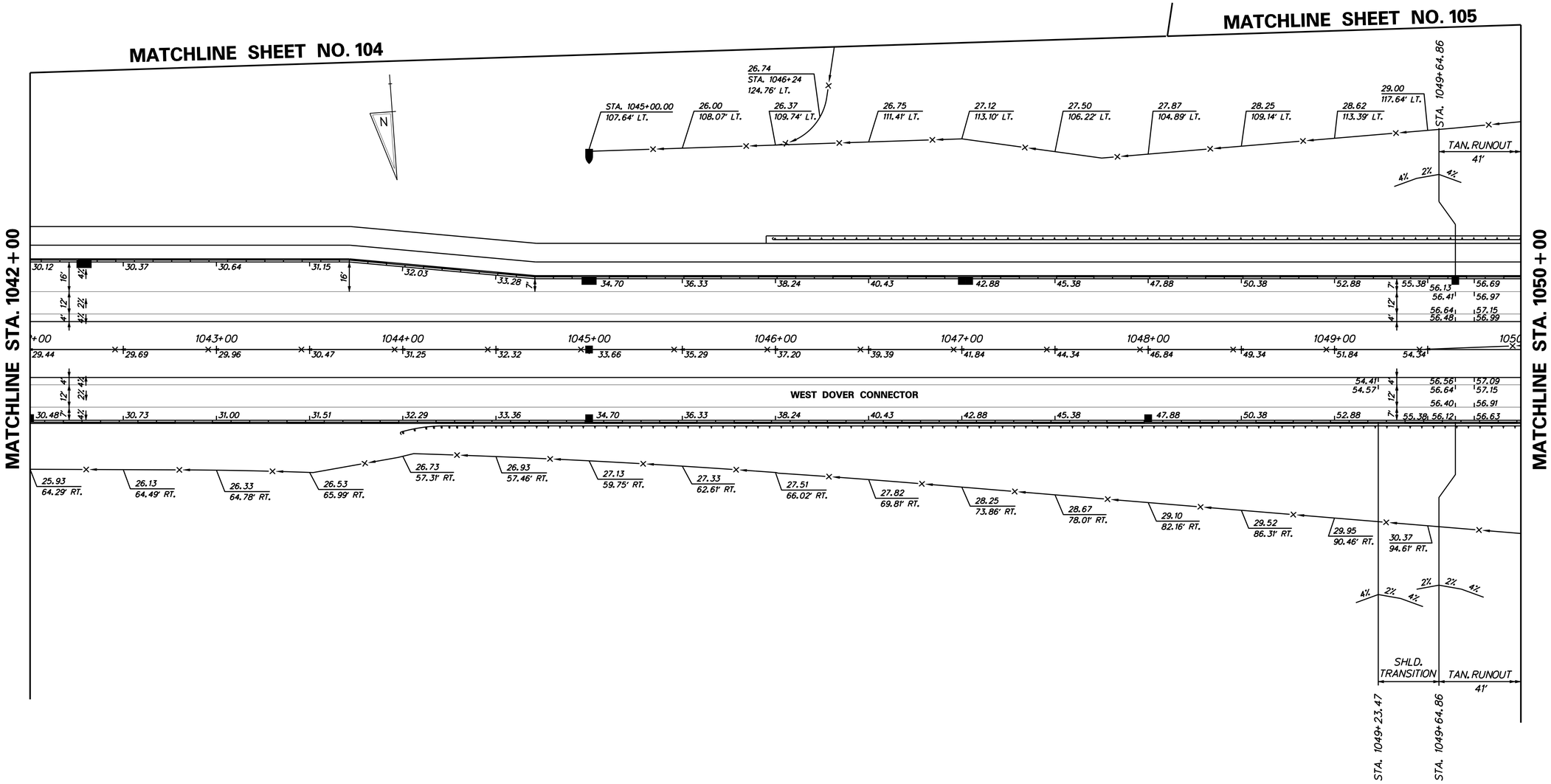

DELAWARE DEPARTMENT OF TRANSPORTATION	ADDENDUMS / REVISIONS	SCALE: 1"=30' 0 30 60 90 FEET	WEST DOVER CONNECTOR	CONTRACT T200411701	BRIDGE NO.	GRADES AND GEOMETRICS
				COUNTY KENT	DESIGNED BY: RP, KM	SHEET NO. 82
					CHECKED BY: BP	TOTAL SHTS. 320

4/3/2014 deinlein
J:\BRIDGE_HIGHWAYS\6061_DelDOT_WEST_DOVER_CONN\Civil\Civ_Sheets\06_Grade_Geo\GG09.dgn

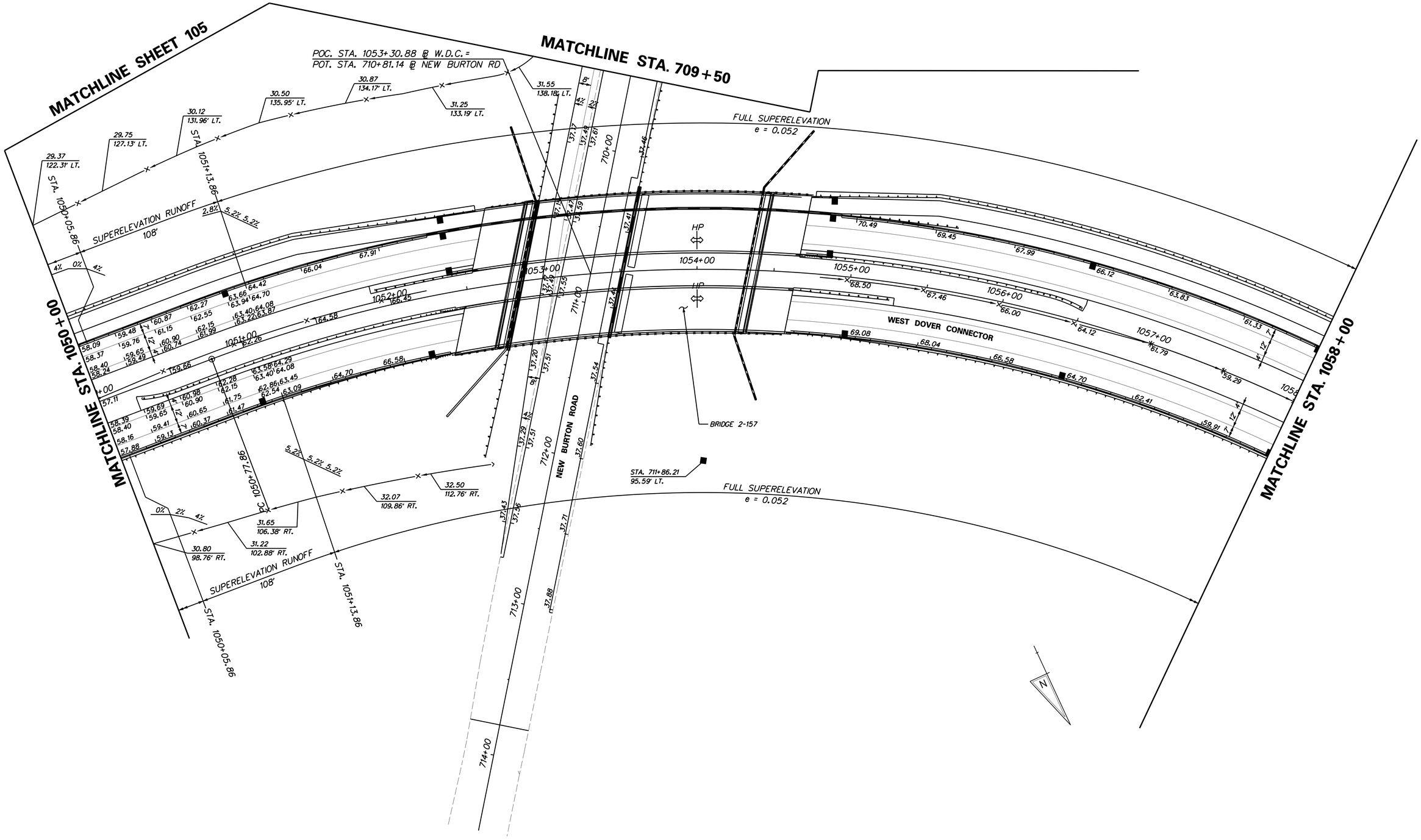

DELAWARE DEPARTMENT OF TRANSPORTATION	ADDENDUMS / REVISIONS	SCALE: 1"=30' (0, 30, 60, 90 FEET)	WEST DOVER CONNECTOR	CONTRACT T200411701	BRIDGE NO.	GRADES AND GEOMETRICS	SHEET NO. 83
				COUNTY KENT	DESIGNED BY: RP, KM		TOTAL SHTS. 320
					CHECKED BY: BP		

4/3/2014 deinlein
J:\BRIDGE_HIGHWAYS\6061_DelDOT_WEST_DOVER_CONN\Civil\Civ_Sheets\06_Grade_Geo\GG10.dgn

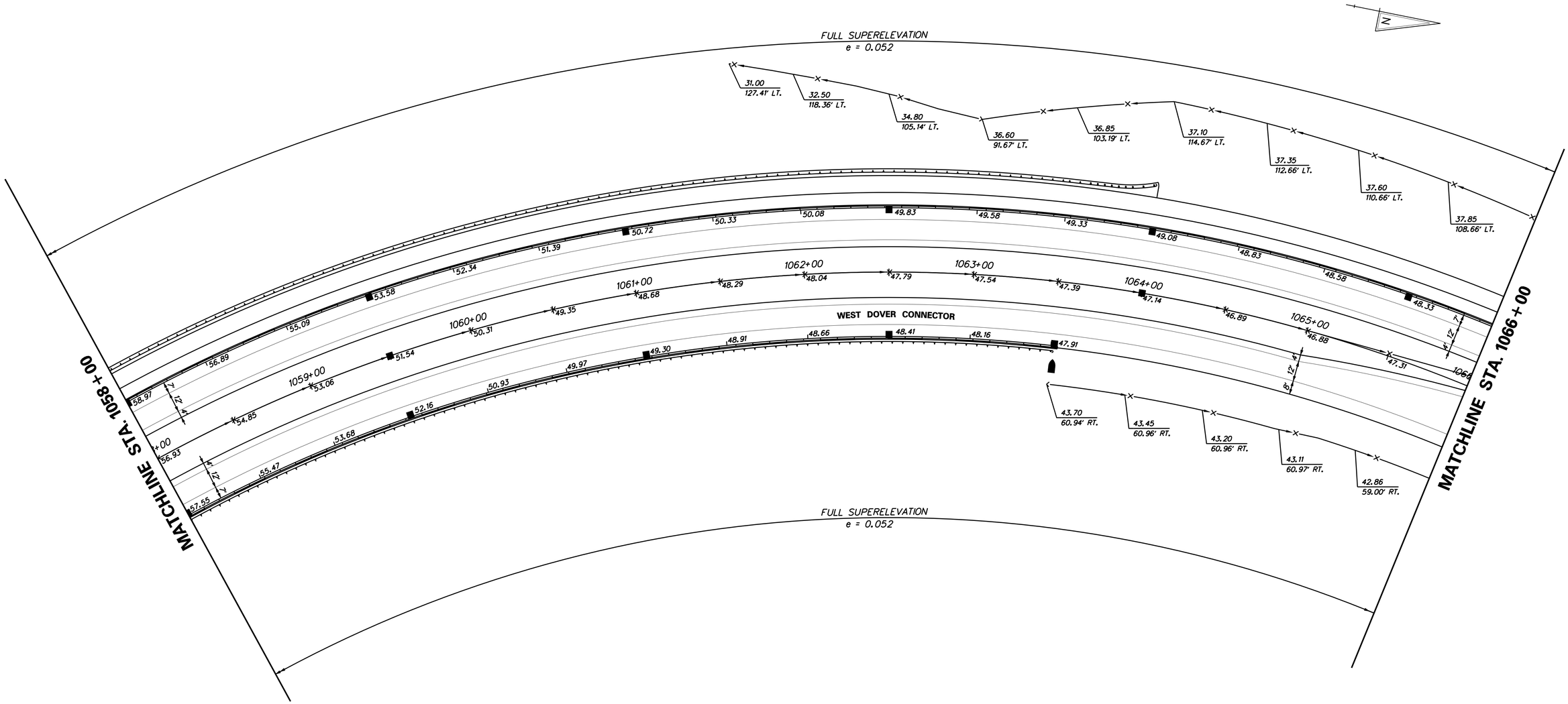

4/3/2014 deinlein
J:\BRIDGE_HIGHWAYS\6061_DelDOT_WEST_DOVER_CONN\Civil\Civ_Sheets\06_Grade_Geo\GG11.dgn

DELAWARE DEPARTMENT OF TRANSPORTATION	ADDENDUMS / REVISIONS	SCALE: 1"=30' 0 30 60 90 FEET	**WEST DOVER CONNECTOR**	CONTRACT T200411701	BRIDGE NO.	**GRADES AND GEOMETRICS**	SHEET NO. 84
				COUNTY KENT	DESIGNED BY: RP, KM		TOTAL SHTS. 320
					CHECKED BY: BP		

COORDINATE LIST

POINT NO.	STATION	OFFSET	NORTHING	EASTING
15000	1068+60.12	-38.00	412891.2163	618380.4547
15001	1068+60.12	-113.00	412925.9185	618313.9660
15002	511+86.25	26.00	412988.6160	618355.1244
15003	1069+06.27	-59.88	412944.3758	618384.9380
15004	511+76.26	-16.00	413029.2079	618369.8234
15005	1070+30.24	-122.00	413091.9054	618410.9819
15006	1070+30.24	-47.00	413045.3278	618469.7656
15007	1069+90.53	-63.17	413021.4843	618431.4427
15008	512+30.38	18.00	412971.0889	618396.4016
15009	512+49.36	16.00	412962.3449	618413.3665
15010	1069+32.73	-38.00	412956.8202	618418.1368
15011	1069+12.44	-38.00	412938.8022	618407.0788
15012	1069+19.69	-47.74	412950.3416	618402.6650
15013	512+35.48	-18.00	412998.3811	618420.4269
15014	1069+79.56	-48.58	413003.5306	618436.5531
15015	1069+91.46	-38.00	413007.5252	618452.4063
15016	1069+67.27	-38.00	412986.9153	618437.8930
15017	512+49.36	-16.00	412989.0962	618430.9267
15018	1068+73.61	4.00	412883.6409	618423.9909
15019	1068+73.61	79.00	412923.1431	618350.9938
15020	1068+95.26	0.87	412904.0291	618431.7629
15021	1068+93.85	-3.92	412905.1806	618426.8973

COORDINATE LIST

POINT NO.	STATION	OFFSET	NORTHING	EASTING
15022	1068+95.83	-8.51	412909.1870	618423.9059
15023	1068+60.18	67.00	412842.6806	618473.5638
15024	1068+60.18	-16.00	412881.0892	618399.9853
15025	1070+39.82	-16.00	413033.6867	618500.1598
15026	1070+39.82	67.00	412981.4511	618564.6612
15027	1069+90.97	-1.39	412985.6521	618481.7676
15028	1069+93.70	2.80	412985.3990	618486.7612
15029	1069+91.37	7.23	412980.9179	618488.9793
15030	1070+27.34	-67.00	413055.3041	618452.1596
15031	1070+27.34	16.00	413003.9680	618517.3792
15032	1069+10.16	39.00	412897.3879	618472.0333
15033	1069+10.16	64.00	412884.6068	618493.5192
15034	1069+37.07	64.73	412905.5060	618507.2387
15035	1069+62.93	64.73	412925.5692	618520.4094
15036	1069+89.95	64.00	412946.4683	618534.1289
15037	1069+89.95	39.00	412961.0994	618513.8574

NOTES:

1. OFFSETS SHOWN IN THE GEOMETRY TABLES WITH A MINUS SIGN ARE TO THE LEFT OF THE CONSTRUCTION & R/W BASELINE.
2. UNLESS OTHERWISE NOTED, POINT GEOMETRY ADJACENT TO CURB AND CURB AND GUTTER IS GIVEN TO THE EDGE OF PAVEMENT.
3. RADII ARE GIVEN TO EDGE OF PAVEMENT.
4. UNLESS OTHERWISE NOTED, EDGE OF PAVEMENT ELEVATIONS AT CURB RETURNS ARE GIVEN AT 10 FOOT INTERVALS.
5. ALL WORK REQUIRED FOR CALCULATING AND STAKING OF GRADES SHALL BE PAID FOR UNDER ITEM 763501 - CONSTRUCTION ENGINEERING.
6. PROPOSED CURBS OR PAVEMENT THAT TIE INTO EXISTING OR CURBS SHALL MATCH THE EXISTING PAVEMENT OR CURB ELEVATIONS.

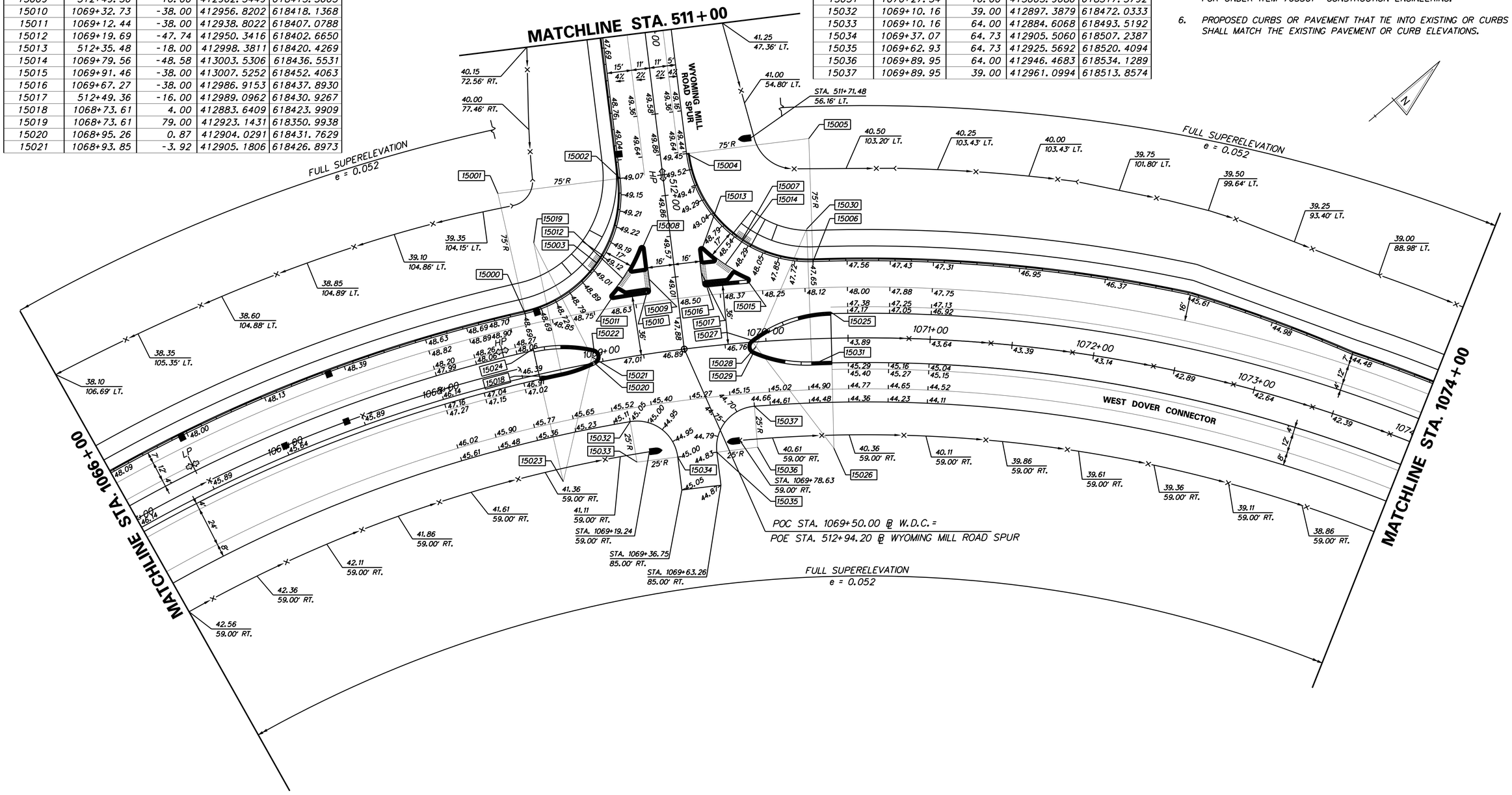

DELAWARE DEPARTMENT OF TRANSPORTATION	ADDENDUMS / REVISIONS	SCALE: 1"=30' (0 30 60 90 FEET)	WEST DOVER CONNECTOR	CONTRACT T200411701	BRIDGE NO.	GRADES AND GEOMETRICS	SHEET NO. 85
				COUNTY KENT	DESIGNED BY: RP, KM		TOTAL SHTS. 320
					CHECKED BY: BP		

4/3/2014 deinlein
J:\BRIDGE_HIGHWAYS\6061_DelDOT_WEST_DOVER_CONN\Civil\Civ_Sheets\06_Grade_Geo\GG12.dgn

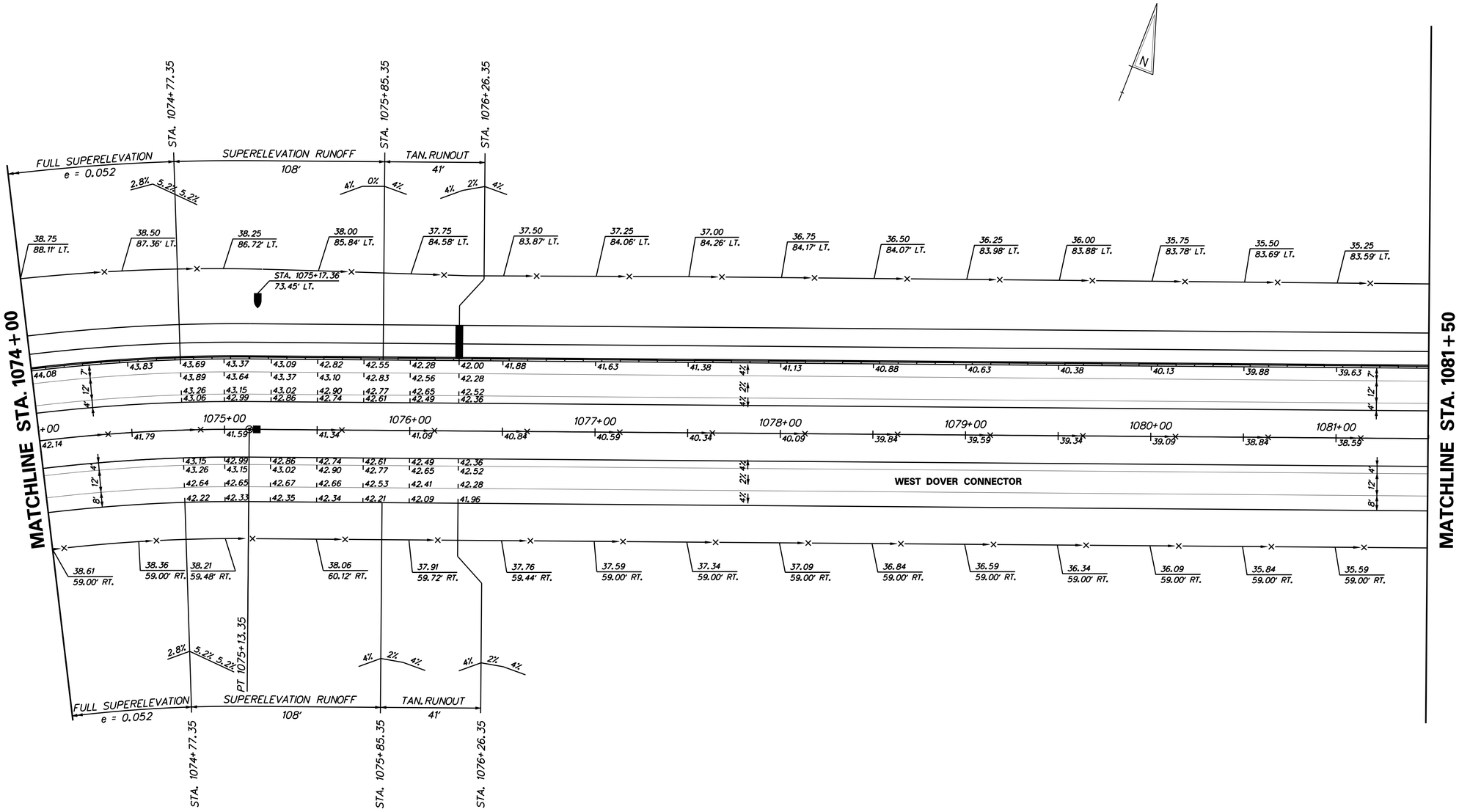

4/3/2014 deinlein
J:\BRIDGE_HIGHWAYS\6061_DelDOT_WEST_DOVER_CONN\Civil\Civ_Sheets\06_Grade_Geo\GG13.dgn

DELAWARE DEPARTMENT OF TRANSPORTATION	ADDENDUMS / REVISIONS	SCALE: 1"=30' (0, 30, 60, 90 FEET)	**WEST DOVER CONNECTOR**	CONTRACT T200411701	BRIDGE NO.	**GRADES AND GEOMETRICS**	SHEET NO. 86
				COUNTY KENT	DESIGNED BY: RP, KM		TOTAL SHTS. 320
					CHECKED BY: BP		

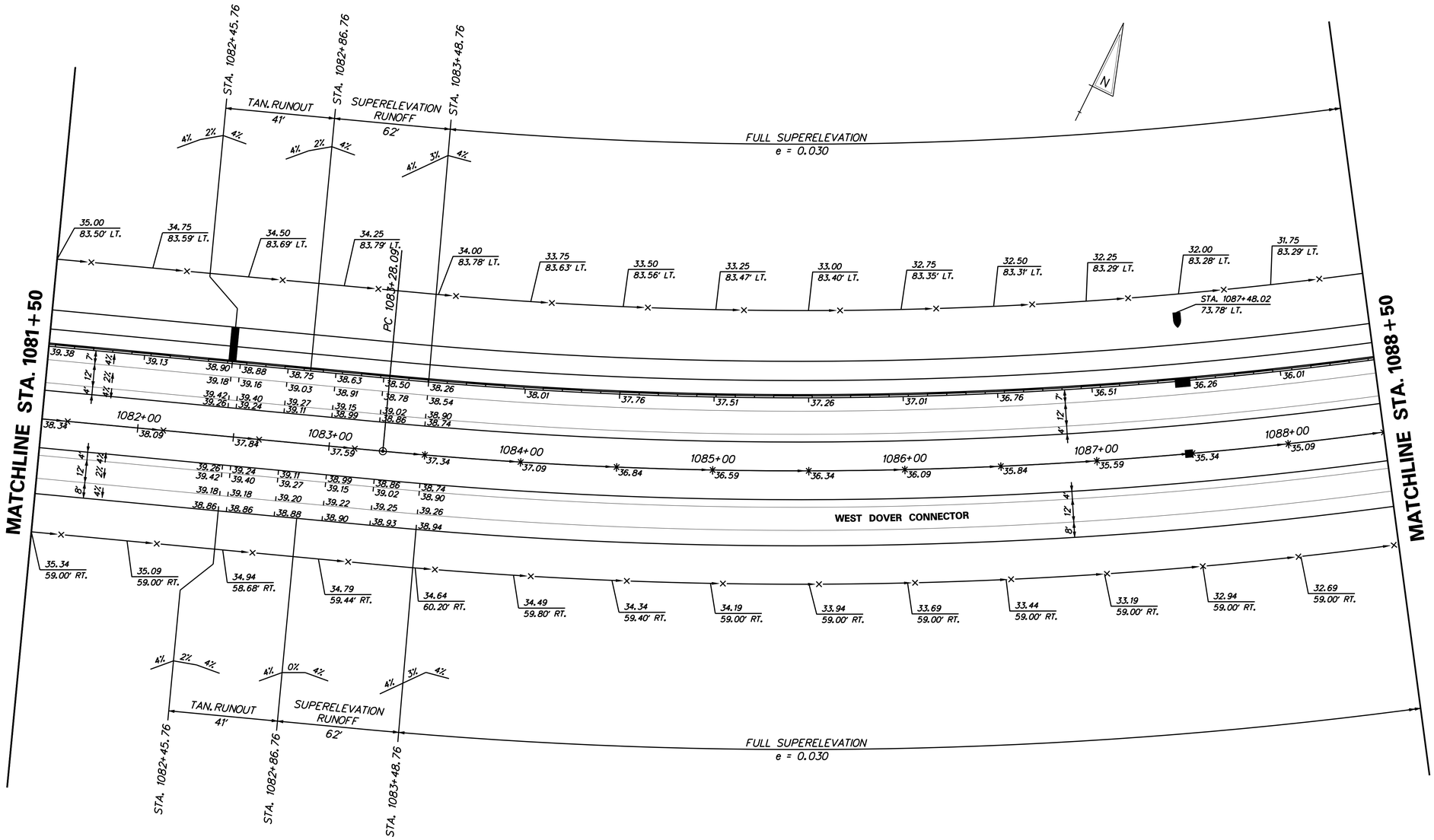

DELAWARE DEPARTMENT OF TRANSPORTATION	ADDENDUMS / REVISIONS	SCALE: 1"=30' 0 30 60 90 FEET	WEST DOVER CONNECTOR	CONTRACT T200411701	BRIDGE NO.	GRADES AND GEOMETRICS	SHEET NO. 87
				COUNTY KENT	DESIGNED BY: RP, KM		TOTAL SHTS. 320
					CHECKED BY: BP		

4/3/2014 deinleinj
J:\BRIDGE_HIGHWAYS\6061_DelDOT_WEST_DOVER_CONN\Civil\Civ_Sheets\06_Grade_Geo\GG14.dgn

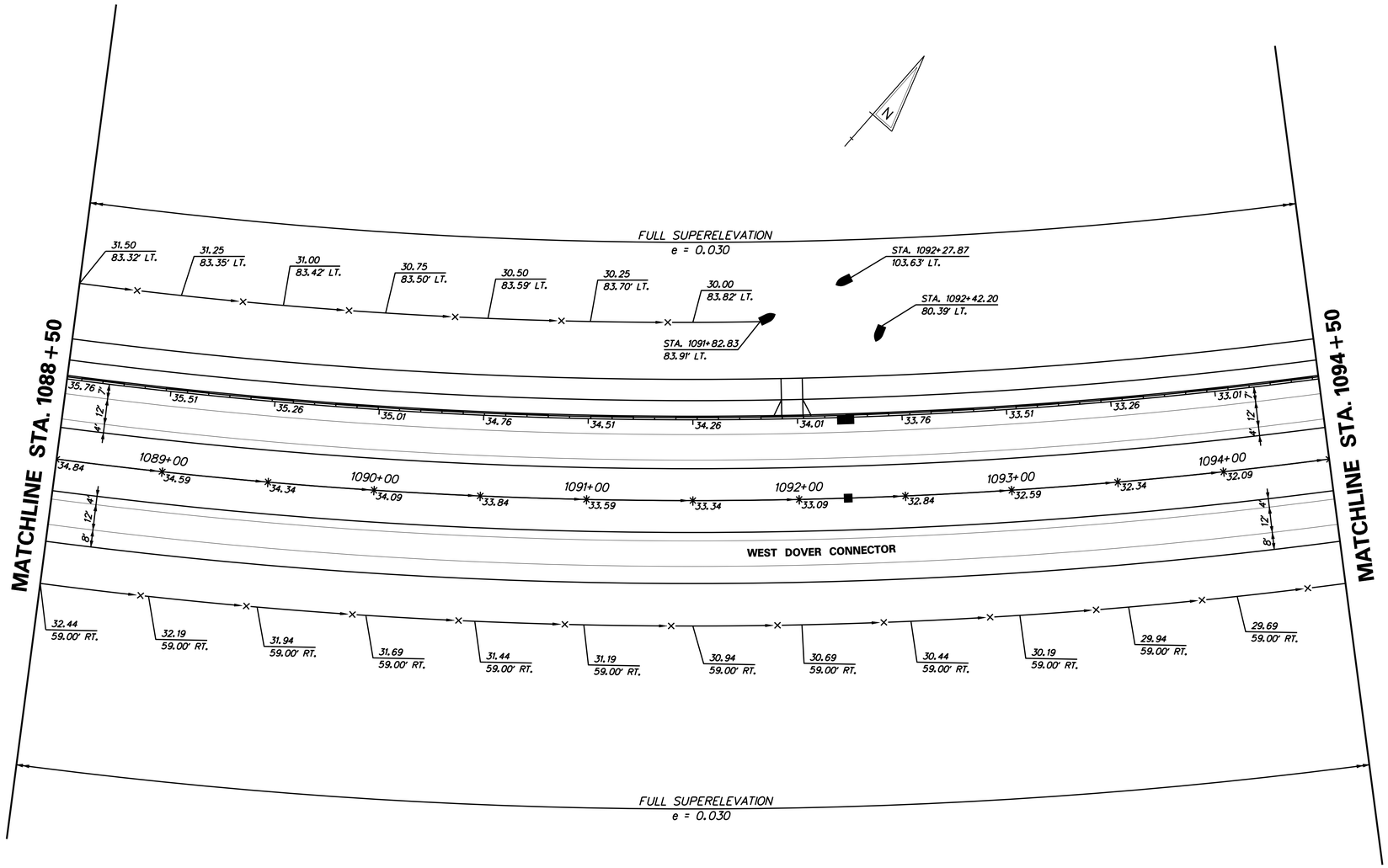

4/3/2014 deinlein
J:\BRIDGE_HIGHWAYS\6061_DelDOT_WEST_DOVER_CONN\Civil\Civ_Sheets\06_Grade_Geo\G615.dgn

DELAWARE DEPARTMENT OF TRANSPORTATION

ADDENDUMS / REVISIONS

SCALE: 1"=30'
0 30 60 90
FEET

WEST DOVER CONNECTOR

CONTRACT	BRIDGE NO.
T200411701	DESIGNED BY: RP, KM
COUNTY	CHECKED BY: BP
KENT	

GRADES AND GEOMETRICS

SHEET NO.
88
TOTAL SHTS.
320

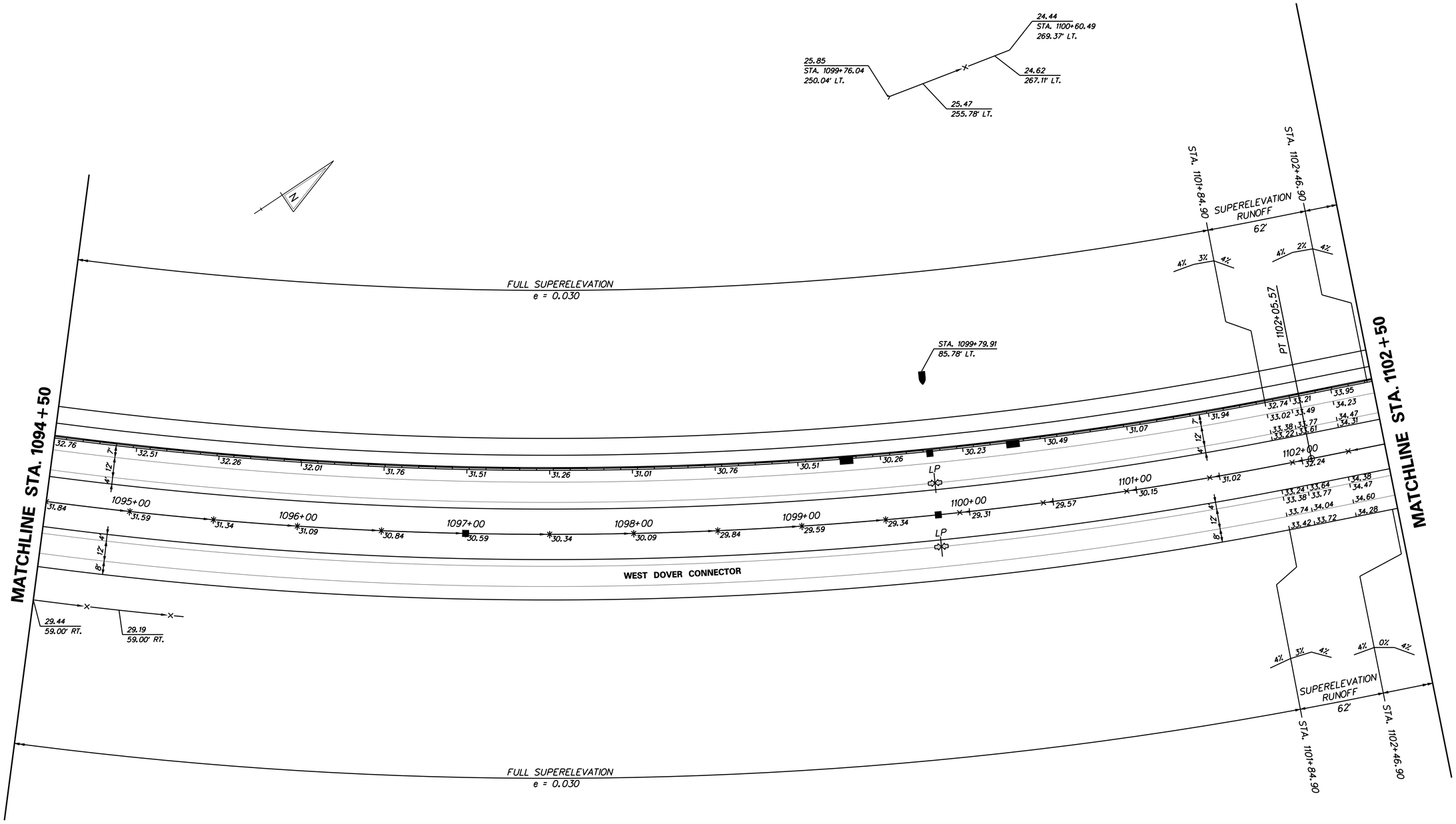

4/3/2014 deinlein
J:\BRIDGE_HIGHWAYS\60611_DelDOT_WEST_DOVER_CONN\Civil\Civ_Sheets\06_Grade_Geo\GG16.dgn

DELAWARE DEPARTMENT OF TRANSPORTATION	ADDENDUMS / REVISIONS	SCALE: 1"=30' 0 30 60 90 FEET	WEST DOVER CONNECTOR	CONTRACT T200411701	BRIDGE NO.	GRADES AND GEOMETRICS	SHEET NO. 89
				COUNTY KENT	DESIGNED BY: RP, KM		TOTAL SHTS. 320
					CHECKED BY: BP		

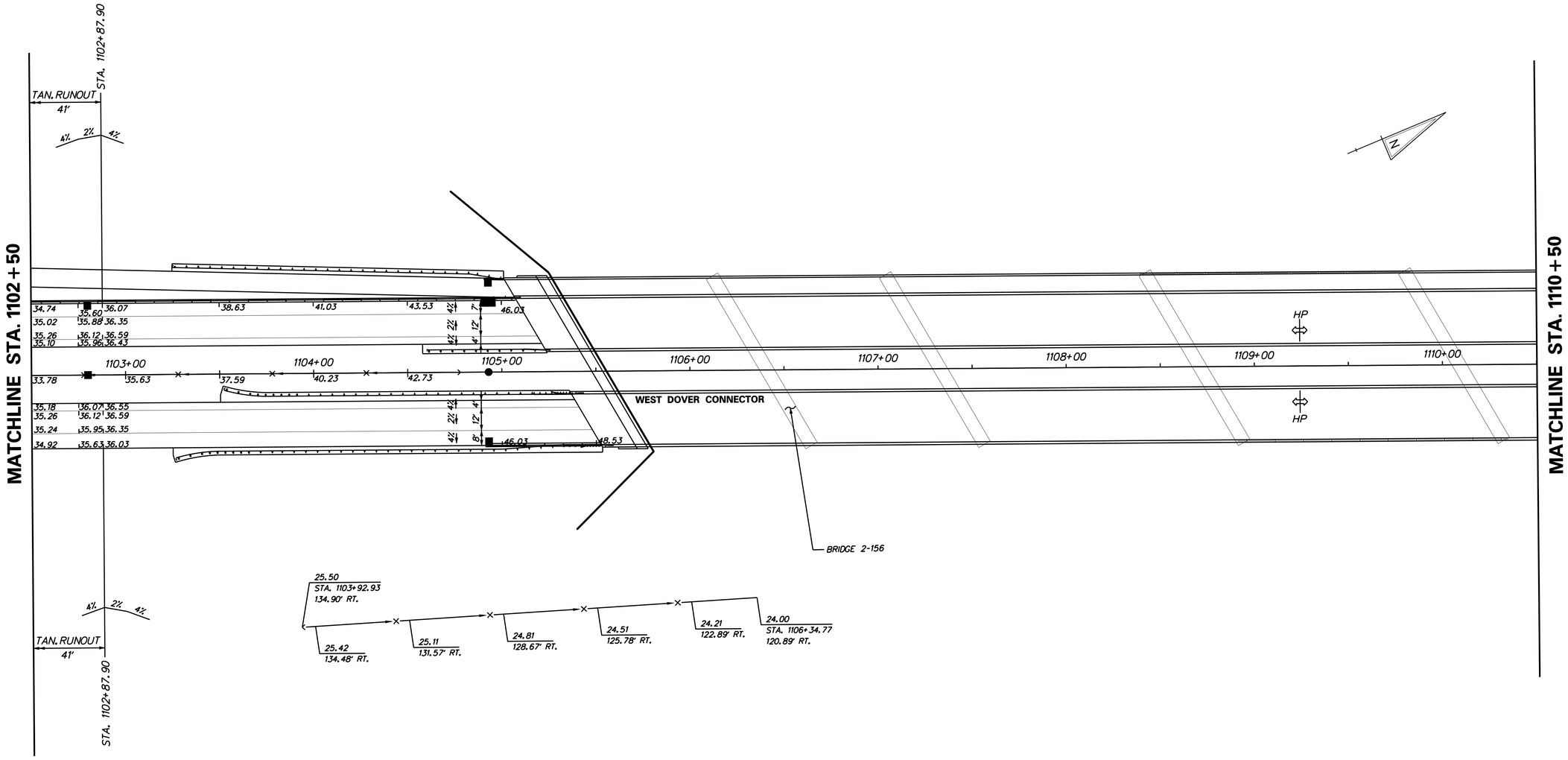

4/3/2014 deinleinj
J:\BRIDGE_HIGHWAYS\6061_DelDOT_WEST_DOVER_CONN\Civil\Civ_Sheets\06_Grade_Geo\GG17.dgn

DELAWARE DEPARTMENT OF TRANSPORTATION	ADDENDUMS / REVISIONS	SCALE: 1"=30' 0 30 60 90 FEET	WEST DOVER CONNECTOR	CONTRACT T200411701	BRIDGE NO.	GRADES AND GEOMETRICS	SHEET NO. 90
				COUNTY KENT	DESIGNED BY: RP, KM		TOTAL SHTS. 320
					CHECKED BY: BP		

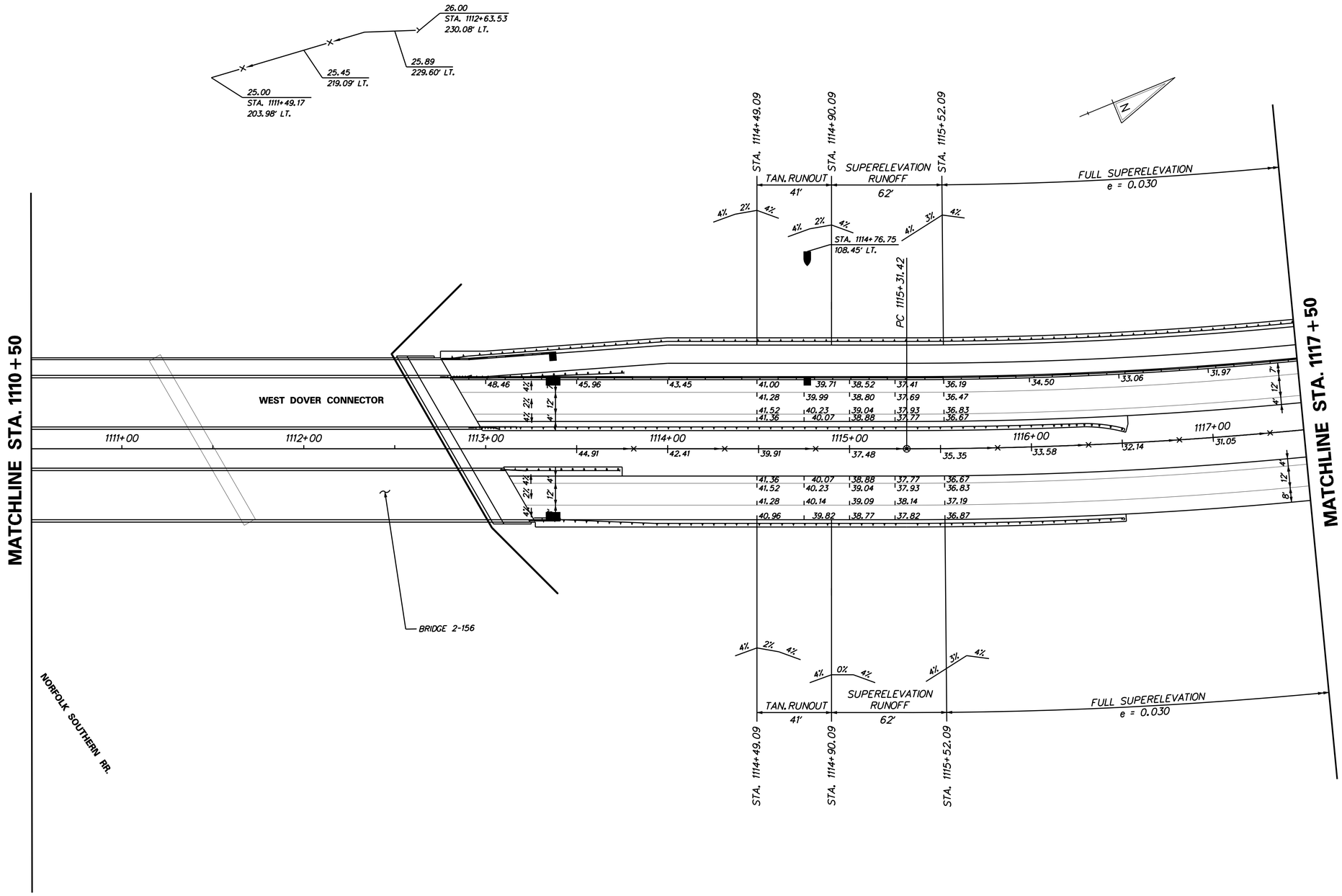

DELAWARE DEPARTMENT OF TRANSPORTATION	ADDENDUMS / REVISIONS	SCALE: 1"=30' (0, 30, 60, 90 FEET)	WEST DOVER CONNECTOR	CONTRACT T200411701	BRIDGE NO.	GRADES AND GEOMETRICS	SHEET NO. 91
				COUNTY KENT	DESIGNED BY: RP, KM		TOTAL SHTS. 320
					CHECKED BY: BP		

4/3/2014 deinlein
J:\BRIDGE_HIGHWAYS\6061_DelDOT_WEST_DOVER_CONN\Civil\Civ_Sheets\06_Grade_Geo\GG18.dgn

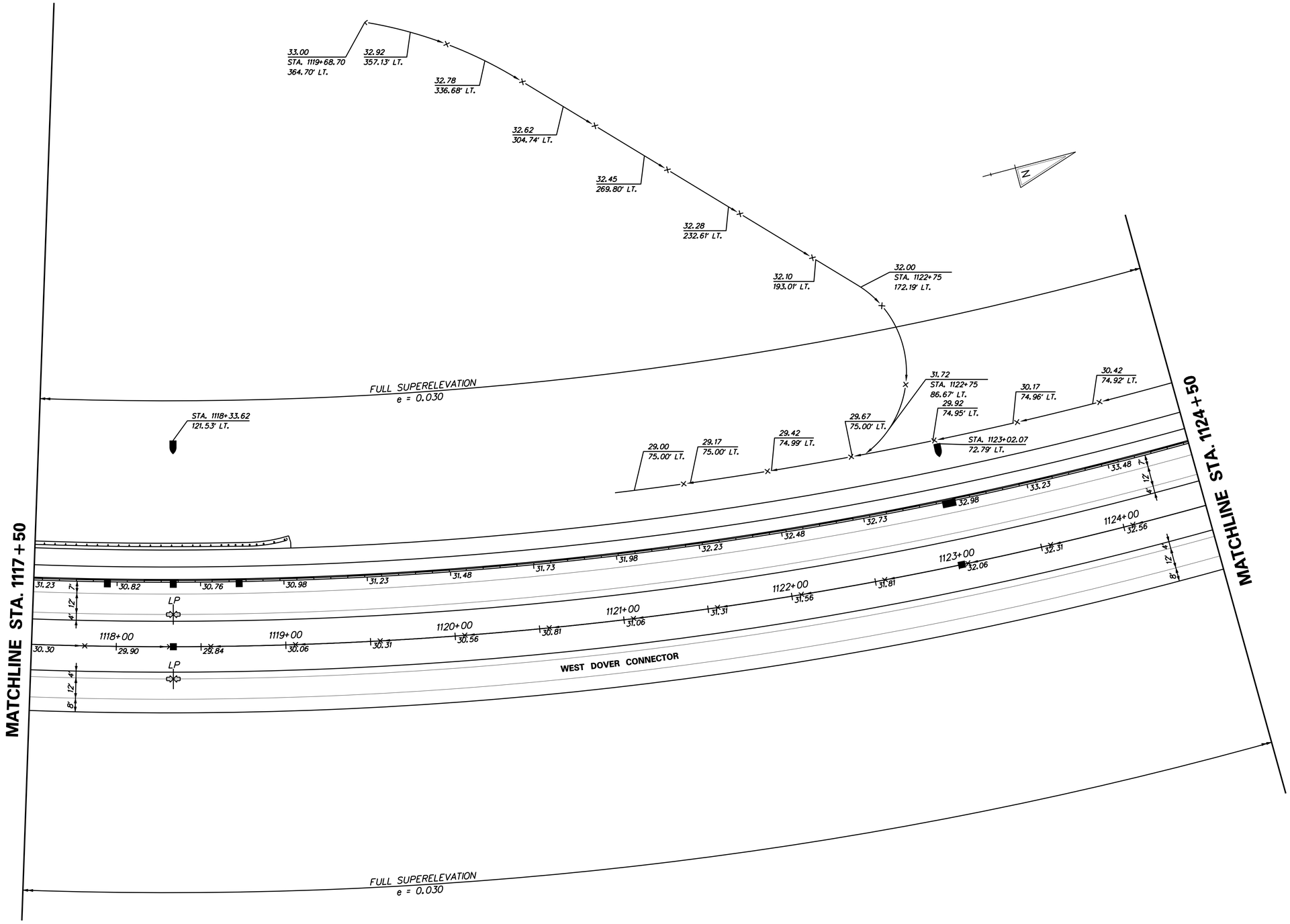

DELAWARE DEPARTMENT OF TRANSPORTATION	ADDENDUMS / REVISIONS	SCALE: 1"=30' (0, 30, 60, 90 FEET)	WEST DOVER CONNECTOR	CONTRACT T200411701	BRIDGE NO.	GRADES AND GEOMETRICS	SHEET NO. 92
				COUNTY KENT	DESIGNED BY: RP, KM		TOTAL SHTS. 320
					CHECKED BY: BP		

4/3/2014 deinlein
J:\BRIDGE_HIGHWAYS\6061_DelDOT_WEST_DOVER_CONN\Civil\Civ_Sheets\06_Grade_Geo\GG19.dgn

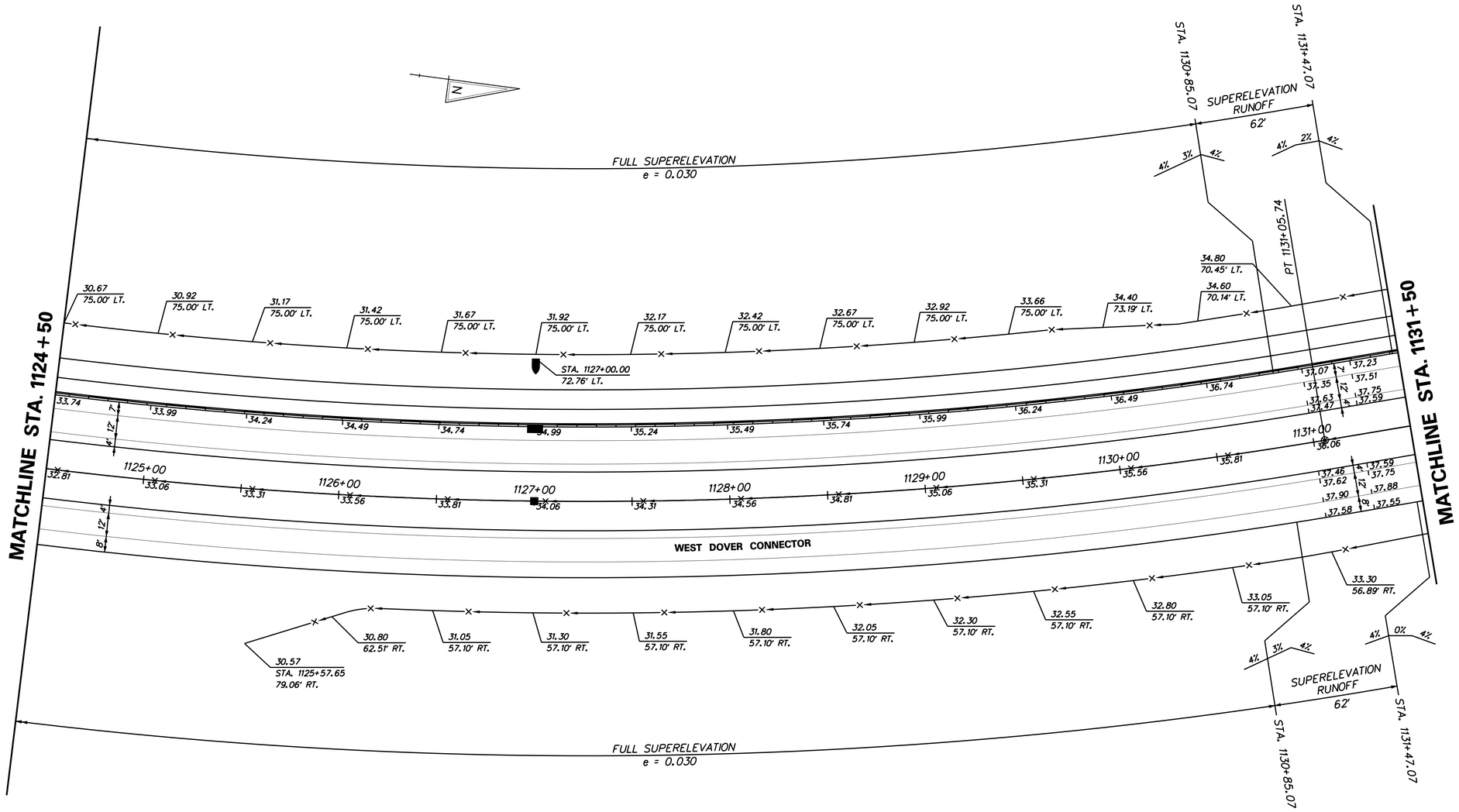

4/3/2014 deinleinj
J:\BRIDGE_HIGHWAYS\6061_DelDOT_WEST_DOVER_CONN\Civil\Civ_Sheets\06_Grade_Geo\GG20.dgn

DELAWARE DEPARTMENT OF TRANSPORTATION	ADDENDUMS / REVISIONS	SCALE: 1"=30' (0, 30, 60, 90 FEET)	**WEST DOVER CONNECTOR**	CONTRACT T200411701	BRIDGE NO.	**GRADES AND GEOMETRICS**	SHEET NO. 93
				COUNTY KENT	DESIGNED BY: RP, KM		TOTAL SHTS. 320
					CHECKED BY: BP		

NOTES:

1. OFFSETS SHOWN IN THE GEOMETRY TABLES WITH A MINUS SIGN ARE TO THE LEFT OF THE CONSTRUCTION & R/W BASELINE.
2. UNLESS OTHERWISE NOTED, POINT GEOMETRY ADJACENT TO CURB AND CURB AND GUTTER IS GIVEN TO THE EDGE OF PAVEMENT.
3. RADII ARE GIVEN TO EDGE OF PAVEMENT.
4. UNLESS OTHERWISE NOTED, EDGE OF PAVEMENT ELEVATIONS AT CURB RETURNS ARE GIVEN AT 10 FOOT INTERVALS.
5. ALL WORK REQUIRED FOR CALCULATING AND STAKING OF GRADES SHALL BE PAID FOR UNDER ITEM 763501 - CONSTRUCTION ENGINEERING.
6. PROPOSED CURBS OR PAVEMENT THAT TIE INTO EXISTING OR CURBS SHALL MATCH THE EXISTING PAVEMENT OR CURB ELEVATIONS.

COORDINATE LIST

POINT NO.	STATION	OFFSET	NORTHING	EASTING
23000	1138+23.13	-39.67	418304.2168	621290.2738
23001	1138+11.14	10.12	418307.3143	621341.3915
23002	1138+10.53	-75.88	418281.5779	621259.3328
23003	1138+47.13	1.95	418339.3398	621323.0475
23004	1138+45.00	-2.58	418335.9816	621319.3431
23005	1138+47.09	-7.12	418336.6524	621314.3883
23006	1138+11.12	71.00	418325.1140	621399.6108
23007	1138+11.12	-15.00	418299.9524	621317.3740
23008	1138+23.46	-14.11	418312.0092	621314.6151
23009	1138+23.48	9.14	418318.8283	621336.8467
23010	1138+23.85	44.70	418329.5859	621370.7381
23011	1138+30.82	42.98	418335.7490	621367.0584
23012	1138+31.03	72.98	418344.7269	621395.6836

COORDINATE LIST

POINT NO.	STATION	OFFSET	NORTHING	EASTING
23013	1138+61.03	73.19	418373.4727	621387.1000
23014	1138+57.39	62.60	418366.8960	621378.0396
23015	1139+35.00	-4.00	418421.6266	621291.6493
23016	1139+35.00	2.00	418423.3821	621297.3867
23017	1139+29.00	2.00	418417.6446	621299.1422
23018	1139+29.00	4.25	418418.3040	621301.2972
23019	1139+35.00	4.25	418424.0415	621299.5418
23020	1139+35.04	10.25	418425.8370	621305.2668
23021	1139+46.41	33.17	418443.4125	621323.8592
23022	1139+46.62	63.17	418452.3903	621352.4844
23023	1139+18.29	62.65	418425.1491	621360.2743
23024	1139+16.62	63.17	418423.7010	621361.2548

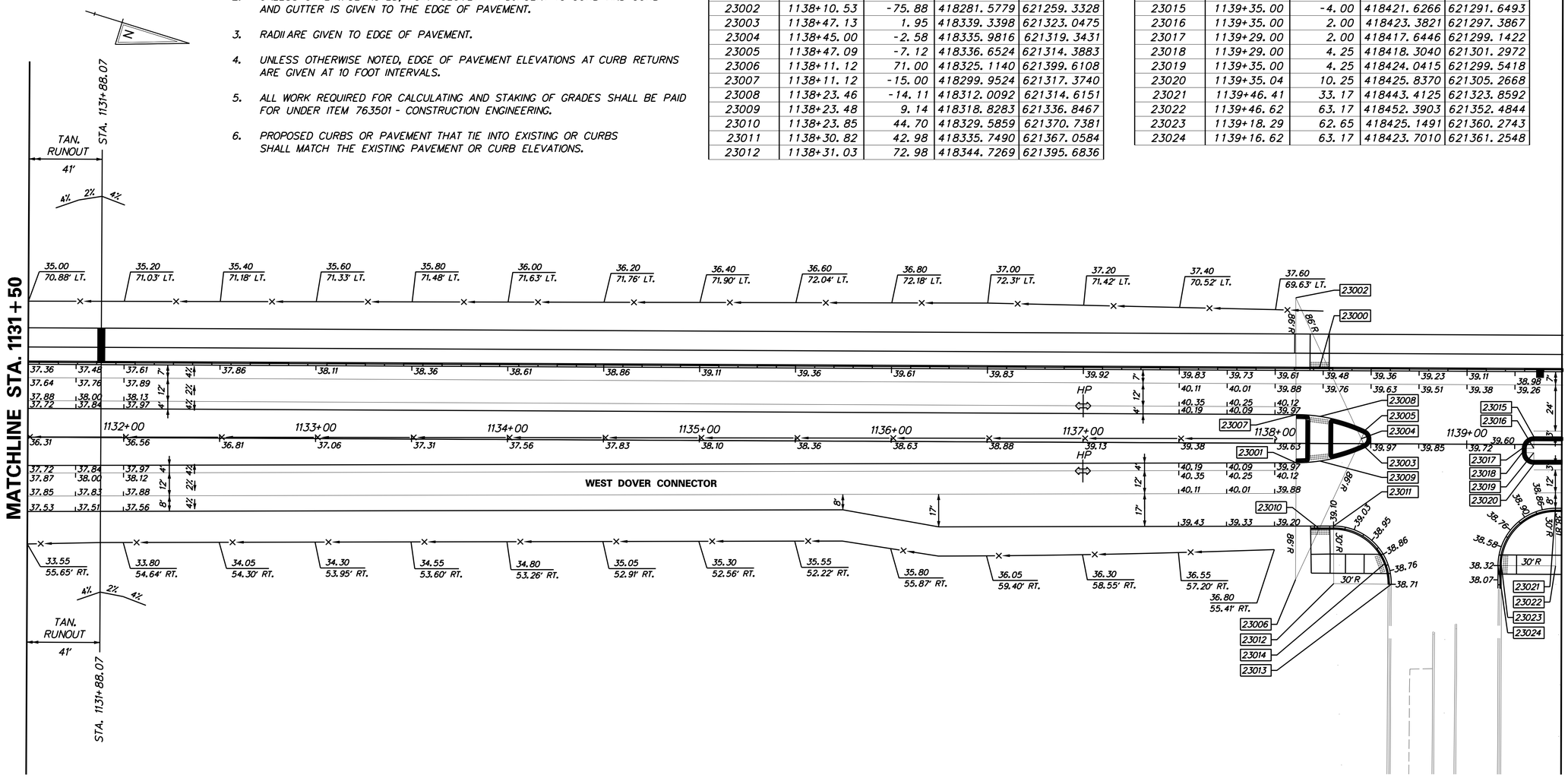

DELAWARE DEPARTMENT OF TRANSPORTATION	ADDENDUMS / REVISIONS	SCALE: 1"=30' (0, 30, 60, 90 FEET)	WEST DOVER CONNECTOR	CONTRACT T200411701 / COUNTY KENT	BRIDGE NO. / DESIGNED BY: RP, KM / CHECKED BY: BP	GRADES AND GEOMETRICS	SHEET NO. 94 / TOTAL SHTS. 320

4/3/2014 deinlein
J:\BRIDGE_HIGHWAYS\6061_DelDOT_WEST_DOVER_CONN\Civil\Civ_Sheets\06_Grade_Geo\GG21.dgn

NOTES:

1. OFFSETS SHOWN IN THE GEOMETRY TABLES WITH A MINUS SIGN ARE TO THE LEFT OF THE CONSTRUCTION & R/W BASELINE.
2. UNLESS OTHERWISE NOTED, POINT GEOMETRY ADJACENT TO CURB AND CURB AND GUTTER IS GIVEN TO THE EDGE OF PAVEMENT.
3. RADII ARE GIVEN TO EDGE OF PAVEMENT.
4. UNLESS OTHERWISE NOTED, EDGE OF PAVEMENT ELEVATIONS AT CURB RETURNS ARE GIVEN AT 10 FOOT INTERVALS.
5. ALL WORK REQUIRED FOR CALCULATING AND STAKING OF GRADES SHALL BE PAID FOR UNDER ITEM 763501 - CONSTRUCTION ENGINEERING.
6. PROPOSED CURBS OR PAVEMENT THAT TIE INTO EXISTING OR CURBS SHALL MATCH THE EXISTING PAVEMENT OR CURB ELEVATIONS.

COORDINATE LIST

POINT NO.	STATION	OFFSET	NORTHING	EASTING
22000	1141+50.00	-2.00	418627.8038	621230.6578
22001	1142+50.00	-14.00	418719.9171	621189.9252
22002	1146+76.17	-16.00	419126.8529	621063.3255
22003	1146+76.17	-11.00	419128.3158	621068.1067
22004	1146+80.14	-7.97	419133.0046	621069.8431
22005	1146+70.23	5.03	419127.3268	621085.1752
22006	1146+66.25	2.00	419122.6379	621083.4388
22007	1146+66.25	7.00	419124.1008	621088.2200
22008	1146+35.63	28.35	419101.0643	621117.5972
22009	1146+35.84	58.35	419110.0421	621146.2224
22010	1146+46.91	30.47	419112.4728	621116.3210
22011	1146+64.10	62.79	419138.3667	621142.1978
22012	1146+97.82	62.80	419170.6146	621132.3395

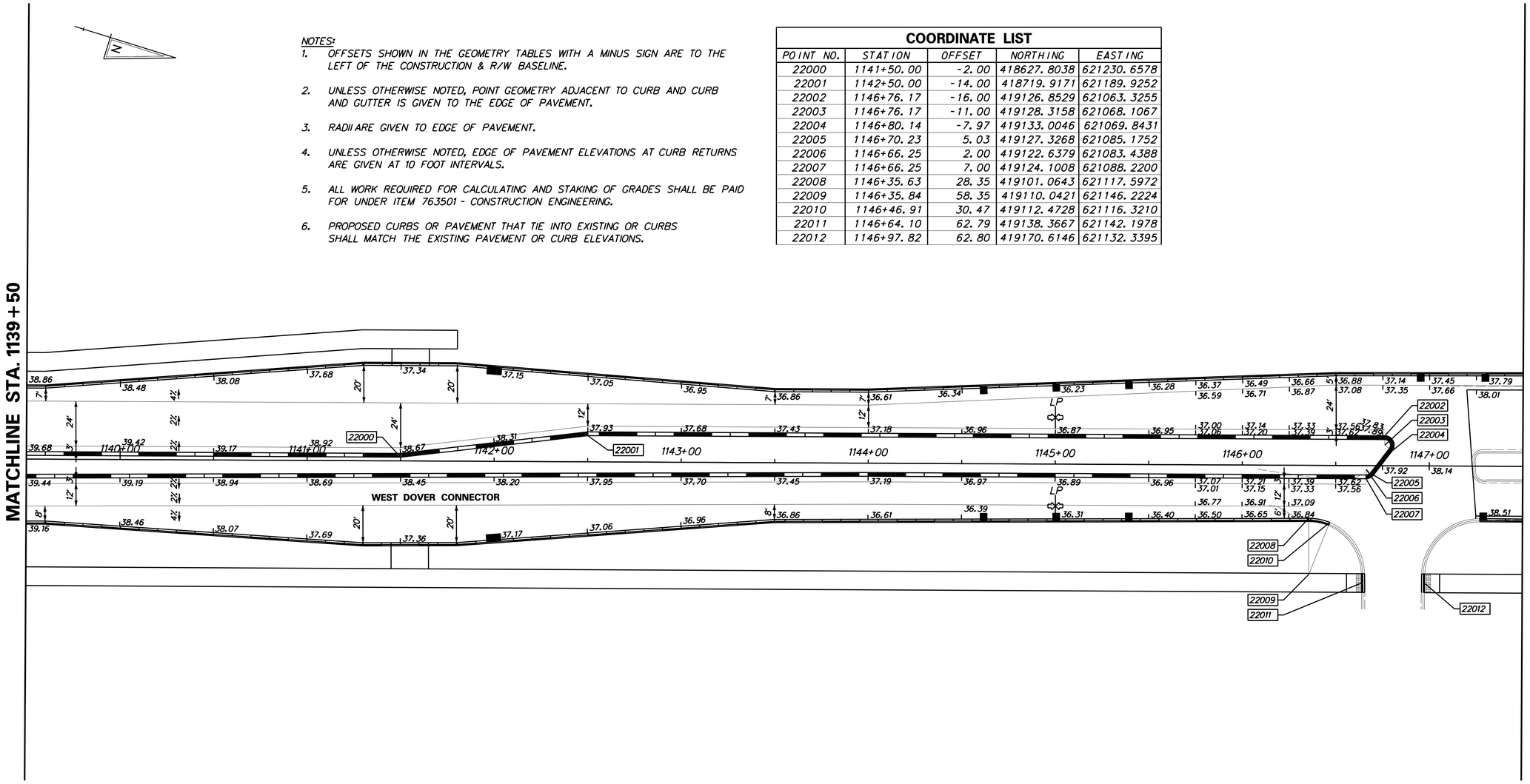

DELAWARE DEPARTMENT OF TRANSPORTATION	ADDENDUMS / REVISIONS	SCALE: 1"=30' 0 30 60 90 FEET	WEST DOVER CONNECTOR	CONTRACT T200411701 / COUNTY KENT	BRIDGE NO. / DESIGNED BY: RP, KM / CHECKED BY: BP	GRADES AND GEOMETRICS	SHEET NO. 95 / TOTAL SHTS. 320

4/3/2014 deinleij
J:\BRIDGE_HIGHWAYS\6061_DelDOT_WEST_DOVER_CONN\Civil\Civ_Sheets\06_Grade_Geo\GG22.dgn

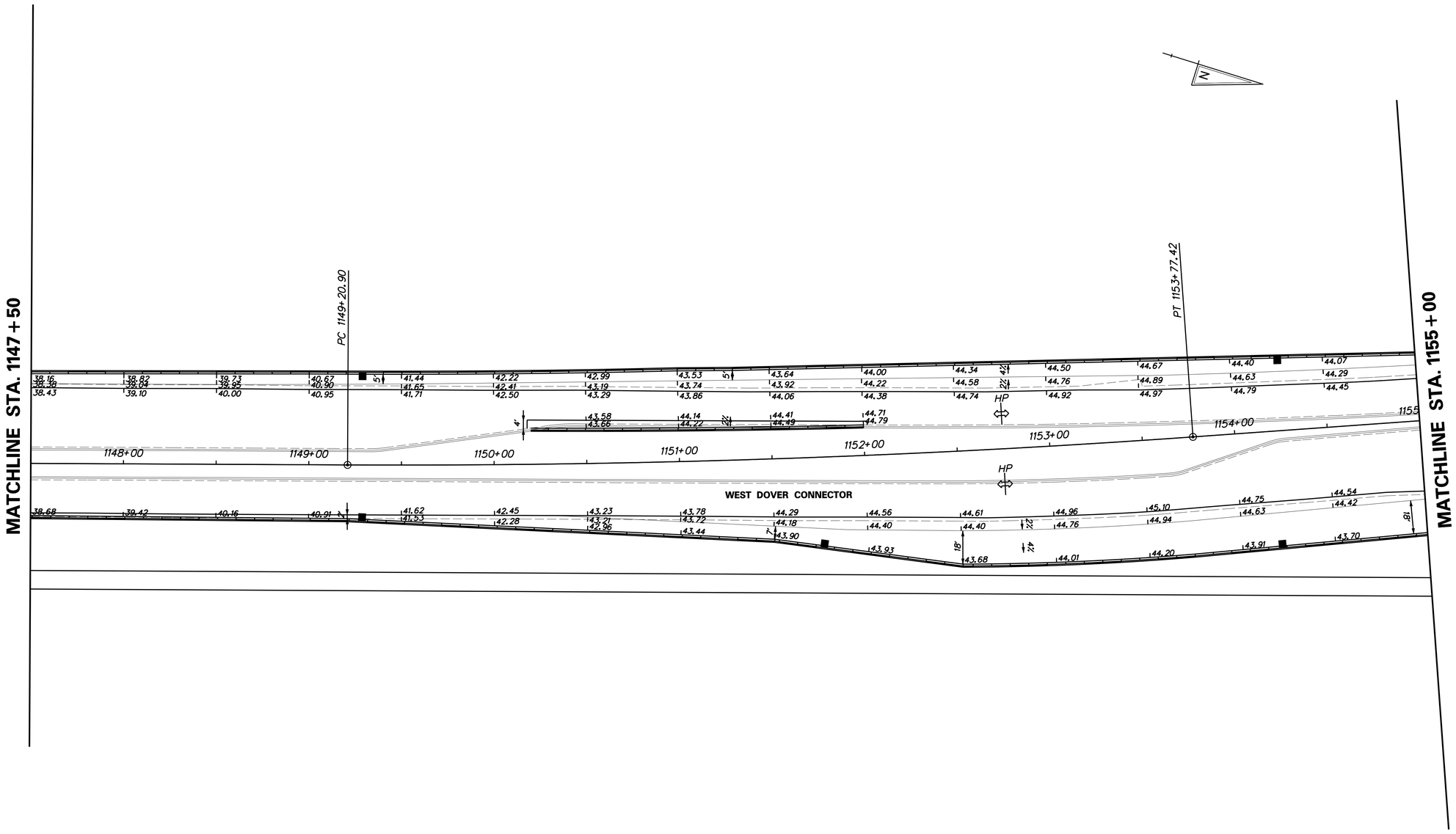

DELAWARE DEPARTMENT OF TRANSPORTATION	ADDENDUMS / REVISIONS	SCALE: 1"=30' 0 30 60 90 FEET	WEST DOVER CONNECTOR	CONTRACT T200411701	BRIDGE NO.	GRADES AND GEOMETRICS	SHEET NO. 96
				COUNTY KENT	DESIGNED BY: RP, KM		TOTAL SHTS. 320
					CHECKED BY: BP		

4/3/2014 deinlein
J:\BRIDGE_HIGHWAYS\6061_DelDOT_WEST_DOVER_CONN\Civil\Civ_Sheets\06_Grade_Geo\GG23.dgn

COORDINATE LIST				
POINT NO.	STATION	OFFSET	NORTHING	EASTING
17000	1155+39.88	-35.00	419935.1378	620765.1875
17001	1155+39.88	-185.00	419880.4754	620625.5020
17002	1155+91.06	-44.00	419979.5151	620738.1569
17003	1155+74.00	-91.00	419946.5019	620700.6053
17004	49+58.50	48.00	419995.2205	620689.3582
17005	49+07.32	189.00	419849.0647	620723.0995
17006	49+07.32	39.00	419974.9394	620641.5180
17007	1156+12.66	-61.99	419993.0738	620713.5345
17008	1156+30.77	-50.04	420014.2904	620718.0614
17009	49+79.98	34.00	420018.5019	620699.5935
17010	50+01.48	32.00	420031.3439	620716.2985
17011	50+11.75	34.00	420034.8605	620725.8883
17012	1156+37.78	-33.37	420026.8947	620731.0296
17013	1156+19.98	-35.59	420009.5099	620735.4477
17014	49+83.27	-12.00	420059.0557	620677.6379
17015	49+26.50	-40.00	420051.6660	620614.6484
17016	49+26.50	-160.00	420152.3658	620549.3832
17017	111+11.78	-45.00	420187.3238	620664.1784
17018	110+48.79	-64.82	420121.2921	620663.5631
17019	110+39.18	-45.30	420117.7803	620685.0440
17020	110+54.65	-35.00	420135.5836	620690.3880
17021	110+35.24	-33.00	420117.5985	620697.9556
17022	50+26.80	-46.00	420111.2737	620697.7910
17023	50+22.44	-44.00	420107.2518	620694.9294
17024	50+09.11	-46.00	420101.8648	620682.0996
17025	110+50.00	10.00	420144.2437	620734.7911
17026	113+23.86	7.55	420405.8976	620655.1088

NOTES:

1. OFFSETS SHOWN IN THE GEOMETRY TABLES WITH A MINUS SIGN ARE TO THE LEFT OF THE CONSTRUCTION & R/W BASELINE.
2. UNLESS OTHERWISE NOTED, POINT GEOMETRY ADJACENT TO CURB AND CURB AND GUTTER IS GIVEN TO THE EDGE OF PAVEMENT.
3. RADII ARE GIVEN TO EDGE OF PAVEMENT.
4. UNLESS OTHERWISE NOTED, EDGE OF PAVEMENT ELEVATIONS AT CURB RETURNS ARE GIVEN AT 10 FOOT INTERVALS.
5. ALL WORK REQUIRED FOR CALCULATING AND STAKING OF GRADES SHALL BE PAID FOR UNDER ITEM 763501 - CONSTRUCTION ENGINEERING.
6. PROPOSED CURBS OR PAVEMENT THAT TIE INTO EXISTING OR CURBS SHALL MATCH THE EXISTING PAVEMENT OR CURB ELEVATIONS.

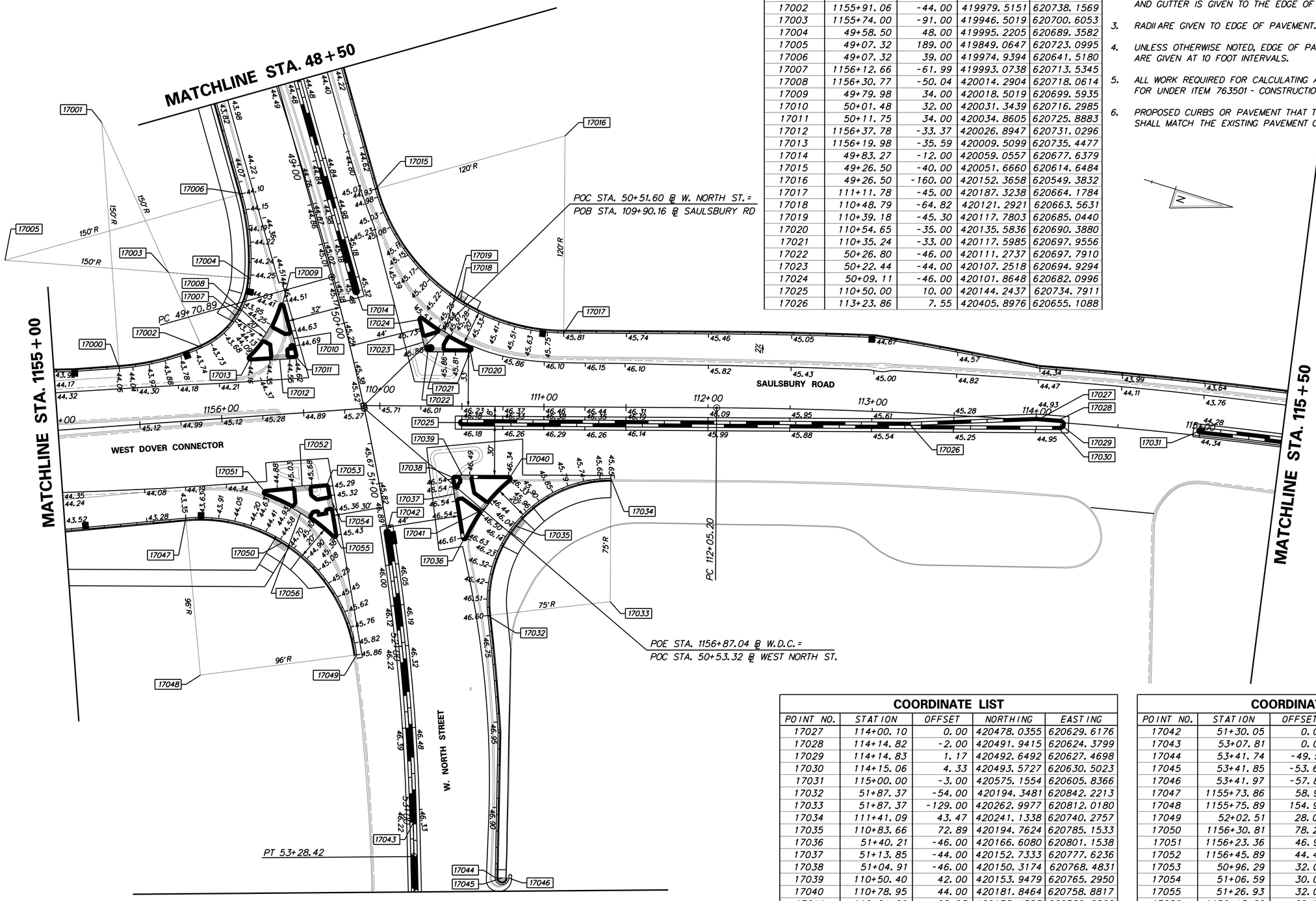

COORDINATE LIST				
POINT NO.	STATION	OFFSET	NORTHING	EASTING
17027	114+00.10	0.00	420478.0355	620629.6176
17028	114+14.82	-2.00	420491.9415	620624.3799
17029	114+14.83	1.17	420492.6492	620627.4698
17030	114+15.06	4.33	420493.5727	620630.5023
17031	115+00.00	-3.00	420575.1554	620605.8366
17032	51+87.37	-54.00	420194.3481	620842.2213
17033	51+87.37	-129.00	420262.9977	620812.0180
17034	111+41.09	43.47	420241.1338	620740.2757
17035	110+83.66	72.89	420194.7624	620785.1533
17036	51+40.21	-46.00	420166.6080	620801.1538
17037	51+13.85	-44.00	420152.7333	620777.6236
17038	51+04.91	-46.00	420150.3174	620768.4831
17039	110+50.40	42.00	420153.9479	620765.2950
17040	110+78.95	44.00	420181.8464	620758.8817
17041	110+64.69	62.03	420173.4553	620780.2822

COORDINATE LIST				
POINT NO.	STATION	OFFSET	NORTHING	EASTING
17042	51+30.05	0.00	420120.7268	620812.0034
17043	53+07.81	0.00	420188.4382	620976.2312
17044	53+41.74	-49.51	420246.0851	620993.3935
17045	53+41.85	-53.68	420250.0872	620992.2342
17046	53+41.97	-57.84	420254.0894	620991.0749
17047	1155+73.86	58.94	420001.0106	620840.2902
17048	1155+75.89	154.92	420037.8749	620928.9301
17049	52+02.51	28.07	420125.1204	620888.8772
17050	1156+30.81	78.23	420061.0722	620837.4941
17051	1156+23.36	46.90	420042.7217	620811.0297
17052	1156+45.89	44.42	420062.7923	620800.5165
17053	50+96.29	32.00	420077.0989	620796.7326
17054	51+06.59	30.00	420083.5015	620804.7555
17055	51+26.93	32.00	420090.6664	620823.3979
17056	1156+43.80	60.88	420066.8540	620816.6082

DELAWARE DEPARTMENT OF TRANSPORTATION

ADDENDUMS / REVISIONS

SCALE: 1"=30'
0 30 60 90
FEET

WEST DOVER CONNECTOR

CONTRACT	BRIDGE NO.	
T200411701	DESIGNED BY: RP, KM	
COUNTY	CHECKED BY: BP	
KENT		

GRADES AND GEOMETRICS

SHEET NO. 97
TOTAL SHTS. 320

7/17/2014 PerryR
J:\BRIDGE_HIGHWAYS\6061_DelDOT_WEST_DOVER_CONN\Civil\Civ_Sheets\06_Grade_Geo\GG24.dgn

NOTES:

1. OFFSETS SHOWN IN THE GEOMETRY TABLES WITH A MINUS SIGN ARE TO THE LEFT OF THE CONSTRUCTION & R/W BASELINE.
2. UNLESS OTHERWISE NOTED, POINT GEOMETRY ADJACENT TO CURB AND CURB AND GUTTER IS GIVEN TO THE EDGE OF PAVEMENT.
3. RADII ARE GIVEN TO EDGE OF PAVEMENT.
4. UNLESS OTHERWISE NOTED, EDGE OF PAVEMENT ELEVATIONS AT CURB RETURNS ARE GIVEN AT 10 FOOT INTERVALS.
5. ALL WORK REQUIRED FOR CALCULATING AND STAKING OF GRADES SHALL BE PAID FOR UNDER ITEM 763501 - CONSTRUCTION ENGINEERING.
6. PROPOSED CURBS OR PAVEMENT THAT TIE INTO EXISTING OR CURBS SHALL MATCH THE EXISTING PAVEMENT OR CURB ELEVATIONS.

COORDINATE LIST

POINT NO.	STATION	OFFSET	NORTHING	EASTING
19000	116+00.00	-3.00	420673.6951	620588.3343
19001	116+95.00	-15.00	420765.4637	620560.9935
19002	118+50.14	-11.00	420919.1731	620539.6293
19003	118+49.94	-6.00	420919.7976	620544.5901
19004	118+49.94	-1.00	420920.6135	620549.5231

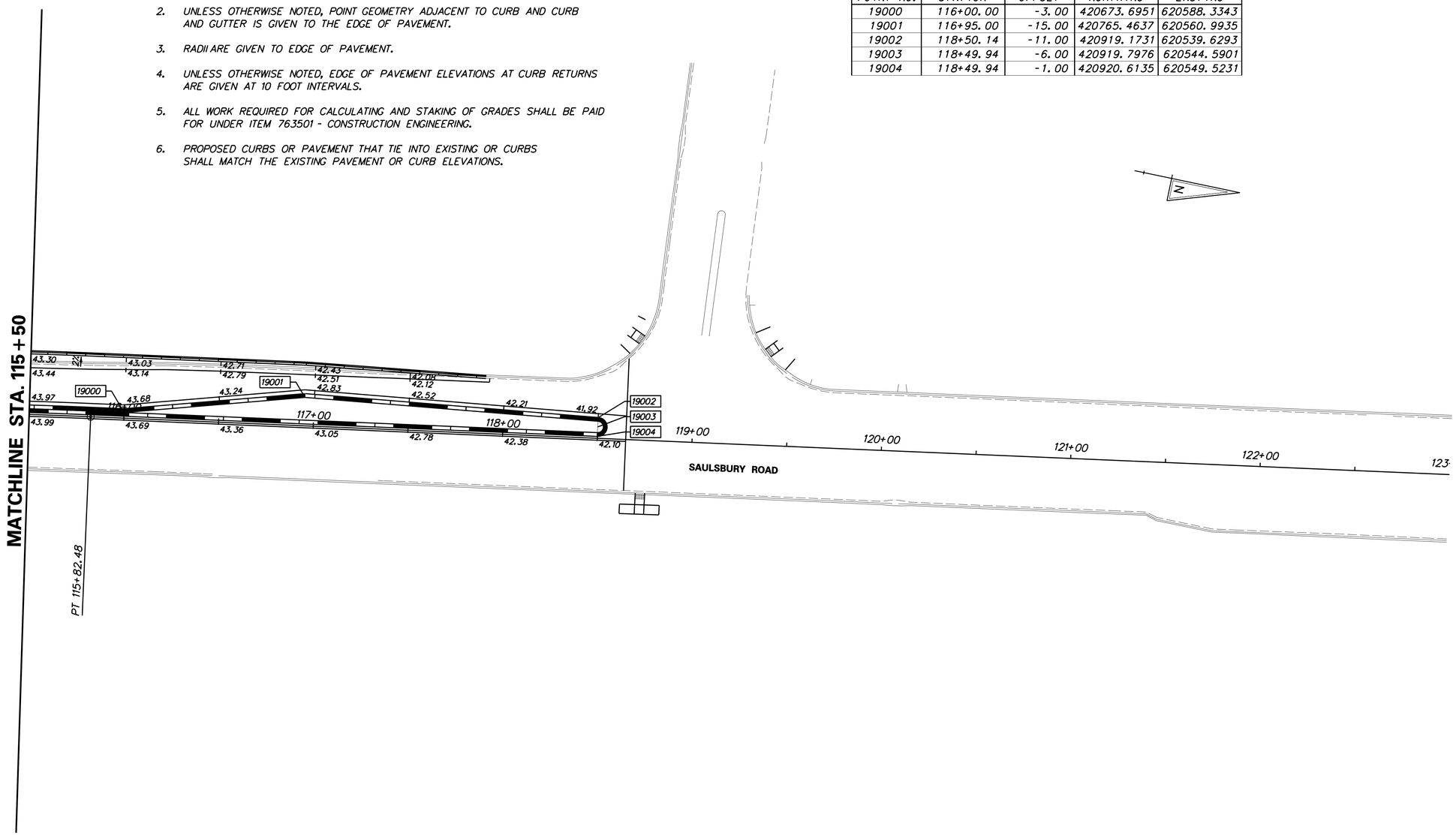

DELAWARE DEPARTMENT OF TRANSPORTATION

ADDENDUMS / REVISIONS

SCALE: 1"=30'
0 30 60 90
FEET

WEST DOVER CONNECTOR

CONTRACT	BRIDGE NO.
T200411701	DESIGNED BY: RP, KM
COUNTY	CHECKED BY: BP
KENT	

GRADES AND GEOMETRICS

SHEET NO.
98
TOTAL SHTS.
320

4/3/2014 deinlein
J:\BRIDGE_HIGHWAYS\6061_DelDOT_WEST_DOVER_CONN\Civil\Civ_Sheets\06_Grade_Geo\GG25.dgn

NOTES:

1. OFFSETS SHOWN IN THE GEOMETRY TABLES WITH A MINUS SIGN ARE TO THE LEFT OF THE CONSTRUCTION & R/W BASELINE.
2. UNLESS OTHERWISE NOTED, POINT GEOMETRY ADJACENT TO CURB AND CURB AND GUTTER IS GIVEN TO THE EDGE OF PAVEMENT.
3. RADII ARE GIVEN TO EDGE OF PAVEMENT.
4. UNLESS OTHERWISE NOTED, EDGE OF PAVEMENT ELEVATIONS AT CURB RETURNS ARE GIVEN AT 10 FOOT INTERVALS.
5. ALL WORK REQUIRED FOR CALCULATING AND STAKING OF GRADES SHALL BE PAID FOR UNDER ITEM 763501 - CONSTRUCTION ENGINEERING.
6. PROPOSED CURBS OR PAVEMENT THAT TIE INTO EXISTING OR CURBS SHALL MATCH THE EXISTING PAVEMENT OR CURB ELEVATIONS.

COORDINATE LIST

POINT NO.	STATION	OFFSET	NORTHING	EASTING
21000	45+50.00	0.00	419813.3278	620320.4547
21001	47+24.88	0.00	419908.4412	620467.2083
21002	48+25.12	-12.00	419973.0289	620544.7990

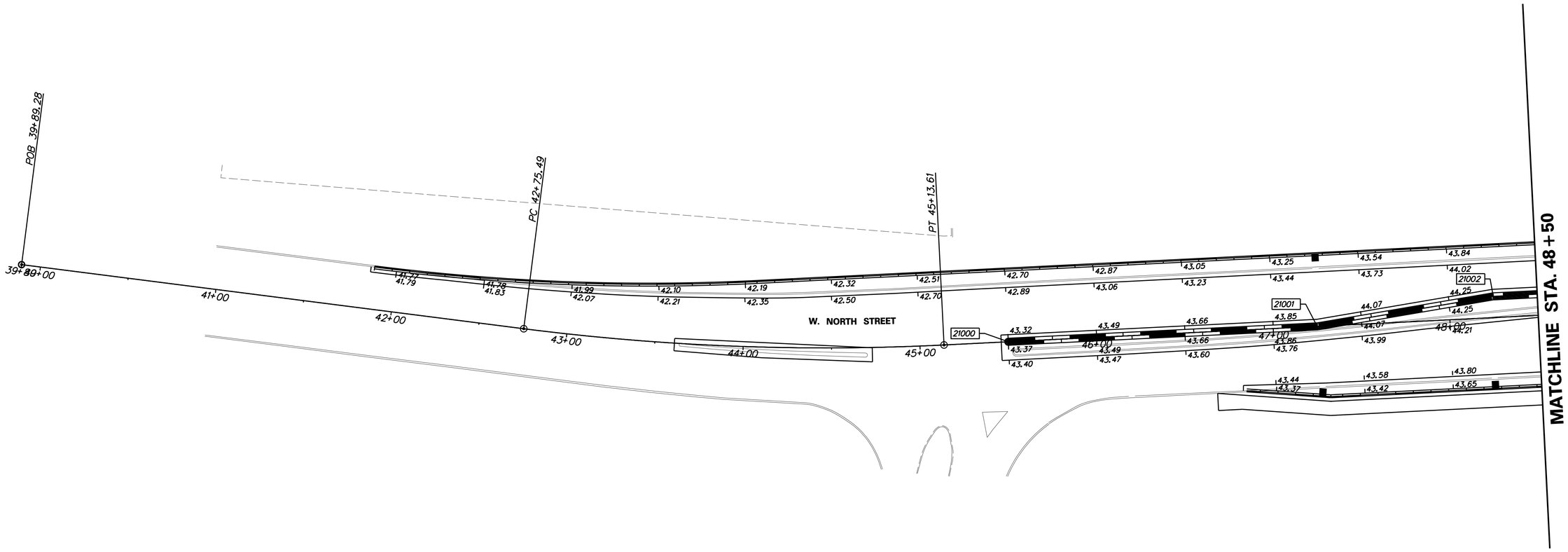

DELAWARE DEPARTMENT OF TRANSPORTATION	ADDENDUMS / REVISIONS	SCALE: 1"=30' (0, 30, 60, 90 FEET)	WEST DOVER CONNECTOR	CONTRACT T200411701	BRIDGE NO.	GRADES AND GEOMETRICS	SHEET NO. 99
				COUNTY KENT	DESIGNED BY: RP, KM		TOTAL SHTS. 320
					CHECKED BY: BP		

4/3/2014 deinlein
J:\BRIDGE_HIGHWAYS\16061_DelDOT_WEST_DOVER_CONN\Civil\Civ_Sheets\06_Grade_Geo\GG26.dgn

NOTES:

1. OFFSETS SHOWN IN THE GEOMETRY TABLES WITH A MINUS SIGN ARE TO THE LEFT OF THE CONSTRUCTION & R/W BASELINE.
2. UNLESS OTHERWISE NOTED, POINT GEOMETRY ADJACENT TO CURB AND CURB AND GUTTER IS GIVEN TO THE EDGE OF PAVEMENT.
3. RADII ARE GIVEN TO EDGE OF PAVEMENT.
4. UNLESS OTHERWISE NOTED, EDGE OF PAVEMENT ELEVATIONS AT CURB RETURNS ARE GIVEN AT 10 FOOT INTERVALS.
5. ALL WORK REQUIRED FOR CALCULATING AND STAKING OF GRADES SHALL BE PAID FOR UNDER ITEM 763501 - CONSTRUCTION ENGINEERING.
6. PROPOSED CURBS OR PAVEMENT THAT TIE INTO EXISTING OR CURBS SHALL MATCH THE EXISTING PAVEMENT OR CURB ELEVATIONS.

COORDINATE LIST

POINT NO.	STATION	OFFSET	NORTHING	EASTING
20000	54+50.00	-2.02	420233.8642	621110.9819

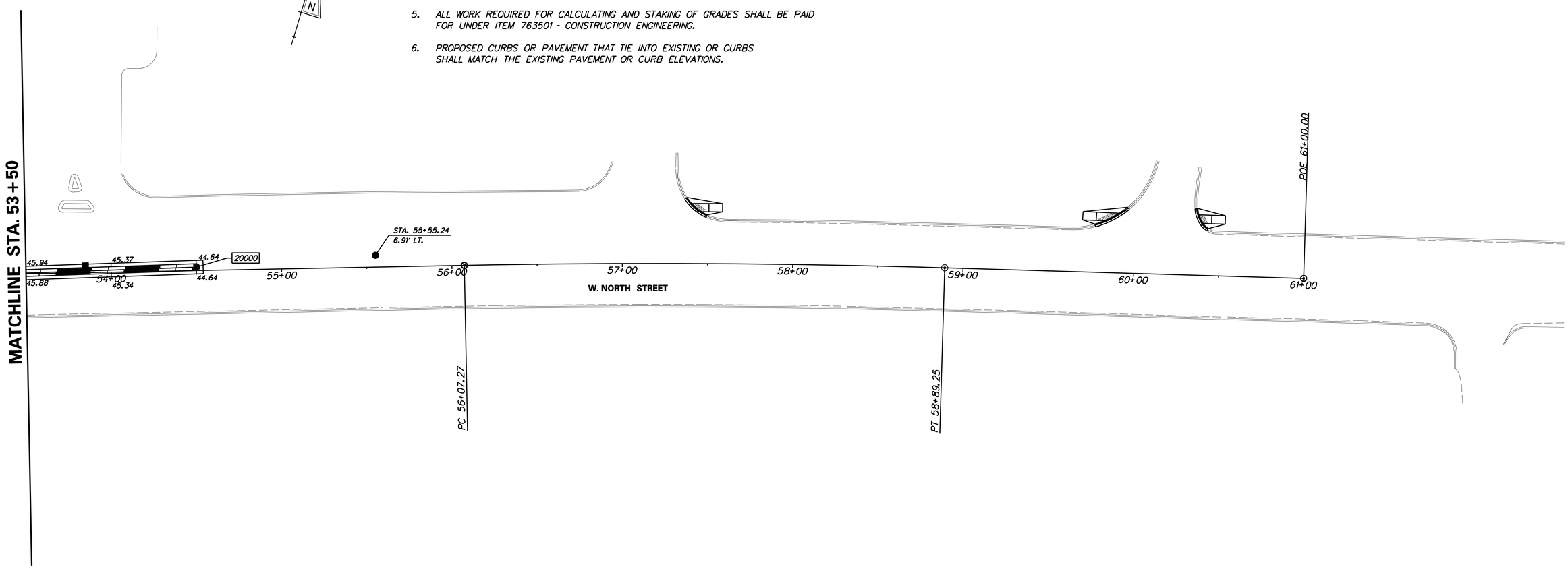

DELAWARE DEPARTMENT OF TRANSPORTATION	ADDENDUMS / REVISIONS	SCALE: 1"=30' 0 30 60 90 FEET	WEST DOVER CONNECTOR	CONTRACT T200411701	BRIDGE NO.	GRADES AND GEOMETRICS	SHEET NO. 100
				COUNTY KENT	DESIGNED BY: RP, KM		TOTAL SHTS. 320
					CHECKED BY: BP		

4/3/2014 deinlein
J:\BRIDGE_HIGHWAYS\6061_DelDOT_WEST_DOVER_CONN\Civil\Civ_Sheets\06_Grade_Geo\GG27.dgn

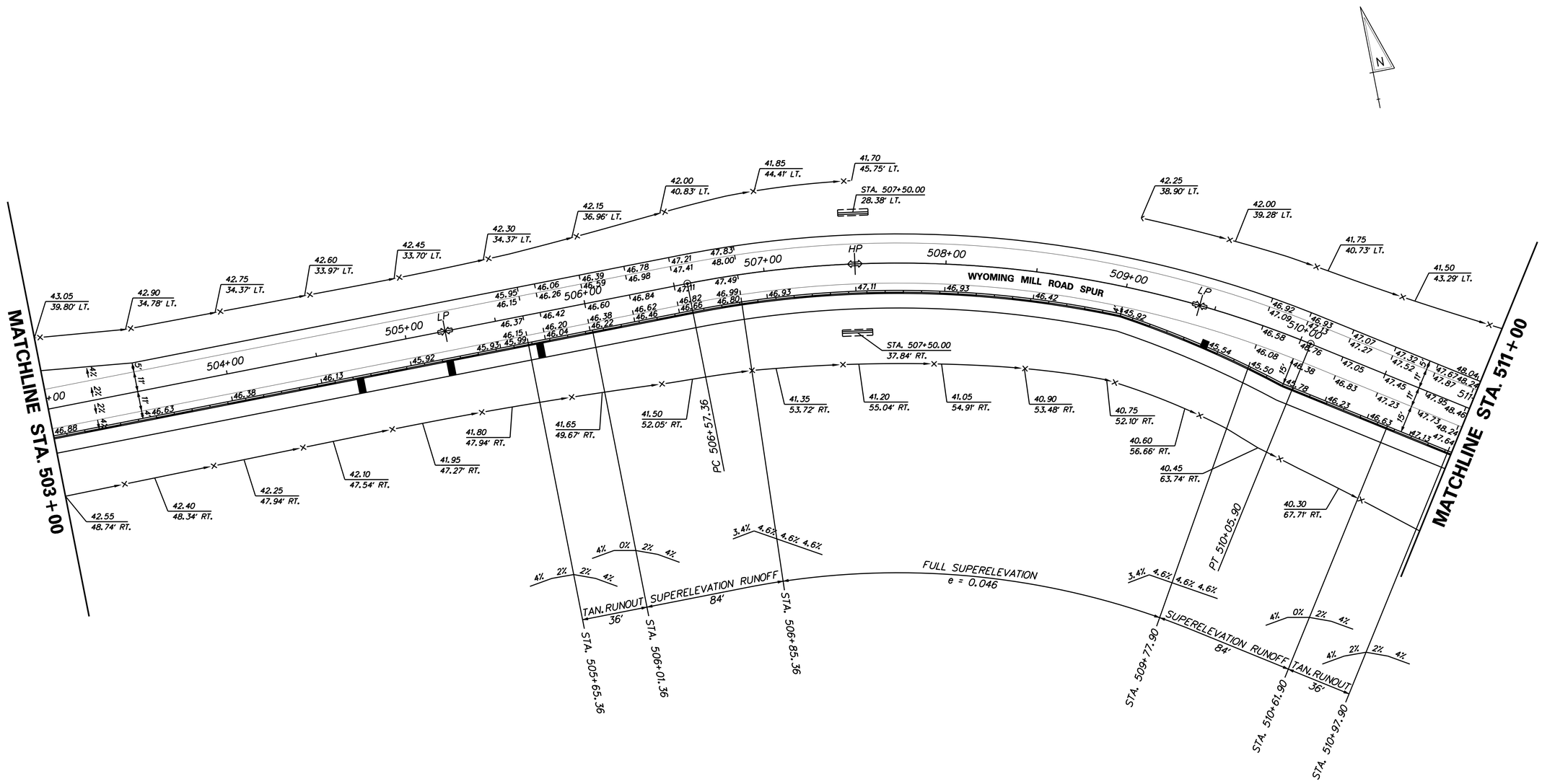

DELAWARE DEPARTMENT OF TRANSPORTATION	ADDENDUMS / REVISIONS	SCALE: 1"=30' (0, 30, 60, 90 FEET)	**WEST DOVER CONNECTOR**	CONTRACT T200411701	BRIDGE NO.	**GRADES AND GEOMETRICS**	SHEET NO. 101
				COUNTY KENT	DESIGNED BY: RP, KM		TOTAL SHTS. 320
					CHECKED BY: BP		

4/3/2014 deinlein
J:\BRIDGE_HIGHWAYS\16061_DelDOT_WEST_DOVER_CONN\Civil\Civ_Sheets\06_Grade_Geo\GG28.dgn

NOTES:

1. OFFSETS SHOWN IN THE GEOMETRY TABLES WITH A MINUS SIGN ARE TO THE LEFT OF THE CONSTRUCTION & R/W BASELINE.
2. UNLESS OTHERWISE NOTED, POINT GEOMETRY ADJACENT TO CURB AND CURB AND GUTTER IS GIVEN TO THE EDGE OF PAVEMENT.
3. RADII ARE GIVEN TO EDGE OF PAVEMENT.
4. UNLESS OTHERWISE NOTED, EDGE OF PAVEMENT ELEVATIONS AT CURB RETURNS ARE GIVEN AT 10 FOOT INTERVALS.
5. ALL WORK REQUIRED FOR CALCULATING AND STAKING OF GRADES SHALL BE PAID FOR UNDER ITEM 763501 - CONSTRUCTION ENGINEERING.
6. PROPOSED CURBS OR PAVEMENT THAT TIE INTO EXISTING OR CURBS SHALL MATCH THE EXISTING PAVEMENT OR CURB ELEVATIONS.

COORDINATE LIST

POINT NO.	STATION	OFFSET	NORTHING	EASTING
16000	600+37.15	31.70	413141.4976	617255.7848
16001	500+83.14	75.00	413132.7440	617315.1428
16002	500+83.14	15.00	413192.7440	617315.1428
16003	501+03.40	-27.00	413234.7440	617335.3969
16004	501+03.40	-87.00	413294.7440	617335.3969
16005	601+98.98	32.00	413302.0709	617275.8460
16006	601+21.95	31.00	413225.7440	617265.4475
16007	601+47.22	31.00	413250.8214	617268.5329
16008	500+62.91	-18.00	413225.7440	617294.9124
16009	600+39.96	33.50	413144.0664	617257.9191

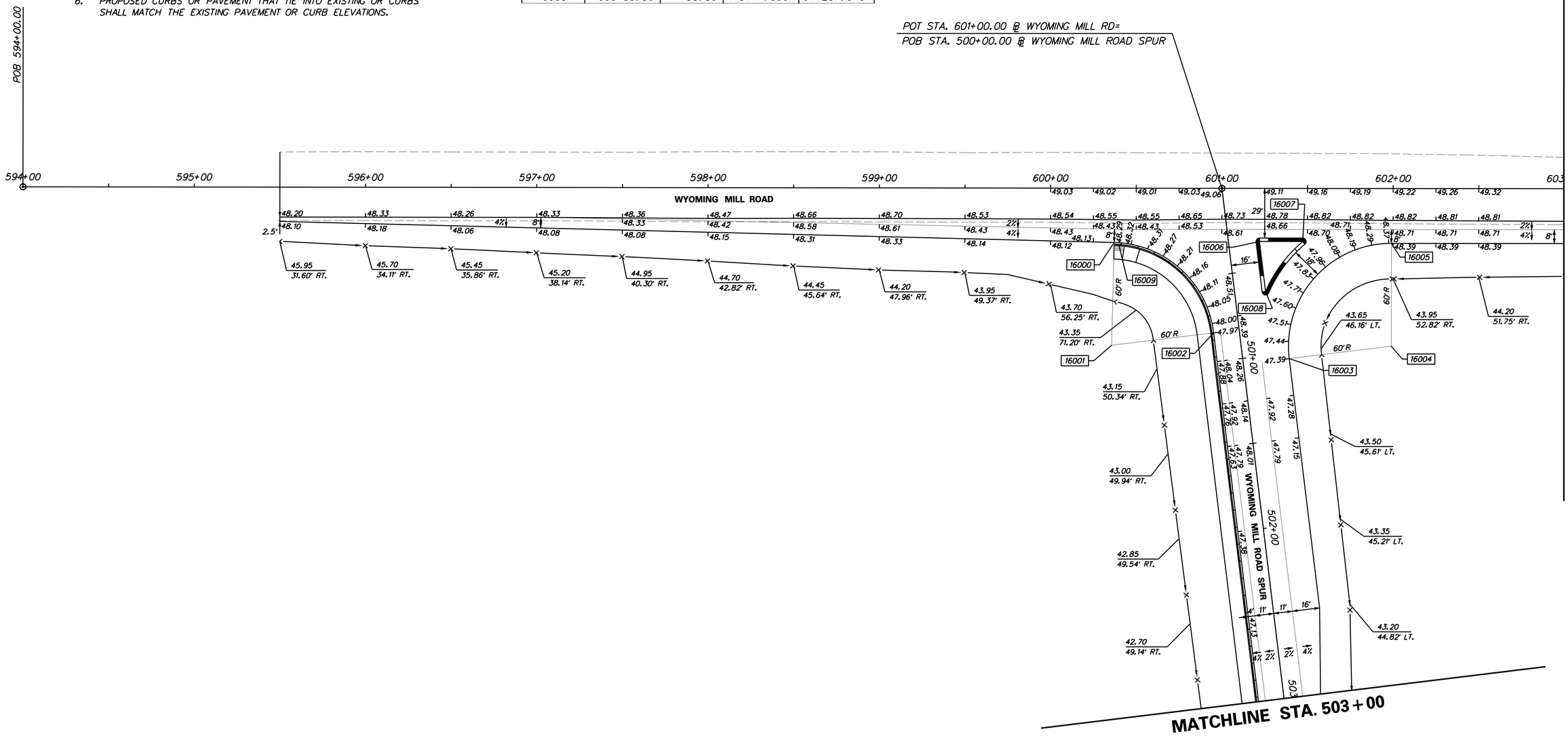

DELAWARE DEPARTMENT OF TRANSPORTATION

ADDENDUMS / REVISIONS

SCALE: 1"=30'
0 30 60 90
FEET

WEST DOVER CONNECTOR

CONTRACT	BRIDGE NO.	
T200411701	DESIGNED BY: RP, KM	
COUNTY		
KENT	CHECKED BY: BP	

GRADES AND GEOMETRICS

SHEET NO.
102
TOTAL SHTS.
320

4/3/2014 deinlein
J:\BRIDGE_HIGHWAYS\6061_DelDOT_WEST_DOVER_CONN\Civil\Civ_Sheets\06_Grade_Geo\GG29.dgn

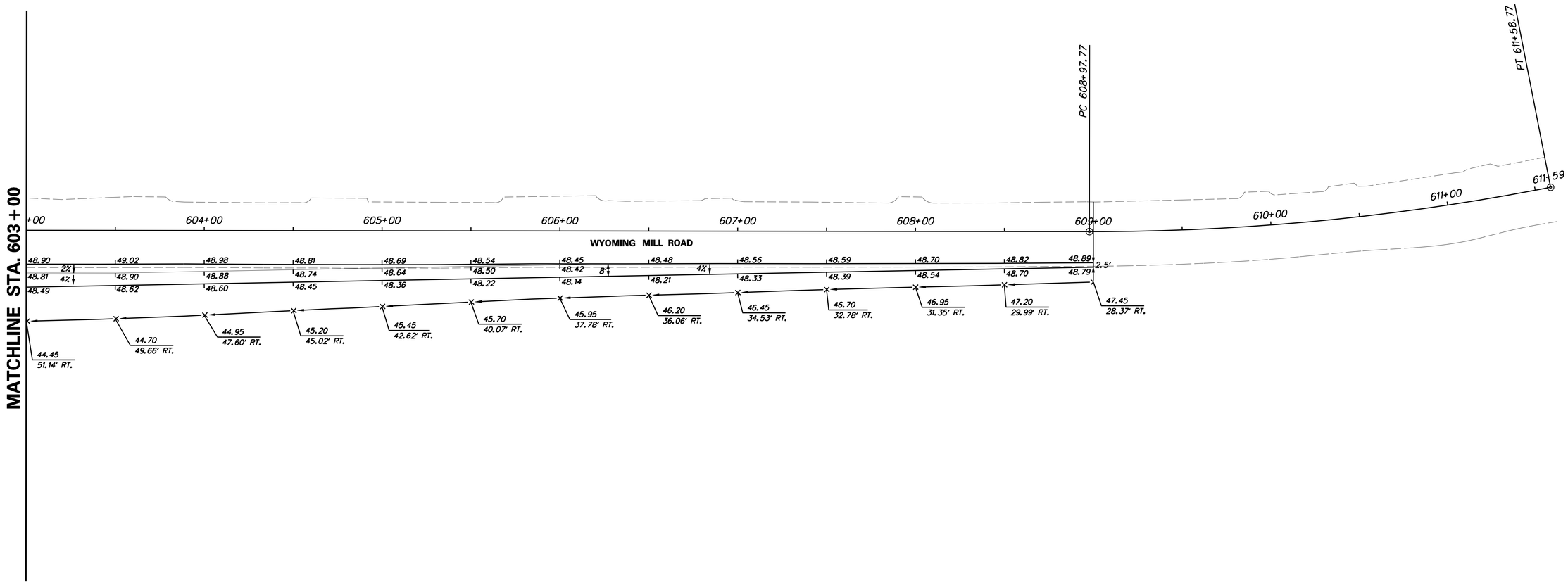

4/3/2014 deinlein
J:\BRIDGE_HIGHWAYS\6061_DelDOT_WEST_DOVER_CONN\Civil\Civ_Sheets\06_Grade_Geo\GG30.dgn

DELAWARE DEPARTMENT OF TRANSPORTATION

ADDENDUMS / REVISIONS	

SCALE: 1"=30'
0 30 60 90
FEET

WEST DOVER CONNECTOR

CONTRACT	BRIDGE NO.	
T200411701	DESIGNED BY: RP, KM	
COUNTY		
KENT	CHECKED BY: BP	

GRADES AND GEOMETRICS

SHEET NO.
103
TOTAL SHTS.
320

COORDINATE LIST				
POINT NO.	STATION	OFFSET	NORTHING	EASTING
18000	406+25.75	-15.00	411054.7660	619844.9837
18001	406+25.75	-45.00	411024.9932	619841.2982
18002	406+51.15	-50.76	411024.1679	619811.3096
18003	406+37.11	-19.61	411051.9058	619832.4388
18004	406+78.59	-37.65	411043.0630	619786.7805
18005	407+07.68	-45.00	411042.2377	619756.7918
18006	407+07.68	-15.00	411071.5142	619763.3407
18007	406+96.41	-19.00	411065.1484	619773.4613

NOTES:

1. OFFSETS SHOWN IN THE GEOMETRY TABLES WITH A MINUS SIGN ARE TO THE LEFT OF THE CONSTRUCTION & R/W BASELINE.
2. UNLESS OTHERWISE NOTED, POINT GEOMETRY ADJACENT TO CURB AND CURB AND GUTTER IS GIVEN TO THE EDGE OF PAVEMENT.
3. RADII ARE GIVEN TO EDGE OF PAVEMENT.
4. UNLESS OTHERWISE NOTED, EDGE OF PAVEMENT ELEVATIONS AT CURB RETURNS ARE GIVEN AT 10 FOOT INTERVALS.
5. ALL WORK REQUIRED FOR CALCULATING AND STAKING OF GRADES SHALL BE PAID FOR UNDER ITEM 763501 - CONSTRUCTION ENGINEERING.
6. PROPOSED CURBS OR PAVEMENT THAT TIE INTO EXISTING OR CURBS SHALL MATCH THE EXISTING PAVEMENT OR CURB ELEVATIONS.

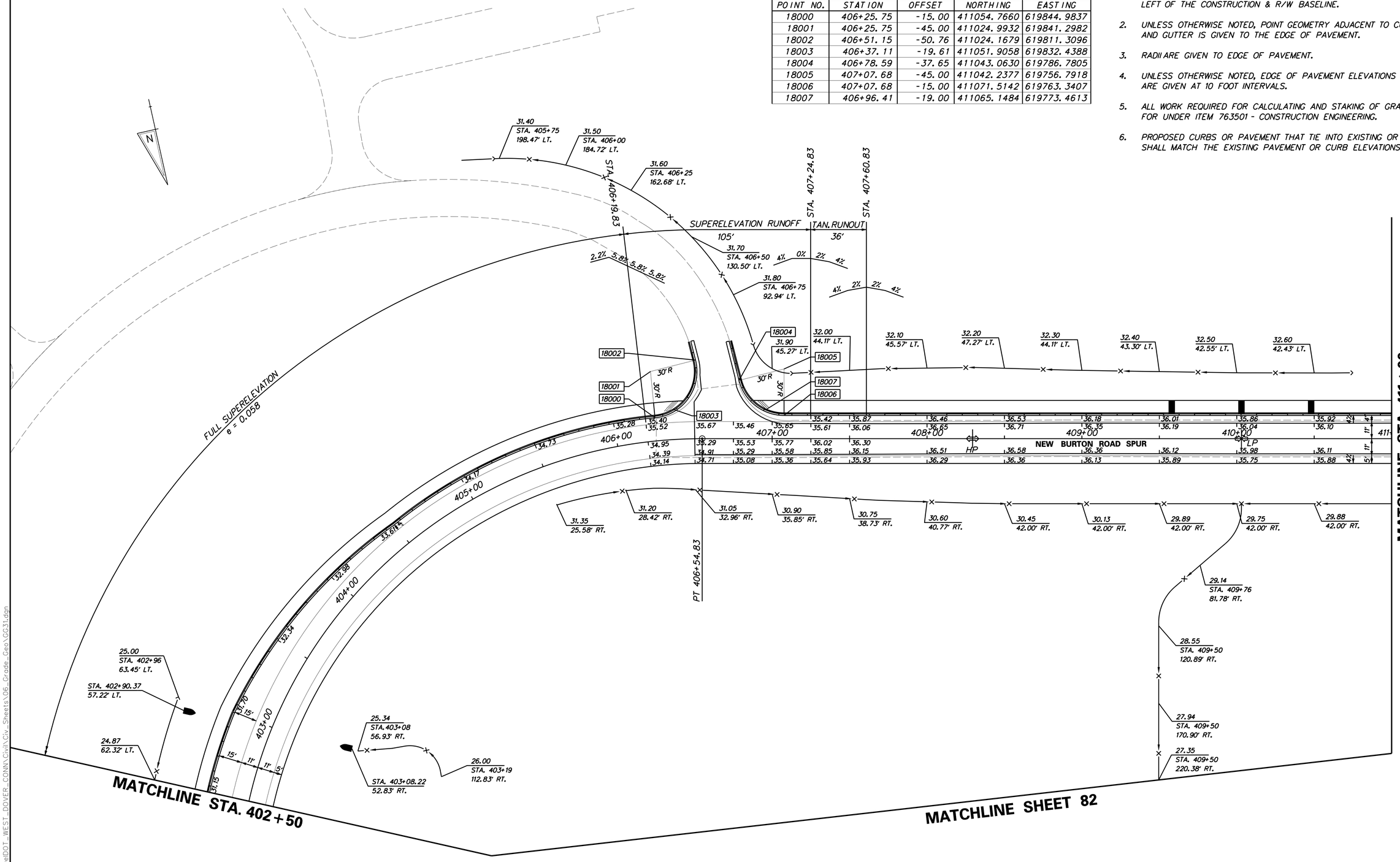

DELAWARE DEPARTMENT OF TRANSPORTATION	ADDENDUMS / REVISIONS	SCALE: 1"=30' (0, 30, 60, 90 FEET)	WEST DOVER CONNECTOR	CONTRACT T200411701	BRIDGE NO.	GRADES AND GEOMETRICS	SHEET NO. 104
				COUNTY KENT	DESIGNED BY: RP, KM		TOTAL SHTS. 320
					CHECKED BY: BP		

4/3/2014 deinlein
J:\BRIDGE_HIGHWAYS\6061_DelDOT_WEST_DOVER_CONN\Civil\Civ_Sheets\06_Grade_Geo\GG31.dgn

COORDINATE LIST				
POINT NO.	STATION	OFFSET	NORTHING	EASTING
14000	416+92.12	-15.00	411312.3560	618805.8080
14001	416+92.12	-75.00	411263.8495	618770.4935
14002	707+25.53	40.80	411301.6350	618723.8861
14003	707+28.34	42.68	411302.7870	618727.0586
14004	417+47.92	-18.00	411343.0218	618759.0160
14005	707+61.81	31.00	411336.6929	618737.4204
14006	417+61.60	-18.00	411351.1238	618747.9932
14007	417+41.25	18.00	411368.0782	618785.7135
14008	417+61.65	18.00	411380.1639	618769.2694
14009	708+32.85	31.00	411393.9958	618779.4033
14010	417+00.76	27.00	411351.3516	618823.6651
14011	417+00.76	87.00	411399.6970	618859.1999
14012	708+84.61	32.00	411435.1572	618810.7998

NOTES:

1. OFFSETS SHOWN IN THE GEOMETRY TABLES WITH A MINUS SIGN ARE TO THE LEFT OF THE CONSTRUCTION & R/W BASELINE.
2. UNLESS OTHERWISE NOTED, POINT GEOMETRY ADJACENT TO CURB AND CURB AND GUTTER IS GIVEN TO THE EDGE OF PAVEMENT.
3. RADII ARE GIVEN TO EDGE OF PAVEMENT.
4. UNLESS OTHERWISE NOTED, EDGE OF PAVEMENT ELEVATIONS AT CURB RETURNS ARE GIVEN AT 10 FOOT INTERVALS.
5. ALL WORK REQUIRED FOR CALCULATING AND STAKING OF GRADES SHALL BE PAID FOR UNDER ITEM 763501 - CONSTRUCTION ENGINEERING.
6. PROPOSED CURBS OR PAVEMENT THAT TIE INTO EXISTING OR CURBS SHALL MATCH THE EXISTING PAVEMENT OR CURB ELEVATIONS.

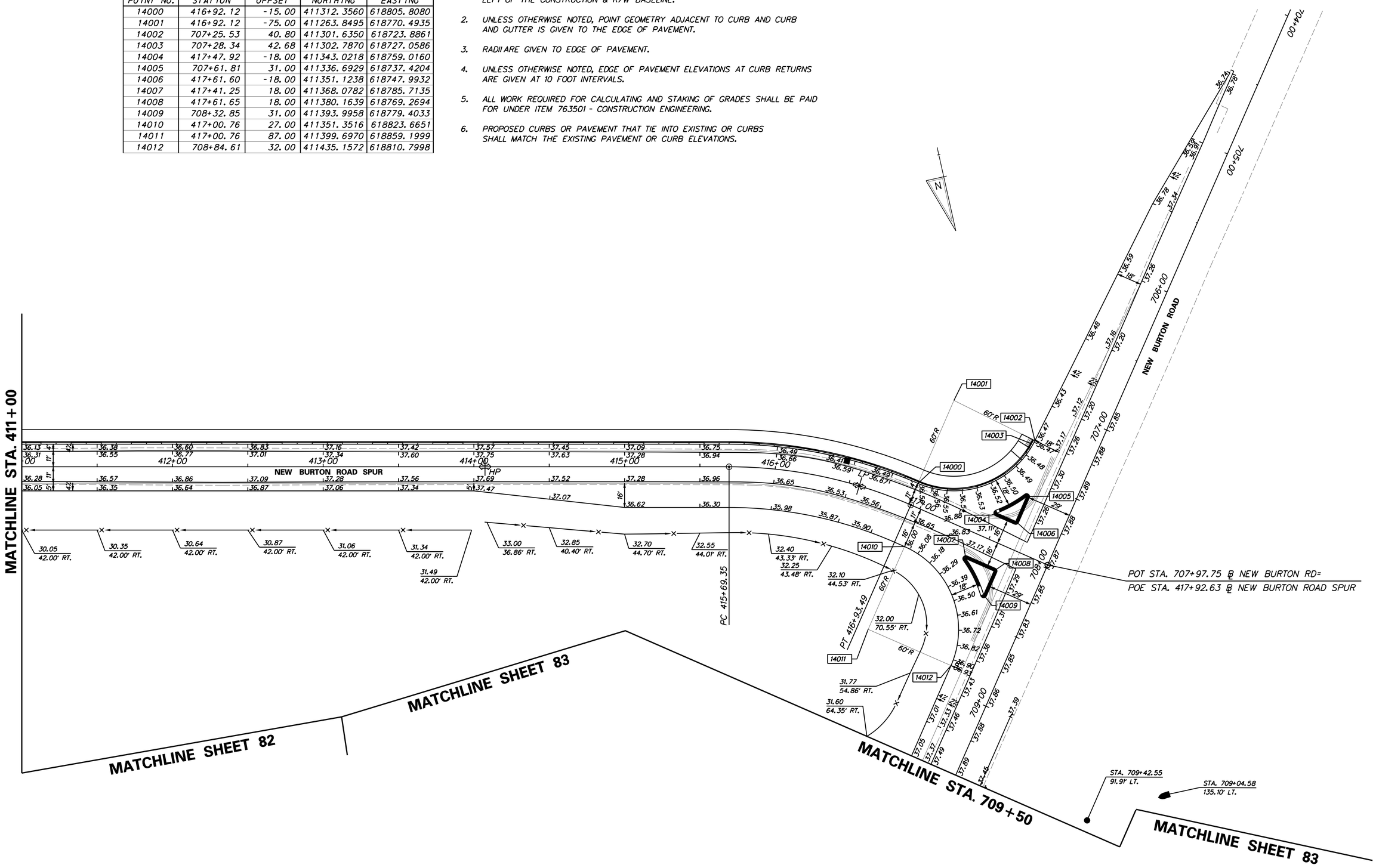

DELAWARE DEPARTMENT OF TRANSPORTATION

ADDENDUMS / REVISIONS

SCALE: 1"=30' (0, 30, 60, 90 FEET)

WEST DOVER CONNECTOR

CONTRACT	BRIDGE NO.	GRADES AND GEOMETRICS	SHEET NO.
T200411701	DESIGNED BY: RP, KM		105
COUNTY			TOTAL SHTS.
KENT	CHECKED BY: BP		320

4/3/2014 deinlein
J:\BRIDGE_HIGHWAYS\6061_DelDOT_WEST_DOVER_CONN\Civil\Civ_Sheets\06_Grade_Geo\GG32.dgn

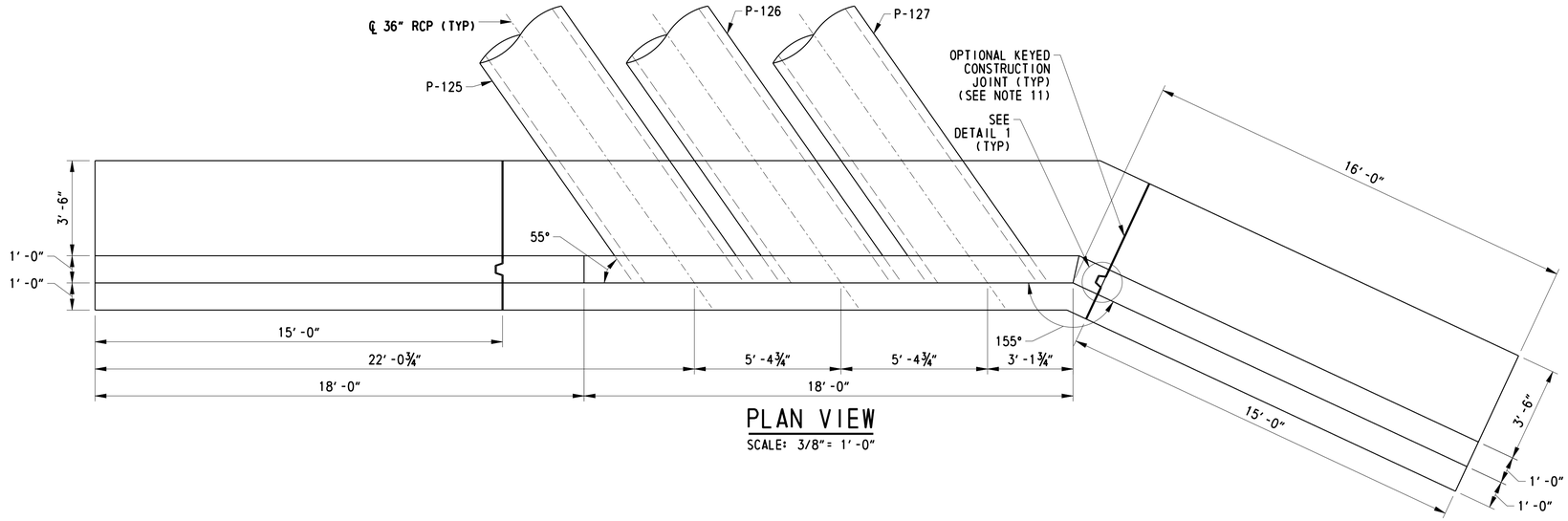

PLAN VIEW

SCALE: 3/8"= 1'-0"

NOTES:

1. HEADWALL DESIGN BASED ON F'C=3,000 PSI TO ALLOW OPTION FOR CAST-IN-PLACE OR PRECAST CONCRETE STRUCTURE.
2. DETAILS SHOWN FOR PRECAST CONCRETE OPTION. CONTRACTOR SHALL SUBMIT PLANS WITH REINFORCEMENT FOR CAST-IN-PLACE CONCRETE OPTION, IF CAST-IN-PLACE OPTION IS TO BE CONSTRUCTED.
3. FOR PRECAST CONCRETE OPTION, ALL CONCRETE SHALL BE CLASS A WITH A 28 DAY COMPRESSIVE STRENGTH OF 4,500 PSI, IN ACCORDANCE WITH SECTION 812 OF THE STANDARD SPECIFICATION.
4. FOR CAST-IN-PLACE OPTION, ALL CONCRETE SHALL BE, AT MINIMUM, CLASS B WITH A 28 DAY COMPRESSIVE STRENGTH OF 3,000 PSI, IN ACCORDANCE WITH SECTION 812 OF THE STANDARD SPECIFICATION.
5. CHAMFER AT EXPOSED EDGES 1" X 1".
6. GRADED AGGREGATE BASE (GAB) IS INCIDENTAL TO WALL CONSTRUCTION.
7. CLEAN CONSTRUCTION JOINTS THOROUGHLY BEFORE PLACING NEXT CONCRETE SEGMENT.
8. PROVIDE ADDITIONAL REINFORCEMENT BARS AROUND PIPE OPENINGS AS SHOWN ON VERTICAL OPENING REINFORCEMENT DETAIL.
9. BAR REINFORCEMENT SHALL BE EPOXY COATED AND SHALL CONFORM TO THE REQUIREMENTS OF SECTION 824 OF THE STANDARD SPECIFICATION.
10. LAP BARS AS REQUIRED. MINIMUM LAP LENGTHS:
    1'- 9" #4 BARS
    2'- 2" #5 BARS
    2'- 7" #6 BARS
11. CONTRACTOR MAY OMIT OR PROPOSE REVISED LOCATION(S) FOR THE KEYED CONSTRUCTION JOINT(S) SHOWN ON THE HEADWALL PLAN AND ELEVATION. CONTRACTOR TO SUBMIT REVISED CONSTRUCTION JOINT LOCATION(S) FOR REVIEW PRIOR TO CONSTRUCTION, IF APPLICABLE.

HEADWALL NO.	PIPE NO.	INVERT EL.
HW-01	125	13.00
	126	13.00
	127	13.00

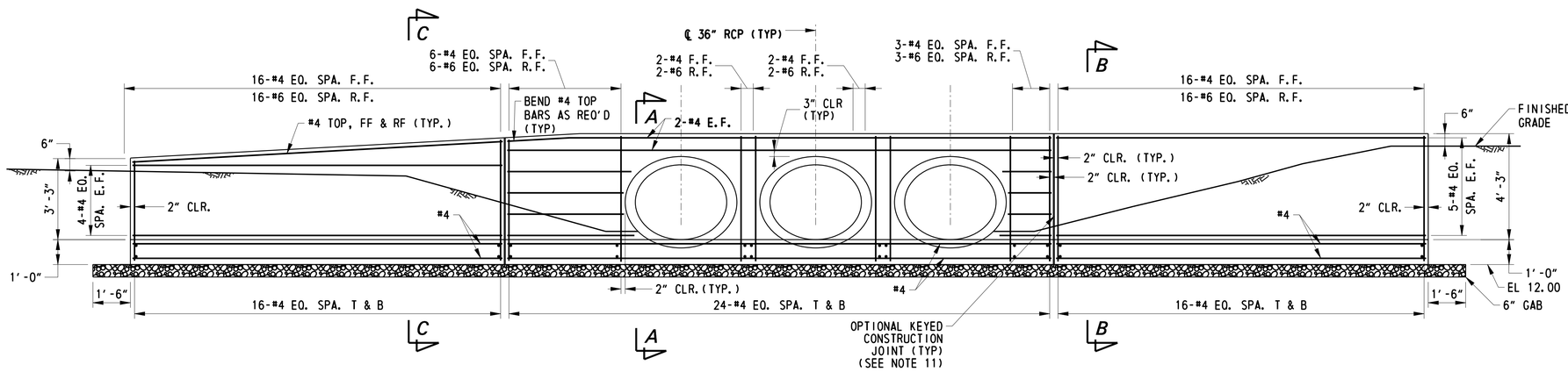

ITEM 617517 - UPSTREAM HEADWALL (HW-01) ELEVATION

SCALE: 3/8"= 1'-0"

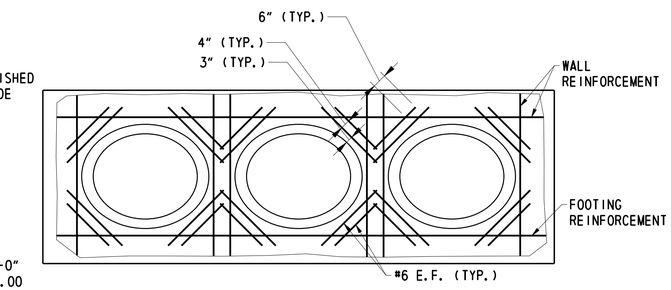

VERTICAL OPENING REINFORCEMENT AT TRIPLE 36" RCP

SCALE: 3/8"= 1'-0"

• ONLY THE FRONT FACE OF BOX WITH MAIN REINFORCEMENT SHOWN FOR CLARITY

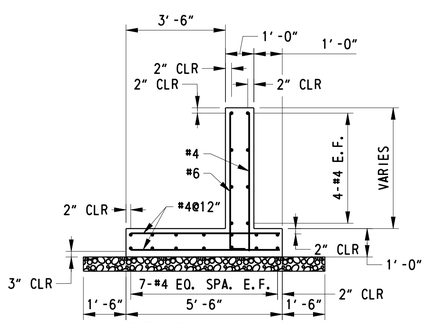

SECTION C-C

SCALE: 3/8"= 1'-0"

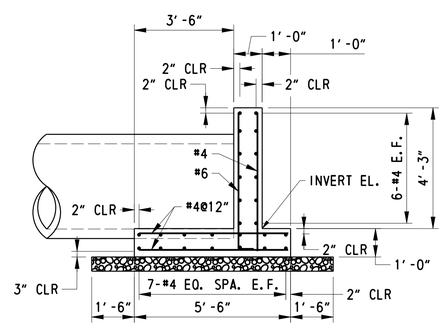

SECTION A-A

SCALE: 3/8"= 1'-0"

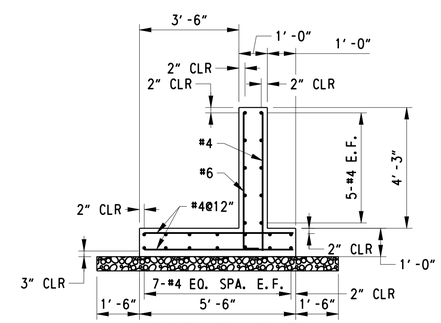

SECTION B-B

SCALE: 3/8"= 1'-0"

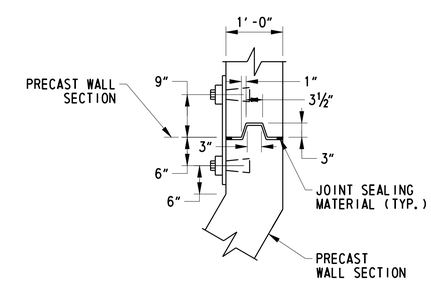

DETAIL 1
KEYED CONSTRUCTION JOINT

SCALE: 3/4"= 1'-0"

7/17/2014 PerryR
J:\BRIDGE_HIGHWAYS\6061_DelDOT_WEST_DOVER_CONN\Civil\Civ_Sheets\08_Const_Detail\HW01.dgn

DELAWARE DEPARTMENT OF TRANSPORTATION	ADDENDUMS / REVISIONS	AS SHOWN	WEST DOVER CONNECTOR	CONTRACT T200411701	BRIDGE NO.	CONSTRUCTION DETAILS	SHEET NO. 106
				COUNTY KENT	DESIGNED BY: JMB		TOTAL SHTS. 320
					CHECKED BY: AM		

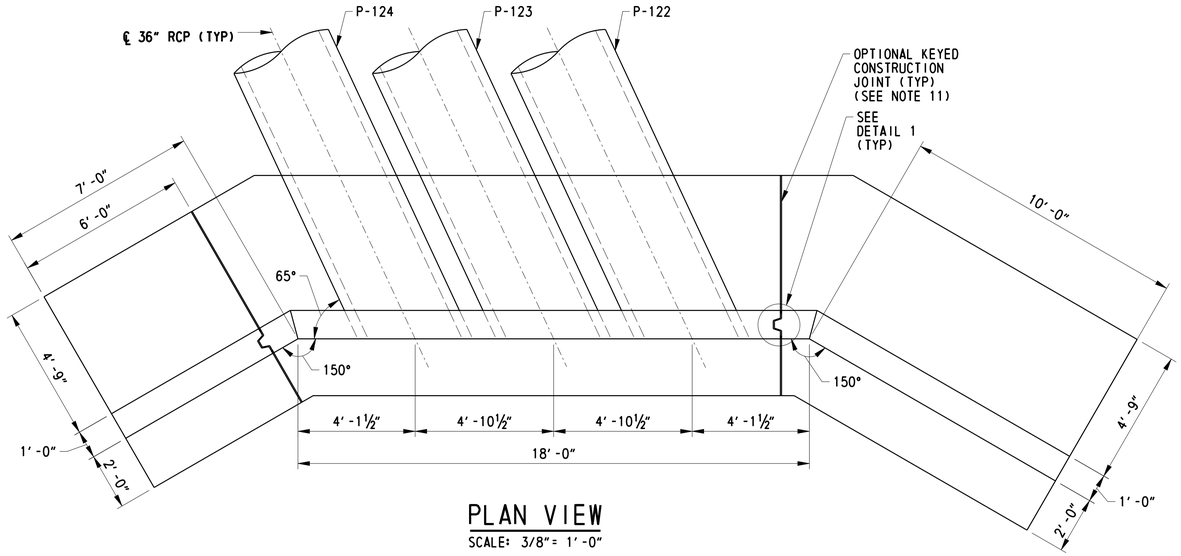

PLAN VIEW

SCALE: 3/8"= 1'-0"

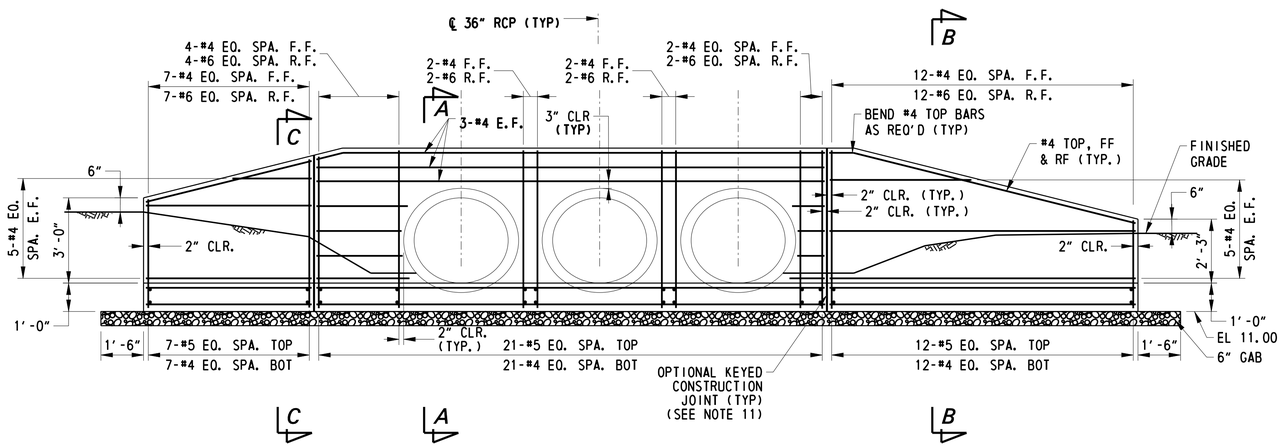

ITEM 617517 - DOWNSTREAM HEADWALL (HW-02) ELEVATION

SCALE: 3/8"= 1'-0"

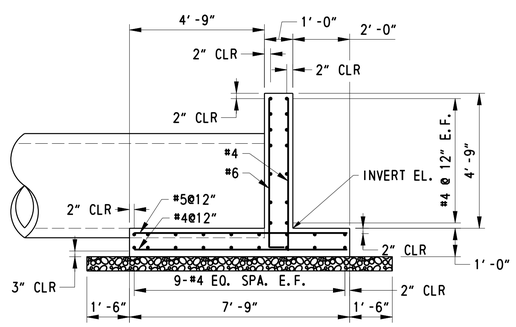

SECTION A-A

SCALE: 3/8"= 1'-0"

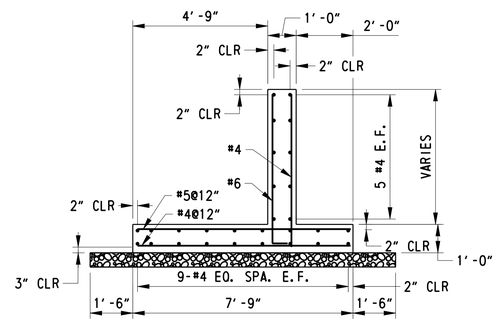

SECTION B-B & C-C

SCALE: 3/8"= 1'-0"

NOTES:

1. HEADWALL DESIGN BASED ON F'C=3,000 PSI TO ALLOW OPTION FOR CAST-IN-PLACE OR PRECAST CONCRETE STRUCTURE.
2. DETAILS SHOWN FOR PRECAST CONCRETE OPTION. CONTRACTOR SHALL SUBMIT PLANS WITH REINFORCEMENT FOR CAST-IN-PLACE CONCRETE OPTION, IF CAST-IN-PLACE OPTION IS TO BE CONSTRUCTED.
3. FOR PRECAST CONCRETE OPTION, ALL CONCRETE SHALL BE CLASS A WITH A 28 DAY COMPRESSIVE STRENGTH OF 4,500 PSI, IN ACCORDANCE WITH SECTION 812 OF THE STANDARD SPECIFICATION.
4. FOR CAST-IN-PLACE OPTION, ALL CONCRETE SHALL BE, AT MINIMUM, CLASS B WITH A 28 DAY COMPRESSIVE STRENGTH OF 3,000 PSI, IN ACCORDANCE WITH SECTION 812 OF THE STANDARD SPECIFICATION.
5. CHAMFER AT EXPOSED EDGES 1" X 1".
6. GRADED AGGREGATE BASE (GAB) IS INCIDENTAL TO WALL CONSTRUCTION.
7. CLEAN CONSTRUCTION JOINTS THOROUGHLY BEFORE PLACING NEXT CONCRETE SEGMENT.
8. PROVIDE ADDITIONAL REINFORCEMENT BARS AROUND PIPE OPENINGS AS SHOWN ON VERTICAL OPENING REINFORCEMENT DETAIL.
9. BAR REINFORCEMENT SHALL BE EPOXY COATED AND SHALL CONFORM TO THE REQUIREMENTS OF SECTION 824 OF THE STANDARD SPECIFICATION.
10. LAP BARS AS REQUIRED. MINIMUM LAP LENGTHS:
    1'- 9" #4 BARS
    2'- 2" #5 BARS
    2'- 7" #6 BARS
11. CONTRACTOR MAY OMIT OR PROPOSE REVISED LOCATION(S) FOR THE KEYED CONSTRUCTION JOINT(S) SHOWN ON THE HEADWALL PLAN AND ELEVATION. CONTRACTOR TO SUBMIT REVISED CONSTRUCTION JOINT LOCATION(S) FOR REVIEW PRIOR TO CONSTRUCTION, IF APPLICABLE.

HEADWALL NO.	PIPE NO.	INVERT EL.
HW-02	122	12.00
	123	12.00
	124	12.00

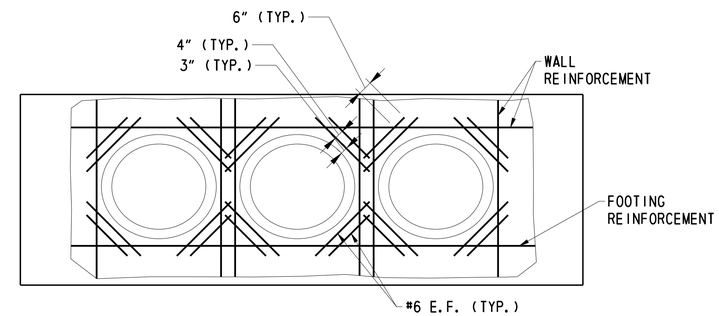

VERTICAL OPENING REINFORCEMENT AT TRIPLE 36" RCP

SCALE: 3/8"= 1'-0"

• ONLY THE FRONT FACE OF BOX WITH MAIN REINFORCEMENT SHOWN FOR CLARITY

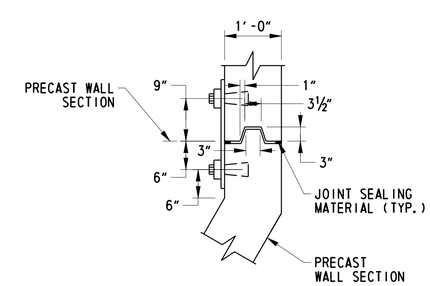

DETAIL 1
KEYED CONSTRUCTION JOINT

SCALE: 3/4"= 1'-0"

7/17/2014 PerryR
J:\BRIDGE_HIGHWAYS\6061_DelDOT_WEST_DOVER_CONN\Civil\Civ_Sheets\08_Const_Detail\HW02.dgn

DELAWARE DEPARTMENT OF TRANSPORTATION	ADDENDUMS / REVISIONS	AS SHOWN	WEST DOVER CONNECTOR	CONTRACT T200411701	BRIDGE NO.	CONSTRUCTION DETAILS	SHEET NO. 107
				COUNTY KENT	DESIGNED BY: JMB		TOTAL SHTS. 320
					CHECKED BY: AM		

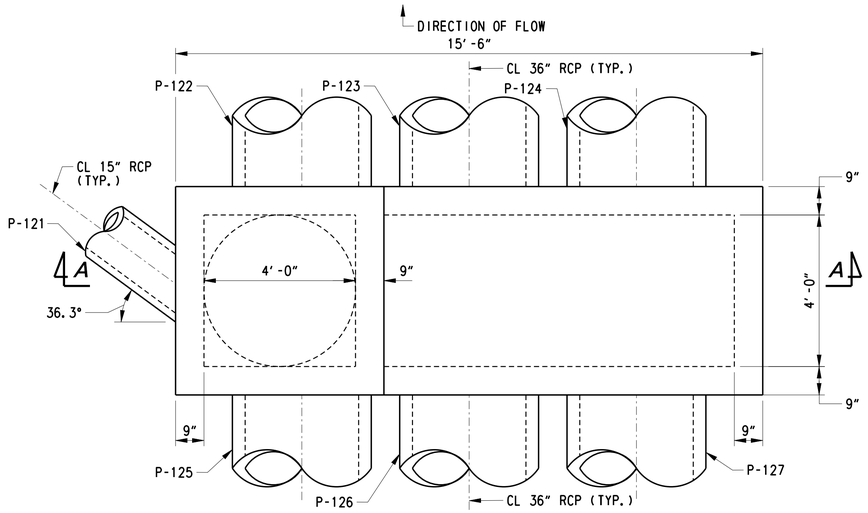

PLAN VIEW

SCALE: 1/2" = 1'-0"

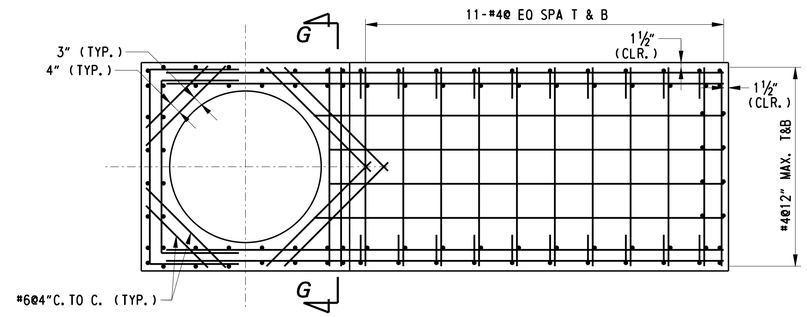

SECTION D-D

SCALE: 1/2" = 1'-0"

NOTES:

1. CONCRETE SHALL BE PRECAST CONCRETE CLASS A WITH A 28 DAY COMPRESSIVE STRENGTH OF 4,500 PSI. CONTRACTOR MAY ALTERNATIVELY USE CAST-IN-PLACE CONCRETE CLASS B WITH A 28 DAY COMPRESSIVE STRENGTH OF 3,000PSI AT NO ADDITIONAL COST TO THE DEPARTMENT. ALL CONCRETE SHALL BE IN ACCORDANCE WITH SECTION 812 OF THE STANDARD SPECIFICATIONS.
2. BAR REINFORCEMENT SHALL BE EPOXY COATED AND SHALL CONFORM TO THE REQUIREMENTS OF SECTION 824 OF THE STANDARD SPECIFICATION.
3. PROVIDE 1 1/2" CONCRETE COVER ON REINFORCING BARS, EXCEPT AS NOTED.
4. FORM A CONCRETE CHANNEL AT THE BOTTOM OF THE MANHOLE CONFORMING TO THE SHAPE OF THE LOWER HALF OF THE INCOMING AND/OR OUTGOING PIPES. PROVIDE A FULL DEPTH U-SHAPED CHANNEL.
5. MARK RISERS OR BASE SECTIONS WITH HOLES CLEARLY WITH MAXIMUM ALLOWABLE DEPTH.
6. CLEAN CONSTRUCTION JOINTS THOROUGHLY BEFORE PLACING NEXT CONCRETE SEGMENT.
7. REFER TO SHEET 24 FOR LOCATION OF JUNCTION BOX.
8. PROVIDE JOINT SEALANT PER DELDOT SPECIFICATIONS, ONLY BETWEEN 2 PRECAST UNITS.
9. LAP BARS AS REQUIRED. MINIMUM LAP LENGTH: 2'-1" #4 BARS

PIPE NO.	INVERT EL.	PIPE SIZE IN
P-121	14.40	15" RCP
P-122	12.40	36" RCP
P-123	12.40	36" RCP
P-124	12.40	36" RCP
P-125	12.50	36" RCP
P-126	12.50	36" RCP
P-127	12.50	36" RCP

CROSS REFERENCE NOTES:

1. FOR TYPICAL MANHOLE STEP DETAILS, SEE SHEET 107.
2. FOR SECTION E-E AND F-F, SEE SHEET 107.
3. FOR ADDITIONAL DETAILS, SEE SHEET 107.

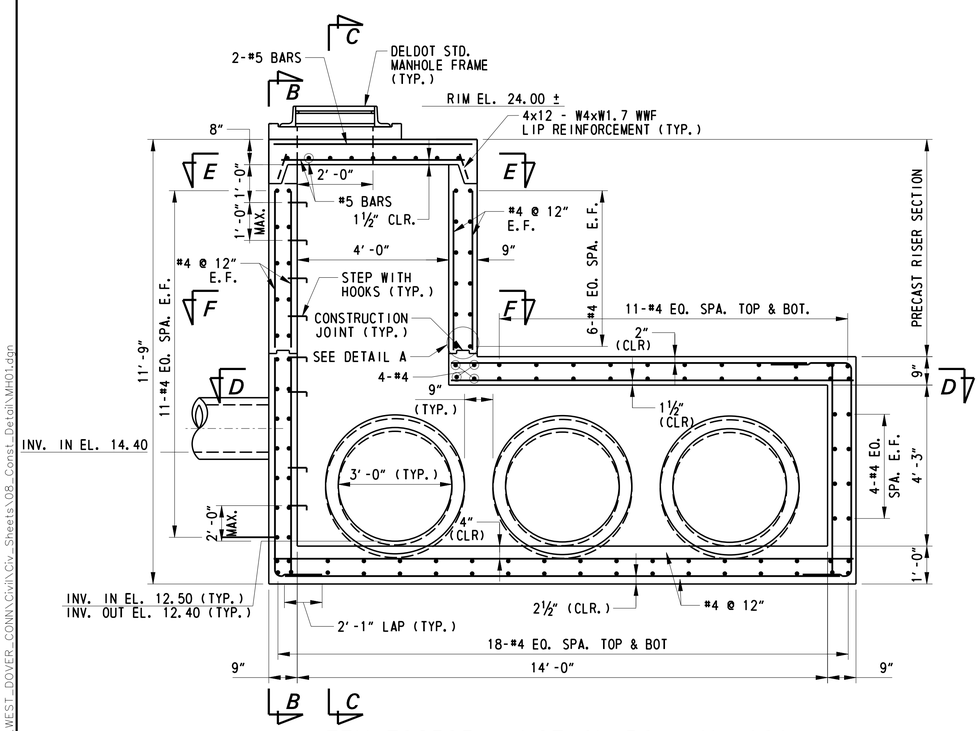

ITEM 708505-JUNCTION BOX (MH-101)
SECTION A-A
(LOOKING DOWNSTREAM)

SCALE: 1/2" = 1'-0"

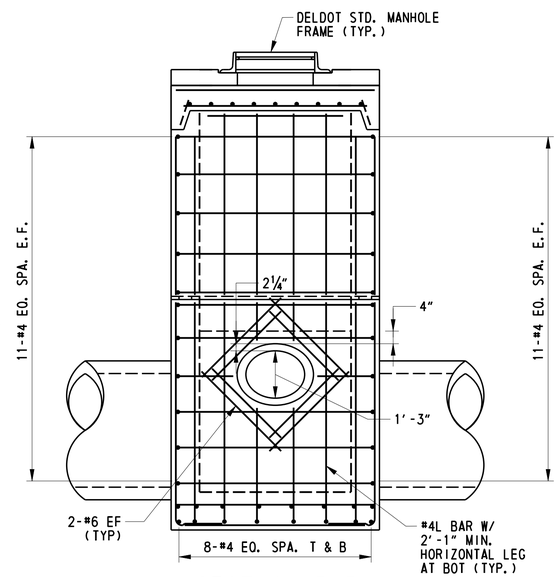

SECTION B-B

SCALE: 1/2" = 1'-0"

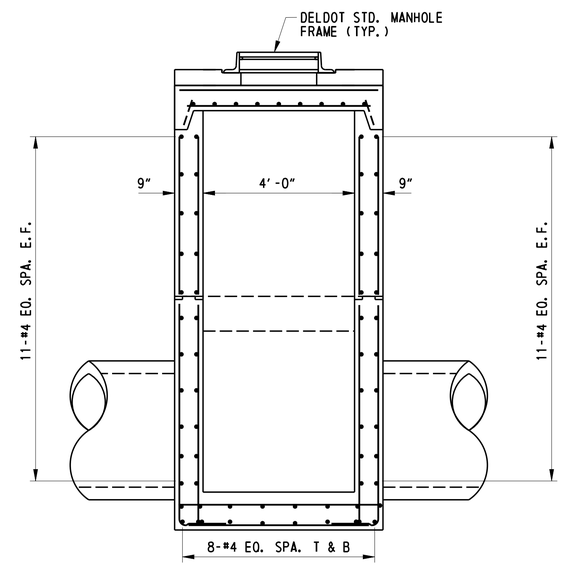

SECTION C-C

SCALE: 1/2" = 1'-0"

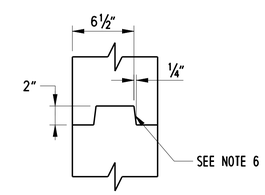

DETAIL A

SCALE: 1 1/2" = 1'-0"

4/3/2014 deinlein
J:\BRIDGE_HIGHWAYS\6061_DelDOT_WEST_DOVER_CONN\Civil\Civ_Sheets\08_Const_Detail\MH01.dgn

DELAWARE DEPARTMENT OF TRANSPORTATION	ADDENDUMS / REVISIONS	AS SHOWN	WEST DOVER CONNECTOR	CONTRACT T200411701	BRIDGE NO.	CONSTRUCTION DETAILS	SHEET NO. 108
				COUNTY KENT	DESIGNED BY: JMB		TOTAL SHTS. 320
					CHECKED BY: AM		

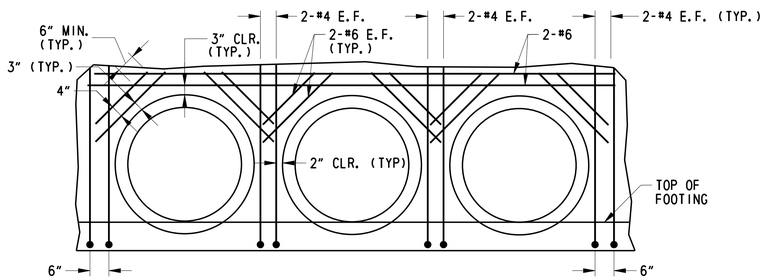

VERTICAL OPENING REINFORCEMENT AT TRIPLE 36" RCP FOR JUNCTION BOX

SCALE: 1/2"= 1'-0"

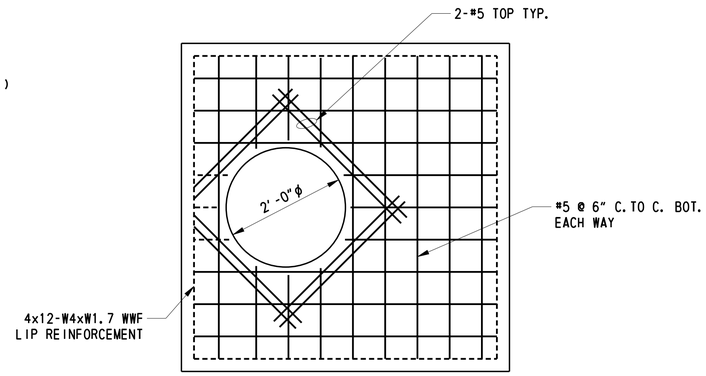

SECTION E-E

SCALE: N.T.S.

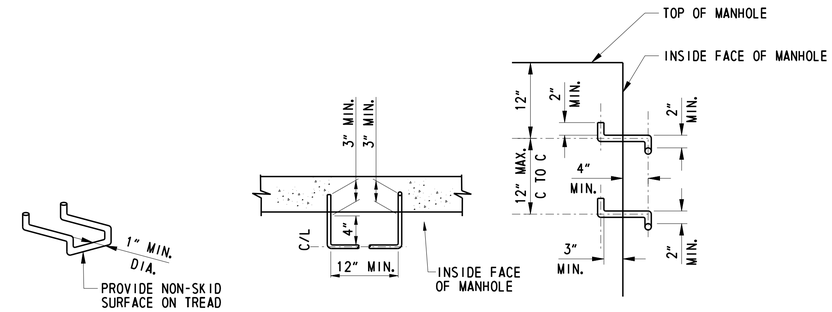

TYPICAL STEP CONFIGURATION MANHOLE STEPS

SCALE: N.T.S.

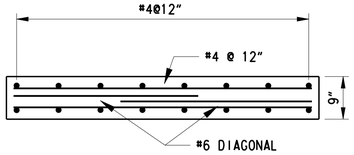

SECTION G-G

SCALE: 3/4"= 1'-0"

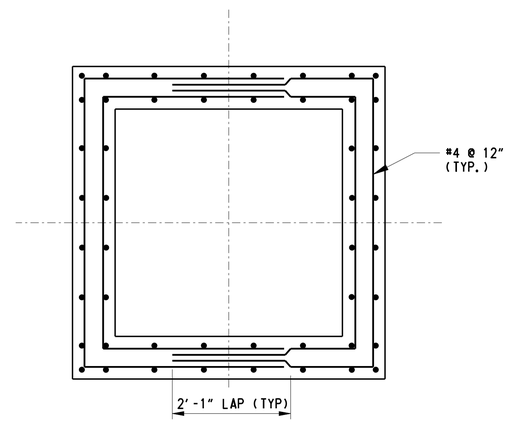

SECTION F-F

SCALE: 3/4"= 1'-0"

NOTES:

1. WORK THIS SHEET WITH SHEET 106.
2. FOR NOTES, SEE SHEET 106.

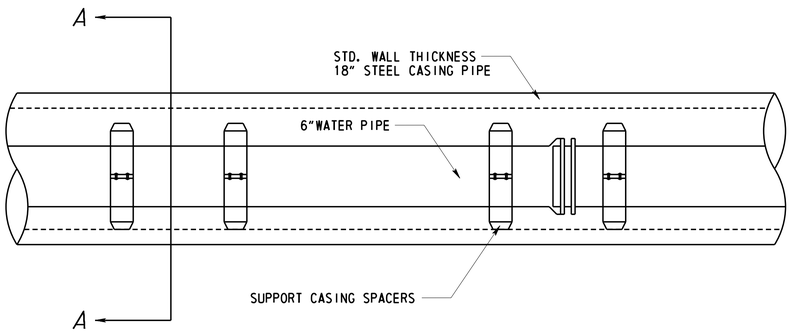

SIDE VIEW

CASING SPACERS SHALL BE INSTALLED A MIN. OF EVERY 5" OR 4 PER STICK OF PIPE, WHICHEVER IS GREATER

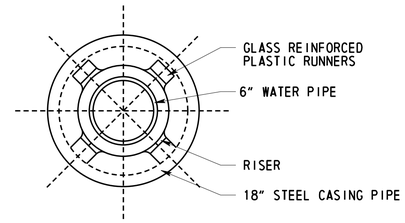

SECTION A-A

WATER LINE CASING INSTALLATION
NOT TO SCALE

NOTE: IF RELOCATION OF THE EXISTING WATER LINE IS REQUIRED TO MAINTAIN MINIMUM CLEARANCES OR TO ENCASE THE EXISTING WATER PIPE THE WORK SHALL BE INCIDENTAL TO ITEM 614744 - STEEL CASING PIPE, 18"

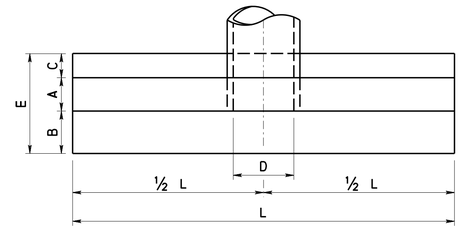

PLAN

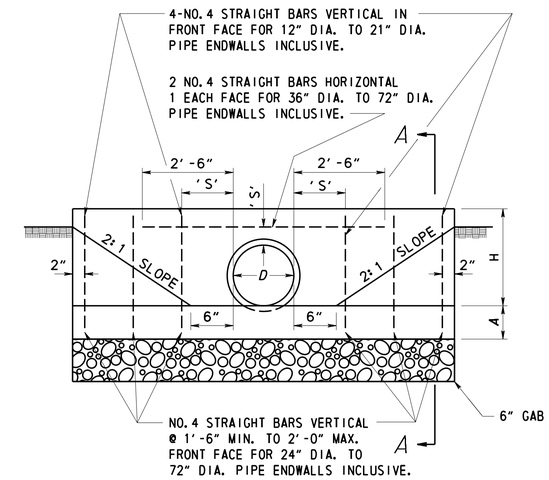

ELEVATION

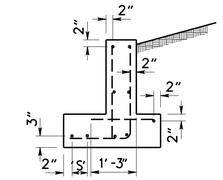

DISPOSITION OF BARS DETAIL

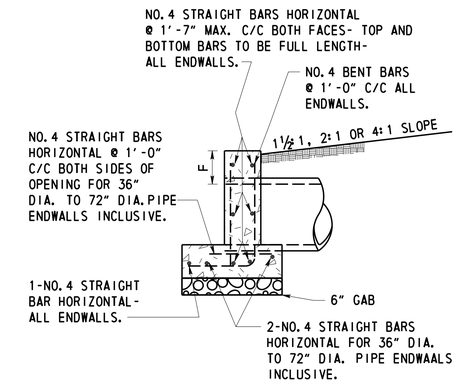

SECTION A-A

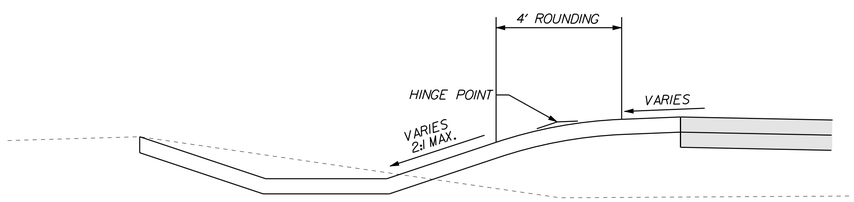

ROUNDING DETAIL
NOT TO SCALE

QUANTITIES FOR ESTIMATING PURPOSES ONLY

OPENING		DIMENSIONS							QUANTITIES	
D	AREA	A	B	C	E	F	H	L	CONC. C.Y.	STEEL LBS.
INCHES	SQ. FT.									
12	0.79	9"	6"	6"	1'-9"	9"	1'-9"	6'-6"	0.61	41
15	1.23	9"	6"	6"	1'-9"	9"	2'-0"	7'-9"	0.77	47
18	1.77	9"	6"	6"	1'-9"	9"	2'-3"	9'-0"	0.95	54
21	2.40	9"	6"	6"	1'-9"	9"	2'-6"	10'-3"	1.14	70
24	3.14	9"	14"	6"	2'-5"	9"	2'-9"	11'-6"	1.56	80
27	3.98	9"	14"	6"	2'-5"	9"	3'-0"	12'-10"	1.82	88
30	4.91	9"	14"	6"	2'-5"	12"	3'-6"	14'-2"	2.22	98
33	5.94	9"	14"	6"	2'-5"	12"	3'-9"	15'-5"	2.48	105
36	7.07	12"	16"	10"	3'-2"	12"	4'-0"	16'-8"	4.16	182
42	9.62	12"	16"	10"	3'-2"	12"	4'-6"	19'-2"	5.07	206
48	12.57	12"	16"	10"	3'-2"	12"	5'-0"	21'-8"	6.09	244
54	15.90	12"	20"	12"	3'-8"	12"	5'-6"	24'-2"	7.62	275
60	19.64	12"	20"	12"	3'-8"	12"	6'-0"	26'-8"	8.82	304
72	28.27	12"	20"	12"	3'-8"	12"	7'-0"	31'-8"	11.46	377

'S' DISTANCES

4" FOR 12" DIA. TO 21" DIA. PIPES INCLUSIVE.
6" FOR 24" DIA. TO 36" DIA. PIPES INCLUSIVE.
8" FOR 42" DIA. TO 72" DIA. PIPES INCLUSIVE.

GENERAL NOTES

1. CONCRETE SHALL BE CLASS B WITH A 28 DAY COMPRESSIVE STRENGTH OF 3,000 PSI, IN ACCORDANCE WITH SECTION 812 OF THE STANDARD SPECIFICATION.
2. BAR REINFORCEMENT SHALL BE EPOXY COATED AND SHALL CONFORM TO THE REQUIREMENTS OF SECTION 824 OF THE STANDARD SPECIFICATION.
3. CHAMFER ALL EXPOSED EDGES 1"X1" OR AS DIRECTED.
4. GAB IS INCIDENTAL TO WALL CONSTRUCTION.

ITEM 617515 HEADWALL
METAL OR CONCRETE ROUND PIPE

1) SEE PLAN SHEETS FOR LOCATIONS:
HW-04, HW-05

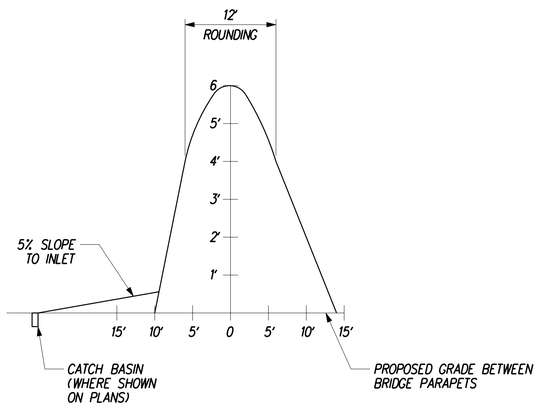

SECTION A-A
N. T. S

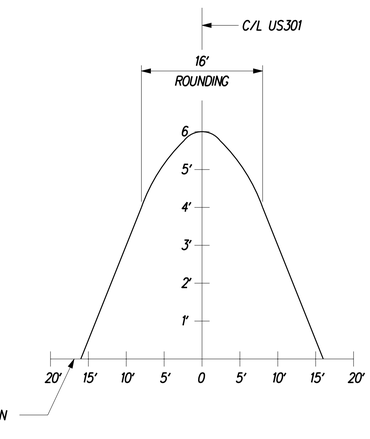

SECTION B-B
N. T. S

NOTES:
1. DISTANCE BETWEEN THE OUTSIDE FACE OF BRIDGE PARAPET AND THE TOE OF SLOPE FOR THE EARTH MOUND SHALL NOT EXCEED FOUR (4) FEET.
2. SEE BRIDGE PLANS FOR THE LOCATIONS OF EARTH MOUNDS AT BRIDGE APPROACHES.
3. EARTH MOUNDS SHALL BE CONSTRUCTED OF MATERIALS MEETING THE REQUIREMENTS OF BORROW, TYPE F AND COMPACTED IN ACCORDANCE WITH SECTION 202.
4. STABILIZE MOUND SURFACE WITH TOPSOIL, SEED AND MULCH PER ROADWAY TYPICAL SECTIONS.
5. EARTH MOUND AT BRIDGE APPROACHES PROVIDED WITHIN THE MEDIAN.

EARTH MOUND DETAILS
AT BRIDGE APPROACHES
N. T. S

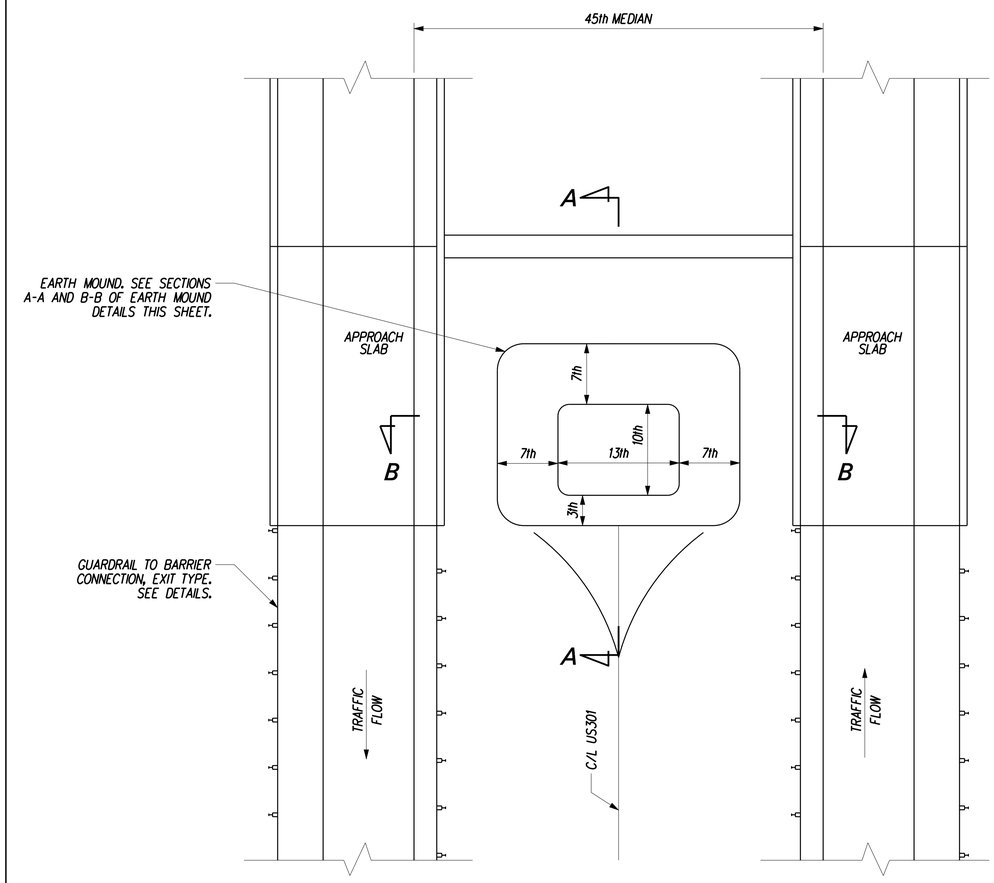

NOTES:
1. SEE PLAN SHEETS FOR LENGTH AND APPLICATION OF GUARDRAIL.

BRIDGE PROTECTION SYSTEM
MAINLINE BRIDGE PARAPET AND
MEDIAN OPENING PROTECTION PLAN
N. T. S

4/3/2014 deinleinj
J:\BRIDGE_HIGHWAYS\6061_DelDOT_WEST_DOVER_CONN\Civil\Civ_Sheets\08_Const_Detail\DT01a.dgn

DELAWARE DEPARTMENT OF TRANSPORTATION	ADDENDUMS / REVISIONS	NOT TO SCALE	WEST DOVER CONNECTOR	CONTRACT T200411701	BRIDGE NO.	CONTRUCTION DETAILS	SHEET NO. 111
				COUNTY KENT	DESIGNED BY: BAS		TOTAL SHTS. 320
					CHECKED BY: JJW		

GENERAL BRIDGE PROJECT NOTES

1. DESIGN SPECIFICATIONS:
   DELDOT BRIDGE MANUAL, MAY 2005 INCLUDING LATEST REVISIONS
   2012 AASHTO LRFD BRIDGE DESIGN SPECIFICATIONS, 6TH EDITION

2. LOADING:
   LIVE LOAD - AASHTO HL-93
   DEAD LOAD - INCLUDES 25 PSF FOR FUTURE WEARING SURFACE, AND 15 PSF FOR PERMANENT METAL DECK FORMS, WHICH TAKE INTO ACCOUNT THE WEIGHT OF THE FORM PLUS THE WEIGHT OF CONCRETE IN THE CORRUGATED FORMS.

3. REINFORCING STEEL:
   ALL REINFORCING STEEL SHALL BE AASHTO M31 (ASTM M615), GRADE 60.
   ALL REINFORCING STEEL SHALL BE EPOXY COATED IN ACCORDANCE WITH AASHTO M284. UNLESS OTHERWISE SPECIFICIED, ALL REINFORCING SHALL HAVE 2" MINIMUM CONCRETE COVER.

4. BEAMS AND PIER DIAPHRAGMS:
   TIME FROM CASTING OF BEAMS TO POURING OF PIER DIAPHRAGM MUST BE NO LESS THAN 90 DAYS. IF TIME IS NOT SUFFICIENT, CONTRACTOR MUST SUBMIT DESIGN FOR APPROVAL SHOWING STRUCTURAL DESIGN CALCULATIONS TO ACCOUNT FOR RESTRAINT MOMENTS.

5. INTERMEDIATE DIAPHRAGMS:
   THE PRECASTER / CONTRACTOR MAY USE A PRECAST ALTERNATE FOR THE INTERMEDIATE DIAPHRAGMS. IF SO, DETAILS (INCLUDING THE NEW CONNECTION) SHALL BE INCLUDED THE PRESTRESSED BEAM SHOP DRAWINGS FOR REVIEW.

6. MISCELLANEOUS PAYMENT NOTES:
   A. ALL DIAPHRAGM CONCRETE IS INCLUDED IN THE QUANTITY FOR ITEM 602013 - PCC MASONRY, SUPERSTRUCTURE, CLASS D. STYROFOAM FILLER USED IN THE PIER AND END DIAPHRAGMS IS INCIDENTAL TO ITEM 602013.
   B. ANY WATERSTOPS SHALL BE INCIDENTAL TO THE APPROPRIATE CONCRETE ITEM.
   C. STRUCTURAL EXCAVATION AND BACKFILL AROUND THE PIER FOOTING SHALL BE PAID UNDER ITEMS 207000 AND 210000 RESPECTIVELY.
   D. ALL BACKFILL AROUND THE ABUTMENTS (EACH CONSTRUCTED ABOVE EXISTING GRADE) SHALL BE PAID UNDER ITEM 209003 - BORROW, TYPE C. THE QUANTITY INCLUDED WITH THE BRIDGE QUANTITIES IS THE FILL AROUND EACH ABUTMENT FROM THE END OF THE APPROACH SLAB TO THE TOE OF SLOPE IN FRONT OF THE ABUTMENT.

7. NO SLIP FORMING SHALL BE PERMITTED.

8. BEARINGS
   ALL ELASTOMERIC BEARING PADS SHALL BE REINFORCED ELASTOMERIC AND SHALL CONFORM TO SUBSECTION 623.06 OF THE STANDARD SPECIFICIATIONS. PAYMENT SHALL BE INCIDENTAL TO ITEM 623003 - PRESTRESSED REINFORCED CONCRETE MEMBERS, BULB-T BEAMS.

9. LOAD RATING
   LOAD RATINGS FOR BR 2-156 & 2-157 HAVE BEEN PERFORMED BY DELDOT'S BRIDGE MANAGEMENT SECTION IN ACCORDANCE WITH THE 2012 AASHTO LRFD BRIDGE DESIGN SPECIFICATIONS AND THE MANUAL FOR BRIDGE EVALUATION. ALL CURRENT AASHTO, DELAWARE LEGAL AND PERMIT LOADS HAVE BEEN CONFIRMED TO HAVE A MINIMUM LOAD RATING FACTOR OF 1.0 IN ACCORDANCE WITH DELDOT'S BRIDGE DESIGN MANUAL.

10. BRIDGE EMBANKMENTS SHALL SIT UNDISTURBED FOR A MINIMUM 30 DAY PERIOD AFTER CONSTRUCTED TO FULL HEIGHT, OR AS DIRECTED BY THE ENGINEER. FULL HEIGHT SHALL BE TO THE BOTTOM OF ABUTMENT FOOTER ELEVATION. ALSO, SETTLEMENT SHALL NOT EXCEED 0.3" PER WEEK BEFORE RESUMING WORK ON THE EMBANKMENT, OR AS DIRECTED BY THE ENGINEER. REFER TO PILE DETAILS FOR SEQUENCE OF CONSTRUCTION NOTES.

BR 2-156 PROJECT NOTES

1. CONCRETE:
   SPECIFIED 28 DAY COMPRESSIVE STRENGTH (f'c)
   PRESTRESSED PCEF 4747 BEAMS-----7.0 KSI (f'ci = 5.6 KSI)
   PRESTRESSED PCEF 7147 BEAMS-----8.0 KSI (f'ci = 6.4 KSI)
   DECK SLAB AND DIAPHRAGMS-------4.5 KSI, CLASS 'D'
   CONCRETE ABOVE FOOTINGS--------4.5 KSI, CLASS 'A'
   CONCRETE IN FOOTINGS----------3.0 KSI, CLASS 'B'
   CHAMFER ALL EXPOSED EDGES ¾" UNLESS NOTED OTHERWISE.

2. END AND PIER DIAPHRAGMS:
   END DIAPHRAGMS AND PIER DIAPHRAGMS (POUR 2) CANNOT BE POURED UNTIL DECK POUR 1 IS COMPLETED.

3. CONCRETE SEALER
   SILICONE ACRYLIC CONCRETE SEALER SHALL BE APPLIED TO THE EXPOSED FACE OF ALL BARRIER AND THE PIER CAPS.
   PAYMENT UNDER ITEM 602646 - SILICONE ACRYLIC CONCRETE SEALER

4. ABUTMENT PROTECTION SHALL CONSIST OF 1'-5" R-5 RIPRAP ON 6" DE #3 STONE ON GEOTEXTILE.
   RIPRAP SHALL EXTEND 8'-0" FROM THE FACE OF EACH MSE WALL AND TERMINATE IN A 2'0" DEEP TOE.

5. HYDRAULIC DATA
   DRAINAGE AREA: 2.55 sq mi
   DESIGN FREQUENCY: 100 years
   DESIGN DISCHARGE: 925 cfs
   DESIGN FLOOD ELEVATION: 24.28'

6. SCOUR ANALYSIS
   THE PROPOSED STRUCTURE HAS BEEN ANALYZED FOR THE EFFECTS OF SCOUR IN ACCORDANCE WITH HEC-18 - 'EVALUATING SCOUR AT BRIDGES' AND HEC-23 - 'BRIDGE SCOUR AND STREAM INSTABILITY COUNTERMEASURES.' SCOUR COUNTERMEASURES HAVE BEEN DESIGNED FOR THE WORST CASE OF THE OVERTOPPING FLOOD OR THE 500-YR FLOOD EVENT.

   DESIGN EVENT: 500-yr STORM
   DESIGN DISCHARGE: 4425 cfs
   DESIGN VELOCITY: 1.07 ft/s
   TAILWATER DEPTH: 15.85 ft

BR 2-157 PROJECT NOTES

1. CONCRETE:
   SPECIFIED 28 DAY COMPRESSIVE STRENGTH (f'c)
   PRESTRESSED PCEF 4548 BEAMS----8.0 KSI (f'ci = 6.4 KSI)
   DECK SLAB AND DIAPHRAGMS-------4.5 KSI, CLASS 'D'
   CONCRETE ABOVE FOOTINGS--------4.5 KSI, CLASS 'A'
   CONCRETE IN FOOTINGS----------3.0 KSI, CLASS 'B'
   CHAMFER ALL EXPOSED EDGES ¾" UNLESS NOTED OTHERWISE.

2. BEAMS AND PIER DIAPHRAGMS:
   PIER DIAPHRAGM CANNOT BE POURED UNTIL AFTER DECK POUR 1 AND 2 ARE COMPLETED.

3. CONCRETE SEALER
   SILICONE ACRYLIC CONCRETE SEALER SHALL BE APPLIED TO THE EXPOSED FACE OF THE BACKWALL, EXPOSED FACE AND TOP OF WINGWALLS, CHEEKWALLS, ABUTMENT SEAT, ALL BARRIER AND THE PIER CAP AND COLUMNS. PAYMENT UNDER ITEM 602646 - SILICONE ACRYLIC CONCRETE SEALER.

4. CONCRETE PLACEMENT
   THE CONTRACTOR SHALL BE RESPONSIBLE FOR ENSURING NO FALLING MATERIAL OR EQUIPMENT INTERFERES WITH THE TRAVELLING PUBLIC. SIP DECK FORMS SHALL BE MORTAR TIGHT PER SECTION 602 OF THE STANDARD SPECIFICATIONS. IF ADDITIONAL PROTECTION IS DEEMED NECESSARY IT MAY BE PLACED BELOW THE SIP FORMS. NO PAYMENT WILL BE MADE FOR ADDITIONAL PROTECTION. A PLAN SHOWING THE CONTRACTORS METHOD SHALL BE SUBMITTED TO THE ENGINEER FOR APPROVAL.

BRIDGE SHEET INDEX

SHEET	DESCRIPTION
1	BRIDGE PROJECT NOTES
2	SAFETY FENCE DETAILS
3	HANDRAIL DETAILS
4	CAST-IN-PLACE PILE DETAILS
5	PRECAST PRESTRESSED CONCRETE PILE DETAILS
6-39	BR 2-156
40-65	BR 2-157
TOTAL BRIDGE SHEETS: 65	

BRIDGE 2-156 SHEET INDEX

SHEET	DESCRIPTION
6	BRIDGE PLAN AND ELEVATION
7	TYPICAL SECTION & BRIDGE QUANTITIES
8	ABUTMENT PILE LAYOUT
9	PIER PILE LAYOUT
10	PIER PILE LAYOUT (CONTINUED)
11	MSE WALL DETAILS
12	ABUTMENT 1 DETAILS
13	ABUTMENT 7 DETAILS
14	ABUTMENT STRAP REINFORCING DETAILS
15	WINGWALL DETAILS
16	PIER DETAILS (PIERS 2, 4-6)
17	PIER FOOTING DETAIL
18	PRECAST BEAM NOTES
19	BEAM DETAILS (PCEF 4747)
20	BEAM DETAILS (PCEF 7147)
21	FRAMING PLAN
22	END DIAPHRAGM DETAILS
23	PIER DIAPHRAGM DETAILS
24	DECK PLAN
25	DECK DETAILS
26	DECK ELEVATIONS
27	DECK ELEVATIONS (CONTINUED)
28	DECK ELEVATIONS (CONTINUED)
29	EXPANSION JOINT DETAILS
30	SLEEPER SLAB DETAILS
31	APPROACH SLAB DETAILS
32	PARAPET DETAILS
33-34	REINFORCING BAR LISTS
35-39	BORING LOGS

BRIDGE 2-157 SHEET INDEX

SHEET	DESCRIPTION
40	BRIDGE PLAN AND ELEVATION
41	TYPICAL SECTION & BRIDGE QUANTITIES
42	MSE WALL DETAILS
43	ABUTMENT 1 PLAN & ELEVATION
44	ABUTMENT 2 PLAN & ELEVATION
45	ABUTMENT 1 DETAILS
46	ABUTMENT 2 DETAILS
47	ABUTMENT REINFORCING STRAP DETAILS
48	WINGWALL DETAILS
49	SOUTHBOUND PIER DETAILS
50	NORTHBOUND PIER DETAILS
51	BEAM DETAILS
52	FRAMING PLAN & BEARING DETAILS
53	ABUTMENT DIAPHRAGM DETAILS
54	PIER & INTERMEDIATE DIAPHRAGM DETAILS
55	DECK REINFORCING DETAILS
56	FINISHED DECK ELEVATIONS
57	DECK DETAILS
58	EXPANSION JOINT DETAILS
59	APPROACH SLAB DETAILS
60	MOMENT SLAB DETAILS
61	PARAPET DETAILS
62-63	REINFORCING BAR LIST
64-65	BORING LOGS

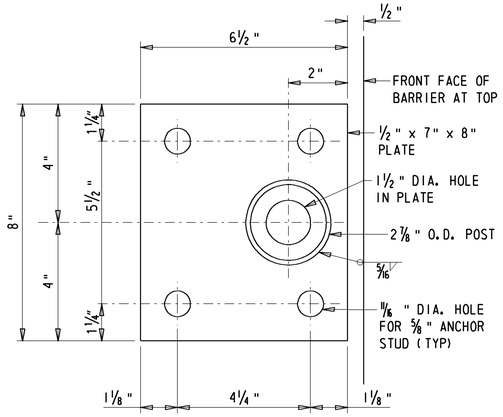

DETAIL A

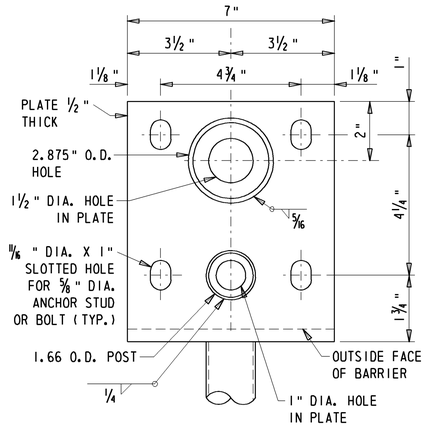

PLAN VIEW

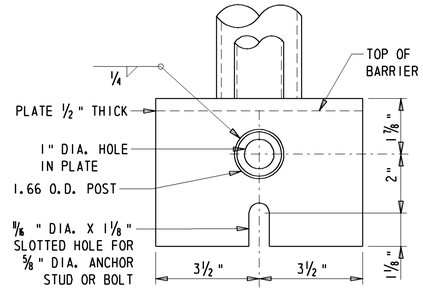

SIDE VIEW

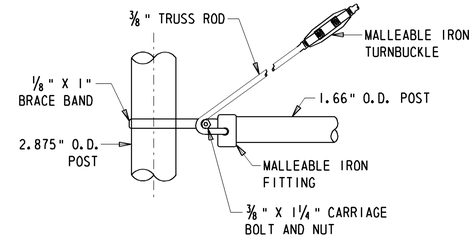

TRUSS ROD ATTACHMENT

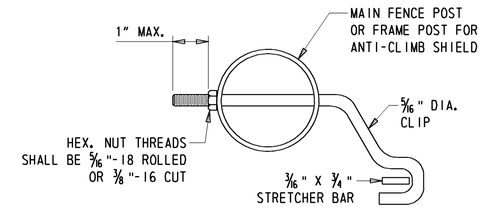

STRETCHER BAR ATTACHMENT

DETAIL B

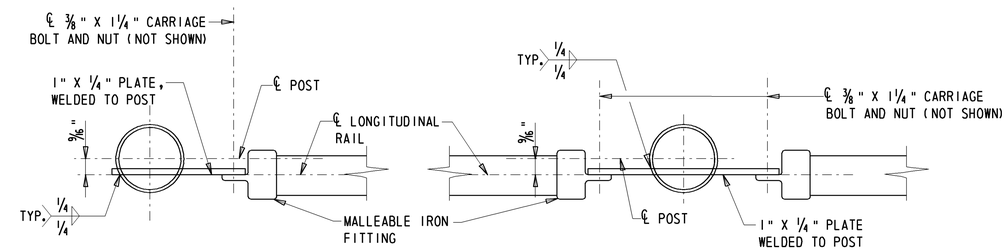

TOP LONGITUDINAL RAIL-POST ATTACHMENT

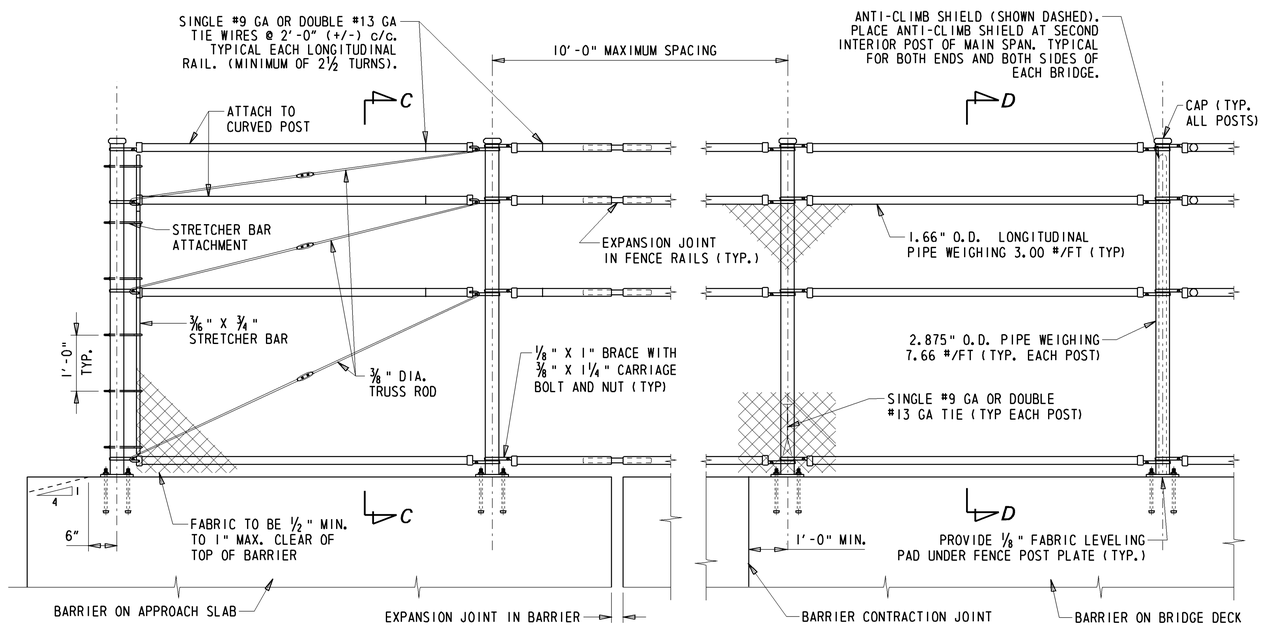

BRIDGE SAFETY FENCE ELEVATION

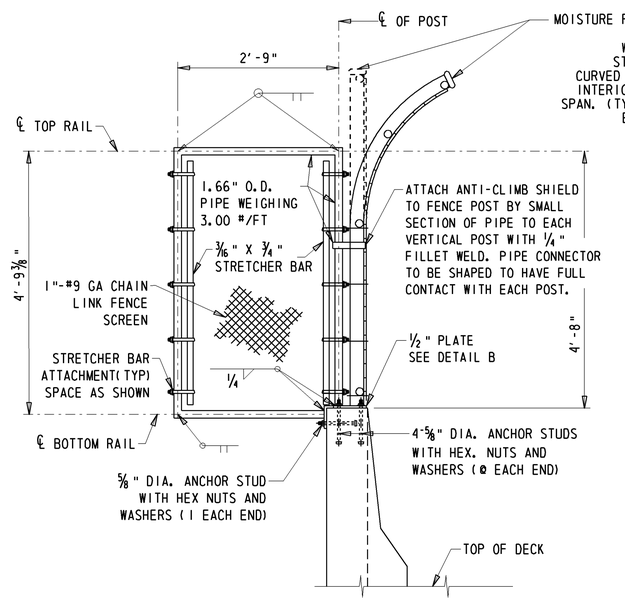

SECTION C-C

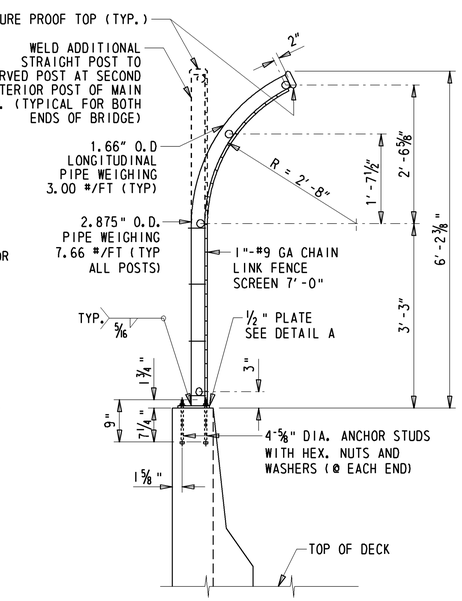

SECTION D-D

BRIDGE SAFETY FENCE NOTES

1. MATERIALS - SEE SPECIAL PROVISIONS FOR ITEM 727507 - BRIDGE SAFETY FENCE.
2. POST SPACING - POST SPACING TO BE DETERMINED BY THE CONTRACTOR AND INCLUDED IN THE SHOP DRAWINGS. EACH POST MUST BE A MINIMUM OF 1'-0" FROM ANY BARRIER JOINT.
3. WORKING DRAWINGS - CONTRACTOR SHALL SUBMIT WORKING DRAWINGS FOR THE FENCE FOR REVIEW BY THE ENGINEER
4. PAYMENT - CHAIN LINK FENCE INCLUDING ANTI-CLIMB SHIELD ITEMS WILL BE PAID UNDER ITEM 727507 - BRIDGE SAFETY FENCE.

GENERAL NOTES

1. POSTS SHALL BE SET PERPENDICULAR TO GRADE.
2. POSTS MAY BE MOVED 6" OR LESS TO CLEAR EXPANSION AND DEFLECTION JOINTS.
3. RAILS SHALL BE CONTINUOUS THROUGH SPAN ONE WITH SPLICES WHERE RAIL SECTIONS CROSS EXPANSION JOINTS.
4. THE CENTERLINE OF ANY SPLICE SHALL BE LOCATED AT LEAST 2'-0" AWAY FROM CENTERLINE OF A POST.
5. BOTTOM OF POST BASES SHALL BE THOROUGHLY COATED WITH AN APPROVED CAULKING COMPOUND OR AN APPROVED ZINC CHROMATE PAINT.
7. SET NUTS ¼" CLEAR MINIMUM OF PLATES AND BURR THREADS ABOVE NUTS.
8. HANDRAIL DETAILS APPLY TO BRIDGE 2-156 ONLY. IT SHALL BE PLACED ENTIRE LENGTH OF SOUTHBOUND 2'-3" BARRIER WITH THE EXCEPTION OF SPAN 5. SEE TYPICAL SECTION FOR MORE DETAILS.

MATERIAL NOTES

ALUMINUM RAILS

1. POSTS, BASE PLATES, SLEEVES AND CLAMP BARS. ASTM B-221 ALLOY 6061-T6.
2. ALUMINUM WASHERS. ASTM B-209 ALLOY ALCLAD 2024-T3.
3. STAINLESS STEEL CAP SCREWS. ASTM A-193, GRADE B-8.
4. END PLUGS. ASTM B-26, B-108, ALLOY A-356-F.
5. ANCHOR STUDS. ASTM A-276 TYPE 430 (THREADS TO BE ROLLED NOT CUT).
6. ALUMINUM NUTS. ASTM B-221, ALUMINUM ALLOY 6061-T6.
7. RAILS. ASTM B-221, ALLOY 6061-T6 OR 6351-T5.
8. STEEL NUTS. ASTM A-307, STEEL.

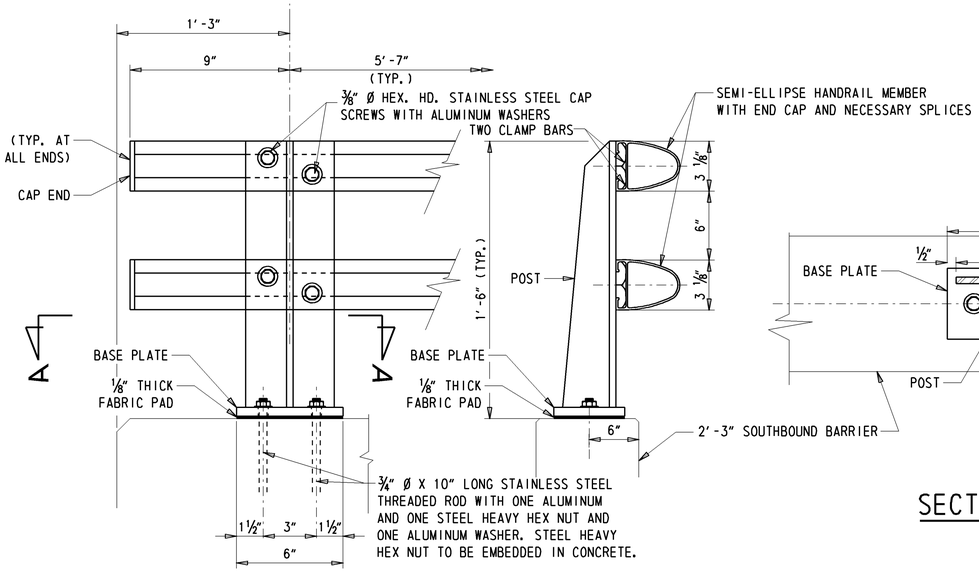

ELEVATION SIDE VIEW

METAL BRIDGE RAILING

N.T.S.

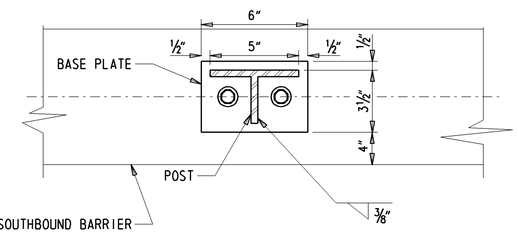

SECTION A-A

N.T.S.

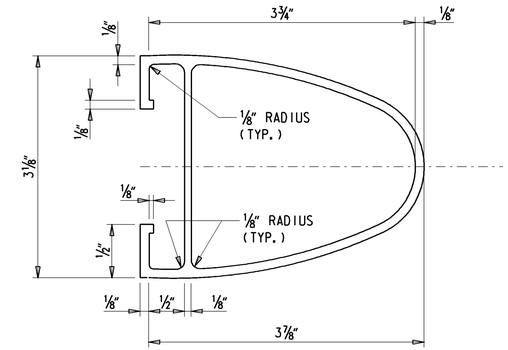

SEMI-ELLIPTICAL HANDRAIL

N.T.S.

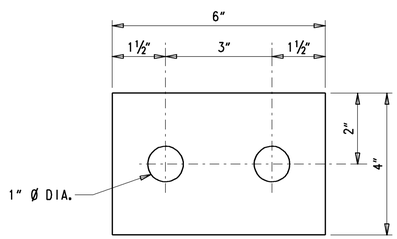

BASE PLATE

N.T.S.

NOTE: BASE PLATE ½" THICK

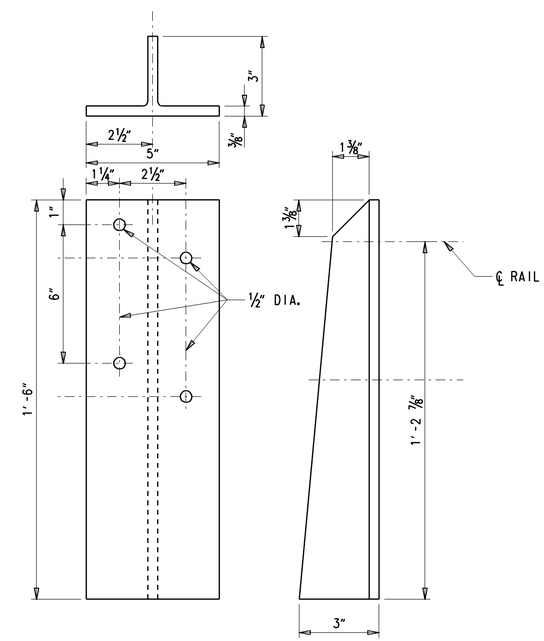

POST

N.T.S.

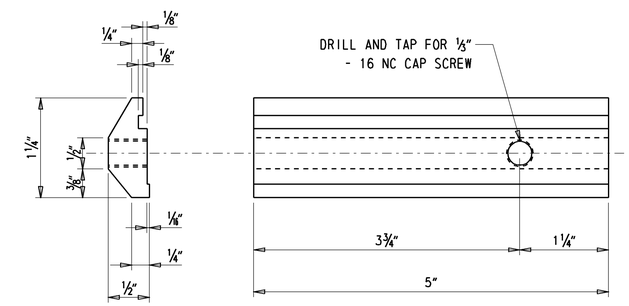

CLAMP BAR

N.T.S.

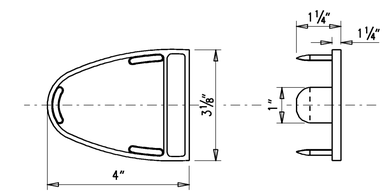

END CAP

N.T.S.

NOTE: CAPS SHALL BE SPOT WELDED TO RAILS WITH WELDS GROUND SMOOTH (3 WELDS REQUIRED FOR EACH CAP)

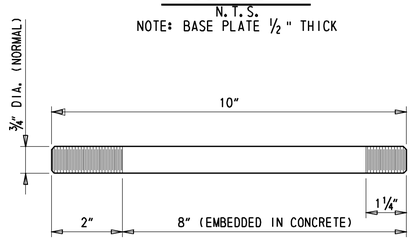

ANCHOR BOLT

N.T.S.

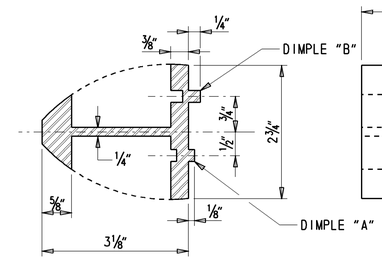

SECTION B-B

N.T.S.

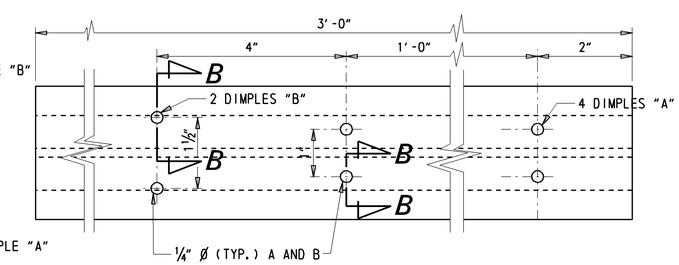

SLEEVE

N.T.S.

DELAWARE DEPARTMENT OF TRANSPORTATION	ADDENDUMS / REVISIONS	NOT TO SCALE	WEST DOVER CONNECTOR	CONTRACT T200411701 · COUNTY KENT · BRIDGE NO. 2-156 N&S · DESIGNED BY: JPN · CHECKED BY: JNH · HANDRAIL DETAILS BRIDGE SHEET 3 OF 65 · SHEET NO. 114 · TOTAL SHTS. 320

Y:\KENT2\BRIDGE\T200411701\Plans\New Burton Rd - 2 Span\RA02

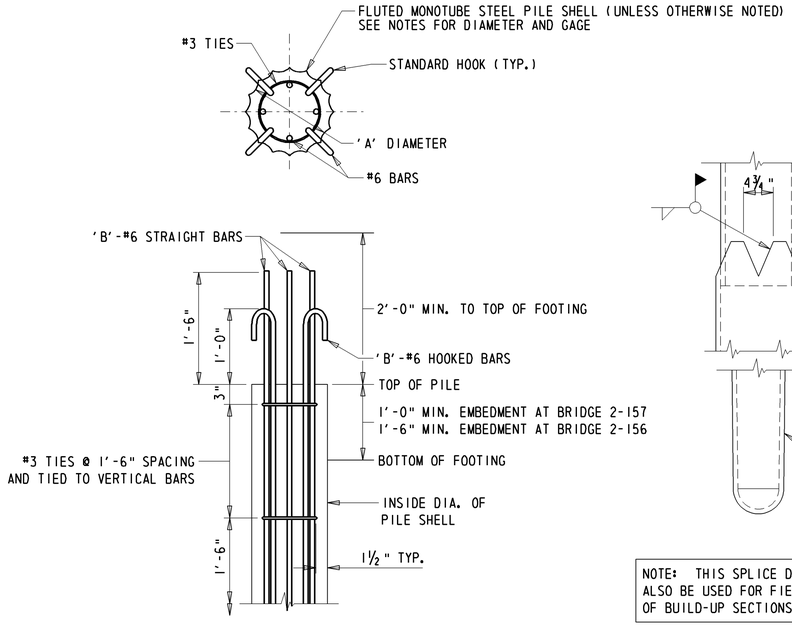

TYPICAL PILE REINFORCEMENT

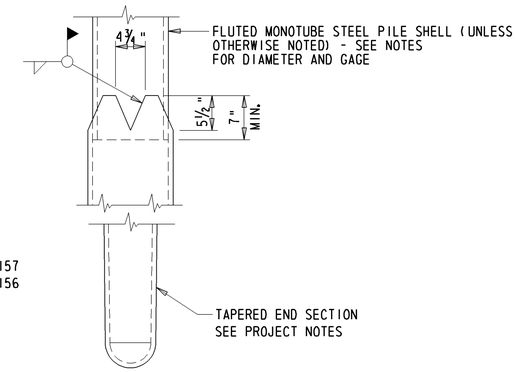

NOTE: THIS SPLICE DETAIL SHALL ALSO BE USED FOR FIELD SPLICES OF BUILD-UP SECTIONS.

TYPICAL PILE SPLICE

CAST-IN-PLACE MONOTUBE PILE DETAILS

SCALE: ½" = 1'-0"

CAST-IN-PLACE PILE SIZES	
PILE SIZE 'A'	DOWELS OR HOOKS 'B'
12"	3
14"	4
16"	4
18"	4

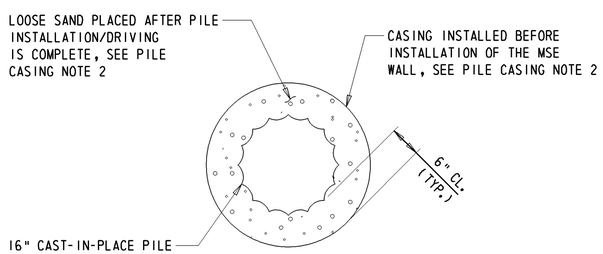

CAST-IN-PLACE PILE

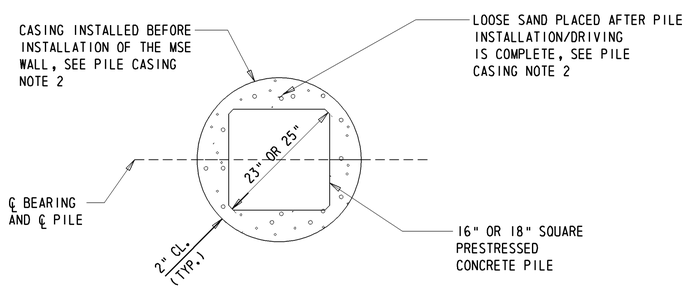

ALTERNATE PRECAST PRESTRESSED CONCRETE PILE

ABUTMENT PILE CASING DETAIL

SCALE: N.T.S.

ABUTMENT PROJECT SPECIFIC PILE NOTES

1. PILE TYPE
   THIS PROJECT SHALL UTILIZE 16" DIA. MONOTUBE CAST-IN-PLACE PILES, 5 GAGE. THE TAPERED END SECTION SHALL BE A "Y" TAPER (0.40" IN/FT), 8" POINT DIAMETER x 16" BUTT DIAMETER x 20' LENGTH. REINFORCEMENT SHALL EXTEND INTO THE PILE THE MINIMUM OF 20'-0".
2. THE ESTIMATED STARTING DRIVING ELEVATION IS FROM THE TOP OF THE PROPOSED PILE LOCATIONS.
3. TOTAL OF 44 PILES ARE REQUIRED FOR THE ABUTMENTS FOR BRIDGE 2-156.
   TOTAL OF 44 PILES ARE REQUIRED FOR THE ABUTMENTS FOR BRIDGE 2-157.

SUPPORT	ULTIMATE BEARING CAPACITY (KIPS)	ESTIMATED PRODUCTION LENGTH (FT)	REQUIRED TEST PILE LENGTH (FT)	MINIMUM TIP ELEVATION
BRIDGE 2-156				
ABUT. 1	335	60	65	-10
ABUT. 7	300	55	60	-10
BRIDGE 2-157				
ABUT. 1	326	65	70	N.A.
ABUT. 2	337	60	65	N.A.

PIER PROJECT SPECIFIC PILE NOTES

1. PILE TYPE
   THIS PROJECT SHALL UTILIZE 16" DIA. MONOTUBE CAST-IN-PLACE PILES, 5 GAGE. THE TAPERED END SECTION SHALL BE A "Y" TAPER (0.40" IN/FT), 8" POINT DIAMETER x 16" BUTT DIAMETER x 20' LENGTH. REINFORCEMENT SHALL EXTEND INTO THE PILE THE MINIMUM OF 20'-0".
2. THE ESTIMATED STARTING DRIVING ELEVATION IS FROM THE TOP OF THE PROPOSED PILE LOCATIONS.
3. TOTAL OF 330 PILES ARE REQUIRED FOR THE PIERS FOR BRIDGE 2-156.
   TOTAL OF 57 PILES ARE REQUIRED FOR THE PIER FOR BRIDGE 2-157.

SUPPORT	ULTIMATE BEARING CAPACITY (KIPS)	ESTIMATED PRODUCTION LENGTH (FT)	REQUIRED TEST PILE LENGTH (FT)	MINIMUM TIP ELEVATION
BRIDGE 2-156				
PIER 2	327	40	45	-10
PIER 3	327	40	45	-10
PIER 4	327	40	45	-10
PIER 5	327	45	50	-10
PIER 6	327	40	45	-10
BRIDGE 2-157				
PIER	381	39	45	N.A.

GENERAL PILE NOTES

1. ONLY ONE TYPE OF PILE SHALL BE USED THROUGHOUT THE PROJECT (I.E., NO MIXING OF PILE TYPES).
2. FOR MORE INFORMATION REGARDING PILE MATERIALS AND FABRICATION, REFER TO SECTION 618 (PILE MATERIALS) OF THE STANDARD SPECIFICATIONS. FOR MORE INFORMATION REGARDING PILE DRIVING AND INSTALLATION, REFER TO SECTION 619 (INSTALLATION OF PILES) OF THE STANDARD SPECIFICATIONS.
3. EACH TEST PILE SHALL BE DYNAMICALLY TESTED BY THE CONTRACTOR IN ACCORDANCE WITH ITEM #619519 - DYNAMIC PILE TESTING BY CONTRACTOR. THE QUANTITY FOR DYNAMIC PILE TESTING SHALL INCLUDE ONE FOR THE INITIAL DRIVE AND ONE FOR THE RE-STRIKE OF EACH TEST PILE. THE NEED TO RESTRIKE EITHER A TEST PILE OR A PRODUCTION PILE SHALL BE THE SOLE DECISION OF THE ENGINEER.
4. WAVE EQUATION ANALYSIS SHALL BE SUBMITTED BY THE CONTRACTOR FOR REVIEW BY THE ENGINEER (ELECTRONIC PREFERRED, OTHERWISE 8 COPIES MINIMUM).
5. TEST PILES SHALL BE DRIVEN AT EACH LOCATION SHOWN ON THE PLANS. PRODUCTION PILES SHALL BE ORDERED BASED ON THE RESULTS OF THE TEST PILE DRIVING.

CAST-IN-PLACE PILE NOTES

1. COST OF REINFORCING BARS INSIDE THE STEEL SHELL IS INCLUDED IN THE BID PRICE FOR THE APPROPRIATE CAST-IN-PLACE CONCRETE PILE ITEMS. REINFORCEMENT SHALL BE EPOXY COATED.
2. PILES SHALL BE COAL TAR EPOXY COATED.

PILE CASING NOTES

1. CASING SHALL BE PLACED AROUND ABUTMENT PILES ABOVE ORIGINAL GROUND LINE ONLY. CASING APPLIES TO PRIMARY AND ALTERNATE PILE TYPE.
2. CASINGS AND CASING SAND FOR SEPARATING THE PILES FROM THE MSE WALL BACKFILL SHALL BE INSTALLED AT LOCATIONS OF PILES PRIOR TO CONSTRUCTING MSE WALL, BUT AFTER PILES ARE DRIVEN.
3. CASINGS SHALL BE 27" OR 29" DIAMETER HIGH DENSITY POLYETHYLENE. CONTRACTOR SHALL FILL THE VOIDS WITH LOOSE AND UNCOMPACTED SAND PRIOR TO FOOTING POUR. PAYMENT FOR CASINGS, SAND AND INSTALLATION SHALL BE INCIDENTAL TO ITEM #602553 - MECHANICALLY STABILIZED EARTH WALLS.

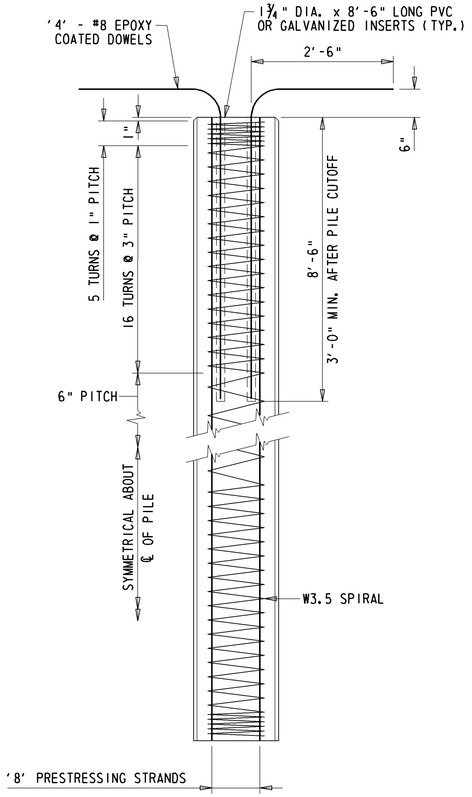

PILE ELEVATION

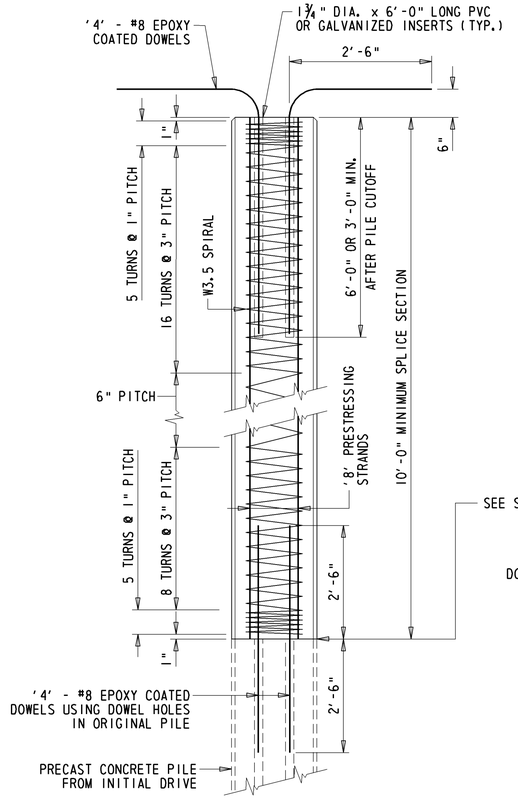

PILE BUILD-UP FOR DRIVING

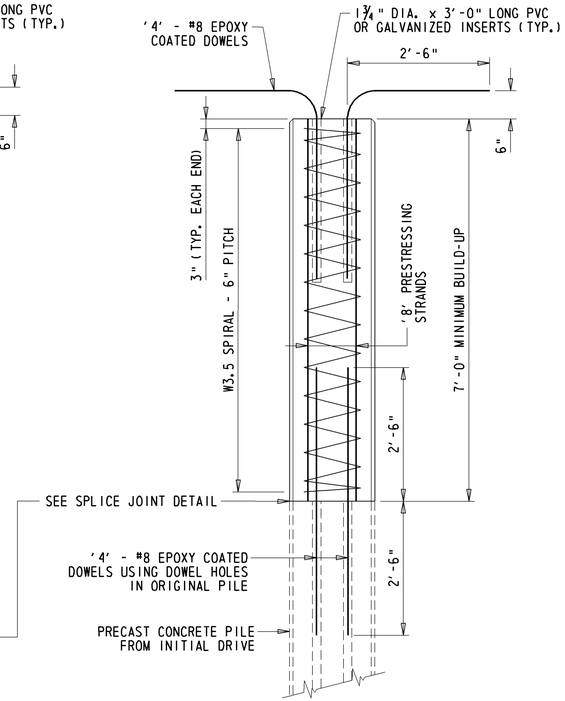

PILE BUILD-UP WITHOUT DRIVING

PRECAST, PRESTRESSED CONCRETE PILE DETAILS

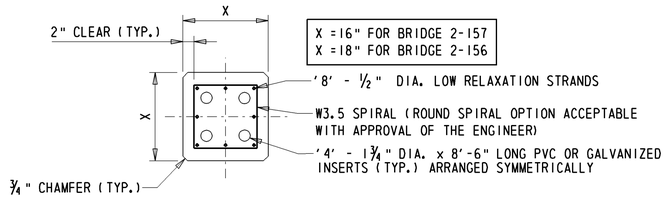

TYPICAL PILE SECTION

ABUTMENT PROJECT SPECIFIC PILE NOTES

1. PILE TYPE
   AS AN ALTERNATE, THIS PROJECT SHALL UTILIZE 18" x 18" PRECAST PRESTRESSED CONCRETE PILES AT BRIDGE 2-156, AND 16" x 16" PRECAST PRESTRESSED CONCRETE PILES AT BRIDGE 2-157.
2. THE ESTIMATED STARTING DRIVING ELEVATION IS FROM THE TOP OF THE PROPOSED PILE LOCATIONS.
3. TOTAL OF 44 PILES ARE REQUIRED FOR THE ABUTMENTS FOR BRIDGE 2-156.
   TOTAL OF 44 PILES ARE REQUIRED FOR THE ABUTMENTS FOR BRIDGE 2-157.

SUPPORT	ULTIMATE BEARING CAPACITY (KIPS)	ESTIMATED PRODUCTION LENGTH (FT)	REQUIRED TEST PILE LENGTH (FT)	MINIMUM TIP ELEVATION
BRIDGE 2-156				
ABUT. 1	335	70	80	-10
ABUT. 7	300	60	70	-10
BRIDGE 2-157				
ABUT. 1	326	80	85	N. A.
ABUT. 2	337	70	75	N. A.

PIER PROJECT SPECIFIC PILE NOTES

1. PILE TYPE
   AS AN ALTERNATE, THIS PROJECT SHALL UTILIZE 18" x 18" PRECAST PRESTRESSED CONCRETE PILES AT BRIDGE 2-156, AND 16" x 16" PRECAST PRESTRESSED CONCRETE PILES AT BRIDGE 2-157.
2. THE ESTIMATED STARTING DRIVING ELEVATION IS FROM THE TOP OF THE PROPOSED PILE LOCATIONS.
3. TOTAL OF 330 PILES ARE REQUIRED FOR THE PIERS FOR BRIDGE 2-156.
   TOTAL OF 57 PILES ARE REQUIRED FOR THE PIERS FOR BRIDGE 2-157.

SUPPORT	ULTIMATE BEARING CAPACITY (KIPS)	ESTIMATED PRODUCTION LENGTH (FT)	REQUIRED TEST PILE LENGTH (FT)	MINIMUM TIP ELEVATION
BRIDGE 2-156				
PIER 2	327	50	55	-10
PIER 3	327	50	55	-10
PIER 4	327	40	45	-10
PIER 5	327	40	45	-10
PIER 6	327	40	45	-10
BRIDGE 2-157				
PIER	381	58	65	N. A.

GENERAL PILE NOTES

1. ONLY ONE TYPE OF PILE SHALL BE USED THROUGHOUT THE PROJECT (I.E., NO MIXING OF PILE TYPES).
2. FOR MORE INFORMATION REGARDING PILE MATERIALS AND FABRICATION, REFER TO SECTION 618 (PILE MATERIALS) OF THE STANDARD SPECIFICATIONS. FOR MORE INFORMATION REGARDING PILE DRIVING AND INSTALLATION, REFER TO SECTION 619 (INSTALLATION OF PILES) OF THE STANDARD SPECIFICATIONS.
3. EACH TEST PILE SHALL BE DYNAMICALLY TESTED BY THE CONTRACTOR IN ACCORDANCE WITH ITEM #619519 - DYNAMIC PILE TESTING BY CONTRACTOR. THE QUANTITY FOR DYNAMIC PILE TESTING SHALL INCLUDE ONE FOR THE INITIAL DRIVE AND ONE FOR THE RE-STRIKE OF EACH TEST PILE. THE NEED TO RESTRIKE EITHER A TEST PILE OR A PRODUCTION PILE SHALL BE THE SOLE DECISION OF THE ENGINEER.
4. WAVE EQUATION ANALYSIS SHALL BE SUBMITTED BY THE CONTRACTOR FOR REVIEW BY THE ENGINEER (ELECTRONIC PREFERRED, OTHERWISE 8 COPIES MINIMUM).
5. TEST PILES SHALL BE DRIVEN AT EACH LOCATION SHOWN ON THE PLANS. PRODUCTION PILES SHALL BE ORDERED BASED ON THE RESULTS OF THE TEST PILE DRIVING.

PRECAST, PRESTRESSED CONCRETE PILE NOTES

1. DOWEL HOLES CAST IN THE TOP OF THE PILES SHALL BE CLEANED BY INSERTING A HIGH PRESSURE AIR HOSE TO THE BOTTOM AND BLOWING THE HOLE CLEAN FROM THE BOTTOM UPWARD PRIOR TO SETTING AND GROUTING THE DOWEL BARS. DOWELS SHALL BE SET WITH AN APPROVED NON-SHRINK EPOXY GROUT.
2. IF, AFTER A PILE CUTOFF, THE PREFORMED HOLES IN THE TOP OF PRECAST, PRESTRESSED CONCRETE PILES ARE NOT LONG ENOUGH TO PROVIDE SUFFICIENT DOWEL EMBEDMENT, THEY SHALL BE DRILLED TO THE PROPER DEPTH AT NO ADDITIONAL COST TO THE DEPARTMENT. THE MINIMUM LENGTH OF THE DOWEL BAR EMBEDMENT IN THE HOLE SHALL BE 3'-0" FEET.
3. EPOXY GROUT FOR GROUTING THE DOWEL BARS IN THE TOP OF THE PRECAST, PRESTRESSED CONCRETE PILE SHALL BE AN APPROVED NON-SHRINK EPOXY GROUT SPECIFICALLY DESIGNED AS A FAST SETTING COMPOUND THAT POURS EASILY TO FILL THE VOIDS. THE COST OF GROUTING THE DOWEL BARS SHALL BE INCIDENTAL TO THE UNIT BID ITEM FOR THAT RESPECTIVE PILE.

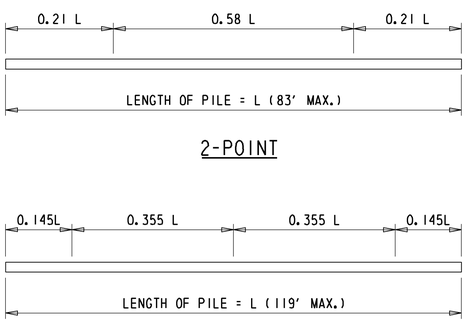

2-POINT

3-POINT

PICK-UP OR SUPPORT DIAGRAMS

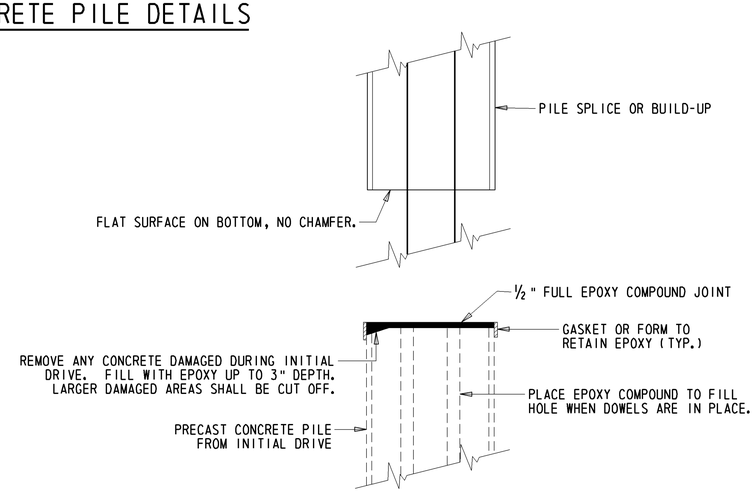

SPLICE JOINT DETAIL

Y:\KENT\156\BRIDGE\T200411701\PLANS\NEW BURTON RD - 2 SPAN\PL01.DGN

DELAWARE DEPARTMENT OF TRANSPORTATION	ADDENDUMS / REVISIONS	NOT TO SCALE	WEST DOVER CONNECTOR	CONTRACT T200411701	BRIDGE NO. 2-156 & 2-157 N&S	PRECAST PRESTRESSED CONCRETE PILE DETAILS BRIDGE SHEET 5 OF 65	SHEET NO. 116
				COUNTY KENT	DESIGNED BY: TRS		TOTAL SHTS. 320
					CHECKED BY: EM, JNH		

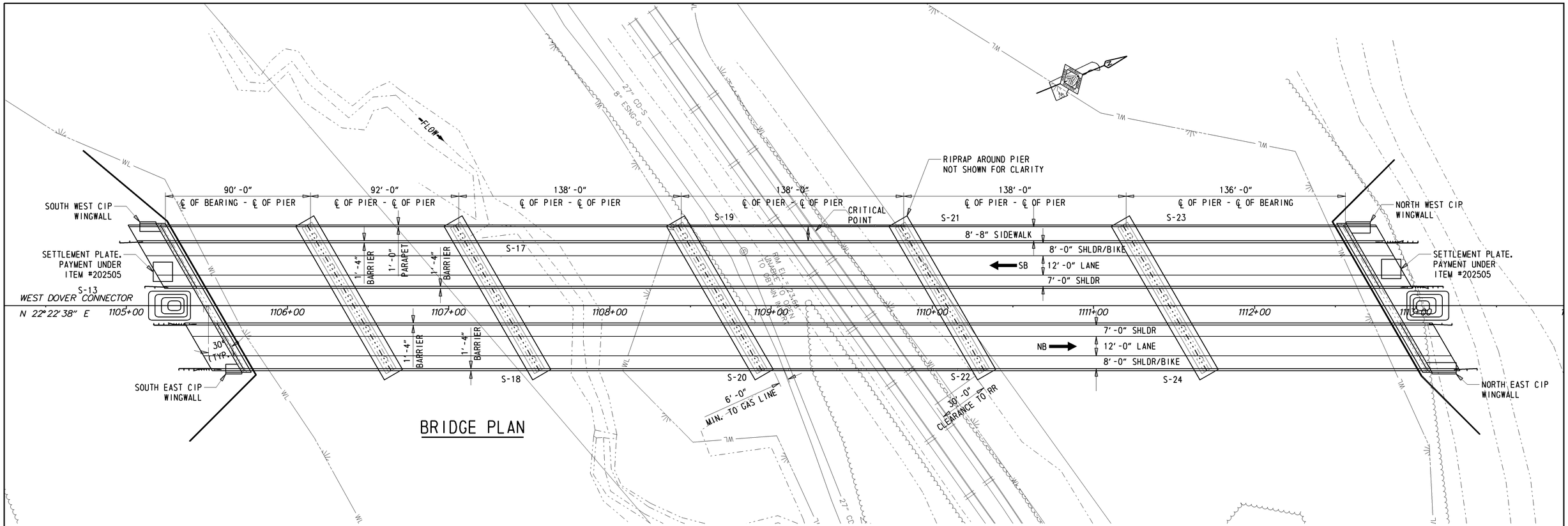

BRIDGE PLAN

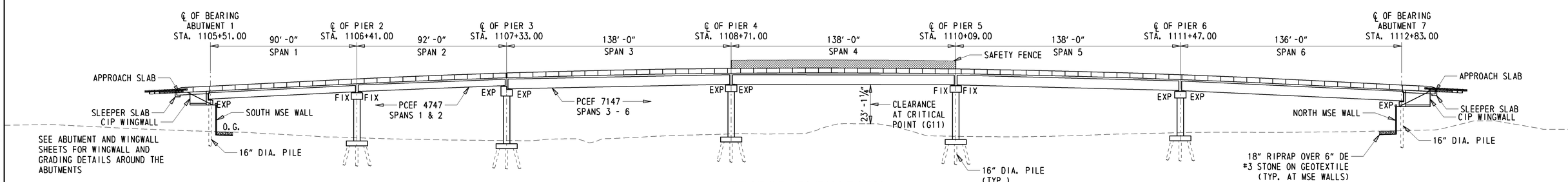

BRIDGE ELEVATION

Y:\KENT\156\BRIDGE\T200411701\PLANS\PUNCHEON RUN - 7 SPAN\PE01.DGN

DELAWARE DEPARTMENT OF TRANSPORTATION	ADDENDUMS / REVISIONS	SCALE 0 30 60 90 FEET	WEST DOVER CONNECTOR	CONTRACT T200411701	BRIDGE NO. BR 2-156 N&S	BRIDGE PLAN AND ELEVATION BRIDGE SHEET 6 OF 65
				COUNTY KENT	DESIGNED BY: JAT	SHEET NO. 117
					CHECKED BY: EM	TOTAL SHTS. 320

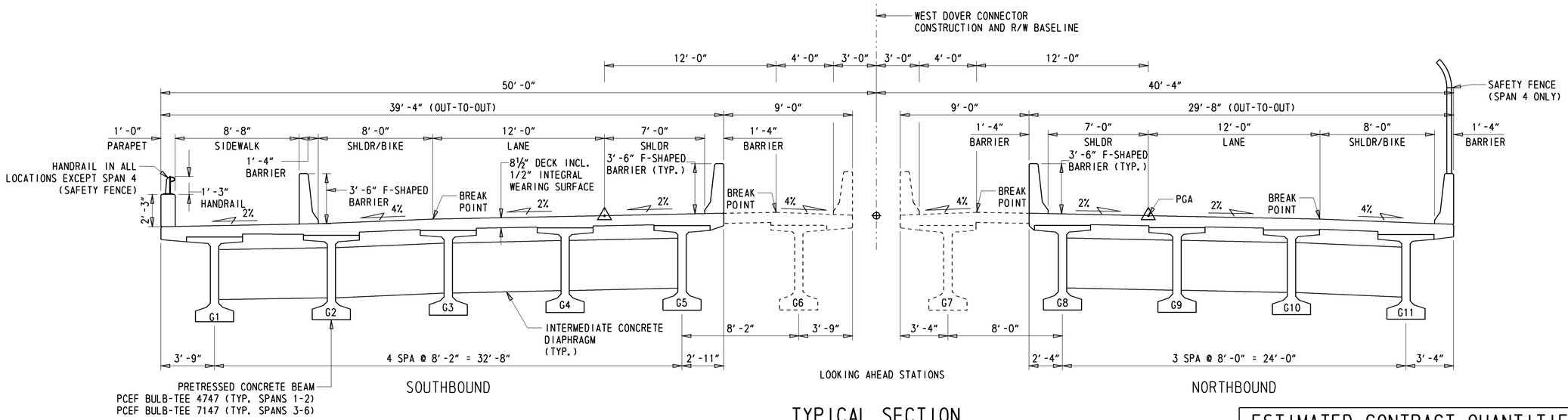

TYPICAL SECTION

¼" = 1'-0"

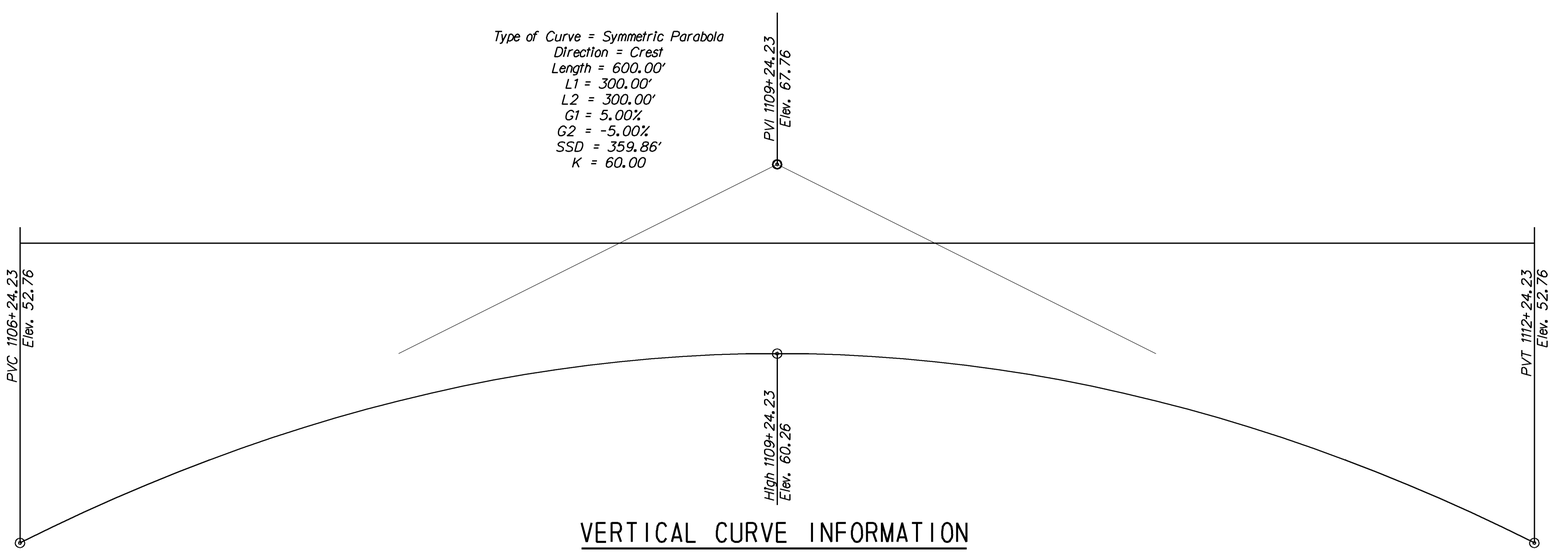

VERTICAL CURVE INFORMATION

ESTIMATED CONTRACT QUANTITIES FOR BR 2-156

ITEM #	DESCRIPTION	UNIT	PROPOSAL
207000	EXCAVATION AND BACKFILL FOR STRUCTURES	CY	2345.00
210000	FURNISHING BORROW TYPE C FOR STRUCTURE BACKFILL	CY	370.00
302011	DE #3 STONE	TON	500.00
602001	PCC MASONRY, CLASS A	CY	28.00
602003	PCC MASONRY, ABUTMENT FOOTING, CLASS A	CY	140.00
602006	PCC MASONRY, PIER FOOTING, CLASS B	CY	1060.00
602007	PCC MASONRY, PIER ABOVE FOOTING, CLASS A	CY	1125
602009	PCC MASONRY, APPROACH SLAB, CLASS A	CY	155.00
602013	PCC MASONRY, SUPERSTRUCTURE, CLASS D	CY	1920.00
602015	PCC MASONRY, ABUTMENT ABOVE FOOTING, CLASS A	CY	42.00
602017	PCC MASONRY, PARAPET, CLASS A	CY	460.00
602553	MECHANICALLY STABILIZED EARTH WALLS, WALL 1	SF	6260.00
602646	SILICONE ACRYLIC CONCRETE SEALER	SF	29770.00
604000	BAR REINFORCEMENT, EPOXY COATED	LB	850000.00
605511	PREFABRICATED EXPANSION JOINT SYSTEM	LF	207.00
646504	ALUMINUM HANDRAIL	LF	641.00
608000	COARSE AGGREGATE FOR FOUNDATION STABILIZATION	TON	35.00
618042	FURNISH CAST-IN-PLACE CONCRETE PILES, 16"	LF	15195.00
618047	FURNISH CAST-IN-PLACE CONCRETE TEST PILES, 16"	LF	940.00
618082	FURNISH PRECAST PRESTRESSED CONCRETE PILE, 18"x18", ALT.	LF	16420.00
618092	FURNISH PRECAST PRESTRESSED CONCRETE TEST PILE, 18"x18", ALT.	LF	1005.00
619022	INSTALL CAST-IN-PLACE CONCRETE PILES, 16"	LF	15195.00
619026	INSTALL CAST-IN-PLACE CONCRETE TEST PILE, 16"	LF	940.00
619062	INSTALL PRECAST PRESTRESSED CONCRETE PILES, 18"x18", ALT.	LF	16420.00
619068	INSTALL PRECAST PRESTRESSED CONCRETE TEST PILES, 18"x18", ALT	LF	1110.00
619519	DYNAMIC PILE TESTING BY CONTRACTOR	EACH	30.00
623003	PRESTRESSED REINFORCED CONCRETE MEMBERS, BULB T-BEAM	L.S.	1
712021	RIPRAP, R-5	TON	3200.00
727507	BRIDGE SAFETY FENCE	LF	280.00

PILE WORKING POINTS (ABUTMENT 1)

POINT NO.	STATION	OFFSET	NORTHING	EASTING
P1-01	1105+22.71	-49.0006	415173.9176	621036.5282
P1-02	1105+25.71	-43.8045	415174.7135	621042.4752
P1-03	1105+28.71	-38.6083	415175.5094	621048.4221
P1-04	1105+31.71	-33.4122	415176.3053	621054.3691
P1-05	1105+34.71	-28.2160	415177.1012	621060.3161
P1-06	1105+37.71	-23.0199	415177.8971	621066.2631
P1-07	1105+40.71	-17.8237	415178.6930	621072.2100
P1-08	1105+43.71	-12.6276	415179.4889	621078.1570
P1-09	1105+46.71	-7.4314	415180.2848	621084.1040
P1-10	1105+49.71	-2.2353	415181.0807	621090.0510
P1-11	1105+52.71	2.9609	415181.8766	621095.9980
P1-12	1105+55.71	8.1570	415182.6725	621101.9449
P1-13	1105+58.71	13.3532	415183.4684	621107.8919
P1-14	1105+61.71	18.5493	415184.2643	621113.8389
P1-15	1105+64.71	23.7455	415185.0602	621119.7859
P1-16	1105+67.71	28.9416	415185.8561	621125.7328
P1-17	1105+70.71	34.1378	415186.6520	621131.6798
P1-18	1105+73.71	39.3339	415187.4479	621137.6268

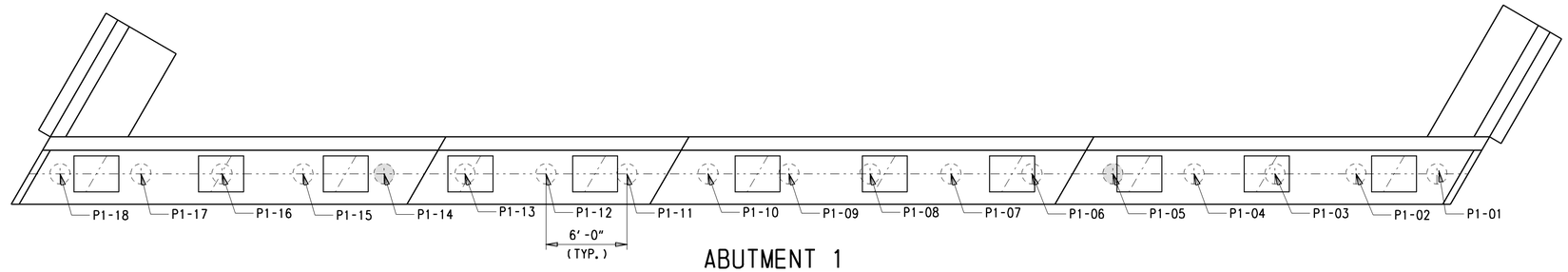

ABUTMENT 1

3/16" = 1'-0"

PILE WORKING POINTS (ABUTMENT 7)

POINT NO.	STATION	OFFSET	NORTHING	EASTING
P7-01	1112+54.43	-49.4878	415850.7214	621314.6452
P7-02	1112+56.49	-45.9154	415851.2686	621318.7337
P7-03	1112+58.55	-42.3431	415851.8158	621322.8223
P7-04	1112+60.62	-38.7707	415852.3630	621326.9108
P7-05	1112+62.68	-35.1984	415852.9102	621330.9994
P7-06	1112+64.74	-31.6260	415853.4574	621335.0879
P7-07	1112+66.80	-28.0537	415854.0045	621339.1765
P7-08	1112+68.87	-24.4813	415854.5517	621343.2650
P7-09	1112+70.93	-20.9089	415855.0989	621347.3536
P7-10	1112+72.99	-17.3366	415855.6461	621351.4421
P7-11	1112+75.05	-13.7642	415856.1933	621355.5307
P7-12	1112+77.12	-10.1919	415856.7405	621359.6192
P7-13	1112+79.18	-6.6195	415857.2876	621363.7078
P7-14	1112+81.24	-3.0472	415857.8348	621367.7963
P7-15	1112+83.30	0.5252	415858.3820	621371.8849
P7-16	1112+85.37	4.0975	415858.9292	621375.9734
P7-17	1112+87.43	7.6699	415859.4764	621380.0620
P7-18	1112+89.49	11.2422	415860.0235	621384.1505
P7-19	1112+91.55	14.8146	415860.5707	621388.2390
P7-20	1112+93.62	18.3870	415861.1179	621392.3276
P7-21	1112+95.68	21.9593	415861.6651	621396.4161
P7-22	1112+97.74	25.5317	415862.2123	621400.5047
P7-23	1112+99.80	29.1040	415862.7595	621404.5932
P7-24	1113+01.87	32.6764	415863.3066	621408.6818
P7-25	1113+03.93	36.2487	415863.8538	621412.7703
P7-26	1113+05.99	39.8211	415864.4010	621416.8589

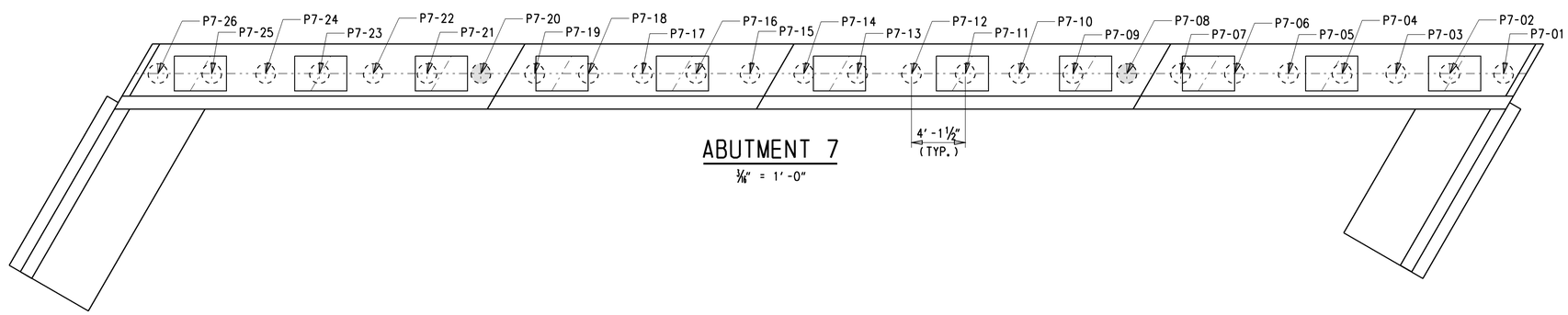

ABUTMENT 7

3/16" = 1'-0"

LEGEND

- DENOTES 16" DIA. PILES
- DENOTES 16" DIA. TEST PILES

Y:\KENT\156\BRIDGE\T200411701\PLANS\PUNCHEON RUN - 7 SPAN\PL01.DGN

DELAWARE DEPARTMENT OF TRANSPORTATION	ADDENDUMS / REVISIONS	SCALE AS NOTED	WEST DOVER CONNECTOR	CONTRACT T200411701	BRIDGE NO. 2-156 N/S	ABUTMENT PILE LAYOUT BRIDGE SHEET 8 OF 65	SHEET NO. 119
				COUNTY KENT	DESIGNED BY: JAT		TOTAL SHTS. 320
					CHECKED BY: EM		

NOTE : THE 'X' IN PX-01 ACTS AS THE PIER IDENTIFIER. TYP. FOR ALL WORKING POINTS.

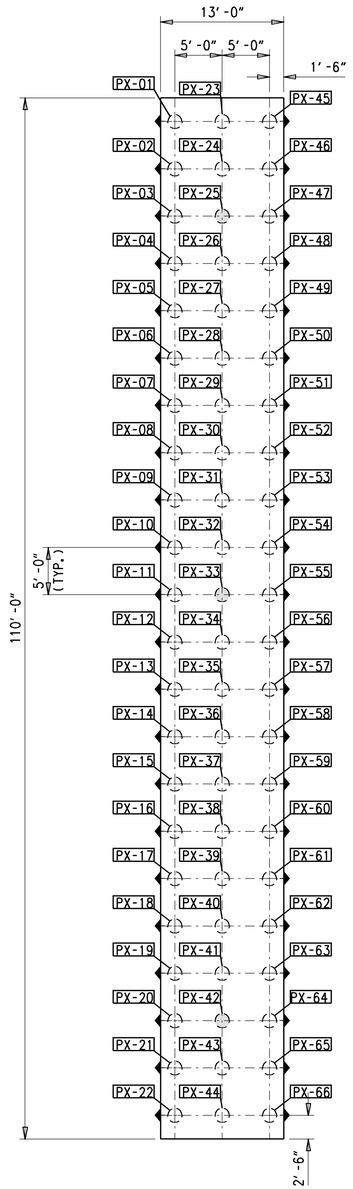

TYPICAL PIER FOOTERS

1/8" = 1'-0"

LEGEND

- ◯ = DENOTES 16" DIA. PILES
- ◯ = DENOTES 16" DIA. TEST PILES
- = 4:1 BATTER

PIER 2 PILE WORKING POINTS

POINT NO.	STATION	OFFSET	NORTHING	EASTING
P2-01	1106+07.63	-47.7997	415251.9855	621069.9679
P2-02	1106+10.13	-43.4696	415252.6488	621074.9238
P2-03	1106+12.63	-39.1394	415253.3120	621079.8796
P2-04	1106+15.13	-34.8093	415253.9753	621084.8354
P2-05	1106+17.63	-30.4792	415254.6386	621089.7912
P2-06	1106+20.13	-26.1490	415255.3018	621094.7470
P2-07	1106+22.63	-21.8189	415255.9651	621099.7028
P2-08	1106+25.13	-17.4888	415256.6283	621104.6587
P2-09	1106+27.63	-13.1587	415257.2916	621109.6145
P2-10	1106+30.13	-8.8285	415257.9548	621114.5703
P2-11	1106+32.63	-4.4984	415258.6181	621119.5261
P2-12	1106+35.13	-0.1683	415259.2813	621124.4819
P2-13	1106+37.63	4.1618	415259.9446	621129.4377
P2-14	1106+40.13	8.4920	415260.6078	621134.3935
P2-15	1106+42.63	12.8221	415261.2711	621139.3494
P2-16	1106+45.13	17.1522	415261.9343	621144.3052
P2-17	1106+47.63	21.4823	415262.5976	621149.2610
P2-18	1106+50.13	25.8125	415263.2608	621154.2168
P2-19	1106+52.63	30.1426	415263.9241	621159.1726
P2-20	1106+55.13	34.4727	415264.5873	621164.1284
P2-21	1106+57.63	38.8029	415265.2506	621169.0842
P2-22	1106+60.13	43.1330	415265.9138	621174.0401
P2-23	1106+11.96	-50.2997	415256.9414	621069.3047
P2-24	1106+14.46	-45.9696	415257.6046	621074.2605
P2-25	1106+16.96	-41.6394	415258.2679	621079.2163
P2-26	1106+19.46	-37.3093	415258.9311	621084.1721
P2-27	1106+21.96	-32.9792	415259.5944	621089.1280
P2-28	1106+24.46	-28.6490	415260.2576	621094.0838
P2-29	1106+26.96	-24.3189	415260.9209	621099.0396
P2-30	1106+29.46	-19.9888	415261.5841	621103.9954
P2-31	1106+31.96	-15.6587	415262.2474	621108.9512
P2-32	1106+34.46	-11.3285	415262.9106	621113.9070
P2-33	1106+36.96	-6.9984	415263.5739	621118.8628
P2-34	1106+39.46	-2.6683	415264.2371	621123.8187
P2-35	1106+41.96	1.6618	415264.9004	621128.7745
P2-36	1106+44.46	5.9920	415265.5636	621133.7303
P2-37	1106+46.96	10.3221	415266.2269	621138.6861
P2-38	1106+49.46	14.6522	415266.8901	621143.6419
P2-39	1106+51.96	18.9823	415267.5534	621148.5977
P2-40	1106+54.46	23.3125	415268.2166	621153.5535
P2-41	1106+56.96	27.6426	415268.8799	621158.5094
P2-42	1106+59.46	31.9727	415269.5431	621163.4652
P2-43	1106+61.96	36.3029	415270.2064	621168.4210
P2-44	1106+64.46	40.6330	415270.8696	621173.3768
P2-45	1106+16.29	-52.7997	415261.8972	621068.6414
P2-46	1106+18.79	-48.4696	415262.5604	621073.5973
P2-47	1106+21.29	-44.1394	415263.2237	621078.5531
P2-48	1106+23.79	-39.8093	415263.8869	621083.5089
P2-49	1106+26.29	-35.4792	415264.5502	621088.4647
P2-50	1106+28.79	-31.1490	415265.2134	621093.4205
P2-51	1106+31.29	-26.8189	415265.8767	621098.3763
P2-52	1106+33.79	-22.4888	415266.5399	621103.3321
P2-53	1106+36.29	-18.1587	415267.2032	621108.2880
P2-54	1106+38.79	-13.8285	415267.8664	621113.2438
P2-55	1106+41.29	-9.4984	415268.5297	621118.1996
P2-56	1106+43.79	-5.1683	415269.1929	621123.1554
P2-57	1106+46.29	-0.8382	415269.8562	621128.1112
P2-58	1106+48.79	3.4920	415270.5194	621133.0670
P2-59	1106+51.29	7.8221	415271.1827	621138.0228
P2-60	1106+53.79	12.1522	415271.8459	621142.9787
P2-61	1106+56.29	16.4823	415272.5092	621147.9345
P2-62	1106+58.79	20.8125	415273.1724	621152.8903
P2-63	1106+61.29	25.1426	415273.8357	621157.8461
P2-64	1106+63.79	29.4727	415274.4990	621162.8019
P2-65	1106+66.29	33.8029	415275.1622	621167.7577
P2-66	1106+68.79	38.1330	415275.8255	621172.7136

PIER 3 PILE WORKING POINTS

POINT NO.	STATION	OFFSET	NORTHING	EASTING
P3-01	1106+99.63	-47.7997	415337.0577	621104.9926
P3-02	1107+02.13	-43.4696	415337.7210	621109.9484
P3-03	1107+04.63	-39.1394	415338.3842	621114.9042
P3-04	1107+07.13	-34.8093	415339.0475	621119.8601
P3-05	1107+09.63	-30.4792	415339.7107	621124.8159
P3-06	1107+12.13	-26.1490	415340.3740	621129.7717
P3-07	1107+14.63	-21.8189	415341.0372	621134.7275
P3-08	1107+17.13	-17.4888	415341.7005	621139.6833
P3-09	1107+19.63	-13.1587	415342.3637	621144.6391
P3-10	1107+22.13	-8.8285	415343.0270	621149.5950
P3-11	1107+24.63	-4.4984	415343.6902	621154.5508
P3-12	1107+27.13	-0.1683	415344.3535	621159.5066
P3-13	1107+29.63	4.1618	415345.0167	621164.4624
P3-14	1107+32.13	8.4920	415345.6800	621169.4182
P3-15	1107+34.63	12.8221	415346.3432	621174.3740
P3-16	1107+37.13	17.1522	415347.0065	621179.3298
P3-17	1107+39.63	21.4823	415347.6697	621184.2857
P3-18	1107+42.13	25.8125	415348.3330	621189.2415
P3-19	1107+44.63	30.1426	415348.9962	621194.1973
P3-20	1107+47.13	34.4727	415349.6595	621199.1531
P3-21	1107+49.63	38.8029	415350.3227	621204.1089
P3-22	1107+52.13	43.1330	415350.9860	621209.0647
P3-23	1107+03.96	-50.2997	415342.0135	621104.3294
P3-24	1107+06.46	-45.9696	415342.6768	621109.2852
P3-25	1107+08.96	-41.6394	415343.3400	621114.2410
P3-26	1107+11.46	-37.3093	415344.0033	621119.1968
P3-27	1107+13.96	-32.9792	415344.6665	621124.1526
P3-28	1107+16.46	-28.6490	415345.3298	621129.1084
P3-29	1107+18.96	-24.3189	415345.9930	621134.0643
P3-30	1107+21.46	-19.9888	415346.6563	621139.0201
P3-31	1107+23.96	-15.6587	415347.3195	621143.9759
P3-32	1107+26.46	-11.3285	415347.9828	621148.9317
P3-33	1107+28.96	-6.9984	415348.6460	621153.8875
P3-34	1107+31.46	-2.6683	415349.3093	621158.8433
P3-35	1107+33.96	1.6618	415349.9725	621163.7991
P3-36	1107+36.46	5.9920	415350.6358	621168.7550
P3-37	1107+38.96	10.3221	415351.2990	621173.7108
P3-38	1107+41.46	14.6522	415351.9623	621178.6666
P3-39	1107+43.96	18.9823	415352.6255	621183.6224
P3-40	1107+46.46	23.3125	415353.2888	621188.5782
P3-41	1107+48.96	27.6426	415353.9520	621193.5340
P3-42	1107+51.46	31.9727	415354.6153	621198.4898
P3-43	1107+53.96	36.3029	415355.2785	621203.4457
P3-44	1107+56.46	40.6330	415355.9418	621208.4015
P3-45	1107+08.29	-52.7997	415346.9693	621103.6661
P3-46	1107+10.79	-48.4696	415347.6326	621108.6219
P3-47	1107+13.29	-44.1394	415348.2958	621113.5777
P3-48	1107+15.79	-39.8093	415348.9591	621118.5336
P3-49	1107+18.29	-35.4792	415349.6223	621123.4894
P3-50	1107+20.79	-31.1490	415350.2856	621128.4452
P3-51	1107+23.29	-26.8189	415350.9488	621133.4010
P3-52	1107+25.79	-22.4888	415351.6121	621138.3568
P3-53	1107+28.29	-18.1587	415352.2753	621143.3126
P3-54	1107+30.79	-13.8285	415352.9386	621148.2684
P3-55	1107+33.29	-9.4984	415353.6018	621153.2243
P3-56	1107+35.79	-5.1683	415354.2651	621158.1801
P3-57	1107+38.29	-0.8382	415354.9284	621163.1359
P3-58	1107+40.79	3.4920	415355.5916	621168.0917
P3-59	1107+43.29	7.8221	415356.2549	621173.0475
P3-60	1107+45.79	12.1522	415356.9181	621178.0033
P3-61	1107+48.29	16.4823	415357.5814	621182.9591
P3-62	1107+50.79	20.8125	415358.2446	621187.9150
P3-63	1107+53.29	25.1426	415358.9079	621192.8708
P3-64	1107+55.79	29.4727	415359.5711	621197.8266
P3-65	1107+58.29	33.8029	415360.2344	621202.7824
P3-66	1107+60.79	38.1330	415360.8976	621207.7382

PIER 4 PILE WORKING POINTS

POINT NO.	STATION	OFFSET	NORTHING	EASTING
P4-01	1108+37.63	-47.7997	415464.6659	621157.5296
P4-02	1108+40.13	-43.4696	415465.3292	621162.4854
P4-03	1108+42.63	-39.1394	415465.9924	621167.4413
P4-04	1108+45.13	-34.8093	415466.6557	621172.3971
P4-05	1108+47.63	-30.4792	415467.3190	621177.3529
P4-06	1108+50.13	-26.1490	415467.9822	621182.3087
P4-07	1108+52.63	-21.8189	415468.6455	621187.2645
P4-08	1108+55.13	-17.4888	415469.3087	621192.2203
P4-09	1108+57.63	-13.1587	415469.9720	621197.1761
P4-10	1108+60.13	-8.8285	415470.6352	621202.1320
P4-11	1108+62.63	-4.4984	415471.2985	621207.0878
P4-12	1108+65.13	-0.1683	415471.9617	621212.0436
P4-13	1108+67.63	4.1618	415472.6250	621216.9994
P4-14	1108+70.13	8.4920	415473.2882	621221.9552
P4-15	1108+72.63	12.8221	415473.9515	621226.9110
P4-16	1108+75.13	17.1522	415474.6147	621231.8668
P4-17	1108+77.63	21.4823	415475.2780	621236.8227
P4-18	1108+80.13	25.8125	415475.9412	621241.7785
P4-19	1108+82.63	30.1426	415476.6045	621246.7343
P4-20	1108+85.13	34.4727	415477.2677	621251.6901
P4-21	1108+87.63	38.8029	415477.9310	621256.6459
P4-22	1108+90.13	43.1330	415478.5942	621261.6017
P4-23	1108+41.96	-50.2997	415469.6218	621156.8664
P4-24	1108+44.46	-45.9696	415470.2850	621161.8222
P4-25	1108+46.96	-41.6394	415470.9483	621166.7780
P4-26	1108+49.46	-37.3093	415471.6115	621171.7338
P4-27	1108+51.96	-32.9792	415472.2748	621176.6896
P4-28	1108+54.46	-28.6490	415472.9380	621181.6454
P4-29	1108+56.96	-24.3189	415473.6013	621186.6013
P4-30	1108+59.46	-19.9888	415474.2645	621191.5571
P4-31	1108+61.96	-15.6587	415474.9278	621196.5129
P4-32	1108+64.46	-11.3285	415475.5910	621201.4687
P4-33	1108+66.96	-6.9984	415476.2543	621206.4245
P4-34	1108+69.46	-2.6683	415476.9175	621211.3803
P4-35	1108+71.96	1.6618	415477.5808	621216.3361
P4-36	1108+74.46	5.9920	415478.2440	621221.2920
P4-37	1108+76.96	10.3221	415478.9073	621226.2478
P4-38	1108+79.46	14.6522	415479.5705	621231.2036
P4-39	1108+81.96	18.9823	415480.2338	621236.1594
P4-40	1108+84.46	23.3125	415480.8970	621241.1152
P4-41	1108+86.96	27.6426	415481.5603	621246.0710
P4-42	1108+89.46	31.9727	415482.2235	621251.0269
P4-43	1108+91.96	36.3029	415482.8868	621255.9827
P4-44	1108+94.46	40.6330	415483.5500	621260.9385
P4-45	1108+46.29	-52.7997	415474.5776	621156.2031
P4-46	1108+48.79	-48.4696	415475.2408	621161.1589
P4-47	1108+51.29	-44.1394	415475.9041	621166.1148
P4-48	1108+53.79	-39.8093	415476.5673	621171.0706
P4-49	1108+56.29	-35.4792	415477.2306	621176.0264
P4-50	1108+58.79	-31.1490	415477.8938	621180.9822
P4-51	1108+61.29	-26.8189	415478.5571	621185.9380
P4-52	1108+63.79	-22.4888	415479.2203	621190.8938
P4-53	1108+66.29	-18.1587	415479.8836	621195.8496
P4-54	1108+68.79	-13.8285	415480.5468	621200.8055
P4-55	1108+71.29	-9.4984	415481.2101	621205.7613
P4-56	1108+73.79	-5.1683	415481.8733	621210.7171
P4-57	1108+76.29	-0.8382	415482.5366	621215.6729
P4-58	1108+78.79	3.4920	415483.1998	621220.6287
P4-59	1108+81.29	7.8221	415483.8631	621225.5845
P4-60	1108+83.79	12.1522	415484.5263	621230.5403
P4-61	1108+86.29	16.4823	415485.1896	621235.4962
P4-62	1108+88.79	20.8125	415485.8528	621240.4520
P4-63	1108+91.29	25.1426	415486.5161	621245.4078
P4-64	1108+93.79	29.4727	415487.1794	621250.3636
P4-65	1108+96.29	33.8029	415487.8426	621255.3194
P4-66	1108+98.79	38.1330	415488.5059	621260.2752

Y:\KENT\156\BRIDGE\T200411701\PLANS\PUNCHEON RUN - 7 SPAN\PL01.DGN

DELAWARE DEPARTMENT OF TRANSPORTATION

ADDENDUMS / REVISIONS

SCALE AS NOTED

WEST DOVER CONNECTOR

CONTRACT	BRIDGE NO. 2-156	PIER PILE LAYOUT BRIDGE SHEET 9 OF 65	SHEET NO.
T200411701	DESIGNED BY: JAT		120
COUNTY			TOTAL SHTS.
KENT	CHECKED BY: EM		320

PIER 5 PILE WORKING POINTS

POINT NO.	STATION	OFFSET	NORTHING	EASTING
P5-01	1109+75.63	-47.7997	415592.2742	621210.0666
P5-02	1109+78.13	-43.4696	415592.9374	621215.0224
P5-03	1109+80.63	-39.1394	415593.6007	621219.9783
P5-04	1109+83.13	-34.8093	415594.2639	621224.9341
P5-05	1109+85.63	-30.4792	415594.9272	621229.8899
P5-06	1109+88.13	-26.1490	415595.5904	621234.8457
P5-07	1109+90.63	-21.8189	415596.2537	621239.8015
P5-08	1109+93.13	-17.4888	415596.9169	621244.7573
P5-09	1109+95.63	-13.1587	415597.5802	621249.7131
P5-10	1109+98.13	-8.8285	415598.2434	621254.6690
P5-11	1110+00.63	-4.4984	415598.9067	621259.6248
P5-12	1110+03.13	-0.1683	415599.5700	621264.5806
P5-13	1110+05.63	4.1618	415600.2332	621269.5364
P5-14	1110+08.13	8.4920	415600.8965	621274.4922
P5-15	1110+10.63	12.8221	415601.5597	621279.4480
P5-16	1110+13.13	17.1522	415602.2230	621284.4038
P5-17	1110+15.63	21.4823	415602.8862	621289.3597
P5-18	1110+18.13	25.8125	415603.5495	621294.3155
P5-19	1110+20.63	30.1426	415604.2127	621299.2713
P5-20	1110+23.13	34.4727	415604.8760	621304.2271
P5-21	1110+25.63	38.8029	415605.5392	621309.1829
P5-22	1110+28.13	43.1330	415606.2025	621314.1387
P5-23	1109+79.96	-50.2997	415597.2300	621209.4034
P5-24	1109+82.46	-45.9696	415597.8933	621214.3592
P5-25	1109+84.96	-41.6394	415598.5565	621219.3150
P5-26	1109+87.46	-37.3093	415599.2198	621224.2708
P5-27	1109+89.96	-32.9792	415599.8830	621229.2266
P5-28	1109+92.46	-28.6490	415600.5463	621234.1825
P5-29	1109+94.96	-24.3189	415601.2095	621239.1383
P5-30	1109+97.46	-19.9888	415601.8728	621244.0941
P5-31	1109+99.96	-15.6587	415602.5360	621249.0499
P5-32	1110+02.46	-11.3285	415603.1993	621254.0057
P5-33	1110+04.96	-6.9984	415603.8625	621258.9615
P5-34	1110+07.46	-2.6683	415604.5258	621263.9173
P5-35	1110+09.96	1.6618	415605.1890	621268.8732
P5-36	1110+12.46	5.9920	415605.8523	621273.8290
P5-37	1110+14.96	10.3221	415606.5155	621278.7848
P5-38	1110+17.46	14.6522	415607.1788	621283.7406
P5-39	1110+19.96	18.9823	415607.8420	621288.6964
P5-40	1110+22.46	23.3125	415608.5053	621293.6522
P5-41	1110+24.96	27.6426	415609.1685	621298.6080
P5-42	1110+27.46	31.9727	415609.8318	621303.5639
P5-43	1110+29.96	36.3029	415610.4950	621308.5197
P5-44	1110+32.46	40.6330	415611.1583	621313.4755
P5-45	1109+84.29	-52.7997	415602.1858	621208.7401
P5-46	1109+86.79	-48.4696	415602.8491	621213.6959
P5-47	1109+89.29	-44.1394	415603.5123	621218.6518
P5-48	1109+91.79	-39.8093	415604.1756	621223.6076
P5-49	1109+94.29	-35.4792	415604.8388	621228.5634
P5-50	1109+96.79	-31.1490	415605.5021	621233.5192
P5-51	1109+99.29	-26.8189	415606.1653	621238.4750
P5-52	1110+01.79	-22.4888	415606.8286	621243.4308
P5-53	1110+04.29	-18.1587	415607.4918	621248.3866
P5-54	1110+06.79	-13.8285	415608.1551	621253.3425
P5-55	1110+09.29	-9.4984	415608.8183	621258.2983
P5-56	1110+11.79	-5.1683	415609.4816	621263.2541
P5-57	1110+14.29	-0.8382	415610.1448	621268.2099
P5-58	1110+16.79	3.4920	415610.8081	621273.1657
P5-59	1110+19.29	7.8221	415611.4713	621278.1215
P5-60	1110+21.79	12.1522	415612.1346	621283.0773
P5-61	1110+24.29	16.4823	415612.7978	621288.0332
P5-62	1110+26.79	20.8125	415613.4611	621292.9890
P5-63	1110+29.29	25.1426	415614.1243	621297.9448
P5-64	1110+31.79	29.4727	415614.7876	621302.9006
P5-65	1110+34.29	33.8029	415615.4508	621307.8564
P5-66	1110+36.79	38.1330	415616.1141	621312.8122

PIER 6 PILE WORKING POINTS

POINT NO.	STATION	OFFSET	NORTHING	EASTING
P6-01	1111+13.63	-47.7997	415719.8824	621262.6036
P6-02	1111+16.13	-43.4696	415720.5457	621267.5595
P6-03	1111+18.63	-39.1394	415721.2089	621272.5153
P6-04	1111+21.13	-34.8093	415721.8722	621277.4711
P6-05	1111+23.63	-30.4792	415722.5354	621282.4269
P6-06	1111+26.13	-26.1490	415723.1987	621287.3827
P6-07	1111+28.63	-21.8189	415723.8619	621292.3385
P6-08	1111+31.13	-17.4888	415724.5252	621297.2943
P6-09	1111+33.63	-13.1587	415725.1884	621302.2502
P6-10	1111+36.13	-8.8285	415725.8517	621307.2060
P6-11	1111+38.63	-4.4984	415726.5149	621312.1618
P6-12	1111+41.13	-0.1683	415727.1782	621317.1176
P6-13	1111+43.63	4.1618	415727.8414	621322.0734
P6-14	1111+46.13	8.4920	415728.5047	621327.0292
P6-15	1111+48.63	12.8221	415729.1679	621331.9850
P6-16	1111+51.13	17.1522	415729.8312	621336.9409
P6-17	1111+53.63	21.4823	415730.4944	621341.8967
P6-18	1111+56.13	25.8125	415731.1577	621346.8525
P6-19	1111+58.63	30.1426	415731.8210	621351.8083
P6-20	1111+61.13	34.4727	415732.4842	621356.7641
P6-21	1111+63.63	38.8029	415733.1475	621361.7199
P6-22	1111+66.13	43.1330	415733.8107	621366.6757
P6-23	1111+17.96	-50.2997	415724.8382	621261.9404
P6-24	1111+20.46	-45.9696	415725.5015	621266.8962
P6-25	1111+22.96	-41.6394	415726.1647	621271.8520
P6-26	1111+25.46	-37.3093	415726.8280	621276.8078
P6-27	1111+27.96	-32.9792	415727.4912	621281.7636
P6-28	1111+30.46	-28.6490	415728.1545	621286.7195
P6-29	1111+32.96	-24.3189	415728.8177	621291.6753
P6-30	1111+35.46	-19.9888	415729.4810	621296.6311
P6-31	1111+37.96	-15.6587	415730.1443	621301.5869
P6-32	1111+40.46	-11.3285	415730.8075	621306.5427
P6-33	1111+42.96	-6.9984	415731.4708	621311.4985
P6-34	1111+45.46	-2.6683	415732.1340	621316.4543
P6-35	1111+47.96	1.6618	415732.7973	621321.4102
P6-36	1111+50.46	5.9920	415733.4605	621326.3660
P6-37	1111+52.96	10.3221	415734.1238	621331.3218
P6-38	1111+55.46	14.6522	415734.7870	621336.2776
P6-39	1111+57.96	18.9823	415735.4503	621341.2334
P6-40	1111+60.46	23.3125	415736.1135	621346.1892
P6-41	1111+62.96	27.6426	415736.7768	621351.1450
P6-42	1111+65.46	31.9727	415737.4400	621356.1009
P6-43	1111+67.96	36.3029	415738.1033	621361.0567
P6-44	1111+70.46	40.6330	415738.7665	621366.0125
P6-45	1111+22.29	-52.7997	415729.7941	621261.2771
P6-46	1111+24.79	-48.4696	415730.4573	621266.2329
P6-47	1111+27.29	-44.1394	415731.1206	621271.1888
P6-48	1111+29.79	-39.8093	415731.7838	621276.1446
P6-49	1111+32.29	-35.4792	415732.4471	621281.1004
P6-50	1111+34.79	-31.1490	415733.1103	621286.0562
P6-51	1111+37.29	-26.8189	415733.7736	621291.0120
P6-52	1111+39.79	-22.4888	415734.4368	621295.9678
P6-53	1111+42.29	-18.1587	415735.1001	621300.9237
P6-54	1111+44.79	-13.8285	415735.7633	621305.8795
P6-55	1111+47.29	-9.4984	415736.4266	621310.8353
P6-56	1111+49.79	-5.1683	415737.0898	621315.7911
P6-57	1111+52.29	-0.8382	415737.7531	621320.7469
P6-58	1111+54.79	3.4920	415738.4163	621325.7027
P6-59	1111+57.29	7.8221	415739.0796	621330.6585
P6-60	1111+59.79	12.1522	415739.7428	621335.6144
P6-61	1111+62.29	16.4823	415740.4061	621340.5702
P6-62	1111+64.79	20.8125	415741.0693	621345.5260
P6-63	1111+67.29	25.1426	415741.7326	621350.4818
P6-64	1111+69.79	29.4727	415742.3958	621355.4376
P6-65	1111+72.29	33.8029	415743.0591	621360.3934
P6-66	1111+74.79	38.1330	415743.7223	621365.3492

NOTES
1. THE WINGWALLS SHALL BE POSITIVELY CONNECTED TO THE ABUTMENTS WITH A BOLTED CONNECTION. THE CONNECTION PLATES AT THE ABUTMENTS SHALL HAVE SLOTTED HOLES IN THE VERTICAL DIRECTION.
2. THE BOLTED CONNECTION MUST CONSIST OF A MINIMUM OF TWO 3'-0" WIDE x 2'-0" TALL x 1/4" THICK PLATES PER JOINT WITH AT LEAST FOUR 3/4" BOLTS PER PLATE. ANGLED PLATES SHALL HAVE 8 BOLTS. HOLES FOR ANCHOR BOLTS MAY BE FIELD DRILLED. BOLTED CONNECTION DETAILS SHALL BE SHOWN IN THE SUBMITTED SHOP DRAWINGS.

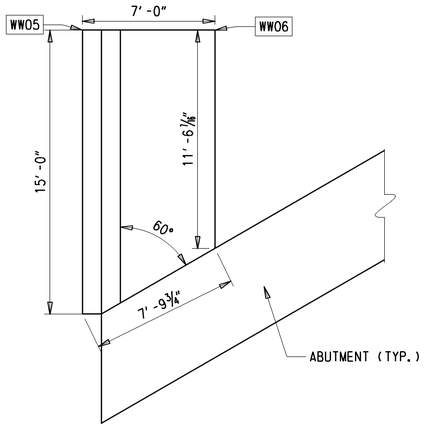

NW WINGWALL PLAN
1/4" = 1'-0"

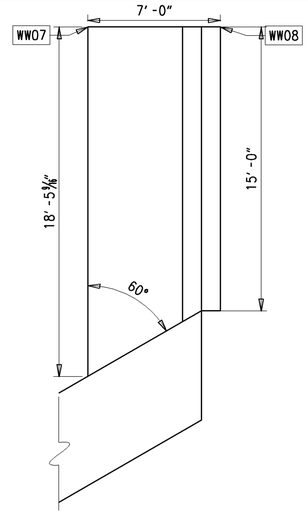

NE WINGWALL PLAN
1/4" = 1'-0"

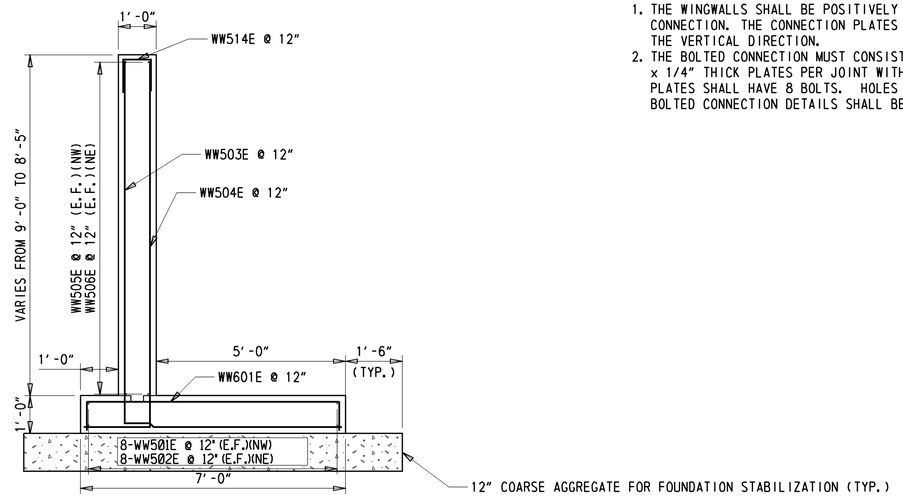

NORTH WINGWALL SECTION
1/2" = 1'-0"

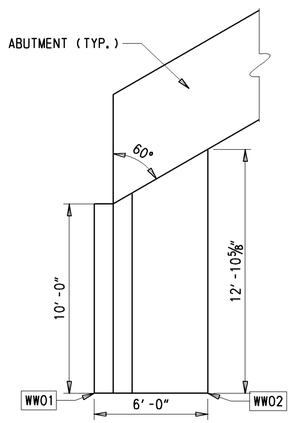

SW WINGWALL PLAN
1/4" = 1'-0"

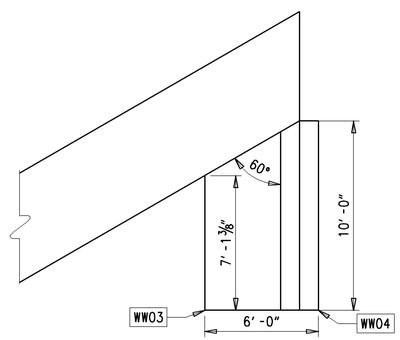

SE WINGWALL PLAN
1/4" = 1'-0"

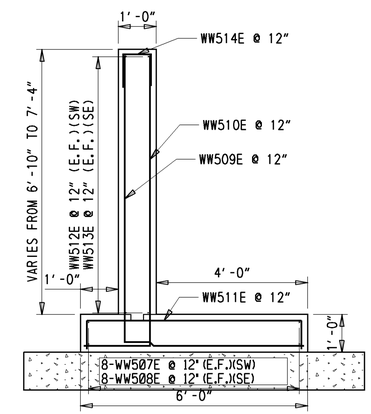

SOUTH WINGWALL SECTION
1/2" = 1'-0"

WINGWALL WORKING POINTS				
POINT NO.	STATION	OFFSET	NORTHING	EASTING
WW01	1105+08.40	-52.00	415161.8279	621028.3072
WW02	1105+08.40	-46.00	415159.5437	621033.8554
WW03	1105+61.71	36.33	415177.4935	621130.2835
WW04	1105+61.71	42.33	415175.2093	621135.8317
WW05	1112+71.71	-52.00	415867.6581	621318.9013
WW06	1112+71.71	-45.00	415864.9932	621325.3742
WW07	1113+25.02	35.33	415883.7045	621419.9530
WW08	1113+25.02	42.33	415881.0395	621426.4258

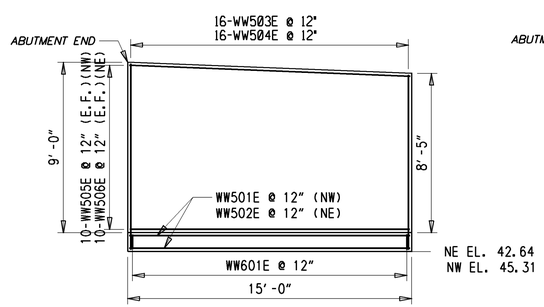

NORTH WINGWALL DETAIL
1/2" = 1'-0"

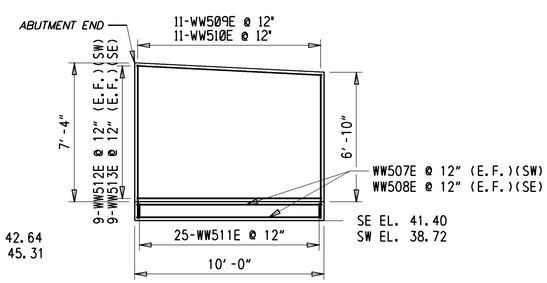

SOUTH WINGWALL DETAIL
1/2" = 1'-0"

Y:\KENT\156\BRIDGE\T200411701\PLANS\PUNCHEON RUN - 7 SPAN\WW02.DGN

DELAWARE
DEPARTMENT OF TRANSPORTATION

ADDENDUMS / REVISIONS

SCALE AS NOTED

WEST DOVER CONNECTOR

CONTRACT	BRIDGE NO.	2-156 N&S
T200411701	DESIGNED BY: JAT	
COUNTY		
KENT	CHECKED BY: EM	

WINGWALL DETAILS
BRIDGE SHEET 11 OF 65

SHEET NO.
122
TOTAL SHTS.
320

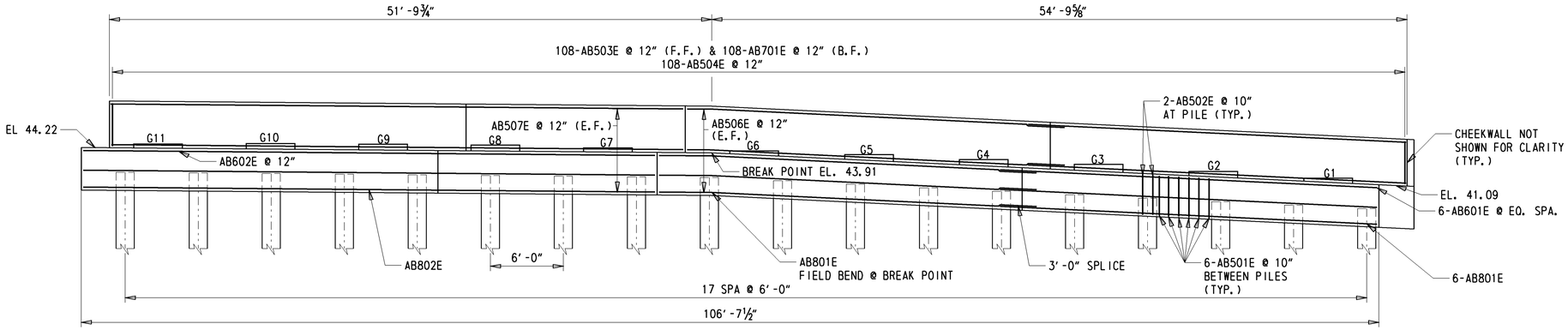

ABUTMENT 1 ELEVATION

3/16" = 1'-0"

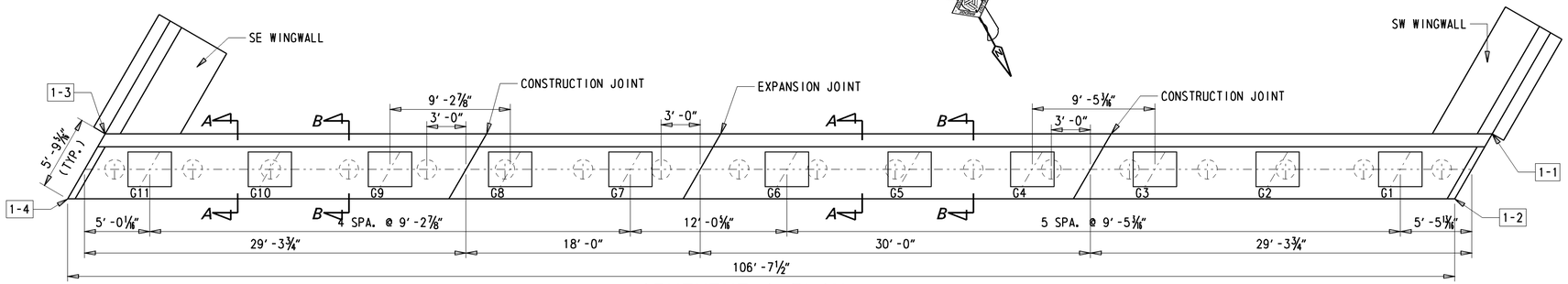

ABUTMENT 1 PLAN

3/16" = 1'-0"

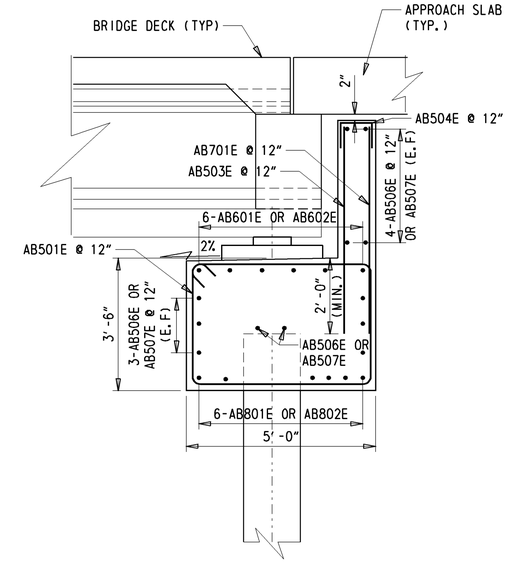

ABUTMENT SECTION A-A

½" = 1'-0"

MASONRY PAD EL.	
	ABUT 1
G1	41.89
G2	42.31
G3	42.85
G4	43.25
G5	43.65
G6	43.95
G7	44.24
G8	44.43
G9	44.50
G10	44.57
G11	44.52

ABUTMENT WORKING POINTS				
POINT NO.	STATION	OFFSET	NORTHING	EASTING
1-1	1105+18.40	-51.00	415170.6942	621033.0389
1-2	1105+24.17	-51.00	415176.0329	621035.2369
1-3	1105+71.71	41.33	415184.8370	621138.7140
1-4	1105+77.48	41.33	415190.1757	621140.9120

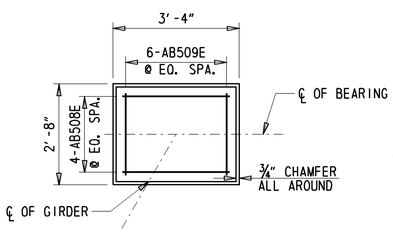

MASONRY PAD PLAN

½" = 1'-0"

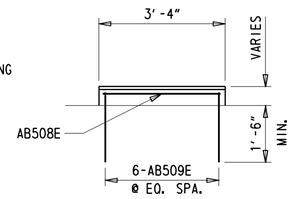

MASONRY PAD ELEVATION

½" = 1'-0"

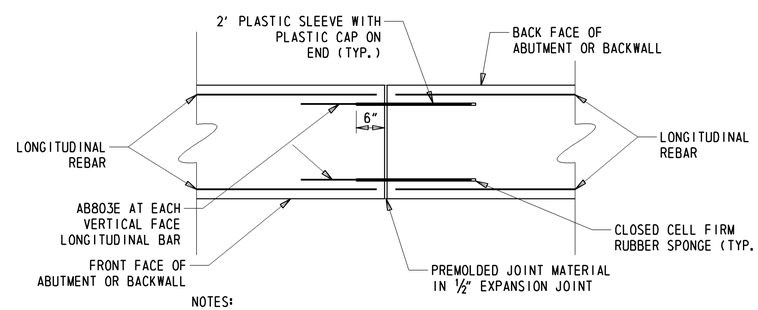

NOTES:
1. PLASTIC SLEEVE, RUBBER SPONGE, AND JOINT MATERIAL SHALL BE INCIDENTAL TO ITEM #604000 - BAR REINFORCING, EPOXY COATED.
2. DETAIL SHALL BE APPLIED AT BARS ON EXTERIOR VERTICAL FACES.

EXPANSION JOINT DETAIL

(PLAN VIEW)

SCALE: N.T.S.

SEE ABUTMENT 7 DETAILS FOR CONSTRUCTION JOINT DETAIL

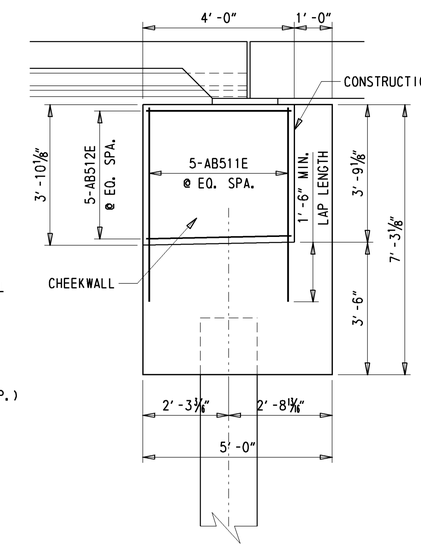

CHEEKWALL SECTION

½" = 1'-0"

NOTE: CHEEK WALLS ARE 6" WIDE

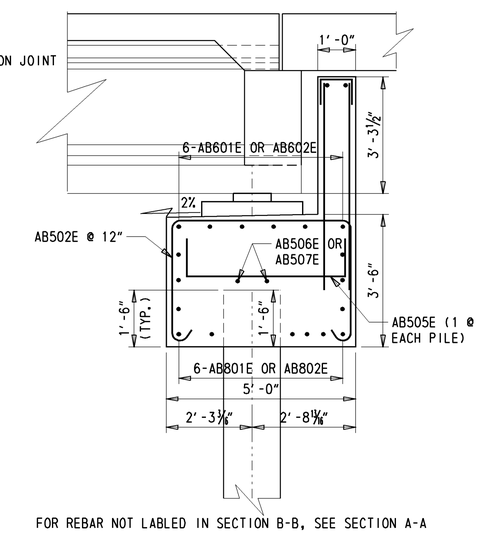

FOR REBAR NOT LABLED IN SECTION B-B, SEE SECTION A-A

ABUTMENT SECTION B-B

½" = 1'-0"

Y:\KENT\156\BRIDGE\T200411701\PLANS\PUNCHEON RUN - 7 SPAN\AB01.DGN

DELAWARE DEPARTMENT OF TRANSPORTATION	ADDENDUMS / REVISIONS	SCALE AS NOTED	WEST DOVER CONNECTOR	CONTRACT T200411701	BRIDGE NO. BR 2-156 N&S	ABUTMENT 1 DETAILS BRIDGE SHEET 12 OF 65	SHEET NO. 123
				COUNTY KENT	DESIGNED BY: JAT		TOTAL SHTS. 320
					CHECKED BY: EM		

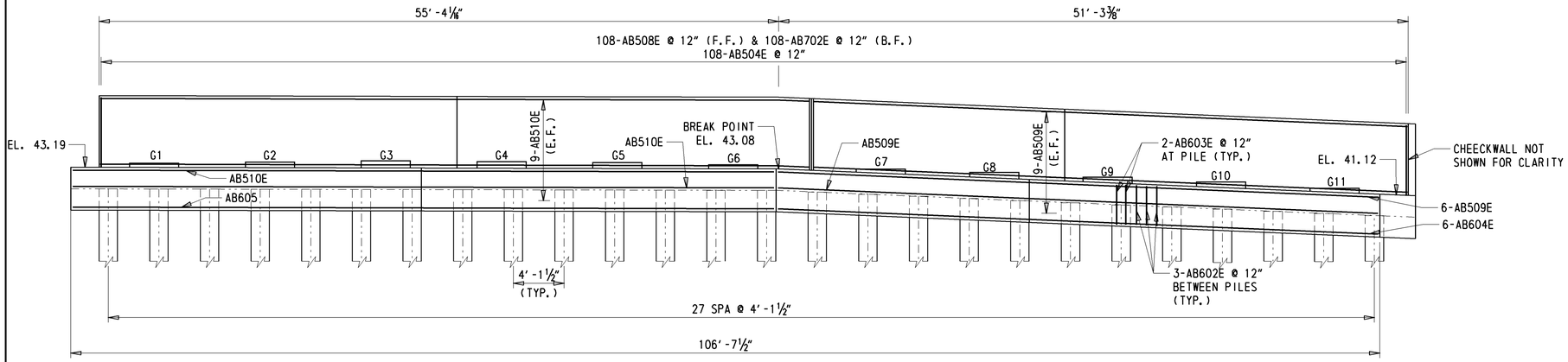

ABUTMENT 7 ELEVATION

3/16" = 1'-0"

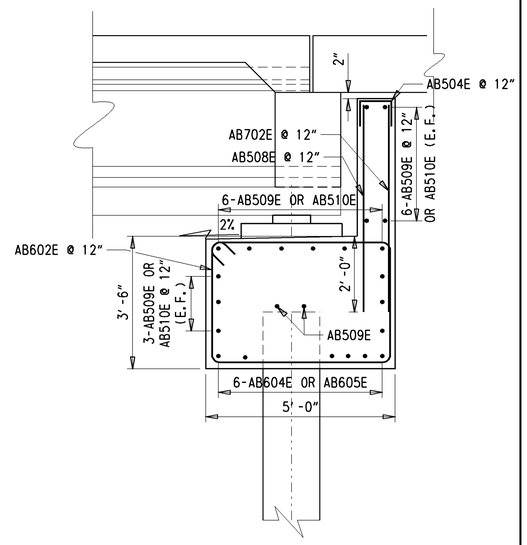

ABUTMENT SECTION C-C

1/2" = 1'-0"

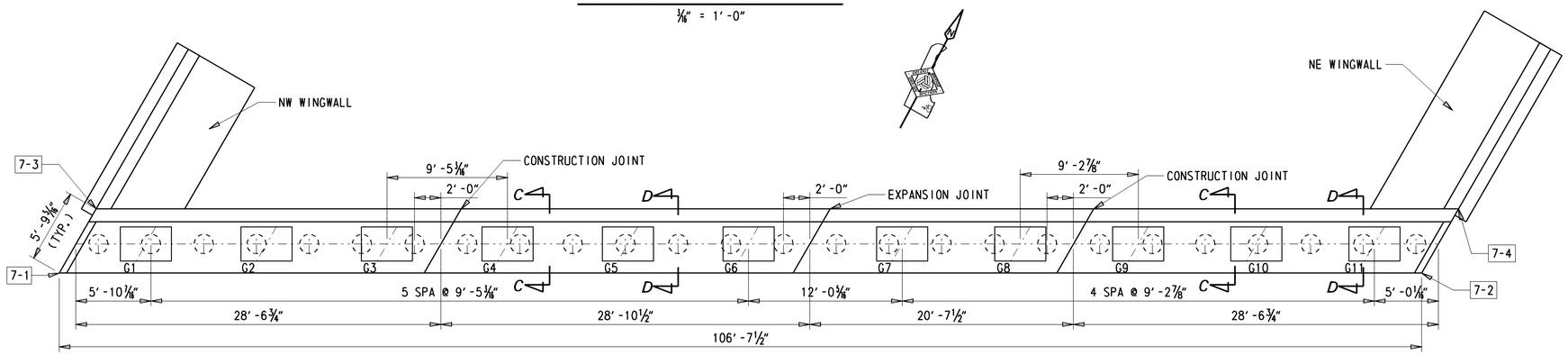

ABUTMENT 7 PLAN

3/16" = 1'-0"

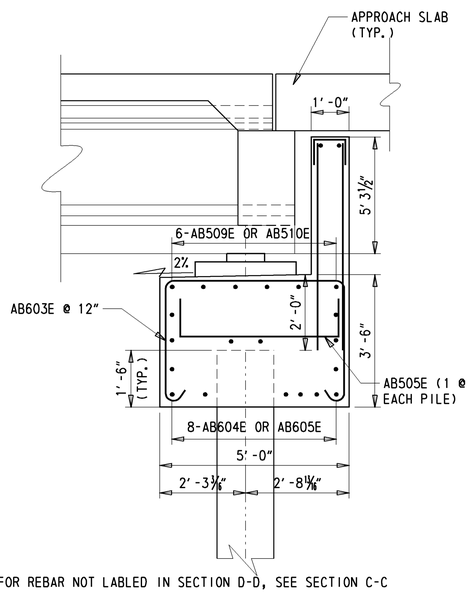

FOR REBAR NOT LABLED IN SECTION D-D, SEE SECTION C-C

ABUTMENT SECTION D-D
(AT PILE SECTION)

1/2" = 1'-0"

MASONRY PAD EL.	
	ABUT 7
G1	43.28
G2	43.23
G3	43.30
G4	43.22
G5	43.15
G6	42.98
G7	42.67
G8	42.40
G9	42.01
G10	41.61
G11	41.10

ABUTMENT WORKING POINTS				
POINT NO.	STATION	OFFSET	NORTHING	EASTING
7-1	1112+50.94	-51.00	415848.0682	621311.9175
7-2	1112+56.71	-51.00	415853.4070	621314.1155
7-3	1113+04.24	41.33	415862.2110	621417.5926
7-4	1113+10.02	41.33	415867.5498	621419.7906

SEE ABUTMENT 1 DETAILS FOR MASONRY PAD DETAILS

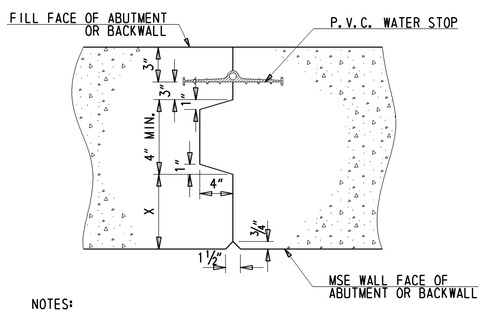

NOTES:
1. "X" SHALL VARY WITH DESIGN DIMENSIONS.
2. REINFORCING SHALL PASS THROUGH CONSTRUCTION JOINT.

CONSTRUCTION JOINT DETAIL

SCALE: N.T.S.

SEE ABUTMENT 1 DETAILS FOR EXPANSION JOINT DETAIL

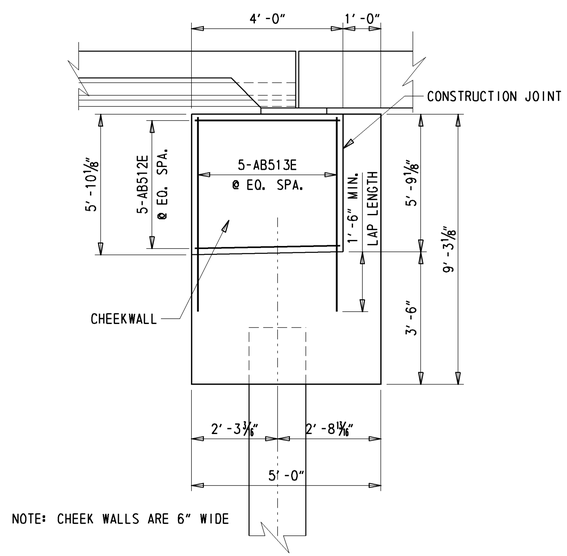

NOTE: CHEEK WALLS ARE 6" WIDE

ABUTMENT TYPICAL SECTION AT CHEEKWALL

1/2" = 1'-0"

Y:\KENT\156\BRIDGE\T200411701\PLANS\PUNCHEON RUN - 7 SPAN\AB01.DGN

DELAWARE DEPARTMENT OF TRANSPORTATION	ADDENDUMS / REVISIONS	SCALE AS NOTED	WEST DOVER CONNECTOR	CONTRACT T200411701	BRIDGE NO. BR 2-156 N&S	ABUTMENT 7 DETAILS BRIDGE SHEET 13 OF 65	SHEET NO. 124
				COUNTY KENT	DESIGNED BY: JAT		TOTAL SHTS. 320
					CHECKED BY: EM		

ABUTMENT LATERAL NOTES:

1. CONTRACTOR SHALL DESIGN THE REINFORCING STRAPS IN THE ABUTMENT STEM AND BACKWALL TO RESIST LATERAL LOADS 'EH' AND 'LS'.
2. LOAD 'EH' IS THE HORIZONTAL EARTH PRESSURE EXERTED ON THE ABUTMENT.
3. LOAD 'LS' IS THE ADDITIONAL HORIZONTAL SOIL PRESSURE DUE TO LIVE LOAD SURCHARGE.
4. PAYMENT FOR STRAPS ATTACHED TO ABUTMENT B SHALL BE INCIDENTAL TO ITEM #602553 - MECHANICALLY STABILIZED EARTH WALLS, TYPE I.

ABUTMENT LATERAL LOADS

TYPE	SERVICE LOAD (KIPS/FT)
EH	2.17 KIP/FT
LS	1.01 KIP/FT

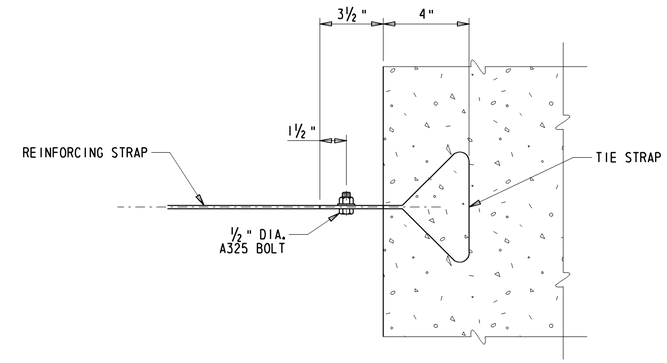

ABUTMENT STRAP ANCHOR DETAIL

N.T.S.

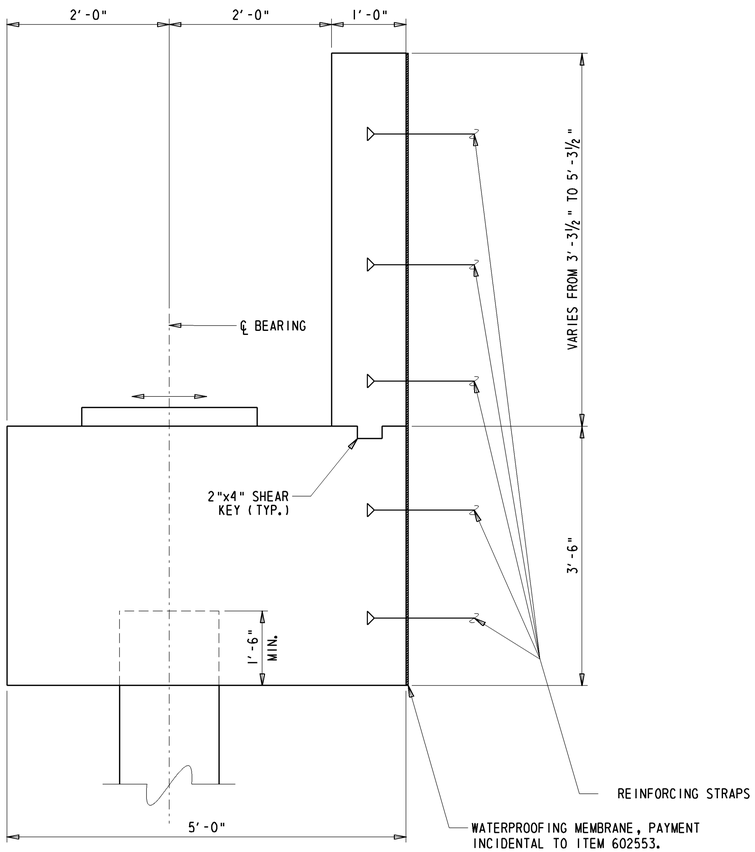

ABUTMENT SECTION

N.T.S.

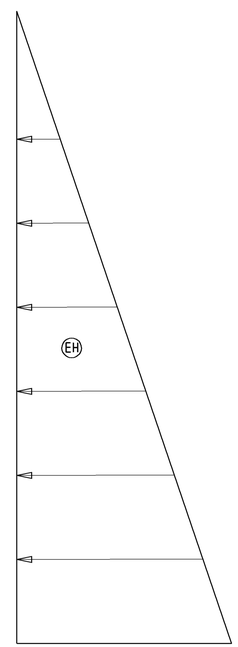

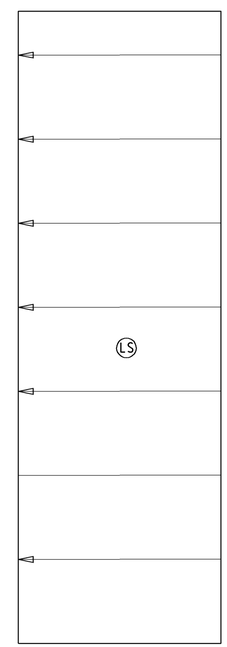

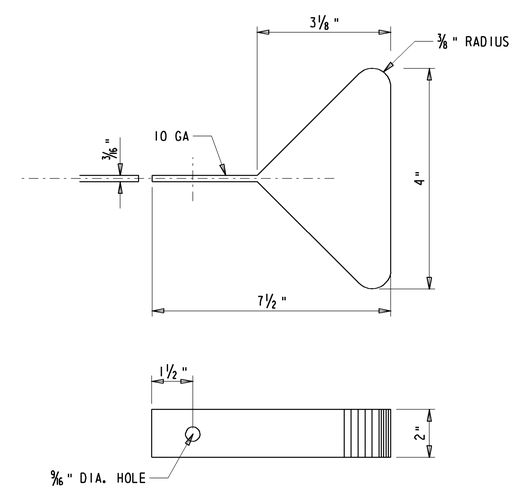

TIE STRAP DETAIL

N.T.S.

DELAWARE DEPARTMENT OF TRANSPORTATION	ADDENDUMS / REVISIONS	NOT TO SCALE	WEST DOVER CONNECTOR	CONTRACT T200411701	BRIDGE NO. 2-156	ABUTMENT STRAP REINFORCING DETAILS BRIDGE SHEET 14 OF 65	SHEET NO. 125
				COUNTY KENT	DESIGNED BY: JAT		TOTAL SHTS. 320
					CHECKED BY: EM		

Y:\NEWCASTL\059\BRIDGE\2510602\BRIDGE 1-763\PLANS\ALTERNATIVE CURVED\AB02.DGN

NOTE:
BRIDGE EMBANKMENTS SHALL SIT UNDISTURBED FOR A MINIMUM 30 DAY PERIOD AFTER CONSTRUCTED TO FULL HEIGHT, OR AS DIRECTED BY THE ENGINEER. FULL HEIGHT SHALL BE TO THE BOTTOM OF ABUTMENT FOOTER ELEVATION. ALSO, SETTLEMENT SHALL NOT EXCEED 0.3" PER WEEK BEFORE RESUMING WORK ON THE EMBANKMENT, OR AS DIRECTED BY THE ENGINEER. REFER TO PILE DETAILS FOR SEQUENCE OF CONSTRUCTION NOTES.

SOUTH MSE WALL WORKING POINTS				
POINT NO.	STATION	OFFSET	NORTHING	EASTING
M1-01	1104+73.15	-96.0369	415146.0013	620974.1682
M1-02	1105+25.04	-52.5000	415177.4048	621034.1796
M1-03	1105+80.08	42.8333	415192.0071	621143.2882
M1-04	1105+39.15	83.7593	415138.5823	621165.5517
NORTH MSE WALL WORKING POINTS				
POINT NO.	STATION	OFFSET	NORTHING	EASTING
M7-01	1112+86.85	-90.3497	415896.2537	621289.2016
M7-02	1112+48.58	-52.0833	415846.3007	621310.0183
M7-03	1113+03.62	43.2500	415860.9030	621419.1269
M7-04	1113+39.85	79.4758	415880.6096	621466.4160

WORKING POINTS ARE TAKEN AT FILL SIDE OF MSE WALL

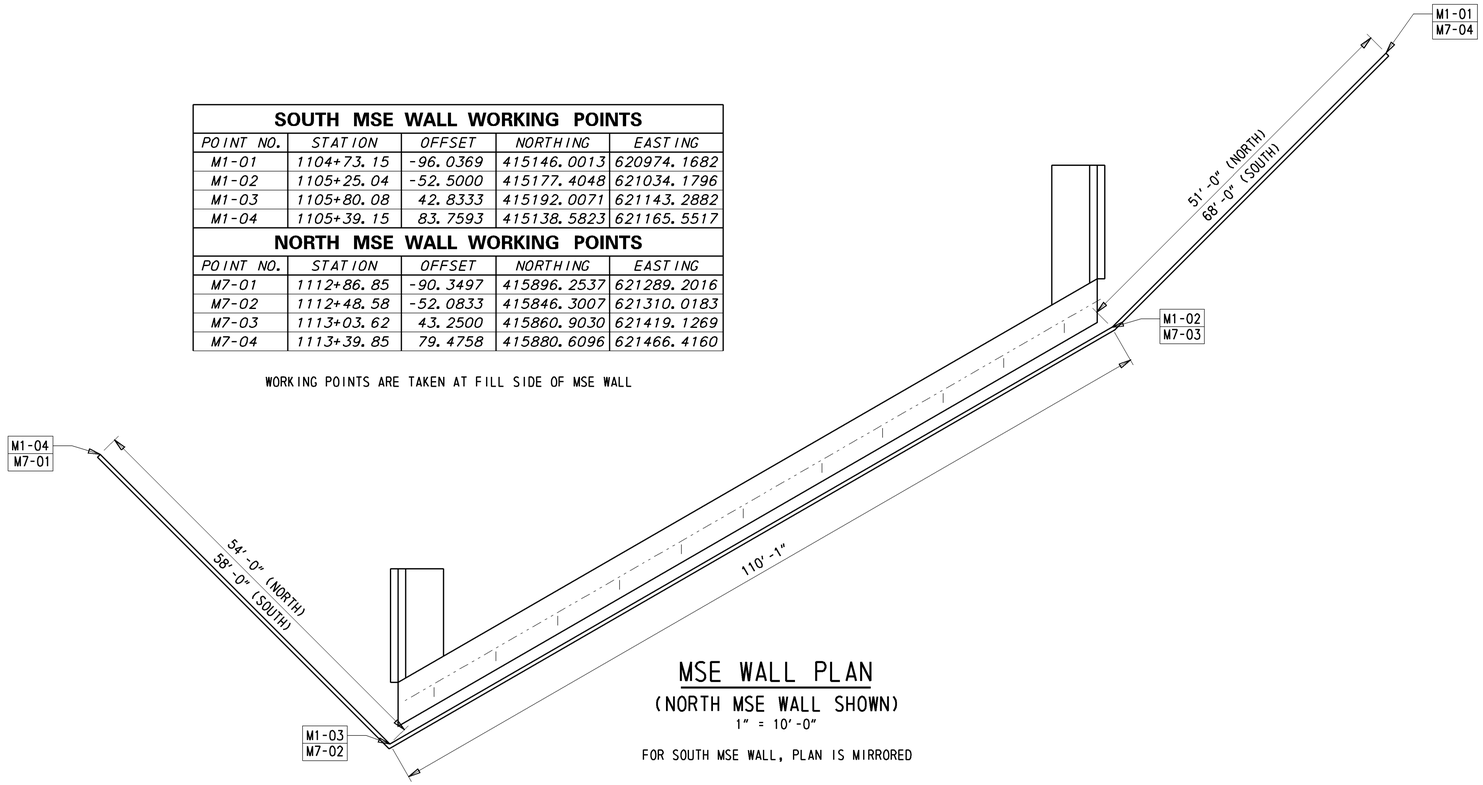

MSE WALL PLAN
(NORTH MSE WALL SHOWN)
1" = 10'-0"

FOR SOUTH MSE WALL, PLAN IS MIRRORED

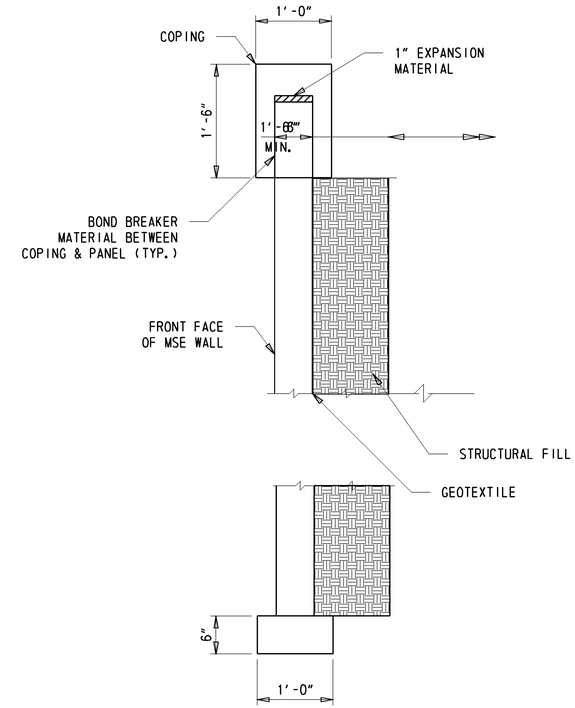

NORTH MSE DETAIL
N.T.S.

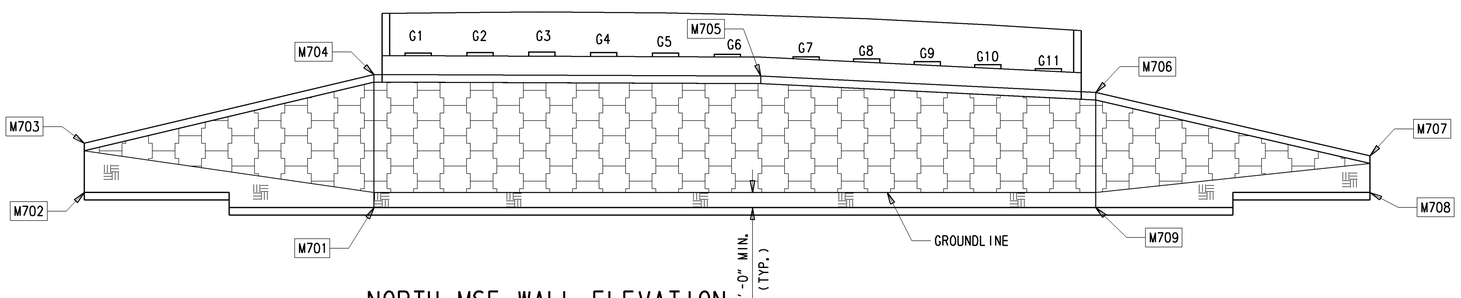

NORTH MSE WALL ELEVATION
1" = 10'-0"

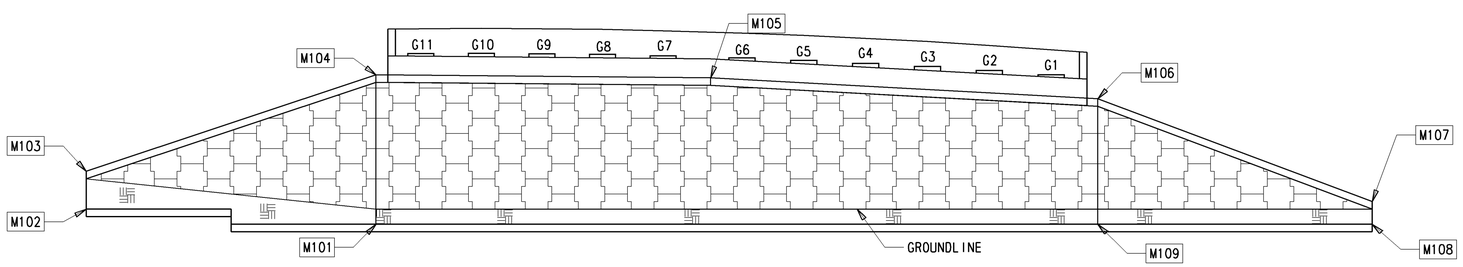

SOUTH MSE WALL ELEVATION
1" = 10'-0"

ELEVATIONS			
POINT	ELEV. (FT)	POINT	ELEV. (FT)
M101	22.00	M701	22.75
M102	24.00	M702	24.75
M103	29.00	M703	31.25
M104	41.74	M704	40.33
M105	41.35	M705	40.13
M106	38.58	M706	37.96
M107	25.00	M707	29.60
M108	22.00	M708	24.75
M109	22.00	M709	22.75

ELEVATIONS SHOWN ARE TO TOP OF LEVELING PAD OR TOP OF COPING

Y:\KENT\156\BRIDGE\T200411701\PLANS\PUNCHEON RUN - 7 SPAN\WW01.DGN

DELAWARE DEPARTMENT OF TRANSPORTATION	ADDENDUMS / REVISIONS	SCALE AS NOTED	WEST DOVER CONNECTOR	CONTRACT T200411701	BRIDGE NO. 2-156	MSE WALL DETAILS BRIDGE SHEET 15 OF 65	SHEET NO. 126
				COUNTY KENT	DESIGNED BY: JAT		TOTAL SHTS. 320
					CHECKED BY: EM		

PIER WORKING POINTS				
POINT NO.	STATION	OFFSET	NORTHING	EASTING
2-1	1106+05.08	-49.21	415250.1672	621067.6890
2-2	1106+16.34	-55.71	415263.0523	621065.9646
2-3	1106+60.08	46.05	415264.7587	621176.7169
2-4	1106+71.34	39.55	415277.6438	621174.9925
3-1	1106+97.08	-49.21	415335.2393	621102.7137
3-2	1107+08.34	-55.71	415348.1245	621100.9892
3-3	1107+52.08	46.05	415349.8309	621211.7416
3-4	1107+63.34	39.55	415362.7160	621210.0172
4-1	1108+35.08	-49.21	415462.8476	621155.2507
4-2	1108+46.34	-55.71	415475.7327	621153.5262
4-3	1108+90.08	46.05	415477.4391	621264.2786
4-4	1109+01.34	39.55	415490.3242	621262.5542
5-1	1109+73.08	-49.21	415590.4558	621207.7877
5-2	1109+84.34	-55.71	415603.3409	621206.0632
5-3	1110+28.08	46.05	415605.0473	621316.8156
5-4	1110+39.34	39.55	415617.9325	621315.0912
6-1	1111+11.08	-49.21	415718.0641	621260.3247
6-2	1111+22.34	-55.71	415730.9492	621258.6003
6-3	1111+66.08	46.05	415732.6556	621369.3526
6-4	1111+77.34	39.55	415745.5407	621367.6282

THE FIRST POINT NUMBER CORRESPONDS TO THE PIER NUMBER, THE SECOND NUMBER CORRESPONDS TO THE WORKING POINT.

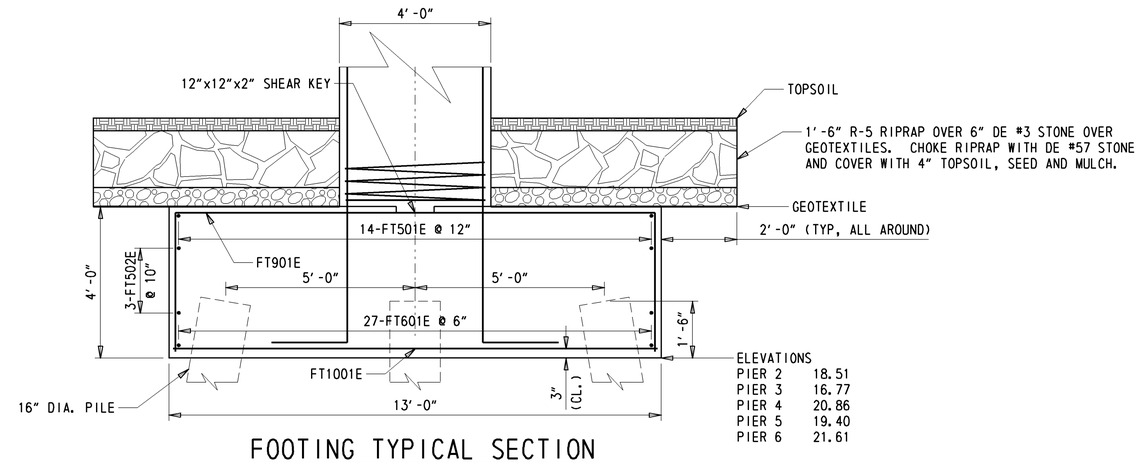

FOOTING TYPICAL SECTION

½" = 1'-0"

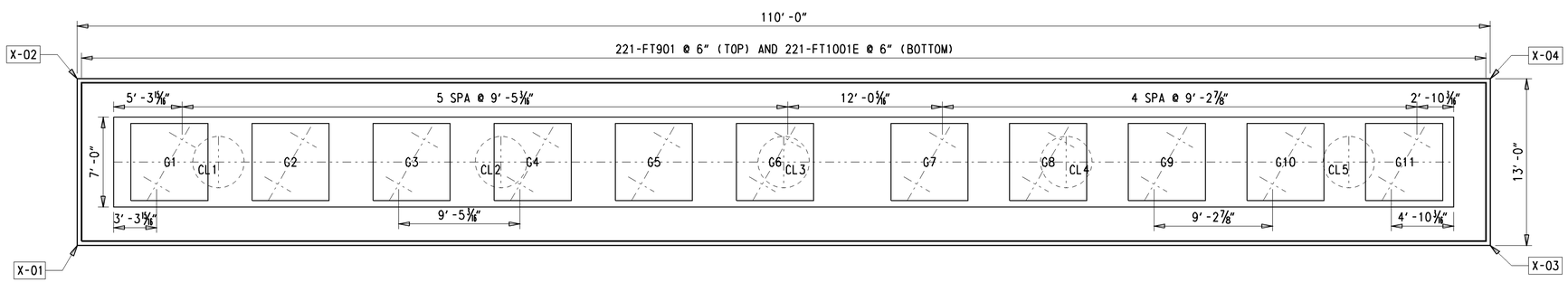

X CORRESPONDS TO THE PIER NUMBER

PIER PLAN

(TYPICAL)

1/16" = 1'-0"

Y:\KENT\156\BRIDGE\T200411701\PLANS\PUNCHEON RUN - 7 SPAN\PRO1.DGN

DELAWARE DEPARTMENT OF TRANSPORTATION	ADDENDUMS / REVISIONS	WEST DOVER CONNECTOR	CONTRACT T200411701	BRIDGE NO. 2-156 N&S	PIER FOOTING DETAIL BRIDGE SHEET 16 OF 65	SHEET NO. 127
			COUNTY KENT	DESIGNED BY: JAT		TOTAL SHTS. 320
				CHECKED BY: EM		

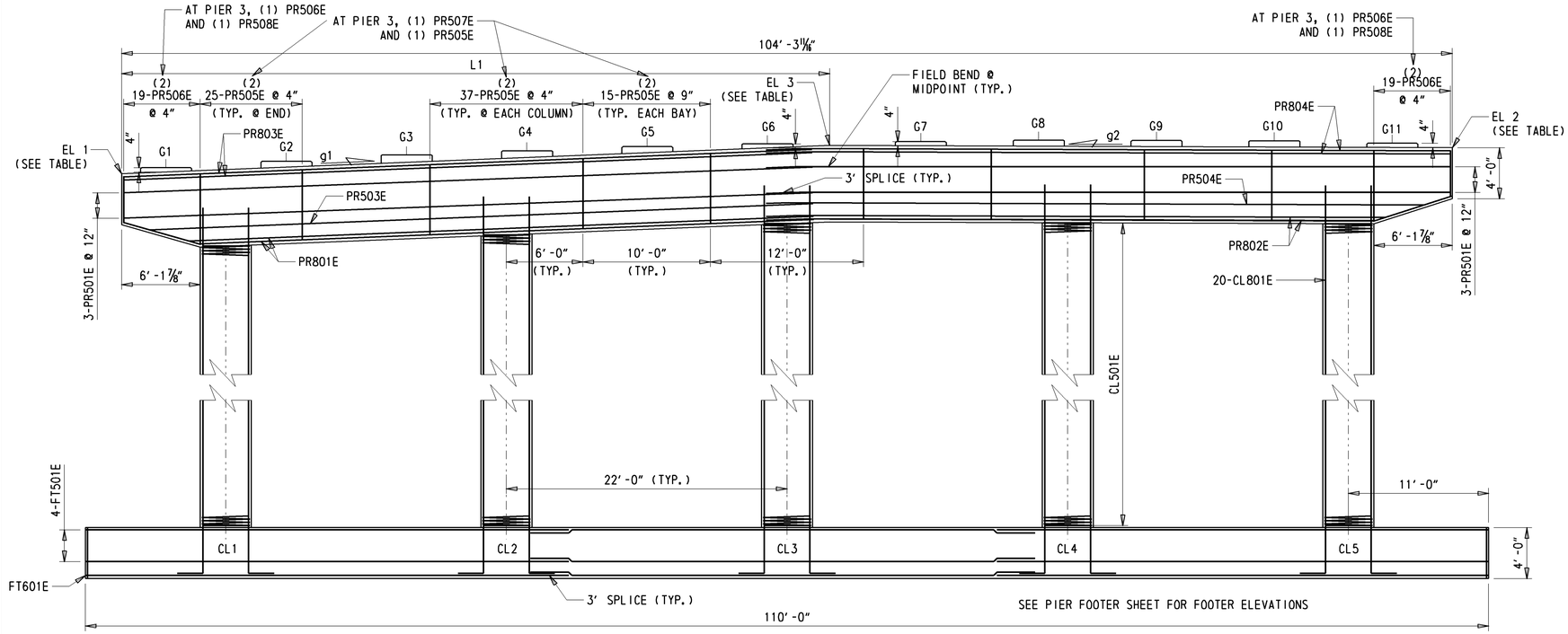

PIER ELEVATION

(TYP. FOR PIERS 2,4,5,6)

3/16" = 1'-0"

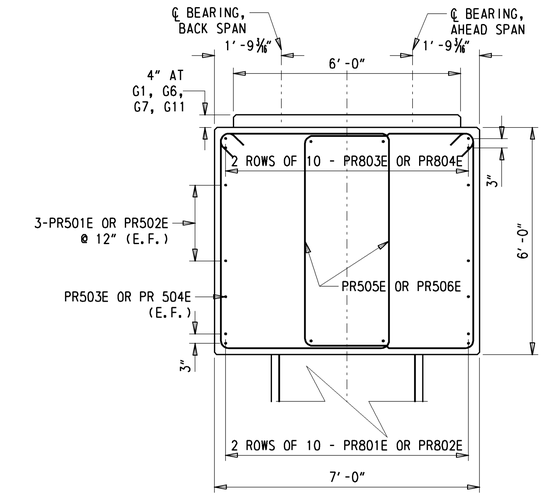

PIER CAP TYPICAL SECTION

(TYP. FOR PIERS 2,4,5,6)

1/2" = 1'-0"

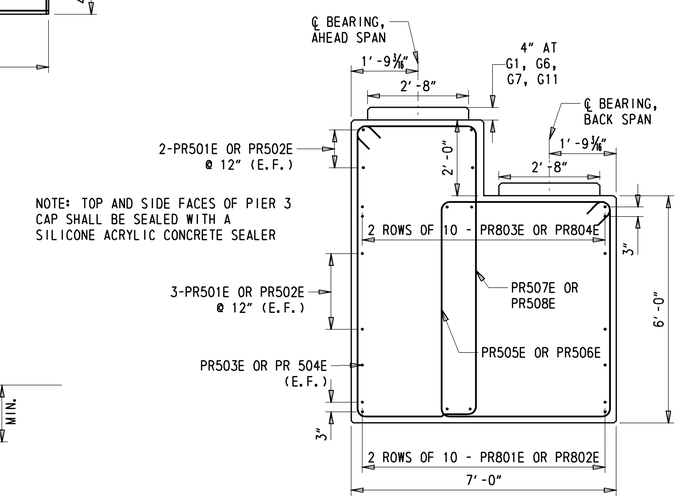

NOTE: TOP AND SIDE FACES OF PIER 3 CAP SHALL BE SEALED WITH A SILICONE ACRYLIC CONCRETE SEALER

PIER CAP TYPICAL SECTION

(TYP. FOR PIERS 3)

1/2" = 1'-0"

PIER CAP GRADES		
	g1	g2
PIER 2	0.0465	-0.0054
PIER 3	0.0388	0.0025
PIER 4	0.0276	0.0137
PIER 5	0.0158	0.0255
PIER 6	0.0043	0.0370

A POSITIVE GRADE INDICATES AN UPWARDS SLOPE FROM THE OUTSIDE EDGE OF THE PIER TO THE CENTER.

PIER CAP ELEVATIONS		
	EL 1	EL 2
PIER 2	45.68	48.53
PIER 3	47.89	49.92
PIER 4	51.27	52.13
PIER 5	51.57	51.20
PIER 6	48.81	47.08

BREAK POINT ELEV.		
	L1	EL 3
PIER 2	55.64	48.27
PIER 3	55.47	50.04
PIER 4	55.42	52.80
PIER 5	55.44	52.45
PIER 6	51.56	49.03

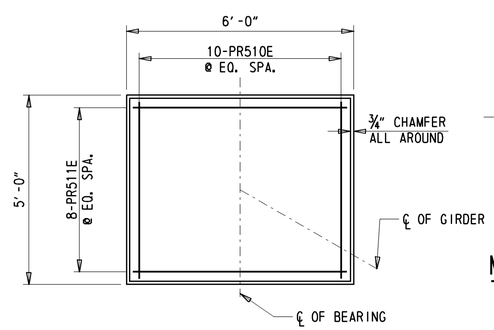

MASONRY PAD PLAN

1/2" = 1'-0"

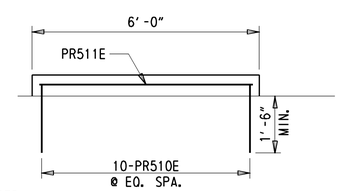

MASONRY PAD ELEVATION

1/2" = 1'-0"

MASONRY PAD ELEVATIONS						
	PIER 2	PIER 3	PEIR 3	PIER 4	PIER 5	PIER 6
G1	46.32	50.38	48.50	51.84	52.10	49.14
G2	46.74	50.73	48.85	52.09	52.23	49.16
G3	47.28	51.20	49.32	52.45	52.49	49.31
G4	47.67	51.53	49.65	52.67	52.59	49.31
G5	48.07	51.85	49.97	52.88	52.70	49.30
G6	48.36	52.08	50.19	53.00	52.70	49.20
G7	48.63	52.25	50.36	53.04	52.60	48.95
G8	48.81	52.36	50.46	53.04	52.49	48.74
G9	48.86	52.34	50.44	52.91	52.25	48.40
G10	48.91	52.32	50.42	52.78	52.02	48.05
G11	48.83	52.17	50.27	52.53	51.65	47.59

CALCULATED COLUMN HEIGHTS					
	CL1	CL2	CL3	CL4	CL5
PIER 2	21.5478	22.5701	23.5923	23.8521	23.9714
PIER 3	25.4372	26.2909	27.1447	27.2292	27.1732
PIER 4	24.6341	25.2413	25.8484	25.6861	25.3836
PIER 5	26.2966	26.6444	26.9922	26.5706	26.0088
PIER 6	21.0702	21.1651	21.2600	20.5853	19.7705

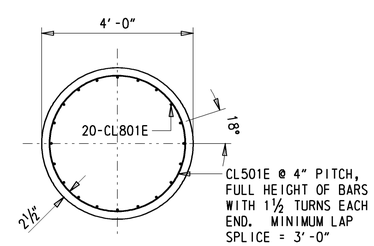

TYPICAL COLUMN SECTION

1/2" = 1'-0"

Y:\KENT\156\BRIDGE\T200411701\PLANS\PUNCHEON RUN - 7 SPAN\PRO1.DGN

DELAWARE DEPARTMENT OF TRANSPORTATION	ADDENDUMS / REVISIONS	SCALE AS NOTED	WEST DOVER CONNECTOR	CONTRACT T200411701	BRIDGE NO. BR 2-156 N&S	PIER DETAILS (PIERS 2-6) BRIDGE SHEET 17 OF 65	SHEET NO. 128
				COUNTY KENT	DESIGNED BY: JAT		TOTAL SHTS. 320
					CHECKED BY: EM		

GENERAL BEAM NOTES

1. DESIGN PLANS - WORKING DRAWINGS
INFORMATION PERTAINING TO THE PRECAST PRESTRESSED REINFORCED CONCRETE BULB-T BEAMS IS INTENDED TO SERVE AS AN INDICATION OF THE TYPE OF CONSTRUCTION ACCEPTABLE FOR USE. THE CONTRACTOR SHALL PREPARE AND SUBMIT, FOR APPROVAL, A COMPLETE SET OF DETAILED SHOP PLANS FOR THE PRESTRESSED PRECAST CONCRETE UNITS THEY PROPOSE TO FURNISH. PAYMENT SHALL BE INCIDENTAL TO ITEM 623003 - PRESTRESSED REINFORCED CONCRETE MEMBERS, BULB-T BEAMS.

2. BAR REINFORCEMENT
BAR REINFORCEMENT SHALL CONFORM TO AASHTO M31, GRADE 60. ALL REBAR REINFORCEMENT AND CHAIR SUPPORTS SHALL BE PROTECTED WITH FUSION BONDED EPOXY IN ACCORDANCE WITH AASHTO M284. CONCRETE COVER SHALL BE 2" UNLESS OTHERWISE SPECIFIED. PAYMENT SHALL BE INCIDENTAL TO ITEM 623003 - PRESTRESSED REINFORCED CONCRETE MEMBERS, BULB-T BEAMS.

3. PRESTRESSING STEEL
ALL STRANDS SHALL BE 0.6" DIAMETER, SEVEN WIRE STRAND, 0.217 SQ. IN. NOMINAL AREA, LOW RELAXATION STRANDS IN ACCORDANCE WITH AASHTO M203, GRADE 270. MINIMUM INITIAL PULL PER STRAND SHALL BE 43,943 POUNDS. MINIMUM ULTIMATE STRENGTH PER STRAND EQUALS 58,590 POUNDS. USE A 1" DEEP RECESS AROUND LOCAL STRAND GROUPS WITH 2" MINIMUM EDGE CLEARANCE AND FILL WITH PNEUMATICALLY APPLIED MORTAR IMMEDIATELY AFTER CLIPPING STRANDS. AN APPROVED EPOXY MORTAR COVERING THE ENDS OF STRANDS WITH A MINIMUM THICKNESS OF 1/8" MAY BE USED AS AN ALTERNATE.

4. CONCRETE FINISH
TOP SURFACE OF ALL BEAMS SHALL HAVE A "STIFF BROOM" HEAVY SCORED FINISH IN THE TRANSVERSE DIRECTION TO REMOVE LATENCE AND TO ROUGHEN THE SURFACE.

5. HANDLING
PRESTRESSES BEAMS SHALL BE HANDLED ONLY BY LIFTING STRANDS PROVIDED ESPECIALLY FOR THIS PURPOSE. LOCATION OF LIFTING STRANDS SHALL BE DETERMINED BY THE PRECASTER AND DETAILED IN THE SHOP PLANS.

6. THREADED INSERTS
AT DIAPHRAGM CONNECTIONS, THREADED INSERTS SHALL HAVE A MINIMUM ULTIMATE PULLOUT CAPACITY OF 11,900 POUNDS EACH. THREADED INSERT AND/OR BAR LOCATIONS MAY BE ADJUSTED BY 1/2" TO AVOID CONFLICTS. ANY DEVIATIONS FROM THIS PLAN SHALL BE NOTED ON THE SHOP DRAWINGS.

7. STAY-IN-PLACE FORMS
METAL INSERTS SHALL BE PROVIDED ALONG THE TOP FLANGE OF THE PRESTRESSED CONCRETE BEAMS TO SUPPORT STAY-IN-PLACE FORMS. SIZE, SPACING, AND LOCATION OF INSERTS SHALL BE DETERMINED BY STAY-IN-PLACE FORM MANUFACTURER. PAYMENT SHALL BE INCIDENTAL TO ITEM 623003 - PRESTRESSED REINFORCED CONCRETE MEMBERS, BULB-T BEAMS.

8. BEARING AREA
BEAMS SHALL BE DAPPED AT ENDS TO REST LEVEL ON THEIR BEARING SURFACE. A DETAIL OF THE DAP SHALL BE SUBMITTED WITH THE SHOP DRAWINGS.

10. ENDS OF PRESTRESSED BEAMS ARE TO BE VERTICAL.

11. PAYMENT FOR FABRICATION AND INSTALLATION OF BEARING PADS SHALL BE INCIDENTAL TO THE PRESTRESSED CONCRETE BEAMS.

12. PCEF 4747 NOTES (SPANS 1 & 2)
A) CONCRETE STRENGTH
THE MINIMUM COMPRESSIVE STRENGTH AT THE TIME OF THE INITIAL PRESTRESS EQUALS 5600 PSI. THE MINIMUM COMPRESSIVE STRENGTH AT 28 DAYS EQUALS 7000 PSI.

13. PCEF 7147 NOTES (SPANS 3-6)
A) CONCRETE STRENGTH
THE MINIMUM COMPRESSIVE STRENGTH AT THE TIME OF THE INITIAL PRESTRESS EQUALS 6400 PSI. THE MINIMUM COMPRESSIVE STRENGTH AT 28 DAYS EQUALS 8000 PSI.

REINFORCING BAR LIST

PCEF 4747 (S1 & S2)				PCEF 7147 (S3-S6)			
MARK	SIZE	NUMBER	LENGTH	MARK	SIZE	NUMBER	LENGTH
BM401	4	134	4'-4 1/4"	BM401	4	228	4'-4 1/4"
BM402	4	268	10'-1/2"	BM403	4	114	14'-1/2"
BM404	4	92	3'-7"	BM404	4	138	3'-7"
BM405	4	12	48'-0"	BM406	4	18	48'-2"

BENDING DIAGRAMS

ALL DIMENSIONS ARE FROM OUT TO OUT.

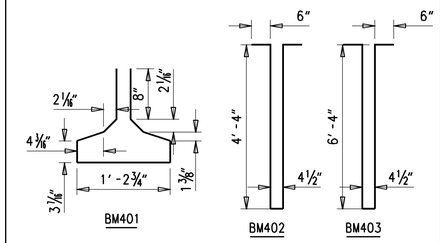

NOTE: REINFORCING BAR LIST COUNT IS PER BEAM

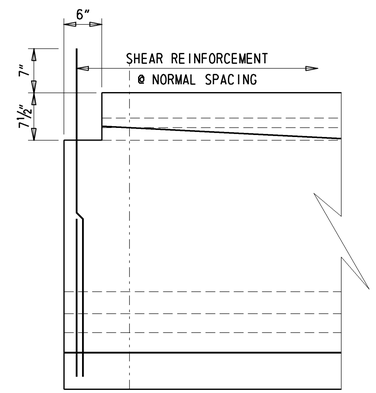

BEAM ELEVATION AT ABUTMENTS

1" = 1'-0"

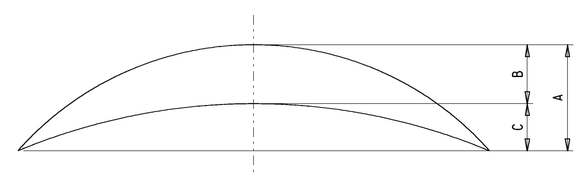

A = ESTIMATED PRESTRESS CAMBER LESS DEFLECTION DUE TO DEAD LOAD OF BEAM TIMES CREEP.
B = DEFLECTION DUE TO DEAD LOAD OF SLAB AND PARAPET.
C = A - B = NET CAMBER.

CAMBER DIAGRAM

N.T.S.

CAMBER (INCHES)							
SPAN	A	B	C	SPAN	A	B	C
S1-G1	3.43	1.39	2.04	S4-G1	4.51	2.54	1.97
S1-G2	3.43	1.35	2.08	S4-G2	4.51	2.55	1.96
S1-G3	3.43	1.32	2.10	S4-G3	4.51	2.50	2.01
S1-G4	3.43	1.28	2.15	S4-G4	4.51	2.46	2.04
S1-G5	3.43	1.16	2.27	S4-G5	4.51	2.20	2.31
S1-G8	3.43	1.06	2.36	S4-G8	4.51	2.01	2.50
S1-G9	3.43	1.28	2.14	S4-G9	4.51	2.43	2.08
S1-G10	3.43	1.29	2.14	S4-G10	4.51	2.43	2.08
S1-G11	3.43	1.27	2.16	S4-G11	4.51	2.37	2.14
S2-G1	3.43	1.34	2.09	S5-G1	4.51	2.54	1.97
S2-G2	3.43	1.33	2.10	S5-G2	4.51	2.55	1.96
S2-G3	3.43	1.30	2.13	S5-G3	4.51	2.50	2.01
S2-G4	3.43	1.25	2.17	S5-G4	4.51	2.46	2.04
S2-G5	3.43	1.12	2.30	S5-G5	4.51	2.20	2.31
S2-G8	3.43	1.02	2.40	S5-G8	4.51	2.01	2.50
S2-G9	3.43	1.24	2.19	S5-G9	4.51	2.43	2.08
S2-G10	3.43	1.24	2.19	S5-G10	4.51	2.43	2.08
S2-G11	3.43	1.23	2.20	S5-G11	4.51	2.37	2.14
S3-G1	4.84	2.66	2.19	S6-G1	4.84	2.61	2.23
S3-G2	4.51	2.68	1.83	S6-G2	4.51	2.62	1.89
S3-G3	4.51	2.63	1.87	S6-G3	4.51	2.55	1.95
S3-G4	4.51	2.51	1.99	S6-G4	4.51	2.42	2.09
S3-G5	4.51	2.25	2.26	S6-G5	4.51	2.13	2.37
S3-G8	4.51	2.08	2.43	S6-G8	4.51	1.95	2.55
S3-G9	4.51	2.50	2.01	S6-G9	4.51	2.35	2.15
S3-G10	4.51	2.50	2.01	S6-G10	4.51	2.34	2.17
S3-G11	4.51	2.43	2.07	S6-G11	4.51	2.32	2.19

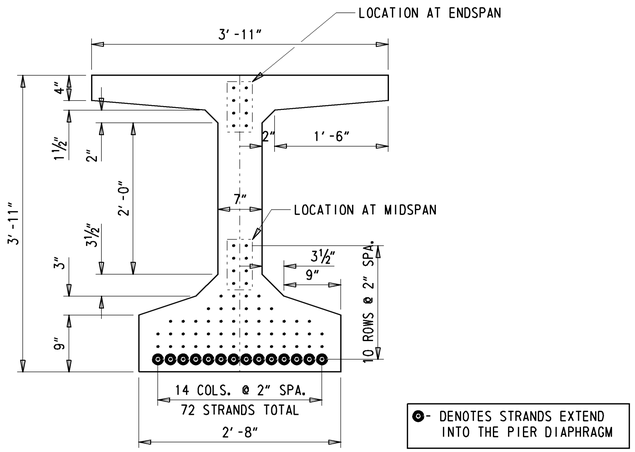

STRAND CONFIGURATION

1" = 1'-0"

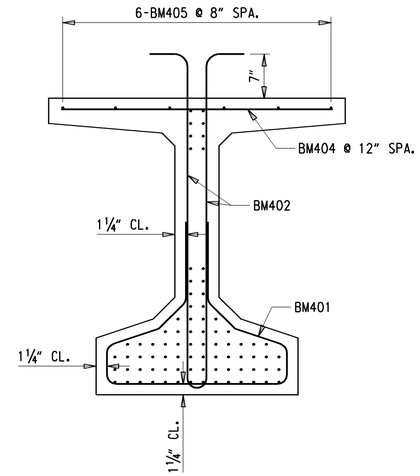

TYPICAL REINFORCING SECTION

1" = 1'-0"

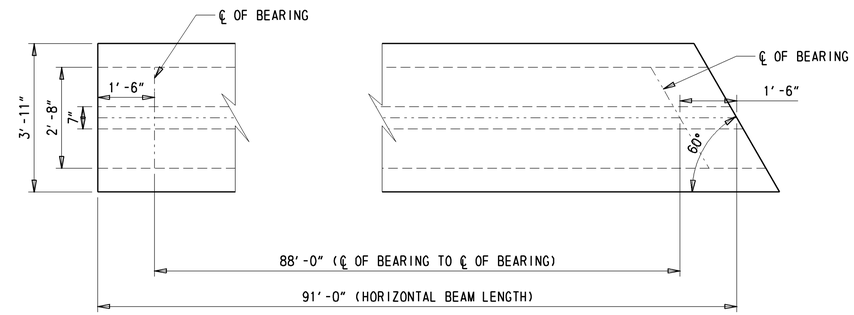

PLAN VIEW OF SPAN 2

½" = 1'-0"

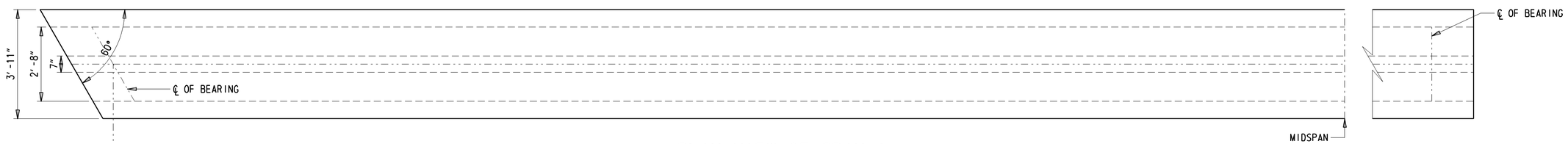

PLAN VIEW OF SPAN 1

½" = 1'-0"

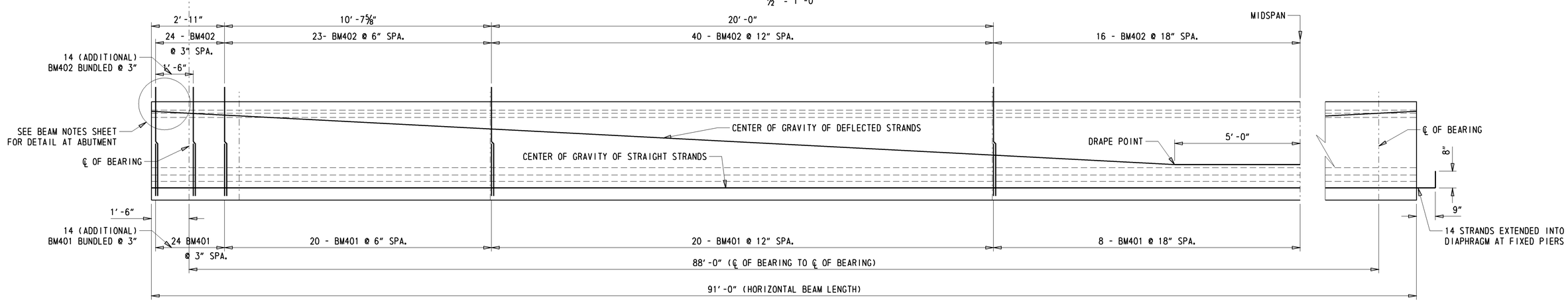

ELEVATION

½" = 1'-0"

Y:\KENT\156\BRIDGE\T200411701\PLANS\PUNCHEON RUN - 7 SPAN\BM01.DGN

DELAWARE DEPARTMENT OF TRANSPORTATION	ADDENDUMS / REVISIONS	SCALE AS NOTED	WEST DOVER CONNECTOR	CONTRACT T200411701	BRIDGE NO. 2-156 N/S	BEAM DETAILS (PCEF 4747) BRIDGE SHEET 19 OF 65	SHEET NO. 130
				COUNTY KENT	DESIGNED BY: JAT		TOTAL SHTS. 320
					CHECKED BY: EM		

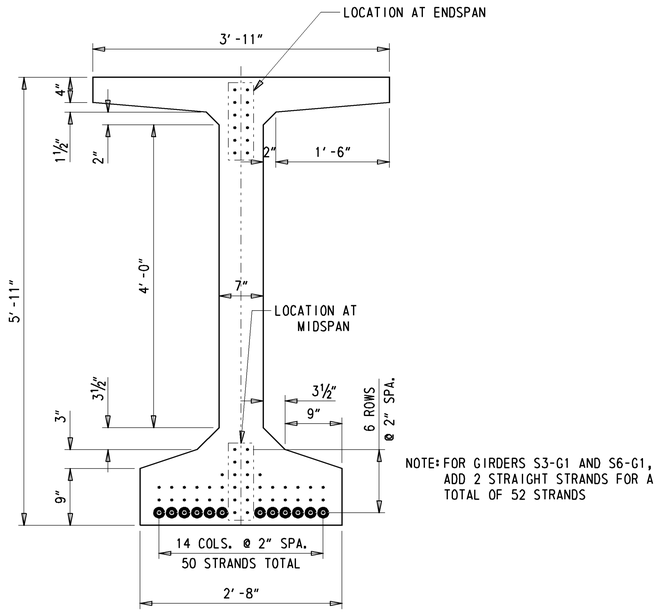

NOTE: FOR GIRDERS S3-G1 AND S6-G1, ADD 2 STRAIGHT STRANDS FOR A TOTAL OF 52 STRANDS

STRAND CONFIGURATION

1" = 1'-0"

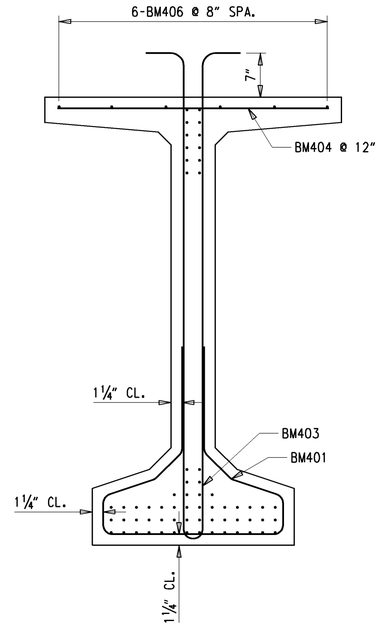

TYPICAL REINFORCING SECTION

1" = 1'-0"

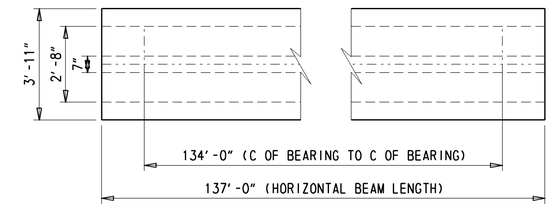

PLAN VIEW FOR SPAN 3-5

½" = 1'-0"

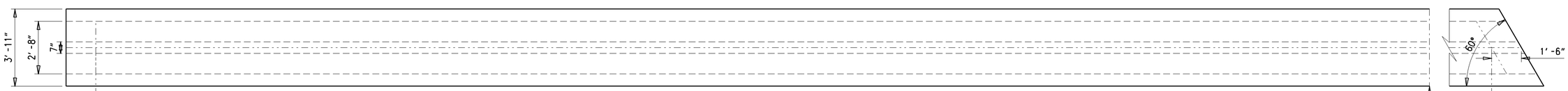

PLAN VIEW FOR SPAN 6

½" = 1'-0"

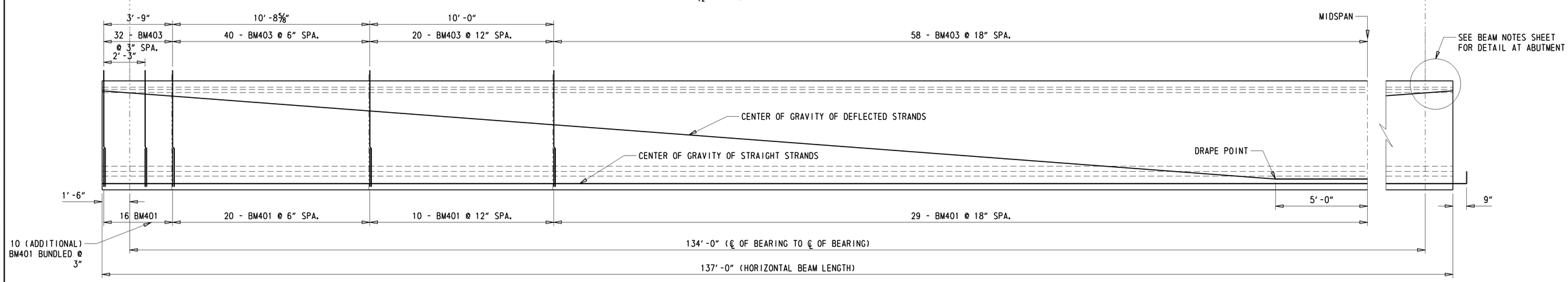

ELEVATION

½" = 1'-0"

Y:\KENT\156\BRIDGE\T200411701\PLANS\PUNCHEON RUN - 7 SPAN\BM01.DGN

DELAWARE DEPARTMENT OF TRANSPORTATION	ADDENDUMS / REVISIONS	SCALE AS NOTED	WEST DOVER CONNECTOR	CONTRACT T200411701	BRIDGE NO. 2-156 N/S	BEAM DETAILS (PCEF 7147) BRIDGE SHEET 20 OF 65	SHEET NO. 131
				COUNTY KENT	DESIGNED BY: JAT		TOTAL SHTS. 320
					CHECKED BY: EM		

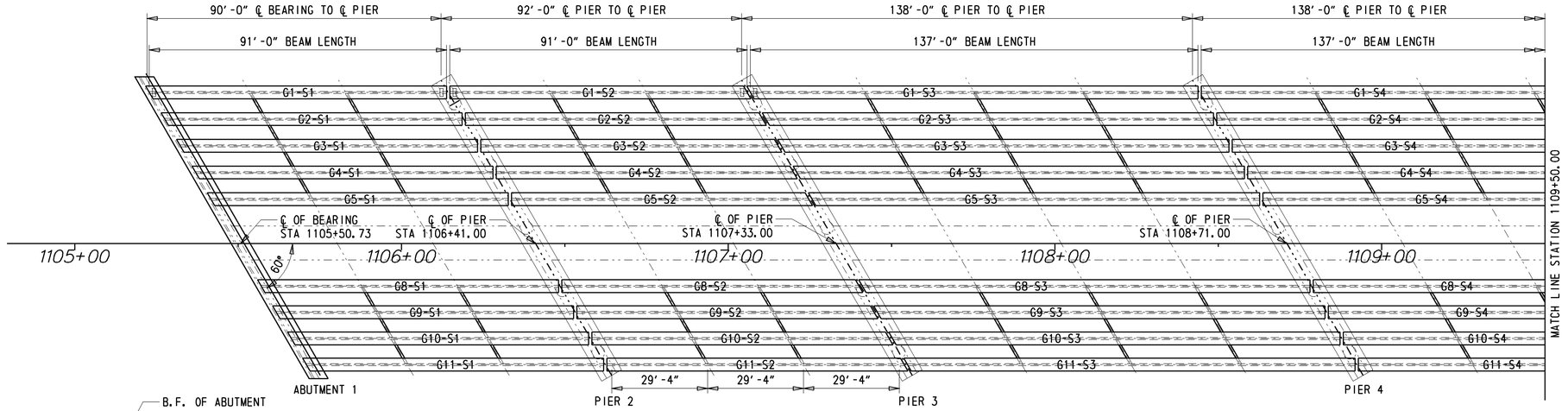

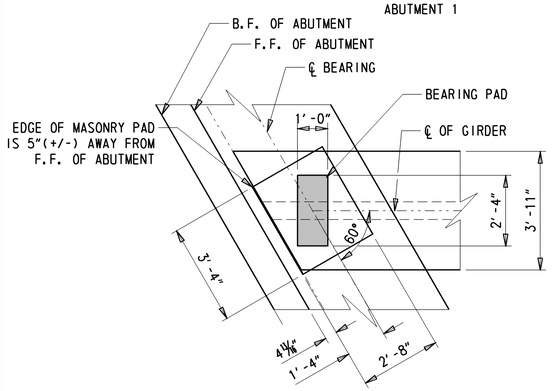

BEARING DETAIL

3/8" = 1'-0"

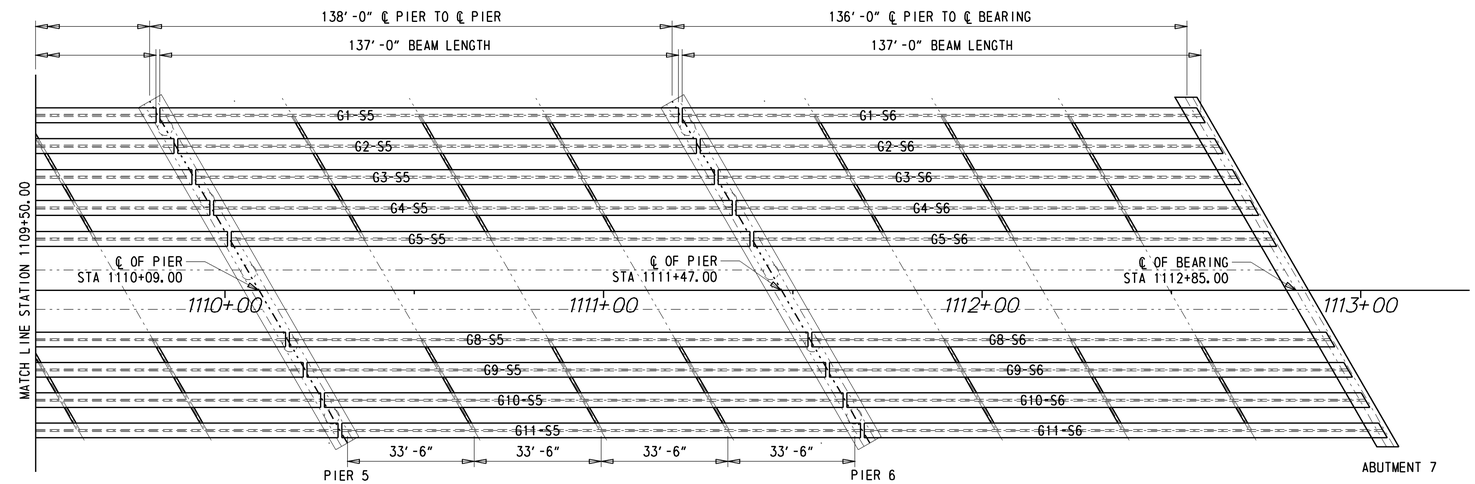

FRAMING PLAN

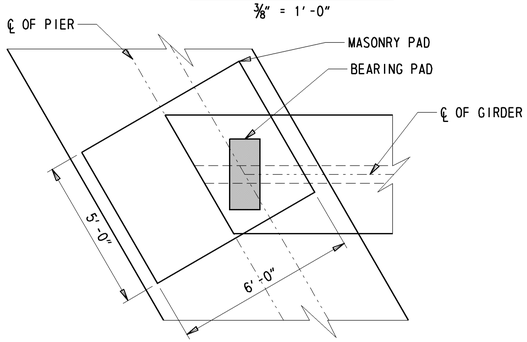

PIER BEARING DETAIL

3/8" = 1'-0"

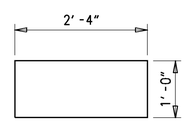

BEARING PLAN

3/4" = 1'-0"

BEARING ELEVATION

3/4" = 1'-0"

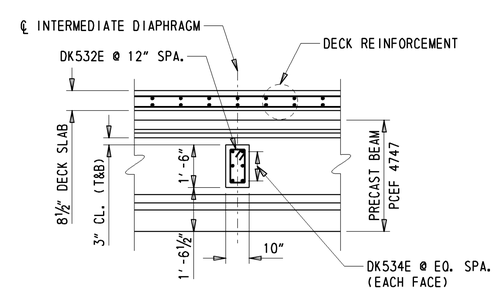

INTERMEDIATE DIAPHRAGM SECTION

(PRECAST BEAM PCEF 4747)

3/8" = 1'-0"

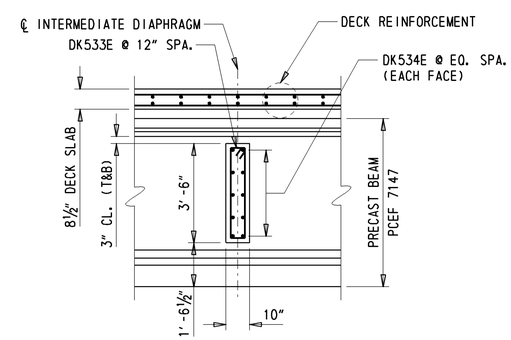

INTERMEDIATE DIAPHRAGM SECTION

(PRECAST BEAM PCEF 7147)

3/8" = 1'-0"

BEARING PAD DIMENSIONS

LENGTH = 12"
WIDTH = 2'-4"
COVER LAYER THICKNESS = 3/8"
INTERNAL LAYER THICKNESS = 3/4"
NUMBER OF STEEL LAYERS = 3
STEEL LAYER GAGE = 16
EDGE DISTANCE = 1/8"

BEARING PAD NOTES:

1. *ALL ELASTOMERIC PADS SHALL BE VIRGIN CHLOROPRENE IN ACCORDANCE WITH SECTION 623.06 OF THE STANDARD SPECIFICATIONS (60 DUROMETER HARDNESS).*
2. *ELASTOMERIC BEARING PADS SHALL BE ATTACHED TO THE BOTTOM OF THE BEAM AND THE TOP OF THE MASONRY PAD WITH AN APPROVED EPOXY GLUE.*
3. *ELASTOMERIC BEARING PADS SHALL BE INCIDENTAL TO ITEM 623003 - PRESTRESSED REINFORCED CONCRETE MEMBERS, BULB-T BEAMS.*

Y:\KENT\156\BRIDGE\T200411701\PLANS\PUNCHEON RUN - 7 SPAN\FR01.DGN

DELAWARE DEPARTMENT OF TRANSPORTATION	ADDENDUMS / REVISIONS	SCALE 0 20 40 60 FEET	**WEST DOVER CONNECTOR**	CONTRACT T200411701 / COUNTY KENT	BRIDGE NO. **BR 2-156 N&S** / DESIGNED BY: JAT / CHECKED BY: EM	**FRAMING PLAN BRIDGE SHEET 21 OF 65**	SHEET NO. 132 / TOTAL SHTS. 320

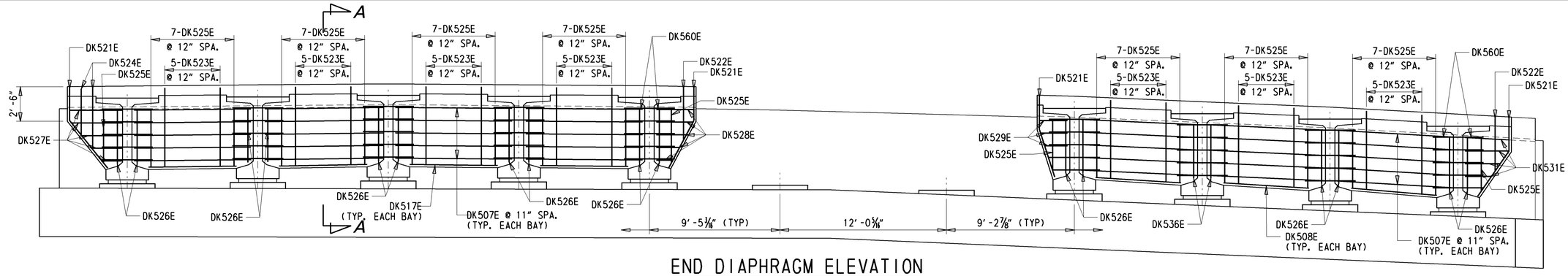

END DIAPHRAGM ELEVATION

(ABUTMENT 7 & PIER 3 AHEAD-SPAN)

1/4" = 1'-0"

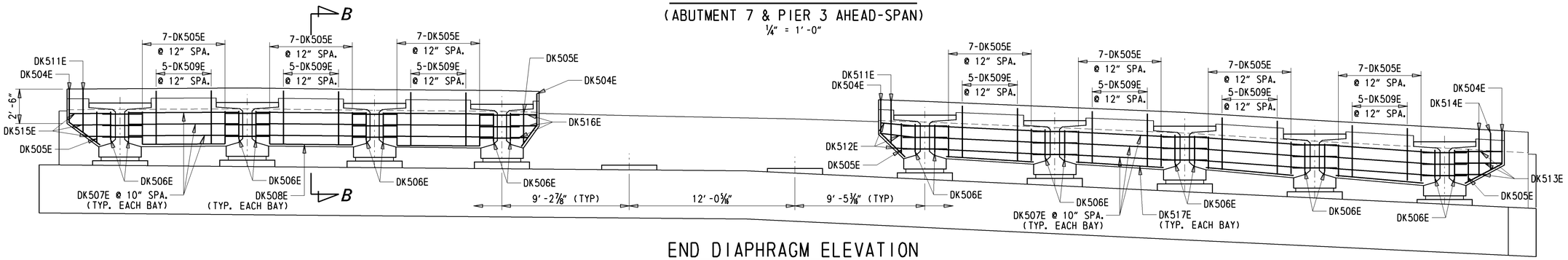

END DIAPHRAGM ELEVATION

(ABUTMENT 1 & PIER 3 BACK-SPAN)

1/4" = 1'-0"

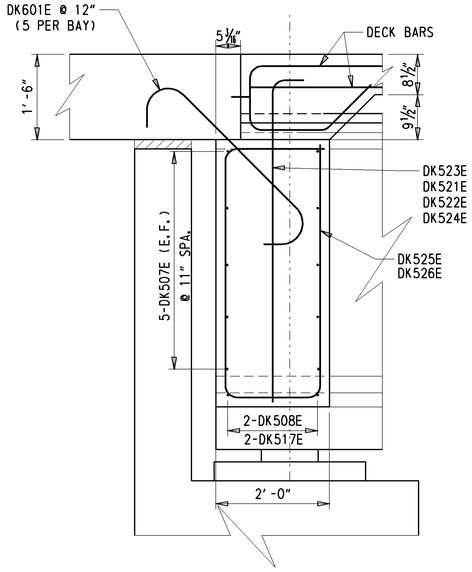

END DIAPHRAGM SECTION

(SECTION A-A)

3/4" = 1'-0"

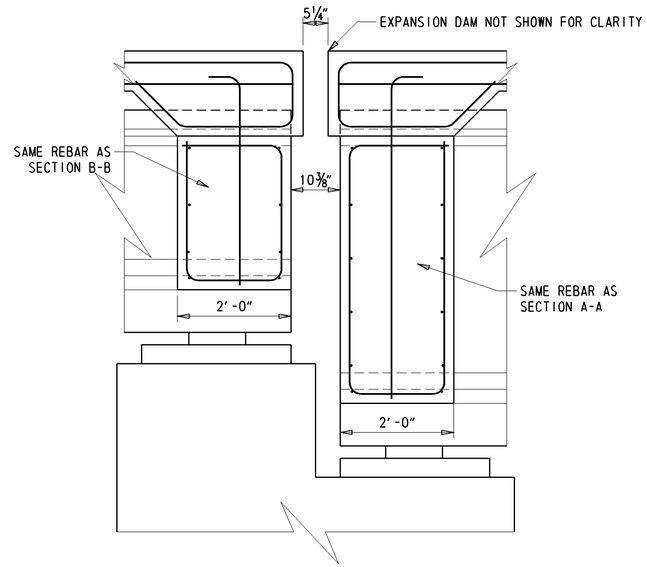

PIER END DIAPHRAGM SECTION

(AT PIER 3)

3/4" = 1'-0"

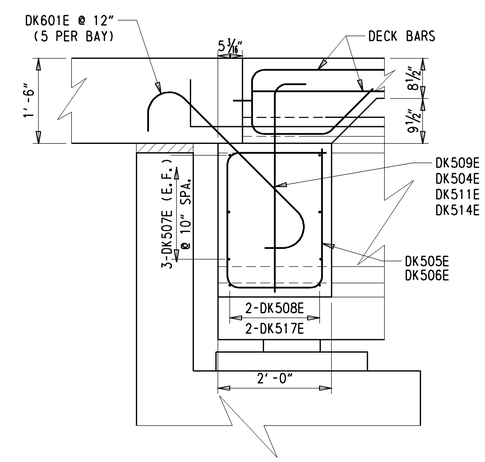

END DIAPHRAGM SECTION

(SECTION B-B)

3/4" = 1'-0"

Y:\KENT\156\BRIDGE\T200411701\PLANS\PUNCHEON RUN - 7 SPAN\DK03.DGN

DELAWARE DEPARTMENT OF TRANSPORTATION	ADDENDUMS / REVISIONS	SCALE AS NOTED	WEST DOVER CONNECTOR	CONTRACT T200411701	BRIDGE NO. 2-156 N&S	END DIAPHRAGM DETAILS BRIDGE SHEET 22 OF 65	SHEET NO. 133
				COUNTY KENT	DESIGNED BY: JAT		TOTAL SHTS. 320
					CHECKED BY: EM		

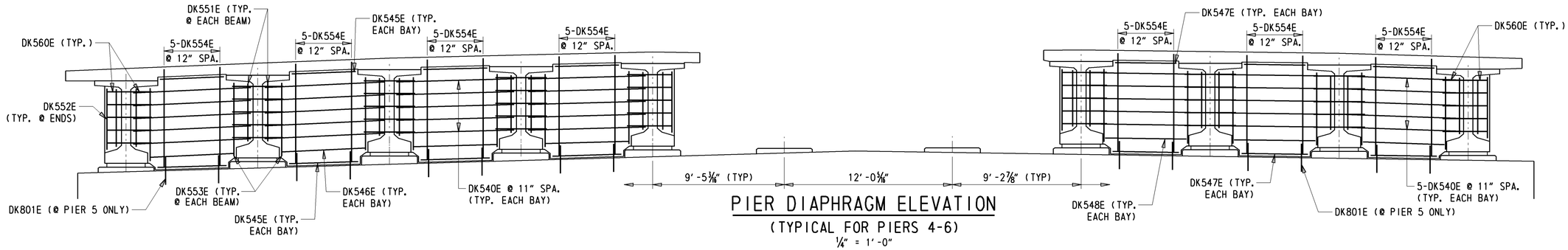

PIER DIAPHRAGM ELEVATION

(TYPICAL FOR PIERS 4-6)

1/4" = 1'-0"

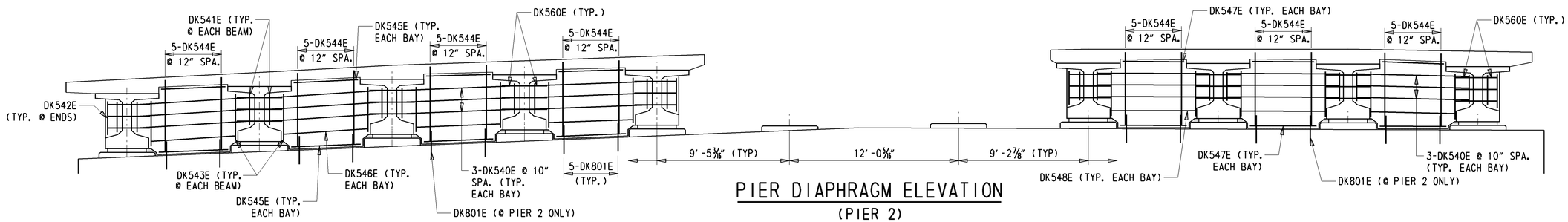

PIER DIAPHRAGM ELEVATION

(PIER 2)

1/4" = 1'-0"

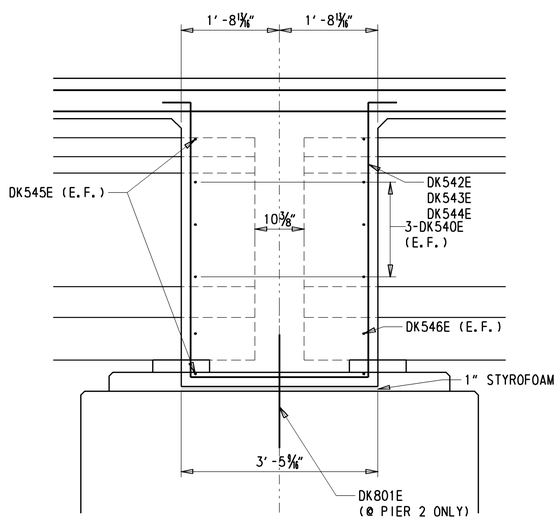

PIER DIAPHRAGM SECTION

(PIER 2)

3/4" = 1'-0"

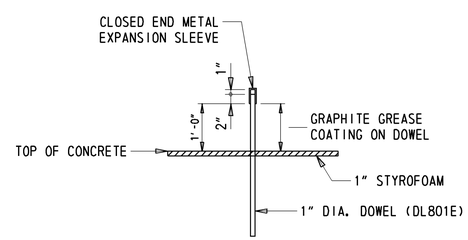

DOWEL DETAIL

3/4" = 1'-0"

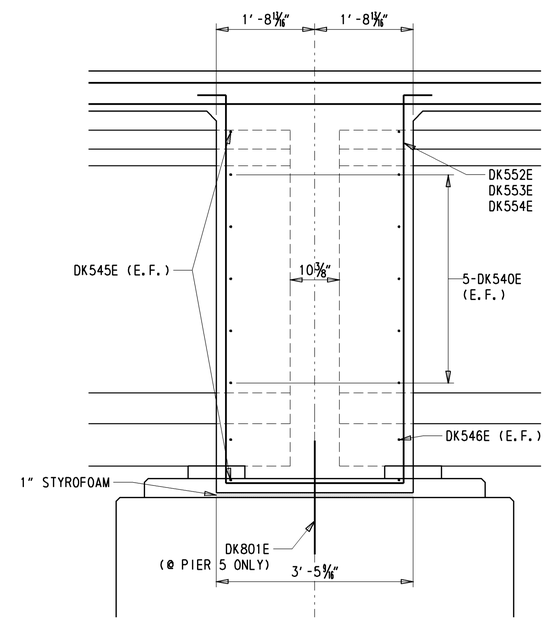

PIER DIAPHRAGM SECTION

(PIERS 4-6)

3/4" = 1'-0"

DELAWARE DEPARTMENT OF TRANSPORTATION	ADDENDUMS / REVISIONS	WEST DOVER CONNECTOR	CONTRACT T200411701 / COUNTY KENT	BRIDGE NO. 2-156 N&S / DESIGNED BY: JAT / CHECKED BY: EM	PIER DIAPHRAGM DETAILS BRIDGE SHEET 23 OF 65	SHEET NO. 134 / TOTAL SHTS. 320

Y:\KENT\156\BRIDGE\T200411701\PLANS\PUNCHEON RUN - 7 SPAN\DK03.DGN

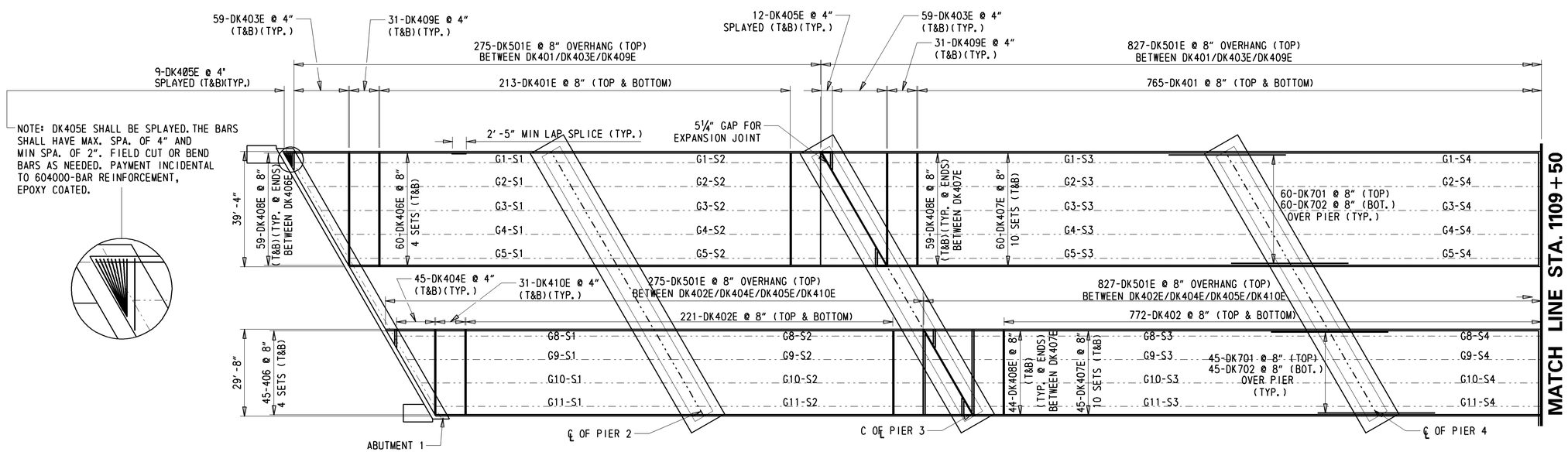

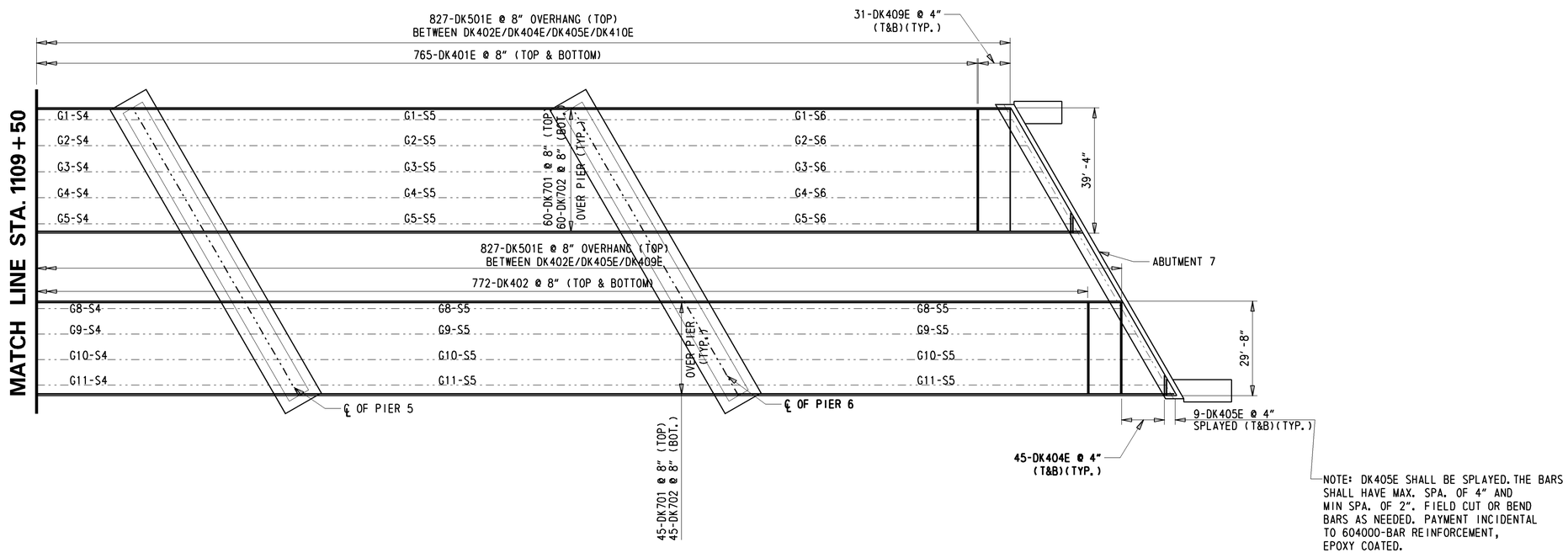

Y:\KENT\156\BRIDGE\T200411701\PLANS\PUNCHEON RUN - 7 SPAN\DK01.DGN

DELAWARE DEPARTMENT OF TRANSPORTATION	ADDENDUMS / REVISIONS	SCALE 0 20 40 60 FEET	WEST DOVER CONNECTOR	CONTRACT T200411701	BRIDGE NO. 2-156 N&S	DECK PLAN BRIDGE SHEET 24 OF 65	SHEET NO. 135
				COUNTY KENT	DESIGNED BY: JAT		TOTAL SHTS. 320
					CHECKED BY: EM		

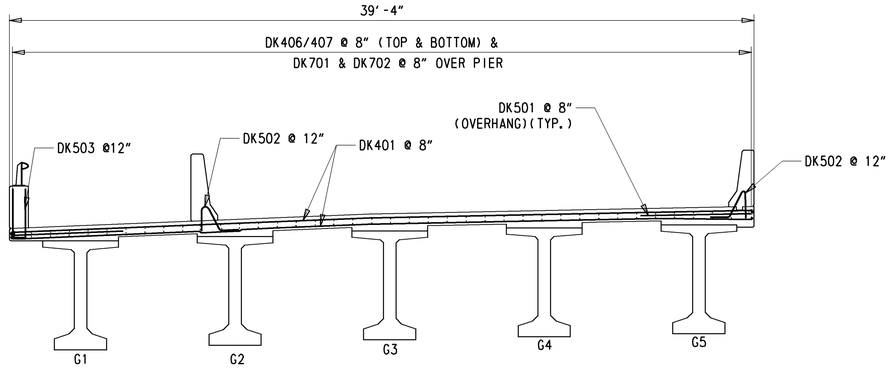

SOUTHBOUND DECK SECTION

1/4" = 1'-0"

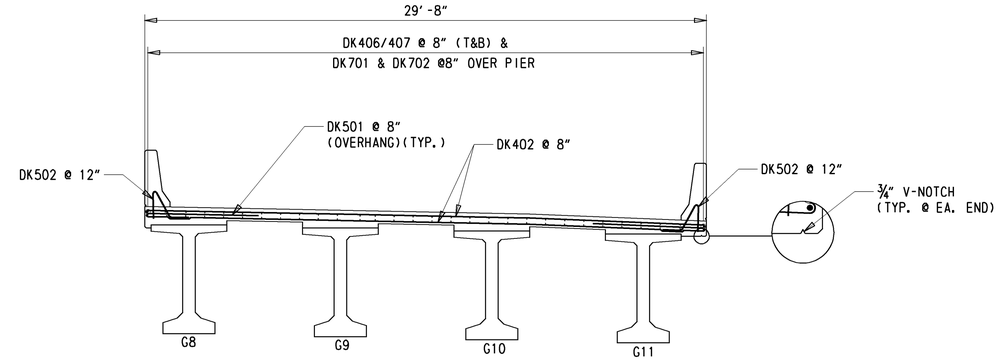

NORTHBOUND DECK SECTION

1/4" = 1'-0"

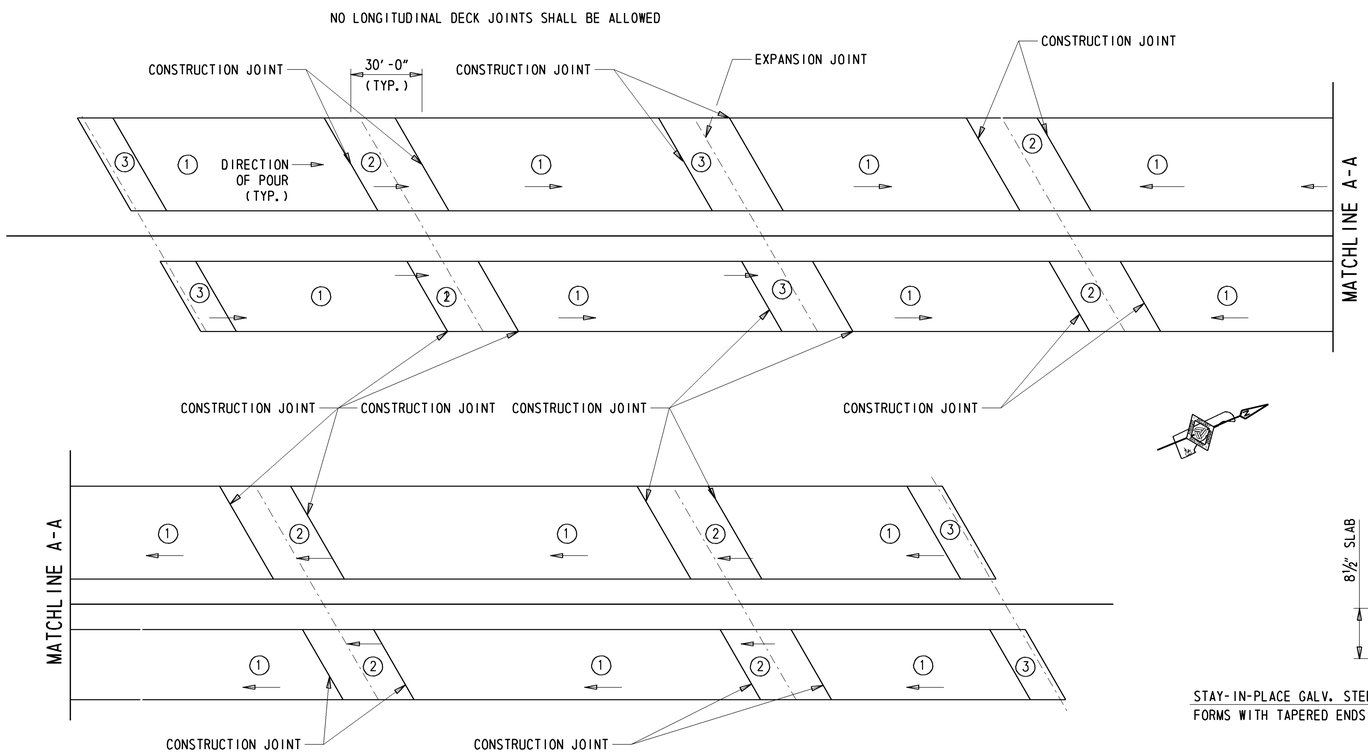

DECK SLAB POURING SEQUENCE

N.T.S.

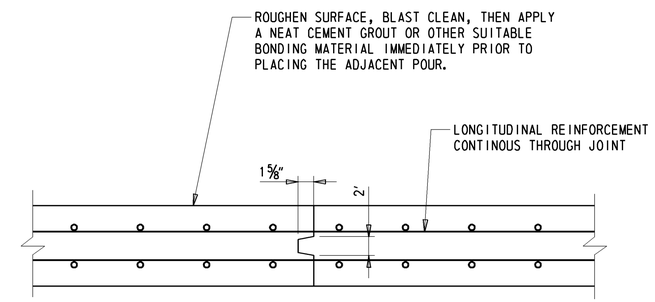

TYPICAL CONSTRUCTION JOINT

N.T.S.

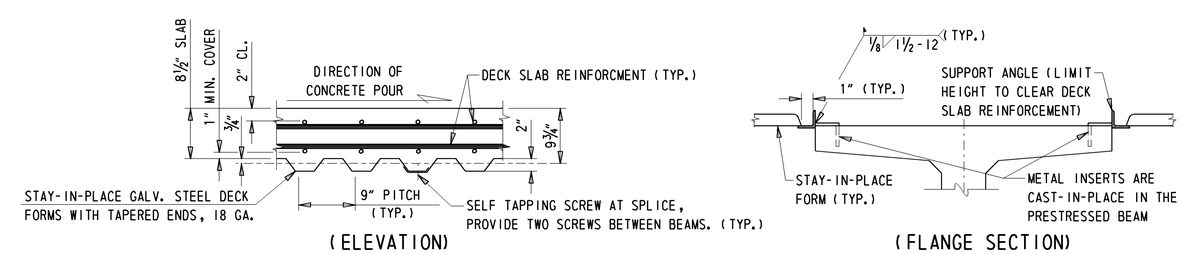

NOTE :

SHOP DRAWINGS SHALL BE SUBMITTED FOR REVIEW AND APPROVAL BY THE ENGINEER. METAL FORMS MUST BE GALVANIZED, MORTAR TIGHT AND STEEL METAL SCREWS MUST BE NON-CORROSIVE. SELF TAPPING SCREWS SHALL BE INSTALLED AT THE SIDE LAP OF THE SHEETS AT MID-SPAN BETWEEN SUPPORTS. NO WELD WILL BE PERMITTED AT NEGATIVE MOMENT ZONE.

STAY-IN-PLACE FORM DETAILS

N.T.S.

SPAN # 1

		ABUTMENT 1		.1		.2		.3		.4		.5		.6		.7		.8		.9		PIER 2 ℄ BEARING	
		STATION	ELEV	STATION	ELEV	STATION	ELEV	STATION	ELEV	STATION	ELEV	STATION	ELEV	STATION	ELEV	STATION	ELEV	STATION	ELEV	STATION	ELEV	STATION	PGA EL.
S. BOUND	LOH	1105+24.03	46.75	1105+32.88	47.20	1105+41.74	47.64	1105+50.59	48.08	1105+59.45	48.52	1105+68.30	48.97	1105+77.15	49.41	1105+86.01	49.85	1105+94.86	50.29	1106+03.72	50.74	1106+12.57	51.18
	G1	1105+24.03	46.90	1105+32.88	47.35	1105+41.74	47.79	1105+50.59	48.23	1105+59.45	48.67	1105+68.30	49.12	1105+77.15	49.56	1105+86.01	50.00	1105+94.86	50.44	1106+03.72	50.89	1106+12.57	51.33
	G2	1105+28.74	47.46	1105+37.59	47.91	1105+46.45	48.35	1105+55.30	48.79	1105+64.16	49.24	1105+73.01	49.68	1105+81.86	50.12	1105+90.72	50.56	1105+99.57	51.01	1106+08.43	51.45	1106+17.28	51.89
	G3	1105+33.46	48.01	1105+42.31	48.45	1105+51.17	48.89	1105+60.02	49.33	1105+68.88	49.78	1105+77.73	50.22	1105+86.58	50.66	1105+95.44	51.10	1106+04.29	51.55	1106+13.15	51.99	1106+22.00	52.43
	G4	1105+38.17	48.40	1105+47.02	48.85	1105+55.88	49.29	1105+64.73	49.73	1105+73.59	50.18	1105+82.44	50.62	1105+91.29	51.06	1106+00.15	51.50	1106+09.00	51.95	1106+17.86	52.39	1106+26.71	52.83
	G5	1105+42.89	48.80	1105+51.74	49.25	1105+60.60	49.69	1105+69.45	50.13	1105+78.31	50.57	1105+87.16	51.02	1105+96.01	51.46	1106+04.87	51.90	1106+13.72	52.35	1106+22.58	52.79	1106+31.43	53.22
	ROH	1105+42.89	48.86	1105+51.74	49.30	1105+60.60	49.75	1105+69.45	50.19	1105+78.31	50.63	1105+87.16	51.08	1105+96.01	51.52	1106+04.87	51.96	1106+13.72	52.40	1106+22.58	52.85	1106+31.43	53.28
N. BOUND	LOH	1105+58.24	49.63	1105+67.09	50.07	1105+75.95	50.52	1105+84.80	50.96	1105+93.65	51.40	1106+02.51	51.84	1106+11.36	52.29	1106+20.21	52.73	1106+29.06	53.17	1106+37.92	53.60	1106+46.77	54.01
	G8	1105+58.24	49.58	1105+67.09	50.03	1105+75.95	50.47	1105+84.80	50.91	1105+93.65	51.35	1106+02.51	51.80	1106+11.36	52.24	1106+20.21	52.68	1106+29.06	53.12	1106+37.92	53.55	1106+46.77	53.96
	G9	1105+62.86	49.65	1105+71.71	50.10	1105+80.57	50.54	1105+89.42	50.98	1105+98.27	51.42	1106+07.13	51.87	1106+15.98	52.31	1106+24.83	52.75	1106+33.68	53.19	1106+42.54	53.61	1106+51.39	54.02
	G10	1105+67.48	49.72	1105+76.33	50.17	1105+85.19	50.61	1105+94.04	51.05	1106+02.89	51.50	1106+11.75	51.94	1106+20.60	52.38	1106+29.45	52.82	1106+38.30	53.25	1106+47.16	53.66	1106+56.01	54.06
	G11	1105+72.09	49.68	1105+80.94	50.12	1105+89.80	50.56	1105+98.65	51.00	1106+07.51	51.45	1106+16.36	51.89	1106+25.21	52.33	1106+34.07	52.76	1106+42.92	53.19	1106+51.78	53.59	1106+60.63	53.99
	ROH	1105+72.09	49.54	1105+80.94	49.98	1105+89.80	50.43	1105+98.65	50.87	1106+07.51	51.31	1106+16.36	51.76	1106+25.21	52.20	1106+34.07	52.63	1106+42.92	53.05	1106+51.78	53.46	1106+60.63	53.86

SPAN # 2

		PIER 2 ℄ BEARING		.1		.2		.3		.4		.5		.6		.7		.8		.9		PIER 3 ℄ BEARING	
		STATION	ELEV	STATION	ELEV	STATION	ELEV	STATION	ELEV	STATION	ELEV	STATION	ELEV	STATION	ELEV	STATION	ELEV	STATION	ELEV	STATION	ELEV	STATION	PGA EL.
S. BOUND	LOH	1106+16.03	51.35	1106+24.88	51.79	1106+33.74	52.23	1106+42.59	52.65	1106+51.45	53.06	1106+60.30	53.46	1106+69.15	53.84	1106+78.01	54.21	1106+86.86	54.56	1106+95.72	54.91	1107+04.57	55.24
	G1	1106+16.03	51.50	1106+24.88	51.94	1106+33.74	52.38	1106+42.59	52.80	1106+51.45	53.21	1106+60.30	53.61	1106+69.15	53.99	1106+78.01	54.36	1106+86.86	54.71	1106+95.72	55.06	1107+04.57	55.39
	G2	1106+20.74	52.06	1106+29.59	52.50	1106+38.45	52.93	1106+47.30	53.35	1106+56.16	53.75	1106+65.01	54.14	1106+73.86	54.51	1106+82.72	54.88	1106+91.57	55.23	1107+00.43	55.56	1107+09.28	55.89
	G3	1106+25.46	52.60	1106+34.31	53.04	1106+43.17	53.46	1106+52.02	53.87	1106+60.88	54.26	1106+69.73	54.64	1106+78.58	55.01	1106+87.44	55.37	1106+96.29	55.71	1107+05.15	56.04	1107+14.00	56.36
	G4	1106+30.17	53.00	1106+39.02	53.43	1106+47.88	53.84	1106+56.73	54.24	1106+65.59	54.63	1106+74.44	55.01	1106+83.29	55.37	1106+92.15	55.72	1107+01.00	56.05	1107+09.86	56.38	1107+18.71	56.69
	G5	1106+34.89	53.39	1106+43.74	53.81	1106+52.60	54.22	1106+61.45	54.61	1106+70.31	55.00	1106+79.16	55.36	1106+88.01	55.72	1106+96.87	56.06	1107+05.72	56.39	1107+14.58	56.71	1107+23.43	57.01
	ROH	1106+34.89	53.45	1106+43.74	53.87	1106+52.60	54.28	1106+61.45	54.67	1106+70.31	55.05	1106+79.16	55.42	1106+88.01	55.78	1106+96.87	56.12	1107+05.72	56.45	1107+14.58	56.76	1107+23.43	57.07
N. BOUND	LOH	1106+50.24	54.17	1106+59.09	54.57	1106+67.95	54.95	1106+76.80	55.32	1106+85.65	55.68	1106+94.51	56.03	1107+03.36	56.36	1107+12.21	56.68	1107+21.06	56.99	1107+29.92	57.28	1107+38.77	57.56
	G8	1106+50.24	54.12	1106+59.09	54.52	1106+67.95	54.91	1106+76.80	55.28	1106+85.65	55.64	1106+94.51	55.98	1107+03.36	56.31	1107+12.21	56.63	1107+21.06	56.94	1107+29.92	57.23	1107+38.77	57.51
	G9	1106+54.86	54.17	1106+63.71	54.56	1106+72.57	54.94	1106+81.42	55.31	1106+90.27	55.66	1106+99.13	56.00	1107+07.98	56.32	1107+16.83	56.64	1107+25.68	56.93	1107+34.54	57.22	1107+43.39	57.49
	G10	1106+59.48	54.22	1106+68.33	54.60	1106+77.19	54.97	1106+86.04	55.33	1106+94.89	55.68	1107+03.75	56.01	1107+12.60	56.33	1107+21.45	56.63	1107+30.30	56.93	1107+39.16	57.21	1107+48.01	57.47
	G11	1106+64.09	54.14	1106+72.94	54.52	1106+81.80	54.88	1106+90.65	55.23	1106+99.51	55.57	1107+08.36	55.90	1107+17.21	56.21	1107+26.07	56.51	1107+34.92	56.79	1107+43.78	57.07	1107+52.63	57.33
	ROH	1106+64.09	54.01	1106+72.94	54.38	1106+81.80	54.75	1106+90.65	55.10	1106+99.51	55.44	1107+08.36	55.76	1107+17.21	56.08	1107+26.07	56.37	1107+34.92	56.66	1107+43.78	56.93	1107+52.63	57.19

SPAN # 3

		PIER 3 ℄ BEARING		+10		+10		+10		+10		+10		+10		+10		+10		+10		+10		+10	
		STATION	ELEV	STATION	ELEV	STATION	ELEV	STATION	ELEV	STATION	ELEV	STATION	ELEV	STATION	ELEV	STATION	ELEV	STATION	ELEV	STATION	ELEV	STATION	PGA EL.	STATION	ELEV
S. BOUND	LOH	1107+08.03	55.36	1107+18.03	55.72	1107+28.03	56.05	1107+38.03	56.37	1107+48.03	56.67	1107+58.03	56.96	1107+68.03	57.23	1107+78.03	57.48	1107+88.03	57.71	1107+98.03	57.93	1108+08.03	58.13	1108+18.03	58.32
	G1	1107+08.03	55.51	1107+18.03	55.87	1107+28.03	56.20	1107+38.03	56.52	1107+48.03	56.82	1107+58.03	57.11	1107+68.03	57.38	1107+78.03	57.63	1107+88.03	57.86	1107+98.03	58.08	1108+08.03	58.28	1108+18.03	58.47
	G2	1107+12.74	56.01	1107+22.74	56.35	1107+32.74	56.68	1107+42.74	56.99	1107+52.74	57.29	1107+62.74	57.56	1107+72.74	57.82	1107+82.74	58.07	1107+92.74	58.30	1108+02.74	58.51	1108+12.74	58.70	1108+22.74	58.88
	G3	1107+17.46	56.48	1107+27.46	56.82	1107+37.46	57.13	1107+47.46	57.44	1107+57.46	57.72	1107+67.46	57.99	1107+77.46	58.25	1107+87.46	58.48	1107+97.46	58.70	1108+07.46	58.91	1108+17.46	59.09	1108+27.46	59.26
	G4	1107+22.17	56.80	1107+32.17	57.13	1107+42.17	57.44	1107+52.17	57.74	1107+62.17	58.02	1107+72.17	58.28	1107+82.17	58.52	1107+92.17	58.75	1108+02.17	58.96	1108+12.17	59.16	1108+22.17	59.34	1108+32.17	59.50
	G5	1107+26.89	57.12	1107+36.89	57.44	1107+46.89	57.75	1107+56.89	58.03	1107+66.89	58.31	1107+76.89	58.56	1107+86.89	58.80	1107+96.89	59.02	1108+06.89	59.22	1108+16.89	59.41	1108+26.89	59.58	1108+36.89	59.73
	ROH	1107+26.89	57.18	1107+36.89	57.50	1107+46.89	57.81	1107+56.89	58.09	1107+66.89	58.36	1107+76.89	58.62	1107+86.89	58.85	1107+96.89	59.08	1108+06.89	59.28	1108+16.89	59.47	1108+26.89	59.64	1108+36.89	59.79
N. BOUND	LOH	1107+42.24	57.67	1107+52.24	57.96	1107+62.24	58.24	1107+72.24	58.50	1107+82.24	58.75	1107+92.24	58.97	1108+02.24	59.19	1108+12.24	59.38	1108+22.24	59.56	1108+32.24	59.72	1108+42.24	59.87	1108+52.24	59.99
	G8	1107+42.24	57.62	1107+52.24	57.91	1107+62.24	58.19	1107+72.24	58.45	1107+82.24	58.70	1107+92.24	58.93	1108+02.24	59.14	1108+12.24	59.33	1108+22.24	59.51	1108+32.24	59.67	1108+42.24	59.82	1108+52.24	59.95
	G9	1107+46.86	57.60	1107+56.86	57.89	1107+66.86	58.16	1107+76.86	58.41	1107+86.86	58.65	1107+96.86	58.87	1108+06.86	59.07	1108+16.86	59.26	1108+26.86	59.43	1108+36.86	59.58	1108+46.86	59.72	1108+56.86	59.84
	G10	1107+51.48	57.57	1107+61.48	57.85	1107+71.48	58.12	1107+81.48	58.36	1107+91.48	58.59	1108+01.48	58.80	1108+11.48	59.00	1108+21.48	59.18	1108+31.48	59.34	1108+41.48	59.49	1108+51.48	59.62	1108+61.48	59.73
	G11	1107+56.09	57.42	1107+66.09	57.70	1107+76.09	57.95	1107+86.09	58.19	1107+96.09	58.41	1108+06.09	58.62	1108+16.09	58.81	1108+26.09	58.98	1108+36.09	59.13	1108+46.09	59.27	1108+56.09	59.39	1108+66.09	59.50
	ROH	1107+56.09	57.29	1107+66.09	57.56	1107+76.09	57.82	1107+86.09	58.06	1107+96.09	58.28	1108+06.09	58.48	1108+16.09	58.67	1108+26.09	58.84	1108+36.09	59.00	1108+46.09	59.14	1108+56.09	59.26	1108+66.09	59.37

SPAN # 3 CONT.

		+10		+10		PIER 4 ℄ BEARING	
		STATION	ELEV	STATION	PGA EL.	STATION	PGA EL.
S. BOUND	LOH	1108+28.03	58.49	1108+38.03	58.64	1108+42.57	58.70
	G1	1108+28.03	58.64	1108+38.03	58.79	1108+42.57	58.85
	G2	1108+32.74	59.04	1108+42.74	59.18	1108+47.28	59.24
	G3	1108+37.46	59.41	1108+47.46	59.55	1108+52.00	59.61
	G4	1108+42.17	59.64	1108+52.17	59.77	1108+56.71	59.83
	G5	1108+46.89	59.87	1108+56.89	59.99	1108+61.43	60.04
	ROH	1108+46.89	59.93	1108+56.89	60.05	1108+61.43	60.10
N. BOUND	LOH	1108+62.24	60.11	1108+72.24	60.20	1108+76.77	60.24
	G8	1108+62.24	60.06	1108+72.24	60.15	1108+76.77	60.19
	G9	1108+66.86	59.95	1108+76.86	60.03	1108+81.39	60.07
	G10	1108+71.48	59.83	1108+81.48	59.91	1108+86.01	59.94
	G11	1108+76.09	59.59	1108+86.09	59.66	1108+90.63	59.69
	ROH	1108+76.09	59.45	1108+86.09	59.53	1108+90.63	59.55

SPAN # 4

		PIER 4 ℄ BEARING		+10		+10		+10		+10		+10		+10		+10		+10		+10		+10		+10	
		STATION	ELEV	STATION	ELEV	STATION	ELEV	STATION	ELEV	STATION	ELEV	STATION	ELEV	STATION	ELEV	STATION	ELEV	STATION	ELEV	STATION	ELEV	STATION	PGA EL.	STATION	ELEV
S. BOUND	LOH	1108+46.03	58.75	1108+56.03	58.87	1108+66.03	58.98	1108+76.03	59.07	1108+86.03	59.14	1108+96.03	59.19	1109+06.03	59.23	1109+16.03	59.25	1109+26.03	59.26	1109+36.03	59.25	1109+46.03	59.22	1109+56.03	59.18
	G1	1108+46.03	58.90	1108+56.03	59.02	1108+66.03	59.13	1108+76.03	59.22	1108+86.03	59.29	1108+96.03	59.34	1109+06.03	59.38	1109+16.03	59.40	1109+26.03	59.41	1109+36.03	59.40	1109+46.03	59.37	1109+56.03	59.33
	G2	1108+50.74	59.29	1108+60.74	59.40	1108+70.74	59.50	1108+80.74	59.58	1108+90.74	59.64	1109+00.74	59.69	1109+10.74	59.72	1109+20.74	59.74	1109+30.74	59.73	1109+40.74	59.71	1109+50.74	59.68	1109+60.74	59.63
	G3	1108+55.46	59.65	1108+65.46	59.75	1108+75.46	59.84	1108+85.46	59.92	1108+95.46	59.97	1109+05.46	60.01	1109+15.46	60.04	1109+25.46	60.04	1109+35.46	60.03	1109+45.46	60.00	1109+55.46	59.96	1109+65.46	59.90
	G4	1108+60.17	59.86	1108+70.17	59.96	1108+80.17	60.04	1108+90.17	60.11	1109+00.17	60.16	1109+10.17	60.19	1109+20.17	60.20	1109+30.17	60.20	1109+40.17	60.18	1109+50.17	60.15	1109+60.17	60.10	1109+70.17	60.03
	G5	1108+64.89	60.07	1108+74.89	60.17	1108+84.89	60.24	1108+94.89	60.30	1109+04.89	60.34	1109+14.89	60.36	1109+24.89	60.37	1109+34.89	60.36	1109+44.89	60.33	1109+54.89	60.29	1109+64.89	60.23	1109+74.89	60.15
	ROH	1108+64.89	60.13	1108+74.89	60.22	1108+84.89	60.30	1108+94.89	60.35	1109+04.89	60.40	1109+14.89	60.42	1109+24.89	60.43	1109+34.89	60.42	1109+44.89	60.39	1109+54.89	60.35	1109+64.89	60.29	1109+74.89	60.21
N. BOUND	LOH	1108+80.24	60.27	1108+90.24	60.33	1109+00.24	60.38	1109+10.24	60.41	1109+20.24	60.43	1109+30.24	60.42	1109+40.24	60.41	1109+50.24	60.37	1109+60.24	60.32	1109+70.24	60.25	1109+80.24	60.17	1109+90.24	60.06
	G8	1108+80.24	60.22	1108+90.24	60.28	1109+00.24	60.33	1109+10.24	60.36	1109+20.24	60.38	1109+30.24	60.38	1109+40.24	60.36	1109+50.24	60.32	1109+60.24	60.27	1109+70.24	60.20	1109+80.24	60.12	1109+90.24	60.02
	G9	1108+84.86	60.09	1108+94.86	60.15	1109+04.86	60.19	1109+14.86	60.21	1109+24.86	60.22	1109+34.86	60.21	1109+44.86	60.18	1109+54.86	60.14	1109+64.86	60.08	1109+74.86	60.01	1109+84.86	59.91	1109+94.86	59.80
	G10	1108+89.48	59.96	1108+99.48	60.01	1109+09.48	60.04	1109+19.48	60.06	1109+29.48	60.06	1109+39.48	60.04	1109+49.48	60.01	1109+59.48	59.96	1109+69.48	59.89	1109+79.48	59.81	1109+89.48	59.71	1109+99.48	59.59
	G11	1108+94.09	59.70	1109+04.09	59.75	1109+14.09	59.77	1109+24.09	59.78	1109+34.09	59.77	1109+44.09	59.75	1109+54.09	59.71	1109+64.09	59.65	1109+74.09	59.57	1109+84.09	59.48	1109+94.09	59.37	1110+04.09	59.25
	ROH	1108+94.09	59.57	1109+04.09	59.61	1109+14.09	59.64	1109+24.09	59.65	1109+34.09	59.64	1109+44.09	59.61	1109+54.09	59.57	1109+64.09	59.51	1109+74.09	59.44	1109+84.09	59.35	1109+94.09	59.24	1110+04.09	59.12

SPAN # 4 CONT.

		+10		+10		PIER 5 ℄ BEARING	
		STATION	ELEV	STATION	PGA EL.	STATION	PGA EL.
S. BOUND	LOH	1109+66.03	59.11	1109+76.03	59.04	1109+80.57	59.00
	G1	1109+66.03	59.26	1109+76.03	59.19	1109+80.57	59.15
	G2	1109+70.74	59.56	1109+80.74	59.47	1109+85.28	59.43
	G3	1109+75.46	59.82	1109+85.46	59.73	1109+90.00	59.68
	G4	1109+80.17	59.94	1109+90.17	59.84	1109+94.71	59.79
	G5	1109+84.89	60.06	1109+94.89	59.95	1109+99.43	59.90
	ROH	1109+84.89	60.12	1109+94.89	60.01	1109+99.43	59.96
N. BOUND	LOH	1110+00.24	59.95	1110+10.24	59.81	1110+14.77	59.74
	G8	1110+00.24	59.90	1110+10.24	59.76	1110+14.77	59.70
	G9	1110+04.86	59.68	1110+14.86	59.54	1110+19.39	59.47
	G10	1110+09.48	59.45	1110+19.48	59.30	1110+24.01	59.23
	G11	1110+14.09	59.11	1110+24.09	58.95	1110+28.63	58.87
	ROH	1110+14.09	58.97	1110+24.09	58.82	1110+28.63	58.74

SPAN # 5

		PIER 5 ℄ BEARING		+10		+10		+10		+10		+10		+10		+10		+10		+10		+10		+10	
		STATION	ELEV	STATION	ELEV	STATION	ELEV	STATION	ELEV	STATION	ELEV	STATION	ELEV	STATION	ELEV	STATION	ELEV	STATION	ELEV	STATION	ELEV	STATION	PGA EL.	STATION	ELEV
S. BOUND	LOH	1109+84.03	58.96	1109+94.03	58.85	1110+04.03	58.73	1110+14.03	58.59	1110+24.03	58.43	1110+34.03	58.26	1110+44.03	58.06	1110+54.03	57.86	1110+64.03	57.63	1110+74.03	57.39	1110+84.03	57.13	1110+94.03	56.86
	G1	1109+84.03	59.11	1109+94.03	59.00	1110+04.03	58.88	1110+14.03	58.74	1110+24.03	58.58	1110+34.03	58.41	1110+44.03	58.21	1110+54.03	58.01	1110+64.03	57.78	1110+74.03	57.54	1110+84.03	57.28	1110+94.03	57.01
	G2	1109+88.74	59.39	1109+98.74	59.27	1110+08.74	59.14	1110+18.74	58.99	1110+28.74	58.83	1110+38.74	58.64	1110+48.74	58.44	1110+58.74	58.23	1110+68.74	58.00	1110+78.74	57.75	1110+88.74	57.48	1110+98.74	57.20
	G3	1109+93.46	59.64	1110+03.46	59.52	1110+13.46	59.38	1110+23.46	59.22	1110+33.46	59.05	1110+43.46	58.86	1110+53.46	58.65	1110+63.46	58.43	1110+73.46	58.19	1110+83.46	57.93	1110+93.46	57.66	1111+03.46	57.36
	G4	1109+98.17	59.75	1110+08.17	59.62	1110+18.17	59.47	1110+28.17	59.30	1110+38.17	59.12	1110+48.17	58.92	1110+58.17	58.71	1110+68.17	58.48	1110+78.17	58.23	1110+88.17	57.97	1110+98.17	57.68	1111+08.17	57.39
	G5	1110+02.89	59.85	1110+12.89	59.71	1110+22.89	59.56	1110+32.89	59.38	1110+42.89	59.19	1110+52.89	58.99	1110+62.89	58.77	1110+72.89	58.53	1110+82.89	58.27	1110+92.89	58.00	1111+02.89	57.71	1111+12.89	57.40
	ROH	1110+02.89	59.91	1110+12.89	59.77	1110+22.89	59.62	1110+32.89	59.44	1110+42.89	59.25	1110+52.89	59.05	1110+62.89	58.82	1110+72.89	58.59	1110+82.89	58.33	1110+92.89	58.06	1111+02.89	57.77	1111+12.89	57.46
N. BOUND	LOH	1110+18.24	59.69	1110+28.24	59.53	1110+38.24	59.34	1110+48.24	59.15	1110+58.24	58.93	1110+68.24	58.70	1110+78.24	58.45	1110+88.24	58.19	1110+98.24	57.90	1111+08.24	57.61	1111+18.24	57.29	1111+28.24	56.96
	G8	1110+18.24	59.64	1110+28.24	59.48	1110+38.24	59.30	1110+48.24	59.10	1110+58.24	58.88	1110+68.24	58.65	1110+78.24	58.40	1110+88.24	58.14	1110+98.24	57.86	1111+08.24	57.56	1111+18.24	57.24	1111+28.24	56.91
	G9	1110+22.86	59.41	1110+32.86	59.24	1110+42.86	59.05	1110+52.86	58.84	1110+62.86	58.62	1110+72.86	58.38	1110+82.86	58.12	1110+92.86	57.85	1111+02.86	57.56	1111+12.86	57.25	1111+22.86	56.93	1111+32.86	56.59
	G10	1110+27.48	59.17	1110+37.48	58.99	1110+47.48	58.79	1110+57.48	58.58	1110+67.48	58.35	1110+77.48	58.10	1110+87.48	57.84	1110+97.48	57.56	1111+07.48	57.26	1111+17.48	56.95	1111+27.48	56.62	1111+37.48	56.27
	G11	1110+32.09	58.81	1110+42.09	58.62	1110+52.09	58.42	1110+62.09	58.20	1110+72.09	57.96	1110+82.09	57.70	1110+92.09	57.43	1111+02.09	57.14	1111+12.09	56.84	1111+22.09	56.52	1111+32.09	56.18	1111+42.09	55.82
	ROH	1110+32.09	58.68	1110+42.09	58.49	1110+52.09	58.28	1110+62.09	58.06	1110+72.09	57.82	1110+82.09	57.57	1110+92.09	57.30	1111+02.09	57.01	1111+12.09	56.71	1111+22.09	56.38	1111+32.09	56.05	1111+42.09	55.69

SPAN # 5 CONT.

		+10		+10		PIER 6 ℄ PGA	
		STATION	ELEV	STATION	PGA EL.	STATION	PGA EL.
S. BOUND	LOH	1111+04.03	56.57	1111+14.03	56.26	1111+18.57	56.11
	G1	1111+04.03	56.72	1111+14.03	56.41	1111+18.57	56.26
	G2	1111+08.74	56.90	1111+18.74	56.58	1111+23.28	56.43
	G3	1111+13.46	57.06	1111+23.46	56.73	1111+28.00	56.58
	G4	1111+18.17	57.07	1111+28.17	56.74	1111+32.71	56.58
	G5	1111+22.89	57.08	1111+32.89	56.74	1111+37.43	56.58
	ROH	1111+22.89	57.14	1111+32.89	56.80	1111+37.43	56.64
N. BOUND	LOH	1111+38.24	56.61	1111+48.24	56.24	1111+52.77	56.07
	G8	1111+38.24	56.56	1111+48.24	56.20	1111+52.77	56.03
	G9	1111+42.86	56.24	1111+52.86	55.86	1111+57.39	55.69
	G10	1111+47.48	55.91	1111+57.48	55.53	1111+62.01	55.35
	G11	1111+52.09	55.45	1111+62.09	55.07	1111+66.63	54.88
	ROH	1111+52.09	55.32	1111+62.09	54.93	1111+66.63	54.75

SPAN # 6

		PIER 6 ℄ PGA		+10		+10		+10		+10		+10		+10		+10		+10		+10		+10		+10	
		STATION	ELEV	STATION	ELEV	STATION	ELEV	STATION	ELEV	STATION	ELEV	STATION	ELEV	STATION	ELEV	STATION	ELEV	STATION	ELEV	STATION	ELEV	STATION	PGA EL.	STATION	ELEV
S. BOUND	LOH	1111+22.03	56.00	1111+32.03	55.66	1111+42.03	55.31	1111+52.03	54.94	1111+62.03	54.55	1111+72.03	54.14	1111+82.03	53.72	1111+92.03	53.28	1112+02.03	52.83	1112+12.03	52.36	1112+22.03	51.87	1112+32.03	51.37
	G1	1111+22.03	56.15	1111+32.03	55.81	1111+42.03	55.46	1111+52.03	55.09	1111+62.03	54.70	1111+72.03	54.29	1111+82.03	53.87	1111+92.03	53.43	1112+02.03	52.98	1112+12.03	52.51	1112+22.03	52.02	1112+32.03	51.52
	G2	1111+26.74	56.32	1111+36.74	55.97	1111+46.74	55.61	1111+56.74	55.23	1111+66.74	54.84	1111+76.74	54.42	1111+86.74	53.99	1111+96.74	53.55	1112+06.74	53.09	1112+16.74	52.61	1112+26.74	52.11	1112+36.74	51.61
	G3	1111+31.46	56.46	1111+41.46	56.11	1111+51.46	55.74	1111+61.46	55.35	1111+71.46	54.95	1111+81.46	54.53	1111+91.46	54.09	1112+01.46	53.64	1112+11.46	53.17	1112+21.46	52.68	1112+31.46	52.18	1112+41.46	51.68
	G4	1111+36.17	56.46	1111+46.17	56.10	1111+56.17	55.72	1111+66.17	55.33	1111+76.17	54.92	1111+86.17	54.49	1111+96.17	54.04	1112+06.17	53.58	1112+16.17	53.10	1112+26.17	52.61	1112+36.17	52.11	1112+46.17	51.61
	G5	1111+40.89	56.46	1111+50.89	56.09	1111+60.89	55.70	1111+70.89	55.30	1111+80.89	54.88	1111+90.89	54.44	1112+00.89	53.99	1112+10.89	53.52	1112+20.89	53.03	1112+30.89	52.54	1112+40.89	52.04	1112+50.89	51.54
	ROH	1111+40.89	56.51	1111+50.89	56.15	1111+60.89	55.76	1111+70.89	55.36	1111+80.89	54.94	1111+90.89	54.50	1112+00.89	54.05	1112+10.89	53.58	1112+20.89	53.09	1112+30.89	52.59	1112+40.89	52.09	1112+50.89	51.59
N. BOUND	LOH	1111+56.24	55.94	1111+66.24	55.55	1111+76.24	55.13	1111+86.24	54.71	1111+96.24	54.26	1112+06.24	53.80	1112+16.24	53.32	1112+26.24	52.83	1112+36.24	52.33	1112+46.24	51.83	1112+56.24	51.33	1112+66.24	50.83
	G8	1111+56.24	55.89	1111+66.24	55.50	1111+76.24	55.09	1111+86.24	54.66	1111+96.24	54.21	1112+06.24	53.75	1112+16.24	53.27	1112+26.24	52.78	1112+36.24	52.28	1112+46.24	51.78	1112+56.24	51.28	1112+66.24	50.78
	G9	1111+60.86	55.55	1111+70.86	55.15	1111+80.86	54.73	1111+90.86	54.30	1112+00.86	53.84	1112+10.86	53.37	1112+20.86	52.89	1112+30.86	52.39	1112+40.86	51.89	1112+50.86	51.39	1112+60.86	50.89	1112+70.86	50.39
	G10	1111+65.48	55.21	1111+75.48	54.80	1111+85.48	54.37	1111+95.48	53.93	1112+05.48	53.47	1112+15.48	52.99	1112+25.48	52.50	1112+35.48	52.00	1112+45.48	51.50	1112+55.48	51.00	1112+65.48	50.50	1112+75.48	50.00
	G11	1111+70.09	54.74	1111+80.09	54.32	1111+90.09	53.89	1112+00.09	53.44	1112+10.09	52.97	1112+20.09	52.49	1112+30.09	51.99	1112+40.09	51.49	1112+50.09	50.99	1112+60.09	50.49	1112+70.09	49.99	1112+80.09	49.49
	ROH	1111+70.09	54.61	1111+80.09	54.19	1111+90.09	53.76	1112+00.09	53.31	1112+10.09	52.84	1112+20.09	52.35	1112+30.09	51.85	1112+40.09	51.35	1112+50.09	50.85	1112+60.09	50.35	1112+70.09	49.85	1112+80.09	49.35

SPAN # 6 CONT.

		+10		+10		ABUTMENT 7 PGA	
		STATION	ELEV	STATION	PGA EL.	STATION	PGA EL.
S. BOUND	LOH	1112+42.03	50.87	1112+52.03	50.37	1112+56.57	50.14
	G1	1112+42.03	51.02	1112+52.03	50.52	1112+56.57	50.29
	G2	1112+46.74	51.11	1112+56.74	50.61	1112+61.28	50.38
	G3	1112+51.46	51.18	1112+61.46	50.68	1112+66.00	50.45
	G4	1112+56.17	51.11	1112+66.17	50.61	1112+70.71	50.38
	G5	1112+60.89	51.04	1112+70.89	50.54	1112+75.43	50.31
	ROH	1112+60.89	51.09	1112+70.89	50.59	1112+75.43	50.37
N. BOUND	LOH	1112+76.24	50.33	1112+86.24	49.83	1112+90.77	49.60
	G8	1112+76.24	50.28	1112+86.24	49.78	1112+90.77	49.55
	G9	1112+80.86	49.89	1112+90.86	49.39	1112+95.39	49.16
	G10	1112+85.48	49.50	1112+95.48	49.00	1113+00.01	48.77
	G11	1112+90.09	48.99	1113+00.09	48.49	1113+04.63	48.26
	ROH	1112+90.09	48.85	1113+00.09	48.35	1113+04.63	48.13

EXPANSION JOINT NOTES:

1. STEEL FOR DECK JOINTS AND STEEL EXTRUSIONS SHALL BE AASHTO M270, GR. 36 (ASTM A36)
2. NEOPRENE EXTRUSION TO MEET D-2628-81 MODIFIED, (RECOVERY TESTS EXCLUDED).
3. THE EXPANSION JOINT SHALL BE CAPABLE OF SEALING THE DECK TO PREVENT MOISTURE AND OTHER CONTAIMINANTS FROM DESCENDING THROUGHT THE JOINT.
4. ENTIRE EXPANSION DAM SHALL BE PAINTED AFTER FABRICATION USING URETHANE SYSTEM, EXCEPT AS NOTED.
5. LUBRICANT-ADHESIVE FOR USE IN INSTALLING AND BONDING NEPORENE SEAL ELEMENTS TO STEEL JOINT COMPONENTS SHALL BE A ONE QUART MOISTURE-CURING POLYURETHAN AND HYDROCARBON SOLVENT MIXTURE HAVING THE FOLLOWING PHYSICAL PROPERTIES:

AVERAGE WEIGHT, POUNDS PER GALLON	8 +/- 10%
SOLIDS CONTENT	65%
ADHESIVE SHALL REMAIN LIQUID FROM	5°F TO 120°F
FILM STRENGTH, AS PER ASTM D-412	2,000 PSI
ELONGATION	250%

6. HOLES SHALL BE PLACED IN THE RIB PLATES AND STRAP ANCHOR PLATES FOR BAR REINFORCEMENT. IF THIS IS DONE IN THE FIELD AN APPROVED PAINT SHALL BE USED TO TOUCH-UP THE HOLES.

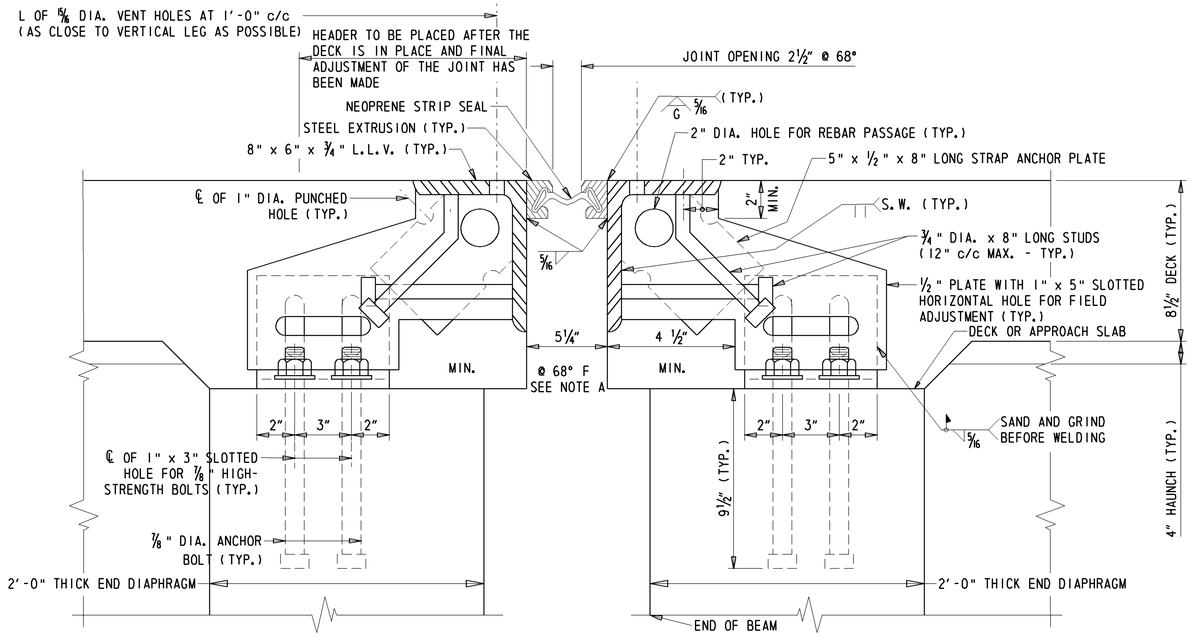

SECTION C-C AT ROADWAY

N.T.S.

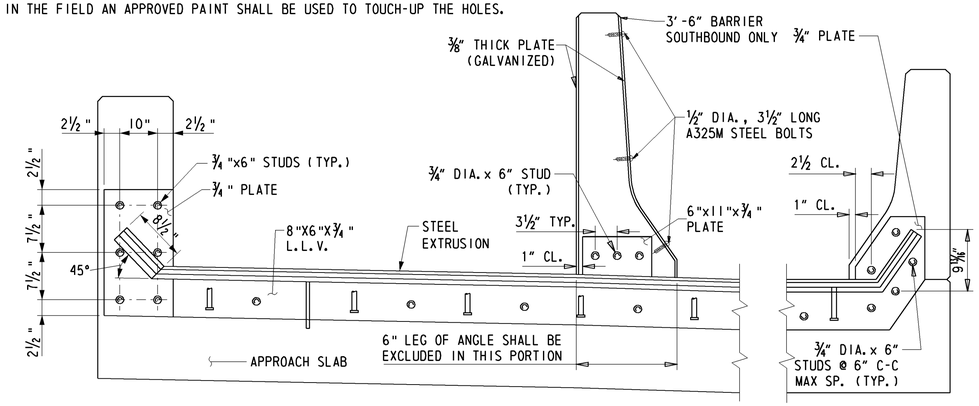

SECTION B-B

SCALE: 1" = 1'-0"

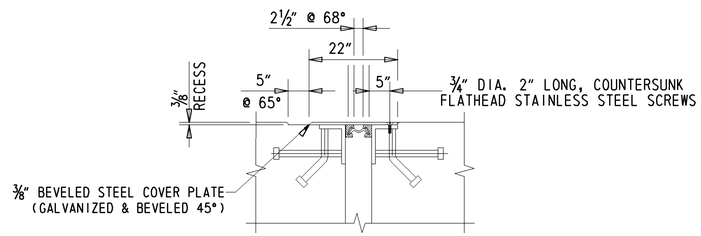

JOINT SECTION D-D AT SIDEWALK

1½" = 1'-0"

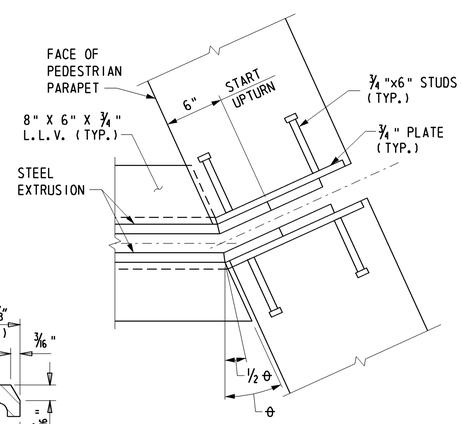

DETAIL 'A'

SCALE: 1½" = 1'-0"

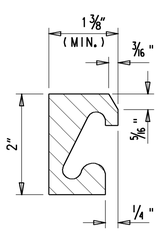

STEEL EXTRUSION DETAIL

SCALE : N.T.S.

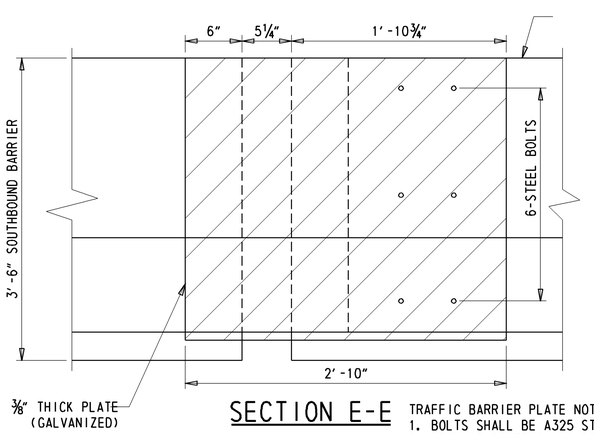

SECTION E-E

1½" = 1'-0"

TRAFFIC BARRIER PLATE NOTES
1. BOLTS SHALL BE A325 STAINLESS STEEL.
2. HEAD OF BOLTS SHALL BE FLUSH WITH FACE OF STEEL PLATE. CONTRACTOR SHALL SUBMIT DETAILS FOR ENGINEER APPROVAL.

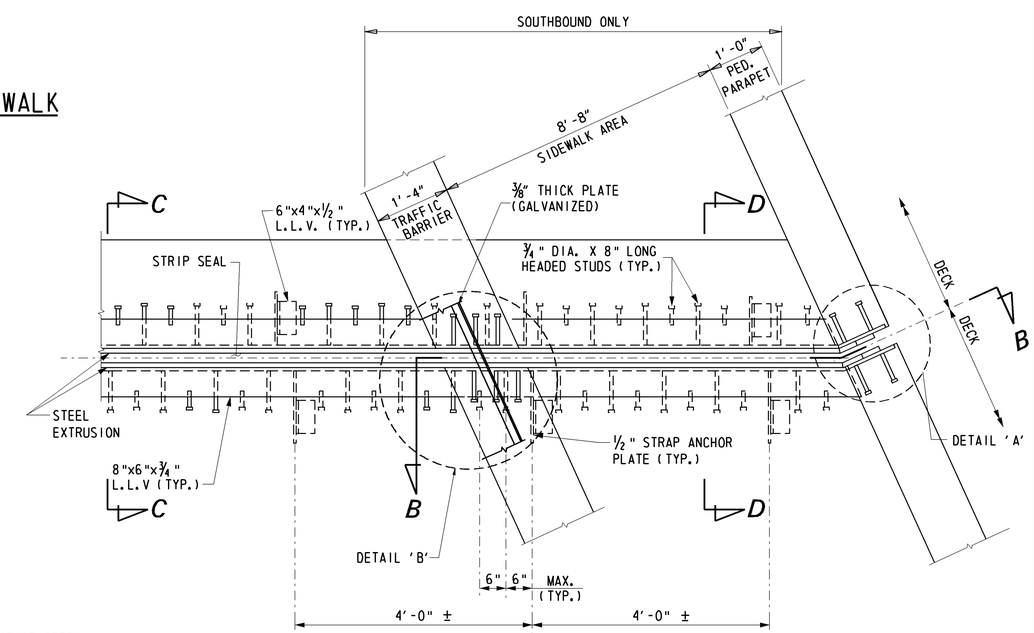

PLAN

SCALE: 1" = 1'-0"

JOINT OPENING (INCH)

LOCATION	TEMPERATURE (°F) 10	30	50	70	90	MOVEMENT CLASSIFICATION
ABUTMENT 1	3	2¾	2⅝	2½	2⅜	4"
PIER 3	4	3½	3	2½	1⅞	4"
ABUTMENT 7	3¾	3¼	2⅞	2½	2	4"

Y:\KENT*\BRIDGE*2202\PLANS\BRIDGE\EXO1.DGN

DELAWARE DEPARTMENT OF TRANSPORTATION	ADDENDUMS / REVISIONS	SCALE: AS NOTED	WEST DOVER CONNECTOR	CONTRACT T200411701 / COUNTY KENT	BRIDGE NO. 2-156 N&S / DESIGNED BY: JAT / CHECKED BY: EM	EXPANSION JOINT DETAILS BRIDGE SHEET 29 OF 65	SHEET NO. 140 / TOTAL SHTS. 320

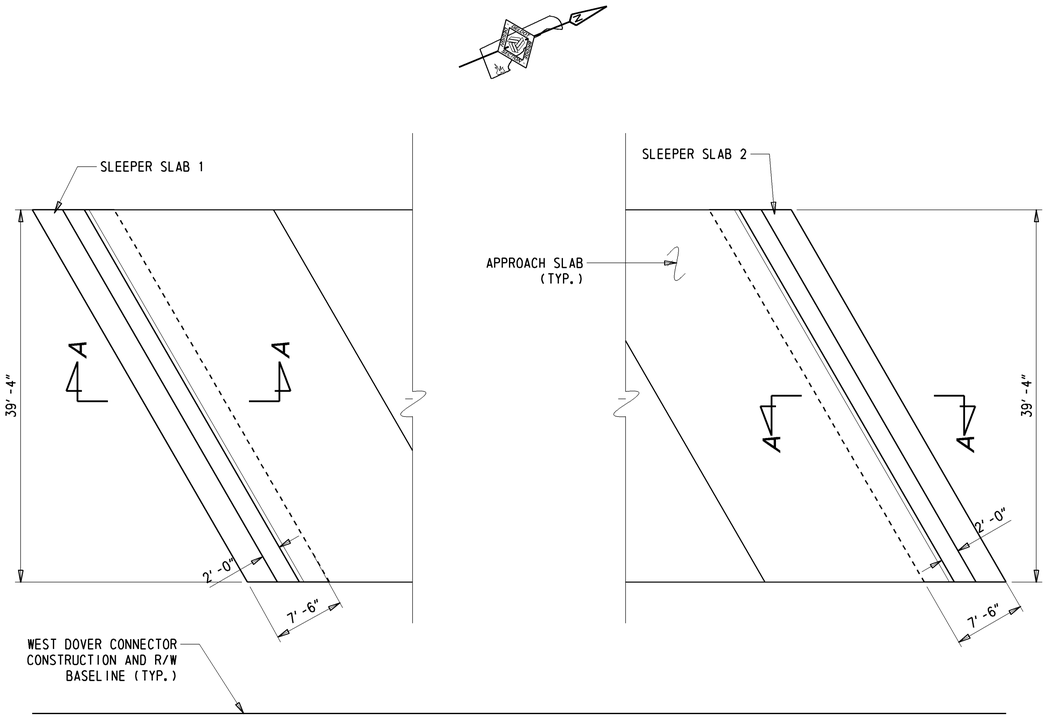

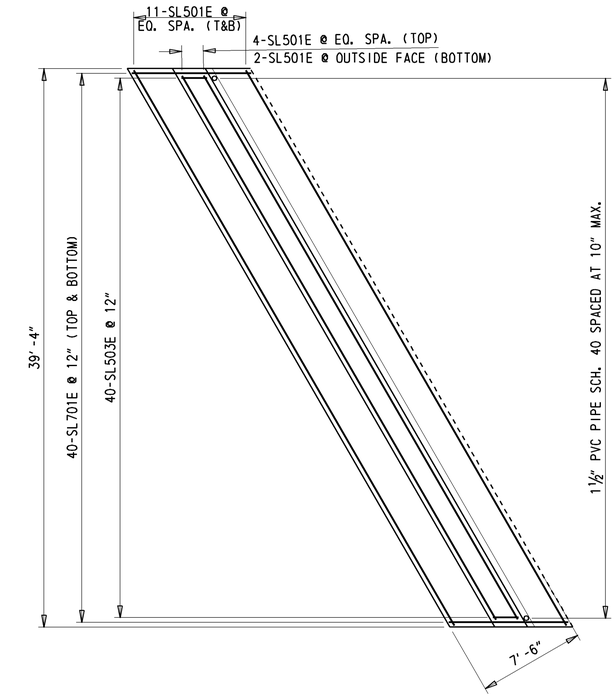

SLEEPER SLAB 1 PLAN

3/16" = 1'-0"

NOTE: SLEEPER SLAB 2 IS SYMMETRIC ABOUT THE BREAKLINE AND WILL HAVE THE SAME REBAR QUANTITY AND LAYOUT AS SLEEPER SLAB 1.

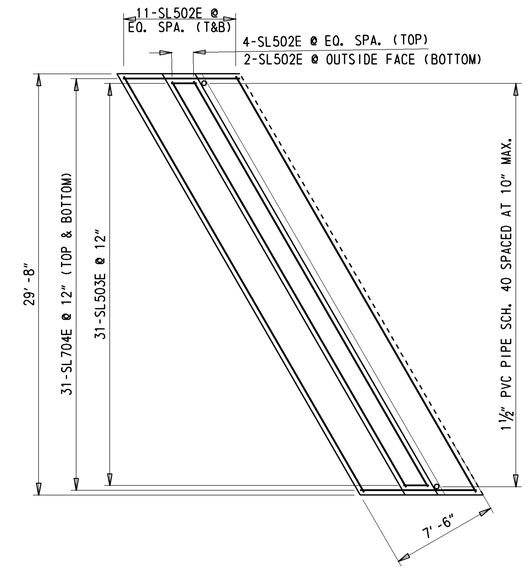

SLEEPER SLAB 3 PLAN

3/16" = 1'-0"

NOTE: SLEEPER SLAB 4 IS SYMMETRIC ABOUT THE BREAKLINE AND WILL HAVE THE SAME REBAR QUANTITY AND LAYOUT AS SLEEPER SLAB 3.

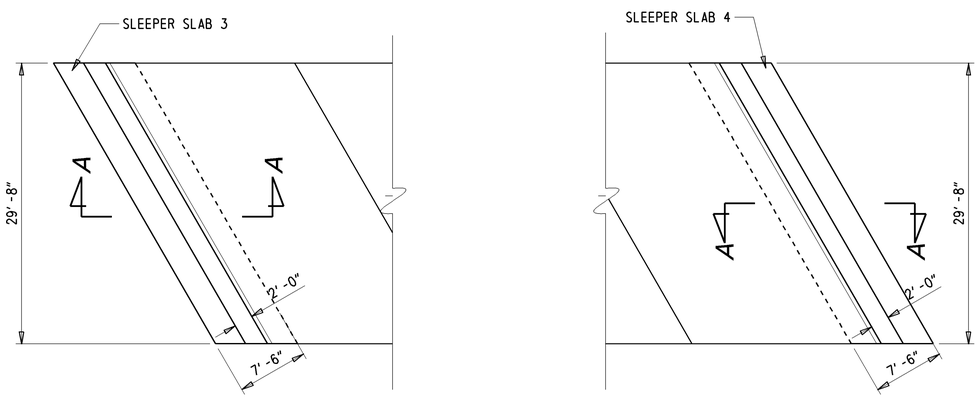

SLEEPER SLAB LAYOUT

1/8" = 1'-0"

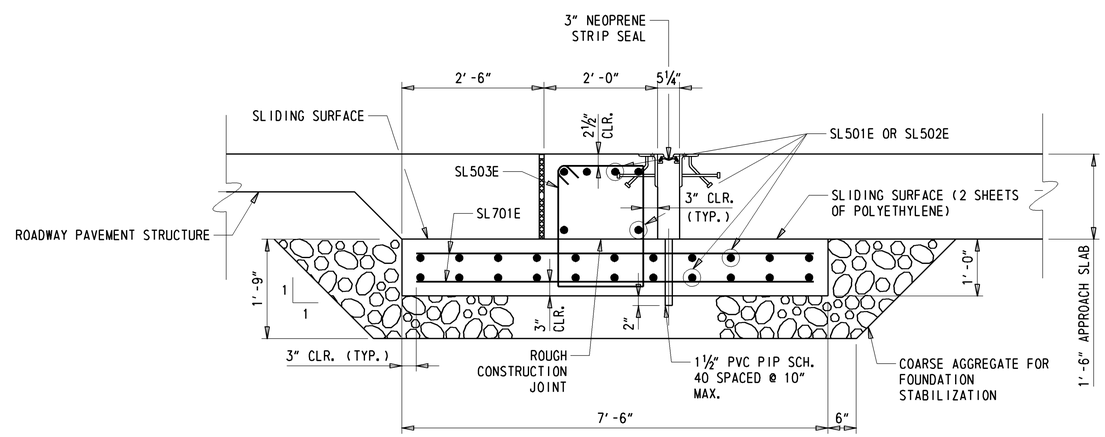

SECTION A-A

¾" = 1'-0"

NOTE: FIELD CUT OR BEND BARS AS NEEDED. PAYMENT INCIDENTAL TO 604000 - BAR REINFORCEMENT, EPOXY COATED.

Y:\KENT2\BRIDGE\T200411701\PLANS\PUNCHEON RUN - 7 SPAN\SLEEPER SLAB.DGN

DELAWARE DEPARTMENT OF TRANSPORTATION	ADDENDUMS / REVISIONS	SCALE: AS NOTED	WEST DOVER CONNECTOR	CONTRACT T200411701	BRIDGE NO. 2-156 N/S	SLEEPER SLAB DETAILS BRIDGE SHEET 30 OF 65	SHEET NO. 141
				COUNTY KENT	DESIGNED BY: JAT		TOTAL SHTS. 320
					CHECKED BY: EM		

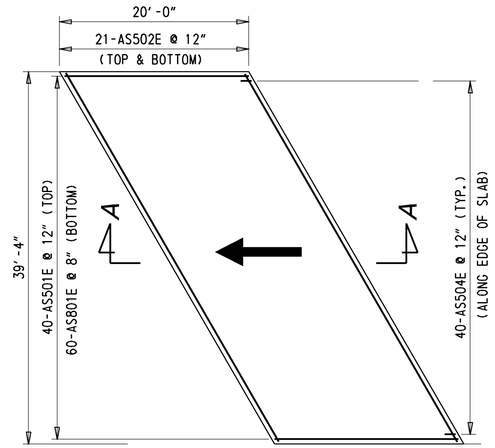

SOUTHBOUND APPROACH SLAB PLAN

1/8" = 1'-0"

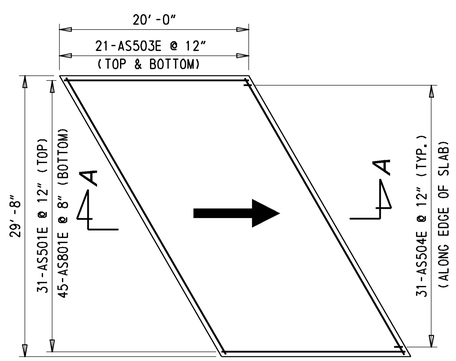

NORTHBOUND APPROACH SLAB PLAN

1/8" = 1'-0"

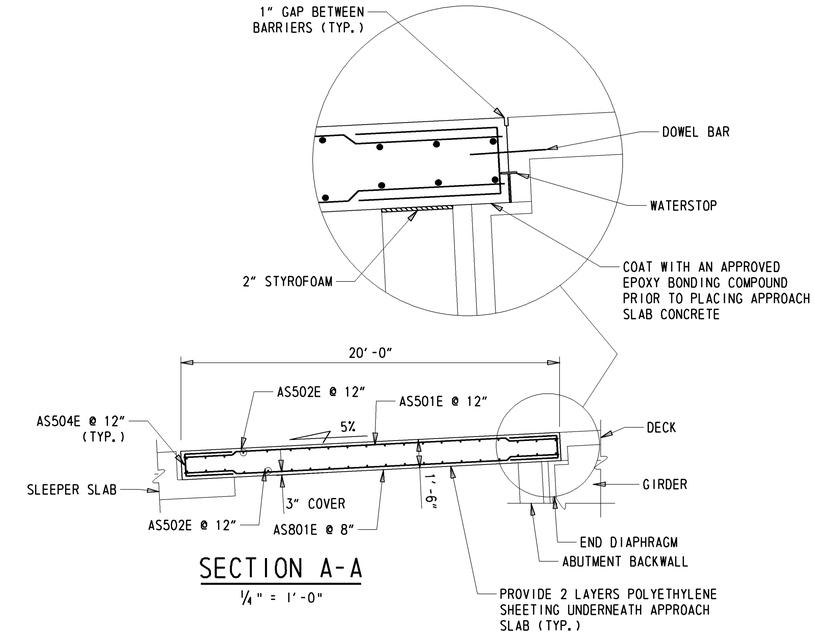

SECTION A-A

1/4" = 1'-0"

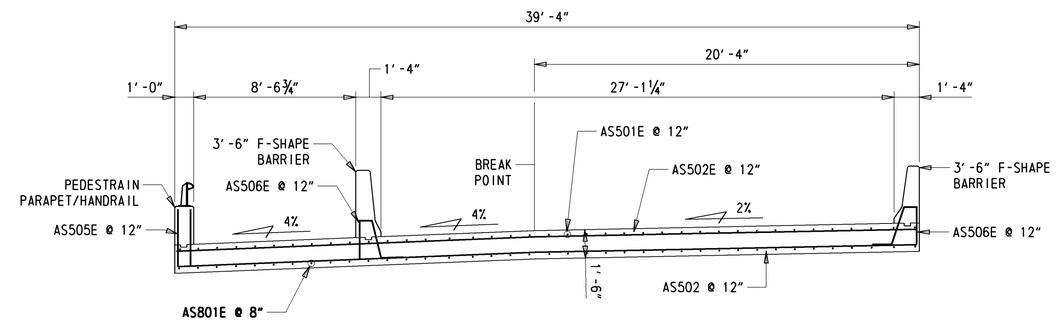

SOUTHBOUND ELEVATION VIEW

1/4" = 1'-0"

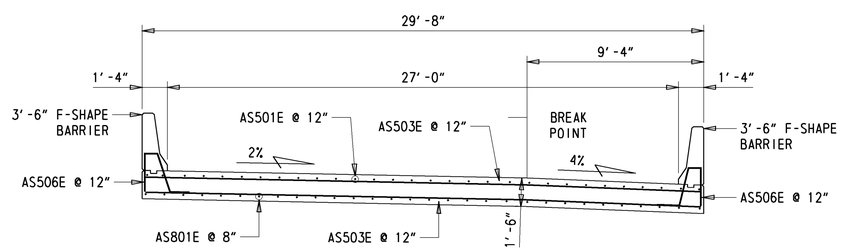

NORTHBOUND ELEVATION VIEW

1/4" = 1'-0"

NOTE:
-REFER TO PARAPET DETAILS FOR MORE DETAILS OF AS505E, & AS506E BAR SPACING DISTRIBUTION.
-FIELD CUT OR BEND BARS NEEDED SHOULD BE APPROVED BY THE ENGINEER. PAYMENT INCIDENTAL TO 604000 - BAR REINFORCEMENT, EPOXY COATED.

Y:\KENT2\BRIDGE\T200411701\PLANS\PUNCHEON RUN - 7 SPAN\AS01.DGN

DELAWARE DEPARTMENT OF TRANSPORTATION	ADDENDUMS / REVISIONS	SCALE: AS NOTED	WEST DOVER CONNECTOR	CONTRACT T200411701	BRIDGE NO. 2-156 N&S	APPROACH SLAB DETAILS BRIDGE SHEET 31 OF 65	SHEET NO. 142
				COUNTY KENT	DESIGNED BY: JAT		TOTAL SHTS. 320
					CHECKED BY: EM		

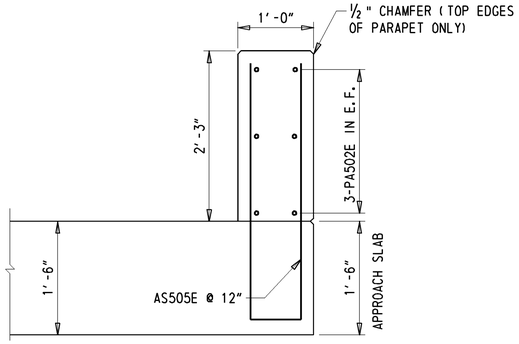

NOTE: APPROACH SLAB BARRIER SHALL BE DIVIDED INTO TWO EQUAL SECTIONS

2'-3" APPROACH SLAB PARAPET SECTION

1" = 1'-0"

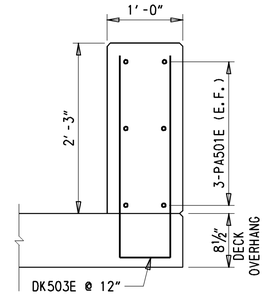

2'-3" DECK PARAPET SECTION

1" = 1'-0"

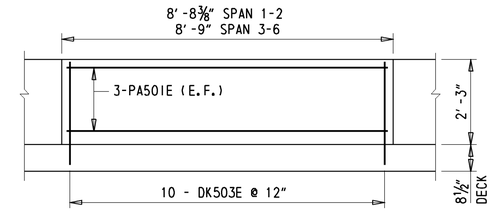

2'-3" DECK PARAPET ELEVATION

½" = 1'-0"

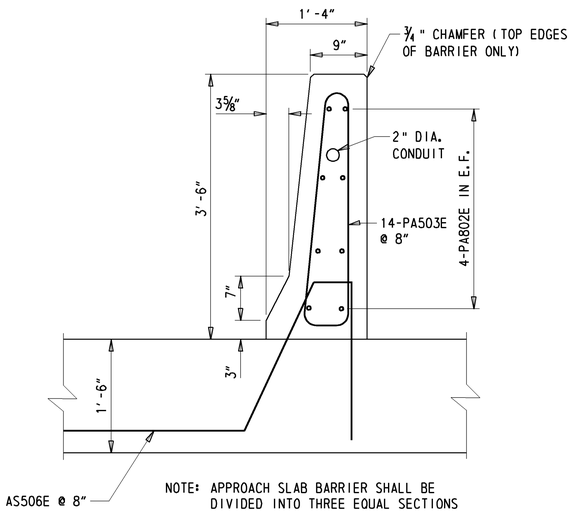

NOTE: APPROACH SLAB BARRIER SHALL BE DIVIDED INTO THREE EQUAL SECTIONS

3'-6" APPROACH SLAB BARRIER SECTION

1" = 1'-0"

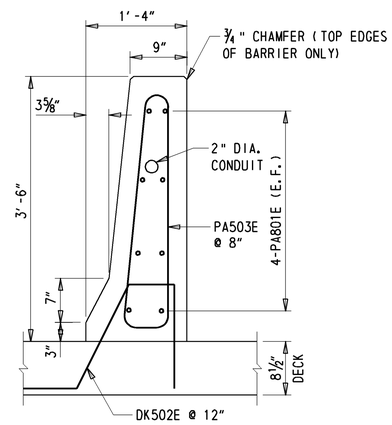

3'-6" DECK BARRIER SECTION

1" = 1'-0"

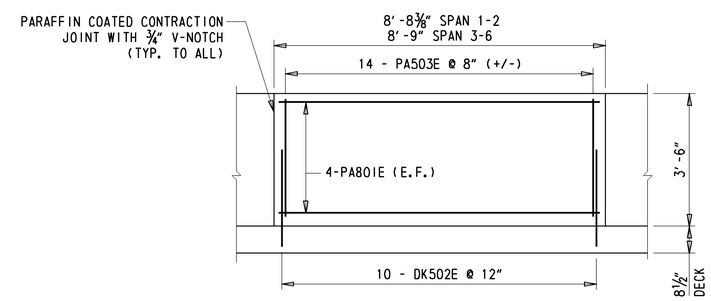

3'-6" DECK BARRIER ELEVATION

½" = 1'-0"

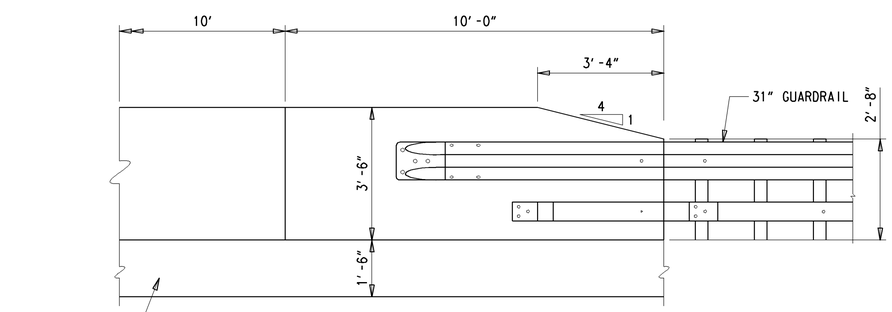

3'-6" BARRIER TRANSITION

½" = 1'-0"

NOTES:
1. NO SLIP FORMING SHALL BE PERMITTED
2. SEE ROADWAY PLANS FOR CONDUIT LOCATIONS

DELAWARE DEPARTMENT OF TRANSPORTATION	ADDENDUMS / REVISIONS	SCALE: AS NOTED	WEST DOVER CONNECTOR	CONTRACT T200411701	BRIDGE NO. 2-156 N&S	PARAPET DETAILS BRIDGE SHEET 32 OF 65	SHEET NO. 143
				COUNTY KENT	DESIGNED BY: JAT		TOTAL SHTS. 320
					CHECKED BY: EM		

Y:\KENT?\BRIDGE\T200411701\PLANS\NEW BURTON RD - 2 SPAN\PA02.DGN

(1) ANY MARK NUMBER WITH SUFFIX 'E' DENOTES EPOXY COATED REINFORCING STEEL.

(2) ALL MARK 'LOCATION PREFIXES' SHALL CONSIST OF TWO LETTERS AND ARE AS FOLLOWS: AB = ABUTMENT, AS = APPROACH SLAB, BC = BOX CULVERT, BW = BACKWALL, CL = COLUMN, DK = DECK, DL = DOWEL, FT = FOOTING, HW = HEADWALL, MS = MISC. BARS, PA = PARAPET, PR = PIER, SC = SHEETPILE CAP, SL = SLAB, TW = TOEWALL, WL = WALL (UNIQUE LOCATION), WW = WINGWALL

SPECIFICATIONS					BENDING DIMENSIONS (FEET-INCHES /QUARTER INCH)										
QTY.	SIZE	LENGTH	MARK	TYPE	A	B	C	D	E	F/R	G	H	J	K	O
106	5	16-6⁰	AB501E	T1	0-5²	4-8⁰	3-2⁰	4-8⁰	3-1⁰		0-5²				
36	5	11-10⁰	AB502E	S3	0-5²	3-1⁰	4-8⁰	3-2⁰			0-5²	0-3³			
108	5	5-6⁰	AB503E	STR		5-6⁰									
216	5	2-4⁰	AB504E	2	0-10⁰	0-8⁰					0-10⁰				
216	5	6-4⁰	AB505E	2	0-10⁰	4-8⁰					0-10⁰				
32	5	31-0⁰	AB506E	STR		31-0⁰									
16	5	46-11⁰	AB507E	STR		46-11⁰									
108	5	7-6⁰	AB508E	STR		7-6⁰									
26	5	48-10²	AB509E	STR		48-10²									
26	5	57-1⁰	AB510E	STR		57-1⁰									
10	5	5-3⁰	AB511E	STR		5-3⁰									
20	5	3-8⁰	AB512E	STR		3-8⁰									
10	5	7-3⁰	AB513E	STR		7-3⁰									
12	6	31-0⁰	AB601E	STR		31-0⁰									
78	6	16-11⁰	AB602E	T1	0-8⁰	4-8⁰	3-2⁰	4-8⁰	3-1⁰		0-8⁰				
83	6	12-3⁰	AB603E	S3	0-8⁰	3-1⁰	4-8⁰	3-2⁰			0-8⁰	0-4²			
6	6	48-10²	AB604E	STR		48-10²									
6	6	57-1⁰	AB605E	STR		57-1⁰									
108	7	5-6⁰	AB701E	STR		5-6⁰									
108	7	7-6⁰	AB702E	STR		7-6⁰									
12	8	31-0⁰	AB801E	STR		31-0⁰									
6	8	46-11³	AB802E	STR		46-11³									
142	5	19-8⁰	AS501E	STR		19-8⁰									
84	5	45-0⁰	AS502E	STR		45-0⁰									
84	5	33-11⁰	AS503E	STR		33-11⁰									
284	5	6-2⁰	AS504E	17		2-6⁰	1-2⁰	2-6⁰							
42	5	6-8⁰	AS505E	17		3-0⁰	0-8⁰	3-0⁰							
168	5	4-0¹	AS506E	16	0-10⁰	1-11⁰	0-5⁰	0-10¹				0-9⁰		0-4³	0-9³
24	8	38-2⁰	AS801E	STR		38-2⁰									
1X25	5	24-8³	CL501E	X						0-4⁰		21-0⁰	1	1.5	3-8⁰
		T0								T0		T0	T0	T0	T0
		31-5²								0-4⁰		28-5⁰	1	1.5	3-8⁰
25X2	08	30-8⁰	CL801E	20			27-8⁰	3-0⁰							
		T0				T0	T0	T0							
		38-1⁰					35-1⁰	3-0⁰							
1956	4	39-0⁰	DK401E	STR		39-0⁰									
1986	4	29-4⁰	DK402E	STR		29-4⁰									

SPECIFICATIONS					BENDING DIMENSIONS (FEET-INCHES /QUARTER INCH)										
QTY.	SIZE	LENGTH	MARK	TYPE	A	B	C	D	E	F/R	G	H	J	K	O
8X59	4	5-5⁰	DK403E	STR		5-5⁰									
		T0				T0									
		38-3⁰				38-3⁰									
8X45	4	5-6⁰	DK404E	STR		5-6⁰									
		T0				T0									
		28-5⁰				28-5⁰									
144	4	5-0⁰	DK405E	STR		5-0⁰									
840	4	48-3⁰	DK406E	STR		48-3⁰									
2100	4	57-7⁰	DK407E	STR		57-7⁰									
824	4	10-0⁰	DK408E	STR		10-0⁰									
248	4	39-0⁰	DK409E	STR		39-0⁰									
248	4	29-4⁰	DK410E	STR		29-4⁰									
4408	5	6-0⁰	DK501E	STR		6-0⁰									
2520	5	11-11	DK502E	16	0-10⁰	2-0⁰	1-0⁰	7-31				2-0⁰		7-0⁰	8-0⁰
840	5	4-8⁰	DK503E	17		2-0⁰	0-8⁰	2-0⁰							
2X4	5	6-53	DK504E	16	0-10⁰		2-2⁰	3-53				1-5⁰		3-2⁰	5-4⁰
		T0			T0	T0	T0	T0				T0		T0	T0
		7-111			0-10⁰		2-2⁰	4-111				1-4⁰		4-9⁰	6-11⁰
106	5	9-0⁰	DK505E	T2	0-6⁰	1-8⁰	2-4⁰	1-8⁰	2-4⁰		0-6⁰				
36	5	8-4⁰	DK506E	T2	0-6⁰	1-8⁰	2-0⁰	1-8⁰	2-0⁰		0-6⁰				
224	5	8-3⁰	DK507E	STR		8-3⁰									
18	5	6-7⁰	DK508E	STR		6-7⁰									
35	5	5-2⁰	DK509E	20		1-6⁰	3-8⁰								
2	5	4-5⁰	DK511E	20		1-6⁰	2-11⁰								
2X3	5	1-5⁰	DK512E	STR		1-5⁰									
		T0				T0									
		2-6⁰				2-6⁰									
2X3	5	2-0⁰	DK513E	STR		2-0⁰									
		T0				T0									
		3-6⁰				3-6⁰									
1X2	5	4-1⁰	DK514E	20		1-5⁰	2-8⁰								
		T0				T0	T0	T0							
		5-3⁰				1-5⁰	3-10⁰								
2X3	5	1-8⁰	DK515E	STR		1-8⁰									
		T0				T0									
		3-10⁰				3-10⁰									
2X3	5	1-3⁰	DK516E	STR		1-3⁰									
		T0				T0									
		1-11⁰				1-11⁰									
24	5	6-9⁰	DK517E	STR		6-9⁰									

SPECIFICATIONS					BENDING DIMENSIONS (FEET-INCHES /QUARTER INCH)										
QTY.	SIZE	LENGTH	MARK	TYPE	A	B	C	D	E	F/R	G	H	J	K	O
2X4	5	7-23	DK521E	16	0-10⁰		2-10⁰	3-63				3-5⁰		1-0⁰	3-10⁰
		T0			T0	T0	T0	T0				T0		T0	T0
		7-10²			0-10⁰		2-10⁰	4-22				3-4⁰		2-7⁰	5-5⁰
2	5	5-2⁰	DK522E	20		1-5⁰	3-9⁰								
70	5	7-2⁰	DK523E	20		1-6⁰	5-8⁰								
2X2	5	4-10⁰	DK524E	20		1-6⁰	3-4⁰								
		T0				T0	T0	T0							
		5-10⁰				1-6⁰	4-4⁰								
106	5	13-2⁰	DK525E	T2	0-6⁰	1-8⁰	4-5⁰	1-8⁰	4-5⁰		0-6⁰				
36	5	14-0⁰	DK526E	T2	0-6⁰	1-8⁰	4-10⁰	1-8⁰	4-10⁰		0-6⁰				
2X5	5	1-4⁰	DK527E	STR		1-4⁰									
		T0				T0									
		3-8⁰				3-8⁰									
2X5	5	1-21	DK528E	STR		1-21									
		T0				T0									
		2-81				2-81									
2X3	5	1-8⁰	DK529E	STR		1-8⁰									
		T0				T0									
		2-01				2-01									
1X4	5	1-111	DK531E	STR		1-111									
		T0				T0									
		3-2⁰				3-2⁰									
142	5	4-3⁰	DK532E	T1	0-5²	0-6⁰	1-2⁰	0-6⁰	1-2⁰		0-5²				
213	5	4-4⁰	DK533E	T1	0-5²	0-6⁰	1-2²	0-6⁰	1-2²		0-5²				
210	5	8-3⁰	DK534E	STR		8-3⁰									
112	5	8-11⁰	DK540E	STR		8-11⁰									
18	5	7-7²	DK541E	17		2-3⁰	3-1²	2-3⁰							
4	5	12-2⁰	DK542E	T1	0-5²	3-1²	2-6⁰	3-1²	2-6⁰		0-5²				
14	5	10-1²	DK543E	17		3-6⁰	3-1²	3-6⁰							
35	5	14-7²	DK544E	S4	0-6⁰	5-3⁰	3-1²	5-3⁰			0-6⁰				
64	5	5-2⁰	DK545E	STR		5-2⁰									
32	5	6-5⁰	DK546E	STR		6-5⁰									
48	5	4-11³	DK547E	STR		4-11³									
24	5	6-2³	DK548E	STR		6-2³									
54	5	11-4²	DK551E	17		4-1²	3-1²	4-1²							
12	5	11-10²	DK552E	17		4-4²	3-1²	4-4²							
42	5	13-7²	DK553E	17		5-3⁰	3-1²	5-3⁰							
105	5	18-1⁰	DK554E	S4	0-6⁰	6-11³	3-1²	6-11³			0-6⁰				
2160	5	2-7⁰	DK560E	STR		2-7⁰									
140	6	4-4⁰	DK601E	1	0-8⁰	3-0⁰					0-8⁰		0-6⁰		

ASTM STANDARD ENGLISH REINFORCING BARS

	NOMINAL DIMENSIONS			RECOMMENDED END HOOKS, APPLICABLE TO ALL GRADES				STIRRUP AND TIE HOOKS, APPLICABLE TO ALL GRADES		
				180° HOOKS			90° HOOKS	90° HOOK	135° HOOK	
BAR SIZE	DIAMETER (INCHES)	AREA (INCHES²)	WEIGHT (LBS./FT.)	D	A OR G	J	A OR G	D	A OR G	A OR G
3	0.375	0.110	0.376	2¼"	5"	3"	6"	1½"	4"	4"	2½"
4	0.500	0.200	0.668	3"	6"	4"	8"	2"	4½"	4½"	3"
5	0.625	0.310	1.043	3¾"	7"	5"	10"	2½"	6"	5½"	3¾"
6	0.750	0.440	1.502	4½"	8"	6"	1-0"	4½"	1-0"	8"	4½"
7	0.875	0.600	2.044	5¼"	10"	7"	1-2"	5¼"	1-2"	9"	5¼"
8	1.000	0.790	2.670	6"	11"	8"	1-4"	6"	1-4"	10½"	6"
9	1.128	1.000	3.400	9½"	1-3"	11¾"	1-7"				
10	1.270	1.270	4.303	10¾"	1-5"	1-1¼"	1-10"				
11	1.410	1.560	5.313	1-0"	1-7"	1-2¾"	2-0"				
14	1.693	2.250	7.650	1-6¼"	2-3"	1-9¾"	2-7"				
18	2.257	4.000	13.600	2-0"	3-0"	2-4½"	3-5"				

NOTES:

1. FIGURES SHOWN IN CIRCLES REPRESENT BAR BEND TYPES.
2. STANDARD BAR BENDS INCLUDE ONLY THOSE TYPES BELOW, INDICATED AS SUCH.
3. ALL DIMENSIONS OUT-TO-OUT, EXCEPT "A" AND "G" ON STD. 180° AND 135° HOOKS.
4. "J" DIMENSIONS ON 180° HOOKS TO BE SHOWN ONLY WHERE NECESSARY TO RESTRICT HOOK SIZE, OTHERWISE STANDARD 'ACI' HOOKS ARE TO BE USED.
5. WHERE "J" IS NOT SHOWN, "J" WILL BE KEPT EQUAL TO OR LESS THAN "H" ON TYPES 3, 5 AND 22. WHERE "J" CAN EXCEED "H", IT SHALL BE SHOWN.
6. "H" DIMENSIONS OF STIRRUPS TO BE SHOWN AS NEEDED TO FIT WITHIN THE CONCRETE.
7. UNLESS OTHERWISE NOTED, DIAMETER "D" IS THE SAME FOR ALL BENDS AND HOOKS ON A BAR (EXCEPT FOR BEND TYPES 11 AND 13).
8. WHERE SLOPE DIFFERS FROM 45° OFFSET, "H" AND "K" MUST BE SHOWN.
9. WHERE BARS ARE TO BE BENT MORE ACCURATELY THAN STANDARD BENDING TOLERANCES, BENDING DIMENSIONS REQUIRING CLOSER FABRICATION SHOULD HAVE LIMITS INDICATED.
10. FOR RECOMMENDED DIAMETER "D", OF BENDS, HOOKS, ETC., REFER TO TABLE ABOVE, 'CRSI' OR 'ACI' TABLES WHERE APPLICABLE AND REQUIRED.
11. TYPE S1-S6, S11, T1-T3 AND T6-T9 APPLICABLE TO BAR SIZES #3 THROUGH #8.

STANDARD BAR BENDS

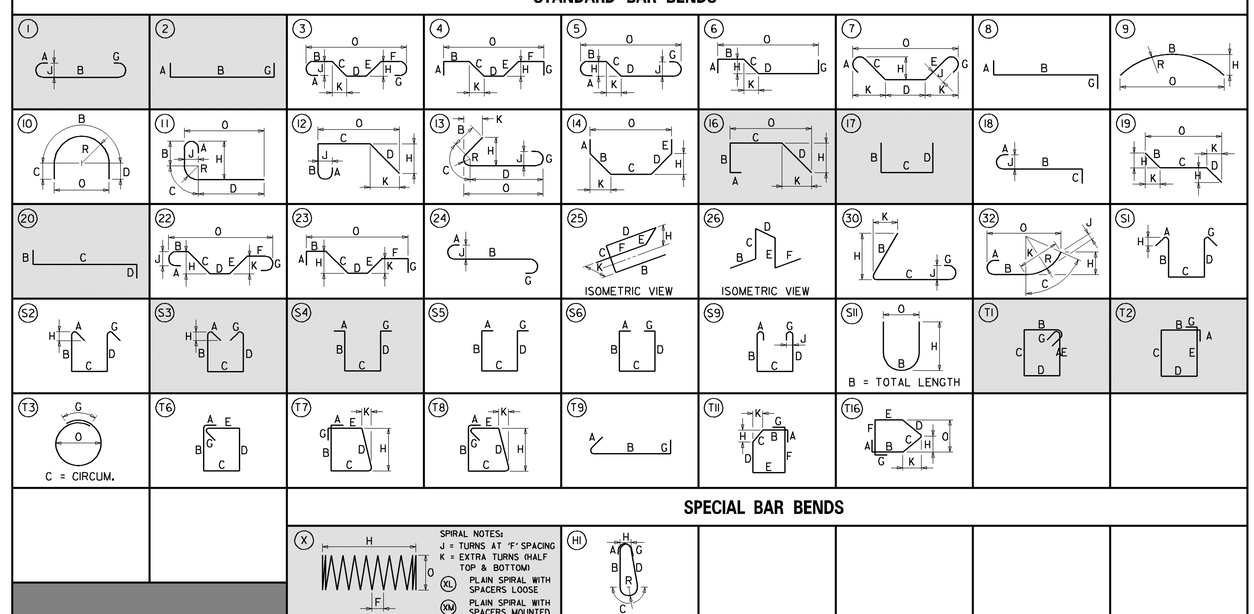

SPECIAL BAR BENDS

STIRRUP AND TIE HOOKS

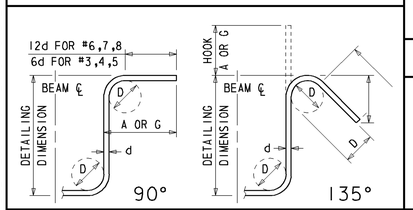

180° AND 90° END HOOKS

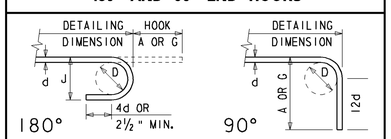

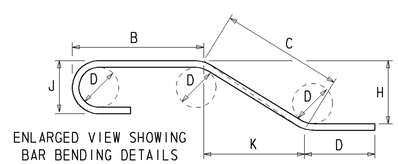

ENLARGED VIEW SHOWING BAR BENDING DETAILS

DELAWARE DEPARTMENT OF TRANSPORTATION

ADDENDUMS / REVISIONS

WEST DOVER CONNECTOR

CONTRACT	BRIDGE NO. 2-156 N&S	REINFORCEMENT BAR LIST BRIDGE SHEET 33 OF 65	SHEET NO.
T200411701	DESIGNED BY:		144
COUNTY			TOTAL SHTS.
KENT	CHECKED BY:		320

Y:\KENT\156\BRIDGE\T200411701\PLANS\PUNCHEON RUN - 7 SPAN\BR01.DGN

(1) ANY MARK NUMBER WITH SUFFIX 'E' DENOTES EPOXY COATED REINFORCING STEEL.

(2) ALL MARK 'LOCATION PREFIXES' SHALL CONSIST OF TWO LETTERS AND ARE AS FOLLOWS: AB = ABUTMENT, AS = APPROACH SLAB, BC = BOX CULVERT, BW = BACKWALL, CL = COLUMN, DK = DECK, DL = DOWEL, FT = FOOTING, HW = HEADWALL, MS = MISC. BARS, PA = PARAPET, PR = PIER, SC = SHEETPILE CAP, SL = SLAB, TW = TOEWALL, WL = WALL (UNIQUE LOCATION), WW = WINGWALL

SPECIFICATIONS					BENDING DIMENSIONS (FEET-INCHES /QUARTER INCH)										
QTY.	SIZE	LENGTH	MARK	TYPE	A	B	C	D	E	F/R	G	H	J	K	O
420	7	40-00	DK701E	STR		40-00									
420	7	20-00	DK702E	STR		20-00									
70	8	2-00	DK801E	STR		2-00									
210	5	38-70	FT501E	STR		38-70									
765	5	38-70	FT502E	STR		38-70									
405	6	38-70	FT601E	STR		38-70									
1105	9	20-00	FT901E	17		3-80	12-80	3-80							
1105	1	12-80	FT1001	STR		12-80									
504	5	8-41	PA501E	STR		8-41									
24	5	9-80	PA502E	STR		9-80									
2688	8	8-41	PA801E	STR		8-41									
192	8	6-40	PA802E	STR		6-40									
120	5	50-00	PR501E	STR		50-00									
120	5	48-00	PR502E	STR		48-00									
40	5	52-00	PR503E	STR		52-00									
40	5	45-110	PR504E	STR		45-110									
1989	5	20-60	PR505E	T1	0-52	4-30	5-80	4-30	5-50		0-52				
18X1	95	16-90	PR506E	T1	0-52	4-30	3-80	4-30	3-80		0-52				
		T0			T0	T0	T0	T0	T0		T0				
		20-90			0-52	4-30	5-80	4-30	5-80		0-52				
221	5	22-72	PR507E	T1	0-52	3-21	7-80	3-21	7-80		0-52				
2X19	5	18-72	PR508E	T1	0-52	3-21	5-80	3-21	5-80		0-52				
		T0			T0	T0	T0	T0	T0		T0				
		22-72			0-52	3-21	7-80	3-21	7-80		0-52				
332	5	10-00	PR509E	STR		10-00									
440	5	8-20	PR510E	17		1-90	4-80	1-90							
352	5	9-20	PR511E	17		1-90	5-80	1-90							
100	8	48-30	PR801E	STR		48-30									
100	8	46-110	PR802E	STR		46-110									
100	8	55-10	PR803E	STR		55-10									
100	8	52-10	PR804E	STR		52-10									
56	5	45-00	SL501E	STR		45-00									
56	5	33-110	SL502E	STR		33-110									
142	5	8-40	SL503E	T1	0-52	1-80	2-02	1-80	2-02		0-52				
284	7	8-40	SL701E	STR		8-40									

SPECIFICATIONS					BENDING DIMENSIONS (FEET-INCHES /QUARTER INCH)										
QTY.	SIZE	LENGTH	MARK	TYPE	A	B	C	D	E	F/R	G	H	J	K	O
2X8	5	11-21	WW501E	STR		11-21									
		T0				T0									
		14-80				14-80									
2X8	5	14-80	WW502E	STR		14-80									
		T0				T0									
		18-12				18-12									
2X16	5	14-90	WW503E	17			9-10	5-80							
		T0				T0	T0	T0							
		15-40					9-80	5-80							
2X16	5	10-90	WW504E	17			9-10	1-80							
		T0				T0	T0	T0							
		11-40					9-80	1-80							
20	5	14-80	WW505E	STR		14-80									
20	5	14-80	WW506E	STR		14-80									
2X7	5	9-80	WW507E	STR		9-80									
		T0				T0									
		12-62				12-62									
2X7	5	6-91	WW508E	STR		6-91									
		T0				T0									
		9-80				9-80									
2X11	5	12-20	WW509E	17			7-60	4-80							
		T0				T0	T0	T0							
		12-80					8-00	4-80							
2X11	5	9-20	WW510E	17			7-60	1-80							
		T0				T0	T0	T0							
		9-80					8-00	1-80							
25	5	5-80	WW511E	STR		5-80									
16	5	9-80	WW512E	STR		9-80									
16	5	9-80	WW513E	STR		9-80									
54	5	2-40	WW514E	2	0-100	0-80					0-100				
32	6	8-00	WW601E	17		0-80	6-80	0-80							

SPECIFICATIONS					BENDING DIMENSIONS (FEET-INCHES /QUARTER INCH)										
QTY.	SIZE	LENGTH	MARK	TYPE	A	B	C	D	E	F/R	G	H	J	K	O

ASTM STANDARD ENGLISH REINFORCING BARS				RECOMMENDED END HOOKS, APPLICABLE TO ALL GRADES				STIRRUP AND TIE HOOKS, APPLICABLE TO ALL GRADES			
NOMINAL DIMENSIONS				180° HOOKS			90° HOOKS	90° HOOK		135° HOOK	
BAR SIZE	DIAMETER (INCHES)	AREA (INCHES²)	WEIGHT (LBS./FT.)	D	A OR G	J	A OR G	D	A OR G	A OR G	A OR G
3	0.375	0.110	0.376	2¼"	5"	3"	6"	1½"	4"	4"	2½"
4	0.500	0.200	0.668	3"	6"	4"	8"	2"	4½"	4½"	3"
5	0.625	0.310	1.043	3¾"	7"	5"	10"	2½"	6"	5½"	3¾"
6	0.750	0.440	1.502	4½"	8"	6"	1-0"	4½"	1-0"	8"	4½"
7	0.875	0.600	2.044	5¼"	10"	7"	1-2"	5¼"	1-2"	9"	5¼"
8	1.000	0.790	2.670	6"	11"	8"	1-4"	6"	1-4"	10½"	6"
9	1.128	1.000	3.400	9½"	1-3"	11¾"	1-7"				
10	1.270	1.270	4.303	10¾"	1-5"	1-1¼"	1-10"				
11	1.410	1.560	5.313	1-0"	1-7"	1-2¾"	2-0"				
14	1.693	2.250	7.650	1-6¼"	2-3"	1-9¾"	2-7"				
18	2.257	4.000	13.600	2-0"	3-0"	2-4½"	3-5"				

NOTES:

1. FIGURES SHOWN IN CIRCLES REPRESENT BAR BEND TYPES.
2. STANDARD BAR BENDS INCLUDE ONLY THOSE TYPES BELOW, INDICATED AS SUCH.
3. ALL DIMENSIONS OUT-TO-OUT, EXCEPT "A" AND "G" ON STD. 180° AND 135° HOOKS.
4. "J" DIMENSIONS ON 180° HOOKS TO BE SHOWN ONLY WHERE NECESSARY TO RESTRICT HOOK SIZE, OTHERWISE STANDARD 'ACI' HOOKS ARE TO BE USED.
5. WHERE "J" IS NOT SHOWN, "J" WILL BE KEPT EQUAL TO OR LESS THAN "H" ON TYPES 3, 5 AND 22. WHERE "J" CAN EXCEED "H", IT SHALL BE SHOWN.
6. "H" DIMENSIONS OF STIRRUPS TO BE SHOWN AS NEEDED TO FIT WITHIN THE CONCRETE.
7. UNLESS OTHERWISE NOTED, DIAMETER "D" IS THE SAME FOR ALL BENDS AND HOOKS ON A BAR (EXCEPT FOR BEND TYPES 11 AND 13).
8. WHERE SLOPE DIFFERS FROM 45° OFFSET, "H" AND "K" MUST BE SHOWN.
9. WHERE BARS ARE TO BE BENT MORE ACCURATELY THAN STANDARD BENDING TOLERANCES, BENDING DIMENSIONS REQUIRING CLOSER FABRICATION SHOULD HAVE LIMITS INDICATED.
10. FOR RECOMMENDED DIAMETER "D", OF BENDS, HOOKS, ETC., REFER TO TABLE ABOVE, 'CRSI' OR 'ACI' TABLES WHERE APPLICABLE AND REQUIRED.
11. TYPE S1-S6, S11, T1-T3 AND T6-T9 APPLICABLE TO BAR SIZES #3 THROUGH #8.

STANDARD BAR BENDS

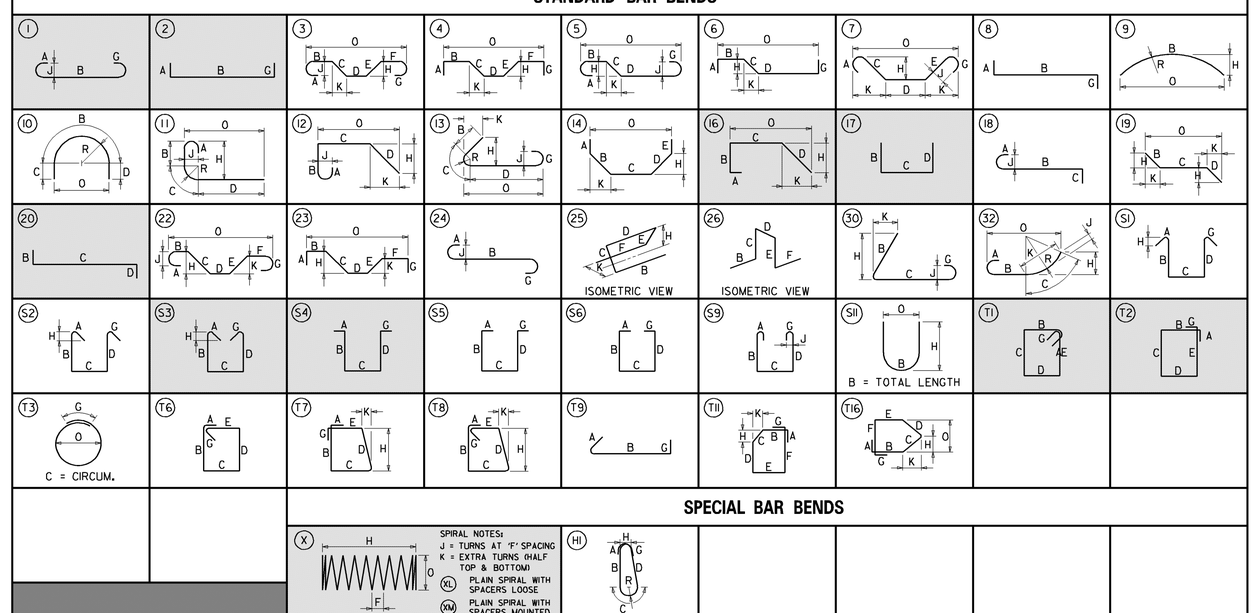

SPECIAL BAR BENDS

STIRRUP AND TIE HOOKS

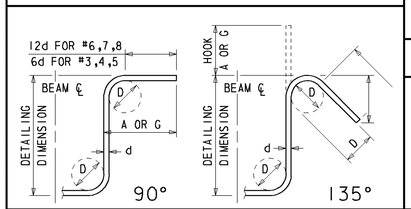

180° AND 90° END HOOKS

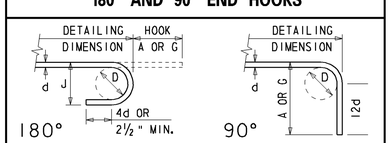

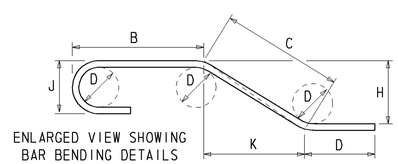

ENLARGED VIEW SHOWING BAR BENDING DETAILS

Y:\KENT\156\BRIDGE\T200411701\PLANS\PUNCHEON RUN - 7 SPAN\BR02.DGN

DELAWARE DEPARTMENT OF TRANSPORTATION

ADDENDUMS / REVISIONS

WEST DOVER CONNECTOR

CONTRACT	BRIDGE NO.	2-156 N&S	REINFORCEMENT BAR LIST BRIDGE SHEET 34 OF 65	SHEET NO.
T200411701	DESIGNED BY:			145
COUNTY				TOTAL SHTS.
KENT	CHECKED BY:			320

BORING: S-13 | **DATE DRILLED:** 7/17/12
STATION: 1104+69.25 | **OFFSET:** 0.0 | **ELEVATION:** | **NORTHING:** 415105.829 | **EASTING:** 621061.486
COMMENTS: N/A

SAMPLE INFORMATION

NO.	DEPTH	BLOWS /6"	DESCRIPTION	CLASS /G.I.	REMARKS
1	0.0 2.0	3 1 1 3	MOIST VERY LOOSE BROWN COARSE TO FINE SAND W/SOME SILT, TRACE OF FINE GRAVEL.	A-1-B	
2	2.0 4.0	2 2 3 2	MOIST LOOSE BROWN COARSE TO FINE SAND W/SOME SILT, TRACE OF FINE GRAVEL.	A-1-B	
3	4.0 6.0	3 2 3 3	MOIST LOOSE BROWN COARSE SAND W/SOME FINE SAND AND SILT, TRACE OF FINE GRAVEL.	A-1-B	
4	6.0 8.0	3 5 4 4	MOIST LOOSE BROWN COARSE SAND W/SOME FINE SAND AND SILT, TRACE OF FINE GRAVEL.	A-1-B	
5	8.0 10.0	3 2 2 2	WET VERY LOOSE BROWN COARSE TO FINE SAND W/SOME SILT.	A-1-B	
6	10.0 12.0	2 1 2 2	WET VERY LOOSE BROWN COARSE SAND W/SOME FINE SAND, TRACE OF SILT AND FINE GRAVEL.	A-1-B	
7	12.0 14.0	1 2 2 2	WET VERY LOOSE BROWN COARSE TO FINE SAND W/SOME SILT, TRACE OF FINE GRAVEL.	A-1-B	
8	14.0 16.0	4 4 7 4	WET MEDIUM DENSE BROWN FINE GRAVELLY COARSE SAND W/SOME FINE SAND, TRACE OF SILT.	A-1-B	
9	16.0 18.0	3 5 7 8	WET MEDIUM DENSE BROWN COARSE TO FINE SAND W/SOME FINE GRAVEL, TRACE OF SILT.	A-1-B	
10	18.0 24.0	2 5 8 13	WET MEDIUM DENSE BROWN FINE TO COARSE SAND W/SOME SILT, TRACE OF FINE GRAVEL.	A-2-4(0)	
11	24.0 29.0	3 3 6 7	SATURATED LOOSE GRAY SILTY COARSE TO FINE SAND.	A-2-4(0)	
12	29.0 34.0	3 3 4 7	SATURATED LOOSE GRAY ORGANIC CLAYEY COARSE SAND W/SOME FINE SAND AND SILT.	A-2-4(0)	
13	34.0 39.0	2 4 6 10	NO SIEVE ANALYSIS - INDICATION OF SATURATED STIFF GRAY ORGANIC CLAY.		
14	39.0 44.0	6 8 10 19	NO SIEVE ANALYSIS - INDICATION OF SATURATED VERY STIFF GRAY ORGANIC CLAY .		
15	44.0 49.0 49.0	10 13 11 10	SATURATED MEDIUM DENSE BROWN COARSE TO FINE SAND W/TRACE OF SILT AND FINE GRAVEL.	A-1-B	
16	54.0	32 32 50	SATURATED VERY DENSE LIGHT GRAY FINE TO COARSE SAND W/TRACE OF FINE GRAVEL AND SILT.	A-3	
17	54.0 59.0	14 13 13 9	SATURATED MEDIUM DENSE BROWNISH GRAY FINE TO COARSE SAND W/TRACE OF FINE GRAVEL AND SILT.	A-3	
18	59.0 64.0	7 10 14 16	SATURATED MEDIUM DENSE BROWN FINE SAND W/SOME COARSE SAND, TRACE OF SILT.	A-3	
19	64.0 69.0	50	SATURATED DENSE BROWN COARSE TO FINE SAND W/TRACE OF FINE GRAVEL AND SILT.	A-1-B	
20	69.0 74.0	50	SATURATED DENSE BROWN COARSE TO FINE SAND W/SOME FINE GRAVEL, TRACE OF SILT.	A-1-B	
21	74.0 79.0		SATURATED DENSE TAN FINE TO COARSE SAND W/TRACE OF FINE GRAVEL AND SILT.	A-3	
22	79.0 84.0		SATURATED DENSE TAN COARSE TO FINE SAND W/TRACE OF FINE GRAVEL AND SILT.	A-1-B	
23	84.0 89.0	8 8 10 20	SATURATED MEDIUM DENSE GRAY ORGANIC CLAYEY COARSE TO FINE SAND W/SOME SILT.	A-2-4(0)	
24	89.0 94.0	6 9 10 17	SATURATED VERY STIFF GRAY ORGANIC CLAYEY COARSE TO FINE SANDY SILT.	A-5(2)	
25	94.0 99.0	8 10 11 14	SATURATED VERY STIFF GRAY ORGANIC CLAYEY FINE TO COARSE SANDY SILT.	A-5(3)	
26	99.0 101.0	7 10 15 15	SATURATED MEDIUM DENSE GRAY SILTY FINE TO COARSE SAND W/SOME ORGANIC MATTER.	A-2-4(0)	
			END BORING.		

BORING: S-17 | **DATE DRILLED:** 7/19/12
STATION: 1107+32.5 | **OFFSET:** 30.3 | **ELEVATION:** | **NORTHING:** 415360.803 | **EASTING:** 621133.657
COMMENTS: N/A

SAMPLE INFORMATION

NO.	DEPTH	BLOWS /6"	DESCRIPTION	CLASS /G.I.	REMARKS
1	0.0 2.0	WH	MOIST SOFT BLACK ORGANIC SILT W/SOME FINE TO COARSE SAND W/TRACE OF FINE GRAVEL.	A-5(3)	
2	2.0 4.0	2 6 9 10	MOIST MEDIUM DENSE TAN FINE GRAVEL AND COARSE TO FINE SAND W/TRACE OF FINE GRAVEL.	A-1-B	
3	4.0 6.0	8 8 7 8	MOIST MEDIUM DENSE TAN COARSE TO FINE SANDY FINE GRAVEL W/TRACE OF SILT.	A-1-B	
4	6.0 8.0	10 10 10 13	MOIST MEDIUM DENSE TAN FINE GRAVEL AND COARSE TO FINE SAND W/TRACE OF SILT.	A-1-B	
5	8.0 10.0	2 3 6 7	WET LOOSE TAN COARSE TO FINE SAND W/TRACE OF FINE GRAVEL AND SILT.	A-1-B	
6	10.0 12.0	5 8 12 14	WET MEDIUM DENSE TAN COARSE TO FINE SAND W/SOME FINE GRAVEL AND SILT.	A-1-B	
7	12.0 14.0	6 10 10 14	WET MEDIUM DENSE TAN COARSE SAND W/SOME FINE SAND AND FINE GRAVEL, TRACE OF SILT.	A-1-B	
8	14.0 16.0	7 9 11 13	WET MEDIUM DENSE TAN COARSE TO FINE SAND W/SOME FINE GRAVEL, TRACE OF SILT.	A-1-B	
9	16.0 18.0		DRILLER MISSED SAMPLE		
10	18.0 23.0	3 4 5 7	SATURATED LOOSE GRAY ORGANIC SILTY FINE TO COARSE SAND.	A-2-4(0)	
11	23.0 28.0	3 4 5 9	SATURATED LOOSE GRAY ORGANIC SILTY FINE SAND W/SOME COARSE SAND.	A-2-4(0)	
12	28.0 33.0	9 11 13 24	SATURATED MEDIUM DENSE GRAY ORGANIC SILTY FINE SAND W/SOME COARSE SAND.	A-2-4(0)	
13	33.0 38.0	8 32 50	SATURATED VERY DENSE TANNISH RED COARSE TO FINE SAND W/TRACE OF FINE GRAVEL AND SILT.	A-1-B	
14	38.0 43.0	28 22 14 14	SATURATED DENSE TANNISH BROWN COARSE TO FINE SAND W/SOME FINE GRAVEL, TRACE OF SILT.	A-1-B	
15	43.0 48.0	6 11 13 17	SATURATED MEDIUM DENSE GRAY SILTY FINE SAND W/SOME COARSE SAND AND CLAY.	A-2-4(0)	
16	48.0 53.0	7 9 12 19	SATURATED VERY STIFF GRAY ORGANIC FINE SANDY SILT W/TRACE OF COARSE SAND.	A-4(0)	
17	53.0 58.0	7 12 14 18	SATURATED VERY STIFF GRAY FINE SANDY SILT W/TRACE OF COARSE SAND.	A-4(0)	
18	58.0 63.0	5 2 50	SATURATED DENSE GRAY SILTY FINE TO COARSE SAND W/TRACE OF FINE GRAVEL AND ORGANIC MATTER.	A-2-4(0)	
19	63.0 68.0	50	SATURATED DENSE BROWN COARSE TO FINE SAND W/TRACE OF FINE GRAVEL AND SILT.	A-1-B	
20	68.0 73.0	50	SATURATED DENSE ORANGISH BROWN FINE TO COARSE SAND W/TRACE OF FINE GRAVEL AND SILT.	A-3	
21	73.0 78.0	50	NO RECOVERY		
22	78.0 83.0	5 8 11 15	SATURATED VERY STIFF BROWN ORGANIC FINE SANDY SILT W/SOME COARSE SAND.	A-4(0)	
23	83.0 88.0	6 13 15 20	SATURATED VERY STIFF GRAY ORGANIC FINE TO COARSE SANDY SILT.	A-4(0)	
24	88.0 93.0	8 14 29 27	SATURATED HARD GRAY FINE SANDY SILT W/SOME ORGANIC MATTER, TRACE OF COARSE SAND.	A-4(0)	
25	93.0 98.0	15 27 28 31	SATURATED VERY DENSE GRAY FINE SAND W/SOME SILT, TRACE OF COARSE SAND, FINE GRAVEL AND ORGANIC MATTER.	A-2-4(0)	
26	98.0 100.0	10 13 50	SATURATED VERY DENSE GRAY FINE SAND W/SOME SILT, TRACE OF COARSE SAND, FINE GRAVEL AND ORGANIC MATTER.	A-2-4(0)	
			END BORING.		

BORING: S-18 | **DATE DRILLED:** 7/24/12
STATION: 1107+47.5 | **OFFSET:** 40.3 RT | **ELEVATION:** | **NORTHING:** 415347.771 | **EASTING:** 621204.713
COMMENTS: N/A

SAMPLE INFORMATION

NO.	DEPTH	BLOWS /6"	DESCRIPTION	CLASS /G.I.	REMARKS
1	0.0 2.0	1 1 2 1	WET SOFT GRAY CLAY W/SOME FINE TO COARSE SAND AND ORGANIC MATTER, TRACE OF FINE GRAVEL.	A-7-5(15)	
2	2.0 4.0	2 5 14 16	WET MEDIUM DENSE GRAY FINE GRAVELLY FINE TO COARSE SAND W/TRACE OF SILT.	A-1-B	
3	4.0 6.0	2 4 8 10	WET MEDIUM DENSE BROWN COARSE TO FINE SAND W/SOME FINE GRAVEL, TRACE OF SILT.	A-1-B	
4	6.0 8.0	4 9 3 2	WET MEDIUM DENSE BROWN COARSE TO FINE SAND W/SOME FINE GRAVEL, TRACE OF SILT.	A-1-B	
5	8.0 10.0	15 7 5 5	NO RECOVERY		
6	10.0 12.0	5 3 4 5	SATURATED LOOSE BROWN ORGANIC CLAYEY COARSE TO FINE SAND W/TRACE OF FINE GRAVEL.	A-2-4(0)	
7	12.0 14.0	1 1 1	SATURATED VERY LOOSE GRAY ORGANIC FINE SAND W/SOME SILT AND COARSE SAND, TRACE OF FINE GRAVEL.	A-2-4(0)	
8	14.0 16.0	1 1 1 2	SATURATED VERY LOOSE BROWN ORGANIC SILTY FINE TO COARSE SAND W/TRACE OF FINE GRAVEL.	A-2-4(0)	
9	16.0 18.0	2 2 2 3	SATURATED SOFT BROWN CLAYEY COARSE TO FINE SANDY SILT.	A-4(1)	
10	18.0 23.0	1 1 2 2	SATURATED VERY LOOSE BROWN ORGANIC SILTY FINE TO COARSE SAND W/TRACE OF CLAY.	A-2-4(0)	
11	23.0 28.0	2 3 4 6	SATURATED LOOSE GRAY ORGANIC SILTY FINE SAND W/SOME COARSE SAND.	A-2-4(0)	
12	28.0 33.0	5 13 18 32	SATURATED DENSE GRAY FINE SAND W/SOME SILT AND COARSE SAND, TRACE OF ORGANIC MATTER.	A-2-4(0)	
13	33.0 38.0	6 6 15 19	SATURATED MEDIUM DENSE GRAY FINE SAND W/SOME SILT, TRACE OF COARSE SAND AND FINE GRAVEL.	A-2-4(0)	
14	38.0 43.0	50	SATURATED DENSE BROWN FINE TO COARSE SAND W/TRACE OF FINE GRAVEL AND SILT.	A-3	
15	43.0 48.0	1 2 1	SATURATED VERY LOOSE BROWN FINE TO COARSE SAND W/SOME SILT, TRACE OF FINE GRAVEL.	A-2-4(0)	
16	48.0 53.0	16 15 16 20	SATURATED DENSE BROWN COARSE TO FINE SAND W/TRACE OF FINE GRAVEL AND SILT.	A-1-B	
17	53.0 58.0	50	SATURATED DENSE TAN FINE TO COARSE SAND W/TRACE OF SILT.	A-3	
18	58.0 63.0	50	SATURATED DENSE BROWN FINE TO COARSE SAND W/TRACE OF SILT AND FINE GRAVEL.	A-1-B	
19	63.0 68.0	39 50	SATURATED VERY DENSE BROWN FINE GRAVELLY COARSE TO FINE SAND W/TRACE OF SILT.	A-1-B	
20	68.0 73.0	50	SATURATED DENSE TAN FINE TO COARSE SAND W/TRACE OF FINE GRAVEL AND SILT.	A-3	
21	73.0 78.0	6 6 10 12	SATURATED MEDIUM DENSE GRAY SILTY FINE SAND W/SOME COARSE SAND AND ORGANIC MATTER.	A-2-4(0)	
22	78.0 83.0	6 8 13 15	SATURATED VERY STIFF GRAY ORGANIC CLAYEY FINE TO COARSE SANDY SILT.	A-4(1)	
23	83.0 88.0	8 17 14 21	SATURATED DENSE GRAY ORGANIC CLAYEY FINE SAND W/SOME COARSE SAND AND SILT.	A-2-6(0)	
24	88.0 93.0	4 10 13 16	SATURATED VERY STIFF GRAY ORGANIC CLAYEY FINE SANDY SILT W/TRACE OF COARSE SAND.	A-4(0)	
25	93.0 98.0	10 16 17 20	SATURATED DENSE GRAY FINE SAND W/TRACE OF COARSE SAND, SILT AND ORGANIC MATTER.	A-3	
26	98.0 100.0	10 14 17 22	SATURATED DENSE GRAY FINE SAND W/SOME SILT, TRACE OF COARSE SAND AND FINE GRAVEL.	A-2-4(0)	
			END BORING.		

Y:\KENT\156\BRIDGE\T200411701\PLANS\PUNCHEON RUN - 7 SPAN\BOO1.DGN

DELAWARE DEPARTMENT OF TRANSPORTATION

ADDENDUMS / REVISIONS

NOT TO SCALE

WEST DOVER CONNECTOR

CONTRACT	BRIDGE NO. 2-156 N&S	**BORING LOGS BRIDGE SHEET 35 OF 65**	SHEET NO.
T200411701	DESIGNED BY: EM		146
COUNTY			TOTAL SHTS.
KENT	CHECKED BY: JNH		320

BORING: S-19 | **DATE DRILLED:** 7/12/12
STATION: 1108+62.5 | **OFFSET:** 50.0 LT | **ELEVATION:** | **NORTHING:** 415488.501 | **EASTING:** 621164.963
COMMENTS: N/A

NO.	DEPTH	BLOWS /6"	DESCRIPTION	CLASS /G.I.	REMARKS
1	0.0 2.0	4 8 14 14	MOIST MEDIUM DENSE BROWN SILTY FINE TO COARSE SAND AND FINE GRAVEL.	A-2-4(0)	
2	2.0 4.0	6 7 9 7	WET MEDIUM DENSE GRAY SILTY FINE TO COARSE SAND W/SOME FINE GRAVEL AND ORGANIC MATTER.	A-2-4(0)	
3	4.0 6.0	7 8 10 8	WET MEDIUM DENSE GRAY FINE GRAVEL AND COARSE SAND W/SOME FINE SAND, TRACE OF SILT.	A-1-B	
4	6.0 8.0	5 3 4 3	WET LOOSE GRAY FINE TO COARSE SAND W/SOME FINE GRAVEL AND SILT.	A-2-4(0)	
5	8.0 10.0	6 6 5 5	WET MEDIUM DENSE ORANGE COARSE SAND W/SOME FINE GRAVEL AND FINE SAND, TRACE OF SILT.	A-1-B	
6	10.0 12.0	4 6 6 7	WET MEDIUM DENSE ORANGE COARSE TO FINE SAND W/TRACE OF SILT AND FINE GRAVEL.	A-1-B	
7	12.0 14.0	4 4 4 4	WET LOOSE ORANGE COARSE TO FINE SAND W/SOME FINE GRAVEL AND SILT.	A-1-B	
8	14.0 16.0	1 2 2 2	SATURATED SOFT ORANGE SILTY CLAY W/SOME FINE SAND, TRACE OF COARSE SAND.	A-6(13)	
9	16.0 18.0	3 2 2 2	SATURATED SOFT ORANGE SILTY FINE SANDY CLAY W/TRACE OF COARSE SAND.	A-6(7)	
U-1	18.0 24.0				
10	24.0 29.0	1 1 2 2	SATURATED SOFT GRAY ORGANIC COARSE TO FINE SANDY CLAY W/SOME SILT.	A-6(3)	
11	29.0 34.0	3 4 10 11	SATURATED MEDIUM DENSE GRAY SILTY FINE SAND W/TRACE OF COARSE SAND.	A-2-4(0)	
12	34.0 39.0	4 7 7 14	SATURATED MEDIUM DENSE ORANGE SILTY FINE TO COARSE SAND W/TRACE OF FINE GRAVEL.	A-2-4(0)	
13	39.0 44.0	41 50	SATURATED VERY DENSE BROWN COARSE TO FINE SAND W/TRACE OF FINE GRAVEL AND SILT.	A-1-B	
14	44.0 49.0	4 6 6 6	SATURATED STIFF GRAY FINE SANDY SILT W/SOME COARSE SAND, TRACE OF FINE GRAVEL.	A-4(0)	
15	49.0 54.0	4 5 7 8	SATURATED STIFF GRAY FINE SANDY SILT W/SOME COARSE SAND.	A-4(0)	
16	54.0 59.0	4 5 5 6	SATURATED STIFF GRAY FINE SANDY SILT W/SOME ORGANIC MATTER, TRACE OF COARSE SAND.	A-4(0)	
17	59.0 64.0	5 6 9 11	SATURATED STIFF GRAY FINE SANDY SILT W/SOME ORGANIC MATTER, TRACE OF COARSE SAND.	A-4(0)	
18	64.0 69.0	4 4 5 7	SATURATED STIFF GRAY FINE SANDY SILT W/SOME ORGANIC MATTER, TRACE OF COARSE SAND.	A-4(0)	
19	69.0 74.0	39 50	SATURATED VERY DENSE BROWN COARSE TO FINE SAND W/SOME SILT, TRACE OF FINE GRAVEL.	A-1-B	
20	74.0 79.0	50	SATURATED DENSE ORANGE COARSE TO FINE SAND W/TRACE OF FINE GRAVEL AND SILT.	A-1-B	
21	79.0 84.0	4 6 6 6	SATURATED STIFF GRAY ORGANIC CLAYEY FINE SANDY SILT W/SOME COARSE SAND.	A-4(3)	
22	84.0 89.0	4 5 6 7	SATURATED STIFF GRAY ORGANIC FINE TO COARSE SANDY CLAY W/SOME SILT.	A-7-5(4)	
23	89.0 94.0	4 5 7 8	SATURATED MEDIUM DENSE GRAY SILTY FINE SAND W/SOME ORGANIC MATTER, TRACE OF COARSE SAND.	A-2-4(0)	
24	94.0 99.0	8 10 11 15	SATURATED MEDIUM DENSE GRAY FINE SAND W/SOME SILT, TRACE OF ORGANIC MATTER AND COARSE SAND.	A-2-4(0)	
25	99.0 101.0	8 12 17 23	SATURATED MEDIUM DENSE GRAY SILTY FINE SAND W/TRACE OF COARSE SAND AND ORGANIC MATTER.	A-2-4(0)	
			END BORING.		

BORING: S-20 | **DATE DRILLED:** 7/17/12
STATION: 1108+87.5 | **OFFSET:** 40.3 RT | **ELEVATION:** | **NORTHING:** 415477.228 | **EASTING:** 621258.011
COMMENTS: N/A

NO.	DEPTH	BLOWS /6"	DESCRIPTION	CLASS /G.I.	REMARKS
1	0.0 2.0	6 8 10 8	MOIST VERY STIFF TAN COARSE TO FINE SANDY SILT W/TRACE OF COARSE SAND AND CLAY.	A-4(0)	
2	2.0 4.0	5 6 20 16	MOIST MEDIUM DENSE TAN SILTY COARSE TO FINE SAND W/SOME FINE GRAVEL AND CLAY.	A-2-4(0)	
3	4.0 6.0	7 8 9 13	WET MEDIUM DENSE BROWN COARSE SAND W/SOME FINE SAND AND FINE GRAVEL, TRACE OF SILT.	A-1-B	
4	6.0 8.0	20 16 15 14	WET DENSE BROWN COARSE SAND W/SOME FINE SAND, TRACE OF FINE GRAVEL AND SILT.	A-1-B	
5	8.0 10.0	9 15 9 6	WET MEDIUM DENSE BROWN SILTY COARSE SAND W/SOME FINE SAND, TRACE OF FINE GRAVEL.	A-1-B	
6	10.0 12.0	4 4 5 4	SATURATED STIFF GRAYISH BROWN ORGANIC CLAYEY COARSE TO FINE SANDY SILT.	A-4(0)	
7	12.0 14.0	2 2 6 6	SATURATED LOOSE GRAY ORGANIC SILTY FINE TO COARSE SAND.	A-2-4(0)	
8	14.0 16.0	6 6 6 6	SATURATED MEDIUM DENSE GRAY ORGANIC CLAYEY COARSE SAND W/SOME FINE SAND AND SILT.	A-2-6(0)	
9	16.0 18.0	5 6 7 8	SATURATED STIFF GRAY ORGANIC COARSE TO FINE SANDY CLAY W/SOME SILT.	A-6(1)	
10	18.0 23.0	4 6 8 10	SATURATED STIFF GRAY ORGANIC CLAYEY COARSE TO FINE SANDY SILT.	A-4(0)	
11	23.0 28.0	5 6 7 6	SATURATED MEDIUM DENSE GRAY SILTY COARSE TO FINE SAND.	A-2-4(0)	
12	28.0 33.0	4 11 13 16	SATURATED MEDIUM DENSE GRAY ORGANIC SILTY FINE TO COARSE SAND.	A-2-4(0)	
13	33.0 38.0	3 7 11 11	SATURATED MEDIUM DENSE BROWN COARSE TO FINE SAND W/TRACE OF FINE GRAVEL AND SILT.	A-1-B	
14	38.0 43.0	20 16 21 21	SATURATED HARD BROWN FINE SANDY SILT W/SOME COARSE SAND.	A-4(0)	
15	43.0 48.0	4 7 11 12	SATURATED MEDIUM DENSE GRAY COARSE TO FINE SAND W/TRACE OF FINE GRAVEL AND SILT.	A-1-B	
16	48.0 53.0	7 9 18 21	SATURATED VERY STIFF GRAY FINE SANDY SILT W/TRACE OF COARSE SAND.	A-4(0)	
17	53.0 58.0	48 50	SATURATED VERY DENSE ORANGE COARSE TO FINE SAND W/TRACE OF FINE GRAVEL AND SILT.	A-1-B	
18	58.0 63.0	20 50	SATURATED VERY DENSE ORANGE COARSE TO FINE SAND W/TRACE OF FINE GRAVEL AND SILT.	A-1-B	
19	63.0 68.0	47 50	SATURATED VERY DENSE ORANGE COARSE SAND W/SOME FINE SAND, TRACE OF FINE GRAVEL AND SILT.	A-1-B	
20	68.0 73.0	29 50	SATURATED VERY DENSE ORANGE COARSE TO FINE SAND W/TRACE OF FINE GRAVEL AND SILT.	A-3	
21A	73.0 74.0	31 16	SATURATED DENSE ORANGE COARSE TO FINE SAND W/SOME SILT, TRACE OF FINE GRAVEL.	A-1-B	
21B	74.0 78.0	17 29	SATURATED HARD GRAY FINE SANDY SILT W/TRACE OF COARSE SAND.	A-4(0)	
22	78.0 83.0	7 9 11 15	SATURATED VERY STIFF GRAY ORGANIC FINE TO COARSE SANDY SILT.	A-4(0)	
23	83.0 88.0	9 10 12 14	SATURATED VERY STIFF GRAY ORGANIC COARSE TO FINE SANDY SILT.	A-4(0)	
24	88.0 93.0	5 9 13 13	SATURATED MEDIUM DENSE GRAY SILTY FINE SAND W/SOME COARSE SAND.	A-2-4(0)	
25	93.0 98.0	8 20 31 26	SATURATED VERY DENSE GRAY FINE SAND W/SOME SILT, TRACE OF COARSE SAND.	A-2-4(0)	
26	98.0 100.0	10 19 27 21	SATURATED DENSE GRAY FINE SAND W/SOME SILT, TRACE OF COARSE SAND.	A-2-4(0)	
			END BORING.		

Y:\KENT\156\BRIDGE\T200411701\PLANS\PUNCHEON RUN - 7 SPAN\B002.DGN

DELAWARE DEPARTMENT OF TRANSPORTATION

ADDENDUMS / REVISIONS

NOT TO SCALE

WEST DOVER CONNECTOR

CONTRACT	BRIDGE NO.	2-156 N&S	BORING LOG BRIDGE SHEET 36 OF 65	SHEET NO.
T200411701	DESIGNED BY: EM			147
COUNTY				TOTAL SHTS.
KENT	CHECKED BY: JNH			320

BORING: S-21 | **DATE DRILLED:** 7/12/12
STATION: 1110+02.5 | **OFFSET:** 50.0 LT | **ELEVATION:** | **NORTHING:** 415617.959 | **EASTING:** 621218.261
COMMENTS: N/A

SAMPLE INFORMATION

NO.	DEPTH	BLOWS /6"	DESCRIPTION	CLASS /G.I.	REMARKS
1	0.0	1, 1, 2, 4	WET VERY LOOSE GRAY SILTY COARSE TO FINE SAND W/TRACE OF FINE GRAVEL.	A-2-4(0)	
	2.0				
2	2.0	6, 5, 4, 5	WET LOOSE BROWN COARSE TO FINE SAND W/TRACE OF FINE GRAVEL AND SILT.	A-1-B	
	4.0				
3	4.0	2, 3, 3, 3	WET LOOSE BROWN COARSE SAND W/SOME FINE SAND, TRACE OF SILT AND FINE GRAVEL.	A-1-B	
	6.0				
4	6.0	2, 3, 3, 3	WET LOOSE BROWN COARSE SAND W/SOME FINE SAND AND SILT, TRACE OF FINE GRAVEL.	A-1-B	
	8.0				
5	8.0	3, 4, 5, 4	SATURATED LOOSE GRAY ORGANIC SILTY FINE TO COARSE SAND.	A-2-4(0)	
	10.0				
6	10.0	3, 3, 4, 4	SATURATED LOOSE GRAY SILTY FINE SAND W/SOME COARSE SAND.	A-2-4(0)	
	12.0				
7	12.0	2, 2, 2, 3	SATURATED VERY LOOSE GRAY SILTY FINE TO COARSE SAND.	A-2-4(0)	
	14.0				
8	14.0	2, 2, 2, 4	NO SIEVE ANALYSIS - INDICATION OF SATURATED SOFT GRAY ORGANIC CLAY.		
	16.0				
9	16.0	3, 3, 4, 5	NO SIEVE ANALYSIS - INDICATION OF SATURATED SOFT GRAY ORGANIC CLAY.		
	18.0				
10	18.0	3, 3, 4, 6	SATURATED LOOSE GRAY ORGANIC CLAYEY COARSE TO FINE SAND W/SOME SILT.	A-2-6(0)	
	23.0				
11	23.0	2, 3, 5, 7	SATURATED LOOSE GRAY ORGANIC CLAYEY COARSE TO FINE SAND W/SOME SILT.	A-2-6(0)	
	28.0				
12	28.0	6, 9, 21, 28	SATURATED MEDIUM DENSE GRAY SILTY FINE TO COARSE SAND.	A-2-4(0)	
	33.0				
13	33.0	9, 23, 36, 50	SATURATED VERY DENSE TAN COARSE TO FINE SAND W/TRACE OF FINE GRAVEL AND SILT.	A-1-B	
	38.0				
14	38.0	40, 33, 26, 31	SATURATED VERY DENSE TAN FINE TO COARSE SAND W/TRACE OF SILT AND FINE GRAVEL.	A-3	
	43.0				
15	43.0	6, 6, 10, 11	SATURATED VERY STIFF GRAY FINE SANDY SILT W/SOME COARSE SAND.	A-4(0)	
	48.0				
16	48.0	5, 6, 8, 11	SATURATED STIFF GRAY FINE SANDY SILT W/TRACE OF COARSE SAND.	A-4(0)	
	53.0				
17	53.0	5, 5, 8, 9	SATURATED STIFF GRAY FINE SANDY SILT W/SOME COARSE SAND.	A-4(0)	
	58.0				
18	58.0	6, 7, 15, 15	SATURATED MEDIUM DENSE GRAY SILTY FINE SAND W/TRACE OF COARSE SAND.	A-2-4(0)	
	63.0				
19	63.0	19, 37, 40, 32	SATURATED VERY DENSE GRAY FINE SAND W/SOME SILT, TRACE OF COARSE SAND.	A-2-4(0)	
	68.0				
20	68.0	21, 22, 30, 37	SATURATED HARD GRAY FINE SANDY SILT W/TRACE OF COARSE SAND.	A-4(0)	
	73.0				
21	73.0	5, 9, 8, 10	SATURATED VERY STIFF GRAY ORGANIC CLAYEY FINE TO COARSE SANDY SILT.	A-4(0)	
	78.0				
22	78.0	4, 7, 9, 11	SATURATED STIFF GRAY ORGANIC FINE TO COARSE SANDY SILT.	A-4(0)	
	83.0				
23	83.0	10, 17, 14, 16	SATURATED DENSE GRAY FINE SAND W/SOME COARSE SAND AND SILT.	A-2-4(0)	
	88.0				
24	88.0	6, 8, 12, 14	SATURATED MEDIUM DENSE GRAY FINE SAND W/TRACE OF COARSE SAND AND SILT.	A-3	
	93.0				
25	93.0	11, 15, 20, 23	SATURATED DENSE GRAY FINE SAND W/TRACE OF COARSE SAND AND SILT.	A-3	
	98.0				

BORING: S-21 CONT.

SAMPLE INFORMATION

NO.	DEPTH	BLOWS /6"	DESCRIPTION	CLASS /G.I.	REMARKS
26	98.0	7, 13, 24, 30	SATURATED DENSE GRAY FINE SAND W/TRACE OF COARSE SAND AND SILT.	A-3	
	100.0				
			END BORING.		

BORING: S-22 | **DATE DRILLED:** 7/10/12
STATION: 1110+27.5 | **OFFSET:** 40.3 RT | **ELEVATION:** | **NORTHING:** 415606.686 | **EASTING:** 621311.310
COMMENTS: N/A

SAMPLE INFORMATION

NO.	DEPTH	BLOWS /6"	DESCRIPTION	CLASS /G.I.	REMARKS
1	0.0	2, 2, 2, 4	WET SOFT GRAY FINE TO COARSE SAND W/TRACE OF SILT AND FINE GRAVEL.	A-3	
	2.0				
2	2.0	4, 4, 6, 12	WET LOOSE LIGHT GRAY FINE TO COARSE SAND W/TRACE OF FINE GRAVEL AND SILT.	A-1-B	
	4.0				
3	4.0	6, 8, 7, 6	WET MEDIUM DENSE TAN COARSE TO FINE SAND W/TRACE OF FINE GRAVEL AND SILT.	A-1-B	
	6.0				
4	6.0	3, 4, 3, 6	WET LOOSE TAN FINE GRAVEL AND COARSE SAND W/SOME FINE SAND AND SILT.	A-1-B	
	8.0				
5	8.0	2, 1, 4, 4	WET LOOSE TAN COARSE TO FINE SAND W/SOME SILT, TRACE OF FINE GRAVEL.	A-1-B	
	10.0				
6	10.0	3, 3, 4, 4	SATURATED LOOSE GRAY FINE GRAVEL AND COARSE TO FINE SAND W/SOME SILT.	A-1-B	
	12.0				
7	12.0	1, 2, 2, 4	SATURATED VERY LOOSE GRAY SILTY FINE TO COARSE SAND W/TRACE OF FINE GRAVEL.	A-2-4(0)	
	14.0				
8	14.0	1, 2, 2, 4	SATURATED VERY LOOSE GRAY CLAYEY COARSE SAND AND FINE GRAVEL W/SOME FINE SAND AND SILT.	A-2-4(0)	
	16.0				
9	16.0	3, 2, 2, 4	SATURATED VERY LOOSE GRAY ORGANIC CLAYEY FINE GRAVEL W/SOME FINE TO COARSE SAND AND SILT.	A-2-4(0)	
	18.0				
10	18.0	2, 3, 3, 6	SATURATED LOOSE GRAY ORGANIC SILTY FINE TO COARSE SAND.	A-2-4(0)	
	23.0				
U-1	23.0		SATURATED GRAY ORGANIC CLAYEY SILTY FINE TO COARSE SAND.	A-2-4(0)	
	28.0				
12	28.0	6, 3, 6, 7	SATURATED LOOSE GRAY ORGANIC SILTY FINE TO COARSE SAND.	A-2-4(0)	
	33.0				
13	33.0	7, 12, 18, 28	SATURATED DENSE TANNISH BROWN COARSE TO FINE SAND W/TRACE OF FINE GRAVEL AND SILT.	A-1-B	
	38.0				
14	38.0	9, 10, 11, 12	SATURATED MEDIUM DENSE TANNISH BROWN FINE TO COARSE SAND W/TRACE OF FINE GRAVEL AND SILT.	A-3	
	43.0				
15	43.0	4, 4, 8, 12	SATURATED MEDIUM DENSE GRAY COARSE TO FINE SAND W/SOME SILT, TRACE OF FINE GRAVEL.	A-1-B	
	48.0				
16	48.0	5, 8, 7, 13	SATURATED STIFF GRAY FINE TO COARSE SANDY SILT W/TRACE OF FINE GRAVEL.	A-4(0)	
	53.0				
17	53.0	4, 6, 7, 10	SATURATED MEDIUM DENSE GRAY SILTY FINE SAND W/SOME COARSE SAND, TRACE OF FINE GRAVEL.	A-2-4(0)	
	58.0				
18	58.0	9, 13, 17, 18	SATURATED MEDIUM DENSE GRAY FINE SAND W/SOME SILT, TRACE OF COARSE SAND AND FINE GRAVEL.	A-2-4(0)	
	63.0				
19	63.0	15, 50	SATURATED VERY DENSE BROWN FINE TO COARSE SAND W/SOME SILT, TRACE OF FINE GRAVEL.	A-2-4(0)	
	68.0				
20	68.0	50	SATURATED DENSE TAN FINE SAND W/TRACE OF COARSE SAND, SILT AND FINE GRAVEL.	A-3	
	73.0				
21	73.0	50	SATURATED DENSE TAN COARSE TO FINE SAND W/TRACE OF FINE GRAVEL AND SILT.	A-1-B	
	78.0				
22	78.0	3, 7, 11, 18	SATURATED VERY STIFF GRAY ORGANIC FINE SANDY SILT W/SOME COARSE SAND.	A-4(0)	
	83.0				
23	83.0	6, 10, 11, 15	SATURATED VERY STIFF GRAY ORGANIC FINE TO COARSE SANDY SILT.	A-4(0)	
	88.0				
24	88.0	8, 12, 14	SATURATED VERY STIFF GRAY FINE SANDY SILT W/SOME ORGANIC MATTER, TRACE OF COARSE SAND.	A-4(0)	
	93.0				
25	93.0	10, 18, 21, 21	SATURATED DENSE GRAY FINE SAND W/TRACE OF COARSE SAND, SILT AND ORGANIC MATTER.	A-3	
	98.0				

BORING: S-22 CONT.

SAMPLE INFORMATION

NO.	DEPTH	BLOWS /6"	DESCRIPTION	CLASS /G.I.	REMARKS
26	98.0	3, 9, 15, 15	SATURATED MEDIUM DENSE GRAY FINE SAND W/SOME SILT, TRACE OF COARSE SAND AND FINE GRAVEL.	A-2-4(0)	
	100.0				
			END BORING.		

Y:\KENT\156\BRIDGE\T200411701\PLANS\PUNCHEON RUN - 7 SPAN\BOO3.DGN

DELAWARE DEPARTMENT OF TRANSPORTATION

ADDENDUMS / REVISIONS

NOT TO SCALE

WEST DOVER CONNECTOR

CONTRACT	BRIDGE NO.	2-156 N&S	BORING LOG BRIDGE SHEET 37 OF 65	SHEET NO.
T200411701	DESIGNED BY: EM			148
COUNTY				TOTAL SHTS.
KENT	CHECKED BY: JNH			320

BORING: S-23 | **DATE DRILLED:** 7/9/12
STATION: 1111+42.5 | **OFFSET:** 50.0 LT | **ELEVATION:** | **NORTHING:** 415747.416 | **EASTING:** 621271.560
COMMENTS: N/A

SAMPLE INFORMATION

NO.	DEPTH	BLOWS /6"	DESCRIPTION	CLASS /G.I.	REMARKS
1	0.0 2.0	2 1 4 5	MOIST LOOSE BROWNISH GRAY SILTY COARSE TO FINE SAND W/TRACE OF FINE GRAVEL.	A-2-4(0)	
2	2.0 4.0	5 8 10 7	WET MEDIUM DENSE BROWN COARSE TO FINE SAND W/SOME FINE GRAVEL AND SILT.	A-2-4(0)	
3	4.0 6.0	3 2 2 2	WET VERY LOOSE TAN FINE TO COARSE SAND W/SOME SILT.	A-2-4(0)	
4	6.0 8.0	2 1 2 4	WET VERY LOOSE TAN FINE TO COARSE SAND W/SOME SILT.	A-2-4(0)	
5	8.0 10.0	2 1 1 2	WET VERY LOOSE TAN FINE TO COARSE SAND W/SOME SILT.	A-2-4(0)	
6	10.0 12.0	1 2 2 3	WET VERY LOOSE TAN COARSE TO FINE SAND W/SOME SILT.	A-2-4(0)	
7	12.0 14.0	1 1 3 3	WET VERY LOOSE TAN FINE TO COARSE SAND W/SOME SILT.	A-2-4(0)	
8	14.0 16.0	1 1 1 1	WET VERY LOOSE TAN COARSE TO FINE SAND W/SOME SILT.	A-1-B	
9	16.0 18.0	3 6 9 3	WET MEDIUM DENSE TAN COARSE TO FINE SAND W/SOME FINE GRAVEL, TRACE OF SILT.	A-1-B	
U-1	18.0 23.0		SATURATED GRAY ORGANIC CLAYEY FINE TO COARSE SANDY SILT.	A-4(0)	
11	23.0 28.0	3 3 4 6	SATURATED LOOSE GRAY ORGANIC SILTY COARSE TO FINE SAND.	A-2-4(0)	
12	28.0 33.0	4 4 7 9	SATURATED MEDIUM DENSE GRAY ORGANIC SILTY FINE TO COARSE SAND.	A-2-4(0)	
13	33.0 38.0	4 4 11 6	SATURATED MEDIUM DENSE GRAY SILTY FINE SAND W/SOME COARSE SAND.	A-2-4(0)	
14	38.0 43.0	50	SATURATED DENSE TAN FINE TO COARSE SAND W/TRACE OF FINE GRAVEL AND SILT.	A-3	
15	43.0 48.0	7 6 8 10	SATURATED MEDIUM DENSE GRAY FINE TO COARSE SAND W/SOME SILT, TRACE OF FINE GRAVEL.	A-2-4(0)	
16	48.0 53.0	4 4 5 10	SATURATED STIFF GRAY FINE SANDY SILT W/SOME COARSE SAND.	A-4(0)	
17	53.0 58.0	3 6 7 8	SATURATED STIFF GRAY FINE SANDY SILT W/TRACE OF COARSE SAND.	A-4(0)	
18	58.0 63.0	4 5 9 13	SATURATED STIFF GRAY FINE SANDY SILT W/SOME COARSE SAND.	A-4(0)	
19	63.0 68.0	10 20 45 50	SATURATED VERY DENSE GRAY FINE SAND W/TRACE OF COARSE SAND AND SILT.	A-3	
20	68.0 73.0	50	SATURATED DENSE GRAY FINE SAND W/TRACE OF COARSE SAND AND SILT.	A-3	
21	73.0 78.0	4 14 12 16	SATURATED MEDIUM DENSE GRAY SILTY FINE TO COARSE SAND W/TRACE OF ORGANIC MATTER.	A-2-4(0)	
22	78.0 83.0	7 8 8 14	SATURATED VERY STIFF GRAY ORGANIC COARSE TO FINE SANDY SILT.	A-4(0)	
23	83.0 88.0	5 7 8 13	SATURATED STIFF GRAY ORGANIC CLAYEY COARSE TO FINE SANDY SILT.	A-5(0)	
24	88.0 93.0	4 7 13 16	SATURATED MEDIUM DENSE GRAY SILTY FINE SAND W/SOME COARSE SAND.	A-2-4(0)	
25	93.0 98.0	8 11 18 28	SATURATED MEDIUM DENSE GRAY FINE SAND W/TRACE OF COARSE SAND, FINE GRAVEL AND SILT.	A-3	
26	98.0 100.0	6 12 20 34	SATURATED DENSE GRAY FINE SAND W/SOME SILT, TRACE OF COARSE SAND.	A-2-4(0)	
			END BORING.		

BORING: S-24 | **DATE DRILLED:** 7/9/12
STATION: 1111+57.5 | **OFFSET:** 40.3 RT | **ELEVATION:** | **NORTHING:** 415726.897 | **EASTING:** 621360.801
COMMENTS: N/A

SAMPLE INFORMATION

NO.	DEPTH	BLOWS /6"	DESCRIPTION	CLASS /G.I.	REMARKS
1	0.0 2.0	2 5 8 8	MOIST STIFF BROWN CLAYEY SILT W/SOME FINE TO COARSE SAND, TRACE OF FINE GRAVEL.	A-4(2)	
2	2.0 4.0	8 8 11 12	MOIST MEDIUM DENSE TAN SILTY COARSE TO FINE SAND W/TRACE OF FINE GRAVEL.	A-1-B	
3	4.0 6.0	4 5 6 6	WET MEDIUM DENSE TANNISH ORANGE COARSE TO FINE SAND W/SOME SILT, TRACE OF FINE GRAVEL.	A-1-B	
4	6.0 8.0	3 3 3 8	WET LOOSE ORANGE FINE TO COARSE SAND W/SOME SILT.	A-2-4(0)	
5	8.0 10.0	3 2 3 3	WET LOOSE ORANGE FINE TO COARSE SAND W/SOME SILT.	A-2-4(0)	
6	10.0 12.0	4 7 8 9	WET MEDIUM DENSE ORANGE FINE TO COARSE SAND W/SOME SILT.	A-2-4(0)	
7	12.0 14.0	3 3 2 3	WET LOOSE ORANGE FINE TO COARSE SAND W/SOME SILT.	A-2-4(0)	
8	14.0 16.0	4 3 3 3	WET LOOSE ORANGE FINE TO COARSE SAND W/SOME SILT.	A-2-4(0)	
9A	16.0 17.2	4 5	WET LOOSE ORANGE FINE TO COARSE SAND W/SOME SILT AND FINE GRAVEL.	A-2-4(0)	
9B	17.2 18.0	4 5 7 6	SATURATED STIFF ORANGE CLAY W/SOME FINE TO COARSE SAND AND SILT, TRACE OF FINE GRAVEL.	A-7-6(17)	
10	18.0 22.0	2 3 3 3	SATURATED FIRM GRAY ORGANIC COARSE TO FINE SANDY CLAY W/SOME SILT.	A-6(1)	
U-1	22.0 24.0				
11	24.0 29.0	3 7 4 4	SATURATED MEDIUM DENSE GRAY ORGANIC CLAYEY FINE TO COARSE SAND W/SOME SILT.	A-2-4(0)	
12	29.0 34.0	4 7 13 12	SATURATED MEDIUM DENSE GRAY ORGANIC SILTY FINE TO COARSE SAND.	A-2-4(0)	
13	34.0 39.0	5 5 8 7	SATURATED MEDIUM DENSE ORANGE FINE SAND W/SOME SILT, TRACE OF COARSE SAND.	A-2-4(0)	
14	39.0 44.0	11 20 15 17	SATURATED DENSE ORANGE COARSE TO FINE SAND W/TRACE OF FINE GRAVEL AND SILT.	A-1-B	
15	44.0 49.0	6 5 7 8	SATURATED STIFF GRAY ORGANIC FINE SANDY SILT W/SOME COARSE SAND.	A-4(0)	
16	49.0 54.0	4 7 8 10	SATURATED STIFF GRAY ORGANIC FINE SANDY SILT W/SOME CLAY, TRACE OF COARSE SAND.	A-4(0)	
17	54.0 59.0	5 6 10 12	SATURATED MEDIUM DENSE GRAY SILTY FINE SAND W/TRACE OF COARSE SAND AND ORGANIC MATTER.	A-2-4(0)	
18	59.0 64.0	7 11 13 20	SATURATED MEDIUM DENSE GRAY FINE SAND W/SOME SILT, TRACE OF COARSE SAND AND ORGANIC MATTER.	A-2-4(0)	
19	64.0 69.0	7 11 18 20	SATURATED MEDIUM DENSE GRAY FINE SAND W/SOME SILT, TRACE OF COARSE SAND AND ORGANIC MATTER.	A-2-4(0)	
20	69.0 74.0	37 50	SATURATED VERY DENSE BROWN FINE SAND W/SOME COARSE SAND, TRACE OF SILT AND FINE GRAVEL.	A-3	
21	74.0 79.0	50	NO RECOVERY		
22	79.0 84.0	3 6 7 8	SATURATED STIFF GRAY ORGANIC COARSE TO FINE SANDY SILT.	A-5(0)	
23	84.0 89.0	2 6 8 7	SATURATED STIFF GRAY ORGANIC CLAYEY FINE TO COARSE SANDY SILT.	A-5(2)	
24	89.0 94.0	4 6 8 9	SATURATED MEDIUM DENSE GRAY ORGANIC SILTY FINE SAND W/SOME COARSE SAND.	A-2-4(0)	
25	94.0 99.0	7 15 16 18	SATURATED DENSE GRAY FINE SAND W/SOME SILT, TRACE OF COARSE SAND AND ORGANIC MATTER.	A-2-4(0)	

BORING: S-24 CONT.

SAMPLE INFORMATION

NO.	DEPTH	BLOWS /6"	DESCRIPTION	CLASS /G.I.	REMARKS
26	99.0 101.0	7 8 13 16	SATURATED MEDIUM DENSE GRAY FINE SAND W/SOME SILT, TRACE OF COARSE SAND AND ORGANIC MATTER.	A-2-4(0)	
			END BORING.		

Y:\KENT\156\BRIDGE\T200411701\PLANS\PUNCHEON RUN - 7 SPAN\BO04.DGN

DELAWARE DEPARTMENT OF TRANSPORTATION

ADDENDUMS / REVISIONS

NOT TO SCALE

WEST DOVER CONNECTOR

CONTRACT	BRIDGE NO.	2-156 N&S	BORING LOGS BRIDGE SHEET 38 OF 64	SHEET NO.
T200411701	DESIGNED BY: EM			149
COUNTY				TOTAL SHTS.
KENT	CHECKED BY: JNH			320

BORING: S-27 | **DATE DRILLED:** 6/28/12
STATION: 1114+20.8 | **OFFSET:** 50.0 LT | **ELEVATION:** | **NORTHING:** 416004.713 | **EASTING:** 621377.490
COMMENTS: N/A

SAMPLE INFORMATION					
NO.	DEPTH	BLOWS /6"	DESCRIPTION	CLASS /G.I.	REMARKS
1	0.0 2.0	10 13 17 23	MOIST SOFT BROWN FINE TO COARSE SANDY SILT W/TRACE OF FINE GRAVEL AND CLAY.	A-4(0)	
2	2.0 4.0	15 13 8 6	MOIST VERY STIFF BROWN FINE SANDY SILT W/SOME COARSE SAND AND CLAY.	A-4(0)	
3	4.0 6.0	8 9 9 13	WET MEDIUM DENSE BROWN COARSE TO FINE SAND W/SOME FINE GRAVEL, TRACE OF SILT.	A-1-B	
4	6.0 8.0	14 14 11 12	WET MEDIUM DENSE BROWN COARSE SAND W/SOME FINE GRAVEL, FINE SAND AND SILT.	A-1-B	
5	8.0 10.0	6 6 4 4	WET LOOSE BROWN FINE SAND W/SOME COARSE SAND AND SILT, TRACE OF FINE GRAVEL.	A-2-4(0)	
6	10.0 12.0	2 2 5 6	WET LOOSE BROWN FINE SAND W/SOME COARSE SAND AND SILT.	A-2-4(0)	
7	12.0 14.0	2 1 3 5	WET VERY LOOSE ORANGE FINE TO COARSE SAND W/SOME SILT, TRACE OF FINE GRAVEL.	A-2-4(0)	
8	14.0 16.0	1 2 2 2	WET VERY LOOSE ORANGE FINE SAND W/SOME COARSE SAND AND SILT, TRACE OF FINE GRAVEL.	A-2-4(0)	
9	16.0 18.0	2 3 3 7	WET LOOSE ORANGE FINE SAND W/SOME SILT, TRACE OF COARSE SAND.	A-2-4(0)	
10	18.0 23.0	2 2 3 4	WET LOOSE ORANGE FINE TO COARSE SAND W/SOME SILT, TRACE OF FINE GRAVEL.	A-2-4(0)	
11	23.0 28.0	14 7 6 7	SATURATED STIFF GRAY CLAY W/SOME FINE TO COARSE SAND, FINE GRAVEL AND SILT.	A-6(3)	
12	28.0 33.0	5 6 6 10	NO SIEVE ANALYSIS - INDICATION OF SATURATED STIFF GRAY CLAY.		
13A	33.0 34.0	10 11	NO SIEVE ANALYSIS - INDICATION OF SATURATED MEDIUM DENSE GRAY SILTY SAND.		
13B	34.0 38.0	8 12	SATURATED MEDIUM DENSE ORANGE FINE SAND W/TRACE OF COARSE SAND, FINE GRAVEL AND SILT.	A-3	
14	38.0 43.0	41 50	SATURATED VERY DENSE ORANGE FINE TO COARSE SAND W/TRACE OF SILT AND FINE GRAVEL.	A-3	
15	43.0 48.0	15 16 11 12	SATURATED MEDIUM DENSE GRAY FINE TO COARSE SAND W/SOME SILT, TRACE OF FINE GRAVEL.	A-2-4(0)	
16	48.0 53.0	6 8 10 10	SATURATED MEDIUM DENSE GRAY SILTY FINE SAND W/SOME COARSE SAND, TRACE OF FINE GRAVEL.	A-2-4(0)	
17	53.0 58.0	6 8 9 11	SATURATED MEDIUM DENSE GRAY SILTY FINE SAND W/SOME COARSE SAND.	A-2-4(0)	
18	58.0 63.0	17 36 50	SATURATED VERY DENSE GRAY FINE SAND W/SOME COARSE SAND AND SILT, TRACE OF FINE GRAVEL.	A-2-4(0)	
19	63.0 68.0	50	SATURATED DENSE BROWN FINE TO COARSE SAND W/TRACE OF FINE GRAVEL AND SILT.	A-3	
20	68.0 73.0	50	SATURATED DENSE ORANGE COARSE TO FINE SAND W/TRACE OF SILT.	A-1-B	
21	73.0 78.0	50	SATURATED DENSE ORANGE FINE TO COARSE SAND W/TRACE OF SILT AND FINE GRAVEL.	A-3	
22	78.0 83.0	11 11 18 19	SATURATED MEDIUM DENSE GRAY ORGANIC SILTY FINE TO COARSE SAND.	A-2-4(0)	
23	83.0 88.0	7 8 11 13	NO SIEVE ANALYSIS - INDICATION OF SATURATED MEDIUM DENSE GRAY ORGANIC SILTY SAND.		
24	88.0 93.0	15 20 14 16	SATURATED DENSE GRAY FINE SAND W/SOME COARSE SAND, TRACE OF SILT.	A-3	
25	93.0 98.0	8 12 19 25	SATURATED DENSE GRAY SILTY FINE SAND W/TRACE OF COARSE SAND.	A-2-4(0)	
26	98.0 100.0	5 8 13 20	SATURATED MEDIUM DENSE GRAY FINE SAND W/TRACE OF COARSE SAND, SILT AND FINE GRAVEL.	A-3	
			END BORING.		

BORING: S-28 | **DATE DRILLED:** 7/2/12
STATION: 1114+20.8 | **OFFSET:** 40.3 RT | **ELEVATION:** | **NORTHING:** 415970.323 | **EASTING:** 621461.021
COMMENTS: N/A

SAMPLE INFORMATION					
NO.	DEPTH	BLOWS /6"	DESCRIPTION	CLASS /G.I.	REMARKS
1	0.0 2.0	10 13 16 16	MOIST MEDIUM DENSE BROWN SILTY COARSE TO FINE SAND W/SOME FINE GRAVEL.	A-2-4(0)	
2	2.0 4.0	13 10 11 11	MOIST MEDIUM DENSE TAN COARSE TO FINE SAND W/TRACE OF FINE GRAVEL AND SILT.	A-1-B	
3	4.0 6.0	9 5 3 3	WET LOOSE BROWN FINE TO COARSE SAND W/SOME SILT, TRACE OF FINE GRAVEL.	A-2-4(0)	
4	6.0 8.0	2 3 3 5	WET LOOSE BROWN FINE SAND W/SOME COARSE SAND AND SILT.	A-2-4(0)	
5	8.0 10.0	4 2 2 4	WET VERY LOOSE BROWN FINE TO COARSE SAND W/SOME SILT.	A-2-4(0)	
6	10.0 12.0	1 3 3 4	WET LOOSE BROWN FINE TO COARSE SAND W/SOME SILT.	A-2-4(0)	
7	12.0 14.0	1 1 1 2	WET VERY LOOSE BROWN FINE TO COARSE SAND W/SOME SILT.	A-2-4(0)	
8	14.0 16.0	1 1 2 3	WET VERY LOOSE BROWN COARSE TO FINE SAND W/SOME FINE GRAVEL AND SILT.	A-1-B	
9	16.0 18.0	6 8 7 6	WET MEDIUM DENSE BROWN COARSE SAND W/SOME FINE GRAVEL, TRACE OF FINE SAND AND SILT.	A-1-B	
10	18.0 23.0	6 6 8 8	WET MEDIUM DENSE BROWN COARSE SAND AND FINE GRAVEL W/TRACE OF FINE SAND AND SILT.	A-1-B	
11	23.0 28.0	4 8 9 12	NO RECOVERY		
12	28.0 33.0	4 6 12 15	WET MEDIUM DENSE GRAY ORGANIC FINE TO COARSE SAND W/SOME SILT.	A-2-4(0)	
13	33.0 38.0	5 8 18 12	WET MEDIUM DENSE GRAY ORANGE SILTY FINE TO COARSE SAND.	A-2-4(0)	
14	38.0 43.0	30 50	WET VERY DENSE GRAY FINE TO COARSE SAND W/TRACE OF SILT AND FINE GRAVEL.	A-3	
15	43.0 48.0	11 8 12 13	WET MEDIUM DENSE BROWN FINE TO COARSE SAND W/TRACE OF SILT AND FINE GRAVEL.	A-3	
16	48.0 53.0	7 10 7 9	SATURATED VERY STIFF GRAY FINE SANDY SILT W/SOME COARSE SAND.	A-4(0)	
17	53.0 58.0	10 10 15 21	SATURATED MEDIUM DENSE GRAY FINE SAND W/SOME SILT, TRACE OF COARSE SAND.	A-2-4(0)	
18	58.0 63.0	50	SATURATED DENSE TANNISH BROWN FINE TO COARSE SAND W/TRACE OF FINE GRAVEL AND SILT.	A-3	
19	63.0 68.0	41 50	SATURATED VERY DENSE TANNISH BROWN COARSE SAND W/SOME FINE SAND, TRACE OF FINE GRAVEL AND SILT.	A-1-B	
20	68.0 73.0	50	SATURATED DENSE LIGHT GRAY FINE TO COARSE SAND W/TRACE OF SILT AND FINE GRAVEL.	A-3	
21	73.0 78.0	50	SATURATED DENSE BROWN FINE TO COARSE SAND W/TRACE OF FINE GRAVEL AND SILT.	A-3	
22	78.0 83.0	6 5 9 11	SATURATED STIFF GRAY ORGANIC FINE TO COARSE SANDY CLAY W/SOME SILT.	A-7-6(8)	
23	83.0 88.0	6 7 16 22	SATURATED MEDIUM DENSE GRAY SILTY FINE SAND W/TRACE OF COARSE SAND.	A-2-4(0)	
24	88.0 93.0	14 20 19 19	SATURATED DENSE GRAY FINE SAND W/SOME COARSE SAND, TRACE OF SILT.	A-3	
25	93.0 98.0	10 19 32 35	SATURATED VERY DENSE GRAY FINE SAND W/SOME SILT, TRACE OF COARSE SAND.	A-2-4(0)	
26	98.0 100.0	9 14 22 31	SATURATED DENSE GRAY FINE SAND W/SOME SILT, TRACE OF COARSE SAND.	A-2-4(0)	
			END BORING.		

Y:\KENT\156\BRIDGE\T200411701\PLANS\PUNCHEON RUN - 7 SPAN\B005.DGN

DELAWARE DEPARTMENT OF TRANSPORTATION

ADDENDUMS / REVISIONS

NOT TO SCALE

WEST DOVER CONNECTOR

CONTRACT	BRIDGE NO.	2-156 N&S	BORING LOGS BRIDGE SHEET 39 OF 64	SHEET NO.
T200411701	DESIGNED BY: EM			150
COUNTY				TOTAL SHTS.
KENT	CHECKED BY: JNH			320