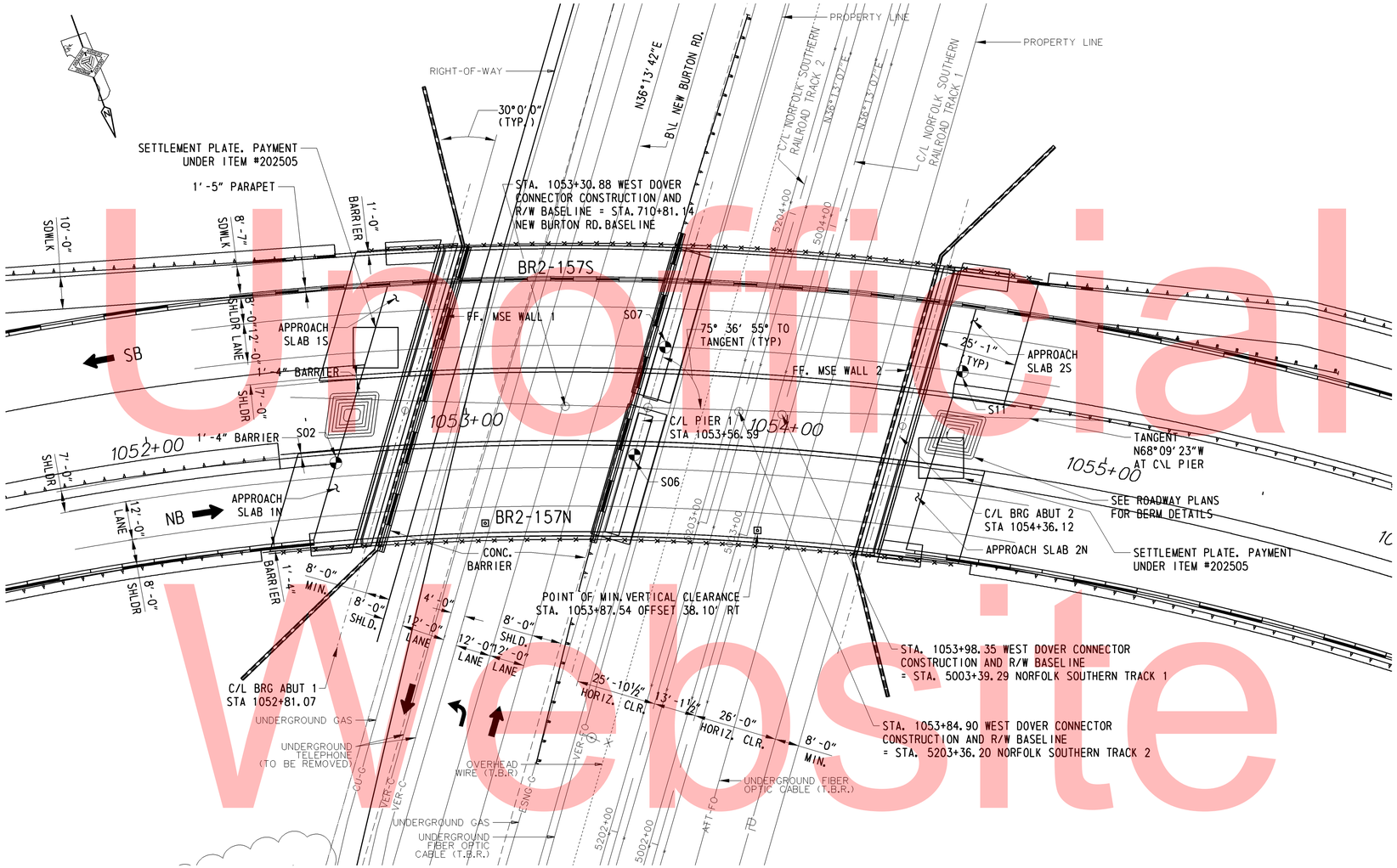

PLAN

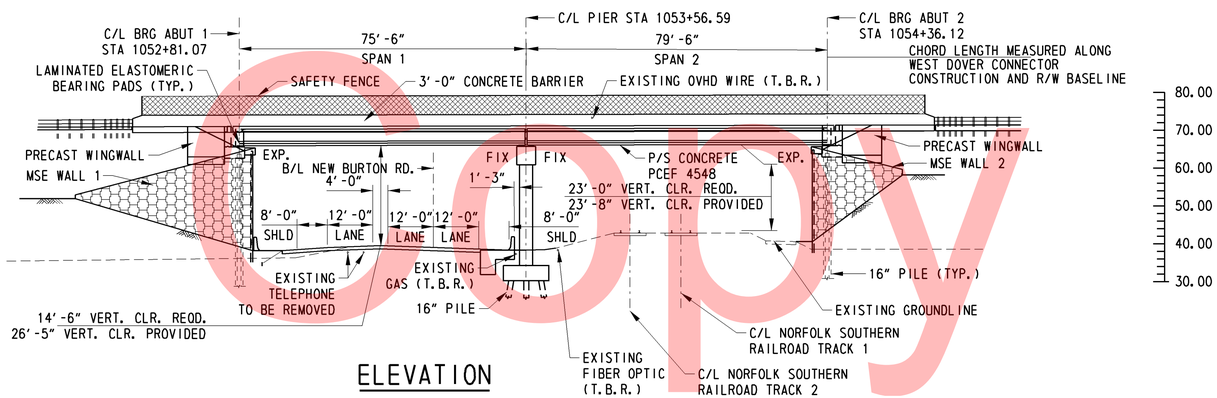

ELEVATION

LEGEND

T.B.R. TO BE RELOCATED

Unofficial Website Copy

DELAWARE DEPARTMENT OF TRANSPORTATION	ADDENDUMS / REVISIONS	SCALE 0 20 40 60 FEET	WEST DOVER CONNECTOR	CONTRACT T200411701	BRIDGE NO. 2-157 N&S	BRIDGE PLAN AND ELEVATION BRIDGE SHEET 40 OF 65	SHEET NO. 151
				COUNTY KENT	DESIGNED BY: EM		TOTAL SHTS. 320
					CHECKED BY: JNH		

Y:\KENT2\BRIDGE\T200411701\PLANS\FROM AECOM\WORKSPACE\PROJECTS\WEST DOVER CONNECTOR - NEW BURTON RD\DGN\PE-001-BURTON.DGN

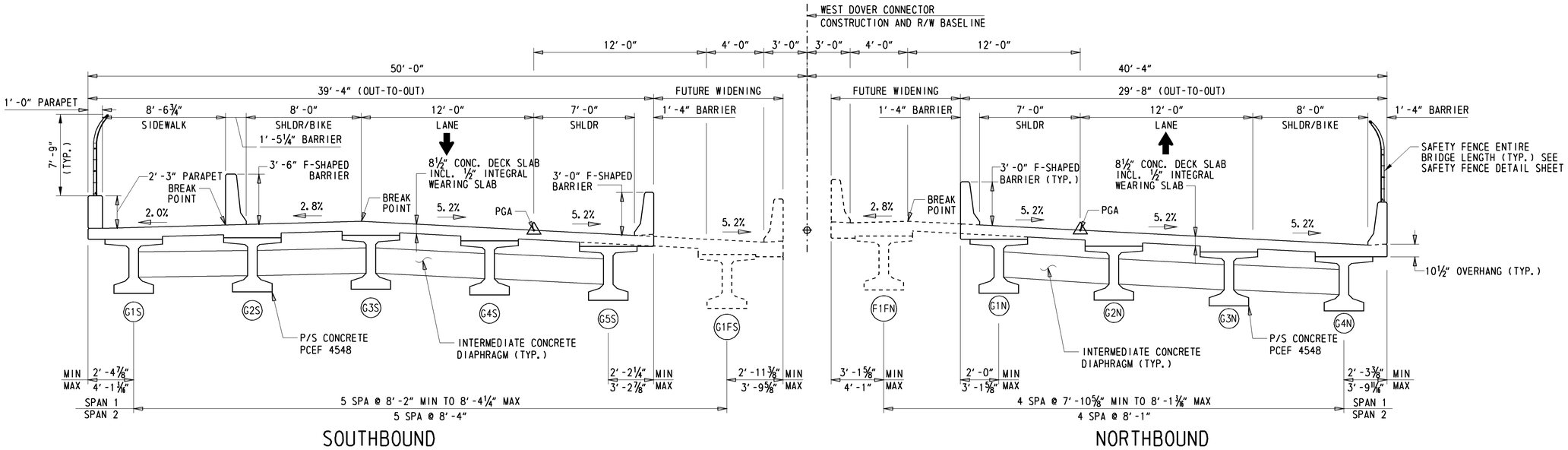

TYPICAL SECTION

SCALE: 1/4" = 1'-0"

NOTE: ALL DIMENSIONS SHOWN ABOVE ROADWAY ARE RADIAL DIMENSIONS.
ALL DIMENSIONS SHOWN BELOW ROADWAY ARE PERPENDICULAR TO GIRDERS.

ESTIMATED CONTRACT QUANTITIES FOR BR 2-157

ITEM #	DESCRIPTION	UNIT	PROPOSAL
207000	EXCAVATION AND BACKFILL FOR STRUCTURES	CY	610.00
209003	BORROW, TYPE C	CY	3545.00
210000	FURNISHING BORROW TYPE C FOR STRUCTURE BACKFILL	CY	210.00
602001	PCC MASONRY, CLASS A	CY	185.00
602003	PCC MASONRY, ABUTMENT FOOTING, CLASS A	CY	153.00
602006	PCC MASONRY, PIER FOOTING, CLASS B	CY	160.00
602007	PCC MASONRY, PIER ABOVE FOOTING, CLASS A	CY	155.00
602009	PCC MASONRY, APPROACH SLAB, CLASS A	CY	225.00
602013	PCC MASONRY, SUPERSTRUCTURE, CLASS D	CY	442.00
602015	PCC MASONRY, ABUTMENT ABOVE FOOTING, CLASS A	CY	55.00
602017	PCC MASONRY, PARAPET, CLASS A	CY	145.00
602553	MECHANICALLY STABILIZED EARTH WALLS, WALL 1	SF	8175.00
602646	SILICONE ACRYLIC CONCRETE SEALER	SF	14690.00
604000	BAR REINFORCEMENT, EPOXY COATED	LB	315950.00
605511	PREFABRICATED EXPANSION JOINT SYSTEM	LF	145.00
608000	COARSE AGGREGATE FOR FOUNDATION STABILIZATION	TON	200.00
618042	FURNISH CAST-IN-PLACE CONCRETE PILES, 16"	LF	4442.00
618047	FURNISH CAST-IN-PLACE CONCRETE TEST PILES, 16"	LF	585.00
618082	FURNISH PRECAST PRESTRESSED CONCRETE PILE, 16"x16", ALT.	LF	5924.00
618092	FURNISH PRECAST PRESTRESSED CONCRETE TEST PILE, 16"x16", ALT.	LF	740.00
619022	INSTALL CAST-IN-PLACE CONCRETE PILES, 16"	LF	4442.00
619026	INSTALL CAST-IN-PLACE CONCRETE TEST PILE, 16"	LF	585.00
619062	INSTALL PRECAST PRESTRESSED CONCRETE PILES, 16"x16", ALT.	LF	5924.00
619068	INSTALL PRECAST PRESTRESSED CONCRETE TEST PILES, 16"x16", ALT.	LF	740.00
619519	DYNAMIC PILE TESTING BY CONTRACTOR	EACH	15
623003	PRESTRESSED REINFORCED CONCRETE MEMBERS, BULB T-BEAM	LUMP SUM	1
727507	BRIDGE SAFETY FENCE	LF	425.00

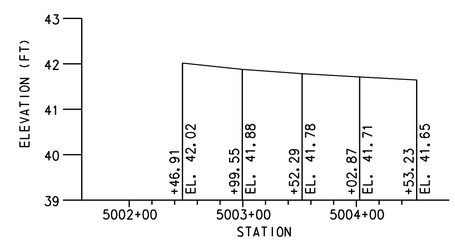

NSRR - EXISTING TOP OF RAIL TRACK 1

NOT TO SCALE

VERTICAL DATA

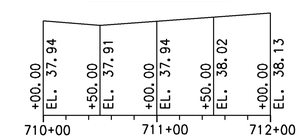

HORIZONTAL DATA

TANGENT

NEW BURTON ROAD

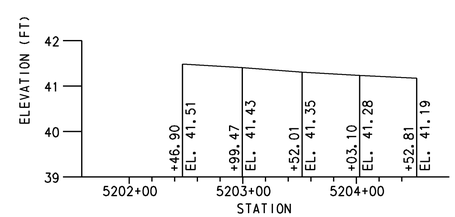

NSRR - EXISTING TOP OF RAIL TRACK 2

NOT TO SCALE

VERTICAL DATA

PVI STA. 1054+00.00
EL. 78.40
VC = 600.00'
M0 = -7.50'
SSD = 359.86'

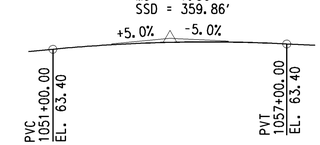

HORIZONTAL DATA

PI STA. 1091+45.67
Δ = 155°02'55"
T = 4067.81
L = 2435.50
R = 900.00
E = 3266.18
SE = 5.2%

WDC GEOMETRY

DELAWARE DEPARTMENT OF TRANSPORTATION	ADDENDUMS / REVISIONS	SCALE: AS NOTED	WEST DOVER CONNECTOR	CONTRACT T200411701 / COUNTY KENT	BRIDGE NO. 2-157 N&S / DESIGNED BY: EM / CHECKED BY: JNH	TYPICAL SECTION & BRIDGE QUANTITIES BRIDGE SHEET 41 OF 65	SHEET NO. 152 / TOTAL SHTS. 320

Y:\KENT2\BRIDGE\T200411701\PLANS\FROM AECOM\WORKSPACE\PROJECTS\WEST DOVER CONNECTOR - NEW BURTON RD\DGN\TS-001-BURTON.DGN

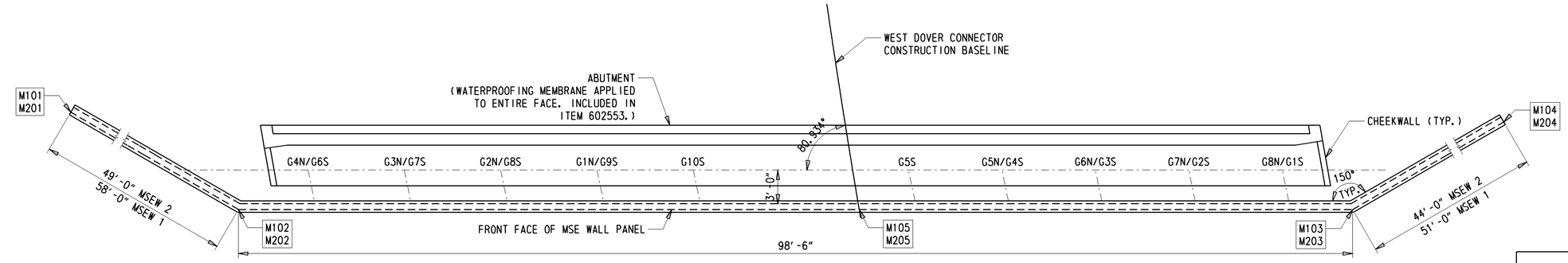

MSE WALL PLAN

3/16" = 1'-0"

MSE WALL 1 WORKING POINTS				
PT.	STATION	OFFSET	NORTHING	EASTING
M101	1052+20.63	R 78.87	411657.74	619024.67
M102	1052+69.31	R 42.75	411634.36	618971.59
M103	1053+01.13	L 50.44	411554.90	618913.37
M104	1052+91.52	L 100.37	411504.20	618907.84
M105	1052+84.77	0+00	411597.79	618944.80
MSE WALL 2 WORKING POINTS				
M201	1054+69.12	L 92.72	411589.02	618730.62
M202	1054+41.15	L 54.16	411608.77	618775.46
M203	1054+24.97	R 42.99	411688.23	618833.67
M204	1054+41.55	R 84.20	411731.97	618838.45
M205	1054+32.57	0+00	411653.04	618807.90

NOTE: POINTS TAKEN AT FRONT FACE OF MSE WALL PANEL.

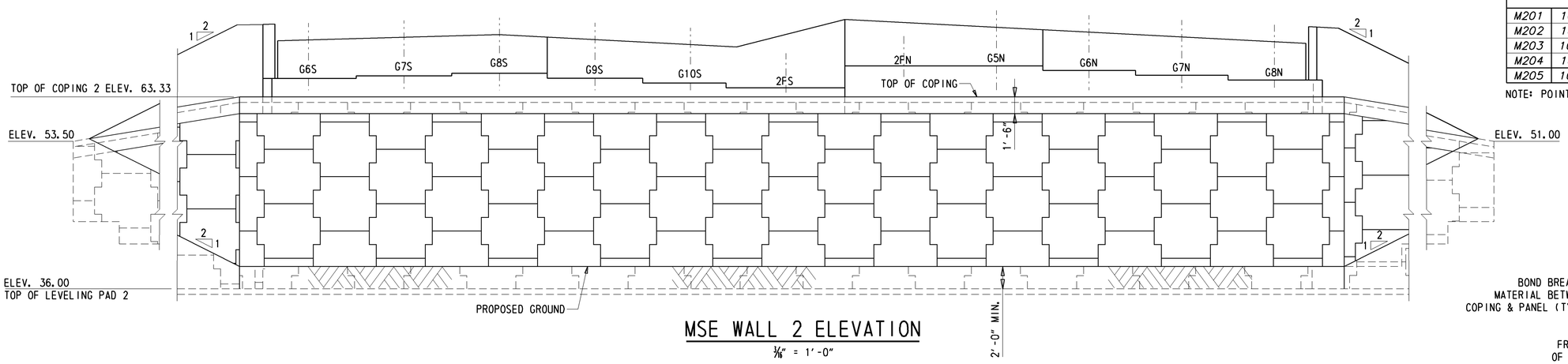

MSE WALL 2 ELEVATION

3/16" = 1'-0"

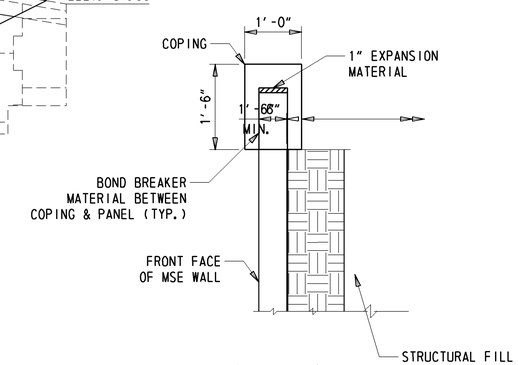

MSE WALL DETAIL

3/4" = 1'-0"

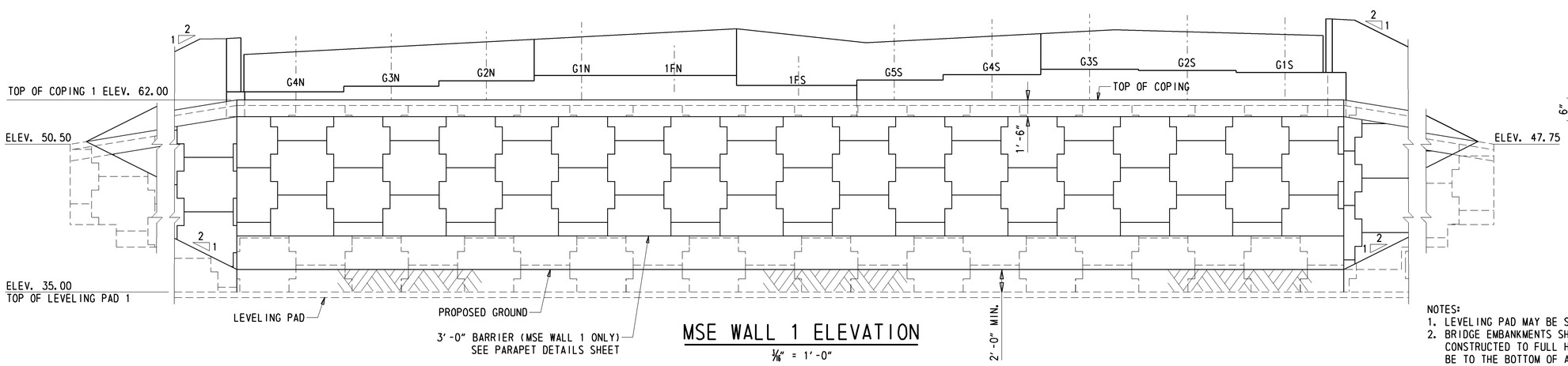

MSE WALL 1 ELEVATION

3/16" = 1'-0"

NOTES:

1. LEVELING PAD MAY BE STEPPED IN NO MORE THAN 2'-0" INCREMENTS.
2. BRIDGE EMBANKMENTS SHALL SIT UNDISTURBED FOR A MINIMUM 30 DAY PERIOD AFTER CONSTRUCTED TO FULL HEIGHT, OR AS DIRECTED BY THE ENGINEER. FULL HEIGHT SHALL BE TO THE BOTTOM OF ABUTMENT FOOTER ELEVATION. ALSO, SETTLEMENT SHALL NOT EXCEED 0.3" PER WEEK BEFORE RESUMING WORK ON THE EMBANKMENT, OR AS DIRECTED BY THE ENGINEER. REFER TO PILE DETAILS FOR SEQUENCE OF CONSTRUCTION NOTES.

Y:\KENT2\BRIDGE\T200411701\PLANS\NEW BURTON RD - 2 SPAN\AB01MSE.DGN

DELAWARE DEPARTMENT OF TRANSPORTATION	ADDENDUMS / REVISIONS	SCALE: AS NOTED	WEST DOVER CONNECTOR	CONTRACT T200411701	BRIDGE NO. 2-157 N&S	MSE WALL DETAILS BRIDGE SHEET 42 OF 65	SHEET NO. 153
				COUNTY KENT	DESIGNED BY: JPN		TOTAL SHTS. 320
					CHECKED BY: EM, JNH		

ABUTMENT 1 WORKING POINTS				
PT.	STATION	OFFSET	NORTHING	EASTING
101	1052+93.91	-51.06	411551.9428	618920.4265
102	1052+77.00	-0.29	411595.2322	618952.1424
103	1052+99.30	-51.24	411553.5352	618914.9557
104	1052+82.69	-0.37	411596.8246	618946.6716
105	1052+76.90	0.00	411595.4843	618952.3271
106	1052+61.50	41.43	411631.0359	618978.3739
107	1052+82.57	0.00	411597.1381	618946.9013
108	1052+67.48	41.44	411632.6162	618972.8943

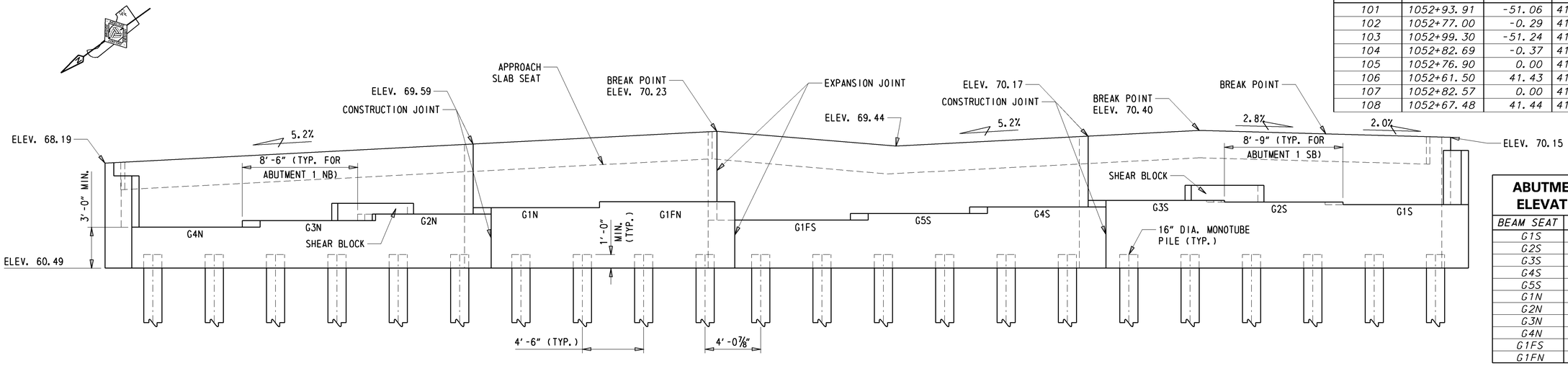

ABUTMENT 1 ELEVATION

¼" = 1'-0"

ABUTMENT 1 BEAM SEAT ELEVATIONS & OFFSETS		
BEAM SEAT	ELEVATION	X OFFSET
G1S	65.15	L 49'-5⅛"
G2S	65.34	L 40'-8⅞"
G3S	65.45	L 32'-0⅝"
G4S	64.97	L 23'-4¼"
G5S	64.49	L 14'-8"
G1N	64.92	R 13'-1¾"
G2N	64.44	R 21'-7⅜"
G3N	63.97	R 30'-0⅞"
G4N	63.49	R 38'-6½"
G1FS	64.02	L 6'-1⅞"
G1FN	65.36	R 4'-10⅝"

NOTE: X IS EQUAL TO THE OFFSET TO CENTERLINE OF A BEAMSEAT FROM THE CONSTRUCTION BASELINE MEASURED ALONG THE CENTERLINE OF THE BEARING.

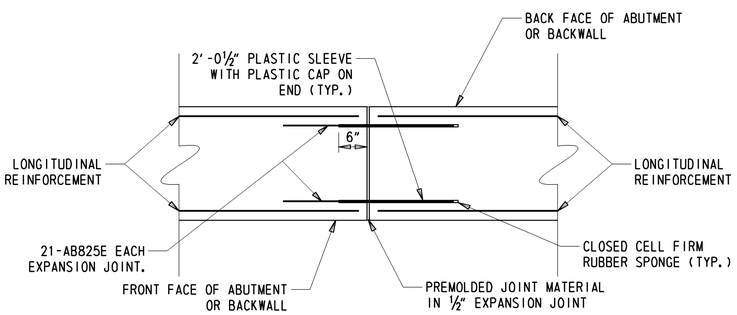

NOTES:
1. PLASTIC SLEEVE, RUBBER SPONGE, AND JOINT MATERIAL SHALL BE INCIDENTAL TO ITEM #604000 - BAR REINFORCING, EPOXY COATED.
2. DETAIL SHALL BE APPLIED AT BARS ON EXTERIOR VERTICAL FACES.

EXPANSION JOINT DETAIL

(PLAN VIEW)

SCALE: N.T.S.

NOTE: THE SHEAR BLOCK DETAILS CAN BE FOUND ON THE ABUTMENT 2 BRIDGE PLAN AND ELEVATION SHEET.

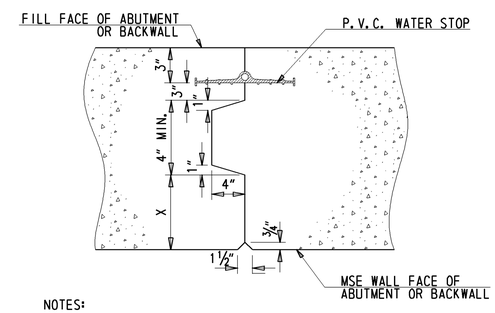

NOTES:
1. "X" SHALL VARY WITH DESIGN DIMENSIONS.
2. REINFORCING SHALL PASS THROUGH CONSTRUCTION JOINT.

CONSTRUCTION JOINT DETAIL

SCALE: N.T.S.

ABUTMENT 1 PILE COORDINATES				
PT.	STATION	OFFSET	NORTHING	EASTING
P101	1052+66.64	R 39.52	411630.55	618973.13
P102	1052+68.25	R 35.29	411626.92	618970.47
P103	1052+69.84	R 31.06	411623.29	618967.81
P104	1052+71.42	R 26.83	411619.66	618965.15
P105	1052+72.99	R 22.59	411616.03	618962.50
P106	1052+74.54	R 18.36	411612.40	618959.84
P107	1052+76.07	R 14.12	411608.77	618957.18
P108	1052+77.59	R 9.87	411605.14	618954.52
P109	1052+79.10	R 5.63	411601.51	618951.86
P110	1052+80.59	R 1.38	411597.88	618949.20
P111	1052+81.93	L 2.47	411594.59	618946.79
P112	1052+83.39	L 6.73	411590.96	618944.13
P113	1052+84.84	L 10.98	411587.33	618941.47
P114	1052+86.28	L 15.24	411583.70	618938.81
P115	1052+87.70	L 19.50	411580.07	618936.15
P116	1052+89.11	L 23.76	411576.44	618933.49
P117	1052+90.51	L 28.02	411572.81	618930.83
P118	1052+91.90	L 32.29	411569.18	618928.17
P119	1052+93.27	L 36.56	411565.55	618925.51
P120	1052+94.63	L 40.83	411561.92	618922.85
P121	1052+95.98	L 45.10	411558.29	618920.19
P122	1052+97.31	L 49.38	411554.66	618917.53

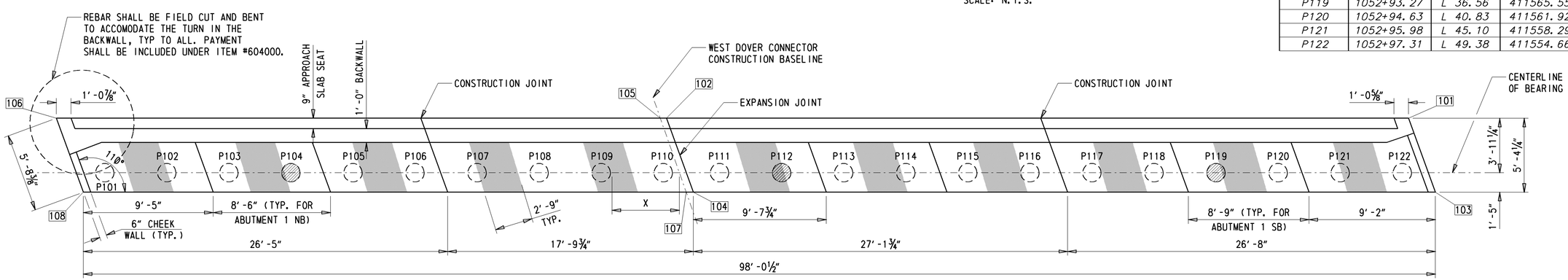

ABUTMENT 1 PLAN

¼" = 1'-0"

LEGEND

LEVEL AREA OF BEAMSEAT -

TEST PILE -

WORKING POINT - 104

DELAWARE DEPARTMENT OF TRANSPORTATION	ADDENDUMS / REVISIONS	SCALE: AS NOTED	WEST DOVER CONNECTOR	CONTRACT T200411701	BRIDGE NO. 2-157 N&S	ABUTMENT 1 PLAN & ELEVATION BRIDGE SHEET 43 OF 65	SHEET NO. 154
				COUNTY KENT	DESIGNED BY: JPN		TOTAL SHTS. 320
					CHECKED BY: EM		

Y:\KENT?\BRIDGE\T200411701\PLANS\NEW BURTON RD - 2 SPAN\AB02.DGN

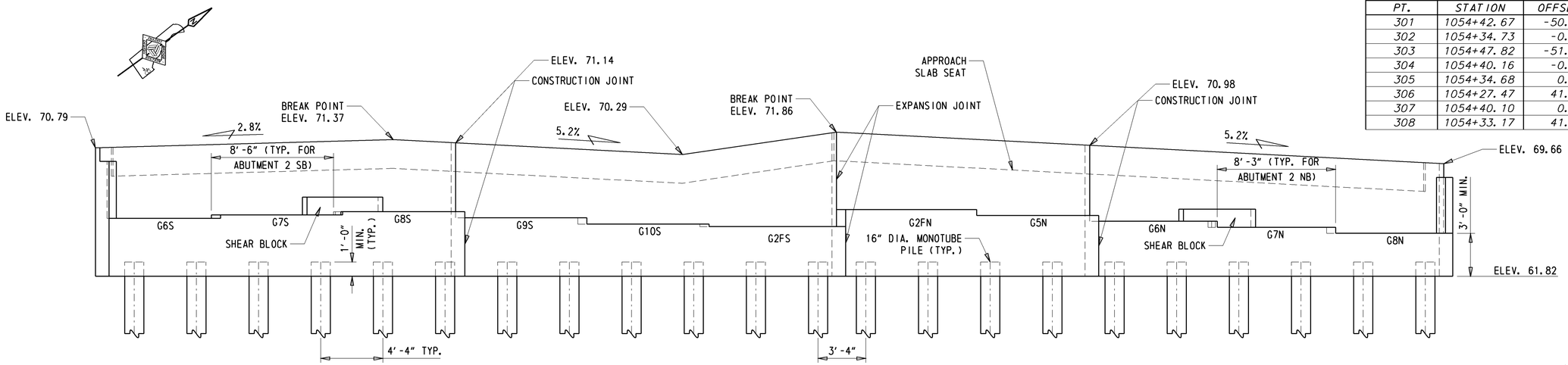

ABUTMENT 2 ELEVATION

¼" = 1'-0"

ABUTMENT 2 WORKING POINTS				
PT.	STATION	OFFSET	NORTHING	EASTING
301	1054+42.67	-50.98	411612.3306	618775.4869
302	1054+34.73	-0.29	411653.7465	618805.8301
303	1054+47.82	-51.10	411614.7334	618770.6098
304	1054+40.16	-0.37	411656.1493	618800.9531
305	1054+34.68	0.00	411653.9868	618806.0062
306	1054+27.47	41.44	411687.8922	618830.8469
307	1054+40.10	0.00	411656.4484	618801.1723
308	1054+33.17	41.41	411690.2950	618825.9699

ABUTMENT 2 BEAM SEAT ELEVATIONS & OFFSETS		
BEAM SEAT	ELEVATION	X OFFSET
G6S	65.86	L 48'-5"
G7S	66.10	L 39'-10⅞"
G8S	66.33	L 31'-4¾"
G9S	65.90	L 22'-10½"
G10S	65.47	L 14'-4⅜"
G5N	66.07	R 12'-11⅛"
G6N	65.66	R 21'-2¼"
G7N	65.24	R 29'-5⅜"
G8N	64.82	R 37'-8½"
G2FS	65.29	L 5'-10⅛"
G2FN	66.48	R 4'-8"

NOTE: X IS EQUAL TO THE OFFSET TO CENTERLINE OF A BEAMSEAT FROM THE CONSTRUCTION BASELINE MEASURED ALONG THE CENTERLINE OF THE BEARING.

ABUTMENT 2 PILE COORDINATES				
PT.	STATION	OFFSET	NORTHING	EASTING
P301	1054+43.74	L 49.03	411614.59	618775.38
P302	1054+43.11	L 44.74	411618.08	618777.94
P303	1054+42.47	L 40.46	411621.58	618780.51
P304	1054+41.82	L 36.18	411625.07	618783.07
P305	1054+41.17	L 31.90	411628.57	618785.63
P306	1054+40.51	L 27.62	411632.06	618788.19
P307	1054+39.85	L 23.34	411635.56	618790.75
P308	1054+39.18	L 19.06	411639.06	618793.31
P309	1054+38.50	L 14.79	411642.55	618795.87
P310	1054+37.82	L 10.51	411646.05	618798.43
P311	1054+37.13	L 6.23	411649.54	618800.99
P312	1054+36.44	L 1.95	411653.04	618803.55
P313	1054+35.90	R 1.33	411655.73	618805.52
P314	1054+35.19	R 5.61	411659.22	618808.09
P315	1054+34.47	R 9.89	411662.72	618810.65
P316	1054+33.75	R 14.16	411666.21	618813.21
P317	1054+33.03	R 18.43	411669.71	618815.77
P318	1054+32.29	R 22.71	411673.20	618818.33
P319	1054+31.55	R 26.98	411676.70	618820.89
P320	1054+30.80	R 31.25	411680.20	618823.45
P321	1054+30.04	R 35.52	411683.69	618826.01
P322	1054+29.28	R 39.79	411687.19	618828.57

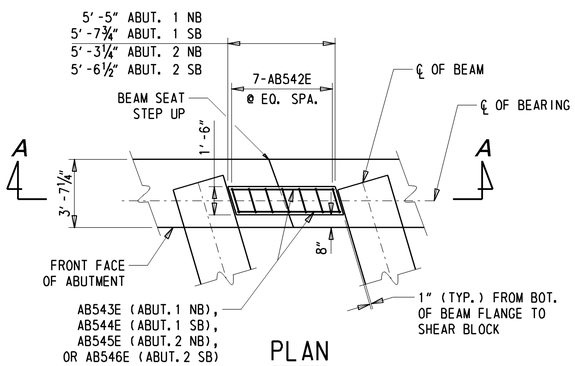

PLAN

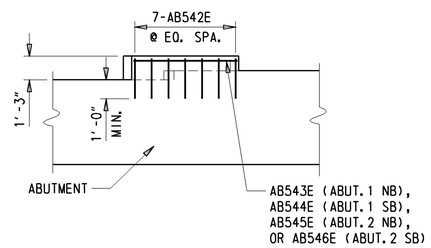

SECTION A-A

SHEAR BLOCK DETAILS

¼" = 1'-0"

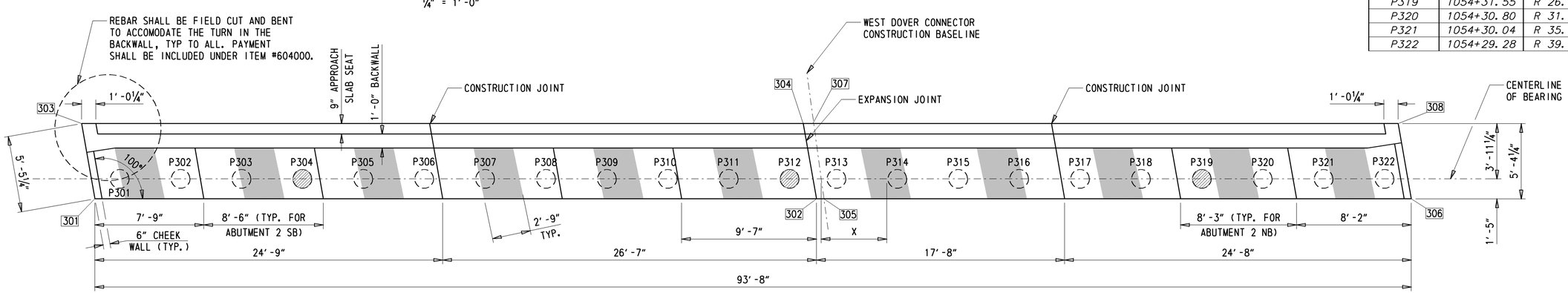

ABUTMENT 2 PLAN

¼" = 1'-0"

LEGEND

LEVEL AREA OF BEAMSEAT -

TEST PILE -

WORKING POINT - 304

DELAWARE DEPARTMENT OF TRANSPORTATION	ADDENDUMS / REVISIONS	SCALE: AS NOTED	WEST DOVER CONNECTOR	CONTRACT T200411701	BRIDGE NO. 2-157 N&S	ABUTMENT 2 PLAN & ELEVATION BRIDGE SHEET 44 OF 65	SHEET NO. 155
				COUNTY KENT	DESIGNED BY: JPN		TOTAL SHTS. 320
					CHECKED BY: EM		

Y:\KENT?\BRIDGE\T200411701\PLANS\NEW BURTON RD - 2 SPAN\AB02.DGN

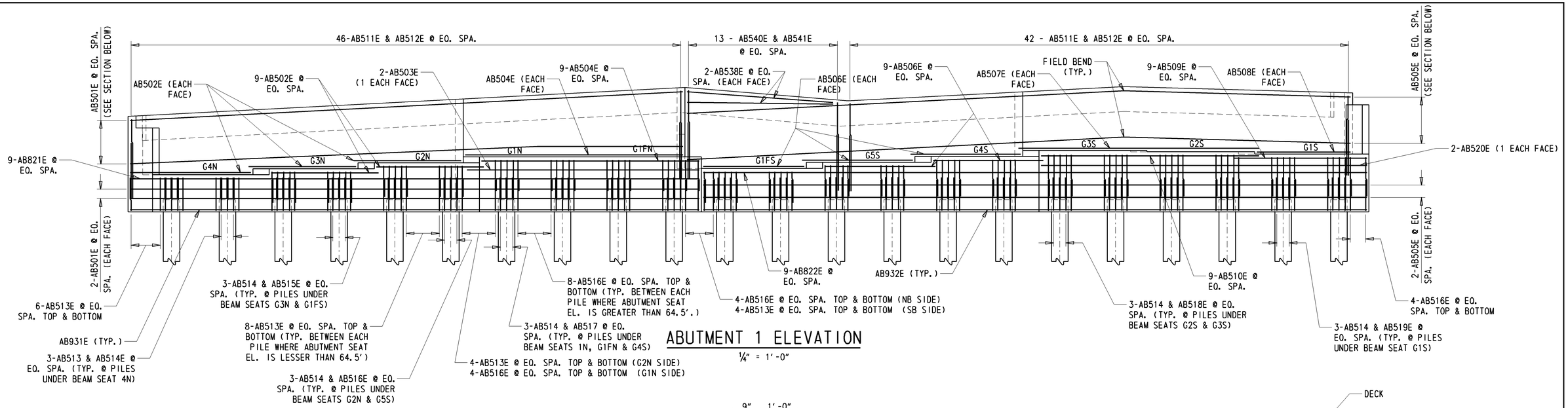

ABUTMENT 1 ELEVATION

¼" = 1'-0"

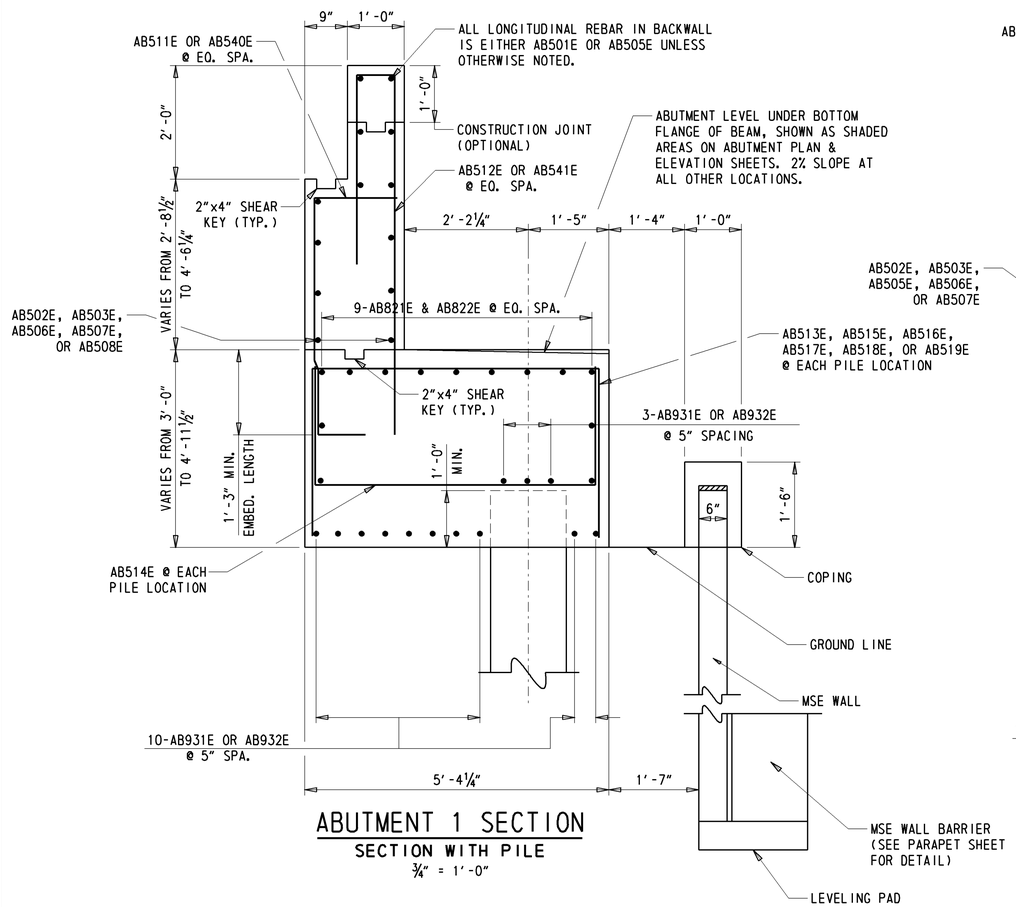

ABUTMENT 1 SECTION

SECTION WITH PILE

¾" = 1'-0"

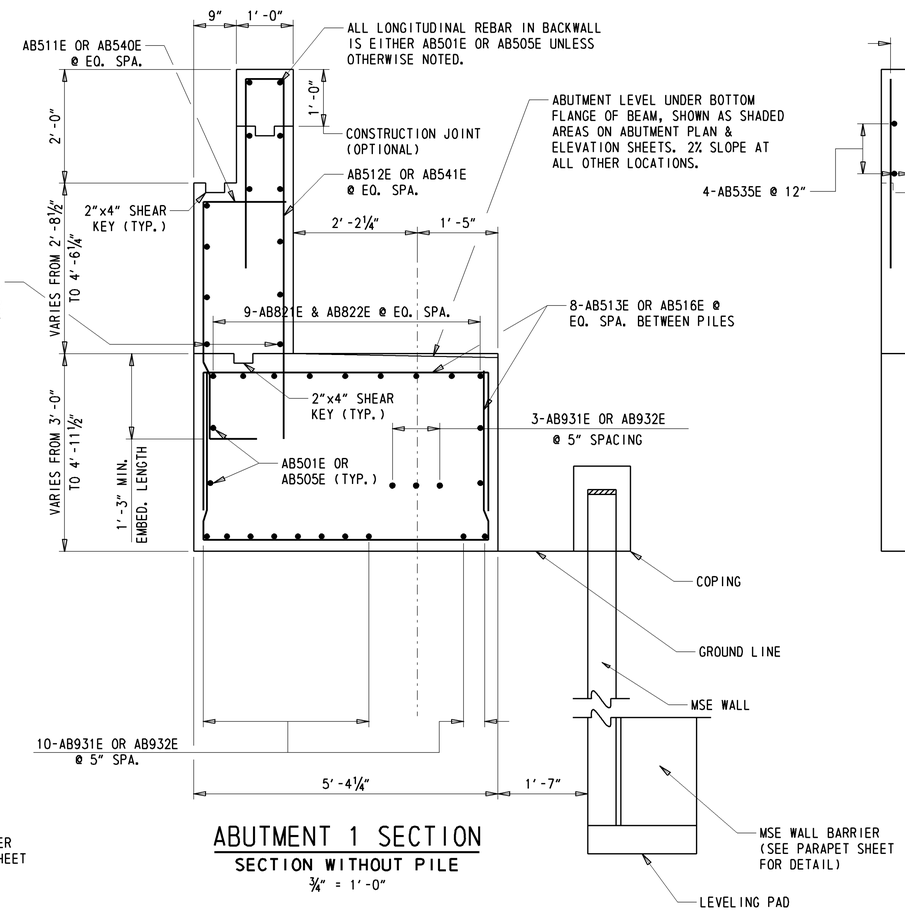

ABUTMENT 1 SECTION

SECTION WITHOUT PILE

¾" = 1'-0"

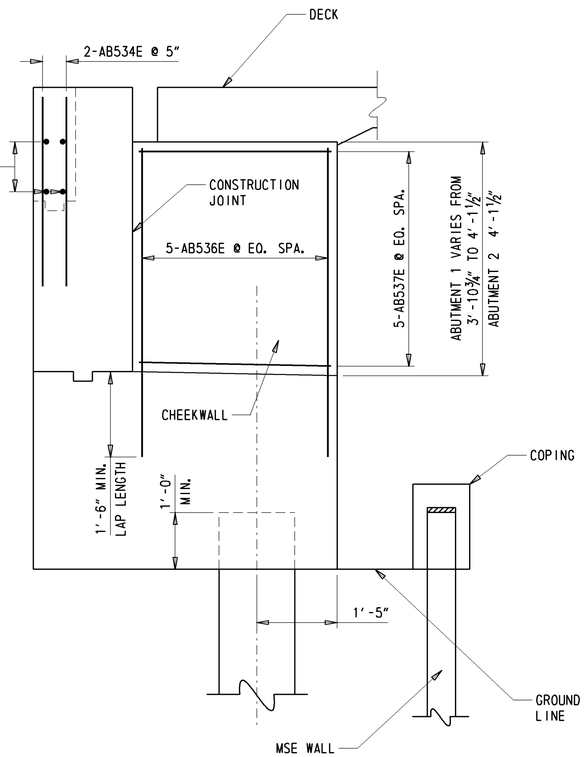

ABUTMENT 1 & 2 SECTION

SECTION AT CHEEK WALL

¾" = 1'-0"

DELAWARE DEPARTMENT OF TRANSPORTATION	ADDENDUMS / REVISIONS	SCALE: AS NOTED	WEST DOVER CONNECTOR	CONTRACT T200411701 / COUNTY KENT	BRIDGE NO. 2-157 N&S / DESIGNED BY: JPN / CHECKED BY: EM	ABUTMENT 1 DETAILS BRIDGE SHEET 45 OF 65	SHEET NO. 156 / TOTAL SHTS. 320

Y:\KENT?\BRIDGE\T200411701\PLANS\NEW BURTON RD - 2 SPAN\AB02.DGN

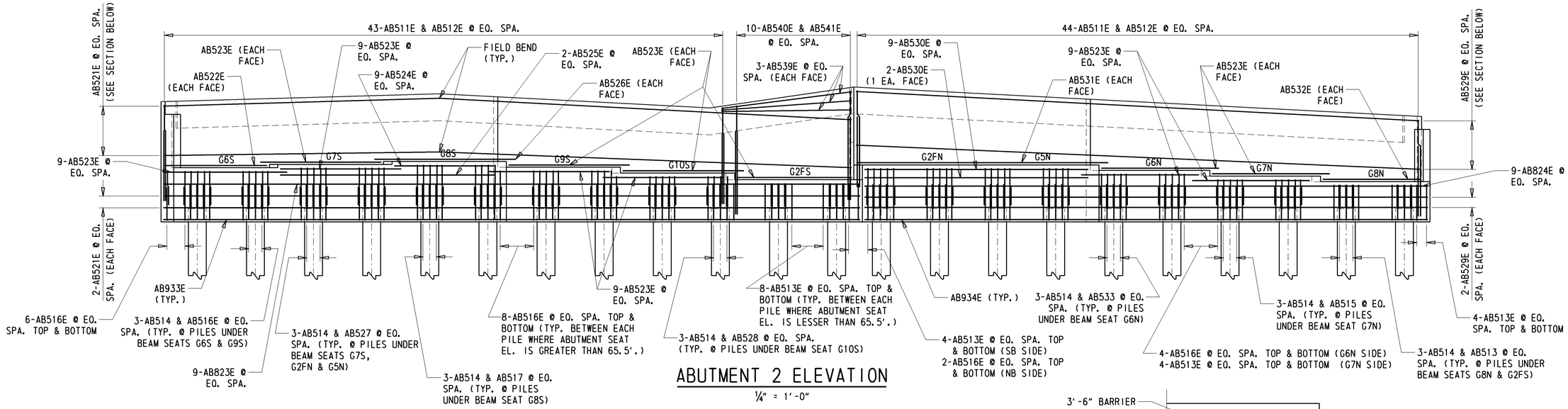

ABUTMENT 2 ELEVATION

¼" = 1'-0"

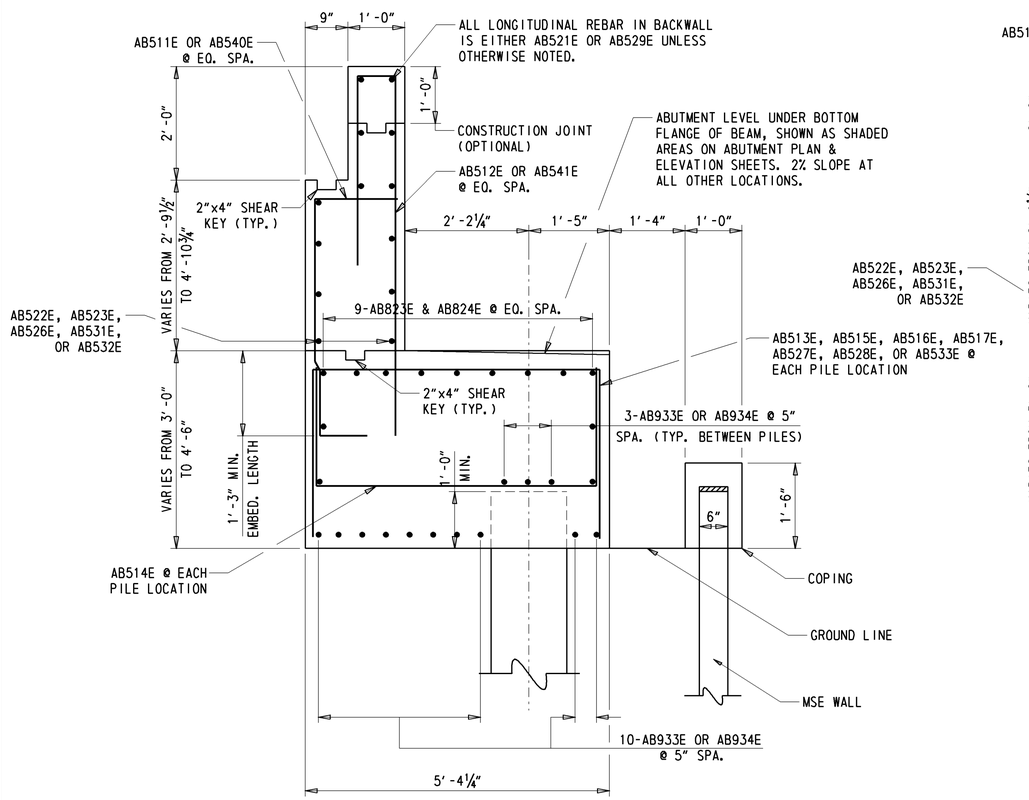

ABUTMENT 2 SECTION

SECTION WITH PILE

¾" = 1'-0"

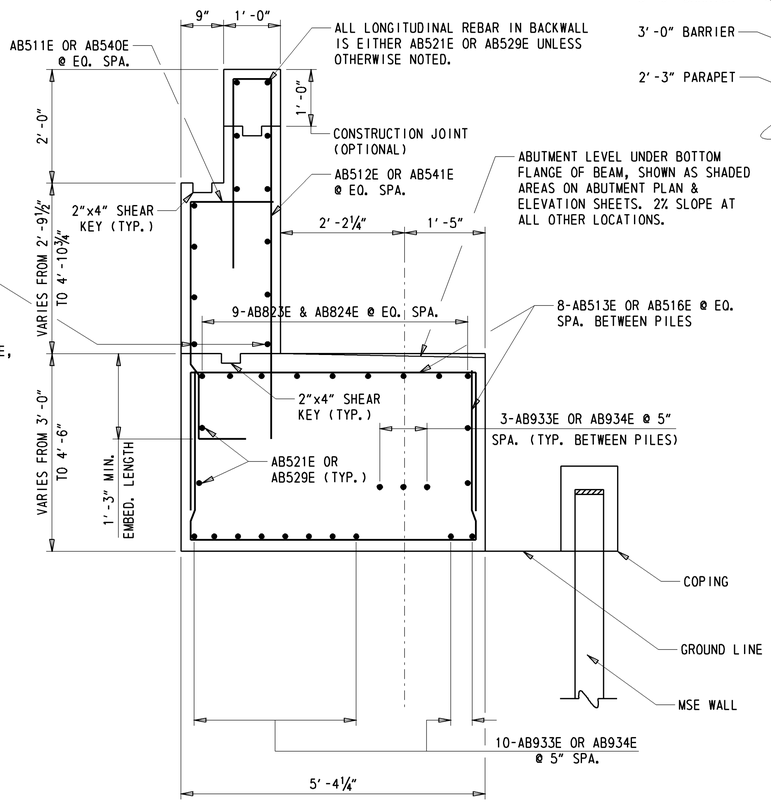

ABUTMENT 2 SECTION

SECTION WITHOUT PILE

¾" = 1'-0"

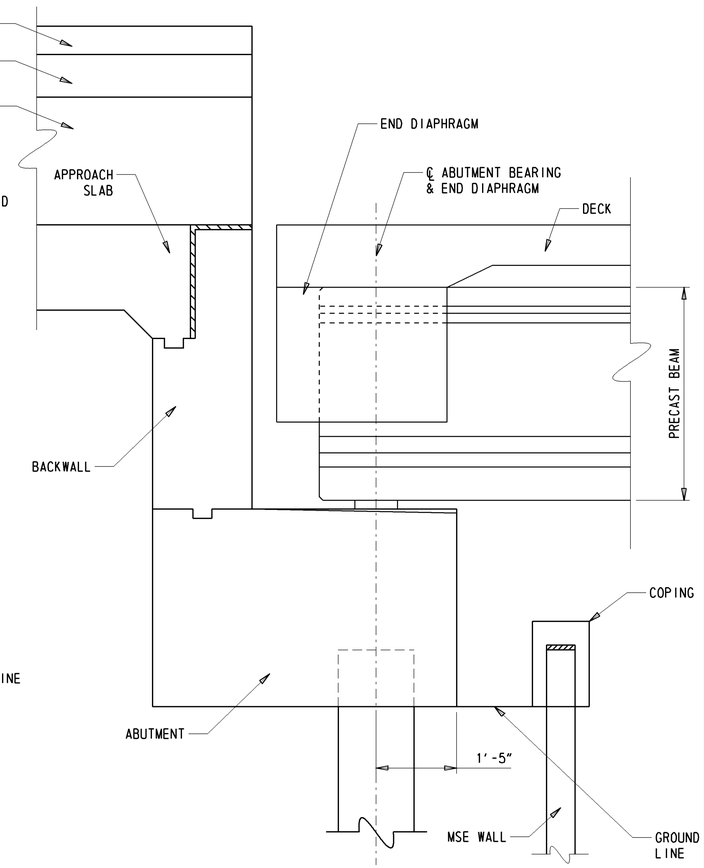

ABUTMENT 1 & 2 SECTION

SECTION AT PARAPET/BARRIER

¾" = 1'-0"

Y:\KENT2\BRIDGE\T200411701\PLANS\NEW BURTON RD - 2 SPAN\AB02.DGN

DELAWARE DEPARTMENT OF TRANSPORTATION	ADDENDUMS / REVISIONS	SCALE: AS NOTED	WEST DOVER CONNECTOR	CONTRACT T200411701	BRIDGE NO. 2-157 N&S	ABUTMENT 2 DETAILS BRIDGE SHEET 46 OF 65	SHEET NO. 157
				COUNTY KENT	DESIGNED BY: JPN		TOTAL SHTS. 320
					CHECKED BY: EM		

ABUTMENT LATERAL NOTES:

1. CONTRACTOR SHALL DESIGN THE REINFORCING STRAPS IN THE ABUTMENT STEM AND BACKWALL TO RESIST LATERAL LOADS 'EH' AND 'LS'.
2. LOAD 'EH' IS THE HORIZONTAL EARTH PRESSURE EXERTED ON THE ABUTMENT.
3. LOAD 'LS' IS THE ADDITIONAL HORIZONTAL SOIL PRESSURE DUE TO LIVE LOAD SURCHARGE.
4. PAYMENT FOR STRAPS ATTACHED TO ABUTMENTS SHALL BE INCIDENTAL TO ITEM #602553 - MECHANICALLY STABILIZED EARTH WALLS, TYPE I.

ABUTMENT LATERAL LOADS

TYPE	SERVICE LOAD (KIPS/FT)
EH	1.61 KIP/FT
LS	1.01 KIP/FT

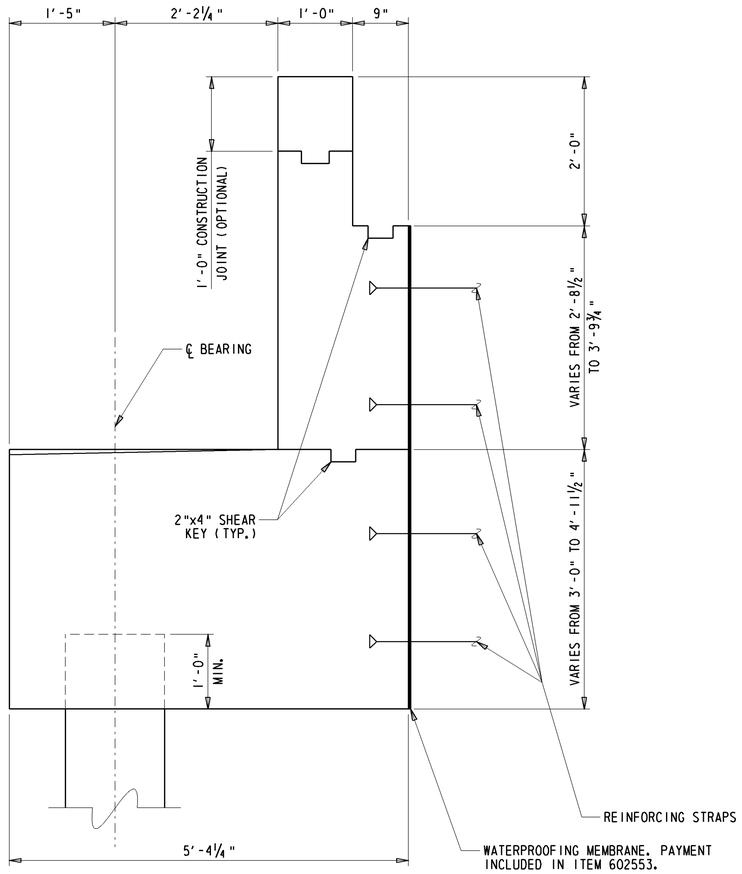

ABUTMENT SECTION

⅛" = 1'-0"

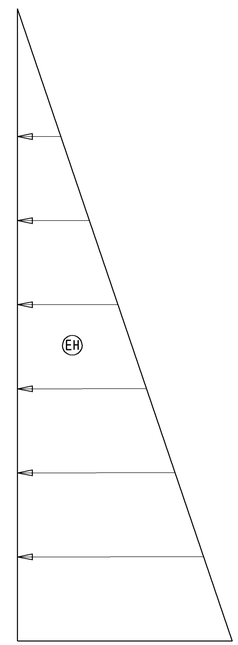

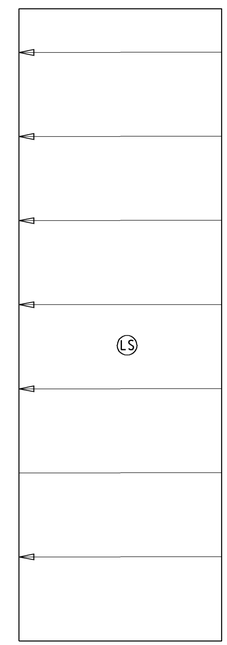

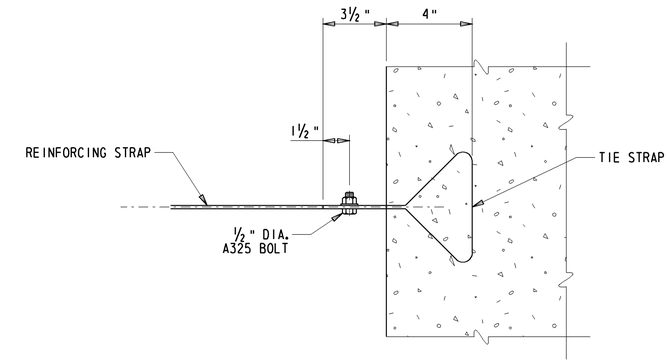

ABUTMENT STRAP ANCHOR DETAIL

N.T.S.

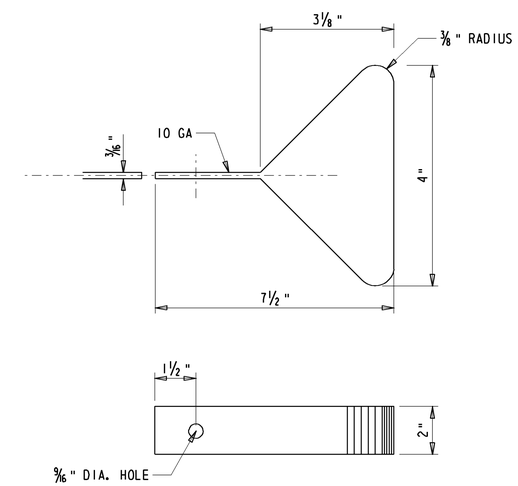

TIE STRAP DETAIL

N.T.S.

Y:\NEWCASTL\059\BRIDGE\2510602\BRIDGE 1-763\PLANS\ALTERNATIVE CURVED\AB02.DGN

DELAWARE DEPARTMENT OF TRANSPORTATION	ADDENDUMS / REVISIONS	SCALE: AS NOTED	WEST DOVER CONNECTOR	CONTRACT T200411701	BRIDGE NO. 2-157	ABUTMENT REINFORCING STRAP DETAILS BRIDGE SHEET 47 OF 65	SHEET NO. 158
				COUNTY KENT	DESIGNED BY: NED		TOTAL SHTS. 320
					CHECKED BY: EM		

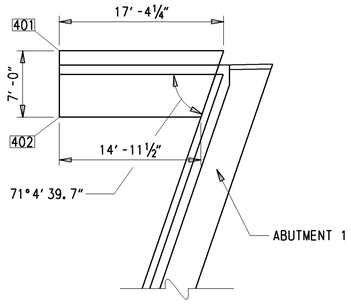

SE WINGWALL PLAN

⅛" = 1'-0"

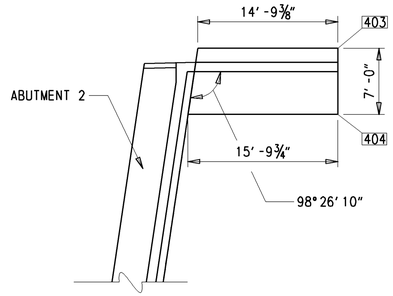

SW WINGWALL PLAN

⅛" = 1'-0"

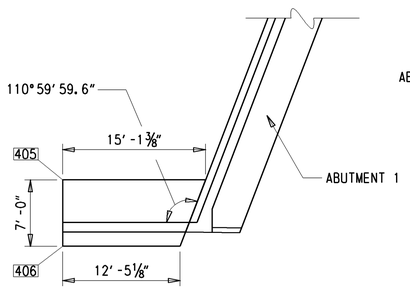

NE WINGWALL PLAN

⅛" = 1'-0"

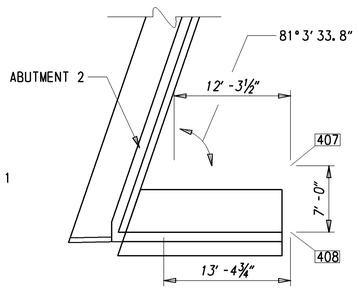

NW WINGWALL PLAN

⅛" = 1'-0"

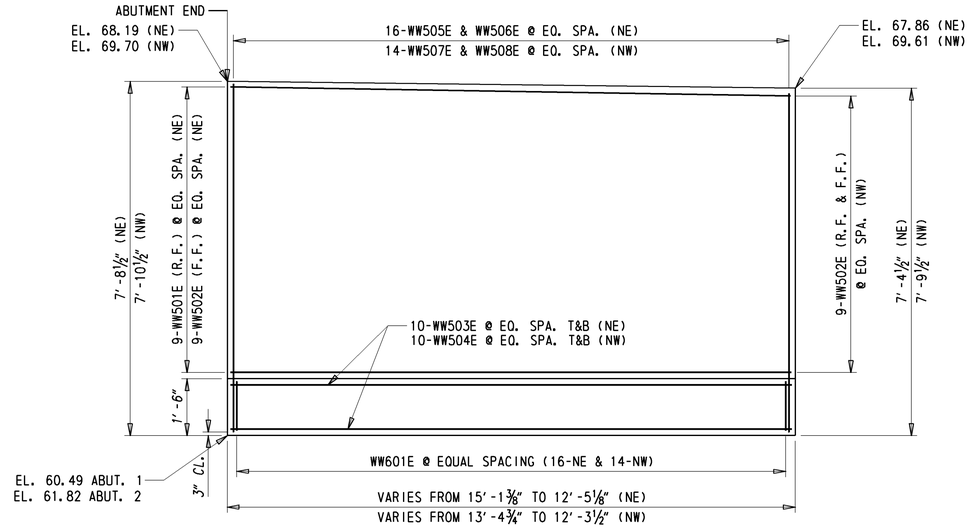

NOTE: NW WINGWALL ELEVATION SHOW IN CORRECT ORIENTATION.
NE WINGWALL IS A MIRROR IMAGE OF NW WINGWALL.

NORTH WINGWALL DETAIL

½" = 1'-0"

WINGWALL WORKING POINTS				
PT.	STATION	OFFSET	NORTHING	EASTING
401	1052+77.98	-52.55	411545.5004	618936.0606
402	1052+77.93	-45.55	411552.1835	618938.1430
403	1054+61.99	-52.68	411620.4004	618756.6408
404	1054+62.08	-45.68	411626.5930	618759.9046
405	1052+47.91	35.96	411622.3143	618989.4728
406	1052+47.87	42.96	411629.0685	618991.3114
407	1054+46.93	35.94	411691.4391	618811.7552
408	1054+46.97	42.94	411697.6601	618814.9644

NOTES

1. THE WINGWALLS SHALL BE POSITIVELY CONNECTED TO THE ABUTMENTS WITH A BOLTED CONNECTION. THE CONNECTION PLATES AT THE ABUTMENTS SHALL HAVE SLOTTED HOLES IN THE VERTICAL DIRECTION.
2. THE BOLTED CONNECTION MUST CONSIST OF A MINIMUM OF TWO 3'-0" WIDE x 2'-0" TALL x 1/4" THICK PLATES PER JOINT WITH AT LEAST FOUR 3/4" BOLTS PER PLATE. ANGLED PLATES SHALL HAVE 8 BOLTS. HOLES FOR ANCHOR BOLTS MAY BE FIELD DRILLED. BOLTED CONNECTION DETAILS SHALL BE SHOWN IN THE SUBMITTED SHOP DRAWINGS.

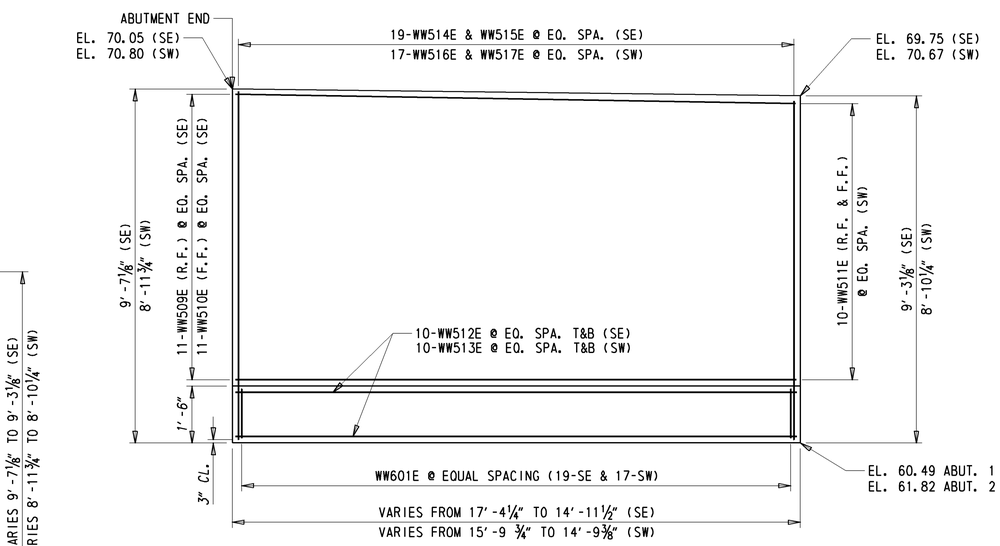

NOTE: SW WINGWALL ELEVATION SHOW IN CORRECT ORIENTATION.
SE WINGWALL IS A MIRROR IMAGE OF SW WINGWALL.

SOUTH WINGWALL DETAIL

½" = 1'-0"

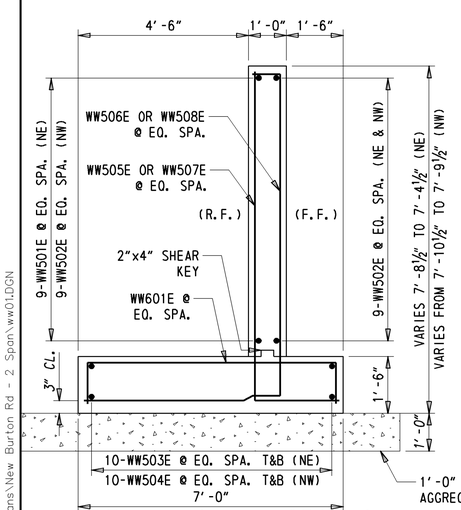

NORTH WINGWALL SECTION

½" = 1'-0"

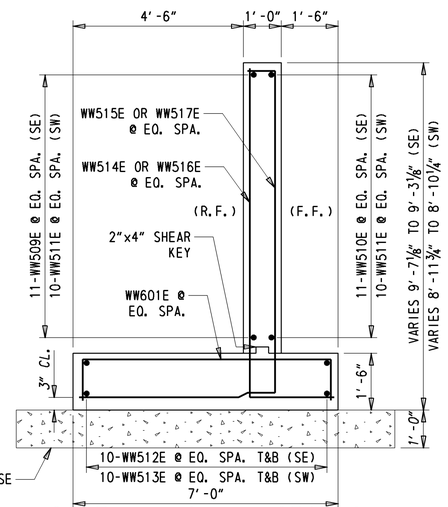

SOUTH WINGWALL SECTION

½" = 1'-0"

NOTE:
F.F. - FRONT FACE
R.F. - REAR FACE

Y:\KENT2\BRIDGE\T200411701\Plans\New Burton Rd - 2 Span\ww01.DGN

DELAWARE DEPARTMENT OF TRANSPORTATION	ADDENDUMS / REVISIONS	SCALE: AS NOTED	WEST DOVER CONNECTOR	CONTRACT T200411701	BRIDGE NO. 2-157 N&S	WINGWALL DETAILS BRIDGE SHEET 48 OF 65	SHEET NO. 159
				COUNTY SUSSEX	DESIGNED BY: JPN		TOTAL SHTS. 320
					CHECKED BY: EM		

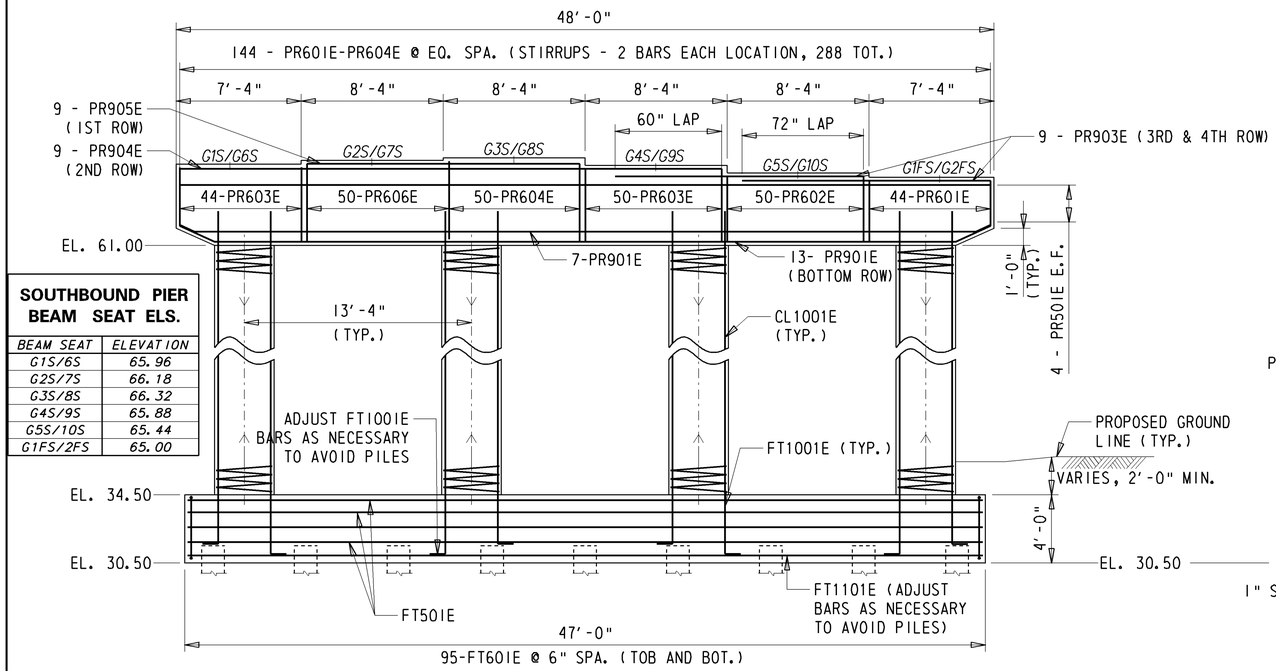

SOUTHBOUND PIER BEAM SEAT ELS.	
BEAM SEAT	ELEVATION
G1S/6S	65.96
G2S/7S	66.18
G3S/8S	66.32
G4S/9S	65.88
G5S/10S	65.44
G1FS/2FS	65.00

S.B. PIER ELEVATION

3/16" = 1'-0"

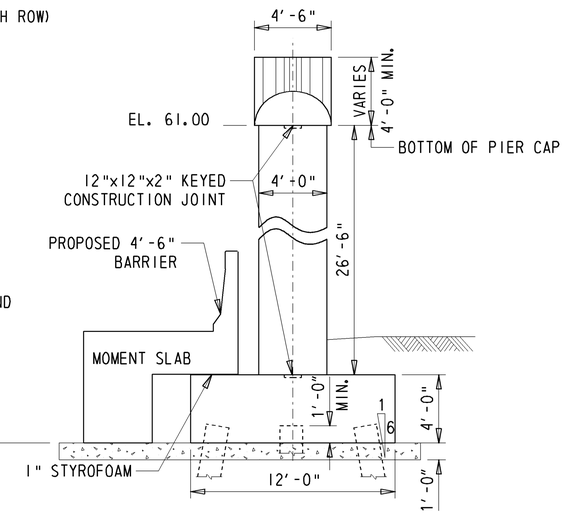

S.B. PIER END ELEVATION

3/16" = 1'-0"

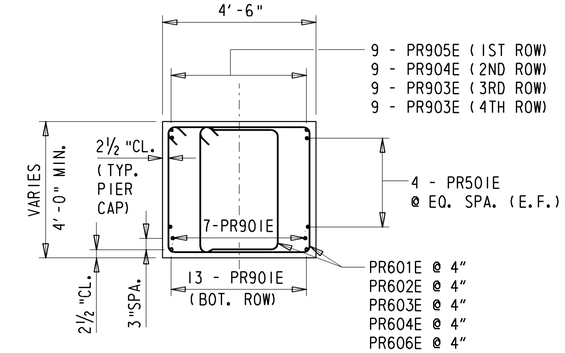

TYPICAL PIER CAP SECTION

3/8" = 1'-0"

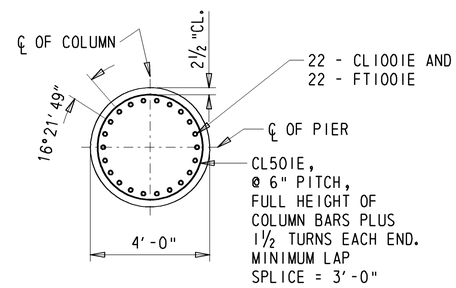

TYPICAL COLUMN SECTION

3/8" = 1'-0"

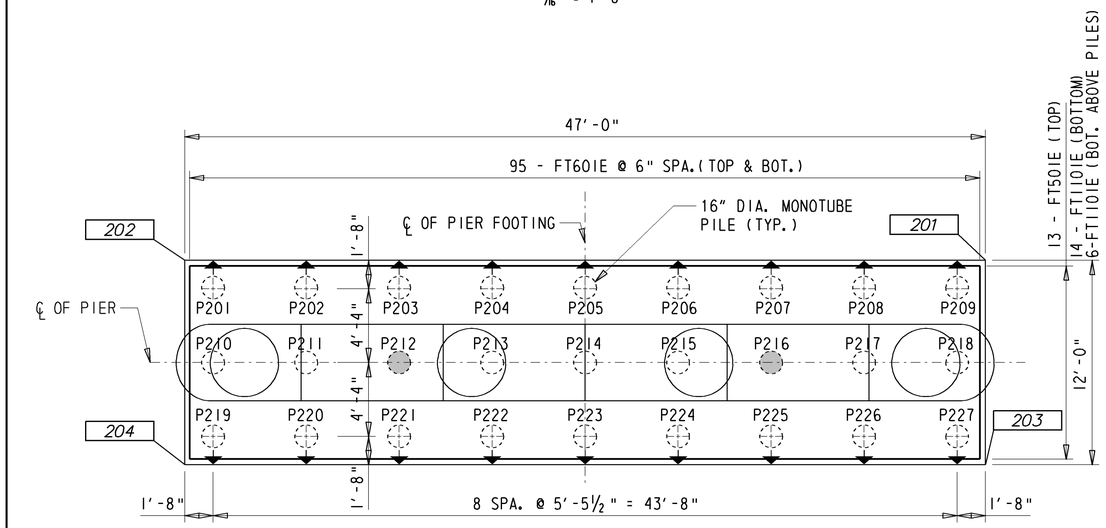

S.B. FOOTING REINFORCEMENT PLAN

3/16" = 1'-0"

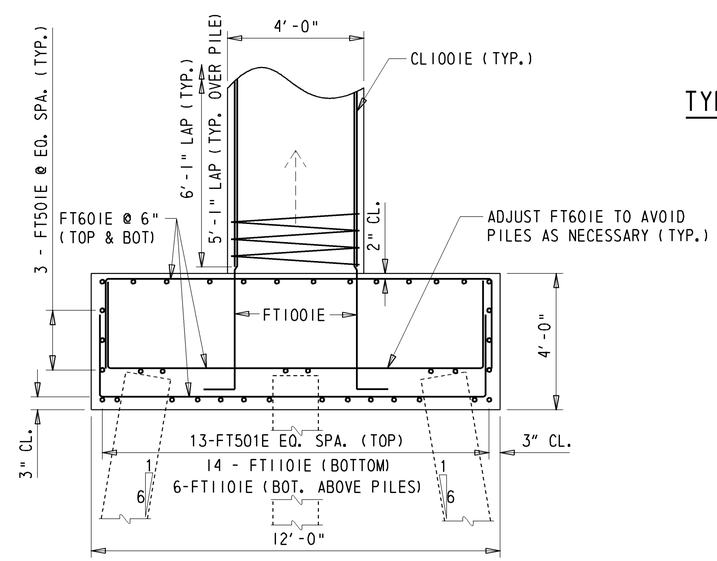

S.B. PIER FOOTING REINFORCEMENT

3/8" = 1'-0"

LEGEND

TEST PILE -

BATTERED PILE -

WORKING POINT - 204

SOUTHBOUND PIER WORKING POINTS				
POINT NO.	STATION	OFFSET	NORTHING	EASTING
201	1053+62.90	-50.13	411577.7934	618852.3170
202	1053+51.60	-4.59	411615.7068	618880.0943
203	1053+74.08	-47.27	411584.9657	618842.5288
204	1053+63.17	-1.62	411622.7931	618870.4221

PILE COORDINATE LIST				
POINT NO.	STATION	OFFSET	NORTHING	EASTING
P201	1053+72.11	-46.05	411585.28	618844.91
P209	1053+62.04	-3.63	411620.51	618870.72
P210	1053+68.05	-47.08	411582.68	618848.46
P218	1053+57.79	-4.70	411617.91	618874.27
P219	1053+64.05	-48.11	411580.12	618851.96
P227	1053+53.62	-5.78	411615.35	618877.76

DELAWARE DEPARTMENT OF TRANSPORTATION

ADDENDUMS / REVISIONS

SCALE: AS NOTED

WEST DOVER CONNECTOR

CONTRACT	BRIDGE NO.	2-157S
T200411701	DESIGNED BY: TRS	
COUNTY		
KENT	CHECKED BY: EM	

SOUTHBOUND PIER DETAILS
BRIDGE SHEET 49 OF 65

SHEET NO. 160
TOTAL SHTS. 320

Y:\KENT?\BRIDGE\T200411701\PLANS\NEW BURTON RD - 2 SPAN\PRO1.DGN

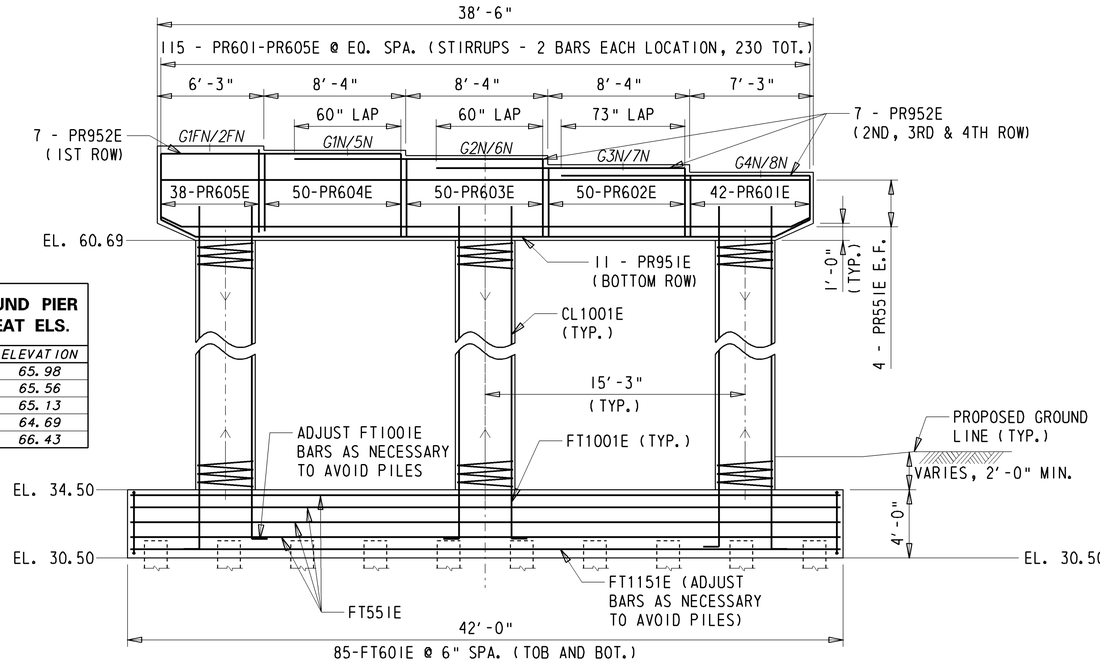

NORTHBOUND PIER BEAM SEAT ELS.	
BEAM SEAT	ELEVATION
G1N/5N	65.98
G2N/6N	65.56
G3N/7N	65.13
G4N/8N	64.69
G1FN/2FN	66.43

N.B. PIER ELEVATION

3/16" = 1'-0"

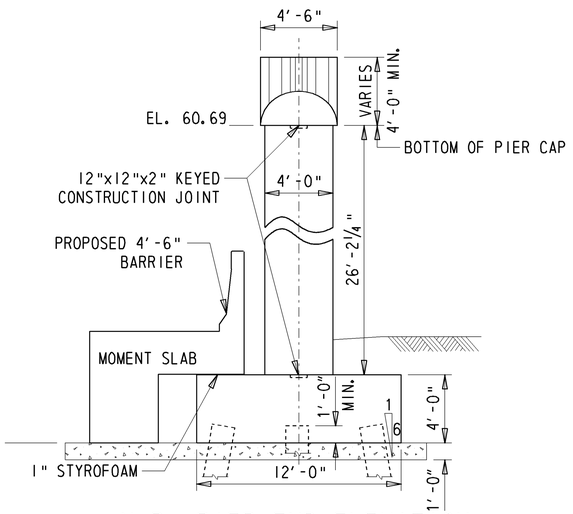

N.B. PIER END ELEVATION

3/16" = 1'-0"

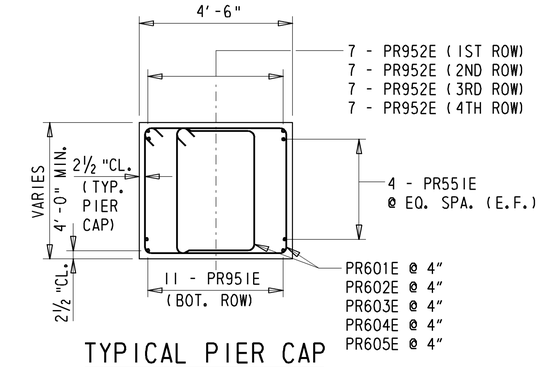

TYPICAL PIER CAP SECTION

3/8" = 1'-0"

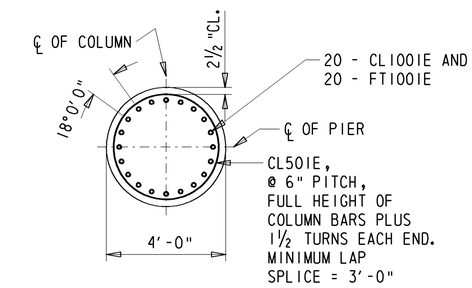

TYPICAL COLUMN SECTION

3/8" = 1'-0"

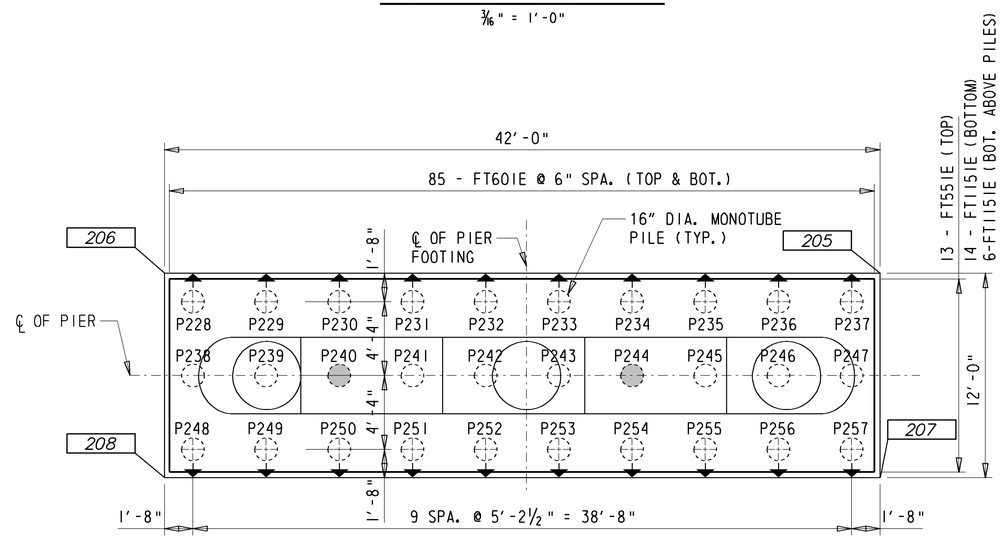

N.B. FOOTING REINFORCEMENT PLAN

3/16" = 1'-0"

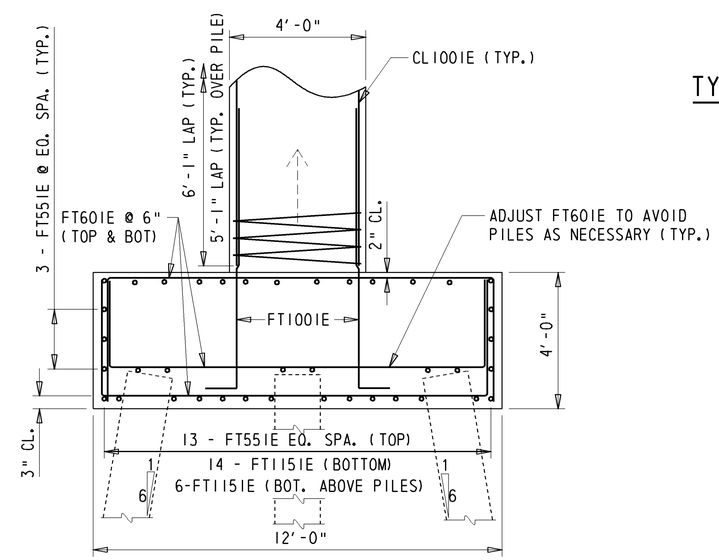

N.B. PIER FOOTING REINFORCEMENT

3/8" = 1'-0"

LEGEND

TEST PILE -

BATTERED PILE -

WORKING POINT - 208

NORTHBOUND PIER WORKING POINTS				
POINT NO.	STATION	OFFSET	NORTHING	EASTING
205	1053+50.64	-0.96	411618.7410	618882.3173
206	1053+39.45	39.59	411652.6211	618907.1395
207	1053+62.27	2.03	411625.8331	618872.6373
208	1053+51.59	42.72	411659.7131	618897.4594

NOTE: FIELD CUT OR BEND BARS AS NECESSARY. PAYMENT INCIDENTAL TO #604000- BAR REINFORCEMENT, EPOXY COATED (TYP.)

PILE COORDINATE LIST				
POINT NO.	STATION	OFFSET	NORTHING	EASTING
P228	1053+60.24	3.24	411626.19	618874.97
P237	1053+50.34	40.68	411657.38	618897.82
P238	1053+56.03	2.17	411623.63	618878.46
P247	1053+45.96	39.56	411654.82	618901.31
P248	1053+51.83	1.08	411621.07	618881.96
P257	1053+41.59	38.43	411652.26	618904.81

Y:\KENT2\BRIDGE\T200411701\PLANS\NEW BURTON RD - 2 SPAN\PRO1.DGN

DELAWARE DEPARTMENT OF TRANSPORTATION

ADDENDUMS / REVISIONS

SCALE: AS NOTED

WEST DOVER CONNECTOR

CONTRACT	BRIDGE NO. 2-157N	NORTHBOUND PIER DETAILS BRIDGE SHEET 50 OF 65	SHEET NO.
T200411701	DESIGNED BY: TRS		161
COUNTY			TOTAL SHTS.
KENT	CHECKED BY: EM		320

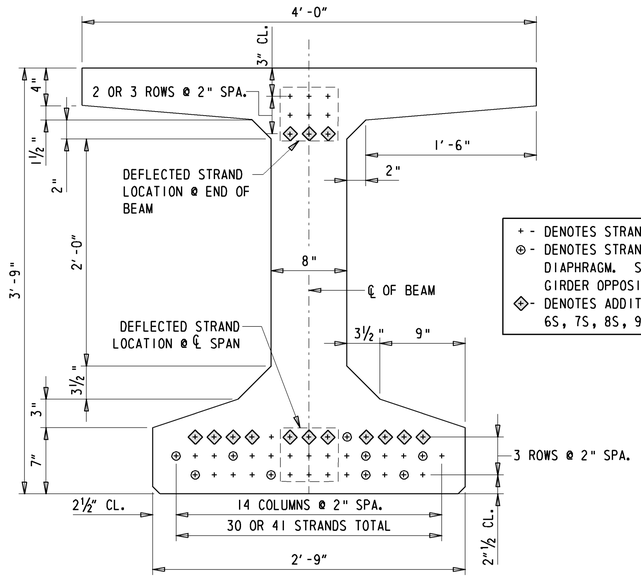

+ - DENOTES STRAND LOCATION
⊕ - DENOTES STRANDS EXTENDED INTO THE PIER DIAPHRAGM. SPAN 1 GIRDER SHOWN, SPAN 2 GIRDER OPPOSITE HAND.
◇ - DENOTES ADDITIONAL STRANDS IN BEAMS 6S, 7S, 8S, 9S AND 10S ONLY.

TYPICAL SECTION

1½" = 1'-0"

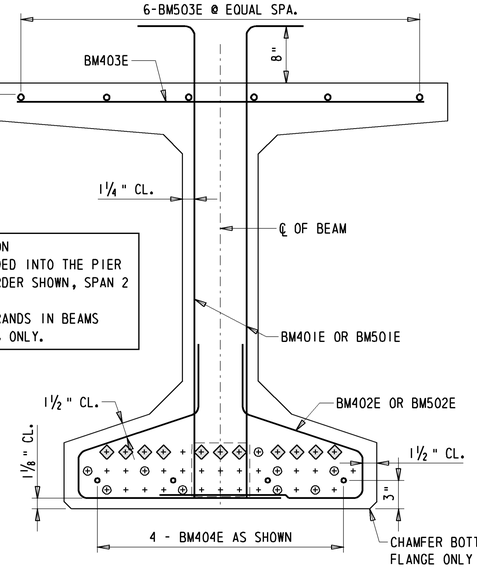

TYPICAL REINFORCING SECTION

1½" = 1'-0"

BEAM NOTES:

1. DESIGN PLANS - WORKING DRAWINGS
   INFORMATION PERTAINING TO THE PRECAST PRESTRESSED REINFORCED CONCRETE BULB-T BEAMS IS INTENDED TO SERVE AS AN INDICATION OF THE TYPE OF CONSTRUCTION ACCEPTABLE FOR USE. THE CONTRACTOR SHALL PREPARE AND SUBMIT, FOR APPROVAL, A COMPLETE SET OF DETAILED SHOP PLANS FOR THE PRESTRESSED PRECAST CONCRETE UNITS THEY PROPOSE TO FURNISH. PAYMENT SHALL BE INCIDENTAL TO ITEM 623003 -PRESTRESSED REINFORCED CONCRETE MEMBERS, BULB-T BEAMS.
2. BAR REINFORCEMENT
   BAR REINFORCEMENT SHALL CONFORM TO AASHTO M31, GRADE 60. ALL REBAR REINFOREMENT AND CHAIR SUPPORTS SHALL BE PROTECTED WITH FUSION BONDED EPOXY IN ACCORDANCE WITH AASHTO M284. PAYMENT SHALL BE INCIDENTAL TO ITEM 623003 - PRESTRESSED REINFORCED CONCRETE MEMBERS, BULB-T BEAMS.
3. PRESTRESSING STEEL
   ALL STRANDS SHALL BE 0.6" DIAMETER, SEVEN WIRE STRAND, 0.217 SQ. IN. NOMINAL AREA, LOW RELAXATION STRANDS IN ACCORDANCE WITH AASHTO M203, GRADE 270. MINIMUM INITIAL PULL PER STRAND SHALL BE 44,000 POUNDS. MINIMUM ULTIMATE STRENGTH PER STRAND EQUALS 58,500 POUNDS. USE A 1" DEEP RECESS AROUND LOCAL STRAND GROUPS WITH 2" MINIMUM EDGE CLEARANCE AND FILL WITH PNEUMATICALLY APPLIED MORTAR IMMEDIATELY AFTER CLIPPING STRANDS. AN APPROVED EPOXY MORTAR COVERING THE ENDS OF STRANDS WITH A MINIMUM THICKNESS OF ⅛" MAY BE USED AS AN ALTERNATE.
4. CONCRETE FINISH
   TOP SURFACE OF ALL BEAMS SHALL HAVE A "STIFF BROOM" HEAVY SCORED FINISH IN THE TRANSVERSE DIRECTION TO REMOVE LATENCE AND ROUGHEN THE SURFACE.
5. HANDLING
   PRESTRESSES BEAMS SHALL BE HANDLED ONLY BY LIFTING STRANDS PROVIDED ESPECIALLY FOR THIS PURPOSE. LOCATION OF LIFTING STRANDS SHALL BE DETERMINED BY THE PRECASTER AND DETAILED IN THE SHOP PLANS.
6. THREADED INSERTS
   AT DIAPHRAGM CONNECTIONS, THREADED INSERTS SHALL HAVE A MINIMUM ULTIMATE PULLOUT CAPACITY OF 11,900 POUNDS EACH. THREADED INSERT AND/OR BAR LOCATIONS MAY BE ADJUSTED BY ½" TO AVOID CONFLICTS. ANY DEVIATIONS FROM THIS PLAN SHALL BE NOTED ON THE SHOP DRAWINGS.
7. STAY-IN-PLACE FORMS
   METAL INSERTS SHALL BE PROVIDED ALONG THE TOP FLANGE OF THE PRESTRESSED CONCRETE BEAMS TO SUPPORT STAY-IN-PLACE FORMS. SIZE, SPACING, AND LOCATION OF INSERTS SHALL BE DETERMINED BY STAY-IN-PLACE FORM MANUFACTURER. PAYMENT SHALL BE INCIDENTAL TO ITEM 623003 - PRESTRESSED REINFORCED CONCRETE MEMBERS, BULB-T BEAMS.
8. BEARING AREA
   BEAMS SHALL BE DAPPED AT ENDS TO REST LEVEL ON THEIR BEARING SURFACE. A DETAIL OF THE DAP SHALL BE SUBMITTED WITH THE SHOP DRAWINGS.
9. CONCRETE STRENGTH
   MINIMUM COMPRESSIVE STRENGTH AT TIME OF THE INITIAL PRESTRESS EQUALS 6400 PSI. THE MINIMUM COMPRESSIVE STRENGTH AT 28 DAYS EQUALS 8000 PSI.
10. ENDS OF PRESTRESSED BEAMS AT ROADWAY JOINTS TO BE VERTICAL. ALL OTHER ENDS TO BE NORMAL TO PROFILE GRADE.
11. PAYMENT FOR FABRICATION AND INSTALLATION OF BEARING PADS SHALL BE INCIDENTAL TO ITEM 623003 - PRESTRESSED REINFORCED CONCRETE MEMBER, BULB-T BEAM.

REINFORCING BAR LIST (EACH BEAM)

QTY. 1	QTY. 2	SIZE	LENGTH	MARK	TYPE
93	97	4	9'-9½"	BM401E	BENT
186	194	4	3'-10"	BM402E	BENT
99	103	4	3'-8"	BM403E	STRAIGHT
8	8	4	VARIES	BM404E	STRAIGHT
12	12	5	9'-9½"	BM501E	BENT
24	24	5	3'-10"	BM502E	BENT
12	12	5	VARIES	BM503E	STRAIGHT

BENDING DIAGRAMS

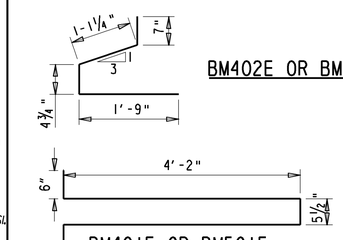

NOTE:
QUANTITY 1 APPLIES TO ALL BEAMS IN SPAN 1, N&S.
QUANTITY 2 APPLIES TO ALL BEAMS IN SPAN 2, N&S.

DIMENSIONS

BEAM	ALL SPAN 2 BEAMS	1S	2S	3S	4S	5S	1N	2N	3N	4N
L	79'-11⅝"	75'-7⅞"	75'-8½"	75'-9"	75'-9⅝"	75'-10¼"	76'-0"	76'-0¾"	76'-1½"	76'-2¼"

CAMBER

	BEAMS 1N-4N	BEAMS 5N-8N	BEAMS 1S-5S	BEAMS 6S-10S
A	2.836"	3.019"	2.593"	3.347"
B	2.164"	1.806"	1.880"	1.202"
C	0.672"	1.213"	0.713"	2.145"

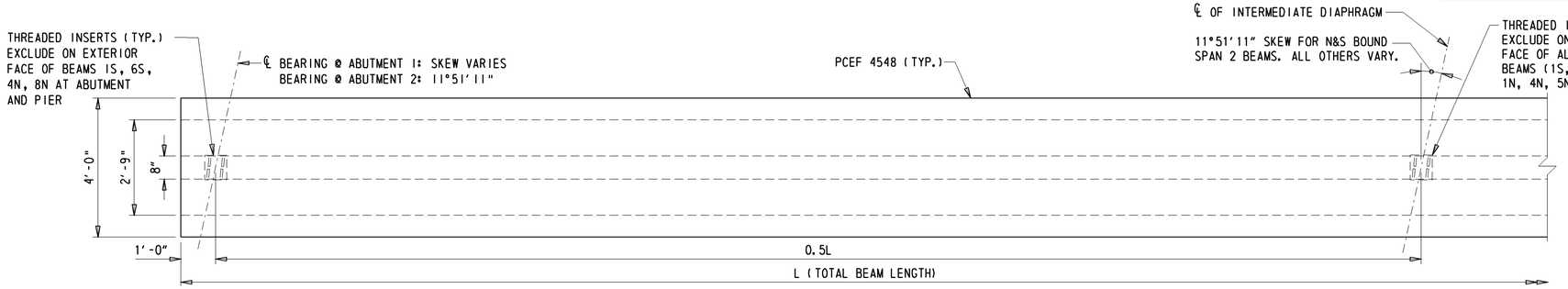

PLAN

½" = 1'-0"

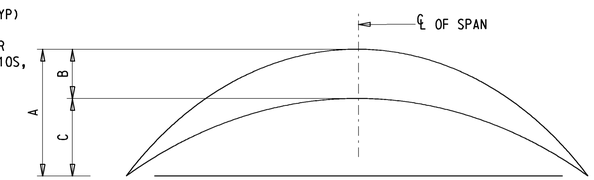

A = ESTIMATED PRESTRESS CAMBER LESS DEFLECTION DUE TO DEAD LOAD OF BEAM TIMES CREEP FACTOR
B = DEFLECTION DUE TO DEAD LOAD OF SLAB, DIAPHRAGMS, PARAPET, AND FUTURE PAVING ALLOWANCES TIMES CREEP FACTOR.
C = A - B = NET CAMBER.

CAMBER DIAGRAM

N.T.S.

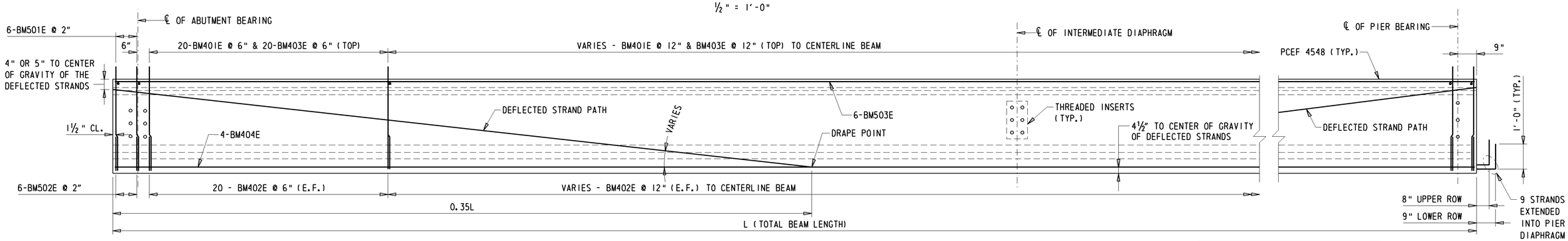

ELEVATION

½" = 1'-0"

NOTE: REINFORCEMENT IS SYMMETRICAL ABOUT THE CENTERLINE OF SPAN.

DELAWARE DEPARTMENT OF TRANSPORTATION	ADDENDUMS / REVISIONS	SCALE: AS NOTED	WEST DOVER CONNECTOR	CONTRACT T200411701 / COUNTY KENT	BRIDGE NO. 2-157 N&S / DESIGNED BY: EM / CHECKED BY: BAB, JNH	BEAM DETAILS BRIDGE SHEET 51 OF 65	SHEET NO. 162 / TOTAL SHTS. 320

Y:\KENT?\BRIDGE\T200411701\PLANS\NEW BURTON RD - 2 SPAN\BM01.DGN

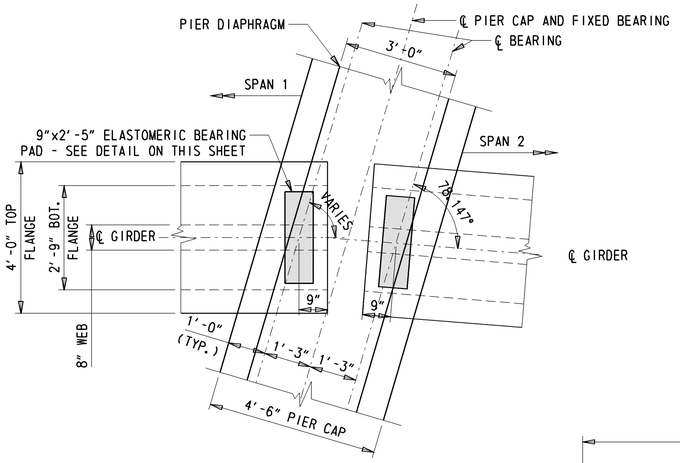

TYPICAL PIER BEARING DETAIL

½" = 1'-0"

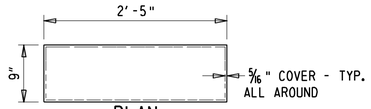

PLAN

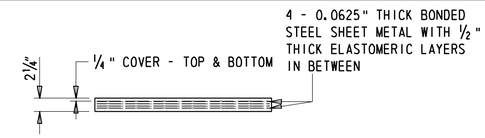

ELEVATION

NOTES:

1. ALL ELASTOMERIC BEARING PADS SHALL BE VIRGIN CHLOROPRENE IN ACCORDANCE WITH SECTION 623.06 OF THE STANDARD SPECIFICATIONS (60 DUROMETER HARDNESS AND MINIMUM SHEAR MODULUS OF 150 psi).
2. ELASTOMERIC BEARING PADS SHALL BE ATTACHED TO THE TOP OF BEARING SEAT WITH AN APPROVED EPOXY GLUE.
3. ELASTOMERIC BEARING PADS SHALL BE INCIDENTAL TO ITEM 623003 - PRESTRESSED REINFORCED CONCRETE MEMBERS, BULB-T BEAMS.

TYPICAL LAMINATED BEARING PAD

1" = 1'-0"

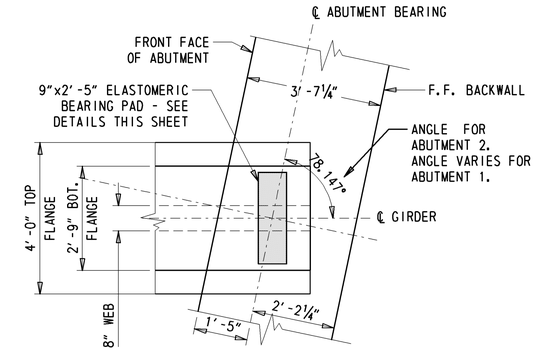

TYPICAL ABUTMENT BEARING DETAIL

½" = 1'-0"

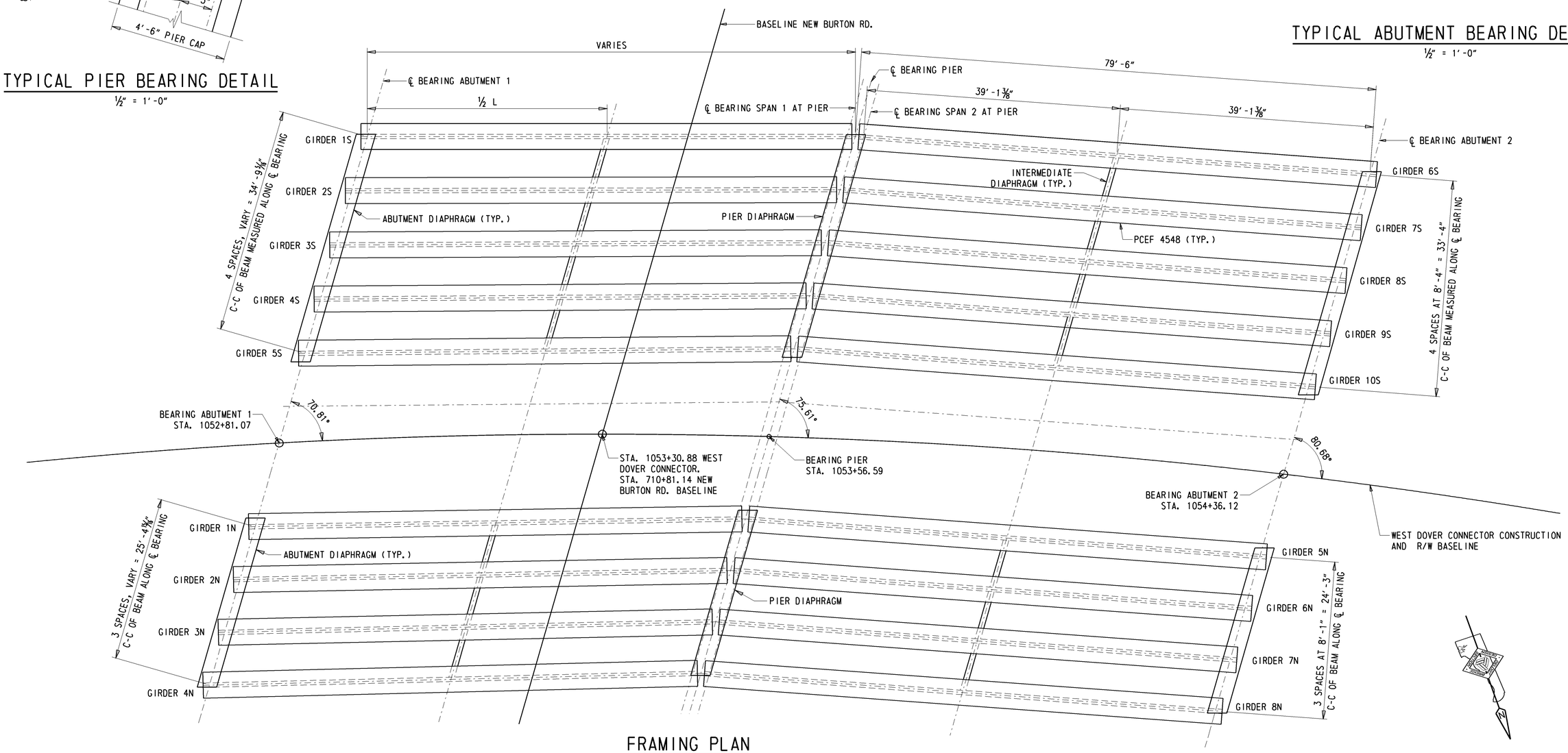

FRAMING PLAN

⅛" = 1'-0"

DELAWARE DEPARTMENT OF TRANSPORTATION	ADDENDUMS / REVISIONS	SCALE 0 2 4 6 FEET	WEST DOVER CONNECTOR	CONTRACT T200411701 / COUNTY KENT	BRIDGE NO. 2-157 N&S / DESIGNED BY: EM / CHECKED BY: JNH	FRAMING PLAN & BEARING DETAILS BRIDGE SHEET 52 OF 65	SHEET NO. 163 / TOTAL SHTS. 320

Y:\KENT\156\BRIDGE\T200411701\PLANS\NEW BURTON RD - 2 SPAN\FR01.DGN

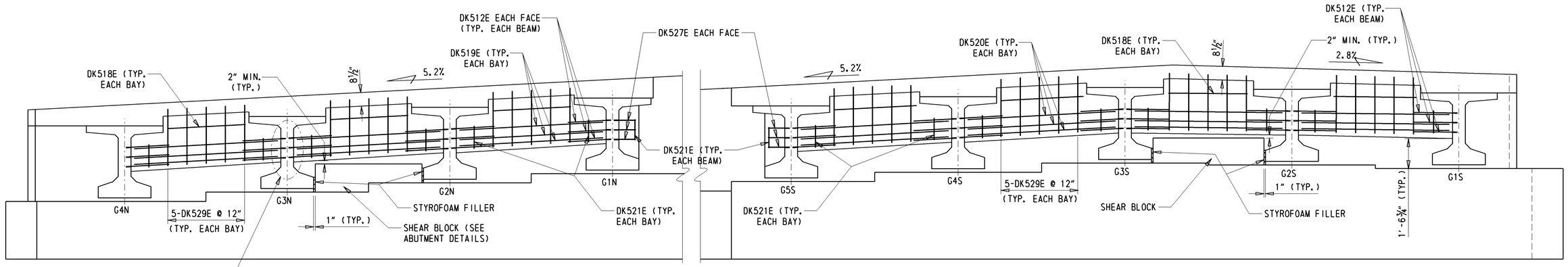

THREADED INSERTS (TYP.) - INSERT MAY BE REPLACED WITH 1½" DIA. PRE-DRILLED HOLES THROUGH THE BEAM WEBS AND #5 BARS MADE CONTINUOUS.

NORTHBOUND

ABUTMENT 1 DIAPHRAGM

⅜" = 1'-0"

SOUTHBOUND

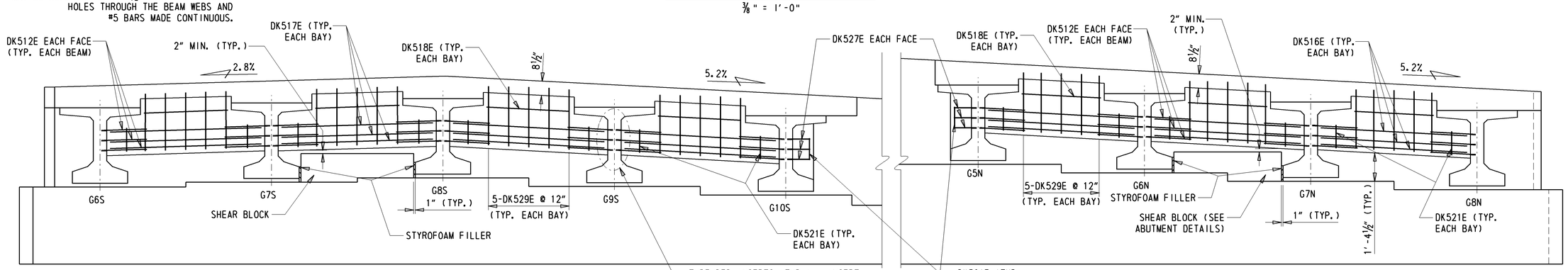

THREADED INSERTS (TYP.) - INSERT MAY BE REPLACED WITH 1½" DIA. PRE-DRILLED HOLES THROUGH THE BEAM WEBS AND #5 BARS MADE CONTINUOUS.

DK521E (TYP. EACH BEAM)

SOUTHBOUND

NORTHBOUND

NOTE: SHEAR BLOCK DETAIL LOCATED ON ABUTMENT PLAN AND ELEVATION SHEETS.

ABUTMENT 2 DIAPHRAGM

⅜" = 1'-0"

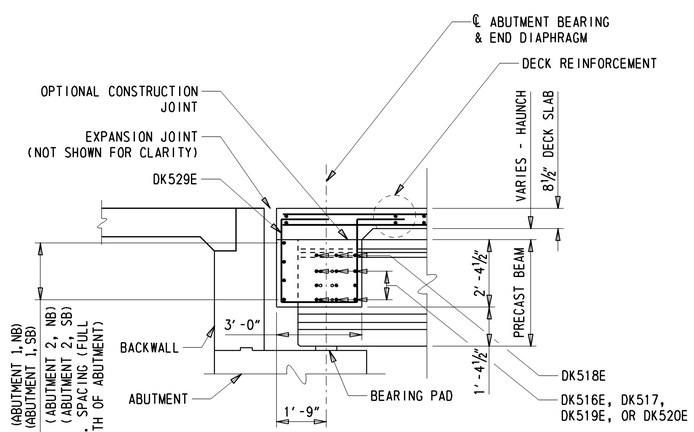

END DIAPHRAGM SECTION

⅜" = 1'-0"

DELAWARE DEPARTMENT OF TRANSPORTATION	ADDENDUMS / REVISIONS	SCALE: AS NOTED	WEST DOVER CONNECTOR	CONTRACT T200411701	BRIDGE NO. 2-157 N&S	ABUTMENT DIAPHRAGM DETAILS BRIDGE SHEET 53 OF 65	SHEET NO. 164
				COUNTY KENT	DESIGNED BY: JPN		TOTAL SHTS. 320
					CHECKED BY: JNH, MJG		

Y:\KENT2\BRIDGE\T200411701\PLANS\NEW BURTON RD - 2 SPAN\BM02.DGN

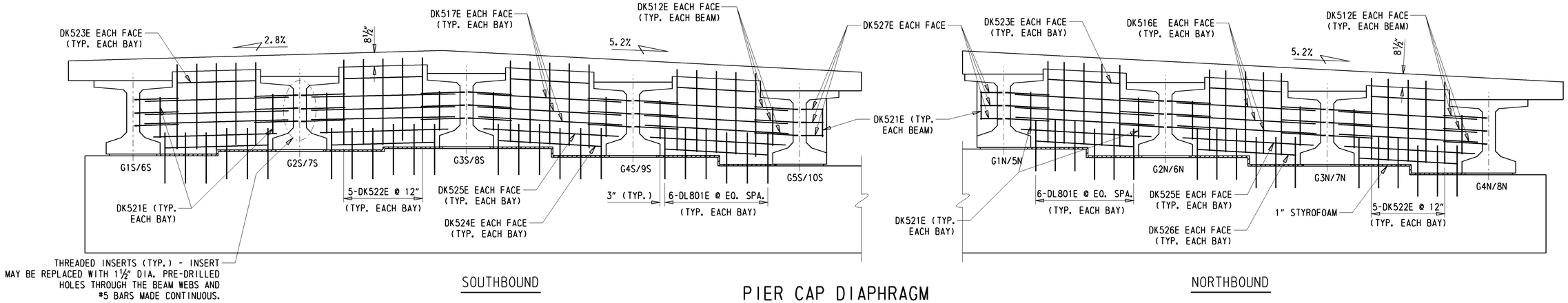

PIER CAP DIAPHRAGM

⅜" = 1'-0"

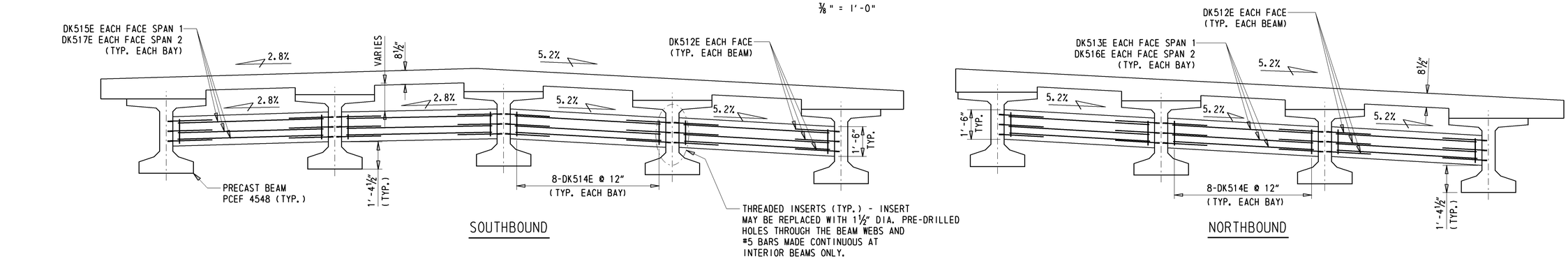

INTERMEDIATE DIAPHRAGM

⅜" = 1'-0"

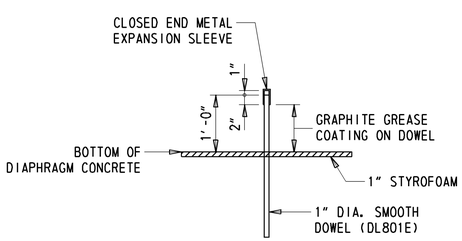

DOWEL DETAIL

¾" = 1'-0"

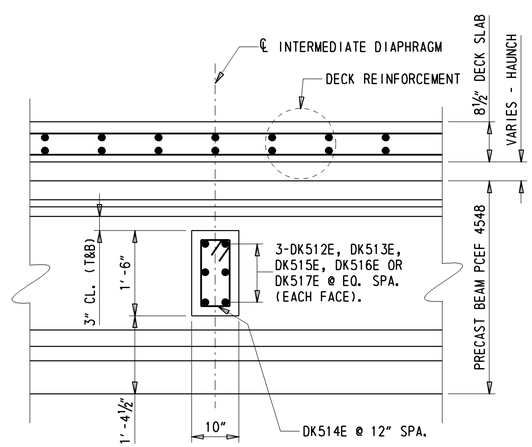

INTERMEDIATE DIAPHRAGM SECTION

¾" = 1'-0"

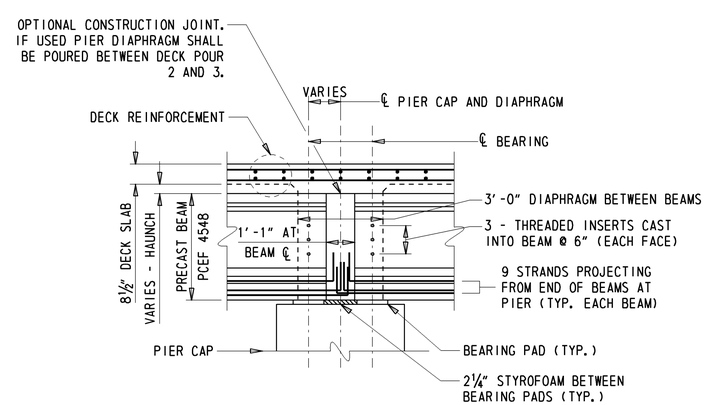

PIER DIAPHRAGM (@ BEAM) SECTION

⅜" = 1'-0"

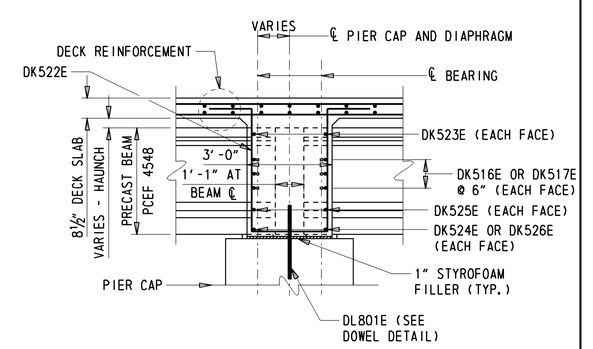

PIER DIAPHRAGM BETWEEN BEAMS

⅜" = 1'-0"

DELAWARE DEPARTMENT OF TRANSPORTATION	ADDENDUMS / REVISIONS	SCALE: AS NOTED	WEST DOVER CONNECTOR	CONTRACT T200411701	BRIDGE NO. 2-157 N&S	PIER & INTERMEDIATE DIAPHRAGM DETAILS BRIDGE SHEET 54 OF 65	SHEET NO. 165
				COUNTY KENT	DESIGNED BY: JPN		TOTAL SHTS. 320
					CHECKED BY: EM		

Y:\KENT?\BRIDGE\T200411701\PLANS\NEW BURTON RD - 2 SPAN\BM02.DGN

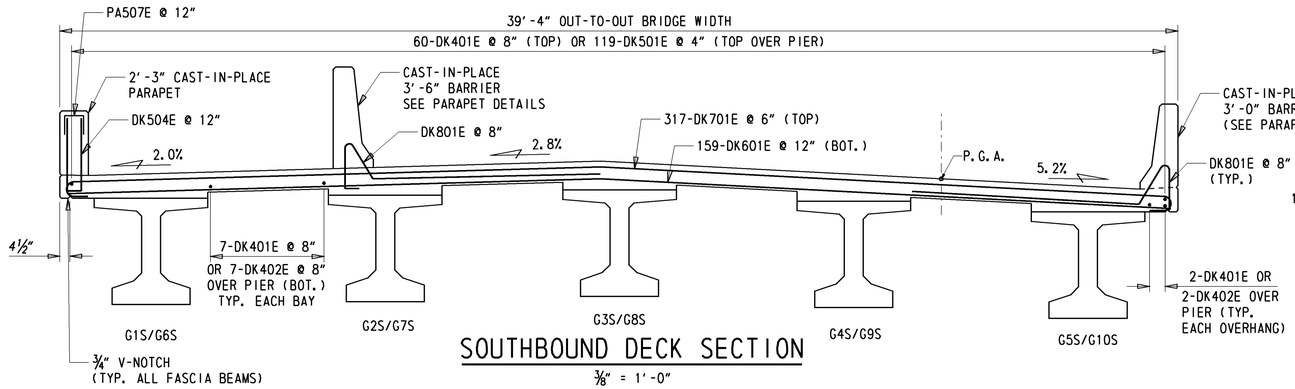

SOUTHBOUND DECK SECTION

⅜" = 1'-0"

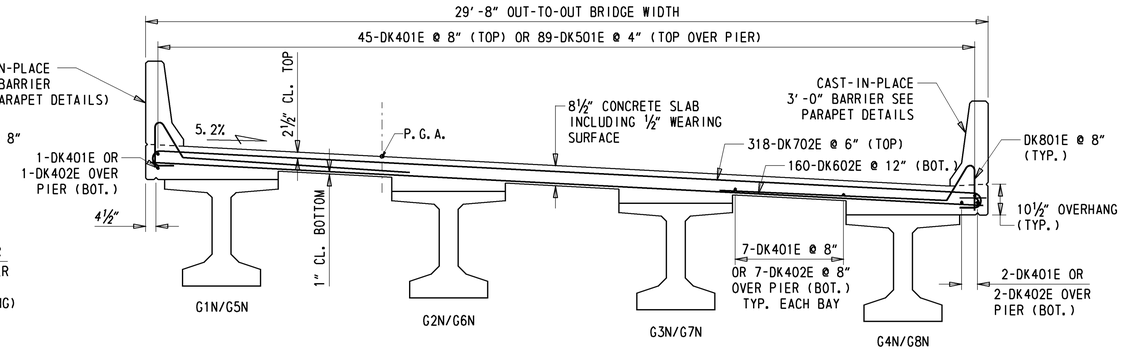

NORTHBOUND DECK SECTION

⅜" = 1'-0"

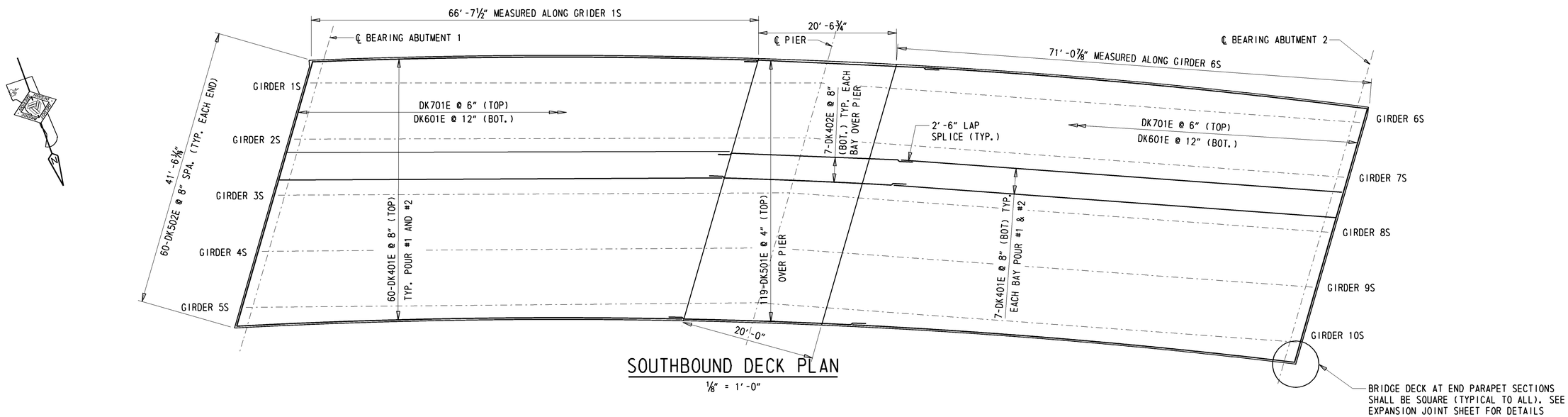

SOUTHBOUND DECK PLAN

⅛" = 1'-0"

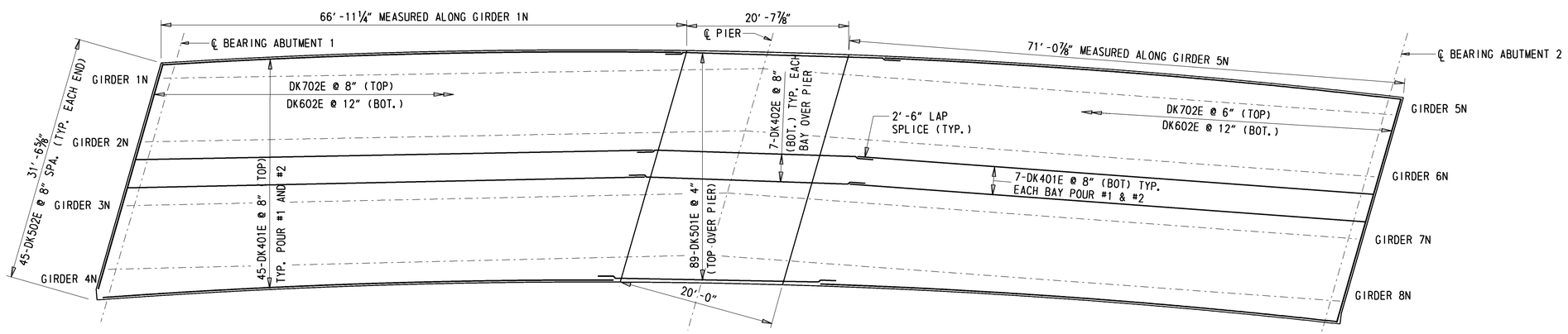

NORTHBOUND DECK PLAN

⅛" = 1'-0"

Y:\KENT\56\BRIDGE\T200411701\PLANS\NEW BURTON RD - 2 SPAN\DK01.DGN

DELAWARE DEPARTMENT OF TRANSPORTATION	ADDENDUMS / REVISIONS	**SCALE: AS NOTED**	**WEST DOVER CONNECTOR**	CONTRACT T200411701	BRIDGE NO. **2-157 N&S**	**DECK REINFORCING DETAILS BRIDGE SHEET 55 OF 65**	SHEET NO. 166
				COUNTY KENT	DESIGNED BY: EM		TOTAL SHTS. 320
					CHECKED BY: JNH		

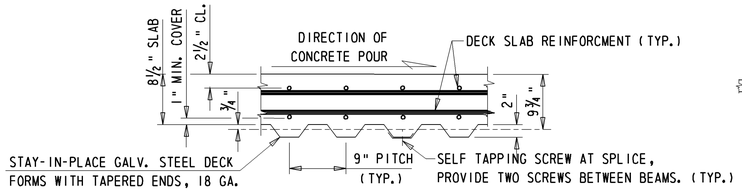

(ELEVATION)

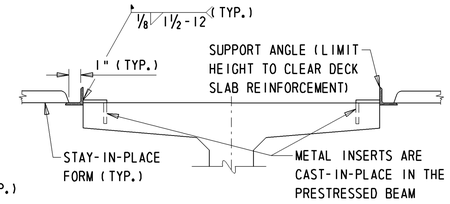

(FLANGE SECTION)

NOTE :

SHOP DRAWINGS SHALL BE SUBMITTED FOR REVIEW AND APPROVAL BY THE ENGINEER. METAL FORMS MUST BE GALVANIZED, MORTAR TIGHT AND STEEL METAL SCREWS MUST BE NON-CORROSIVE. SELF TAPPING SCREWS SHALL BE INSTALLED AT THE SIDE LAP OF THE SHEETS AT MID-SPAN BETWEEN SUPPORTS.

STAY-IN-PLACE FORM DETAILS

N.T.S.

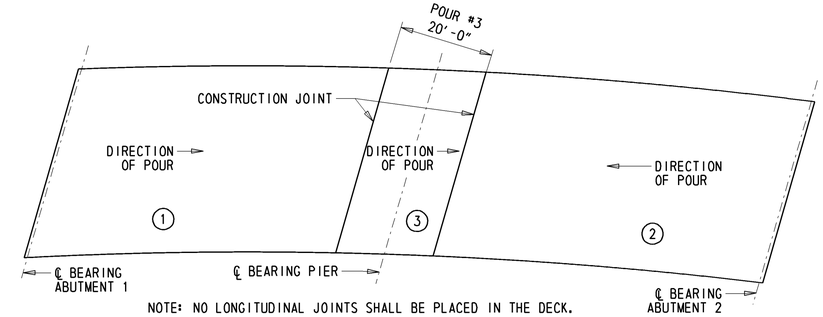

NOTE: NO LONGITUDINAL JOINTS SHALL BE PLACED IN THE DECK.

DECK SLAB POURING SEQUENCE

1/16" = 1'-0"

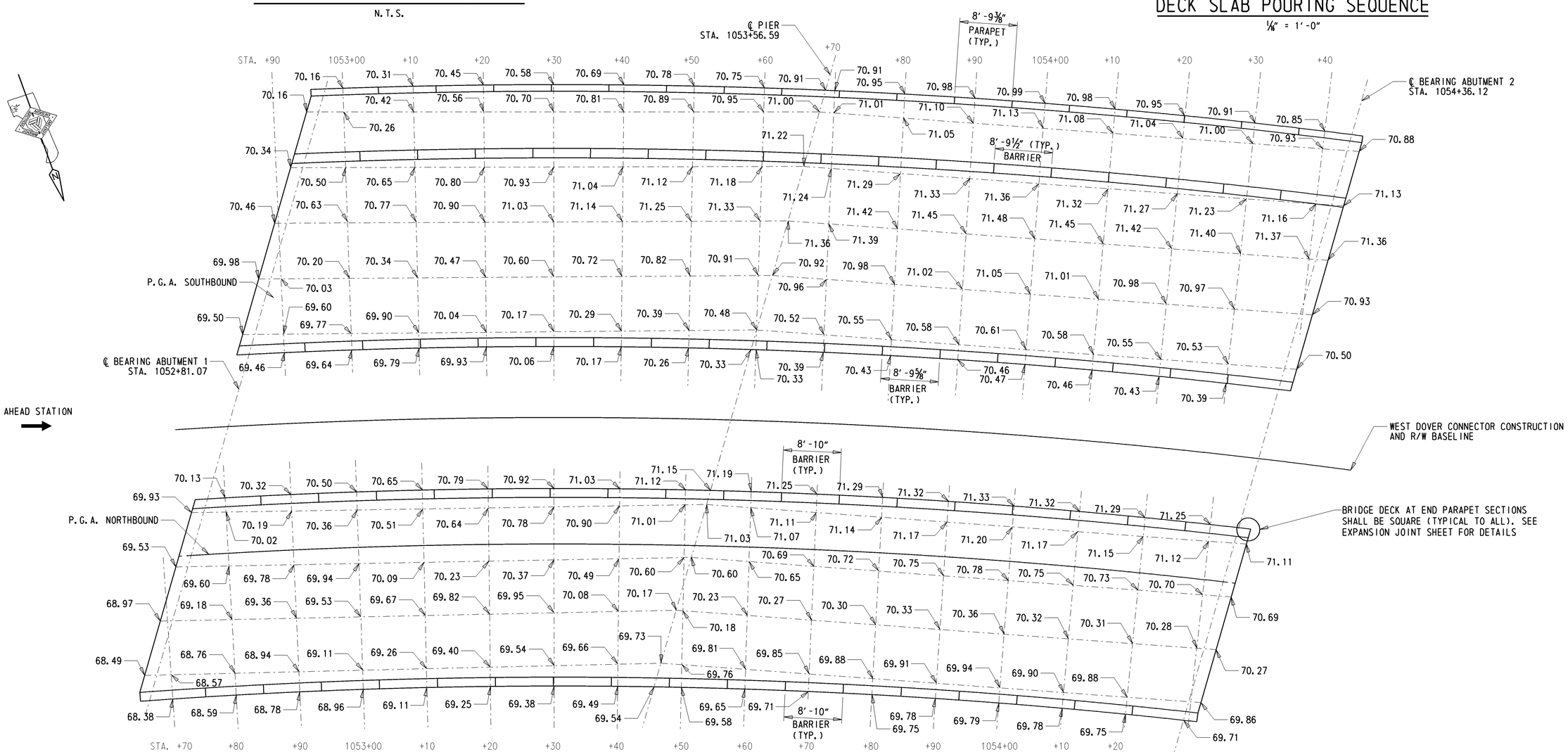

PLAN

1/8" = 1'-0"

DELAWARE DEPARTMENT OF TRANSPORTATION	ADDENDUMS / REVISIONS	SCALE: AS NOTED	WEST DOVER CONNECTOR	CONTRACT T200411701	BRIDGE NO. 2-157 N&S	FINISHED DECK ELEVATIONS BRIDGE SHEET 56 OF 65	SHEET NO. 167
				COUNTY KENT	DESIGNED BY: EM		TOTAL SHTS. 320
					CHECKED BY: JNH		

Y:\KENT2\BRIDGE\T200411701\PLANS\NEW BURTON RD - 2 SPAN\DK02.DGN

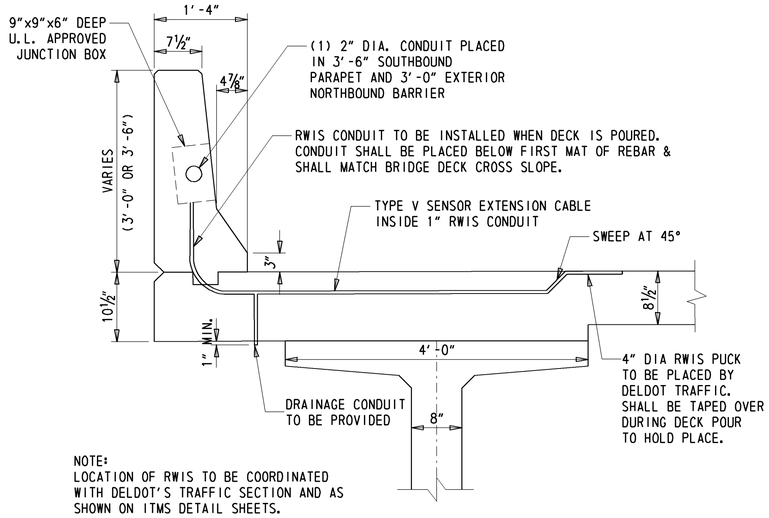

NOTE:
LOCATION OF RWIS TO BE COORDINATED WITH DELDOT'S TRAFFIC SECTION AND AS SHOWN ON ITMS DETAIL SHEETS.

TYPICAL SECTION OF DECK PARAPET AT RWIS

SCALE: N.T.S.

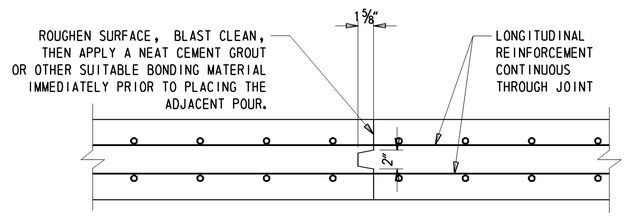

TYP. DECK CONSTRUCTION JOINT

SCALE: N.T.S.

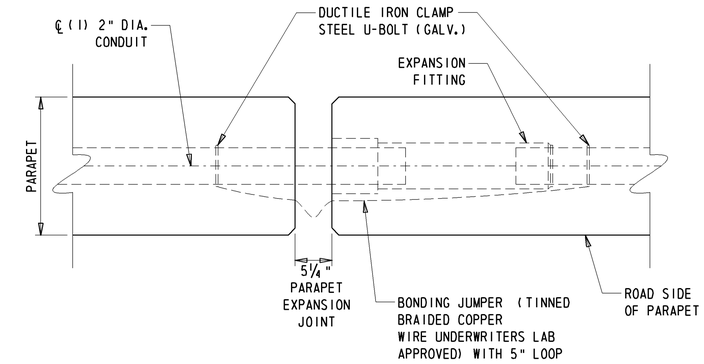

PARAPET CONDUIT EXPANSION JOINT

SCALE: N.T.S.

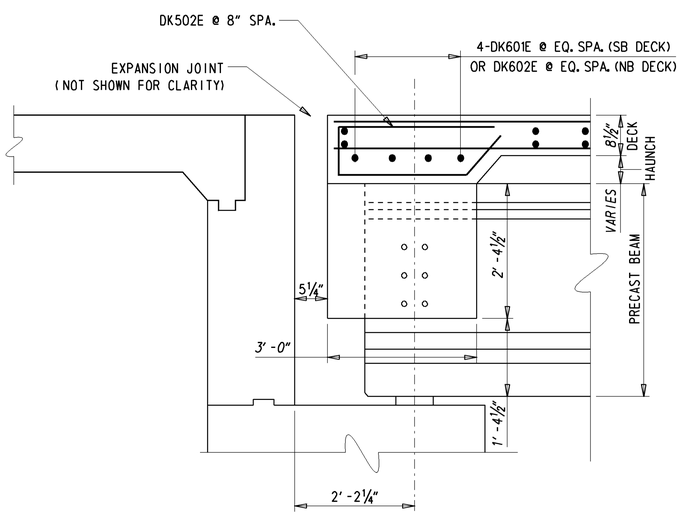

END DIAPHRAGM SECTION

SCALE: N.T.S.

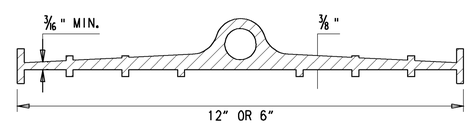

P.V.C. WATER STOP

SCALE: N.T.S.

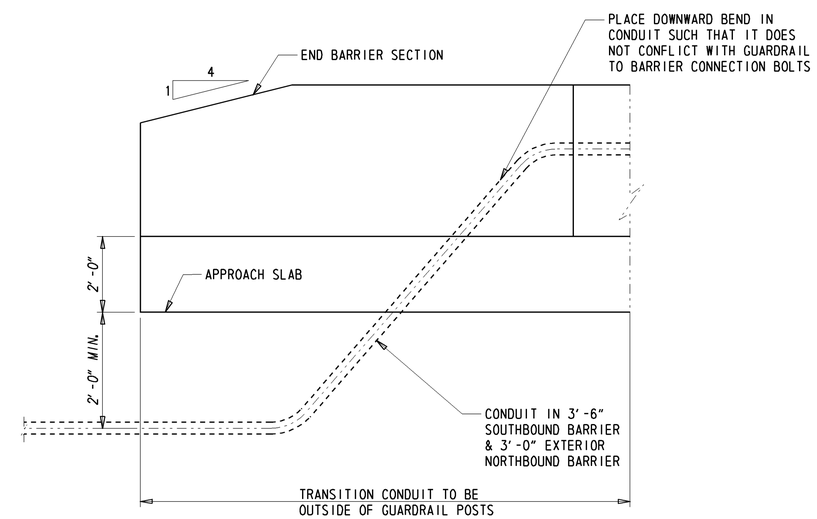

CONDUIT TRANSITION DETAIL

SCALE: N.T.S.

Y:\KENT%%\BRIDGE\T200411701\Plans\New Burton Rd - 2 Span\dk03.dgn

DELAWARE DEPARTMENT OF TRANSPORTATION	ADDENDUMS / REVISIONS	NOT TO SCALE	WEST DOVER CONNECTOR	CONTRACT T200411701	BRIDGE NO. 2-157 N&S	DECK DETAILS BRIDGE SHEET 57 OF 65	SHEET NO. 168
				COUNTY KENT	DESIGNED BY: EM		TOTAL SHTS. 320
					CHECKED BY: JNH		

EXPANSION JOINT NOTES:

1. STEEL FOR DECK JOINTS AND STEEL EXTRUSIONS SHALL BE AASHTO M270, GR. 36 (ASTM A36)
2. NEOPRENE EXTRUSION TO MEET D-2628-81 MODIFIED, (RECOVERY TESTS EXCLUDED).
3. THE EXPANSION JOINT SHALL BE CAPABLE OF SEALING THE DECK TO PREVENT MOISTURE AND OTHER CONTAMINANTS FROM DESCENDING THROUGH THE JOINT.
4. ENTIRE EXPANSION DAM SHALL BE PAINTED AFTER FABRICATION USING URETHANE SYSTEM, EXCEPT AS NOTED.
5. LUBRICANT-ADHESIVE FOR USE IN INSTALLING AND BONDING NEOPRENE SEAL ELEMENTS TO STEEL JOINT COMPONENTS SHALL BE A ONE QUART MOISTURE-CURING POLYURETHANE AND HYDROCARBON SOLVENT MIXTURE HAVING THE FOLLOWING PHYSICAL PROPERTIES:

AVERAGE WEIGHT, POUNDS PER GALLON	8 +/- 10%
SOLIDS CONTENT	65%
ADHESIVE SHALL REMAIN LIQUID FROM	5°F TO 120°F
FILM STRENGTH, AS PER ASTM D-412	2,000 PSI
ELONGATION	250%

6. HOLES SHALL BE PLACED IN THE RIB PLATES AND STRAP ANCHOR PLATES FOR BAR REINFORCEMENT. IF THIS IS DONE IN THE FIELD AN APPROVED PAINT SHALL BE USED TO TOUCH-UP THE HOLES.

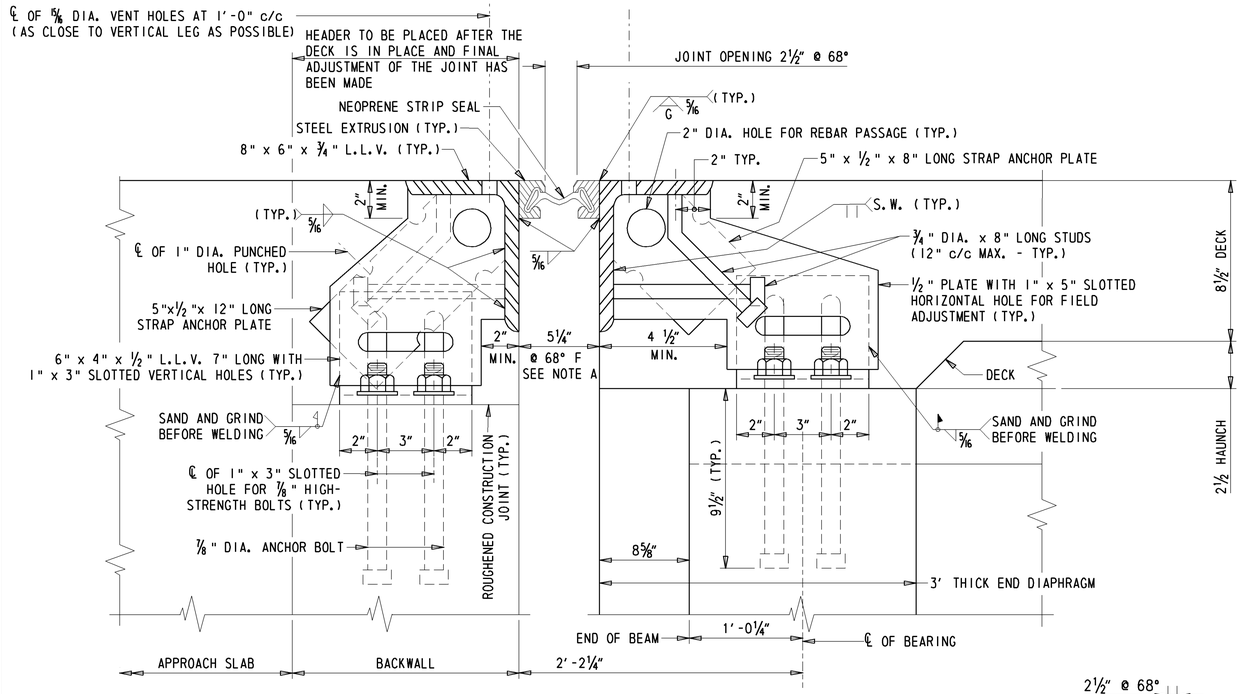

SECTION C-C AT ROADWAY

3" = 1'-0"

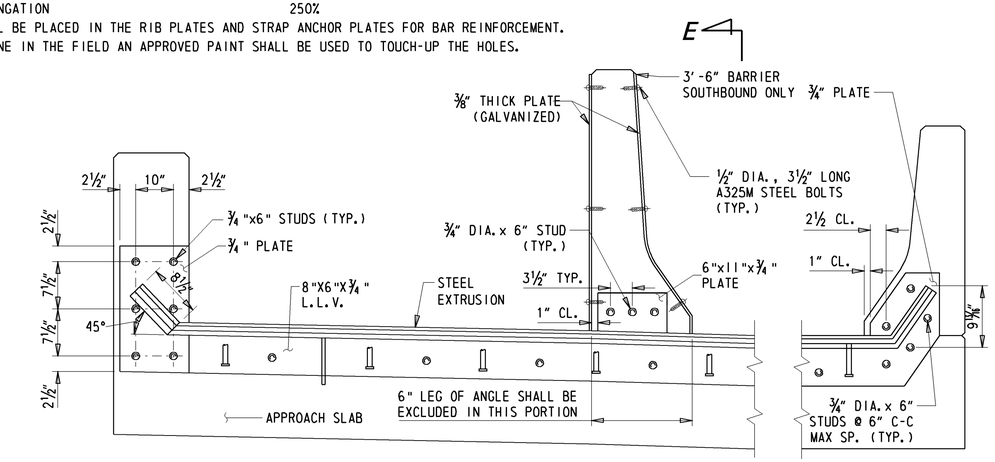

SECTION B-B

SCALE: 1" = 1'-0"

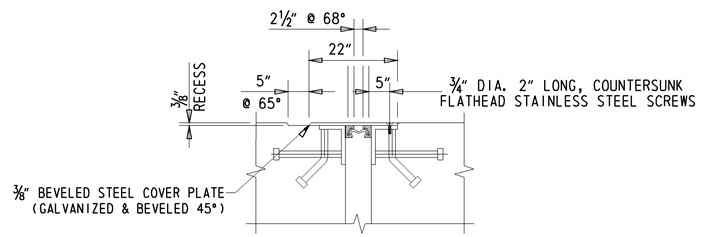

JOINT SECTION D-D AT SIDEWALK

1½" = 1'-0"

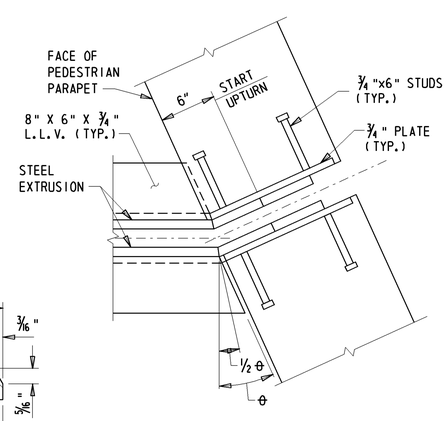

DETAIL 'A'

SCALE: 1½" = 1'-0"

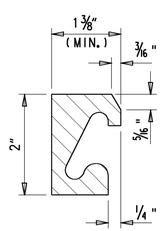

STEEL EXTRUSION DETAIL

SCALE : N.T.S.

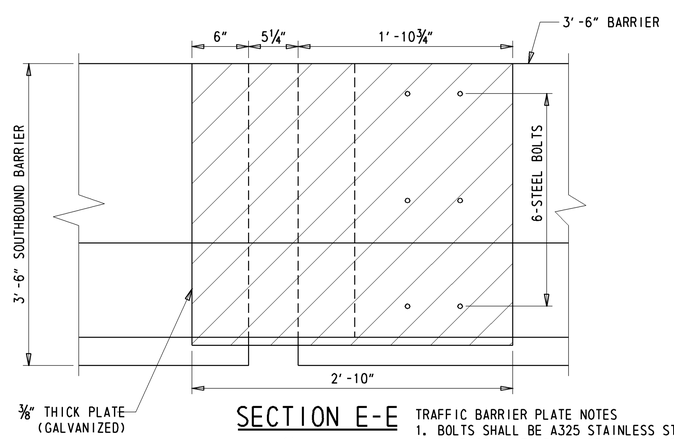

SECTION E-E

1½" = 1'-0"

TRAFFIC BARRIER PLATE NOTES
1. BOLTS SHALL BE A325 STAINLESS STEEL.
2. HEAD OF BOLTS SHALL BE FLUSH WITH FACE OF STEEL PLATE. CONTRACTOR SHALL SUBMIT DETAILS FOR ENGINEER APPROVAL.

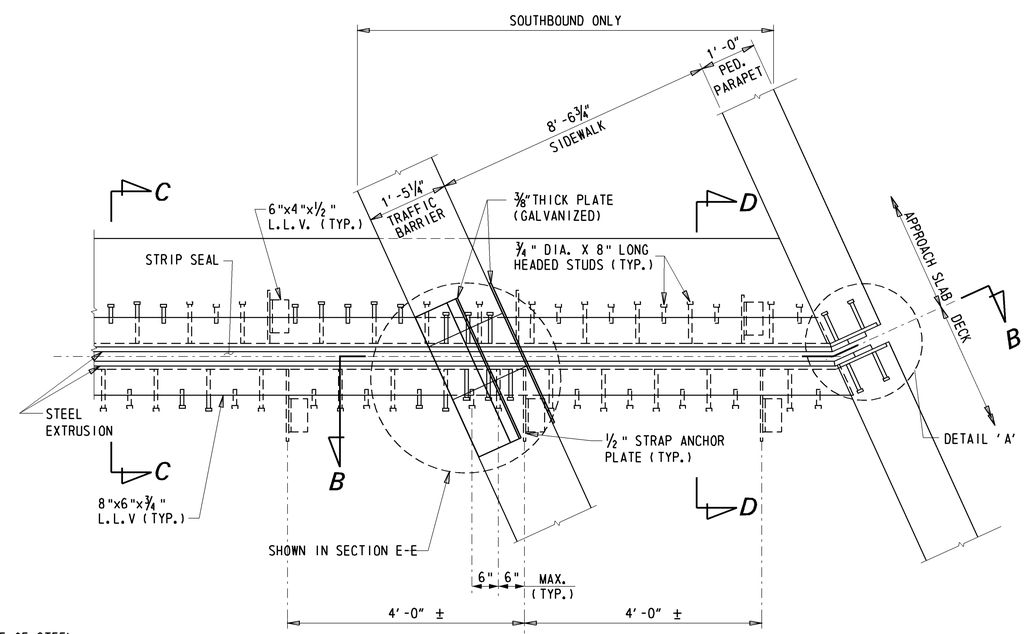

PLAN

SCALE: 1" = 1'-0"

JOINT OPENING (INCH)

LOCATION	TEMPERATURE (°F)					MOVEMENT CLASSIFICATION
	10	30	50	70	90	
ABUTMENTS	2⅞	2¾	2⅝	2½"	2⅜	3"

DELAWARE DEPARTMENT OF TRANSPORTATION	ADDENDUMS / REVISIONS	SCALE: AS NOTED	WEST DOVER CONNECTOR	CONTRACT T200411701 / COUNTY KENT	BRIDGE NO. 2-157 N&S / DESIGNED BY: EM / CHECKED BY: JNH	EXPANSION JOINT DETAILS BRIDGE SHEET 58 OF 65	SHEET NO. 169 / TOTAL SHTS. 320

Y:\KENT*\BRIDGE*2202\PLANS\BRIDGE\EXO1.DGN

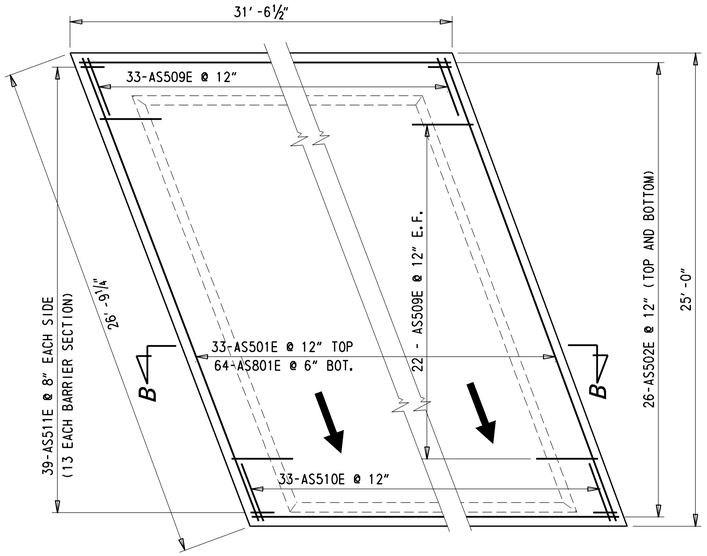

APPROACH SLAB 1N PLAN

¼" = 1' -0"

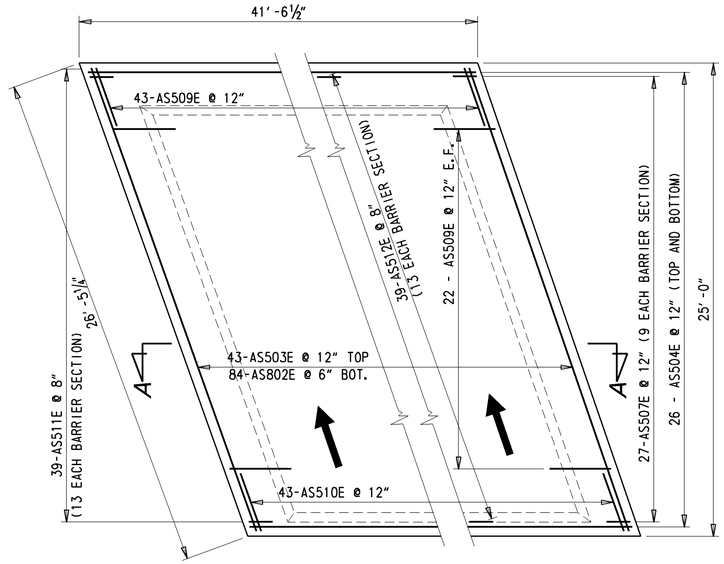

APPROACH SLAB 1S PLAN

¼" = 1' -0"

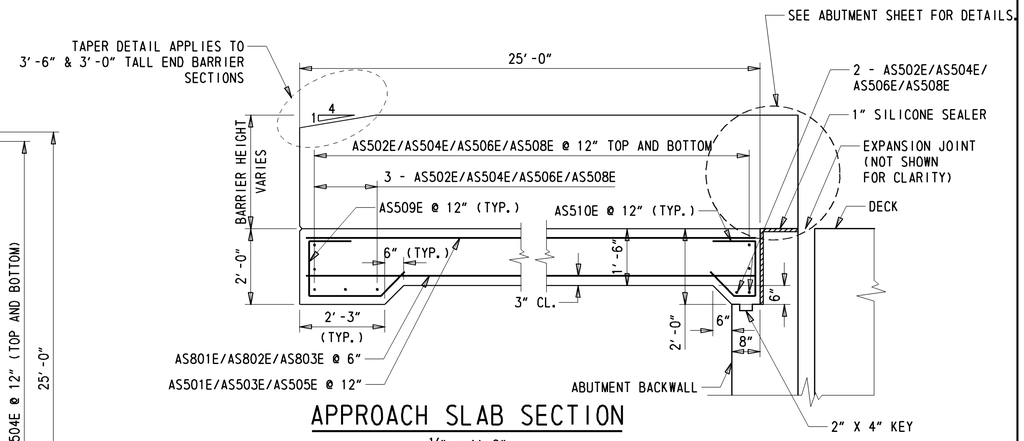

APPROACH SLAB SECTION

½" = 1' -0"

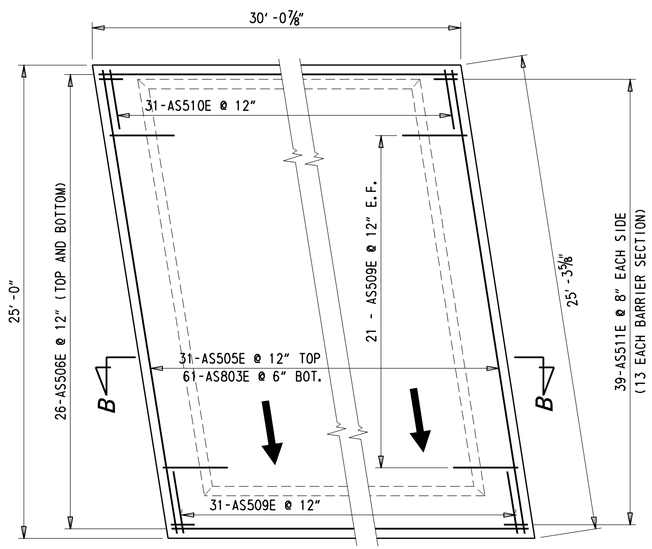

APPROACH SLAB 2N PLAN

¼" = 1' -0"

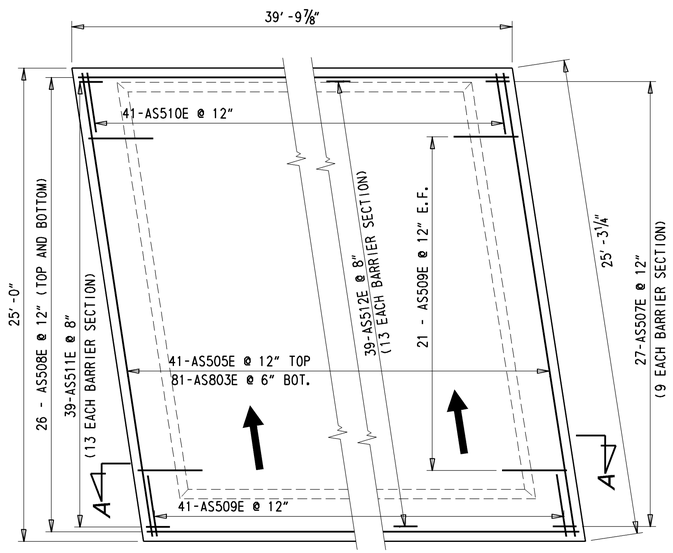

APPROACH SLAB 2S PLAN

¼" = 1' -0"

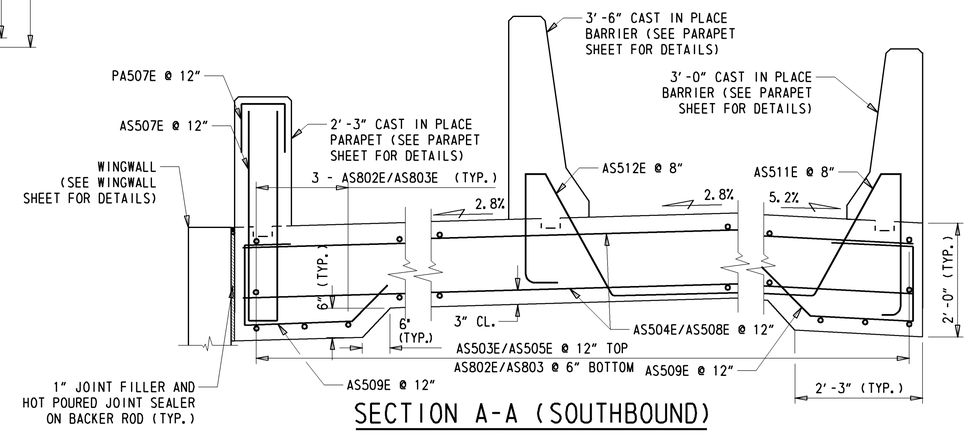

SECTION A-A (SOUTHBOUND)

¾" = 1' -0"

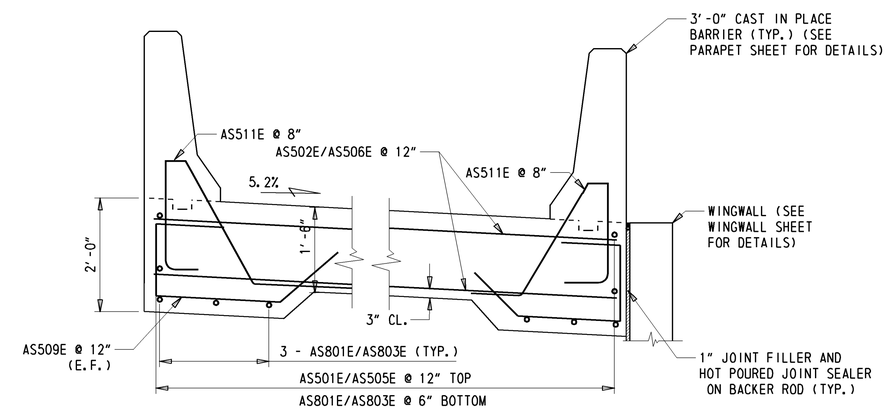

SECTION B-B (NORTHBOUND)

¾" = 1' -0"

Y:\KENT?\BRIDGE\T200411701\PLANS\NEW BURTON RD - 2 SPAN\AS01.DGN

DELAWARE DEPARTMENT OF TRANSPORTATION	ADDENDUMS / REVISIONS	**SCALE: AS NOTED**	**WEST DOVER CONNECTOR**	CONTRACT T200411701	BRIDGE NO. **2-157 N&S**	**APPROACH SLAB DETAILS BRIDGE SHEET 59 OF 65**	SHEET NO. 170
				COUNTY KENT	DESIGNED BY: EM		TOTAL SHTS. 320
					CHECKED BY: EM, JNH		

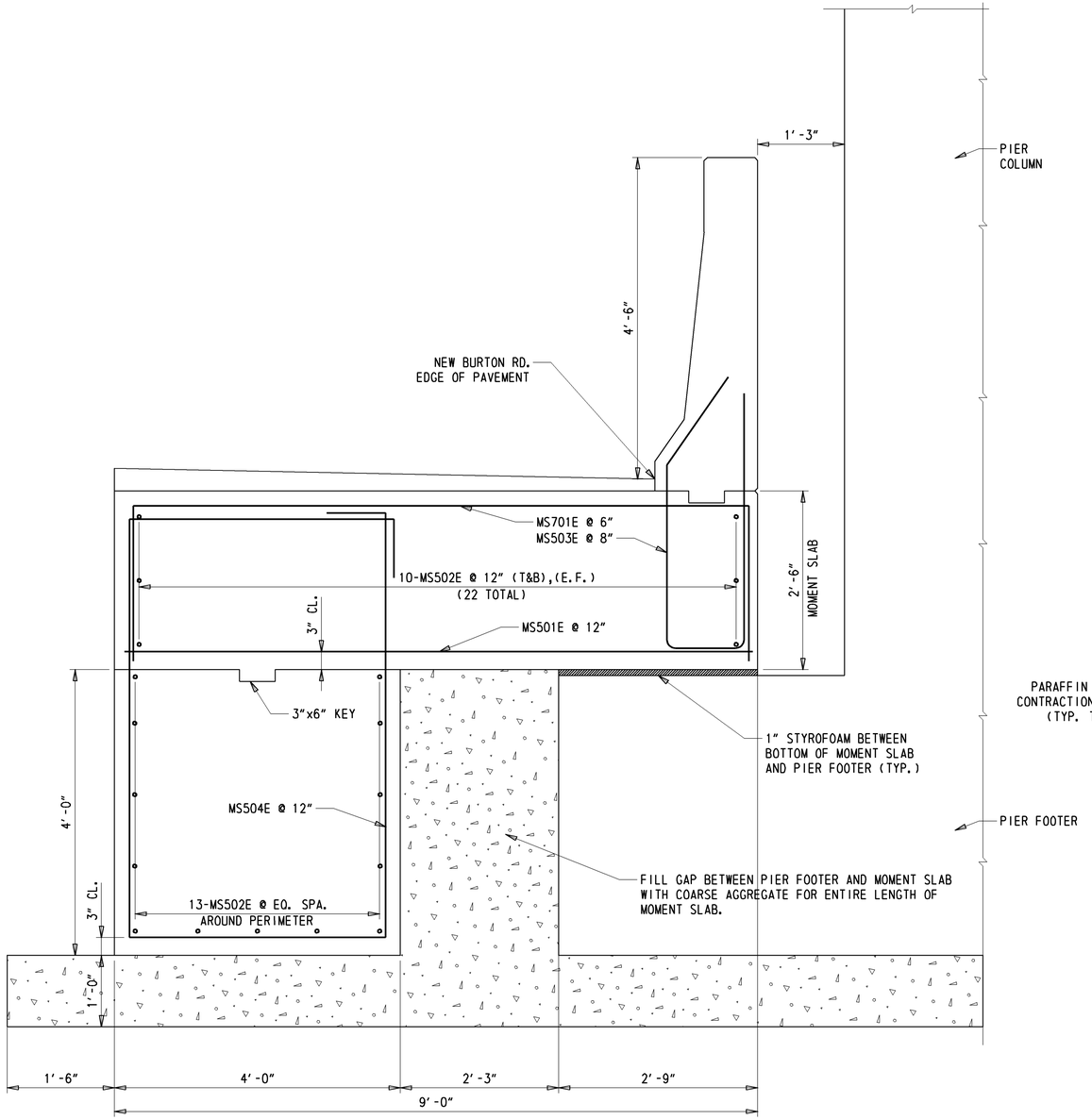

CRASH BARRIER AND MOMENT SLAB DETAIL

1" = 1'-0"

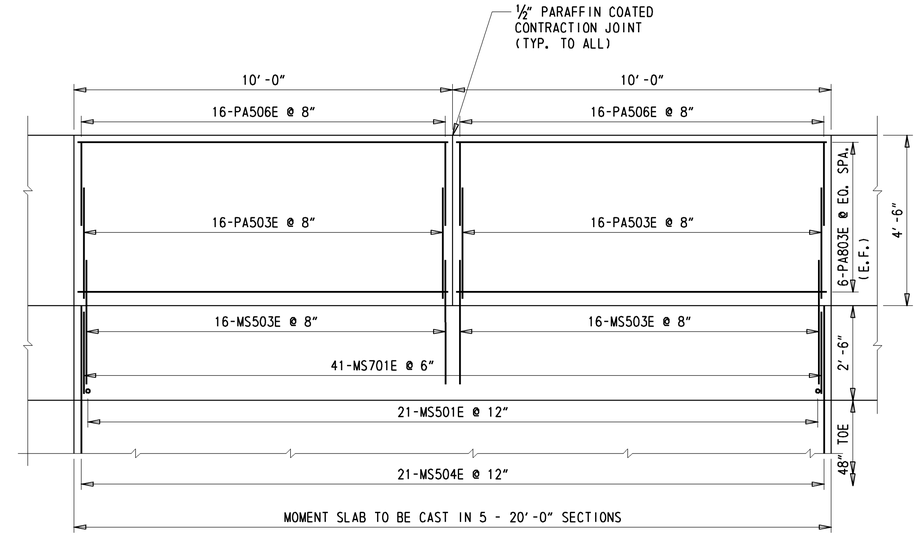

4'-6" BARRIER ELEVATION

½" = 1'-0"

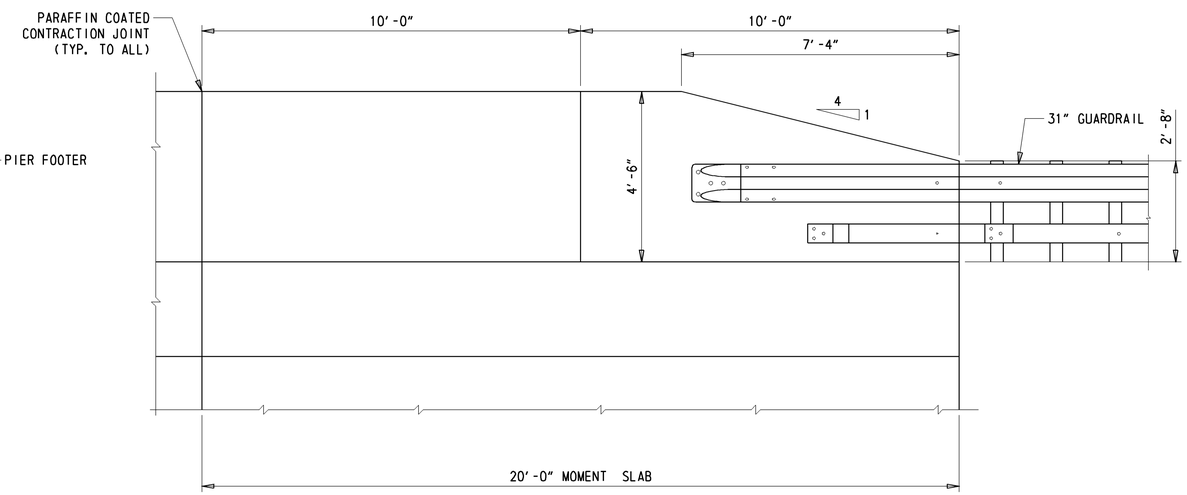

4'-6" TO 3'-0" BARRIER TRANSITION

½" = 1'-0"

Y:\KENT2\BRIDGE\T200411701\PLANS\NEW BURTON RD - 2 SPAN\PA02.DGN

DELAWARE DEPARTMENT OF TRANSPORTATION	ADDENDUMS / REVISIONS	SCALE: AS NOTED	WEST DOVER CONNECTOR	CONTRACT T200411701	BRIDGE NO. 2-157 N&S	MOMENT SLAB DETAILS BRIDGE SHEET 60 OF 65	SHEET NO. 171
				COUNTY KENT	DESIGNED BY: TRS		TOTAL SHTS. 320
					CHECKED BY: EM		

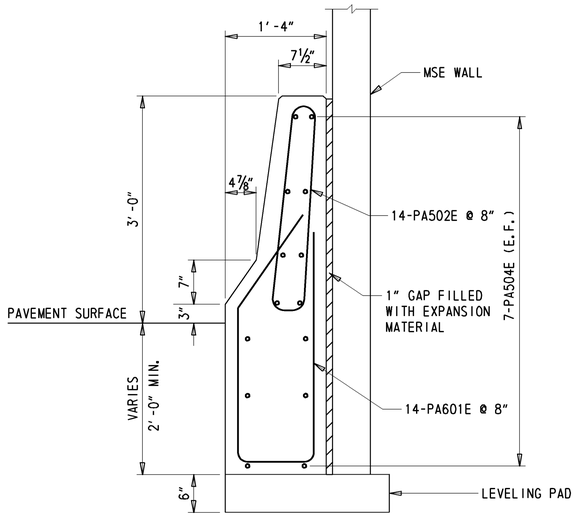

NOTE:
MSE WALL BARRIER SHALL BE CAST IN 12 EQUAL 8'-2½" SECTIONS ACROSS THE LENGTH OF MSE WALL 1

MSE WALL BARRIER SECTION

1" = 1'-0"

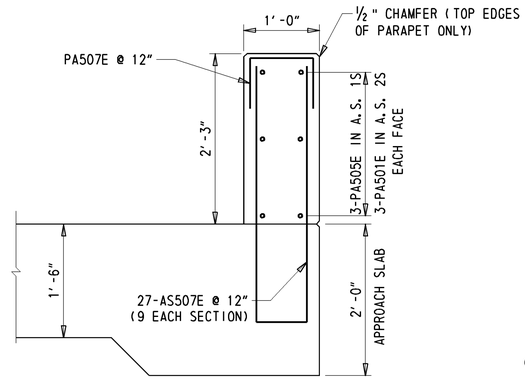

NOTE: APPROACH SLAB BARRIER SHALL BE DIVIDED INTO THREE EQUAL SECTIONS.

2'-3" APPROACH SLAB PARAPET SECTION

1" = 1'-0"

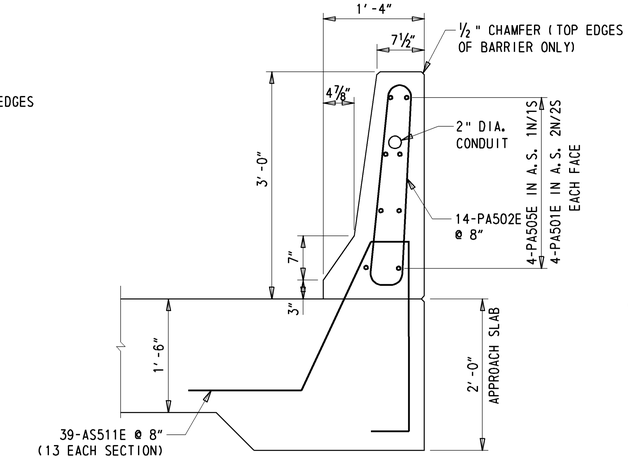

NOTES: 1. APPROACH SLAB BARRIER SHALL BE DIVIDED INTO THREE EQUAL SECTIONS.
2. END PARAPET SECTIONS ON APPROACH SLAB SHALL BE TAPERED AT 4:1 AND REBAR FIELD CUT AS NECESSARY. PAYMENT UNDER ITEM #604000.

3'-0" APPROACH SLAB BARRIER SECTION

1" = 1'-0"

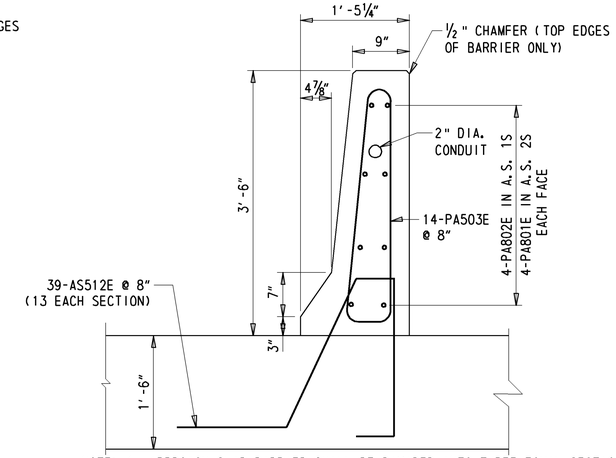

NOTE: 1. APPROACH SLAB BARRIER SHALL BE DIVIDED INTO THREE EQUAL SECTIONS.
2. END PARAPET SECTIONS ON APPROACH SLAB SHALL BE TAPERED AT 4:1 AND REBAR FIELD CUT AS NECESSARY. PAYMENT UNDER ITEM #604000.

3'-6" APPROACH SLAB BARRIER SECTION

1" = 1'-0"

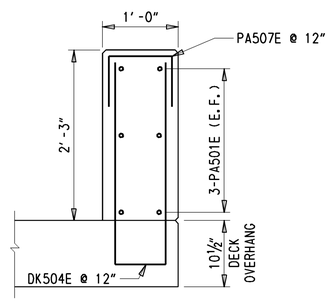

2'-3" DECK PARAPET SECTION

1" = 1'-0"

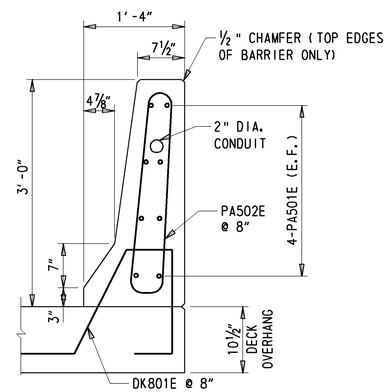

3'-0" DECK BARRIER SECTION

1" = 1'-0"

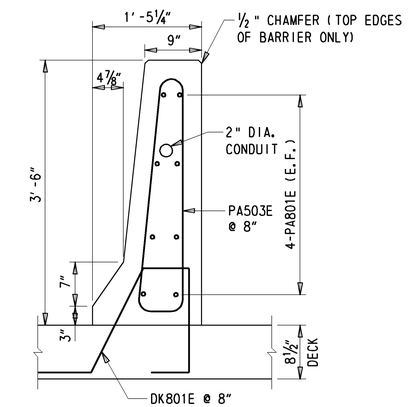

NOTE: END PARAPET SECTIONS ON DECK SHALL BE SQUARE. SEE EXPANSION JOINT SHEET FOR DETAILS. REBAR FIELD CUT AS NECESSARY. PAYMENT UNDER ITEM #604000.

3'-6" DECK BARRIER SECTION

1" = 1'-0"

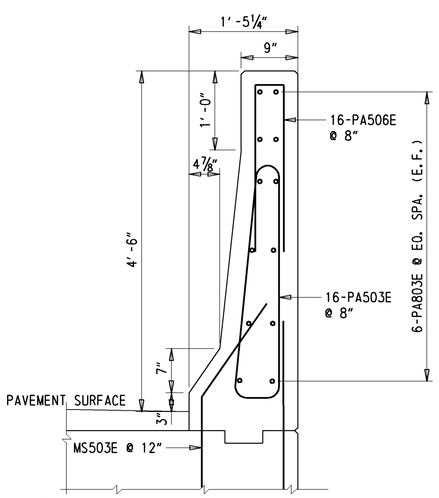

NOTE:
MOMENT SLAB BARRIER SHALL BE CAST IN 10 EQUAL 10'-0" SECTIONS

4'-6" MOMENT SLAB BARRIER SECTION

1" = 1'-0"

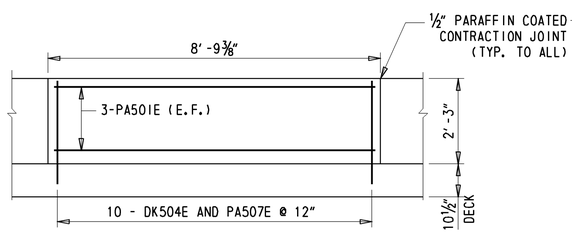

2'-3" DECK PARAPET ELEVATION

½" = 1'-0"

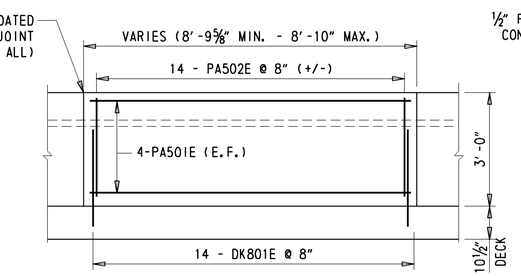

3'-0" DECK BARRIER ELEVATION

½" = 1'-0"

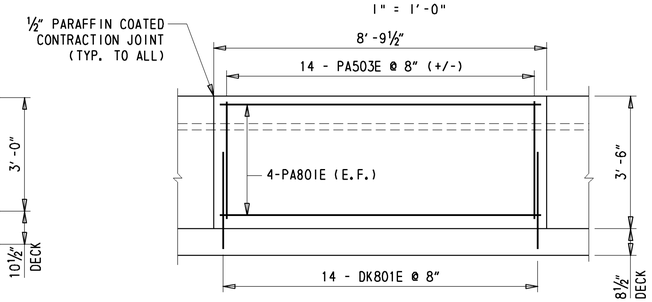

3'-6" DECK BARRIER ELEVATION

½" = 1'-0"

NOTES:
1. SEE ROADWAY PLANS FOR CONDUIT LOCATIONS

Y:\KENT2\BRIDGE\T200411701\PLANS\NEW BURTON RD - 2 SPAN\PA02.DGN

DELAWARE DEPARTMENT OF TRANSPORTATION	ADDENDUMS / REVISIONS	SCALE: AS NOTED	WEST DOVER CONNECTOR	CONTRACT T200411701	BRIDGE NO. 2-157 N&S	PARAPET DETAILS BRIDGE SHEET 61 OF 65	SHEET NO. 172
				COUNTY KENT	DESIGNED BY: EM		TOTAL SHTS. 320
					CHECKED BY: JNH		

(1) ANY MARK NUMBER WITH SUFFIX 'E' DENOTES EPOXY COATED REINFORCING STEEL.

(2) ALL MARK 'LOCATION PREFIXES' SHALL CONSIST OF TWO LETTERS AND ARE AS FOLLOWS: AB = ABUTMENT, AS = APPROACH SLAB, BC = BOX CULVERT, BW = BACKWALL, CL = COLUMN, DK = DECK, DL = DOWEL, FT = FOOTING, HW = HEADWALL, MS = MISC. BARS, PA = PARAPET, PR = PIER, SC = SHEETPILE CAP, SL = SLAB, TW = TOEWALL, WL = WALL (UNIQUE LOCATION), WW = WINGWALL

SPECIFICATIONS					BENDING DIMENSIONS (FEET-INCHES /QUARTER INCH)										
QTY.	SIZE	LENGTH	MARK	TYPE	A	B	C	D	E	F/R	G	H	J	K	O
322	4	66-60	DK401E	1	0-60	65-60					0-60		0-40		
56	4	35-00	DK402E	STR		35-00									
208	5	35-00	DK501E	STR		35-00									
210	5	4-70	DK502E	16	0-100	0-80	2-70	0-60	0-72	2-00		0-60			2-70
180	5	6-10	DK504E	17		2-82	0-80	2-82							
159	6	39-90	DK601E	STR		39-90									
160	6	29-90	DK602E	STR		29-90									
317	7	41-50	DK701E	1	0-100	39-90					0-100		0-50		
318	7	31-50	DK702E	1	0-100	29-90					0-100		0-50		
1008	8	13-12	DK801E	T15	1-40	1-62	0-71		1-73	8-00		1-62			
420	5	2-30	DK512E	STR		2-30									
18	5	7-33	DK513E	STR		7-33									
112	5	4-30	DK514E	T1	0-52	0-60	1-20	0-60	1-20		0-52				
24	5	7-40	DK515E	STR		7-40									
63	5	7-12	DK516E	STR		7-12									
84	5	7-42	DK517E	STR		7-42									
42	5	3-110	DK518E	STR		3-110									
27	5	7-50	DK519E	STR		7-50									
36	5	7-72	DK520E	STR		7-72									
48	5	9-70	DK521E	T1	0-52	2-80	1-80	2-80	1-80		0-52				
35	5	12-40	DK522E	S4	0-60	4-40	2-80	4-40			0-60				
14	5	4-10	DK523E	STR		4-10									
8	5	5-40	DK524E	STR		5-40									
14	5	6-100	DK525E	STR		6-100									
6	5	5-10	DK526E	STR		5-10									
36	5	2-72	DK527E	17		1-60	1-12								
70	5	10-40	DK529E	S5	0-60	3-40	2-80	3-40			0-60				
4	5	26-10	DK530E	STR		26-10									
4	5	35-50	DK531E	STR		35-50									
4	5	25-00	DK532E	STR		25-00									
4	5	34-30	DK533E	STR		34-30									
70	8	26-50	AS801E	STR		26-50									
90	8	26-20	AS802E	STR		26-20									
154	8	24-113	AS803E	STR		24-113									
33	5	26-50	AS501E	STR		26-50									
57	5	31-22	AS502E	STR		31-22									
43	5	26-20	AS503E	STR		26-20									
57	5	41-22	AS504E	STR		41-22									

SPECIFICATIONS					BENDING DIMENSIONS (FEET-INCHES /QUARTER INCH)										
QTY.	SIZE	LENGTH	MARK	TYPE	A	B	C	D	E	F/R	G	H	J	K	O
72	5	24-113	AS505E	STR		24-113									
57	5	29-83	AS506E	STR		29-83									
54	5	8-40	AS507E	17		3-100	0-80	3-100							
57	5	39-53	AS508E	STR		39-53									
320	5	5-53	AS509E	16	0-100	1-70	2-00	1-03				0-90		0-90	2-90
148	5	3-93	AS510E	16	0-100	1-70	0-40	1-03				0-90		0-90	1-10
234	5	9-01	AS511E	T15	0-100	2-60	0-71		2-10	3-00		2-00			
78	5	8-61	AS512E	T15	0-100	2-00	0-71		2-10	3-00		2-00			
7	5	33-91	CL501E	XM						0-60		26-10	0	1.5	3-70
148	1	27-60	CL1001	STR		27-60									
630	5	8-52	PA501E	STR		8-52									
1176	5	6-93	PA502E	H1	0-70	2-41	0-112	2-40		0-32	0-70	0-32			
496	5	7-91	PA503E	H1	0-70	2-91	1-10	2-90		0-40	0-70	0-50			
168	5	7-102	PA504E	STR		7-102									
90	5	8-102	PA505E	STR		8-102									
160	5	5-50	PA506E	17		2-60	0-50	2-60							
234	5	2-40	PA507E	17		0-100	0-80	0-100							
168	6	6-112	PA601E	T11			1-12	1-110	1-00	2-110		1-00		0-60	
168	8	8-52	PA801E	STR		8-52									
24	8	8-93	PA802E	STR		8-93									
120	8	9-80	PA803E	STR		9-80									
19	5	46-80	FT501E	STR		46-80									
379	6	16-60	FT601E	17		2-60	11-60	2-60							
148	1	11-00	FT1001	17		1-00	10-00								
20	1	46-60	FT1101	STR		46-60									
19	5	41-80	FT551E	STR		41-80									
20	1	41-60	FT1151	STR		41-60									
8	5	47-70	PR501E	STR		47-70									
86	6	14-00	PR601E	T1	0-80	2-90	3-70	2-90	3-70		0-80				
100	6	14-102	PR602E	T1	0-80	2-90	4-01	2-90	4-01		0-80				
144	6	15-90	PR603E	T1	0-80	2-90	4-52	2-90	4-52		0-80				
100	6	16-70	PR604E	T1	0-80	2-90	4-102	2-90	4-102		0-80				
50	6	16-42	PR606E	T1	0-80	2-90	4-91	2-90	4-91		0-80				
20	9	47-70	PR901E	STR		47-70									

SPECIFICATIONS					BENDING DIMENSIONS (FEET-INCHES /QUARTER INCH)										
QTY.	SIZE	LENGTH	MARK	TYPE	A	B	C	D	E	F/R	G	H	J	K	O
18	9	13-00	PR903E	STR		13-00									
9	9	32-00	PR904E	STR		32-00									
9	9	16-30	PR905E	STR		16-30									
8	5	38-10	PR551E	STR		38-10									
38	6	17-52	PR605E	T1	0-80	2-90	5-33	2-90	5-33		0-80				
11	9	38-10	PR951E	STR		38-10									
28	9	14-10	PR952E	STR		14-10									
15	5	43-103	AB501E	STR		43-103									
24	5	9-10	AB502E	STR		9-10									
4	5	18-73	AB503E	STR		18-73									
9	5	17-53	AB504E	STR		17-53									
15	5	53-52	AB505E	STR		53-52									
24	5	9-33	AB506E	STR		9-33									
2	5	19-60	AB507E	STR		19-60									
2	5	8-100	AB508E	STR		8-100									
9	5	10-00	AB509E	STR		10-00									
9	5	18-40	AB510E	STR		18-40									
188	5	7-50	AB511E	17		1-50	5-20	0-100							
188	5	11-40	AB512E	17		3-60	0-80	7-20							
172	5	9-100	AB513E	17		2-50	5-00	2-50							
132	5	8-00	AB514E	17		1-60	5-00	1-60							
18	5	10-80	AB515E	17		2-100	5-00	2-100							
224	5	11-100	AB516E	17		3-50	5-00	3-50							
24	5	12-100	AB517E	17		3-110	5-00	3-110							
12	5	13-60	AB518E	17		4-30	5-00	4-30							
6	5	13-20	AB519E	17		4-10	5-00	4-10							
2	5	26-40	AB520E	STR		26-40									
15	5	51-00	AB521E	STR		51-00									
2	5	7-50	AB522E	STR		7-50									
66	5	9-30	AB523E	STR		9-30									
9	5	8-20	AB524E	STR		8-20									
2	5	16-80	AB525E	STR		16-80									
2	5	10-60	AB526E	STR		10-60									
18	5	12-40	AB527E	17		3-80	5-00	3-80							
6	5	11-10	AB528E	17		3-02	5-00	3-02							
15	5	42-00	AB529E	STR		42-00									
11	5	17-40	AB530E	STR		17-40									
2	5	18-60	AB531E	STR		18-60									

ASTM STANDARD ENGLISH REINFORCING BARS				RECOMMENDED END HOOKS, APPLICABLE TO ALL GRADES				STIRRUP AND TIE HOOKS, APPLICABLE TO ALL GRADES			
	NOMINAL DIMENSIONS				180° HOOKS		90° HOOKS		90° HOOK	135° HOOK	
BAR SIZE	DIAMETER (INCHES)	AREA (INCHES²)	WEIGHT (LBS./FT.)	D	A OR G	J	A OR G	D	A OR G	A OR G	A OR G
3	0.375	0.110	0.376	2¼"	5"	3"	6"	1½"	4"	4"	2½"
4	0.500	0.200	0.668	3"	6"	4"	8"	2"	4½"	4½"	3"
5	0.625	0.310	1.043	3¾"	7"	5"	10"	2½"	6"	5½"	3¾"
6	0.750	0.440	1.502	4½"	8"	6"	1-0"	4½"	1-0"	8"	4½"
7	0.875	0.600	2.044	5¼"	10"	7"	1-2"	5¼"	1-2"	9"	5¼"
8	1.000	0.790	2.670	6"	11"	8"	1-4"	6"	1-4"	10½"	6"
9	1.128	1.000	3.400	9½"	1-3"	11¾"	1-7"				
10	1.270	1.270	4.303	10¾"	1-5"	1-1¼"	1-10"				
11	1.410	1.560	5.313	1-0"	1-7"	1-2¾"	2-0"				
14	1.693	2.250	7.650	1-6¼"	2-3"	1-9¾"	2-7"				
18	2.257	4.000	13.600	2-0"	3-0"	2-4½"	3-5"				

NOTES:

1. FIGURES SHOWN IN CIRCLES REPRESENT BAR BEND TYPES.
2. STANDARD BAR BENDS INCLUDE ONLY THOSE TYPES BELOW, INDICATED AS SUCH.
3. ALL DIMENSIONS OUT-TO-OUT, EXCEPT "A" AND "G" ON STD. 180° AND 135° HOOKS.
4. "J" DIMENSIONS ON 180° HOOKS TO BE SHOWN ONLY WHERE NECESSARY TO RESTRICT HOOK SIZE, OTHERWISE STANDARD 'ACI' HOOKS ARE TO BE USED.
5. WHERE "J" IS NOT SHOWN, "J" WILL BE KEPT EQUAL TO OR LESS THAN "H" ON TYPES 3, 5 AND 22. WHERE "J" CAN EXCEED "H", IT SHALL BE SHOWN.
6. "H" DIMENSIONS OF STIRRUPS TO BE SHOWN AS NEEDED TO FIT WITHIN THE CONCRETE.
7. UNLESS OTHERWISE NOTED, DIAMETER "D" IS THE SAME FOR ALL BENDS AND HOOKS ON A BAR (EXCEPT FOR BEND TYPES 11 AND 13).
8. WHERE SLOPE DIFFERS FROM 45° OFFSET, "H" AND "K" MUST BE SHOWN.
9. WHERE BARS ARE TO BE BENT MORE ACCURATELY THAN STANDARD BENDING TOLERANCES, BENDING DIMENSIONS REQUIRING CLOSER FABRICATION SHOULD HAVE LIMITS INDICATED.
10. FOR RECOMMENDED DIAMETER "D", OF BENDS, HOOKS, ETC., REFER TO TABLE ABOVE, 'CRSI' OR 'ACI' TABLES WHERE APPLICABLE AND REQUIRED.
11. TYPE S1-S6, S11, T1-T3 AND T6-T9 APPLICABLE TO BAR SIZES #3 THROUGH #8.

STANDARD BAR BENDS

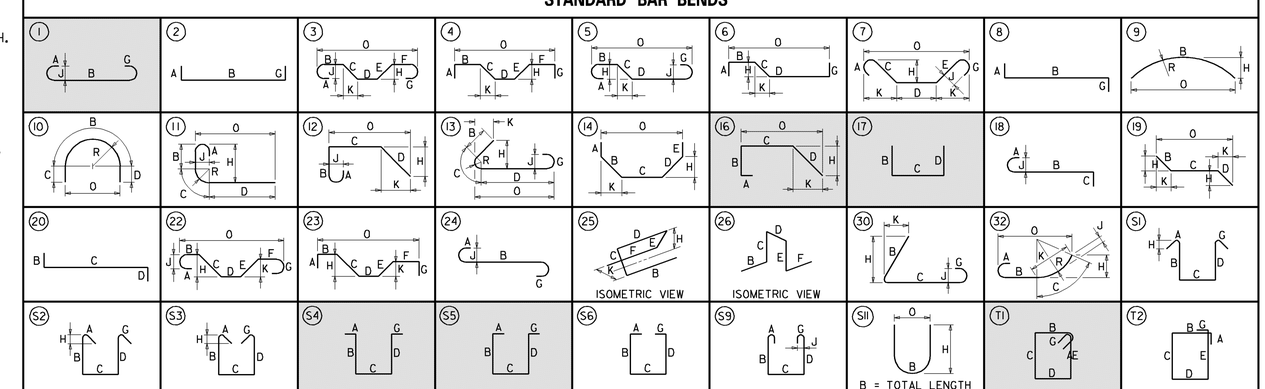

SPECIAL BAR BENDS

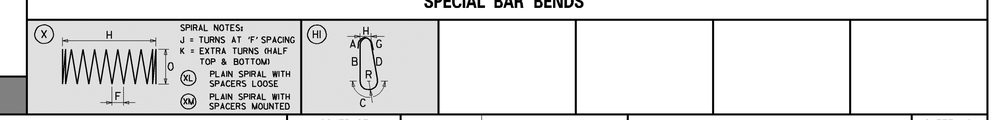

STIRRUP AND TIE HOOKS

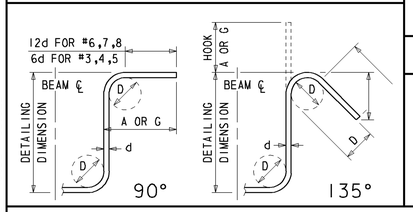

180° AND 90° END HOOKS

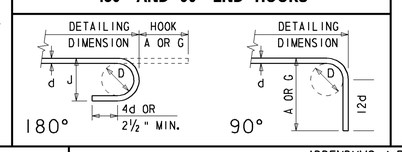

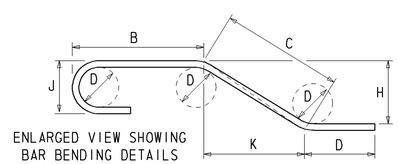

ENLARGED VIEW SHOWING BAR BENDING DETAILS

DELAWARE DEPARTMENT OF TRANSPORTATION

ADDENDUMS / REVISIONS

WEST DOVER CONNECTOR

CONTRACT	BRIDGE NO.	2-157 N&S	REINFORCEMENT BAR LIST BRIDGE SHEET 62 OF 65	SHEET NO.
T200411701	DESIGNED BY: EM, NED			173
COUNTY				TOTAL SHTS.
KENT	CHECKED BY: EM, MJG			320

W:\MSV8\CELLS\PROJDEV\SB.CEL

(1) ANY MARK NUMBER WITH SUFFIX 'E' DENOTES EPOXY COATED REINFORCING STEEL.

(2) ALL MARK 'LOCATION PREFIXES' SHALL CONSIST OF TWO LETTERS AND ARE AS FOLLOWS: AB = ABUTMENT, AS = APPROACH SLAB, BC = BOX CULVERT, BW = BACKWALL, CL = COLUMN, DK = DECK, DL = DOWEL, FT = FOOTING, HW = HEADWALL, MS = MISC. BARS, PA = PARAPET, PR = PIER, SC = SHEETPILE CAP, SL = SLAB, TW = TOEWALL, WL = WALL (UNIQUE LOCATION), WW = WINGWALL

SPECIFICATIONS					BENDING DIMENSIONS (FEET-INCHES /QUARTER INCH)										
QTY.	SIZE	LENGTH	MARK	TYPE	A	B	C	D	E	F/R	G	H	J	K	O
2	5	7-100	AB532E	STR		7-100									
6	5	11-60	AB533E	17		3-30	5-00	3-30							
8	5	7-50	AB534E	17		3-40	0-90	3-40							
16	5	0-90	AB535E	STR		0-90									
20	5	5-60	AB536E	STR		5-60									
20	5	3-23	AB537E	STR		3-23									
4	5	11-90	AB538E	STR		11-90									
6	5	9-90	AB539E	STR		9-90									
23	5	7-80	AB540E	17		1-50	6-30								
23	5	12-50	AB541E	17		3-60	0-80	8-30							
28	5	5-62	AB542E	17		2-20	1-22	2-20							
2	5	5-10	AB543E	STR		5-10									
2	5	5-33	AB544E	STR		5-33									
2	5	4-111	AB545E	STR		4-111									
2	5	5-22	AB546E	STR		5-22									
9	8	43-103	AB821E	STR		43-103									
9	8	53-52	AB822E	STR		53-52									
9	8	51-00	AB823E	STR		51-00									
9	8	42-00	AB824E	STR		42-00									
13	9	43-103	AB931E	STR		43-103									
13	9	53-52	AB932E	STR		53-52									
13	9	51-00	AB933E	STR		51-00									
13	9	42-00	AB934E	STR		42-00									
42	8	2-60	DL801E	STR		2-60									
105	5	8-80	MS501E	STR		8-80									
175	5	19-80	MS502E	STR		19-80									
160	5	9-02	MS503E	T11			1-82	2-80	1-00	3-80		1-60		0-100	
105	5	20-10	MS504E	T1	0-52	3-60	6-10	3-60	6-10		0-52				
205	7	12-100	MS701E	17		2-10	8-80	2-10							
66	6	8-100	WW601E	17		1-10	6-80	1-10							
9	5	13-02	WW501E	STR		13-02									
27	5	12-80	WW502E	STR		12-80									
2X10	5	12-10	WW503E	STR		12-10									
		T0				T0									
		14-91				14-91									
2X10	5	11-112	WW504E	STR		11-112									
		T0				T0									
		13-03				13-03									

SPECIFICATIONS					BENDING DIMENSIONS (FEET-INCHES /QUARTER INCH)										
QTY.	SIZE	LENGTH	MARK	TYPE	A	B	C	D	E	F/R	G	H	J	K	O
1X16	5	9-12	WW505E	17		2-20	6-112								
		T0				T0	T0	T0							
		9-52				2-20	7-32								
1X16	5	12-92	WW506E	17		0-80	6-112	5-20							
		T0				T0	T0	T0							
		13-12				0-80	7-32	5-20							
1X14	5	9-72	WW507E	17		2-20	7-52								
		T0				T0	T0	T0							
		9-62				2-20	7-42								
1X14	5	13-32	WW508E	17		0-80	7-52	5-20							
		T0				T0	T0	T0							
		13-22				0-80	7-42	5-20							
11	5	16-20	WW509E	STR		16-20									
11	5	16-60	WW510E	STR		16-60									
20	5	14-80	WW511E	STR		14-80									
2X10	5	14-72	WW512E	STR		14-72									
		T0				T0									
		17-01				17-01									
2X10	5	14-51	WW513E	STR		14-51									
		T0				T0									
		15-53				15-53									
1X19	5	11-00	WW514E	17		2-20	8-100								
		T0				T0	T0	T0							
		11-40				2-20	9-20								
1X19	5	14-80	WW515E	17		0-80	8-100	5-20							
		T0				T0	T0	T0							
		15-00				0-80	9-20	5-20							
1X17	5	10-71	WW516E	17		2-20	8-51								
		T0				T0	T0	T0							
		10-83				2-20	8-63								
1X17	5	14-31	WW517E	17		0-80	8-51	5-20							
		T0				T0	T0	T0							
		14-43				0-80	8-63	5-20							

SPECIFICATIONS					BENDING DIMENSIONS (FEET-INCHES /QUARTER INCH)										
QTY.	SIZE	LENGTH	MARK	TYPE	A	B	C	D	E	F/R	G	H	J	K	O

ASTM STANDARD ENGLISH REINFORCING BARS				RECOMMENDED END HOOKS, APPLICABLE TO ALL GRADES				STIRRUP AND TIE HOOKS, APPLICABLE TO ALL GRADES			
NOMINAL DIMENSIONS				180° HOOKS			90° HOOKS	90° HOOK		135° HOOK	
BAR SIZE	DIAMETER (INCHES)	AREA (INCHES²)	WEIGHT (LBS./FT.)	D	A OR G	J	A OR G	D	A OR G	A OR G	A OR G
3	0.375	0.110	0.376	2¼"	5"	3"	6"	1½"	4"	4"	2½"
4	0.500	0.200	0.668	3"	6"	4"	8"	2"	4½"	4½"	3"
5	0.625	0.310	1.043	3¾"	7"	5"	10"	2½"	6"	5½"	3¾"
6	0.750	0.440	1.502	4½"	8"	6"	1-0"	4½"	1-0"	8"	4½"
7	0.875	0.600	2.044	5¼"	10"	7"	1-2"	5¼"	1-2"	9"	5¼"
8	1.000	0.790	2.670	6"	11"	8"	1-4"	6"	1-4"	10½"	6"
9	1.128	1.000	3.400	9½"	1-3"	11¾"	1-7"				
10	1.270	1.270	4.303	10¾"	1-5"	1-1¼"	1-10"				
11	1.410	1.560	5.313	1-0"	1-7"	1-2¾"	2-0"				
14	1.693	2.250	7.650	1-6¼"	2-3"	1-9¾"	2-7"				
18	2.257	4.000	13.600	2-0"	3-0"	2-4½"	3-5"				

NOTES:

1. FIGURES SHOWN IN CIRCLES REPRESENT BAR BEND TYPES.
2. STANDARD BAR BENDS INCLUDE ONLY THOSE TYPES BELOW, INDICATED AS SUCH.
3. ALL DIMENSIONS OUT-TO-OUT, EXCEPT "A" AND "G" ON STD. 180° AND 135° HOOKS.
4. "J" DIMENSIONS ON 180° HOOKS TO BE SHOWN ONLY WHERE NECESSARY TO RESTRICT HOOK SIZE, OTHERWISE STANDARD 'ACI' HOOKS ARE TO BE USED.
5. WHERE "J" IS NOT SHOWN, "J" WILL BE KEPT EQUAL TO OR LESS THAN "H" ON TYPES 3, 5 AND 22. WHERE "J" CAN EXCEED "H", IT SHALL BE SHOWN.
6. "H" DIMENSIONS OF STIRRUPS TO BE SHOWN AS NEEDED TO FIT WITHIN THE CONCRETE.
7. UNLESS OTHERWISE NOTED, DIAMETER "D" IS THE SAME FOR ALL BENDS AND HOOKS ON A BAR (EXCEPT FOR BEND TYPES 11 AND 13).
8. WHERE SLOPE DIFFERS FROM 45° OFFSET, "H" AND "K" MUST BE SHOWN.
9. WHERE BARS ARE TO BE BENT MORE ACCURATELY THAN STANDARD BENDING TOLERANCES, BENDING DIMENSIONS REQUIRING CLOSER FABRICATION SHOULD HAVE LIMITS INDICATED.
10. FOR RECOMMENDED DIAMETER "D", OF BENDS, HOOKS, ETC., REFER TO TABLE ABOVE, 'CRSI' OR 'ACI' TABLES WHERE APPLICABLE AND REQUIRED.
11. TYPE S1-S6, S11, T1-T3 AND T6-T9 APPLICABLE TO BAR SIZES #3 THROUGH #8.

STANDARD BAR BENDS

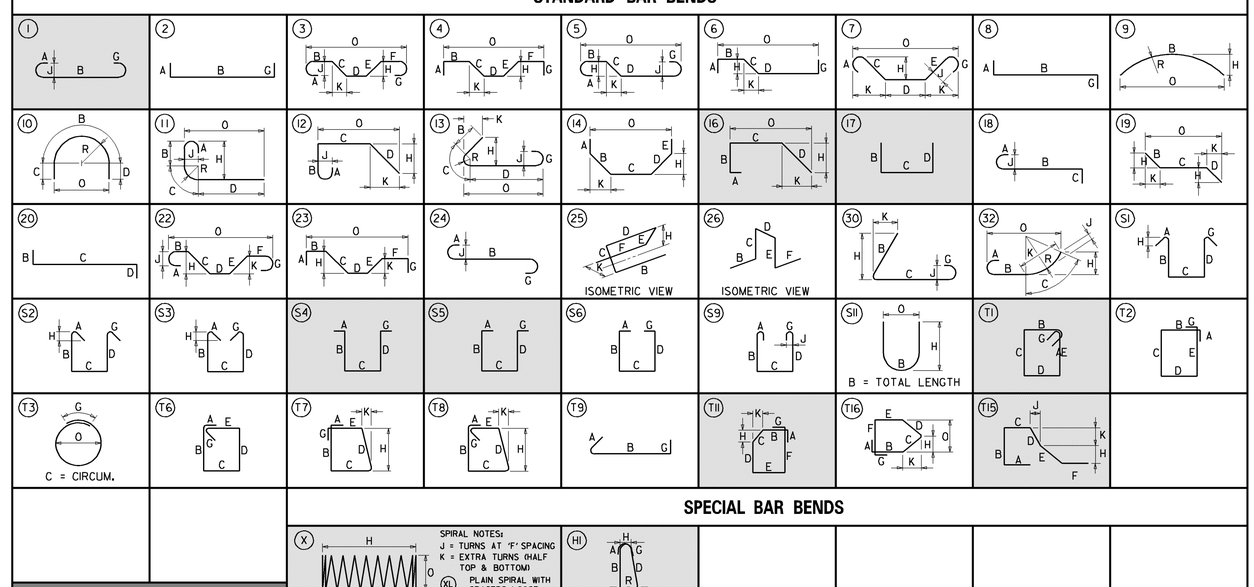

SPECIAL BAR BENDS

STIRRUP AND TIE HOOKS

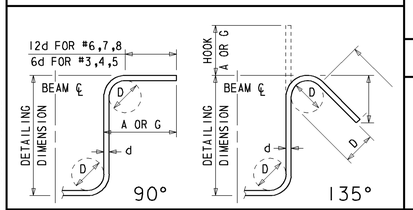

180° AND 90° END HOOKS

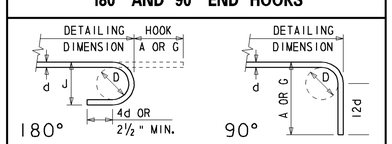

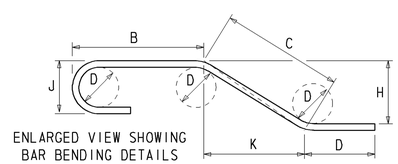

ENLARGED VIEW SHOWING BAR BENDING DETAILS

DELAWARE DEPARTMENT OF TRANSPORTATION

ADDENDUMS / REVISIONS

WEST DOVER CONNECTOR

CONTRACT	BRIDGE NO.	2-157 N&S	REINFORCEMENT BAR LIST BRIDGE SHEET 63 OF 65	SHEET NO.
T200411701	DESIGNED BY: EM, NED			174
COUNTY				TOTAL SHTS.
KENT	CHECKED BY: EM, MJG			320

W:\MSV8\CELLS\PROJDEV\SB.CEL

BORING: S-02 | **DATE DRILLED:** 8/9/12
STATION: 1052+58.3 | **OFFSET:** 14.7 RT | **ELEVATION:** | **NORTHING:** 411604.432 | **EASTING:** 618974.109
COMMENTS: N/A

SAMPLE INFORMATION

NO.	DEPTH	BLOWS /6"	DESCRIPTION	CLASS /G.I.	REMARKS
1	0.0 2.0	3 10 10 10	MOIST VERY STIFF TAN FINE TO COARSE SANDY SILT W/SOME CLAY, TRACE OF FINE GRAVEL.	A-4(0)	
2	2.0 4.0	11 8 9 7	MOIST MEDIUM DENSE TAN CLAYEY FINE TO COARSE SAND W/SOME SILT, TRACE OF FINE GRAVEL.	A-2-6(0)	
3	4.0 6.0	4 6 5 7	MOIST MEDIUM DENSE TAN FINE TO COARSE SAND W/SOME SILT, TRACE OF FINE GRAVEL.	A-2-4(0)	
4	6.0 8.0	9 7 8 6	MOIST MEDIUM DENSE TAN FINE SAND W/SOME COARSE SAND AND SILT, TRACE OF FINE GRAVEL.	A-2-4(0)	
5	8.0 10.0	3 8 11 9	MOIST MEDIUM DENSE BROWN COARSE TO FINE SAND W/SOME FINE GRAVEL AND SILT.	A-1-B	
6	10.0 12.0	8 6 5 5	WET MEDIUM DENSE BROWN COARSE TO FINE SAND W/SOME SILT, TRACE OF FINE GRAVEL.	A-1-B	
7	12.0 14.0	3 3 4 4	WET LOOSE BROWN FINE SAND W/SOME SILT, TRACE OF COARSE SAND.	A-2-4(0)	
8	14.0 16.0	4 3 4 3	WET LOOSE TANNISH BROWN FINE SAND W/SOME SILT, TRACE OF COARSE SAND AND FINE GRAVEL.	A-2-4(0)	
9	16.0 18.0	6 7 8 6	WET MEDIUM DENSE TANNISH BROWN FINE TO COARSE SAND W/SOME SILT AND FINE GRAVEL.	A-2-4(0)	
10	18.0 23.0	2 3 5 5	WET LOOSE TANNISH BROWN COARSE TO FINE SAND W/TRACE OF FINE GRAVEL AND SILT.	A-1-B	
11	23.0 28.0	1 2 6 6	WET LOOSE GRAY ORGANIC SILTY COARSE TO FINE SAND.	A-2-4(0)	
12	28.0 33.0	4 9 16 10	WET MEDIUM DENSE BROWNISH TAN COARSE TO FINE SAND W/SOME SILT, TRACE OF FINE GRAVEL.	A-1-B	
13	33.0 38.0	4 6 6 5	WET MEDIUM DENSE BROWNISH TAN FINE TO COARSE SAND W/TRACE OF SILT AND FINE GRAVEL.	A-3	
14	38.0 43.0	4 6 6 8	SATURATED STIFF GRAY FINE SANDY SILT W/SOME COARSE SAND, CLAY AND ORGANIC MATTER.	A-4(1)	ESTIMATED C.I.P. PILE TIP ELEVATION
15	43.0 48.0	3 4 6 6	SATURATED STIFF GRAY ORGANIC CLAYEY COARSE TO FINE SANDY SILT.	A-4(2)	
16	48.0 53.0	6 6 9 9	SATURATED MEDIUM DENSE GRAY SILTY FINE SAND W/SOME COARSE SAND.	A-2-4(0)	
17	53.0 58.0	6 6 8 9	SATURATED MEDIUM DENSE GRAY FINE TO COARSE SAND W/SOME SILT, TRACE OF ORGANIC MATTER.	A-2-4(0)	ESTIMATED PRECAST PILE TIP ELEVATION
18	58.0 63.0	13 19 17 19	SATURATED DENSE GRAY FINE TO COARSE SAND W/TRACE OF FINE GRAVEL, SILT AND ORGANIC MATTER.	A-3	
19	63.0 68.0	26 36 43 40	SATURATED VERY DENSE GRAY FINE SAND W/TRACE OF COARSE SAND, SILT AND ORGANIC MATTER.	A-3	
20	68.0 73.0	50	SATURATED DENSE GRAY FINE TO COARSE SAND W/TRACE OF FINE GRAVEL AND SILT.	A-3	
21	73.0 78.0	50	SATURATED DENSE GRAY COARSE TO FINE SAND W/SOME SILT, TRACE OF ORGANIC MATTER.	A-1-B	
22	78.0 83.0	50	SATURATED DENSE GRAY FINE SAND W/TRACE OF COARSE SAND, SILT AND ORGANIC MATTER.	A-3	
23	83.0 88.0	14 25 50	SATURATED VERY DENSE GRAY ORGANIC SILTY FINE TO COARSE SAND.	A-2-4(0)	
24	88.0 93.0	8 12 25 24	SATURATED HARD GRAY ORGANIC FINE SANDY SILT W/SOME COARSE SAND AND CLAY.	A-4(0)	
25	93.0 98.0	17 14 21 25	SATURATED HARD GRAY ORGANIC FINE SANDY SILT W/SOME COARSE SAND.	A-5(1)	
26	98.0 100.0	9 8 11 17	SATURATED VERY STIFF GRAY ORGANIC FINE TO COARSE SANDY SILT.	A-5(0)	
			END BORING.		

BORING: S-06 | **DATE DRILLED:** 7/25/12
STATION: 1053+52.7 | **OFFSET:** 14.8 RT | **ELEVATION:** | **NORTHING:** 411634.152 | **EASTING:** 618886.169
COMMENTS: N/A

SAMPLE INFORMATION

NO.	DEPTH	BLOWS /6"	DESCRIPTION	CLASS /G.I.	REMARKS
1	2.0 4.0	2 3 3 3	MOIST LOOSE BROWN SILTY FINE TO COARSE SAND W/TRACE OF FINE GRAVEL.	A-2-4(0)	
2	4.0 6.0	2 2 3 3	MOIST LOOSE BROWN FINE TO COARSE SAND W/SOME SILT, TRACE OF FINE GRAVEL.	A-2-4(0)	
3	6.0 8.0	2 3 3 3	MOIST LOOSE BROWN SILTY FINE TO COARSE SAND W/TRACE OF FINE GRAVEL.	A-2-4(0)	
4	8.0 10.0	3 2 2 2	MOIST VERY LOOSE BROWN FINE TO COARSE SAND W/SOME SILT, TRACE OF FINE GRAVEL.	A-2-4(0)	
5	10.0 12.0	3 4 5 6	WET LOOSE TAN COARSE TO FINE SAND W/SOME FINE GRAVEL AND SILT.	A-1-B	
6	12.0 14.0	6 7 7 9	WET MEDIUM DENSE BROWN COARSE SAND W/SOME FINE SAND, TRACE OF SILT AND FINE GRAVEL.	A-1-B	
7	14.0 16.0	5 7 6 5	WET MEDIUM DENSE BROWN COARSE SAND W/TRACE OF FINE SAND, SILT AND FINE GRAVEL.	A-1-B	
8	16.0 18.0	3 5 7 6	WET MEDIUM DENSE BROWN COARSE SAND W/TRACE OF FINE SAND, SILT AND FINE GRAVEL.	A-1-B	
9	18.0 23.0	4 10 20 21	WET MEDIUM DENSE BROWN FINE TO COARSE SAND AND FINE GRAVEL W/SOME SILT.	A-1-B	
10	23.0 28.0	4 3 5 7	SATURATED LOOSE GRAY SILTY FINE TO COARSE SAND.	A-2-4(0)	
11	28.0 33.0	4 7 10 10	SATURATED MEDIUM DENSE BROWN COARSE SAND W/SOME FINE SAND, TRACE OF FINE GRAVEL AND SILT.	A-1-B	
12	33.0 38.0	6 9 16 20	SATURATED MEDIUM DENSE BROWN COARSE TO FINE SAND W/TRACE OF FINE GRAVEL AND SILT.	A-1-B	
13	38.0 43.0	2 3 4 4	SATURATED FIRM GRAY FINE SANDY SILT W/SOME COARSE SAND AND CLAY.	A-4(0)	ESTIMATED C.I.P. PILE TIP ELEVATION
14	43.0 48.0	3 4 4 4	SATURATED FIRM GRAY CLAYEY COARSE TO FINE SANDY SILT.	A-4(2)	
15	48.0 53.0	4 4 6 7	SATURATED LOOSE GRAY ORGANIC SILTY FINE TO COARSE SAND.	A-2-4(0)	
16	53.0 58.0	3 4 5 8	SATURATED LOOSE GRAY FINE TO COARSE SAND W/TRACE OF SILT.	A-3	
17	58.0 63.0	8 12 16 17	SATURATED MEDIUM DENSE GRAY COARSE TO FINE SAND W/TRACE OF FINE GRAVEL AND SILT.	A-1-B	ESTIMATED PRECAST PILE TIP ELEVATION
18	63.0 68.0	9 15 19 27	SATURATED DENSE GRAY FINE SAND W/SOME COARSE SAND, TRACE OF SILT AND FINE GRAVEL.	A-3	
19	68.0 73.0	42 50	SATURATED VERY DENSE GRAY FINE TO COARSE SAND W/TRACE OF SILT AND FINE GRAVEL.	A-3	
20	73.0 78.0	50	SATURATED DENSE GRAY COARSE TAN FINE SAND W/TRACE OF SILT AND FINE GRAVEL.	A-1-B	
21	78.0 83.0	50	SATURATED DENSE GRAY FINE TO COARSE SAND W/SOME SILT, TRACE OF FINE GRAVEL.	A-2-4(0)	
22	83.0 88.0	4 10 12 14	SATURATED VERY STIFF GRAY ORGANIC FINE SANDY SILT W/TRACE OF COARSE SAND.	A-4(0)	
23	88.0 93.0	10 8 11 9	SATURATED VERY STIFF GRAY COARSE SANDY SILT W/SOME FINE SAND.	A-4(0)	
24	93.0 98.0	7 10 15 19	SATURATED VERY STIFF GRAY ORGANIC FINE SANDY SILT W/SOME COARSE SAND.	A-4(0)	
25	98.0 100.0	6 9 10 14	SATURATED VERY STIFF GRAY ORGANIC FINE TO COARSE SANDY CLAY W/TRACE OF SILT.	A-7-5(11)	
			END BORING.		

BORING: S-07 | **DATE DRILLED:** 7/27/12
STATION: 1053+61.3 | **OFFSET:** 18.9 LT | **ELEVATION:** | **NORTHING:** 411606.070 | **EASTING:** 618865.596
COMMENTS: N/A

SAMPLE INFORMATION

NO.	DEPTH	BLOWS /6"	DESCRIPTION	CLASS /G.I.	REMARKS
1	0.0 2.0		NO SAMPLE		
2	2.0 4.0	5 6 4 5	WET LOOSE BROWN SILTY FINE TO COARSE SAND W/TRACE OF FINE GRAVEL.	A-2-4(0)	
3	4.0 6.0	3 5 5 6	WET LOOSE TAN COARSE TO FINE SAND W/SOME FINE GRAVEL AND SILT.	A-1-B	
4	6.0 8.0	12 12 8 10	WET MEDIUM DENSE TAN FINE SAND W/SOME COARSE SAND AND SILT, TRACE OF FINE GRAVEL.	A-2-4(0)	
5	8.0 10.0	4 5 5 5	WET LOOSE TAN FINE SAND W/SOME COARSE SAND AND SILT, TRACE OF FINE GRAVEL.	A-2-4(0)	
6	10.0 12.0	4 5 7 7	WET MEDIUM DENSE BROWN FINE TO COARSE SAND W/SOME SILT, TRACE OF FINE GRAVEL.	A-2-4(0)	
7	12.0 14.0	2 4 5	WET LOOSE BROWN COARSE SAND W/TRACE OF FINE SAND, FINE GRAVEL AND SILT.	A-1-B	
8	14.0 16.0	2 5 4	WET LOOSE BROWN COARSE SAND W/SOME FINE SAND, TRACE OF FINE GRAVEL AND SILT.	A-1-B	
9	16.0 18.0	2 5 6 4	WET MEDIUM DENSE REDDISH BROWN COARSE SAND W/SOME FINE SAND, TRACE OF FINE GRAVEL AND SILT.	A-1-B	
10	18.0 23.0	1 2 3 8	WET LOOSE BROWN COARSE TO FINE SAND W/SOME SILT, TRACE OF FINE GRAVEL.	A-1-B	
11	23.0 28.0	2 2 3 3	SATURATED LOOSE GRAY CLAYEY FINE TO COARSE SAND W/SOME SILT AND FINE GRAVEL.	A-2-6(1)	
12	28.0 33.0	8 16 17 20	SATURATED DENSE TAN COARSE TO FINE SAND W/TRACE OF FINE GRAVEL AND SILT.	A-1-B	
13	33.0 38.0	14 16 11 17	SATURATED MEDIUM DENSE BROWN FINE TO COARSE SAND W/SOME SILT, TRACE OF FINE GRAVEL.	A-2-4(0)	
14	38.0 43.0	2 3 4 5	SATURATED FIRM GRAY ORGANIC COARSE TO FINE SANDY SILT W/SOME CLAY.	A-4(1)	ESTIMATED C.I.P. PILE TIP ELEVATION
15	43.0 48.0	2 3 4 5	SATURATED FIRM GRAY CLAYEY COARSE TO FINE SANDY SILT.	A-4(3)	
16	48.0 53.0	2 4 4 6	SATURATED FIRM GRAY ORGANIC CLAYEY FINE TO COARSE SANDY SILT.	A-4(2)	
17	53.0 58.0	3 4 4 4	SATURATED LOOSE GRAY FINE TO COARSE SAND W/TRACE OF FINE GRAVEL, SILT AND ORGANIC MATTER.	A-3	
18	58.0 63.0	6 6 10 10	SATURATED MEDIUM DENSE GRAY COARSE TO FINE SAND W/TRACE OF FINE GRAVEL, SILT AND ORGANIC MATTER.	A-1-B	ESTIMATED PRECAST PILE TIP ELEVATION
19	63.0 68.0	22 37 50	SATURATED VERY DENSE GRAY FINE SAND W/TRACE OF COARSE SAND, FINE GRAVEL AND SILT.	A-3	
20	68.0 73.0	34 50	SATURATED VERY DENSE GRAY FINE SAND W/TRACE OF COARSE SAND, FINE GRAVEL AND SILT.	A-3	
21	73.0 78.0	50	SATURATED DENSE GRAY SAND W/SOME ORGANIC MATTER.		
22	78.0 83.0	25 50	SATURATED VERY DENSE GRAY FINE SAND W/SOME COARSE SAND, FINE GRAVEL AND ORGANIC MATTER.	A-2-4(0)	
23	83.0 88.0	33 50	SATURATED VERY DENSE GRAY FINE SAND W/SOME SILT, TRACE OF COARSE SAND.	A-2-4(0)	
24	88.0 93.0	6 6 10 13	SATURATED VERY DENSE BROWN CLAYEY COARSE TO FINE SANDY SILT.	A-5(1)	
25	93.0 98.0	6 7 13 19	SATURATED VERY STIFF GRAY FINE SANDY SILT W/SOME COARSE SAND.	A-4(0)	
26	98.0 100.0	7 8 11 14	SATURATED VERY STIFF BROWN ORGANIC COARSE TO FINE SANDY SILT.	A-4(0)	
			END BORING.		

Y:\KENT\156\BRIDGE\T200411701\PLANS\NEW BURTON RD - 2 SPAN\BOO1.DGN

DELAWARE DEPARTMENT OF TRANSPORTATION

ADDENDUMS / REVISIONS

NOT TO SCALE

WEST DOVER CONNECTOR

CONTRACT	BRIDGE NO.	2-157 N&S
T200411701	DESIGNED BY:	EM
COUNTY		
KENT	CHECKED BY:	JNH

BORING LOGS
BRIDGE SHEET 64 OF 65

SHEET NO. 175
TOTAL SHTS. 320

BORING: S-11		DATE DRILLED: 8/14/12		
STATION: 1054+52.1	OFFSET: 19.2 LT	ELEVATION:	NORTHING: 411645.048	EASTING: 618781.546
COMMENTS: N/A				

SAMPLE INFORMATION

NO.	DEPTH	BLOWS /6"	DESCRIPTION	CLASS /G.I.	REMARKS
1	0.0 2.0	2 11 8 9	MOIST VERY STIFF TANNISH BROWN CLAYEY FINE SANDY SILT W/SOME COARSE SAND, TRACE OF FINE GRAVEL.	A-4(0)	
2	2.0 4.0	4 5 6 6	MOIST MEDIUM DENSE TAN SILTY FINE TO COARSE SAND W/TRACE OF FINE GRAVEL.	A-2-4(0)	
3	4.0 6.0	6 4 4 4	MOIST LOOSE TAN SILTY FINE TO COARSE SAND W/TRACE OF FINE GRAVEL.	A-2-4(0)	
4	6.0 8.0	7 5 5 6	MOIST LOOSE TAN FINE TO COARSE SAND W/SOME SILT, TRACE OF FINE GRAVEL.	A-2-4(0)	
5	8.0 10.0	3 4 3 3	MOIST LOOSE TAN FINE TO COARSE SAND W/SOME SILT, TRACE OF FINE GRAVEL.	A-2-4(0)	
6	10.0 12.0	5 6 6 6	WET MEDIUM DENSE BROWN FINE TO COARSE SAND W/SOME SILT, TRACE OF FINE GRAVEL.	A-2-4(0)	
7	12.0 14.0	4 7 6 6	WET MEDIUM DENSE BROWN COARSE SAND W/SOME FINE SAND, TRACE OF SILT AND FINE GRAVEL.	A-1-B	
8	14.0 16.0	3 6 7 7	WET MEDIUM DENSE BROWN COARSE SAND W/SOME FINE SAND, TRACE OF FINE GRAVEL AND SILT.	A-1-B	
9	16.0 18.0	6 6 7 8	WET MEDIUM DENSE BROWN COARSE TO FINE SAND W/SOME SILT, TRACE OF FINE GRAVEL.	A-2-4(0)	
10	18.0 23.0	5 2 4 4	SATURATED LOOSE LIGHT GRAY CLAYEY COARSE TO FINE SAND W/SOME SILT, TRACE OF FINE GRAVEL.	A-2-7(1)	
11	23.0 28.0	9 4 5 10	SATURATED STIFF GRAY CLAYEY SILT W/SOME FINE TO COARSE SAND, TRACE OF FINE GRAVEL.	A-4(3)	
12	28.0 33.0	3 8 19 15	SATURATED MEDIUM DENSE GRAYISH BROWN COARSE TO FINE SAND W/SOME FINE GRAVEL, TRACE OF SILT.	A-1-B	ESTIMATED C.I.P. PILE TIP ELEVATION
13	33.0 38.0	24 23 31 50	SATURATED VERY DENSE LIGHT GRAY FINE TO COARSE SAND W/TRACE OF FINE GRAVEL AND SILT.	A-3	
14	38.0 43.0	12 6 4 4	SATURATED LOOSE BROWN SILTY FINE TO COARSE SAND W/TRACE OF FINE GRAVEL.	A-2-4(0)	ESTIMATED PRECAST PILE TIP ELEVATION
15	43.0 48.0	3 4 5 5	SATURATED STIFF GRAY ORGANIC CLAYEY COARSE TO FINE SANDY SILT.	A-5(3)	
16	48.0 53.0	6 9 11 12	SATURATED VERY STIFF GRAY CLAYEY FINE TO COARSE SANDY SILT W/SOME ORGANIC MATTER.	A-4(2)	
17	53.0 58.0	5 5 6 7	SATURATED MEDIUM DENSE GRAY FINE TO COARSE SAND W/TRACE OF SILT.	A-3	
18	58.0 63.0	11 13 14 17	SATURATED MEDIUM DENSE GRAY FINE TO COARSE SAND W/TRACE OF SILT, FINE GRAVEL AND ORGANIC MATTER.	A-3	
19	63.0 68.0	8 7 16 18	SATURATED MEDIUM DENSE GRAY FINE TO COARSE SAND W/TRACE OF FINE GRAVEL, SILT AND ORGANIC MATTER.	A-3	
20	68.0 73.0	32 26 42 50	SATURATED VERY DENSE GRAY FINE SAND W/TRACE OF COARSE SAND, SILT AND ORGANIC MATTER.	A-3	
21	73.0 78.0	50	SATURATED DENSE GRAY FINE TO COARSE SAND W/TRACE OF SILT AND ORGANIC MATTER.	A-3	
22	78.0 83.0	21 30 42 50	SATURATED VERY DENSE GRAY FINE TO COARSE SAND W/SOME SILT AND ORGANIC MATTER.	A-2-4(0)	
23	83.0 88.0	42 30 31 27	SATURATED VERY DENSE GRAY SILTY FINE SAND W/TRACE OF COARSE SAND AND ORGANIC MATTER.	A-2-4(0)	
24	88.0 93.0	9 7 10 12	SATURATED VERY STIFF BROWN ORGANIC COARSE TO FINE SANDY SILT W/SOME CLAY.	A-4(1)	
25	93.0 98.0	7 8 13 25	SATURATED VERY STIFF GRAY FINE TO COARSE SANDY SILT W/SOME ORGANIC MATTER.	A-4(0)	
26	98.0 100.0	10 13 15 15	SATURATED VERY STIFF GRAY ORGANIC COARSE TO FINE SANDY CLAY W/TRACE OF SILT.	A-7-5(2)	

Y:\KENT\156\BRIDGE\T200411701\PLANS\NEW BURTON RD - 2 SPAN\BO02.DGN

DELAWARE
DEPARTMENT OF TRANSPORTATION

ADDENDUMS / REVISIONS

NOT TO SCALE

WEST DOVER CONNECTOR

CONTRACT	BRIDGE NO.	2-157 N&S	BORING LOGS BRIDGE SHEET 65 OF 65	SHEET NO.
T200411701	DESIGNED BY: EM			176
COUNTY				TOTAL SHTS.
KENT	CHECKED BY: JNH			320

STORMWATER MANAGEMENT GENERAL NOTES

THE CONTRACTOR SHALL PROVIDE 'AS-BUILT' DRAWINGS OF ALL STORMWATER MANAGEMENT FACILITIES SUCH AS PONDS, INFILTRATION BASINS, BIOFILTRATION SWALES, ETC. 'AS-BUILT' DRAWINGS SHALL SHOW THE ACTUAL FINISHED GROUND CONTOURS, OUTLET STRUCTURE DIMENSIONS AND ELEVATIONS, ETC. AS THEY EXIST AT THE COMPLETION OF THE PROJECT. THESE DRAWINGS SHALL BE SIGNED BY A PROFESSIONAL ENGINEER OR LAND SURVEYOR AND SENT TO DELDOT STORMWATER ENGINEERS.

INFILTRATION BASIN CONSTRUCTION SEQUENCE

STORMWATER MANAGEMENT BASINS THAT WILL FUNCTION AS AN INFILTRATION FACILITY SHALL BE CONSTRUCTED IN ACCORDANCE WITH THE FOLLOWING SPECIFICATIONS:

SECTION 271 - STORMWATER MANAGEMENT POND
SECTION 272 - POND OUTLET STRUCTURE, CONCRETE

1. CONSTRUCT INFILTRATION BASIN AFTER ALL AREAS DRAINING TO THE BASIN HAVE BEEN PERMANENTLY STABILIZED AND THE ENGINEER HAS APPROVED THE CONSTRUCTION. IF BASIN CONSTRUCTION CANNOT BE DELAYED UNTIL ITS DRAINAGE AREA IS STABILIZED, DIVERSION BERMS OR OTHER SUITABLE MEASURES SHOULD BE PLACED AROUND THE BASIN'S PERIMETER DURING ALL PHASES OF CONSTRUCTION TO DIVERT ALL RUNOFF AND SEDIMENT AWAY FROM THE BASIN. THESE DIVERSION MEASURES SHOULD NOT BE REMOVED UNTIL ALL CONSTRUCTION WITHIN THE BASIN'S DRAINAGE AREA IS COMPLETED AND THE DRAINAGE AREA STABILIZED.
2. SEE CONSTRUCTION PLANS FOR EROSION AND SEDIMENT CONTROL MEASURES.
3. CONSTRUCT THE INFILTRATION BASIN WITHOUT COMPACTING THE BASINS SUBGRADE SOILS. EXCAVATION SHALL BE PERFORMED BY CONSTRUCTION EQUIPMENT PLACED OUTSIDE THE BASIN, WHERE POSSIBLE. ALL EXCAVATION SHALL BE PERFORMED WITH 10 PSI EXCAVATION EQUIPMENT.
4. CONSTRUCT WEIR WALL, RIPRAP ENERGY DISSIPATER AT THE END OF PRINCIPAL SPILLWAY AND PARTIAL EMBANKMENT AS NEEDED TO INSTALL WEIR WALL. INSTALL SKIMMER DEWATERING DEVICE. DE-WATER FOUNDATION AS NEEDED IN ACCORDANCE WITH SECTION 111 AND USE SUMP PIT FOR PUMPING.
5. WHEN INFILTRATION BASINS ARE USED AS SEDIMENT TRAPS, EXCAVATE FACILITY TO 1' ABOVE THE FINISHED GRADE DURING CONSTRUCTION.
6. STABILIZE BASIN USING PERMANENT SEEDING, WET GROUND ON BASIN BOTTOM AND PERMANENT SEEDING, DRY GROUND FOR REMAINING AREAS.
7. REMOVE EROSION AND SEDIMENT CONTROLS, WATER DIVERSION PRACTICES AND FENCE UPON FINAL STABILIZATION AND APPROVAL FROM CCR.

MAINTENANCE OF POND AS A SEDIMENT BASIN

1. CONTRACTOR SHALL INSPECT THE BASIN IMMEDIATELY AFTER EVERY RAIN AND MAKE REPAIRS AS NEEDED.
2. CONTRACTOR SHALL CLEARLY MARK THE CLEANOUT ELEVATION ON A STAKE DRIVEN INTO THE GROUND AT A LOCATION CLEARLY VISIBLE FROM THE EMBANKMENT. CLEANOUT ELEVATIONS CAN BE FOUND ON SEDIMENT BASIN / TRAP TABLES ON THE CONSTRUCTION PHASING, M.O.T., AND EROSION CONTROL PLANS. SEDIMENT SHALL BE REMOVED WHEN CLEANOUT ELEVATION IS REACHED AND DISPOSED OF AT A LOCATION APPROVED BY THE ENGINEER.

CONVERSION TO PERMANENT STORMWATER MANAGEMENT POND

1. COMPLETE EXCAVATION TO FINAL GRADES ONCE ALL AREAS DRAINING TO THE POND HAVE BEEN PERMANENTLY STABILIZED AND THE ENGINEER HAS APPROVED THE CONVERSION.
2. REMOVE ACCUMULATED SEDIMENT TO ELEVATION DISPLAYED ON PLANS AND DISPOSE SEDIMENT AT A LOCATION APPROVED BY THE ENGINEER.
3. COMPLETE STABILIZATION OF ALL BARE AREAS. REMOVE EROSION AND SEDIMENT CONTROL MEASURES AND DEACTIVATE SKIMMER DEWATER DEVICE.

WET POND CONSTRUCTION SEQUENCE AND NOTES

STORMWATER MANAGEMENT WET PONDS THAT WILL FUNCTION AS A SEDIMENT BASIN DURING ROADWAY CONSTRUCTION SHALL BE CONSTRUCTED IN ACCORDANCE WITH THE FOLLOWING SECTIONS OF THE STANDARD SPECIFICATIONS:

SECTION 271 - STORMWATER MANAGEMENT POND
SECTION 272 - POND OUTLET STRUCTURE, CONCRETE

1. INSTALL STABILIZED CONSTRUCTION ENTRANCE.
2. CLEAR AND GRUB FOR INSTALLATION OF PERIMETER EROSION AND SEDIMENT CONTROLS.
3. INSTALL PERIMETER SEDIMENT CONTROLS AS SHOWN ON EROSION SEDIMENT CONTROL PLANS.
4. CLEAR AND GRUB REMAINING AREA FOR POND CONSTRUCTION.
5. CONSTRUCT POND OUTLET STRUCTURE, RIPRAP ENERGY DISSIPATOR AT END OF PRINCIPAL SPILLWAY AND PARTIAL EMBANKMENT AS NEEDED TO INSTALL POND OUTLET STRUCTURE. INSTALL SKIMMER DEWATERING DEVICE. DEWATER FOUNDATION AS NEEDED IN ACCORDANCE WITH SECTION 111 AND USE SUMP PIT FOR PUMPING. (SEE EROSION AND SEDIMENT CONTROL DETAILS FOR SKIMMER DEWATERING DEVICE INSTALLATION).
6. EXCAVATE THE POND AND COMPLETE THE EMBANKMENT, GRADES AND DETAILS SHOWN IN THE CONSTRUCTION PLANS.
7. STABILIZE BASIN EMBANKMENT WITH PERMANENT SEEDING, WET GROUND WITHIN 1-FOOT ABOVE THE PERMANENT POOL ELEVATION AND ALL REMAINING AREAS WITH PERMANENT SEEDING, DRY GROUND.

MAINTENANCE OF POND AS A SEDIMENT BASIN

1. CONTRACTOR SHALL INSPECT THE BASIN IMMEDIATELY AFTER EVERY RAIN AND MAKE REPAIRS AS NEEDED.
2. CONTRACTOR SHALL CLEARLY MARK THE CLEANOUT ELEVATION ON A STAKE DRIVEN INTO THE GROUND AT A LOCATION CLEARLY VISIBLE FROM THE EMBANKMENT. CLEANOUT ELEVATIONS CAN BE FOUND ON SEDIMENT BASIN / TRAP TABLES ON THE CONSTRUCTION PHASING, M.O.T., AND EROSION CONTROL PLANS. SEDIMENT SHALL BE REMOVED WHEN CLEANOUT ELEVATION IS REACHED AND DISPOSED OF AT A LOCATION APPROVED BY THE ENGINEER.

CONVERSION TO PERMANENT STORMWATER MANAGEMENT POND

1. CONVERT THE BASIN INTO THE PERMANENT STORMWATER MANAGEMENT POND AFTER ALL AREAS DRAINING TO THE POND HAVE BEEN PERMANENTLY STABILIZED AND THE ENGINEER HAS APPROVED THE CONVERSION.
2. REMOVE ACCUMULATED SEDIMENT TO ELEVATION DISPLAYED ON PLANS AND DISPOSE SEDIMENT AT A LOCATION APPROVED BY THE ENGINEER.
3. COMPLETE STABILIZATION OF ALL BARE AREAS. REMOVE EROSION AND SEDIMENT CONTROL MEASURES AND DEACTIVATE SKIMMER DEWATER DEVICE.

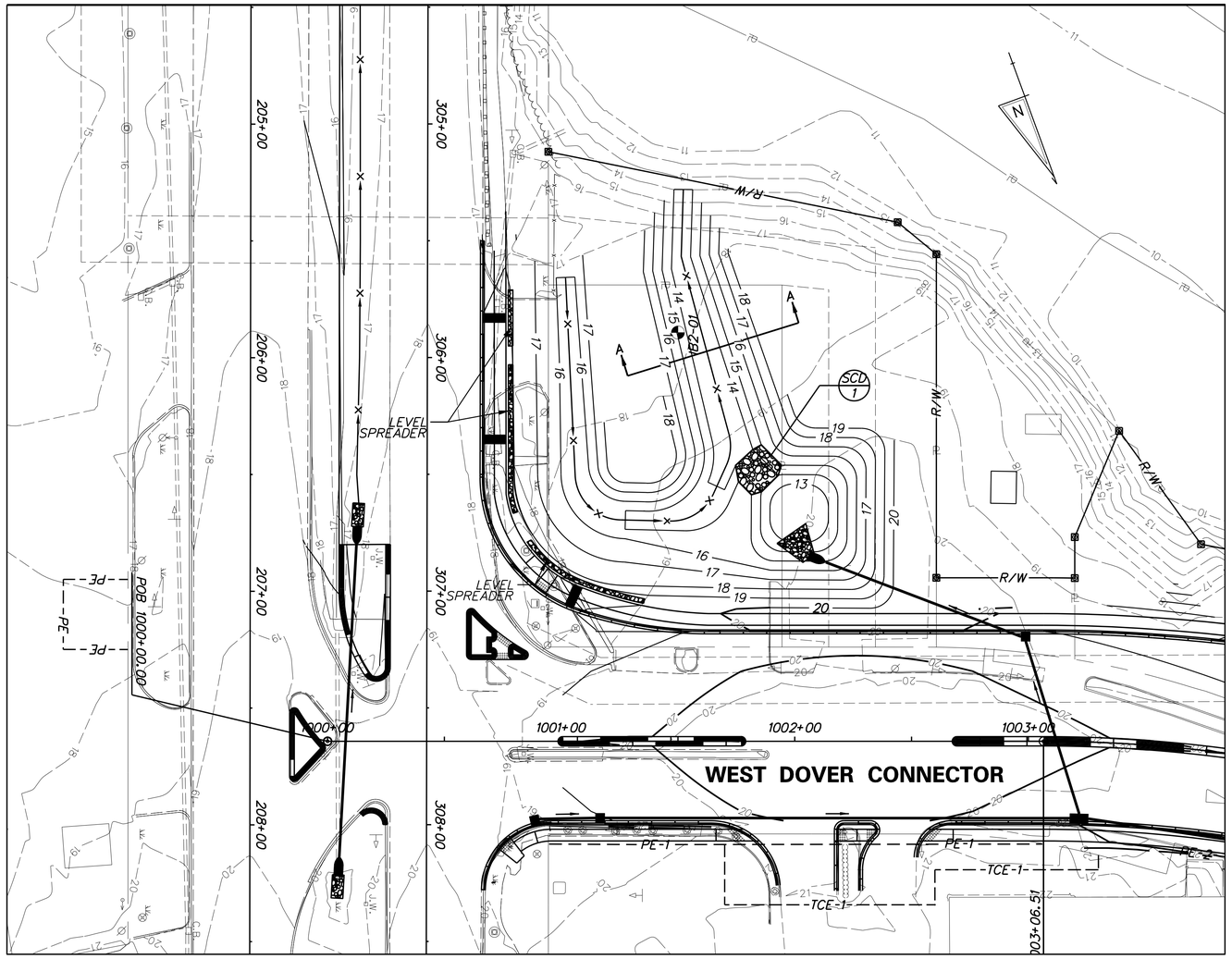

PLAN - DELDOT SWM FACILITY #870
BIOSWALE

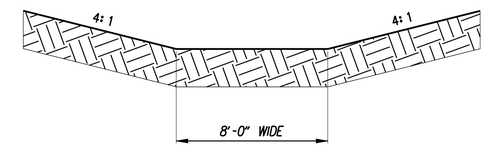

BIOSWALE TYPICAL SECTION A-A
(N.T.S.)

NOTES:

1. SEE CONSTRUCTION PLANS FOR PIPE, MANHOLE, INLET, FLARED END SECTION AND RIPRAP SCHEDULES.
2. SEE SWM DETAILS FOR CHECK DAM SCHEDULES.
3. DRAINAGE AREA TO FACILITY: 2.25 AC
4. MANAGEMENT PROVIDED BY FACILITY:

   WATER QUALITY BY BIOFILTRATION OF THE 1-YEAR STORM RUNOFF, WATER QUANTITY FOR 2 AND 10-YEAR STORMS NOT REQUIRED DUE TO 2 AND 10-YR STORMS DECREASED FROM EXISTING TO PROPOSED CONDITIONS

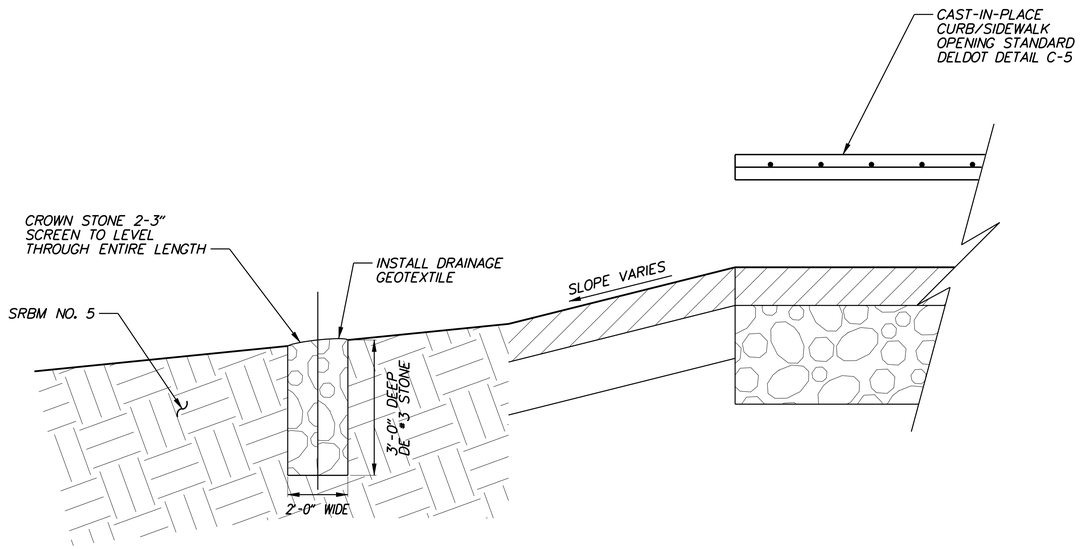

LEVEL SPREADER DETAIL

(N.T.S.)

4/3/2014 deinlein
J:\BRIDGE_HIGHWAYS\6061_DelDOT_WEST_DOVER_CONN\Civil\Civ_Sheets\07_SWM\SW20.dgn

DELAWARE DEPARTMENT OF TRANSPORTATION	ADDENDUMS / REVISIONS	AS SHOWN	WEST DOVER CONNECTOR	CONTRACT T200411701	BRIDGE NO.	STORMWATER MANAGEMENT DETAILS DELDOT SWM FACILITY #870	SHEET NO. 179
				COUNTY KENT	DESIGNED BY: JW		TOTAL SHTS. 320
					CHECKED BY: BS		

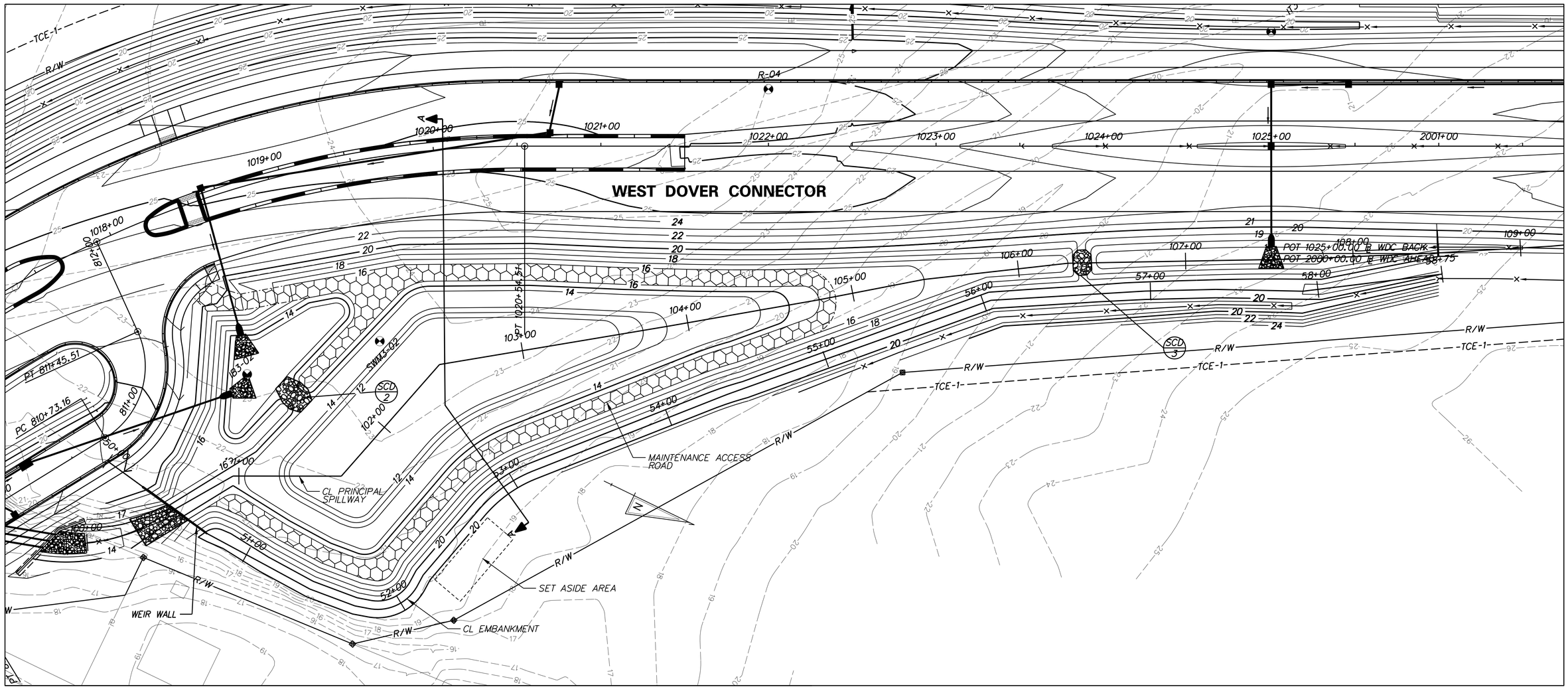

PLAN - DELDOT SWM FACILITY #871
WET POND

NOTES:

SEE CONSTRUCTION PLANS FOR PIPE, MANHOLE, INLET, FLARED END SECTION AND RIPRAP SCHEDULES.

SEE SWM DETAILS FOR CHECK DAM SCHEDULES.

WET POND DESIGN SUMMARY				
DESIGN STORM	FACILITY INFLOW (CFS)	FACILITY DISCHARGE (CFS)	WATER SURFACE ELEVATION (FT)	STORAGE VOLUME (AC. FT)
QUALITY STORM (1-YR)	10.89	0.45	15.91	1.67
2 - YEAR	15.42	0.81	16.15	1.87
10 - YEAR	30.67	2.66	16.86	2.58
100 - YEAR	61.35	9.61	18.11	4.02

HAZARD CLASSIFICATION: CLASS A AS PER POND CODE 378

DRAINAGE AREA TO FACILITY: 9.14 AC

MANAGEMENT PROVIDED BY FACILITY: WATER QUALITY BY EXTENDED DETENTION OF THE 1-YEAR STORM, WATER QUANTITY BY EXTENDED DETENTION FOR 2 AND 10-YEAR STORMS.

DELAWARE DEPARTMENT OF TRANSPORTATION

ADDENDUMS / REVISIONS

SCALE: 1"=30'
0 30 60 90
FEET

WEST DOVER CONNECTOR

CONTRACT	BRIDGE NO.	
T200411701	DESIGNED BY:	JW
COUNTY	CHECKED BY:	BS
KENT		

STORMWATER MANAGEMENT DETAILS DELDOT SWM FACILITY #871

SHEET NO. 180
TOTAL SHTS. 320

4/3/2014 deinlein
J:\BRIDGE_HIGHWAYS\6061_DelDOT_WEST_DOVER_CONN\Civil\Civ_Sheets\07_SWM\SW04.dgn

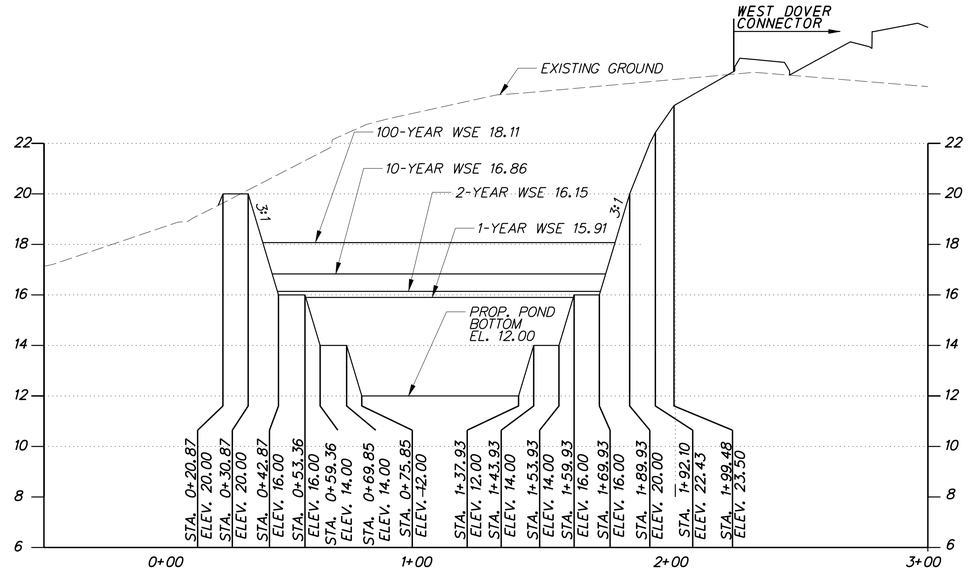

SECTION A-A

HORIZONTAL SCALE: 1" = 30'
0 30 60 90
FEET

VERTICAL SCALE: 1" = 3'
0 3 6 9
FEET

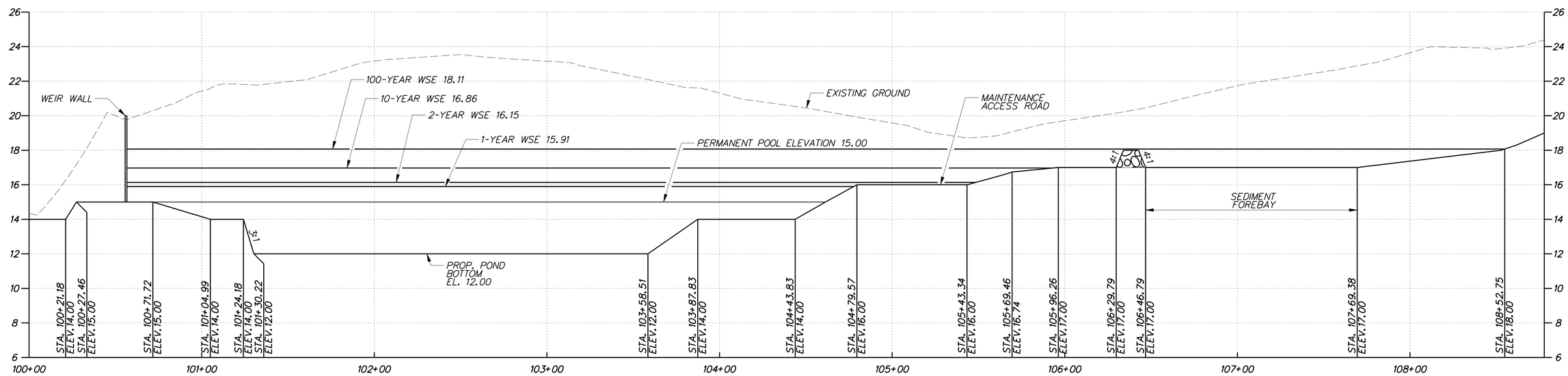

SPILLWAY PROFILE FOR DELDOT SWM FACILITY #871

HORIZONTAL SCALE: 1" = 30'
0 30 60 90
FEET

VERTICAL SCALE: 1" = 3'
0 3 6 9
FEET

4/3/2014 deinlein
J:\BRIDGE_HIGHWAYS\6061_DelDOT_WEST_DOVER_CONN\Civil\Civ_Sheets\D7_SWM\SW03.dgn

DELAWARE DEPARTMENT OF TRANSPORTATION	ADDENDUMS / REVISIONS	AS SHOWN	**WEST DOVER CONNECTOR**	CONTRACT T200411701	BRIDGE NO.	**STORMWATER MANAGEMENT DETAILS BMP #871**	SHEET NO. 181
				COUNTY KENT	DESIGNED BY: JW		TOTAL SHTS. 320
					CHECKED BY: BS		

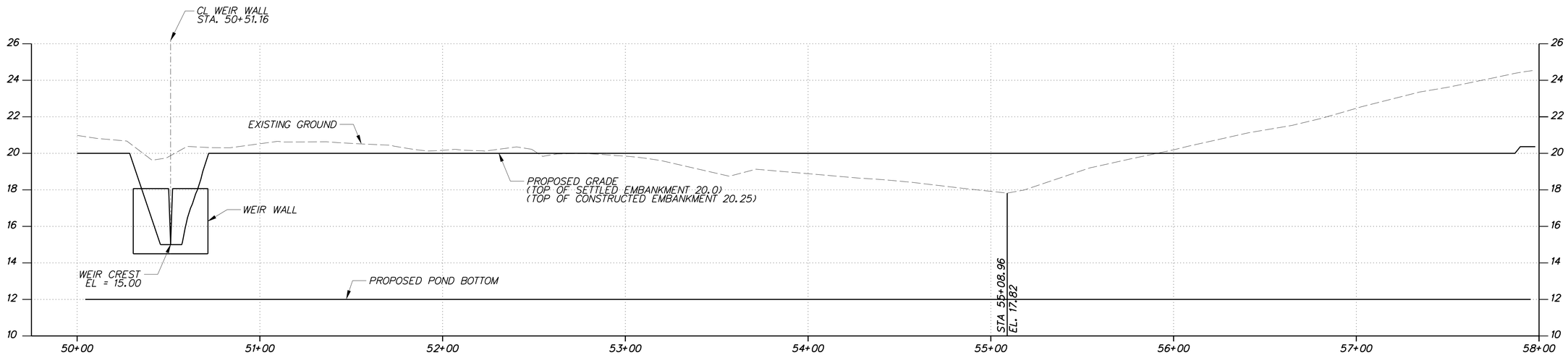

EMBANKMENT PROFILE FOR DELDOT SWM FACILITY #871

HORIZONTAL SCALE: 1" = 30'

0 30 60 90

FEET

VERTICAL SCALE: 1" = 3'

0 3 6 9

FEET

DELAWARE DEPARTMENT OF TRANSPORTATION	ADDENDUMS / REVISIONS	AS SHOWN	WEST DOVER CONNECTOR	CONTRACT T200411701	BRIDGE NO.	STORMWATER MANAGEMENT DETAILS BMP #871	SHEET NO. 182
				COUNTY KENT	DESIGNED BY: JW		TOTAL SHTS. 320
					CHECKED BY: BS		

4/3/2014 deinlein
J:\BRIDGE_HIGHWAYS\16061_DelDOT_WEST_DOVER_CONN\Civil\Civ_Sheets\07_SWM\SW05.dgn

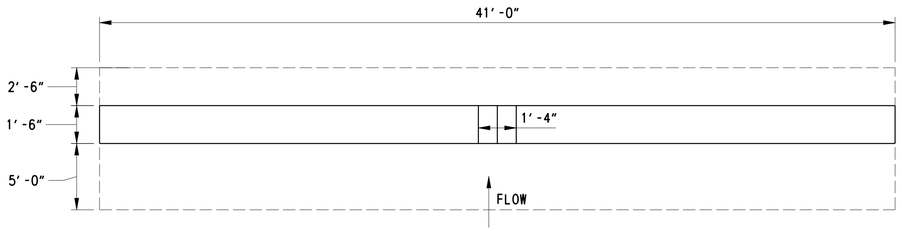

WEIR WALL PLAN

SCALE: NTS

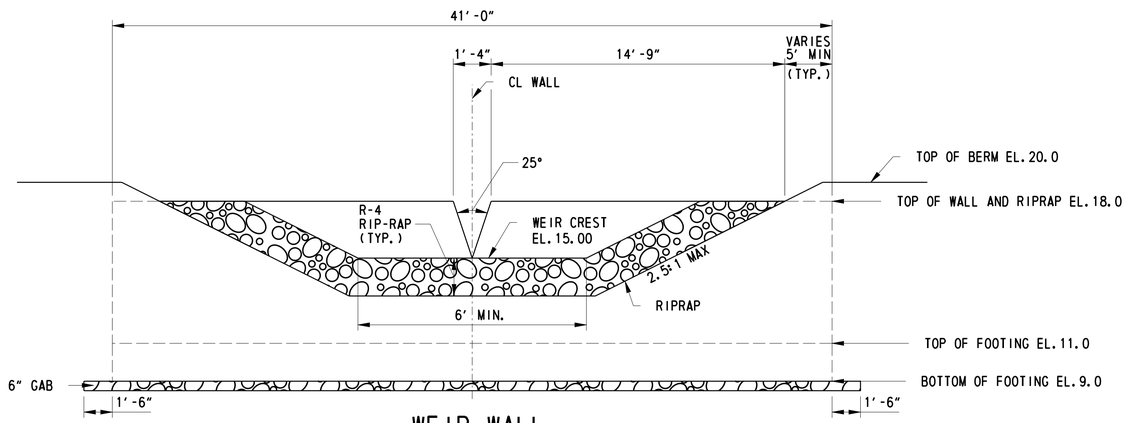

WEIR WALL EXTERIOR ELEVATION WITH RIPRAP APRON

SCALE: NTS

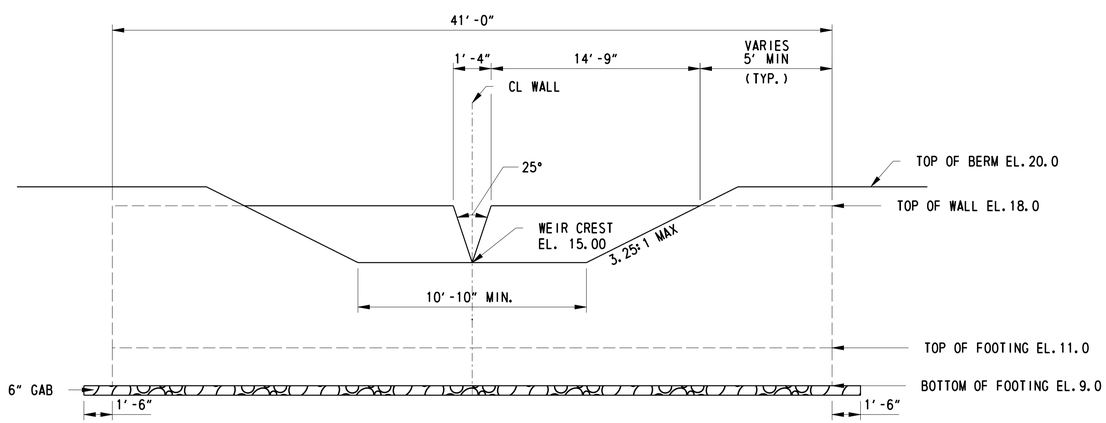

WEIR WALL INTERIOR ELEVATION

SCALE: NTS

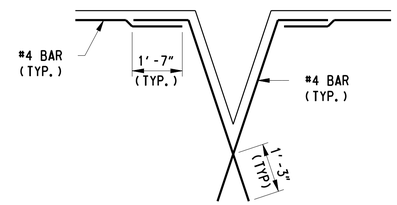

OPENING DETAILS

SCALE: NTS

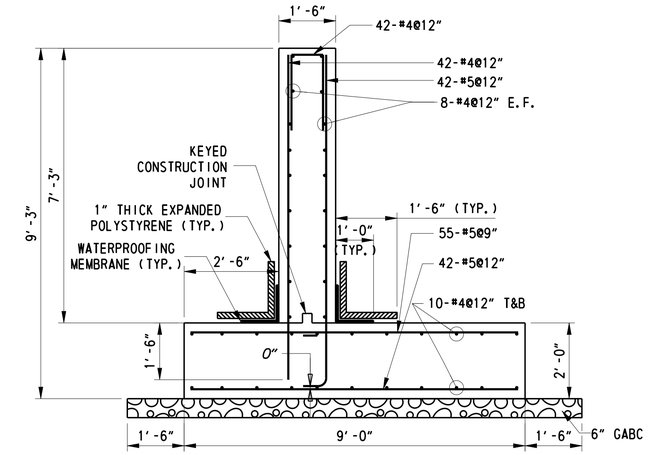

WEIR WALL SECTION

SCALE: 1/2"=1'-0"

GENERAL NOTES

1. DESIGN SPECIFICATIONS:

   AASHTO LRFD BRIDGE DESIGN SPECIFICATIONS, 6TH EDITION, 2012, AND AS SUPPLEMENTED BY DELAWARE DEPARTMENT OF TRANSPORTATION BRIDGE DESIGN MANUAL, MAY 2005, INCLUDING LATEST REVISIONS.

   PROVIDE MATERIALS AND PERFORM WORK IN ACCORDANCE WITH THE DELAWARE DEPARTMENT OF TRANSPORTATION STANDARD SPECIFICATIONS AND CONSTRUCTION DETAILS, AASHTO/AWS D1.5M/D1.5 BRIDGE WELDING CODE, AND CONTRACT SPECIAL PROVISIONS.

2. LOADING:

   UNIT WEIGHTS OF MATERIALS IN ACCORDANCE WITH THE DELAWARE BRIDGE DESIGN MANUAL.

3. PORTLAND CEMENT CONCRETE:

   PORTLAND CEMENT CONCRETE FOR WEIR WALL FOOTING AND STEM SHALL BE CLASS B, f'c=3000PSI:

   MIX REQUIREMENTS SHALL CONFORM TO SECTION 812 OF THE DELAWARE DEPARTMENT OF TRANSPORTATION STANDARD SPECIFICATIONS.

   ALL EXPOSED CORNERS OF CONCRETE SHALL BE CHAMFERED WITH ¾" X ¾" MILLED CHAMFER STRIPS EXCEPT ON UNEXPOSED FOOTINGS.

4. BAR REINFORCEMENT:

   REINFORCING STEEL SHALL CONFORM TO AASHTO M31 (ASTM A615), GRADE 60 AND IS TO BE EPOXY COATED. FUSION-BONDED EPOXY COATED REINFORCING STEEL SHALL CONFORM TO AASHTO M284 (ASTM D3963).

   PROVIDE 3" CONCRETE COVER ON REINFORCEMENT BARS, EXCEPT AS NOTED.

   CUT STEM REINFORCEMENT AS REQUIRED AT WEIR OPENING LOCATION.

   ANY FIELD CUT BARS SHALL BE REPAIRED PER EPOXY COATED SPECIFICATION.

   LAP LENGTH OF #4 BARS TO BE 3'-0". STAGGER SPLICE LOCATIONS.

   DO NOT WELD GRADE 60 REINFORCING STEEL.

   LENGTHS OF U-BAR LEGS SHALL BE 2'-1" (TYP.)

5. CONSTRUCTION JOINTS:

   KEYED CONSTRUCTION JOINTS SHALL BE 2" x 4", AS REQUIRED OR AS NOTED. VERTICAL CONSTRUCTION JOINTS FOR PRECAST CONSTRUCTION, AS APPLICABLE, SHALL BE LOCATED NO CLOSER THAN 5'-0" FROM CENTERLINE OF WEIR WALL OPENING.

6. WATERPROOFING MEMBRANE:

   ADHESIVE BACKED WATERPROOFING MEMBRANE IS TO BE USED. SPLICING OF THE MEMBRANE IS PROHIBITED.

7. REFER TO SPECIFICATION SECTION 272501 FOR CONSTRUCTION SEQUENCE.

8. GRADED AGGREGATE BASE COURSE, TYPE B (GAB) IS INCIDENTAL TO WALL CONSTRUCTION.

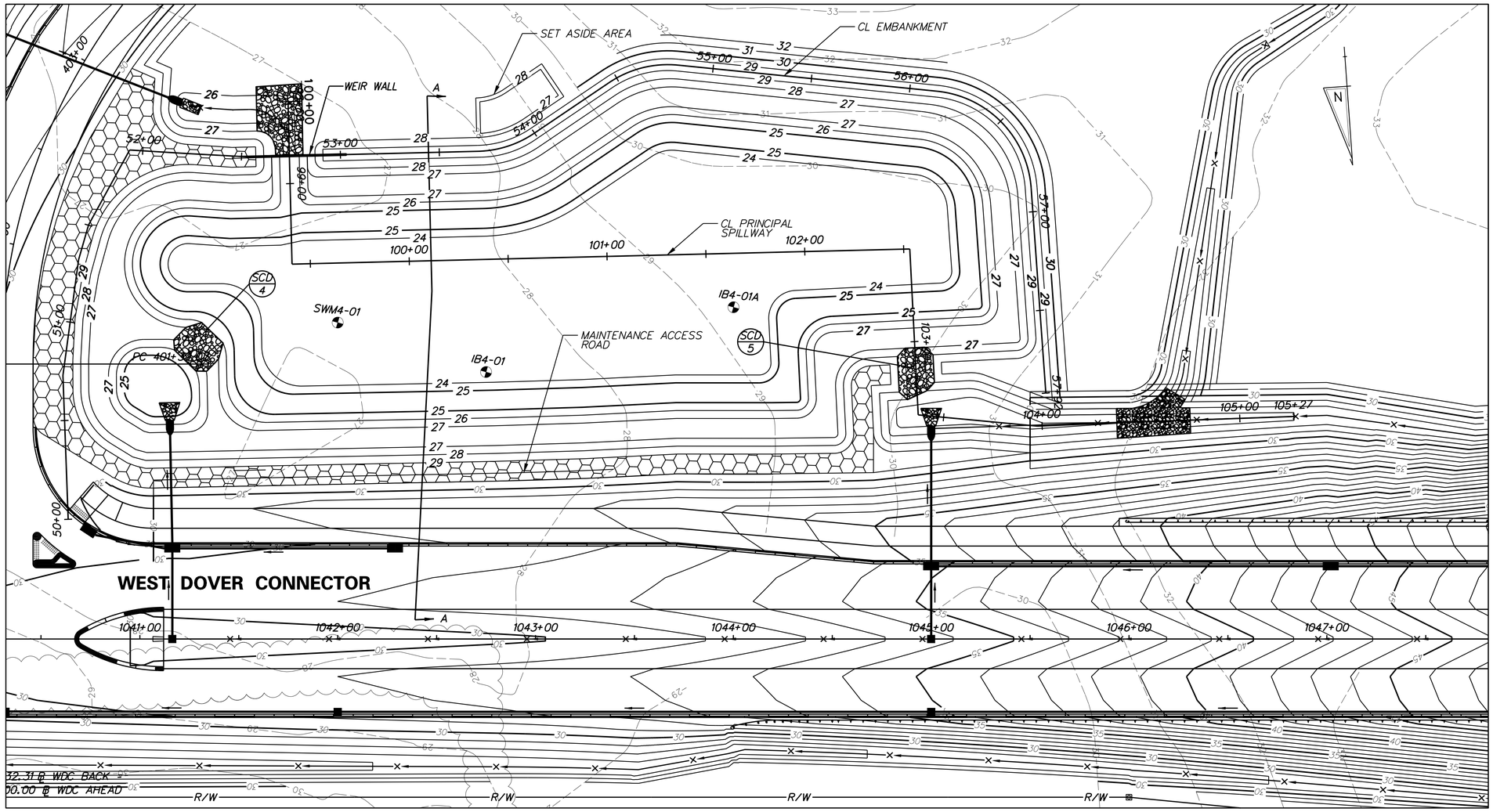

PLAN - DELDOT SWM FACILITY #872
WET POND

NOTES:

SEE CONSTRUCTION PLANS FOR PIPE, MANHOLE, INLET, FLARED END SECTION AND RIPRAP SCHEDULES.

SEE SWM DETAILS FOR CHECK DAM SCHEDULES.

WET POND DESIGN SUMMARY				
DESIGN STORM	FACILITY INFLOW (CFS)	FACILITY DISCHARGE (CFS)	WATER SURFACE ELEVATION (FT)	STORAGE VOLUME (AC. FT)
QUALITY STORM (1-YR)	9.88	0.24	26.39	2.19
2 - YEAR	16.09	0.54	26.53	2.36
10 - YEAR	39.04	2.89	27.05	2.98
100 - YEAR	89.50	13.74	27.96	4.50

HAZARD CLASSIFICATION: CLASS A AS PER POND CODE 378

DRAINAGE AREA TO FACILITY: 11.50 AC

MANAGEMENT PROVIDED BY FACILITY: WATER QUALITY BY EXTENDED DETENTION OF THE 1-YEAR STORM RUNOFF, WATER QUANTITY BY EXTENDED DETENTION OF THE 2 AND 10-YEAR STORMS.

4/3/2014 deinlein
J:\BRIDGE_HIGHWAYS\6061_DelDOT_WEST_DOVER_CONN\Civil\Civ_Sheets\07_SWM\SW06.dgn

DELAWARE DEPARTMENT OF TRANSPORTATION	ADDENDUMS / REVISIONS	SCALE: 1"=30' (0 30 60 90 FEET)	WEST DOVER CONNECTOR	CONTRACT T200411701	BRIDGE NO.	STORMWATER MANAGEMENT DETAILS DELDOT SWM FACILITY #872	SHEET NO. 184
				COUNTY KENT	DESIGNED BY: JW		TOTAL SHTS. 320
					CHECKED BY: BS		

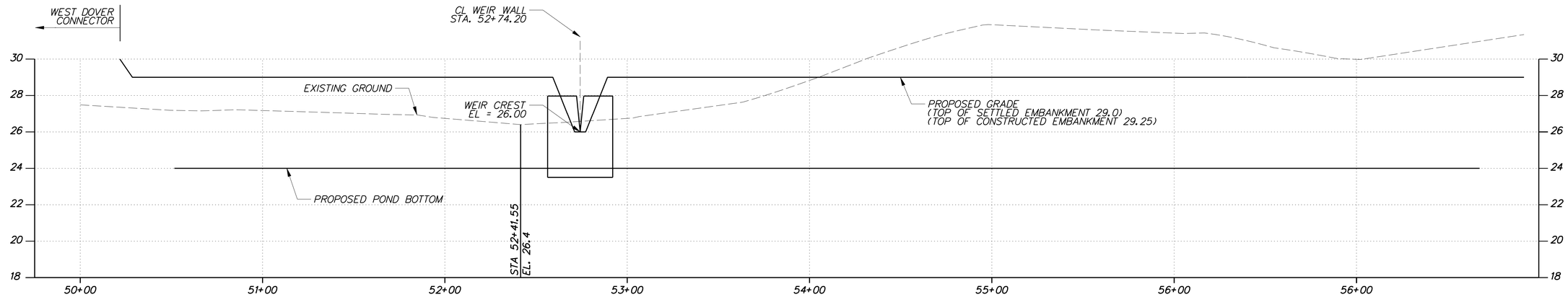

EMBANKMENT PROFILE FOR DELDOT SWM FACILITY #872

HORIZONTAL SCALE: 1" = 30'
0 30 60 90
FEET

VERTICAL SCALE: 1" = 3'
0 3 6 9
FEET

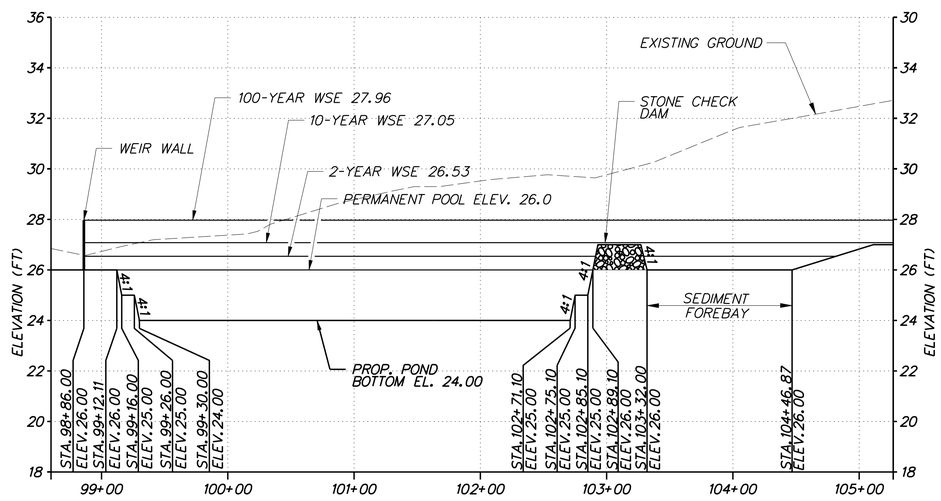

SPILLWAY PROFILE FOR DELDOT SWM FACILITY #872

HORIZONTAL SCALE: 1" = 60'
0 60 120 180
FEET

VERTICAL SCALE: 1" = 3'
0 3 6 9
FEET

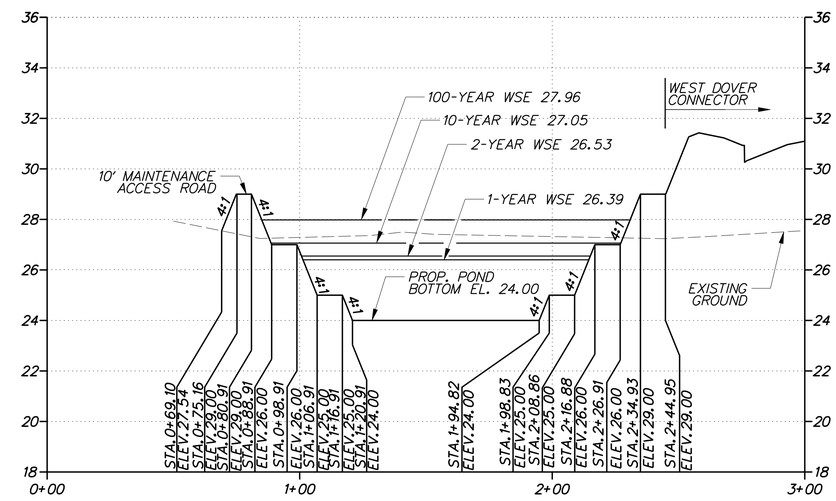

SECTION A-A

HORIZONTAL SCALE: 1" = 30'
0 30 60 90
FEET

VERTICAL SCALE: 1" = 3'
0 3 6 9
FEET

4/3/2014 deinlein
J:\BRIDGE_HIGHWAYS\6061_DelDOT_WEST_DOVER_CONN\Civil\Civ_Sheets\07_SWM\SW07.dgn

DELAWARE DEPARTMENT OF TRANSPORTATION	ADDENDUMS / REVISIONS	AS SHOWN	WEST DOVER CONNECTOR	CONTRACT T200411701	BRIDGE NO.	STORMWATER MANAGEMENT DETAILS DELDOT SWM FACILITY #872	SHEET NO. 185
				COUNTY KENT	DESIGNED BY: JW		TOTAL SHTS. 320
					CHECKED BY: BS		

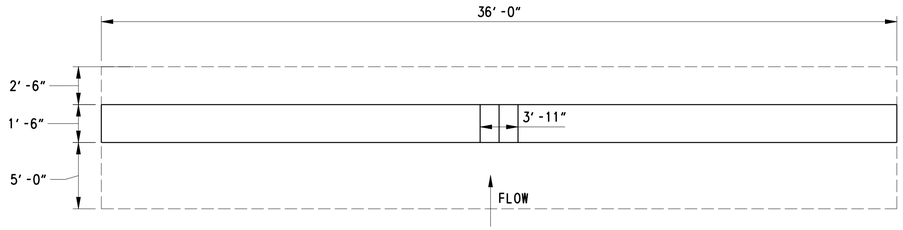

WEIR WALL PLAN

SCALE: NTS

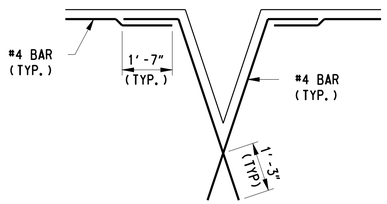

OPENING DETAILS

SCALE: NTS

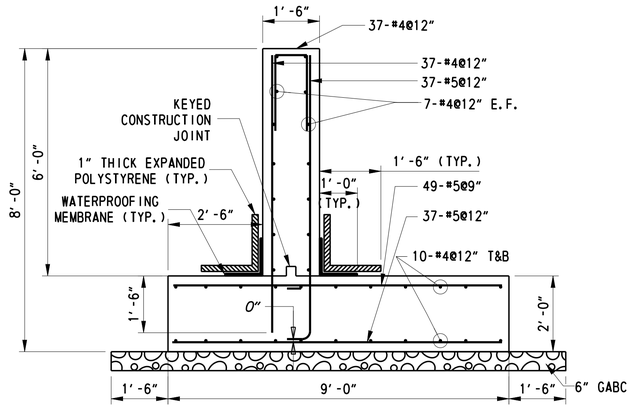

WEIR WALL SECTION

SCALE: 1/2"=1'-0"

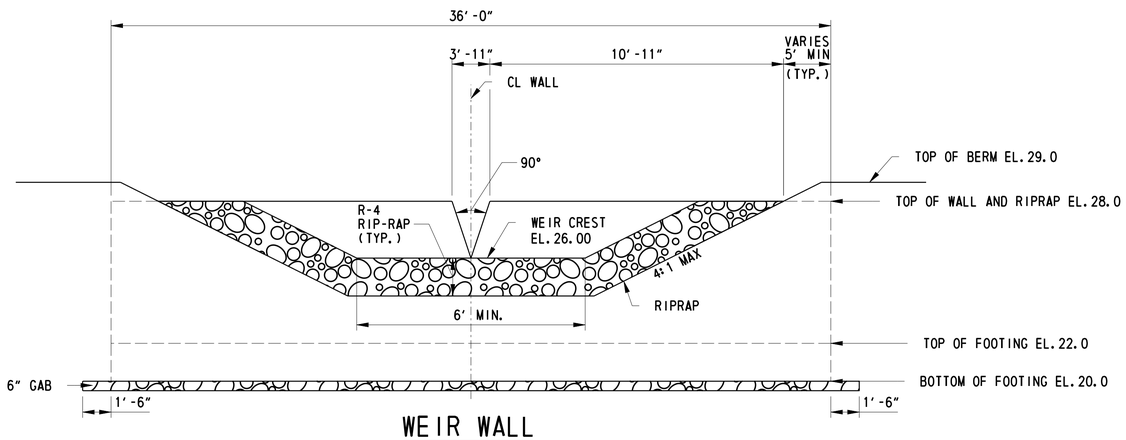

WEIR WALL EXTERIOR ELEVATION WITH RIPRAP APRON

SCALE: NTS

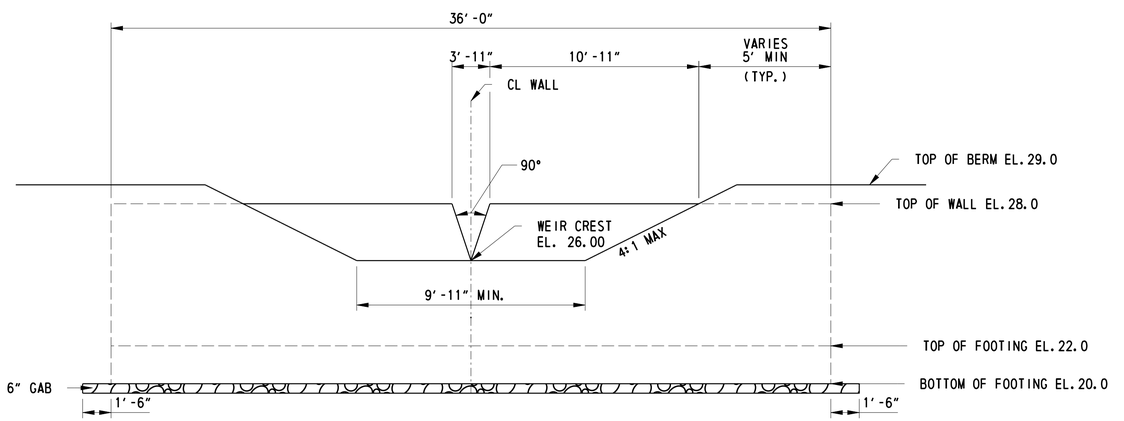

WEIR WALL INTERIOR ELEVATION

SCALE: NTS

GENERAL NOTES

1. DESIGN SPECIFICATIONS:

   AASHTO LRFD BRIDGE DESIGN SPECIFICATIONS, 6TH EDITION, 2012, AND AS SUPPLEMENTED BY DELAWARE DEPARTMENT OF TRANSPORTATION BRIDGE DESIGN MANUAL, MAY 2005, INCLUDING LATEST REVISIONS.

   PROVIDE MATERIALS AND PERFORM WORK IN ACCORDANCE WITH THE DELAWARE DEPARTMENT OF TRANSPORTATION STANDARD SPECIFICATIONS AND CONSTRUCTION DETAILS, AASHTO/AWS D1.5M/D1.5 BRIDGE WELDING CODE, AND CONTRACT SPECIAL PROVISIONS.

2. LOADING:

   UNIT WEIGHTS OF MATERIALS IN ACCORDANCE WITH THE DELAWARE BRIDGE DESIGN MANUAL.

3. PORTLAND CEMENT CONCRETE:

   PORTLAND CEMENT CONCRETE FOR WEIR WALL FOOTING AND STEM SHALL BE CLASS B, f'c=3000PSI:

   MIX REQUIREMENTS SHALL CONFORM TO SECTION 812 OF THE DELAWARE DEPARTMENT OF TRANSPORTATION STANDARD SPECIFICATIONS.

   ALL EXPOSED CORNERS OF CONCRETE SHALL BE CHAMFERED WITH ¾" X ¾" MILLED CHAMFER STRIPS EXCEPT ON UNEXPOSED FOOTINGS.

4. BAR REINFORCEMENT:

   REINFORCING STEEL SHALL CONFORM TO AASHTO M31 (ASTM A615), GRADE 60 AND IS TO BE EPOXY COATED. FUSION-BONDED EPOXY COATED REINFORCING STEEL SHALL CONFORM TO AASHTO M284 (ASTM D3963).

   PROVIDE 3" CONCRETE COVER ON REINFORCEMENT BARS, EXCEPT AS NOTED.

   CUT STEM REINFORCEMENT AS REQUIRED AT WEIR OPENING LOCATION.

   ANY FIELD CUT BARS SHALL BE REPAIRED PER EPOXY COATED SPECIFICATION.

   LAP LENGTH OF #4 BARS TO BE 3'-0". STAGGER SPLICE LOCATIONS.

   DO NOT WELD GRADE 60 REINFORCING STEEL.

   LENGTHS OF U-BAR LEGS SHALL BE 2'-1" (TYP.)

5. CONSTRUCTION JOINTS:

   KEYED CONSTRUCTION JOINTS SHALL BE 2" x 4", AS REQUIRED OR AS NOTED. VERTICAL CONSTRUCTION JOINTS FOR PRECAST CONSTRUCTION, AS APPLICABLE, SHALL BE LOCATED NO CLOSER THAN 5'-0" FROM CENTERLINE OF WEIR WALL OPENING.

6. WATERPROOFING MEMBRANE:

   ADHESIVE BACKED WATERPROOFING MEMBRANE IS TO BE USED. SPLICING OF THE MEMBRANE IS PROHIBITED.

7. REFER TO SPECIFICATION SECTION 272501 FOR CONSTRUCTION SEQUENCE.

8. GRADED AGGREGATE BASE COURSE, TYPE B (GAB) IS INCIDENTAL TO WALL CONSTRUCTION.

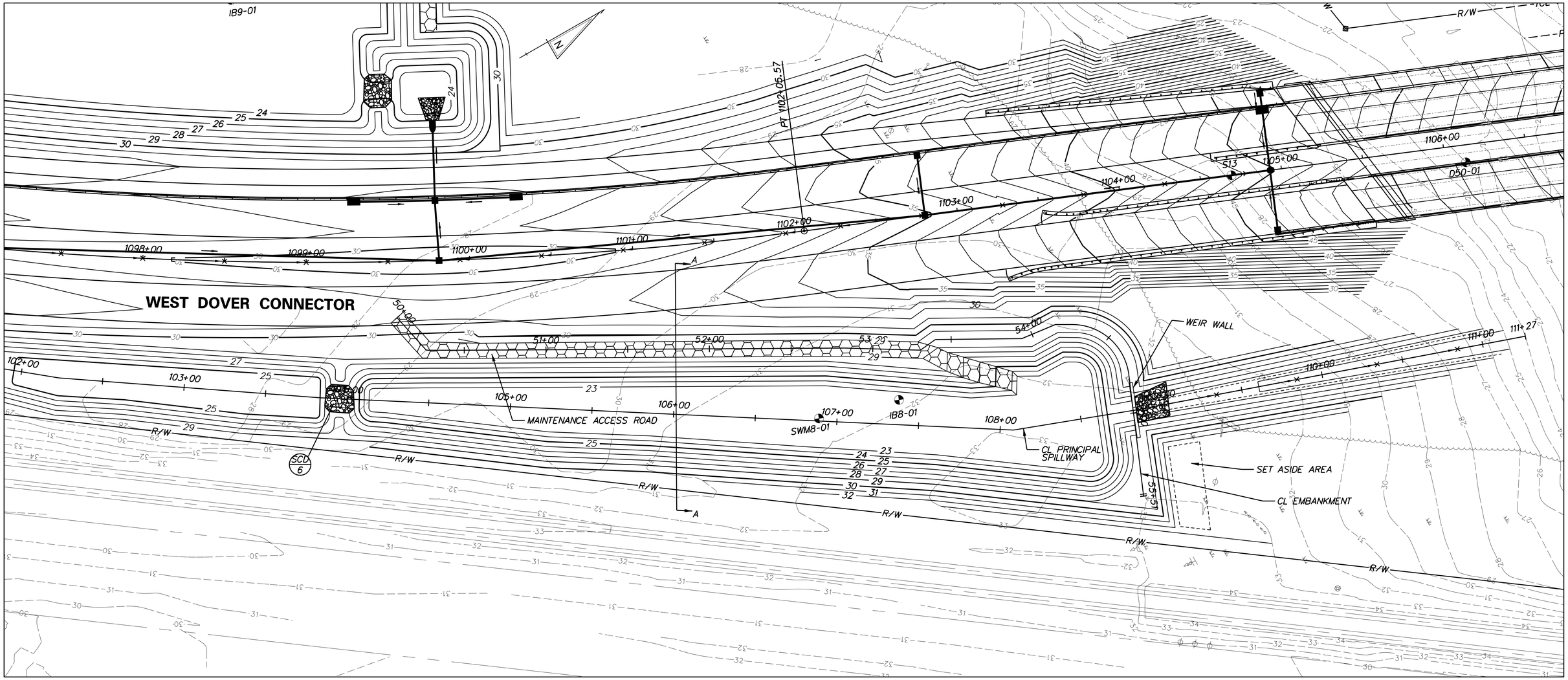

NOTES:

SEE CONSTRUCTION PLANS FOR PIPE, MANHOLE, INLET, FLARED END SECTION AND RIPRAP SCHEDULES.

SEE SWM DETAILS FOR CHECK DAM SCHEDULES.

PLAN - DELDOT SWM FACILITY #873
INFILTRATION BASIN

INFILTRATION BASIN DESIGN SUMMARY				
DESIGN STORM	FACILITY INFLOW (CFS)	FACILITY DISCHARGE (CFS)	WATER SURFACE ELEVATION (FT)	STORAGE VOLUME (AC. FT)
QUALITY STORM (1-YR)	6.17	0.45	24.44	0.58
2 - YEAR	9.77	0.54	25.21	0.95
10 - YEAR	22.87	3.18	26.51	1.83
100 - YEAR	51.17	24.36	28.02	3.14

HAZARD CLASSIFICATION: CLASS A AS PER POND CODE 378
DRAINAGE AREA TO FACILITY: 13.71 AC
MANAGEMENT PROVIDED BY FACILITY: WATER QUALITY BY INFILTRATION OF 1-YEAR STORM RUNOFF, WATER QUANTITY FOR 2, 10, AND 100-YEAR STORMS.

4/3/2014 deinlein
J:\BRIDGE_HIGHWAYS\6061_DelDOT_WEST_DOVER_CONN\Civil\Civ_Sheets\07_SWM\SW08.dgn

DELAWARE DEPARTMENT OF TRANSPORTATION	ADDENDUMS / REVISIONS	SCALE: 1"=30' (0, 30, 60, 90 FEET)	WEST DOVER CONNECTOR	CONTRACT T200411701	BRIDGE NO.	STORMWATER MANAGEMENT DETAILS DELDOT SWM FACILITIY #873	SHEET NO. 187
				COUNTY KENT	DESIGNED BY: JW		TOTAL SHTS. 320
					CHECKED BY: BS		

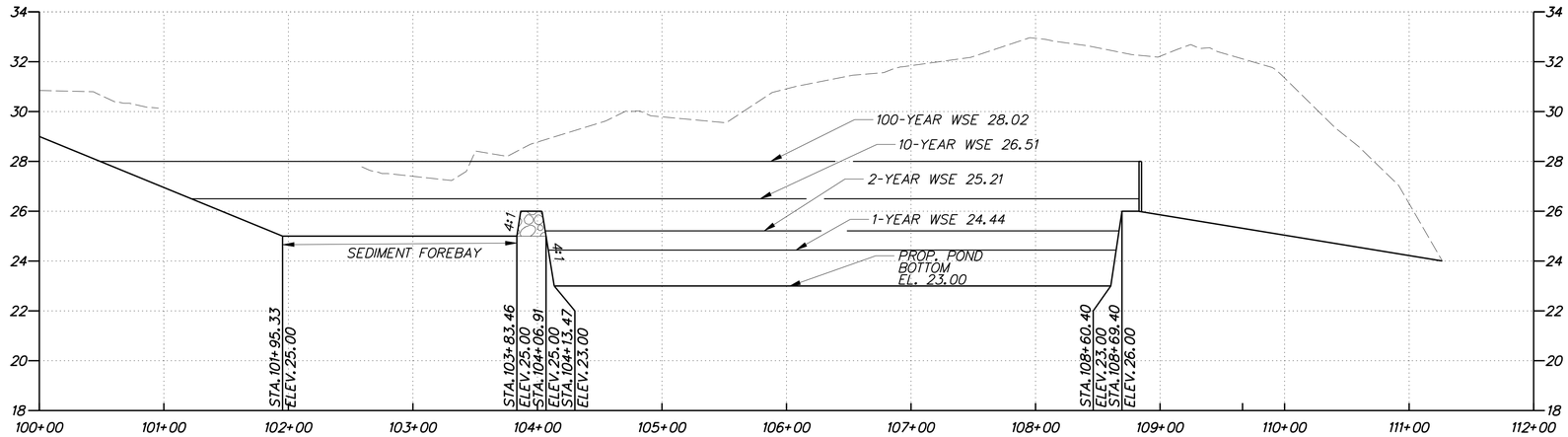

SPILLWAY PROFILE FOR DELDOT SWM FACILITY #873

HORIZONTAL SCALE: 1" = 60'
0 60 120 180
FEET

VERTICAL SCALE: 1" = 3'
0 3 6 9
FEET

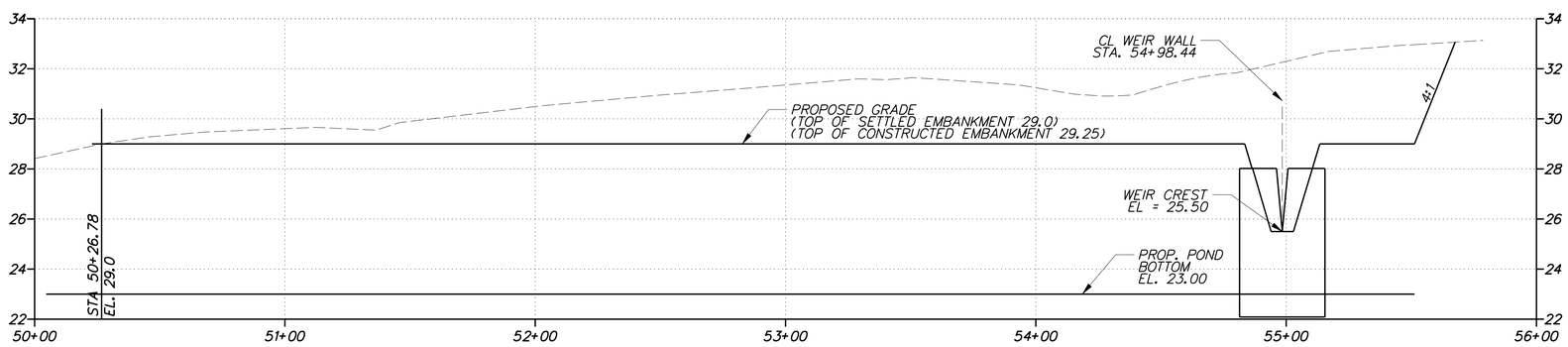

EMBANKMENT PROFILE FOR DELDOT SWM FACILITY #873

HORIZONTAL SCALE: 1" = 30'
0 30 60 90
FEET

VERTICAL SCALE: 1" = 3'
0 3 6 9
FEET

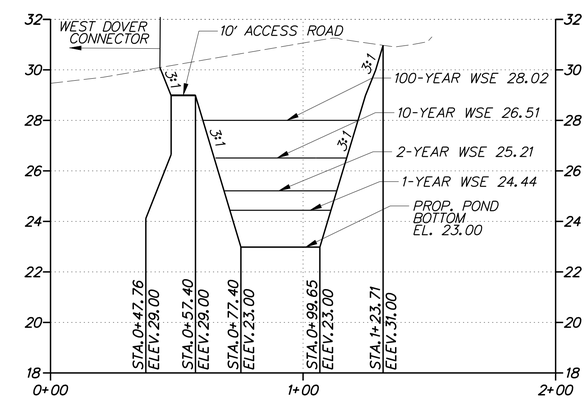

SECTION A-A

HORIZONTAL SCALE: 1" = 30'
0 30 60 90
FEET

VERTICAL SCALE: 1" = 3'
0 3 6 9
FEET

DELAWARE DEPARTMENT OF TRANSPORTATION	ADDENDUMS / REVISIONS	AS SHOWN	WEST DOVER CONNECTOR	CONTRACT T200411701 / COUNTY KENT	BRIDGE NO. / DESIGNED BY: JW / CHECKED BY: BS	STORMWATER MANAGEMENT DETAILS DELDOT SWM FACILITY #873	SHEET NO. 188 / TOTAL SHTS. 320

4/3/2014 deinlein
J:\BRIDGE_HIGHWAYS\6061_DelDOT_WEST_DOVER_CONN\Civil\Civ_Sheets\07_SWM\SW09.dgn

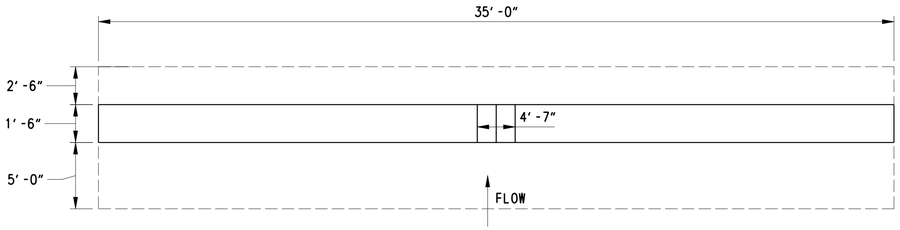

WEIR WALL PLAN

SCALE: NTS

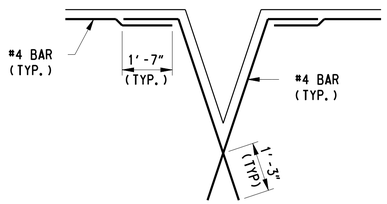

OPENING DETAILS

SCALE: NTS

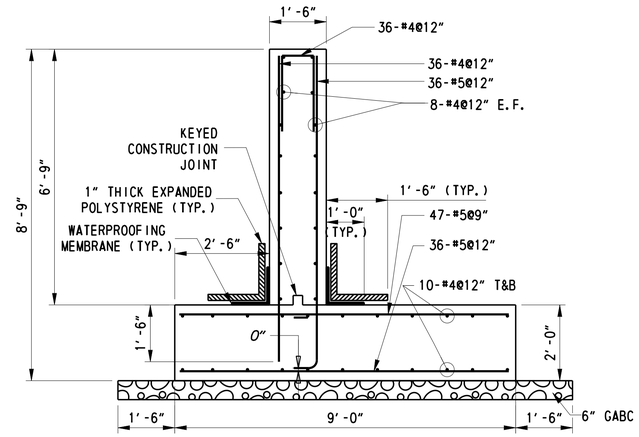

WEIR WALL SECTION

SCALE: 1/2"=1'-0"

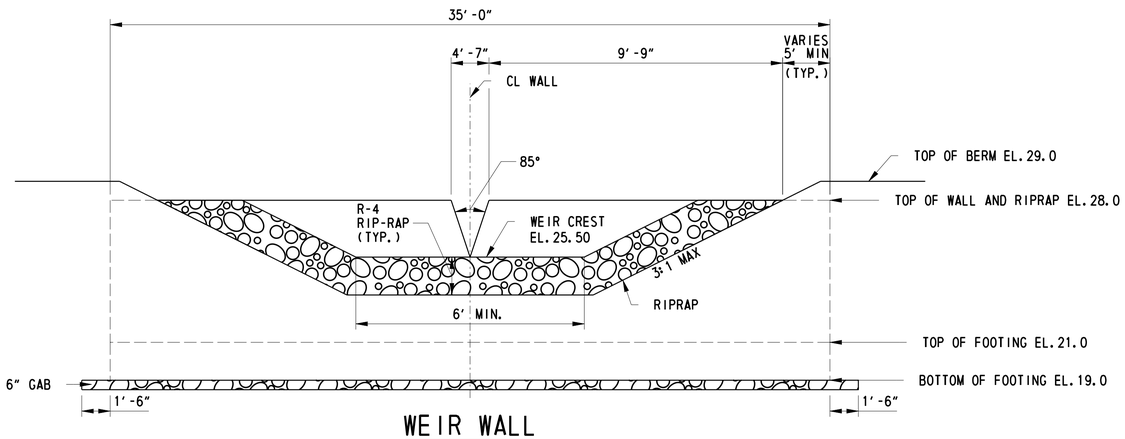

WEIR WALL EXTERIOR ELEVATION WITH RIPRAP APRON

SCALE: NTS

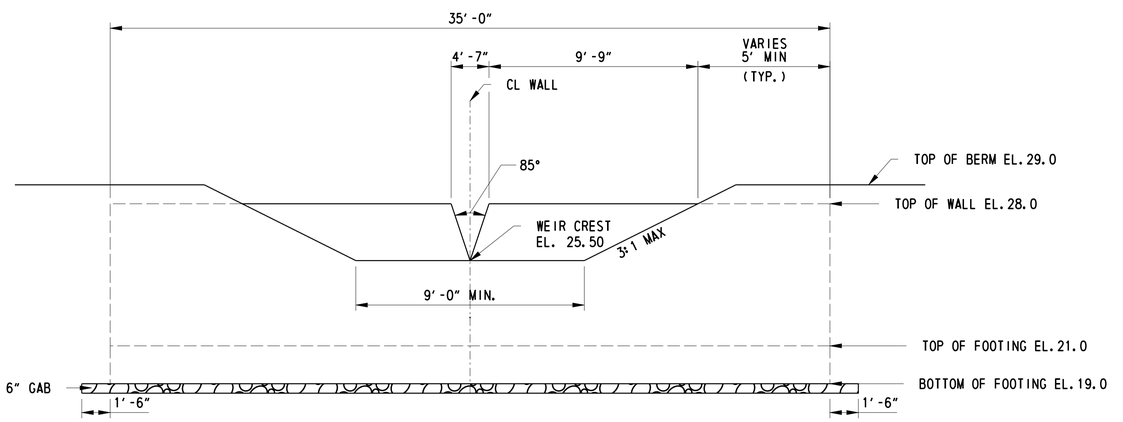

WEIR WALL INTERIOR ELEVATION

SCALE: NTS

GENERAL NOTES

1. DESIGN SPECIFICATIONS:

   AASHTO LRFD BRIDGE DESIGN SPECIFICATIONS, 6TH EDITION, 2012, AND AS SUPPLEMENTED BY DELAWARE DEPARTMENT OF TRANSPORTATION BRIDGE DESIGN MANUAL, MAY 2005, INCLUDING LATEST REVISIONS.

   PROVIDE MATERIALS AND PERFORM WORK IN ACCORDANCE WITH THE DELAWARE DEPARTMENT OF TRANSPORTATION STANDARD SPECIFICATIONS AND CONSTRUCTION DETAILS, AASHTO/AWS D1.5M/D1.5 BRIDGE WELDING CODE, AND CONTRACT SPECIAL PROVISIONS.

2. LOADING:

   UNIT WEIGHTS OF MATERIALS IN ACCORDANCE WITH THE DELAWARE BRIDGE DESIGN MANUAL.

3. PORTLAND CEMENT CONCRETE:

   PORTLAND CEMENT CONCRETE FOR WEIR WALL FOOTING AND STEM SHALL BE CLASS B, f'c=3000PSI:

   MIX REQUIREMENTS SHALL CONFORM TO SECTION 812 OF THE DELAWARE DEPARTMENT OF TRANSPORTATION STANDARD SPECIFICATIONS.

   ALL EXPOSED CORNERS OF CONCRETE SHALL BE CHAMFERED WITH ¾" X ¾" MILLED CHAMFER STRIPS EXCEPT ON UNEXPOSED FOOTINGS.

4. BAR REINFORCEMENT:

   REINFORCING STEEL SHALL CONFORM TO AASHTO M31 (ASTM A615), GRADE 60 AND IS TO BE EPOXY COATED. FUSION-BONDED EPOXY COATED REINFORCING STEEL SHALL CONFORM TO AASHTO M284 (ASTM D3963).

   PROVIDE 3" CONCRETE COVER ON REINFORCEMENT BARS, EXCEPT AS NOTED.

   CUT STEM REINFORCEMENT AS REQUIRED AT WEIR OPENING LOCATION.

   ANY FIELD CUT BARS SHALL BE REPAIRED PER EPOXY COATED SPECIFICATION.

   LAP LENGTH OF #4 BARS TO BE 3'-0". STAGGER SPLICE LOCATIONS.

   DO NOT WELD GRADE 60 REINFORCING STEEL.

   LENGTHS OF U-BAR LEGS SHALL BE 2'-1" (TYP.)

5. CONSTRUCTION JOINTS:

   KEYED CONSTRUCTION JOINTS SHALL BE 2" x 4", AS REQUIRED OR AS NOTED. VERTICAL CONSTRUCTION JOINTS FOR PRECAST CONSTRUCTION, AS APPLICABLE, SHALL BE LOCATED NO CLOSER THAN 5'-0" FROM CENTERLINE OF WEIR WALL OPENING.

6. WATERPROOFING MEMBRANE:

   ADHESIVE BACKED WATERPROOFING MEMBRANE IS TO BE USED. SPLICING OF THE MEMBRANE IS PROHIBITED.

7. REFER TO SPECIFICATION SECTION 272501 FOR CONSTRUCTION SEQUENCE.

8. GRADED AGGREGATE BASE COURSE, TYPE B (GAB) IS INCIDENTAL TO WALL CONSTRUCTION.

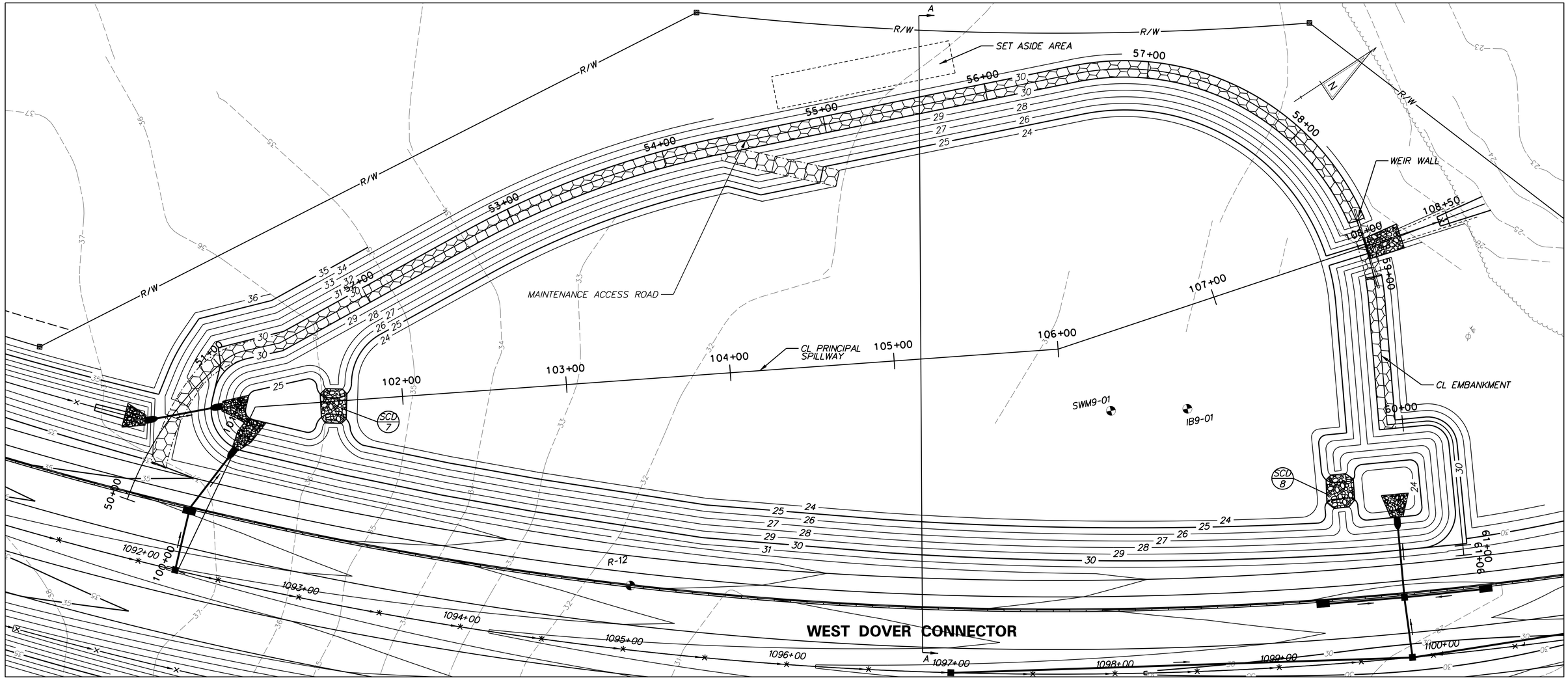

PLAN - DELDOT SWM FACILITY #874

INFILTRATION BASIN

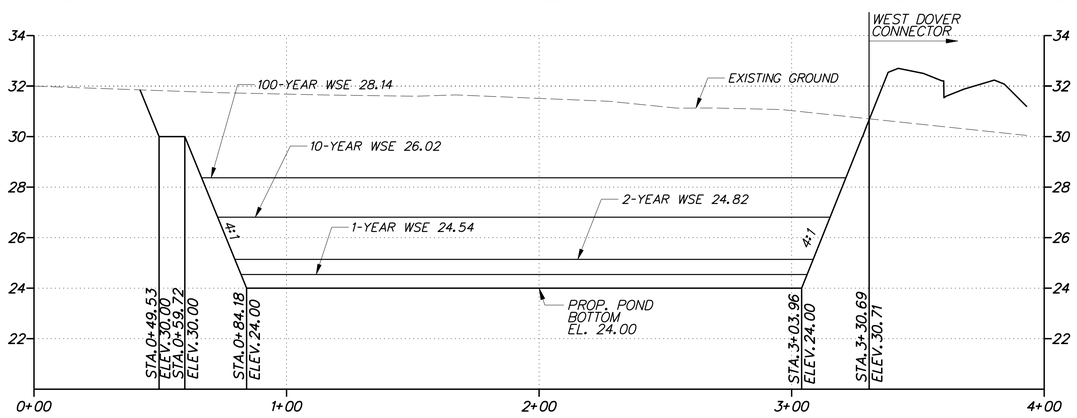

SECTION A-A

HORIZONTAL SCALE: 1" = 30'
0 30 60 90
FEET

VERTICAL SCALE: 1" = 3'
0 3 6 9
FEET

INFILTRATION BASIN DESIGN SUMMARY				
DESIGN STORM	FACILITY INFLOW (CFS)	FACILITY DISCHARGE (CFS)	WATER SURFACE ELEVATION (FT)	STORAGE VOLUME (AC. FT)
QUALITY STORM (1-YR)	15.16	2.63	24.54	1.39
2 - YEAR	23.65	4.02	24.82	2.14
10 - YEAR	54.30	5.23	26.02	5.44
100 - YEAR	120.03	17.49	28.14	11.91

HAZARD CLASSIFICATION: CLASS A AS PER POND CODE 378
DRAINAGE AREA TO FACILITY: 39.28 AC
MANAGEMENT PROVIDED BY FACILITY: WATER QUALITY BY INFILTRATION OF 1-YEAR STORM RUNOFF, WATER QUANTITY FOR 2, 10, AND 100-YEAR STORMS.

NOTES:

SEE CONSTRUCTION PLANS FOR PIPE, MANHOLE, INLET, FLARED END SECTION AND RIPRAP SCHEDULES.

SEE SWM DETAILS FOR CHECK DAM SCHEDULES.

DELAWARE DEPARTMENT OF TRANSPORTATION	ADDENDUMS / REVISIONS	SCALE: 1"=30' 0 30 60 90 FEET	WEST DOVER CONNECTOR	CONTRACT T200411701	BRIDGE NO.	STORMWATER MANAGEMENT DETAILS DELDOT SWM FACILITY #874	SHEET NO. 190
				COUNTY KENT	DESIGNED BY: JW		TOTAL SHTS. 320
					CHECKED BY: BS		

4/3/2014 deinlein
J:\BRIDGE_HIGHWAYS\6061_DelDOT_WEST_DOVER_CONN\Civil\Civ_Sheets\07_SWM\SW10.dgn

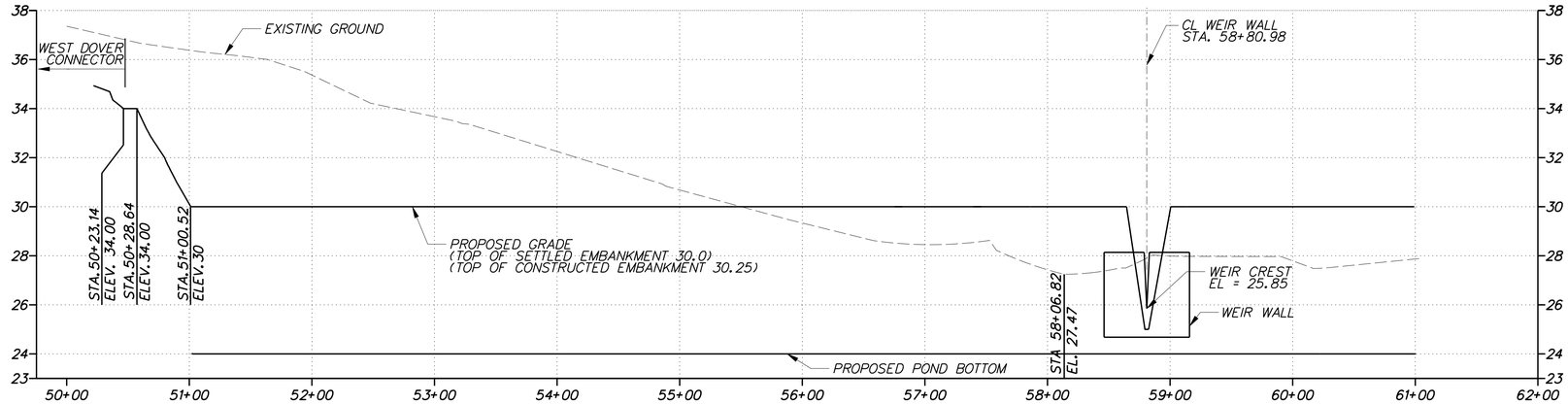

EMBANKMENT PROFILE FOR DELDOT SWM FACILITY #874

HORIZONTAL SCALE: 1" = 60'

0 60 120 180

FEET

VERTICAL SCALE: 1" = 3'

0 3 6 9

FEET

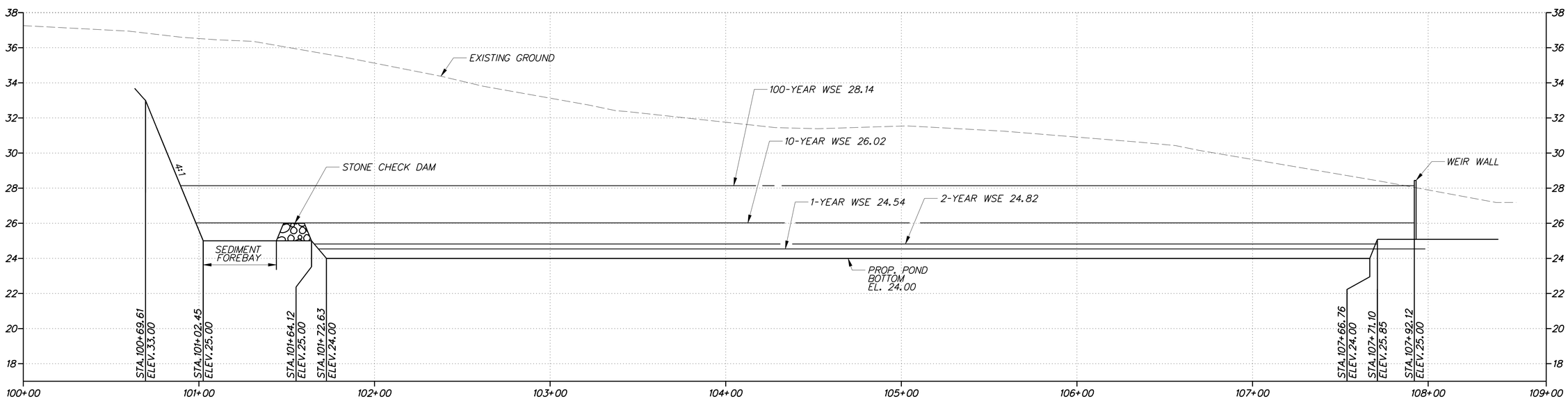

SPILLWAY PROFILE FOR DELDOT SWM FACILITY #874

HORIZONTAL SCALE: 1" = 30'

0 30 60 90

FEET

VERTICAL SCALE: 1" = 3'

0 3 6 9

FEET

4/3/2014 deinlein
J:\BRIDGE_HIGHWAYS\6061_DelDOT_WEST_DOVER_CONN\Civil\Civ_Sheets\07_SWM\SW11.dgn

DELAWARE DEPARTMENT OF TRANSPORTATION	ADDENDUMS / REVISIONS	AS SHOWN	WEST DOVER CONNECTOR	CONTRACT T200411701	BRIDGE NO.	STORMWATER MANAGEMENT DETAILS DELDOT SWM FACILITY #874	SHEET NO. 191
				COUNTY KENT	DESIGNED BY: JW		TOTAL SHTS. 320
					CHECKED BY: BS		

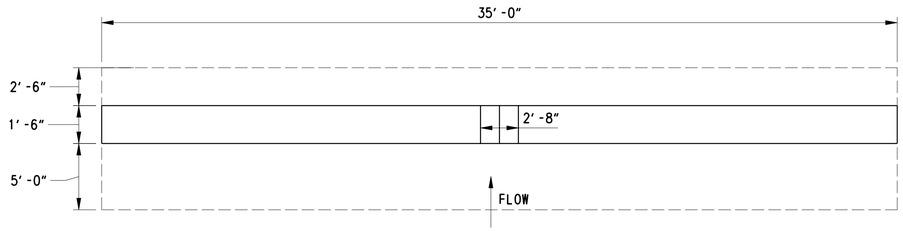

WEIR WALL PLAN

SCALE: NTS

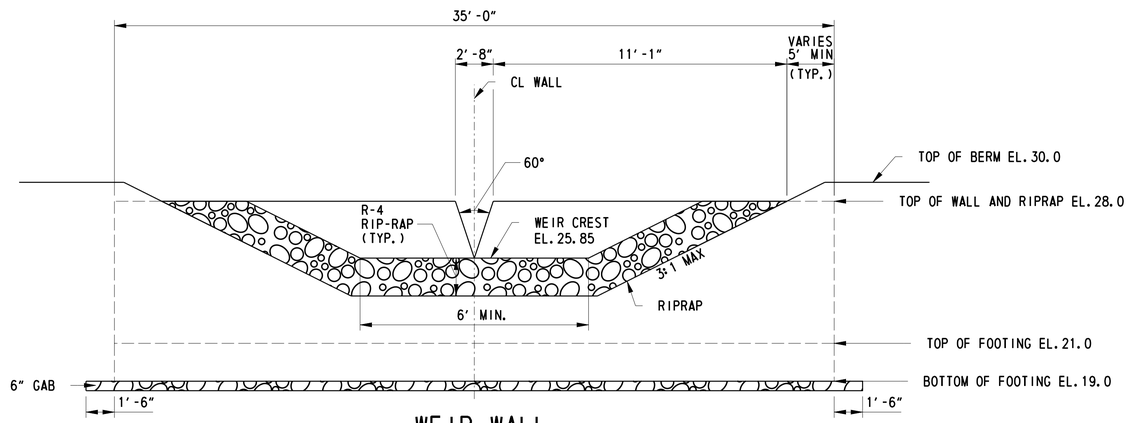

WEIR WALL EXTERIOR ELEVATION WITH RIPRAP APRON

SCALE: NTS

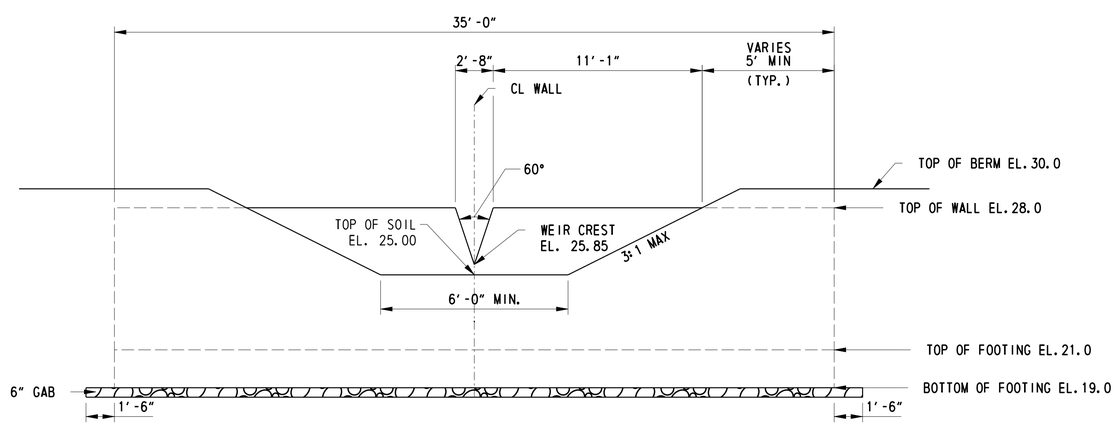

WEIR WALL INTERIOR ELEVATION

SCALE: NTS

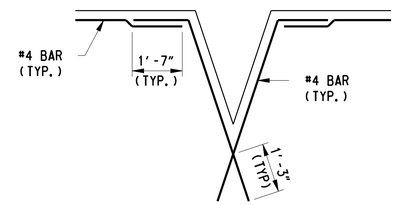

OPENING DETAILS

SCALE: NTS

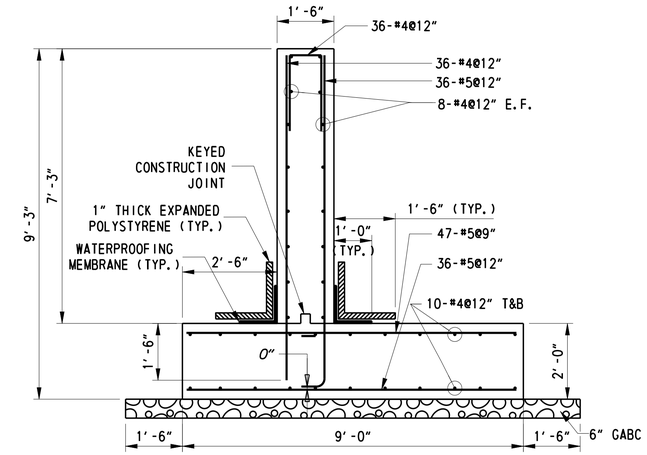

WEIR WALL SECTION

SCALE: 1/2"=1'-0"

GENERAL NOTES

1. DESIGN SPECIFICATIONS:

   AASHTO LRFD BRIDGE DESIGN SPECIFICATIONS, 6TH EDITION, 2012, AND AS SUPPLEMENTED BY DELAWARE DEPARTMENT OF TRANSPORTATION BRIDGE DESIGN MANUAL, MAY 2005, INCLUDING LATEST REVISIONS.

   PROVIDE MATERIALS AND PERFORM WORK IN ACCORDANCE WITH THE DELAWARE DEPARTMENT OF TRANSPORTATION STANDARD SPECIFICATIONS AND CONSTRUCTION DETAILS, AASHTO/AWS D1.5M/D1.5 BRIDGE WELDING CODE, AND CONTRACT SPECIAL PROVISIONS.

2. LOADING:

   UNIT WEIGHTS OF MATERIALS IN ACCORDANCE WITH THE DELAWARE BRIDGE DESIGN MANUAL.

3. PORTLAND CEMENT CONCRETE:

   PORTLAND CEMENT CONCRETE FOR WEIR WALL FOOTING AND STEM SHALL BE CLASS B, f'c=3000PSI:

   MIX REQUIREMENTS SHALL CONFORM TO SECTION 812 OF THE DELAWARE DEPARTMENT OF TRANSPORTATION STANDARD SPECIFICATIONS.

   ALL EXPOSED CORNERS OF CONCRETE SHALL BE CHAMFERED WITH ¾" X ¾" MILLED CHAMFER STRIPS EXCEPT ON UNEXPOSED FOOTINGS.

4. BAR REINFORCEMENT:

   REINFORCING STEEL SHALL CONFORM TO AASHTO M31 (ASTM A615), GRADE 60 AND IS TO BE EPOXY COATED. FUSION-BONDED EPOXY COATED REINFORCING STEEL SHALL CONFORM TO AASHTO M284 (ASTM D3963).

   PROVIDE 3" CONCRETE COVER ON REINFORCEMENT BARS, EXCEPT AS NOTED.

   CUT STEM REINFORCEMENT AS REQUIRED AT WEIR OPENING LOCATION.

   ANY FIELD CUT BARS SHALL BE REPAIRED PER EPOXY COATED SPECIFICATION.

   LAP LENGTH OF #4 BARS TO BE 3'-0". STAGGER SPLICE LOCATIONS.

   DO NOT WELD GRADE 60 REINFORCING STEEL.

   LENGTHS OF U-BAR LEGS SHALL BE 2'-1" (TYP.)

5. CONSTRUCTION JOINTS:

   KEYED CONSTRUCTION JOINTS SHALL BE 2" x 4", AS REQUIRED OR AS NOTED. VERTICAL CONSTRUCTION JOINTS FOR PRECAST CONSTRUCTION, AS APPLICABLE, SHALL BE LOCATED NO CLOSER THAN 5'-0" FROM CENTERLINE OF WEIR WALL OPENING.

6. WATERPROOFING MEMBRANE:

   ADHESIVE BACKED WATERPROOFING MEMBRANE IS TO BE USED. SPLICING OF THE MEMBRANE IS PROHIBITED.

7. REFER TO SPECIFICATION SECTION 272501 FOR CONSTRUCTION SEQUENCE.

8. GRADED AGGREGATE BASE COURSE, TYPE B (GAB) IS INCIDENTAL TO WALL CONSTRUCTION.

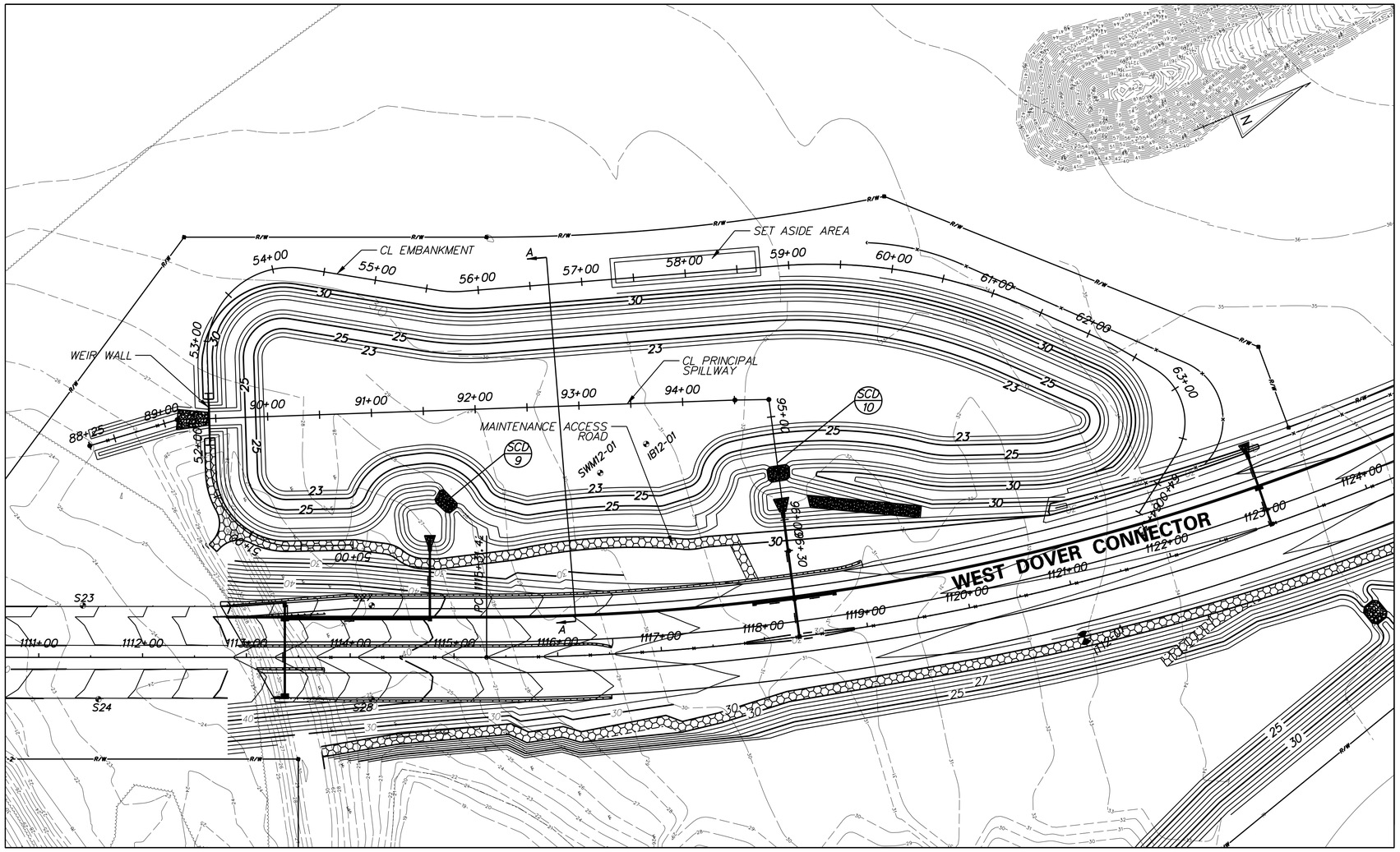

PLAN - DELDOT SWM FACILITY #875
WET POND

NOTES:

SEE CONSTRUCTION PLANS FOR PIPE, MANHOLE, INLET, FLARED END SECTION AND RIPRAP SCHEDULES.

SEE SWM DETAILS FOR CHECK DAM SCHEDULES.

WET POND DESIGN SUMMARY				
DESIGN STORM	FACILITY INFLOW (CFS)	FACILITY DISCHARGE (CFS)	WATER SURFACE ELEVATION (FT)	STORAGE VOLUME (AC. FT)
QUALITY STORM (1-YR)	6.41	0.05	26.39	7.44
2 - YEAR	15.29	0.21	26.67	8.21
10 - YEAR	58.22	1.52	27.49	10.82
100 - YEAR	168.82	8.34	28.94	16.21

HAZARD CLASSIFICATION: CLASS A AS PER POND CODE 378
DRAINAGE AREA TO FACILITY: 41.38 AC
MANAGEMENT PROVIDED BY FACILITY: WATER QUALITY BY EXTENDED DETENTION OF 1-YEAR STORM RUNOFF.
WATER QUANTITY BY EXTENDED DETENTION FOR 2, 10, AND 100-YEAR STORMS.

7/23/2014 PerryR
J:\BRIDGE_HIGHWAYS\6061_DelDOT_WEST_DOVER_CONN\Civil\Civ_Sheets\07_SWM\SW12.dgn

DELAWARE DEPARTMENT OF TRANSPORTATION	ADDENDUMS / REVISIONS	SCALE: 1"=60' 0 60 120 180 FEET	WEST DOVER CONNECTOR	CONTRACT T200411701	BRIDGE NO.	STORMWATER MANAGEMENT DETAILS DELDOT SWM FACILITY #875	SHEET NO. 193
				COUNTY KENT	DESIGNED BY: JW		TOTAL SHTS. 320
					CHECKED BY: BS		

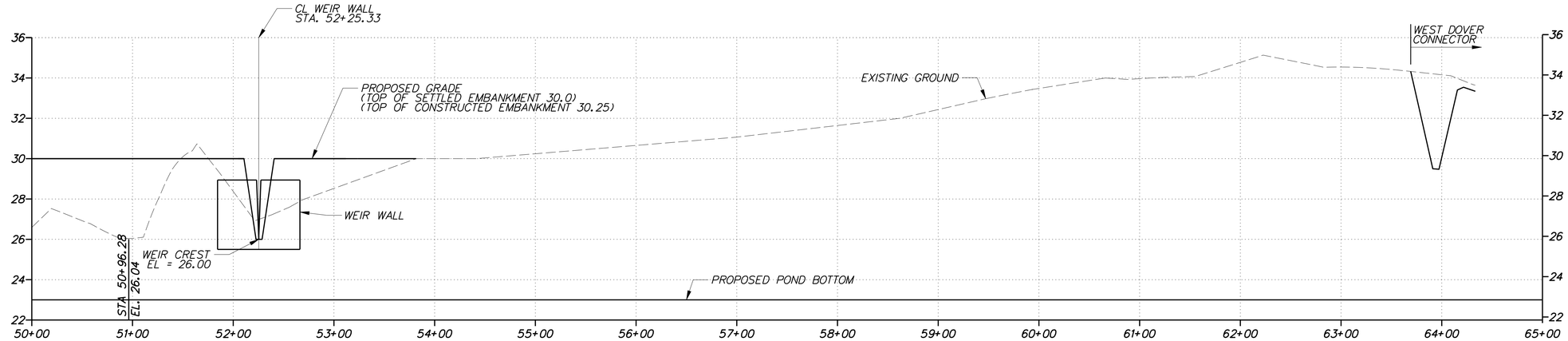

EMBANKMENT PROFILE FOR DELDOT SWM FACILITY #875

HORIZONTAL SCALE: 1" = 60'
0 60 120 180
FEET

VERTICAL SCALE: 1" = 3'
0 3 6 9
FEET

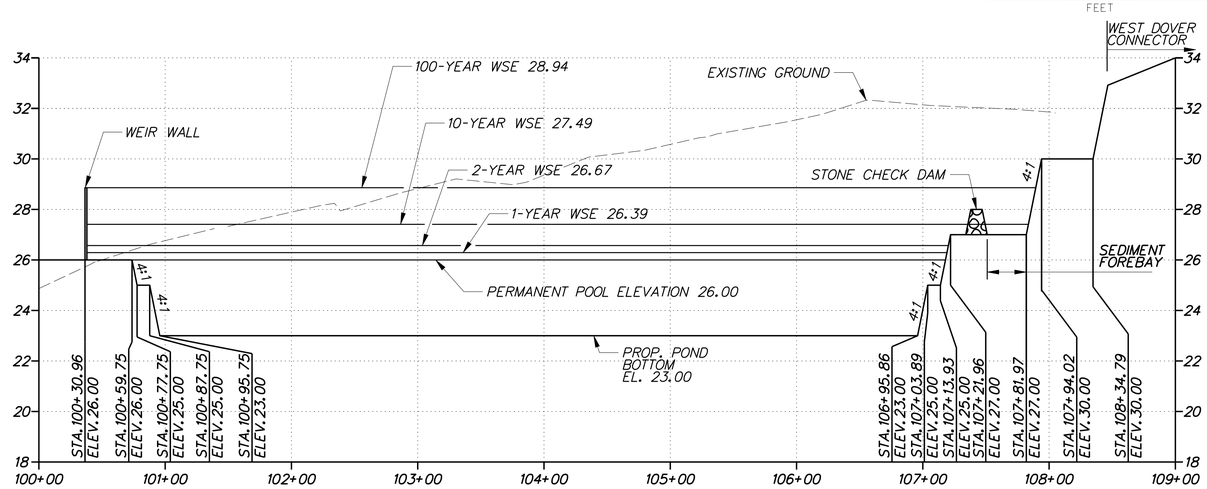

SPILLWAY PROFILE FOR DELDOT SWM FACILITY #875

HORIZONTAL SCALE: 1" = 60'
0 60 120 180
FEET

VERTICAL SCALE: 1" = 3'
0 3 6 9
FEET

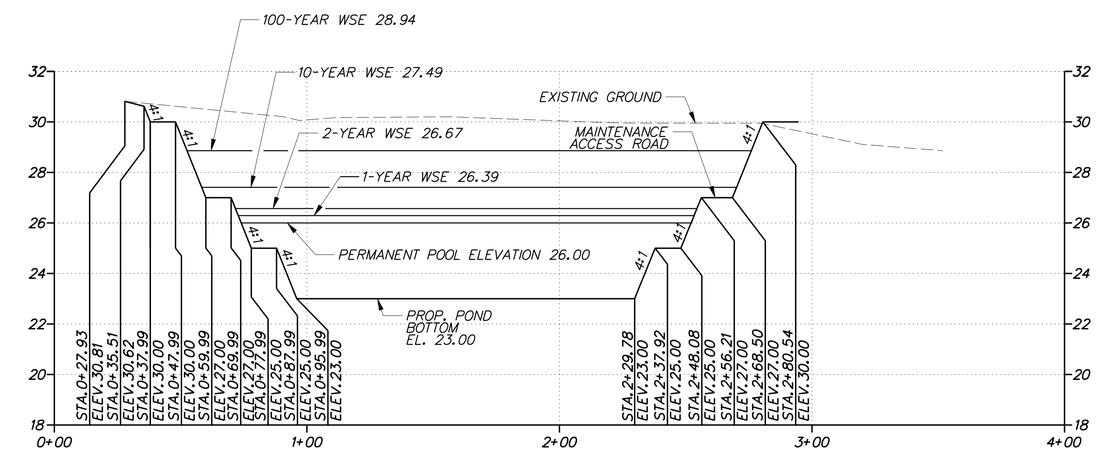

SECTION A-A

HORIZONTAL SCALE: 1" = 30'
0 60 120 180
FEET

VERTICAL SCALE: 1" = 3'
0 3 6 9
FEET

7/23/2014 PerryR
J:\BRIDGE_HIGHWAYS\6061_DelDOT_WEST_DOVER_CONN\Civil\Civ_Sheets\07_SWM\SW13.dgn

DELAWARE DEPARTMENT OF TRANSPORTATION	ADDENDUMS / REVISIONS	AS SHOWN	**WEST DOVER CONNECTOR**	CONTRACT T200411701 / COUNTY KENT	BRIDGE NO. / DESIGNED BY: JW / CHECKED BY: BS	**STORMWATER MANAGEMENT DETAILS DELDOT SWM FACILITY #875**	SHEET NO. 194 / TOTAL SHTS. 320

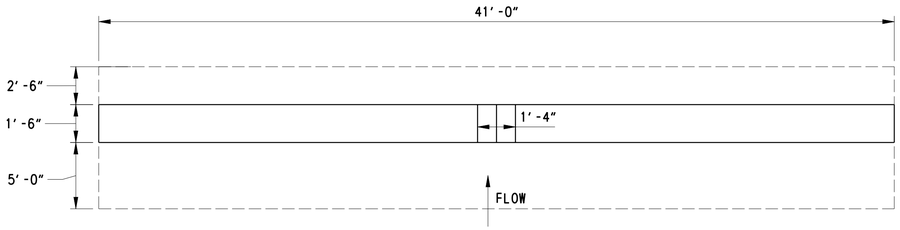

WEIR WALL PLAN

SCALE: NTS

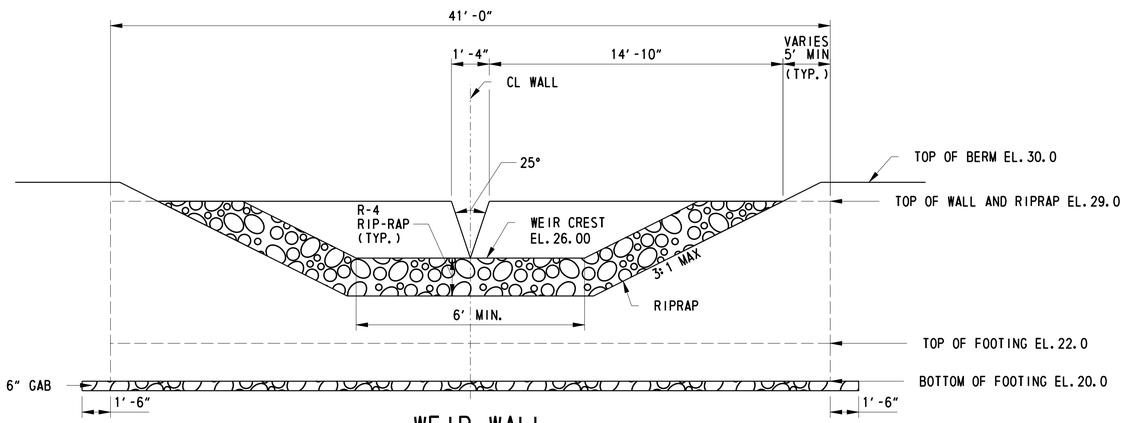

WEIR WALL EXTERIOR ELEVATION WITH RIPRAP APRON

SCALE: NTS

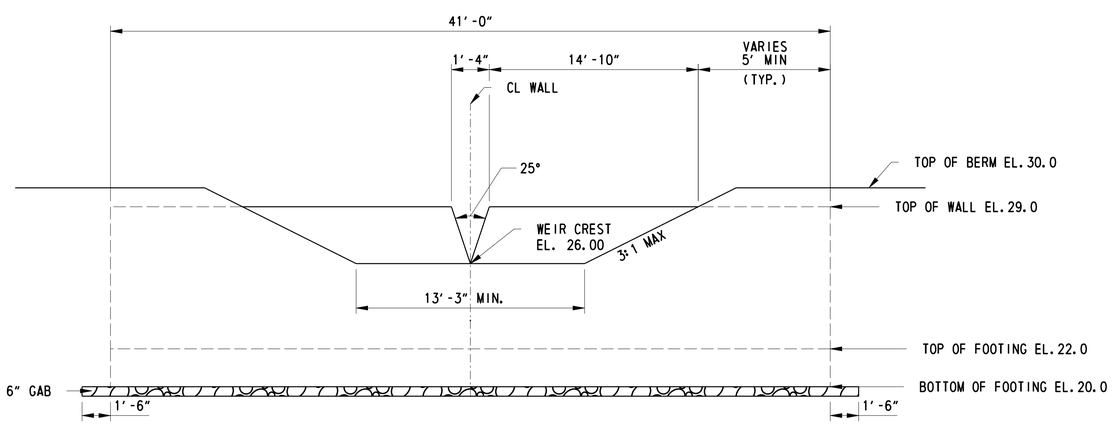

WEIR WALL INTERIOR ELEVATION

SCALE: NTS

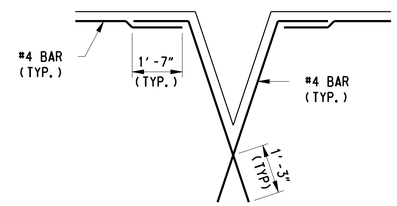

OPENING DETAILS

SCALE: NTS

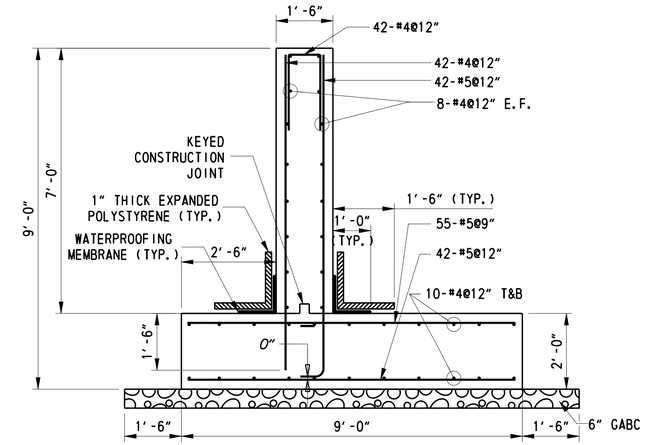

WEIR WALL SECTION

SCALE: 1/2"=1'-0"

GENERAL NOTES

1. DESIGN SPECIFICATIONS:

   AASHTO LRFD BRIDGE DESIGN SPECIFICATIONS, 6TH EDITION, 2012, AND AS SUPPLEMENTED BY DELAWARE DEPARTMENT OF TRANSPORTATION BRIDGE DESIGN MANUAL, MAY 2005, INCLUDING LATEST REVISIONS.

   PROVIDE MATERIALS AND PERFORM WORK IN ACCORDANCE WITH THE DELAWARE DEPARTMENT OF TRANSPORTATION STANDARD SPECIFICATIONS AND CONSTRUCTION DETAILS, AASHTO/AWS D1.5M/D1.5 BRIDGE WELDING CODE, AND CONTRACT SPECIAL PROVISIONS.

2. LOADING:

   UNIT WEIGHTS OF MATERIALS IN ACCORDANCE WITH THE DELAWARE BRIDGE DESIGN MANUAL.

3. PORTLAND CEMENT CONCRETE:

   PORTLAND CEMENT CONCRETE FOR WEIR WALL FOOTING AND STEM SHALL BE CLASS B, f'c=3000PSI:

   MIX REQUIREMENTS SHALL CONFORM TO SECTION 812 OF THE DELAWARE DEPARTMENT OF TRANSPORTATION STANDARD SPECIFICATIONS.

   ALL EXPOSED CORNERS OF CONCRETE SHALL BE CHAMFERED WITH ¾" X ¾" MILLED CHAMFER STRIPS EXCEPT ON UNEXPOSED FOOTINGS.

4. BAR REINFORCEMENT:

   REINFORCING STEEL SHALL CONFORM TO AASHTO M31 (ASTM A615), GRADE 60 AND IS TO BE EPOXY COATED. FUSION-BONDED EPOXY COATED REINFORCING STEEL SHALL CONFORM TO AASHTO M284 (ASTM D3963).

   PROVIDE 3" CONCRETE COVER ON REINFORCEMENT BARS, EXCEPT AS NOTED.

   CUT STEM REINFORCEMENT AS REQUIRED AT WEIR OPENING LOCATION.

   ANY FIELD CUT BARS SHALL BE REPAIRED PER EPOXY COATED SPECIFICATION.

   LAP LENGTH OF #4 BARS TO BE 3'-0". STAGGER SPLICE LOCATIONS.

   DO NOT WELD GRADE 60 REINFORCING STEEL.

   LENGTHS OF U-BAR LEGS SHALL BE 2'-1" (TYP.)

5. CONSTRUCTION JOINTS:

   KEYED CONSTRUCTION JOINTS SHALL BE 2" x 4", AS REQUIRED OR AS NOTED. VERTICAL CONSTRUCTION JOINTS FOR PRECAST CONSTRUCTION, AS APPLICABLE, SHALL BE LOCATED NO CLOSER THAN 5'-0" FROM CENTERLINE OF WEIR WALL OPENING.

6. WATERPROOFING MEMBRANE:

   ADHESIVE BACKED WATERPROOFING MEMBRANE IS TO BE USED. SPLICING OF THE MEMBRANE IS PROHIBITED.

7. REFER TO SPECIFICATION SECTION 272501 FOR CONSTRUCTION SEQUENCE.

8. GRADED AGGREGATE BASE COURSE, TYPE B (GAB) IS INCIDENTAL TO WALL CONSTRUCTION.

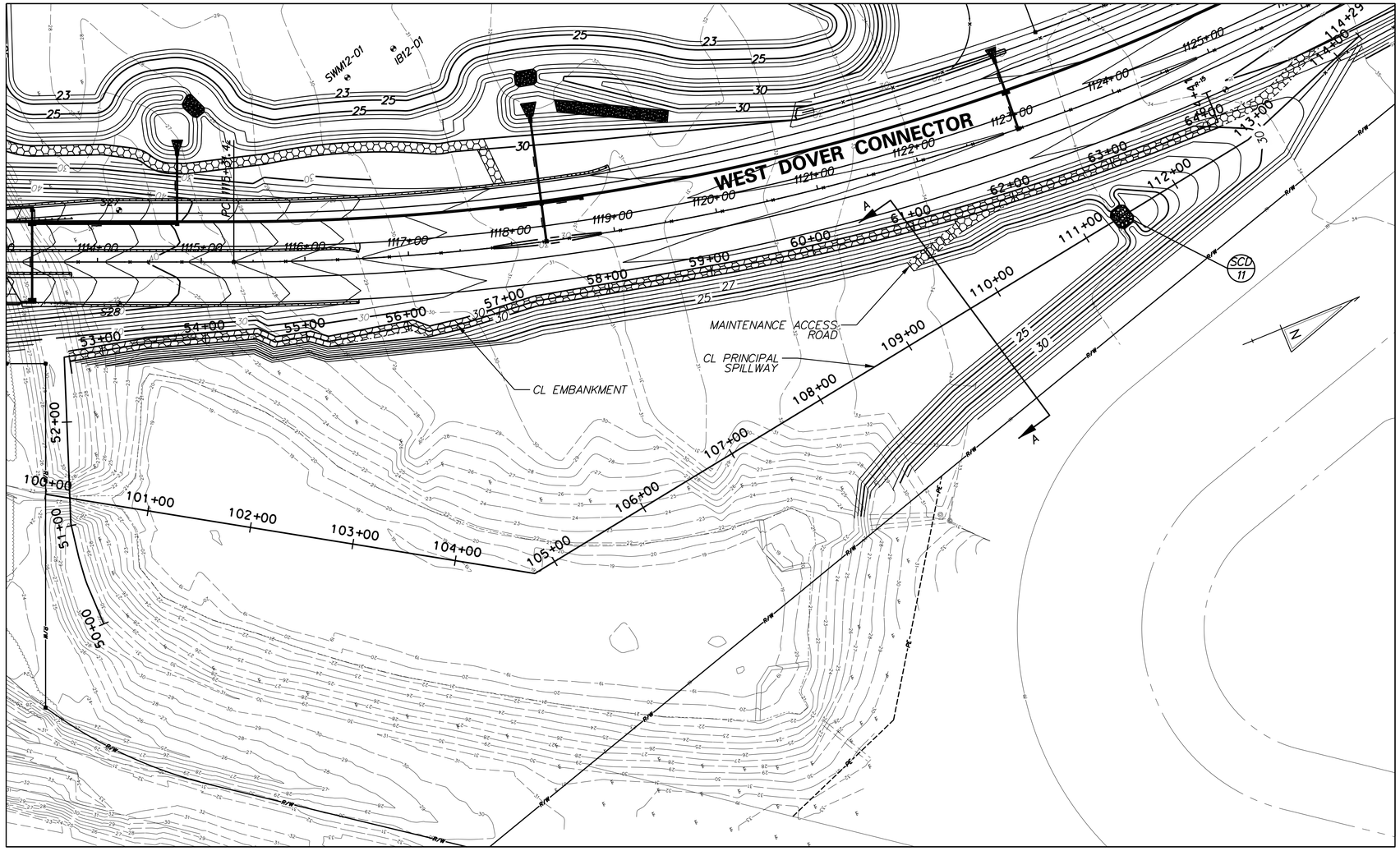

PLAN - DELDOT SWM FACILITY #879
WET POND

NOTES:

SEE CONSTRUCTION PLANS FOR PIPE, MANHOLE, INLET, FLARED END SECTION AND RIPRAP SCHEDULES.

SEE SWM DETAILS FOR CHECK DAM SCHEDULES.

WET POND DESIGN SUMMARY				
DESIGN STORM	FACILITY INFLOW (CFS)	FACILITY DISCHARGE (CFS)	WATER SURFACE ELEVATION (FT)	STORAGE VOLUME (AC. FT)
QUALITY STORM (1-YR)	42.22	1.30	23.75	16.53
2 - YEAR	63.56	2.16	24.09	18.67
10 - YEAR	138.76	5.90	25.22	26.10
100 - YEAR	296.82	16.20	27.46	41.94

HAZARD CLASSIFICATION: CLASS A AS PER POND CODE 378

DRAINAGE AREA TO FACILITY: 82.02 AC

MANAGEMENT PROVIDED BY FACILITY: WATER QUALITY BY EXTENDED DENTENTION OF 1-YEAR STORM RUNOFF, WATER QUANTITY BY EXTENDED DETENTION OF THE 2, 10, AND 100-YEAR STORMS.

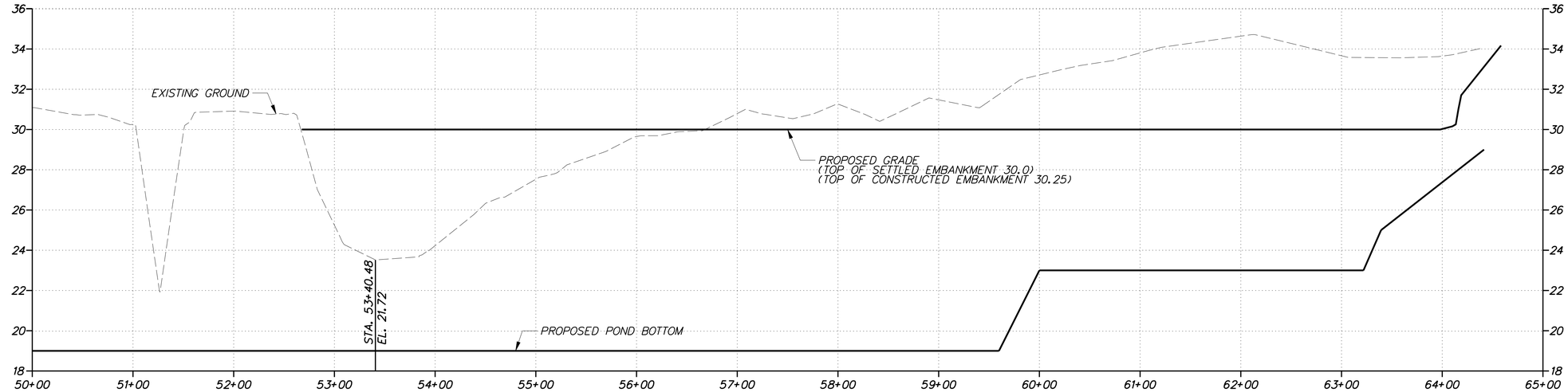

EMBANKMENT PROFILE FOR DELDOT SWM FACILITY #879

HORIZONTAL SCALE: 1" = 60'
0 60 120 180
FEET

VERTICAL SCALE: 1" = 3'
0 3 6 9
FEET

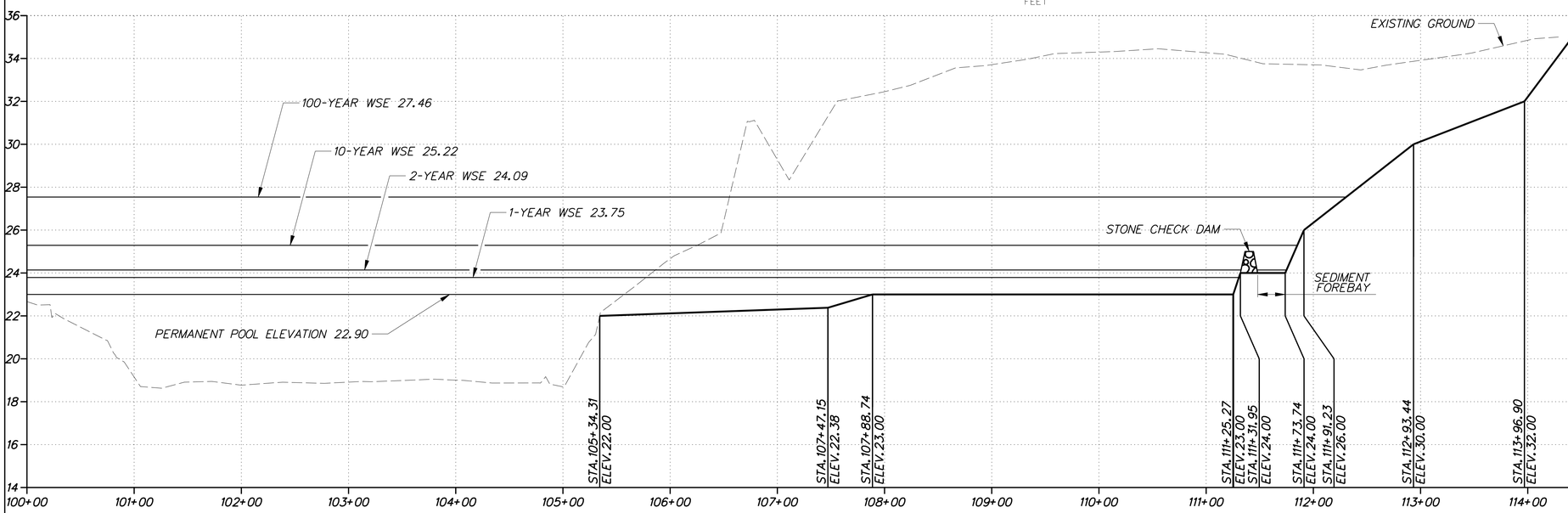

SPILLWAY PROFILE FOR DELDOT SWM FACILITY #879

HORIZONTAL SCALE: 1" = 60'
0 60 120 180
FEET

VERTICAL SCALE: 1" = 3'
0 3 6 9
FEET

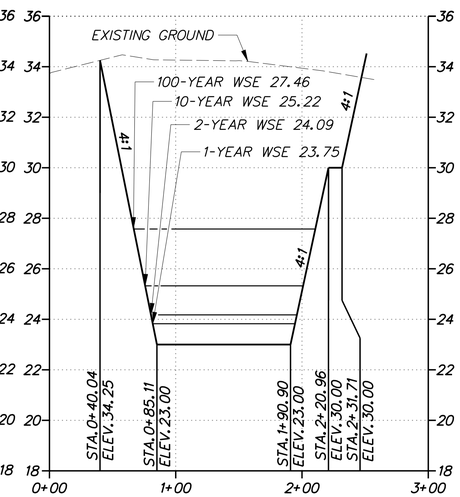

SECTION A-A

HORIZONTAL SCALE: 1" = 60'
0 60 120 180
FEET

VERTICAL SCALE: 1" = 3'
0 3 6 9
FEET

7/23/2014 PerryR
J:\BRIDGE_HIGHWAYS\6061_DelDOT_WEST_DOVER_CONN\Civil\Civ_Sheets\07_SWM\SW15.dgn

DELAWARE DEPARTMENT OF TRANSPORTATION	ADDENDUMS / REVISIONS	AS SHOWN	**WEST DOVER CONNECTOR**	CONTRACT T200411701	BRIDGE NO.	**STORMWATER MANAGEMENT DETAILS DELDOT SWM FACILITY #879**	SHEET NO. 197
				COUNTY KENT	DESIGNED BY: JW		TOTAL SHTS. 320
					CHECKED BY: BS		

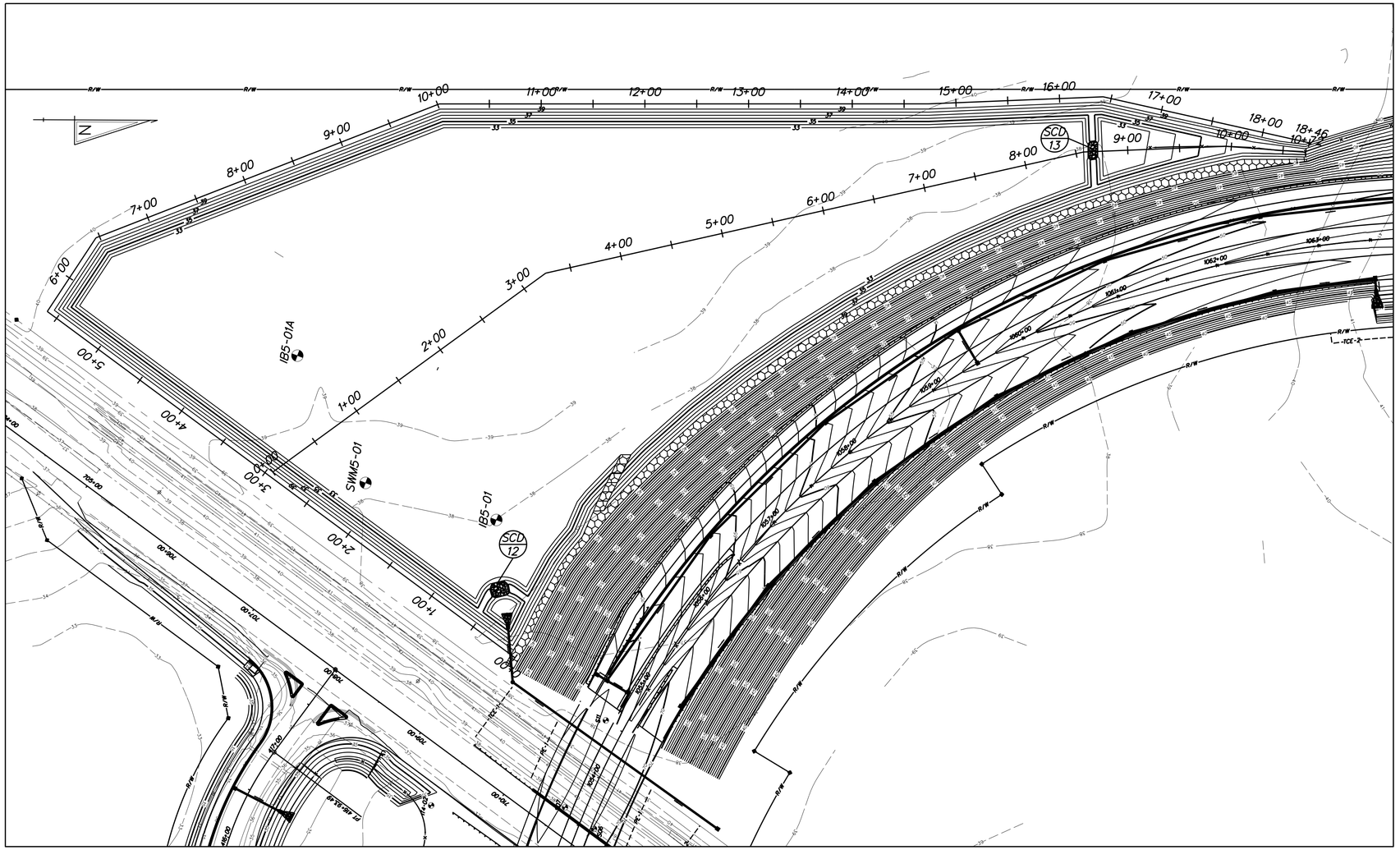

PLAN - DELDOT SWM FACILITY #876

INFILTRATION BASIN

NOTES:

SEE CONSTRUCTION PLANS FOR PIPE, MANHOLE, INLET, FLARED END SECTION AND RIPRAP SCHEDULES.

SEE SWM DETAILS FOR CHECK DAM SCHEDULES.

WET POND DESIGN SUMMARY				
DESIGN STORM	FACILITY INFLOW (CFS)	FACILITY DISCHARGE (CFS)	WATER SURFACE ELEVATION (FT)	STORAGE VOLUME (AC. FT)
QUALITY STORM (1-YR)	16.34	4.72	33.36	1.92
2 - YEAR	25.46	7.25	33.55	2.94
10 - YEAR	59.00	13.23	34.30	6.97
100 - YEAR	131.39	14.21	36.33	18.48

HAZARD CLASSIFICATION: CLASS A AS PER POND CODE 378
DRAINAGE AREA TO FACILITY: 58.36 AC
MANAGEMENT PROVIDED BY FACILITY: WATER QUALITY BY INFILTRATION OF 1-YEAR STORM RUNOFF, WATER QUANTITY FOR 2, 10, AND 100-YEAR STORMS.

DELAWARE DEPARTMENT OF TRANSPORTATION

ADDENDUMS / REVISIONS

SCALE: 1"=60'
0 60 120 180
FEET

WEST DOVER CONNECTOR

CONTRACT	BRIDGE NO.	
T200411701	DESIGNED BY:	JW
COUNTY	CHECKED BY:	BS
KENT		

STORMWATER MANAGEMENT DETAILS DELDOT SWM FACILITY #876

SHEET NO. 198
TOTAL SHTS. 320

4/3/2014 deinlein
J:\BRIDGE_HIGHWAYS\6061_DelDOT_WEST_DOVER_CONN\Civil\Civ_Sheets\07_SWM\SW17.dgn

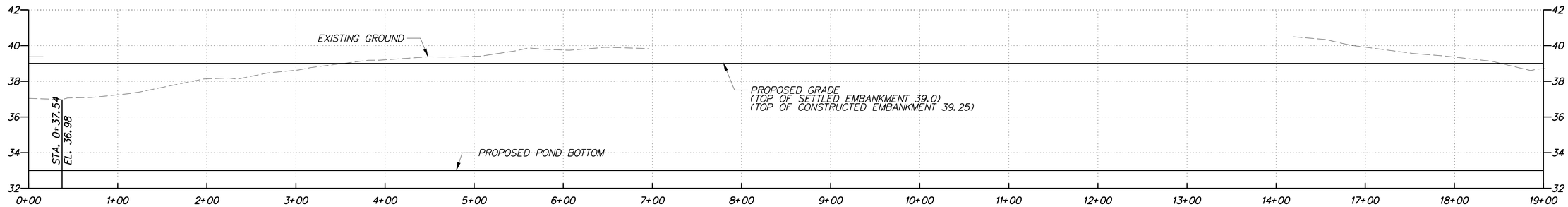

EMBANKMENT PROFILE FOR DELDOT SWM FACILITY #876

HORIZONTAL SCALE: 1" = 60'
0 60 120 180
FEET

VERTICAL SCALE: 1" = 3'
0 3 6 9
FEET

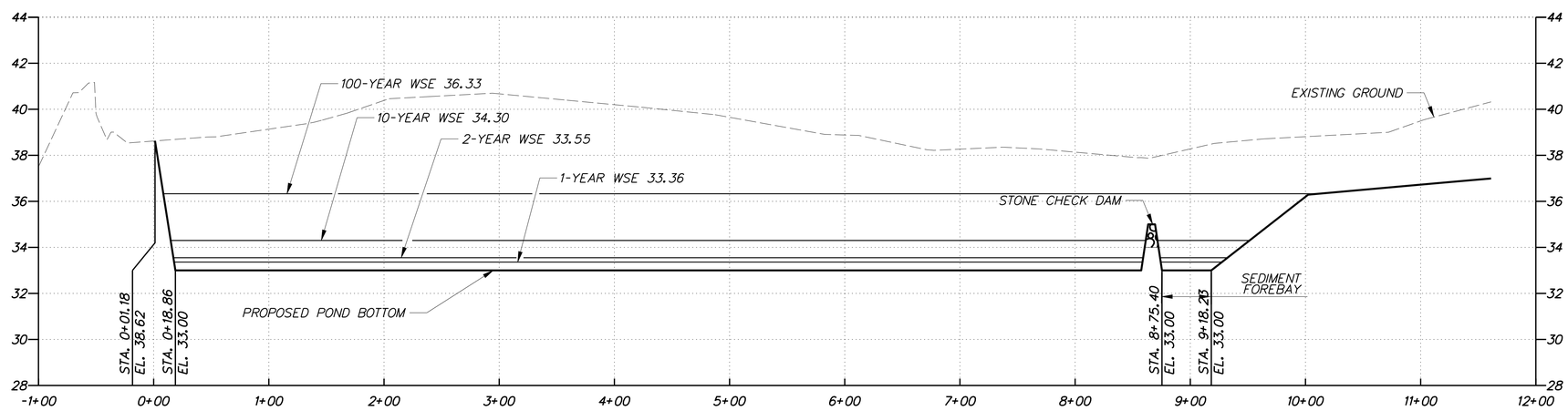

SPILLWAY PROFILE FOR DELDOT SWM FACILITY #876

HORIZONTAL SCALE: 1" = 60'
0 60 120 180
FEET

VERTICAL SCALE: 1" = 3'
0 3 6 9
FEET

DELAWARE DEPARTMENT OF TRANSPORTATION	ADDENDUMS / REVISIONS	AS SHOWN	WEST DOVER CONNECTOR	CONTRACT T200411701	BRIDGE NO.	STORMWATER MANAGEMENT DETAILS DELDOT SWM FACILITY #876	SHEET NO. 199
				COUNTY KENT	DESIGNED BY: JW		TOTAL SHTS. 320
					CHECKED BY: BS		

4/3/2014 deinlein
J:\BRIDGE_HIGHWAYS\16061_DelDOT_WEST_DOVER_CONN\Civil\Civ_Sheets\07_SWM\SW18.dgn

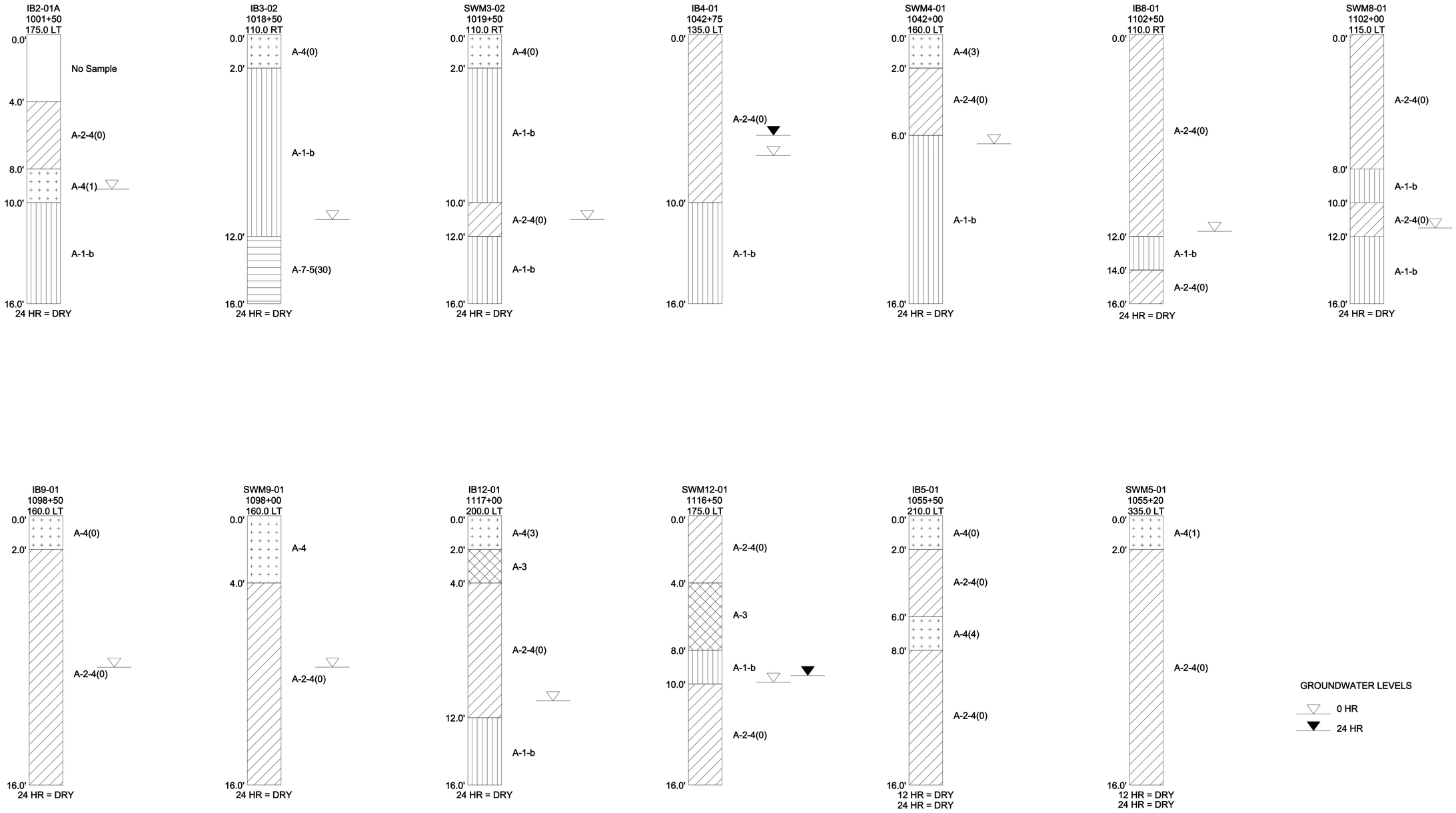

DELAWARE DEPARTMENT OF TRANSPORTATION

ADDENDUMS / REVISIONS

SCALE: 1"=60'
0 60 120 180
FEET

WEST DOVER CONNECTOR

CONTRACT	BRIDGE NO.	
T200411701	DESIGNED BY: KM/JP	
COUNTY		
KENT	CHECKED BY: JS/SS	

STORMWATER MANAGEMENT DETAILS

SHEET NO.
200
TOTAL SHTS.
320

4/3/2014 deinlein
J:\BRIDGE_HIGHWAYS\16061_DelDOT_WEST_DOVER_CONN\Civil\Civ_Sheets\07_SWM\SW19.dgn