STATE OF DELAWARE
DEPARTMENT OF TRANSPORTATION
PO BOX 778
DOVER, DELAWARE 19903

JACK MARKELL
GOVERNOR

SHAILEN BHATT
SECRETARY

(302) 760-2030
FAX (302) 739-2254

VIA OVERNIGHT DELIVERY

October 6, 2014

Contract No. T200411701.01
Federal Aid Project No. ESTP-2011(17)
West Dover Connector
Kent County

Ladies and Gentlemen:

Enclosed is Addendum No. 1 for the referenced contract consisting of the following:

1. Quantities have been revised for the following items:

   608000
   617003
   617005
   708107
   743024
   612022
   701022
   708050
   708052
   710001
   710501

2. The following items have been added:

   701031
   743003
   743010

3. The following items have been deleted:

   746594
   746888
   746889
   746890

4. One (1) page, Table of Contents, page vi, revised, to be substituted for the same page in the Proposal.

5. Four (4) pages, Special Provisions, 202505 - Settlement Platform, pages 40 through 43,

revised, to be substituted for the same pages in the Proposal.

6. One (1) page, Special Provisions, 272501 - Pond Outlet Structure, Special, page 48, revised, to be substituted for the same pages in the Proposal.

7. One (1) page, Special Provisions, 746594 - Luminaire (HPS) 250 Watt, page 142, deleted, to be removed from the Proposal, and substituted with the enclosed sequencing page.

8. One (1) page, Special Provisions, 746888 - Aluminum Lighting Single Davit Arm, 8' Arm Spread, 746889 - Aluminum Lighting Single Davit Arm, 12' Arm Spread, 746890 - Aluminum Lighting Single Davit Arm, 15' Arm Spread, page 147, deleted, to be removed from the Proposal, and substituted with the enclosed sequencing page.

9. Twenty five (25) pages, Bid Proposal Forms, pages 1 through 25, revised, to be substituted for the same pages in the Proposal.

10. Seven (7) sheets, Construction Plans, sheets 31, 42, 43, 118, 127, 160 and 161, revised, to be substituted for the same sheets in the Plan Set.

11. For proposal holders with the electronic bid option only, Amendment Disk No. 1.

Please note the revisions listed above and submit your bid based upon this information.

Sincerely,

signature on file

James H. Hoagland
Contract Services Administrator

:jhh
Enclosures

746653 - ELECTRICAL TESTING 143
746847 - POLE BASE, TYPE 3 145
746850 - POLE BASE, TYPE 4 145
746852 - POLE BASE, TYPE 6 145
746907 - FURNISH & INSTALL 1-CONDUCTOR #2 AWG STRANDED COPPER 148
746909 - FURNISH & INSTALL 1-CONDUCTOR #6 AWG STRANDED COPPER 148
746914 - FURNISH & INSTALL #6 BARE STRANDED COPPER GROUND 148
746924 - FURNISH & INSTALL LOOP WIRE 1-CONDUCTOR #14 AWG ENCASED IN ¼" FLEXIBLE TUBING IN A LOOP SAWCUT 152
746925 – FURNISH & INSTALL EMBEDDED METERED SERVICE PEDESTAL (100 AMP) 155
746926 – FURNISH & INSTALL ELECTRICAL UTILITY SERVICE EQUIPMENT 120/240 156
746941 - TRAFFIC CONTROL DEVICE EQUIPMENT TURN ON, PICK UP, REMOVAL AND MAINTENANCE, TYPE III 157
747500 - LOAD CENTER CABINETS WITH PAD 160
747513 - LIGHTING CONTROL AND DISTRIBUTION ENCLOSURE (120/240 100 AMP) . . 162
747514 - CABINET BASE TYPE F 164
747515 - CABINET BASE TYPE M 164
747516 - CABINET BASE TYPE P 164
748548 - PERMANENT PAVEMENT STRIPING, EPOXY RESIN PAINT, WHITE/YELLOW, 5" 165
748549 -PERMANENT PAVEMENT STRIPING, EPOXY RESIN PAINT, WHITE/YELLOW, 10" 165
748557 - PERMANENT PAVEMENT STRIPING, EPOXY RESIN PAINT, BLACK, 3" 165
748530 - REMOVAL OF PAVEMENT STRIPING 174
748553 - PREFORMED RETROREFLECTIVE THERMOPLASTIC PAVEMENT MARKINGS, BIKE SYMBOL 175
749687 - INSTALLATION OR REMOVAL OF TRAFFIC SIGN ON SINGLE SIGN POST . . . 179
749690 - INSTALLATION OR REMOVAL OF TRAFFIC SIGN ON MULTIPLE SIGN POSTS 180
753516 - SANITARY SEWER SYSTEM 181
759511 - FIELD OFFICE, SPECIAL 188
760502 - PAVEMENT MILLING, TAPER CUT 194
760507 - PROFILE MILLING, BITUMINOUS CONCRETE 195
763501 - CONSTRUCTION ENGINEERING 197
763503 - TRAINEE 201
763508 - PROJECT CONTROL SYSTEM DEVELOPMENT PLAN 202
763509 - CPM SCHEDULE UPDATES AND/OR REVISED UPDATES 202
763626 - DIESEL FUEL COST PRICE ADJUSTMENT 207

UTILITY STATEMENT 211

RIGHT OF WAY CERTIFICATE 226

ENVIRONMENTAL STATEMENT 228

BID PROPOSAL FORMS 238
BREAKOUT SHEETS 264

CERTIFICATION 268

BID BOND 270

202505 – SETTLEMENT PLATFORM
202518 – SETTLEMENT MONUMENT

Description:

The work of this section includes furnishing, installing, protecting and maintaining settlement monitoring plates (SMP), pipe extensions, and monument settlement points conforming to the design and at the locations shown on the Plans or as directed by the Department. All labor, materials, equipment and incidentals necessary to complete this work shall be considered part of this item required to provide devices to observe ground movement during and after construction. The Contractor shall perform the monitoring, recording and reporting of the settlement.

Submittals:

1. Qualifying Experience

The Contractor shall submit proof of three or more projects of similar size and complexity on which the firm and personnel assigned to the project have successfully installed similar instrumentation within the last three years. The Contractor shall present the following information for each project listed as a reference at or prior to any preconstruction meetings:

1. Project Name, Location, Project Description, and Completion Date.
2. Surface and Subsurface Conditions.
3. Type and number of instruments installed.
4. Installation equipment and techniques utilized when applicable.
5. Provide names, current phone numbers, and current business addresses for the owner/designer, geotechnical consultant, and contract manager.

2. Settlement surveying and monitoring plan for review prior to construction. The plan shall identify the detailed location of settlement monitoring points, reference benchmarks, survey schedules and procedures and reporting formats.

3. Description of the surveying equipment to be used.

4. Settlement Plate Layout and Installation Details: Within two days after the installation of each settlement plate, the Contractor shall submit an installation record sheet including appropriate items from the following list.

   i. Project name.
   ii. Contract name and number.
   iii. Settlement plate number.
   iv. Material sizes and compositions.
   v. Planned location in horizontal position and elevation.
   vi. Planned orientation.
   vii. Personnel responsible for installation.
   viii. Date and time of start and completion.
   ix. Weather conditions at the time of installation.
   x. Notes of importance on the installation including problems encountered, delays, unusual features of the installation, and details of any events that may have a bearing on settlement plate behavior.

Schedule for Settlement Platform Installations and Readings:

The Contractor shall provide settlement monitoring plates, pipe extensions and monument settlement points to monitor settlement of new fill embankments. The Contractor shall make regular readings of the settlement as indicated on the plans.

Settlement monitoring plates shall be installed as shown on the plans. Settlement monitoring plates shall be located by repeatable survey (locations and elevations) and referenced to permanent benchmarks. Locations of benchmarks are to be determined by the Contractor and approved by the Engineer, and shall be located outside the zone of influence of the construction activity. Settlement monitoring plates shall be placed level and the risers shall be plumb.

The approximate locations of each instrument to be installed by the Contractor are shown on the project plans and include the following types: settlement plates and settlement monuments. Other locations may need to be added as directed by the Engineer.

Protection of Instrumentation and Repair of Damage

a. The Contractor shall protect all instruments and appurtenant fixtures, leads, connections, and other components of instrumentation systems from damage due to construction operations.

b. If an instrument is damaged or made inoperative due to the Contractor's operations or the operation of subcontractors under the direction of the Contractor, the Contractor shall notify the Engineer immediately. The Engineer will be the sole judge of whether repair or replacement is required. For each instrument that is abandoned for these reasons, the Contractor shall replace that instrument at no additional cost to the Department.

c. Should any instrument become damaged or inoperative through no fault of the Contractor, the damaged or inoperative instrument shall be repaired or replaced at the contract unit prices for that instrument.

d. The Engineer will advise the Contractor immediately upon discovery of damage to instruments as to the necessary schedule for replacement and the times of required access. Damaged instruments shall be repaired or replaced within 24 hours of initial damage. The Contractor's construction operations in the area of a damaged instrument(s) may be halted during repair or replacement of each damaged instrument at the request of the Department.

Materials:

Settlement Plates

a. Settlement plates are sub-surface displacement reference platforms placed on the prepared ground surface prior to embankment fill placement. Risers are extended from the settlement plate as the fill is placed. A casing is placed around the riser for protection. Settlement plates are monitored by optical survey methods to determine vertical displacements occurring during and after embankment construction.

b. The base plate shall be made from steel conforming to the requirements of ASTM A36. The riser pipe and outer casing shall be steel pipe conforming to the requirements of ASTM A53, Grade B, standard weight. The casing and the risers shall be as shown on the plan. The casing pipe shall have a minimum wall thickness of 0.375 inches. The riser pipe shall be galvanized and have a minimum wall thickness of 0.25 inches. Couplings, pipe caps, etc. shall conform to the requirements of ASTM A865. Threaded pipes shall be used for riser and casing pipe extensions.

c. Sand shall conform to the requirements of ASTM C33.

Settlement Monuments

a. Materials for the construction of the Settlement Monument shall conform to the applicable sections of Section 812 for the Concrete, Class C of the Standard Specifications.

b. The Reinforcement Bar shall conform to Section 824 of the Standard Specifications.

Construction Methods:

1. Readings on the settlement platforms and settlement monuments shall be performed by the Contractor. The Contractor is fully responsible for establishing benchmarks, submittals, and

furnishing, installing and maintaining the settlement platforms.

2. The settlement monuments shall be installed at locations indicated on the plans or as directed by the Department.

3. The settlement plates shall be installed as indicated on the plans after all clearing and grubbing and topsoil removal has been completed. The sand base shall be tamped to provide a firm, level, and unyielding bearing surface for the base plate. The riser pipe shall be marked in 1-foot increments and labeled at 5-foot increments to indicate the distances above the plate extending up through the embankment fill.

4. The initial casing and riser pipes shall have a maximum length of 4 feet for each section. Spacers shall be provided between the riser pipe and the casing at a minimum of 4-foot intervals to ensure concentricity. The spacers shall not be directly attached to the riser pipe or otherwise installed that would impede the independent movement of the riser pipe.

5. As the height of fill above the settlement plate changes, the casing and riser pipes shall be increased or decreased in a maximum of 4-foot intervals to maintain the top of the riser pipe and casing above the embankment. As each additional length of pipe is added or removed, the pipe cap on the casing shall be immediately transferred to the top section on the settlement plate so as to prevent fill material from entering the casing. At other times, the cap shall only be removed to check settlement.

6. The casing pipe shall be marked by flags or other approved method to clearly show its location and to warn equipment operators and others of its location. The Contractor shall maintain the flags during the entire length of the Contract and replace those flags that are missing. At no time shall the settlement plate risers and casings extend higher than 5 feet above the ground surface elevation. Sections shall be added or removed as necessary during embankment construction to maintain the tops of the risers and casings at least 1-foot above the surface of the embankment.

7. The Contractor is responsible for maintaining the settlement plates in working order during the length of the Contract. Settlement Plates which are to be abandoned at the completion of the project shall have their riser pipes cut off two feet below roadway subgrade level and capped. If an instrument is damaged, moved, or disturbed due to causes other than settlement, the Contractor shall repair, reset, or replace the damaged instrument at no additional cost to the Department within three days after being damaged. The Engineer will be the sole judge of whether repair, resetting, or replacement is required. No additional fills shall be placed within fifty (50) feet of a damaged settlement platform until the damage has been corrected to the satisfaction of the Engineer. The Engineer may impose a work stoppage in the vicinity of the damaged instrument until it is again operational at no additional cost to the Department. Any repairs or replacements required will be at the Contractor’s expense.

8. By the end of the first work day in each week, the Contractor shall submit to the Engineer a description of the work performed during the previous week. This description shall include at a minimum: a plan view location of the placed embankment, the volume of embankment placed, and in-situ density test results in accordance with Standard Specification sections 202 and 209.

9. The use of the settlement platforms for collecting data related to embankment foundation response will extend beyond the time of completion of the Contractor's embankment placement operations. The Contractor shall be responsible for assuring that all platforms are in working order until the time of completion of the Contract.

10. Instrumentation shall be read as indicated on the plans.

11. For vertical deformation monitoring, runs shall be performed by a single run beginning and ending on two different benchmarks installed in accordance with NGS standards. Settlement monitoring points shall be used as turning points or as intermediate foresights from two different turning points, allowing elevations to be adjusted and eliminating significant observational errors. The maximum length of line of sight shall be 150 feet, and the imbalance between backsight and foresight shall not exceed 30 feet. Allowable level loop misclosure shall not exceed ±0.033 times the square root of M feet (where M is the distance of the level run in miles)

for a single run between two benchmarks. A formal initial reading on a settlement monitoring point will consist of the average of three elevations, from three independent level runs, which meet the closure specified herein. Elevations established subsequent to a formal initial reading shall be determined by a single run as specified herein. The least count (without estimation) of the rod and level combination shall read to 0.003 foot or less, such that the accuracy of an elevation measurement shall be ±0.01 foot (at 95 percent level of confidence).

12. Data shall be recorded in U.S. survey feet or inches.

13. Instruments used for vertical deformation monitoring shall have a minimum accuracy of plus or minus 0.005 of a foot (standard deviation for 3300 feet of double run leveling) and a minimum setting accuracy of plus or minus 1.0 arc seconds. Leveling rods shall be non-telescopic in design (i.e. “Chicago” style leveling rod). A bull’s eye bubble shall be used to plumb the leveling rod. The use of fiberglass rods will need approval of Engineer prior to use.

14. All data recorded by the Contractor shall be of the following form:
    a. Raw and reduced data shall be on summary tables in printed tabular format on 8-1/2 inch x 11 inch sheets of paper.
    b. Reduced data for up to six like instruments that are located in the same geographical area shall be plotted on the same graphical plot. Each plot shall be submitted on an 8-1/2 inch x 11 inch sheet or 11 inch by 17 inch sheet.
    c. Plots of deformation data at Settlement Monitoring Plates shall show absolute vertical deformation versus time with height or elevation of fill placed at time of reading. Plots of settlement plate data shall show absolute vertical deformation versus time and shall show the height or elevation of fill placed at the time of reading. Deformation plots shall also be provided in electronic data file format.
    d. Survey data reports prepared by the Contractor shall be signed and sealed by either a Professional Engineer or Professional Land Surveyor licensed in the State of Delaware.

Method of Measurement:

The number of Settlement Platforms measured will be the actual number of platforms set in place and/or maintained as shown on the Plans or as directed by the Engineer. No measurement for payment will be made for pipe extensions. The number of Settlement Monuments measured will be the actual number of monuments set in place and/or maintained as shown on the Plans or as directed by the Engineer.

Basis of Payment:

Settlement Platforms and Settlement Monuments will be paid for at the Contract unit price per Each, complete in place, which price shall be full compensation for all materials, tools, labor, and work incidental thereto including pipe extensions, steel plate, sand, couplings, spacers, welding, protection of the plate and pipe extensions during construction, all labor tools, equipment, and necessary incidentals to complete the work.

10/3/14

272501 - POND OUTLET STRUCTURE, SPECIAL

Description:

This item shall consist of furnishing all materials and constructing Pond Outlet Structure, Special, as described as weir walls for DelDOT SWM Facilities No. 871, 872, 873, 874 and 875, in accordance with locations, notes, details on Plans and as directed by the Engineer.

Materials:

Borrow. Borrow for backfill material shall be Clay Borrow, Type 1 & Clay Borrow, Type 2 and shall conform to the requirements of Subsection 274.02.

Concrete. Concrete used in structure may be precast or cast-in-place. Concrete used in structure shall be Class A conforming to the requirements of Section 812

Grout. Grout shall be non-shrink conforming to the requirements of ASTM C 1107

Reinforcing Steel. Reinforcing steel shall be Grade 60 (Grade 400) and conform to the requirements of Section 603.

Construction Methods:

Excavation. The Contractor shall excavate to the required depth. The foundation upon which the structure is to be placed shall be compacted to a firm and level surface.

Outlet Structure. Concrete structure shall be poured in place or pre-cast. If the concrete structures are pre-cast, the Contractor shall design the lifting lugs, and all hardware required to transport and install the structure. The top slab shall not be used to lift the weir structure. For cast-in-place structures, steel reinforcing shall be continuous through cold joints and keyways.

Backfill. The backfill material next structures shall be placed to the required elevation in 4" (100 mm) horizontal loose-thickness lifts at the same rate on all sides to prevent damage from unequal loading. Each lift shall be compacted by a manually directed power tamper around the structure to 90% or more of maximum dry density. Compaction next to cast-in-place concrete structures will not begin until the concrete has reached enough strength to support the load.

Submittals. Working drawings for precast structures shall be submitted for review and acceptance in accordance with Section 105 of the Standard Specifications.

Method of Measurement:

The quantity of pond outlet structure will be measured as a lump sum price for the completed pond outlet structures, special, installed and accepted.

Basis of Payment:

The quantity of pond outlet structure, special will be paid for at the Contract lump sum price for pond outlet structure, special as described as weir walls for DelDOT SWM Facilities No. 871, 872, 873, 874 and 875. Price and payment will constitute full compensation for excavating; for all ground preparation; for furnishing and placing all materials, reinforcing steel, concrete, grout, bedding, clay backfills, and all other materials required for pond outlet structure, concrete; for welding; and for all labor, equipment, tools, and incidentals necessary to complete the work. Any and all dewatering necessary to complete this work to the satisfaction of the Engineer under Item No. 271501- Dewatering of Existing Stormwater Management Pond will be incidental to the cost of the pond outlet structure, special.

10/3/14

THIS PAGE IS INTENTIONALLY LEFT BLANK FOR SEQUENCING PURPOSES.

THIS PAGE IS INTENTIONALLY LEFT BLANK FOR SEQUENCING PURPOSES.

CONTRACT ID: T200411701.01 PROJECT(S): ESTP-2011(17)

All figures must be typewritten.

CONTRACTOR :_____

LINE NO	ITEM DESCRIPTION	APPROX. QUANTITY AND UNITS	UNIT PRICE DOLLARS	UNIT PRICE CTS	BID AMOUNT DOLLARS	BID AMOUNT CTS
	SECTION 0001 WEST DOVER CONNECTOR					
0010	201000 CLEARING AND GRUBBING	LUMP	LUMP			
0020	202000 EXCAVATION AND EMBANKMENT	347615.000 CY				
0030	202505 SETTLEMENT PLATFORM	4.000 EACH				
0040	202508 WETLAND ACCESS ROAD, TYPE II	LUMP	LUMP			
0050	208000 EXCAVATION AND BACKFILLING FOR PIPE TRENCHES	2181.000 CY				
0060	208001 FLOWABLE FILL	183.000 CY				
0070	209001 BORROW, TYPE A	16435.000 CY				
0080	209002 BORROW, TYPE B	21111.000 CY				
0090	209006 BORROW, TYPE F	62733.000 CY				

CONTRACT ID: T200411701.01 PROJECT(S): ESTP-2011(17)

All figures must be typewritten.

CONTRACTOR :_____

LINE NO	ITEM DESCRIPTION	APPROX. QUANTITY AND UNITS	UNIT PRICE DOLLARS	UNIT PRICE CTS	BID AMOUNT DOLLARS	BID AMOUNT CTS
0100	210000 FURNISHING BORROW TYPE "C" FOR PIPE, UTILITY TRENCH, AND STRUCTURE BACKFILL	1625.000 CY				
0110	211000 REMOVAL OF STRUCTURES AND OBSTRUCTIONS	LUMP	LUMP			
0120	212000 UNDERCUT EXCAVATION	16889.000 CY				
0130	212001 UNDERCUT EXCAVATION, PATCHING	338.000 CY				
0140	251000 SILT FENCE	8743.000 LF				
0150	251001 REINFORCED SILT FENCE	1131.000 LF				
0160	252000 INLET SEDIMENT CONTROL, DRAINAGE INLET	31.000 EACH				
0170	252001 INLET SEDIMENT CONTROL, CURB INLET	124.000 EACH				
0180	254000 STONE CHECK DAM	842.000 TON				
0190	255000 SEDIMENT TRAP	3280.000 CY				

CONTRACT ID: T200411701.01 PROJECT(S): ESTP-2011(17)

All figures must be typewritten.

CONTRACTOR :_____

LINE NO	ITEM DESCRIPTION	APPROX. QUANTITY AND UNITS	UNIT PRICE DOLLARS	UNIT PRICE CTS	BID AMOUNT DOLLARS	BID AMOUNT CTS
0200	260003 EARTH DIKE, TYPE B-1	382.000 LF				
0210	261001 TEMPORARY SLOPE DRAIN, 18"	790.000 LF				
0220	268000 STABILIZED CONSTRUCTION ENTRANCE	638.000 TON				
0230	272500 SKIMMER DEWATERING DEVICE	5.000 EACH				
0240	272501 POND OUTLET STRUCTURE, SPECIAL	LUMP	LUMP			
0250	302006 GRADED AGGREGATE BASE COURSE, TYPE B, PATCHING	87.000 TON				
0260	302007 GRADED AGGREGATE BASE COURSE, TYPE B	31997.000 CY				
0270	302011 DELAWARE NO. 3 STONE	2373.000 TON				
0280	401577 PAVER-LAID ULTRATHIN HOT MIX	27666.000 SY				
0290	401801 BITUMINOUS CONCRETE, SUPERPAVE, TYPE C, 160 GYRATIONS PG 64-22 (CARBONATE STONE)	3045.000 TON				

CONTRACT ID: T200411701.01 PROJECT(S): ESTP-2011(17)

All figures must be typewritten.

CONTRACTOR :_____

LINE NO	ITEM DESCRIPTION	APPROX. QUANTITY AND UNITS	UNIT PRICE DOLLARS	UNIT PRICE CTS	BID AMOUNT DOLLARS	BID AMOUNT CTS
0300	401816 BITUMINOUS CONCRETE, SUPERPAVE, TYPE B, 160 GYRATIONS, PG 76-22	17430.000 TON				
0310	401819 BITUMINOUS CONCRETE, SUPERPAVE, BITUMINOUS CONCRETE BASE COURSE, 160 GYRATIONS, PG 64-22	31245.000 TON				
0320	401821 BITUMINOUS CONCRETE, SUPERPAVE, TYPE C, 160 GYRATIONS, PG 64-22, PATCHING	356.000 TON				
0330	401822 BITUMINOUS CONCRETE, SUPERPAVE, TYPE B, 160 GYRATIONS, PG 64-22, PATCHING	349.000 TON				
0340	401823 BITUMINOUS CONCRETE, SUPERPAVE, BITUMINOUS CONCRETE BASE COURSE, 160 GYRATIONS, PG 64-22, PATCHING	625.000 TON				
0350	401833 BITUMINOUS CONCRETE, SUPERPAVE, TYPE C, 160 GYRATIONS, PG 76-22, (NON-CARBONATE STONE)	14735.000 TON				
0360	503001 PATCHING P.C.C. PAVEMENT, 6' TO 15', TYPE A	192.000 SY				
0370	503006 DOWEL BARS	528.000 EACH				

CONTRACT ID: T200411701.01 PROJECT(S): ESTP-2011(17)

All figures must be typewritten.

CONTRACTOR :_____

LINE NO	ITEM DESCRIPTION	APPROX. QUANTITY AND UNITS	UNIT PRICE DOLLARS	UNIT PRICE CTS	BID AMOUNT DOLLARS	BID AMOUNT CTS
0380	503503 PATCHING CONCRETE	2304.000 SYIN	5.65000		13017.60	
0390	503521 JOINT REPLACEMENT, TRANSVERSE	864.000 LF				
0400	612021 REINFORCED CONCRETE PIPE, 15", CLASS IV	8326.000 LF				
0410	612022 REINFORCED CONCRETE PIPE, 18", CLASS IV	3354.000 LF				
0420	612023 REINFORCED CONCRETE PIPE, 24", CLASS IV	1243.000 LF				
0430	612024 REINFORCED CONCRETE PIPE, 27", CLASS IV	193.000 LF				
0440	612025 REINFORCED CONCRETE PIPE, 30", CLASS IV	124.000 LF				
0450	612030 REINFORCED CONCRETE PIPE, 18", CLASS V	183.000 LF				
0460	612032 REINFORCED CONCRETE PIPE, 15", CLASS V	155.000 LF				
0470	612034 REINFORCED CONCRETE PIPE, 36", CLASS IV	761.000 LF				

CONTRACT ID: T200411701.01 PROJECT(S): ESTP-2011(17)

All figures must be typewritten.

CONTRACTOR :_____

LINE NO	ITEM DESCRIPTION	APPROX. QUANTITY AND UNITS	UNIT PRICE DOLLARS	UNIT PRICE CTS	BID AMOUNT DOLLARS	BID AMOUNT CTS
0480	612049 REINFORCED CONCRETE PIPE, 12", CLASS V	7.000 LF				
0490	614744 STEEL CASING PIPE, 18"	144.000 LF				
0500	617002 REINFORCED CONCRETE FLARED END SECTION, 15"	9.000 EACH				
0510	617003 REINFORCED CONCRETE FLARED END SECTION, 18"	11.000 EACH				
0520	617005 REINFORCED CONCRETE FLARED END SECTION, 24"	7.000 EACH				
0530	617006 REINFORCED CONCRETE FLARED END SECTION, 27"	2.000 EACH				
0540	617007 REINFORCED CONCRETE FLARED END SECTION, 30"	1.000 EACH				
0550	617515 HEADWALL	2.000 EACH				
0560	617517 HEADWALL, SPECIAL TYPE I	2.000 EACH				
0570	701010 PORTLAND CEMENT CONCRETE CURB, TYPE 1-8	135.000 LF				

CONTRACT ID: T200411701.01 PROJECT(S): ESTP-2011(17)

All figures must be typewritten.

CONTRACTOR :_____

LINE NO	ITEM DESCRIPTION	APPROX. QUANTITY AND UNITS	UNIT PRICE DOLLARS	UNIT PRICE CTS	BID AMOUNT DOLLARS	BID AMOUNT CTS
0580	701011 PORTLAND CEMENT CONCRETE CURB, TYPE 2	10184.000 LF				
0590	701021 INTEGRAL PORTLAND CEMENT CONCRETE CURB & GUTTER, TYPE 2	837.000 LF				
0600	701022 INTEGRAL PORTLAND CEMENT CONCRETE CURB & GUTTER, TYPE 3-8	27861.000 LF				
0610	705001 P.C.C. SIDEWALK, 4"	18305.000 SF				
0620	705002 P.C.C. SIDEWALK, 6"	30827.000 SF				
0630	705007 SIDEWALK SURFACE DETECTABLE WARNING SYSTEM	1050.000 SF				
0640	705008 CURB RAMP, TYPE 1	1256.000 SF				
0650	705009 CURB RAMP, TYPE 2, 3, AND/OR 4	4755.000 SF				
0660	705010 CURB RAMP, TYPE 5	1708.000 SF				
0670	707005 UNDERDRAIN OUTLET	33.000 EACH				

CONTRACT ID: T200411701.01 PROJECT(S): ESTP-2011(17)

All figures must be typewritten.

CONTRACTOR :_____

LINE NO	ITEM DESCRIPTION	APPROX. QUANTITY AND UNITS	UNIT PRICE DOLLARS	UNIT PRICE CTS	BID AMOUNT DOLLARS	BID AMOUNT CTS
0680	708050 DRAINAGE INLET, 34" X 18"	24.000 EACH				
0690	708051 DRAINAGE INLET, 34" X 24"	55.000 EACH				
0700	708052 DRAINAGE INLET, 48" X 30"	33.000 EACH				
0710	708053 DRAINAGE INLET, 48" X 48"	3.000 EACH				
0720	708055 DRAINAGE INLET, 66" X 48"	1.000 EACH				
0730	708057 DRAINAGE INLET, 72" X 24"	18.000 EACH				
0740	708058 DRAINAGE INLET, 72" X 48"	6.000 EACH				
0750	708060 REPLACE DRAINAGE INLET GRATE(S)	5.000 EACH				
0760	708107 MANHOLE, ROUND	4.000 EACH				
0770	708505 JUNCTION BOX, SPECIAL	1.000 EACH				

CONTRACT ID: T200411701.01 PROJECT(S): ESTP-2011(17)

All figures must be typewritten.

CONTRACTOR :_____

LINE NO	ITEM DESCRIPTION	APPROX. QUANTITY AND UNITS	UNIT PRICE DOLLARS	UNIT PRICE CTS	BID AMOUNT DOLLARS	BID AMOUNT CTS
0780	710001 ADJUSTING AND REPAIRING EXISTING DRAINAGE INLET	19.000 EACH				
0790	710002 ADJUSTING AND REPAIRING EXISTING MANHOLE	34.000 EACH				
0800	710501 CONVERTING EXISTING CATCH BASIN TO MANHOLE	12.000 EACH				
0810	712005 RIPRAP, R-4	691.000 SY				
0820	712006 RIPRAP, R-5	244.000 SY				
0830	712531 CHANNEL BED FILL	36.000 CY				
0840	713002 GEOTEXTILES, SEPARATION	15701.000 SY				
0850	713003 GEOTEXTILES, RIPRAP	1562.000 SY				
0860	715001 PERFORATED PIPE UNDERDRAINS, 6"	32684.000 LF				
0870	715500 UNDERDRAIN OUTLET PIPE, 6"	1170.000 LF				

CONTRACT ID: T200411701.01 PROJECT(S): ESTP-2011(17)

All figures must be typewritten.

CONTRACTOR :_____

LINE NO	ITEM DESCRIPTION	APPROX. QUANTITY AND UNITS	UNIT PRICE DOLLARS	UNIT PRICE CTS	BID AMOUNT DOLLARS	BID AMOUNT CTS
0880	718511 CURB/SIDEWALK OPENING	10.000 EACH				
0890	720050 GALVANIZED STEEL BEAM GUARDRAIL, TYPE 1-31	5205.000 LF				
0900	720529 P.C.C. SAFETY BARRIER PERMANENT, SINGLE FACE	199.000 LF				
0910	720585 GUARDRAIL END TREATMENT ATTENUATOR, TYPE 1-31	10.000 EACH				
0920	720586 GUARDRAIL END TREATMENT ATTENUATOR, TYPE 2-31	9.000 EACH				
0930	725001 GUARDRAIL TO BARRIER CONNECTION (EXIT TYPE 31)	6.000 EACH				
0940	725002 GUARDRAIL TO BARRIER CONNECTION, APPROACH TYPE 1-31	4.000 EACH				
0950	725003 GUARDRAIL TO BARRIER CONNECTION, APPROACH TYPE 2-31	8.000 EACH				
0960	725005 GUARDRAIL TO BARRIER CONNECTION (EXIT TYPE 27)	2.000 EACH				
0970	725007 GUARDRAIL TO BARRIER CONNECTION , APPROACH TYPE 2-27	2.000 EACH				

CONTRACT ID: T200411701.01 PROJECT(S): ESTP-2011(17)

All figures must be typewritten.

CONTRACTOR :_____

LINE NO	ITEM DESCRIPTION	APPROX. QUANTITY AND UNITS	UNIT PRICE DOLLARS	UNIT PRICE CTS	BID AMOUNT DOLLARS	BID AMOUNT CTS
0980	726001 END ANCHORAGE 31	7.000 EACH				
0990	727014 CONSTRUCTION SAFETY FENCE	6126.000 LF				
1000	727015 MONUMENTS	23.000 EACH				
1010	727552 RESOURCE PROTECTION FENCE	3200.000 LF				
1020	727555 RIGHT-OF-WAY MARKER, CAPPED REBAR	77.000 EACH				
1030	733001 TOPSOILING, 4" DEPTH	749.000 SY				
1040	733002 TOPSOILING, 6" DEPTH	271681.000 SY				
1050	734013 PERMANENT GRASS SEEDING, DRY GROUND	375697.000 SY				
1060	734015 PERMANENT GRASS SEEDING, WET GROUND	63621.000 SY				
1070	734017 TEMPORARY GRASS SEEDING, DRY GROUND	294328.000 SY				

CONTRACT ID: T200411701.01 PROJECT(S): ESTP-2011(17)

All figures must be typewritten.

CONTRACTOR :_____

LINE NO	ITEM DESCRIPTION	APPROX. QUANTITY AND UNITS	UNIT PRICE DOLLARS	UNIT PRICE CTS	BID AMOUNT DOLLARS	BID AMOUNT CTS
1080	734531 STREAMBANK SEED MIX	6032.000 SY				
1090	734551 NATIVE GRASS SEEDING: NO MOW MIX	4883.000 SY				
1100	734553 WETLAND MITIGATION GRASS SEEDING	9946.000 SY				
1110	735535 SOIL RETENTION BLANKET MULCH, TYPE 5	61254.000 SY				
1120	737523 PLANTINGS	LUMP	LUMP			
1130	743000 MAINTENANCE OF TRAFFIC	LUMP	LUMP			
1140	743004 FURNISH AND MAINTAIN PORTABLE CHANGEABLE MESSAGE SIGN	154.000 EADY				
1150	743006 PLASTIC DRUMS	27643.000 EADY				
1160	743007 TRAFFIC OFFICERS	500.000 HOUR	75.00000		37500.00	
1170	743015 FURNISH AND MAINTAIN PORTABLE PCC SAFETY BARRIER	386.000 LF				

CONTRACT ID: T200411701.01 PROJECT(S): ESTP-2011(17)

All figures must be typewritten.

CONTRACTOR :_____

LINE NO	ITEM DESCRIPTION	APPROX. QUANTITY AND UNITS	UNIT PRICE DOLLARS	UNIT PRICE CTS	BID AMOUNT DOLLARS	BID AMOUNT CTS
1180	743023 TEMPORARY BARRICADES, TYPE III	15825.000 LFDY				
1190	743024 TEMPORARY WARNING SIGNS AND PLAQUES	32550.000 EADY				
1200	743025 INSTALL TEMPORARY IMPACT ATTENUATOR	4.000 EACH				
1210	743057 FLAGGER, KENT COUNTY, FEDERAL	1200.000 HOUR				
1220	743066 FLAGGER, KENT COUNTY, FEDERAL, OVERTIME	300.000 HOUR				
1230	743552 PEDESTRIAN CHANNELIZING BARRICADE	59850.000 LFDY				
1240	744506 CONDUIT JUNCTION WELL, TYPE 7, PRECAST POLYMER CONCRETE	15.000 EACH				
1250	744520 CONDUIT JUNCTION WELL, TYPE 1, PRECAST CONCRETE	12.000 EACH				
1260	744530 CONCUIT JUNCTION WELL, TYPE 11, PRECAST CONCRETE/ POLYMER LID-FRAME	52.000 EACH				
1270	744531 CONDUIT JUNCTION WELL, TYPE 14, PRECAST CONCRETE/ POLYMER LID-FRAME	38.000 EACH				

CONTRACT ID: T200411701.01 PROJECT(S): ESTP-2011(17)

All figures must be typewritten.

CONTRACTOR :_____

LINE NO	ITEM DESCRIPTION	APPROX. QUANTITY AND UNITS	UNIT PRICE DOLLARS	UNIT PRICE CTS	BID AMOUNT DOLLARS	BID AMOUNT CTS
1280	744544 ADJUST OR REPAIR EXISTING CONDUIT JUNCTION WELL	5.000 EACH				
1290	745602 FURNISH & INSTALL UP TO 4" SCHEDULE 80 HDPE CONDUIT (BORE)	5154.000 LF				
1300	745604 FURNISH & INSTALL UP TO 4" SCHEDULE 80 PVC CONDUIT (TRENCH)	24773.000 LF				
1310	745606 FURNISH & INSTALL UP TO 4" GALVANIZED STEEL CONDUIT (TRENCH)	438.000 LF				
1320	745609 FURNISH & INSTALL UP TO 4" GALVANIZED STEEL CONDUIT (ON STRUCTURE)	200.000 LF				
1330	745610 FURNISH & INSTALL UP TO 4" NONMETALLIC POLE RISER SHIELD	100.000 LF				
1340	746515 INSULATED GROUND CABLES, 1/#6	8075.000 LF				
1350	746517 ALUMINUM LIGHTING STANDARD WITH SINGLE DAVIT ARM, 30' POLE	46.000 EACH				
1360	746528 INSTALLATION OF STEEL POLE (EQUAL TO OR GREATER THAN 40')	3.000 EACH				
1370	746553 POLE BASE, SPECIAL	3.000 EACH				

CONTRACT ID: T200411701.01 PROJECT(S): ESTP-2011(17)

All figures must be typewritten.

CONTRACTOR :_____

LINE NO	ITEM DESCRIPTION	APPROX. QUANTITY AND UNITS	UNIT PRICE DOLLARS	UNIT PRICE CTS	BID AMOUNT DOLLARS	BID AMOUNT CTS
1380	746590 FURNISH & INSTALL GROUND ROD	66.000 EACH				
1400	746653 ELECTRICAL TESTING	LUMP	LUMP			
1410	746697 INSTALLATION OF WOOD POLE	5.000 EACH				
1420	746847 POLE BASE, TYPE 3	10.000 EACH				
1430	746850 POLE BASE, TYPE 4	9.000 EACH				
1440	746852 POLE BASE, TYPE 6	46.000 EACH				
1480	746907 FURNISH & INSTALL 1-CONDUCTOR #2 AWG STRANDED COPPER	885.000 LF				
1490	746909 FURNISH & INSTALL 1-CONDUCTOR #6 AWG STRANDED COPPER	21415.000 LF				
1500	746914 FURNISH & INSTALL #6 BARE STRANDED COPPER GROUND	660.000 LF				
1510	746924 FURNISH & INSTALL LOOP WIRE 1-CONDUCTOR #14 AWG ENCASED IN 1/4" FLEXIBLE TUBING IN A LOOP SAWCUT	3324.000 LF				

CONTRACT ID: T200411701.01 PROJECT(S): ESTP-2011(17)

All figures must be typewritten.

CONTRACTOR :_____

LINE NO	ITEM DESCRIPTION	APPROX. QUANTITY AND UNITS	UNIT PRICE DOLLARS	UNIT PRICE CTS	BID AMOUNT DOLLARS	BID AMOUNT CTS
1520	746925 FURNISH & INSTALL EMBEDDED METERED SERVICE PEDESTAL (100 AMP)	5.000 EACH				
1530	746926 FURNISH & INSTALL ELECTRICAL UTILITY SERVICE EQUIPMENT 120/240	5.000 EACH				
1540	746941 TRAFFIC CONTROL DEVICE EQUIPMENT TURN ON, PICK UP, REMOVAL & MAINTENANCE, TYPE III	2.000 EACH				
1550	747500 LIGHTING CONTROL CENTER PAD	5.000 EACH				
1560	747513 LIGHTING CONTROL AND DISTRIBUTION ENCLOSURE (120/240; 100 AMP)	5.000 EACH				
1570	747514 CABINET BASE, TYPE F	2.000 EACH				
1580	747515 CABINET BASE, TYPE M	8.000 EACH				
1590	747516 CABINET BASE, TYPE P	3.000 EACH				
1600	748015 PERMANENT PAVEMENT STRIPING, SYMBOL/LEGEND ALKYD-THERMOPLAST IC	5629.000 SF				

CONTRACT ID: T200411701.01 PROJECT(S): ESTP-2011(17)

All figures must be typewritten.

CONTRACTOR :_____

LINE NO	ITEM DESCRIPTION	APPROX. QUANTITY AND UNITS	UNIT PRICE DOLLARS	UNIT PRICE CTS	BID AMOUNT DOLLARS	BID AMOUNT CTS
1610	748019 TEMPORARY MARKINGS, PAINT, 4"	37300.000 LF				
1620	748026 TEMPORARY MARKINGS, PAINT SYMBOL/LEGEND	350.000 SF				
1630	748530 REMOVAL OF PAVEMENT STRIPING	8062.000 SF				
1640	748548 PERMANENT PAVEMENT STRIPING, EPOXY RESIN PAINT, WHITE/YELLOW, 5"	117821.000 LF				
1650	748549 PERMANENT PAVEMENT STRIPING, EPOXY RESIN PAINT, WHITE/YELLOW, 10"	1200.000 LF				
1660	748553 PREFORMED RETROREFLECTIVE THERMOPLASTIC PAVEMENT MARKINGS, BIKE SYMBOL	89.000 EACH				
1670	748557 PERMANENT PAVEMENT STRIPING, EPOXY RESIN PAINT, BLACK, 3"	2271.000 LF				
1680	749687 INSTALLATION OR REMOVAL OF TRAFFIC SIGN(S) ON SINGLE SIGN POST	240.000 EACH				
1690	749690 INSTALLATION OR REMOVAL OF TRAFFIC SIGNS ON MULTIPLE SIGN POSTS	22.000 SF				

CONTRACT ID: T200411701.01 PROJECT(S): ESTP-2011(17)

All figures must be typewritten.

CONTRACTOR :_____

LINE NO	ITEM DESCRIPTION	APPROX. QUANTITY AND UNITS	UNIT PRICE DOLLARS	UNIT PRICE CTS	BID AMOUNT DOLLARS	BID AMOUNT CTS
1700	750000 ADJUST WATER VALVE BOXES	3.000 EACH				
1710	752000 RELOCATE FIRE HYDRANTS	1.000 EACH				
1720	753516 SANITARY SEWER SYSTEM	LUMP	LUMP			
1730	758000 REMOVAL OF EXISTING PORTLAND CEMENTCONCRETE PAVEMENT, CURB, SIDEWALK, ETC.	1916.000 SY				
1740	759511 FIELD OFFICE SPECIAL II	30.000 EAMO				
1750	760502 PAVEMENT MILLING, TAPER CUT	3067.000 SYIN				
1760	760507 PROFILE MILLING, HOT-MIX	7419.000 SYIN				
1770	762001 SAW CUTTING, HOT MIX	15842.000 LF				
1780	762002 SAW CUTTING, CONCRETE, FULL DEPTH	864.000 LF				
1790	763000 INITIAL EXPENSE	LUMP	LUMP			

CONTRACT ID: T200411701.01 PROJECT(S): ESTP-2011(17)

All figures must be typewritten.

CONTRACTOR :_____

LINE NO	ITEM DESCRIPTION	APPROX. QUANTITY AND UNITS	UNIT PRICE DOLLARS	UNIT PRICE CTS	BID AMOUNT DOLLARS	BID AMOUNT CTS
1800	763501 CONSTRUCTION ENGINEERING	LUMP	LUMP			
1810	763503 TRAINEE	2160.000 HOUR	0.80000		1728.00	
1820	763508 PROJECT CONTROL SYSTEM DEVELOPMENT PLAN	LUMP	LUMP			
1830	763509 CPM SCHEDULE UPDATES AND/OR REVISED UPDATES	30.000 EAMO				
2320	743003 ARROWPANELS, TYPE C	550.000 EADY	20.00000		11000.00	
2330	743010 FURNISH AND MAINTAIN TRUCK MOUNTED ATTENUATOR, TYPE II	550.000 EADY				
2340	701031 CURB OPENING, 2' OPENING	4.000 EACH				
	SECTION 0001 TOTAL					

SECTION 0002 BRIDGE 2-156 - PUNCHEON RUN

1840	207000 EXCAVATION AND BACKFILL FOR STRUCTURES	2345.000 CY				

CONTRACT ID: T200411701.01 PROJECT(S): ESTP-2011(17)

All figures must be typewritten.

CONTRACTOR :_____

LINE NO	ITEM DESCRIPTION	APPROX. QUANTITY AND UNITS	UNIT PRICE DOLLARS	UNIT PRICE CTS	BID AMOUNT DOLLARS	BID AMOUNT CTS
1850	210000 FURNISHING BORROW TYPE "C" FOR PIPE, UTILITY TRENCH, AND STRUCTURE BACKFILL	370.000 CY				
1860	302011 DELAWARE NO. 3 STONE	500.000 TON				
1870	602001 PORTLAND CEMENT CONCRETE MASONRY, CLASS A	28.000 CY				
1880	602003 PORTLAND CEMENT CONCRETE MASONRY, ABUTMENT FOOTING, CLASS A	140.000 CY				
1890	602006 PORTLAND CEMENT CONCRETE MASONRY, PIER FOOTING, CLASS B	1060.000 CY				
1900	602007 PORTLAND CEMENT CONCRETE MASONRY, PIER ABOVE FOOTING, CLASS A	1125.000 CY				
1910	602009 PORTLAND CEMENT CONCRETE MASONRY, APPROACH SLAB, CLASS A	155.000 CY				
1920	602013 PORTLAND CEMENT CONCRETE MASONRY, SUPERSTRUCTURE, CLASS D	1922.000 CY				
1930	602015 PORTLAND CEMENT CONCRETE MASONRY, ABUTMENT ABOVE FOOTING, CLASS A	42.000 CY				

CONTRACT ID: T200411701.01 PROJECT(S): ESTP-2011(17)

All figures must be typewritten.

CONTRACTOR :_____

LINE NO	ITEM DESCRIPTION	APPROX. QUANTITY AND UNITS	UNIT PRICE DOLLARS	UNIT PRICE CTS	BID AMOUNT DOLLARS	BID AMOUNT CTS
1940	602017 PORTLAND CEMENT CONCRETE MASONRY, PARAPET, CLASS A	460.000 CY				
1950	602553 MECHANICALLY STABILIZED EARTH WALLS, WALL 1	6260.000 SF				
1960	602646 SILICONE ACRYLIC CONCRETE SEALER	29770.000 SF				
1970	604000 BAR REINFORCEMENT, EPOXY COATED	860000.000 LB				
1980	605511 PREFABRICATED EXPANSION JOINT SYSTEM, 3"	207.000 LF				
1990	606003 METAL BRIBGE RAILING (PEDESTRIAN)	641.000 LF				
2000	608000 COARSE AGGREGATE FOR FOUNDATION STABILIZATION AND SUBFOUNDATION BACKFILL	545.000 TON				
2010	619519 DYNAMIC PILE TESTING BY CONTRACTOR	30.000 EACH				
2020	623003 PRESTRESSED REINFORCED CONCRETE MEMBERS, BULB T BEAM	LUMP	LUMP			
2030	712021 RIPRAP, R-5	3225.000 TON				

CONTRACT ID: T200411701.01 PROJECT(S): ESTP-2011(17)

All figures must be typewritten.

CONTRACTOR :_____

LINE NO	ITEM DESCRIPTION	APPROX. QUANTITY AND UNITS	UNIT PRICE DOLLARS	UNIT PRICE CTS	BID AMOUNT DOLLARS	BID AMOUNT CTS
2040	727507 BRIDGE SAFETY FENCE	280.000 LF				
	SECTION 0002 TOTAL					

SECTION 0003 BRIDGE 2-157 - NEW BURTON RD.

2050	207000 EXCAVATION AND BACKFILL FOR STRUCTURES	610.000 CY				
2060	209003 BORROW, TYPE C	3545.000 CY				
2070	210000 FURNISHING BORROW TYPE "C" FOR PIPE, UTILITY TRENCH, AND STRUCTURE BACKFILL	210.000 CY				
2080	602001 PORTLAND CEMENT CONCRETE MASONRY, CLASS A	185.000 CY				
2090	602003 PORTLAND CEMENT CONCRETE MASONRY, ABUTMENT FOOTING, CLASS A	153.000 CY				
2100	602006 PORTLAND CEMENT CONCRETE MASONRY, PIER FOOTING, CLASS B	160.000 CY				
2110	602007 PORTLAND CEMENT CONCRETE MASONRY, PIER ABOVE FOOTING, CLASS A	155.000 CY				

CONTRACT ID: T200411701.01 PROJECT(S): ESTP-2011(17)

All figures must be typewritten.

CONTRACTOR :_____

LINE NO	ITEM DESCRIPTION	APPROX. QUANTITY AND UNITS	UNIT PRICE DOLLARS	UNIT PRICE CTS	BID AMOUNT DOLLARS	BID AMOUNT CTS
2120	602009 PORTLAND CEMENT CONCRETE MASONRY, APPROACH SLAB, CLASS A	225.000 CY				
2130	602013 PORTLAND CEMENT CONCRETE MASONRY, SUPERSTRUCTURE, CLASS D	442.000 CY				
2140	602015 PORTLAND CEMENT CONCRETE MASONRY, ABUTMENT ABOVE FOOTING, CLASS A	55.000 CY				
2150	602017 PORTLAND CEMENT CONCRETE MASONRY, PARAPET, CLASS A	145.000 CY				
2160	602553 MECHANICALLY STABILIZED EARTH WALLS, WALL 1	8175.000 SF				
2170	602646 SILICONE ACRYLIC CONCRETE SEALER	14690.000 SF				
2180	604000 BAR REINFORCEMENT, EPOXY COATED	315950.000 LB				
2190	605511 PREFABRICATED EXPANSION JOINT SYSTEM, 3"	145.000 LF				
2200	608000 COARSE AGGREGATE FOR FOUNDATION STABILIZATION AND SUBFOUNDATION BACKFILL	200.000 TON				

CONTRACT ID: T200411701.01 PROJECT(S): ESTP-2011(17)

All figures must be typewritten.

CONTRACTOR :_____

LINE NO	ITEM DESCRIPTION	APPROX. QUANTITY AND UNITS	UNIT PRICE DOLLARS	UNIT PRICE CTS	BID AMOUNT DOLLARS	BID AMOUNT CTS
2210	619519 DYNAMIC PILE TESTING BY CONTRACTOR	15.000 EACH				
2220	623003 PRESTRESSED REINFORCED CONCRETE MEMBERS, BULB T BEAM	LUMP	LUMP			
2230	727507 BRIDGE SAFETY FENCE	425.000 LF				
	SECTION 0003 TOTAL					

SECTION 0004 BRIDGE PILE ALTERNATE 1
ALT GROUP AA1

2240	618042 FURNISH CAST-IN-PLACE CONCRETE PILES, 16"	19637.000 LF				
2250	618047 FURNISH CAST-IN-PLACE CONCRETE TEST PILES, 16"	1525.000 LF				
2260	619022 INSTALL CAST-IN-PLACE CONCRETE PILES, 16"	19637.000 LF				
2270	619026 INSTALL CAST-IN-PLACE CONCRETE TEST PILES, 16"	1525.000 LF				
	SECTION 0004 TOTAL					

SECTION 0005 BRIDGE PILE ALTERNATE 2
ALT GROUP AA2

CONTRACT ID: T200411701.01 PROJECT(S): ESTP-2011(17)

All figures must be typewritten.

CONTRACTOR :_____

LINE NO	ITEM DESCRIPTION	APPROX. QUANTITY AND UNITS	UNIT PRICE DOLLARS	UNIT PRICE CTS	BID AMOUNT DOLLARS	BID AMOUNT CTS
2280	618082 FURNISH PRECAST PRESTRESSED CONCRETE PILE, 16" X 16"	22344.000 LF				
2290	618092 FURNISH PRECAST PRESTRESSED CONCRETE TEST PILE, 16" X 16"	1850.000 LF				
2300	619062 INSTALL PRECAST PRESTRESSED CONCRETE PILE, 16" X 16"	22344.000 LF				
2310	619068 INSTALL PRECAST PRESTRESSED CONCRETE TEST PILE, 16" X 16"	1850.000 LF				
	SECTION 0005 TOTAL					
	TOTAL BID					

CURB SCHEDULE		
NO.	ITEM DESCRIPTION / TYPE	LENGTH
44	INTEGRAL PCC CURB AND GUTTER, TYPE 3-8	468
45	P.C.C. CURB, TYPE 2	85
46	P.C.C. CURB, TYPE 2	114
47	P.C.C. CURB, TYPE 2	112
48	P.C.C. CURB, TYPE 2	112
49	INTEGRAL PCC CURB AND GUTTER, TYPE 3-8	500

RIGHT-OF-WAY MONUMENT SCHEDULE					
NO.	TYPE	STATION	OFFSET	NORTHING	EASTING
M049	REBAR	1070+50.00	-125.0000	413111.2494	618422.7968

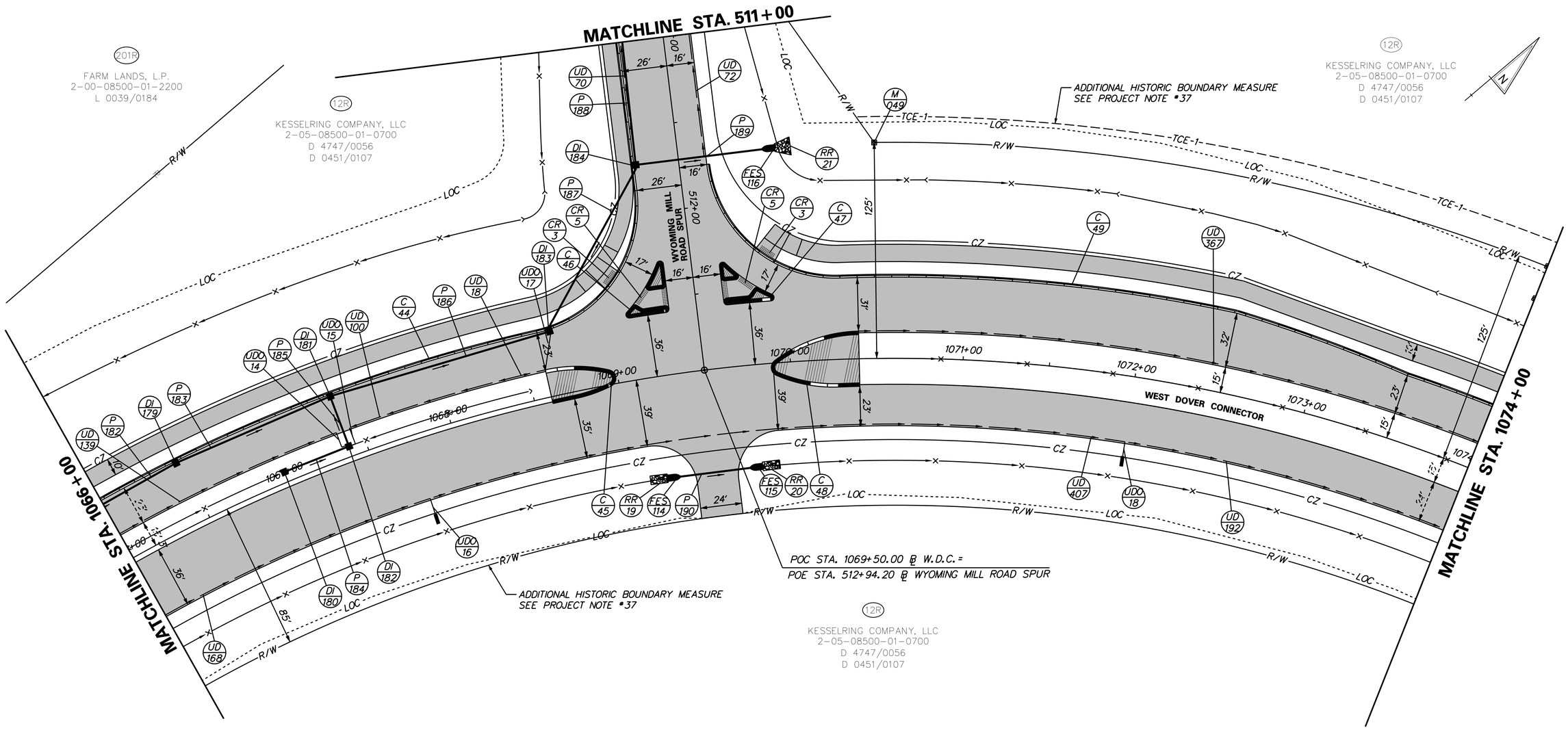

FLARED END SECTION SCHEDULE			
NO.	SIZE / TYPE	SLOPE	SAFETY GRATE
114	~~24" RCP~~ 18" RCP	0.0050	NO
115	~~24" RCP~~ 18" RCP	0.0050	NO
116	24" RCP	0.0035	NO

DRAINAGE INLET SCHEDULE						
NO.	STATION	OFFSET	BOX SIZE	GRATE	T.G. EL.	INV. EL.
179	1066+46.4	38.8' LT	34" x 24"	1	47.94	43.19
180	1067+00.0	6.0' LT	34" x 24"	3	46.96	44.52
181	1067+40.0	38.8' LT	34" x 24"	1	48.28	42.28
182	1067+40.0	6.0' LT	34" x 24"	3	46.93	44.21
183	1068+66.9	39.2' LT	66" x 48"	1	48.63	41.69
184	511+71.5	26.8' RT	48" x 48"	1	48.96	41.28

DRAINAGE PIPE SCHEDULE						
NO.	SIZE / TYPE	CLASS	LENGTH	SLOPE	INT. EL.	DIS. EL.
183	18" RCP	IV	93.3	0.0044	43.19	42.78
184	15" RCP	IV	37.4	0.0030	44.52	44.41
185	15" RCP	IV	27.8	0.0030	44.21	44.13
186	24" RCP	IV	128.3	0.0030	42.28	41.89
187	24" RCP	IV	104.5	0.0030	41.69	41.38
188	15" RCP	IV	216.0	0.0030	42.13	41.48
189	24" RCP	IV	79.0	0.0035	41.28	41.00
190	18" RCP	IV	55.5	0.0050	41.00	40.72

UNDERDRAIN OUTLETS		
NO.	LENGTH	DIS. EL.
14	11.0	44.84
15	12.0	44.88
16	15.5	42.88
17	20.3	45.17
18	14.4	40.75

RIPRAP SCHEDULE		
NO.	TYPE	AREA (SY)
19	R-4	6
20	R-4	6
21	R-4	8

DELAWARE
DEPARTMENT OF TRANSPORTATION

ADDENDUMS / REVISIONS
1 UPDATED SIZE OF FES 114 & 115 10/01/14

SCALE: 1"=30'
0 30 60 90
FEET

WEST DOVER CONNECTOR

CONTRACT	BRIDGE NO.	
T200411701	DESIGNED BY: BP,JW	
COUNTY		
KENT	CHECKED BY: JF	

CONSTRUCTION PLANS

SHEET NO. 31
TOTAL SHTS. 320

10/1/2014 PerryR
J:\BRIDGE_HIGHWAYS\6061_DelDOT_WEST_DOVER_CONN\Civil\Civ_Sheets\04_Plans\CP12.dgn

CURB SCHEDULE

NO.	ITEM DESCRIPTION / TYPE	LENGTH
72	INTEGRAL PCC CURB AND GUTTER, TYPE 3-8	747
73	INTEGRAL PCC CURB AND GUTTER, TYPE 3-8	180
⚠ 74	INTEGRAL PCC CURB AND GUTTER, TYPE 3-8	425 ~~756~~
⚠ 74A	INTEGRAL PCC CURB AND GUTTER, TYPE 3-8	237
⚠ 74B	INTEGRAL PCC CURB AND GUTTER, TYPE 3-8	74

DRAINAGE INLET SCHEDULE

NO.	STATION	OFFSET	BOX SIZE	GRATE	T.G. EL.	INV. EL.
225	1149+28.9	49.8' LT	34" x 18"	1	41.08	36.6
226	1149+28.9	30.2' RT	34" x 18"	1	41.21	36.2±
⚠ ~~227~~	~~1151+76.3~~	~~48.7' RT~~	~~34" x 18"~~	~~1~~	~~43.89~~	~~37.8±~~
228	1151+80.6	48.6' LT	34" x 18"	1	44.14	38.3
⚠ ~~229~~	~~1154+25.8~~	~~40.0' LT~~	~~34" x 18"~~	~~1~~	~~44.83~~	~~39.5±~~
⚠ ~~242~~	~~1154+21.5~~	~~63.0' RT~~	~~34" x 18"~~	~~1~~	~~43.74~~	~~39.0±~~

DRAINAGE PIPE SCHEDULE

NO.	SIZE / TYPE	CLASS	LENGTH	SLOPE	INT. EL.	DIS. EL.
232	15" RCP	IV	5.4	0.0050	36.6	36.5±
233	15" RCP	IV	9.6	0.0050	38.3	38.2±

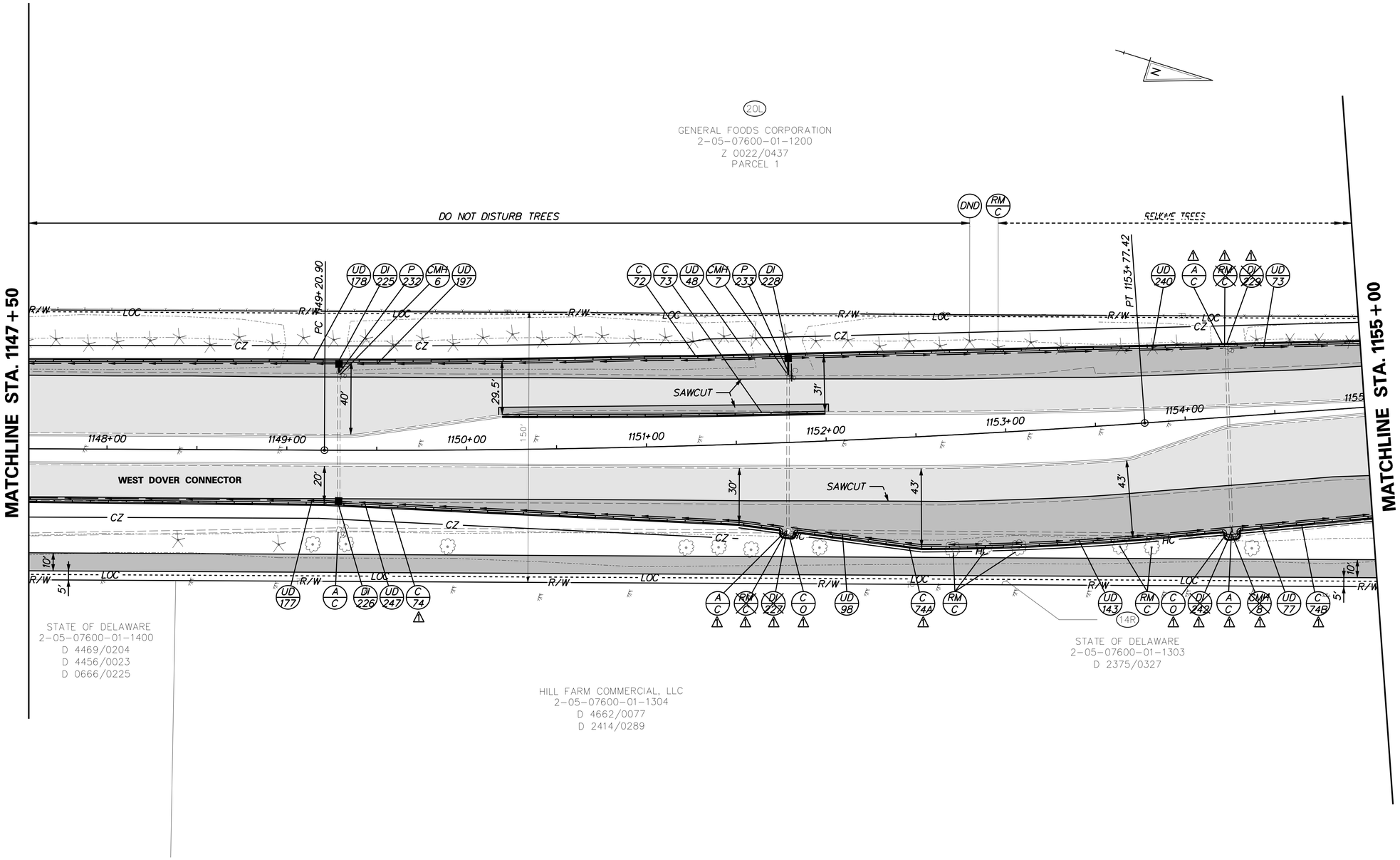

DELAWARE DEPARTMENT OF TRANSPORTATION	ADDENDUMS / REVISIONS	SCALE: 1"=30' (0, 30, 60, 90 FEET)	WEST DOVER CONNECTOR	CONTRACT T200411701	BRIDGE NO.	CONSTRUCTION PLANS	SHEET NO. 42
	⚠ REMOVED DI-227,242,229; REVISED CURB & INLET SCHEDULES; ADDED CURB OPENINGS 10/02/14			COUNTY KENT	DESIGNED BY: BP,JW		TOTAL SHTS. 320
					CHECKED BY: JF		

10/2/2014 PerryR
J:\BRIDGE_HIGHWAYS\6061_DelDOT_WEST_DOVER_CONN\Civil\Civ_Sheets\04_Plans\CP23.dgn

RIGHT-OF-WAY MONUMENT SCHEDULE

NO.	TYPE	STATION	OFFSET	NORTHING	EASTING
M074	REBAR	1155+80.00	-57.4364	419964.3188	620729.6750
M075	REBAR	49+40.00	65.0000	419970.8940	620683.0811
M079	REBAR	111+50.00	55.9705	420253.2984	620749.6360
M080	REBAR	51+70.00	-71.1972	420202.6164	620818.6032

UTILITY TEST HOLE SCHEDULE

NO.	UTILITY	STATION	OFFSET	GRND EL.	COVER	O.D. & MATERIAL
TH-12	FIB. OPTIC	51+30	44.5' RT.	45.25	3.73	(2)4.5" PLASTIC
TH-13	FIB. OPTIC	51+30	43.6' RT.	45.24	3.75	(3)4.5" PLASTIC
TH-14	WATER	51+28	5.5' RT.	45.81	4.46	12" D.I.P.
TH-15	GAS	51+28	1.5' LT.	46.02	4.45	4.5" STEEL
TH-16	GAS	49+65	38.3' RT.	45.40	3.16	8" STEEL
TH-17	GAS	49+67	46.8' RT.	45.39	5.10	5" STEEL
TH-18	FIB. OPTIC	49+65	42.9' RT.	45.40	2.98	2.5" PLASTIC
TH-19	FIB. OPTIC	49+65	36.6' RT.	45.42	3.13	4.5" PLASTIC
TH-20	GAS	110+99	44.9' LT.	45.11	8.07	10" STEEL
TH-21	TELEPHONE	112+90	43.6' LT.	43.19	3.38	(2)4" PVC
TH-22	COMM.	112+05	47.3' LT.	43.66	2.62	2" PLASTIC
TH-23	FIB. OPTIC	112+04	43.8' LT.	44.26	1.75	(2)3/8" PLASTIC
TH-24	TELEPHONE	112+98	39.3' LT.	43.84	2.59	2" PVC
TH-26	FIB. OPTIC	113+00	32.9' LT.	44.98	2.69	(1)1/2"/(1)3/4"D.B.
TH-27	GAS	113+09	30.2' LT.	45.36	5.10	10" STEEL
TH-28	WATER	113+01	31.7' RT.	45.58	6.83	10" D.I.P.

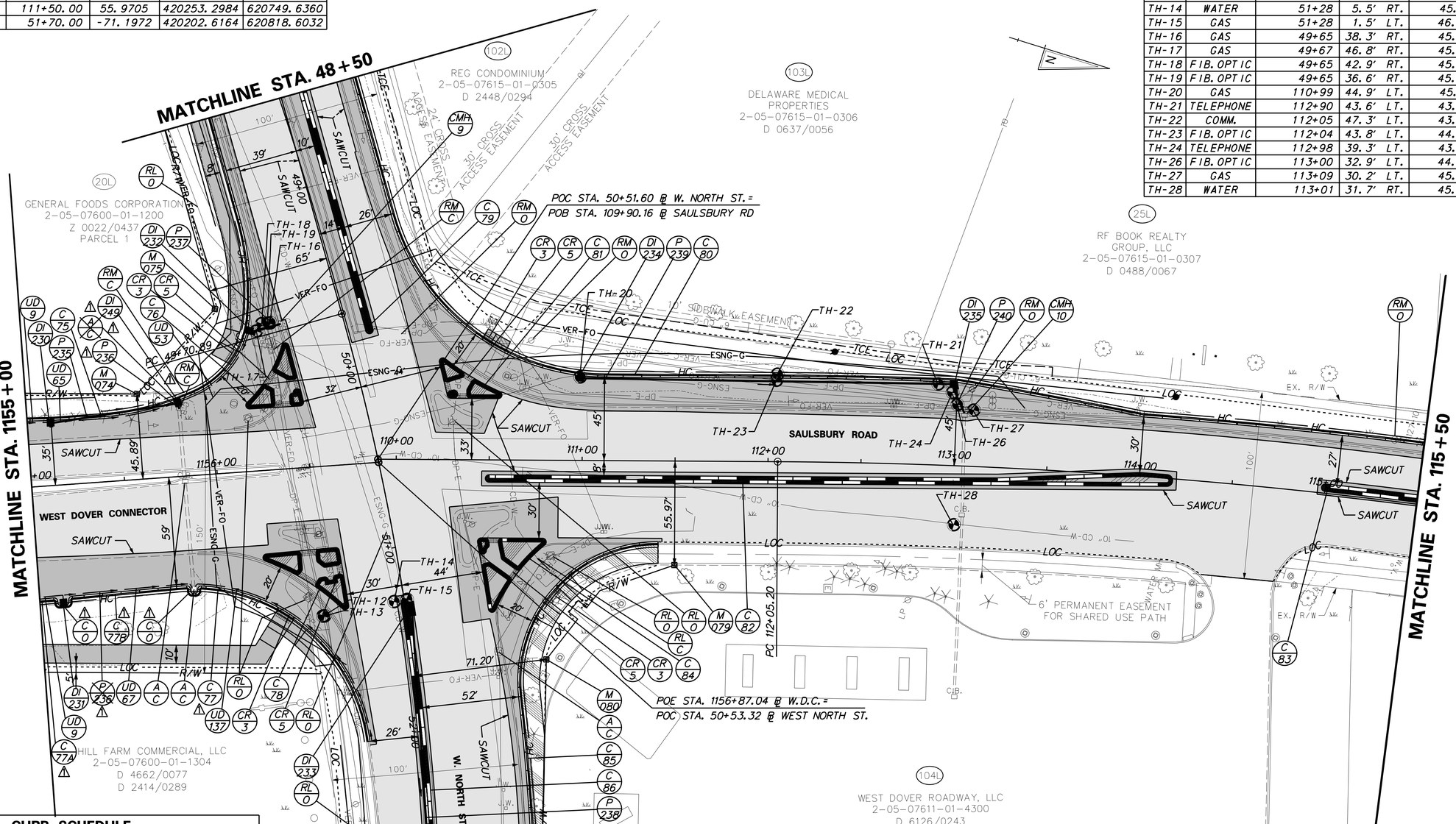

CURB SCHEDULE

	NO.	ITEM DESCRIPTION / TYPE	LENGTH
	75	INTEGRAL PCC CURB AND GUTTER, TYPE 3-8	256
	76	P.C.C. CURB, TYPE 2	135
△1	77	INTEGRAL PCC CURB AND GUTTER, TYPE 3-8	133 ~~221~~
△1	77A	INTEGRAL PCC CURB AND GUTTER, TYPE 3-8	8
△1	77B	INTEGRAL PCC CURB AND GUTTER, TYPE 3-8	60
	78	P.C.C. CURB, TYPE 2	138
	79	P.C.C. CURB, TYPE 2	273
	80	INTEGRAL PCC CURB AND GUTTER, TYPE 3-8	675
	81	P.C.C. CURB, TYPE 2	84
	82	P.C.C. CURB, TYPE 2	745
	83	P.C.C. CURB, TYPE 2	106
	84	P.C.C. CURB, TYPE 2	166
	85	INTEGRAL PCC CURB AND GUTTER, TYPE 3-8	300
	86	P.C.C. CURB, TYPE 2	446

DRAINAGE INLET SCHEDULE

	NO.	STATION	OFFSET	BOX SIZE	GRATE	T.G. EL.	INV. EL.
	230	1155+12.7	35.8' LT	48" x 30"	1	43.99	40.37
△1	~~231~~	~~1155+12.5~~	~~61.1' RT~~	~~48" x 30"~~	~~1~~	~~43.40~~	~~39.78~~
△1	231	1155+12.5	65.2' RT	48" x 30"	1	44.08	MATCH EX.
	232	1156+20.9	76.2' LT	34" x 18"	1	43.97	41.21
	233	51+32.0	1.0' LT	72" x 24"	1	46.00	42.65
	234	110+99.1	46.5' LT	48" x 30"	1	45.67	42.32
	235	112+98.0	45.8' LT	48" x 30"	1	44.62	41.52
△1	249	1155+81.1	41.7' LT	48" x 30"	1	43.92	40.17

DRAINAGE PIPE SCHEDULE

	NO.	SIZE / TYPE	CLASS	LENGTH	SLOPE	INT. EL.	DIS. EL.
	235	18" RCP	IV	65.4	0.0030	40.37	40.17
	~~236~~	~~18" RCP~~	~~IV~~	~~66.7~~	~~0.0030~~	~~39.78~~	~~39.57~~
△1	236	18" RCP	IV	4.2	0.0030	40.17	40.16
	237	15" RCP	V	15.4	0.0030	41.21	41.16
	238	15" RCP	IV	250.3	0.0007	42.65	40.89
	239	15" RCP	IV	196.6	0.0035	42.32	41.62
	240	15" RCP	IV	16.1	0.0026	41.52	41.48

10/2/2014 PerryR
J:\BRIDGE_HIGHWAYS\6061_DelDOT_WEST_DOVER_CONN\Civil\Civ_Sheets\04_Plans\CP24.dgn

DELAWARE DEPARTMENT OF TRANSPORTATION

ADDENDUMS / REVISIONS
△1 ADDED DI-249, CURB OPENINGS; REVISED P-236;
REVISED CURB, INLET, & PIPE SCHEDULES 10/02/14

SCALE: 1"=30'
0 30 60 90
FEET

WEST DOVER CONNECTOR

CONTRACT	BRIDGE NO.	
T200411701	DESIGNED BY: BP,JW	
COUNTY		
KENT	CHECKED BY: JF	

CONSTRUCTION PLANS

SHEET NO. 43
TOTAL SHTS. 320

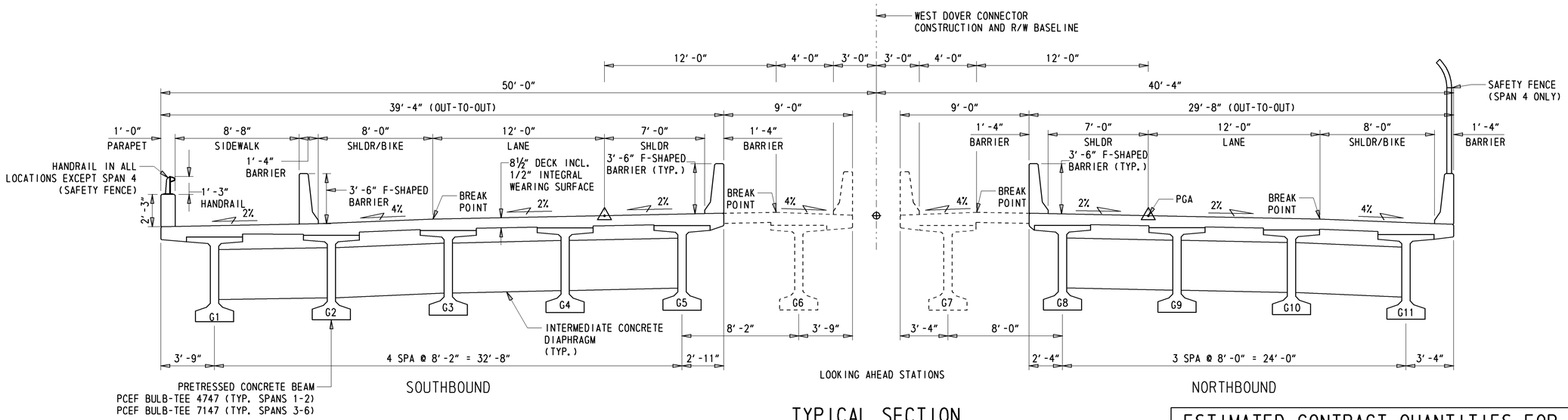

TYPICAL SECTION

¼" = 1'-0"

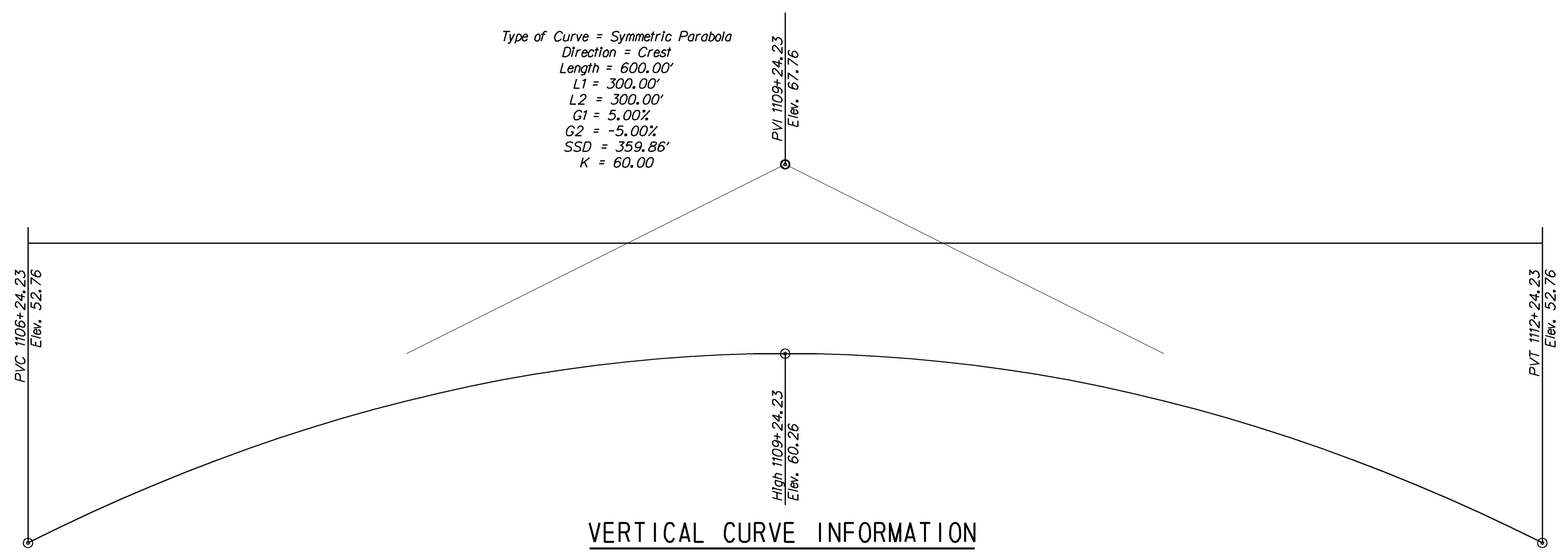

VERTICAL CURVE INFORMATION

ESTIMATED CONTRACT QUANTITIES FOR BR 2-156

ITEM #	DESCRIPTION	UNIT	PROPOSAL
207000	EXCAVATION AND BACKFILL FOR STRUCTURES	CY	2345.00
210000	FURNISHING BORROW TYPE C FOR STRUCTURE BACKFILL	CY	370.00
302011	DE #3 STONE	TON	500.00
602001	PCC MASONRY, CLASS A	CY	28.00
602003	PCC MASONRY, ABUTMENT FOOTING, CLASS A	CY	140.00
602006	PCC MASONRY, PIER FOOTING, CLASS B	CY	1060.00
602007	PCC MASONRY, PIER ABOVE FOOTING, CLASS A	CY	1125
602009	PCC MASONRY, APPROACH SLAB, CLASS A	CY	155.00
602013	PCC MASONRY, SUPERSTRUCTURE, CLASS D	CY	1920.00
602015	PCC MASONRY, ABUTMENT ABOVE FOOTING, CLASS A	CY	42.00
602017	PCC MASONRY, PARAPET, CLASS A	CY	460.00
602553	MECHANICALLY STABILIZED EARTH WALLS, WALL 1	SF	6260.00
602646	SILICONE ACRYLIC CONCRETE SEALER	SF	29770.00
604000	BAR REINFORCEMENT, EPOXY COATED	LB	850000.00
605511	PREFABRICATED EXPANSION JOINT SYSTEM	LF	207.00
646504	ALUMINUM HANDRAIL	LF	641.00
608000	COARSE AGGREGATE FOR FOUNDATION STABILIZATION	TON	~~35.00~~ 545.00 △1
618042	FURNISH CAST-IN-PLACE CONCRETE PILES, 16"	LF	15195.00
618047	FURNISH CAST-IN-PLACE CONCRETE TEST PILES, 16"	LF	940.00
618082	FURNISH PRECAST PRESTRESSED CONCRETE PILE, 18"x18", ALT.	LF	16420.00
618092	FURNISH PRECAST PRESTRESSED CONCRETE TEST PILE, 18"x18", ALT.	LF	1005.00
619022	INSTALL CAST-IN-PLACE CONCRETE PILES, 16"	LF	15195.00
619026	INSTALL CAST-IN-PLACE CONCRETE TEST PILE, 16"	LF	940.00
619062	INSTALL PRECAST PRESTRESSED CONCRETE PILES, 18"x18", ALT.	LF	16420.00
619068	INSTALL PRECAST PRESTRESSED CONCRETE TEST PILES, 18"x18", ALT	LF	1110.00
619519	DYNAMIC PILE TESTING BY CONTRACTOR	EACH	30.00
623003	PRESTRESSED REINFORCED CONCRETE MEMBERS, BULB T-BEAM	L.S.	1
712021	RIPRAP, R-5	TON	3200.00
727507	BRIDGE SAFETY FENCE	LF	280.00

PIER WORKING POINTS

POINT NO.	STATION	OFFSET	NORTHING	EASTING
2-1	1106+05.08	-49.21	415250.1672	621067.6890
2-2	1106+16.34	-55.71	415263.0523	621065.9646
2-3	1106+60.08	46.05	415264.7587	621176.7169
2-4	1106+71.34	39.55	415277.6438	621174.9925
3-1	1106+97.08	-49.21	415335.2393	621102.7137
3-2	1107+08.34	-55.71	415348.1245	621100.9892
3-3	1107+52.08	46.05	415349.8309	621211.7416
3-4	1107+63.34	39.55	415362.7160	621210.0172
4-1	1108+35.08	-49.21	415462.8476	621155.2507
4-2	1108+46.34	-55.71	415475.7327	621153.5262
4-3	1108+90.08	46.05	415477.4391	621264.2786
4-4	1109+01.34	39.55	415490.3242	621262.5542
5-1	1109+73.08	-49.21	415590.4558	621207.7877
5-2	1109+84.34	-55.71	415603.3409	621206.0632
5-3	1110+28.08	46.05	415605.0473	621316.8156
5-4	1110+39.34	39.55	415617.9325	621315.0912
6-1	1111+11.08	-49.21	415718.0641	621260.3247
6-2	1111+22.34	-55.71	415730.9492	621258.6003
6-3	1111+66.08	46.05	415732.6556	621369.3526
6-4	1111+77.34	39.55	415745.5407	621367.6282

THE FIRST POINT NUMBER CORRESPONDS TO THE PIER NUMBER, THE SECOND NUMBER CORRESPONDS TO THE WORKING POINT.

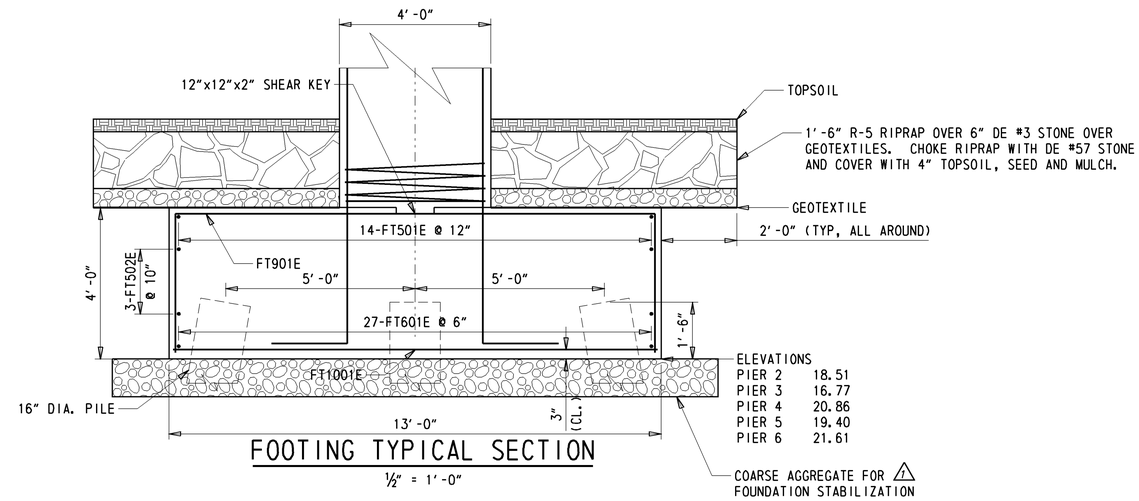

FOOTING TYPICAL SECTION

½" = 1'-0"

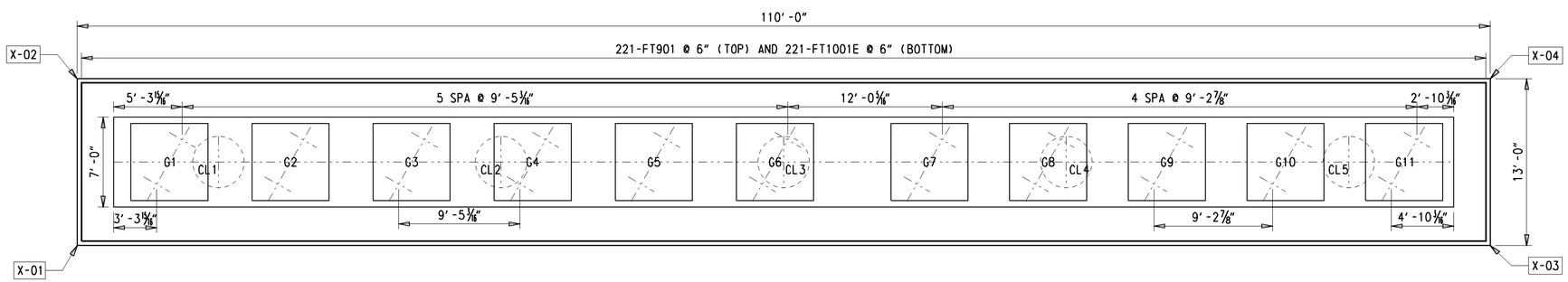

X CORRESPONDS TO THE PIER NUMBER

PIER PLAN

(TYPICAL)

3/16" = 1'-0"

Y:\KENT\156\BRIDGE\T200411701\PLANS\PUNCHEON RUN - 7 SPAN\PROI.DGN

DELAWARE DEPARTMENT OF TRANSPORTATION

ADDENDUMS / REVISIONS

1 ADD COARSE AGGREGATE TO PIER FOOTERS

WEST DOVER CONNECTOR

CONTRACT	BRIDGE NO.	2-156 N&S
T200411701	DESIGNED BY: JAT	
COUNTY		
KENT	CHECKED BY: EM	

PIER FOOTING DETAIL
BRIDGE SHEET 16 OF 65

SHEET NO.
127
TOTAL SHTS.
320

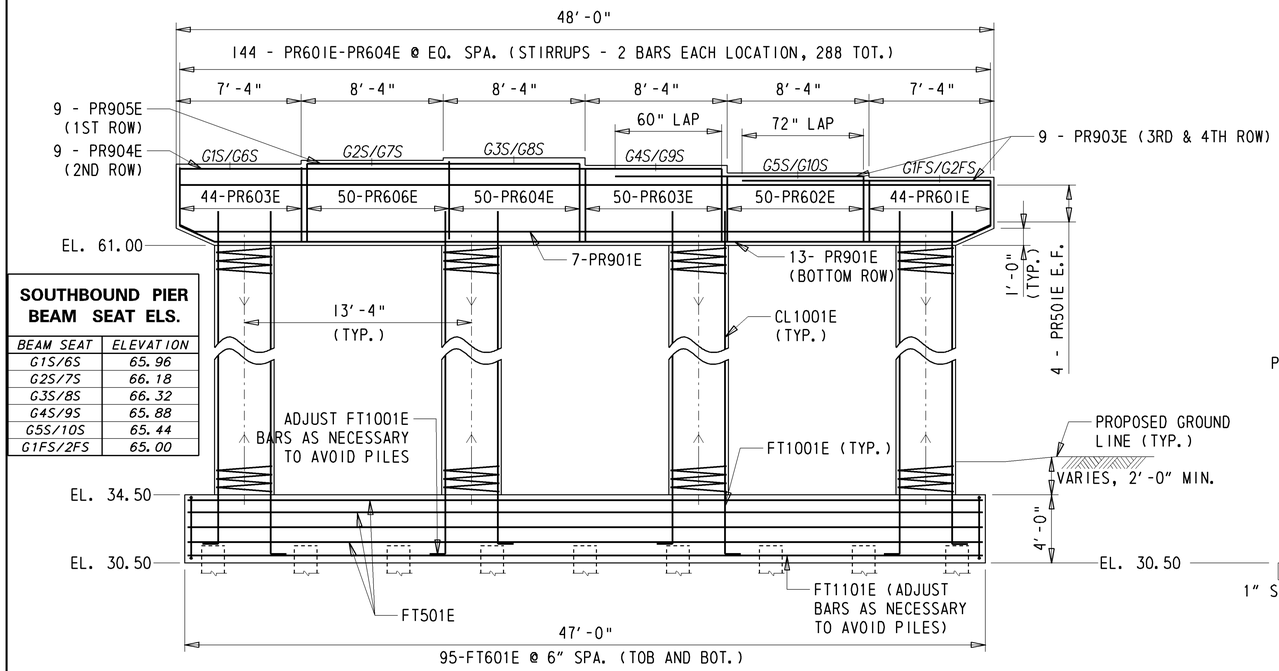

SOUTHBOUND PIER BEAM SEAT ELS.	
BEAM SEAT	ELEVATION
G1S/6S	65.96
G2S/7S	66.18
G3S/8S	66.32
G4S/9S	65.88
G5S/10S	65.44
G1FS/2FS	65.00

S.B. PIER ELEVATION

3/16" = 1'-0"

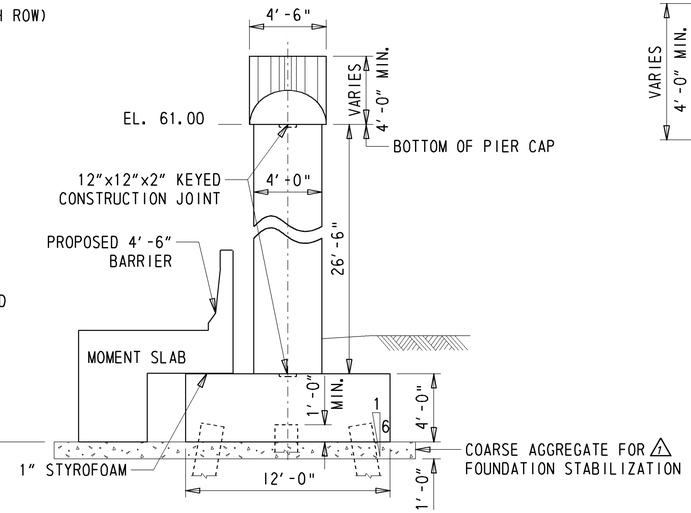

S.B. PIER END ELEVATION

3/16" = 1'-0"

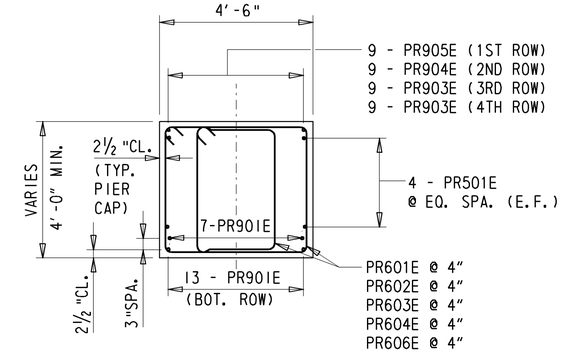

TYPICAL PIER CAP SECTION

3/8" = 1'-0"

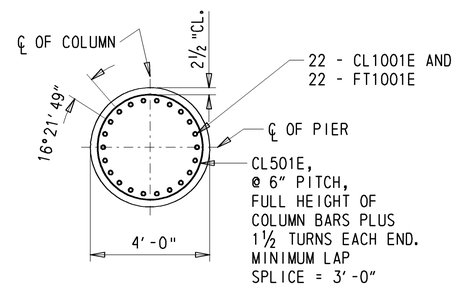

TYPICAL COLUMN SECTION

3/8" = 1'-0"

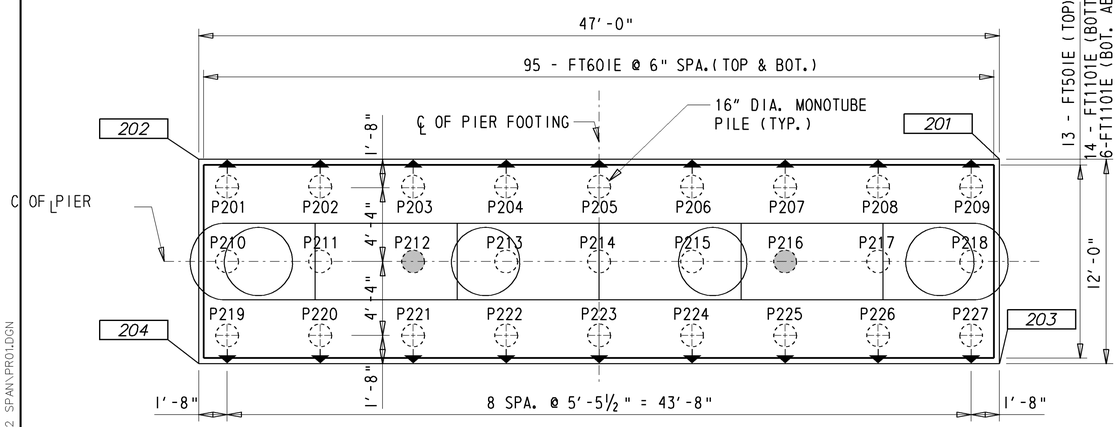

S.B. FOOTING REINFORCEMENT PLAN

3/16" = 1'-0"

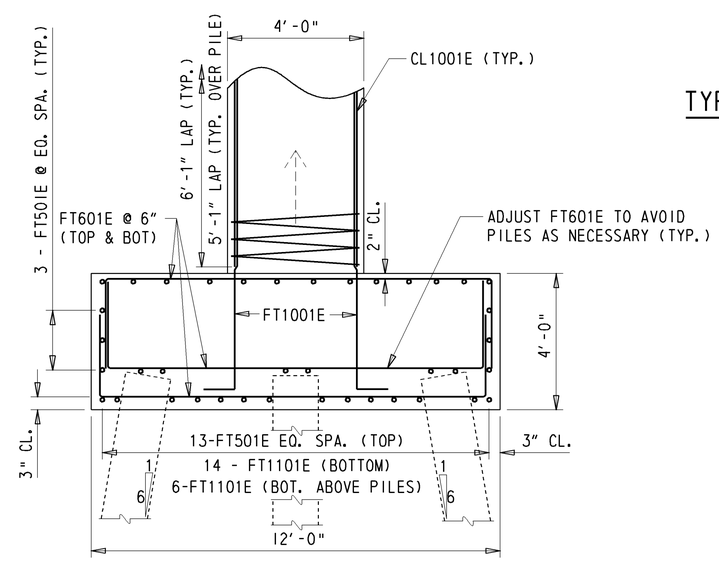

S.B. PIER FOOTING REINFORCEMENT

3/8" = 1'-0"

LEGEND

TEST PILE -

BATTERED PILE -

WORKING POINT - 204

SOUTHBOUND PIER WORKING POINTS				
POINT NO.	STATION	OFFSET	NORTHING	EASTING
201	1053+62.90	-50.13	411577.7934	618852.3170
202	1053+51.60	-4.59	411615.7068	618880.0943
203	1053+74.08	-47.27	411584.9657	618842.5288
204	1053+63.17	-1.62	411622.7931	618870.4221

PILE COORDINATE LIST				
POINT NO.	STATION	OFFSET	NORTHING	EASTING
P201	1053+72.11	-46.05	411585.28	618844.91
P209	1053+62.04	-3.63	411620.51	618870.72
P210	1053+68.05	-47.08	411582.68	618848.46
P218	1053+57.79	-4.70	411617.91	618874.27
P219	1053+64.05	-48.11	411580.12	618851.96
P227	1053+53.62	-5.78	411615.35	618877.76

DELAWARE DEPARTMENT OF TRANSPORTATION

ADDENDUMS / REVISIONS

1 ADD COARSE AGGREGATE TO PIER FOOTERS

SCALE: AS NOTED

WEST DOVER CONNECTOR

CONTRACT T200411701

COUNTY KENT

BRIDGE NO. 2-157S

DESIGNED BY: TRS

CHECKED BY: EM

SOUTHBOUND PIER DETAILS
BRIDGE SHEET 49 OF 65

SHEET NO. 160

TOTAL SHTS. 320

Y:\KENT?\BRIDGE\T200411701\PLANS\NEW BURTON RD - 2 SPAN\PRO1.DGN

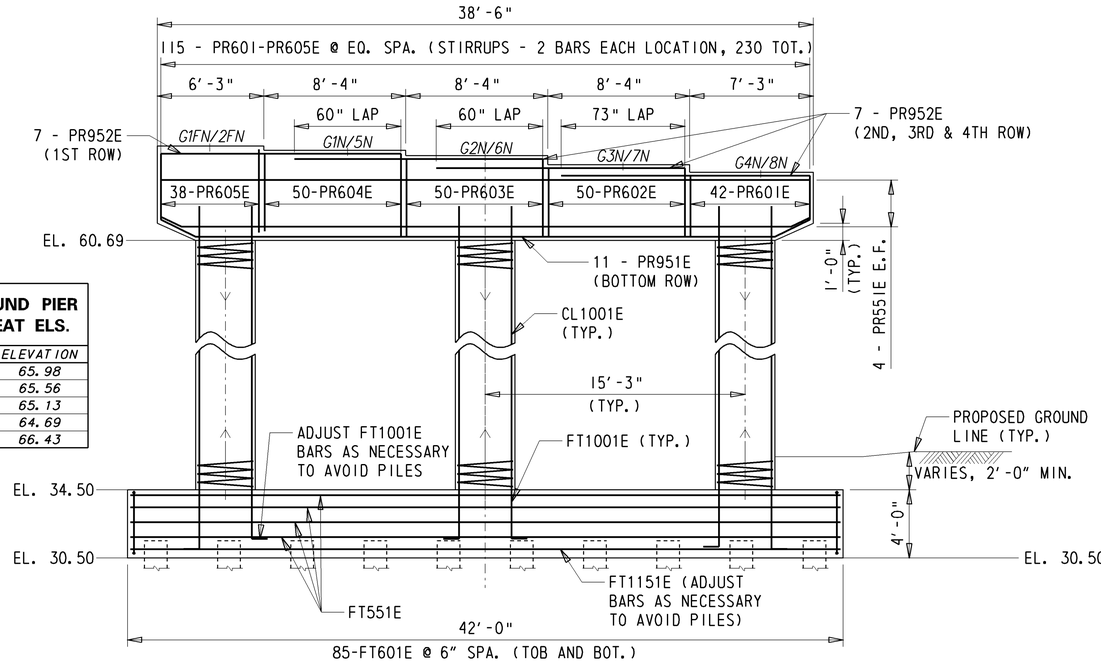

NORTHBOUND PIER BEAM SEAT ELS.

BEAM SEAT	ELEVATION
G1N/5N	65.98
G2N/6N	65.56
G3N/7N	65.13
G4N/8N	64.69
G1FN/2FN	66.43

N.B. PIER ELEVATION

3/16" = 1'-0"

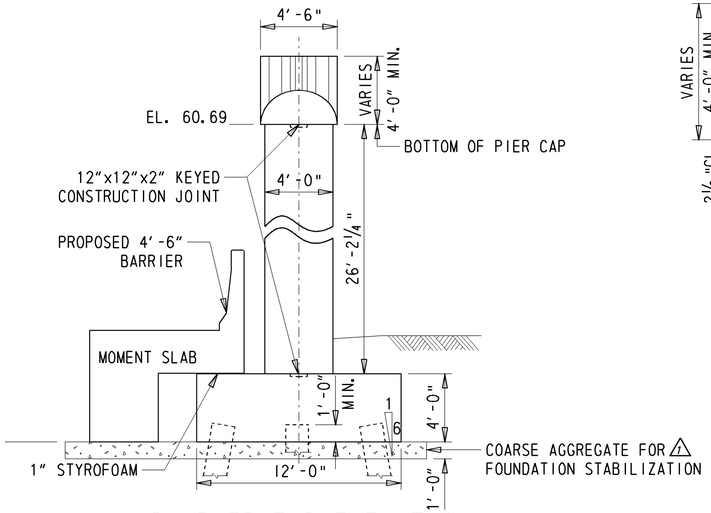

N.B. PIER END ELEVATION

3/16" = 1'-0"

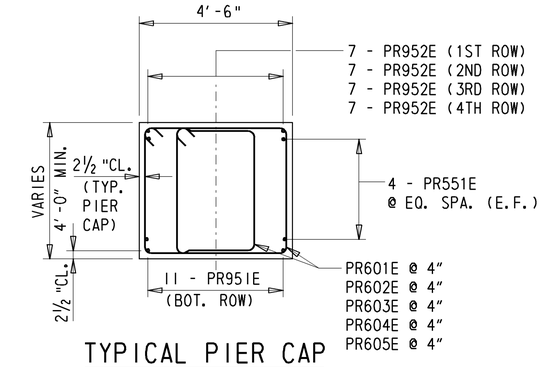

TYPICAL PIER CAP SECTION

3/8" = 1'-0"

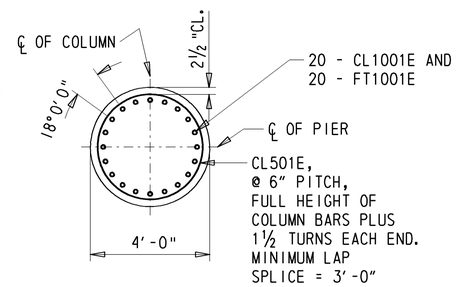

TYPICAL COLUMN SECTION

3/8" = 1'-0"

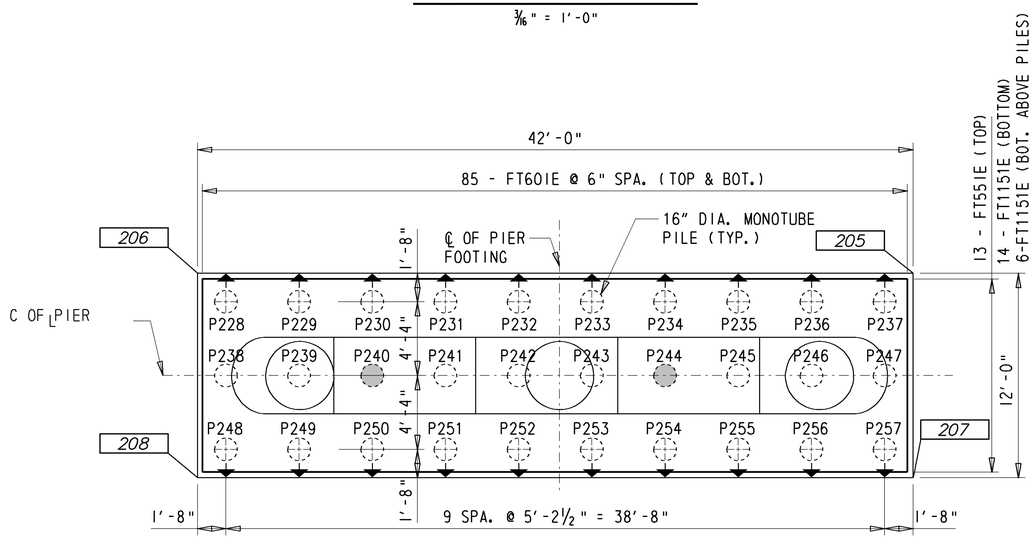

N.B. FOOTING REINFORCEMENT PLAN

3/16" = 1'-0"

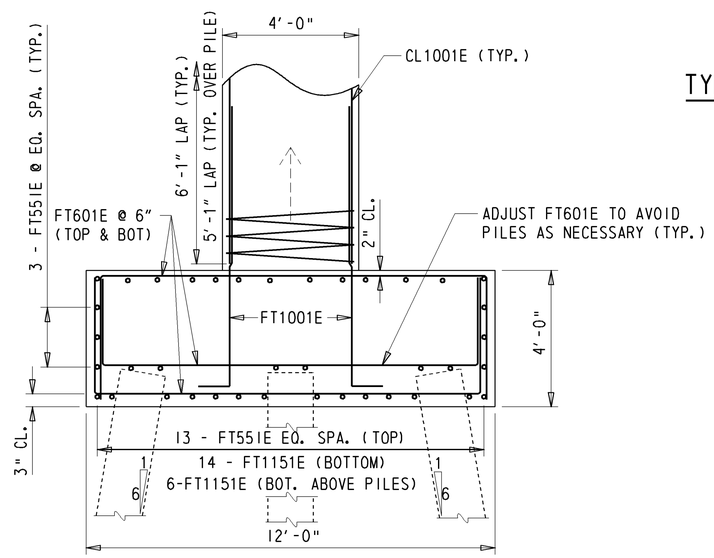

N.B. PIER FOOTING REINFORCEMENT

3/8" = 1'-0"

LEGEND

TEST PILE -

BATTERED PILE -

WORKING POINT - 208

NORTHBOUND PIER WORKING POINTS

POINT NO.	STATION	OFFSET	NORTHING	EASTING
205	1053+50.64	-0.96	411618.7410	618882.3173
206	1053+39.45	39.59	411652.6211	618907.1395
207	1053+62.27	2.03	411625.8331	618872.6373
208	1053+51.59	42.72	411659.7131	618897.4594

NOTE: FIELD CUT OR BEND BARS AS NECESSARY. PAYMENT INCIDENTAL TO #604000- BAR REINFORCEMENT, EPOXY COATED (TYP.)

PILE COORDINATE LIST

POINT NO.	STATION	OFFSET	NORTHING	EASTING
P228	1053+60.24	3.24	411626.19	618874.97
P237	1053+50.34	40.68	411657.38	618897.82
P238	1053+56.03	2.17	411623.63	618878.46
P247	1053+45.96	39.56	411654.82	618901.31
P248	1053+51.83	1.08	411621.07	618881.96
P257	1053+41.59	38.43	411652.26	618904.81

Y:\KENT2\BRIDGE\T200411701\PLANS\NEW BURTON RD - 2 SPAN\PR01.DGN

DELAWARE DEPARTMENT OF TRANSPORTATION

ADDENDUMS / REVISIONS

△1 ADD COARSE AGGREGATE TO PIER FOOTERS

SCALE: AS NOTED

WEST DOVER CONNECTOR

CONTRACT	BRIDGE NO.	2-157N
T200411701	DESIGNED BY: TRS	
COUNTY		
KENT	CHECKED BY: EM	

NORTHBOUND PIER DETAILS
BRIDGE SHEET 50 OF 65

SHEET NO. 161

TOTAL SHTS. 320