NOTE: SOIL BORING DATA IS FOR INFORMATIONAL PURPOSES ONLY.

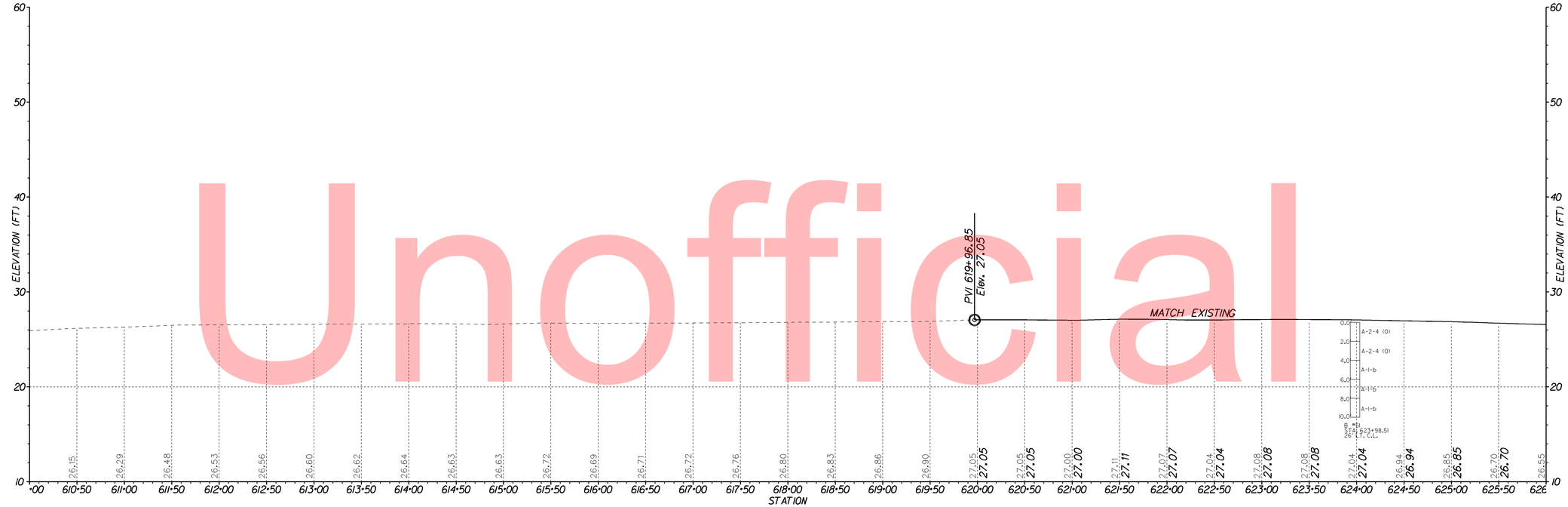

RAMP D

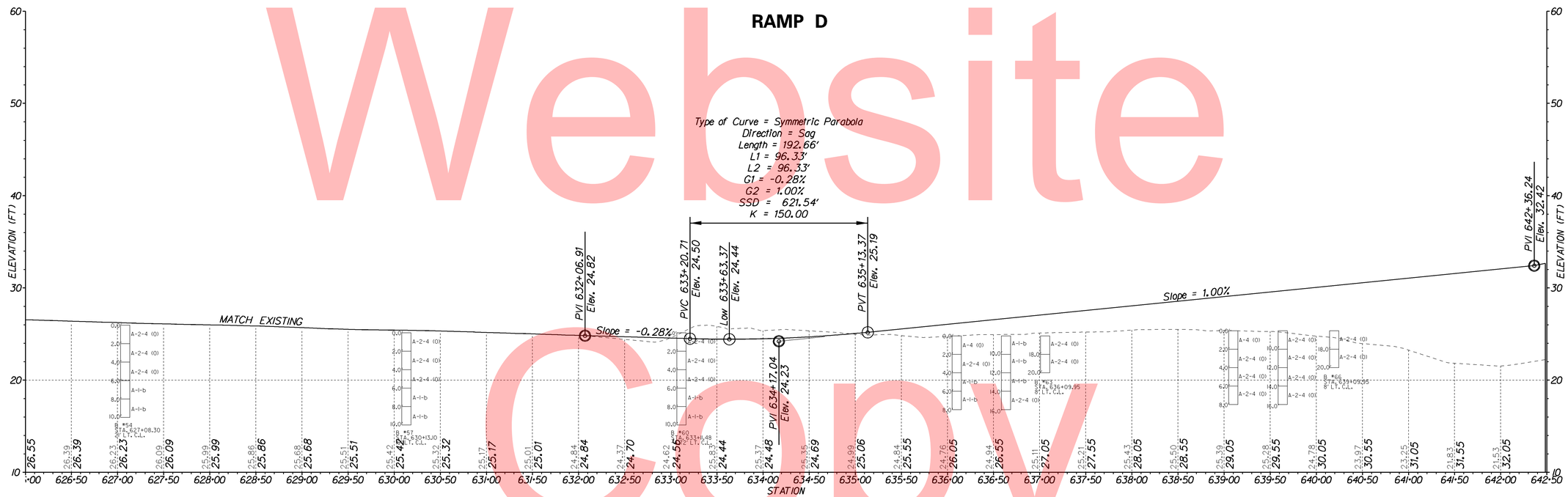

RAMP D

SCALE FEET

SCALE FEET

Unofficial Website Copy

DELAWARE DEPARTMENT OF TRANSPORTATION	ADDENDUMS / REVISIONS	SR1, THOMPSONVILLE GRADE SEPARATED INTERSECTION	CONTRACT T200412201	BRIDGE NO.	PROFILE	SHEET NO. 38
			COUNTY KENT	DESIGNED BY: MATTHEW VINCENT		TOTAL SHTS. 183
				CHECKED BY:		

NOTE: SOIL BORING DATA IS FOR INFORMATIONAL PURPOSES ONLY.

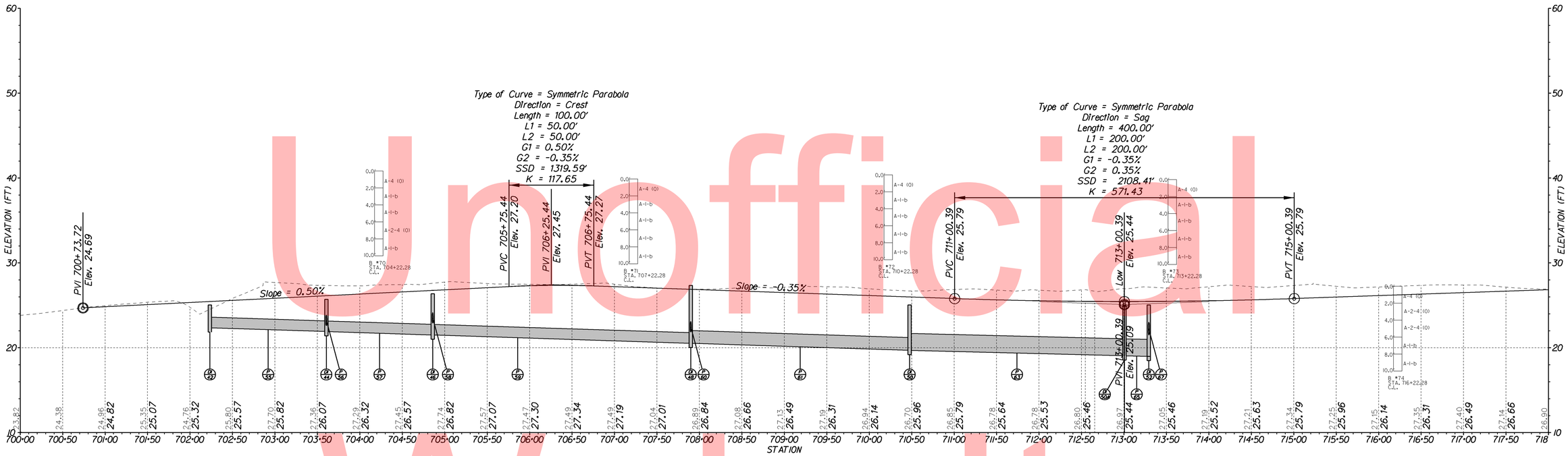

SERVICE ROAD

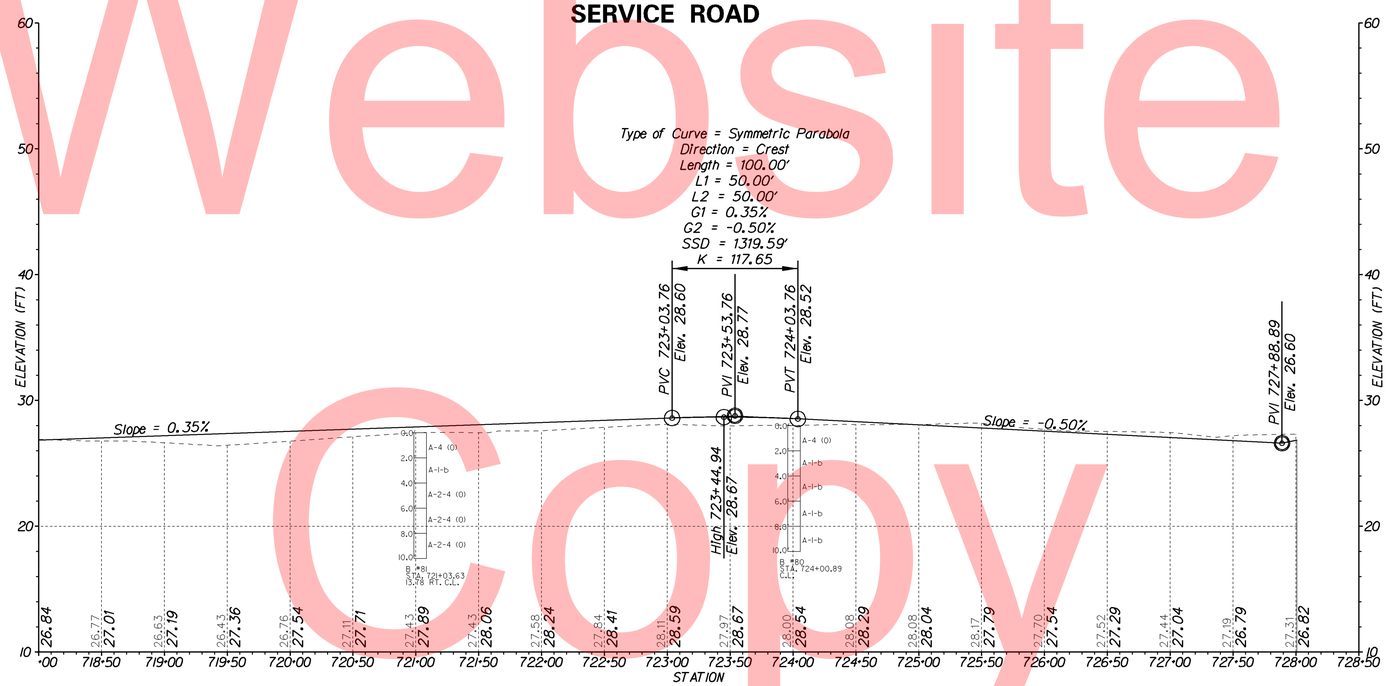

SERVICE ROAD

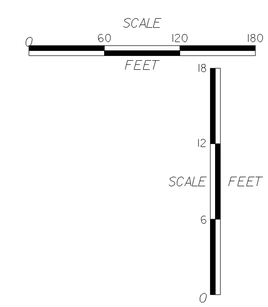

Unofficial Website Copy

DELAWARE DEPARTMENT OF TRANSPORTATION	ADDENDUMS / REVISIONS	SR1, THOMPSONVILLE GRADE SEPARATED INTERSECTION	CONTRACT T200412201	BRIDGE NO.	PROFILE	SHEET NO. 39
			COUNTY KENT	DESIGNED BY: MATTHEW VINCENT		TOTAL SHTS. 183
				CHECKED BY:		

NOTE: SOIL BORING DATA IS FOR INFORMATIONAL PURPOSES ONLY.

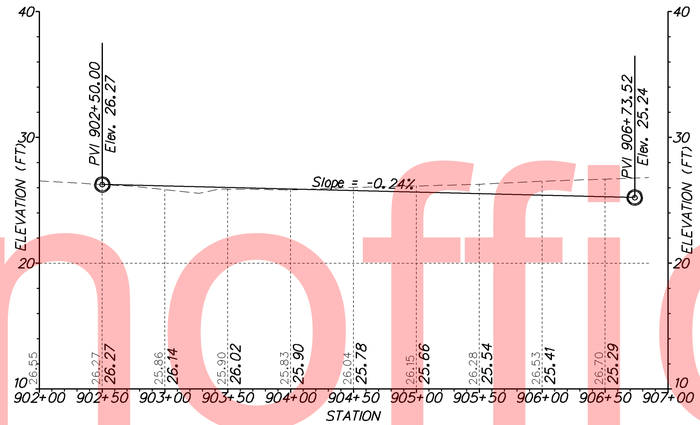

SERVICE ROAD SPUR

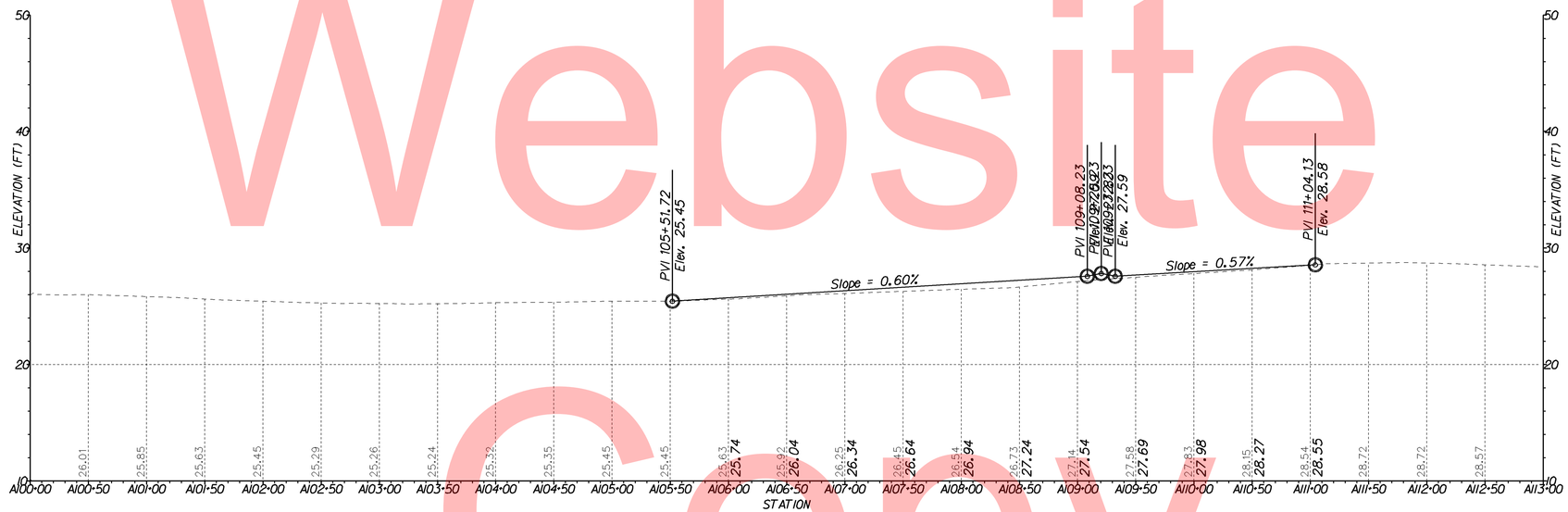

TUB MILL POND ROAD

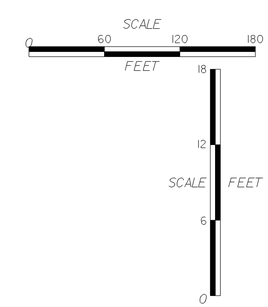

Unofficial Website Copy

DELAWARE DEPARTMENT OF TRANSPORTATION	ADDENDUMS / REVISIONS		SR1, THOMPSONVILLE GRADE SEPARATED INTERSECTION	CONTRACT T200412201	BRIDGE NO.	PROFILE	SHEET NO. 40
				COUNTY KENT	DESIGNED BY: MATTHEW VINCENT		TOTAL SHTS. 183
					CHECKED BY:		

NOTE: SOIL BORING DATA IS FOR INFORMATIONAL PURPOSES ONLY.

Unofficial Website Copy

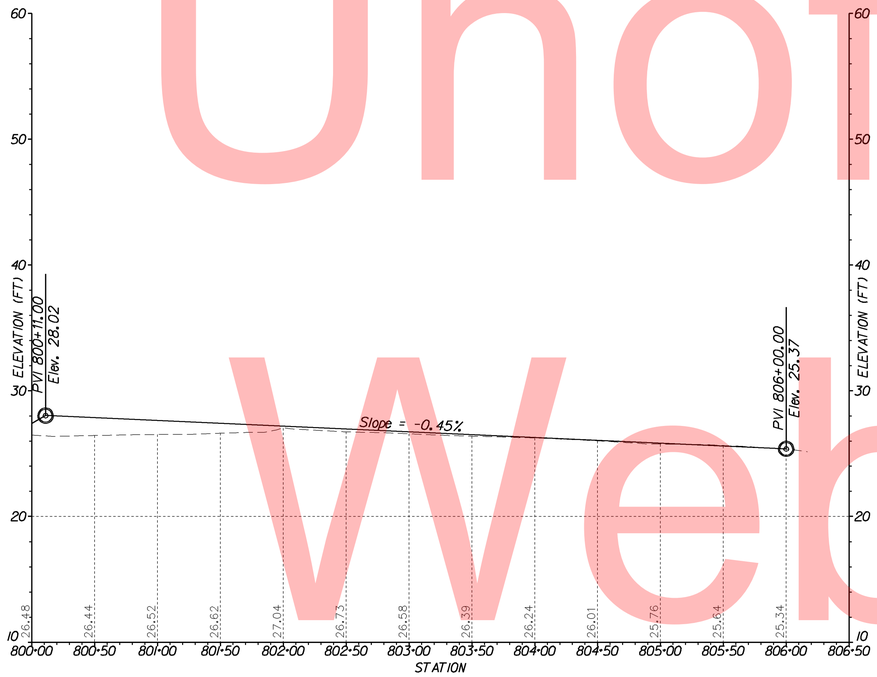

KELLER AVE. EXTENDED

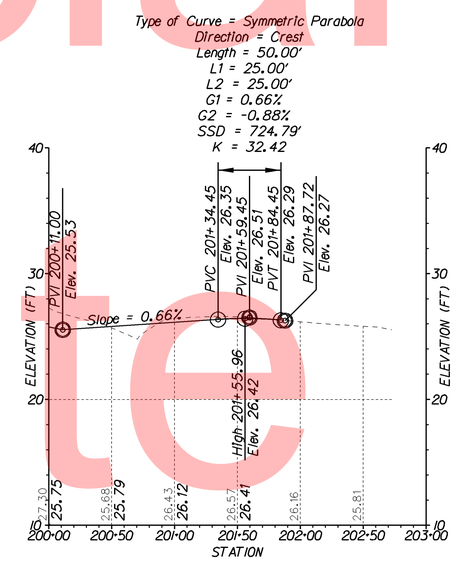

WILLIAMSBURG DRIVE

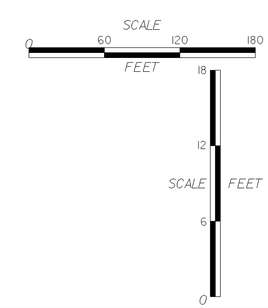

DELAWARE DEPARTMENT OF TRANSPORTATION	ADDENDUMS / REVISIONS	SR1, THOMPSONVILLE GRADE SEPARATED INTERSECTION	CONTRACT T200412201	BRIDGE NO.	PROFILE	SHEET NO. 41
			COUNTY KENT	DESIGNED BY: MATTHEW VINCENT		TOTAL SHTS. 183
				CHECKED BY:		

COORDINATE LIST				
POINT NO.	STATION	OFFSET	NORTHING	EASTING
70220	613+13.25	-58.53	345927.0361	653493.8832
70221	613+13.24	-20.00	345927.0936	653532.4089
70222	613+07.22	-14.00	345921.0964	653538.4178
70223	612+95.14	-14.00	345909.0414	653538.4106
70224	612+93.51	-17.17	345907.4283	653535.2328
70225	613+07.00	-58.52	345920.8540	653493.8935
70226	612+43.26	27.28	345856.8477	653579.3631
70227	612+83.51	27.28	345897.2845	653579.6582
70228	612+86.05	34.36	345899.8150	653586.7437
70229	26+23.06	-34.33	345856.5828	653603.7543
70230	613+26.75	30.12	345940.7451	653582.4931
70231	613+31.82	27.28	345945.8299	653579.6315
70232	613+50.37	27.28	345964.4730	653579.5108
70233	27+31.61	-16.00	345964.6314	653622.2318
70234	26+46.09	-16.00	345879.3525	653622.2848
70235	26+45.93	-19.99	345879.2218	653618.2900
70236	26+49.09	-20.25	345882.3712	653618.0592
70237	21+99.82	-16.00	345434.9050	653601.9211
70238	23+20.41	-28.00	345555.5881	653598.8607
70239	24+43.47	-28.00	345677.8718	653605.3410

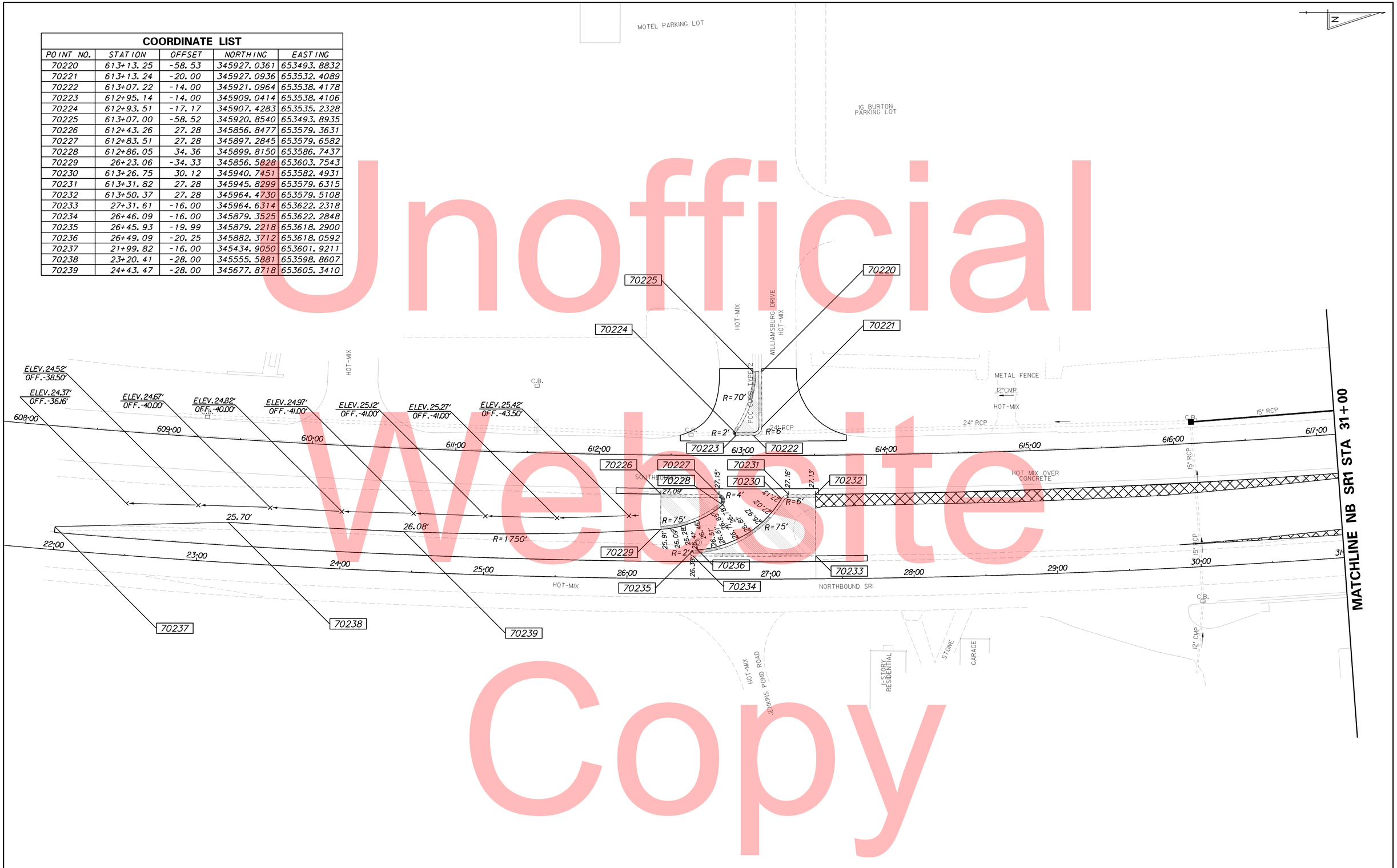

Unofficial Website Copy

DELAWARE DEPARTMENT OF TRANSPORTATION

ADDENDUMS / REVISIONS

SCALE 0 30 60 90 FEET

SR1, THOMPSONVILLE GRADE SEPARATED INTERSECTION

CONTRACT	BRIDGE NO.	
T200412201	DESIGNED BY:	MATTHEW VINCENT
COUNTY	CHECKED BY:	
KENT		

GRADES & GEOMETRICS

SHEET NO. 42

TOTAL SHTS. 183

COORDINATE LIST				
POINT NO.	STATION	OFFSET	NORTHING	EASTING
70201	619+96.85	-16.00	346607.0324	653494.1315
70212	623+01.10	-16.00	346906.9970	653448.9119
70213	623+01.11	-20.00	346906.3036	653444.9725
70214	623+50.30	-16.00	346955.2544	653440.0838
70215	623+50.29	-20.00	346954.5121	653436.1533
101534	903+34.94	49.41	346975.8123	653150.8020
101535	903+06.22	56.59	346986.6200	653178.3656
101536	902+64.38	53.00	346988.4133	653220.3273
101537	902+64.38	11.00	346946.7591	653225.7054
101538	903+30.81	97.58	347024.1215	653148.7374
101539	903+02.91	95.18	347025.3171	653176.7118
101540	902+50.00	-11.00	346926.7812	653242.7816
101541	902+50.00	11.00	346948.6001	653239.9646

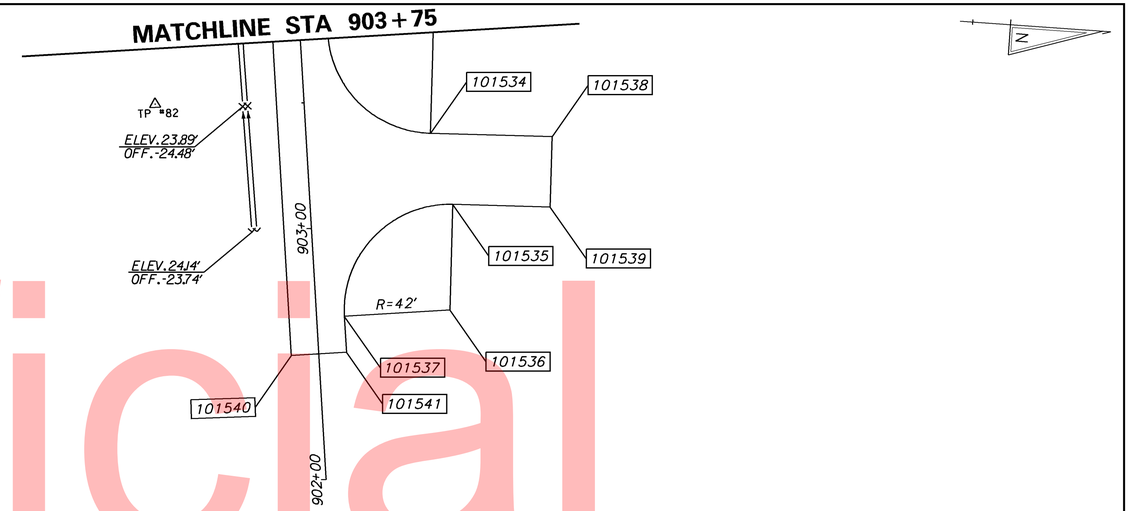

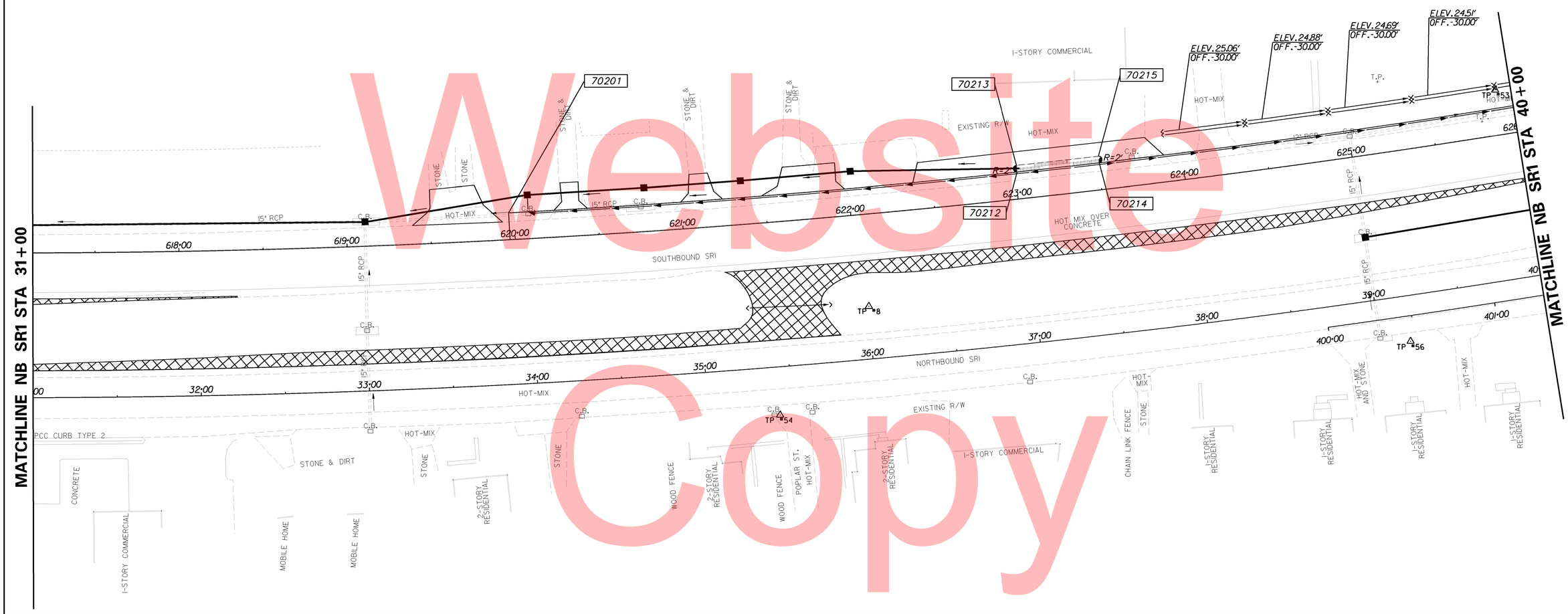

Unofficial Website Copy

DELAWARE DEPARTMENT OF TRANSPORTATION	ADDENDUMS / REVISIONS	SCALE 0 30 60 90 FEET	SR1, THOMPSONVILLE GRADE SEPARATED INTERSECTION	CONTRACT T200412201	BRIDGE NO.	GRADES & GEOMETRICS	SHEET NO. 43
				COUNTY KENT	DESIGNED BY: MATTHEW VINCENT		TOTAL SHTS. 183
					CHECKED BY:		

COORDINATE LIST				
POINT NO.	STATION	OFFSET	NORTHING	EASTING
50201	402+00.00	17.50	347297.0819	653500.4706
50202	406+00.00	17.50	347682.9773	653390.9377
50203	408+80.00	22.00	347949.7043	653302.6147
50204	409+33.42	-4.00	347992.7916	653264.2129
50208	409+88.84	-21.44	348049.4220	653243.1272
50209	409+92.72	-11.67	348053.1226	653253.0661
70202	632+06.85	-22.00	347777.6313	653214.0784
70203	632+53.96	4.00	347829.7702	653219.0285
70206	633+13.57	21.17	347890.3963	653196.9628
70207	633+17.08	11.71	347886.8453	653187.4402
90201	806+08.77	11.00	347690.9088	653207.2963
90202	806+08.77	-11.00	347712.7487	653204.6477

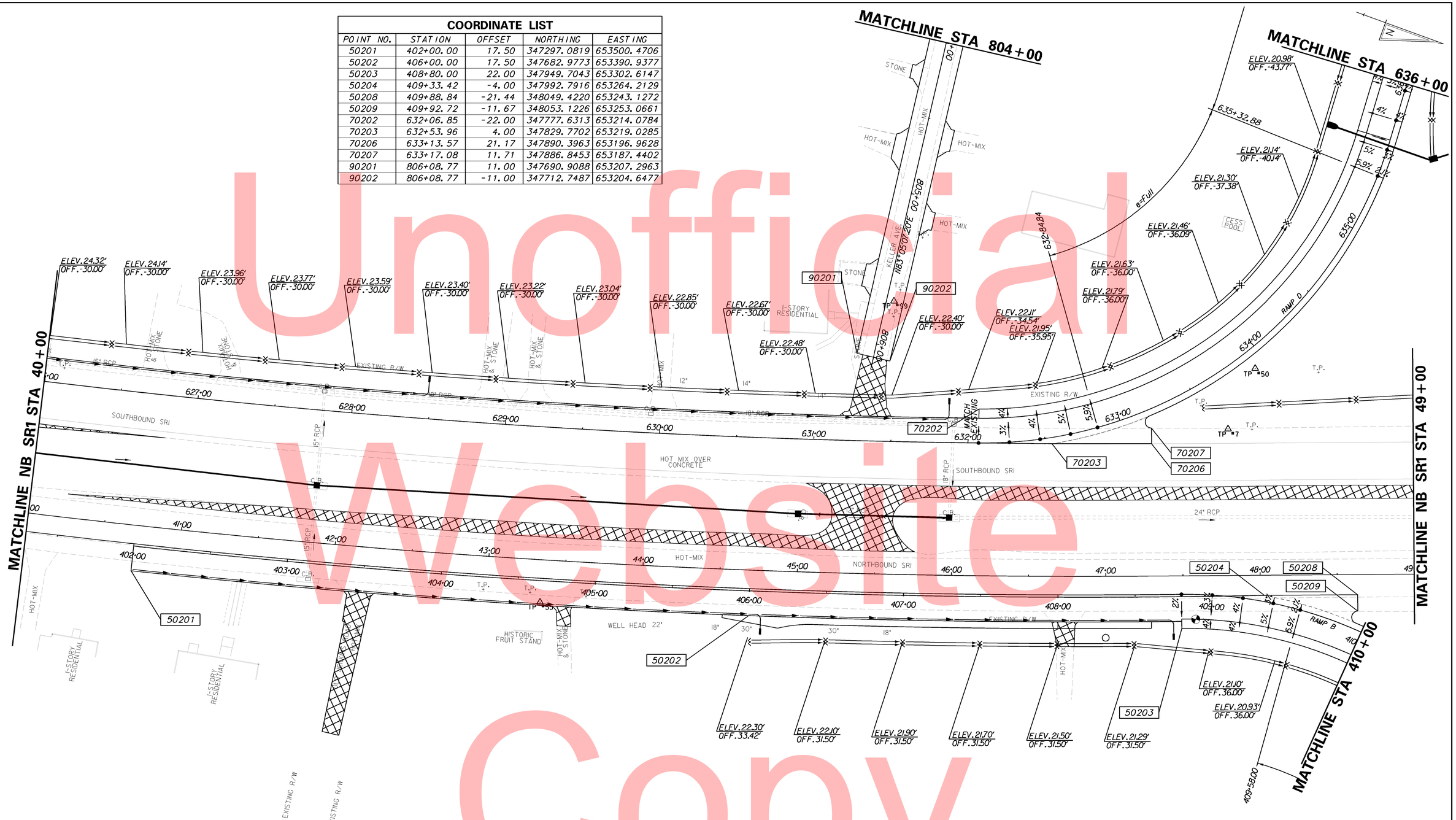

Unofficial Website Copy

DELAWARE DEPARTMENT OF TRANSPORTATION

ADDENDUMS / REVISIONS

SCALE 0 30 60 90 FEET

SR1, THOMPSONVILLE GRADE SEPARATED INTERSECTION

CONTRACT	BRIDGE NO.		GRADES & GEOMETRICS	SHEET NO.
T200412201	DESIGNED BY:	MATTHEW VINCENT		44
COUNTY				TOTAL SHTS.
KENT	CHECKED BY:			183

COORDINATE LIST				
POINT NO.	STATION	OFFSET	NORTHING	EASTING
30223	231+27.09	20.00	348692.3538	653135.7321
40203	310+68.56	-4.00	348447.8139	653095.8504
40204	311+16.90	22.00	348500.4797	653097.5775
60203	509+24.04	4.00	348260.8858	653047.8209
60204	510+12.27	-22.00	348339.2361	653006.0957
60206	509+07.72	21.15	348243.9231	653065.0600
60207	509+04.09	11.69	348240.3601	653055.4909

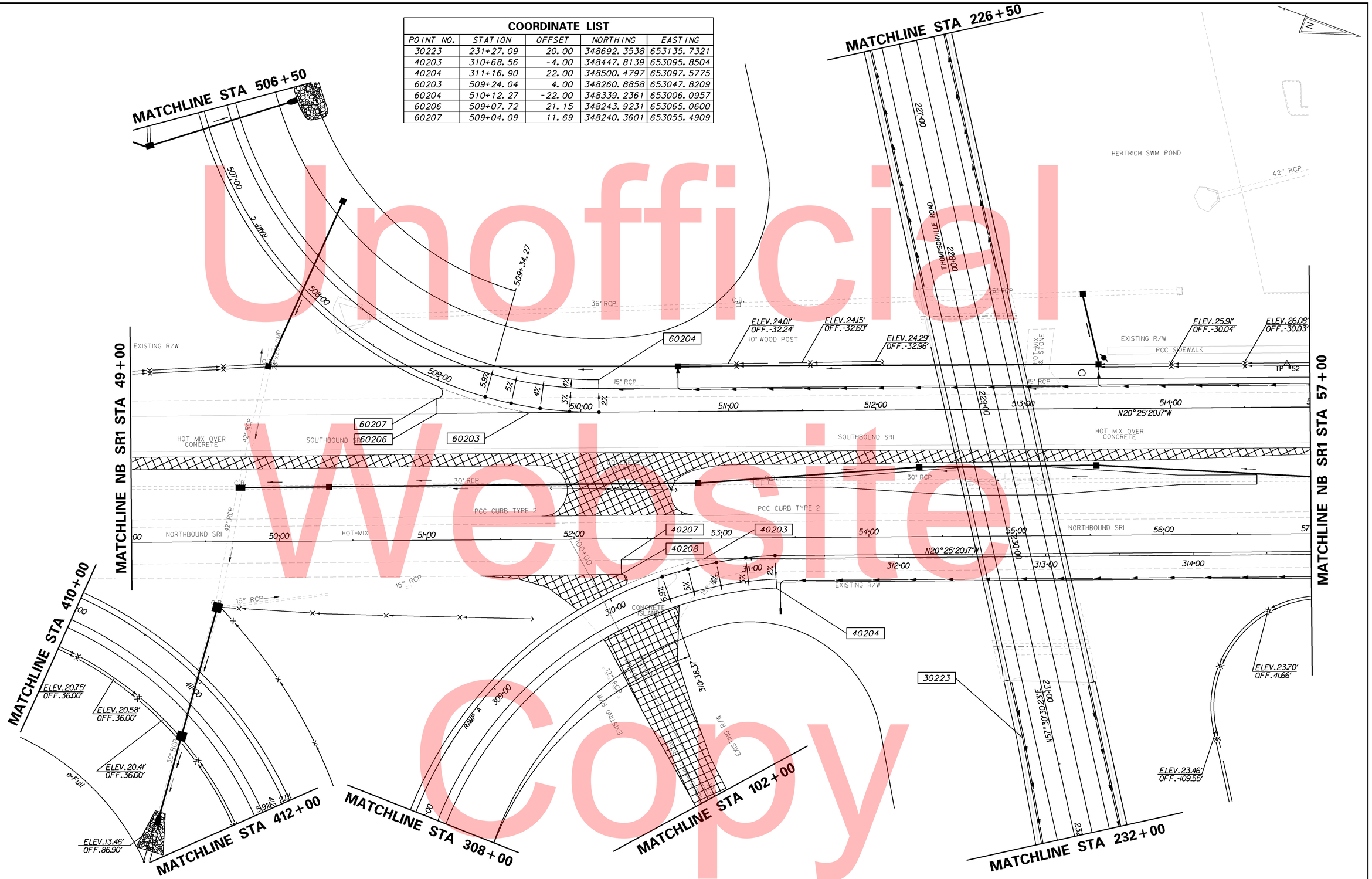

Unofficial Website Copy

DELAWARE DEPARTMENT OF TRANSPORTATION

ADDENDUMS / REVISIONS

SCALE 0 30 60 90 FEET

SR1, THOMPSONVILLE GRADE SEPARATED INTERSECTION

CONTRACT	BRIDGE NO.		GRADES & GEOMETRICS	SHEET NO.
T200412201	DESIGNED BY:	MATTHEW VINCENT		45
COUNTY				TOTAL SHTS.
KENT	CHECKED BY:			183

COORDINATE LIST				
POINT NO.	STATION	OFFSET	NORTHING	EASTING
40205	323+17.77	18.00	349624.4721	652674.8075
60205	516+92.27	-16.00	348978.5899	652774.4417

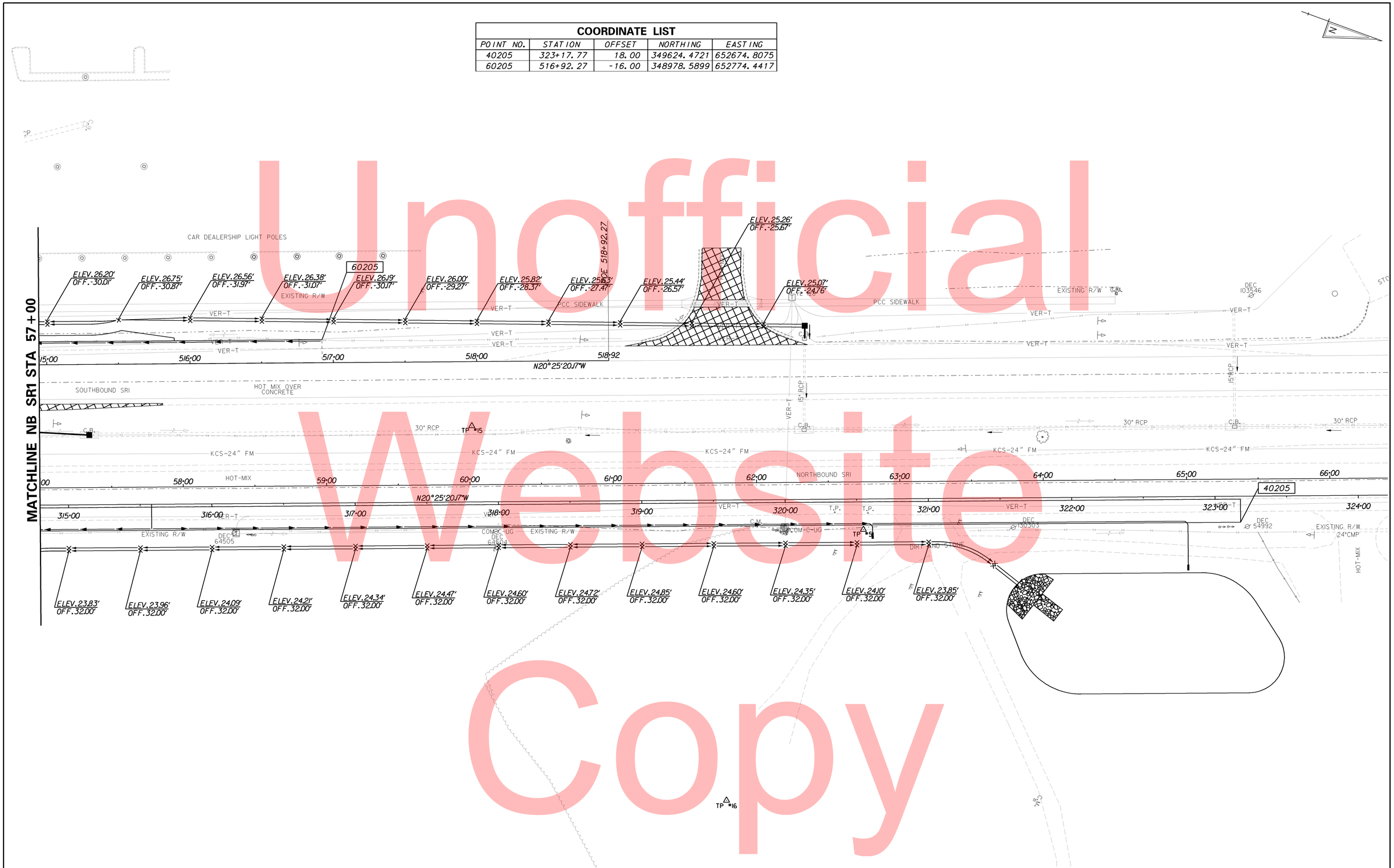

Unofficial Website Copy

DELAWARE DEPARTMENT OF TRANSPORTATION	ADDENDUMS / REVISIONS	SCALE 0 30 60 90 FEET	SR1, THOMPSONVILLE GRADE SEPARATED INTERSECTION	CONTRACT T200412201	BRIDGE NO.	GRADES & GEOMETRICS	SHEET NO. 46
				COUNTY KENT	DESIGNED BY: MATTHEW VINCENT		TOTAL SHTS. 183
					CHECKED BY:		

COORDINATE LIST

POINT NO.	STATION	OFFSET	NORTHING	EASTING
30201	108+35.26	9.00	346995.2809	651032.1625
30202	204+74.16	85.00	347019.9337	651092.3059
30203	204+74.16	20.00	347080.0690	651067.6339
30204	110+17.26	13.00	347165.2006	650966.8353
30205	204+78.21	-97.00	347189.8534	651026.9787

COORDINATE LIST

POINT NO.	STATION	OFFSET	NORTHING	EASTING
30206	204+78.21	-32.00	347129.7178	651051.6508
30241	108+63.21	-13.00	347012.8056	651001.2026
30242	203+42.16	57.00	346995.7382	650959.5648
30243	203+42.16	12.00	347037.3706	650942.4842
30244	203+47.20	-12.00	347061.4855	650938.0325
30245	203+47.20	-52.00	347098.4920	650922.8497
30246	109+72.22	-13.00	347113.6630	650959.8611
30247	203+36.81	0.00	347046.4392	650932.9732
200201	105+51.72	9.00	346732.9274	651139.7013
200202	105+51.72	-13.00	346724.5833	651119.3451
200204	110+68.70	9.00	347211.2818	650943.6235
200205	110+68.70	-13.00	347202.9378	650923.2673

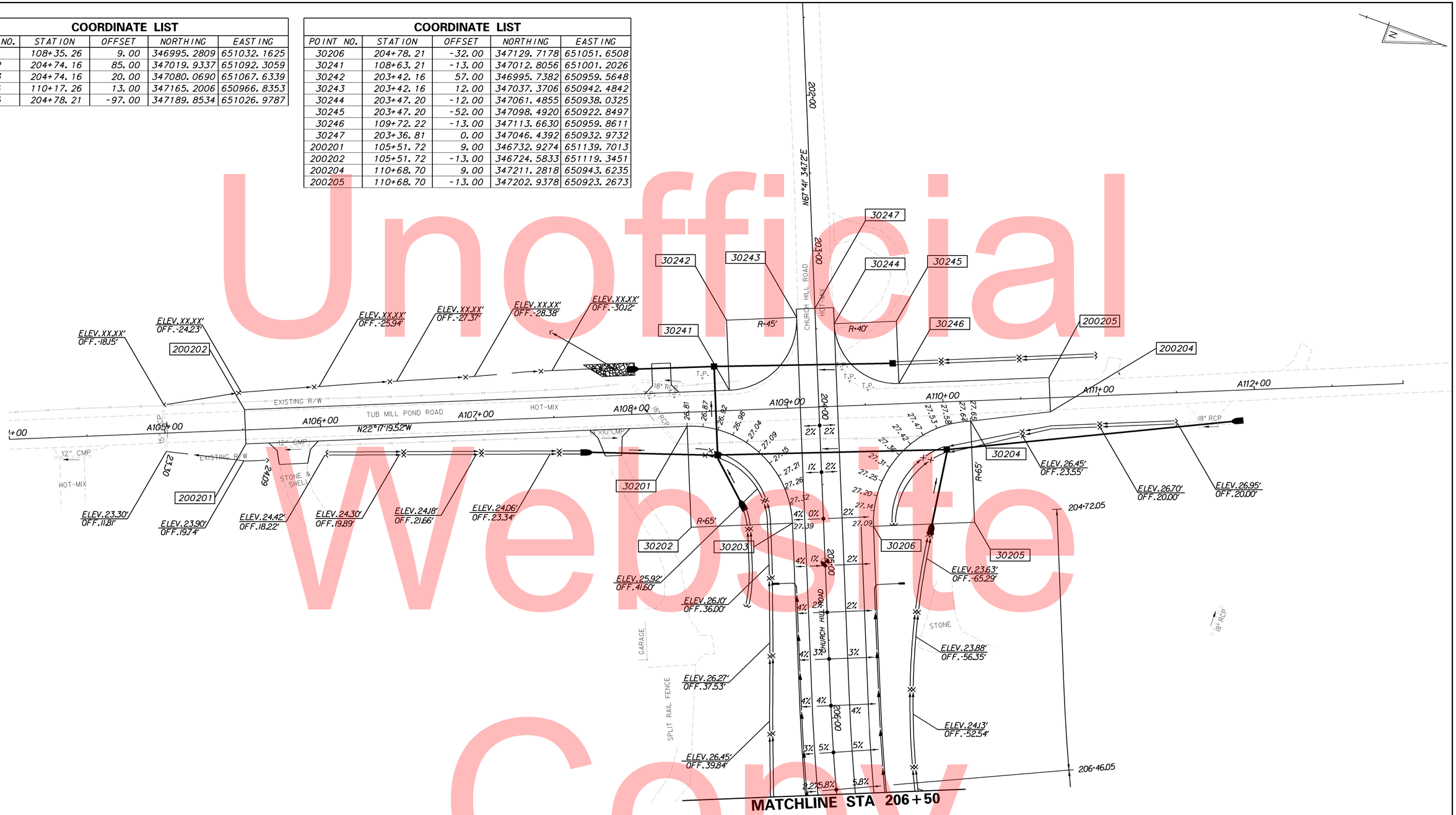

Unofficial Website Copy

DELAWARE DEPARTMENT OF TRANSPORTATION	ADDENDUMS / REVISIONS	SCALE 0 30 60 90 FEET	SR1, THOMPSONVILLE GRADE SEPARATED INTERSECTION	CONTRACT T200412201	BRIDGE NO.	GRADES & GEOMETRICS	SHEET NO. 47
				COUNTY KENT	DESIGNED BY: MATTHEW VINCENT		TOTAL SHTS. 183
					CHECKED BY:		

COORDINATE LIST				
POINT NO.	STATION	OFFSET	NORTHING	EASTING
30207	209+18.34	24.00	347284.0621	651466.7767

Unofficial Website Copy

DELAWARE DEPARTMENT OF TRANSPORTATION

ADDENDUMS / REVISIONS

SCALE 0 30 60 90 FEET

SR1, THOMPSONVILLE GRADE SEPARATED INTERSECTION

CONTRACT	BRIDGE NO.	
T200412201	DESIGNED BY:	MATTHEW VINCENT
COUNTY	CHECKED BY:	
KENT		

GRADES & GEOMETRICS

SHEET NO. 48

TOTAL SHTS. 183

COORDINATE LIST				
POINT NO.	STATION	OFFSET	NORTHING	EASTING
30208	214+50.33	24.00	347677.3300	651831.8222
30209	214+50.33	89.00	347638.8970	651884.2425
30210	215+15.33	89.00	347691.3165	651922.6779
30211	215+47.33	89.00	347717.1272	651941.5937
30212	216+12.33	89.00	347769.5462	651980.0287
30213	216+12.33	24.00	347807.9787	651927.6079

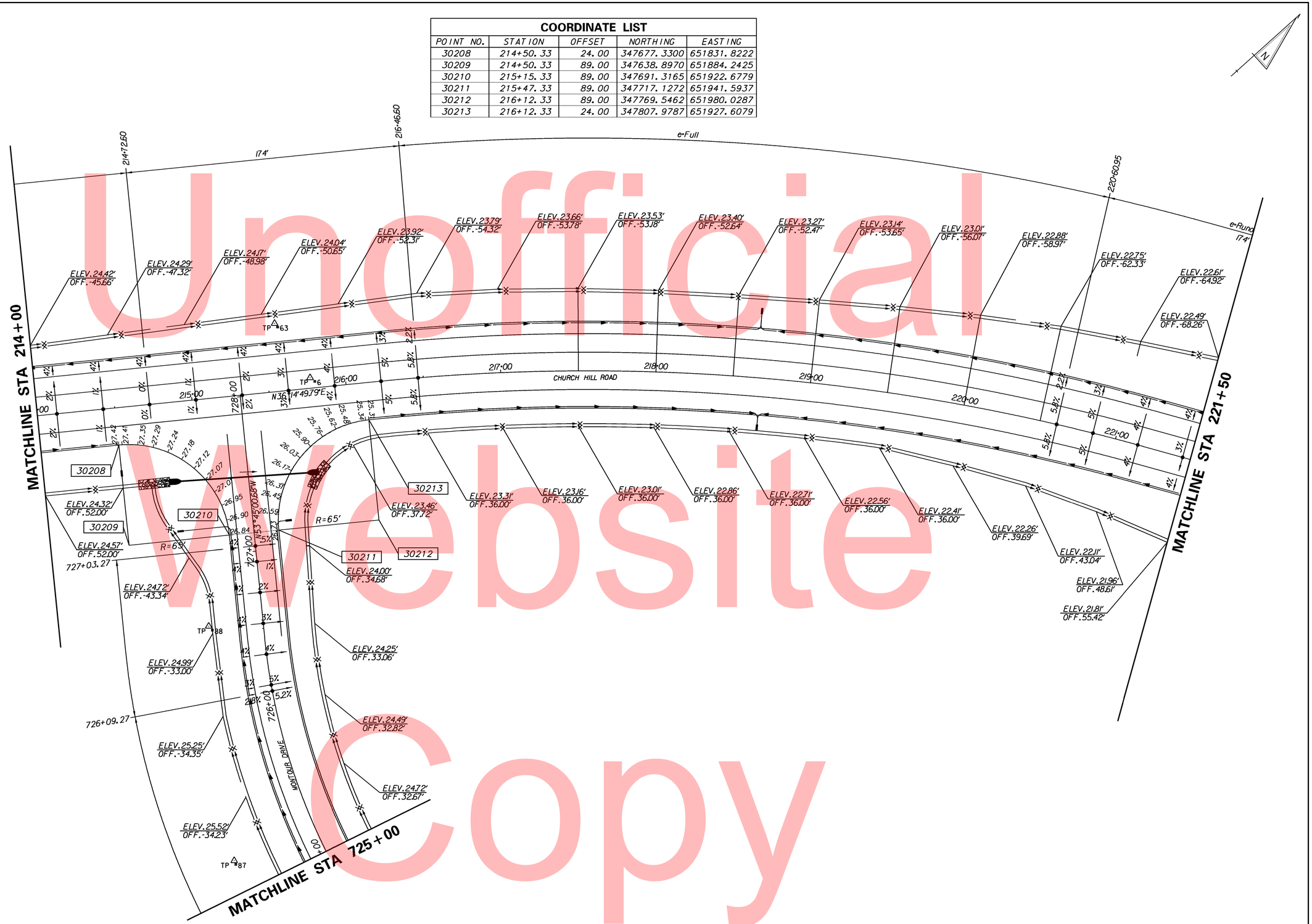

Unofficial Website Copy

DELAWARE DEPARTMENT OF TRANSPORTATION	ADDENDUMS / REVISIONS	SCALE 0 30 60 90 FEET	SR1, THOMPSONVILLE GRADE SEPARATED INTERSECTION	CONTRACT T200412201	BRIDGE NO.	GRADES & GEOMETRICS	SHEET NO. 49
				COUNTY KENT	DESIGNED BY: MATTHEW VINCENT		TOTAL SHTS. 183
					CHECKED BY:		

COORDINATE LIST				
POINT NO.	STATION	OFFSET	NORTHING	EASTING
30215	221+91.11	24.00	348186.1914	652348.4055
30216	221+91.11	89.00	348131.3658	652383.3219
30217	641+59.24	-22.00	348166.2823	652438.1475
30218	501+10.00	-28.00	348182.9487	652503.4103
30219	224+10.11	110.00	348231.2945	652579.3226
30220	224+10.11	20.00	348307.2068	652530.9767
30221	221+95.71	-32.00	348235.8990	652322.2071
30222	223+84.71	-32.00	348337.4230	652481.6194
60201	500+45.50	4.00	348220.1629	652441.7713
60202	504+81.51	4.00	347967.4347	652769.2758
60208	500+42.18	-17.00	348234.2404	652457.7030
60209	500+22.00	-17.00	348251.2651	652446.8606
60210	223+11.11	20.00	348254.0264	652447.4732
60211	223+28.52	20.00	348263.3817	652462.1628
60212	223+29.88	23.47	348261.1881	652465.1719
60213	500+43.31	-20.65	348235.2478	652461.3888
70204	637+52.01	4.00	347961.4415	652769.5609
70205	642+02.74	4.00	348216.9398	652436.7105
400201	300+95.63	-90.00	348294.9419	652284.6048
400202	300+95.63	-20.00	348328.2627	652346.1656
400203	301+46.77	95.00	348400.6832	652441.3312
400204	301+46.77	20.00	348389.0906	652367.2326
400205	303+05.91	20.00	348511.4817	652415.4499
400206	303+02.95	-20.00	348540.8641	652388.1506

COORDINATE LIST				
POINT NO.	STATION	OFFSET	NORTHING	EASTING
400207	300+39.00	-2.01	348288.7464	652392.1567
400208	300+84.98	-2.01	348327.5300	652367.4568
400209	300+39.00	1.99	348290.8951	652395.5305
400210	300+84.98	1.99	348329.6787	652370.8307
400211	301+25.11	-2.00	348364.3320	652350.4385
400212	301+25.11	2.00	348365.5124	652354.2604

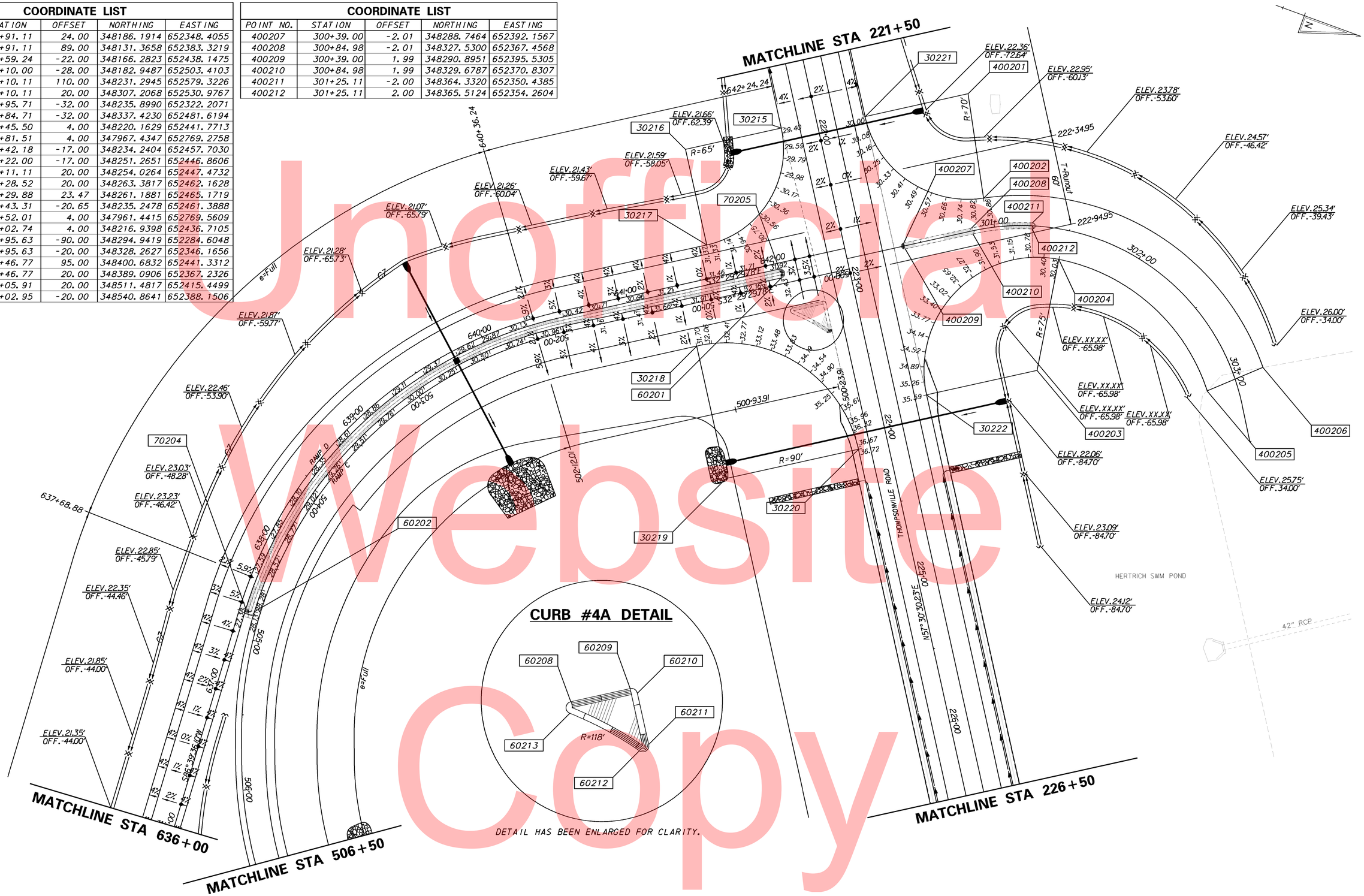

Unofficial Website Copy

DELAWARE DEPARTMENT OF TRANSPORTATION

ADDENDUMS / REVISIONS

SCALE 0 30 60 90 FEET

SR1, THOMPSONVILLE GRADE SEPARATED INTERSECTION

CONTRACT	BRIDGE NO.		SHEET NO.
T200412201	DESIGNED BY:	MATTHEW VINCENT	50
COUNTY	CHECKED BY:		TOTAL SHTS.
KENT			183

GRADES & GEOMETRICS

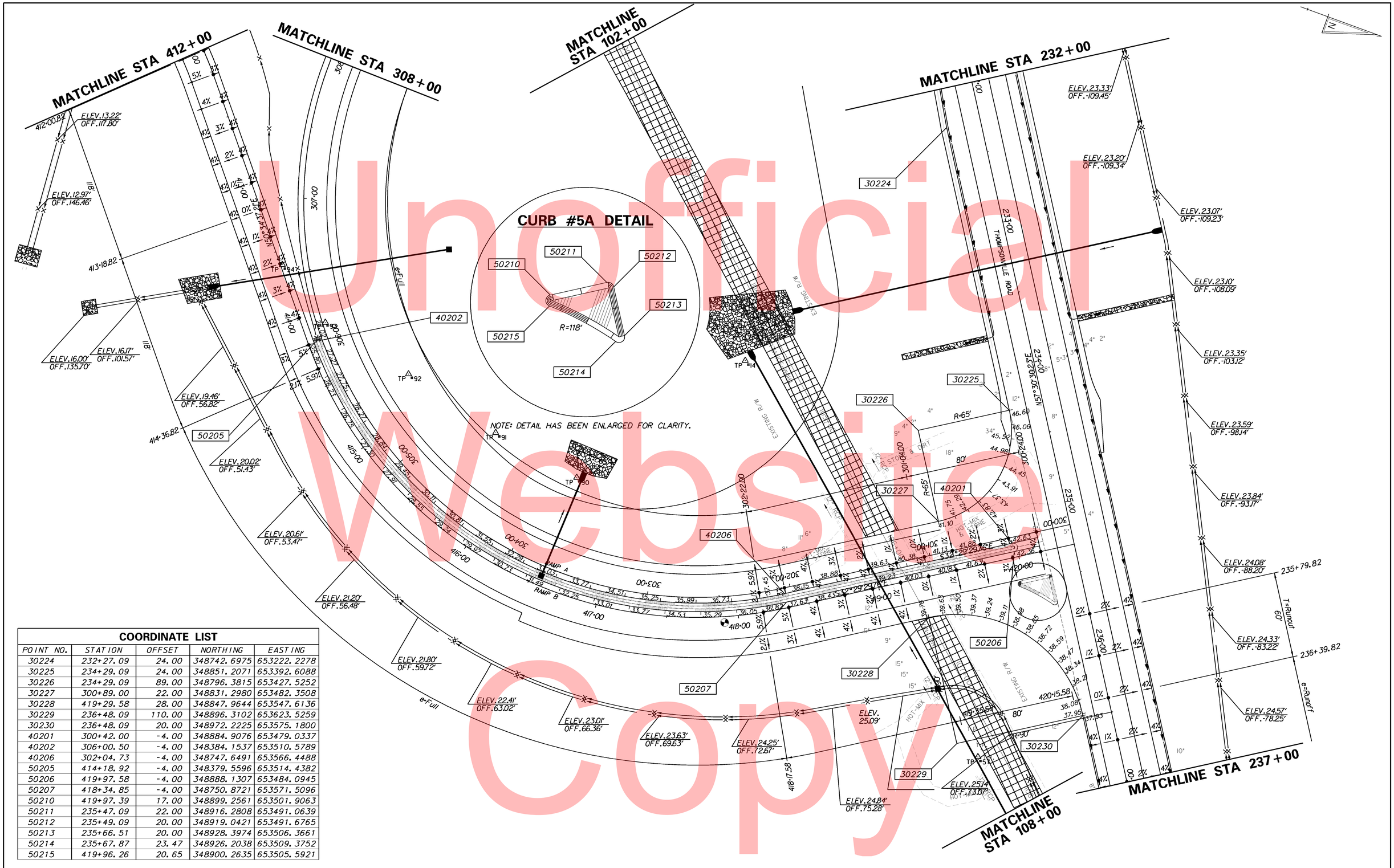

COORDINATE LIST

POINT NO.	STATION	OFFSET	NORTHING	EASTING
30224	232+27.09	24.00	348742.6975	653222.2278
30225	234+29.09	24.00	348851.2071	653392.6088
30226	234+29.09	89.00	348796.3815	653427.5252
30227	300+89.00	22.00	348831.2980	653482.3508
30228	419+29.58	28.00	348847.9644	653547.6136
30229	236+48.09	110.00	348896.3102	653623.5259
30230	236+48.09	20.00	348972.2225	653575.1800
40201	300+42.00	-4.00	348884.9076	653479.0337
40202	306+00.50	-4.00	348384.1537	653510.5789
40206	302+04.73	-4.00	348747.6491	653566.4488
50205	414+18.92	-4.00	348379.5596	653514.4382
50206	419+97.58	-4.00	348888.1307	653484.0945
50207	418+34.85	-4.00	348750.8721	653571.5096
50210	419+97.39	17.00	348899.2561	653501.9063
50211	235+47.09	22.00	348916.2808	653491.0639
50212	235+49.09	20.00	348919.0421	653491.6765
50213	235+66.51	20.00	348928.3974	653506.3661
50214	235+67.87	23.47	348926.2038	653509.3752
50215	419+96.26	20.65	348900.2635	653505.5921

Unofficial Website Copy

DELAWARE DEPARTMENT OF TRANSPORTATION

ADDENDUMS / REVISIONS

SCALE 0 30 60 90 FEET

SR1, THOMPSONVILLE GRADE SEPARATED INTERSECTION

CONTRACT	BRIDGE NO.		SHEET NO.
T200412201	DESIGNED BY:	MATTHEW VINCENT	51
COUNTY	CHECKED BY:		TOTAL SHTS.
KENT			183

GRADES & GEOMETRICS

COORDINATE LIST				
POINT NO.	STATION	OFFSET	NORTHING	EASTING
30231	238+46.56	17.00	349084.5728	653740.2163
30232	238+47.45	-29.00	349122.1234	653713.6336
30248	238+47.23	-12.00	349108.3154	653723.5509
30249	241+30.61	-6.38	349293.8222	653934.5733

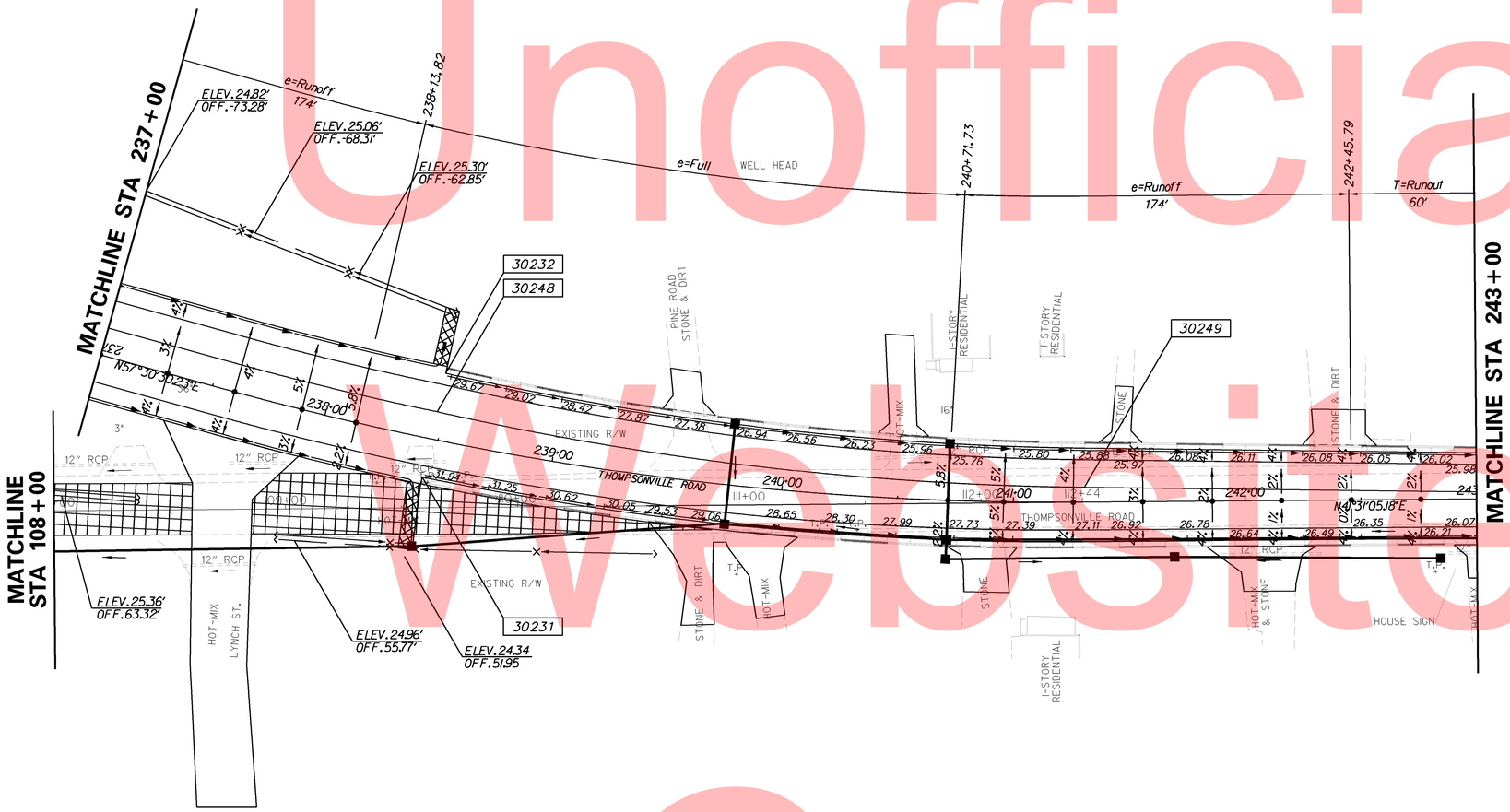

Unofficial Website Copy

DELAWARE DEPARTMENT OF TRANSPORTATION	ADDENDUMS / REVISIONS	SCALE 0 30 60 90 FEET	SR1, THOMPSONVILLE GRADE SEPARATED INTERSECTION	CONTRACT T200412201	BRIDGE NO.	GRADES & GEOMETRICS	SHEET NO. 52
				COUNTY KENT	DESIGNED BY: MATTHEW VINCENT		TOTAL SHTS. 183
					CHECKED BY:		

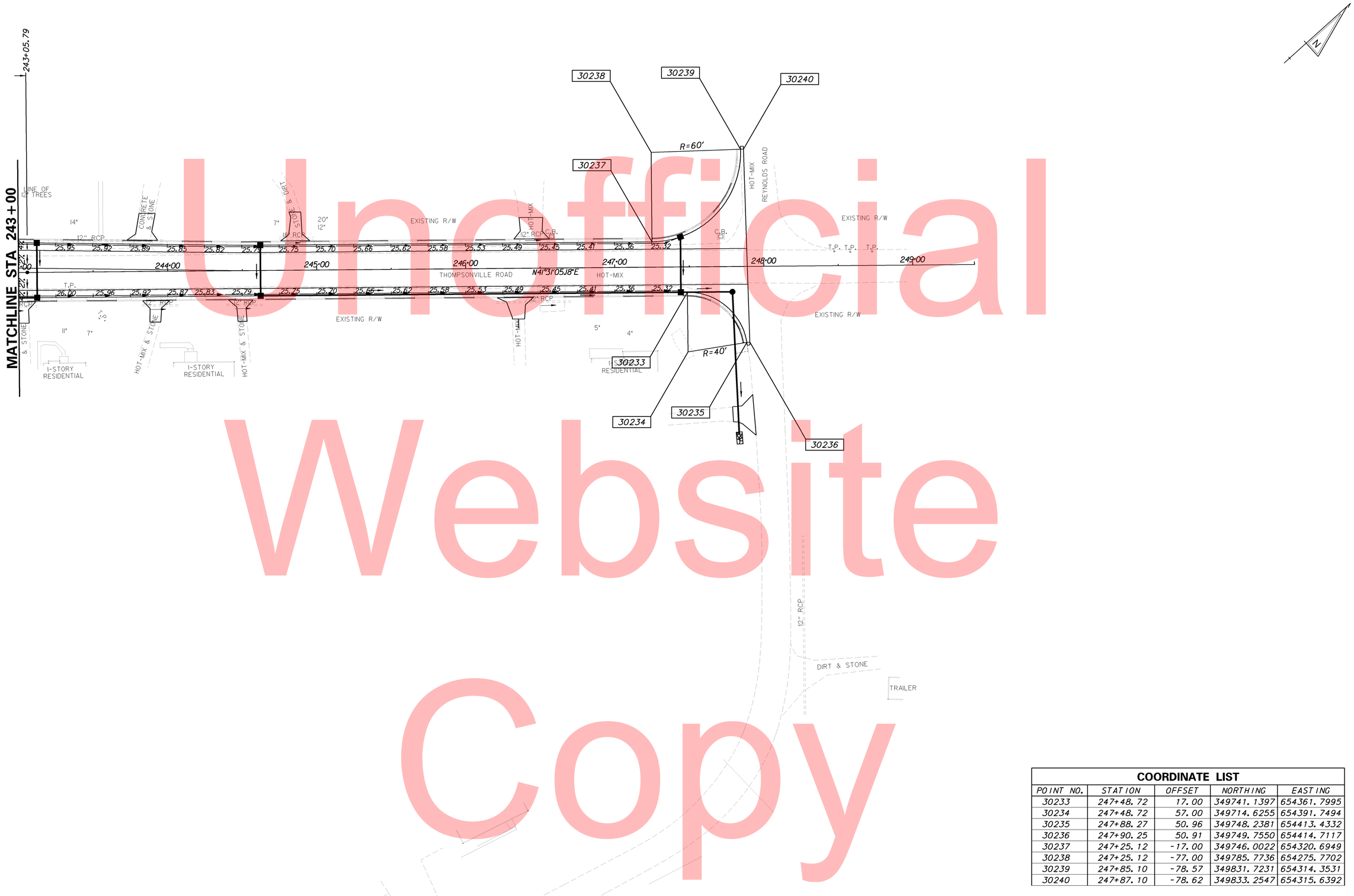

Unofficial Website Copy

COORDINATE LIST

POINT NO.	STATION	OFFSET	NORTHING	EASTING
30233	247+48.72	17.00	349741.1397	654361.7995
30234	247+48.72	57.00	349714.6255	654391.7494
30235	247+88.27	50.96	349748.2381	654413.4332
30236	247+90.25	50.91	349749.7550	654414.7117
30237	247+25.12	-17.00	349746.0022	654320.6949
30238	247+25.12	-77.00	349785.7736	654275.7702
30239	247+85.10	-78.57	349831.7231	654314.3531
30240	247+87.10	-78.62	349833.2547	654315.6392

DELAWARE DEPARTMENT OF TRANSPORTATION

ADDENDUMS / REVISIONS

SCALE 0 30 60 90 FEET

SR1, THOMPSONVILLE GRADE SEPARATED INTERSECTION

CONTRACT	BRIDGE NO.		SHEET NO.
T200412201	DESIGNED BY: MATTHEW VINCENT	**GRADES & GEOMETRICS**	53
COUNTY			TOTAL SHTS.
KENT	CHECKED BY:		183

COORDINATE LIST

POINT NO.	STATION	OFFSET	NORTHING	EASTING
80200	702+21.46	-16.00	345859.7932	652759.8567
80201	700+00.00	12.00	345640.4858	652745.1311
80202	700+00.00	-12.00	345647.6278	652722.2184
80203	702+21.90	12.00	345860.8019	652787.8420
80204	702+21.90	62.00	345861.8138	652837.8318
80205	200+63.39	12.00	345911.8137	652837.9280
80206	200+83.31	-12.00	345935.7753	652857.8986
80207	703+60.43	85.00	346000.7752	652858.0236
80208	703+60.43	20.00	345999.4597	652793.0369
80209	704+10.43	16.00	346049.3686	652788.0259
80210	703+60.43	-12.00	345998.8121	652761.0435
80226	707+50.73	16.00	346389.6005	652781.1388
80227	707+50.73	-16.00	346388.9529	652749.1454
80228	708+48.04	16.00	346479.6551	652795.3661
80229	708+48.04	-16.00	346490.1340	652765.1304
300201	201+87.72	12.00	345911.5733	652962.2616
300202	201+87.72	-12.00	345935.5733	652962.3078

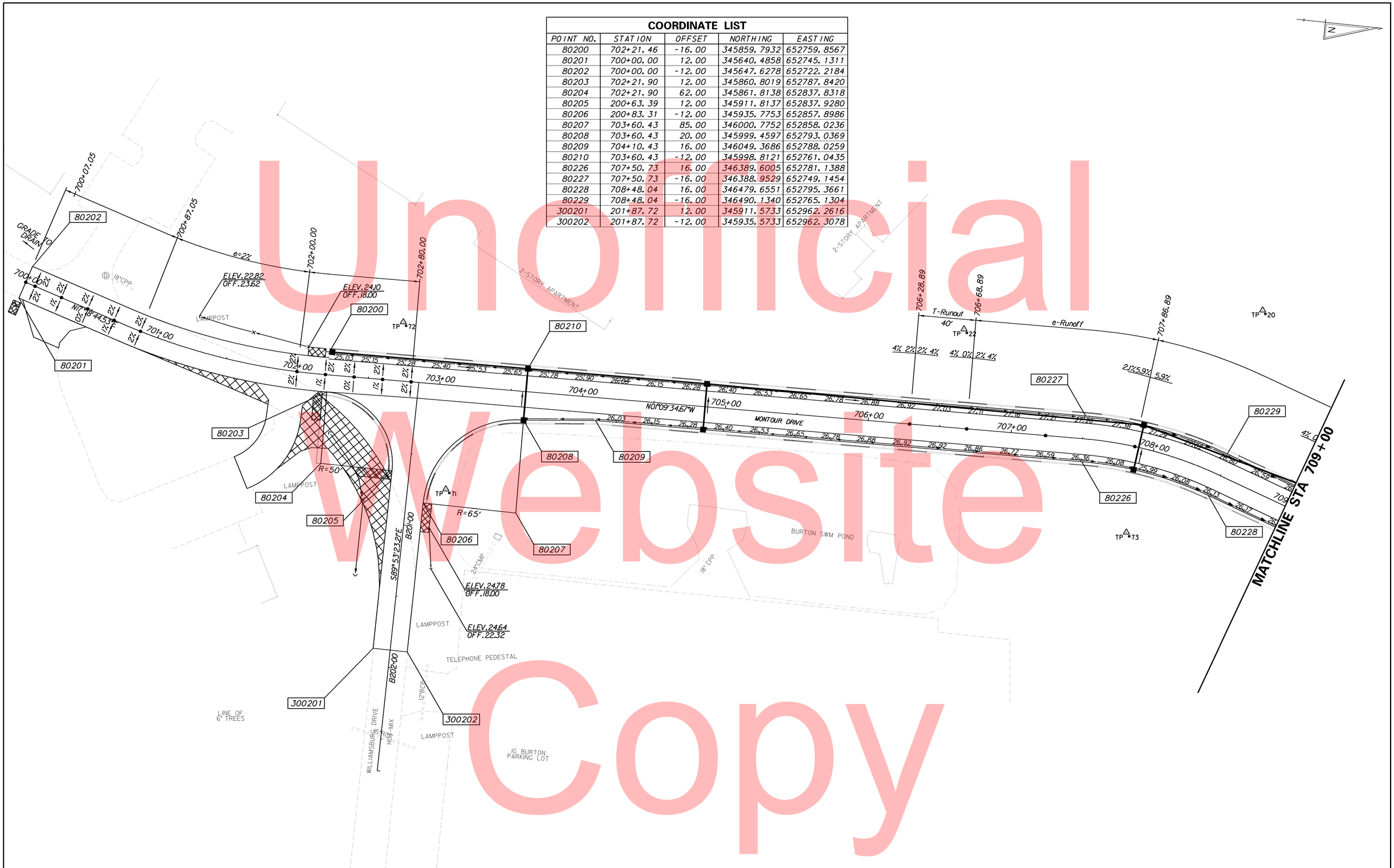

Unofficial Website Copy

DELAWARE DEPARTMENT OF TRANSPORTATION	ADDENDUMS / REVISIONS	SCALE 0 30 60 90 FEET	SR1, THOMPSONVILLE GRADE SEPARATED INTERSECTION	CONTRACT T200412201	BRIDGE NO.	GRADES & GEOMETRICS	SHEET NO. 54
				COUNTY KENT	DESIGNED BY: MATTHEW VINCENT		TOTAL SHTS. 183
					CHECKED BY:		

Unofficial Website Copy

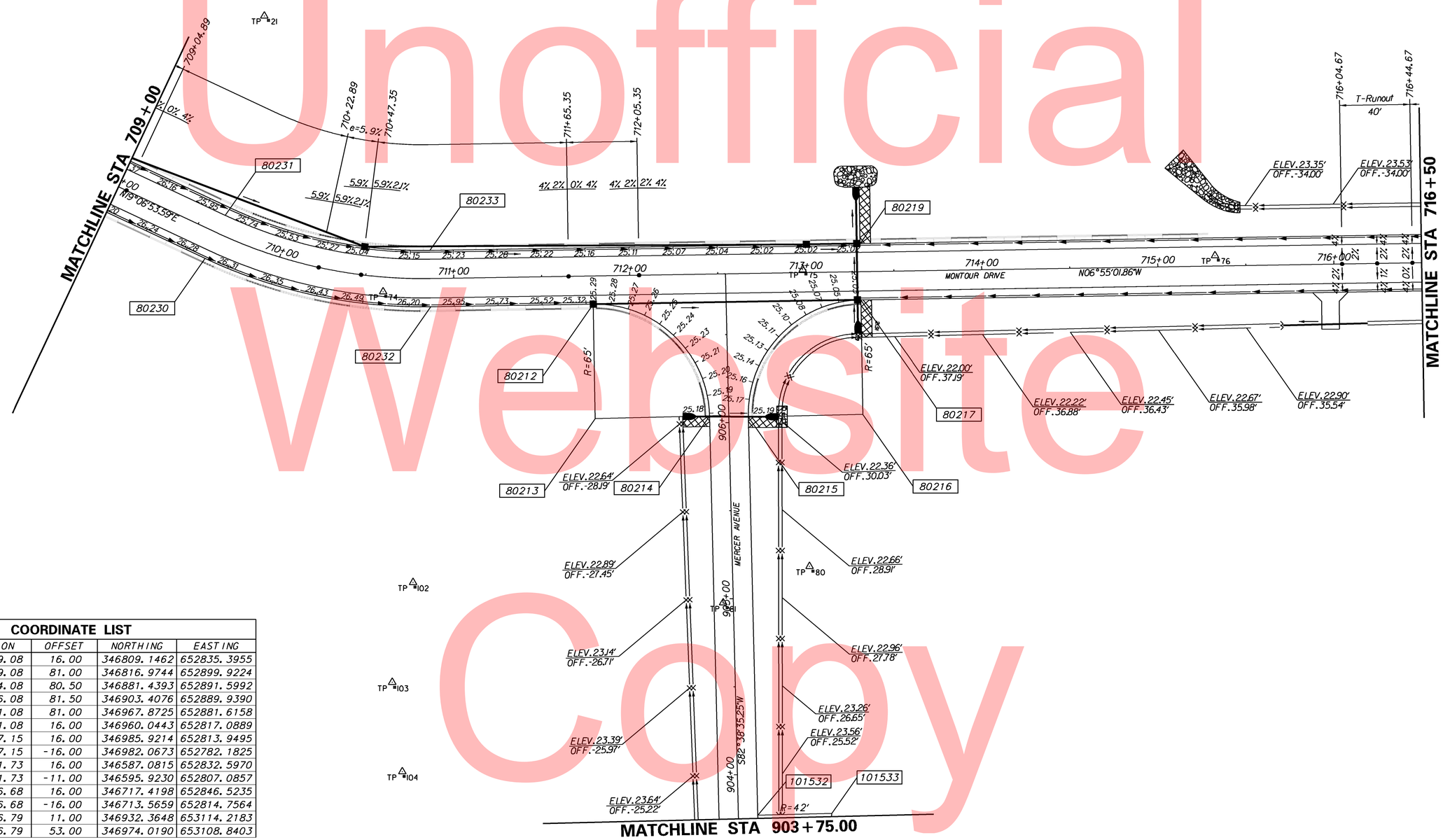

COORDINATE LIST

POINT NO.	STATION	OFFSET	NORTHING	EASTING
80212	711+79.08	16.00	346809.1462	652835.3955
80213	711+79.08	81.00	346816.9744	652899.9224
80214	712+44.08	80.50	346881.4393	652891.5992
80215	712+66.08	81.50	346903.4076	652889.9390
80216	713+31.08	81.00	346967.8725	652881.6158
80217	713+31.08	16.00	346960.0443	652817.0889
80218	713+57.15	16.00	346985.9214	652813.9495
80219	713+57.15	-16.00	346982.0673	652782.1825
80230	709+61.73	16.00	346587.0815	652832.5970
80231	709+61.73	-11.00	346595.9230	652807.0857
80232	710+86.68	16.00	346717.4198	652846.5235
80233	710+86.68	-16.00	346713.5659	652814.7564
101532	903+76.79	11.00	346932.3648	653114.2183
101533	903+76.79	53.00	346974.0190	653108.8403

DELAWARE DEPARTMENT OF TRANSPORTATION

ADDENDUMS / REVISIONS

SCALE 0 30 60 90 FEET

SR1, THOMPSONVILLE GRADE SEPARATED INTERSECTION

CONTRACT	BRIDGE NO.		GRADES & GEOMETRICS	SHEET NO.
T200412201	DESIGNED BY:	MATTHEW VINCENT		55
COUNTY				TOTAL SHTS.
KENT	CHECKED BY:			183

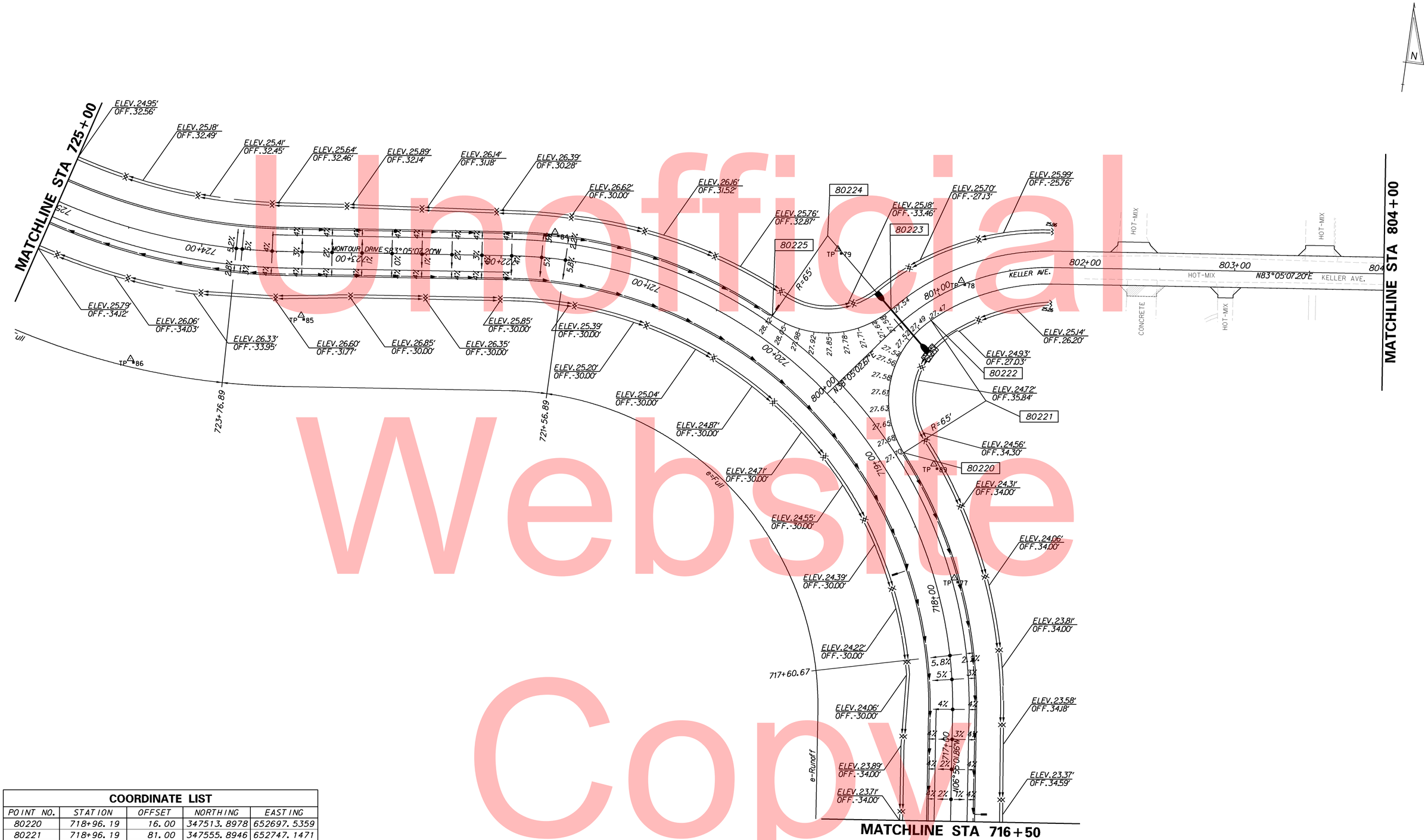

Unofficial Website Copy

COORDINATE LIST				
POINT NO.	STATION	OFFSET	NORTHING	EASTING
80220	718+96.19	16.00	347513.8978	652697.5359
80221	718+96.19	81.00	347555.8946	652747.1471
80222	800+86.00	11.00	347604.0065	652703.4408
80223	800+69.15	-11.00	347607.3976	652675.9659
80224	720+17.24	81.00	347650.3044	652627.1396
80225	720+17.24	16.00	347592.2010	652598.0021

DELAWARE DEPARTMENT OF TRANSPORTATION

ADDENDUMS / REVISIONS

SCALE 0 30 60 90 FEET

SR1, THOMPSONVILLE GRADE SEPARATED INTERSECTION

CONTRACT	BRIDGE NO.	X
T200412201	DESIGNED BY:	MATTHEW VINCENT
COUNTY	CHECKED BY:	
KENT		

GRADES & GEOMETRICS

SHEET NO. 56

TOTAL SHTS. 183

W:\MSV8\CELLS\PROJDEV\SB.CEL

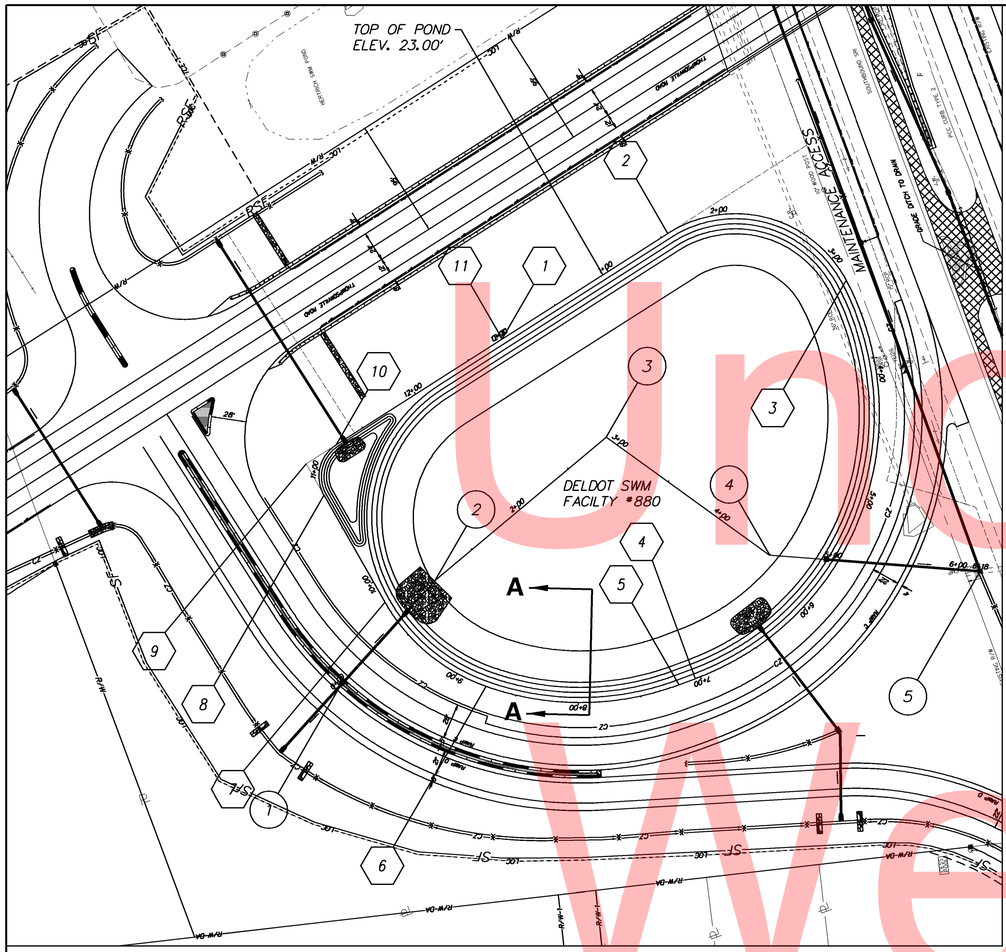

INFILTRATION BASIN CONSTRUCTION SEQUENCE AND NOTES:

IF THE INFILTRATION BASIN IS TO BE USED AS A SEDIMENT BASIN DURING CONSTRUCTION, GRADING SHALL ONLY BE COMPLETED TO 1-FOOT ABOVE THE PERMANENT BOTTOM ELEVATION.

A. CONSTRUCTION:
1. INSTALL STABILIZED CONSTRUCTION ENTRANCE(S) AS NEEDED.
2. CLEAR AND GRUB FOR INSTALLATION OF PERIMETER EROSION AND SEDIMENT CONTROLS.
3. INSTALL PERIMETER CONTROLS AS SHOWN ON THE PLANS.
4. CLEAR AND GRUB REMAINING AREA FOR STORMWATER MANAGEMENT FACILITY CONSTRUCTION.
5. CONSTRUCT BASIN OUTLET AND OUTFALL AS SHOWN ON THE PLANS. DEWATER FOUNDATION AS NEEDED IN ACCORDANCE WITH DEWATERING PRACTICES AS SHOWN IN THE STANDARD SPECIFICATIONS. INSTALL SKIMMER DEWATERING DEVICE AND/OR OTHER TEMPORARY MODIFICATIONS AS SHOWN IN THE PLANS.
6. EXCAVATE THE FACILITY AND COMPLETE TO 1-FOOT ABOVE THE PERMANENT BOTTOM ELEVATION. NO HEAVY EQUIPMENT SHALL BE USED AT THE PERMANENT BOTTOM ELEVATION. THE FINAL 1-FOOT OF MATERIAL TO BE EXCAVATED SHALL BE STARTED AT FROM ONE SIDE OF THE BASIN AND REMOVED GOING ACROSS OR STARTED IN THE MIDDLE AND WORKED TOWARDS THE OUTSIDES.
7. ALL DISTURBED AREAS MEETING FINAL ELEVATIONS AND GRADES ABOVE THE PERMANENT BOTTOM ELEVATION SHALL BE SEEDED WITH PERMANENT SEED - DRY GROUND AS SPECIFIED IN THE STANDARD SPECIFICATIONS. IF NOT MEETING FINAL ELEVATIONS AND GRADES, THEN SEED WITH TEMPORARY SEED - DRY GROUND AS SPECIFIED IN THE STANDARD SPECIFICATIONS.
8. BASIN BOTTOM ELEVATION SHALL BE SEEDED WITH PERMANENT SEED - WET GROUND.

B. MAINTENANCE OF INFILTRATION BASIN BEING USED AS A SEDIMENT BASIN:
1. THE CONTRACTOR SHALL INSPECT THE BASIN THE NEXT WORK DAY FOLLOWING A RAIN EVENT AND MAKE ANY REPAIRS AS NEEDED.
2. ANY EXCESS SEDIMENT AROUND THE OUTFALL AREA WILL BE REMOVED AND DISPOSED AT A LOCATION APPROVED BY THE ENGINEER.

C. CONVERSION TO PERMANENT STORMWATER MANAGEMENT FACILITY:
1. CONVERT THE BASIN INTO THE PERMANENT STORMWATER MANAGEMENT FACILITY AFTER ALL AREAS DRAINING TO THE BASIN HAVE ATTAINED FINAL STABILIZATION AND THE STORMWATER ENGINEER HAS APPROVED THE CONVERSION.
2. PUMP DOWN ANY STANDING WATER IN THE BASIN AS NECESSARY AS PER THE STANDARD SPECIFICATIONS.
3. REMOVE ANY EXCESS SEDIMENT. NO HEAVY EQUIPMENT SHALL BE USED AT THE PERMANENT BOTTOM ELEVATION. THE FINAL 1-FOOT OF MATERIAL TO BE EXCAVATED SHALL BE STARTED AT FROM ONE SIDE OF THE BASIN AND REMOVED GOING ACROSS OR STARTED IN THE MIDDLE AND WORKED TOWARDS THE OUTSIDES.
4. ALL DISTURBED AREAS MEETING FINAL ELEVATIONS AND GRADES ABOVE THE PERMANENT BOTTOM ELEVATION SHALL BE SEEDED WITH PERMANENT SEED - DRY GROUND AS SPECIFIED IN THE STANDARD SPECIFICATIONS.
5. BASIN BOTTOM ELEVATION SHALL BE SEEDED WITH PERMANENT SEED - WET GROUND.

℄ POND EMBANKMENT				
	STATION	NORTHING	EASTING	RADIUS
1	POB STA 0+00	348310.1798	652693.8799	
2	PC STA 1+56.17	348394.0701	652825.6039	100.00'
3	PCC STA 3+21.01	348356.7374	652967.5805	225.00'
4	PT STA 7+04.33	348040.1104	652847.5437	
5	PC STA 7+18.18	348035.2747	652834.5629	225.00'
6	PCC STA 8+74.83	348033.9710	652681.0634	150.00'
7	PT STA 9+81.73	348101.0601	652600.7516	
8	PC STA 10+79.66	348186.1168	652552.2150	30.00'
9	PI STA 11+08.24	348210.9380	652538.0510	
10	PT STA 11+25.33	348226.2895	652562.1559	
11	POE STA 12+81.50	348310.1798	652693.8799	

POND DESIGN SUMMARY FOR INFILTRATION POND				
DESIGN STORM	FACILITY INFLOW	FACILITY DISCHARGE	WATER SURFACE ELEVATION	STORAGE VOLUME (AC.FT)
1 - YEAR	12.02 cfs	0 cfs	18.61 ft	0.173
2 - YEAR	16.50 cfs	0 cfs	18.68 ft	0.354
10 - YEAR	39.32 cfs	0 cfs	19.45 ft	1.966
100 - YEAR	105.90 cfs	27.81 cfs	21.36 ft	6.501

HAZARD CLASSIFICATION: CLASS A AS PER POND CODE 378
DRAINAGE AREA TO FACILITY: 65.42 ACRES
MANAGEMENT PROVIDED BY FACILITY: WATER QUALITY BY EXTENDED DETENTION OF FIRST 2.0" OF RUNOFF, WATER QUANTITY FOR 2 & 10 YEAR STORMS.

℄ PRINCIPAL SPILLWAY			
	STATION	NORTHING	EASTING
1	PI STA 0+00.00	348035.2416	652565.7894
2	PI STA 1+12.00	348118.4054	652640.8079
3	PI STA 2+89.37	348232.3187	652776.7601
4	PI STA 4+49.83	348138.2508	652906.7629
5	POE STA 6+17.73	348125.4793	653074.1686

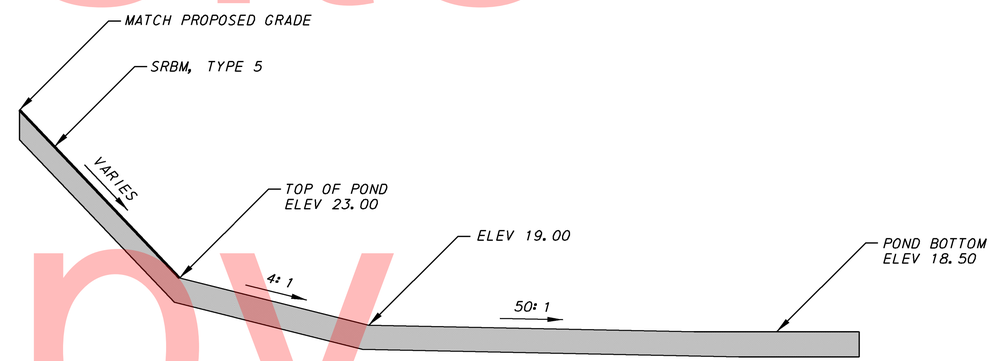

SECTION A-A
NOT TO SCALE

Unofficial Website Copy

DELAWARE DEPARTMENT OF TRANSPORTATION

ADDENDUMS / REVISIONS

NOT TO SCALE

SR1, THOMPSONVILLE GRADE SEPARATED INTERSECTION

CONTRACT	BRIDGE NO.	X
24-122-01	DESIGNED BY:	
COUNTY		
KENT	CHECKED BY:	

STORMWATER MANAGEMENT DETAILS SWM FACILITY #880

SHEET NO. 57
TOTAL SHTS. 183

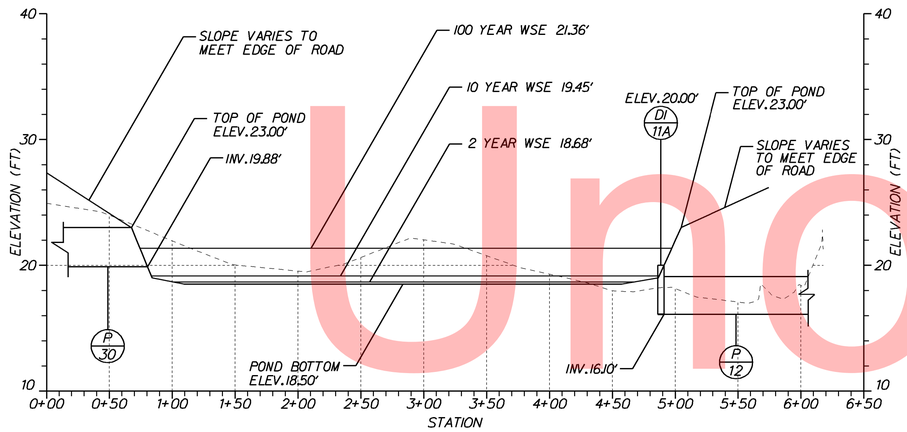

WEST POND SPILLWAY

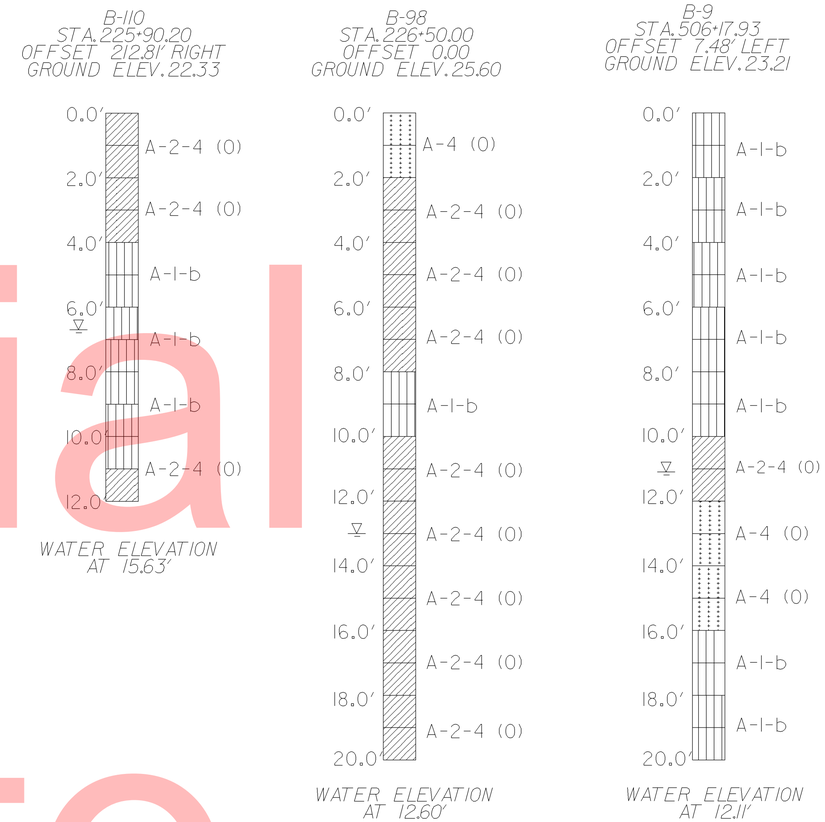

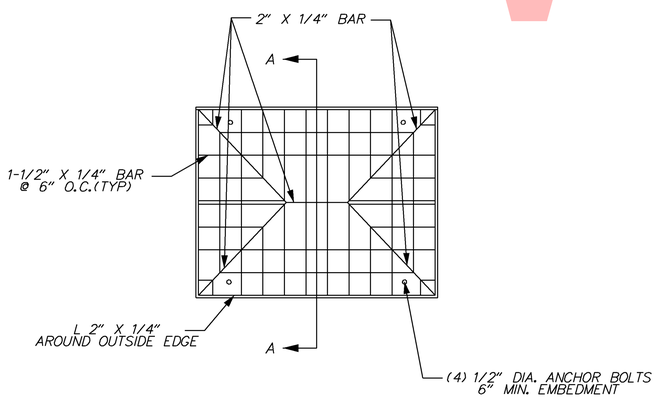

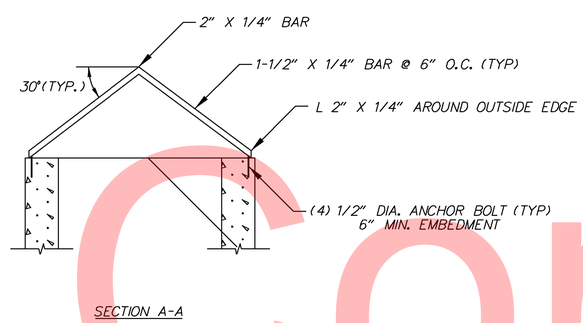

OVERFLOW TRASH RACK

NOTES:

1. TRASH RACK SHALL BE ALUMINUM.
2. ALL MOUNTING HARDWARE SHALL BE ALUMINUM OR STAINLESS STEEL.

Unofficial Website Copy

DELAWARE DEPARTMENT OF TRANSPORTATION	ADDENDUMS / REVISIONS	NOT TO SCALE	SR1, THOMPSONVILLE GRADE SEPARATED INTERSECTION	CONTRACT 24-122-01	BRIDGE NO. X	STORMWATER MANAGEMENT DETAILS SWM FACILITY #880	SHEET NO. 58
				COUNTY KENT	DESIGNED BY:		TOTAL SHTS. 183
					CHECKED BY:		

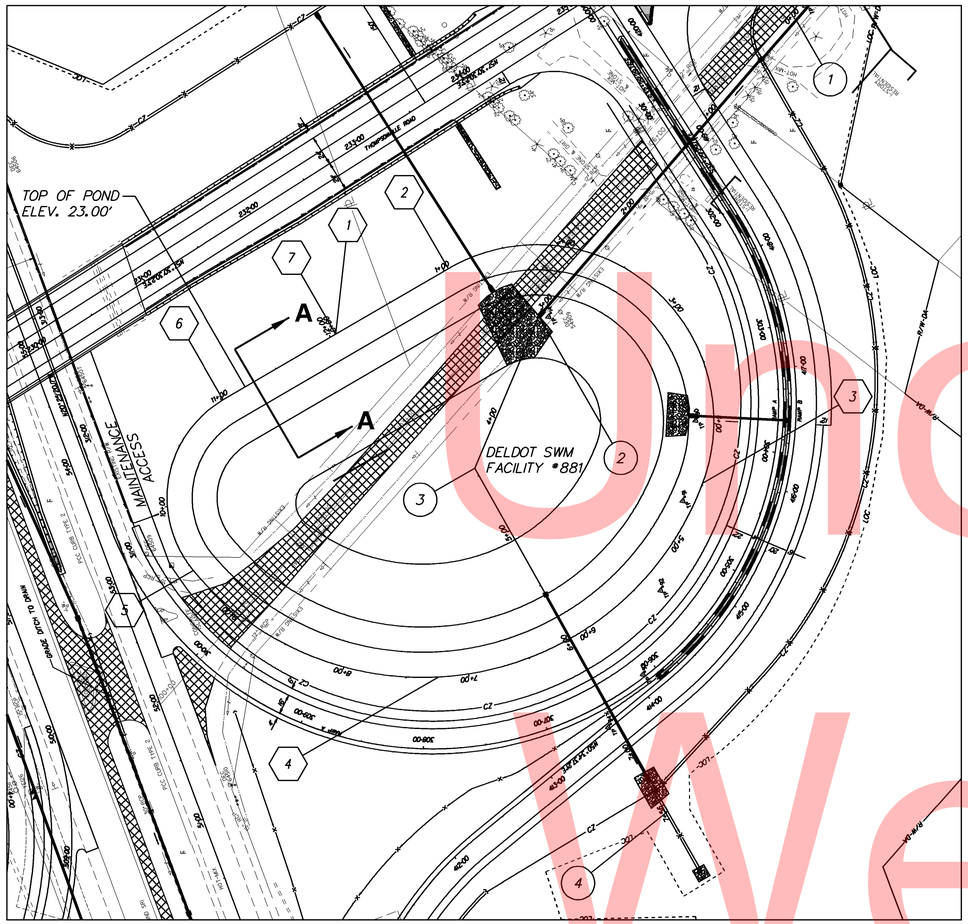

INFILTRATION BASIN CONSTRUCTION SEQUENCE AND NOTES:

IF THE INFILTRATION BASIN IS TO BE USED AS A SEDIMENT BASIN DURING CONSTRUCTION, GRADING SHALL ONLY BE COMPLETED TO 1-FOOT ABOVE THE PERMANENT BOTTOM ELEVATION.

A. CONSTRUCTION:
1. INSTALL STABILIZED CONSTRUCTION ENTRANCE(S) AS NEEDED.
2. CLEAR AND GRUB FOR INSTALLATION OF PERIMETER EROSION AND SEDIMENT CONTROLS.
3. INSTALL PERIMETER CONTROLS AS SHOWN ON THE PLANS.
4. CLEAR AND GRUB REMAINING AREA FOR STORMWATER MANAGEMENT FACILITY CONSTRUCTION.
5. CONSTRUCT BASIN OUTLET AND OUTFALL AS SHOWN ON THE PLANS. DEWATER FOUNDATION AS NEEDED IN ACCORDANCE WITH DEWATERING PRACTICES AS SHOWN IN THE STANDARD SPECIFICATIONS. INSTALL SKIMMER DEWATERING DEVICE AND/OR OTHER TEMPORARY MODIFICATIONS AS SHOWN IN THE PLANS.
6. EXCAVATE THE FACILITY AND COMPLETE TO 1-FOOT ABOVE THE PERMANENT BOTTOM ELEVATION. NO HEAVY EQUIPMENT SHALL BE USED AT THE PERMANENT BOTTOM ELEVATION. THE FINAL 1-FOOT OF MATERIAL TO BE EXCAVATED SHALL BE STARTED AT FROM ONE SIDE OF THE BASIN AND REMOVED GOING ACROSS OR STARTED IN THE MIDDLE AND WORKED TOWARDS THE OUTSIDES.
7. ALL DISTURBED AREAS MEETING FINAL ELEVATIONS AND GRADES ABOVE THE PERMANENT BOTTOM ELEVATION SHALL BE SEEDED WITH PERMANENT SEED - DRY GROUND AS SPECIFIED IN THE STANDARD SPECIFICATIONS. IF NOT MEETING FINAL ELEVATIONS AND GRADES, THEN SEED WITH TEMPORARY SEED - DRY GROUND AS SPECIFIED IN THE STANDARD SPECIFICATIONS.
8. BASIN BOTTOM ELEVATION SHALL BE SEEDED WITH PERMANENT SEED - WET GROUND.

B. MAINTENANCE OF INFILTRATION BASIN BEING USED AS A SEDIMENT BASIN:
1. THE CONTRACTOR SHALL INSPECT THE BASIN THE NEXT WORK DAY FOLLOWING A RAIN EVENT AND MAKE ANY REPAIRS AS NEEDED.
2. ANY EXCESS SEDIMENT AROUND THE OUTFALL AREA WILL BE REMOVED AND DISPOSED AT A LOCATION APPROVED BY THE ENGINEER.

C. CONVERSION TO PERMANENT STORMWATER MANAGEMENT FACILITY:
1. CONVERT THE BASIN INTO THE PERMANENT STORMWATER MANAGEMENT FACILITY AFTER ALL AREAS DRAINING TO THE BASIN HAVE ATTAINED FINAL STABILIZATION AND THE STORMWATER ENGINEER HAS APPROVED THE CONVERSION.
2. PUMP DOWN ANY STANDING WATER IN THE BASIN AS NECESSARY AS PER THE STANDARD SPECIFICATIONS.
3. REMOVE ANY EXCESS SEDIMENT. NO HEAVY EQUIPMENT SHALL BE USED AT THE PERMANENT BOTTOM ELEVATION. THE FINAL 1-FOOT OF MATERIAL TO BE EXCAVATED SHALL BE STARTED AT FROM ONE SIDE OF THE BASIN AND REMOVED GOING ACROSS OR STARTED IN THE MIDDLE AND WORKED TOWARDS THE OUTSIDES.
4. ALL DISTURBED AREAS MEETING FINAL ELEVATIONS AND GRADES ABOVE THE PERMANENT BOTTOM ELEVATION SHALL BE SEEDED WITH PERMANENT SEED - DRY GROUND AS SPECIFIED IN THE STANDARD SPECIFICATIONS.
5. BASIN BOTTOM ELEVATION SHALL BE SEEDED WITH PERMANENT SEED - WET GROUND.

℄ POND EMBANKMENT			
STATION	NORTHING	EASTING	RADIUS
1 POB STA 0+00	348652.4200	653253.9873	
2 PC STA 1+03.61	348704.5382	653343.5318	140.41'
3 PCC STA 4+48.56	348533.8794	653545.6311	237.76'
4 PCC STA 7+23.95	348379.9537	653335.7684	237.76'
5 PCC STA 9+44.46	348464.7426	653140.7084	90.00'
6 PT STA 11+01.12	348600.3017	653164.4427	
7 POE STA 12+04.73	348652.4200	653253.9873	

POND DESIGN SUMMARY FOR INFILTRATION BASIN				
DESIGN STORM	FACILITY INFLOW	FACILITY DISCHARGE	WATER SURFACE ELEVATION	STORAGE VOLUME (AC.FT)
1 - YEAR	0.00 cfs	0 cfs	20.00 FT	0.000
2 - YEAR	0.03 cfs	0 cfs	20.03 FT	0.007
10 - YEAR	1.25 cfs	0 cfs	20.66 ft	0.397
100 - YEAR	20.02 cfs	1.39 cfs	21.54 ft	1.68

HAZARD CLASSIFICATION: CLASS A AS PER POND CODE 378
DRAINAGE AREA TO FACILITY: 16.42 ACRES
MANAGEMENT PROVIDED BY FACILITY: WATER QUALITY BY EXTENDED DETENTION OF FIRST 2.0" OF RUNOFF, WATER QUANTITY FOR 2 & 10 YEAR STORMS.

℄ PRINCIPAL SPILLWAY		
STATION	NORTHING	EASTING
1 POB STA 0+00	348902.6875	653619.6801
2 PI STA 3+12.00	348666.6834	653415.6065
3 PI STA 4+43.19	348545.8486	653364.5099
4 POE STA 7+56.20	348273.0398	653517.9605

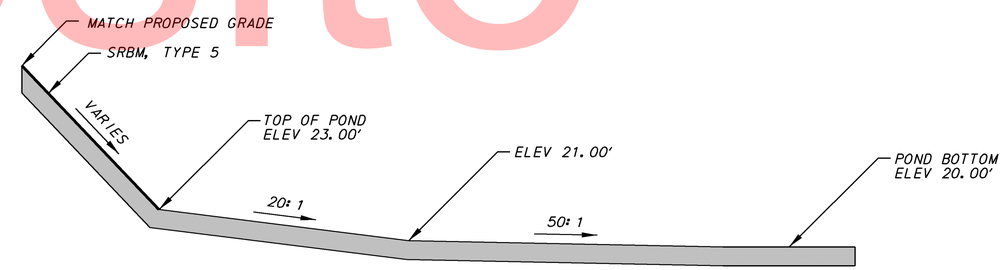

SECTION A-A
NOT TO SCALE

Unofficial Website Copy

DELAWARE DEPARTMENT OF TRANSPORTATION

ADDENDUMS / REVISIONS

NOT TO SCALE

SR1, THOMPSONVILLE GRADE SEPARATED INTERSECTION

CONTRACT	BRIDGE NO.	X
T200412201	DESIGNED BY:	
COUNTY		
KENT	CHECKED BY:	

STORMWATER MANAGEMENT DETAILS SWM FACILITY #881

SHEET NO. 59
TOTAL SHTS. 183

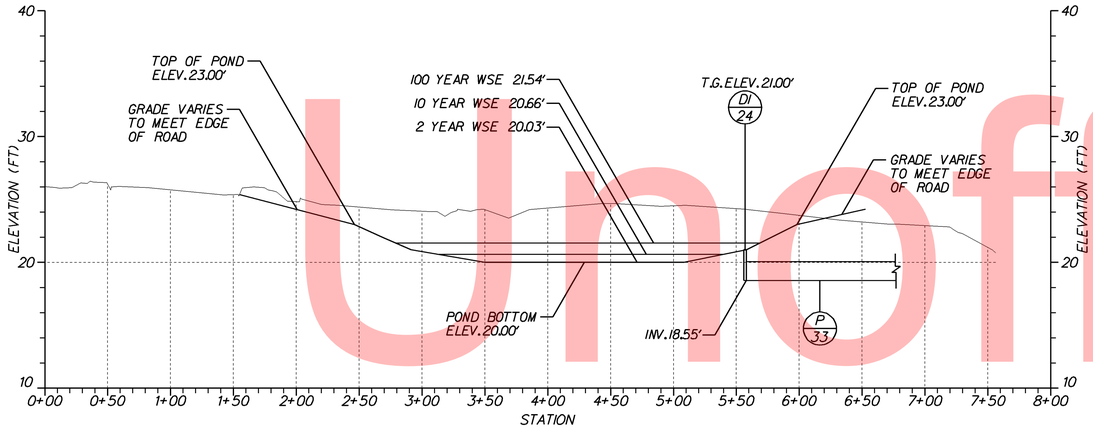

EAST POND SPILLWAY

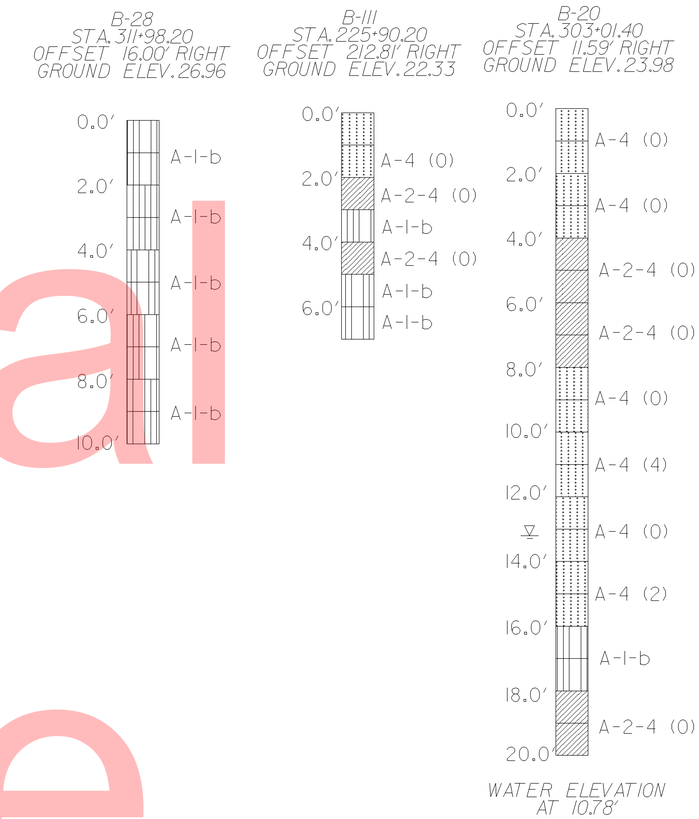

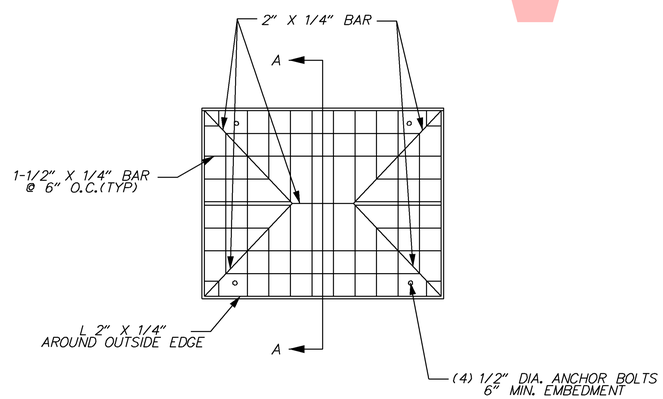

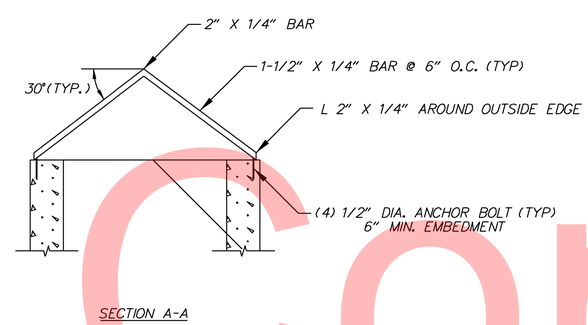

SECTION A-A

OVERFLOW TRASH RACK

NOTES:

1. TRASH RACK SHALL BE ALUMINUM.
2. ALL MOUNTING HARDWARE SHALL BE ALUMINUM OR STAINLESS STEEL.

Unofficial Website Copy

DELAWARE DEPARTMENT OF TRANSPORTATION	ADDENDUMS / REVISIONS	NOT TO SCALE	SR1, THOMPSONVILLE GRADE SEPARATED INTERSECTION	CONTRACT T200412201	BRIDGE NO. X	STORMWATER MANAGEMENT DETAILS SWM FACILITY #881	SHEET NO. 60
				COUNTY KENT	DESIGNED BY:		TOTAL SHTS. 183
					CHECKED BY:		

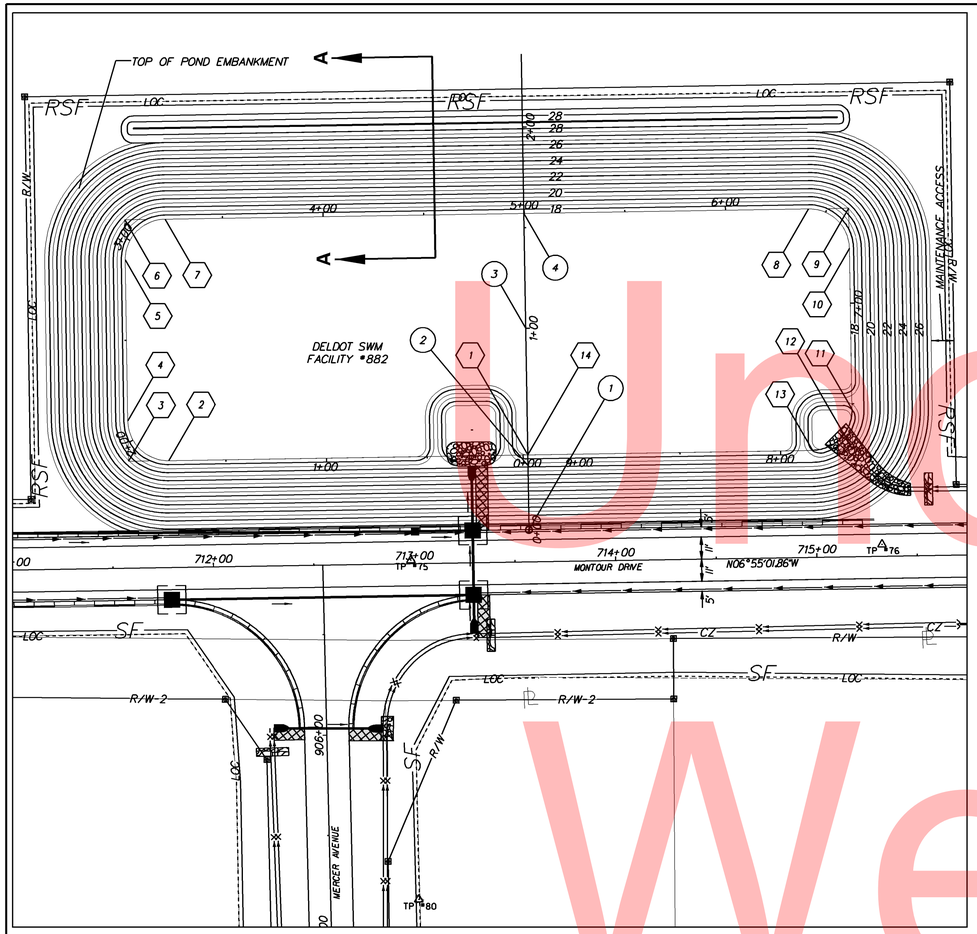

INFILTRATION BASIN CONSTRUCTION SEQUENCE AND NOTES:

IF THE INFILTRATION BASIN IS TO BE USED AS A SEDIMENT BASIN DURING CONSTRUCTION, GRADING SHALL ONLY BE COMPLETED TO 1-FOOT ABOVE THE PERMANENT BOTTOM ELEVATION.

A. CONSTRUCTION:
1. INSTALL STABILIZED CONSTRUCTION ENTRANCE(S) AS NEEDED.
2. CLEAR AND GRUB FOR INSTALLATION OF PERIMETER EROSION AND SEDIMENT CONTROLS.
3. INSTALL PERIMETER CONTROLS AS SHOWN ON THE PLANS.
4. CLEAR AND GRUB REMAINING AREA FOR STORMWATER MANAGEMENT FACILITY CONSTRUCTION.
5. CONSTRUCT BASIN OUTLET AND OUTFALL AS SHOWN ON THE PLANS. DEWATER FOUNDATION AS NEEDED IN ACCORDANCE WITH DEWATERING PRACTICES AS SHOWN IN THE STANDARD SPECIFICATIONS. INSTALL SKIMMER DEWATERING DEVICE AND/OR OTHER TEMPORARY MODIFICATIONS AS SHOWN IN THE PLANS.
6. EXCAVATE THE FACILITY AND COMPLETE TO 1-FOOT ABOVE THE PERMANENT BOTTOM ELEVATION. NO HEAVY EQUIPMENT SHALL BE USED AT THE PERMANENT BOTTOM ELEVATION. THE FINAL 1-FOOT OF MATERIAL TO BE EXCAVATED SHALL BE STARTED AT FROM ONE SIDE OF THE BASIN AND REMOVED GOING ACROSS OR STARTED IN THE MIDDLE AND WORKED TOWARDS THE OUTSIDES.
7. ALL DISTURBED AREAS MEETING FINAL ELEVATIONS AND GRADES ABOVE THE PERMANENT BOTTOM ELEVATION SHALL BE SEEDED WITH PERMANENT SEED - DRY GROUND AS SPECIFIED IN THE STANDARD SPECIFICATIONS. IF NOT MEETING FINAL ELEVATIONS AND GRADES, THEN SEED WITH TEMPORARY SEED - DRY GROUND AS SPECIFIED IN THE STANDARD SPECIFICATIONS.
8. BASIN BOTTOM ELEVATION SHALL BE SEEDED WITH PERMANENT SEED - WET GROUND.

B. MAINTENANCE OF INFILTRATION BASIN BEING USED AS A SEDIMENT BASIN:
1. THE CONTRACTOR SHALL INSPECT THE BASIN THE NEXT WORK DAY FOLLOWING A RAIN EVENT AND MAKE ANY REPAIRS AS NEEDED.
2. ANY EXCESS SEDIMENT AROUND THE OUTFALL AREA WILL BE REMOVED AND DISPOSED AT A LOCATION APPROVED BY THE ENGINEER.

C. CONVERSION TO PERMANENT STORMWATER MANAGEMENT FACILITY:
1. CONVERT THE BASIN INTO THE PERMANENT STORMWATER MANAGEMENT FACILITY AFTER ALL AREAS DRAINING TO THE BASIN HAVE ATTAINED FINAL STABILIZATION AND THE STORMWATER ENGINEER HAS APPROVED THE CONVERSION.
2. PUMP DOWN ANY STANDING WATER IN THE BASIN AS NECESSARY AS PER THE STANDARD SPECIFICATIONS.
3. REMOVE ANY EXCESS SEDIMENT. NO HEAVY EQUIPMENT SHALL BE USED AT THE PERMANENT BOTTOM ELEVATION. THE FINAL 1-FOOT OF MATERIAL TO BE EXCAVATED SHALL BE STARTED AT FROM ONE SIDE OF THE BASIN AND REMOVED GOING ACROSS OR STARTED IN THE MIDDLE AND WORKED TOWARDS THE OUTSIDES.
4. ALL DISTURBED AREAS MEETING FINAL ELEVATIONS AND GRADES ABOVE THE PERMANENT BOTTOM ELEVATION SHALL BE SEEDED WITH PERMANENT SEED - DRY GROUND AS SPECIFIED IN THE STANDARD SPECIFICATIONS.
5. BASIN BOTTOM ELEVATION SHALL BE SEEDED WITH PERMANENT SEED - WET GROUND.

℄ POND EMBANKMENT

	STATION	NORTHING	EASTING	RADIUS
1	POB STA 0+00	346977.5910	652745.2830	
2	PC STA 1+78.51	346800.3817	652766.7816	20.00'
3	PI STA 1+98.51	346780.5273	652769.1903	
4	PT STA 2+09.92	346778.1186	652749.3359	
5	PC STA 2+89.92	346768.4838	652669.9182	20.00'
6	PI STA 3+09.92	346766.0751	652650.0638	
7	PT STA 3+21.34	346785.9296	652647.6551	
8	PC STA 6+41.34	347103.6004	652609.1160	20.00'
9	PI STA 6+61.34	347123.4548	652606.7073	
10	PT STA 6+72.76	347125.8635	652626.5617	
11	PC STA 7+52.76	347135.4983	652705.9794	20.00'
12	PI STA 7+72.76	347137.9069	652725.8339	
13	PT STA 7+84.17	347118.0525	652728.2426	
14	POE STA 9+25.66	346977.5910	652745.2830	

POND DESIGN SUMMARY FOR INFILTRATION POND

DESIGN STORM	FACILITY INFLOW	FACILITY DISCHARGE	WATER SURFACE ELEVATION	STORAGE VOLUME (AC.FT)
1 - YEAR	1.34 cfs	0.00 cfs	17.59 ft	0.086
2 - YEAR	3.30 cfs	0.00 cfs	17.69 ft	0.189
10 - YEAR	13.77 cfs	0.00 cfs	18.33 ft	0.861
100 - YEAR	43.37 cfs	0.00 cfs	21.27 ft	4.374

HAZARD CLASSIFICATION: CLASS A AS PER POND CODE 378
DRAINAGE AREA TO FACILITY: 22.27 ACRES
MANAGEMENT PROVIDED BY FACILITY: WATER QUALITY BY EXTENDED DETENTION OF FIrST 2.0" OF RUNOFF, WATER QUANTITY FOR 2 & 10 YEAR STORMS.

℄ PRINCIPAL SPILLWAY

	STATION	NORTHING	EASTING
1	POB STA 0+00.00	346982.0675	652782.1825
2	PI STA 0+32.00	346978.2124	652750.4055
3	PI STA 1+00.00	346970.0241	652682.9103
4	POE STA 1+57.17	346963.1388	652626.1565

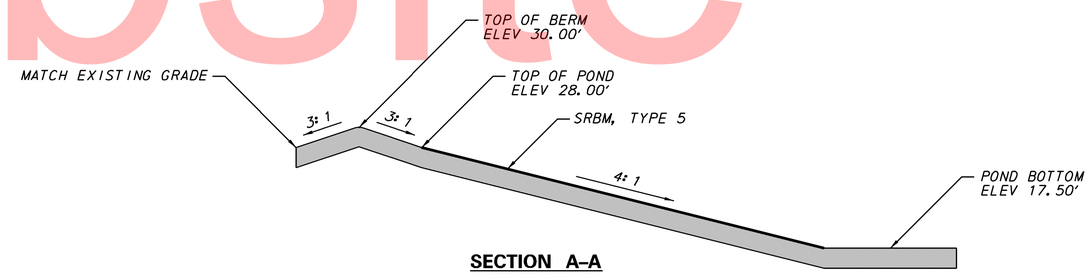

SECTION A-A
NOT TO SCALE

Unofficial Website Copy

DELAWARE DEPARTMENT OF TRANSPORTATION	ADDENDUMS / REVISIONS	NOT TO SCALE	SR1, THOMPSONVILLE GRADE SEPARATED INTERSECTION	CONTRACT T200412201 / COUNTY KENT	BRIDGE NO. X / DESIGNED BY: / CHECKED BY:	STORMWATER MANAGEMENT PLAN SWM FACILITY #882	SHEET NO. 61 / TOTAL SHTS. 183

Unofficial Website Copy

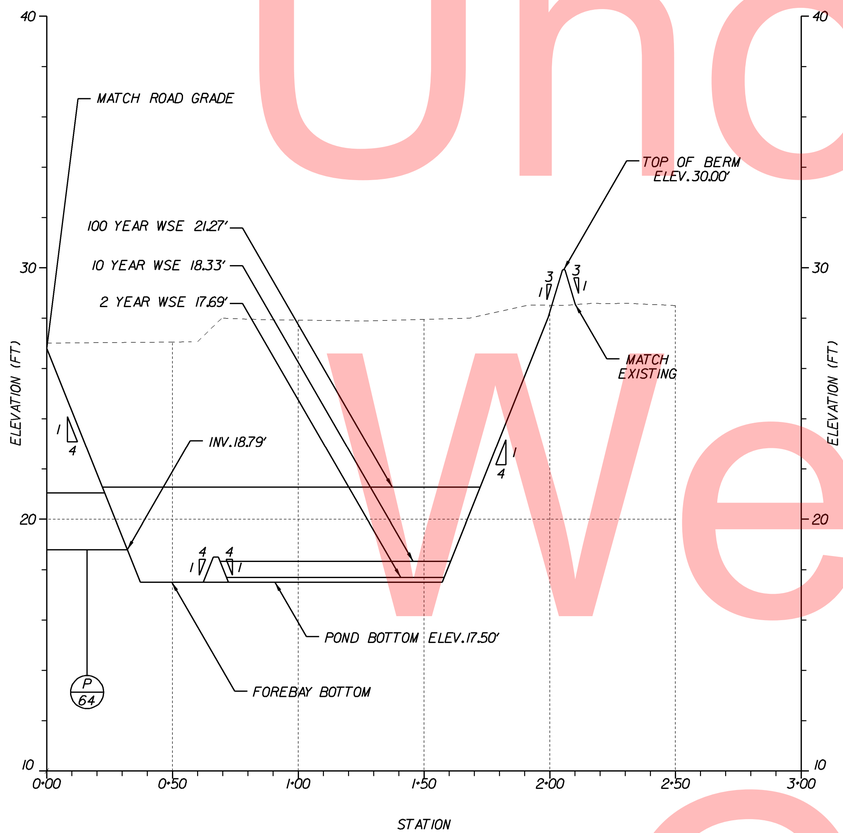

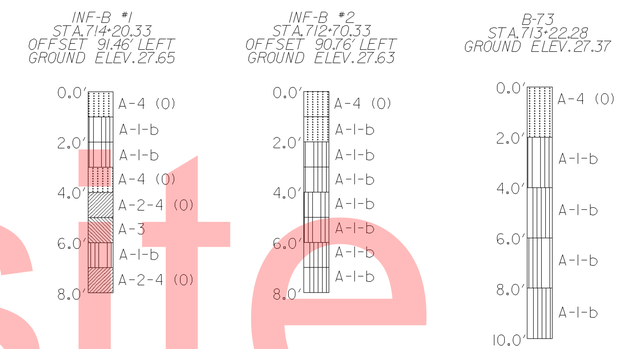

DELAWARE DEPARTMENT OF TRANSPORTATION	ADDENDUMS / REVISIONS	NOT TO SCALE	SR1, THOMPSONVILLE GRADE SEPARATED INTERSECTION	CONTRACT T200412201	BRIDGE NO. X	STORMWATER MANAGEMENT PLAN SWM FACILITY #882	SHEET NO. 62
				COUNTY KENT	DESIGNED BY:		TOTAL SHTS. 183
					CHECKED BY:		

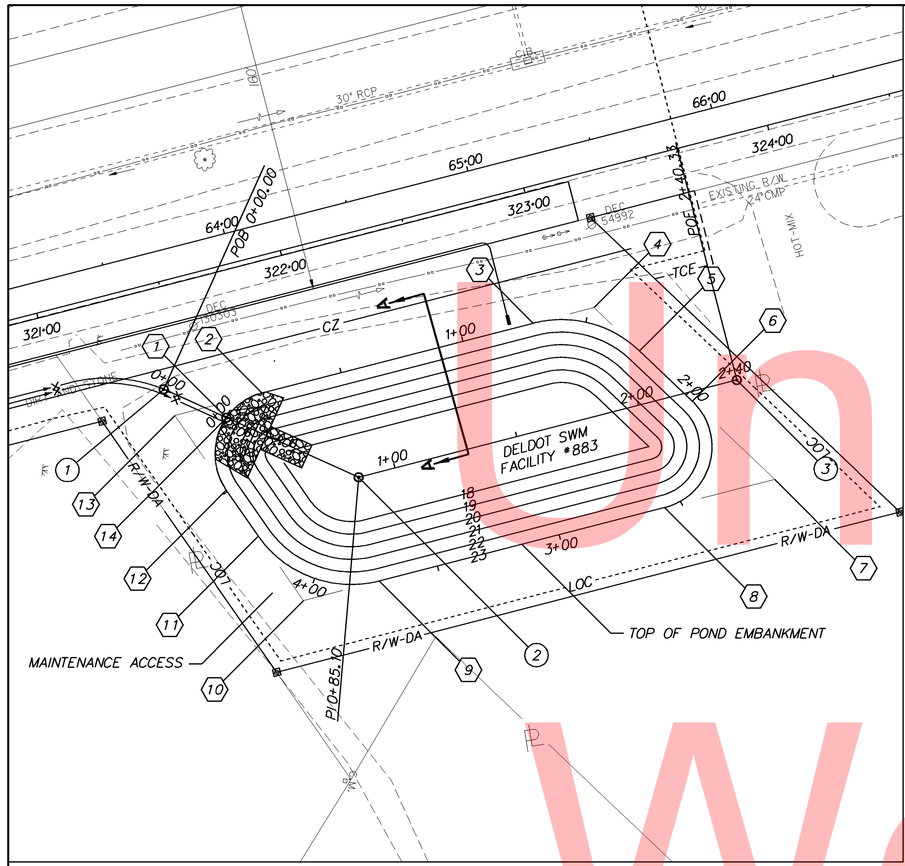

INFILTRATION BASIN CONSTRUCTION SEQUENCE AND NOTES:

IF THE INFILTRATION BASIN IS TO BE USED AS A SEDIMENT BASIN DURING CONSTRUCTION, GRADING SHALL ONLY BE COMPLETED TO 1-FOOT ABOVE THE PERMANENT BOTTOM ELEVATION.

A. CONSTRUCTION:

1. *INSTALL STABILIZED CONSTRUCTION ENTRANCE(S) AS NEEDED.*
2. *CLEAR AND GRUB FOR INSTALLATION OF PERIMETER EROSION AND SEDIMENT CONTROLS.*
3. *INSTALL PERIMETER CONTROLS AS SHOWN ON THE PLANS.*
4. *CLEAR AND GRUB REMAINING AREA FOR STORMWATER MANAGEMENT FACILITY CONSTRUCTION.*
5. *CONSTRUCT BASIN OUTLET AND OUTFALL AS SHOWN ON THE PLANS. DEWATER FOUNDATION AS NEEDED IN ACCORDANCE WITH DEWATERING PRACTICES AS SHOWN IN THE STANDARD SPECIFICATIONS. INSTALL SKIMMER DEWATERING DEVICE AND/OR OTHER TEMPORARY MODIFICATIONS AS SHOWN IN THE PLANS.*
6. *EXCAVATE THE FACILITY AND COMPLETE TO 1-FOOT ABOVE THE PERMANENT BOTTOM ELEVATION. NO HEAVY EQUIPMENT SHALL BE USED AT THE PERMANENT BOTTOM ELEVATION. THE FINAL 1-FOOT OF MATERIAL TO BE EXCAVATED SHALL BE STARTED AT FROM ONE SIDE OF THE BASIN AND REMOVED GOING ACROSS OR STARTED IN THE MIDDLE AND WORKED TOWARDS THE OUTSIDES.*
7. *ALL DISTURBED AREAS MEETING FINAL ELEVATIONS AND GRADES ABOVE THE PERMANENT BOTTOM ELEVATION SHALL BE SEEDED WITH PERMANENT SEED - DRY GROUND AS SPECIFIED IN THE STANDARD SPECIFICATIONS. IF NOT MEETING FINAL ELEVATIONS AND GRADES, THEN SEED WITH TEMPORARY SEED - DRY GROUND AS SPECIFIED IN THE STANDARD SPECIFICATIONS.*
8. *BASIN BOTTOM ELEVATION SHALL BE SEEDED WITH PERMANENT SEED - WET GROUND.*

B. MAINTENANCE OF INFILTRATION BASIN BEING USED AS A SEDIMENT BASIN:

1. *THE CONTRACTOR SHALL INSPECT THE BASIN THE NEXT WORK DAY FOLLOWING A RAIN EVENT AND MAKE ANY REPAIRS AS NEEDED.*
2. *ANY EXCESS SEDIMENT AROUND THE OUTFALL AREA WILL BE REMOVED AND DISPOSED AT A LOCATION APPROVED BY THE ENGINEER.*

C. CONVERSION TO PERMANENT STORMWATER MANAGEMENT FACILITY:

1. *CONVERT THE BASIN INTO THE PERMANENT STORMWATER MANAGEMENT FACILITY AFTER ALL AREAS DRAINING TO THE BASIN HAVE ATTAINED FINAL STABILIZATION AND THE STORMWATER ENGINEER HAS APPROVED THE CONVERSION.*
2. *PUMP DOWN ANY STANDING WATER IN THE BASIN AS NECESSARY AS PER THE STANDARD SPECIFICATIONS.*
3. *REMOVE ANY EXCESS SEDIMENT. NO HEAVY EQUIPMENT SHALL BE USED AT THE PERMANENT BOTTOM ELEVATION. THE FINAL 1-FOOT OF MATERIAL TO BE EXCAVATED SHALL BE STARTED AT FROM ONE SIDE OF THE BASIN AND REMOVED GOING ACROSS OR STARTED IN THE MIDDLE AND WORKED TOWARDS THE OUTSIDES.*
4. *ALL DISTURBED AREAS MEETING FINAL ELEVATIONS AND GRADES ABOVE THE PERMANENT BOTTOM ELEVATION SHALL BE SEEDED WITH PERMANENT SEED - DRY GROUND AS SPECIFIED IN THE STANDARD SPECIFICATIONS.*
5. *BASIN BOTTOM ELEVATION SHALL BE SEEDED WITH PERMANENT SEED - WET GROUND.*

℄ POND EMBANKMENT			
STATION	NORTHING	EASTING	RADIUS
1 POB STA 0+00	349493.5193	652767.2612	
2 PT STA 0+17.61	349506.6138	652756.0382	
3 PC STA 1+28.89	349610.9025	652717.2075	45.00'
4 PI STA 1+53.81	349634.2595	652708.5107	
5 PT STA 1+74.41	349654.0226	652723.6963	
6 PC STA 2+03.45	349677.0438	652741.3854	25.00'
7 PI STA 2+48.58	349712.8360	652768.8874	
8 PT STA 2+56.69	349670.5350	652784.6378	
9 PC STA 3+73.78	349560.8074	652825.4936	45.00'
10 PI STA 4+05.05	349531.5065	652836.4035	
11 PT STA 4+28.43	349511.0605	652812.7491	
12 PC STA 4+50.82	349496.4235	652795.8153	25.00'
13 PI STA 4+68.34	349472.8940	652768.5935	
14 POE STA 4+81.39	349493.5193	652767.2612	

POND DESIGN SUMMARY FOR INFILTRATION POND				
DESIGN STORM	FACILITY INFLOW	FACILITY DISCHARGE	WATER SURFACE ELEVATION	STORAGE VOLUME (AC.FT)
1 - YEAR	0.99 cfs	0.00 cfs	18.38 ft	0.040
2 - YEAR	1.82 cfs	0.00 cfs	18.68 ft	0.075
10 - YEAR	5.12 cfs	0.00 cfs	19.96 ft	0.268
100 - YEAR	12.86 cfs	0.00 cfs	22.15 ft	0.769

HAZARD CLASSIFICATION: CLASS A AS PER POND CODE 378
DRAINAGE AREA TO FACILITY: 2.86 ACRES
MANAGEMENT PROVIDED BY FACILITY: WATER QUALITY BY EXTENDED DETENTION OF FIRST 2.0" OF RUNOFF, WATER QUANTITY FOR 2, 10 & 100 YEAR STORMS.

℄ PRINCIPAL SPILLWAY		
STATION	NORTHING	EASTING
1 POB STA 0+00	349467.4541	652758.6476
2 PI STA 0+85.10	349548.2565	652785.3499
3 POE STA 2+40.33	349693.7292	652731.1847

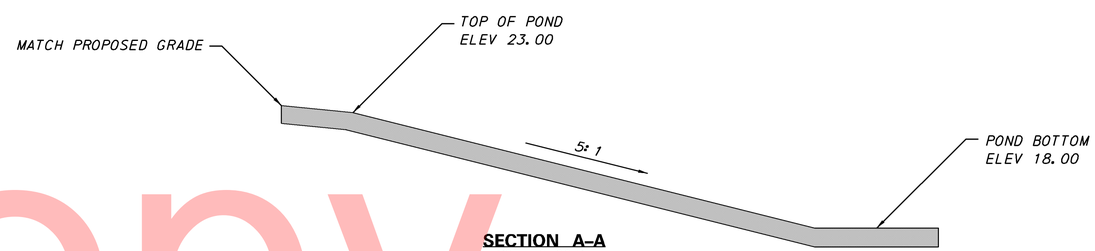

SECTION A-A
NOT TO SCALE

Unofficial Website Copy

DELAWARE DEPARTMENT OF TRANSPORTATION	ADDENDUMS / REVISIONS	NOT TO SCALE	SR1, THOMPSONVILLE GRADE SEPARATED INTERSECTION	CONTRACT T200412201	BRIDGE NO. X	STORMWATER MANAGEMENT PLAN DELDOT FACILITY #883	SHEET NO. 63
				COUNTY KENT	DESIGNED BY:		TOTAL SHTS. 183
					CHECKED BY:		

Unofficial Website Copy

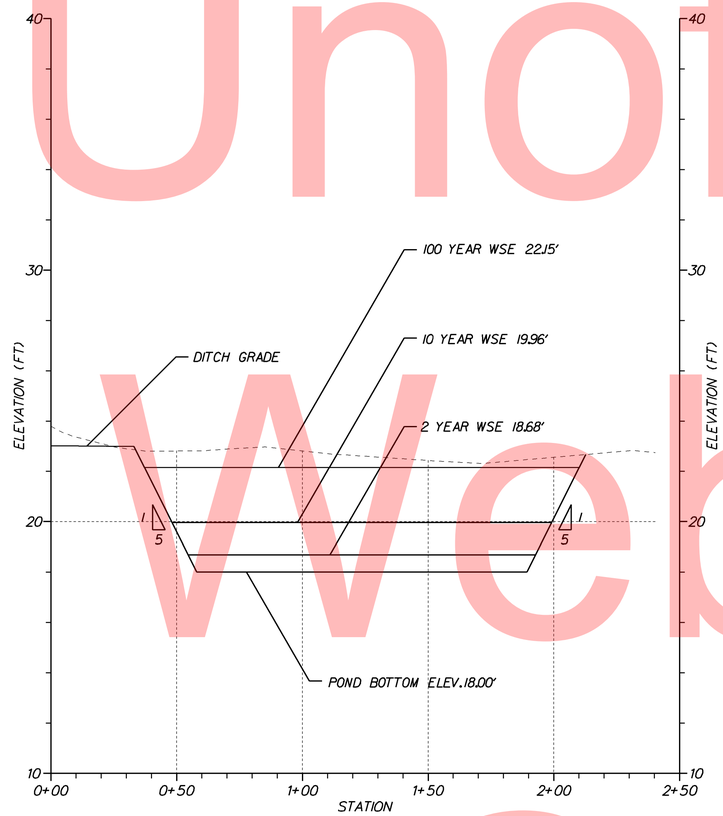

NORTH INFILTRATION BASIN

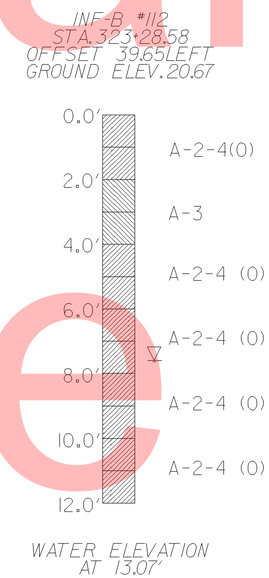

DELAWARE DEPARTMENT OF TRANSPORTATION	ADDENDUMS / REVISIONS	NOT TO SCALE	SR1, THOMPSONVILLE GRADE SEPARATED INTERSECTION	CONTRACT T200412201	BRIDGE NO. X	STORMWATER MANAGEMENT PLAN DELDOT FACILITY #883	SHEET NO. 64
				COUNTY KENT	DESIGNED BY:		TOTAL SHTS. 183
					CHECKED BY:		

NOTE: THE CONTRACTOR SHALL CONSTRUCT ITEM 252002 AS PER THE DNREC EROSION AND SEDIMENT CONTROL HANBOOK. THE GEOTEXTILE INLET INSERT SHALL MEET OR EXCEED THE SPECIFICATIONS OF TYPE GD-III GEOTEXTILE IN ACCORDANCE WITH APPENDIX A-3 OF THE DELAWARE EROSION & SEDIMENT CONTROL HANBOOK. ALL COSTS SHALL BE COVERED UNDER PRICE BID FOR ITEM 252002.

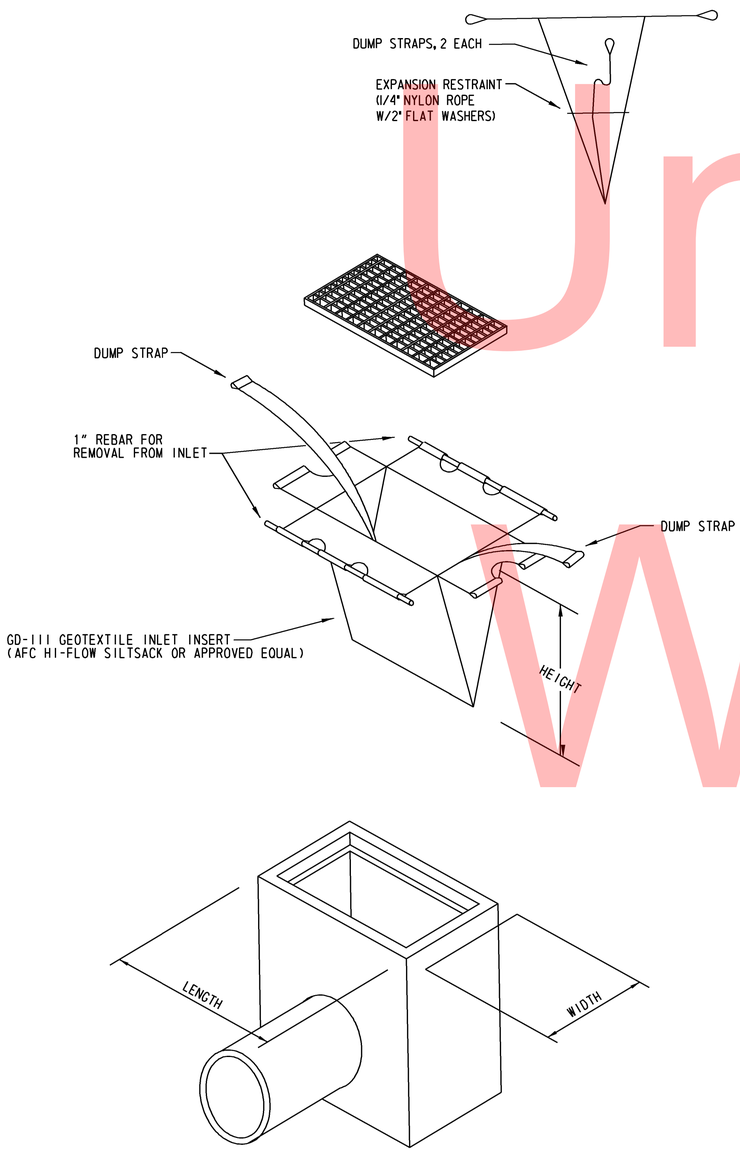

INLET PROTECTION - TYPE 2

NOT TO SCALE

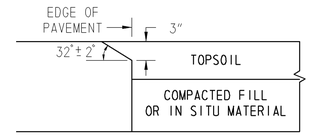

CONCRETE PAVEMENTS

NOT TO SCALE

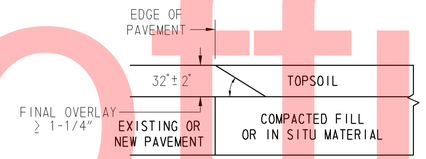

HOT-MIX PAVEMENTS AND OVERLAYS

NOT TO SCALE

SAFETY EDGE DETAIL

NOT TO SCALE

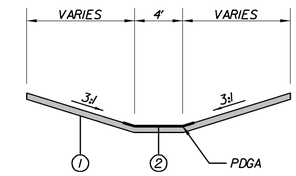

TYPICAL SECTION DITCHING

RAMP B: STA 412+00 RT

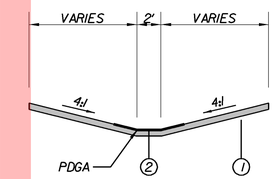

TYPICAL SECTION DITCHING

RAMP B: STA 413+50 RT

NOT TO SCALE

LEGEND

1. ITEM 732002, TOPSOIL, 6" OR ITEM 733002, TOPSOILING, 6" ITEM 734013, PERMANENT GRASS SEEDING, DRY GROUND
2. ITEM 735535, SOIL RENTENTION BLANKET MUCH, TYPE 5 (MIN. 6' WIDTH)

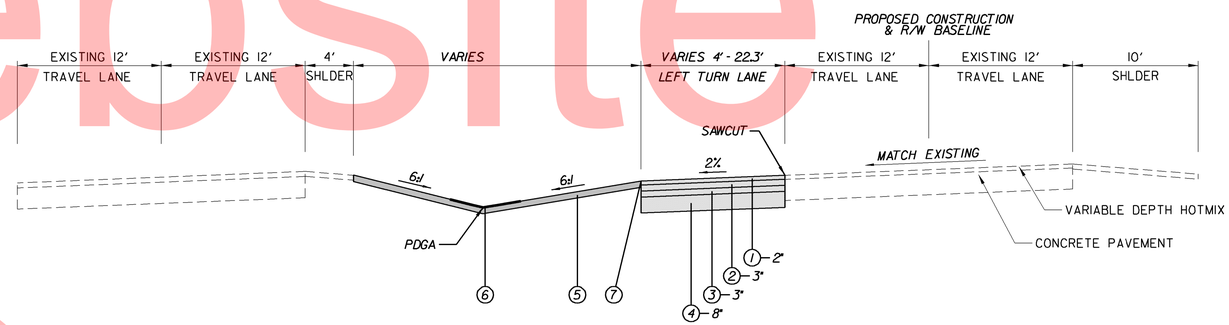

TYPICAL SECTION LEFT TURN LANE SR 1/WILLIAMSBURG DRIVE

SR 1 NB: STA 22+00.00 TO STA 27+31.50

NOT TO SCALE

LEGEND

1. ITEM 401804, WMA, SUPERPAVE TYPE C, 160 GYRATIONS, PG 70-22 (CARBONATE STONE)
2. ITEM 401813, WMA, SUPERPAVE TYPE B, 160 GYRATIONS, PG 70-22
3. ITEM 401819, WMA, SUPERPAVE BCBC, PG 64-22
4. ITEM 302007, GABC, TYPE B
5. ITEM 732002, TOPSOIL, 6" OR ITEM 733002, TOPSOILING, 6" ITEM 734013, PERMANENT GRASS SEEDING, DRY GROUND
6. ITEM 735535, SOIL RENTENTION BLANKET MUCH, TYPE 5 (MIN. 6' WIDTH)
7. ITEM 401752, SAFETY EDGE FOR ROADWAY PAVEMENT

Unofficial Website Copy

DELAWARE DEPARTMENT OF TRANSPORTATION	ADDENDUMS / REVISIONS	SR1, THOMPSONVILLE GRADE SEPARATED INTERSECTION	CONTRACT T200412201	BRIDGE NO.	CONSTRUCTION DETAILS	SHEET NO. 65
			COUNTY KENT	DESIGNED BY: MATTHEW VINCENT		TOTAL SHTS. 183
				CHECKED BY:		

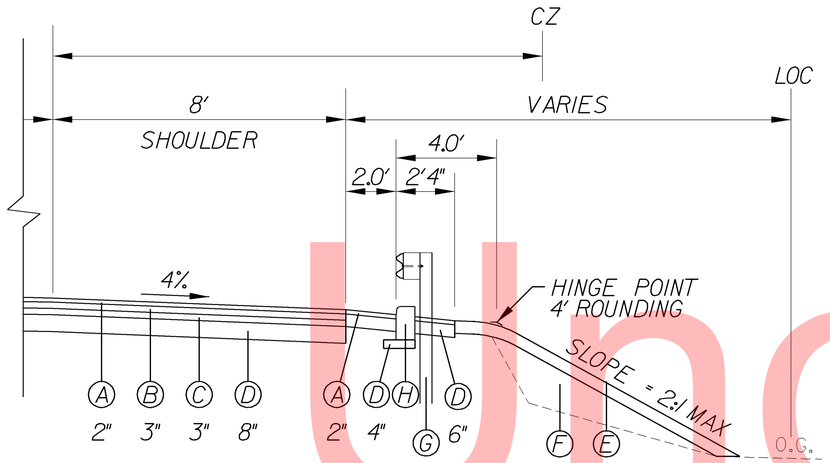

LEGEND

- Ⓐ ITEM 401804,WMA,SUPERPAVE TYPE C,160 GYRATIONS,PG 70-22
- Ⓑ ITEM 401813,WMA,SUPERPAVE TYPE B,160 GYRATIONS,PG 70-22
- Ⓒ ITEM 401819,WMA,SUPERPAVE BCBC,PG 64-22
- Ⓓ ITEM 302007 - GRADED AGGREGATE BASE COURSE,TYPE B
- Ⓔ ITEM 732002 - TOPSOIL,6" OR ITEM 733002 - TOPSOILING,6"
  ITEM 734013 - PERMANENT GRASS SEEDING,DRY GROUND
- Ⓕ ITEM 209006 - BORROW,TYPE F
- Ⓖ ITEM 720050 - GALVANIZED STEEL BEAM GUARDRAIL,TYPE 1-31
- Ⓗ ITEM 701012 - P.C.C.CURB,TYPE 1-4

GUARDRAIL APPLICATION

NOTES:
1. GUARDRAIL SHALL BE CONSTRUCTED ACCORDING TO THE STANDARD CONSTRUCTION DETAIL FOR RURAL SHOULDER APPLICATION.
2. PCC CURB,TYPE 1-4 SHALL ONLY BE PLACED WHERE IDENTIFIED ON THE CONSTRUCTION PLANS.

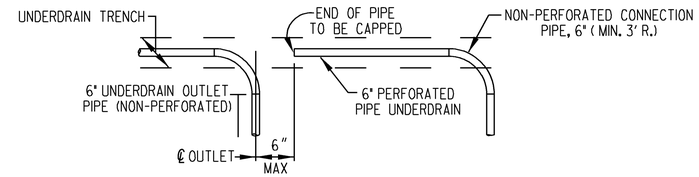

UNDERDRAIN OUTLET DETAIL

NOT TO SCALE

NOTES:
1. CONNECT PIPE UNDERDRAINS TO INLETS USING A NON-PERFORATED CONNECTION PIPE. FURNISHING AND INSTALLING CONNECTION PIPE AND PIPE END CAPS TO BE INCLUDED IN THE UNIT PRICE BID FOR ITEM 715001-PERFORATED PIPE UNDERDRAINS, 6". CONNECTION PIPES AND END CAPS SHALL BE THE SAME MATERIAL AS FOR PERFORATED PIPE UNDERDRAINS.

2. PAYMENT FOR CONNECTING PIPE UNDERDRAINS OR UNDERDRAIN OUTLET PIPE TO INLETS TO BE INCLUDED IN THE UNIT PRICE BID FOR ITEM 715001 - PERFORATED PIPE UNDERDRAINS, 6".

3. CONNECTION PIPE SHALL BE LAID WITH A MINIMUM RADIUS OF 3'.

4. WHEN TWO LINES OF PIPE UNDERDRAIN DRAIN TO A LOW POINT, ONLY ONE UNDERDRAIN OUTLET PIPE IS TO BE USED. CONNECTION SHALL BE MADE WITH A "Y" AT THE END OF THE 3' RADIUS OF THE CONNECTION PIPE. FURNISHING AND INSTALLING THE "Y" SHALL BE INCLUDED IN THE UNIT PRICE BID ITEM 715001-PERFORATED PIPE UNDERDRAINS, 6".

5. CUT GEOTEXTILE IN WALL OF UNDERDRAIN TRENCH FOR CONNECTION PIPE SO AS TO MINIMIZE EXPOSURE OF THE TRENCH. WRAP SECTION OF CONNECTION PIPE OUTSIDE TRENCH IN GEOTEXTILE AND PROVIDE 6" LAP AROUND CONNECTION PIPE AT UNDERDRAIN TRENCH WALL. GEOTEXTILE TO BE INCLUDED IN THE UNIT PRICE BID FOR ITEM 715001-PERFORATED PIPE UNDERDRAINS, 6".

6. NON-PERFORATED UNDERDRAIN OUTLET PIPE SHALL HAVE A SMOOTH INSIDE WALL AND BE THE SAME MATERIAL AS FOR PERFORATED PIPE UNDERDRAINS OR AS APPROVED BY THE ENGINEER. ALL REQUIRED CONNECTIONS SHALL BE INCIDENTAL TO ITEM 715500-UNDERDRAIN OUTLET PIPE, 6".

7. SEE UNDERDRAIN OUTLET SCHEDULE ON PLAN SHEETS FOR LOCATIONS AND LIMITS OF UNDERDRAIN OUTLETS.

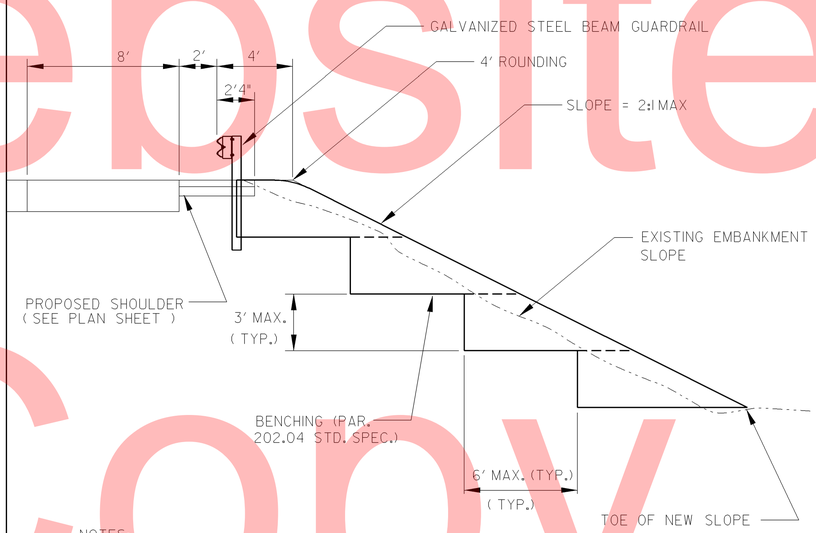

NOTES:
BENCHING SHALL CONFORM TO THIS DETAIL AT ALL LOCATIONS WHERE EXISTING EMBANKMENTS ARE WIDENED.

BENCHING DETAIL

NOT TO SCALE

Unofficial Website Copy

DELAWARE DEPARTMENT OF TRANSPORTATION	ADDENDUMS / REVISIONS	SR1, THOMPSONVILLE GRADE SEPARATED INTERSECTION	CONTRACT T200412201	BRIDGE NO.	CONSTRUCTION DETAILS	SHEET NO. 66
			COUNTY KENT	DESIGNED BY: MATTHEW VINCENT		TOTAL SHTS. 183
				CHECKED BY:		

BRIDGE SHEET INDEX

SHEET	DESCRIPTION
1	BRIDGE SHEET INDEX & QUANTITY SUMMARY
2	LAYOUT PLAN
3	BRIDGE PLAN & ELEVATION
4	BRIDGE SECTION
5	CAST-IN-PLACE PILE DETAILS
6	WEST ABUTMENT FOOTING & PILE LAYOUT PLAN
7	WEST ABUTMENT PLAN & ELEVATION
8	EAST ABUTMENT FOOTING & PILE LAYOUT PLAN
9	EAST ABUTMENT PLAN & ELEVATION
10	ABUTMENT & WINGWALL SECTIONS
11	WINGWALL ELEVATIONS
12	PIER DRILLED SHAFT LAYOUT & DETAILS
13	PIER PLAN, ELEVATION & SECTION
14	PIER REINFORCEMENT DETAILS
15	BEARING DETAILS
16	FRAMING PLAN
17	CAMBER DETAILS
18	BEAM DETAILS
19	EXPANSION JOINT DETAILS
20	DECK REINFORCEMENT
21	FINISHED DECK ELEVATION
22	BARRIER & SAFETY FENCE DETAILS
23	REINFORCING BAR LISTS
24-28	SOIL BORING LOGS

ESTIMATED CONTRACT QUANTITIES

ITEM #	DESCRIPTION	UNIT	PROPOSAL
207000	EXCAVATION AND BACKFILL FOR STRUCTURES	C.Y.	207
209003	BORROW, TYPE "C"	C.Y.	8460
210000	FURNISHING BORROW TYPE "C" FOR STRUCTURE BACKFILL	C.Y.	140
602003	PCC MASONRY, ABUTMENT FOOTING, CLASS A	C.Y.	226
602006	PCC MASONRY, PIER FOOTING, CLASS B	C.Y.	92
602007	PCC MASONRY, PIER ABOVE FOOTING, CLASS A	C.Y.	62
602013	PCC MASONRY, SUPERSTRUCTURE, CLASS D	C.Y.	374
602015	PCC MASONRY, ABUTMENT ABOVE FOOTING, CLASS A	C.Y.	252
602017	PCC MASONRY, PARAPET, CLASS A	C.Y.	47.8
602646	SILICONE ACRYLIC CONCRETE SEALER	S.F.	1510
604000	BAR REINFORCEMENT, EPOXY COATED	LB	204634
605001	STEEL STRUCTURES	L.S.	L.S.
605511	PREFABRICATED EXPANSION JOINT SYSTEM, 3"	L.F.	127
608000	COARSE AGGREGATE FOR FOUNDATION STABILIZATION	TON	235
618041	FURNISH CAST-IN-PLACE CONCRETE PILES, 14"	L.F.	2937
618046	FURNISH STEEL SHELL TEST PILES, 14"	L.F.	192
618526	DRILLED SHAFT FOUNDATIONS	L.F.	710
618527	PILE INTEGRITY TESTING OF DRILLED SHAFT FDN.	EA	1
619021	INSTALL CAST-IN-PLACE CONCRETE PILES, 14"	L.F.	2937
619025	INSTALL STEEL SHELL TEST PILES, 14"	L.F.	192
619519	DYNAMIC PILE TESTING BY CONTRACTOR	EACH	4
712020	RIPRAP, R-4	TON	380
713003	GEOTEXTILES, RIPRAP	S.Y.	670
715000	PERFORATED PIPE UNDERDRAINS, 4"	L.F.	196
727507	BRIDGE SAFETY FENCE	L.F.	547

LRFR LOAD RATINGS

RATING VEHICLE	RATING TYPE	CONTROLLING UNIT/SPAN/ MEMBER	CONTROLLING POINT	LOAD EFFECT	LIMIT STATE	LOAD RATING FACTOR	LOAD RATING (tons)
HL-93 TRUCK	INVENTORY	INT. GIRDER	110.00	SHEAR	STRENGTH I	1.26	N/A
HL-93 TRKYRA	INVENTORY	INT. GIRDER	110.00	SHEAR	STRENGTH I	1.07	N/A
HL-93 TRUCK	OPERATING	INT. GIRDER	110.00	SHEAR	STRENGTH II	1.63	N/A
HL-93 TRKTRA	OPERATING	INT. GIRDER	110.00	SHEAR	STRENGTH II	1.39	N/A
S220	LEGAL	INT. GIRDER	110.00	SHEAR	STRENGTH I	3.26	65.26
S335	LEGAL	INT. GIRDER	110.00	SHEAR	BEARING	2.12	74.14
S437	LEGAL	INT. GIRDER	110.00	SHEAR	BEARING	2.03	74.47
T330	LEGAL	INT. GIRDER	110.00	SHEAR	BEARING	3.49	74.66
S435	LEGAL	INT. GIRDER	110.00	SHEAR	BEARING	2.20	77.09
T540	LEGAL	INT. GIRDER	110.00	SHEAR	BEARING	1.98	79.39

Unofficial Website Copy

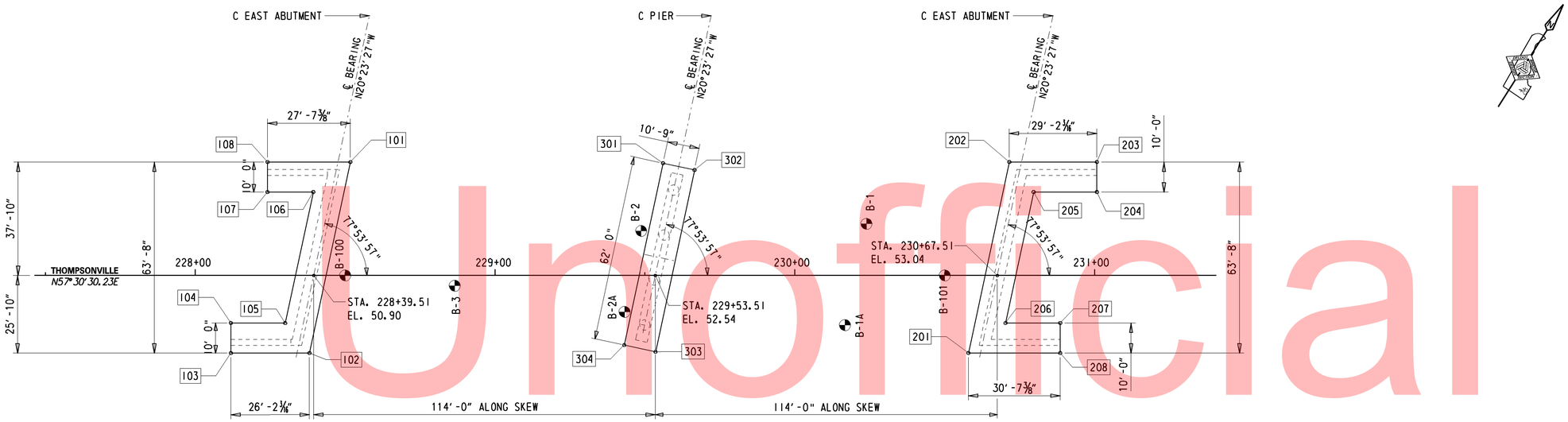

LAYOUT PLAN

WEST ABUTMENT WORKING POINTS				
POINT	STATION	OFFSET	NORTHING	EASTING
101	228+51.71	L37.8	348593.21	652872.39
102	228+38.06	R25.83	348532.17	652895.08
103	228+11.88	R25.83	348518.11	652872.99
104	228+11.88	R15.83	348526.54	652867.62
105	228+29.98	R15.83	348536.27	652882.89
106	228+39.34	L27.83	348578.13	652867.33
107	228+24.10	L27.83	348569.94	652854.47
108	228+24.10	L37.83	348578.38	652849.10

PIER WORKING POINTS				
POINT	STATION	OFFSET	NORTHING	EASTING
301	229+56.04	L37.44	348648.91	652960.60
302	229+66.55	L35.18	348652.66	652970.67
303	229+53.55	R25.44	348594.54	652992.28
304	229+43.04	R23.18	348590.80	652982.20

EAST ABUTMENT WORKING POINTS				
POINT	STATION	OFFSET	NORTHING	EASTING
201	230+57.88	R25.83	348650.26	653080.49
202	230+71.53	L37.83	348711.29	653057.80
203	231+00.71	L37.83	348726.97	653082.42
204	231+00.71	L27.83	348718.53	653087.79
205	230+79.61	L27.83	348707.20	653069.99
206	230+70.25	R15.83	348665.34	653085.55
207	230+88.49	R15.83	348675.13	653100.94
208	230+88.49	R25.83	348666.70	653106.31

Unofficial Website Copy

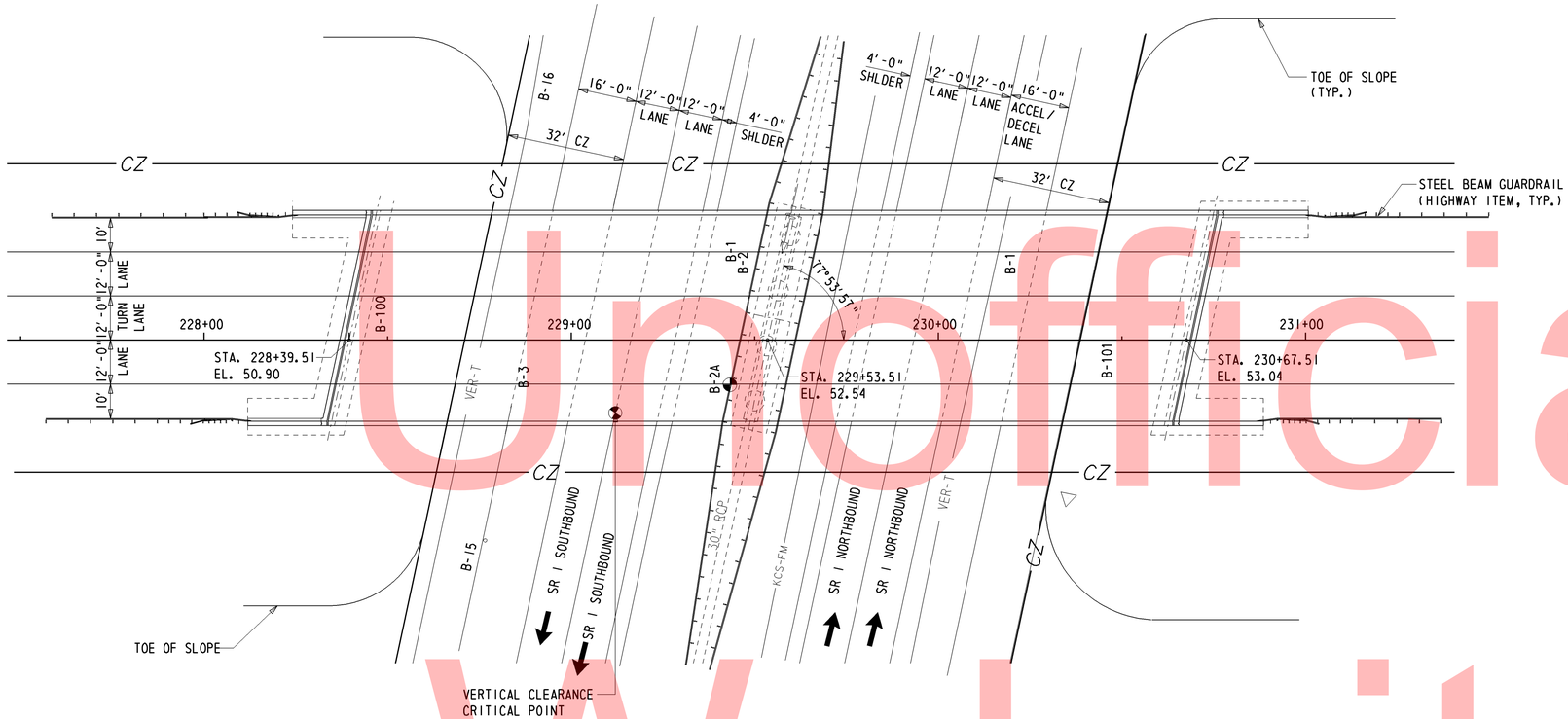

PLAN

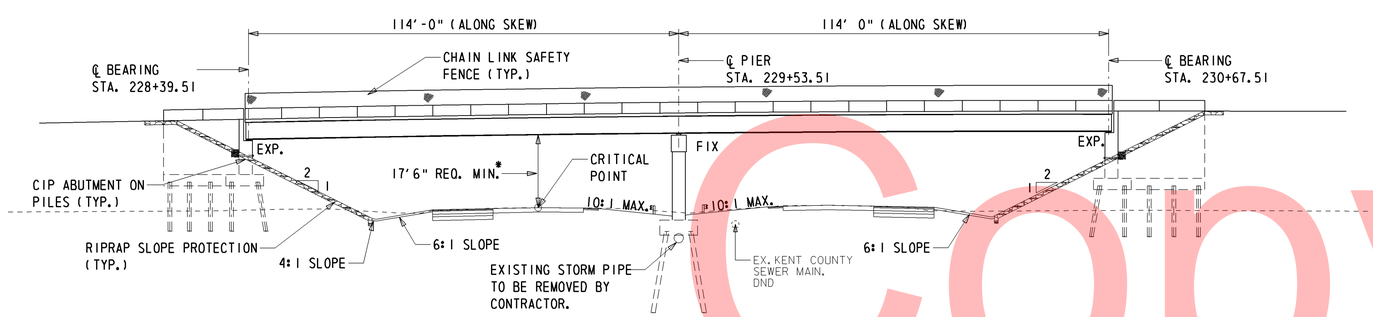

ELEVATION

* EXTRA FOOT REQIURED FOR FUTURE WORK REHABILITATION

BRIDGE PROJECT NOTES

1. DESIGN SPECIFICATIONS:
   AASHTO LRFD BRIDGE DESIGN SPECIFICATIONS, 5th EDITION (2010).

2. LOADING:
   LIVE LOAD - AASHTO HL-93
   DEAD LOAD - INCLUDES 25 PSF PROVISION FOR FUTURE WEARING SURFACE AND 15 PSF FOR STAY-IN-PLACE FORMS (INCLUDES CONCRETE IN FORM CORRUGATIONS)

3. MATERIAL AND FABRICATION:
   DELAWARE DEPARTMENT OF TRANSPORTATION STANDARD SPECIFICATIONS, 2001, WITH CURRENT MODIFICATIONS, ADDITIONS, AND SPECIAL PROVISIONS.

4. CONCRETE:
   SPECIFIED COMPRESSIVE STRENGTH (f'c)
   DECK SLAB AND DIAPHRAGMS-------4.5 KSI, CLASS 'D'
   CONCRETE ABOVE FOOTINGS--------4.5 KSI, CLASS 'A'
   CONCRETE IN FOOTINGS----------4.5 KSI, CLASS 'A'
   CONCRETE IN PIER FOOTING ------3.0 KSI, CLASS 'B'
   CHAMFER ALL EXPOSED EDGES ¾" UNLESS NOTED OTHERWISE.

5. REINFORCING STEEL:
   ALL REINFORCING STEEL SHALL BE AASHTO M31, GRADE 60.
   ALL REINFORCING STEEL IN THE SHALL BE EPOXY COATED IN ACCORDANCE WITH AASHTO M284. MINIMUM REBAR CLEARANCE SHALL BE 2" OR AS NOTED.

6. BEAMS AND DIAPHRAGMS:
   STRUCTURAL STEEL SHALL CONFORM TO ASTM A 709, GRADE 50W UNCOATED WEATHERING STEEL WITH Fy = 50 ksi (FOR ALL OTHER GIRDER AND CROSS-FRAME COMPONENTS) INCLUDING THE ADDITIONAL REQUIREMENTS FOR CHARPY V-NOTCH TESTING OF AASHTO M270 FOR PRIMARY LOAD CARRYING MEMBERS. FOR WELDING OF STRUCTURAL STEEL, USE ANSI/AASHTO/AWS D1.5 2010 BRIDGE WELDING CODE.

7. ABUTMENT SLOPE PROTECTION:
   ABUTMENT SLOPE PROTECTION SHALL CONSIST OF 1'-0" R-4 RIPRAP ON GEOTEXTILE. RIPRAP SHALL EXTEND TO DITCH FROM THE FACE OF EACH ABUTMENT AND TERMINATE IN A 2'0" DEEP TOE. RIPRAP SHALL EXTEND 5'-0" BEYOND THE FACE OF EACH WINGWALL AND 5'0" AT GRADE BEYOND THE END OF EACH WINGWALL.

8. CONCRETE SEALER
   SILICONE ARCYLIC CONCRETE SEALER SHALL BE APPLIED TO ALL EXPOSED CONCRETE FACES EXCEPT RIDING SURFACES. THIS INCLUDES ENTIRE PIER, ABUTMENT BACKWALLS, ABUTMENT SEATS, WINGWALLS, PARAPET, ETC. PAYMENT UNDER ITEM 602646 - SILICONE ACRYLIC CONCRETE SEALER

9. MISCELLANEOUS PAYMENT NOTES:
   A. ANY WATERSTOPS SHALL BE INCIDENTAL TO THE APPROPRIATE CONCRETE ITEM.
   B. STRUCTURAL EXCAVATION AND BACKFILL AROUND THE PIER FOOTING SHALL BE PAID UNDER ITEMS 207000 AND 210000 RESPECTIVELY.
   C. ALL BACKFILL AROUND THE WEST AND EAST ABUTMENTS (EACH CONSTRUCTED ABOVE EXISTING GRADE) SHALL BE PAID UNDER ITEM 209003 - BORROW, TYPE C. THE QUANTITY INCLUDED WITH THE BRIDGE QUANTITIES IS THE FILL AROUND EACH ABUTMENT FROM 5 FEET BEYOND THE END OF THE WINGWALLS TO THE TOE OF SLOPE IN FRONT OF THE ABUTMENT.

10. CONSTRUCTION JOINTS -
    KEYED CONSTRUCTION JOINTS SHALL BE 2 INCHES X 4 INCHES OR AS NOTED. ALL EXPOSED CONSTRUCTION JOINTS SHALL HAVE A ¾" V-NOTCH.

11. S.I.P. FORM SUBMITTALS
    IN ADDITIONAL TO THE REQUIREMENTS OF THE STANDARD SPECIFICATIONS, CALCULATIONS AND DRAWINGS FOR THE S.I.P. FORMS MUST SEALED BY A PROFESSIONAL ENGINEER REGISTERED IN THE STATE OF DELAWARE AND SUBMITTED FOR APPROVAL. PAYMENT SHALL BE INCIDENTAL TO ITEM 602013 - PORTLAND CEMENT CONCRETE MASONRY, SUPERSTRUCTURE, CLASS "D"

12. TEMPORARY PROTECTIVE SHIELD.
    IT IS THE RESPONSIBILITY OF THE CONTRACTOR TO PROVIDE TEMPORARY PROTECTIVE SHIELD IN ORDER TO PROTECT VEHICULAR TRAFFIC AGAINST DAMAGE FROM FALLING MATERIAL, DEBRIS AND OTHER CONSTRUCTION OPERATIONS DURING THE SUPERSTRUCTURE CONSTRUCTION. PAYMENT SHALL BE INCIDENTAL TO THE CONTRACT.

Unofficial Website Copy

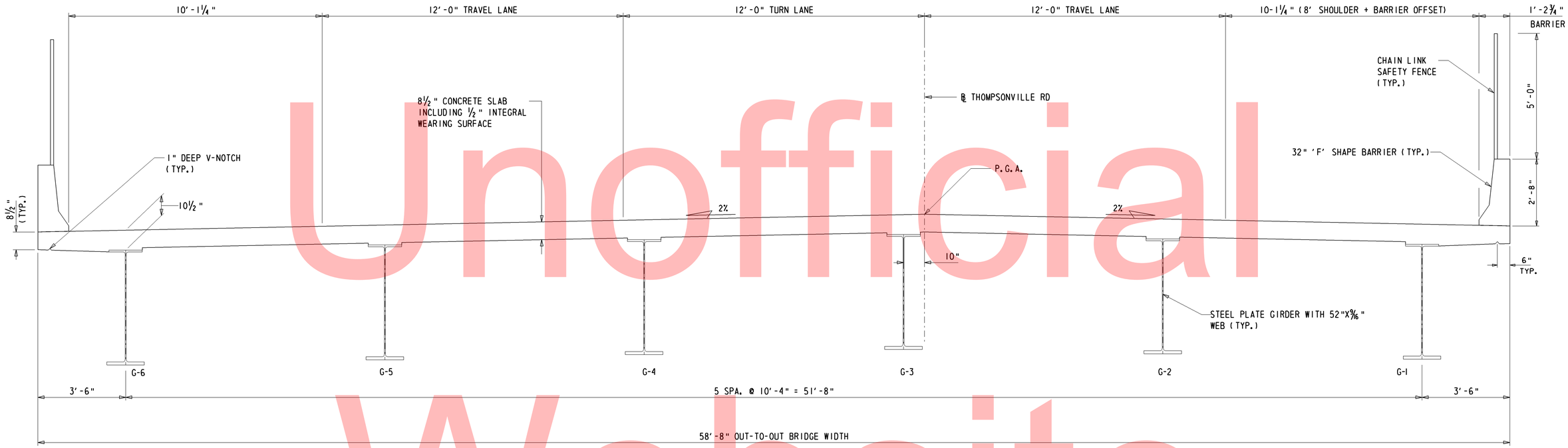

TYPICAL BRIDGE SECTION

½" = 1'-0"

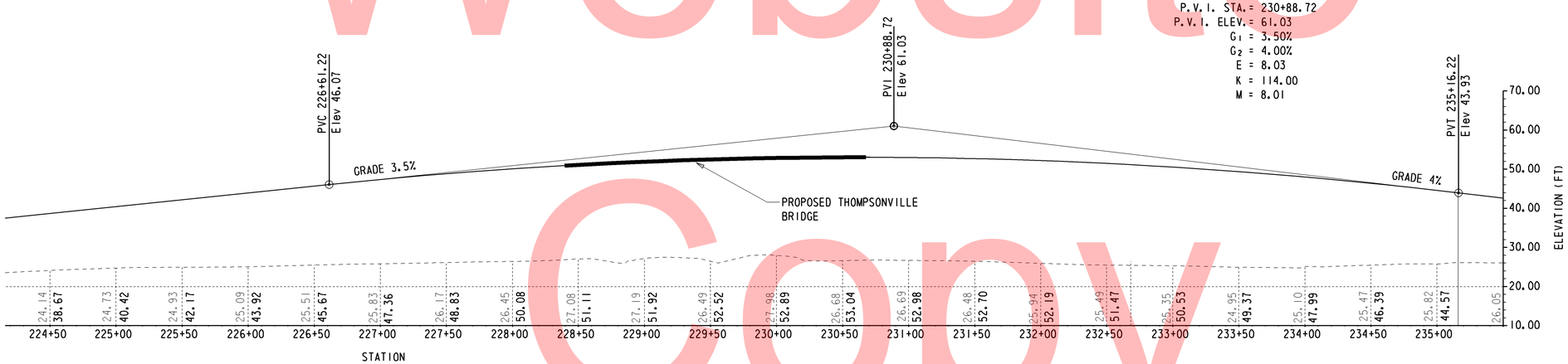

PROFILE - PROPOSED THOMPSONVILLE RD

N.T.S.

Unofficial Website Copy

DELAWARE DEPARTMENT OF TRANSPORTATION	ADDENDUMS / REVISIONS	SCALE AS NOTED	SR1, THOMPSONVILLE GRADE SEPARATED INTERSECTION	CONTRACT T200412201	BRIDGE NO. 2-019B	BRIDGE SECTION BRIDGE SHEET 4 OF 28	SHEET NO. 70
				COUNTY KENT	DESIGNED BY: PAM		TOTAL SHTS. 183
					CHECKED BY: BB		

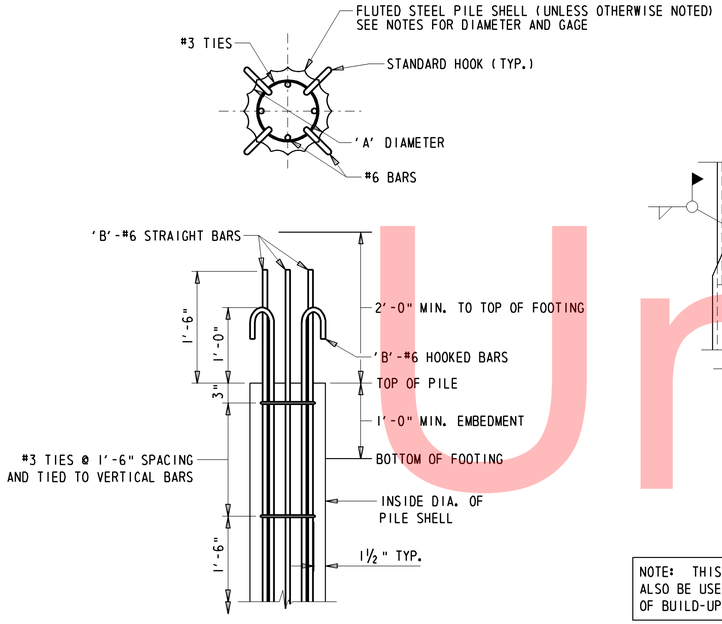

TYPICAL PILE REINFORCEMENT

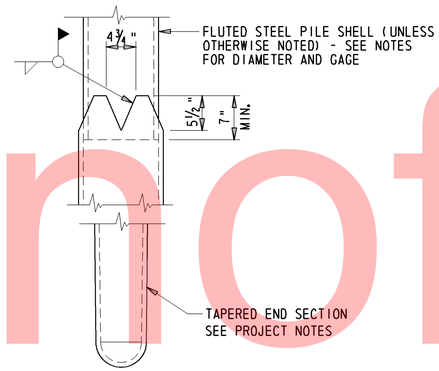

NOTE: THIS SPLICE DETAIL SHALL ALSO BE USED FOR FIELD SPLICES OF BUILD-UP SECTIONS.

TYPICAL PILE SPLICE

CAST-IN-PLACE PILE DETAILS

CAST-IN-PLACE PILE SIZES	
PILE SIZE 'A'	DOWELS OR HOOKS 'B'
12"	3
14"	4
16"	4
18"	4

PROJECT SPECIFIC PILE NOTES

1. PILE TYPE
   THIS PROJECT SHALL UTILIZE 14" DIA. CAST-IN-PLACES PILES. 5 GUAGE. THE PILE TAPERED SECTIONSHALL BE "Y" TAPER (0.40 IN/FT), 8" POINT DIAMETER x 14" BUTT DIAMETER x 15' LENGTH.
   REINFORCEMENT SHALL EXTEND 20'-0" INTO EACH PILE.
2. ESTIMATED PRODUCTION PILE LENGTHS ARE: 41' FOR WEST ABUTMENTS AND 38' FOR EAST ABUTMEN. DRILLED SHAFT SHALL BE INSTALLED AT THE PIER.
3. REQUIRED TEST PILE LENGTHS ARE: 46' AT WEST ABUTMENTS AND 43' AT EAST ABUTMENT.
4. PILES SHALL BE DRIVEN TO A NOMINAL BEARING CAPACITY OF 210 KIPS AT THE ABUTMENTS.
5. MINIMUM TIP ELEVATION SHALL NOT BE REQUIRED FOR THIS PROJECT.

GENERAL PILE NOTES

1. FOR MORE INFORMATION REGARDING PILE MATERIALS AND FABRICATION, REFER TO SECTION 618 (PILE MATERIALS) OF THE STANDARD SPECIFICATIONS. FOR MORE INFORMATION REGARDING PILE DRIVING AND INSTALLATION, REFER TO SECTION 619 (INSTALLATION OF PILES) OF THE STANDARD SPECIFICATIONS.
2. EACH TEST PILE SHALL BE DYNAMICALLY TESTED BY THE CONTRACTOR IN ACCORDANCE WITH ITEM #619519 - DYNAMIC PILE TESTING BY CONTRACTOR. THE QUANTITY FOR DYNAMIC PILE TESTING SHALL INCLUDE ONE FOR THE INITIAL DRIVE AND ONE FOR THE RE-STRIKE OF EACH TEST PILE. THE NEED TO RESTRIKE EITHER A TEST PILE OR A PRODUCTION PILE SHALL BE THE SOLE DECISION OF THE ENGINEER.
3. WAVE EQUATION ANALYSIS SHALL BE SUBMITTED BY THE CONTRACTOR FOR REVIEW BY THE ENGINEER (ELECTRONIC PREFERRED, OTHERWISE 8 COPIES MINIMUM).
4. ALL PILES SHALL BE ORDERED AS NOTED ABOVE. TEST PILES, AS NOTED, SHALL BE DRIVEN FIRST TO ESTABLISH DRIVING CRITERIA FOR THE OTHER PILES IN EACH SUBSTRUCTURE ELEMENT. AN ADDITIONAL 5' HAS BEEN ADDED TO THE DESIGN LENGTH OF EACH PILE AS A CONTINGENCY.

CAST-IN-PLACE PILE NOTES

1. COST OF REINFORCING BARS INSIDE THE STEEL SHELL IS INCLUDED IN THE BID PRICE FOR THE APPROPRIATE CAST-IN-PLACE CONCRETE PILE ITEMS. REINFORCEMENT SHALL BE EPOXY COATED.
2. PILES SHALL BE COAL TAR EPOXY COATED.

PILE TIP DATA TABLE

SUBSTRUCTURE UNIT	DESIGN DATA		AUTUAL FIELD DATA	
	NOMINAL PILE DRIVING RESISTANCE (KIPS)	ESTIMATED PILE TIP ELEVATION	AVERAGE ACTUAL MINIMUM TIP ELEVATION	AVERAGE ACTUAL MAXIMUM TIP ELEVATION
WEST ABUTMENT (A)	210.00	-3.50		
EAST ABUTMENT (B)	210.00	-4.25		

Unofficial Website Copy

WEST ABUTMENT PILE COORDINATES				
PT.	STATION	OFFSET	NORTHING	EASTING
P01	228+49.65	L 36.17	348590.69	652871.55
P02	228+48.66	L 31.53	348586.24	652873.20
P03	228+47.66	L 26.88	348581.79	652874.85
P04	228+46.67	L 22.24	348577.35	652876.51
P05	228+45.67	L 17.60	348572.90	652878.16
P06	228+44.68	L 12.96	348568.46	652879.81
P07	228+43.68	L8.32	348563.99	652881.47
P08	228+42.68	L 3.68	348559.54	652883.12
P09	228+41.69	L 0.96	348555.10	652884.77
P10	228+40.69	R 5.60	348550.65	652886.42
P11	228+39.70	R 10.24	348546.20	652888.08
P12	228+38.70	R 14.88	348541.75	652889.74
P13	228+37.71	R 19.53	348537.30	652891.39
P14	228+36.71	R 24.17	348532.85	652893.04
P15	228+43.68	L 36.17	348587.49	652866.51
P16	228+37.70	L 36.17	348584.28	652861.48
P17	228+31.74	L 36.17	348581.08	652856.44
P18	228+25.76	L 36.17	348577.87	652851.40
P19	228+30.92	R 24.17	348529.75	652888.16
P20	228+25.13	R 24.17	348526.63	652883.27
P21	228+19.33	R 24.17	348523.52	652878.38
P22	228+13.54	R 24.17	348520.41	652873.50
P23	228+25.76	L 29.50	348572.24	652854.98
P24	228+30.79	L 29.50	348575.04	652859.38
P25	228+36.19	L 29.50	348577.84	652863.77
P26	228+41.40	L 29.50	348580.64	652868.17
P27	228+39.72	L 21.67	348573.13	652870.96
P28	228+38.04	L 13.83	348565.62	652873.76
P29	228+36.36	L 6.00	348558.11	652876.54
P30	228+34.69	R 1.83	348550.60	652879.34
P31	228+33.01	R 9.67	348543.09	652882.13
P32	228+31.33	R 17.50	348535.58	652884.92
P33	228+25.40	R 17.50	348532.40	652879.92
P34	228+19.47	R 17.50	348529.21	652874.92
P35	228+13.54	R 17.50	348526.03	652869.92

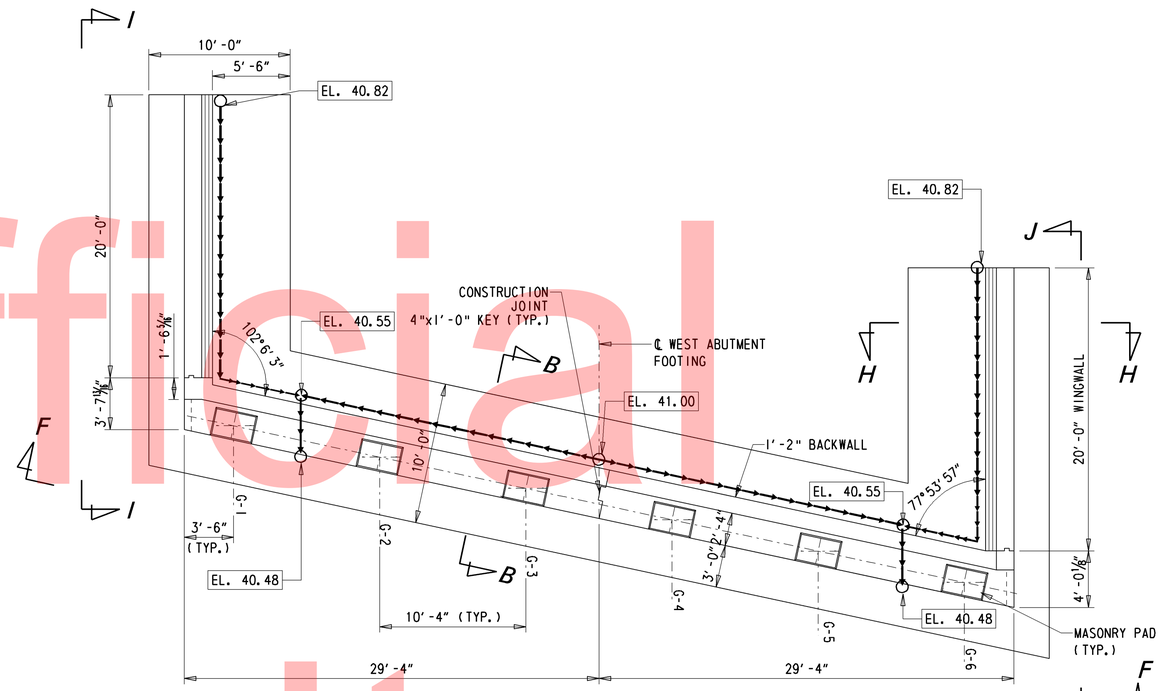

WEST ABUTMENT PLAN

3/16" = 1'-0"

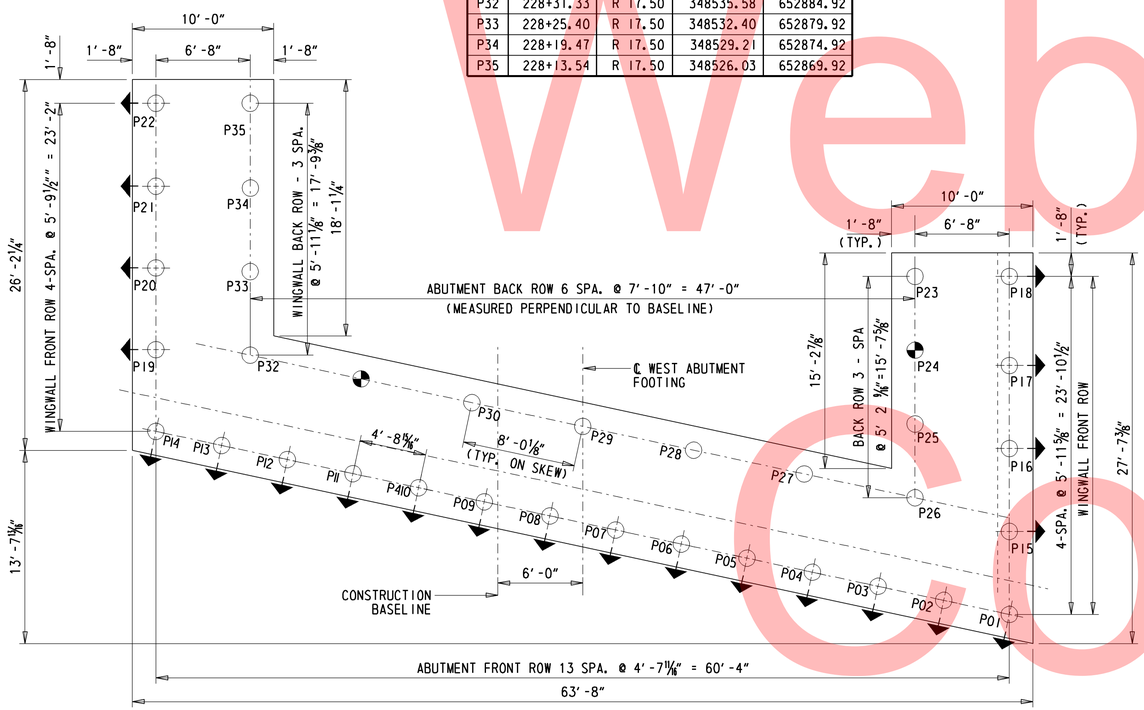

WEST ABUTMENT PILE LAYOUT

3/16" = 1'-0'

SEE SHEET #76 FOR SECTIONS B-B & H-H AND SHEET # 77 FOR ELEVATIONS I-I & J-J.
SEE SHEET 75 FOR CONSTRUCTION JOINT DETAIL

LEGEND

- BATTERED PILES
- TEST PILES
- P00 - WORKING POINTS
- F.F. - FILL FACE
- R.F. - ROADWAY FACE
- PREFORATED PIPES

Unofficial Website Copy

DELAWARE DEPARTMENT OF TRANSPORTATION	ADDENDUMS / REVISIONS	SCALE 0 5.3334 10.6668 16.0002 FEET	SR1, THOMPSONVILLE GRADE SEPARATED INTERSECTION	CONTRACT T200412201 / COUNTY KENT	BRIDGE NO. 2-019 / DESIGNED BY: PAM / CHECKED BY: BB	WEST ABUTMENT FOOTING AND PILE LAYOUT PLAN BRIDGE SHEET 6 OF 28	SHEET NO. 72 / TOTAL SHTS. 183

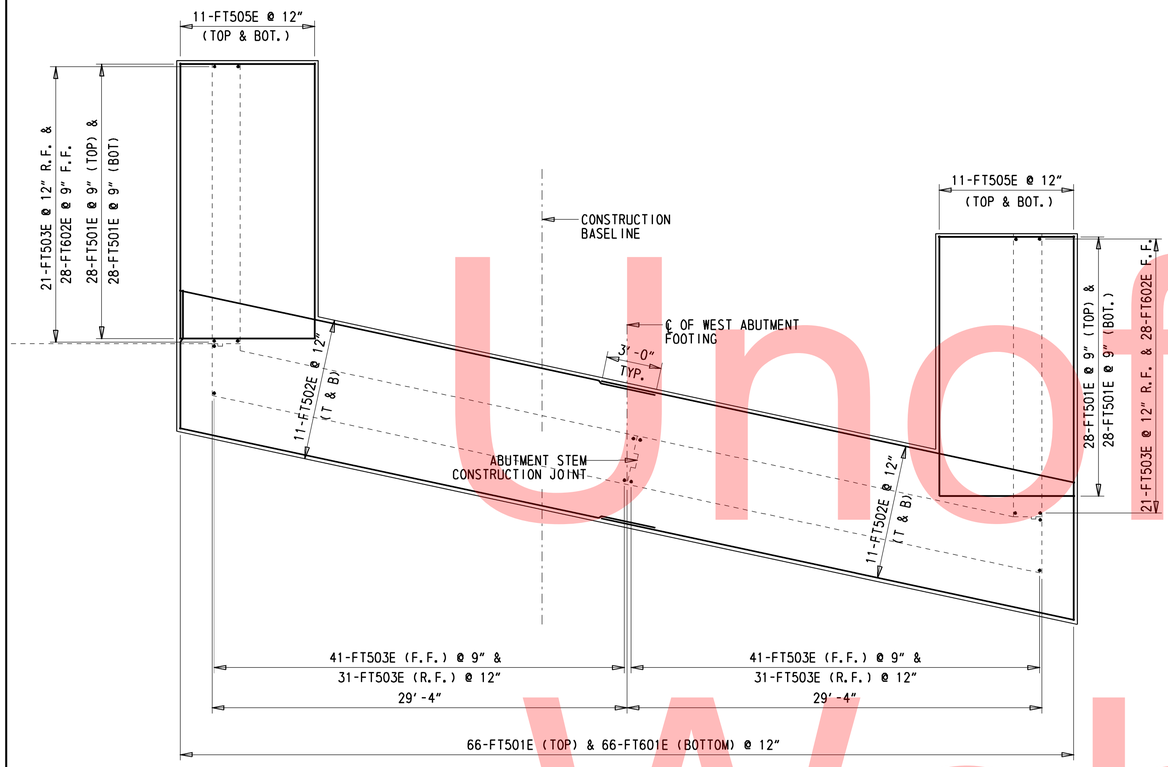

WEST ABUTMENT FOOTING PLAN

3/16" = 1'-0'

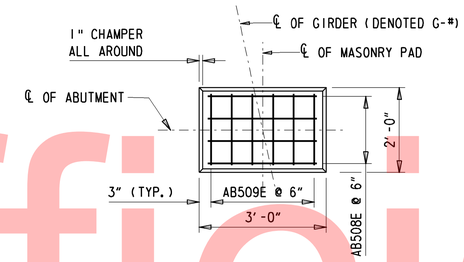

PLAN

3/8" = 1'-0'

MASONRY PAD ELEVATIONS	
PAD	ELEVATION
G-1	44.62
G-2	44.87
G-3	45.09
G-4	44.93
G-5	44.76
G-6	44.60

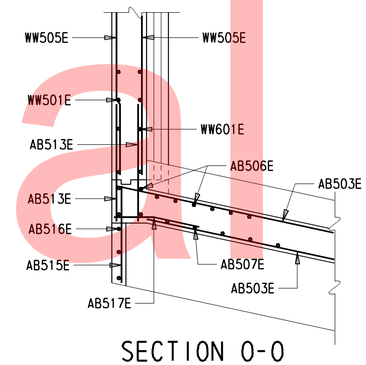

SECTION O-O

3/8" = 1'-0'

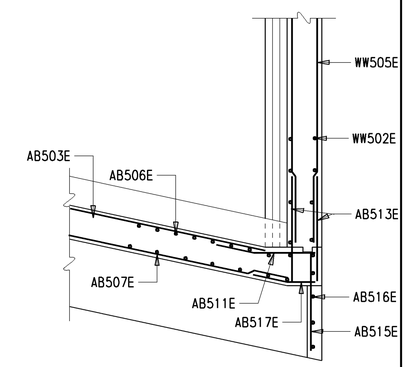

SECTION P-P

3/8" = 1'-0'

SEE SHEET #76 FOR SECTIONS B-B & H-H AND SHEET # 77 FOR ELEVATIONS I-I & J-J.
SEE SHEET 75 FOR CONSTRUCTION JOINT DETAIL

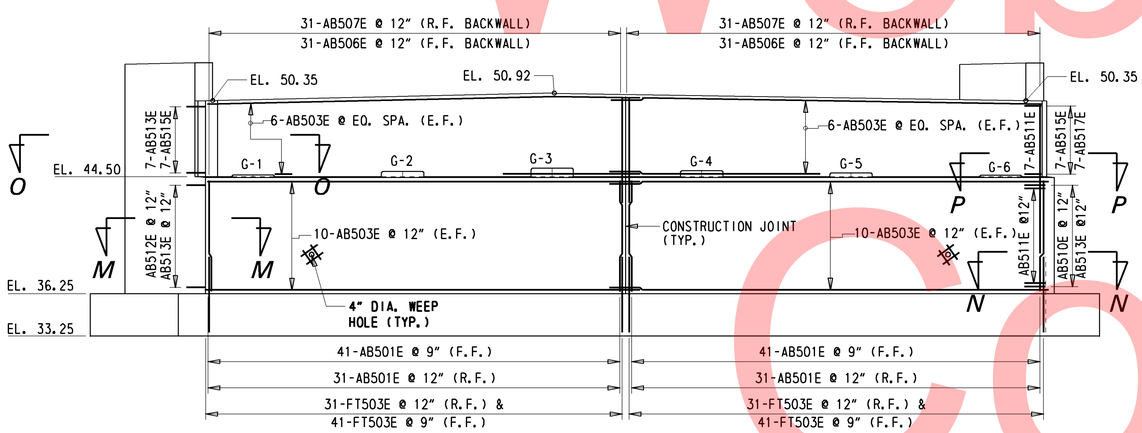

WEST ABUTMENT ELEVATION (SECTION F-F)

3/16" = 1'-0"

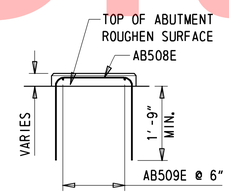

ELEVATION

MASONRY PAD

3/8" = 1'-0'

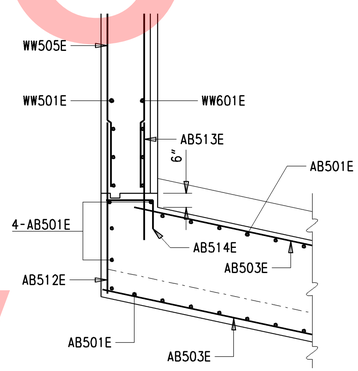

SECTION M-M

3/8" = 1'-0'

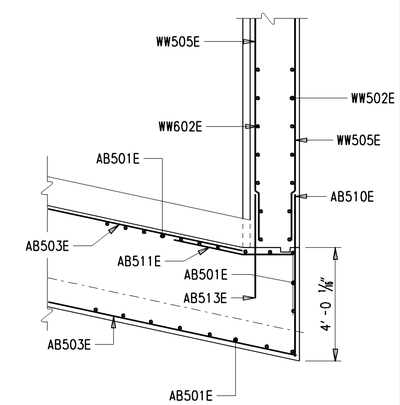

SECTION N-N

3/8" = 1'-0'

Unofficial Website Copy

DELAWARE DEPARTMENT OF TRANSPORTATION	ADDENDUMS / REVISIONS	SCALE AS NOTED	SR1, THOMPSONVILLE GRADE SEPARATED INTERSECTION	CONTRACT T200412201	BRIDGE NO. 2-019B	WEST ABUTMENT PLAN AND ELEVATION BRIDGE SHEET 7 OF 28	SHEET NO. 73
				COUNTY KENT	DESIGNED BY: PAM		TOTAL SHTS. 183
					CHECKED BY: BB		

EAST ABUTMENT WORKING POINTS				
PT.	STATION	OFFSET	NORTHING	EASTING
P36	230+59.94	R 24.17	348652.77	653081.33
P37	230+60.94	R 19.53	348657.22	653079.68
P38	230+61.93	R 14.88	348661.66	653078.02
P39	230+62.93	R 10.24	348666.11	653076.37
P40	230+63.92	R 5.60	348670.56	653074.71
P41	230+64.92	R 0.96	348675.01	653073.06
P42	230+65.91	L 3.68	348679.46	653071.41
P43	230+66.91	L 8.32	348683.91	653069.75
P44	230+67.90	L 12.96	348688.36	653068.10
P45	230+68.90	L 17.60	348692.81	653066.45
P46	230+69.89	L 22.24	348697.26	653064.79
P47	230+70.89	L 26.88	348701.71	653063.14
P48	230+71.88	L 31.53	348706.16	653061.48
P49	230+72.88	L 36.17	348710.60	653059.83
P50	230+66.66	R 24.17	348656.38	653087.00
P51	230+73.39	R 24.17	348659.99	653092.67
P52	230+80.11	R 24.17	348663.60	653098.34
P53	230+86.83	R 24.17	348667.21	653104.01
P54	230+79.42	L 36.17	348714.12	653065.35
P55	230+85.96	L 36.17	348717.64	653070.87
P56	230+92.51	L 36.17	348721.15	653076.39
P57	230+99.05	L 36.17	348724.66	653081.91
P58	230+86.83	R 17.50	348672.83	653100.43
P59	230+80.62	R 17.50	348669.50	653095.19
P60	230+74.40	R 17.50	348666.16	653089.95
P61	230+68.19	R 17.50	348662.82	653084.71
P62	230+69.87	R 9.67	348670.33	653081.92
P63	230+71.55	R 1.83	348677.84	653079.13
P64	230+73.23	L 6.00	348685.35	653076.33
P65	230+74.91	L 13.83	348692.86	653073.54
P66	230+76.59	L 21.67	348700.37	653070.75
P67	230+78.27	L 29.50	348707.88	653067.96
P68	230+85.17	L 29.50	348711.59	653073.80
P69	230+92.07	L 29.50	348715.32	653079.64
P70	230+98.98	L 29.50	348719.04	653085.49

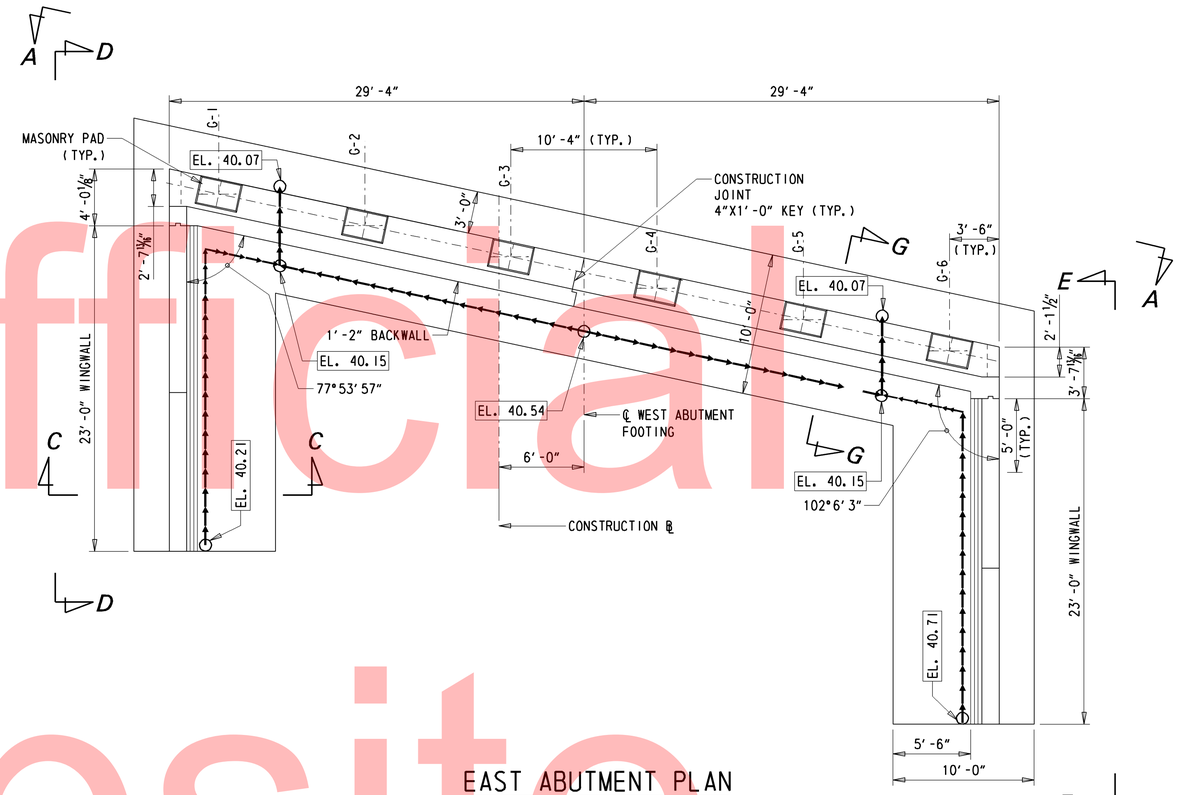

EAST ABUTMENT PLAN

3/16" = 1'-0"

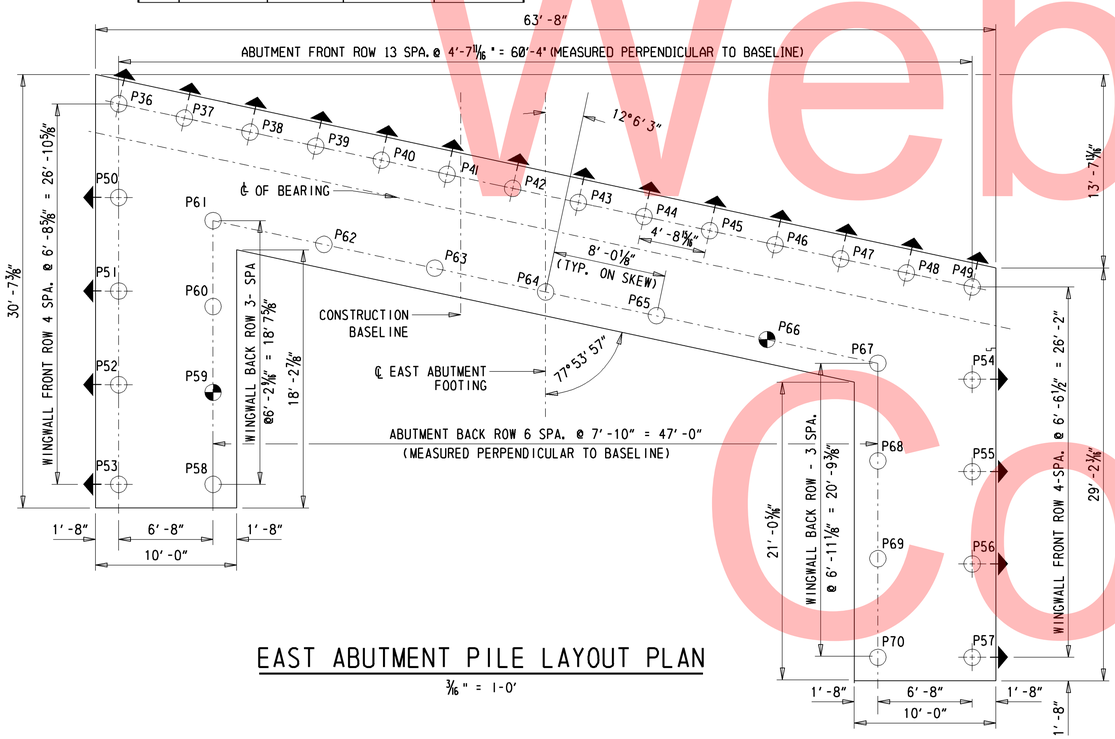

EAST ABUTMENT PILE LAYOUT PLAN

3/16" = 1-0'

SEE SHEET #76 FOR SECTIONS G-G & C-C AND SHEET # 77 FOR ELEVATIONS D-D & E-E.
SEE SHEET 75 FOR CONSTRUCTION JOINT DETAIL

LEGEND

- BATTERED PILES
- TEST PILES
- P00 - WORKING POINTS
- F.F. - FILL FACE
- R.F. - ROAD FACE
- PREFORATED PIPES

Unofficial Website Copy

DELAWARE DEPARTMENT OF TRANSPORTATION	ADDENDUMS / REVISIONS	SCALE AS NOTED	SR1, THOMPSONVILLE GRADE SEPARATED INTERSECTION	CONTRACT T200412201	BRIDGE NO. 2-019B	EAST ABUTMENT FOOTING AND PILE LAYOUT PLAN BRIDGE SHEET 8 OF 28	SHEET NO. 74
				COUNTY KENT	DESIGNED BY: PAM		TOTAL SHTS. 183
					CHECKED BY: BB		

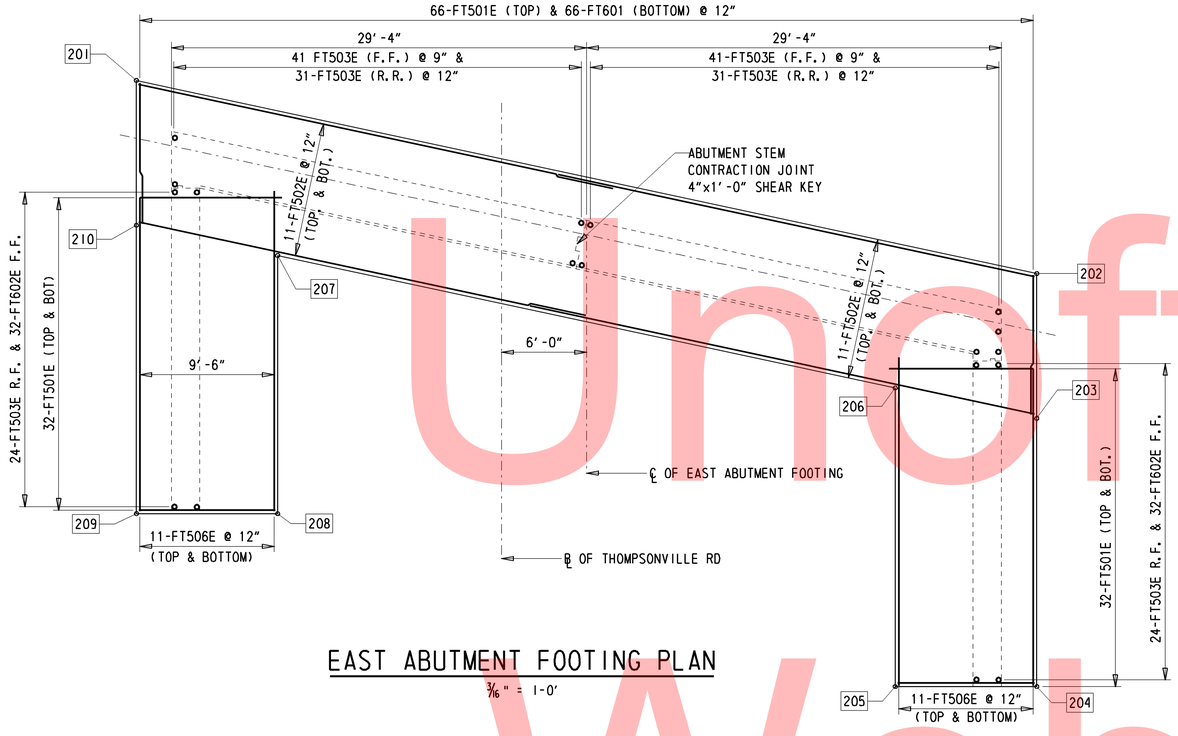

EAST ABUTMENT FOOTING PLAN

3/16" = 1'-0'

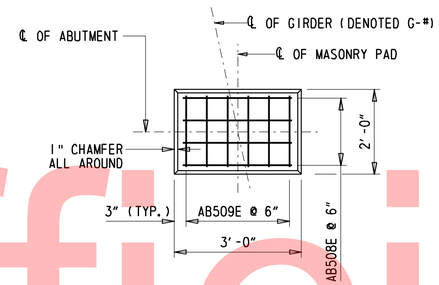

PLAN

3/8" = 1'-0'

MASONRY PAD ELEVATIONS	
PAD	ELEVATION
G-1	46.86
G-2	47.05
G-3	47.22
G-4	47.01
G-5	46.80
G-6	46.60

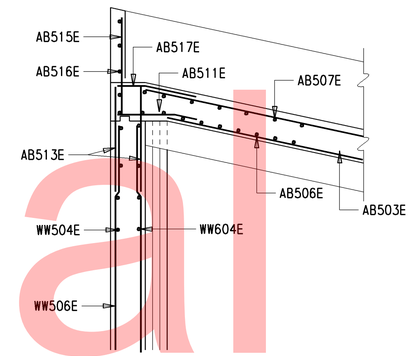

SECTION P-P

3/8" = 1'-0'

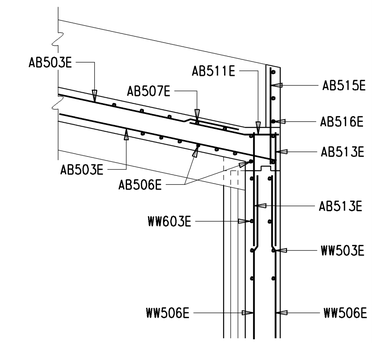

SECTION O-O

3/8" = 1'-0'

SEE SHEET #76 FOR SECTIONS G-G & C-C AND SHEET # 77 FOR ELEVATIONS D-D & E-E.

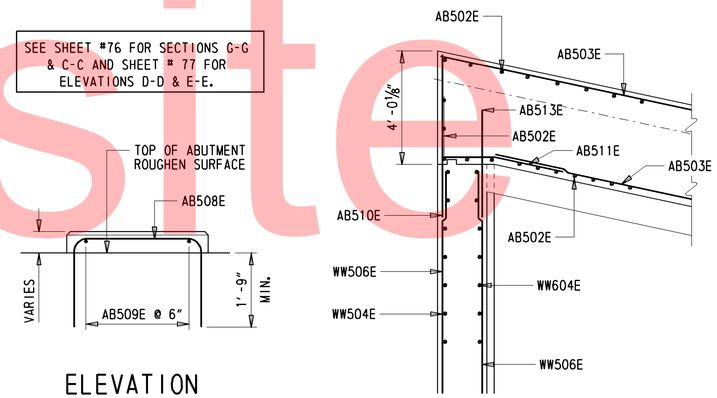

SECTION N-N

3/8" = 1'-0'

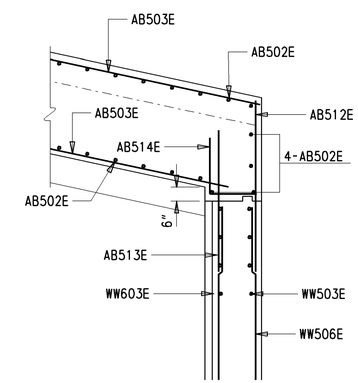

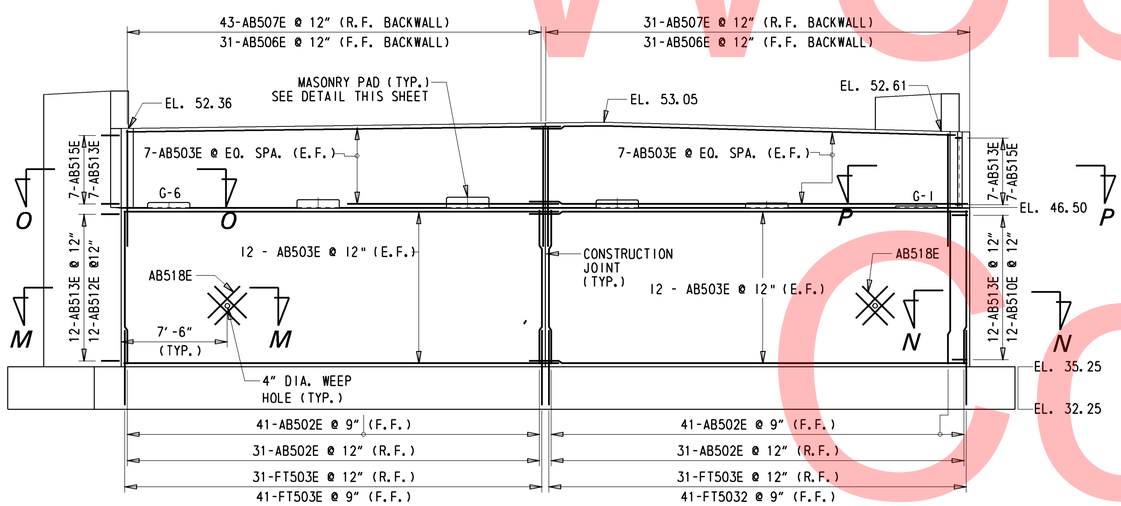

EAST ABUTMENT ELEVATION (SECTION A-A)

3/16" = 1'-0'

ELEVATION

MASONRY PAD

3/16" = 1'-0'

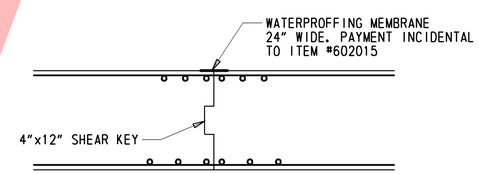

CONSTRUCTION JOINT

3/8" = 1'-0'

Unofficial Website Copy

DELAWARE DEPARTMENT OF TRANSPORTATION	ADDENDUMS / REVISIONS	SCALE AS NOTED	SR1, THOMPSONVILLE GRADE SEPARATED INTERSECTION	CONTRACT T200412201 / COUNTY KENT	BRIDGE NO. 2-019 / DESIGNED BY: PAM / CHECKED BY: BB	EAST ABUTMENT PLAN AND ELEVATION BRIDGE SHEET 9 OF 28	SHEET NO. 75 / TOTAL SHTS. 183

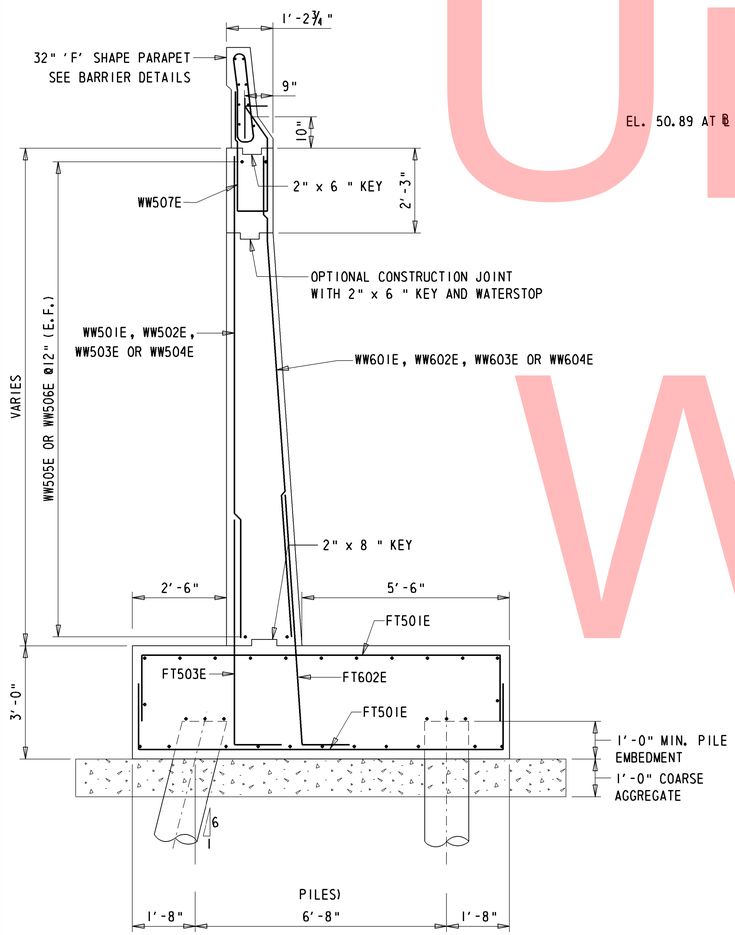

TYPICAL WINGWALL SECTION (C-C OR H-H)

½" = 1'-0"

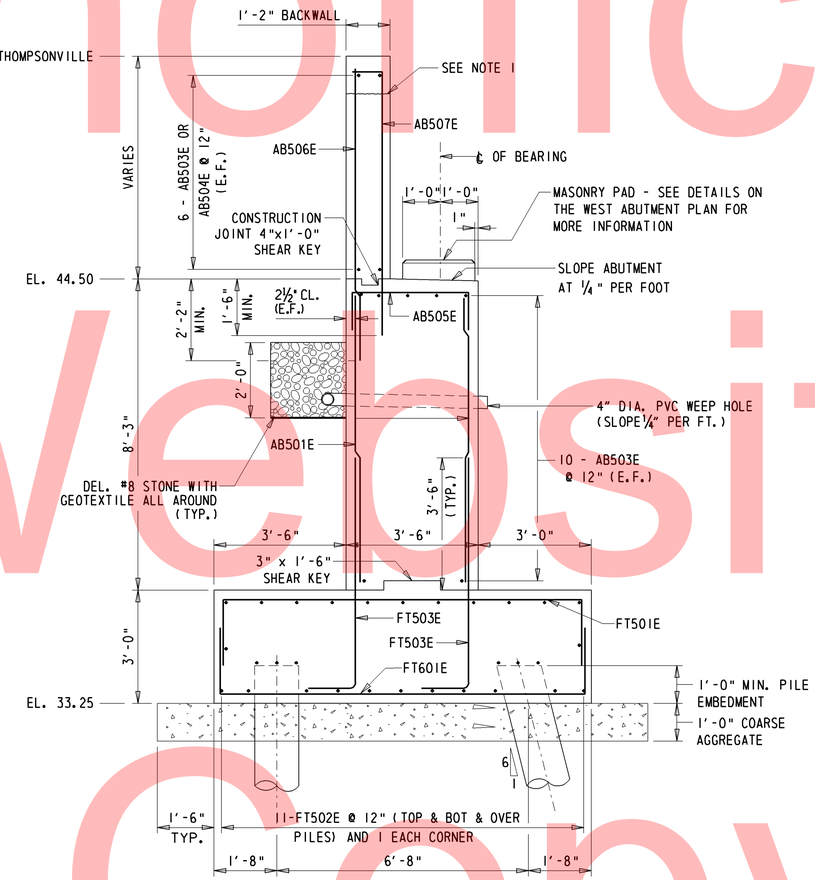

TYPICAL WEST ABUTMENT SECTION (B-B)

½" = 1'-0"

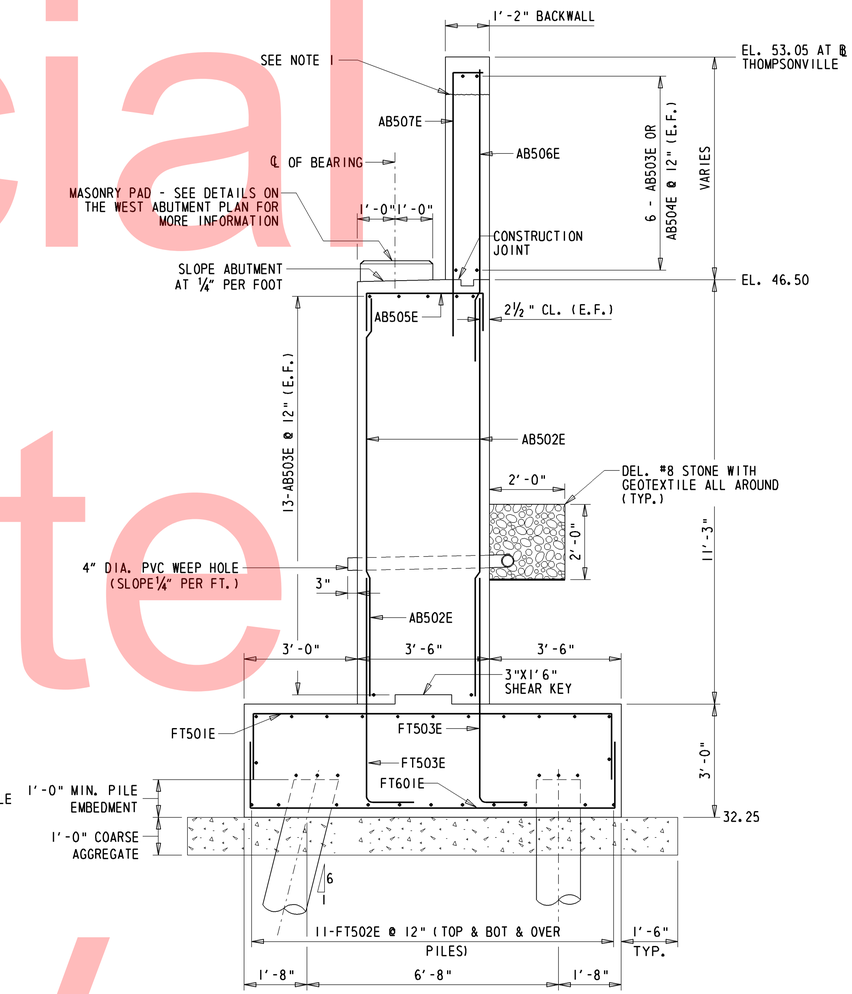

TYPICAL EAST ABUTMENT SECTION (G-G)

½" = 1'-0"

NORTH

NOTE:

1. TOP PORTION OF BACKWALL SHALL NOT BE PLACED UNTIL ENTIRE BRIDGE DECK SLAB IS COMPLETELY IN PLACE.

Unofficial Website Copy

DELAWARE DEPARTMENT OF TRANSPORTATION	ADDENDUMS / REVISIONS	SCALE 0 2 4 6 FEET	SR1, THOMPSONVILLE GRADE SEPARATED INTERSECTION	CONTRACT T200412201	BRIDGE NO. 2-019B	ABUTMENT & WINGWALL SECTIONS BRIDGE SHEET 10 OF 28	SHEET NO. 76
				COUNTY KENT	DESIGNED BY: PAM		TOTAL SHTS. 183
					CHECKED BY: BB		

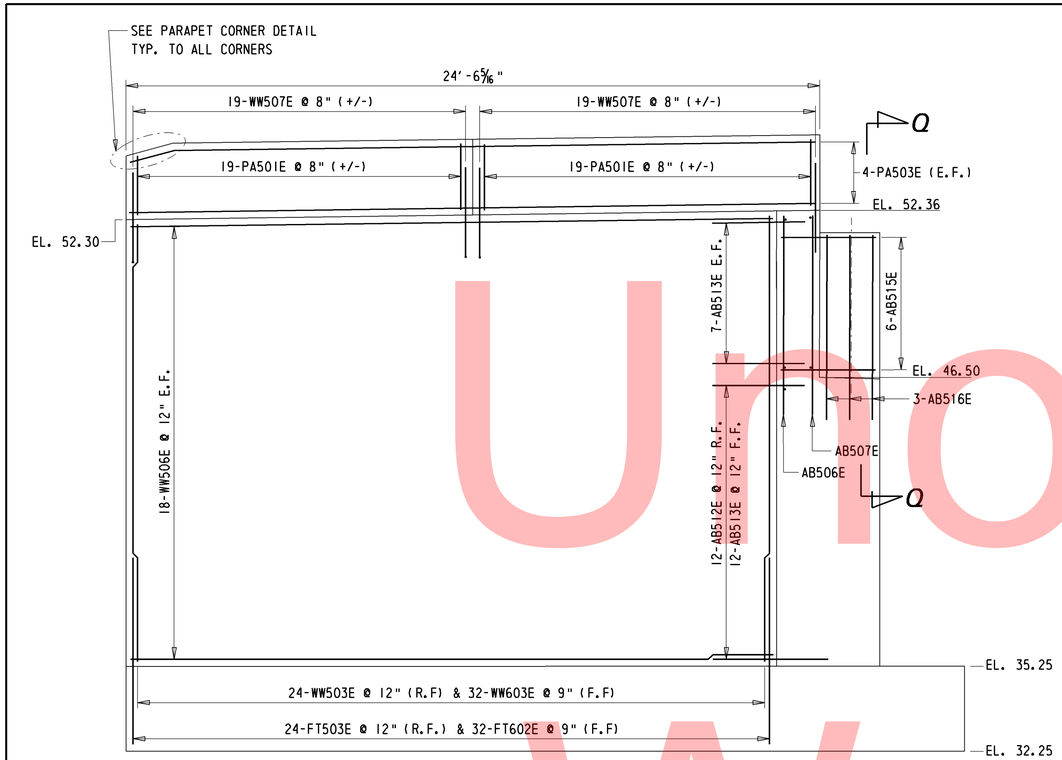

NORTHEAST WINGWALL ELEVATION (SECTION E-E)

3/8" = 1'-0"

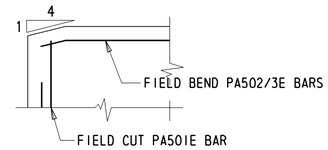

BARRIER CORNER DETAIL

3/4" = 1'-0"

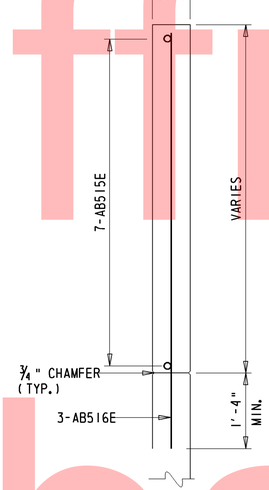

SECTION Q-Q

3/4" = 1'-0"

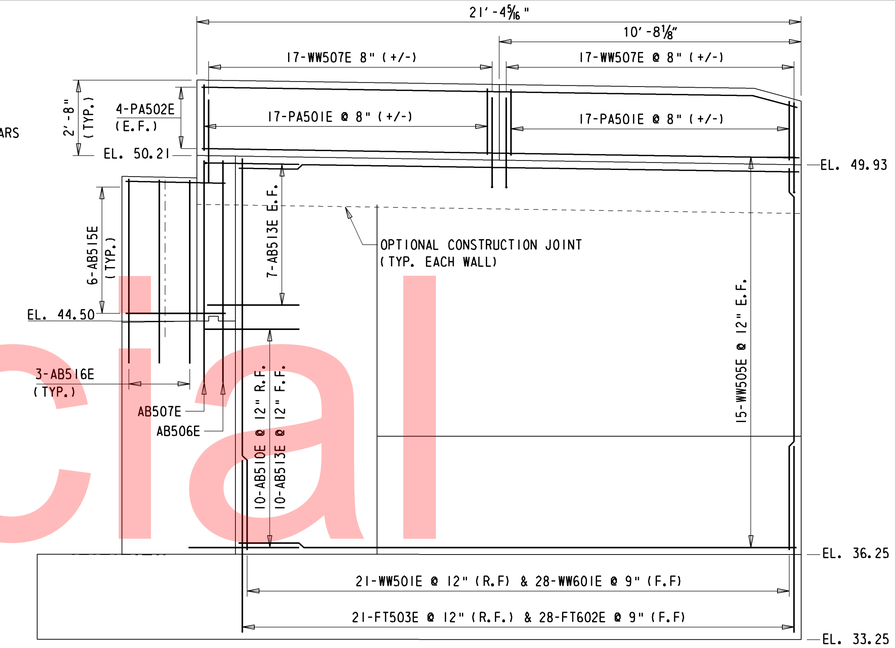

NORTHWEST WINGWALL ELEVATION (SECTION J-J)

3/8" = 1'-0"

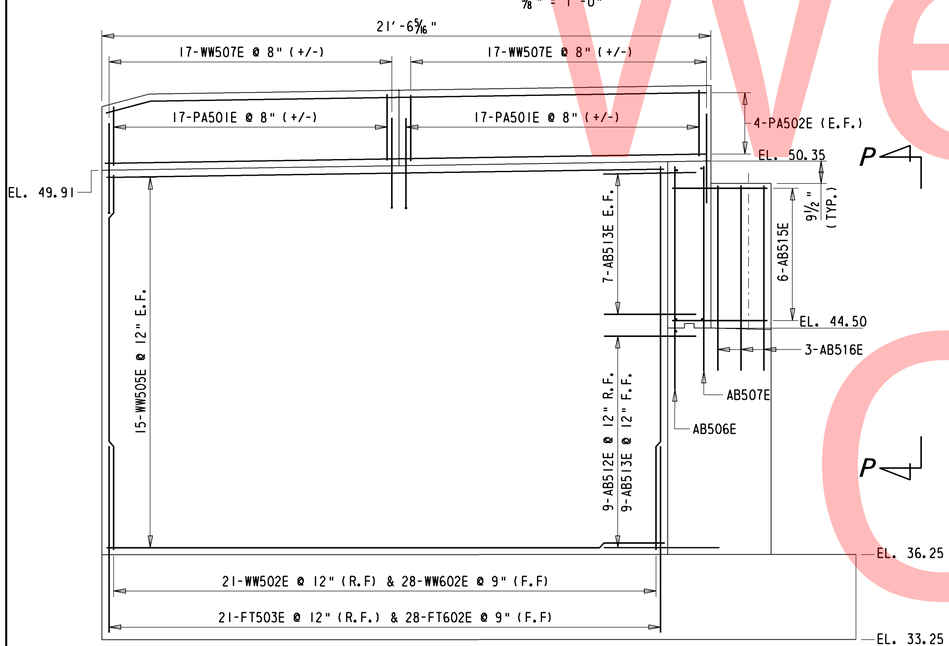

SOUTHWEST WINGWALL ELEVATION (SECTION I-I)

3/8" = 1'-0"

NOTE: ALL JOINTS BETWEEN BARRIER SECTION SHALL BE PARAFFIN COATED CONTRACTION JOINTS.

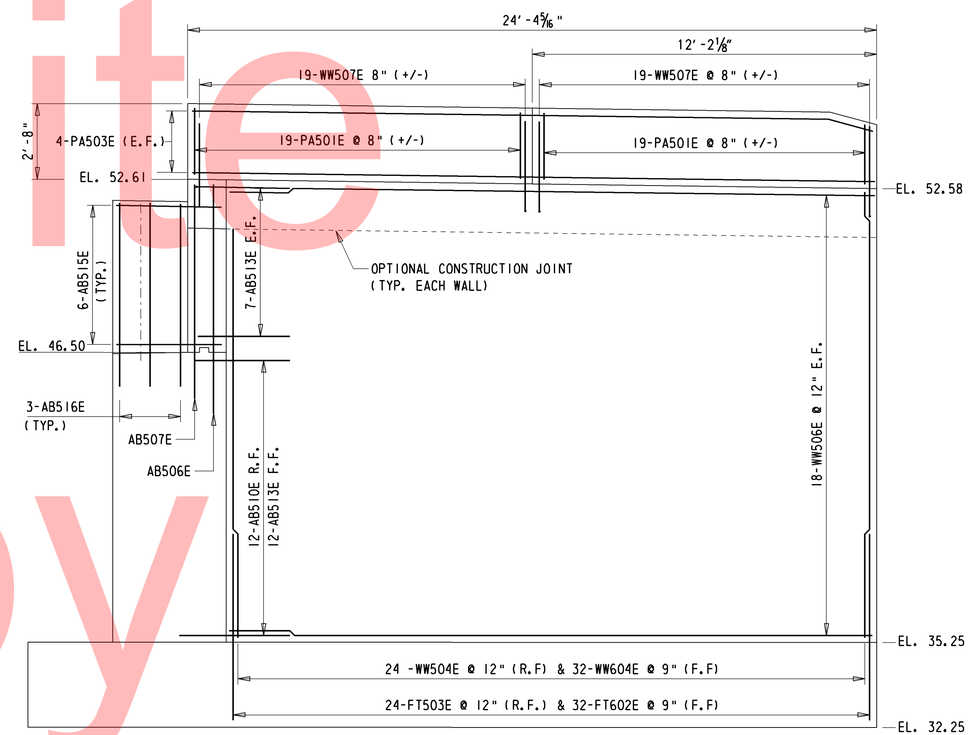

SOUTHEAST WINGWALL ELEVATION (SECTION D-D)

3/8" = 1'-0"

Unofficial Website Copy

DELAWARE DEPARTMENT OF TRANSPORTATION	ADDENDUMS / REVISIONS	SCALE AS NOTED	SR1, THOMPSONVILLE GRADE SEPARATED INTERSECTION	CONTRACT T200412201 / COUNTY KENT	BRIDGE NO. 2-019B / DESIGNED BY: PAM / CHECKED BY: BB	WINGWALL ELEVATIONS BRIDGE SHEET 11 OF 28	SHEET NO. 77 / TOTAL SHTS. 183

PROJECT SPECIFIC NOTES:

1. PILE TYPE
   THIS PROJECT SHALL UTILIZE 30" DIA. DRILLED SHAFTS. THE LONGITUDINAL BARS SHALL CONSIST OF 12 - #7 BARS. THE TRANSVERSE BARS SHALL BE #5 BARS SPIRALED SPACED AT 6" PITCH AND SHALL BE BUNDLED. THE MINIMUM CONCRETE COVER SHALL BE 3".
2. ESTIMATED DRILLED SHAFT LENGTH IS 76'.
3. DRILLED SHAFTS ARE ESTIMATED TO HAVE ULTIMATE BEARING CAPACITY OF 845 KIPS USING A RESISTANCE FACTOR OF 0.65.
4. MINIMUM TIP ELEVATION SHALL BE ELEVATION -52.5.
5. DRILLED SHAFTS SHALL UTILIZE CLASS "B" CONCRETE AS PER SECTION 812 IN STANDARD SPECIFICATIONS.

PIER DRILLED SHAFTS COORDINATES				
POINT	STATION	OFFSET	NORTHING	EASTING
1	229+45.71	R 21.46	348593.690	652983.530
2	229+48.72	R 07.40	348607.520	652978.720
3	229+51.74	L 06.66	348620.640	652973.510
4	229+54.75	L 20.71	348634.120	652968.500
5	229+57.76	L 34.77	348647.590	652963.490
6	229+51.82	R 22.77	348595.870	652989.380
7	229+54.83	R 08.71	348609.340	652984.370
8	229+57.85	L 05.34	348622.820	652979.370
9	229+80.86	L 19.40	348636.290	652974.360
10	229+63.87	L 34.46	348649.770	652969.350

DRILLED SHAFT NOTES:

1. FOR MORE INFORMATION REGARDING DRILLED SHAFT MATERIALS, FABRICATION, AND PLACEMENT, REFER TO SPECIAL PROVISIONS FOR ITEM 618526 - DRILLED SHAFT FOUNDATIONS.
2. ALL ELEVATIONS SHALL BE VERIFIED IN THE FIELD PRIOR TO FABRICATION AND CONSTRUCTION.
3. THE MINIMUM CONCRETE COVER GIVEN IN 'PROJECT SPECIFIC NOTES', NOTE 1 IS FOR LONGITUDIAL BARS. THE MINIMUM CONCRETE COVER FOR TRANSVERSE BARS MAY BE LESS THAN REQUIRED FOR LONGITUDINAL BARS BY NO MORE THAN 0.5".
4. ALL BARS DENOTED AS BEING BUNDLED SHALL BE BUNDLED IN MAXIMUM OF TWO'S.

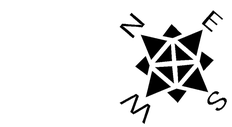

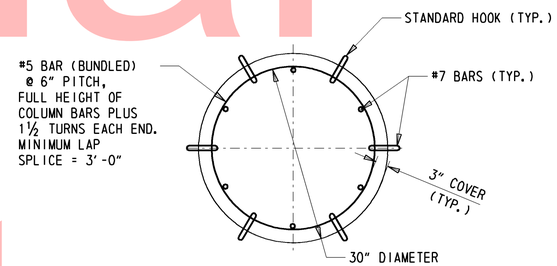

PLAN

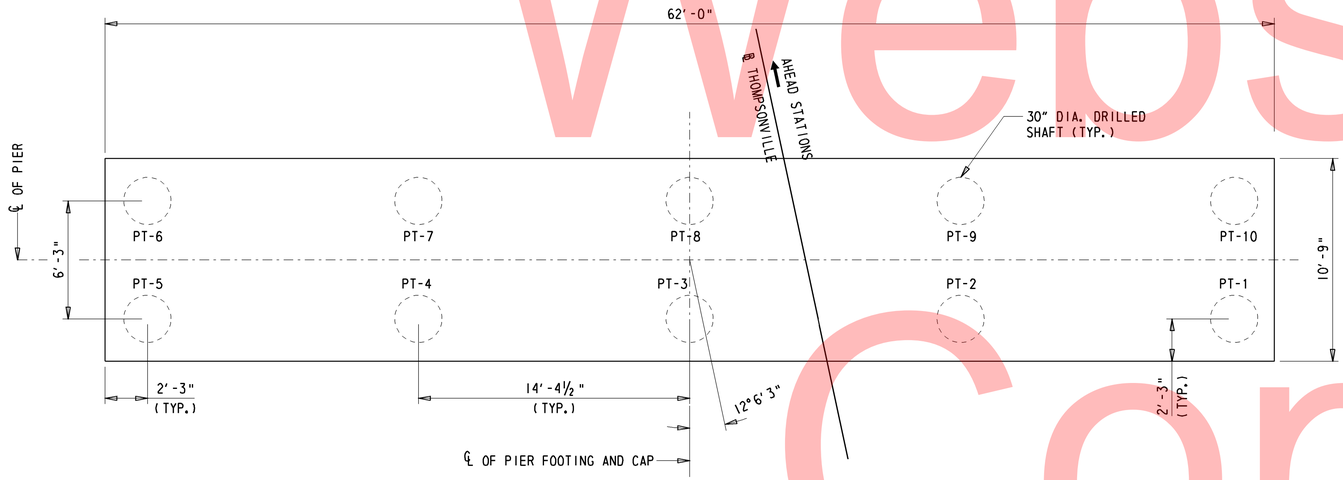

LAYOUT FOR PIER DRILLED SHAFTS

¼" = 1'-0"

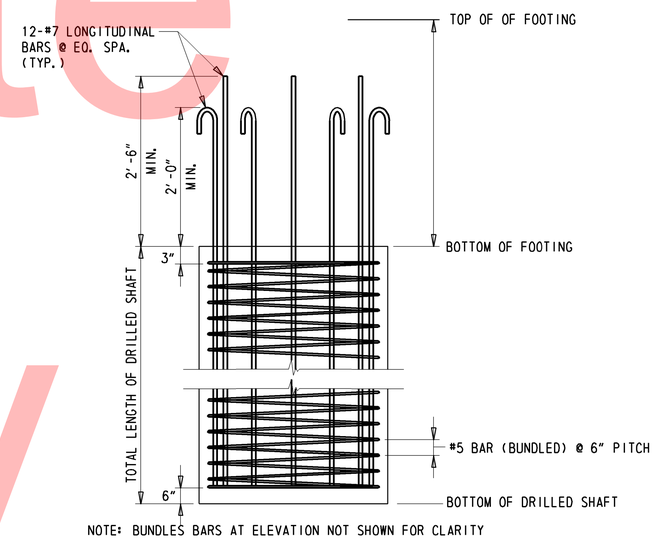

NOTE: BUNDLES BARS AT ELEVATION NOT SHOWN FOR CLARITY

ELEVATION

DRILLED SHAFT DETAILS

1" = 1'-0"

NOTE: IF THE CONTRACTOR PROPOSES TO USE PERMANENT CASING, THE PERMANENT CASING SHALL NOT BE DRIVEN NOR VIBRATED.

Unofficial Website Copy

DELAWARE DEPARTMENT OF TRANSPORTATION	ADDENDUMS / REVISIONS	SCALE AS NOTED	SR1, THOMPSONVILLE GRADE SEPARATED INTERSECTION	CONTRACT T200412201	BRIDGE NO. 2-019B	PIER DRILLED SHAFT LAYOUT & DETAILS BRIDGE SHEET 12 OF 28	SHEET NO. 78
				COUNTY KENT	DESIGNED BY: PAM		TOTAL SHTS. 183
					CHECKED BY: BB		

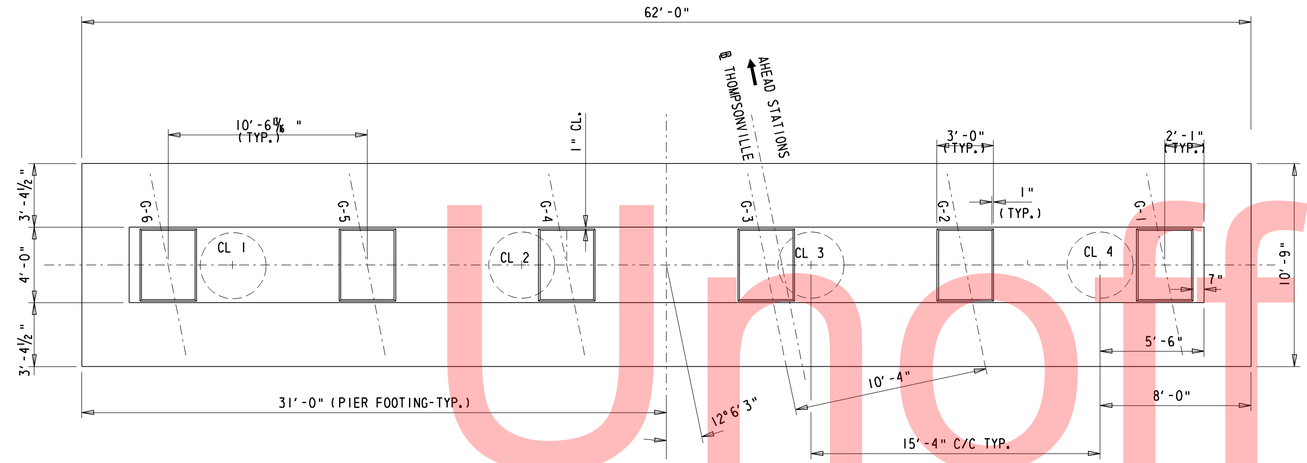

PIER FOOTING PLAN

1/4" = 1'-0"

PIER COLUMN COORDINATES				
POINT	STATION	OFFSET	NORTHING	EASTING
CL1	229+59.62	L 28.49	348643.29	652968.42
CL2	229+56.40	L 13.50	348628.92	652973.77
CL3	229+53.18	R 01.50	348614.54	652979.11
CL4	229+49.97	R 16.49	348600.17	652984.45

MASONRY PAD ELEVATIONS	
PAD	ELEVATION
G-1	46.00
G-2	46.23
G-3	46.43
G-4	46.24
G-5	46.06
G-6	45.87

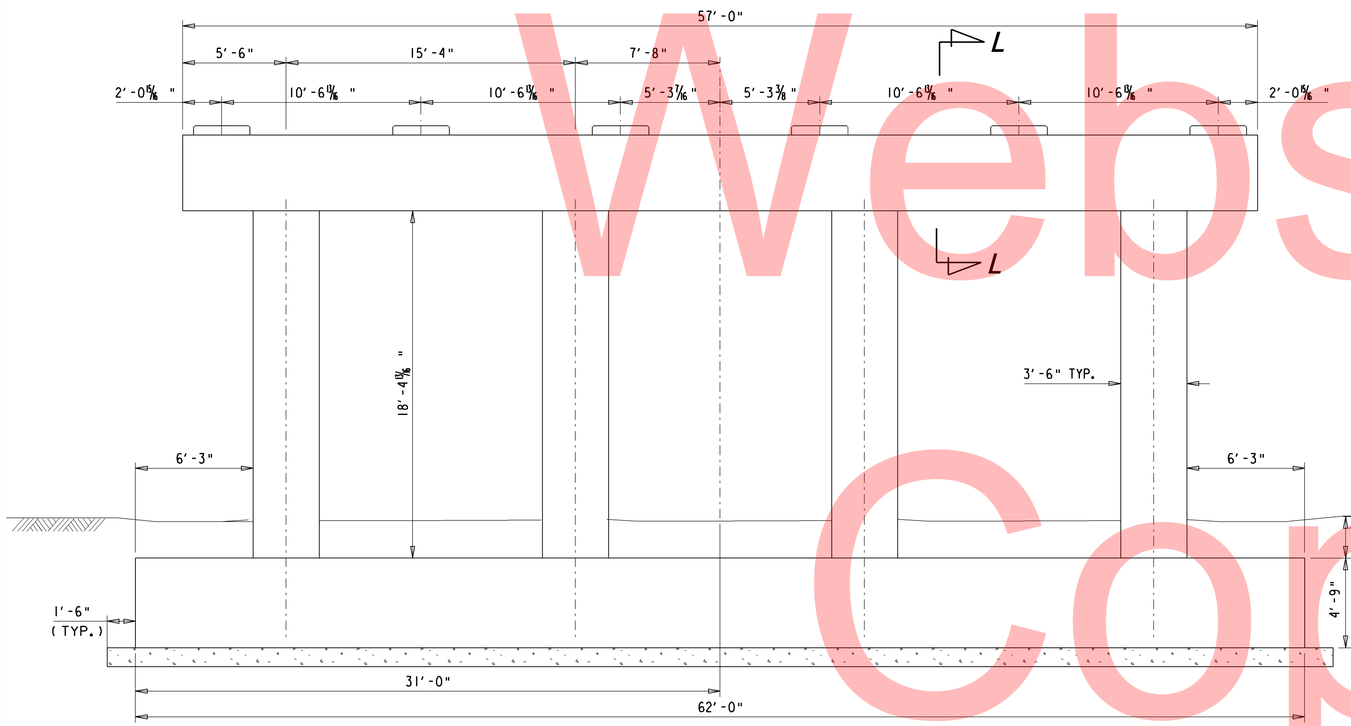

PIER ELEVATION

1/4" = 1'-0"

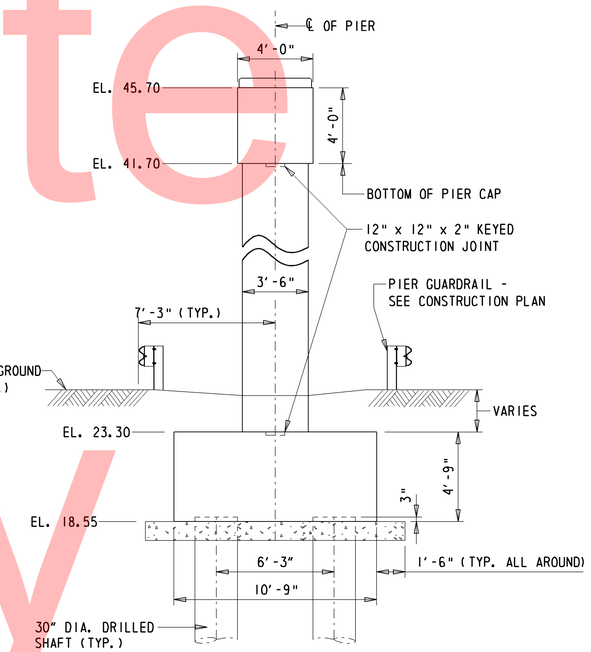

PIER END ELEVATION

1/4" = 1'-0"

Unofficial Website Copy

DELAWARE DEPARTMENT OF TRANSPORTATION	ADDENDUMS / REVISIONS	SCALE 0 4 8 12 FEET	SR1, THOMPSONVILLE GRADE SEPARATED INTERSECTION	CONTRACT T200412201	BRIDGE NO. 2-019B	PIER PLAN, ELEVATION & SECTION BRIDGE SHEET 13 OF 28	SHEET NO. 79
				COUNTY KENT	DESIGNED BY: PAM		TOTAL SHTS. 183
					CHECKED BY: BB		

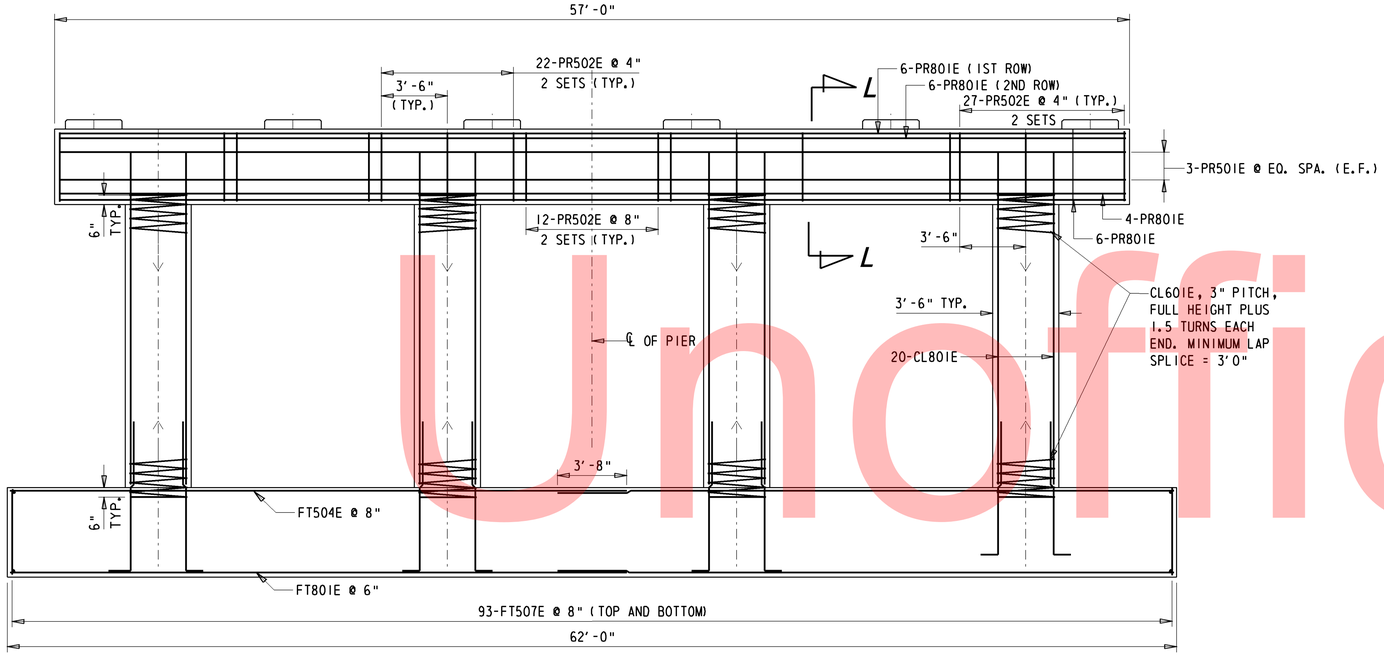

PIER ELEVATION

1/4" = 1'-0"

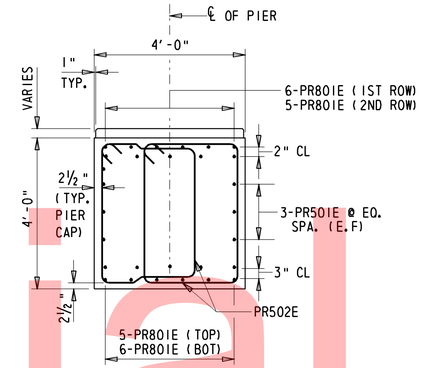

SECTION L-L

1/2" = 1'-0"

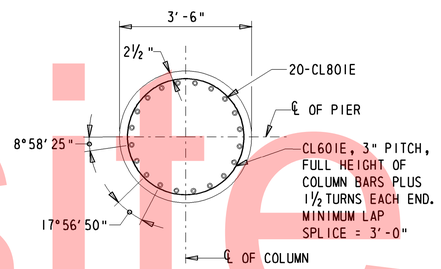

TYPICAL COLUMN SECTION

(3'-6" DIAMETER)

1/2" = 1'-0"

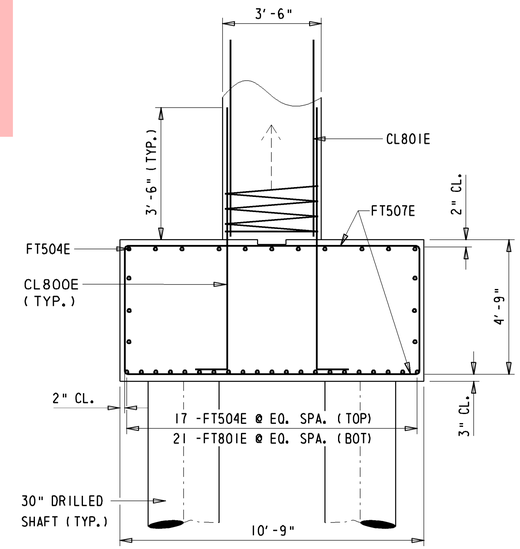

PIER FOOTING REINFORCEMENT

3/8" = 1'-0"

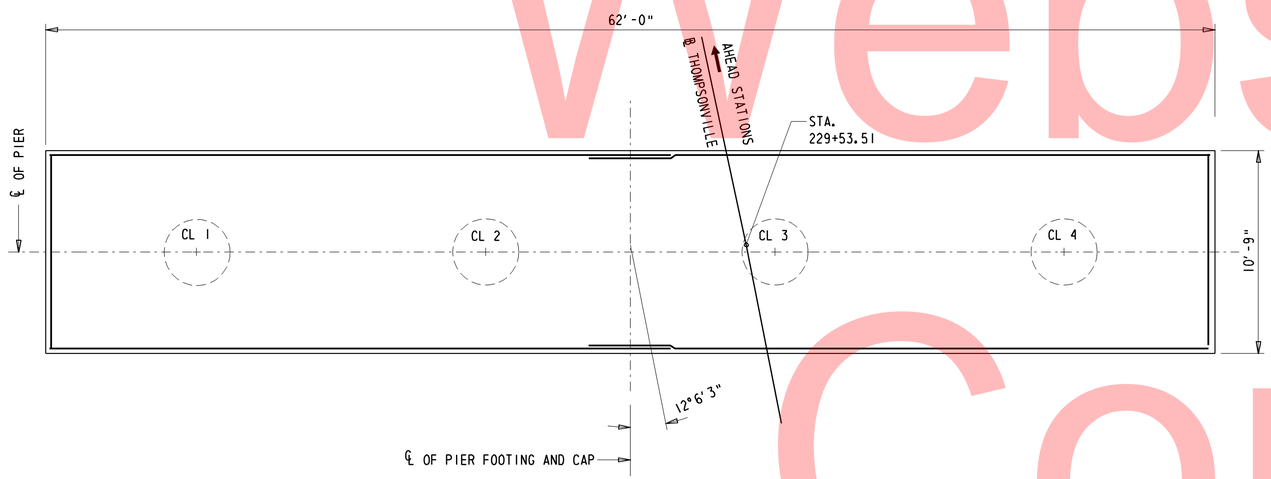

FOOTING REINFORCEMENT PLAN

1/4" = 1'-0"

MASONRY PAD ELEVATIONS	
PAD	ELEVATION
G-1	46.00
G-2	46.23
G-3	46.43
G-4	46.24
G-5	46.06
G-6	45.87

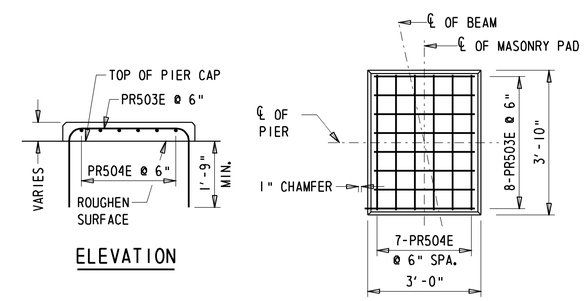

MASONRY PAD

1/2" = 1'-0"

Unofficial Website Copy

DELAWARE
DEPARTMENT OF TRANSPORTATION

ADDENDUMS / REVISIONS

SCALE 0 4 8 12 FEET

SR1, THOMPSONVILLE GRADE SEPARATED INTERSECTION

CONTRACT	BRIDGE NO.	2-019B
T200412201	DESIGNED BY: PAM	
COUNTY		
KENT	CHECKED BY: BB	

PIER REINFORCEMENT DETAILS
BRIDGE SHEET 14 OF 28

SHEET NO. 80
TOTAL SHTS. 183

BEARING NOTES:

1. DESIGN OF STEEL LAMINATE IS BASED ON ASTM A 709 GRADE 36. SOLE PLATE SHALL BE ASTM A 709 GRADE 50W TO MATCH FLANGE OF GIRDERS.

2. NEOPRENE IN BEARING PAD SHALL HAVE A SHORE 'A' DUROMETER HARDNESS OF 60.

3. ANCHOR BOLTS AND WASHERS SHALL BE UNPAINTED A709 GRADE 36 GALVANIZED STEEL. ALL NUTS SHALL BE UNPAINTED A307 GALVANIZED STEEL. SET NUTS 1/4" CLEAR OF SOLE PLATES AND BURR THREADS ABOVE AND BELOW NUTS.

4. USE SWEDGED ANCHOR BOLTS. BOLTS SHALL BE CAST-IN-PLACE OR GROUTED IN PREFORMED (SLEEVED) HOLES. THE PREFORMED HOLES SHALL HAVE A DIAMETER OF AT LEAST 1" LARGER THAN THE DIAMETER OF THE BOLTS.

5. SOLE PLATES ARE TO BE BEVELED TO MATCH GRADE WHEN GRADE EXCEEDS 1 PERCENT.

6. STEEL SURFACES OF SOLE PLATE TO BE MACHINE FINISHED AS SHOWN IN THE DETAILS, MEASURED IN ACCORDANCE WITH ANSI B46.1.

7. STEEL PLATES SHALL MEET A FLATNESS REQUIREMENT OF 0.5 PERCENT IN THE DIRECTION BEING MEASURED (WIDTH, LENGTH, AND DIAGONALS) MAXIMUM, BUT NOT TO EXCEED 1/8 INCH.

8. BEARING SHALL BE PLACED NORMAL TO CENTERLINE OF BEAM.

9. FILL SLOTS AND HOLES AROUND ANCHOR BOLTS WITH AN APPROVED NON-HARDENING CAULKING COMPOUND OR ELASTIC JOINT SEALER.

10. FOR EXPANSION BEARINGS
USE 1 7/8" x 3" SLOTS IN SOLE PLATE AND 3/8" x 3" x 5 1/2" WASHERS WITH 1 5/16" DIA. HOLE IN WASHERS.

FOR FIXED BEARINGS
USE 1 7/8" DIA. HOLES IN SOLE PLATE AND 3/8" x 3" DIA. WASHERS WITH 1 5/16" DIA. HOLE IN WASHER.

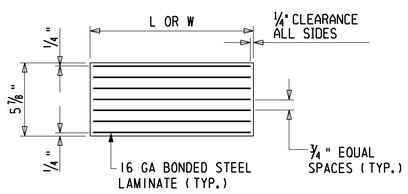

LAMINATED ELASTOMERIC PAD (PIER)

NOT TO SCALE

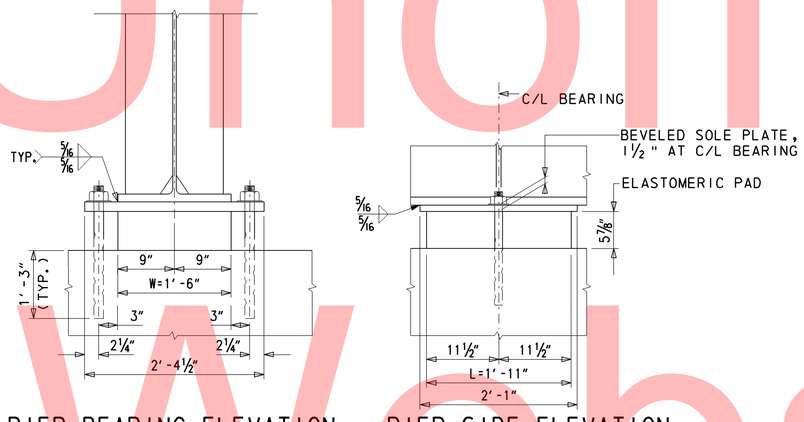

PIER BEARING ELEVATION

SCALE: 1" = 1'-0"

PIER SIDE ELEVATION

SCALE: 1" = 1'-0"

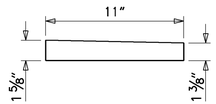

BEVELLED SOLE PLATE - ABUT.

SCALE: 2" = 1'-0"

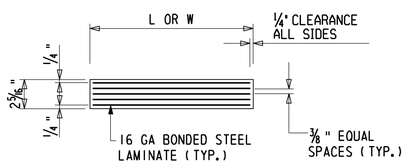

LAMINATED ELASTOMERIC PAD

NOT TO SCALE

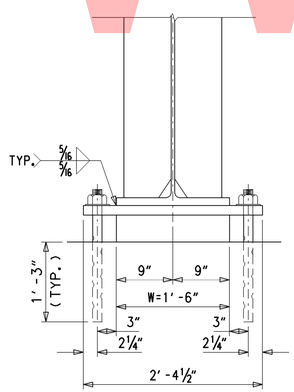

ABUT. BEARING ELEVATION

SCALE: 1" = 1'-0"

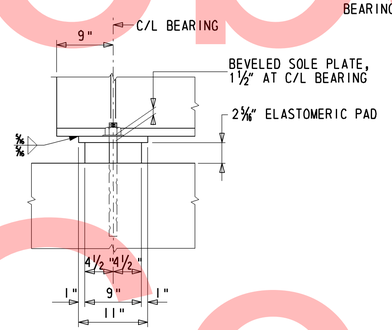

ABUT. SIDE ELEVATION

SCALE: 1" = 1'-0"

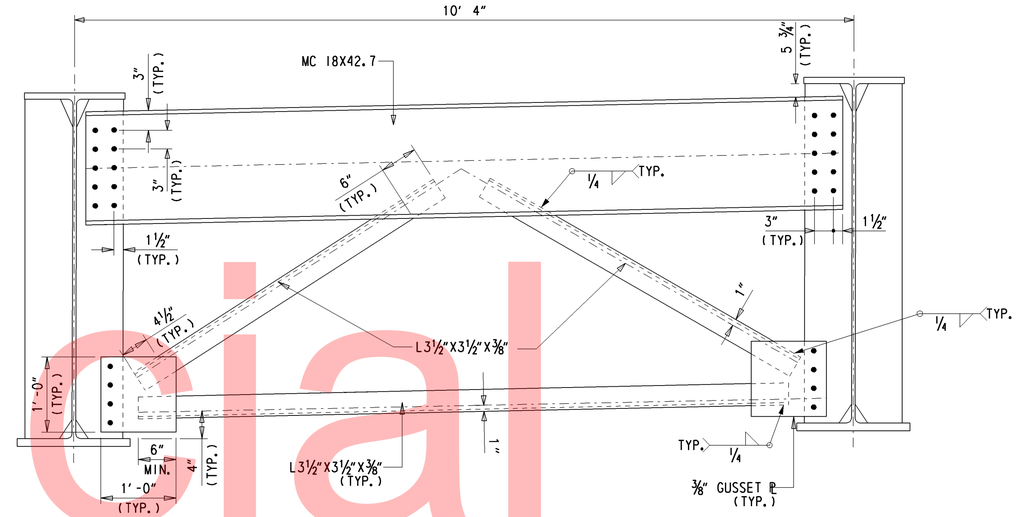

END DIAPHRAGM

(AT ABUTMENTS)

1/2"X7 1/2" CONNECTION @ INTERMEDIATE LOCATIONS, 1" X7 1/2" BEARING STIFFENER

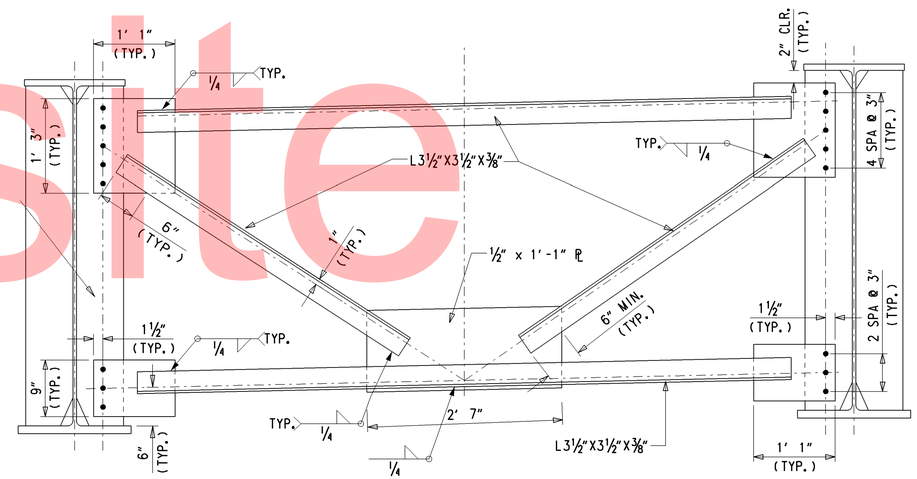

INTERMEDIATE DIAPHRAGM

(AT PIER & INTERMEDIATE LOCATIONS)

NOTES:

1. UNLESS OTHERWISE NOTED, ALL BOLTS SHALL BE TYPE 3, 7/8" DIA. A325 (AASHTO M164) HIGH STRENGTH FRICTION BOLTS MECHANICALLY GALVANIZED.

2. BOLT PITCH SHALL BE 3" UNLESS OTHERWISE NOTED

3. MINIMUM EDGE DISTANCE IS 1 1/2" UNLESS OTHERWISE SHOWN OR NOTED

4. PAYMENT FOR ELASTOMERIC PADS, SOLE PLATES AND ANCHOR BOLTS SHALL BE INCIDENTAL TO ITEM "605001-STEEL STRUCTURES".

Unofficial Website Copy

W:\MSV8\CELLS\PROJDEV\SB.CEL

DELAWARE DEPARTMENT OF TRANSPORTATION	ADDENDUMS / REVISIONS	SCALE AS NOTED	SR1, THOMPSONVILLE GRADE SEPARATED INTERSECTION	CONTRACT T201412201	BRIDGE NO. 2-019B	BEARING DETAILS BRIDGE 15 OF 28	SHEET NO. 81
				COUNTY KENT	DESIGNED BY: PAM		TOTAL SHTS. 183
					CHECKED BY: BB		

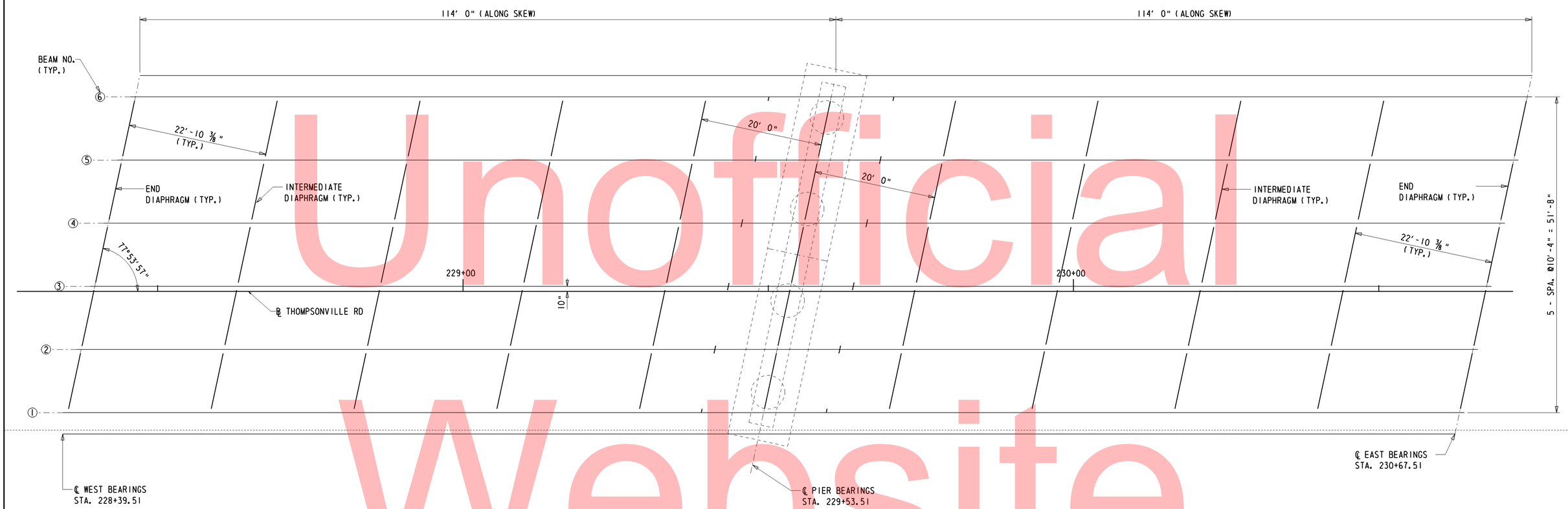

FRAMING PLAN

1/8" = 1'-0"

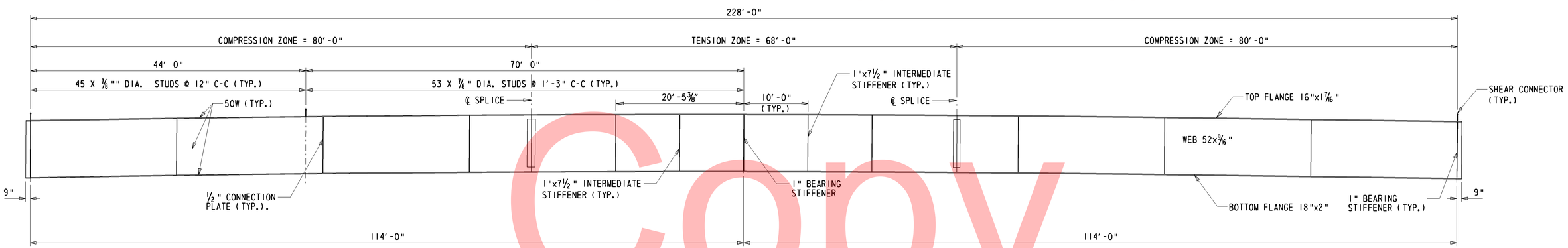

BEAM ELEVATION

1/8" = 1'-0" HORIZANTAL
1/4" = 1'-0" VERTICAL

Unofficial Website Copy

DELAWARE DEPARTMENT OF TRANSPORTATION	ADDENDUMS / REVISIONS	SCALE 0 1 2 3 FEET	SR1, THOMPSONVILLE GRADE SEPARATED INTERSECTION	CONTRACT T200412201	BRIDGE NO. 2-019B	FRAMING PLAN BRIDGE SHEET 16 OF 28	SHEET NO. 82
				COUNTY KENT	DESIGNED BY: PAM		TOTAL SHTS. 183
					CHECKED BY: BB		

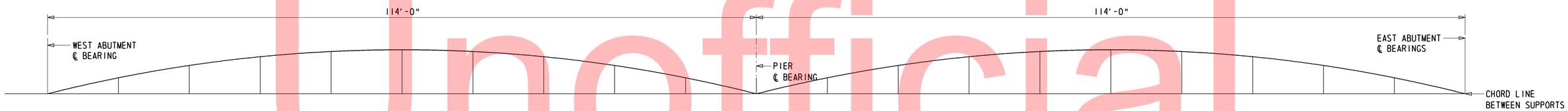

CAMBER DETAILS

DEFLECTION AND TOTAL CAMBERS (INCH)

GIRDER		0	10.0	20.0	30.0	40.0	50.0	60.0	70.0	80.0	90.0	100	110	L	10.0	20.0	30.0	40.0	50.0	60.0	70.0	80.0	90.0	100	110	L
GIRDER NO. 1	DLS	0	1/8	3/16	5/16	5/16	5/16	5/16	1/4	3/16	1/8	1/16	1/16	0	1/16	1/16	1/8	3/16	1/4	5/16	5/16	5/16	5/16	3/16	1/8	0
	DLC	0	1/2	1	1 5/16	1 1/2	1 9/16	1 1/2	1 1/4	15/16	9/16	1/4	1/16	0	1/16	1/4	9/16	15/16	1 1/4	1 1/2	1 9/16	1 1/2	1 5/16	1	1/2	0
	SDL	0	1/16	1/16	1/16	1/16	1/16	1/16	1/16	1/16	1/16	0	0	0	0	0	1/16	1/16	1/16	1/16	1/16	1/16	1/16	1/16	1/16	0
	TD&C	0	11/16	1 1/4	1 11/16	1 7/8	1 15/16	1 7/8	1 9/16	1 3/16	3/4	5/16	1/8	0	1/8	5/16	3/4	1 3/16	1 9/16	1 7/8	1 15/16	1 7/8	1 11/16	1 1/4	11/16	0
	VCO	0	9/16	1	1 5/16	1 9/16	1 11/16	1 11/16	1 5/8	1 7/16	1 1/8	3/4	1/4	0	9/16	1	1 5/16	1 9/16	1 11/16	1 11/16	1 11/16	1 7/16	1 1/8	3/4	1/4	0
	TD&C+VCO	0	1 1/4	2 1/4	3	3 7/16	3 5/8	3 9/16	3 3/16	2 5/8	1 7/8	1 1/16	3/8	0	11/16	1 5/16	2 1/16	2 3/4	3 1/4	3 9/16	3 5/8	3 5/16	2 13/16	2	15/16	0
GIRDERS 2-5	DLS	0	1/8	3/16	5/16	5/16	5/16	5/16	1/4	3/16	1/8	1/16	1/16	0	1/16	1/16	1/8	3/16	1/4	5/16	5/16	5/16	5/16	3/16	1/8	0
	DLC	0	11/16	1 5/16	1 11/16	1 7/8	1 11/16	1 1/2	1 1/8	5/8	3/16	0	0	0	0	0	3/16	5/8	1 1/8	1 1/8	1 13/16	1 1/8	1 11/16	1 5/16	11/16	0
	SDL	0	1/16	1/16	1/16	1/16	1/16	1/16	1/16	1/16	1/16	0	0	0	0	0	1/16	1/16	1/16	1/16	1/16	1/16	1/16	1/16	1/16	0
	TD&C	0	7/8	1 9/16	2 1/16	2 3/16	2 3/16	1 7/8	1 7/16	7/8	3/8	1/16	1/16	0	1/16	1/16	3/8	7/8	1 7/16	1 7/8	2 3/16	2 3/16	2 1/16	1 9/16	7/8	0
	VCO	0	9/16	1	1 5/16	1 9/16	1 11/16	1 11/16	1 5/8	1 7/16	1 1/8	3/4	1/4	0	9/16	1	1 5/16	1 9/16	1 11/16	1 15/16	1 11/16	1 7/16	1 1/8	3/4	1/4	0
	TD&C+VCO	0	1 7/16	2 9/16	3 3/8	3 3/4	3 7/8	3 9/16	3 1/16	2 5/16	1 1/2	15/16	5/16	0	5/8	1 1/16	1 11/16	2 7/16	3 1/8	3 1/8	3 7/8	3 5/8	3 3/16	2 5/16	1 1/8	0
GIRDER NO. 6	DLS	0	1/8	3/16	5/16	5/16	5/16	5/16	1/4	3/16	1/8	1/16	1/16	0	1/16	1/16	1/8	3/16	1/4	5/16	5/16	5/16	5/16	3/16	1/8	0
	DLC	0	1/2	1	1 5/16	1 1/2	1 9/16	1 1/2	1 1/4	15/16	9/16	1/4	1/16	0	1/16	1/4	9/16	15/16	1 1/4	1 1/2	1 9/16	1 1/2	1 5/16	1	1/2	0
	SDL	0	1/16	1/16	1/16	1/16	1/16	1/16	1/16	1/16	1/16	0	0	0	0	0	1/16	1/16	1/16	1/16	1/16	1/16	1/16	1/16	1/16	0
	TD&C	0	11/16	1 1/4	1 11/16	1 7/8	1 15/16	1 7/8	1 9/16	1 3/16	3/4	5/16	1/8	0	1/8	5/16	3/4	1 3/16	1 9/16	1 7/8	1 15/16	1 7/8	1 11/16	1 1/4	11/16	0
	VCO	0	9/16	1	1 5/16	1 9/16	1 11/16	1 11/16	1 5/8	1 7/16	1 1/8	3/4	1/4	0	9/16	1	1 5/16	1 9/16	1 11/16	1 11/16	1 11/16	1 7/16	1 1/8	3/4	1/4	0
	TD&C+VCO	0	1 1/4	2 1/4	3	3 7/16	3 5/8	3 1/8	3 3/16	2 5/8	1 7/8	1 1/16	3/8	0	11/16	1 5/16	2 1/16	2 3/4	3 1/4	3 9/16	3 5/8	3 5/16	2 13/16	2	15/16	0

LEGEND

DLS - DENOTES DEFLECTION DUE TO STRUCTURAL STEEL GIRDER (DC1)

DLC - DENOTES DEFLECTION DUE TO DECK SLAB, HAUNCH, SIP FORMS (DC1)

SDL - DENOTES DEFLECTION DUE TO PARAPET, SIDEWALK AND PROTECTIVE FENCE (DC2)

TD&C - DENOTES TOTAL DEAD LOAD DEFLECTION AND CAMBER

VCO - DENOTES CAMBER FOR VERTICAL CURVE ORDINATE DUE TO ROADWAY PROFILE

ALL BEAMS SHALL BE CAMBERED FOR DEAD LOAD DEFLECTION ORDINATES TO THE DIMENSIONS SHOWN ON THESE PLANS. THE CAMBER TOLERANCE IS ZERO UNDER TO THREE QUARTERS (3/4) INCH OVER.

Unofficial Website Copy

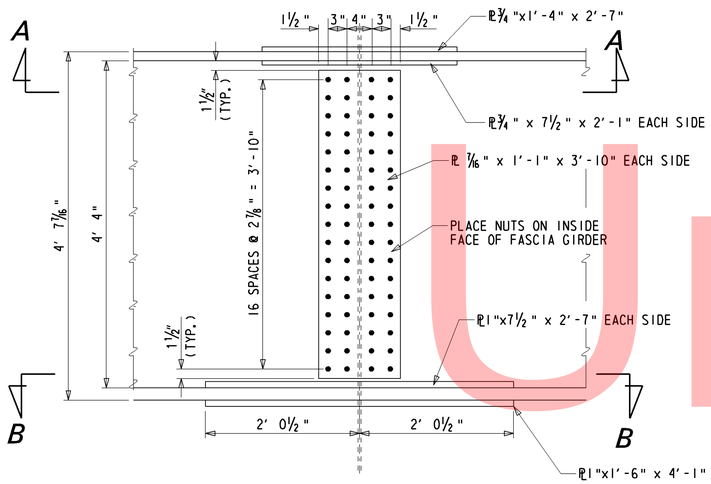

PLAN

1" = 1'-0"

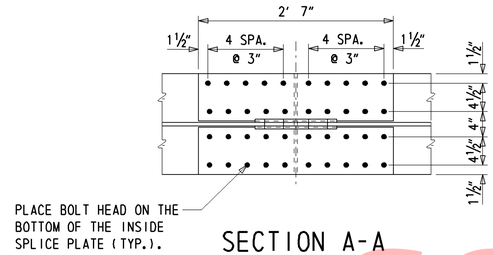

SECTION A-A

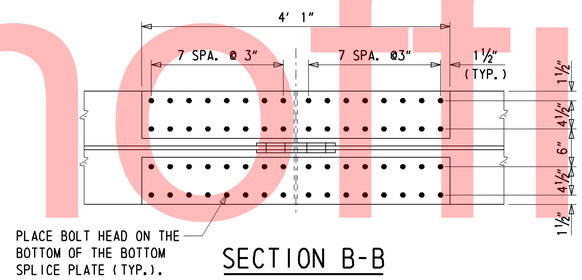

SECTION B-B

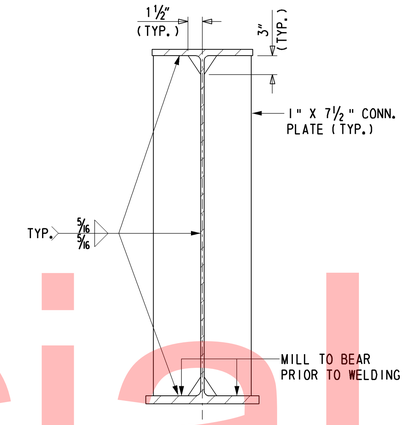

ABUTMENT STIFFENER

SCALE: 1" = 1'-0"

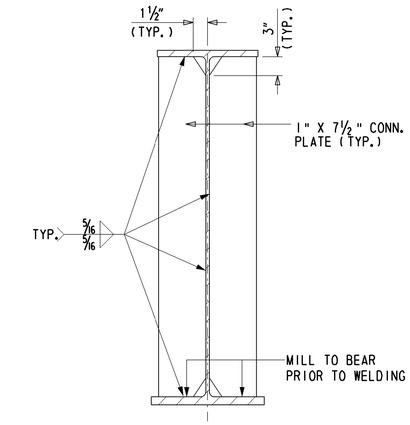

PIER STIFFENER

SCALE: 1" = 1'-0"

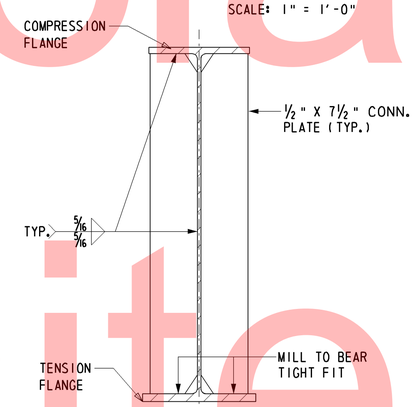

INTERMEDIATE DIAPHRAGM CONNECTION PLATES

POSITIVE MOMENT ZONE
1" = 1'-0"

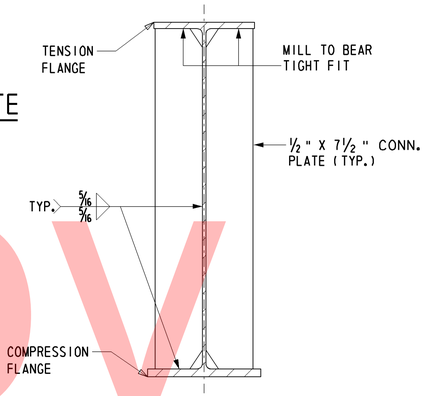

INTERMEDIATE DIAPHRAGM CONNECTION PLATES

NEGATIVE MOMENT ZONE
1" = 1'-0"

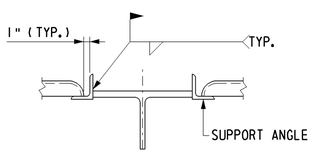

NOTE: ALL ANGLES, WELDS, AND INSERTS MUST BE DESIGNED BY THE CONTRACTOR AND SUBMITTED FOR APPROVAL

COMPRESSION FLANGE FOR S.I.P. FORMS

SCALE: 1" = 1'-0"

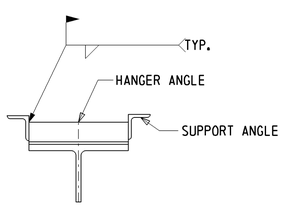

NOTE: ALL ANGLES, WELDS, AND INSERTS MUST BE DESIGNED BY THE CONTRACTOR AND SUBMITTED FOR APPROVAL

TENSION FLANGE FOR S.I.P. FORMS

SCALE: 1" = 1'-0"

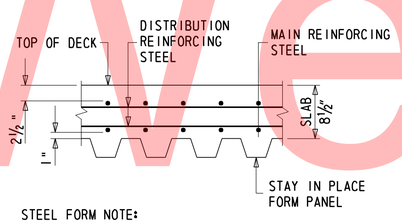

STEEL FORM NOTE:

FORMS SHALL BE VERTICALLY ADJUSTED TO ATTAIN LINE AND GRADE REQUIRED ON THE PLANS.

STEEL FORM SECTION

SCALE: 1" = 1'-0"

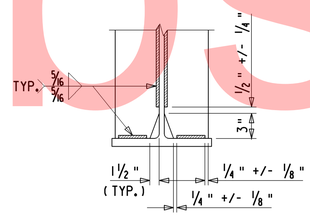

STIFFENER & CONNECTION PLATE WELD TERMINATION

NOT TO SCALE

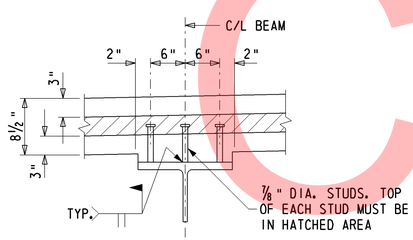

SHEAR CONNECTORS

SCALE: 1" = 1'-0"

STRUCTURAL STEEL NOTES:

1. ALL STRUCTURAL STELL SHALL BE AASHTO M270 (ASTM A709) GRADE 50W.
2. WELDING SHALL CONFORM TO 2010 AASHTO/AWS BRIDGE WELDING CODE D1.5:2010.
3. USE MECHANICALY GALVANIZED BOLTS, NUTS AND WASHERS ON PAINTED PORTIONS OF WEATHERING STEEL. FOR PORTIONS OF STEEL THAT ARE TO REMAIN UNPAINTED, USE BOLTS, NUTS AND WASHERS CONFORMING TO ATMOSPHERIC CORROSSION RESISTANCE REQUIREMENTS OF AASHTO M270/ M270M (AASHTO A709/A709M), GRADE 50W IN SPLICE CONNECTIONS.
4. BOLT PITCH SHALL BE 3" UNLESS OTHERWISE NOTED.
5. MINIMUM EDGE DISTANCE IS 1½" UNLESS OTHERWISE SHOWN OR NOTED.
6. FLANGE AND WEB SPLICES SHALL BE LOCATED WHERE SHOWN ON PLANS. FIELD SPLICE DESIGNS ARE BASED ON CLASS A SURFACE (UNPAINTED CLEAN MILL SCALE, AND BLASTED-CLEANED SURFACES WITH CLASS A COATING). MINOR CHANGES IN LOCATION, TOGETHER WITH ANY ADDITIONAL SPLICES REQUESTED, SHALL BE SUBJECT TO THE APPROVAL OF THE ENGINEER. LENGTHS OF PLATES SHALL BE CONSISTENT WITH THE LENGTHS OF PLATES AVAILABLE FROM THE MILL. LOCATIONS SHALL BE AT POINTS OF REDUCED TENSILE STRESS. SHOP WEB SPICES SHALL BE AT LEAST 12" FROM SHOP FLANGE SPLICES AND/OR CONNECTION PLATES FOR CROSS FRAMES.
7. ALLOWANCES SHALL BE MADE IN THE SHOP FOR SHRINKAGE DUE TO WELDING AND BURNING. IF UNEVEN SHRINKAGE IS ANTICIPATED, CAMBER ORDINATES SHALL BE ASJUSTED ACCORDINGLY.
8. FLANGE AND WEB SHOP SPLICES ARE TO BE COMPLETED AND WELDMENTS INSPECTED BEFORE FITTED AND WELDING FLANGES TO WEBS. FABRICATION METHODS SHALL BE INCLUDED IN THE WRITTEN WELDING PROCEDURE SPECIFICATIONS OF THE SHOP DRAWING.
9. ALL INTERMEDIATE CROSSFRAME CONNECTION PLATES ARE TO BE PER-PENDICULAR TO THE TOP FLANGE AND WEB.
10. ALL BEARING STIFFNERS, AND ENDS OF GIRDERS SHALL BE PLUMB UNDER FULL DEAD LOAD. ALL BEARING STIFFNERS ARE NORMAL TO WEB.
11. STAY-IN-PLACE FORMS SHALL NOT BE WELDED TO FLANGE IN THE TENSION ZONE.
12. INTERMEDIATE DIAPHRAGM CONNECTION PLATES ARE NOT REQUIRED ON FASCIA SIDE OF EXTERIOR GIRDERS
13. BOLT HEADS SHALL BE ON THE EXTERIOR FACE OF THE EXTERIOR GIRDERS AND ON THE BOTTOM OF THE BOTTOM FLANGES

Unofficial Website Copy

EXPANSION JOINT NOTES:

1. STEEL FOR DECK JOINTS AND STEEL EXTRUSIONS SHALL BE AASHTO M270, GR. 36 (ASTM A36)
2. NEOPRENE EXTRUSION TO MEET D-2628-81 MODIFIED, (RECOVERY TESTS EXCLUDED).
3. THE EXPANSION JOINT SHALL BE CAPABLE OF SEALING THE DECK TO PREVENT MOISTURE AND OTHER CONTAMINANTS FROM DESCENDING THROUGH THE JOINT.
4. ENTIRE EXPANSION DAM SHALL BE PAINTED AFTER FABRICATION USING URETHANE SYSTEM, EXCEPT AS NOTED.
5. LUBRICANT-ADHESIVE FOR USE IN INSTALLING AND BONDING NEPORENE SEAL ELEMENTS TO STEEL JOINT COMPONENTS SHALL BE A ONE QUART MOISTURE-CURING POLYURETHAN AND HYDROCARBON SOLVENT MIXTURE HAVING THE FOLLOWING PHYSICAL PROPERTIES:

AVERAGE WEIGHT, POUNDS PER GALLON	8 +/- 10%
SOLIDS CONTENT	65%
ADHESIVE SHALL REMAIN LIQUID FROM	5°F TO 120°F
FILM STRENGTH, AS PER ASTM D-412	2,000 PSI
ELONGATION	250%

6. HOLES SHALL BE PLACED IN THE RIB PLATES AND STRAP ANCHOR PLATES FOR BAR REINFORCEMENT. IF THIS IS DONE IN THE FIELD AN APPROVED PAINT SHALL BE USED TO TOUCH-UP THE HOLES.

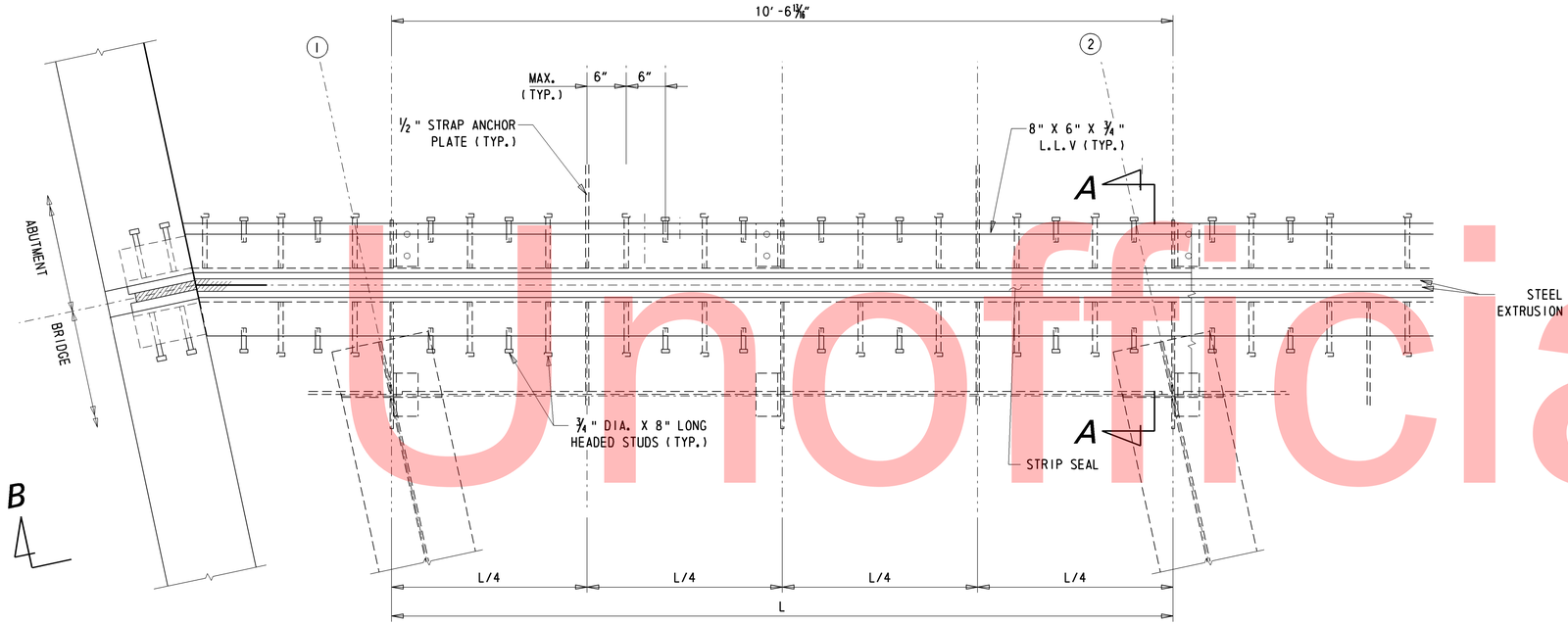

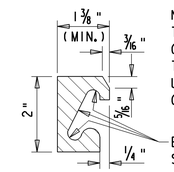

NOTE A:
THE CONTRACTOR SHALL ADJUST THE OPEN DECK JOINT AS REQUIRED BY THE WIDTH OF THE STEEL EXTRUSION USED SO AS TO PROVIDE A 2" JOINT OPENING AT 68°F.

ENTIRE INSIDE AREA SHALL NOT BE PAINTED

STEEL EXTRUSION DETAIL

6" = 1'-0"

TYPICAL JOINT PLAN

1" = 1'-0"

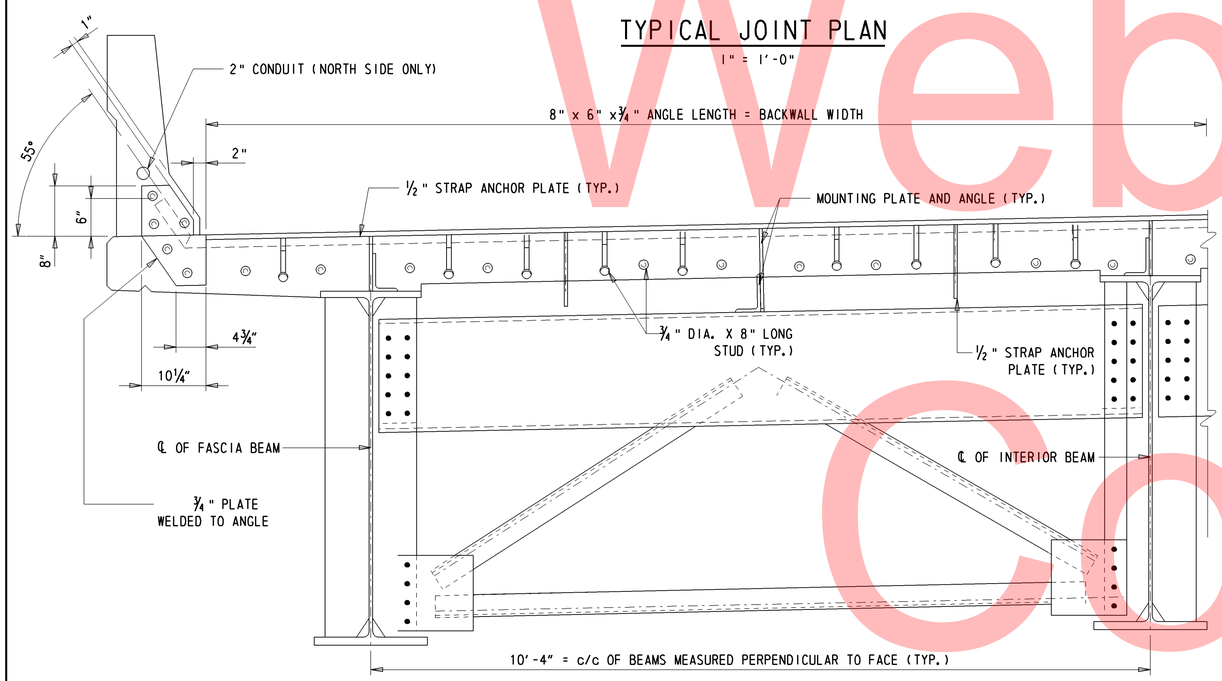

SECTION B-B

1" = 1'-0"

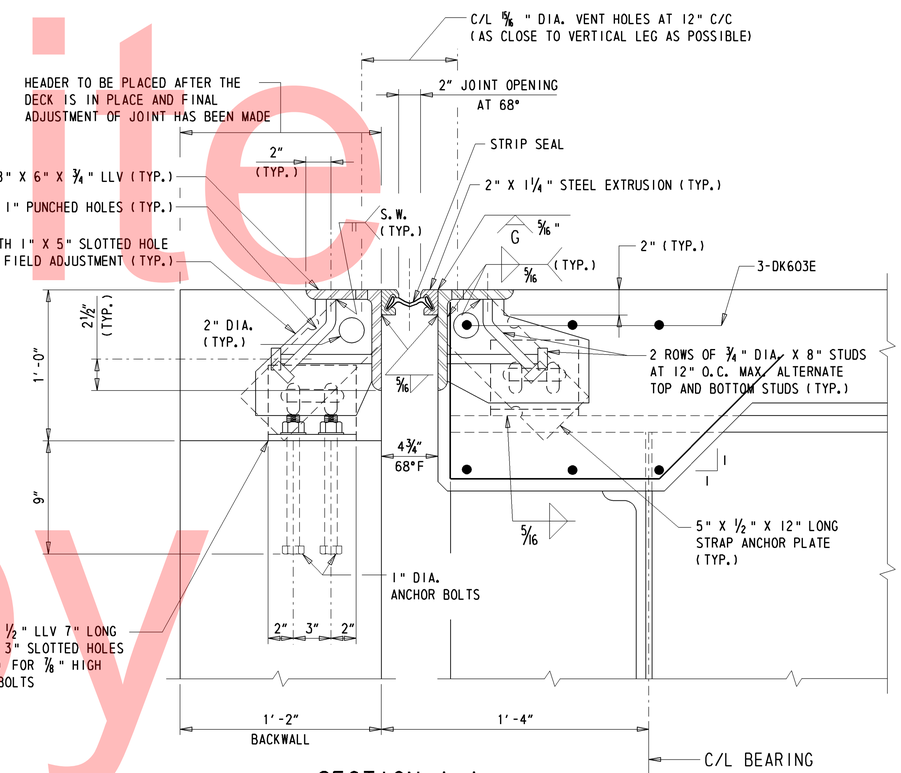

SECTION A-A

2" = 1'-0"

Unofficial Website Copy

DELAWARE DEPARTMENT OF TRANSPORTATION	ADDENDUMS / REVISIONS	SCALE AS NOTED	SR1, THOMPSONVILLE GRADE SEPARATED INTERSECTION	CONTRACT T200412201	BRIDGE NO. 2-017B	EXPANSION JOINT DETAILS BRIDGE SHEET 19 OF 28	SHEET NO. 85
				COUNTY KENT	DESIGNED BY: PAM		TOTAL SHTS. 183
					CHECKED BY: BB		

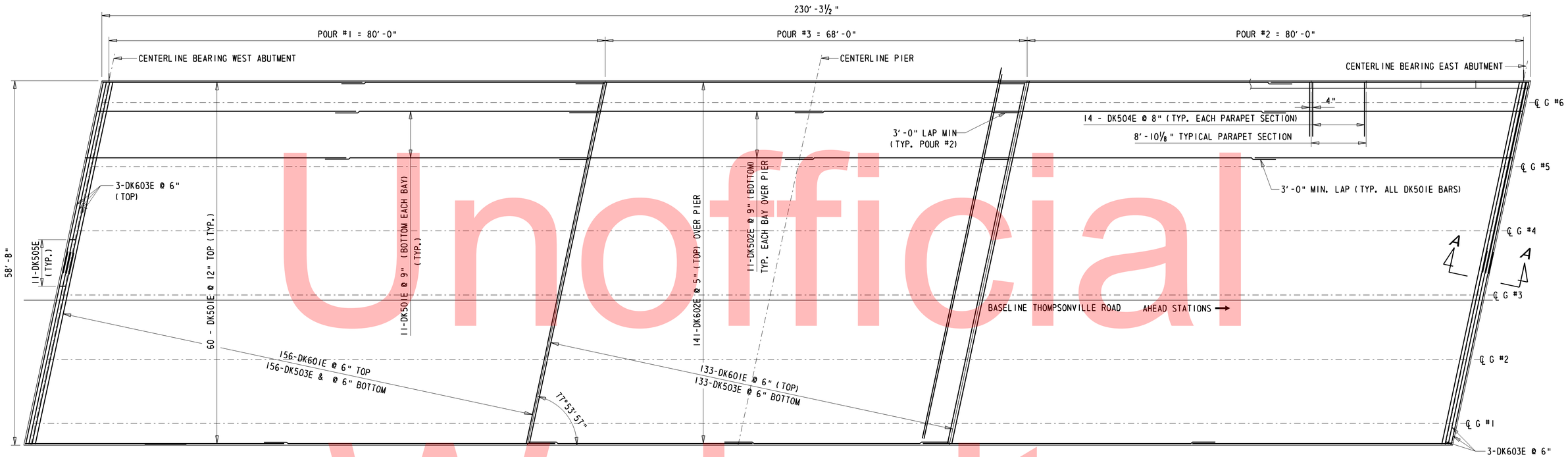

DECK PLAN

⅛" = 1'-0"

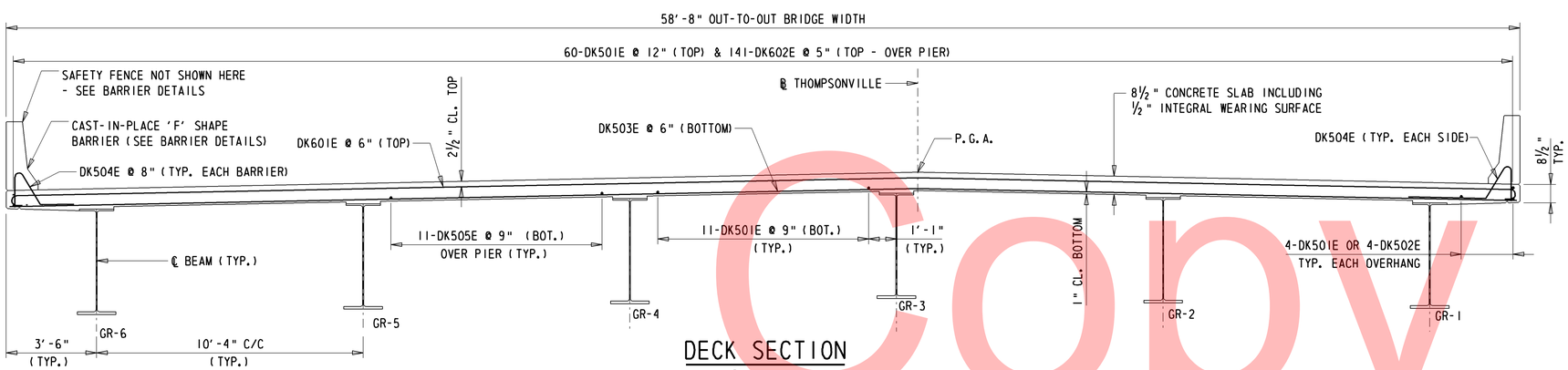

DECK SECTION

⅜" = 1'-0"

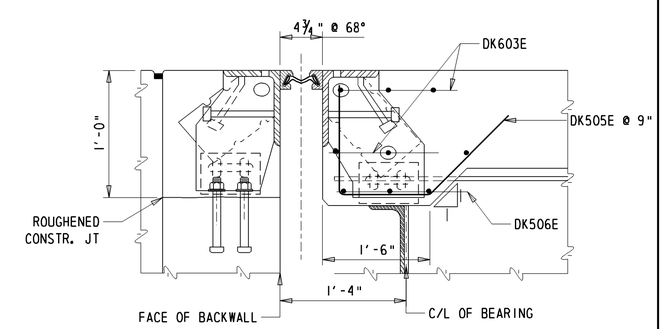

SECTION A-A

NOT TO SCALE

Unofficial Website Copy

DELAWARE DEPARTMENT OF TRANSPORTATION	ADDENDUMS / REVISIONS	SCALE AS NOTED	SR1, THOMPSONVILLE GRADED SEPARATED INTERSECTION	CONTRACT T200412201	BRIDGE NO. 2-019B	DECK REINFORCEMENT BRIDGE SHEET 20 OF 28	SHEET NO. 86
				COUNTY KENT	DESIGNED BY: PAM		TOTAL SHTS. 183
					CHECKED BY: BB		

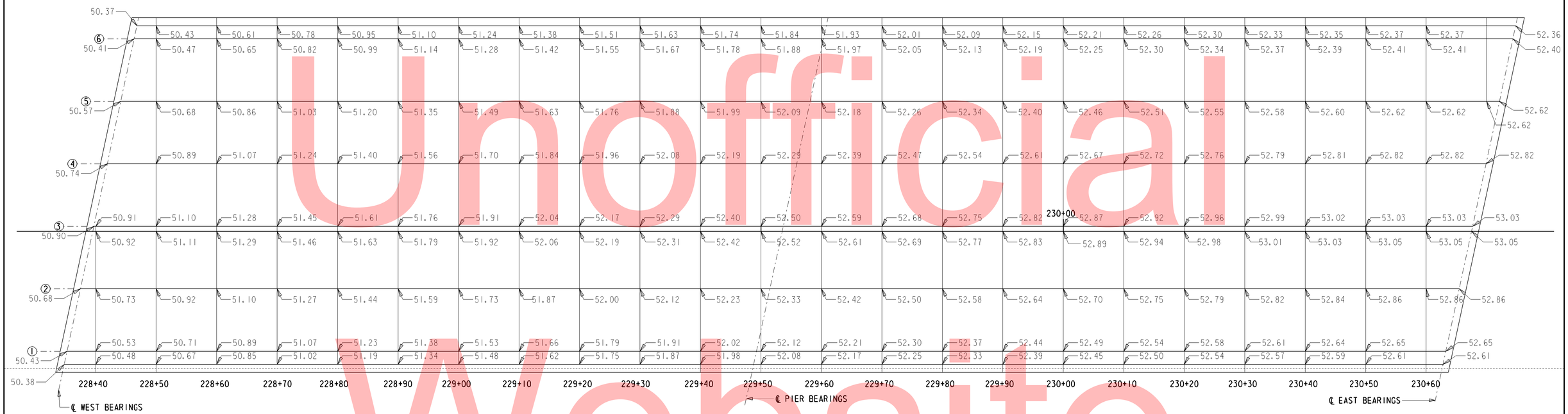

PLAN

1/8" = 1'-0"

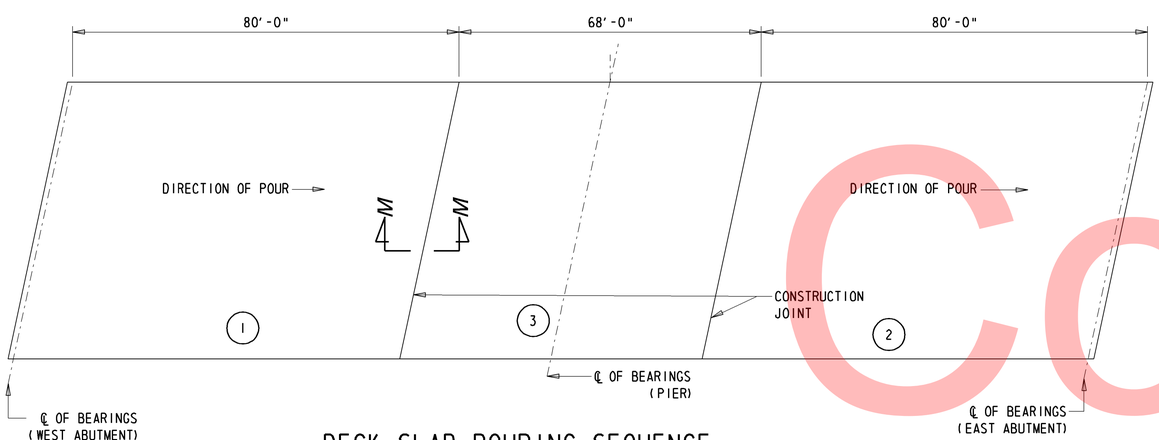

DECK SLAB POURING SEQUENCE

1/16" = 1'-0"

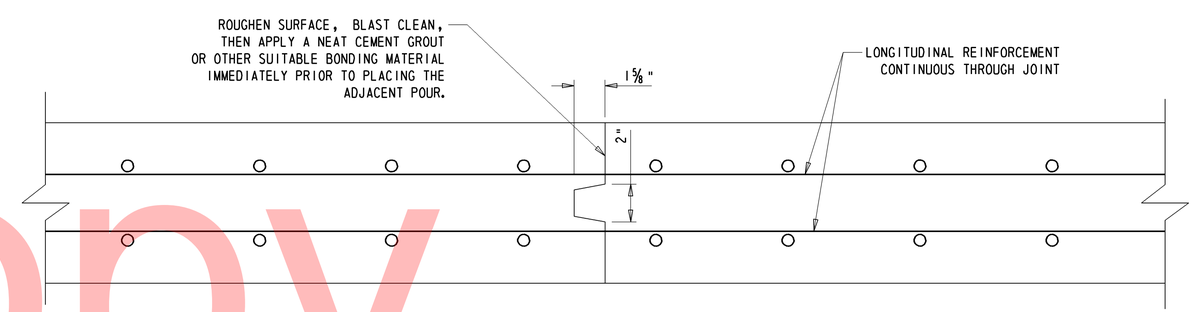

SECTION M-M

3" = 1'-0"

Unofficial Website Copy

W:\MSV8\CELLS\PROJDEV\SB.CEL

DELAWARE DEPARTMENT OF TRANSPORTATION	ADDENDUMS / REVISIONS	SCALE 0 1 2 3 FEET	SR1, THOMPSONVILLE GRADE SEPARATED INTERSECTION	CONTRACT T200412201	BRIDGE NO. 2-019B	FINISHED DECK ELEVATIONS BRIDGE SHEET 21 OF 28	SHEET NO. 87
				COUNTY KENT	DESIGNED BY: PAM		TOTAL SHTS. 183
					CHECKED BY: BB		

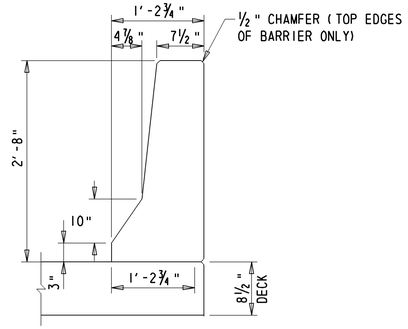

DECK BARRIER SECTION

1" = 1'-0"

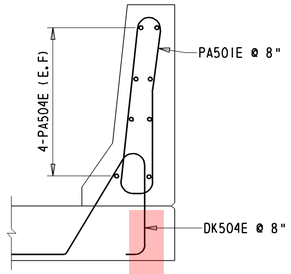

TYPICAL BARRIER REINFORCEMENT

1" = 1'-0"

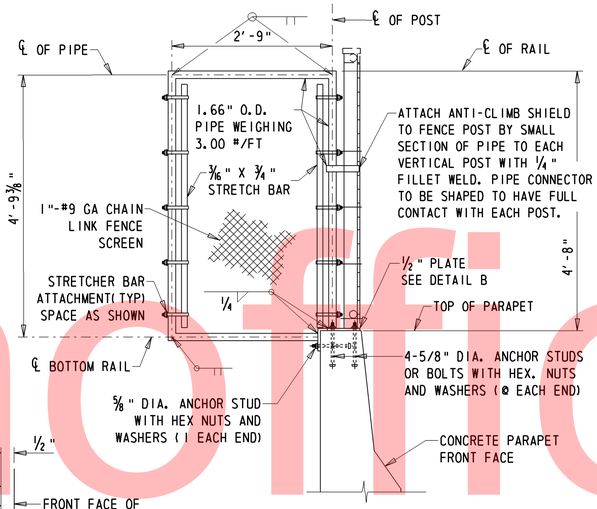

SECTION Q-Q

N.T.S

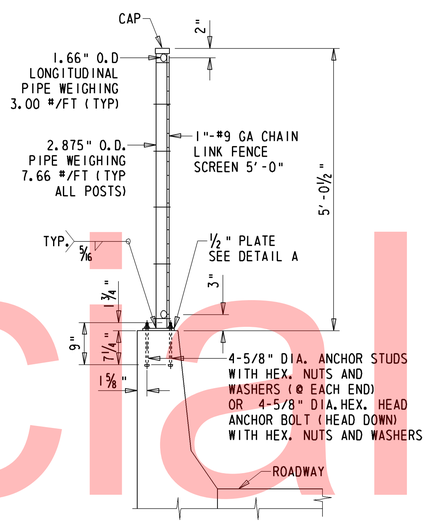

SECTION R-R

N.T.S

BRIDGE SAFETY FENCE NOTES

1. MATERIALS - SEE SPECIAL PROVISIONS FOR ITEM 727507 - BRIDGE SAFETY FENCE.
2. POST SPACING - POST SPACING ALL BE DETERMINED BY THE CONTRACTOR AND INCLUDED IN THE SHOP DRAWINGS. EACH POST MUST BE A MINIMUM OF 1'-0" FROM ANY PARAPET JOINT.
3. WORKING DRAWINGS - CONTRACTOR SHALL SUBMIT WORKING DRAWINGS FOR THE FENCE FOR REVIEW BY THE ENGINEER
4. PAYMENT - CHAIN LINK FENCE INCLUDING ANTI-CLIMB SHIELD ITEMS WILL BE PAID UNDER ITEM 727507 - BRIDGE SAFETY FENCE.

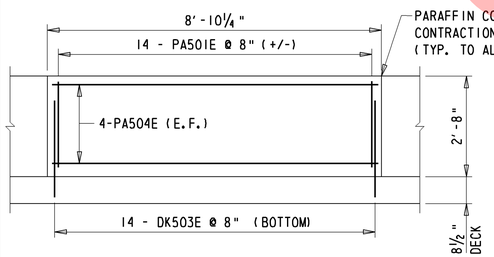

DECK BARRIER ELEVATION

½" = 1'-0"

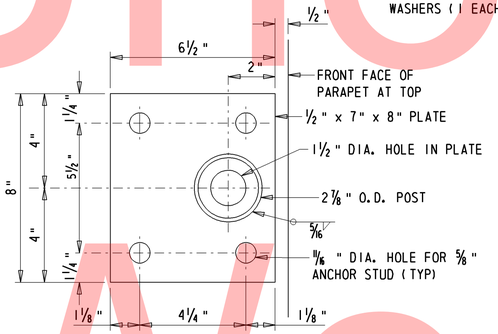

DETAIL A

N.T.S

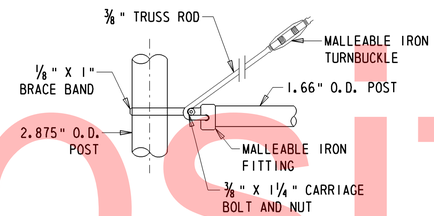

TRUSS ROD ATTACHMENT

N.T.S

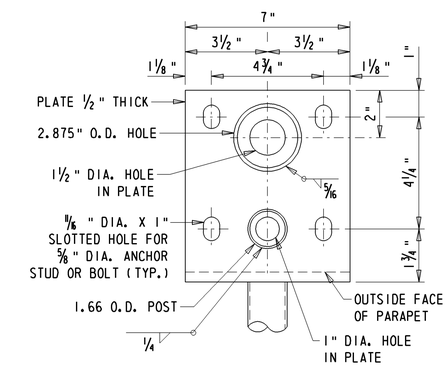

PLAN VIEW

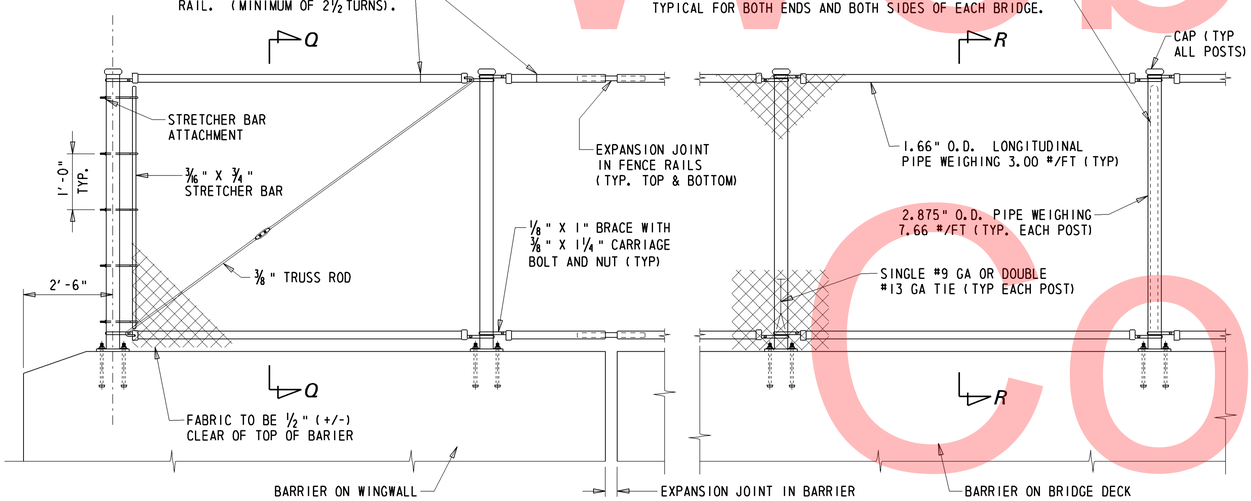

SAFETY FENCE ELEVATION

N.T.S

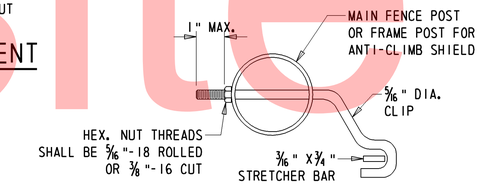

STRETCHER BAR ATTACHMENT

1½" = 1'-0"

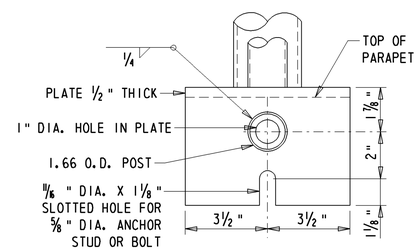

SIDE VIEW

DETAIL B

N.T.S

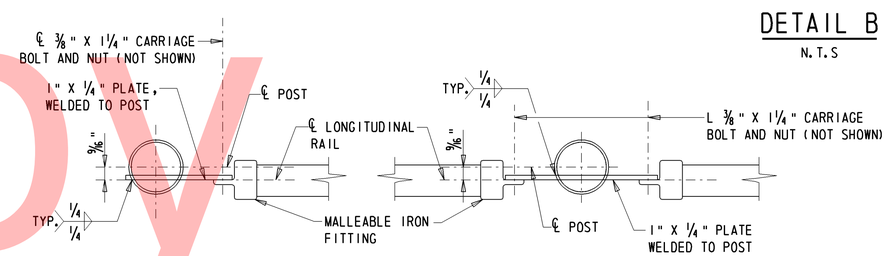

TOP LONGITUDINAL RAIL-POST ATTACHMENT

N.T.S

Unofficial Website Copy

DELAWARE DEPARTMENT OF TRANSPORTATION	ADDENDUMS / REVISIONS	SCALE AS NOTED	SR1, THOMPSONVILLE GRADE DEPARATED INTERSECTION	CONTRACT T200412201	BRIDGE NO. 2-019B	BARRIER & SAFETY FENCE DETAILS BRIDGE SHEET 22 OF 28	SHEET NO. 88
				COUNTY KENT	DESIGNED BY: PAM		TOTAL SHTS. 183
					CHECKED BY: BB		

① ANY MARK NUMBER WITH SUFFIX 'E' DENOTES EPOXY COATED REINFORCING STEEL.

② ALL MARK 'LOCATION PREFIXES' SHALL CONSIST OF TWO LETTERS AND ARE AS FOLLOWS: AB = ABUTMENT, AS = APPROACH SLAB, BC = BOX CULVERT, BW = BACKWALL, CL = COLUMN, DK = DECK, DL = DOWEL, FT = FOOTING, HW = HEADWALL, MS = MISC. BARS, PA = PARAPET, PR = PIER, SC = SHEETPILE CAP, SL = SLAB, TW = TOEWALL, WL = WALL (UNIQUE LOCATION), WW = WINGWALL

SPECIFICATIONS					BENDING DIMENSIONS (FEET-INCHES /QUARTER INCH)										
QTY.	SIZE	LENGTH	MARK	TYPE	A	B	C	D	E	F/R	G	H	J	K	O
144	5	7-110	AB501E	STR		7-110									
144	5	10-110	AB502E	STR		10-110									
160	5	33-100	AB503E	STR		33-100									
124	5	5-00	AB505E	17		1-00	3-00	1-00							
124	5	8-50	AB506E	STR		8-50									
124	5	8-70	AB507E	17		0-100	7-90								
60	5	7-60	AB508E	17		2-60	2-60	2-60							
72	5	1-60	AB509E	STR		1-60									
22	5	6-00	AB510E	STR		6-00									
42	5	3-62	AB511E	16			1-100	1-82				0-40		1-80	3-60
21	5	5-70	AB512E	STR		5-70									
98	5	3-80	AB513E	STR		3-80									
14	5	2-80	AB514E	17		1-80	1-00								
12	5	3-30	AB515E	STR		3-30									
12	5	6-60	AB516E	STR		6-60									
14	5	3-02	AB517E	16			1-50	1-72				0-40		1-70	3-00
32	5	2-80	AB518E	STR		2-80									
4	6	872-10	CL601E	X						0-30		22-60	90	0	3-10
80	8	8-40	CL800E	17		7-00	1-40								
80	8	21-60	CL801E	STR		21-60									
492	5	42-50	DK501E	STR		42-50									
126	5	36-60	DK502E	STR		36-60									
445	5	59-80	DK503E	STR		59-80									
728	5	4-33	DK504E	T15		1-43	0-52	0-111	0-41	1-20			0-50	0-100	1-23
110	5	3-32	DK505E	16		1-00	1-20	1-12				0-92		0-92	1-112
12	5	31-60	DK506E	STR		31-60									
445	6	61-00	DK601E	1	0-80	59-80					0-80		0-60		
282	6	36-60	DK602E	STR		36-60									
12	6	31-60	DK603E	STR		31-60									
372	5	14-80	FT501E	17		2-60	9-80	2-60							
112	5	33-100	FT502E	STR		33-100									
468	5	6-110	FT503E	18	0-70	6-40							0-50		
34	5	32-80	FT504E	STR		32-80									
44	5	19-80	FT505E	STR		19-80									
44	5	22-80	FT506E	STR		22-80									
184	5	17-20	FT507E	17		3-90	9-80	3-90							
130	6	11-80	FT601E	17		1-00	9-80	1-00							
120	6	7-00	FT602E	18	0-80	6-40							0-60		
42	8	32-80	FT801E	STR		32-80									
872	5	6-10	PA501E	H1	0-70	2-00	0-111	1-113		0-32	0-70	0-43			

SPECIFICATIONS					BENDING DIMENSIONS (FEET-INCHES /QUARTER INCH)										
QTY.	SIZE	LENGTH	MARK	TYPE	A	B	C	D	E	F/R	G	H	J	K	O
32	5	10-40	PA502E	STR		10-40									
32	5	11-100	PA503E	STR		11-100									
416	5	8-60	PA504E	STR		8-60									
6	5	56-70	PR501E	STR		56-70									
268	5	13-12	PR502E	T6	0-60	3-70	2-60	3-70	2-60		0-52				
48	5	7-100	PR503E	17		2-70	2-80	2-70							
42	5	3-60	PR504E	STR		3-60									
22	8	56-70	PR801E	STR		56-70									
21	5	13-80	WW501E	STR		13-80									
21	5	13-80	WW502E	STR		13-80									
24	5	16-90	WW503E	STR		16-90									
24	5	17-00	WW504E	STR		17-00									
60	5	19-80	WW505E	STR		19-80									
72	5	22-80	WW506E	STR		22-80									
144	5	6-110	WW518E	T11			1-10	1-110	0-90	3-20		0-102		0-72	
32	5	2-80	WW508E	STR		2-80									
28	6	13-80	WW601E	STR		13-80									
28	6	13-90	WW602E	STR		13-90									
32	6	16-90	WW603E	STR		16-90									
32	6	17-00	WW604E	STR		17-00									

SPECIFICATIONS					BENDING DIMENSIONS (FEET-INCHES /QUARTER INCH)										
QTY.	SIZE	LENGTH	MARK	TYPE	A	B	C	D	E	F/R	G	H	J	K	O

ASTM STANDARD ENGLISH REINFORCING BARS

NOMINAL DIMENSIONS				RECOMMENDED END HOOKS, APPLICABLE TO ALL GRADES				STIRRUP AND TIE HOOKS, APPLICABLE TO ALL GRADES			
					180° HOOKS		90° HOOKS		90° HOOK	135° HOOK	
BAR SIZE	DIAMETER (INCHES)	AREA (INCHES²)	WEIGHT (LBS./FT.)	D	A OR G	J	A OR G	D	A OR G	A OR G	A OR G
3	0.375	0.110	0.376	2¼"	5"	3"	6"	1½"	4"	4"	2½"
4	0.500	0.200	0.668	3"	6"	4"	8"	2"	4½"	4½"	3"
5	0.625	0.310	1.043	3¾"	7"	5"	10"	2½"	6"	5½"	3¾"
6	0.750	0.440	1.502	4½"	8"	6"	1-0"	4½"	1-0"	8"	4½"
7	0.875	0.600	2.044	5¼"	10"	7"	1-2"	5¼"	1-2"	9"	5¼"
8	1.000	0.790	2.670	6"	11"	8"	1-4"	6"	1-4"	10½"	6"
9	1.128	1.000	3.400	9½"	1-3"	11¾"	1-7"				
10	1.270	1.270	4.303	10¾"	1-5"	1-1¼"	1-10"				
11	1.410	1.560	5.313	1-0"	1-7"	1-2¾"	2-0"				
14	1.693	2.250	7.650	1-6¼"	2-3"	1-9¾"	2-7"				
18	2.257	4.000	13.600	2-0"	3-0"	2-4½"	3-5"				

NOTES:

1. FIGURES SHOWN IN CIRCLES REPRESENT BAR BEND TYPES.
2. STANDARD BAR BENDS INCLUDE ONLY THOSE TYPES BELOW, INDICATED AS SUCH.
3. ALL DIMENSIONS OUT-TO-OUT, EXCEPT "A" AND "G" ON STD. 180° AND 135° HOOKS.
4. "J" DIMENSIONS ON 180° HOOKS TO BE SHOWN ONLY WHERE NECESSARY TO RESTRICT HOOK SIZE, OTHERWISE STANDARD 'ACI' HOOKS ARE TO BE USED.
5. WHERE "J" IS NOT SHOWN, "J" WILL BE KEPT EQUAL TO OR LESS THAN "H" ON TYPES 3, 5 AND 22. WHERE "J" CAN EXCEED "H", IT SHALL BE SHOWN.
6. "H" DIMENSIONS OF STIRRUPS TO BE SHOWN AS NEEDED TO FIT WITHIN THE CONCRETE.
7. UNLESS OTHERWISE NOTED, DIAMETER "D" IS THE SAME FOR ALL BENDS AND HOOKS ON A BAR (EXCEPT FOR BEND TYPES 11 AND 13).
8. WHERE SLOPE DIFFERS FROM 45° OFFSET, "H" AND "K" MUST BE SHOWN.
9. WHERE BARS ARE TO BE BENT MORE ACCURATELY THAN STANDARD BENDING TOLERANCES, BENDING DIMENSIONS REQUIRING CLOSER FABRICATION SHOULD HAVE LIMITS INDICATED.
10. FOR RECOMMENDED DIAMETER "D", OF BENDS, HOOKS, ETC., REFER TO TABLE ABOVE, 'CRSI' OR 'ACI' TABLES WHERE APPLICABLE AND REQUIRED.
11. TYPE S1-S6, S11, T1-T3 AND T6-T9 APPLICABLE TO BAR SIZES #3 THROUGH #8.

STANDARD BAR BENDS

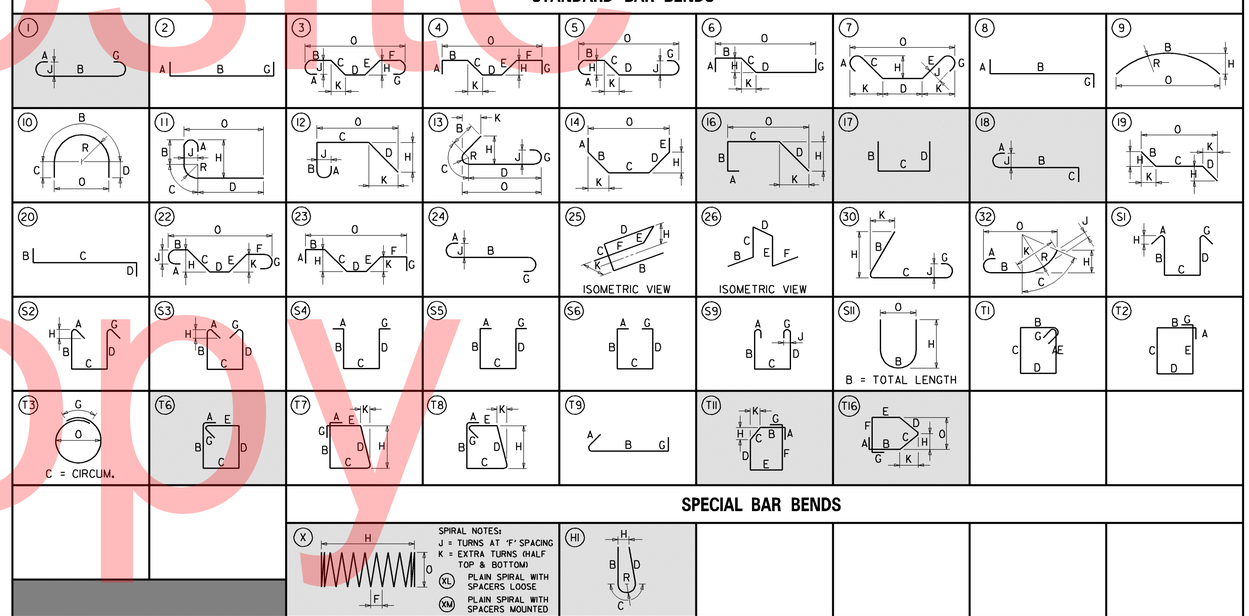

STIRRUP AND TIE HOOKS

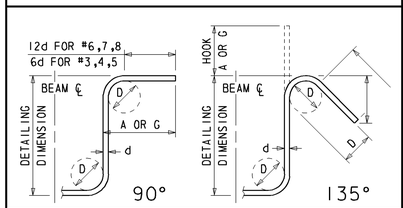

180° AND 90° END HOOKS

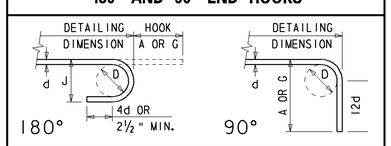

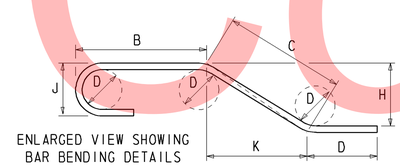

ENLARGED VIEW SHOWING BAR BENDING DETAILS

SPECIAL BAR BENDS

Unofficial Website Copy

DELAWARE DEPARTMENT OF TRANSPORTATION

ADDENDUMS / REVISIONS

NOT TO SCALE

SR1, THOMPSONVILLE GRADE SEPARATED INTERSECTION

CONTRACT	BRIDGE NO.	2-019B
T200412201	DESIGNED BY:	PAM
COUNTY	CHECKED BY:	BB
NEW CASTLE		

REINFORCEMENT BAR LIST
BRIDGE SHEET 23 OF 28

SHEET NO. 89
TOTAL SHTS. 166

W:\MSV8\CELLS\PROJDEV\SB.CEL

BORING: B # 1 | **DATE DRILLED:** 8/8/2007
STATION: 230+23.88 | **OFFSET:** -17.88 | **ELEVATION:** | **NORTHING:** | **EASTING:**
COMMENTS: ON SAMPLE 19 @ 64.0' SPOON SANK TO 70.0'.

DEPTH (FT.)	NO.	SAMPLE DEPTH	BLOWS/6"	SAMPLE DESCRIPTION	CLASS./G. I.	REMARKS
	1	0.0' 2.0'	3 5 7 6	MOIST MEDIUM DENSE BROWN FINE TO COARSE SAND W/SOME SILT. 22" RECOVERY	A-2-4(0)	
2.9	2	2.0' 4.0'	7 5 5 6	MOIST STIFF LIGHT BROWN FINE SANDY SILT W/SOME COARSE SAND, TRACE OF GRAVEL. 24" RECOVERY	A-4(0)	
5.8	3	4.0' 6.0'	5 8 10 6	MOIST MEDIUM DENSE LIGHT BROWN SILTY FINE SAND W/SOME COARSE SAND, TRACE OF GRAVEL. 19" RECOVERY	A-2-4(0)	
8.7	4	6.0' 8.0'	5 9 19 28	WET VERY STIFF LIGHT GRAY FINE SANDY CLAY W/SOME COARSE SAND, TRACE OF GRAVEL. 23" RECOVERY	A-6(2)	
11.6	5	8.0' 10.0'	5 10 13 15	WET MEDIUM DENSE LIGHT GRAY FINE TO COARSE SAND W/SOME SILT, TRACE OF GRAVEL. 23" RECOVERY	A-2-4(0)	
14.5	6	10.0' 12.0'	13 14 15 15	WET MEDIUM DENSE LIGHT GRAY COARSE TO FINE SAND W/SOME SILT, TRACE OF GRAVEL. 23" RECOVERY	A-1-B	
17.4	7	12.0' 14.0'	6 9 11 3	SATURATED MEDIUM DENSE LIGHT GRAY CLAYEY COARSE TO FINE SAND W/TRACE OF GRAVEL. 20" RECOVERY	A-2-6(0)	
20.3	8	14.0' 16.0'	1 3 4 6	SATURATED FIRM LIGHT BROWN CLAY W/TRACE OF FINE TO COARSE SAND. 24" RECOVERY	A-6(13)	
23.2	9	16.0' 18.0'	3 6 8 9	SATURATED STIFF LIGHT BROWN CLAYEY SILT W/SOME FINE SAND. 24" RECOVERY	A-4(5)	
26.1	10	18.0' 20.0'	4 5 7 8	SATURATED STIFF LIGHT BROWN FINE SANDY SILT. 23" RECOVERY	A-4(0)	
29	11	24.0' 26.0'	5 9 10 11	SATURATED MEDIUM DENSE LIGHT BROWN CLAYEY GRAVEL AND COARSE SAND W/SOME FINE SAND. 10" RECOVERY	A-1-B	
31.9	12	29.0' 31.0'	7 8 9 11	SATURATED MEDIUM DENSE LIGHT BROWN COARSE SAND AND GRAVEL W/TRACE OF FINE SAND AND SILT. 18" RECOVERY	A-1-B	TIP OF PILES
34.8	13	34.0' 36.0'	7 11 16 21	SATURATED MEDIUM DENSE LIGHT BROWN COARSE TO FINE SAND W/SOME GRAVEL, TRACE OF SILT. 16" RECOVERY	A-1-B	
37.7	14	39.0' 41.0'	7 11 15 18	SATURATED MEDIUM DENSE LIGHT BROWN FINE TO COARSE SAND W/TRACE OF GRAVEL AND SILT. 16" RECOVERY	A-3	
40.6	15	44.0'	4 8 10	SATURATED MEDIUM DENSE LIGHT BROWN FINE TO COARSE SAND W/TRACE OF SILT AND GRAVEL.	A-3	
43.5						

BORING (CONT.): B # 1

DEPTH (FT.)	NO.	SAMPLE DEPTH	BLOWS/6"	SAMPLE DESCRIPTION	CLASS./G. I.	REMARKS
46.4		46.0'	8	16" RECOVERY		
49.3	16	49.0' 51.0'	8 14 13 14	SATURATED MEDIUM DENSE LIGHT BROWN COARSE TO FINE SAND W/TRACE OF SILT AND GRAVEL. 20" RECOVERY	A-1-B	
52.2	17	54.0' 56.0'	5 8 11 13	SATURATED MEDIUM DENSE LIGHT BROWN COARSE SAND W/SOME FINE SAND AND GRAVEL, TRACE OF SILT. 18" RECOVERY	A-1-B	
55.1	18	59.0' 60.5'	2 4 5	SATURATED LOOSE DARK GRAY SILTY FINE SAND W/SOME COARSE SAND, TRACE OF ORGANIC MATTER. 18" RECOVERY	A-2-4(0)	
58	19	64.0' 66.0'	W/H W/H W/H W/H	SATURATED VERY LOOSE DARK GRAY FINE SAND W/SOME COARSE SAND AND SILT, TRACE OF ORGANIC MATTER. 24" RECOVERY	A-2-4(0)	
60.9	20	69.0' 71.0'	W/R W/R 2 3	SATURATED VERY LOOSE DARK GRAY FINE SAND W/SOME COARSE SAND, TRACE OF SILT AND ORGANIC MATTER. 15" RECOVERY	A-3	
63.8	21	74.0' 76.0'	W/R 9 20 21	SATURATED MEDIUM DENSE DARK GRAY FINE TO COARSE SAND AND GRAVEL W/SOME SILT, TRACE OF ORGANIC MATTER AND SEA SHELLS. 18" RECOVERY	A-2-4(0)	
66.7	22	79.0' 80.8'	9 28 48 50/3"	SATURATED VERY DENSE DARK GRAY FINE SAND AND GRAVEL W/SOME COARSE SAND, SILT AND SEA SHELLS. 2" RECOVERY	A-1-B	
69.6						
72.5						
75.4						
78.3						
81.2						
84.1						
87						
89.9						
92.8						

Unofficial Website Copy

BORING: B = 1A | **DATE DRILLED:** 8/20/2007
STATION: 233+16.71 | **OFFSET:** 16.57 | **ELEVATION:** | **NORTHING:** | **EASTING:**
COMMENTS:

DEPTH (FT.)	NO.	SAMPLE DEPTH	BLOWS/6"	SAMPLE DESCRIPTION	CLASS./G. I.	REMARKS
5.8	1	4.0′ 6.0′	1 2 2 3	MOIST VERY LOOSE LIGHT BROWN FINE TO COARSE SAND W/SOME SILT, TRACE OF GRAVEL. 24″ RECOVERY	A-2-4(0)	
11.6	2	9.0′ 11.0′	12 23 20 16	MOIST DENSE LIGHT BROWN FINE TO COARSE SAND W/SOME SILT, TRACE OF GRAVEL. 24″ RECOVERY	A-2-4(0)	
17.4	3	14.0′ 16.0′	3 4 6 5	SATURATED STIFF LIGHT BROWN CLAY W/SOME FINE SAND, TRACE OF COARSE SAND. 24″ RECOVERY	A-6(10)	
23.2	4	19.0′ 21.0′	2 3 4 4	SATURATED FIRM LIGHT BROWN FINE SANDY SILT W/SOME CLAY, TRACE OF COARSE SAND. 22″ RECOVERY	A-4(1)	
29	5	24.0′ 26.0′	13 10 9 9	SATURATED MEDIUM DENSE LIGHT BROWN COARSE SAND AND GRAVEL W/TRACE OF FINE SAND AND SILT. 18″ RECOVERY	A-1-B	
34.8	6	29.0′ 31.0′	14 14 12 12	SATURATED MEDIUM DENSE LIGHT BROWN GRAVEL AND COARSE SAND W/SOME FINE SAND, TRACE OF SILT. 18″ RECOVERY	A-1-B	TIP OF PILES
40.6	7	34.0′ 36.0′	14 12 11 11	SATURATED MEDIUM DENSE LIGHT BROWN COARSE SAND W/SOME FINE SAND AND GRAVEL, TRACE OF SILT. 18″ RECOVERY	A-1-B	
46.4	8	39.0′ 41.0′	12 15 20 28	SATURATED DENSE LIGHT BROWN FINE TO COARSE SAND W/TRACE OF SILT AND GRAVEL. 20″ RECOVERY	A-3	
49.3	9	44.0′ 46.0′	17 22 25 25	SATURATED DENSE LIGHT BROWN FINE TO COARSE SAND W/TRACE OF GRAVEL AND SILT. 20″ RECOVERY	A-3	
	10	49.0′ 51.0′	12 10 11 12	SATURATED MEDIUM DENSE LIGHT BROWN COARSE TO FINE SAND W/TRACE OF SILT AND GRAVEL. 22″ RECOVERY	A-1-B	
58	11	54.0′ 56.0′	14 14 19 28	SATURATED DENSE LIGHT BROWN COARSE TO FINE SAND W/TRACE OF GRAVEL AND SILT. 22″ RECOVERY	A-1-B	
63.8	12	59.0′ 61.0′	4 7 10 16	SATURATED MEDIUM DENSE LIGHT BROWN SILTY FINE SAND W/SOME COARSE SAND, TRACE OF ORGANIC MATTER. 24″ RECOVERY	A-2-4(0)	
69.6	13	64.0′ 64.8′	26 50/3″	SATURATED VERY DENSE DARK GRAY SILTY FINE SAND W/SOME COARSE SAND, TRACE OF GRAVEL, ORGANIC MATTER AND SEA SHELLS. 9″ RECOVERY	A-2-4(0)	
75.4	14	69.0′ 71.0′	12 20 27 45	SATURATED DENSE GRAY FINE SAND W/SOME COARSE SAND AND SILT, TRACE OF GRAVEL, ORGANIC MATTER AND SEA SHELLS. 22″ RECOVERY	A-2-4(0)	
81.2	15	74.0′ 75.4′	7 26 50/5″	SATURATED VERY DENSE DARK GRAY FINE SAND AND GRAVEL W/SOME COARSE SAND AND SILT, TRACE OF ORGANIC MATTER AND SEA SHELLS. 17″ RECOVERY	A-2-4(0)	
87	16	79.0′ 80.4′	7 17 50/5″	SATURATED VERY DENSE DARK GRAY FINE SAND W/SOME SILT, TRACE OF COARSE SAND, GRAVEL, ORGANIC MATTER AND SEA SHELLS. 16″ RECOVERY	A-2-4(0)	
92.8	17	84.0′ 85.3′	17 35 50/3″	SATURATED VERY DENSE GRAY FINE SAND W/ SOME COARSE SAND, TRACE OF SILT, GRAVEL, ORGANIC MATTER AND SEA SHELLS. 14″ RECOVERY	A-3	

BORING (CONT.): B = 1A

Unofficial Website Copy

BORING: B - 2 | **DATE DRILLED:** 8/9/2007
STATION: 229+48.41 | **OFFSET:** 14.84 | **ELEVATION:** + 26.5' | **NORTHING:** | **EASTING:**
COMMENTS: LOST WATER CIRCULATION @ 66.0'.

DEPTH (FT.)	NO.	SAMPLE DEPTH	BLOWS/6"	SAMPLE DESCRIPTION	CLASS./G.I.	REMARKS
	1	0.0'	4 12 24 25	MOIST DENSE BROWN SILTY FINE TO COARSE SAND W/TRACE OF GRAVEL. 20" RECOVERY	A-2-4(0)	
2.9	2	2.0'	9 6 7 8	MOIST MEDIUM DENSE LIGHT BROWN SILTY FINE SAND W/SOME COARSE SAND, TRACE OF GRAVEL. 18" RECOVERY	A-2-4(0)	
5.8	3	4.0'	2 1 1 1	MOIST VERY LOOSE BROWN SILTY FINE TO COARSE SAND W/TRACE OF GRAVEL. 12" RECOVERY	A-2-4(0)	
	4	6.0'	1 1 1 1	WET VERY LOOSE BROWN SILTY FINE TO COARSE SAND W/TRACE OF GRAVEL. 14" RECOVERY	A-2-4(0)	
8.7	5	8.0'	6 8 5 6	WET STIFF LIGHT BROWN FINE TO COARSE SANDY SILT W/TRACE OF GRAVEL. 20" RECOVERY	A-4(0)	
11.6	6	10.0'	6 5 6 7	WET MEDIUM DENSE LIGHT BROWN SILTY FINE SAND W/SOME COARSE SAND, TRACE OF GRAVEL. 22" RECOVERY	A-2-4(0)	
14.5	7	12.0'	2 2 3 4	SATURATED LOOSE LIGHT BROWN SILTY FINE SAND W/TRACE OF COARSE SAND. 22" RECOVERY	A-2-4(0)	
17.4	8	14.0'	2 3 3 4	SATURATED FIRM LIGHT BROWN FINE SANDY SILT. 22" RECOVERY	A-4(0)	
20.3	9	16.0'	3 4 5 6	SATURATED LOOSE LIGHT BROWN SILTY FINE SAND W/TRACE OF COARSE SAND. 20" RECOVERY	A-2-4(0)	
23.2	10	18.0'	2 3 4 5	SATURATED FIRM LIGHT BROWN FINE SANDY SILT W/SOME CLAY. 20" RECOVERY	A-4(1)	
26.1	11	24.0'	3 5 6 9	SATURATED MEDIUM DENSE LIGHT BROWN COARSE TO FINE SAND W/SOME GRAVEL, TRACE OF SILT. 16" RECOVERY	A-1-B	
29	12	29.0'	8 8 7 9	SATURATED MEDIUM DENSE LIGHT BROWN COARSE SAND W/SOME GRAVEL, TRACE OF FINE SAND AND SILT. 20" RECOVERY	A-1-B	
31.9						
34.8	13	34.0'	10 11 16 17	SATURATED MEDIUM DENSE LIGHT BROWN COARSE SAND AND GRAVEL W/TRACE OF FINE SAND AND SILT. 22" RECOVERY	A-1-B	
37.7						
40.6	14	39.0'	9 14 21 24	SATURATED DENSE LIGHT BROWN FINE SAND W/ SOME COARSE SAND, TRACE OF SILT AND GRAVEL. 22" RECOVERY	A-3	
43.5						TIP OF PILES
	15	44.0'	12 10 11	SATURATED MEDIUM DENSE LIGHT BROWN COARSE SAND W/SOME FINE SAND AND GRAVEL, TRACE OF SILT.	A-1-B	

BORING (CONT.): B - 2

DEPTH (FT.)	NO.	SAMPLE DEPTH	BLOWS/6"	SAMPLE DESCRIPTION	CLASS./G.I.	REMARKS
46.4		46.0'	14	22" RECOVERY		
49.3	16	49.0' 51.0'	6 6 8 8	SATURATED MEDIUM DENSE LIGHT BROWN COARSE SAND W/SOME FINE SAND, TRACE OF GRAVEL AND SILT. 22" RECOVERY	A-1-B	
52.2	17	54.0' 56.0'	6 9 10 13	SATURATED MEDIUM DENSE LIGHT BROWN COARSE TO FINE SAND W/TRACE OF SILT AND GRAVEL. 20" RECOVERY	A-3	
55.1						
58	18	59.0' 61.0'	4 4 7 9	SATURATED MEDIUM DENSE LIGHT BROWN SILTY FINE SAND W/TRACE OF COARSE SAND. 22" RECOVERY	A-2-4(0)	
60.9						
63.8	19	64.0' 66.0'	3 3 4 5	SATURATED LOOSE DARK GRAY FINE SAND W/ SOME SILT AND COARSE SAND, TRACE OF ORGANIC MATTER. 20" RECOVERY	A-2-4(0)	
66.7						
69.6	20	69.0' 71.0'	3 1 2 8	SATURATED VERY LOOSE GRAY FINE SAND W/ SOME COARSE SAND, TRACE OF SILT AND ORGANIC MATTER. 18" RECOVERY	A-3	
72.5						
75.4	21	74.0' 76.0'	18 28 42 60	SATURATED VERY DENSE DARK GRAY FINE TO COARSE SAND W/SOME SILT, GRAVEL AND SEA SHELLS, TRACE OF ORGANIC MATTER. 18" RECOVERY	A-2-4(0)	TIP OF DRILLED SHAFT
78.3						
81.2	22	79.0' 79.8'	25 50/3"	SATURATED VERY DENSE GRAY FINE SAND W/ SOME COARSE SAND, SILT AND SEA SHELLS, TRACE OF GRAVEL AND ORGANIC MATTER. 9" RECOVERY	A-2-4(0)	
84.1						
87						
89.9						
92.8						

Unofficial Website Copy

DELAWARE DEPARTMENT OF TRANSPORTATION

ADDENDUMS / REVISIONS

NOT TO SCALE

S.R. 1, THOMPSONVILLE GRADE SEPARATED INTERSECTION

CONTRACT	BRIDGE NO.	2-019B
T200412201	DESIGNED BY: PAM	
COUNTY		
KENT	CHECKED BY: BB	

BORING LOG
3 OF 5
BRIDGE SHEET 26 OF 28

SHEET NO. 92
TOTAL SHTS. 183

Y:\KENT\008\BRIDGE\2412201\PLANS\B003.DGN

BORING: B = 2A | DATE DRILLED: 8/26/2007
STATION: 229+43.42 | OFFSET: 12.15 | ELEVATION: | NORTHING: | EASTING:
COMMENTS:

DEPTH (FT.)	NO.	SAMPLE DEPTH	BLOWS/6"	SAMPLE DESCRIPTION	CLASS./G. I.	REMARKS
5.8	1	4.0′ 6.0′	2 2 3 3	MOIST LOOSE LIGHT BROWN SILTY FINE TO COARSE SAND W/TRACE OF GRAVEL. 22″ RECOVERY	A-2-4(0)	
8.7						
11.6	2	9.0′ 11.0′	6 9 11 13	MOIST MEDIUM DENSE LIGHT GRAY COARSE TO FINE SAND W/SOME GRAVEL AND SILT. 20″ RECOVERY	A-1-B	
14.5	3	14.0′ 16.0′	1 2 1 2	SATURATED SOFT LIGHT BROWN FINE SANDY SILT W/SOME CLAY, TRACE OF COARSE SAND AND GRAVEL. 22″ RECOVERY	A-4(0)	
17.4						
20.3	4	19.0′ 21.0′	2 3 3 4	SATURATED FIRM LIGHT BROWN CLAY W/SOME FINE SAND, TRACE OF GRAVEL. 24″ RECOVERY	A-6(7)	
23.2						
26.1	5	24.0′ 26.0′	5 9 8 9	SATURATED MEDIUM DENSE LIGHT BROWN COARSE TO FINE SAND AND GRAVEL W/TRACE OF SILT. 18″ RECOVERY	A-1-B	
29						
31.9	6	29.0′ 31.0′	4 9 17 16	SATURATED MEDIUM DENSE LIGHT BROWN COARSE SAND AND GRAVEL W/SOME FINE SAND, TRACE OF SILT. 18″ RECOVERY	A-1-B	
34.8	7	34.0′ 36.0′	9 9 12 20	SATURATED MEDIUM DENSE LIGHT BROWN FINE TO COARSE SAND W/SOME GRAVEL, TRACE OF SILT. 18″ RECOVERY	A-3	
37.7						
40.6	8	39.0′ 41.0′	10 13 13 16	SATURATED MEDIUM DENSE LIGHT BROWN FINE SAND W/SOME COARSE SAND, TRACE OF SILT AND GRAVEL. 20″ RECOVERY	A-3	
43.5						TIP OF PILES
46.4	9	44.0′ 46.0′	10 10 18 19	SATURATED MEDIUM DENSE LIGHT BROWN FINE TO COARSE SAND W/TRACE OF SILT AND GRAVEL. 22″ RECOVERY	A-1-B	
49.3	10	49.0′	12	SATURATED MEDIUM DENSE LIGHT BROWN FINE	A-3	

BORING (CONT.): B = 2A

DEPTH (FT.)	NO.	SAMPLE DEPTH	BLOWS/6"	SAMPLE DESCRIPTION	CLASS./G. I.	REMARKS
52.2		51.0′	12 16 18	TO COARSE SAND W/TRACE OF SILT AND GRAVEL. 15″ RECOVERY		
55.1	11	54.0′ 56.0′	17 16 18 17	SATURATED DENSE LIGHT BROWN COARSE TO FINE SAND W/TRACE OF GRAVEL AND SILT. 18″ RECOVERY	A-1-B	
58						
60.9	12	59.0′ 59.7′	11 4	SATURATED MEDIUM DENSE LIGHT BROWN FINE TO COARSE SAND W/TRACE OF GRAVEL AND SILT. 8″ RECOVERY	A-1-B	
	12A	59.7′ 60.9′	3 3	SATURATED LOOSE LIGHT BROWN SILTY FINE SAND W/SOME COARSE SAND, TRACE OF GRAVEL. 6″ RECOVERY	A-2-4(0)	
63.8						
66.7	13	64.0′ 66.0′	6 5 5 4	SATURATED MEDIUM DENSE DARK GRAY FINE SAND W/SOME SILT AND COARSE SAND, TRACE OF ORGANIC MATTER. 12″ RECOVERY	A-2-4(0)	
69.6	14	69.0′ 71.0′	5 10 21 23	SATURATED DENSE GRAY FINE SAND W/SOME SILT AND COARSE SAND, TRACE OF ORGANIC MATTER. 16″ RECOVERY	A-2-4(0)	
72.5						
75.4	15	74.0′ 76.0′	6 20 38 50	SATURATED VERY DENSE GRAY FINE SAND AND GRAVEL W/SOME SEA SHELLS, COARSE SAND AND SILT, TRACE OF ORGANIC MATTER. 15″ RECOVERY	A-2-4(0) TIP OF DRILLED SHAFT	
78.3						
81.2	16	79.0′ 80.5′	8 20 50	SATURATED VERY DENSE GRAY FINE TO COARSE SAND W/SOME SILT, TRACE OF GRAVEL, ORGANIC MATTER AND SEA SHELLS. 16″ RECOVERY	A-2-4(0)	
84.1	17	84.0′ 84.8′	42 50/3″	SATURATED VERY DENSE LIGHT GRAY FINE SAND W/TRACE OF COARSE SAND AND SILT. 8″ RECOVERY	A-3	
87						
89.9	18	89.0′ 90.3′	25 45 50/4″	SATURATED VERY DENSE LIGHT GRAY FINE SAND W/TRACE OF COARSE SAND AND SILT. 14″ RECOVERY	A-3	
92.8						
95.7						

Unofficial Website Copy

Y:\KENT\008\BRIDGE\2412201\PLANS\B004.DGN

DELAWARE DEPARTMENT OF TRANSPORTATION

ADDENDUMS / REVISIONS

NOT TO SCALE

S.R. 1, THOMPSONVILLE GRADE SEPARATED INTERSECTION

CONTRACT: T200412201
COUNTY: KENT
BRIDGE NO. 2-019B
DESIGNED BY: PAM
CHECKED BY: BB

BORING LOG 4 OF 5
BRIDGE SHEET 27 OF 28

SHEET NO. 93
TOTAL SHTS. 183

BORING: B = 3 | DATE DRILLED: 8/7/2007
STATION: 228+86.53 | OFFSET: 3.44 | ELEVATION: | NORTHING: | EASTING:
COMMENTS:

DEPTH (FT.)	NO.	SAMPLE DEPTH	BLOWS/6"	SAMPLE DESCRIPTION	CLASS./G. I.	REMARKS
	1	0.0'	2 5 8 8	MOIST STIFF BROWN FINE SANDY SILT W/SOME COARSE SAND, TRACE OF CLAY. 20" RECOVERY	A-4(0)	
2.9	2	2.0' 4.0'	3 3 3 4	MOIST LOOSE LIGHT BROWN FINE TO COARSE SAND W/SOME SILT, TRACE OF GRAVEL. 24" RECOVERY	A-2-4(0)	
5.8	3	4.0' 6.0'	3 6 5 3	WET STIFF LIGHT BROWN FINE SANDY SILT W/ SOME CLAY, TRACE OF COARSE SAND. 22" RECOVERY	A-4(0)	
	4	6.0' 7.0'	4 7	WET STIFF LIGHT BROWN CLAYEY FINE SANDY SILT W/SOME COARSE SAND, TRACE OF GRAVEL. 10" RECOVERY	A-4(0)	
8.7	4A	7.0' 8.0'	11 16	WET MEDIUM DENSE LIGHT BROWN FINE TO COARSE SAND W/SOME SILT AND GRAVEL. 12" RECOVERY	A-2-4(0)	
11.6	5	8.0' 10.0'	14 14 24 35	MOIST DENSE LIGHT BROWN COARSE TO FINE SAND W/SOME GRAVEL, TRACE OF SILT. 22" RECOVERY	A-1-B	
	6	10.0' 12.0'	24 10 9 10	WET MEDIUM DENSE LIGHT BROWN SILTY FINE SAND W/SOME GRAVEL AND COARSE SAND. 24" RECOVERY	A-2-4(0)	
14.5	7	12.0' 14.0'	2 3 3 3	SATURATED LOOSE LIGHT BROWN SILTY FINE SAND W/TRACE OF COARSE SAND. 24" RECOVERY	A-2-4(0)	
17.4	8	14.0' 16.0'	1 1 2 1	SATURATED SOFT LIGHT GRAY FINE SANDY SILT. 22" RECOVERY	A-4(0)	
20.3	9	16.0' 18.0'	1 4 4 5	SATURATED FIRM LIGHT BROWN FINE SANDY SILT W/TRACE OF COARSE SAND. 22" RECOVERY	A-4(0)	
23.2	10	18.0' 20.0'	4 6 7 9	SATURATED STIFF LIGHT BROWN FINE SANDY SILT W/TRACE OF COARSE SAND. 22" RECOVERY	A-4(0)	
26.1	11	24.0' 26.0'	14 18 14 12	SATURATED DENSE LIGHT BROWN GRAVEL AND COARSE SAND W/SOME FINE SAND, TRACE OF SILT. 18" RECOVERY	A-1-B	
29	12	29.0' 31.0'	5 6 10 10	SATURATED MEDIUM DENSE LIGHT BROWN COARSE SAND AND GRAVEL W/TRACE OF FINE SAND AND SILT. 14" RECOVERY	A-1-B	
31.9						TIP OF PILES
34.8	13	34.0' 36.0'	5 8 10 10	SATURATED MEDIUM DENSE LIGHT BROWN COARSE SAND W/SOME FINE SAND, TRACE OF GRAVEL AND SILT. 18" RECOVERY	A-1-B	
37.7						
40.6	14	39.0' 41.0'	3 5 11 16	SATURATED MEDIUM DENSE LIGHT BROWN COARSE TO FINE SAND W/SOME GRAVEL, TRACE OF SILT. 18" RECOVERY	A-1-B	
43.5	15	44.0'	18 28 30	SATURATED VERY DENSE LIGHT BROWN COARSE TO FINE SAND W/TRACE OF SILT AND GRAVEL.	A-1-B	

BORING (CONT.): B = 3

DEPTH (FT.)	NO.	SAMPLE DEPTH	BLOWS/6"	SAMPLE DESCRIPTION	CLASS./G. I.	REMARKS
46.4		46.0'	37	22" RECOVERY		
49.3	16	49.0' 51.0'	9 14 13 23	SATURATED MEDIUM DENSE LIGHT BROWN FINE SAND W/TRACE OF COARSE SAND, SILT AND GRAVEL. 20" RECOVERY	A-3	
52.2	17	54.0' 56.0'	8 17 35 50/5"	SATURATED VERY DENSE LIGHT BROWN COARSE TO FINE SAND W/SOME SILT, TRACE OF GRAVEL. 20" RECOVERY	A-2-4(0)	
55.1						
58						
60.9	18	59.0' 61.0'	8 11 17 14	SATURATED MEDIUM DENSE DARK GRAY FINE SAND W/SOME SILT, TRACE OF COARSE SAND, GRAVEL AND ORGANIC MATTER. 20" RECOVERY	A-2-4(0)	
63.8	19	64.0' 65.3'	8 22 50/3"	SATURATED VERY DENSE DARK GRAY FINE SAND W/SOME SILT, COARSE SAND AND SEA SHELLS, TRACE OF GRAVEL AND ORGANIC MATTER. 14" RECOVERY	A-2-4(0)	
66.7						
69.6	20	69.0' 71.0'	8 13 27 21	SATURATED DENSE DARK GRAY FINE SAND W/ SOME COARSE SAND, TRACE OF SILT AND SEA SHELLS. 16" RECOVERY	A-3	
72.5						
75.4	21	74.0' 75.5'	25 45 40	SATURATED VERY DENSE DARK GRAY FINE TO COARSE SAND W/SOME GRAVEL, SILT AND SEA SHELLS, TRACE OF ORGANIC MATTER. 15" RECOVERY	A-2-4(0)	
78.3						
81.2	22	79.0' 79.5'	70	SATURATED VERY DENSE GRAY FINE TO COARSE SAND W/SOME SEA SHELLS, TRACE OF SILT AND GRAVEL. 4" RECOVERY	A-3	
84.1						
87						
89.9						
92.8						

Unofficial Website Copy

DELAWARE DEPARTMENT OF TRANSPORTATION

ADDENDUMS / REVISIONS

NOT TO SCALE

S.R. 1, THOMPSONVILLE GRADE SEPARATED INTERSECTION

CONTRACT: T200412201
COUNTY: KENT
BRIDGE NO. 2-019B
DESIGNED BY: PAM
CHECKED BY: BB

BORING LOG 5 OF 5
BRIDGE SHEET 28 OF 28

SHEET NO. 94
TOTAL SHTS. 183

Y:\KENT\008\BRIDGE\2412201\PLANS\B006.DGN

ENVIRONMENTAL COMPLIANCE NOTES

1. GENERAL NOTES:

   A. THE PURPOSE OF THIS SHEET IS TO IDENTIFY THOSE ITEMS ASSOCIATED WITH ENVIRONMENTAL COMPLIANCE. IMPACT CALCULATIONS ARE FOR THE AGENCY PERMIT REPORTING PURPOSES ONLY AND ARE NOT TO BE USED FOR BIDDING PURPOSES.

   B. IF A DEPARTURE FROM THE APPROVED PLANS (WHICH WOULD AFFECT ANY NATURAL AND/OR CULTURAL RESOURCES) IS NECESSARY, THE ENVIRONMENTAL STUDIES SECTION SHALL BE CONTACTED AT (302)760-2264 TO ALLOW FOR COORDINATION WITH THE APPROPRIATE RESOURCE AGENCIES AND APPROVAL.

   C. USE OF THIS SHEET DOES NOT ALLEVIATE THE CONTRACTOR'S RESPONSIBILITY TO COMPLY WITH ALL CONDITIONS SET FORTH IN THE ENVIRONMENTAL STATEMENT AND PERMITS.

2. NATURAL RESOURCE ISSUES:

   A. PERMIT REQUIREMENTS/APPROVALS*:
   U.S. ARMY CORPS OF ENGINEERS (COE): NWP *23**
   DNREC - WETLANDS & SUBAQUEOUS LANDS (WLSL): NONE - THERE ARE NO DNREC JURISDICTIONAL WATERS OR WETLANDS WITHIN THE PROJECT AREA, AS PER THE JURISDICTIONAL DETERMINATION (JD) DATED 3/21/14.
   DNREC - WATER QUALITY (WQC) & COASTAL ZONE CONSISTENCY (CZM): ISSUED (PROJECT IS NOT LOCATED IN CRW)

   * THE PERMITS/APPROVALS LISTED ARE THOSE REQUIRED FOR THIS PROJECT. THE ENVIRONMENTAL STUDIES SECTION IS RESPONSIBLE FOR COORDINATING AND/OR OBTAINING THIS APPROVAL.
   ** THE CONTRACTOR MUST ENSURE THAT THESE PERMITS/APPROVALS ARE IN THEIR POSSESSION PRIOR TO BEGINNING CONSTRUCTION IN THE PERMITTED AREA(S) AND ENSURE IT IS DISPLAYED ON-SITE DURING THE ENTIRE CONSTRUCTION PERIOD.

   NOTE: THERE ARE NO DNREC JURISDICTIONAL WATERS OR WETLANDS TO BE IMPACTED.

   B. CONSTRUCTION RESTRICTIONS:
   FISHERIES - NONE
   ENDANGERED SPECIES - NONE
   MIGRATORY BIRDS - NONE

   C. PROTECTION OF RESOURCE (WETLANDS):
   SILT FENCE OR CONSTRUCTION SAFETY FENCE SHALL BE USED ALONG THE LIMITS OF CONSTRUCTION IN AREAS WHERE WOODS AND/OR WETLANDS EXIST. ENCROACHMENT BEYOND THE LOC IN THESE AREAS IS STRICTLY PROHIBITED.

3. CULTURAL RESOURCE ISSUES:

   A. WITHIN THE SCOTT PROPERTY (18R), THE FRUIT STAND AND FRONTAGE GROUNDS ARE CONSIDERED ELIGIBLE FOR THE NATIONAL REGISTER OF HISTORIC PLACES. DO NOT DISTURB NOTES ARE PLACED ON THE PLANS AND NO FURTHER ENCROACHMENT IS WARRANTED UNLESS APPROVED BY DELDOT'S ENVIRONMENTAL STUDIES.

4. PROTECTION OF RESOURCES:

   A. CLEARING IN WETLAND AREAS SHALL BE KEPT TO A MINIMUM ABSOLUTELY NECESSARY FOR CONSTRUCTION ACCESS. ALL EQUIPMENT TRAVERSING WETLANDS AND SUBAQUEOUS LAND SHALL BE SUPPORTED ON MATS. IN WETLAND AREAS THAT ARE CLEARED, THERE SHALL BE NO GRUBBING EXCEPT WHERE NECESSARY TO CONSTRUCT PROJECT COMPONENTS SUCH AS FOUNDATIONS AND RIPRAP PROTECTION. VEGETATION SHALL BE CUT FLUSH WITH THE GROUND (I.E. NO DISTURBANCE OF THE ROOT MAT. TEMPORARILY DISTURBED WETLAND AREAS SHALL BE RESTORED TO GRADE AND SEEDED WITH TEMPORARY GRASS SEEDING - DRY GROUND, (PAYMENT UNDER ITEM 734017).

   B. SILT FENCE OR CONSTRUCTION SAFETY FENCE SHALL BE USED ALONG THE LIMITS OF CONSTRUCTION IN ALL AREAS WHERE WATER/WETLANDS ARE BEING IMPACTED (AS SHOWN ON EC SHEETS), AND ALSO IN ANY AREA WHERE WATER/WETLANDS EXIST WITHIN 20 FEET OF THE LOC (AS SHOWN ON CONSTRUCTION PLANS). CONTRACTOR ACCESS BEYOND THE LOC IS STRICTLY PROHIBITED.

   C. SILT FENCE INSTALLATION ADJACENT TO WOODED UPLANDS/WETLANDS: PROVIDED PROPER EROSION & SEDIMENT CONTROL CAN BE MAINTAINED, IT IS RECOMMENDED THAT SANDBAGS BE USED TO SECURE SILT FENCE IN LIEU OF TRENCHING. THE ENVIRONMENTAL STUDIES SECTION (CAROL SULLIVAN, 302-760-2129) CAN PROVIDE FURTHER GUIDANCE REGARDING THIS METHOD OF INSTALLATION.

5. WETLAND MITIGATION:

   A. ALL WATER AND WETLAND REPLACEMENT OBLIGATIONS WILL BE MET THROUGH THE CARTANZA WETLAND MITIGATION SITE.

PERMANENT WETLAND IMPACT AREA SCHEDULE

ID	IMPACT DESCRIPTION	AREA (SF)	AREA (AC)	VOLUME (CY)	JURISDICTION
W-1	FILL	2201.08	0.0505	N/A	USACE
W-2	FILL	13863.87	0.3183	N/A	USACE
TOTAL PERMANENT WETLAND IMPACT AREAS		16064.95	0.3688	N/A	USACE

PERMANENT OPEN WATER IMPACT AREA SCHEDULE

ID	IMPACT DESCRIPTION	AREA (SF)	AREA (AC)	VOLUME (CY)	JURISDICTION
O-1	FILL	38.22	0.0009	1.77	USACE
O-2	RIPRAP	75.78	0.0017	3.51	USACE
O-3	FILL	784.08	0.0180	36.30	USACE
O-4	PIPE REMOVAL	69.16	0.0016	3.02	USACE
O-5	FILL	981.99	0.0225	45.46	USACE
TOTAL FOR THIS SHEET		967.24	0.0222	90.06	USACE

TEMPORARY WETLAND IMPACT AREA SCHEDULE

ID	IMPACT DESCRIPTION	AREA (SF)	AREA (AC)	VOLUME (CY)	JURISDICTION
WT-1	ACCESS	124.68	0.0029	N/A	USACE
TOTAL TEMPORARY WETLAND IMPACT AREAS		124.68	0.0029	N/A	USACE

TEMPORARY OPEN WATER IMPACT AREA SCHEDULE

ID	IMPACT DESCRIPTION	AREA (SF)	AREA (AC)	VOLUME (CY)	JURISDICTION
OT-1	DITCH CLEANOUT	248.54	0.0057	11.51	USACE
OT-2	SANDBAGS	177.27	0.0041	8.21	USACE
OT-3	ACCESS FOR PIPE REMOVAL	47.41	0.0011	1.32	USACE
TOTAL TEMPORARY OPEN WATER IMPACTS		473.22	0.0109	567.83	USACE

OPEN WATER CREATION AREA SCHEDULE

ID	IMPACT DESCRIPTION	AREA (SF)	AREA (AC)	VOLUME (CY)	JURISDICTION
OC-1	DITCH CREATION	280.77	0.0064	13.00	USACE
OC-2	NEW PIPES	308.30	0.0071	15.23	USACE
TOTAL FOR THIS SHEET		589.07	0.0135	28.23	USACE

Unofficial Website Copy

PERMANENT WETLAND IMPACT AREA SCHEDULE

ID	IMPACT DESCRIPTION	AREA (SF)	AREA (AC)	VOLUME (CY)	JURISDICTION
W-1	FILL	2201.08	0.0505	N/A	USACE
TOTAL FOR THIS SHEET		2201.08	0.0505	N/A	USACE

PERMANENT OPEN WATER IMPACT AREA SCHEDULE

ID	IMPACT DESCRIPTION	AREA (SF)	AREA (AC)	VOLUME (CY)	JURISDICTION
O-1	FILL	38.22	0.0009	1.77	USACE
O-2	RIPRAP	75.78	0.0017	3.51	USACE
O-3	FILL	784.08	0.0180	36.30	USACE
O-4	PIPE REMOVAL	69.16	0.0016	3.02	USACE
TOTAL FOR THIS SHEET		967.24	0.0222	44.60	USACE

OPEN WATER CREATION AREA SCHEDULE

ID	IMPACT DESCRIPTION	AREA (SF)	AREA (AC)	VOLUME (CY)	JURISDICTION
OC-1	DITCH CREATION	280.77	0.0064	13.00	USACE
OC-2	NEW PIPES	308.30	0.0071	15.23	USACE
TOTAL FOR THIS SHEET		589.07	0.0135	28.23	USACE

TEMPORARY OPEN WATER IMPACT AREA SCHEDULE

ID	IMPACT DESCRIPTION	AREA (SF)	AREA (AC)	VOLUME (CY)	JURISDICTION
OT-1	DITCH CLEANOUT	248.54	0.0057	11.51	USACE
OT-2	SANDBAGS	177.27	0.0041	8.21	USACE
TOTAL TEMPORARY OPEN WATER IMPACTS		425.81	0.0098	19.72	USACE

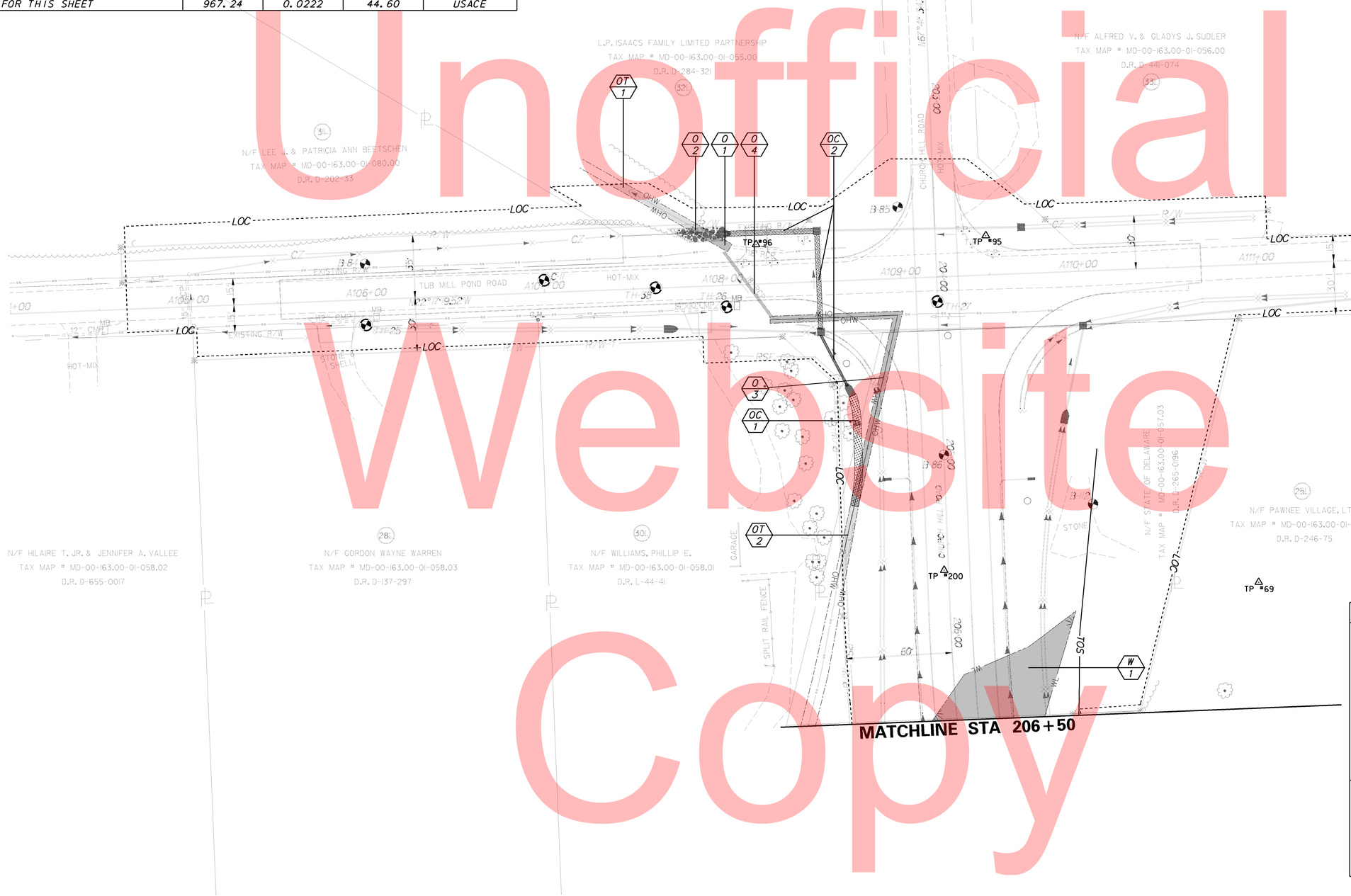

LEGEND

- TEMPORARY IMPACT AREA
- PERMANENT IMPACT AREA
- CREATION AREA
- OHW — ORDINARY HIGH WATER
- WL — WETLAND BOUNDARY
- XX / ?X — IMPACT AREA TYPE ID. (SEE BELOW) / IMPACT AREA ID. AND/OR NUMBER

T = TEMPORARY IMPACT
O = OPEN WATER IMPACT
W = WETLAND IMPACT

Unofficial Website Copy

DELAWARE DEPARTMENT OF TRANSPORTATION

ADDENDUMS / REVISIONS

SCALE 0 30 60 90 FEET

SR1, THOMPSONVILLE GRADE SEPARATED INTERSECTION

CONTRACT	BRIDGE NO.	X
T200412201	DESIGNED BY:	MATTHEW VINCENT
COUNTY	CHECKED BY:	
KENT		

ENVIRONMENTAL COMPLIANCE PLAN 02

SHEET NO. 96
TOTAL SHTS. 183

PERMANENT OPEN WATER IMPACT AREA SCHEDULE					
ID	IMPACT DESCRIPTION	AREA (SF)	AREA (AC)	VOLUME (CY)	JURISDICTION
O-5	FILL	981.99	0.0225	45.46	USACE
TOTAL FOR THIS SHEET		981.99	0.0225	45.46	USACE

PERMANENT WETLAND IMPACT AREA SCHEDULE					
ID	IMPACT DESCRIPTION	AREA (SF)	AREA (AC)	VOLUME (CY)	JURISDICTION
W-2	FILL	13863.87	0.3183	N/A	USACE
TOTAL FOR THIS SHEET		13863.87	0.3183	N/A	USACE

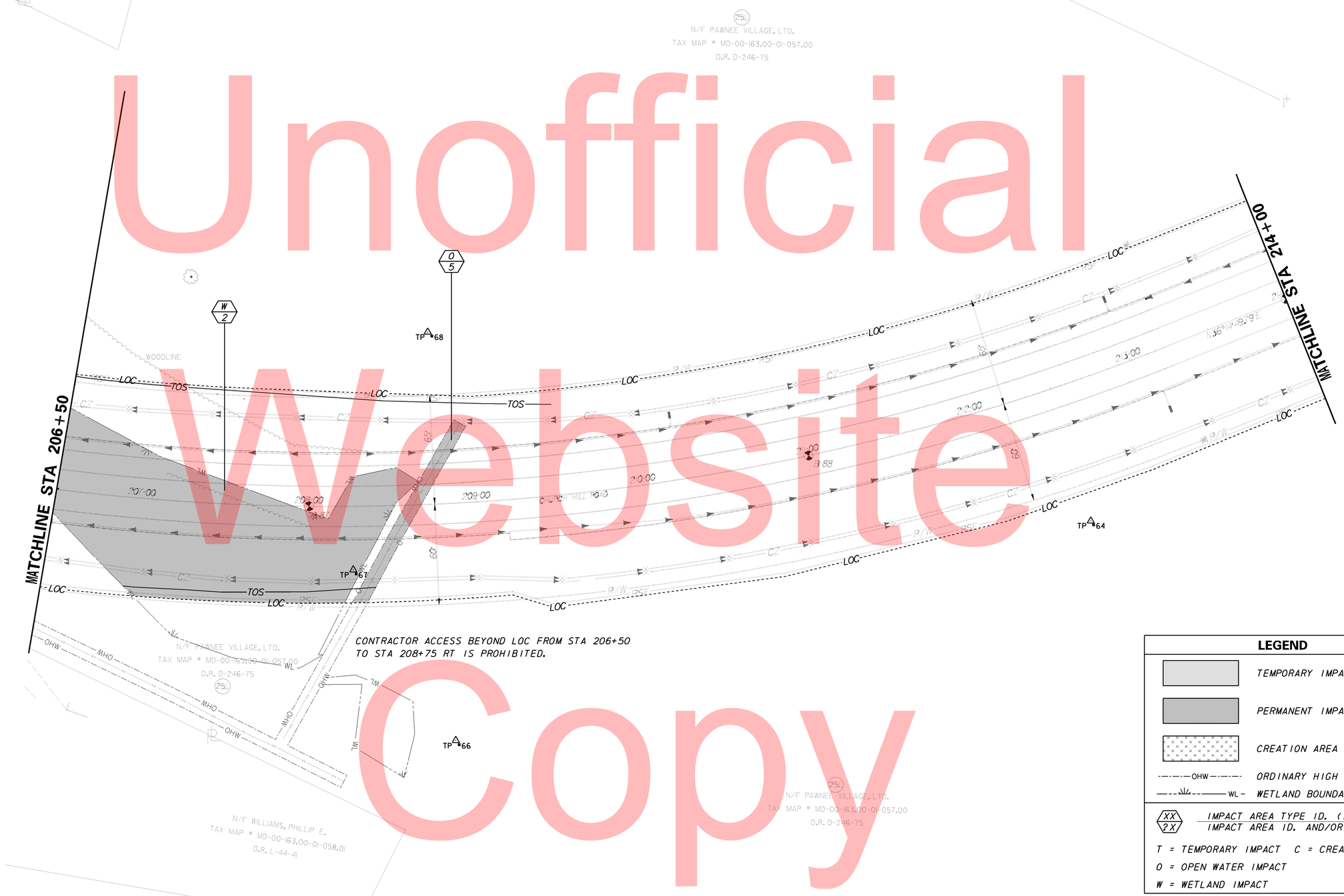

LEGEND

- TEMPORARY IMPACT AREA
- PERMANENT IMPACT AREA
- CREATION AREA
- OHW — ORDINARY HIGH WATER
- WL — WETLAND BOUNDARY
- XX / ?X — IMPACT AREA TYPE ID. (SEE BELOW) / IMPACT AREA ID. AND/OR NUMBER

T = TEMPORARY IMPACT C = CREATION AREA
O = OPEN WATER IMPACT
W = WETLAND IMPACT

Unofficial Website Copy

DELAWARE DEPARTMENT OF TRANSPORTATION

ADDENDUMS / REVISIONS

SCALE 0 30 60 90 FEET

SR1, THOMPSONVILLE GRADE SEPARATED INTERSECTION

CONTRACT	BRIDGE NO.	X
T200412201	DESIGNED BY:	MATTHEW VINCENT
COUNTY	CHECKED BY:	
KENT		

ENVIRONMENTAL COMPLIANCE PLAN 03

SHEET NO. 97
TOTAL SHTS. 183

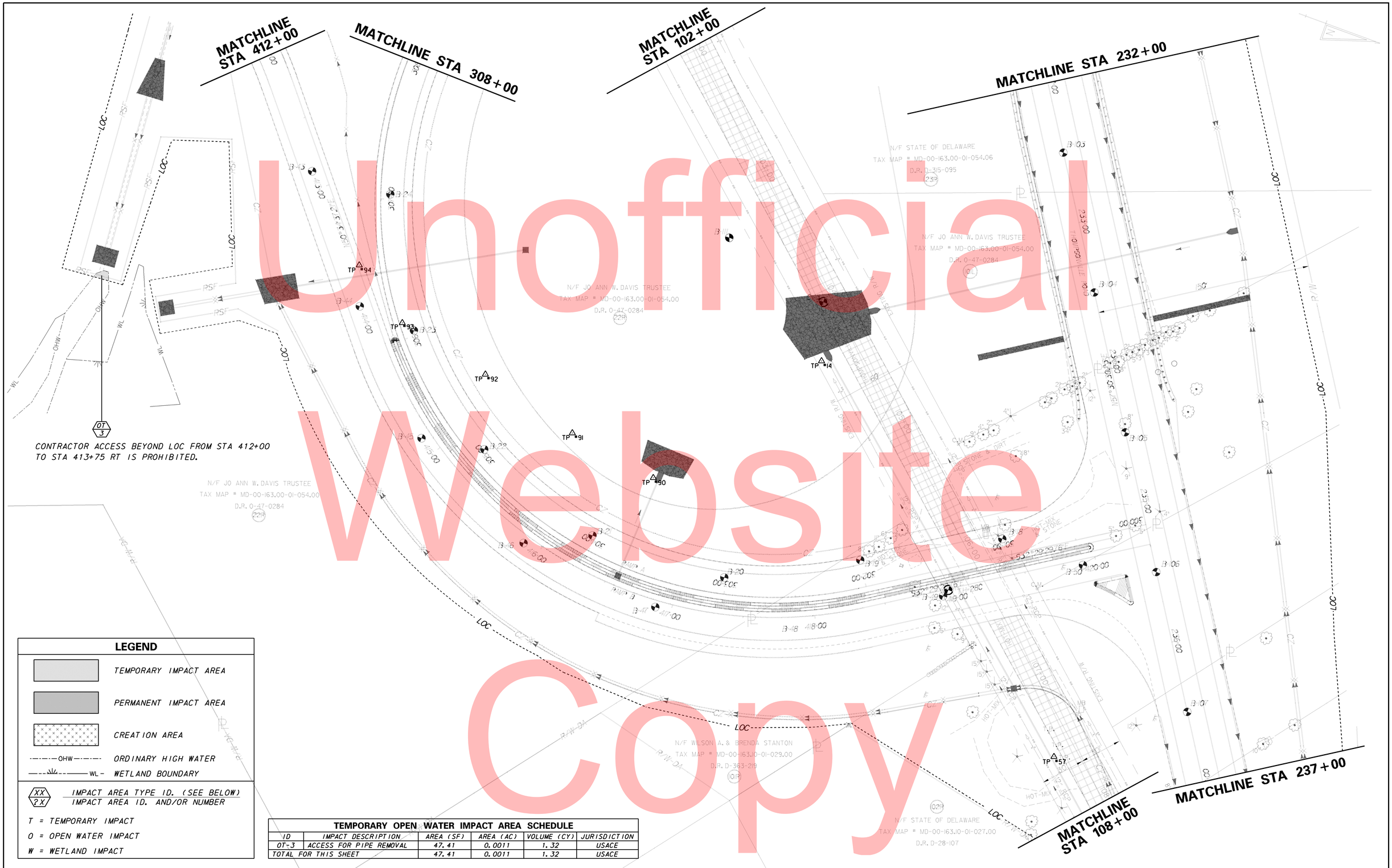

Unofficial Website Copy

LEGEND

- TEMPORARY IMPACT AREA
- PERMANENT IMPACT AREA
- CREATION AREA
- OHW — ORDINARY HIGH WATER
- WL — WETLAND BOUNDARY
- XX / ?X — IMPACT AREA TYPE ID. (SEE BELOW) / IMPACT AREA ID. AND/OR NUMBER
- T = TEMPORARY IMPACT
- O = OPEN WATER IMPACT
- W = WETLAND IMPACT

TEMPORARY OPEN WATER IMPACT AREA SCHEDULE

ID	IMPACT DESCRIPTION	AREA (SF)	AREA (AC)	VOLUME (CY)	JURISDICTION
OT-3	ACCESS FOR PIPE REMOVAL	47.41	0.0011	1.32	USACE
TOTAL FOR THIS SHEET		47.41	0.0011	1.32	USACE

DELAWARE DEPARTMENT OF TRANSPORTATION

ADDENDUMS / REVISIONS

SCALE 0 30 60 90 FEET

SR1, THOMPSONVILLE GRADE SEPARATED INTERSECTION

CONTRACT	BRIDGE NO.	
T200412201	DESIGNED BY:	MATTHEW VINCENT
COUNTY	CHECKED BY:	
KENT		

ENVIRONMENTAL COMPLIANCE PLAN 04

SHEET NO. 98

TOTAL SHTS. 183

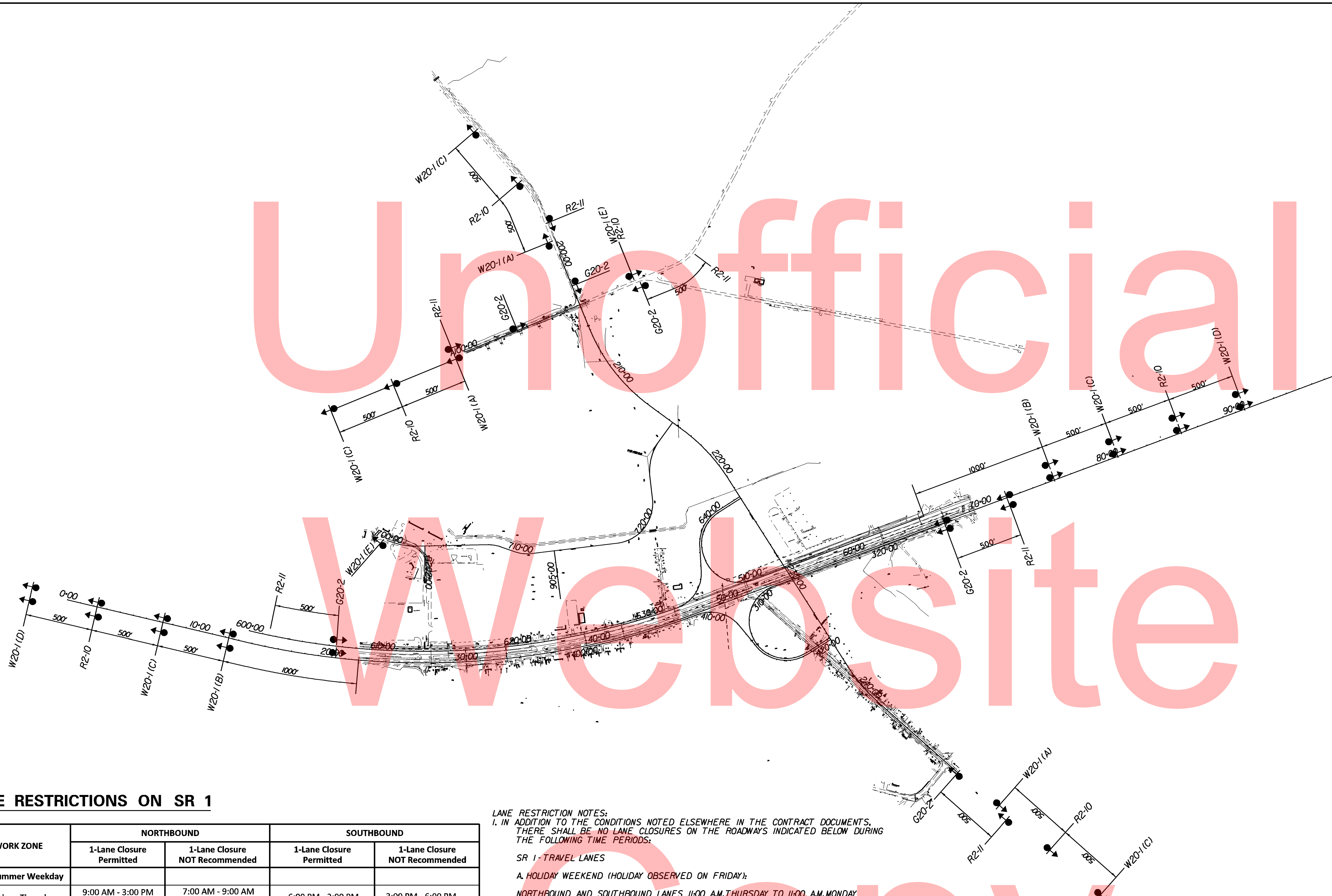

SIGN LEGEND

W20-1 (*) 48" X 48"	ROAD WORK *
R2-10 36" X 48"	BEGIN HIGHER FINES ZONE
R2-11 36" X 48"	END HIGHER FINES ZONE
G20-2 48" X 24"	END ROAD WORK

* DISTANCE LEGEND

LETTER	DISTANCE
A	500 FT
B	1000 FT
C	1500 FT
D	1/2 MILE
E	AHEAD

LANE RESTRICTIONS ON SR 1

WORK ZONE	NORTHBOUND		SOUTHBOUND	
	1-Lane Closure Permitted	1-Lane Closure NOT Recommended	1-Lane Closure Permitted	1-Lane Closure NOT Recommended
Non-Summer Weekday				
Monday - Thursday	9:00 AM - 3:00 PM 6:00 PM - 7:00 AM	7:00 AM - 9:00 AM 3:00 PM - 6:00 PM	6:00 PM - 3:00 PM	3:00 PM - 6:00 PM
Friday	8:00 AM - 2:00 PM 6:00 PM - 7:00 AM	7:00 AM - 8:00 AM 2:00 PM - 6:00 PM	9:00 PM - 10:00 AM	10:00 AM - 9:00 PM
Summer Weekday				
Monday - Thursday	7:00 PM - 7:00 AM	7:00 AM - 7:00 PM	7:00 PM - 8:00 AM	8:00 AM - 7:00 PM
Friday	7:00 PM - 7:00 AM	7:00 AM - 7:00 PM	11:00 PM - 7:00 AM	7:00 AM - 11:00 PM
Non-Summer Weekend				
Saturday	5:00 PM - 3:00 PM	3:00 PM - 5:00 PM	5:00 PM - 10:00 AM	10:00 AM - 5:00 PM
Sunday	7:00 PM - 10:00 AM	10:00 AM - 7:00 PM	24 Hours	N/A
Summer Weekend				
Saturday	9:00 PM - 8:00 AM	8:00 AM - 9:00 PM	7:00 PM - 8:00 AM	8:00 AM - 7:00 PM
Sunday	10:00 PM - 9:00 AM	9:00 AM - 10:00 PM	7:00 PM - 9:00 AM	9:00 AM - 7:00 PM

LANE RESTRICTION NOTES:

1. IN ADDITION TO THE CONDITIONS NOTED ELSEWHERE IN THE CONTRACT DOCUMENTS, THERE SHALL BE NO LANE CLOSURES ON THE ROADWAYS INDICATED BELOW DURING THE FOLLOWING TIME PERIODS:

   SR 1 - TRAVEL LANES

   A. HOLIDAY WEEKEND (HOLIDAY OBSERVED ON FRIDAY):

   NORTHBOUND AND SOUTHBOUND LANES 11:00 A.M. THURSDAY TO 11:00 A.M. MONDAY

   B. HOLIDAY WEEKEND (HOLIDAY OBSERVED ON MONDAY):

   NORTHBOUND AND SOUTHBOUND LANES 11:00 A.M. FRIDAY TO 11:00 A.M. TUESDAY

   C. HOLIDAY WEEKDAY (TUESDAY, WEDNESDAY, OR THURSDAY):

   NORTHBOUND AND SOUTHBOUND LANES 11:00 A.M. DAY PRIOR TO 11:00 A.M. DAY AFTER

   D. HOLIDAY WEEKEND (THANKSGIVING HOLIDAY-THURSDAY):

   NORTHBOUND AND SOUTHBOUND LANES 11:00 A.M. WEDNESDAY TO 11:00 A.M. MONDAY

2. SUMMER LANE RESTRICTIONS WILL BE IN EFFECT ON SR 1 FROM MAY 1ST THROUGH SEPTEMBER 30TH. NON-SUMMER LANE RESTRICTIONS WILL BE IN EFFECT ON SR 1 FROM OCTOBER 1ST THROUGH APRIL 30TH.

3. LANE CLOSURES ON ROADWAYS OTHER THAN SR 1 MAY OCCUR MONDAY THROUGH FRIDAY, 8:00 AM TO 4:00 PM, OR AS PERMITTED BY THE CENTRAL DISTRICT SAFETY OFFICER.

4. SEE THE CONTRACT SPECIFICATIONS, ITEM 743000 AND THE CONSTRUCTION STAGING FOR ADDITIONAL CONDITIONS REGARDING LANE CLOSURES.

ADVANCED WARNING SIGN NOTES:

1. ALL ADVANCED WARNING SIGNS TO BE PAID UNDER ITEM# 743024.

2. THE CONTRACTOR SHALL LAYOUT SIGNS FOR APPROVAL BY THE ENGINEER PRIOR TO INSTALLATION. THE COVERING OF ANY CONFLICTING SIGNS SHALL BE INCIDENTAL TO ITEM# 743024.

3. ON SR1, PLACE ADVANCE WARNING SIGNS ON BOTH THE LEFT MEDIAN AND RIGHT SIDES OF THE TRAVEL LANES.

4. ALL PERMANENT ADVANCE WARNING SIGNS SHALL BE GROUND MOUNTED ON TWO NCHRP-350 OR MASH APPROVED BREAK-AWAY POSTS AND SHALL BE MOUNTED IN COMPLIANCE WITH THE DE MUTCD. PERMANENT ADVANCE WARNINGS SIGNS SHALL BE MOUNTED AT A HEIGHT OF 7 FEET, MEASURED FROM THE ROADWAY TO THE BOTTOM OF THE SIGN. THE USE OF SKID MOUNTED SIGN SUPPORTS IS NOT ALLOWED UNLESS THE CONTRACTOR CAN DEMOSTRATE THAT AN UTILITY CONFLICT EXISTS, WHICH SHALL BE VERIFIED BY THE ENGINEER, OR CONCRETE MEDIANS PREVENT THE INSTALLATION OF THE PERMANENT SIGNS IN THE APPROPRIATE LOCATION.

Unofficial Website Copy

TRAFFIC CONTROL NOTES:

1. MAINTENANCE OF TRAFFIC DURING LANE CLOSURES SHALL CONFORM TO TA-33 OR TA-10 OF THE DE-MUTCD. MAINTENANCE OF TRAFFIC DURING LANE SHIFTS SHALL CONFORM TO TA-11B OR TA-36 OF THE DE-MUTCD.

2. GRADING AND MAINTAINING BASE COURSE THAT IS BEING USED AS A TRAVELWAY, DRIVEWAY, ACCESS RAMP, ETC. SHALL BE INCIDENTAL TO ITEM 743000 - MAINTENANCE OF TRAFFIC. EXCESS BASE COURSE MATERIAL SHALL BE PUSHED AHEAD AND USED IN THE NEXT SEGMENT AND SHALL BE INCIDENTAL TO THE PARTICULAR BASE COURSE PAY ITEM. NO PAYMENT SHALL BE MADE FOR TEMPORARY ROADWAY MATERIAL (TRM) USED TO PROTECT EDGE DROP-OFFS, UNLESS THE MATERIAL IS EVENTUALLY UTILIZED AS PART OF A PERMANENT ROADWAY AT WHICH TIME THE MATERIAL WOULD BE PAID FOR UNDER THE RESPECTIVE CONTRACT MATERIAL ITEM. CONSTRUCTION OF A PLANNED RUNAROUND OR DETOUR WOULD BE ELIGIBLE FOR PAYMENT AS SPECIFIED IN THE CONTRACT.

3. THIS PROJECT IS CONSIDERED A SIGNIFICANT PROJECT AS DEFINED BY DELDOT'S WORK ZONE MOBILITY PROCEDURES AND GUIDELINES. A TYPE B TRANSPORTATION MANAGEMENT PLAN (TMP) HAS BEEN PREPARED AND IS AVAILABLE FOR VIEWING BY CONTACTING THE DEPARTMENT'S SAFETY PROGRAMS MANAGER AT (302)659-4060. ALL MONITORING REQUIREMENTS OF THE TMP SHALL BE CONDUCTED BY DELDOT FORCES UNLESS OTHERWISE DIRECTED BY THE ENGINEER. MODIFICATIONS TO THE TMP SHALL BE COMPLETED BY THE CONTRACTOR IF CHANGES TO THE TIME RESTRICTIONS OR THE TRAFFIC CONTROL PLAN ARE DESIRED. THE MODIFIED TMP SHALL BE PREPARED BY A PROFESSIONAL ENGINEER, REGISTERED IN THE STATE OF DELAWARE.

4. A TYPE II TRUCK MOUNTED ATTENUATOR (TMA) SHALL BE REQUIRED ON THIS PROJECT DURING THE FOLLOWING OPERATIONS: TEMPORARY/PERMANENT PAVEMENT MARKINGS, ROADSIDE SPRAYING, PATCHING, MILLING, SWEEPING, TEMPORARY TRAFFIC BARRIER PLACEMENT OR AS DIRECTED BY THE ENGINEER. THE ROLL AHEAD DISTANCE SHALL BE AS PER THE MANUFACTURER'S RECOMMENDATIONS. THE TMA SHALL CONFORM TO THE REQUIREMENTS OF SECTION 6F OF THE DELAWARE MUTCD.

5. LONGITUDINAL EDGE DROP-OFFS SHALL BE CORRECTED IN ACCORDANCE WITH TABLE 6G-1 OF THE DELAWARE MUTCD.

   a) WHERE PLACEMENT OF A WEDGE/FILLET BETWEEN TRAVEL LANES AND A PAVEMENT BOX IS REQUIRED, APPROVED BASE COURSE MATERIAL SHALL BE USED FOR THE FILLET MATERIAL. THE BASE COURSE MATERIAL SHALL BE PLACED AT NO GREATER THAN THE SLOPE SPECIFIED IN TABLE 6G-1 AND SHALL BE COMPACTED. EXCESS BASE COURSE MATERIAL SHALL BE PUSHED AHEAD AND USED IN THE NEXT SEGMENT AND SHALL BE INCIDENTAL TO THE PARTICULAR BASE COURSE ITEM.

   b) WHERE PLACEMENT OF A WEDGE/FILLET AT THE EDGE OF THE ROADWAY IS REQUIRED, PAVEMENT MILLINGS SHALL BE USED FOR THE FILLET MATERIAL. PAYMENT FOR PAVEMENT MILLINGS SHALL BE INCIDENTAL TO ITEM 743000. NO SEPARATE PAYMENT SHALL BE MADE FOR PAVEMENT MILLINGS TO CORRECT PAVEMENT EDGE DROP-OFFS, UNLESS THE MATERIAL IS EVENTUALLY USED AS PART OF A PERMANENT ROADWAY, AT WHICH TIME THE MATERIAL WOULD BE PAID FOR UNDER THE RESPECTIVE CONTRACT BID ITEM.

6. REMOVAL OF THE EXISTING PAVEMENT MARKINGS AS DIRECTED BY THE ENGINEER SHALL BE PAID UNDER ITEM 748530 - REMOVAL OF PAVEMENT STRIPING.

7. THE CONTRACTOR SHALL BE RESPONSIBLE FOR COORDINATING THEIR WORK WITH OTHER CONTRACTORS IN THE AREA. ANY COSTS SHALL BE INCIDENTAL TO THE CONTRACT.

8. THE ENDS OF PORTABLE P.C.C. SAFETY BARRIER SHALL BE PROTECTED WITH A IMPACT ATTENUATOR AS NOTED ON THE PLANS.

9. LATERAL TAPERS OF PORTABLE P.C.C. SAFETY BARRIER TOWARDS A TRAVEL LANE SHALL BE INSTALLED IN ACCORDANCE WITH PARAGRAPH 6E OF SECTION 6F.85 OF THE 2011 DE MUTCD.

10. THE DEPARTMENT SHALL ONLY PAY FOR ITEM 743005 - FURNISH AND MAINTAIN PORTABLE LIGHT ASSEMBLY FOR THAT IS SPECIFICALLY RESTRICTED TO NIGHT WORK AS NOTED IN THE CONTRACT DOCUMENTS OR AS DIRECTED BY THE ENGINEER. THE COST OF ANY FLOODLIGHTING NECESSARY DUE TO THE WORK BY THE CONTRACTOR ON ANY ITEM OCCURING AFTER DARK THAT IS NOT SPECIFICALLY IDENTIFIED AS NIGHT WORK WITHIN THE CONTRACT DOCUMENTS SHALL BE INCIDENTAL TO THE BID PRICE OF THE ITEM BEING CONSTRUCTED AFTER DARK. DURING NIGHT WORK ALL PERSONS WITHIN THE WORKSITE SHALL WEAR REFLECTORIZED VESTS. IT SHALL BE THE CONTRACTOR'S RESPONSIBILITY TO ADEQUATELY ILLUMINATE THE WORK ZONE TO ensure THE SAFETY OF THE WORKERS AND THE TRAVELLING PUBLIC.

11. WHERE TYPE III BARRICADES ARE USED TO CLOSED A ROADWAY, PLACE ROAD CLOSED SIGN ON TYPE III BARRICADE (ONE SIGN PER CLOSED APPROACHING LANE).

CONSTRUCTION PHASING & M.O.T	
	BARRICADE, TYPE 3
	CONCRETE SAFETY BARRIER - PORTABLE
CSF XXX	CONSTRUCTION SAFETY FENCE / LENGTH
—CSF—	CONSTRUCTION SAFETY FENCE
	CONSTRUCTION WARNING SIGN LOCATION
END ROAD WORK	CONSTRUCTION WARNING SIGN
	CRASH CUSHION ARRAY
	DRUM - TRAFFIC CONTROL
	FLAGGER LOCATION
PHASE	PHASING TRAFFIC FLOW ARROW
	TEMPORARY CONSTRUCTION
	TEMPORARY PAVEMENT MARKING ARROW
	TRUCK WITH MOUNTED ATTENUATOR
	WORK AREA - ACTIVE PHASE
EROSION & SEDIMENT CONTROL	
DWBAG	DEWATERING BAG
DWB	DEWATERING BASIN
ED	EARTH DIKE
	INLET SEDIMENT CONTROL
	PERIMETER DIKE/SWALE
PST	PORTABLE SEDIMENT TANK
SBD	SANDBAG DIKE
SB	SANDBAG DIVERSION
SCD	STONE CHECK DAM
SCE	STABILIZED CONSTRUCTION ENTRANCE
SF	SILT FENCE / LENGTH
—SF—	SILT FENCE
—RSF—	SILT FENCE - REINFORCED
SP-1	SUMP PIT, TYPE 1
SP-2	SUMP PIT, TYPE 2
ST	SEDIMENT TRAP
ST	SEDIMENT TRAP
ST	SEDIMENT TRAP WITH INLET AS OUTLET
ST	SEDIMENT TRAP PIPE OUTLET
SW	STILLING WELL
	TEMPORARY SWALE
TSD	TEMPORARY SLOPE DRAIN
T XXX	TURBIDITY CURTAIN / LENGTH
—T—	TURBIDITY CURTAIN

Unofficial Website Copy

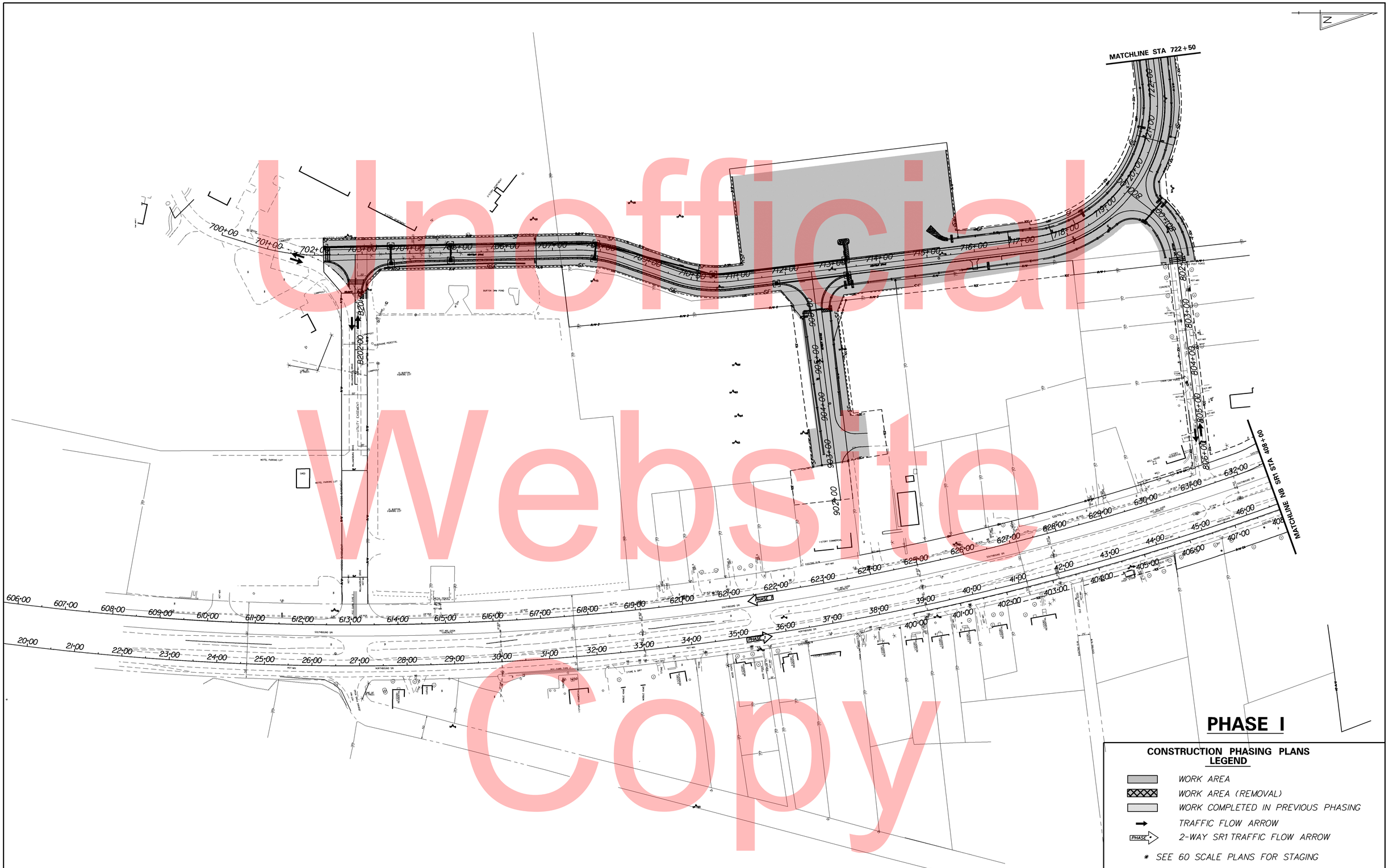

Unofficial Website Copy

DELAWARE DEPARTMENT OF TRANSPORTATION	ADDENDUMS / REVISIONS	SCALE 0 90 180 270 FEET	SR1, THOMPSONVILLE GRADE SEPARATED INTERSECTION	CONTRACT T200412201	BRIDGE NO.	CONSTRUCTION PHASING, M.O.T., AND EROSION CONTROL PLAN	SHEET NO. 101
				COUNTY KENT	DESIGNED BY: MATTHEW VINCENT		TOTAL SHTS. 183
					CHECKED BY:		

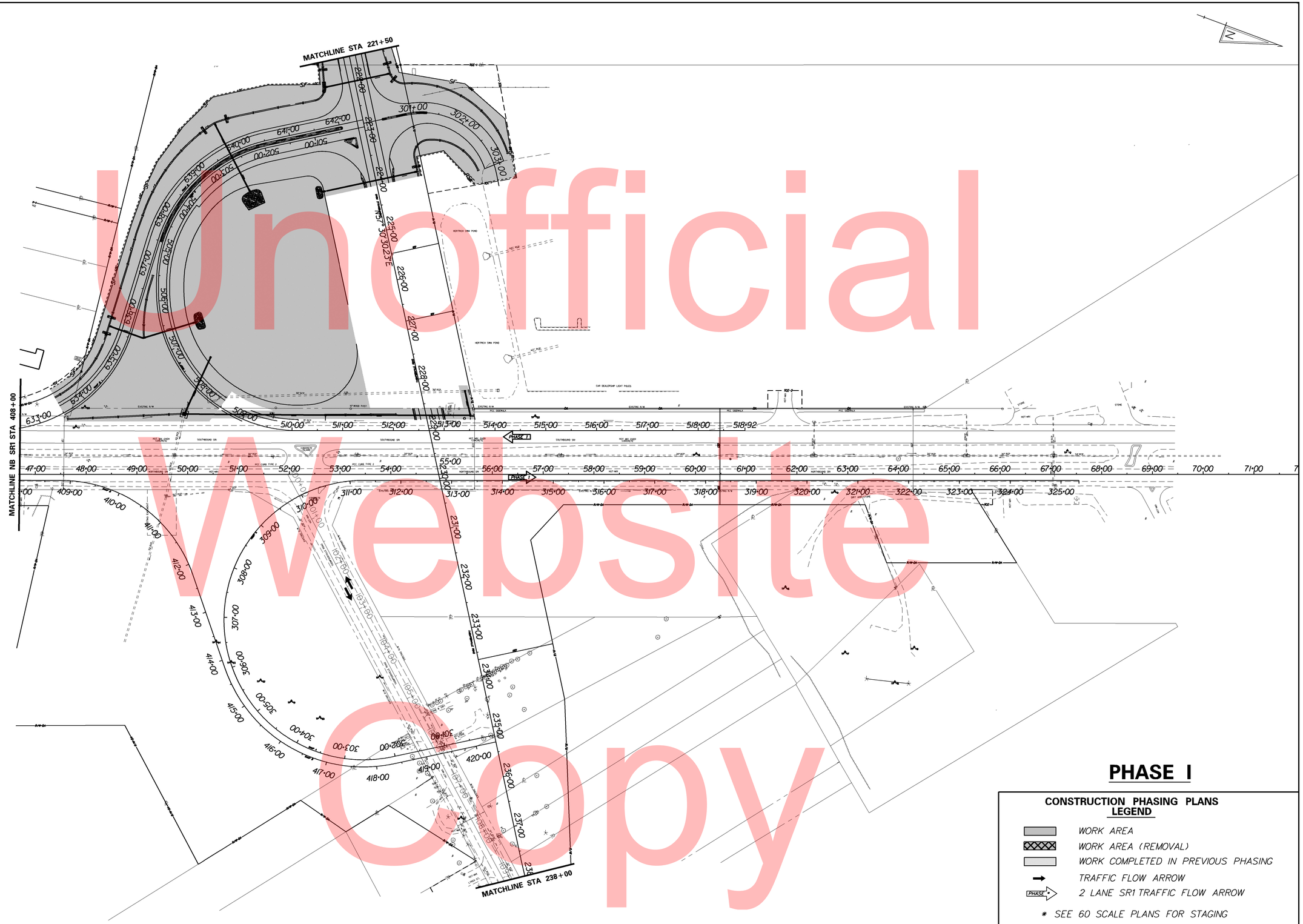

PHASE I

CONSTRUCTION PHASING PLANS LEGEND

- WORK AREA
- WORK AREA (REMOVAL)
- WORK COMPLETED IN PREVIOUS PHASING
- TRAFFIC FLOW ARROW
- PHASE 2 LANE SR1 TRAFFIC FLOW ARROW

* SEE 60 SCALE PLANS FOR STAGING

Unofficial Website Copy

DELAWARE DEPARTMENT OF TRANSPORTATION	ADDENDUMS / REVISIONS	SCALE 0 90 180 270 FEET	SR1, THOMPSONVILLE GRADE SEPARATED INTERSECTION	CONTRACT T200412201	BRIDGE NO.	CONSTRUCTION PHASING, M.O.T., AND EROSION CONTROL PLAN	SHEET NO. 102
				COUNTY KENT	DESIGNED BY:		TOTAL SHTS. 183
					CHECKED BY:		

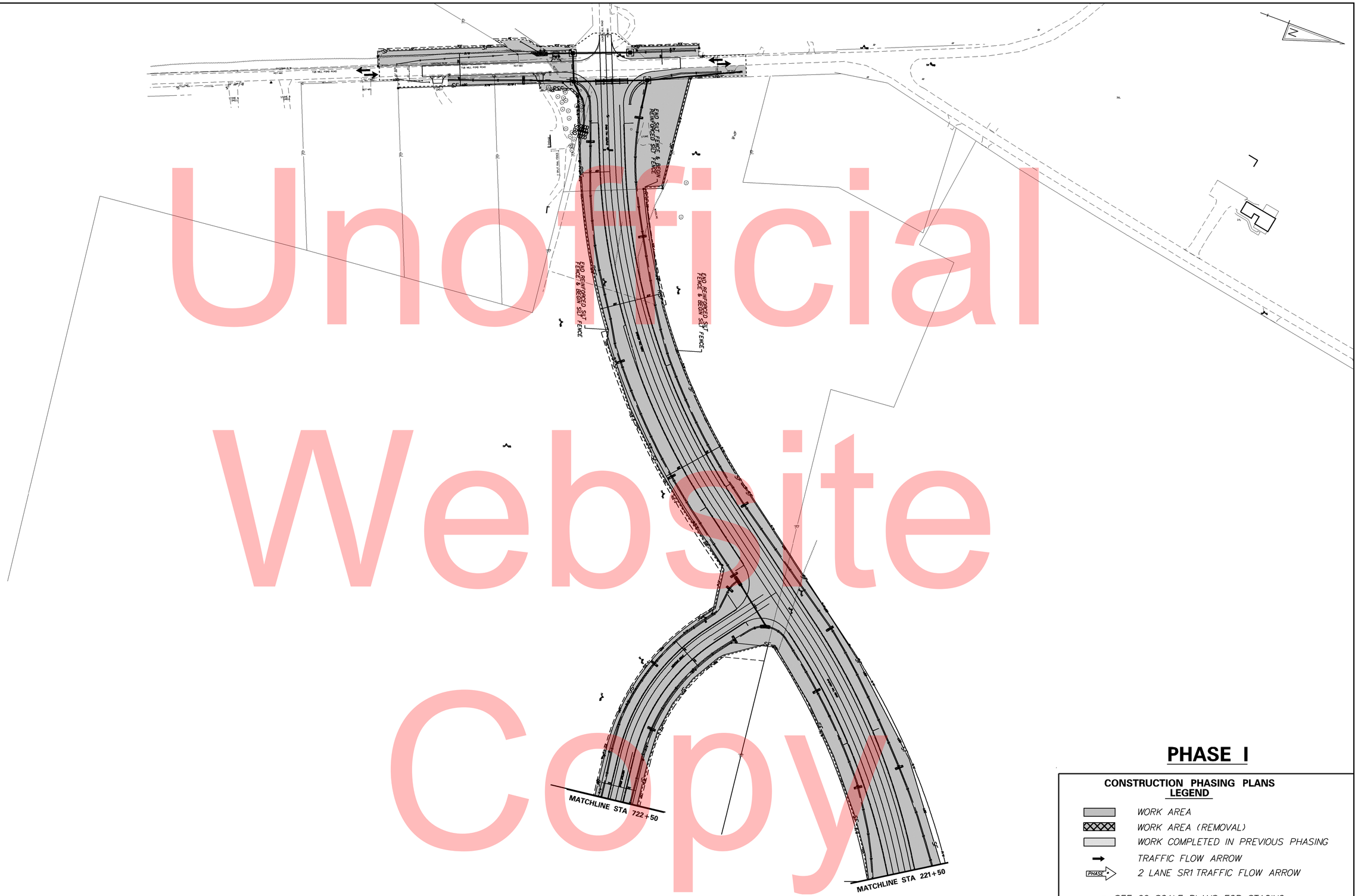

Unofficial Website Copy

PHASE I

CONSTRUCTION PHASING PLANS LEGEND

- WORK AREA
- WORK AREA (REMOVAL)
- WORK COMPLETED IN PREVIOUS PHASING
- TRAFFIC FLOW ARROW
- PHASE 2 LANE SR1 TRAFFIC FLOW ARROW

* SEE 60 SCALE PLANS FOR STAGING

DELAWARE DEPARTMENT OF TRANSPORTATION	ADDENDUMS / REVISIONS	SCALE 0 90 180 270 FEET	SR1, THOMPSONVILLE GRADE SEPARATED INTERSECTION	CONTRACT T200412201	BRIDGE NO.	CONSTRUCTION PHASING, M.O.T., AND EROSION CONTROL PLAN	SHEET NO. 103
				COUNTY KENT	DESIGNED BY: MATTHEW VINCENT		TOTAL SHTS. 183
					CHECKED BY:		

Unofficial Website Copy

PHASE I

CONSTRUCTION PHASING PLANS LEGEND

- *WORK AREA*
- *WORK AREA (REMOVAL)*
- *WORK COMPLETED IN PREVIOUS PHASING*
- *TRAFFIC FLOW ARROW*
- PHASE *2-WAY SR1 TRAFFIC FLOW ARROW*

* *SEE 60 SCALE PLANS FOR STAGING*

DELAWARE DEPARTMENT OF TRANSPORTATION	ADDENDUMS / REVISIONS	SCALE 0 90 180 270 FEET	**SR1, THOMPSONVILLE GRADE SEPARATED INTERSECTION**	CONTRACT T200412201	BRIDGE NO.	**CONSTRUCTION PHASING, M.O.T., AND EROSION CONTROL PLAN**	SHEET NO. 104
				COUNTY KENT	DESIGNED BY: MATTHEW VINCENT		TOTAL SHTS. 183
					CHECKED BY:		

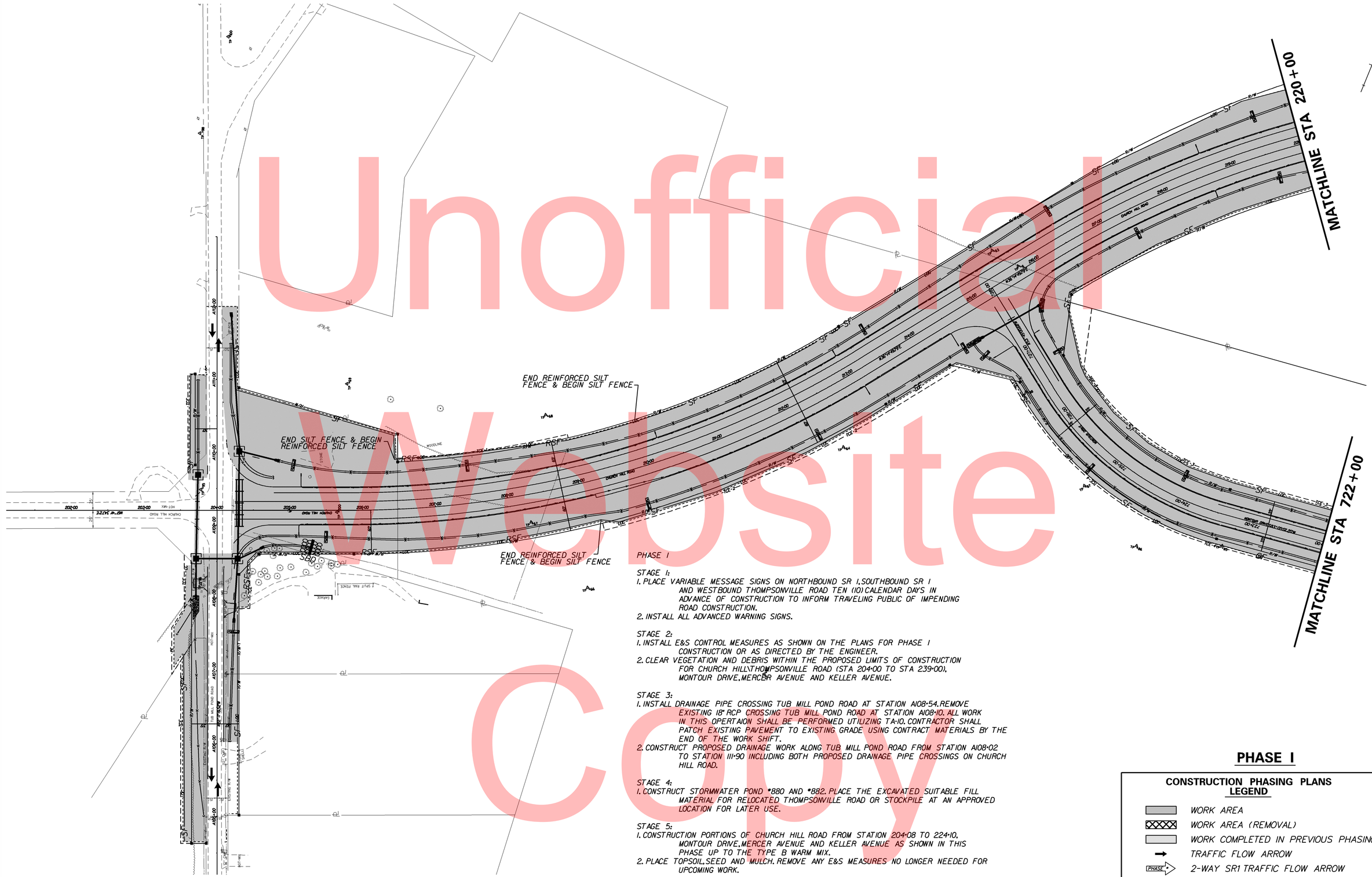

PHASE I

STAGE 1:
1. PLACE VARIABLE MESSAGE SIGNS ON NORTHBOUND SR 1, SOUTHBOUND SR 1 AND WESTBOUND THOMPSONVILLE ROAD TEN (10) CALENDAR DAYS IN ADVANCE OF CONSTRUCTION TO INFORM TRAVELING PUBLIC OF IMPENDING ROAD CONSTRUCTION.
2. INSTALL ALL ADVANCED WARNING SIGNS.

STAGE 2:
1. INSTALL E&S CONTROL MEASURES AS SHOWN ON THE PLANS FOR PHASE 1 CONSTRUCTION OR AS DIRECTED BY THE ENGINEER.
2. CLEAR VEGETATION AND DEBRIS WITHIN THE PROPOSED LIMITS OF CONSTRUCTION FOR CHURCH HILL, THOMPSONVILLE ROAD (STA 204+00 TO STA 239+00), MONTOUR DRIVE, MERCER AVENUE AND KELLER AVENUE.

STAGE 3:
1. INSTALL DRAINAGE PIPE CROSSING TUB MILL POND ROAD AT STATION A108+54. REMOVE EXISTING 18" RCP CROSSING TUB MILL POND ROAD AT STATION A108+10. ALL WORK IN THIS OPERTAION SHALL BE PERFORMED UTILIZING TA-10. CONTRACTOR SHALL PATCH EXISTING PAVEMENT TO EXISTING GRADE USING CONTRACT MATERIALS BY THE END OF THE WORK SHIFT.
2. CONSTRUCT PROPOSED DRAINAGE WORK ALONG TUB MILL POND ROAD FROM STATION A108+02 TO STATION 111+90 INCLUDING BOTH PROPOSED DRAINAGE PIPE CROSSINGS ON CHURCH HILL ROAD.

STAGE 4:
1. CONSTRUCT STORMWATER POND #880 AND #882. PLACE THE EXCAVATED SUITABLE FILL MATERIAL FOR RELOCATED THOMPSONVILLE ROAD OR STOCKPILE AT AN APPROVED LOCATION FOR LATER USE.

STAGE 5:
1. CONSTRUCTION PORTIONS OF CHURCH HILL ROAD FROM STATION 204+08 TO 224+10, MONTOUR DRIVE, MERCER AVENUE AND KELLER AVENUE AS SHOWN IN THIS PHASE UP TO THE TYPE B WARM MIX.
2. PLACE TOPSOIL, SEED AND MULCH. REMOVE ANY E&S MEASURES NO LONGER NEEDED FOR UPCOMING WORK.

PHASE I

CONSTRUCTION PHASING PLANS
LEGEND

- WORK AREA
- WORK AREA (REMOVAL)
- WORK COMPLETED IN PREVIOUS PHASING
- TRAFFIC FLOW ARROW
- PHASE 2-WAY SR1 TRAFFIC FLOW ARROW

Unofficial Website Copy

DELAWARE DEPARTMENT OF TRANSPORTATION	ADDENDUMS / REVISIONS	SCALE 0 60 120 180 FEET	SR 1, THOMPSONVILLE GRADE SEPARATED INTERSECTION	CONTRACT T200412201	BRIDGE NO. N\A	CONSTRUCTION PHASING, M.O.T., AND EROSION CONTROL PLAN	SHEET NO. 105
				COUNTY KENT	DESIGNED BY:		TOTAL SHTS. 183
					CHECKED BY:		

PHASE I

STAGE 1:
1. PLACE VARIABLE MESSAGE SIGNS ON NORTHBOUND SR 1, SOUTHBOUND SR 1 AND WESTBOUND THOMPSONVILLE ROAD TEN (10) CALENDAR DAYS IN ADVANCE OF CONSTRUCTION TO INFORM TRAVELING PUBLIC OF IMPENDING ROAD CONSTRUCTION.
2. INSTALL ALL ADVANCED WARNING SIGNS.

STAGE 2:
1. INSTALL E&S CONTROL MEASURES AS SHOWN ON THE PLANS FOR PHASE I CONSTRUCTION OR AS DIRECTED BY THE ENGINEER.
2. CLEAR VEGETATION AND DEBRIS WITHIN THE PROPOSED LIMITS OF CONSTRUCTION FOR CHURCH HILL\THOMPSONVILLE ROAD (STA 204+00 TO STA 239+00), MONTOUR DRIVE, MERCER AVENUE AND KELLER AVENUE.

STAGE 3:
1. INSTALL DRAINAGE PIPE CROSSING TUB MILL POND ROAD AT STATION A108+54. REMOVE EXISTING 18" RCP CROSSING TUB MILL POND ROAD AT STATION A108+10. ALL WORK IN THIS OPERTAION SHALL BE PERFORMED UTILIZING TA-10. CONTRACTOR SHALL PATCH EXISTING PAVEMENT TO EXISTING GRADE USING CONTRACT MATERIALS BY THE END OF THE WORK SHIFT.
2. CONSTRUCT PROPOSED DRAINAGE WORK ALONG TUB MILL POND ROAD FROM STATION A108+02 TO STATION 111+90 INCLUDING BOTH PROPOSED DRAINAGE PIPE CROSSINGS ON CHURCH HILL ROAD.

STAGE 4:
1. CONSTRUCT STORMWATER POND #880 AND #882. PLACE THE EXCAVATED SUITABLE FILL MATERIAL FOR RELOCATED THOMPSONVILLE ROAD OR STOCKPILE AT AN APPROVED LOCATION FOR LATER USE.

STAGE 5:
1. CONSTRUCTION PORTIONS OF CHURCH HILL ROAD FROM STATION 204+08 TO 224+10, MONTOUR DRIVE, MERCER AVENUE AND KELLER AVENUE AS SHOWN IN THIS PHASE UP TO THE TYPE B WARM MIX.
2. PLACE TOPSOIL, SEED AND MULCH. REMOVE ANY E&S MEASURES NO LONGER NEEDED FOR UPCOMING WORK.

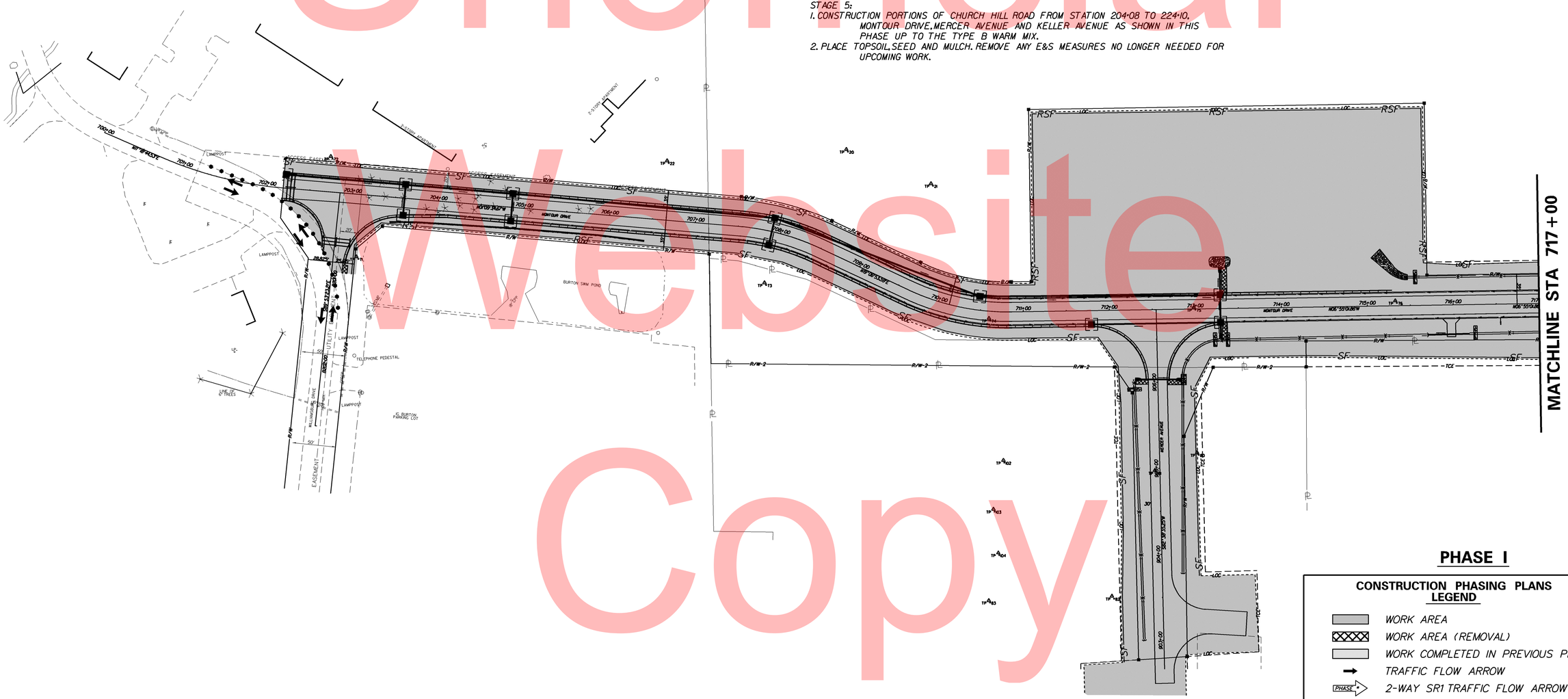

PHASE I

CONSTRUCTION PHASING PLANS LEGEND

- WORK AREA
- WORK AREA (REMOVAL)
- WORK COMPLETED IN PREVIOUS PHASING
- TRAFFIC FLOW ARROW
- PHASE 2-WAY SR1 TRAFFIC FLOW ARROW

Unofficial Website Copy

DELAWARE DEPARTMENT OF TRANSPORTATION	ADDENDUMS / REVISIONS	SCALE 0 60 120 180 FEET	SR 1, THOMPSONVILLE GRADE SEPARATED INTERSECTION	CONTRACT T200412201	BRIDGE NO. N\A	CONSTRUCTION PHASING, M.O.T., AND EROSION CONTROL PLAN	SHEET NO. 106
				COUNTY KENT	DESIGNED BY:		TOTAL SHTS. 183
					CHECKED BY:		

CONSTRUCTION PHASING PLANS
LEGEND

- WORK AREA
- WORK AREA (REMOVAL)
- WORK COMPLETED IN PREVIOUS PHASING
- TRAFFIC FLOW ARROW
- PHASE 2-WAY SR1 TRAFFIC FLOW ARROW

PHASE I

PHASE I

STAGE 1:
1. PLACE VARIABLE MESSAGE SIGNS ON NORTHBOUND SR 1, SOUTHBOUND SR 1 AND WESTBOUND THOMPSONVILLE ROAD TEN (10) CALENDAR DAYS IN ADVANCE OF CONSTRUCTION TO INFORM TRAVELING PUBLIC OF IMPENDING ROAD CONSTRUCTION.
2. INSTALL ALL ADVANCED WARNING SIGNS.

STAGE 2:
1. INSTALL E&S CONTROL MEASURES AS SHOWN ON THE PLANS FOR PHASE I CONSTRUCTION OR AS DIRECTED BY THE ENGINEER.
2. CLEAR VEGETATION AND DEBRIS WITHIN THE PROPOSED LIMITS OF CONSTRUCTION FOR CHURCH HILL\THOMPSONVILLE ROAD (STA 204+00 TO STA 239+00), MONTOUR DRIVE, MERCER AVENUE AND KELLER AVENUE.

STAGE 3:
1. INSTALL DRAINAGE PIPE CROSSING TUB MILL POND ROAD AT STATION A108+54. REMOVE EXISTING 18" RCP CROSSING TUB MILL POND ROAD AT STATION A108+10. ALL WORK IN THIS OPERTAION SHALL BE PERFORMED UTILIZING TA-10. CONTRACTOR SHALL PATCH EXISTING PAVEMENT TO EXISTING GRADE USING CONTRACT MATERIALS BY THE END OF THE WORK SHIFT.
2. CONSTRUCT PROPOSED DRAINAGE WORK ALONG TUB MILL POND ROAD FROM STATION A108+02 TO STATION 111+90 INCLUDING BOTH PROPOSED DRAINAGE PIPE CROSSINGS ON CHURCH HILL ROAD.

STAGE 4:
1. CONSTRUCT STORMWATER POND #880 AND #882. PLACE THE EXCAVATED SUITABLE FILL MATERIAL FOR RELOCATED THOMPSONVILLE ROAD OR STOCKPILE AT AN APPROVED LOCATION FOR LATER USE.

STAGE 5:
1. CONSTRUCTION PORTIONS OF CHURCH HILL ROAD FROM STATION 204+08 TO 224+10, MONTOUR DRIVE, MERCER AVENUE AND KELLER AVENUE AS SHOWN IN THIS PHASE UP TO THE TYPE B WARM MIX.
2. PLACE TOPSOIL, SEED AND MULCH. REMOVE ANY E&S MEASURES NO LONGER NEEDED FOR UPCOMING WORK.

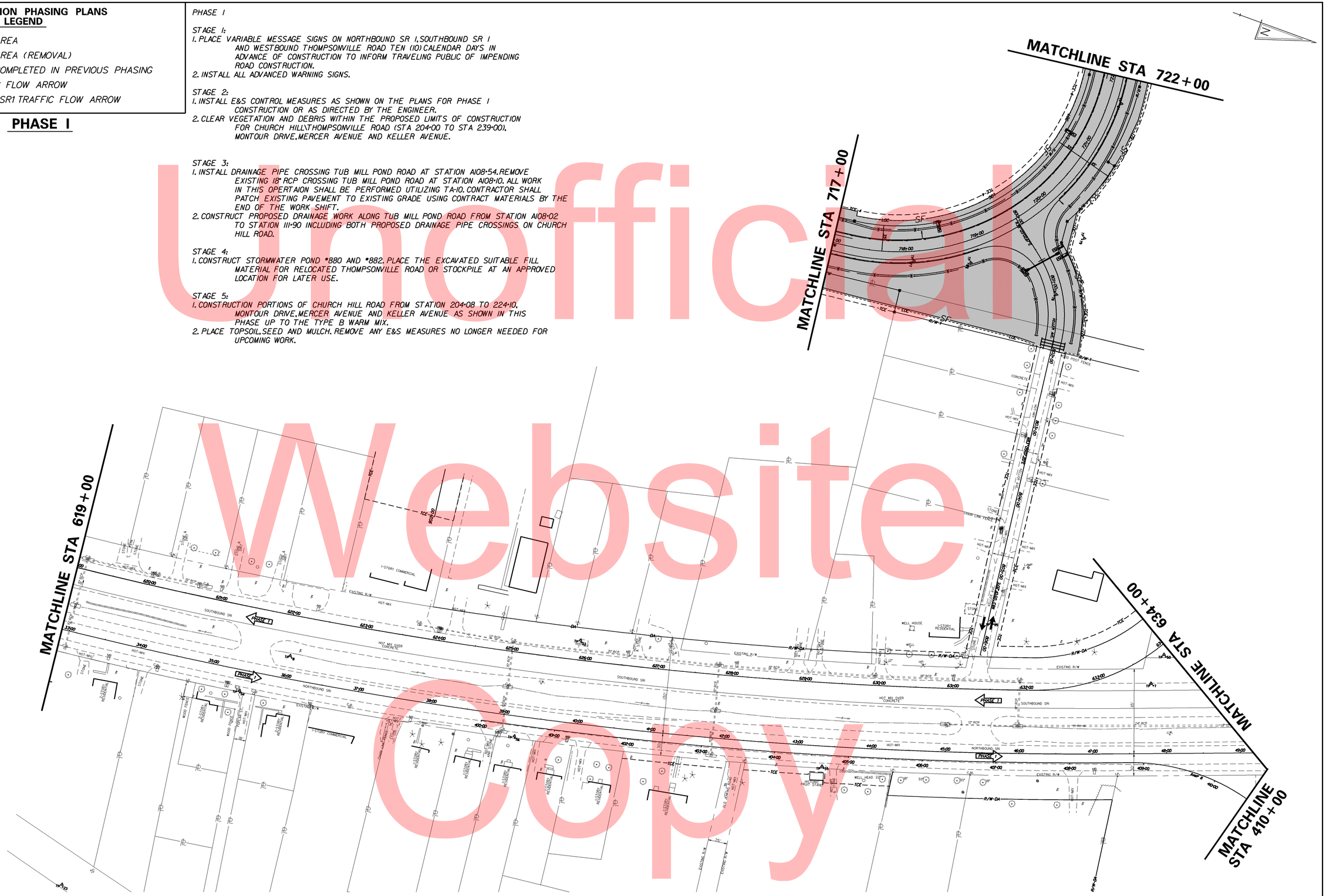

Unofficial Website Copy

DELAWARE DEPARTMENT OF TRANSPORTATION	ADDENDUMS / REVISIONS	SCALE 0 60 120 180 FEET	SR 1, THOMPSONVILLE GRADE SEPARATED INTERSECTION	CONTRACT T200412201	BRIDGE NO. N\A	CONSTRUCTION PHASING, M.O.T., AND EROSION CONTROL PLAN	SHEET NO. 107
				COUNTY KENT	DESIGNED BY:		TOTAL SHTS. 183
					CHECKED BY:		

PHASE 1

STAGE 1:
1. PLACE VARIABLE MESSAGE SIGNS ON NORTHBOUND SR 1, SOUTHBOUND SR 1 AND WESTBOUND THOMPSONVILLE ROAD TEN (10) CALENDAR DAYS IN ADVANCE OF CONSTRUCTION TO INFORM TRAVELING PUBLIC OF IMPENDING ROAD CONSTRUCTION.
2. INSTALL ALL ADVANCED WARNING SIGNS.

STAGE 2:
1. INSTALL E&S CONTROL MEASURES AS SHOWN ON THE PLANS FOR PHASE 1 CONSTRUCTION OR AS DIRECTED BY THE ENGINEER.
2. CLEAR VEGETATION AND DEBRIS WITHIN THE PROPOSED LIMITS OF CONSTRUCTION FOR CHURCH HILL, THOMPSONVILLE ROAD (STA 204+00 TO STA 239+00), MONTOUR DRIVE, MERCER AVENUE AND KELLER AVENUE.

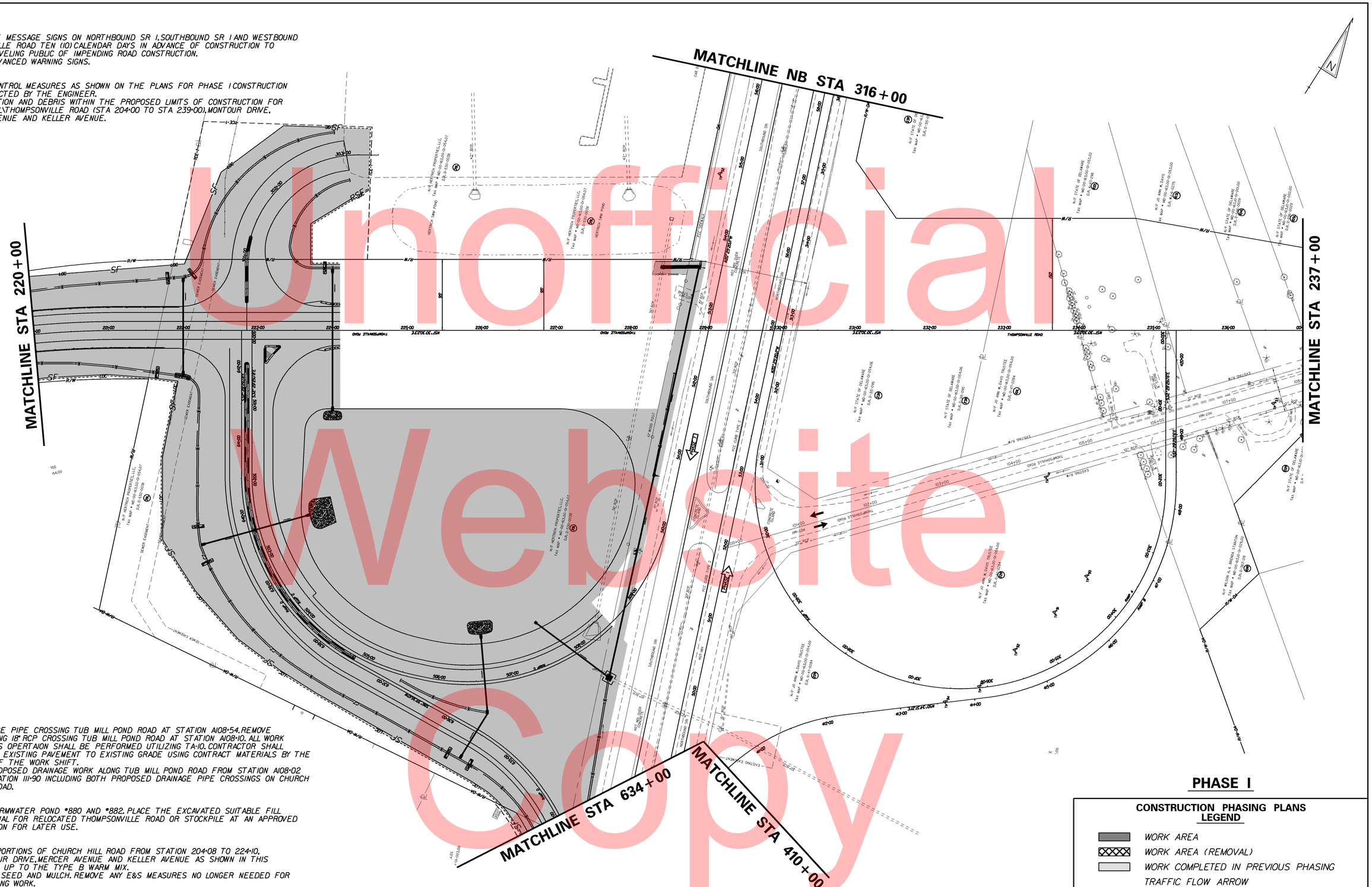

PHASE 1 (CONT.)

STAGE 3:
1. INSTALL DRAINAGE PIPE CROSSING TUB MILL POND ROAD AT STATION A108+54. REMOVE EXISTING 18" RCP CROSSING TUB MILL POND ROAD AT STATION A108+10. ALL WORK IN THIS OPERTAION SHALL BE PERFORMED UTILIZING TA-10. CONTRACTOR SHALL PATCH EXISTING PAVEMENT TO EXISTING GRADE USING CONTRACT MATERIALS BY THE END OF THE WORK SHIFT.
2. CONSTRUCT PROPOSED DRAINAGE WORK ALONG TUB MILL POND ROAD FROM STATION A108+02 TO STATION 111+90 INCLUDING BOTH PROPOSED DRAINAGE PIPE CROSSINGS ON CHURCH HILL ROAD.

STAGE 4:
1. CONSTRUCT STORMWATER POND #880 AND #882. PLACE THE EXCAVATED SUITABLE FILL MATERIAL FOR RELOCATED THOMPSONVILLE ROAD OR STOCKPILE AT AN APPROVED LOCATION FOR LATER USE.

STAGE 5:
1. CONSTRUCTION PORTIONS OF CHURCH HILL ROAD FROM STATION 204+08 TO 224+10, MONTOUR DRIVE, MERCER AVENUE AND KELLER AVENUE AS SHOWN IN THIS PHASE UP TO THE TYPE B WARM MIX.
2. PLACE TOPSOIL, SEED AND MULCH. REMOVE ANY E&S MEASURES NO LONGER NEEDED FOR UPCOMING WORK.

PHASE 1

CONSTRUCTION PHASING PLANS LEGEND

- WORK AREA
- WORK AREA (REMOVAL)
- WORK COMPLETED IN PREVIOUS PHASING
- TRAFFIC FLOW ARROW
- PHASE 2-WAY SR1 TRAFFIC FLOW ARROW

Unofficial Website Copy

DELAWARE DEPARTMENT OF TRANSPORTATION	ADDENDUMS / REVISIONS	SCALE 0 60 120 180 FEET	SR 1, THOMPSONVILLE GRADE SEPARATED INTERSECTION	CONTRACT T200412201	BRIDGE NO. N\A	CONSTRUCTION PHASING, M.O.T., AND EROSION CONTROL PLAN
				COUNTY KENT	DESIGNED BY:	SHEET NO. 108
					CHECKED BY:	TOTAL SHTS. 183

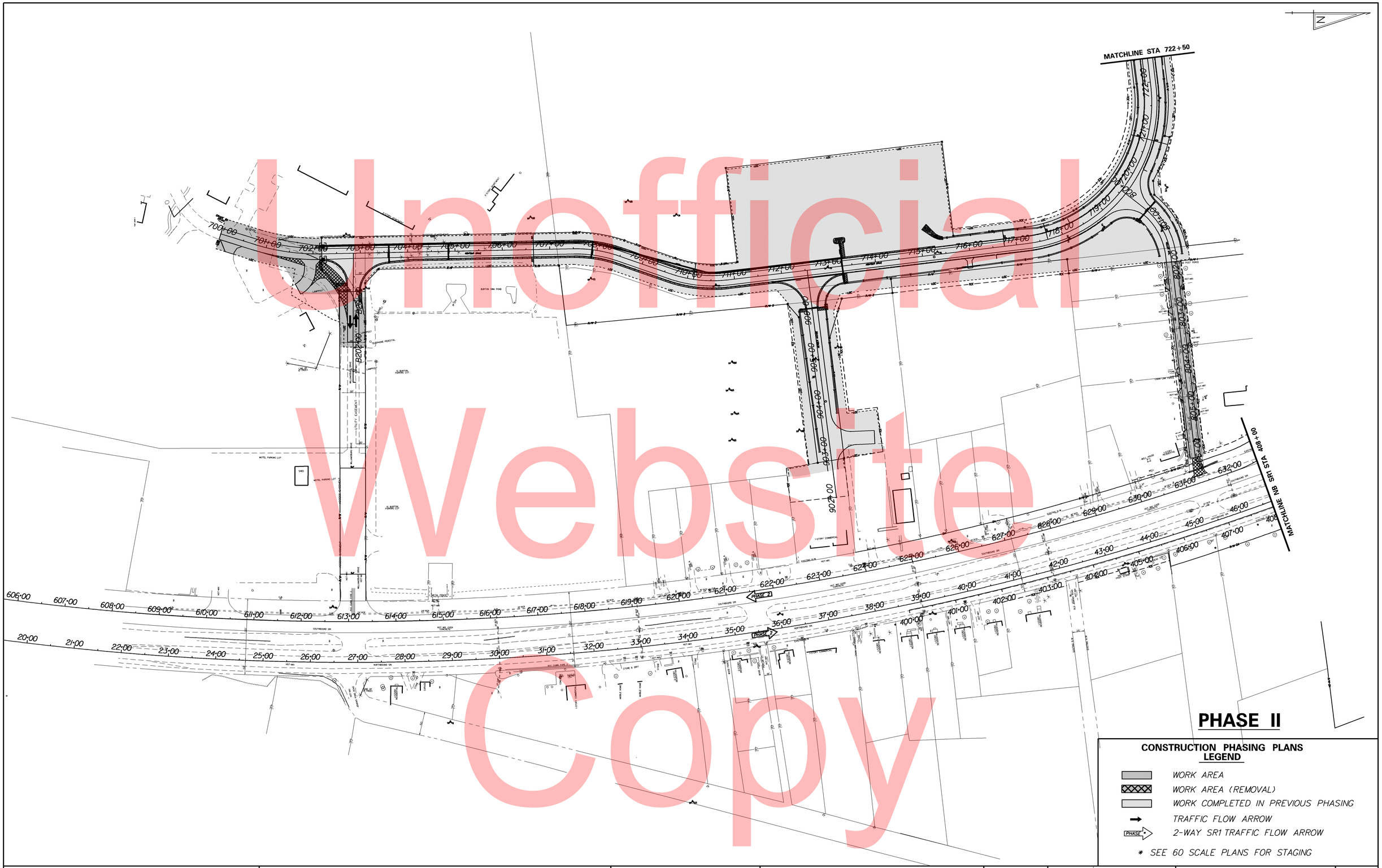

Unofficial Website Copy

DELAWARE DEPARTMENT OF TRANSPORTATION	ADDENDUMS / REVISIONS	SCALE 0 90 180 270 FEET	SR1, THOMPSONVILLE GRADE SEPARATED INTERSECTION	CONTRACT T200412201	BRIDGE NO.	CONSTRUCTION PHASING, M.O.T., AND EROSION CONTROL PLAN	SHEET NO. 109
				COUNTY KENT	DESIGNED BY: MATTHEW VINCENT		TOTAL SHTS. 183
					CHECKED BY:		

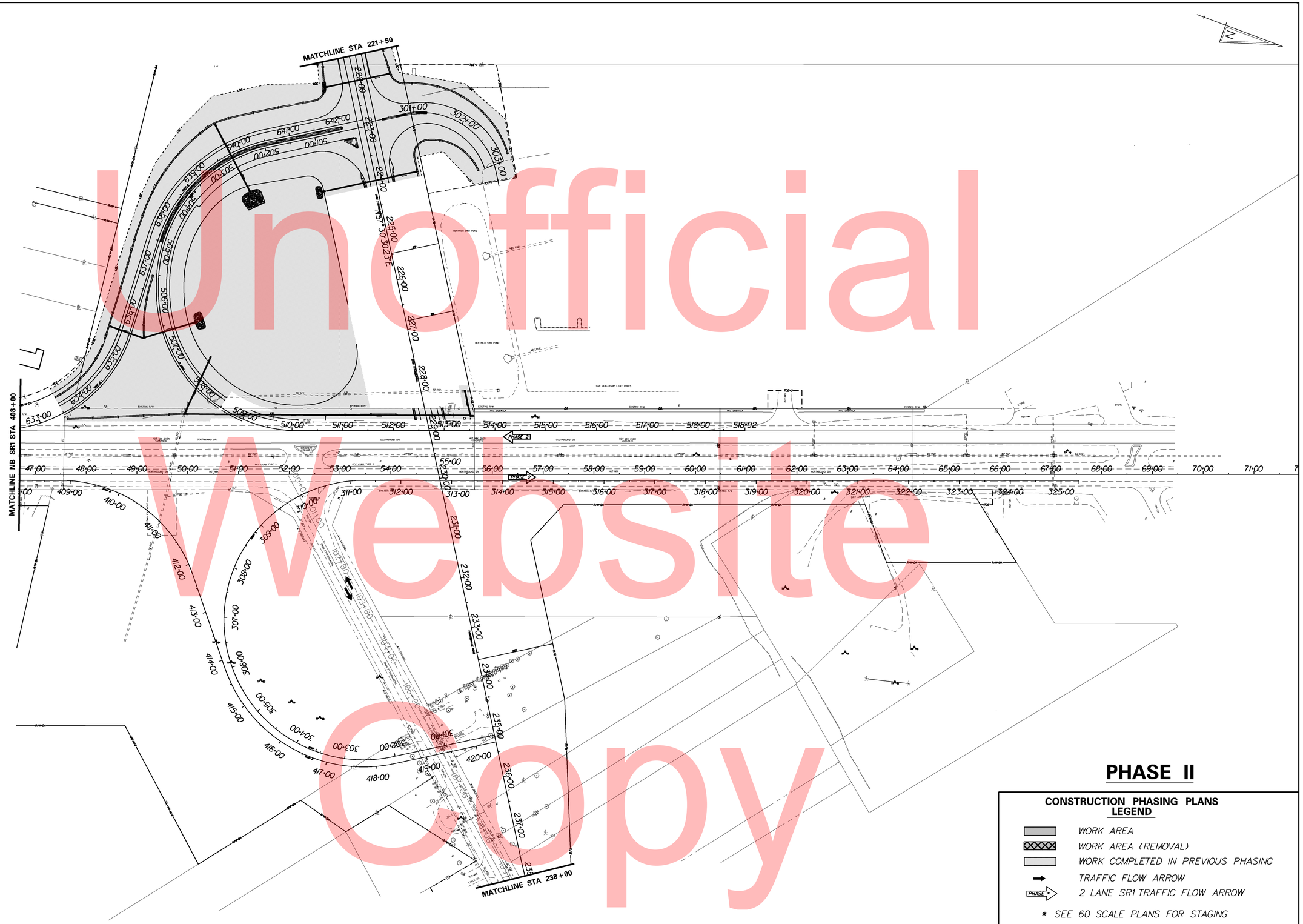

PHASE II

CONSTRUCTION PHASING PLANS LEGEND

- WORK AREA
- WORK AREA (REMOVAL)
- WORK COMPLETED IN PREVIOUS PHASING
- TRAFFIC FLOW ARROW
- PHASE 2 LANE SR1 TRAFFIC FLOW ARROW

* SEE 60 SCALE PLANS FOR STAGING

Unofficial Website Copy

DELAWARE DEPARTMENT OF TRANSPORTATION	ADDENDUMS / REVISIONS	SCALE 0 90 180 270 FEET	SR1, THOMPSONVILLE GRADE SEPARATED INTERSECTION	CONTRACT T200412201	BRIDGE NO.	CONSTRUCTION PHASING, M.O.T., AND EROSION CONTROL PLAN	SHEET NO. 110
				COUNTY KENT	DESIGNED BY:		TOTAL SHTS. 183
					CHECKED BY:		

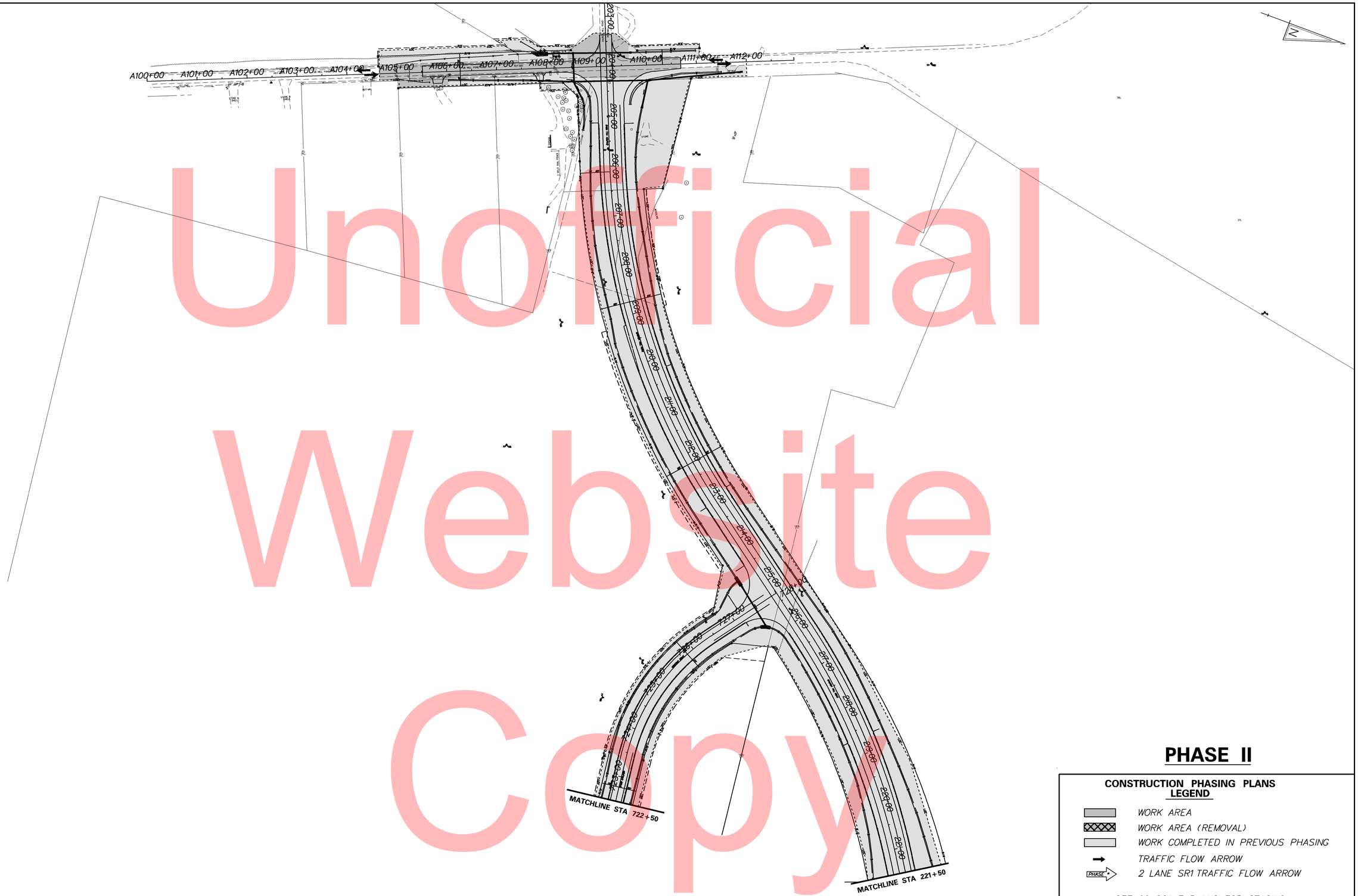

Unofficial Website Copy

PHASE II

CONSTRUCTION PHASING PLANS LEGEND

- WORK AREA
- WORK AREA (REMOVAL)
- WORK COMPLETED IN PREVIOUS PHASING
- TRAFFIC FLOW ARROW
- PHASE 2 LANE SR1 TRAFFIC FLOW ARROW

* SEE 60 SCALE PLANS FOR STAGING

DELAWARE DEPARTMENT OF TRANSPORTATION	ADDENDUMS / REVISIONS	SCALE 0 90 180 270 FEET	SR1, THOMPSONVILLE GRADE SEPARATED INTERSECTION	CONTRACT T200412201	BRIDGE NO.	CONSTRUCTION PHASING, M.O.T., AND EROSION CONTROL PLAN	SHEET NO. 111
				COUNTY KENT	DESIGNED BY: MATTHEW VINCENT		TOTAL SHTS. 183
					CHECKED BY:		