Unofficial Website Copy

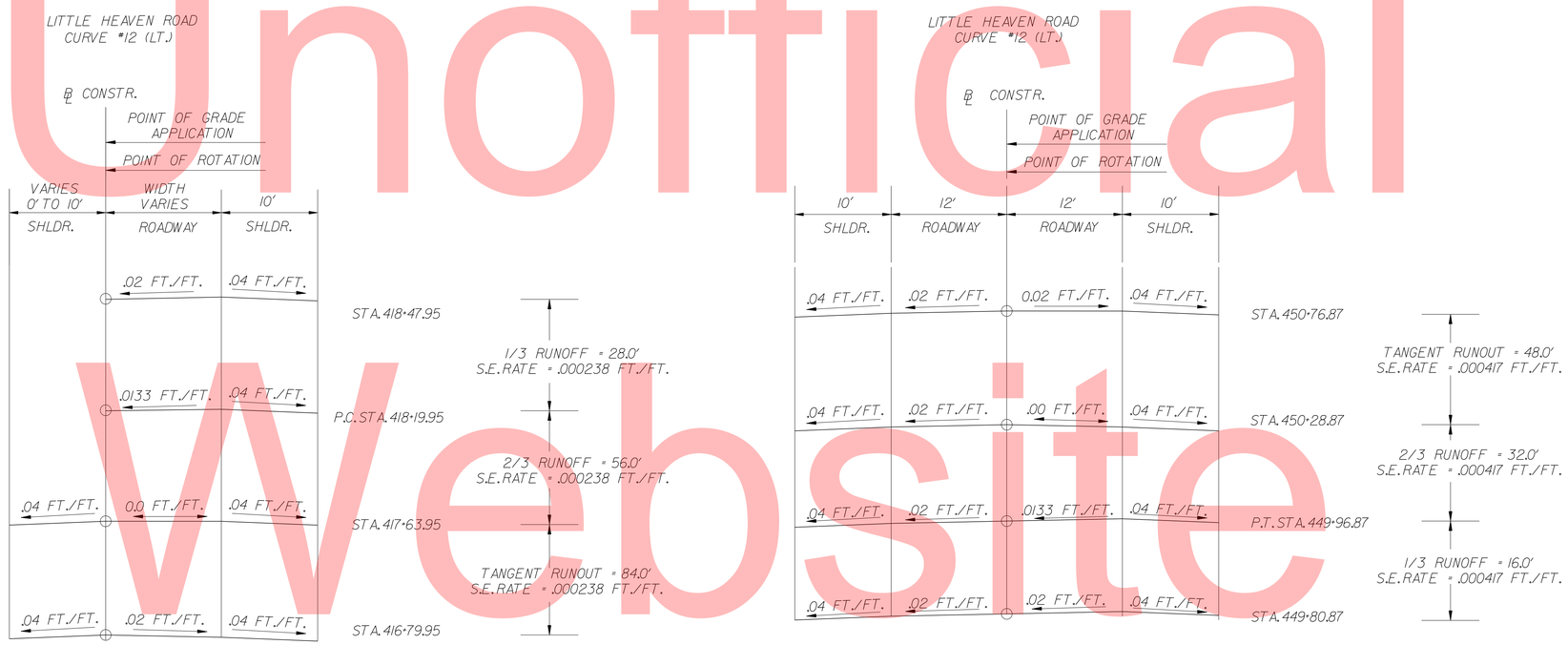

DELAWARE DEPARTMENT OF TRANSPORTATION	ADDENDUMS / REVISIONS	**SR1, LITTLE HEAVEN GRADE SEPARATED INTERSECTION**	CONTRACT T200412202	BRIDGE NO. –	**SUPERELEVATION SHEETS**	SHEET NO. 151
			COUNTY KENT	DESIGNED BY: SFP		TOTAL SHTS. 641
				CHECKED BY: WFC		

1/5/2015 G:\PROJECTS\035I7.00 (DELDOT AGMT 1223 DOTS Open End\035I7.16 SR1 LITTLE HEAVEN FINAL DESIGN\DGN Files\superlv06lh.dgn 02:09:41 PM

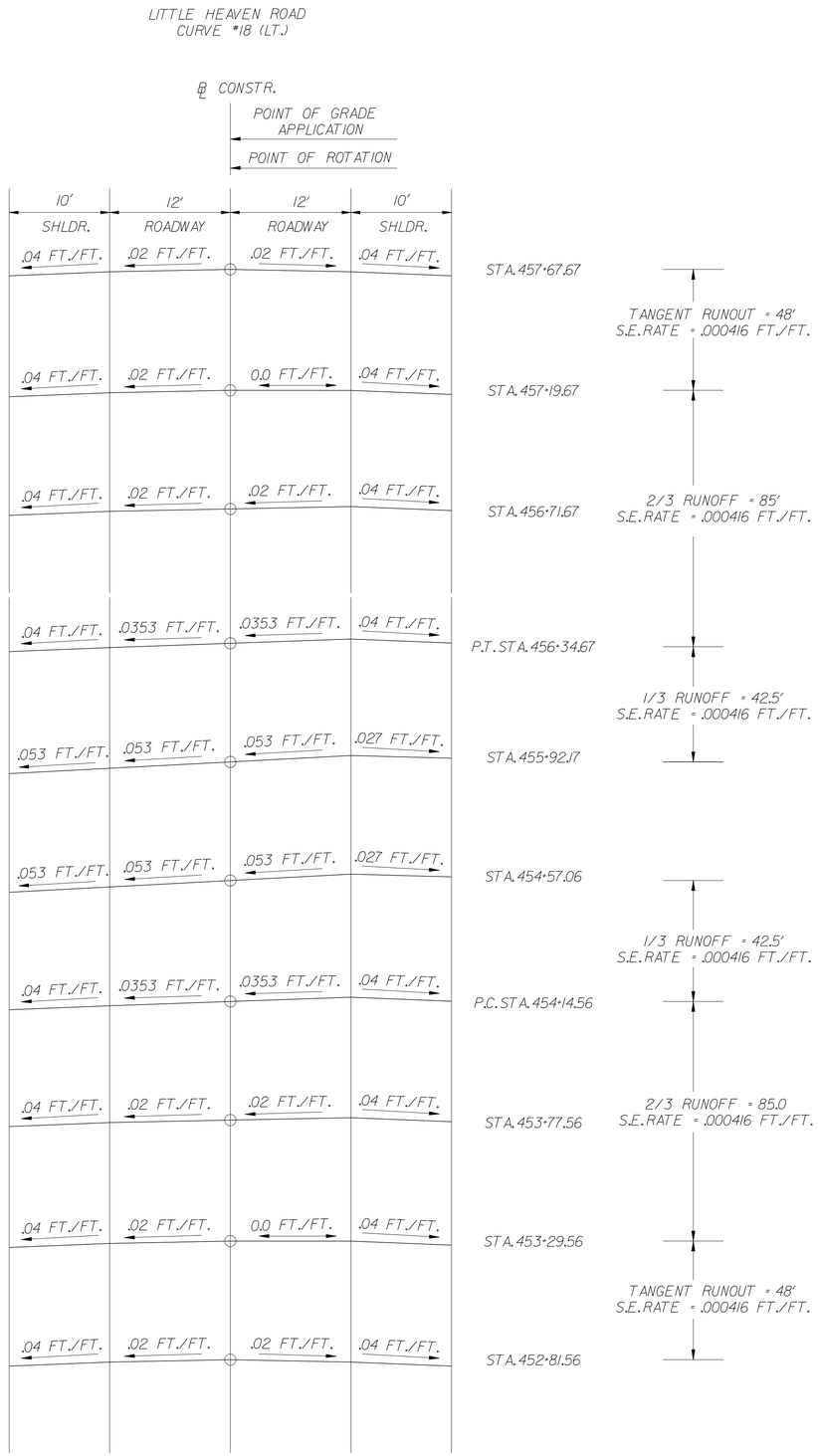

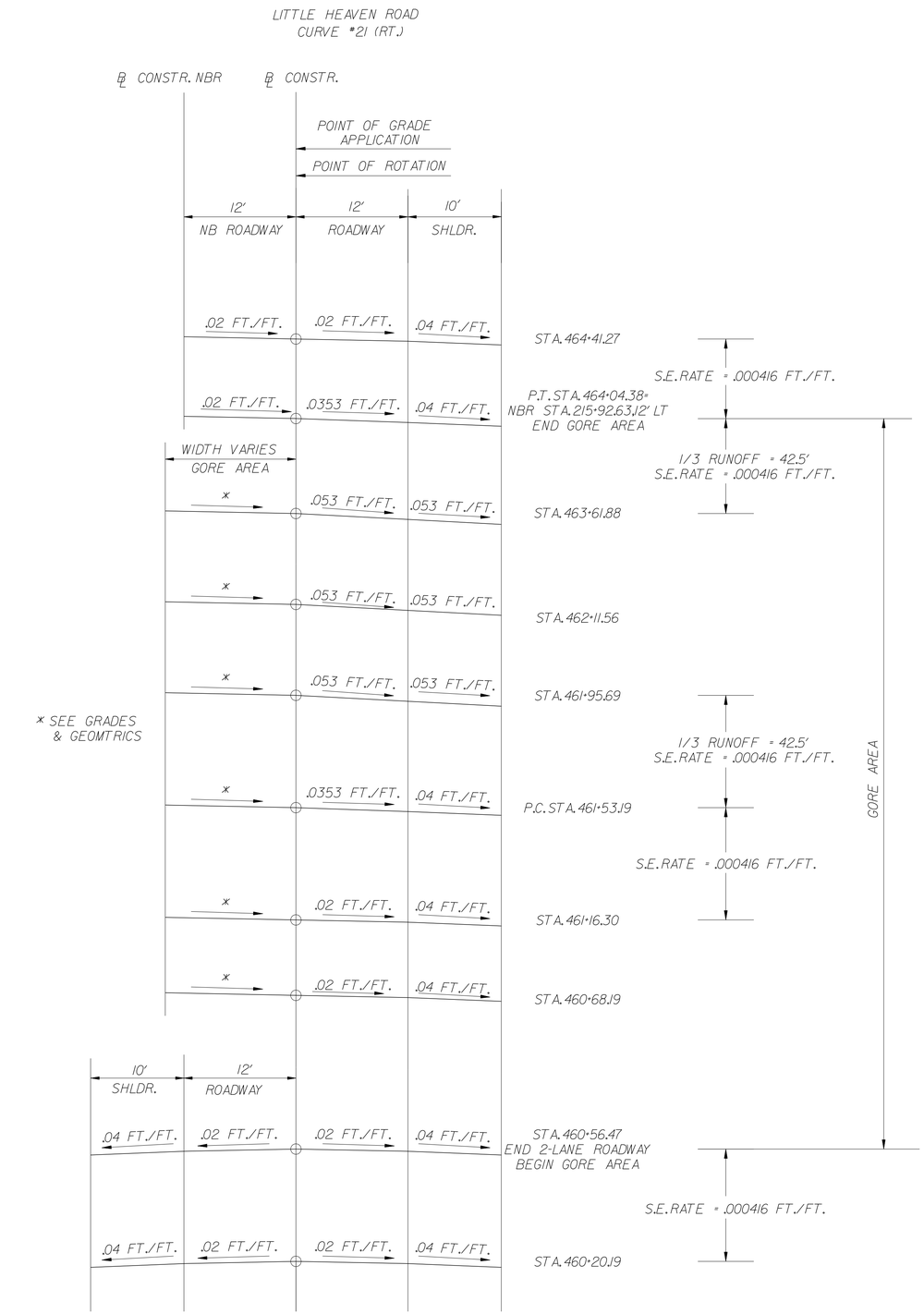

11/25/2014
9:10:05 AM
S:\PROJECTS\035I7.00 (deldot agmt 1223 dots open end)\035I7.16 sr1, little heaven final design\dgn files\superlv07lh.dgn

DELAWARE DEPARTMENT OF TRANSPORTATION

ADDENDUMS / REVISIONS

SR1, LITTLE HEAVEN GRADE SEPARATED INTERSECTION

CONTRACT	BRIDGE NO.	-
T200412202	DESIGNED BY:	SFP
COUNTY	CHECKED BY:	WFC
KENT		

SUPERELEVATION SHEETS

SHEET NO.
152
TOTAL SHTS.
641

MULBERRIE POINT CONNECTOR
CURVE # 19 (LT.)

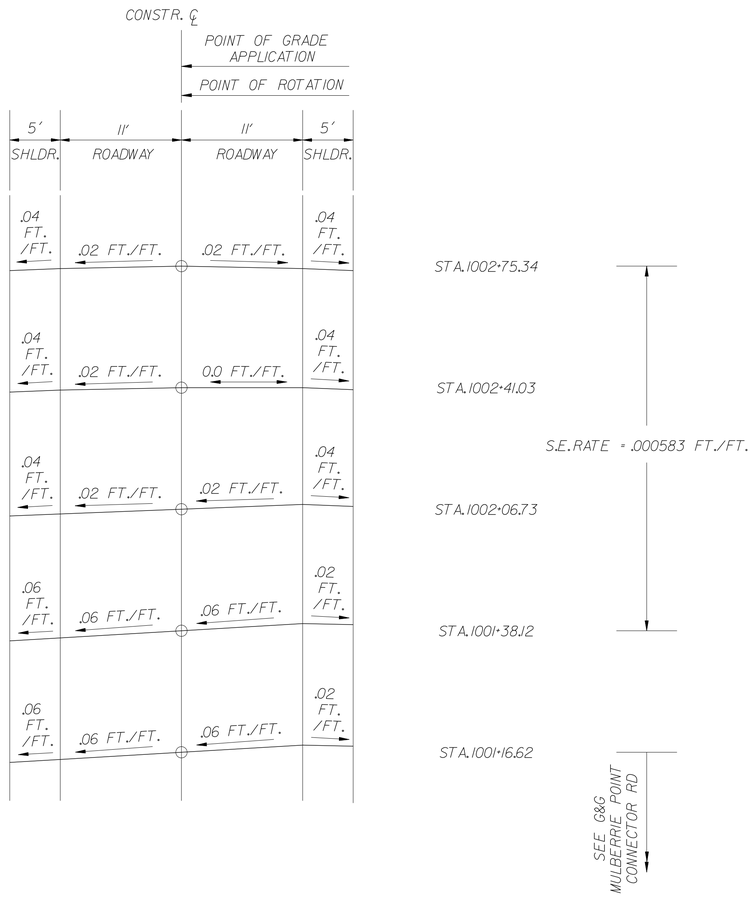

MULBERRIE POINT CONNECTOR
CURVE # 20 (LT.)

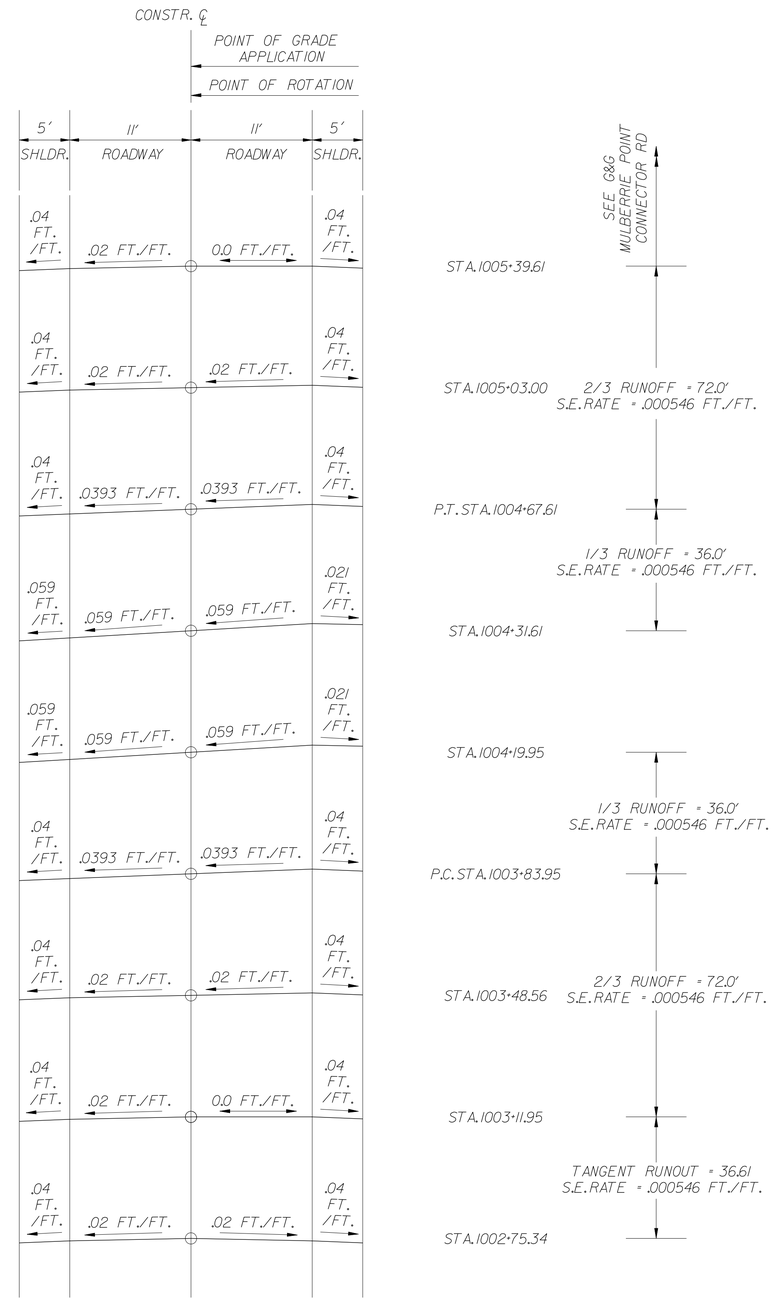

11/25/2014
9:Projects\035I7.00 (deldot agmt 1223 dots open end)\035I7.16 sr1, little heaven final design\dgn files\superlv08lh.dgn
2:46:55 PM

DELAWARE DEPARTMENT OF TRANSPORTATION

ADDENDUMS / REVISIONS

SR1, LITTLE HEAVEN GRADE SEPARATED INTERSECTION

CONTRACT	BRIDGE NO.	-	SUPERELEVATION SHEETS	SHEET NO.
T200412202	DESIGNED BY:	SFP		153
COUNTY				TOTAL SHTS.
KENT	CHECKED BY:	WFC		641

PROPOSED OLD BEACH ROAD
CURVE #2 (RT.)

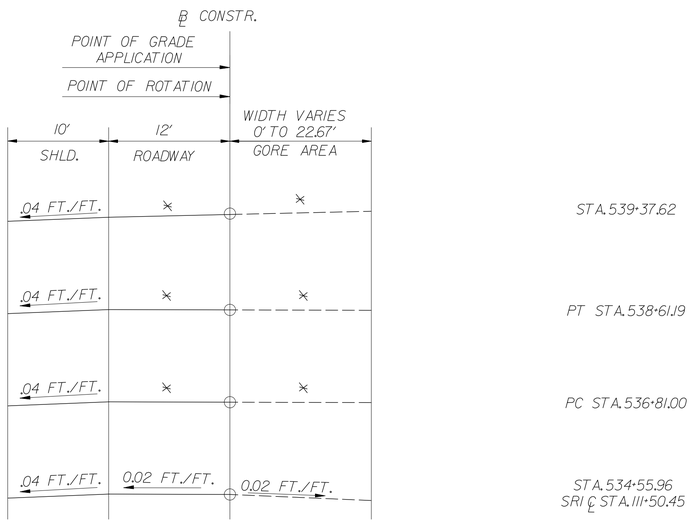

* GORE AREA (STA. 535+02 TO 541+44)
SEE GRADES AND GEOMETRIC SHEETS

PROPOSED OLD BEACH ROAD
CURVE # 29 (RT.)

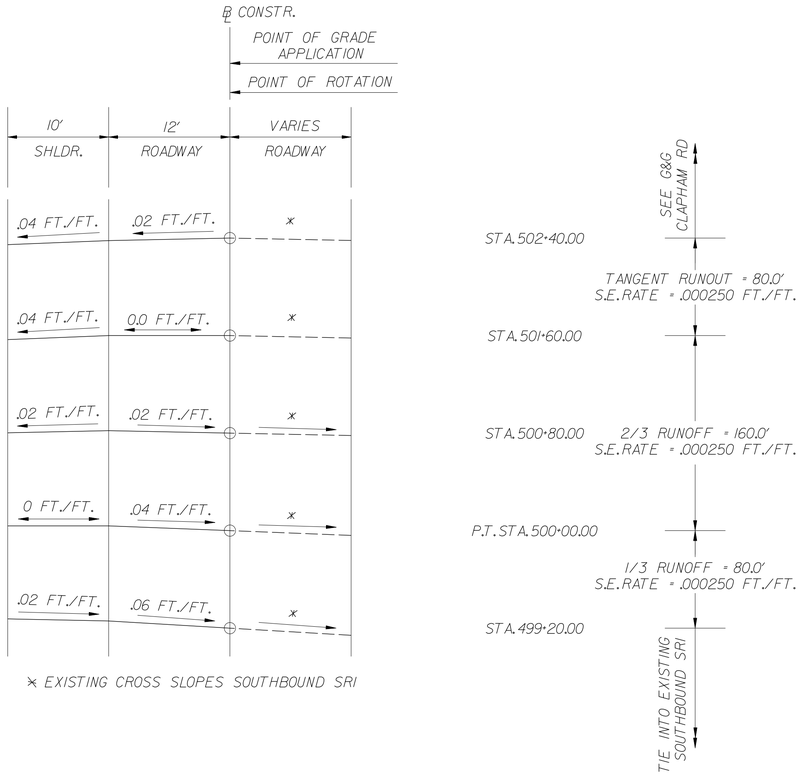

* EXISTING CROSS SLOPES SOUTHBOUND SR1

PROPOSED OLD BEACH ROAD
CURVE #3 (LT.)

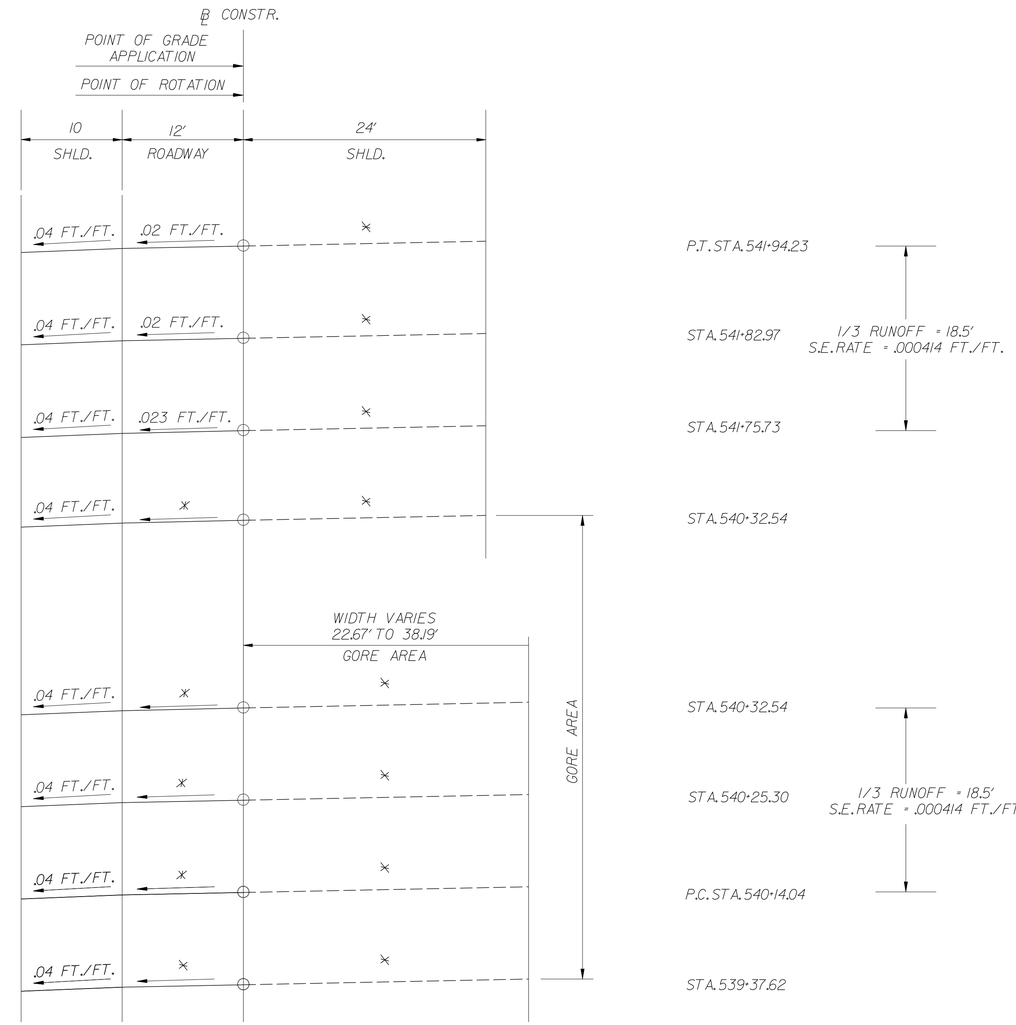

* GORE AREA (STA. 535+02 TO 541+44)
SEE GRADES AND GEOMETRIC SHEETS

DELAWARE DEPARTMENT OF TRANSPORTATION	ADDENDUMS / REVISIONS	SR1, LITTLE HEAVEN GRADE SEPARATED INTERSECTION	CONTRACT T200412202	BRIDGE NO. -	SUPERELEVATION SHEETS
			COUNTY KENT	DESIGNED BY: SFP	SHEET NO. 154
				CHECKED BY: WFC	TOTAL SHTS. 641

11/25/2014
9:20:45 PM
p:\projects\035\7.00 (deldot agmt 1223 dots open end)\035\7.16 sr1, little heaven final design\dgn files\superlv09h.dgn

PROPOSED OLD BEACH ROAD
CURVE #10 (LT.)

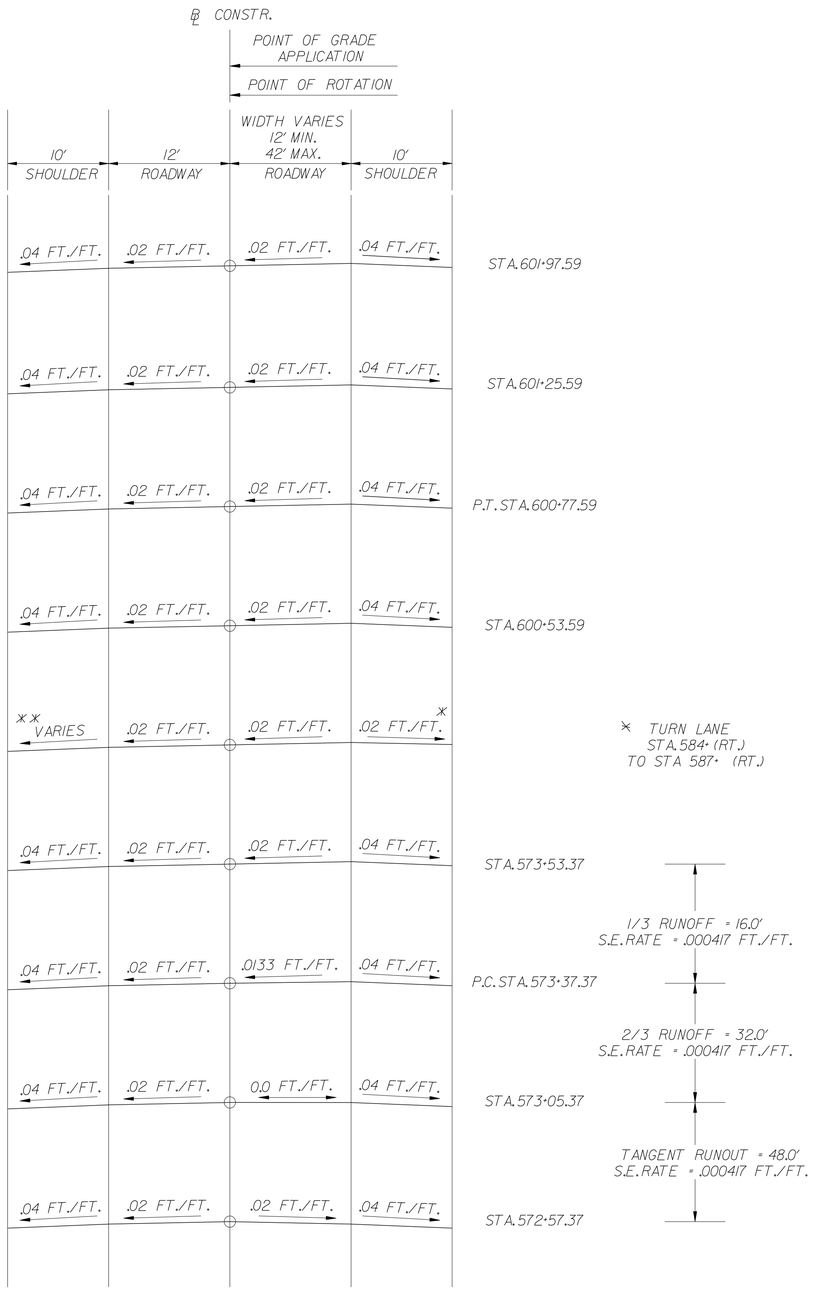

** SLOPE NEEDS TO BE 2% AT CROSSWALK

* TURN LANE STA.584+ (RT.) TO STA 587+ (RT.)

PROPOSED OLD BEACH ROAD
CURVE #15 (LT.)

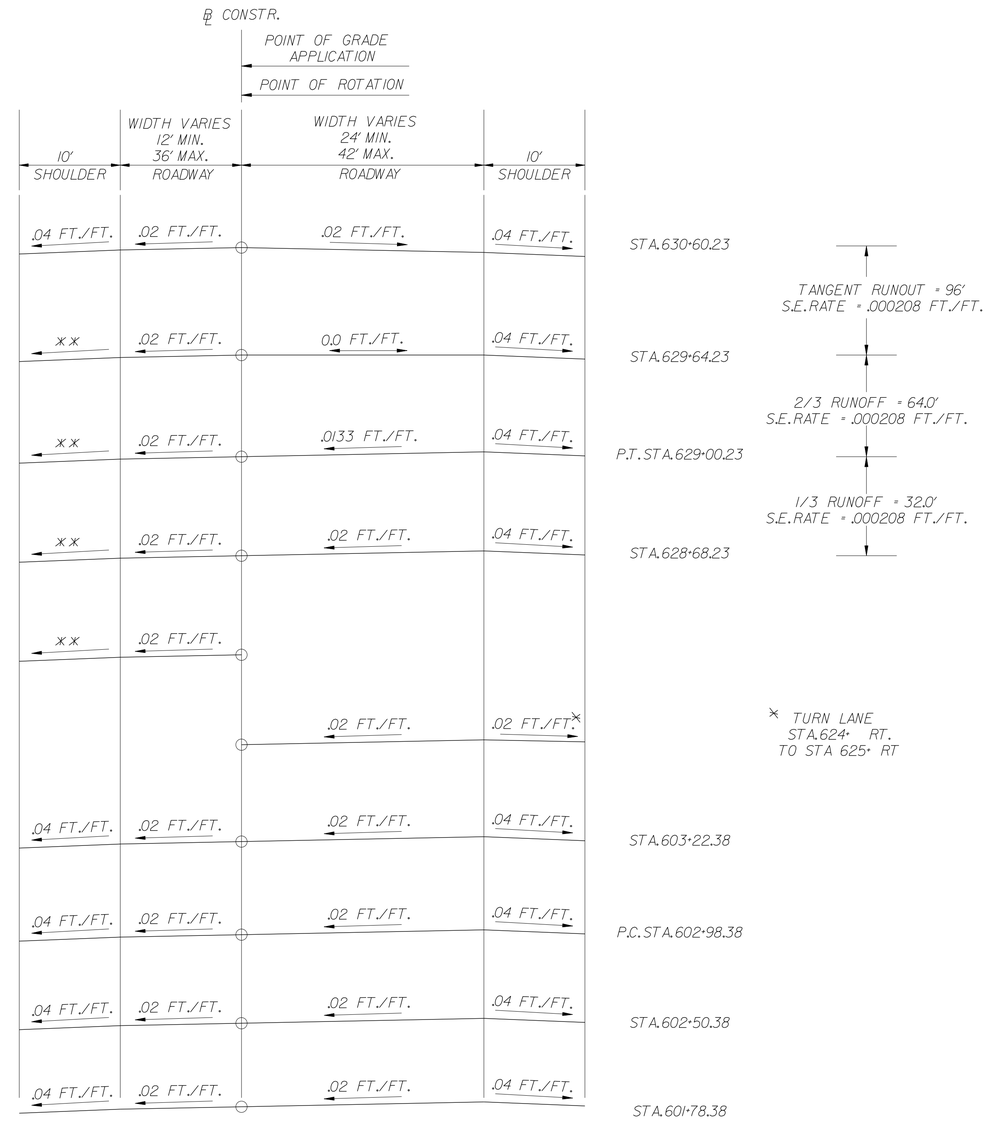

** VARIES 2% TO 4% TURN LANE STA.627+ (LT.) TO STA.629+ (LT.) SEE GRADES & GEOMETRICS

* TURN LANE STA.624+ RT. TO STA 625+ RT

DELAWARE DEPARTMENT OF TRANSPORTATION	ADDENDUMS / REVISIONS	SR1, LITTLE HEAVEN GRADE SEPARATED INTERSECTION	CONTRACT T200412202 · COUNTY KENT · BRIDGE NO. - · DESIGNED BY: SFP · CHECKED BY: WFC · SUPERELEVATION SHEETS · SHEET NO. 155 · TOTAL SHTS. 641

3/10/2015 \\VMODFILE\Snap\PROJECTS\03517.00 (DELDOT AGMT 1223 DOTS Open End)\03517.16 SR1, LITTLE HEAVEN FINAL DESIGN\DGN Files\superlv10n.dgn 10:08:51 AM

BARRATTS CHAPEL ROAD
CURVE #7 (LT.)

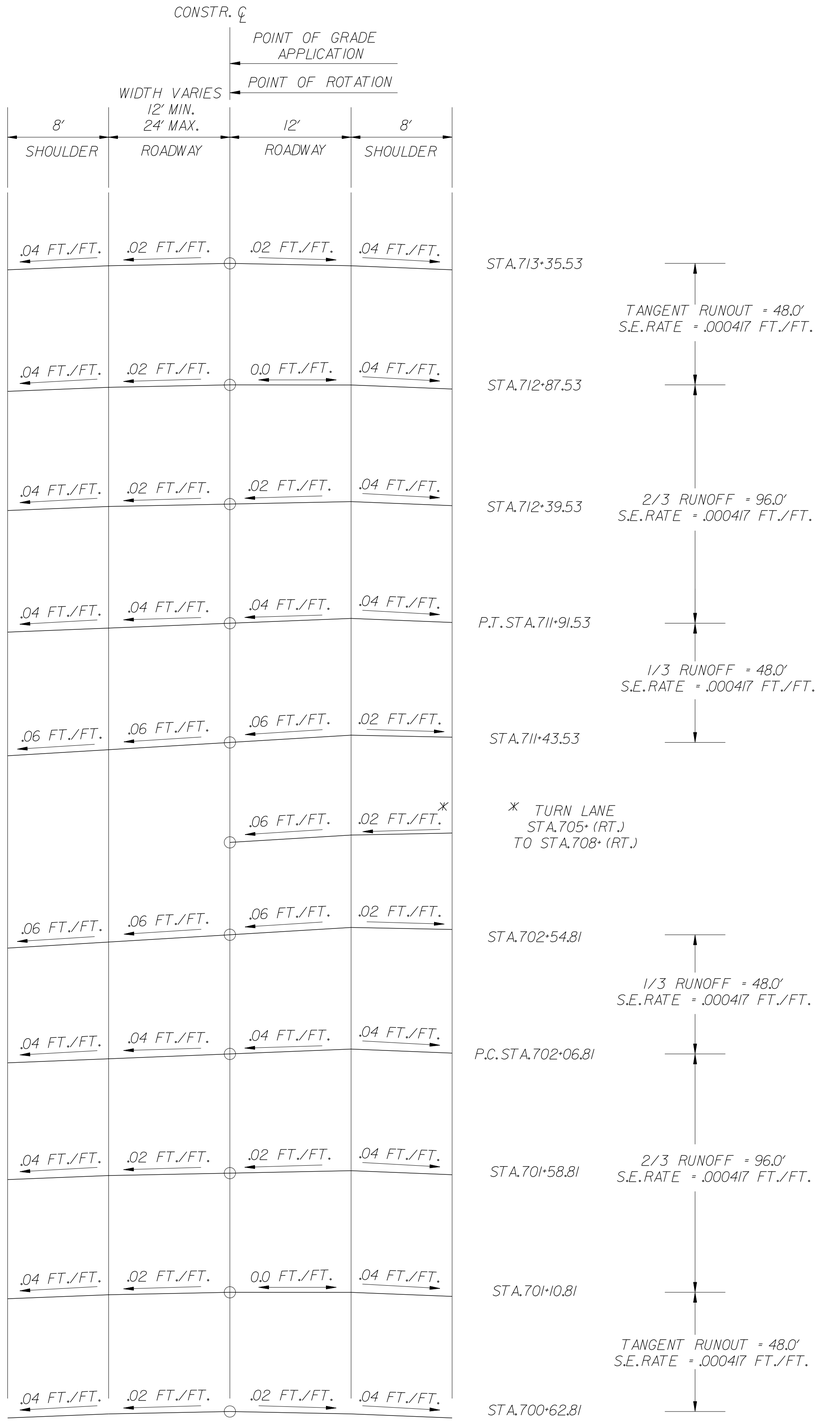

BARRATTS CHAPEL ROAD
CURVE #5 (RT.)

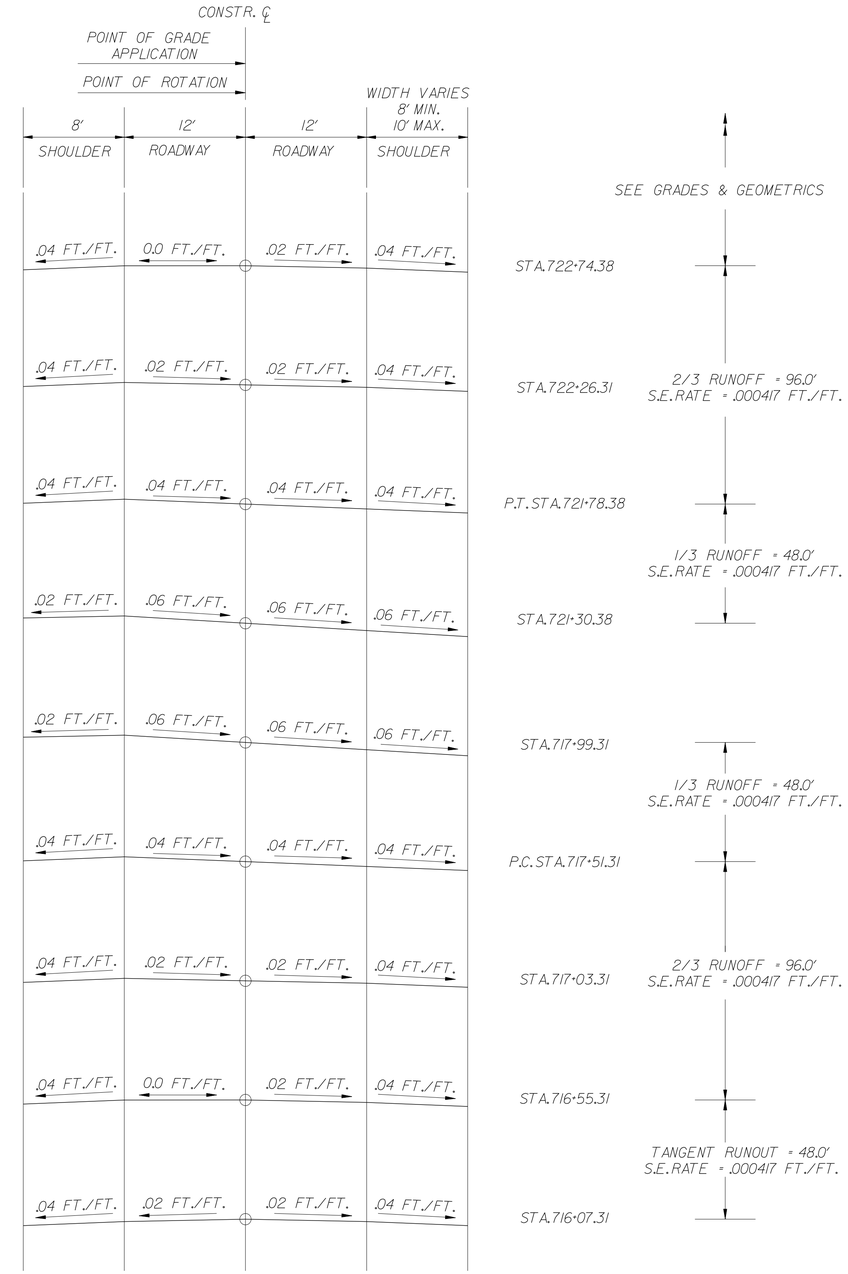

11/25/2014
9:\projects\035\7.00 (deldot agmt 1223 dots open end\035\7.16 sr1_little heaven final design\dgn files\superelvlln.dgn
2:46:51 PM

DELAWARE DEPARTMENT OF TRANSPORTATION	ADDENDUMS / REVISIONS	SR1, LITTLE HEAVEN GRADE SEPARATED INTERSECTION	CONTRACT T200412202	BRIDGE NO. -	SUPERELEVATION SHEETS	SHEET NO. 156
			COUNTY KENT	DESIGNED BY: SFP		TOTAL SHTS. 641
				CHECKED BY: WFC		

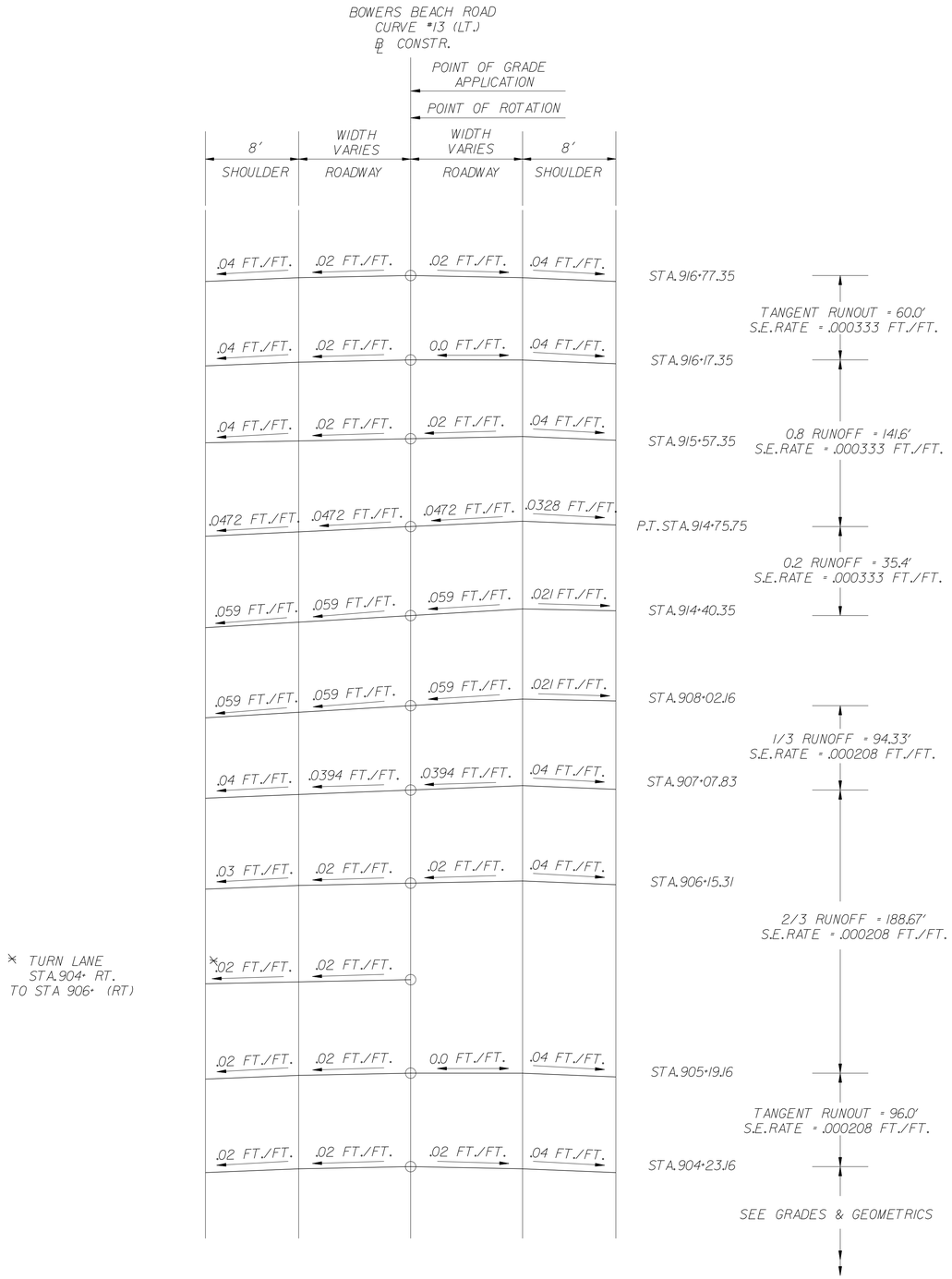

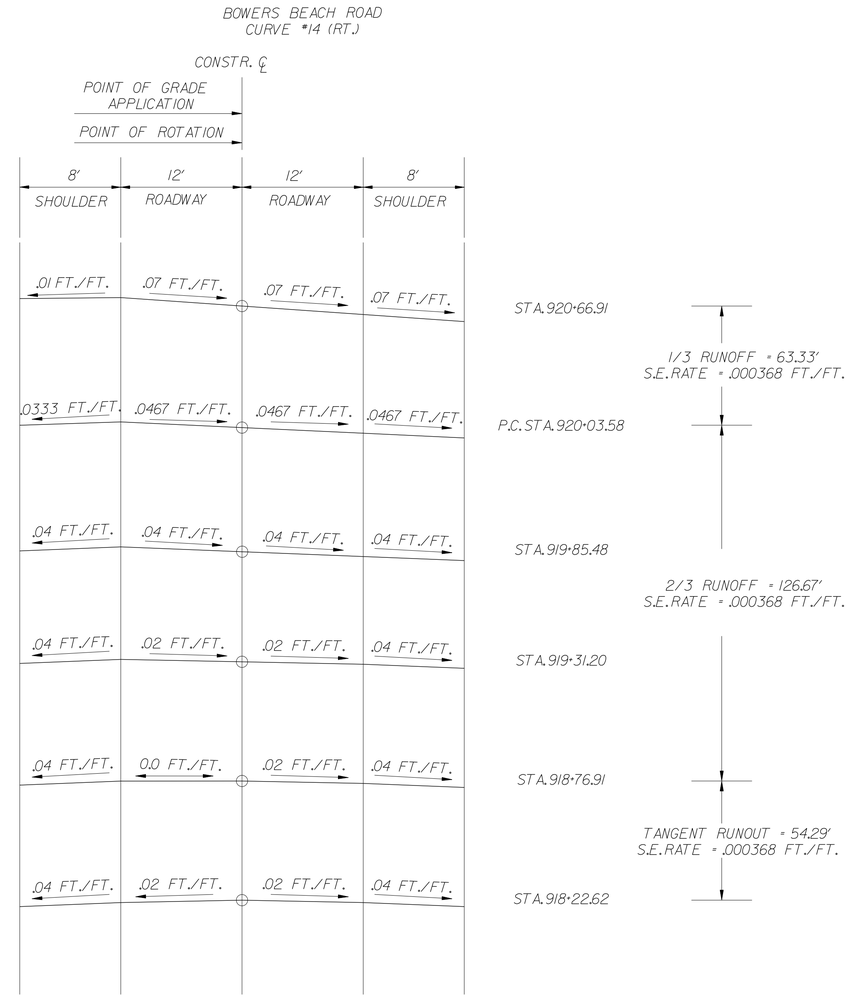

NOTE: MILL AND RESURFACE PAVEMENT @ SE=7% FROM STA. 920+66.91
TO BOWERS BEACH RD/ RD 372 INTERSECTION (STA. 923+48.47)

11/25/2014
9:20:16 a.m.
2:\Projects\03517.00 (deldot agmt 223 dots open end)\03517.16 sr1, little heaven final design\dgn files\supelvl2h.dgn

DELAWARE DEPARTMENT OF TRANSPORTATION	ADDENDUMS / REVISIONS	**SR1, LITTLE HEAVEN GRADE SEPARATED INTERSECTION**	CONTRACT T200412202	BRIDGE NO. –	**SUPERELEVATION SHEETS**	SHEET NO. 157
			COUNTY KENT	DESIGNED BY: SFP		TOTAL SHTS. 641
				CHECKED BY: WFC		

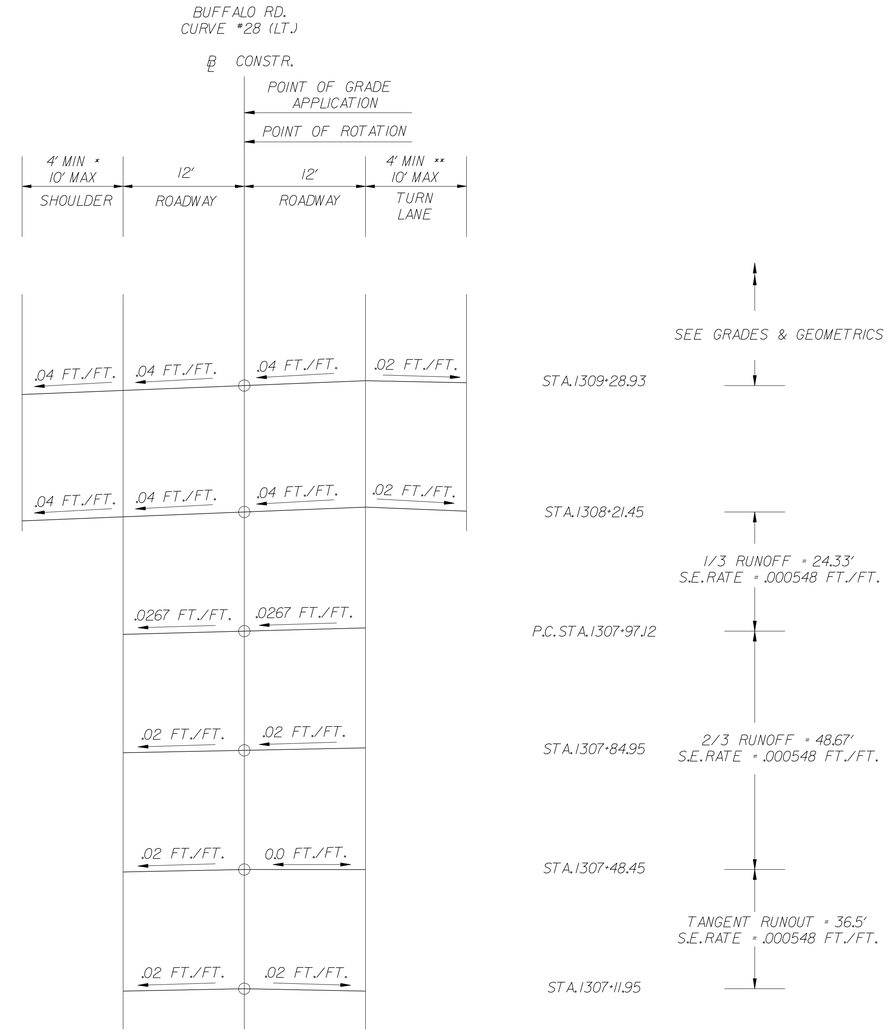

* SHOULDER WIDTH VARIES FROM 4' WIDTH @ 1308+18.59 LT. TO 10' WIDTH @ STA.1308+67.26 LT.

** TURN LANE WIDTH VARIES FROM 4' WIDTH @ 1308+18.59 RT. TO 10' WIDTH @ STA.1308+67.26 RT.

11/25/2014
9:Projects\035I1.00 (deldot agmt 123 dots open end)\035I1.16 sr1, little heaven final design\dgn files\superlv3h.dgn
2:46:03 PM

DELAWARE DEPARTMENT OF TRANSPORTATION	ADDENDUMS / REVISIONS	**SR1, LITTLE HEAVEN GRADE SEPARATED INTERSECTION**	CONTRACT T200412202	BRIDGE NO. -	**SUPERELEVATION SHEETS**	SHEET NO. 158
			COUNTY KENT	DESIGNED BY: SFP		TOTAL SHTS. 641
				CHECKED BY: WFC		

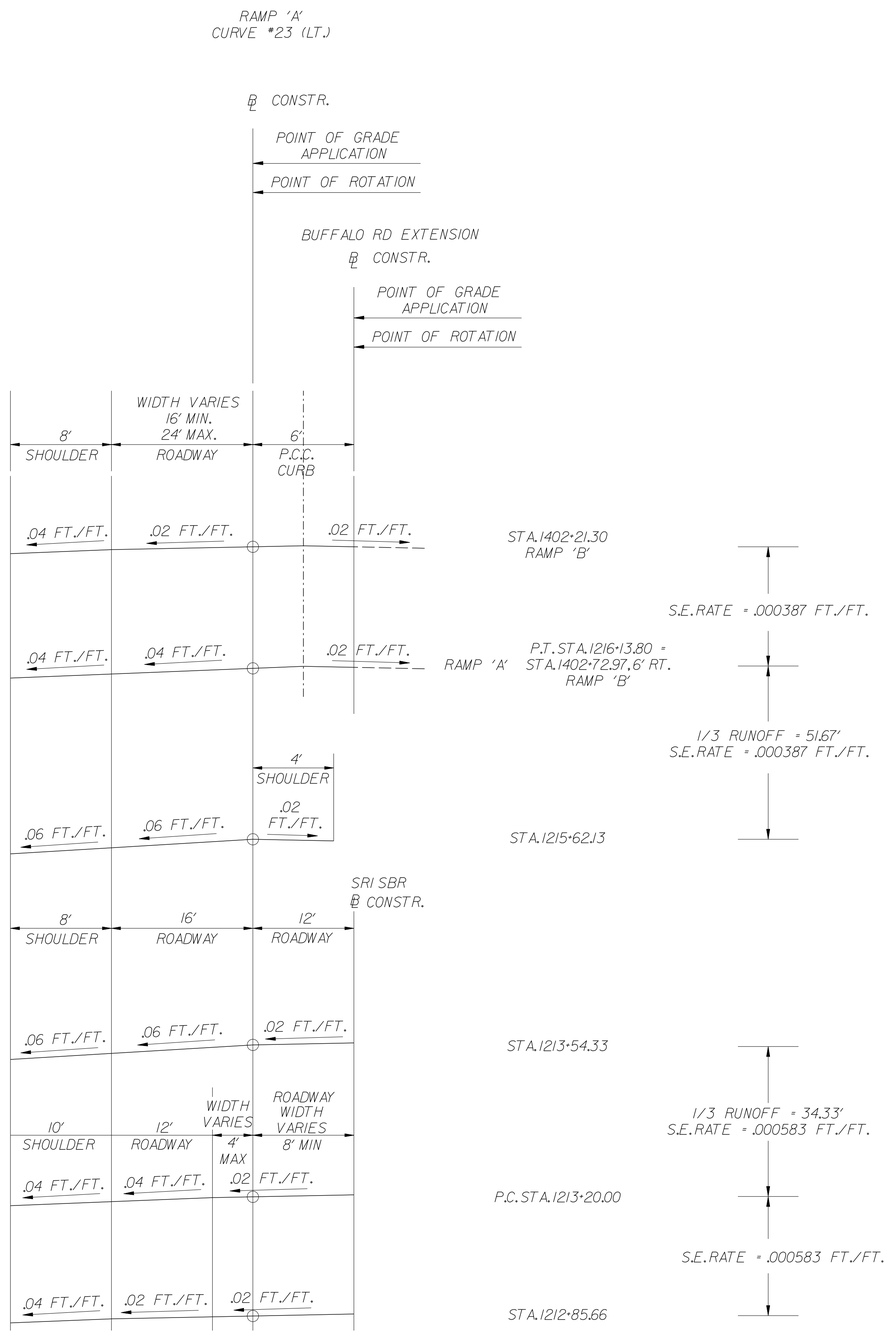

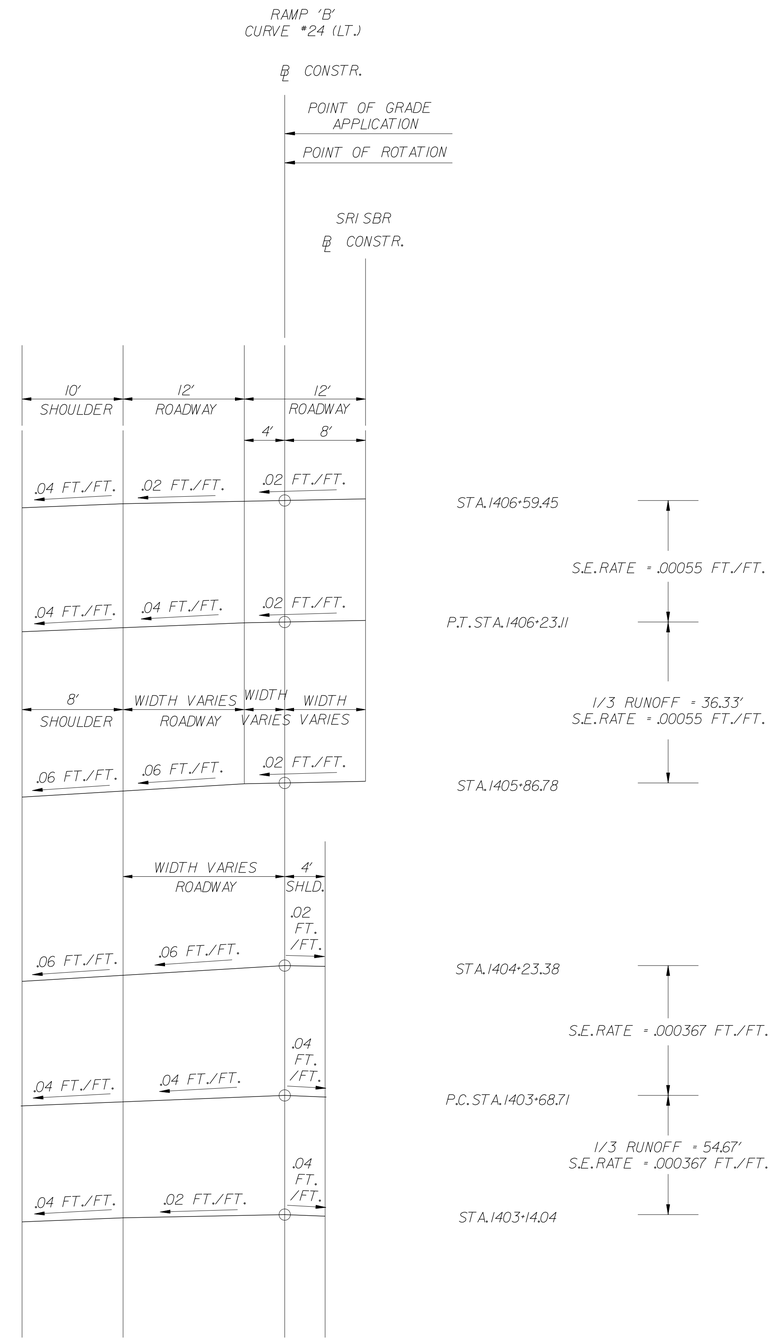

11/25/2014
9:21:03 AM
Projects\03517.00 (deldot agmt 123 dots open end)\03517.16 sr1, little heaven final design\dgn files\superlv14fh.dgn

DELAWARE DEPARTMENT OF TRANSPORTATION

ADDENDUMS / REVISIONS

SR1, LITTLE HEAVEN GRADE SEPARATED INTERSECTION

CONTRACT	BRIDGE NO.	-
T200412202	DESIGNED BY:	SFP
COUNTY		
KENT	CHECKED BY:	WFC

SUPERELEVATION SHEETS

SHEET NO.
159
TOTAL SHTS.
641

PHILIP BARRATT ROAD
CURVE #6 (RT.)

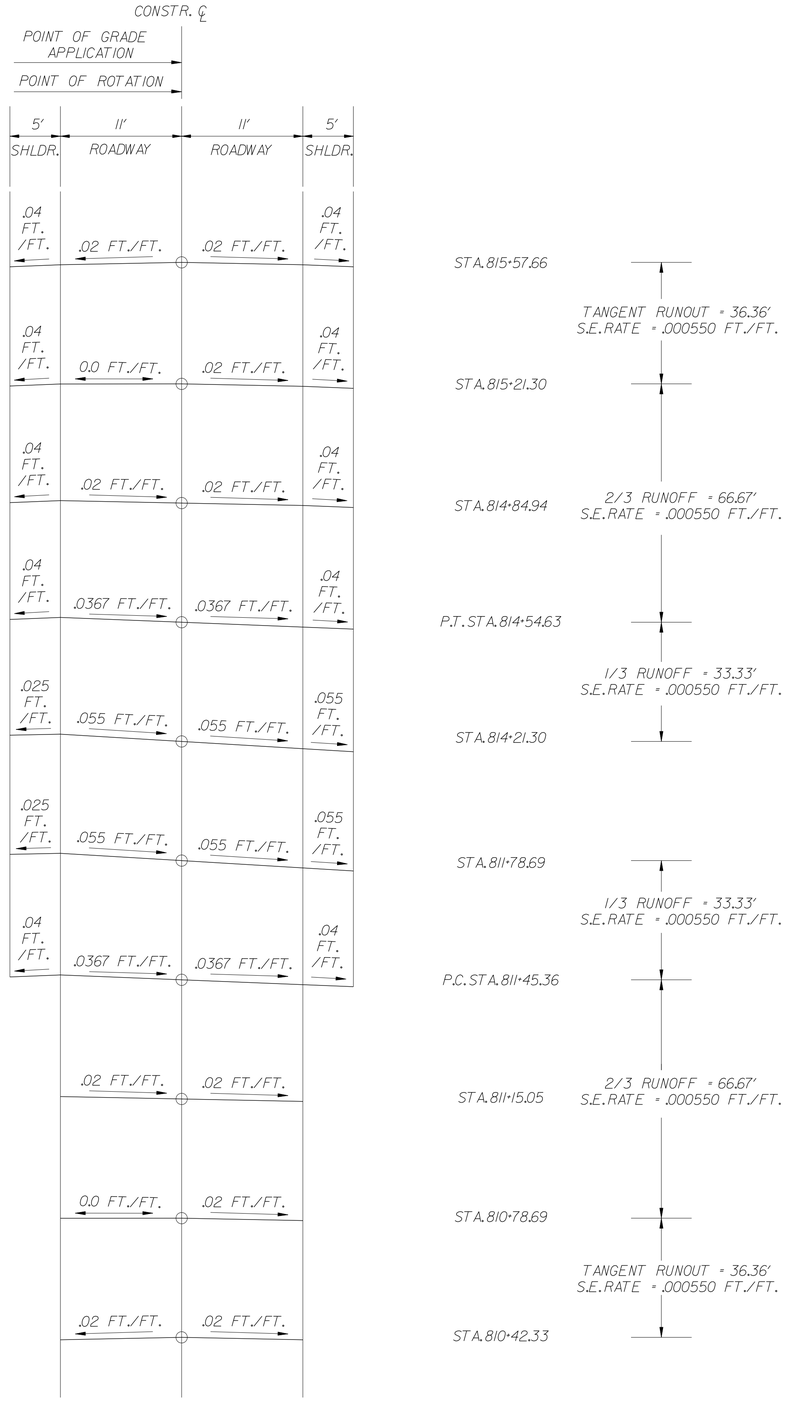

PHILIP BARRATT ROAD
CURVE #30 (LT.)

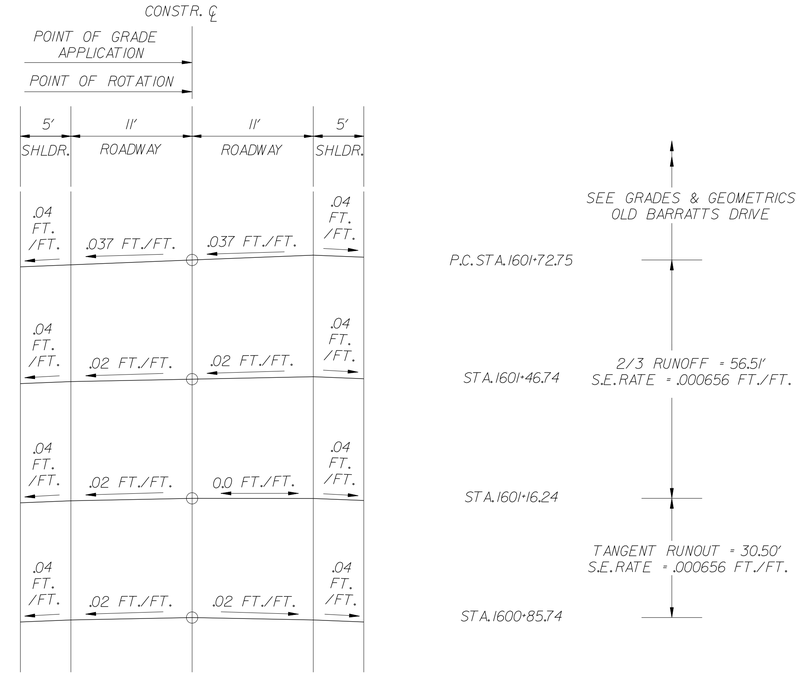

3/10/2015
\\VMSOFTLE\Snap\PROJECTS\0351.00 (DELDOT AGMT 1223 DOTS Open End\0351.16 SR1 LITTLE HEAVEN FINAL DESIGN\DGN Files\superlv5in.dgn
11:08:42 AM

DELAWARE DEPARTMENT OF TRANSPORTATION	ADDENDUMS / REVISIONS	**SR1, LITTLE HEAVEN GRADE SEPARATED INTERSECTION**	CONTRACT T200412202	BRIDGE NO. –	**SUPERELEVATION SHEETS**	SHEET NO. 160
			COUNTY KENT	DESIGNED BY: SFP		TOTAL SHTS. 641
				CHECKED BY: WFC		

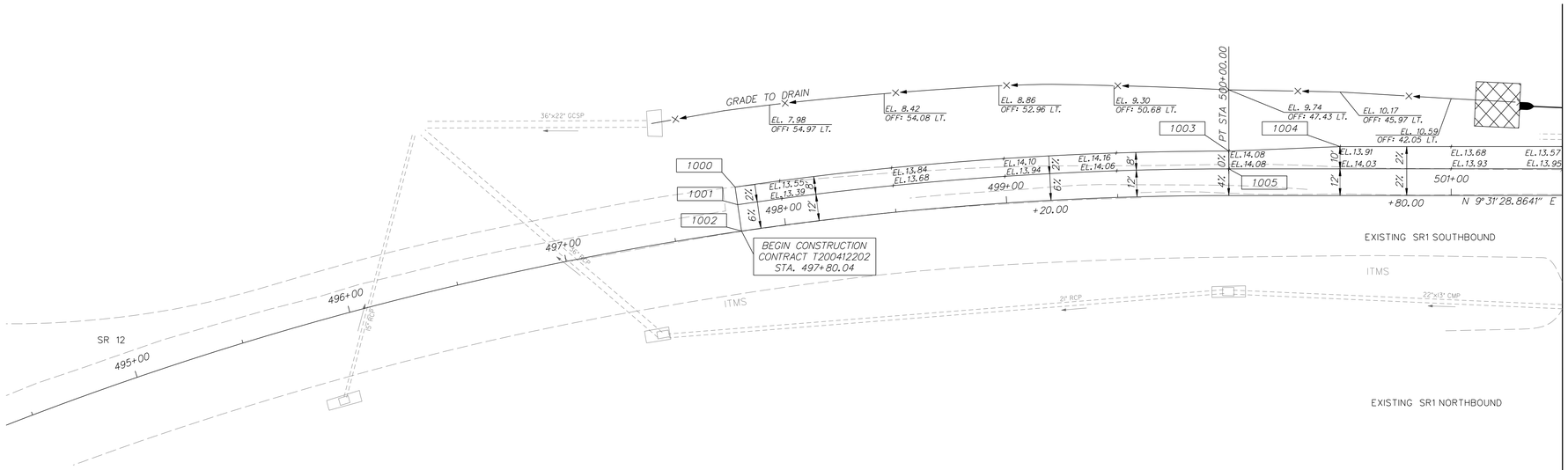

MATCHLINE PROPOSED OLD BEACH ROAD STA. 501+50

COORDINATE LIST

POINT NO.	STATION	OFFSET	NORTHING	EASTING	ELEV.
1000	497+80.04	-20.00	370482.5978	643285.2982	13.00
1001	497+80.04	-12.00	370482.4268	643293.2964	12.84
1002	497+80.04	0.00	370482.1703	643305.2937	12.12
1003	500+00.00	-20.00	370704.2782	643306.1545	13.74
1004	500+50.00	-22.00	370753.9199	643312.4557	13.67
1005	500+00.00	-12.00	370702.9545	643314.0442	13.74

NOTES:

1. OFFSETS SHOWN IN THE GEOMETRY TABLES WITH A MINUS SIGN ARE TO THE LEFT OF THE CONSTRUCTION & R/W BASELINE.
2. UNLESS OTHERWISE NOTED, POINT GEOMETRY ADJACENT TO CURB AND CURB AND GUTTER IS GIVEN TO THE EDGE OF PAVEMENT.
3. RADII ARE GIVEN TO EDGE OF PAVEMENT.
4. UNLESS OTHERWISE NOTED, EDGE OF PAVEMENT ELEVATIONS AT CURB RETURNS ARE GIVEN AT 10 FOOT INTERVALS.
5. ALL WORK REQUIRED FOR CALCULATING AND STAKING OF GRADES SHALL BE PAID FOR UNDER ITEM 763501-CONSTRUCTION ENGINEERING.
6. PROPOSED CURBS OR PAVEMENT THAT TIE INTO EXISTING PAVEMENT SHALL MATCH ELEVATIONS.

11/25/2014
9:50:05 PM
S:\Projects\03517.00 (delaot agmt 1223 dots open end)\03517.16 sr1, little heaven final design\dgn files\GG01n.dgn

DELAWARE DEPARTMENT OF TRANSPORTATION

ADDENDUMS / REVISIONS

SCALE 0 30 60 90 FEET

SR1, LITTLE HEAVEN GRADE SEPARATED INTERSECTION

CONTRACT	BRIDGE NO.	-
T200412202	DESIGNED BY:	SFP
COUNTY		
KENT	CHECKED BY:	WFC

GRADES AND GEOMETRICS

SHEET NO.
161
TOTAL SHTS.
641

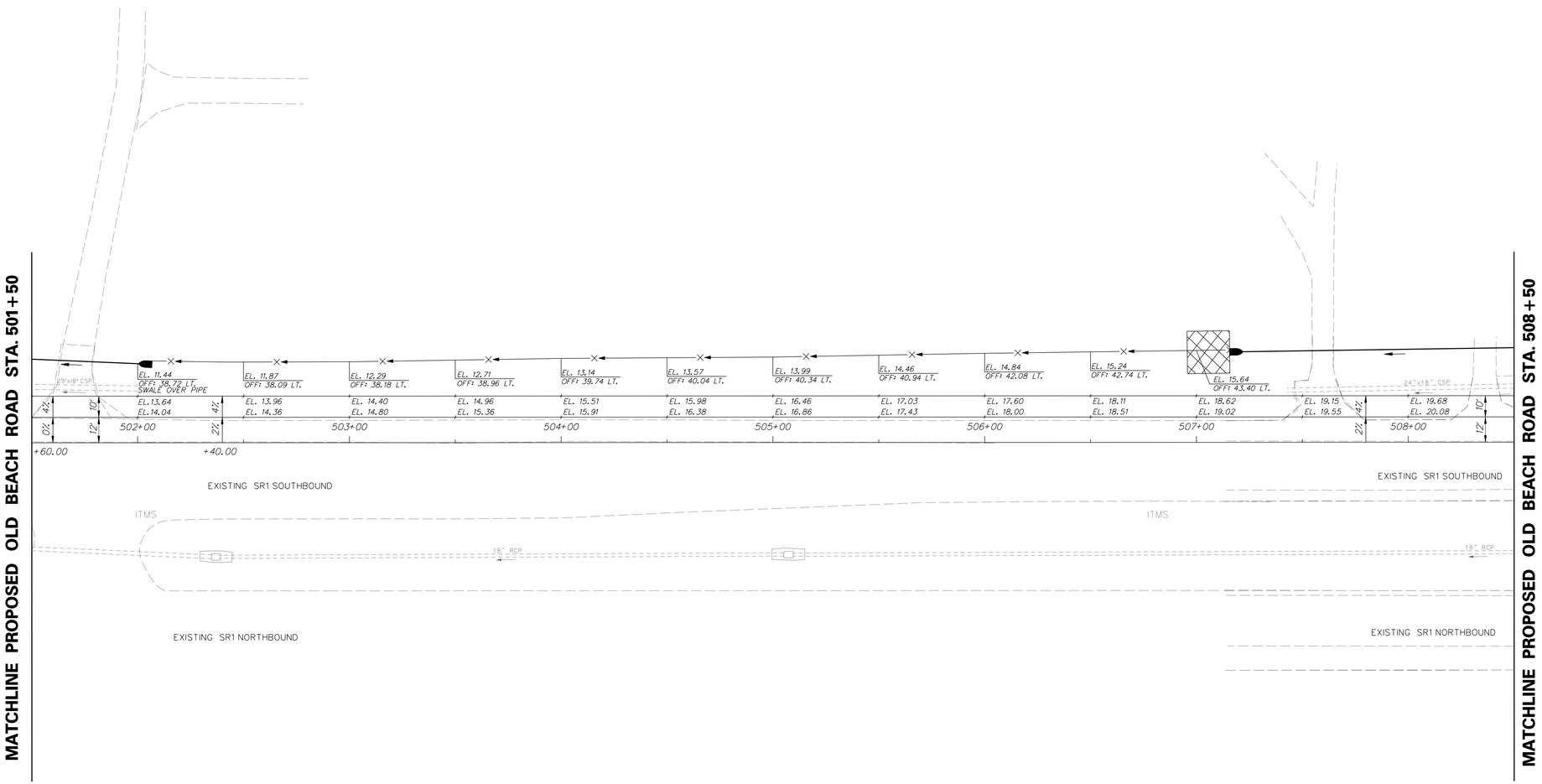

NOTES:

1. OFFSETS SHOWN IN THE GEOMETRY TABLES WITH A MINUS SIGN ARE TO THE LEFT OF THE CONSTRUCTION & R/W BASELINE.
2. UNLESS OTHERWISE NOTED, POINT GEOMETRY ADJACENT TO CURB AND CURB AND GUTTER IS GIVEN TO THE EDGE OF PAVEMENT.
3. RADII ARE GIVEN TO EDGE OF PAVEMENT.
4. UNLESS OTHERWISE NOTED, EDGE OF PAVEMENT ELEVATIONS AT CURB RETURNS ARE GIVEN AT 10 FOOT INTERVALS.
5. ALL WORK REQUIRED FOR CALCULATING AND STAKING OF GRADES SHALL BE PAID FOR UNDER ITEM 763501-CONSTRUCTION ENGINEERING.
6. PROPOSED CURBS OR PAVEMENT THAT TIE INTO EXISTING PAVEMENT SHALL MATCH ELEVATIONS.

11/25/2014
9:26:26 AM
S:\Projects\03517.00 (deldot agmt 1223 dots open end)\03517.16 sr1, little heaven final design\dgn files\G002h.dgn

DELAWARE DEPARTMENT OF TRANSPORTATION	ADDENDUMS / REVISIONS	SCALE 0 30 60 90 FEET	SR1, LITTLE HEAVEN GRADE SEPARATED INTERSECTION	CONTRACT T200412202	BRIDGE NO. -	GRADES AND GEOMETRICS	SHEET NO. 162
				COUNTY KENT	DESIGNED BY: SFP		TOTAL SHTS. 641
					CHECKED BY: WFC		

NOTES:

1. OFFSETS SHOWN IN THE GEOMETRY TABLES WITH A MINUS SIGN ARE TO THE LEFT OF THE CONSTRUCTION & R/W BASELINE.
2. UNLESS OTHERWISE NOTED, POINT GEOMETRY ADJACENT TO CURB AND CURB AND GUTTER IS GIVEN TO THE EDGE OF PAVEMENT.
3. RADII ARE GIVEN TO EDGE OF PAVEMENT.
4. UNLESS OTHERWISE NOTED, EDGE OF PAVEMENT ELEVATIONS AT CURB RETURNS ARE GIVEN AT 10 FOOT INTERVALS.
5. ALL WORK REQUIRED FOR CALCULATING AND STAKING OF GRADES SHALL BE PAID FOR UNDER ITEM 763501-CONSTRUCTION ENGINEERING.
6. PROPOSED CURBS OR PAVEMENT THAT TIE INTO EXISTING PAVEMENT SHALL MATCH ELEVATIONS.

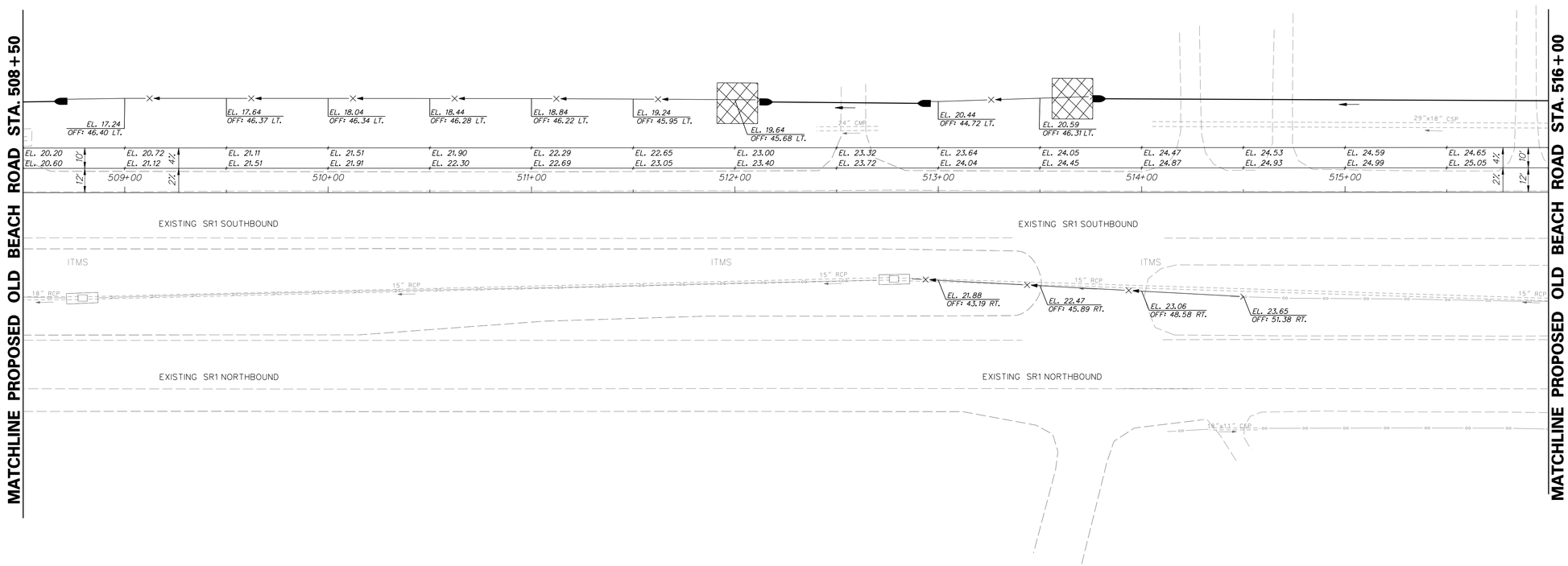

DELAWARE DEPARTMENT OF TRANSPORTATION	ADDENDUMS / REVISIONS	SCALE 0 30 60 90 FEET	SR1, LITTLE HEAVEN GRADE SEPARATED INTERSECTION	CONTRACT T200412202	BRIDGE NO. –	GRADES AND GEOMETRICS	SHEET NO. 163
				COUNTY KENT	DESIGNED BY: SFP		TOTAL SHTS. 641
					CHECKED BY: WFC		

11/25/2014
9:19:03 am
C:\pwworking\dot\d0357\d0357j06 sr1,little heaven final design\dgn files\GG03h.dgn
3:38:22 PM

NOTES:

1. OFFSETS SHOWN IN THE GEOMETRY TABLES WITH A MINUS SIGN ARE TO THE LEFT OF THE CONSTRUCTION & R/W BASELINE.
2. UNLESS OTHERWISE NOTED, POINT GEOMETRY ADJACENT TO CURB AND CURB AND GUTTER IS GIVEN TO THE EDGE OF PAVEMENT.
3. RADII ARE GIVEN TO EDGE OF PAVEMENT.
4. UNLESS OTHERWISE NOTED, EDGE OF PAVEMENT ELEVATIONS AT CURB RETURNS ARE GIVEN AT 10 FOOT INTERVALS.
5. ALL WORK REQUIRED FOR CALCULATING AND STAKING OF GRADES SHALL BE PAID FOR UNDER ITEM 763501-CONSTRUCTION ENGINEERING.
6. PROPOSED CURBS OR PAVEMENT THAT TIE INTO EXISTING PAVEMENT SHALL MATCH ELEVATIONS.

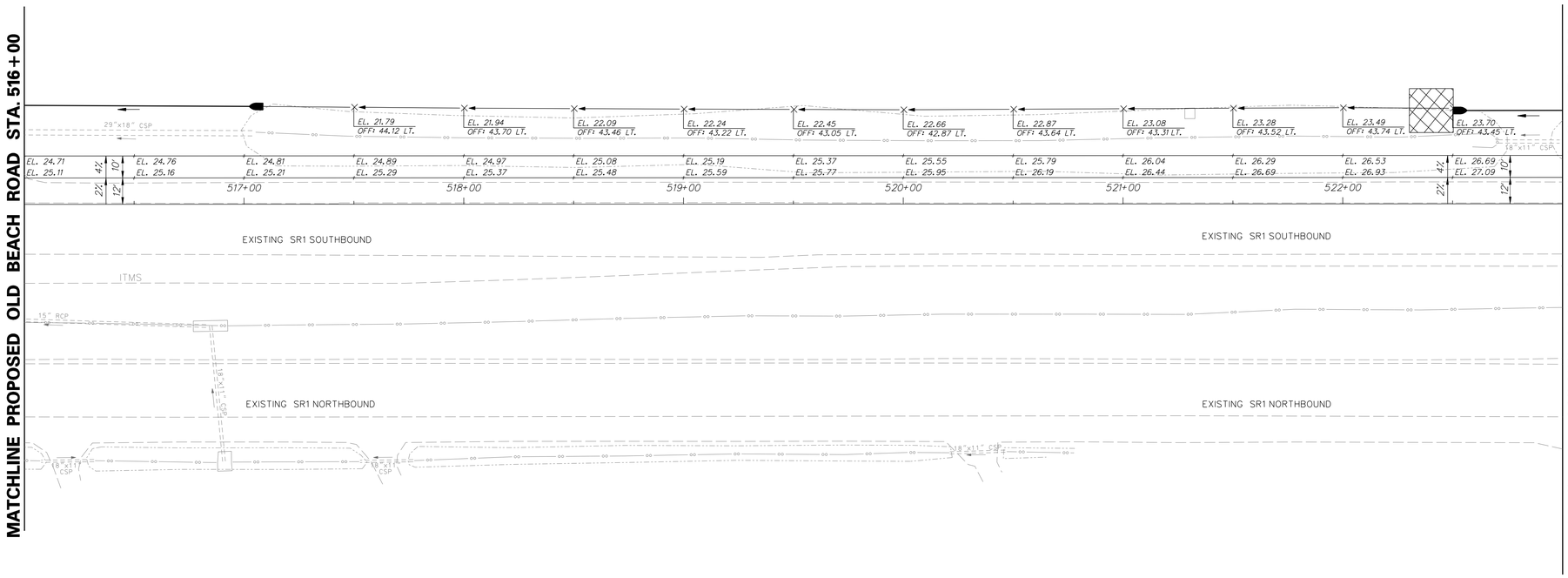

DELAWARE DEPARTMENT OF TRANSPORTATION	ADDENDUMS / REVISIONS	SCALE 0 30 60 90 FEET	SR1, LITTLE HEAVEN GRADE SEPARATED INTERSECTION	CONTRACT T200412202	BRIDGE NO. -	GRADES AND GEOMETRICS	SHEET NO. 164
				COUNTY KENT	DESIGNED BY: SFP		TOTAL SHTS. 641
					CHECKED BY: WFC		

11/25/2004 9:30:00 PM
g:\projects\035\7.00 (deldot agmt 1223 dots open end)\035\7.16 sr1,little heaven finaldesign\dgn files\G004h.dgn

COORDINATE LIST

POINT NO.	STATION	OFFSET	NORTHING	EASTING	ELEV.
1006	523+05.54	12.00	372972.7475	643719.1573	27.75
1007	523+05.53	24.00	372970.7501	643730.9899	27.99
1008	523+05.52	28.00	372970.0843	643734.9341	27.91
1009	523+05.48	70.00	372963.0936	643776.3482	27.91
1010	523+05.48	74.00	372962.4278	643780.2924	27.99
1011	523+05.46	86.00	372960.4304	643792.1250	28.05
1012	523+05.45	98.00	372958.4331	643803.9576	28.08
1013	523+05.44	108.00	372956.7686	643813.8181	27.68
1014	101+68.12	19.00	373129.2436	643802.2180	29.42
1015	103+43.12	13.00	373302.8212	643825.2791	30.48
1016	105+18.12	13.00	373475.4053	643854.2572	30.72
1017	105+40.14	-21.00	373502.7512	643824.3729	30.90
1019	105+97.67	21.00	373552.5261	643875.3184	30.95
1018	106+19.69	-13.00	737579.8720	643845.4340	30.82
1020	798+29.95	-24.40	373540.7559	643780.0542	30.09
1021	798+51.55	-37.00	373544.8957	643755.3994	--
1022	798+51.55	-12.00	373564.1069	643771.3972	29.98
1023	799+02.23	-12.00	373596.5358	643732.4544	29.93
1024	798+98.01	-19.23	373588.2765	643731.0679	29.87
1025	799+18.74	-31.33	373592.2498	643707.3991	29.67
1027	799+27.70	-15.96	373609.7928	643710.3440	29.88
1028	799+36.34	-21.00	373611.4483	643700.4820	--
1029	799+36.34	-11.00	373619.1328	643706.8811	29.98
1030	799+60.84	11.00	373651.7162	643702.1326	30.00
1031	799+60.84	21.00	373659.4007	643708.5317	--
1032	799+52.20	26.04	373657.7451	643718.3938	29.74

COORDINATE LIST

POINT NO.	STATION	OFFSET	NORTHING	EASTING	ELEV.
1033	799+61.16	41.40	373675.2882	643721.3387	29.59
1034	799+40.43	53.50	373671.3149	643745.0075	29.59
1035	799+16.23	12.00	373623.9371	643737.0542	29.94
1036	798+94.71	12.00	373610.1696	643753.5872	29.92
1037	798+94.71	37.00	373629.3808	643769.5850	--
1038	798+73.12	49.60	373625.2410	643794.2399	30.17
1840	526+29.65	-22.00	373298.0055	643739.3165	29.53
1841	105+48.27	62.76	373496.8956	643908.3180	30.20

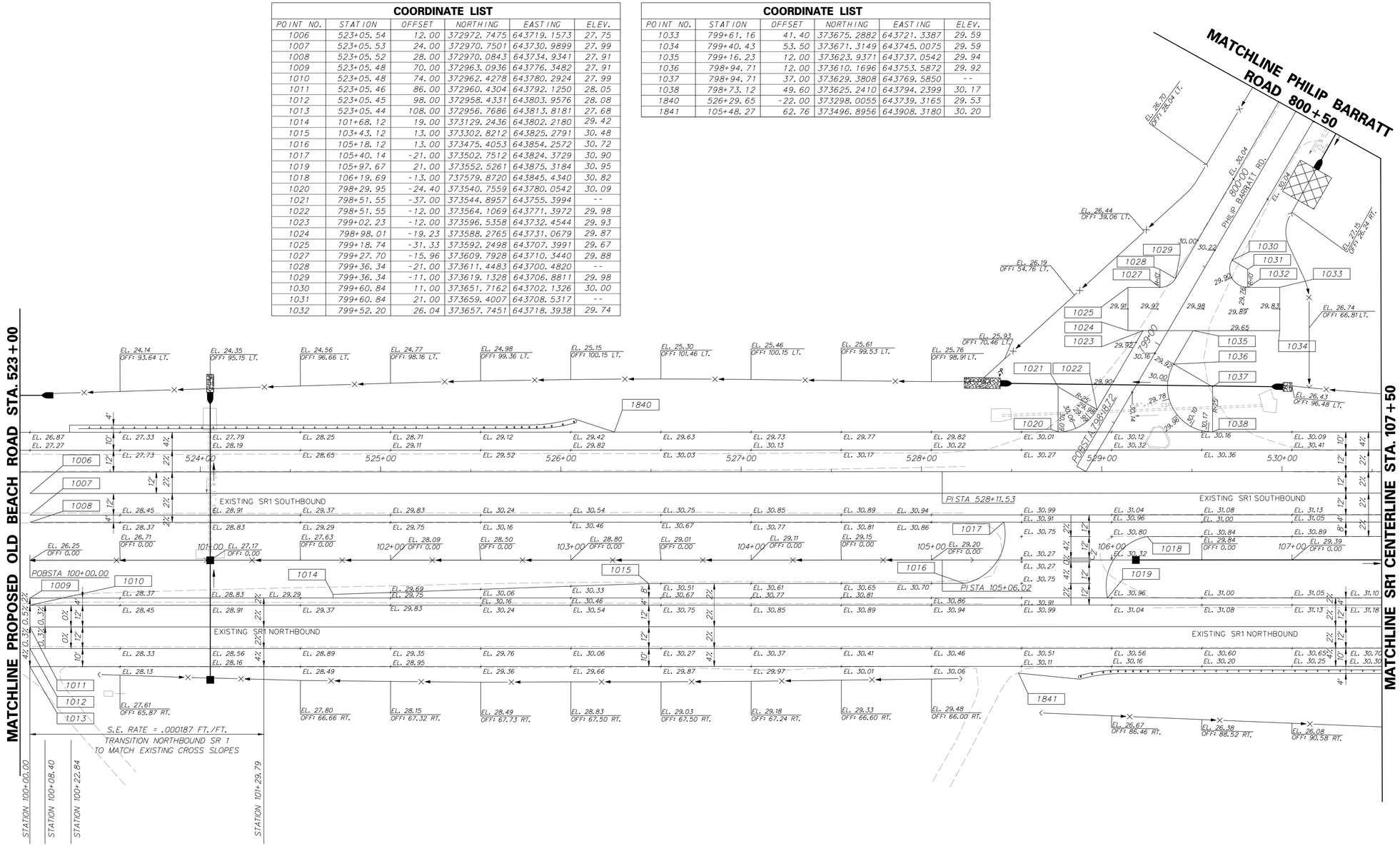

NOTES:

1. OFFSETS SHOWN IN THE GEOMETRY TABLES WITH A MINUS SIGN ARE TO THE LEFT OF THE CONSTRUCTION & R/W BASELINE.
2. UNLESS OTHERWISE NOTED, POINT GEOMETRY ADJACENT TO CURB AND CURB AND GUTTER IS GIVEN TO THE EDGE OF PAVEMENT.
3. RADII ARE GIVEN TO EDGE OF PAVEMENT.
4. UNLESS OTHERWISE NOTED, EDGE OF PAVEMENT ELEVATIONS AT CURB RETURNS ARE GIVEN AT 10 FOOT INTERVALS.
5. ALL WORK REQUIRED FOR CALCULATING AND STAKING OF GRADES SHALL BE PAID FOR UNDER ITEM 763501-CONSTRUCTION ENGINEERING.
6. PROPOSED CURBS OR PAVEMENT THAT TIE INTO EXISTING PAVEMENT SHALL MATCH ELEVATIONS.

3/12/2015
C:\PROJECTS\035I7.00 (DELDOT AGMT 1223 DOTS Open End)\035I7.16 SR1 LITTLE HEAVEN FINAL DESIGN\DGN Files\GG05ln.dgn
11:59:15 AM

DELAWARE DEPARTMENT OF TRANSPORTATION	ADDENDUMS / REVISIONS	SCALE 0 30 60 90 FEET	SR1, LITTLE HEAVEN GRADE SEPARATED INTERSECTION	CONTRACT T200412202	BRIDGE NO. -	GRADES AND GEOMETRICS	SHEET NO. 165
				COUNTY KENT	DESIGNED BY: SFP		TOTAL SHTS. 641
					CHECKED BY: WFC		

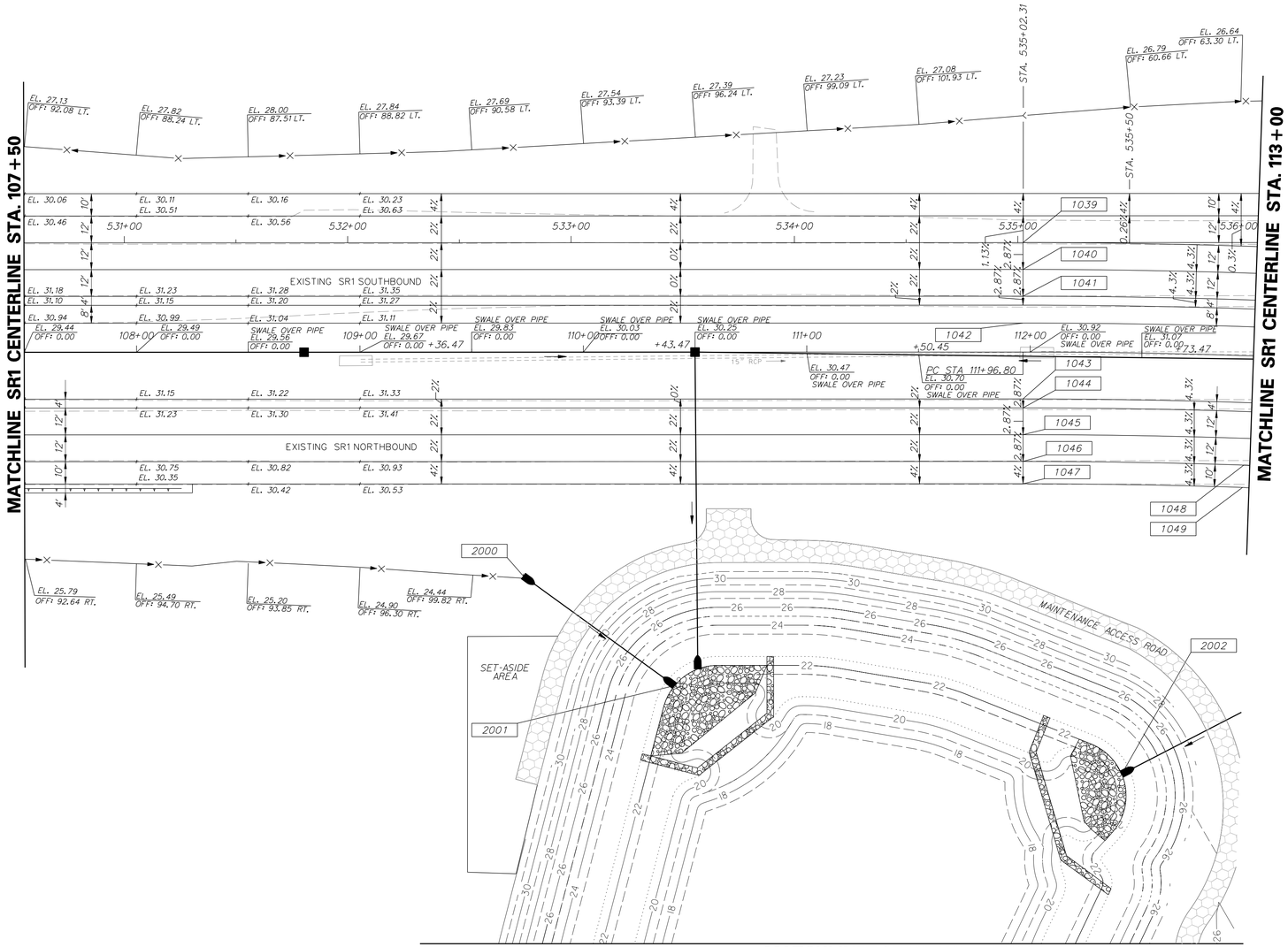

COORDINATE LIST

POINT NO.	STATION	OFFSET	NORTHING	EASTING	ELEV.
1039	111+96.80	-49.00	374154.9822	643905.4954	32.70
1040	111+96.80	-37.00	374152.9951	643917.3298	32.35
1041	111+96.80	-25.00	374151.0080	643929.1641	32.01
1042	111+96.80	-13.00	374149.0210	643940.9984	31.66
1043	111+96.80	21.00	374143.3909	643974.5291	32.18
1044	111+96.80	25.00	374142.7286	643978.4738	32.06
1045	111+96.80	37.00	374140.7415	643990.3082	31.72
1046	111+96.80	49.00	374138.7544	644002.1425	31.37
1047	111+96.80	59.00	374137.0985	644012.0045	30.97
1048	112+97.25	49.00	374235.9047	644020.1319	31.05
1049	112+97.05	59.00	374233.7287	644023.8942	30.64
2000	109+73.12	100.25	373909.6721	644015.6486	-
2001	110+40.80	149.37	373968.2854	644075.2933	-
2002	112+43.89	188.67	374159.0837	644147.5320	-

NOTES:

1. OFFSETS SHOWN IN THE GEOMETRY TABLES WITH A MINUS SIGN ARE TO THE LEFT OF THE CONSTRUCTION & R/W BASELINE.
2. UNLESS OTHERWISE NOTED, POINT GEOMETRY ADJACENT TO CURB AND CURB AND GUTTER IS GIVEN TO THE EDGE OF PAVEMENT.
3. RADII ARE GIVEN TO EDGE OF PAVEMENT.
4. UNLESS OTHERWISE NOTED, EDGE OF PAVEMENT ELEVATIONS AT CURB RETURNS ARE GIVEN AT 10 FOOT INTERVALS.
5. ALL WORK REQUIRED FOR CALCULATING AND STAKING OF GRADES SHALL BE PAID FOR UNDER ITEM 763501-CONSTRUCTION ENGINEERING.
6. PROPOSED CURBS OR PAVEMENT THAT TIE INTO EXISTING PAVEMENT SHALL MATCH ELEVATIONS.

DELAWARE DEPARTMENT OF TRANSPORTATION

ADDENDUMS / REVISIONS

SCALE 0 30 60 90 FEET

SR1, LITTLE HEAVEN GRADE SEPARATED INTERSECTION

CONTRACT	BRIDGE NO.	-
T200412202	DESIGNED BY:	SFP
COUNTY		
KENT	CHECKED BY:	WFC

GRADES AND GEOMETRICS

SHEET NO. 166
TOTAL SHTS. 641

11/25/2014 3:57:38 PM
S:\Projects\035\7.00 (deldot agmt 1223 dots open end\035\7.16 sr1,little heaven final design\dgn files\GG08lh.dgn

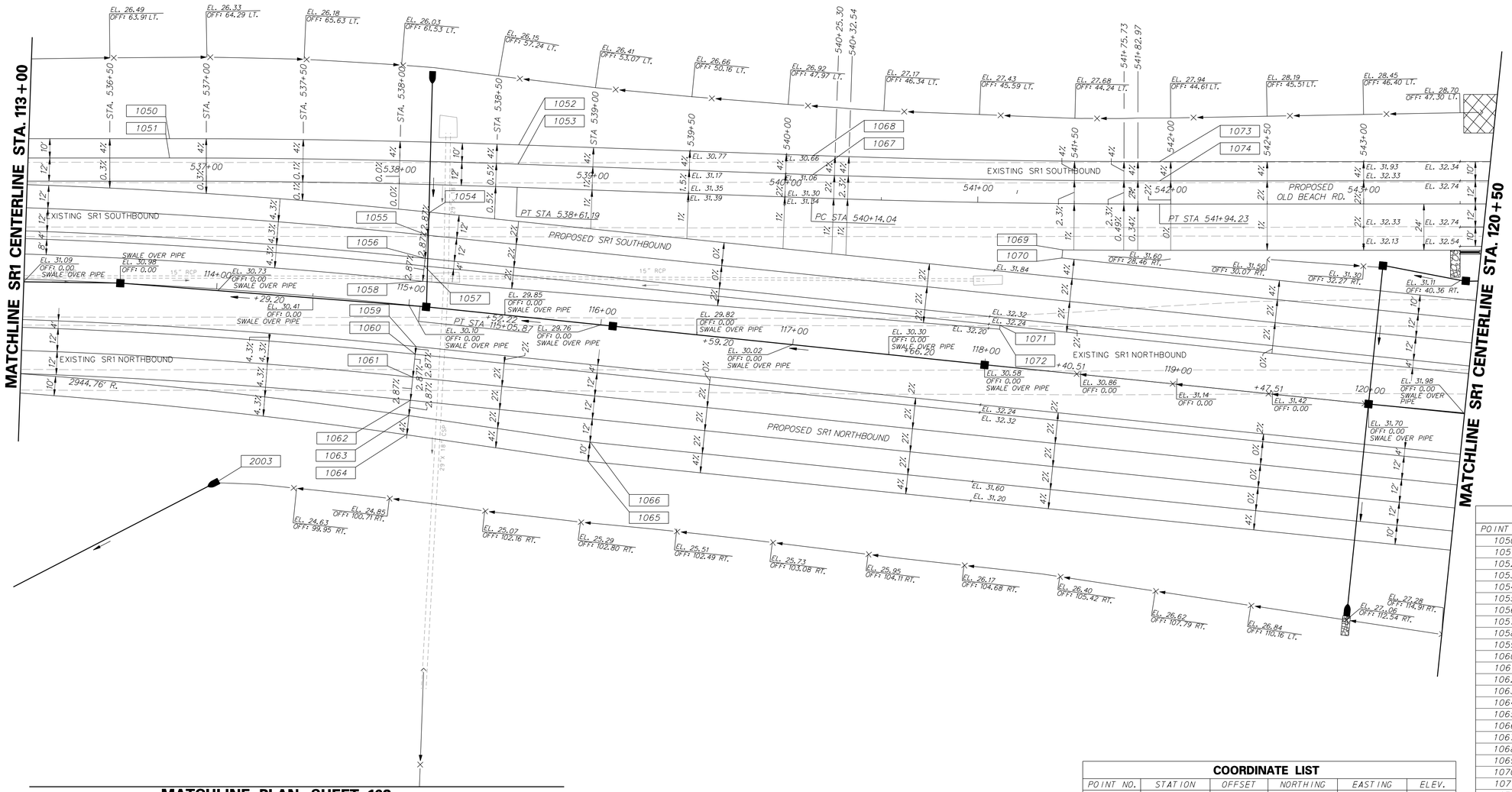

MATCHLINE PLAN SHEET 168

NOTES:

1. OFFSETS SHOWN IN THE GEOMETRY TABLES WITH A MINUS SIGN ARE TO THE LEFT OF THE CONSTRUCTION & R/W BASELINE.
2. UNLESS OTHERWISE NOTED, POINT GEOMETRY ADJACENT TO CURB AND CURB AND GUTTER IS GIVEN TO THE EDGE OF PAVEMENT.
3. RADII ARE GIVEN TO EDGE OF PAVEMENT.
4. UNLESS OTHERWISE NOTED, EDGE OF PAVEMENT ELEVATIONS AT CURB RETURNS ARE GIVEN AT 10 FOOT INTERVALS.
5. ALL WORK REQUIRED FOR CALCULATING AND STAKING OF GRADES SHALL BE PAID FOR UNDER ITEM 763501-CONSTRUCTION ENGINEERING.
6. PROPOSED CURBS OR PAVEMENT THAT TIE INTO EXISTING PAVEMENT SHALL MATCH ELEVATIONS.

COORDINATE LIST

POINT NO.	STATION	OFFSET	NORTHING	EASTING	ELEV.
1050	536+81.00	-22.00	374334.8534	643913.3892	32.83
1051	536+81.00	-12.00	374333.1975	643923.2511	33.23
1052	538+61.19	-22.00	374512.7555	643946.5666	31.34
1053	538+61.19	-12.00	374510.7454	643956.3625	31.74
1054	115+05.87	-49.00	374461.5361	643973.3606	32.28
1055	115+05.87	-37.00	374458.3425	643984.9278	31.94
1056	115+05.87	-25.00	374455.1489	643396.4950	31.59
1057	115+05.87	-21.00	374454.0844	644000.3508	31.48
1058	115+05.87	-13.00	374451.9553	644008.0623	31.25
1059	115+05.87	21.00	374442.9068	644040.8361	31.33
1060	115+05.87	25.00	374441.8423	644044.6919	31.22
1061	115+05.87	37.00	374438.6487	644056.2591	30.87
1062	115+05.87	49.00	374435.4551	644067.8263	30.53
1063	115+05.87	57.00	374433.3261	644075.5378	30.30
1064	115+05.45	66.99	374430.2760	644085.0613	29.90
1065	116+00.63	71.00	374520.9478	644114.2530	30.01
1066	116+00.84	61.00	374523.8121	644104.6696	30.41
1067	540+14.04	-12.00	374660.4803	643987.0885	31.07
1068	540+14.04	-22.00	374662.4905	643977.2926	30.67
1069	541+44.29	24.00	374781.7745	644046.9885	31.72
1070	541+43.90	28.23	374780.6427	644051.0882	31.75
1071	118+05.87	-21.00	374743.2654	644080.1904	32.27
1072	118+05.87	-19.00	374742.7331	644082.1183	32.23
2003	114+08.02	99.24	374330.4907	644092.5670	-

COORDINATE LIST

POINT NO.	STATION	OFFSET	NORTHING	EASTING	ELEV.
1073	541+94.23	-22.00	374838.8339	644010.1793	31.09
1074	541+94.23	-12.00	374837.1780	644020.0413	31.49

DELAWARE DEPARTMENT OF TRANSPORTATION

ADDENDUMS / REVISIONS

SCALE 0 30 60 90 FEET

SR1, LITTLE HEAVEN GRADE SEPARATED INTERSECTION

CONTRACT	BRIDGE NO.	-
T200412202	DESIGNED BY:	SFP
COUNTY		
KENT	CHECKED BY:	WFC

GRADES AND GEOMETRICS

SHEET NO. 167

TOTAL SHTS. 641

11/25/2014 9:35:12 AM
C:\Projects\03517.00 (deldot agmt 123 dots open end)\03517.16 sr1 little heaven final design\dgn files\GC07lh.dgn

MATCHLINE SHEETS 166 & 167

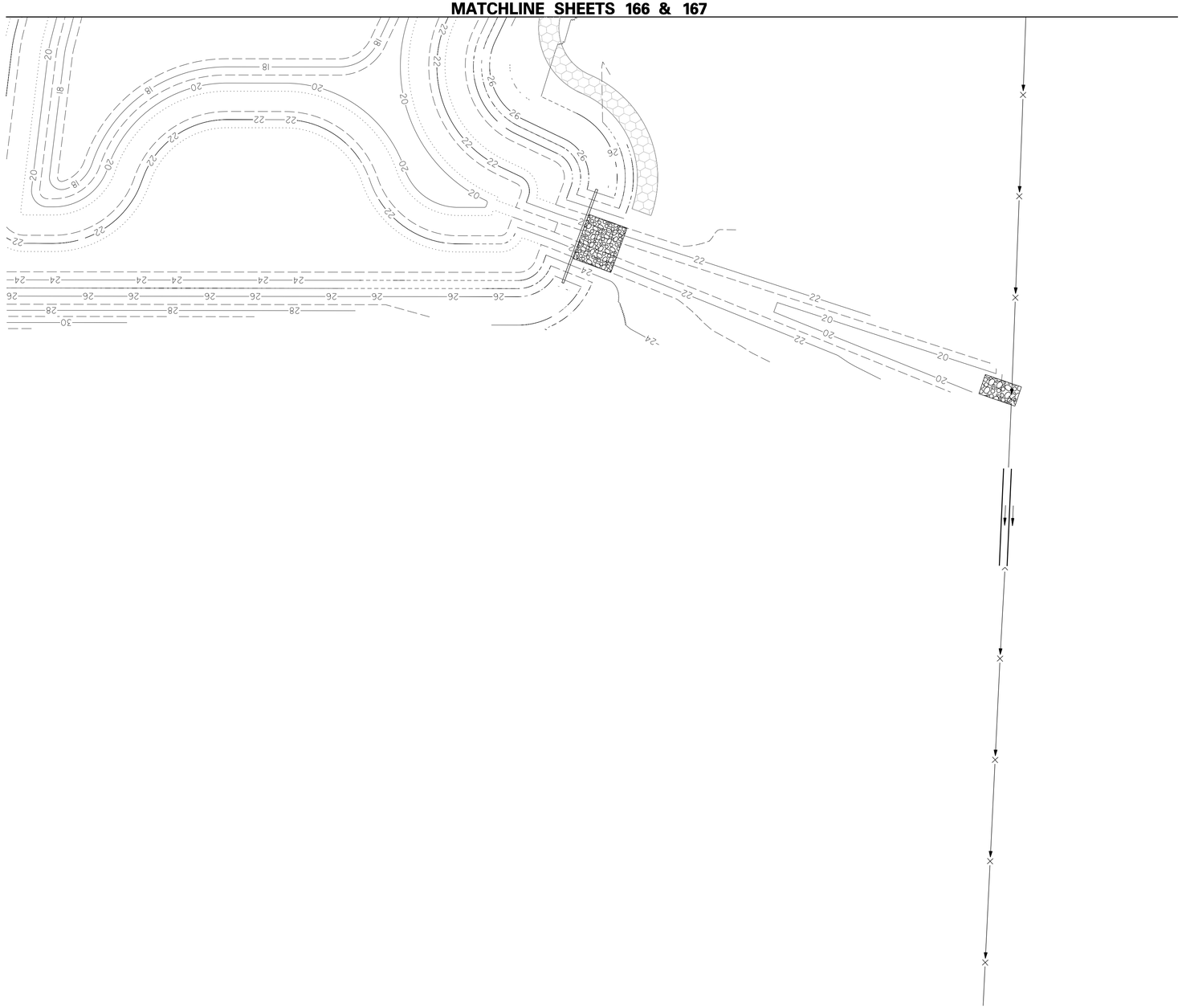

NOTES:

1. OFFSETS SHOWN IN THE GEOMETRY TABLES WITH A MINUS SIGN ARE TO THE LEFT OF THE CONSTRUCTION & R/W BASELINE.
2. UNLESS OTHERWISE NOTED, POINT GEOMETRY ADJACENT TO CURB AND CURB AND GUTTER IS GIVEN TO THE EDGE OF PAVEMENT.
3. RADII ARE GIVEN TO EDGE OF PAVEMENT.
4. UNLESS OTHERWISE NOTED, EDGE OF PAVEMENT ELEVATIONS AT CURB RETURNS ARE GIVEN AT 10 FOOT INTERVALS.
5. ALL WORK REQUIRED FOR CALCULATING AND STAKING OF GRADES SHALL BE PAID FOR UNDER ITEM 763501-CONSTRUCTION ENGINEERING.
6. PROPOSED CURBS OR PAVEMENT THAT TIE INTO EXISTING PAVEMENT SHALL MATCH ELEVATIONS.

DELAWARE DEPARTMENT OF TRANSPORTATION

ADDENDUMS / REVISIONS

SCALE 0 30 60 90 FEET

SR1, LITTLE HEAVEN GRADE SEPARATED INTERSECTION

CONTRACT	BRIDGE NO.	-
T200412202	DESIGNED BY:	SFP
COUNTY	CHECKED BY:	WFC
KENT		

GRADES AND GEOMETRICS

SHEET NO. 168

TOTAL SHTS. 641

11/25/2014
9:21:09 AM
S:\Projects\035\7.00 (deldot agmt 1223 dots open end\035\7.16 sr1,little heaven final design\dgn files\GG08lh.dgn

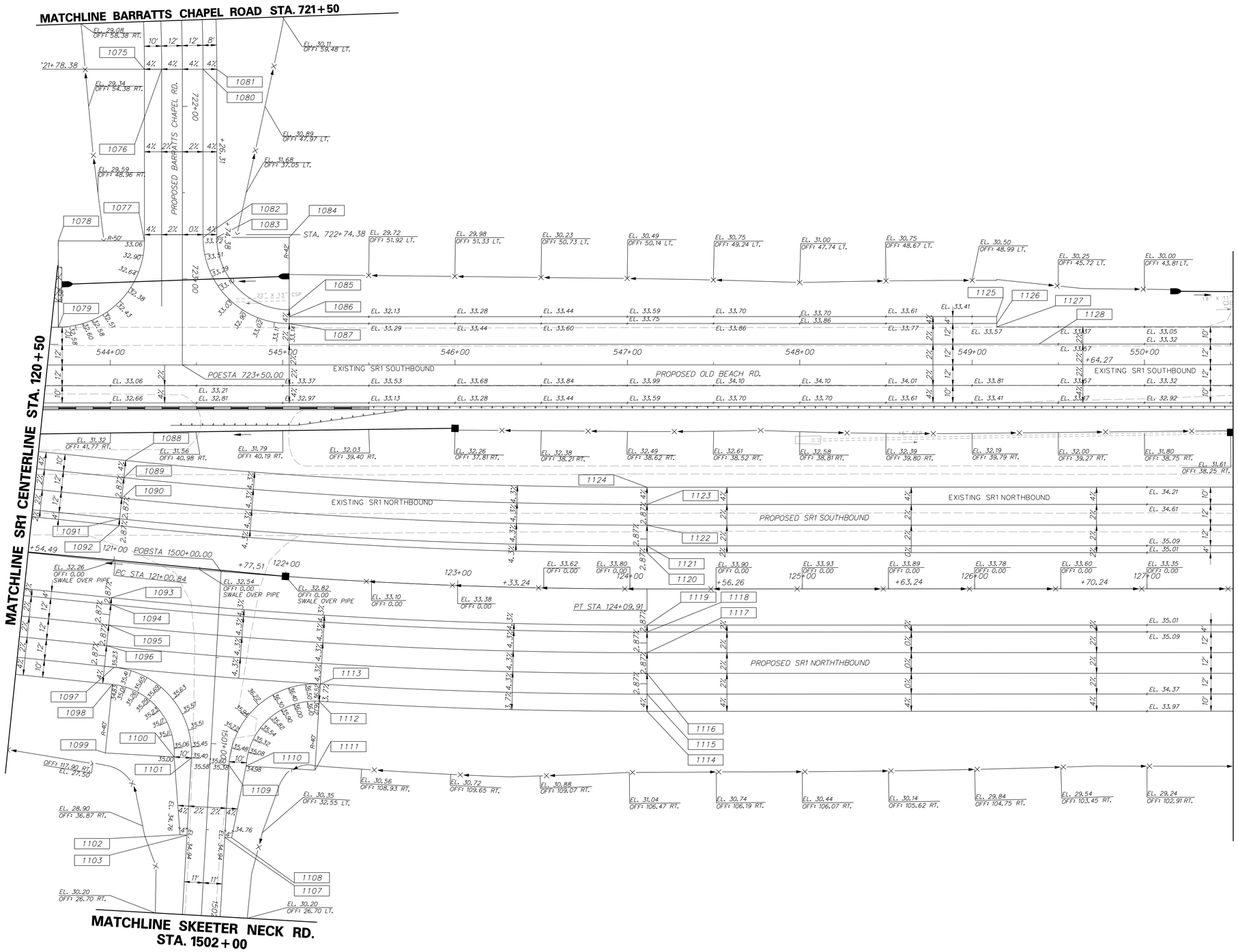

COORDINATE LIST

POINT NO.	STATION	OFFSET	NORTHING	EASTING	ELEV.
1075	721+78.38	22.00	375086.0843	643899.9716	34.37
1076	721+78.38	12.00	375095.9458	643901.6298	34.77
1077	722+78.02	22.00	375069.5617	643998.2323	33.06
1078	722+78.02	72.00	375020.2539	643989.9412	34.99
1079	723+28.02	72.00	375011.9744	644039.2509	32.50
1080	721+78.38	-12.00	375119.6136	643905.6095	35.73
1081	721+78.38	-22.00	375127.5028	643906.9361	35.41
1082	722+75.39	-12.00	375103.4278	644001.8667	33.72
1083	722+75.99	-20.00	375111.3171	644003.1934	33.40
1084	722+75.99	-62.00	375152.7356	644010.1579	33.20
1085	723+17.99	-62.00	375145.7809	644051.5781	32.82
1086	723+21.99	-62.01	375145.1185	644055.5228	33.20
1087	723+25.99	-62.01	375144.4561	644059.4676	33.14
1088	121+00.84	-59.00	375037.7162	644122.0633	32.33
1089	121+00.84	-49.00	375035.0549	644131.7026	32.73
1090	121+00.84	-37.00	375031.8613	644143.2699	33.08
1091	121+00.84	-25.00	375028.6677	644154.8371	33.42
1092	121+00.84	-21.00	375027.6032	644158.6928	33.54
1093	121+00.84	21.00	375016.4256	644199.1782	34.00
1094	121+00.84	25.00	375015.3611	644203.0339	34.11
1095	121+00.84	37.00	375012.1675	644214.6012	34.45
1096	121+00.86	49.00	375008.9855	644226.1716	34.80
1097	1500+59.03	58.73	375011.2384	644239.2425	35.22
1098	1500+69.02	59.19	375008.5771	644248.8819	34.82
1099	1501+08.98	61.00	374997.9318	644287.4394	29.58
1100	1501+08.98	21.00	375036.9325	644296.3245	34.98
1101	1501+08.98	11.00	375046.6826	644298.5458	35.38
1102	1501+53.90	15.00	375032.8053	644341.4520	34.73
1103	1501+53.90	11.00	375036.7053	644342.3405	34.89
1107	1501+53.90	-11.00	375058.1557	644347.2274	34.89
1108	1501+53.90	-15.00	375062.0558	644348.1159	34.73
1109	1501+11.90	-11.00	375067.4851	644306.2766	35.38
1110	1501+11.90	-21.00	375077.2353	644308.4979	34.98
1111	1501+11.90	-61.00	375116.2360	644317.3830	31.56
1112	1500+71.90	-61.17	375125.2900	644278.4212	36.11
1113	1500+61.90	-61.22	375127.5535	644268.6807	36.52
1114	124+09.91	71.00	375311.8849	644315.7298	36.30
1115	124+09.91	61.00	375313.5407	644305.8679	36.70
1116	124+09.91	49.00	375315.5278	644294.0335	36.36
1117	124+09.91	37.00	375317.5149	644282.1992	36.01
1118	124+09.91	25.00	375319.5020	644270.3649	35.67
1119	124+09.91	21.00	375320.1643	644266.4201	35.55
1120	124+09.91	-21.00	375327.1191	644224.9999	35.10
1121	124+09.91	-25.00	375327.7815	644221.0551	34.98
1122	124+09.91	-37.00	375329.7685	644209.2208	34.64
1123	124+09.91	-49.00	375331.7556	644197.3865	34.29
1124	124+09.91	-59.00	375333.4115	644187.5245	33.89
1125	549+14.27	-28.00	375549.9251	644123.4929	33.42
1126	549+14.27	-24.00	375549.2627	644127.4377	33.50
1127	549+14.27	-22.00	375548.9316	644129.4101	33.54
1128	549+38.80	-12.00	375571.4638	644143.3334	33.62

NOTES:

1. OFFSETS SHOWN IN THE GEOMETRY TABLES WITH A MINUS SIGN ARE TO THE LEFT OF THE CONSTRUCTION & R/W BASELINE.
2. UNLESS OTHERWISE NOTED, POINT GEOMETRY ADJACENT TO CURB AND CURB AND GUTTER IS GIVEN TO THE EDGE OF PAVEMENT.
3. RADII ARE GIVEN TO EDGE OF PAVEMENT.
4. UNLESS OTHERWISE NOTED, EDGE OF PAVEMENT ELEVATIONS AT CURB RETURNS ARE GIVEN AT 10 FOOT INTERVALS.
5. ALL WORK REQUIRED FOR CALCULATING AND STAKING OF GRADES SHALL BE PAID FOR UNDER ITEM 763501-CONSTRUCTION ENGINEERING.
6. PROPOSED CURBS OR PAVEMENT THAT TIE INTO EXISTING PAVEMENT SHALL MATCH ELEVATIONS.

DELAWARE DEPARTMENT OF TRANSPORTATION

ADDENDUMS / REVISIONS

SCALE 0 30 60 90 FEET

SR1, LITTLE HEAVEN GRADE SEPARATED INTERSECTION

CONTRACT	BRIDGE NO.	-
T200412202	DESIGNED BY:	SFP
COUNTY		
KENT	CHECKED BY:	WFC

GRADES AND GEOMETRICS

SHEET NO. 169

TOTAL SHTS. 641

3/10/2015
N:\WBDFILE\Snap\PROJECTS\035I7.00 (DELDOT AGMT 1223 DOTS Open End)\035I7.16 SR1,LITTLE HEAVEN FINAL DESIGN\DGN Files\GG09n.dgn
10:29:22 AM

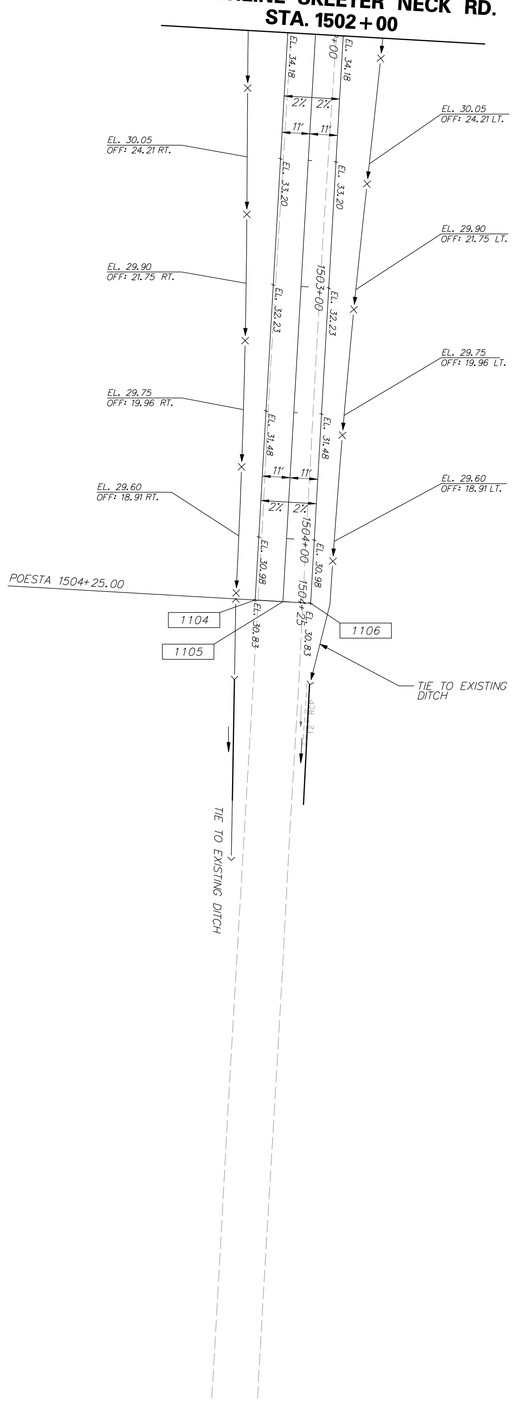

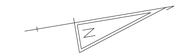

COORDINATE LIST					
POINT NO.	STATION	OFFSET	NORTHING	EASTING	ELEV.
1104	1504+25.00	11.00	374976.4853	644606.6722	30.83
1105	1504+25.00	0.00	374987.2105	644609.1157	31.05
1106	1504+25.00	-11.00	374997.9357	644611.5591	30.83

NOTES:

1. OFFSETS SHOWN IN THE GEOMETRY TABLES WITH A MINUS SIGN ARE TO THE LEFT OF THE CONSTRUCTION & R/W BASELINE.
2. UNLESS OTHERWISE NOTED, POINT GEOMETRY ADJACENT TO CURB AND CURB AND GUTTER IS GIVEN TO THE EDGE OF PAVEMENT.
3. RADII ARE GIVEN TO EDGE OF PAVEMENT.
4. UNLESS OTHERWISE NOTED, EDGE OF PAVEMENT ELEVATIONS AT CURB RETURNS ARE GIVEN AT 10 FOOT INTERVALS.
5. ALL WORK REQUIRED FOR CALCULATING AND STAKING OF GRADES SHALL BE PAID FOR UNDER ITEM 763501-CONSTRUCTION ENGINEERING.
6. PROPOSED CURBS OR PAVEMENT THAT TIE INTO EXISTING PAVEMENT SHALL MATCH ELEVATIONS.

DELAWARE
DEPARTMENT OF TRANSPORTATION

ADDENDUMS / REVISIONS

SCALE
0 30 60 90
FEET

SR1, LITTLE HEAVEN
GRADE SEPARATED INTERSECTION

CONTRACT	BRIDGE NO.	-
T200412202	DESIGNED BY:	SFP
COUNTY		
KENT	CHECKED BY:	WFC

GRADES AND GEOMETRICS

SHEET NO.
170
TOTAL SHTS.
641

11/25/2014
9:30:02 AM
$:\projects\035\7.00 (deldot agmt 1223 dots open end\035\7.16 sr1,little heaven finaldesign\dgn files\G009alh.dgn

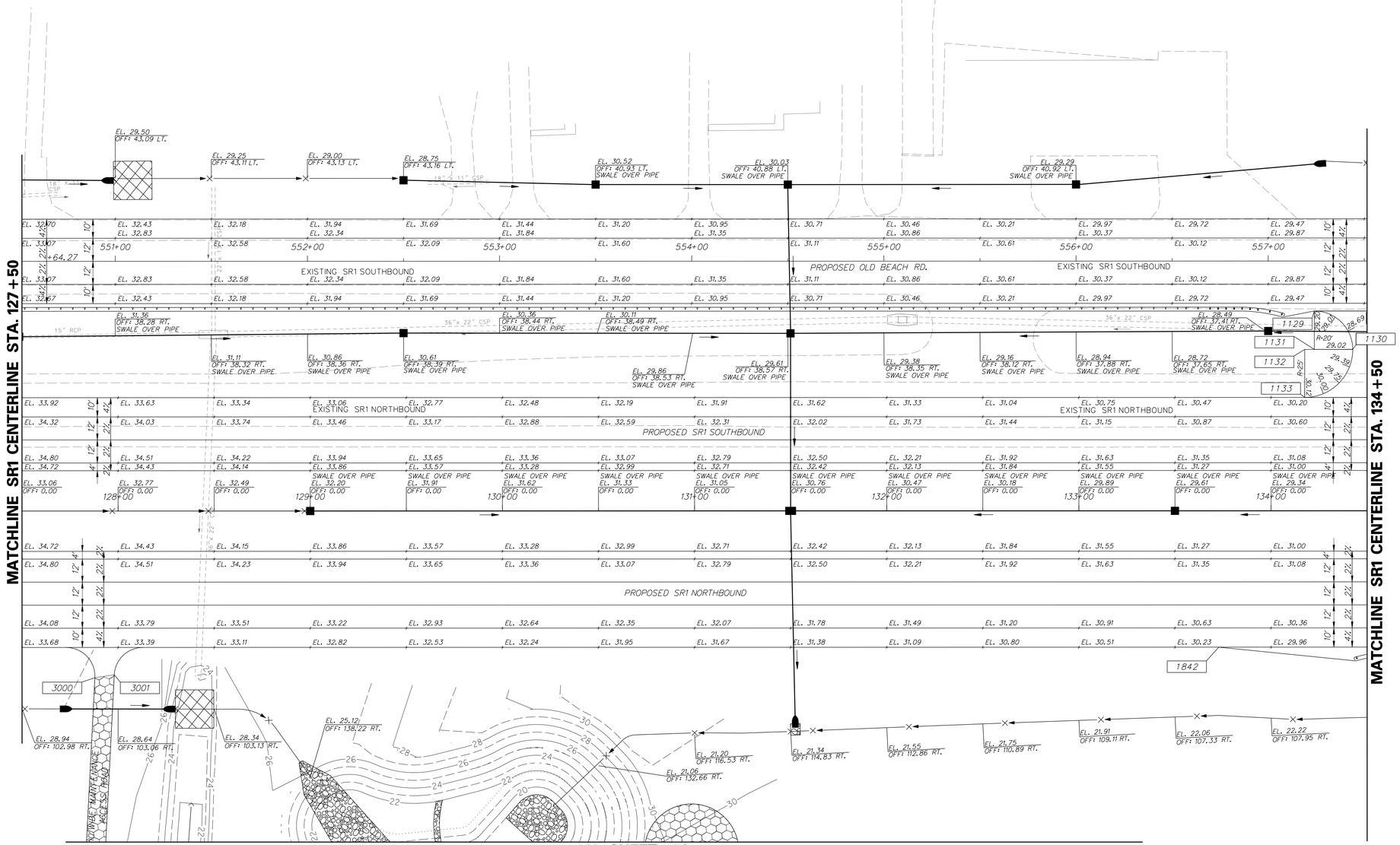

MATCHLINE PLAN SHEET 172

COORDINATE LIST

POINT NO.	STATION	OFFSET	NORTHING	EASTING	ELEV.
1129	557+24.00	26.00	376339.5356	644310.8304	29.20
1130	557+44.00	46.00	376355.9477	644333.8661	28.75
1131	557+24.00	46.00	376336.2238	644330.5543	--
1132	557+19.00	46.00	376331.2929	644329.7264	--
1133	557+19.00	71.00	376327.1532	644354.3813	30.12
1842	133+72.79	71.00	376261.4742	644475.1731	30.10
3000	127+87.89	86.76	375628.0362	644393.8661	--
3001	127+97.98	85.24	375692.2410	644394.0295	--

NOTES:

1. OFFSETS SHOWN IN THE GEOMETRY TABLES WITH A MINUS SIGN ARE TO THE LEFT OF THE CONSTRUCTION & R/W BASELINE.
2. UNLESS OTHERWISE NOTED, POINT GEOMETRY ADJACENT TO CURB AND CURB AND GUTTER IS GIVEN TO THE EDGE OF PAVEMENT.
3. RADII ARE GIVEN TO EDGE OF PAVEMENT.
4. UNLESS OTHERWISE NOTED, EDGE OF PAVEMENT ELEVATIONS AT CURB RETURNS ARE GIVEN AT 10 FOOT INTERVALS.
5. ALL WORK REQUIRED FOR CALCULATING AND STAKING OF GRADES SHALL BE PAID FOR UNDER ITEM 763501-CONSTRUCTION ENGINEERING.
6. PROPOSED CURBS OR PAVEMENT THAT TIE INTO EXISTING PAVEMENT SHALL MATCH ELEVATIONS.

11/25/2014
9:50:04 PM
g:\projects\03517.00 (deldot agmt 1223 dots open end)\03517.16 sr1 little heaven final design\dgn files\G010h.dgn

DELAWARE DEPARTMENT OF TRANSPORTATION

ADDENDUMS / REVISIONS

SCALE 0 30 60 90 FEET

SR1, LITTLE HEAVEN GRADE SEPARATED INTERSECTION

CONTRACT	BRIDGE NO.	-
T200412202	DESIGNED BY:	SFP
COUNTY		
KENT	CHECKED BY:	WFC

GRADES AND GEONETRICS

SHEET NO.
171
TOTAL SHTS.
641

MATCHLINE PLAN SHEET 171

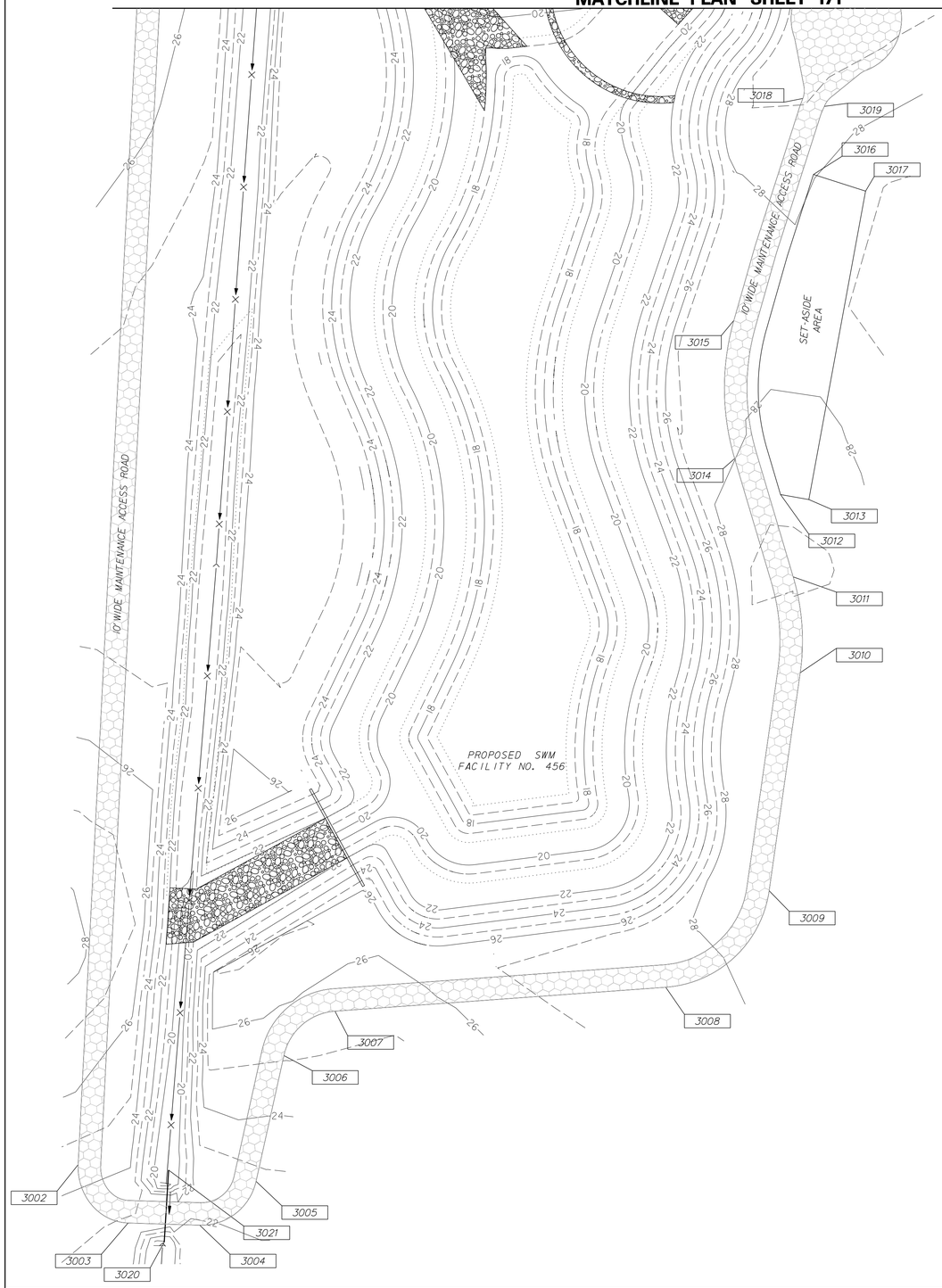

NOTES:

1. OFFSETS SHOWN IN THE GEOMETRY TABLES WITH A MINUS SIGN ARE TO THE LEFT OF THE CONSTRUCTION & R/W BASELINE.
2. UNLESS OTHERWISE NOTED, POINT GEOMETRY ADJACENT TO CURB AND CURB AND GUTTER IS GIVEN TO THE EDGE OF PAVEMENT.
3. RADII ARE GIVEN TO EDGE OF PAVEMENT.
4. UNLESS OTHERWISE NOTED, EDGE OF PAVEMENT ELEVATIONS AT CURB RETURNS ARE GIVEN AT 10 FOOT INTERVALS.
5. ALL WORK REQUIRED FOR CALCULATING AND STAKING OF GRADES SHALL BE PAID FOR UNDER ITEM 763501-CONSTRUCTION ENGINEERING.
6. PROPOSED CURBS OR PAVEMENT THAT TIE INTO EXISTING PAVEMENT SHALL MATCH ELEVATIONS.

COORDINATE LIST

POINT NO.	STATION	OFFSET	NORTHING	EASTING
· 3002			375552.7273	644979.4487
· 3003			375570.3076	645008.6421
· 3004			375601.5036	645014.8814
· 3005			375629.3819	644999.8296
· 3006			375650.8426	644946.8234
· 3007			375676.4409	644931.1410
· 3008			375823.0198	644945.0116
· 3009			375875.3740	644910.4018
· 3010			375905.0390	644817.2211
· 3011			375909.0121	644774.7487
· 3012			375909.5277	644737.7685
· 3013			375921.5450	644742.0604
· 3014			375892.0826	644718.6841
· 3015			375901.9168	644658.1207
· 3016			375947.4991	644600.0804
· 3017			375969.0790	644611.2241
· 3018			375948.4391	644566.0324
· 3019			375957.2846	644571.0805
· 3020			375584.7347	644019.6520
· 3021			375591.9217	644988.4695

DELAWARE DEPARTMENT OF TRANSPORTATION

ADDENDUMS / REVISIONS

SCALE 0 30 60 90 FEET

SR1, LITTLE HEAVEN GRADE SEPARATED INTERSECTION

CONTRACT	BRIDGE NO.	-
T200412202	DESIGNED BY:	SFP
COUNTY		
KENT	CHECKED BY:	WFC

GRADES AND GEOMETRICS

SHEET NO.
172
TOTAL SHTS.
641

11/25/2014 9:35:55 AM
g:\projects\035\1.00 (deldot agmt 1223 dots open end)\035\1.16 sr1, little heaven final design\dgn files\GGlin.dgn

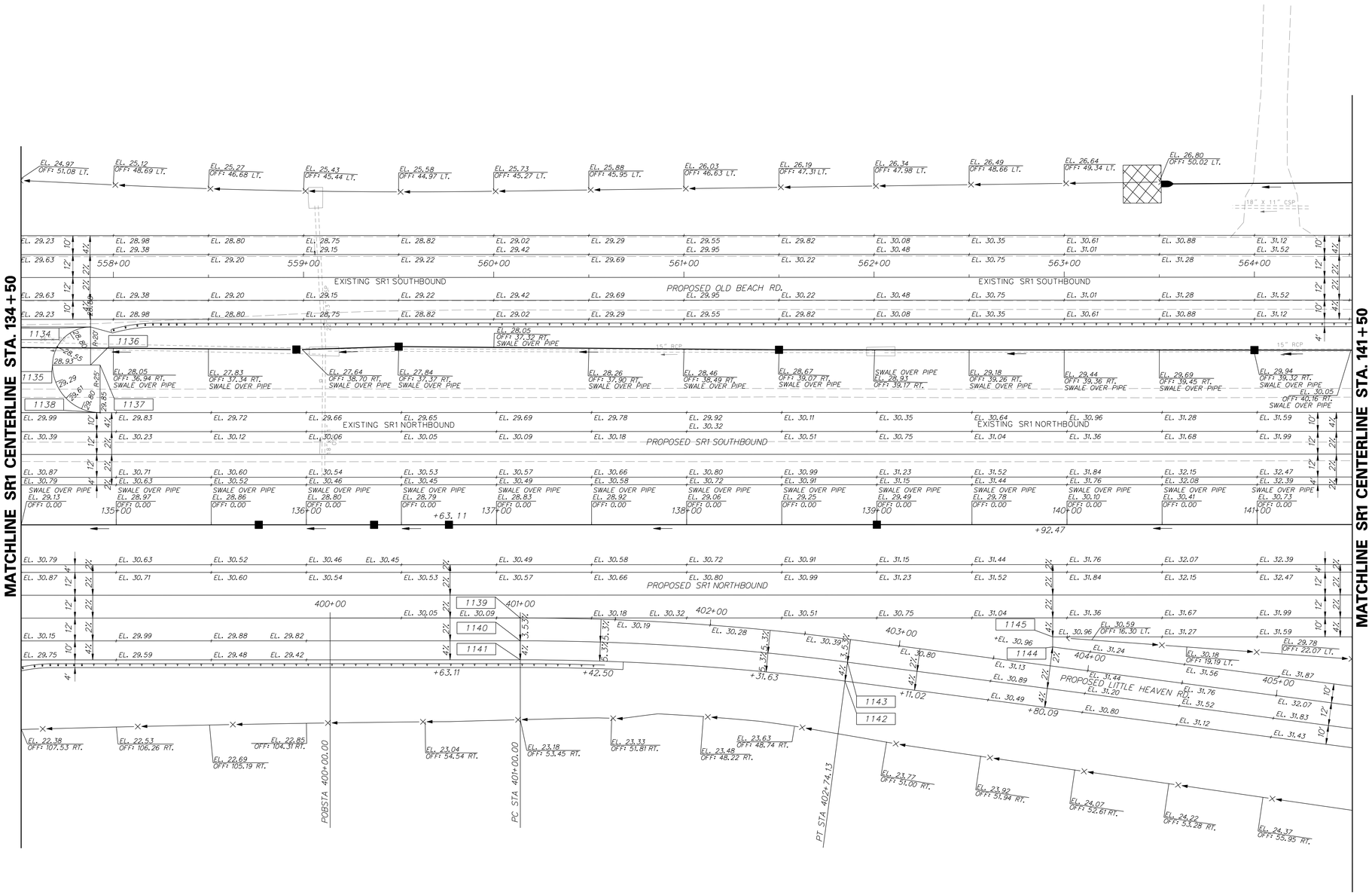

COORDINATE LIST

POINT NO.	STATION	OFFSET	NORTHING	EASTING	ELEV.
1134	557+88.00	26.00	376402.6520	644321.4281	28.88
1135	557+68.00	46.00	376379.6164	644337.8403	28.65
1136	557+88.00	46.00	376399.3403	644341.1521	--
1137	557+93.00	46.00	376404.2713	644341.9800	--
1138	557+93.00	71.00	376400.1315	644366.6349	29.85
1139	401+00.00	0.00	376600.1116	644509.7249	30.10
1140	401+00.00	12.00	376598.1245	644521.5592	29.69
1141	401+00.00	22.00	376596.4686	644531.4212	29.29
1142	402+74.13	22.00	376763.0185	644570.7373	29.76
1143	402+74.13	12.00	376765.9477	644561.1759	30.16
1144	403+80.09	-10.00	376873.7044	644571.1789	31.12
1145	403+79.40	-15.26	376874.5823	644565.9506	30.91

NOTES:

1. OFFSETS SHOWN IN THE GEOMETRY TABLES WITH A MINUS SIGN ARE TO THE LEFT OF THE CONSTRUCTION & R/W BASELINE.
2. UNLESS OTHERWISE NOTED, POINT GEOMETRY ADJACENT TO CURB AND CURB AND GUTTER IS GIVEN TO THE EDGE OF PAVEMENT.
3. RADII ARE GIVEN TO EDGE OF PAVEMENT.
4. UNLESS OTHERWISE NOTED, EDGE OF PAVEMENT ELEVATIONS AT CURB RETURNS ARE GIVEN AT 10 FOOT INTERVALS.
5. ALL WORK REQUIRED FOR CALCULATING AND STAKING OF GRADES SHALL BE PAID FOR UNDER ITEM 763501-CONSTRUCTION ENGINEERING.
6. PROPOSED CURBS OR PAVEMENT THAT TIE INTO EXISTING PAVEMENT SHALL MATCH ELEVATIONS.

11/25/2014
9:39:26 AM
G:\projects\035I7.00 (deldot agmt 1223 dots open end)\035I7.16 sr1, little heaven final design\dgn files\GG21h.dgn

DELAWARE DEPARTMENT OF TRANSPORTATION

ADDENDUMS / REVISIONS

SCALE 0 30 60 90 FEET

SR1, LITTLE HEAVEN GRADE SEPARATED INTERSECTION

CONTRACT	BRIDGE NO.	-
T200412202	DESIGNED BY:	SFP
COUNTY		
KENT	CHECKED BY:	WFC

GRADES AND GEOMETRICS

SHEET NO. 173
TOTAL SHTS. 641

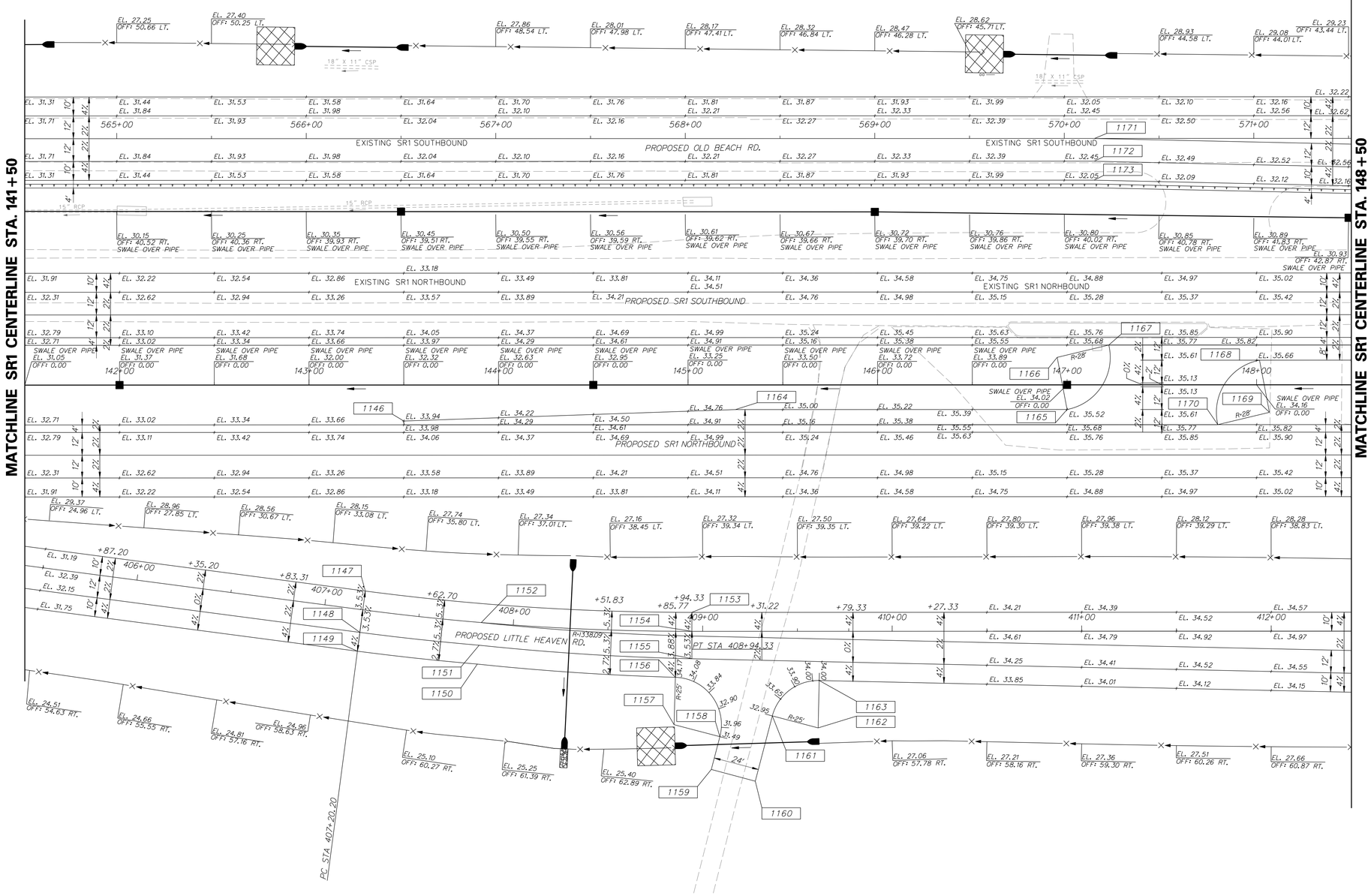

COORDINATE LIST

POINT NO.	STATION	OFFSET	NORTHING	EASTING	ELEV.
1146	143+50.00	19.00	377233.8012	644585.7062	33.94
1147	407+20.20	-10.00	377198.8926	644670.8034	33.01
1148	407+20.20	12.00	377192.4484	644691.8384	33.79
1149	407+20.20	22.00	377189.5191	644701.3997	33.39
1150	407+82.83	22.00	377250.8118	644718.6097	34.00
1151	407+82.94	12.00	377253.3924	644708.9478	34.27
1152	407+83.07	00.00	377256.4892	644697.3535	33.64
1153	408+94.33	-10.00	377366.9706	644710.4802	33.69
1154	408+94.33	0.00	377365.3147	644720.3421	34.04
1155	408+94.52	14+48	377363.1057	644734.6536	34.55
1156	408+85.77	24.29	377352.7062	644742.8227	34.17
1157	408+85.24	49.28	377347.8671	644767.3499	27.00
1158	409+09.09	55.57	377370.6729	644777.5917	31.49
1159	409+04.56	72.89	377363.3379	644793.9250	--
1160	409+27.75	79.09	377385.1793	644803.8732	--
1161	409+36.76	44.64	377399.7662	644771.3921	32.95
1162	409+60.94	50.96	377422.5720	644781.6339	30.40
1163	409+61.50	25.97	377427.2585	644757.0771	34.00
1164	145+25.00	13.00	377407.3788	644608.7672	34.88
1165	147+00.00	13.00	377579.9629	644637.7454	35.52
1166	146+94.78	-14.51	377579.3727	644609.7516	35.54
1167	147+22.02	-21.00	377607.3088	644607.8610	35.73
1168	148+01.56	-13.00	377684.4297	644628.9222	35.66
1169	148+06.78	14.51	377685.0198	644656.9160	35.70
1170	147+79.54	21.00	377657.0837	644658.8066	35.81
1171	570+15.95	0.00	377617.9579	644499.1233	32.70
1172	570+15.82	12.00	377615.8392	644510.9355	32.46
1173	570+15.71	22.00	377614.0737	644520.7790	32.06

NOTES:

1. OFFSETS SHOWN IN THE GEOMETRY TABLES WITH A MINUS SIGN ARE TO THE LEFT OF THE CONSTRUCTION & R/W BASELINE.
2. UNLESS OTHERWISE NOTED, POINT GEOMETRY ADJACENT TO CURB AND CURB AND GUTTER IS GIVEN TO THE EDGE OF PAVEMENT.
3. RADII ARE GIVEN TO EDGE OF PAVEMENT.
4. UNLESS OTHERWISE NOTED, EDGE OF PAVEMENT ELEVATIONS AT CURB RETURNS ARE GIVEN AT 10 FOOT INTERVALS.
5. ALL WORK REQUIRED FOR CALCULATING AND STAKING OF GRADES SHALL BE PAID FOR UNDER ITEM 763501-CONSTRUCTION ENGINEERING.
6. PROPOSED CURBS OR PAVEMENT THAT TIE INTO EXISTING PAVEMENT SHALL MATCH ELEVATIONS.

3/10/2015
\\VMGFILE\Snap\PROJECTS\035I7.00 DELDOT AGMT 1223 DOTS Open End\035I7.16 SR1 LITTLE HEAVEN FINAL DESIGN\DGN Files\GG13n.dgn
10:02 AM

DELAWARE DEPARTMENT OF TRANSPORTATION

ADDENDUMS / REVISIONS

SCALE 0 30 60 90 FEET

SR1, LITTLE HEAVEN GRADE SEPARATED INTERSECTION

CONTRACT	BRIDGE NO.	-
T200412202	DESIGNED BY:	SFP
COUNTY		
KENT	CHECKED BY:	WFC

GRADES AND GEOMETRICS

SHEET NO. 174

TOTAL SHTS. 641

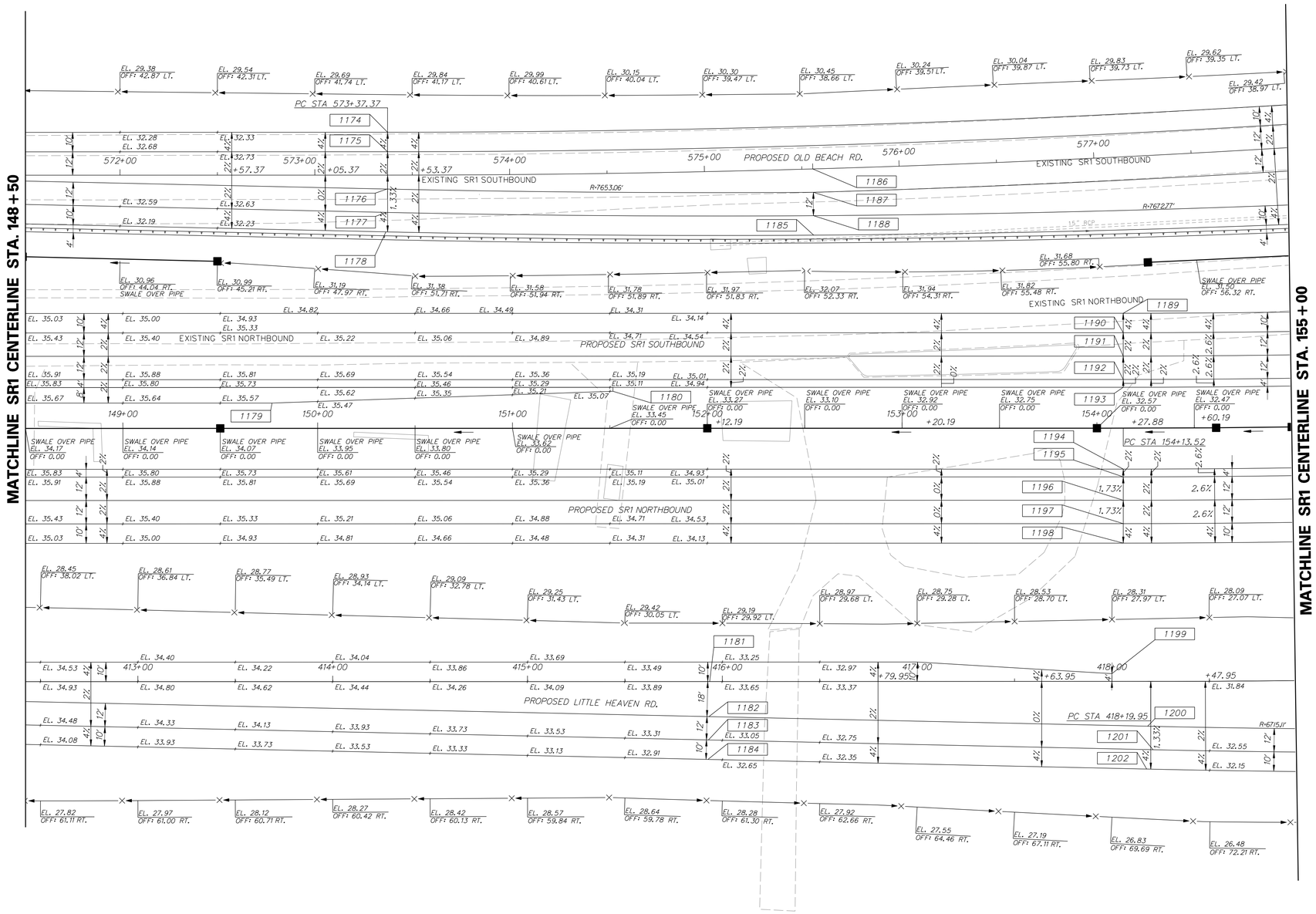

COORDINATE LIST

POINT NO.	STATION	OFFSET	NORTHING	EASTING	ELEV.
1174	573+37.37	-22.00	377938.5832	644530.6507	32.44
1175	573+37.37	-12.00	377936.9273	644540.5127	32.84
1176	573+36.97	7.14	377933.3631	644559.3229	33.22
1177	573+36.71	19.14	377931.1133	644571.1101	33.32
1178	573+36.48	29.14	377929.2385	644580.9328	32.92
1179	149+76.56	-13.00	377857.0138	644657.9004	35.51
1180	151+51.56	-19.00	378030.5914	644680.9614	35.06
1181	415+93.53	0.00	378054.8676	644836.1233	33.68
1182	415+93.13	18.00	378051.4928	644853.8101	33.33
1183	415+92.87	30.00	378049.2433	644865.5974	33.08
1184	415+92.64	40.00	378047.3690	644875.4202	32.69
1185	575+55.13	34.00	378145.5081	644619.0128	33.36
1186	575+55.62	0.00	378150.6610	644585.4075	33.28
1187	575+55.62	12.00	378149.0123	644597.2937	33.52
1188	575+55.35	24.00	378147.1006	644609.1404	33.76
1189	154+13.52	-59.00	378295.5556	644684.8909	32.95
1190	154+13.52	-49.00	387293.8997	644694.7529	33.35
1191	154+13.52	-37.00	378291.9126	644706.5872	33.59
1192	154+13.52	-25.00	378289.9256	644718.4216	33.83
1193	154+13.52	-21.00	378289.2632	644722.3663	33.90
1194	154+13.52	21.00	378282.3085	644763.7865	34.19
1195	154+13.52	25.00	378281.6461	644767.7313	34.27
1196	154+13.52	37.00	378279.6590	644779.5656	34.48
1197	154+13.52	49.00	378277.6719	644791.4000	34.69
1198	154+13.52	59.00	378276.0160	644801.2619	34.29
1199	418+00.00	-4.00	378259.1469	644866.3674	32.12'
1200	418+18.34	23.00	378272.7639	644896.0332	32.42
1201	418+21.13	35.07	378273.5270	644908.3954	32.58
1202	418+17.85	45.00	378268.6372	644917.6427	32.18

NOTES:

1. OFFSETS SHOWN IN THE GEOMETRY TABLES WITH A MINUS SIGN ARE TO THE LEFT OF THE CONSTRUCTION & R/W BASELINE.
2. UNLESS OTHERWISE NOTED, POINT GEOMETRY ADJACENT TO CURB AND CURB AND GUTTER IS GIVEN TO THE EDGE OF PAVEMENT.
3. RADII ARE GIVEN TO EDGE OF PAVEMENT.
4. UNLESS OTHERWISE NOTED, EDGE OF PAVEMENT ELEVATIONS AT CURB RETURNS ARE GIVEN AT 10 FOOT INTERVALS.
5. ALL WORK REQUIRED FOR CALCULATING AND STAKING OF GRADES SHALL BE PAID FOR UNDER ITEM 763501-CONSTRUCTION ENGINEERING.
6. PROPOSED CURBS OR PAVEMENT THAT TIE INTO EXISTING PAVEMENT SHALL MATCH ELEVATIONS.

1/5/2005
G:\PROJECTS\035I.00 (DELDOT AGMT 1223 DOTS Open End)\035I.16 SR1, LITTLE HEAVEN FINAL DESIGN\DGN Files\GG04h.dgn

DELAWARE DEPARTMENT OF TRANSPORTATION

ADDENDUMS / REVISIONS

SCALE 0 30 60 90 FEET

SR1, LITTLE HEAVEN GRADE SEPARATED INTERSECTION

CONTRACT	BRIDGE NO.	-
T200412202	DESIGNED BY:	SFP
COUNTY	CHECKED BY:	WFC
KENT		

GRADES AND GEOMETRICS

SHEET NO.
175
TOTAL SHTS.
641

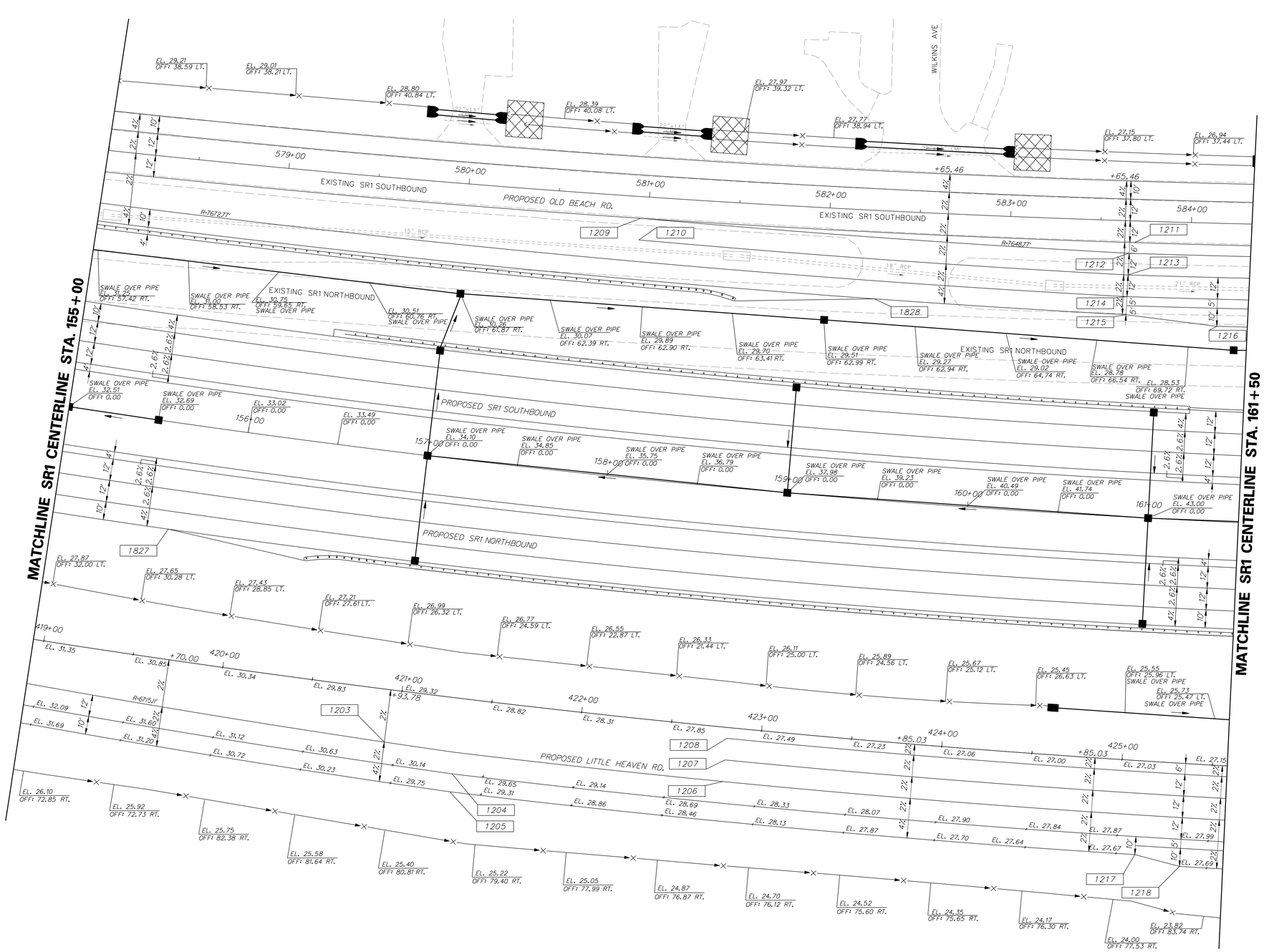

COORDINATE LIST

POINT NO.	STATION	OFFSET	NORTHING	EASTING	ELEV.
1203	420+93.78	29.13	378545.4153	644942.3275	29.97
1204	421+32.93	42.00	378582.9075	644959.9153	29.79
1205	421+32.82	52.00	378581.6044	644969.8307	29.43
1206	422+81.40	30.00	378732.5901	644964.1590	28.22
1207	422+81.40	18.00	378733.7580	644952.2160	27.98
1208	422+81.40	6.00	378734.9260	644940.2730	27.74
1209	580+95.94	12.00	378687.2299	644652.6161	30.95
1210	580+95.67	24.00	378686.1603	644664.5683	31.19
1211	583+68.97	12.00	378960.3464	644666.0639	29.47
1212	583+65.97	18.00	378957.1576	644671.9663	29.61
1213	583+65.84	30.00	378956.6441	644683.9560	29.85
1214	583+65.71	42.00	378956.1307	644695.9458	30.09
1215	583+65.46	52.00	378955.5589	644705.9295	29.89
1216	584+15.44	57.00	379005.7338	644712.3660	29.53
1217	425+10.35	52.00	378960.4218	645004.5836	27.68
1218	425+35.17	57.00	378985.0844	645011.1107	27.65
1827	155+63.85	59.00	378425.9990	644824.5488	34.81
1828	582+26.96	48.92	378816.3945	644697.1620	30.38

NOTES:

1. OFFSETS SHOWN IN THE GEOMETRY TABLES WITH A MINUS SIGN ARE TO THE LEFT OF THE CONSTRUCTION & R/W BASELINE.
2. UNLESS OTHERWISE NOTED, POINT GEOMETRY ADJACENT TO CURB AND CURB AND GUTTER IS GIVEN TO THE EDGE OF PAVEMENT.
3. RADII ARE GIVEN TO EDGE OF PAVEMENT.
4. UNLESS OTHERWISE NOTED, EDGE OF PAVEMENT ELEVATIONS AT CURB RETURNS ARE GIVEN AT 10 FOOT INTERVALS.
5. ALL WORK REQUIRED FOR CALCULATING AND STAKING OF GRADES SHALL BE PAID FOR UNDER ITEM 763501-CONSTRUCTION ENGINEERING.
6. PROPOSED CURBS OR PAVEMENT THAT TIE INTO EXISTING PAVEMENT SHALL MATCH ELEVATIONS.

1/5/2015
G:\PROJECTS\03517.00 (DELDOT AGMT 1223 DOTS Open End)\03517.16 SR1 LITTLE HEAVEN FINAL DESIGN\DGN Files\GG6fn.dgn
12:14:03 PM

DELAWARE DEPARTMENT OF TRANSPORTATION

ADDENDUMS / REVISIONS

SCALE 0 30 60 90 FEET

SR1, LITTLE HEAVEN GRADE SEPARATED INTERSECTION

CONTRACT	BRIDGE NO.	-
T200412202	DESIGNED BY:	SFP
COUNTY		
KENT	CHECKED BY:	WFC

GRADES AND GEOMETRICS

SHEET NO. 176
TOTAL SHTS. 641

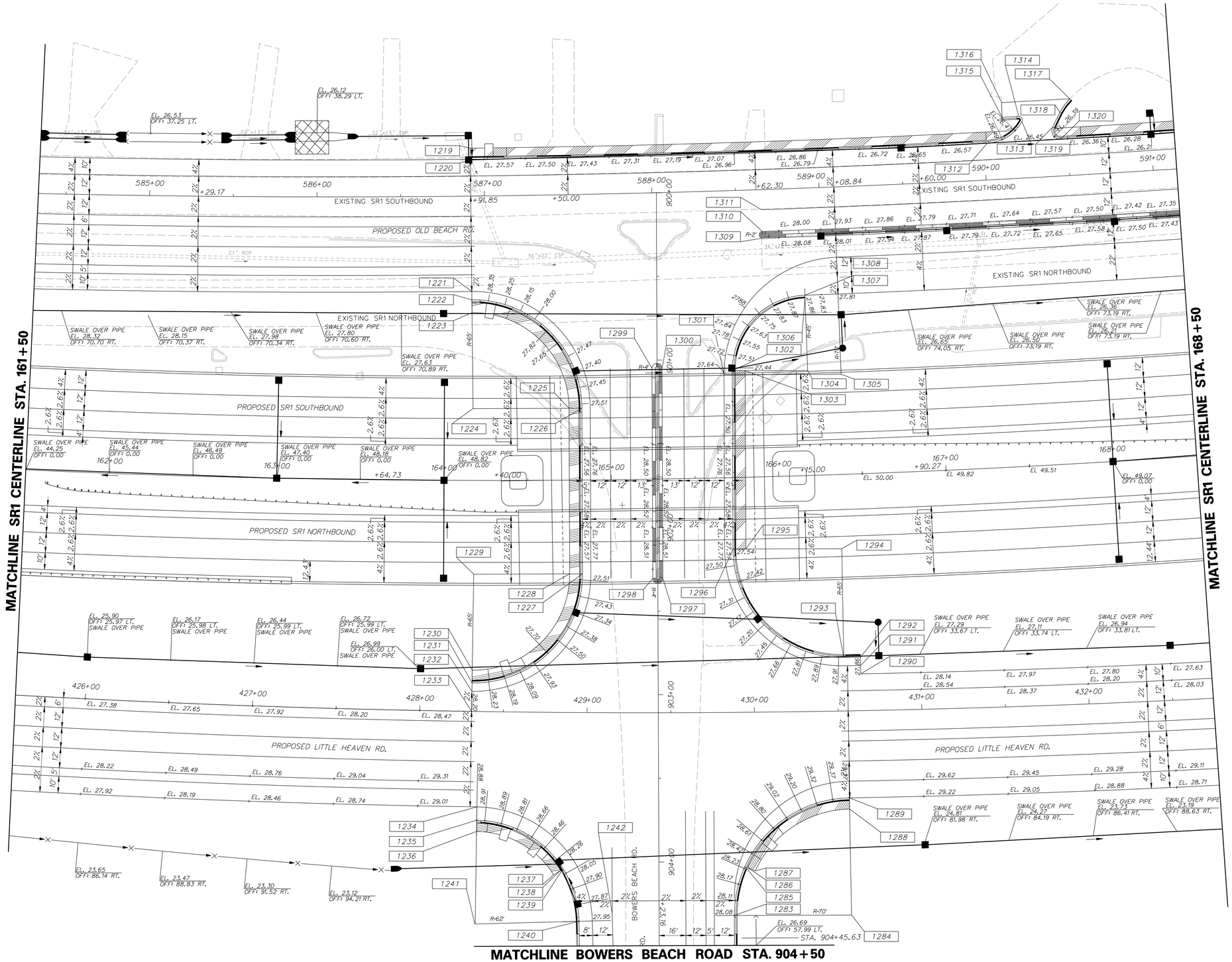

COORDINATE LIST

POINT NO.	STATION	OFFSET	NORTHING	EASTING	ELEV.
1219	586+91.89	-28.67	379283.2931	644628.6971	28.30
1220	586+91.89	-22.00	379283.3661	644635.3634	27.59
1221	586+91.85	57.00	379284.1873	644714.3591	28.57
1222	586+91.85	62.00	379284.2419	644719.3588	28.37
1223	586+91.85	69.67	379284.3257	644727.0250	29.10
1224	901+28.60	110.00	379284.9525	644784.3549	--
1225	901+28.60	52.67	379342.2854	644784.1411	28.24
1226	901+28.60	45.00	379349.9520	644784.1125	27.51
1227	902+27.57	45.00	379350.3212	644883.0779	27.51
1228	902+27.57	52.67	379342.6546	644883.1065	28.23
1229	902+27.57	110.00	379285.3217	644883.3204	--
1230	428+30.97	-24.67	379284.4355	644940.6468	28.92
1231	428+30.97	-17.00	379284.3170	644948.3126	28.20
1232	428+30.97	-12.00	379284.2397	644953.3120	28.40
1233	428+30.97	0.00	379284.0543	644965.3106	28.64
1234	428+35.02	57.00	379287.2558	645022.3656	29.20
1235	428+35.02	65.00	379287.1370	645030.3647	28.88
1236	428+35.02	71.67	379287.0380	645037.0307	29.58
1237	904+07.36	62.91	379333.0781	645062.9345	28.81
1238	904+04.72	58.67	379337.3126	645060.2757	28.71
1239	904+03.83	57.25	379338.7241	645059.3895	28.11
1240	904+35.23	47.90	379348.1953	645090.7493	27.95
1241	904+36.61	109.86	379286.2162	645092.3579	--
1242	904+30.37	28.00	379368.0746	645085.8197	28.46
1283	904+32.08	-45.00	379441.0834	645087.2545	28.08
1284	904+32.08	-115.00	379511.0830	645086.9934	--
1285	904+02.74	-51.44	379447.4183	645057.8934	28.24
1286	904+03.44	-52.96	379448.9341	645058.5863	28.84
1287	904+05.54	-57.50	379453.4816	645060.6648	28.94
1288	430+55.81	58.67	379509.9367	645023.6704	30.07
1289	430+55.81	52.00	379509.8160	645017.0049	29.37
1290	430+63.86	-22.00	379516.6009	644942.8650	28.26
1291	430+63.97	-26.99	379516.5120	644937.8733	28.06
1292	430+63.97	-31.99	379516.4229	644932.8741	27.86
1293	430+53.93	-32.00	379506.4245	644933.0522	27.90
1294	902+13.13	-110.00	379505.2663	644868.0626	--
1295	902+13.13	-52.67	379447.9333	644868.2765	28.26
1296	902+13.13	-45.00	379440.2667	644868.3051	27.54
1297	902+30.46	-3.00	379398.3317	644885.7911	28.44
1298	902+30.46	3.00	379392.3317	644885.8135	28.44
1299	901+04.96	3.00	379391.8635	644760.3120	28.37
1300	901+04.96	-3.00	379397.8635	644760.2896	28.37
1301	901+08.89	-40.00	379434.8779	644764.0844	27.65
1302	901+06.57	-45.00	379439.8693	644761.7506	27.44
1303	901+06.57	-52.67	379447.5359	644761.7220	28.16
1304	901+06.57	-90.00	3749484.8689	644761.5827	--
1305	901+08.89	-110.00	379504.8774	644763.8232	--
1306	588+89.22	65.67	379483.2796	644718.2786	28.53
1307	588+89.21	64.00	379483.2149	644716.6132	27.86
1308	589+08.84	42.00	379502.1248	644693.8774	28.25
1309	588+65.33	29.00	379457.9739	644682.4804	28.11
1310	588+65.28	25.00	379457.7910	644678.4849	28.03
1311	588+65.28	12.00	379457.3538	644665.4916	27.77
1312	590+01.81	-22.00	379592.2255	644625.7175	26.50
1313	590+23.21	-33.88	379612.8812	644612.7305	26.48
1314	590+21.50	-36.93	379611.0186	644609.7750	26.51
1315	590+11.46	-36.93	379601.0429	644610.3036	26.55
1316	590+11.63	-45.78	379600.7410	644601.4639	26.60
1317	590+52.66	-45.76	379641.4679	644599.2227	26.08
1318	590+46.24	-38.06	379635.5295	644607.2775	26.25
1319	590+41.44	-29.43	379631.2502	644616.1629	26.40
1320	590+45.82	-22.00	379636.0372	644623.3325	26.37

NOTES:

1. OFFSETS SHOWN IN THE GEOMETRY TABLES WITH A MINUS SIGN ARE TO THE LEFT OF THE CONSTRUCTION & R/W BASELINE.
2. UNLESS OTHERWISE NOTED, POINT GEOMETRY ADJACENT TO CURB AND CURB AND GUTTER IS GIVEN TO THE EDGE OF PAVEMENT.
3. RADII ARE GIVEN TO EDGE OF PAVEMENT.
4. UNLESS OTHERWISE NOTED, EDGE OF PAVEMENT ELEVATIONS AT CURB RETURNS ARE GIVEN AT 10 FOOT INTERVALS.
5. ALL WORK REQUIRED FOR CALCULATING AND STAKING OF GRADES SHALL BE PAID FOR UNDER ITEM 763501-CONSTRUCTION ENGINEERING.
6. PROPOSED CURBS OR PAVEMENT THAT TIE INTO EXISTING PAVEMENT SHALL MATCH ELEVATIONS.

1/5/2015
G:\PROJECTS\03517.00 IDELDOT AGMT 123 DOTS Open End\03517.16 SR1, LITTLE HEAVEN FINAL DESIGN\DGN Files\GG6in.dgn
12:14:34 PM

DELAWARE DEPARTMENT OF TRANSPORTATION

ADDENDUMS / REVISIONS

SCALE 0 30 60 90 FEET

SR1, LITTLE HEAVEN GRADE SEPARATED INTERSECTION

CONTRACT	BRIDGE NO.	-
T200412202	DESIGNED BY:	SFP
COUNTY	CHECKED BY:	WFC
KENT		

GRADES AND GEOMETRICS

SHEET NO.
177
TOTAL SHTS.
641

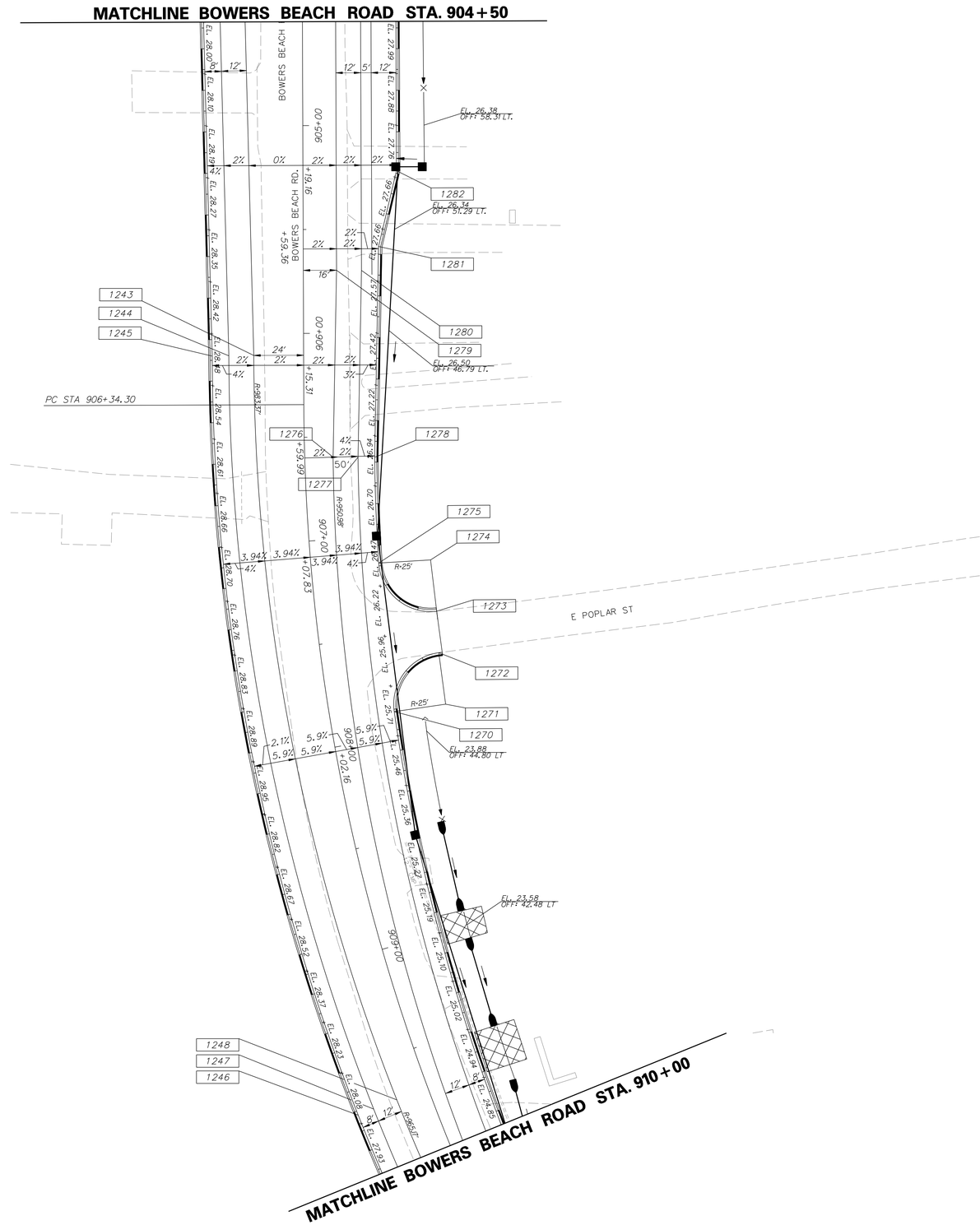

COORDINATE LIST

POINT NO.	STATION	OFFSET	NORTHING	EASTING	ELEV.
1243	906+10.53	24.00	379372.7496	645265.9608	28.60
1244	906+10.66	36.00	379360.7501	645226.1368	28.83
1245	906+10.75	44.00	379352.7505	645266.2546	28.51
1246	909+70.84	36.00	379423.0168	645631.5880	27.95
1247	909+70.68	28.00	379430.4559	645628.6453	28.12
1248	909+70.44	16.00	379441.6141	645624.2299	27.41
1270	907+87.81	-31.05	379440.3527	645437.3857	25.58
1271	907+88.39	-56.05	379465.0983	645433.8014	-
1272	907+61.82	-56.50	379461.7876	645409.0216	24.44
1273	907+40.62	-58.03	379460.7938	645389.0593	24.52
1274	907+14.02	-57.58	379457.8257	645364.2361	-
1275	907+13.46	-32.59	379432.8794	645365.8738	26.34
1276	906+59.99	-13.66	379410.9325	645314.9035	27.51
1277	906+60.41	-25.65	379422.9337	645314.9518	27.16
1278	906+60.70	-33.65	379430.9345	645314.9834	26.84
1279	905+69.66	-16.00	379412.5968	645224.9459	28.02
1280	905+69.80	-28.00	379424.5973	645225.0334	27.78
1281	905+58.29	-36.26	379432.8100	645213.5004	27.66
1282	905+21.86	-45.00	379441.4183	645177.0333	27.66

NOTES:

1. OFFSETS SHOWN IN THE GEOMETRY TABLES WITH A MINUS SIGN ARE TO THE LEFT OF THE CONSTRUCTION & R/W BASELINE.
2. UNLESS OTHERWISE NOTED, POINT GEOMETRY ADJACENT TO CURB AND CURB AND GUTTER IS GIVEN TO THE EDGE OF PAVEMENT.
3. RADII ARE GIVEN TO EDGE OF PAVEMENT.
4. UNLESS OTHERWISE NOTED, EDGE OF PAVEMENT ELEVATIONS AT CURB RETURNS ARE GIVEN AT 10 FOOT INTERVALS.
5. ALL WORK REQUIRED FOR CALCULATING AND STAKING OF GRADES SHALL BE PAID FOR UNDER ITEM 763501-CONSTRUCTION ENGINEERING.
6. PROPOSED CURBS OR PAVEMENT THAT TIE INTO EXISTING PAVEMENT SHALL MATCH ELEVATIONS.

DELAWARE DEPARTMENT OF TRANSPORTATION

ADDENDUMS / REVISIONS

SCALE 0 30 60 90 FEET

SR1, LITTLE HEAVEN GRADE SEPARATED INTERSECTION

CONTRACT	BRIDGE NO.	-
T200412202	DESIGNED BY:	SFP
COUNTY		
KENT	CHECKED BY:	WFC

GRADES AND GEOMETRICS

SHEET NO. 178
TOTAL SHTS. 641

11/25/2014
9:13:01 AM
g:\proj\ecs\035\7.00 (deldot agmt 1223 dots open end)\035\7.46 sr1, little heaven final design\dgn files\0017lh.dgn

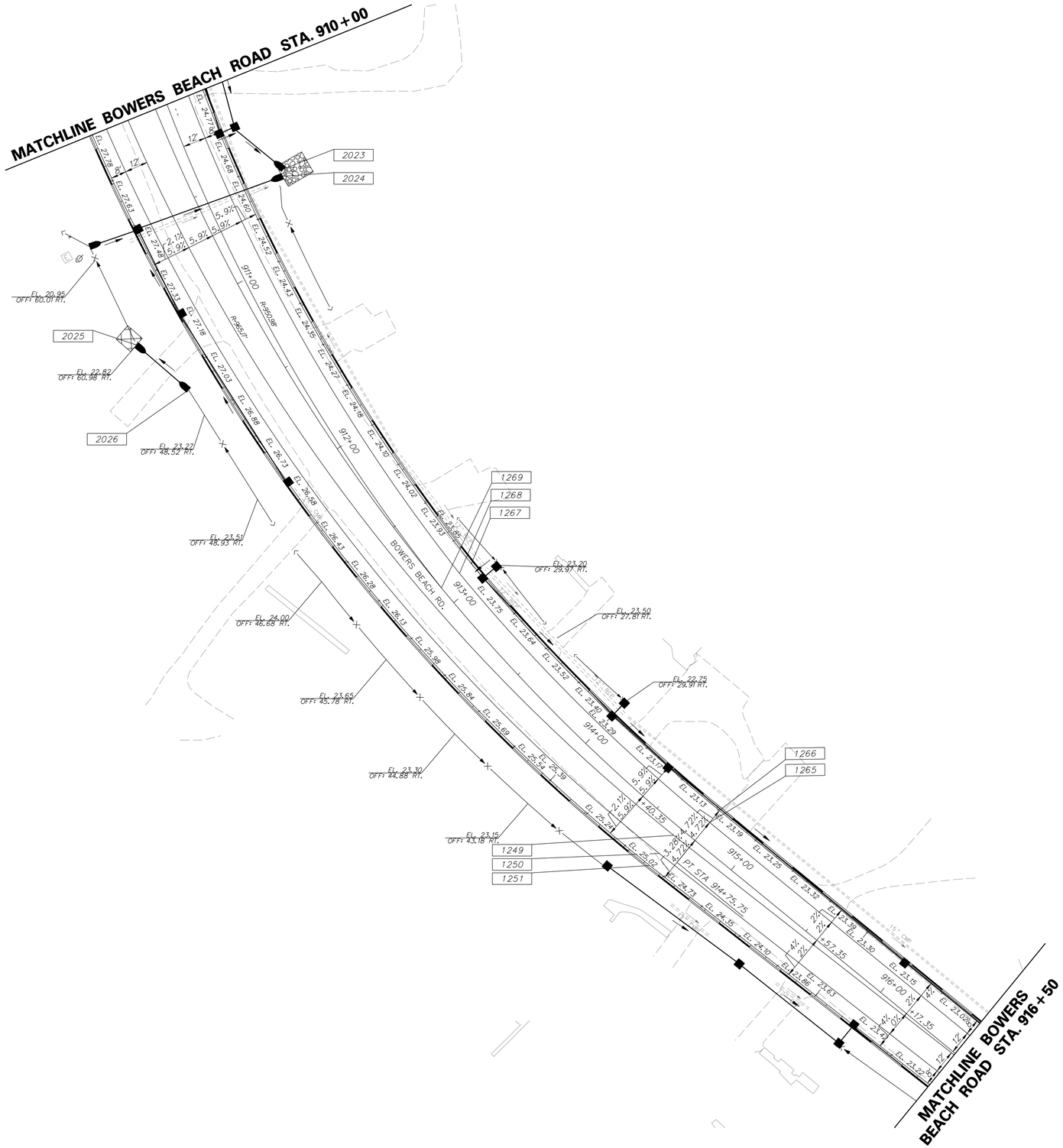

COORDINATE LIST

POINT NO.	STATION	OFFSET	NORTHING	EASTING	ELEV.
1249	914+65.54	5.00	379735.8375	646022.3875	24.43
1250	914+65.85	17.00	379728.3896	646031.7967	25.03
1251	914+66.06	25.00	379723.4246	646038.0697	24.79
1265	914+75.75	-12.00	379754.5157	646015.7742	23.57
1266	914+75.75	-20.00	379759.5831	646009.5837	23.19
1267	912+90.27	-20.00	379631.0809	645881.6772	23.80
1268	912+90.18	-12.00	379624.8569	645886.7041	24.27
1269	912+90.04	0.00	379615.5209	645894.2444	24.98
2023	910+56.65	-48.11	379533.6522	645677.2557	-
2024	910+60.01	-46.01	379533.1409	645681.0464	-
2025	911+03.10	61.11	379457.5053	645768.4223	-
2026	911+34.78	48.95	379484.5017	645791.6937	-

NOTES:

1. OFFSETS SHOWN IN THE GEOMETRY TABLES WITH A MINUS SIGN ARE TO THE LEFT OF THE CONSTRUCTION & R/W BASELINE.
2. UNLESS OTHERWISE NOTED, POINT GEOMETRY ADJACENT TO CURB AND CURB AND GUTTER IS GIVEN TO THE EDGE OF PAVEMENT.
3. RADII ARE GIVEN TO EDGE OF PAVEMENT.
4. UNLESS OTHERWISE NOTED, EDGE OF PAVEMENT ELEVATIONS AT CURB RETURNS ARE GIVEN AT 10 FOOT INTERVALS.
5. ALL WORK REQUIRED FOR CALCULATING AND STAKING OF GRADES SHALL BE PAID FOR UNDER ITEM 763501-CONSTRUCTION ENGINEERING.
6. PROPOSED CURBS OR PAVEMENT THAT TIE INTO EXISTING PAVEMENT SHALL MATCH ELEVATIONS.

DELAWARE DEPARTMENT OF TRANSPORTATION

ADDENDUMS / REVISIONS

SCALE 0 30 60 90 FEET

SR1, LITTLE HEAVEN GRADE SEPARATED INTERSECTION

CONTRACT	BRIDGE NO.	-
T200412202	DESIGNED BY:	SFP
COUNTY		
KENT	CHECKED BY:	WFC

GRADES AND GEOMETRICS

SHEET NO. 179

TOTAL SHTS. 641

3/10/2015 \\MODEL\S\Snap\PROJECTS\03517.00 IDELDOT AGMT 1223 DOTS Open End\03517.16 SR1, LITTLE HEAVEN FINAL DESIGN\DGN Files\GG18h.dgn 10:02:36 AM

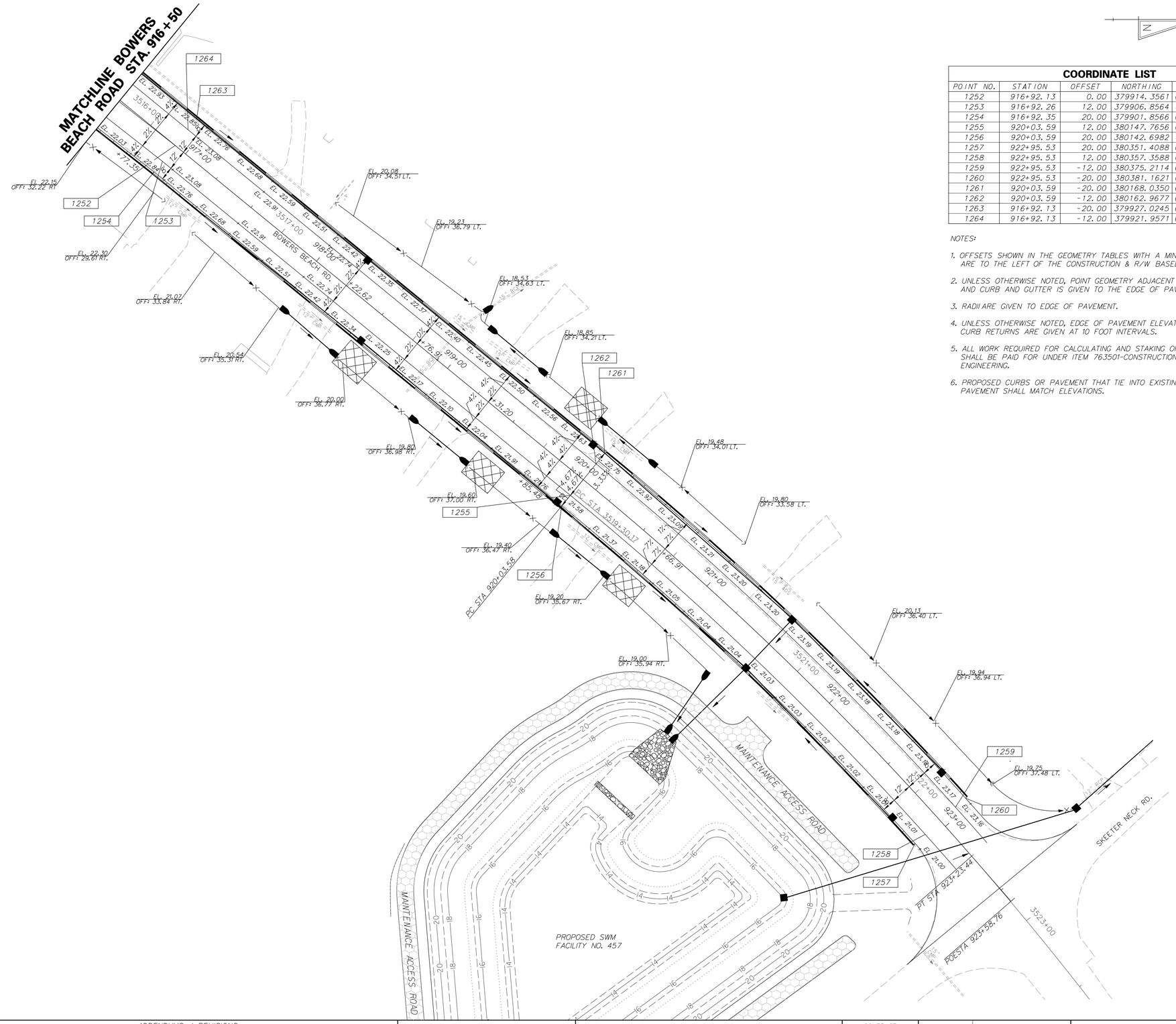

COORDINATE LIST					
POINT NO.	STATION	OFFSET	NORTHING	EASTING	ELEV.
1252	916+92.13	0.00	379914.3561	646162.1234	23.35
1253	916+92.26	12.00	379906.8564	646171.4921	23.11
1254	916+92.35	20.00	379901.8566	646177.7379	22.79
1255	920+03.59	12.00	380147.7656	646368.6946	21.92
1256	920+03.59	20.00	380142.6982	646374.8851	21.55
1257	922+95.53	20.00	380351.4088	646574.2080	21.55
1258	922+95.53	12.00	380357.3588	646568.8604	21.56
1259	922+95.53	-12.00	380375.2114	646552.8202	23.24
1260	922+95.53	-20.00	380381.1621	646547.4736	23.16
1261	920+03.59	-20.00	380168.0350	646343.9328	22.77
1262	920+03.59	-12.00	380162.9677	646350.1233	23.04
1263	916+92.13	-20.00	379927.0245	646146.6473	22.79
1264	916+92.13	-12.00	379921.9571	646152.8377	23.11

NOTES:

1. OFFSETS SHOWN IN THE GEOMETRY TABLES WITH A MINUS SIGN ARE TO THE LEFT OF THE CONSTRUCTION & R/W BASELINE.
2. UNLESS OTHERWISE NOTED, POINT GEOMETRY ADJACENT TO CURB AND CURB AND GUTTER IS GIVEN TO THE EDGE OF PAVEMENT.
3. RADII ARE GIVEN TO EDGE OF PAVEMENT.
4. UNLESS OTHERWISE NOTED, EDGE OF PAVEMENT ELEVATIONS AT CURB RETURNS ARE GIVEN AT 10 FOOT INTERVALS.
5. ALL WORK REQUIRED FOR CALCULATING AND STAKING OF GRADES SHALL BE PAID FOR UNDER ITEM 763501-CONSTRUCTION ENGINEERING.
6. PROPOSED CURBS OR PAVEMENT THAT TIE INTO EXISTING PAVEMENT SHALL MATCH ELEVATIONS.

3/12/2015
G:\PROJECTS\035I7.00 DELDOT AGMT 123 DOTS Open End\035I7.16 SR1 LITTLE HEAVEN FINAL DESIGN\DGN Files\GD19n.dgn
10:39:57 AM

DELAWARE DEPARTMENT OF TRANSPORTATION

ADDENDUMS / REVISIONS

SCALE 0 30 60 90 FEET

SR1, LITTLE HEAVEN GRADE SEPARATED INTERSECTION

CONTRACT	BRIDGE NO.	-
T200412202	DESIGNED BY:	SFP
COUNTY	CHECKED BY:	WFC
KENT		

GRADES AND GEOMETRICS

SHEET NO.
180
TOTAL SHTS.
641

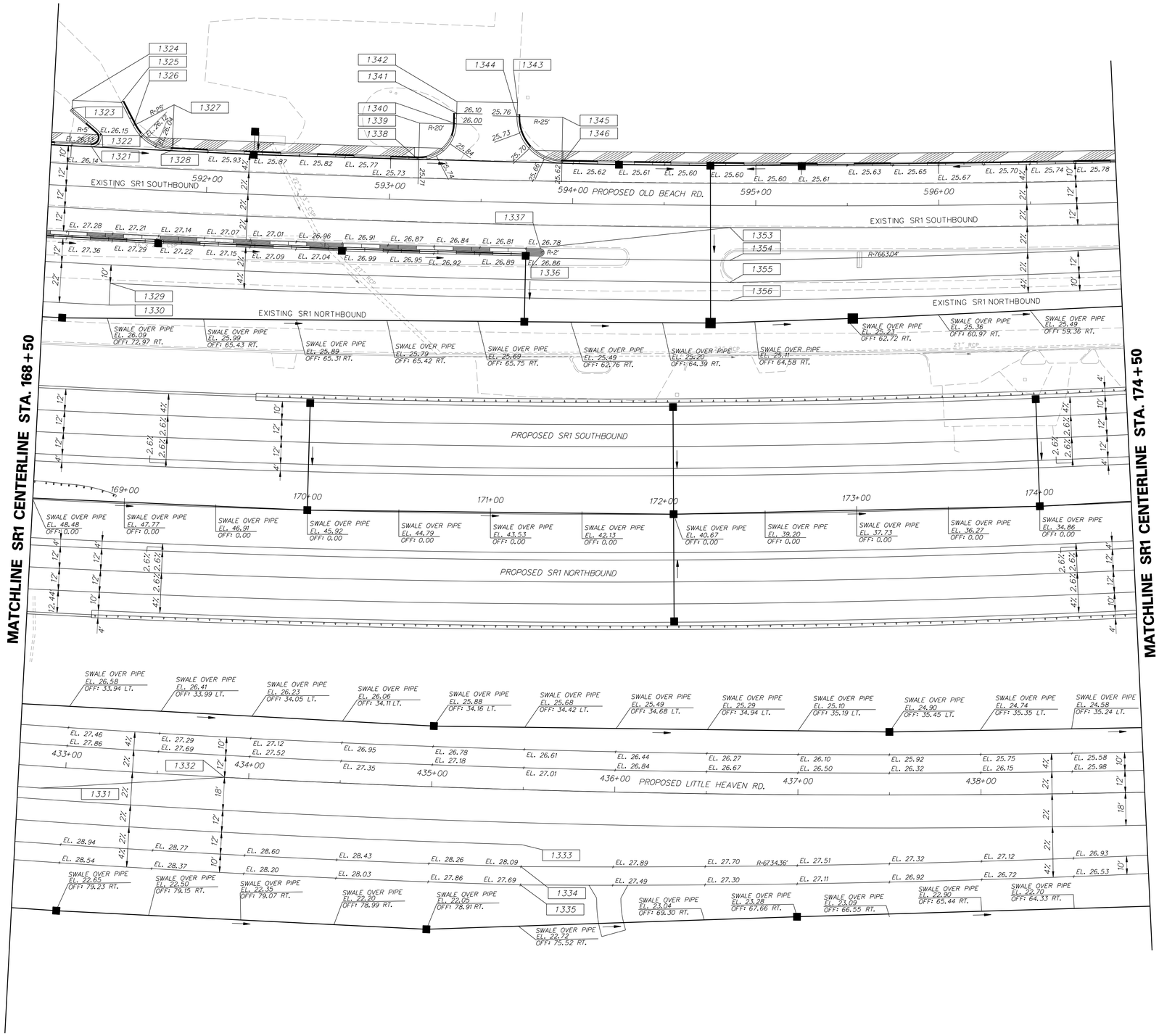

COORDINATE LIST

POINT NO.	STATION	OFFSET	NORTHING	EASTING	ELEV.
1321	591+36.03	-22.00	379725.8041	644617.6546	26.11
1322	591+39.10	-30.96	379728.2349	644608.5079	26.17
1323	591+24.35	-42.28	379712.8137	644598.2146	26.10
1324	591+24.30	-46.64	379712.4693	644593.8646	26.16
1325	591+51.14	-46.90	379739.0630	644591.7588	26.00
1326	591+58.35	-34.51	379747.1096	644603.6081	26.17
1327	591+80.13	-47.00	379767.7916	644589.5634	-
1328	591+80.13	-22.00	379769.6609	644614.4934	25.98
1329	591+50.00	52.00	379744.9439	644690.4945	27.15
1330	591+50.00	64.00	379745.7940	644702.4644	26.67
1331	432+87.01	12.00	379740.5557	644968.8248	28.38
1332	433+86.84	00.00	379839.5728	644950.8494	27.80
1333	435+50.00	30.00	380004.9621	644967.7358	27.85
1334	435+50.00	42.00	380006.0629	644979.6852	28.09
1335	435+50.11	52.00	380007.0901	644989.6329	27.69
1336	593+82.97	29.00	379976.2908	644647.4326	26.85
1337	593+83.02	25.00	379975.9342	644643.4488	26.77
1338	593+15.31	-22.00	379003.9801	644603.2260	25.71
1339	593+15.31	-42.00	379902.1320	644583.3116	-
1340	593+35.42	-42.11	379922.0331	644581.3246	26.00
1341	593+35.39	-47.91	379921.4577	644575.5617	26.10
1342	593+35.46	-54.28	379920.9214	644569.2132	26.29
1343	593+68.77	-54.57	379953.8060	644565.7060	26.24
1344	593+68.60	-47.04	379954.3873	644573.2139	25.76
1345	593+93.76	-47.00	379979.2637	644570.7302	-
1346	593+93.76	-22.00	379981.8293	644595.5982	25.62
1353	594+86.01	12.00	380077.1661	644619.3822	26.48
1354	594+86.01	30.00	380079.2294	644637.2635	26.84
1355	597+86.14	42.00	380080.7368	644649.1692	27.08
1356	594+86.25	52.00	380081.8833	644659.1033	26.68

NOTES:

1. OFFSETS SHOWN IN THE GEOMETRY TABLES WITH A MINUS SIGN ARE TO THE LEFT OF THE CONSTRUCTION & R/W BASELINE.
2. UNLESS OTHERWISE NOTED, POINT GEOMETRY ADJACENT TO CURB AND CURB AND GUTTER IS GIVEN TO THE EDGE OF PAVEMENT.
3. RADII ARE GIVEN TO EDGE OF PAVEMENT.
4. UNLESS OTHERWISE NOTED, EDGE OF PAVEMENT ELEVATIONS AT CURB RETURNS ARE GIVEN AT 10 FOOT INTERVALS.
5. ALL WORK REQUIRED FOR CALCULATING AND STAKING OF GRADES SHALL BE PAID FOR UNDER ITEM 763501-CONSTRUCTION ENGINEERING.
6. PROPOSED CURBS OR PAVEMENT THAT TIE INTO EXISTING PAVEMENT SHALL MATCH ELEVATIONS.

11/25/2014
9:30:09 Projects\03517.00 (deldot agmt 1223 dots open end)\03517.16 sr1 little heaven final design\dgn files\G020lh.dgn
3:32:38 PM

DELAWARE DEPARTMENT OF TRANSPORTATION

ADDENDUMS / REVISIONS

SCALE 0 30 60 90 FEET

SR1, LITTLE HEAVEN GRADE SEPARATED INTERSECTION

CONTRACT	BRIDGE NO.	-
T200412202	DESIGNED BY:	SFP
COUNTY		
KENT	CHECKED BY:	WFC

GRADES AND GEOMETRICS

SHEET NO.
181
TOTAL SHTS.
641

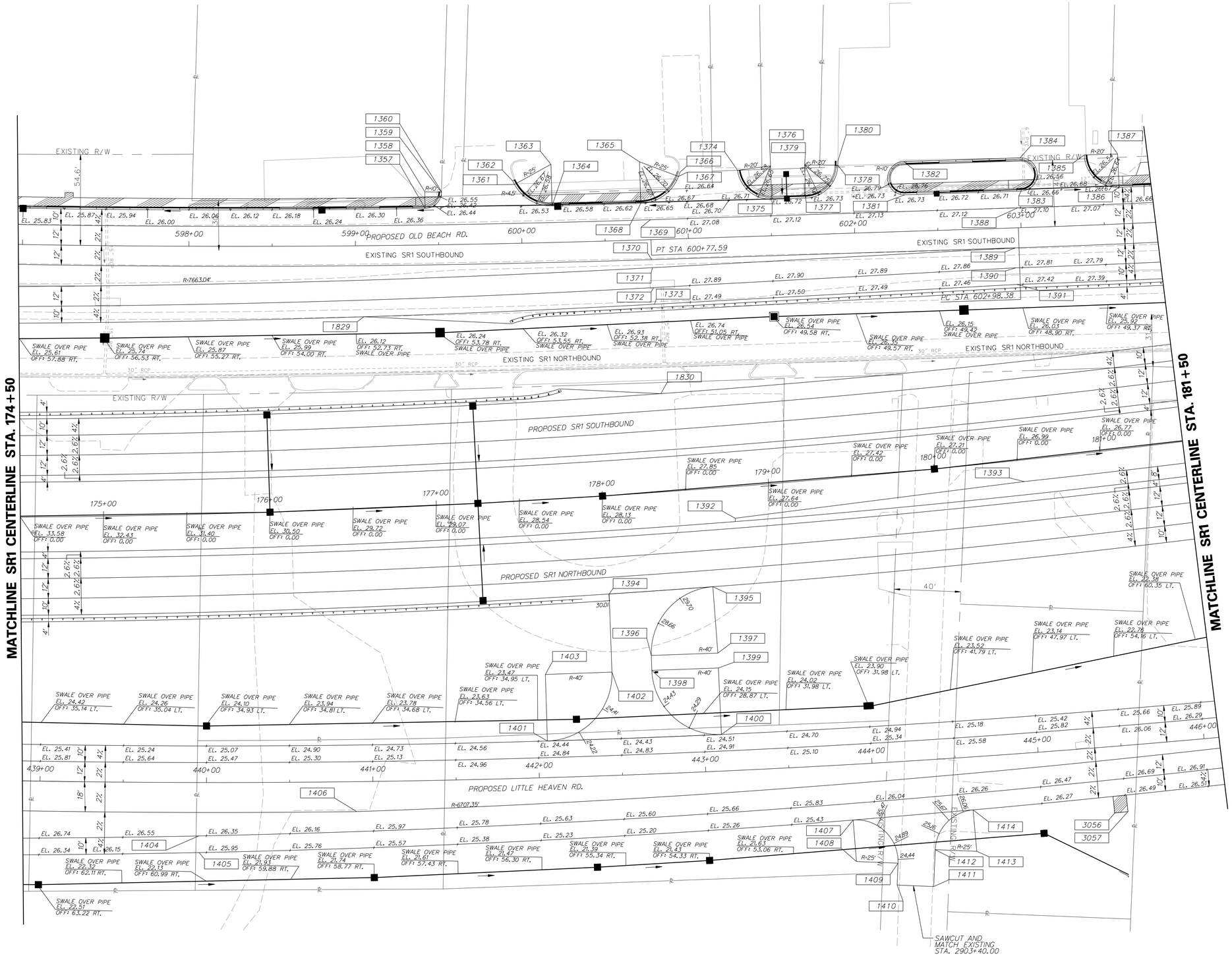

COORDINATE LIST

POINT NO.	STATION	OFFSET	NORTHING	EASTING	ELEV.
1357	599+42.16	-22.00	380523.2917	644520.0148	26.40
1358	599+42.15	-32.00	380521.5413	644510.1692	-
1359	599+52.18	-31.55	380531.4561	644508.8670	26.60
1360	599+52.20	-31.94	380531.4052	644508.4793	26.61
1361	599+96.37	-35.41	380574.0613	644497.2521	26.44
1362	599+95.20	-37.63	380572.5131	644495.2792	26.37
1363	600+18.64	-47.00	380593.7289	644481.8188	-
1364	600+18.64	-22.00	380598.3176	644506.3941	26.56
1365	600+72.17	-46.42	380646.1042	644472.4348	-
1366	600+96.36	-40.06	380671.0311	644474.0651	26.68
1367	600+95.28	-37.44	380670.4685	644476.8412	26.64
1368	600+72.14	-22.00	380650.7273	644496.4181	26.65
1369	600+77.59	-12.00	380657.9742	644505.1968	27.06
1370	600+77.59	12.00	380662.5612	644528.7543	27.54
1371	600+77.91	16.84	380663.7956	644533.4473	27.63
1372	600+78.09	28.84	380666.2637	644545.1911	27.87
1373	600+78.30	38.84	380668.3923	644554.9619	27.47
1374	601+30.89	-40.00	380704.9357	644467.5266	-
1375	601+50.79	-22.00	380727.9089	644481.3914	26.72
1376	601+50.79	-42.00	380724.0863	644461.7601	-
1377	601+71.21	-22.00	380747.9558	644477.4879	26.73
1378	601+91.19	-41.09	380763.9181	644454.9315	-
1379	601+71.25	-41.87	380744.1953	644457.9806	-
1380	601+91.31	-43.67	380763.5409	644452.3796	-
1381	602+30.83	-22.00	380806.4788	644466.0924	26.73
1382	602+30.83	-42.00	380802.6564	644446.4611	-
1383	603+00.75	-22.00	380875.0954	644452.7310	26.70
1384	603+00.75	-42.00	380871.2647	644433.1013	-
1385	603+39.70	-42.35	380909.1243	644425.2225	-
1386	603+59.85	-22.00	380932.8204	644441.1568	26.67
1387	603+59.85	-42.00	380928.7875	644421.5676	-
1388	602+98.38	-12.00	380874.6921	644462.9978	27.10
1389	602+96.06	12.00	380876.9993	644486.9993	27.58
1390	602+96.19	24.00	380879.4235	644498.7527	27.82
1391	602+96.26	34.00	380881.4437	644508.5471	27.42
1392	178+78.36	19.00	380736.8105	644674.2109	29.39
1393	180+52.84	13.00	380904.7206	644624.7801	28.48
1394	442+45.82	-109.09	380669.3295	644731.1974	30.17
1395	443+09.30	-110.93	380730.1495	644716.9594	29.84
1396	442+70.08	-71.21	380700.2281	644763.6384	26.92
1397	443+10.51	-70.95	380739.4645	644755.8597	-
1398	442+70.05	-62.27	380701.9680	644772.4145	26.20
1399	443+10.42	-62.00	380741.2043	644764.6358	-
1400	443+10.42	-22.00	380749.3610	644803.7953	24.54
1401	442+05.45	-22.00	380646.7685	644824.3274	24.43
1402	442+45.82	-62.12	380678.4627	644777.2661	26.27
1403	442+05.45	-62.00	380639.2264	644785.0448	-
1404	439+95.40	32.10	380449.1131	644913.9979	26.37
1405	439+95.62	42.10	380450.9076	644923.8356	25.97
1406	440+90.00	18.00	380540.4452	644884.4562	25.77
1407	443+86.76	33.41	380835.6747	644841.9718	25.58
1408	443+87.31	58.41	380841.5898	644866.2620	-
1409	444+11.96	60.88	380866.4117	644863.2831	24.34
1410	444+10.65	73.97	380867.9796	644876.3480	-
1411	444+32.29	76.22	380889.8229	644873.7266	-
1412	444+34.58	54.16	380887.1787	644851.6934	24.70
1413	444+59.23	56.81	380912.0006	644848.7145	-
1414	444+58.69	31.81	380905.8249	644824.4893	26.10
1829	599+04.72	42.70	380497.4303	644590.1773	27.20
1830	178+39.34	-59.00	380680.8619	644607.3830	28.07
3056	445+42.96	-39.94	380990.1289	644812.7698	-
3057	445+50.91	-39.76	380997.8544	644810.6918	-

NOTES:

1. OFFSETS SHOWN IN THE GEOMETRY TABLES WITH A MINUS SIGN ARE TO THE LEFT OF THE CONSTRUCTION & R/W BASELINE.
2. UNLESS OTHERWISE NOTED, POINT GEOMETRY ADJACENT TO CURB AND CURB AND GUTTER IS GIVEN TO THE EDGE OF PAVEMENT.
3. RADII ARE GIVEN TO EDGE OF PAVEMENT.
4. UNLESS OTHERWISE NOTED, EDGE OF PAVEMENT ELEVATIONS AT CURB RETURNS ARE GIVEN AT 10 FOOT INTERVALS.
5. ALL WORK REQUIRED FOR CALCULATING AND STAKING OF GRADES SHALL BE PAID FOR UNDER ITEM 763501-CONSTRUCTION ENGINEERING.
6. PROPOSED CURBS OR PAVEMENT THAT TIE INTO EXISTING PAVEMENT SHALL MATCH ELEVATIONS.

11/25/2014
9:50:56
S:\Projects\V035I.00 (deldot agmt 1223 dots open end)\035I.16 sr1, little heaven final design\dgn files\GG2lin.dgn
3:32:51 PM

DELAWARE DEPARTMENT OF TRANSPORTATION

ADDENDUMS / REVISIONS

SCALE 0 30 60 90 FEET

SR1, LITTLE HEAVEN GRADE SEPARATED INTERSECTION

CONTRACT	BRIDGE NO.	-
T200412202	DESIGNED BY:	SFP
COUNTY		
KENT	CHECKED BY:	WFC

GRADES AND GEOMETRICS

SHEET NO. 182
TOTAL SHTS. 641

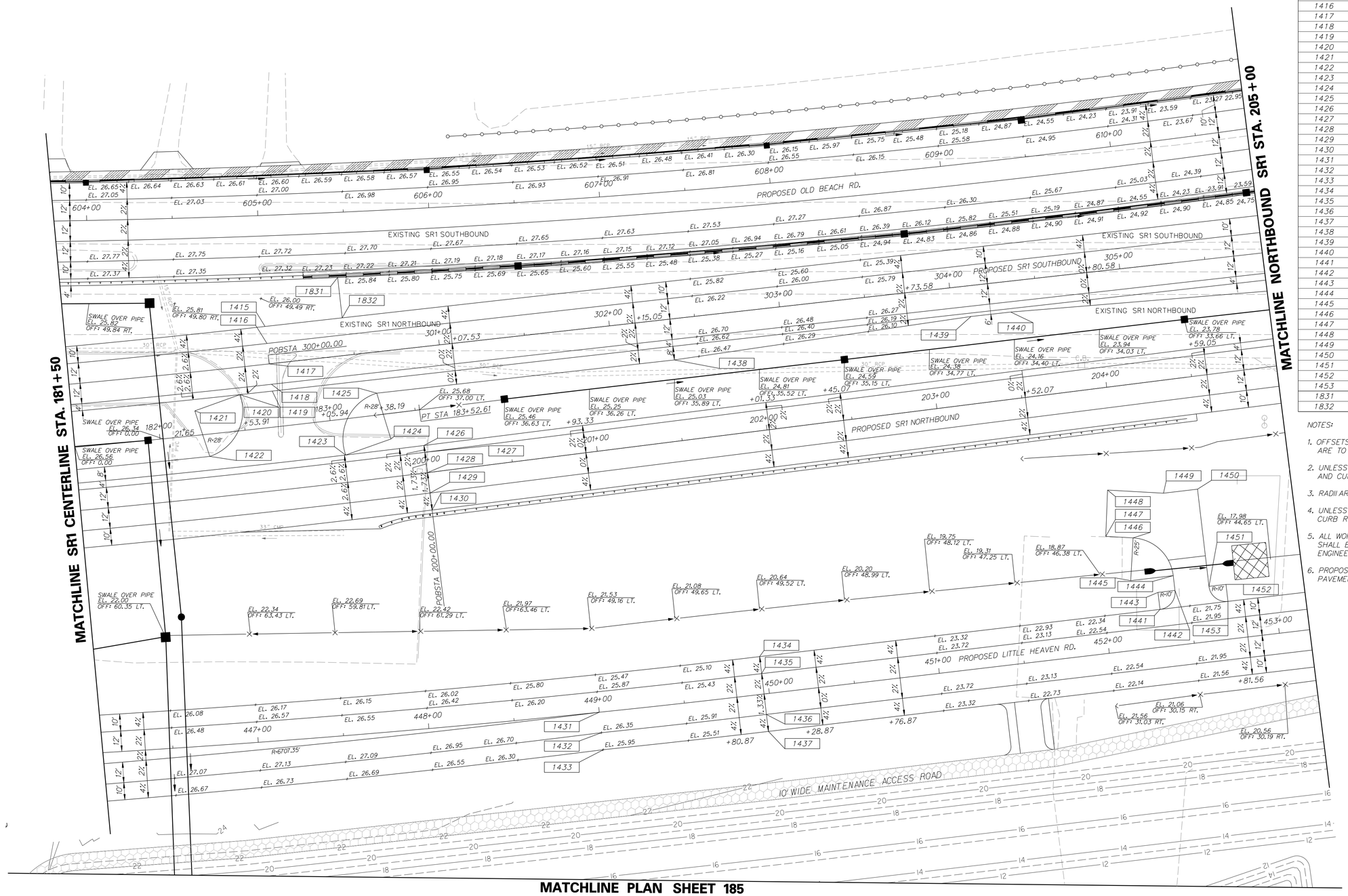

MATCHLINE PLAN SHEET 185

COORDINATE LIST

POINT NO.	STATION	OFFSET	NORTHING	EASTING	ELEV.
1415	300+00.00	-22.00	381090.6037	344495.5339	26.43
1416	300+00.00	-12.00	381093.5746	644505.0824	26.83
1417	300+00.00	0.00	381097.1397	644516.5406	27.07
1418	300+00.00	12.00	381100.7047	644527.9988	27.31
1419	300+00.00	16.00	381101.8391	644531.8182	27.39
1420	182+49.25	-21.00	381083.7404	644537.4351	27.46
1421	182+21.97	-14.36	381059.6609	644551.7242	-
1422	182+27.90	13.00	381073.2836	644576.1869	27.72
1423	183+06.68	21.00	381151.0903	644560.3703	27.59
1424	183+33.92	14.86	381175.2328	644546.1880	-
1425	183+28.99	-12.70	381162.0781	644521.4706	27.28
1426	200+00.00	-16.00	381194.9615	644546.2350	27.34
1427	200+00.00	-12.00	381196.2025	644550.0376	27.42
1428	200+00.00	0.00	381199.9256	644561.4454	27.63
1429	200+00.00	12.00	381203.6486	644572.8532	27.84
1430	200+00.00	22.00	381206.7512	644582.3598	27.44
1431	449+00.00	0.00	381325.0064	644679.8847	26.11
1432	449+00.13	12.00	381328.6038	644691.3335	26.35
1433	449+00.24	22.00	381331.6017	644700.8742	25.94
1434	449+96.87	-22.00	381410.8622	644630.2396	24.67
1435	449+96.87	-12.00	381413.8919	644639.7695	24.93
1436	449+96.87	12.00	381421.1633	644662.6415	25.33
1437	449+96.87	22.00	381424.1930	644672.1715	24.93
1438	302+35.54	24.00	381329.1767	644469.4798	26.52
1439	304+10.54	18.00	381494.4928	644411.7600	25.88
1440	304+33.91	18.00	381516.8102	644404.8162	25.78
1441	452+32.39	-22.00	381635.3199	644558.8811	21.96
1442	452+42.39	-32.00	381641.8202	644546.3213	22.14
1443	452+32.39	-32.00	381632.2902	644549.3511	-
1444	452+42.39	-40.69	381639.1862	644538.0360	22.40
1445	452+17.39	-40.69	381615.3612	644545.6104	-
1446	452+21.70	-65.32	381612.0031	644520.8369	24.03
1447	452+05.92	-68.08	381596.1342	644522.9880	24.10
1448	452+10.14	-94.81	381592.0546	644496.2340	-
1449	452+42.39	-89.17	381624.4985	644491.8361	24.09
1450	452+62.39	-89.17	381643.5585	644485.7767	-
1451	452+62.39	-32.00	381660.8802	644540.2619	21.99
1452	452+72.39	-32.00	381670.4102	644537.2322	-
1453	452+72.39	-22.00	381673.4399	644546.7622	21.49
1831	605+45.02	38.00	381126.8513	644459.3940	25.85
1832	300+45.35	-22.00	381133.9040	644482.0615	26.33

NOTES:

1. OFFSETS SHOWN IN THE GEOMETRY TABLES WITH A MINUS SIGN ARE TO THE LEFT OF THE CONSTRUCTION & R/W BASELINE.
2. UNLESS OTHERWISE NOTED, POINT GEOMETRY ADJACENT TO CURB AND CURB AND GUTTER IS GIVEN TO THE EDGE OF PAVEMENT.
3. RADII ARE GIVEN TO EDGE OF PAVEMENT.
4. UNLESS OTHERWISE NOTED, EDGE OF PAVEMENT ELEVATIONS AT CURB RETURNS ARE GIVEN AT 10 FOOT INTERVALS.
5. ALL WORK REQUIRED FOR CALCULATING AND STAKING OF GRADES SHALL BE PAID FOR UNDER ITEM 763501-CONSTRUCTION ENGINEERING.
6. PROPOSED CURBS OR PAVEMENT THAT TIE INTO EXISTING PAVEMENT SHALL MATCH ELEVATIONS.

11/25/2014
9:30:22 PM
G:\projects\035\1.00 (delaat agmt 1223 dots open end)\035\1.16 sr1, little heaven final design\dgn files\G022h.dgn

DELAWARE DEPARTMENT OF TRANSPORTATION

ADDENDUMS / REVISIONS

SCALE 0 30 60 90 FEET

SR1, LITTLE HEAVEN GRADE SEPARATED INTERSECTION

CONTRACT	BRIDGE NO.	-
T200412202	DESIGNED BY:	SFP
COUNTY		
KENT	CHECKED BY:	WFC

GRADES AND GEOMETRICS

SHEET NO.
183
TOTAL SHTS.
641

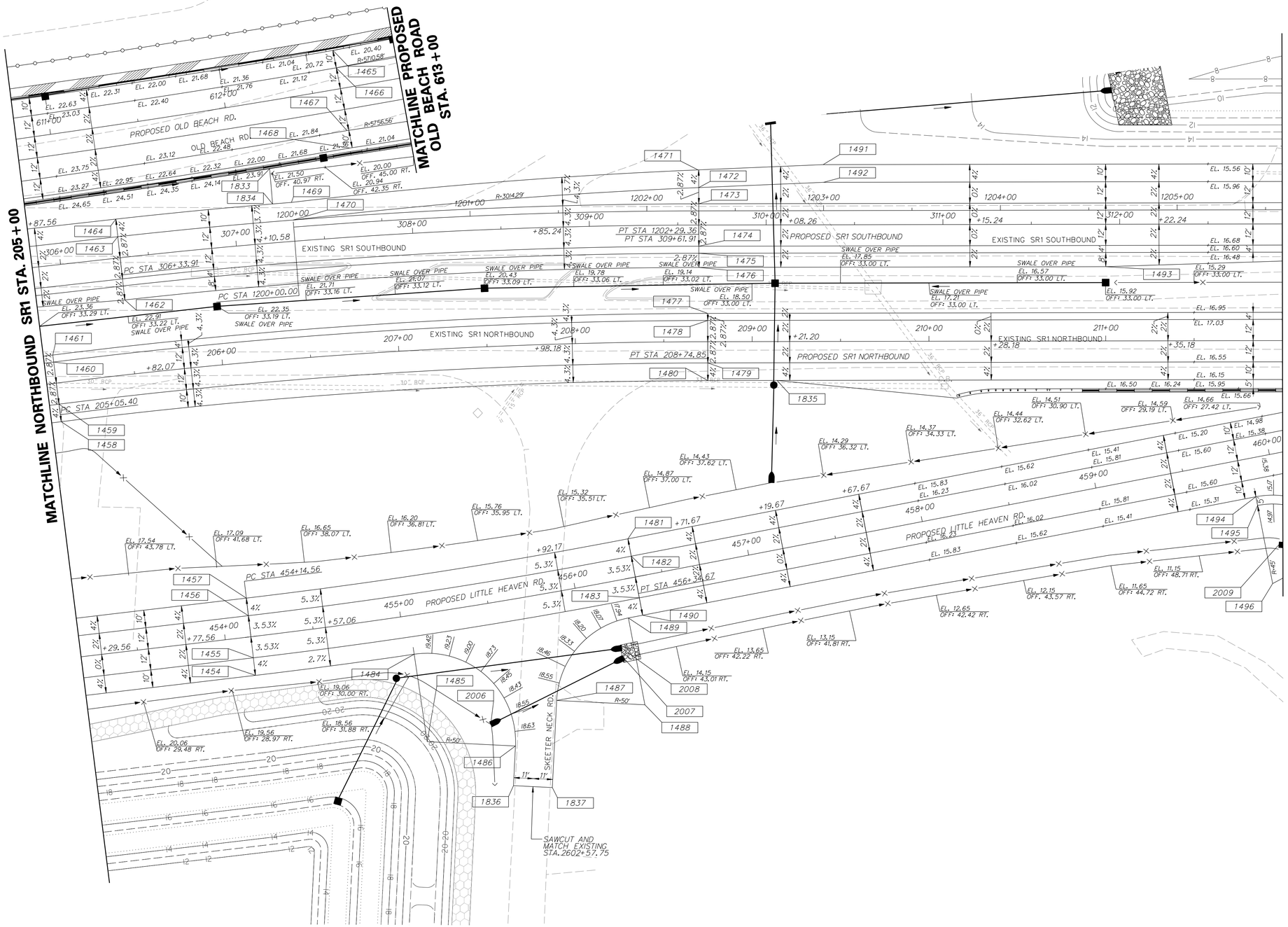

COORDINATE LIST

POINT NO.	STATION	OFFSET	NORTHING	EASTING	ELEV.
1454	454+14.56	22.00	381822.2549	644545.6216	20.28
1455	454+14.56	12.00	381819.2252	644536.0916	20.68
1456	454+14.56	-12.00	381811.9539	644513.2197	19.84
1457	454+14.56	-22.00	381808.9241	644503.6897	19.48
1458	205+05.40	22.00	381687.2116	644425.5561	23.38
1459	205+05.40	12.00	381684.1090	644416.0495	23.78
1460	205+05.40	-12.00	381676.6629	644393.2339	24.47
1461	205+05.40	-16.00	381675.4219	644389.4313	24.58
1462	306+33.91	24.00	381709.5626	644351.1272	24.24
1463	306+33.91	-12.00	381698.8674	644316.7527	25.27
1464	306+33.91	-22.00	381695.8965	644307.2042	24.87
1465	612+65.53	-22.00	381798.4680	644790.2957	20.52
1466	612+65.64	-12.00	381802.1052	644199.6115	20.92
1467	612+65.64	24.00	381814.8248	644233.2896	21.46
1468	612+65.53	34.00	381818.2544	644242.6837	21.24
1469	307+32.96	-22.00	381791.6345	644279.1411	23.86
1470	307+33.16	-12.00	381794.4803	644288.7297	24.25
1471	1202+28.97	-23.17	382013.9680	644217.5486	20.21
1472	1202+29.36	-13.18	382016.2691	644227.2802	20.61
1473	1202+29.36	-4.00	382018.0226	644236.2856	20.34
1474	309+61.91	12.00	382022.6103	644259.8430	19.66
1475	309+61.91	16.00	382023.3743	644263.7694	19.54
1476	309+61.91	24.00	382024.9033	644271.6219	19.31
1477	208+74.85	-16.00	382034.7110	644296.2005	20.09
1478	208+74.85	-12.00	382035.4755	644300.1267	19.98
1479	208+74.85	12.00	382040.0626	644323.6843	19.29
1480	208+74.85	22.00	382041.9739	644333.4999	18.89
1481	456+34.67	-22.00	382014.5415	644429.9133	16.87
1482	456+34.67	-12.00	382018.2617	644439.1956	17.27
1483	456+34.67	12.00	382027.1901	644461.4730	18.11
1484	455+04.51	22.00	381908.1788	644516.8800	19.57
1485	455+04.51	72.00	381924.7490	644564.0544	-
1486	455+52.24	82.15	381974.2507	644557.0127	18.66
1487	455+78.87	60.64	381992.2465	644527.3073	18.59
1488	456+26.51	72.00	382041.7482	644520.2656	-
1489	456+26.51	22.00	382023.2736	644473.8039	17.84
1490	456+34.67	22.00	382030.9103	644470.7553	17.71
1491	1202+99.80	-26.00	382082.9570	644201.2285	18.99
1492	1203+00.00	-16.00	382085.0645	644211.0059	19.38
1493	311+92.09	24.00	382250.8390	644227.6281	17.00
1494	1000+15.70	51.66	382358.8594	644339.3184	15.23
1495	1000+20.66	52.28	382360.7195	644343.9595	15.03
1496	1000+54.98	61.00	382337.4603	644385.7296	-
1833	307+22.34	-42.00	381775.9471	644262.7354	23.66
1834	307+22.34	-22.00	381781.3235	644281.9992	24.06
1835	209+14.08	22.00	382080.4747	644326.0031	18.65
1836	455+47.67	104.10	381977.4116	644579.2333	18.41
1837	455+68.43	108.77	381999.1924	644576.1350	18.91
2006	455+40.69	67.82	381958.2030	644547.6334	-
2007	456+19.75	43.68	382024.9034	644496.4817	-
2008	456+19.75	38.08	382022.8441	644491.2683	-
2009	459+95.63	51.08	382376.7761	644363.4612	-

NOTES:

1. OFFSETS SHOWN IN THE GEOMETRY TABLES WITH A MINUS SIGN ARE TO THE LEFT OF THE CONSTRUCTION & R/W BASELINE.
2. UNLESS OTHERWISE NOTED, POINT GEOMETRY ADJACENT TO CURB AND CURB AND GUTTER IS GIVEN TO THE EDGE OF PAVEMENT.
3. RADII ARE GIVEN TO EDGE OF PAVEMENT.
4. UNLESS OTHERWISE NOTED, EDGE OF PAVEMENT ELEVATIONS AT CURB RETURNS ARE GIVEN AT 10 FOOT INTERVALS.
5. ALL WORK REQUIRED FOR CALCULATING AND STAKING OF GRADES SHALL BE PAID FOR UNDER ITEM 763501-CONSTRUCTION ENGINEERING.
6. PROPOSED CURBS OR PAVEMENT THAT TIE INTO EXISTING PAVEMENT SHALL MATCH ELEVATIONS.

3/12/2015
G:\PROJECTS\03517.00 (DELDOT AGMT 1223 DOTS Open End\03517.46 SR1, LITTLE HEAVEN FINAL DESIGN\DGN Files\GG23h.dgn
12:40:38 AM

DELAWARE DEPARTMENT OF TRANSPORTATION

ADDENDUMS / REVISIONS

SCALE 0 30 60 90 FEET

SR1, LITTLE HEAVEN GRADE SEPARATED INTERSECTION

CONTRACT	BRIDGE NO.	-
T200412202	DESIGNED BY:	SFP
COUNTY		
KENT	CHECKED BY:	WFC

GRADES AND GEOMETRICS

SHEET NO. 184

TOTAL SHTS. 641

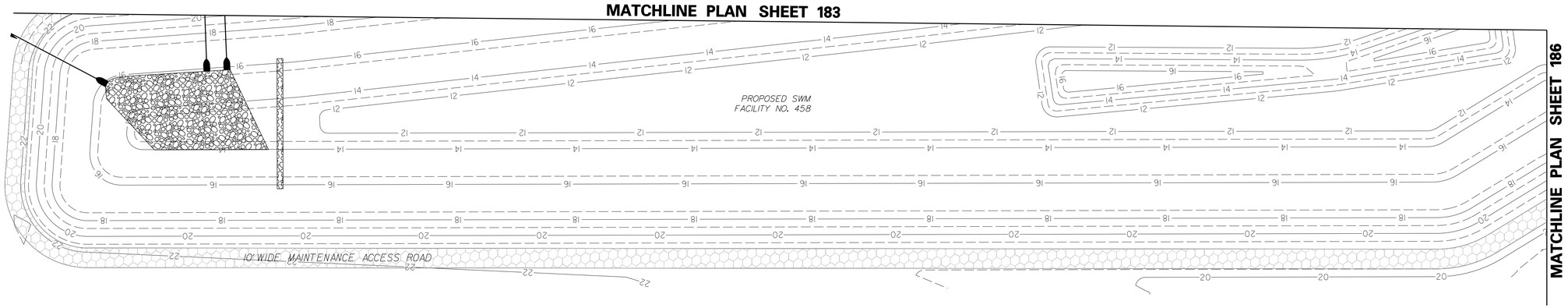

NOTES:

1. OFFSETS SHOWN IN THE GEOMETRY TABLES WITH A MINUS SIGN ARE TO THE LEFT OF THE CONSTRUCTION & R/W BASELINE.
2. UNLESS OTHERWISE NOTED, POINT GEOMETRY ADJACENT TO CURB AND CURB AND GUTTER IS GIVEN TO THE EDGE OF PAVEMENT.
3. RADII ARE GIVEN TO EDGE OF PAVEMENT.
4. UNLESS OTHERWISE NOTED, EDGE OF PAVEMENT ELEVATIONS AT CURB RETURNS ARE GIVEN AT 10 FOOT INTERVALS.
5. ALL WORK REQUIRED FOR CALCULATING AND STAKING OF GRADES SHALL BE PAID FOR UNDER ITEM 763501-CONSTRUCTION ENGINEERING.
6. PROPOSED CURBS OR PAVEMENT THAT TIE INTO EXISTING PAVEMENT SHALL MATCH ELEVATIONS.

DELAWARE DEPARTMENT OF TRANSPORTATION	ADDENDUMS / REVISIONS	SCALE 0 30 60 90 FEET	SR1, LITTLE HEAVEN GRADE SEPARATED INTERSECTION	CONTRACT T200412202	BRIDGE NO. -	GRADES AND GEOMETRICS	SHEET NO. 185
				COUNTY KENT	DESIGNED BY: SFP		TOTAL SHTS. 641
					CHECKED BY: WFC		

11/25/2014
9:36:52 PM
G:\projects\03517.00 (deldot agmt 1223 dots open end)\03517.16 sr1, little heaven final design\dgn files\GG24h.dgn

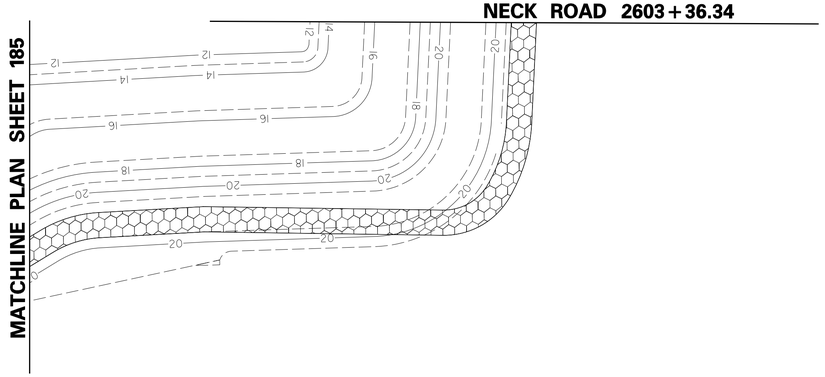

NOTES:

1. OFFSETS SHOWN IN THE GEOMETRY TABLES WITH A MINUS SIGN ARE TO THE LEFT OF THE CONSTRUCTION & R/W BASELINE.
2. UNLESS OTHERWISE NOTED, POINT GEOMETRY ADJACENT TO CURB AND CURB AND GUTTER IS GIVEN TO THE EDGE OF PAVEMENT.
3. RADII ARE GIVEN TO EDGE OF PAVEMENT.
4. UNLESS OTHERWISE NOTED, EDGE OF PAVEMENT ELEVATIONS AT CURB RETURNS ARE GIVEN AT 10 FOOT INTERVALS.
5. ALL WORK REQUIRED FOR CALCULATING AND STAKING OF GRADES SHALL BE PAID FOR UNDER ITEM 763501-CONSTRUCTION ENGINEERING.
6. PROPOSED CURBS OR PAVEMENT THAT TIE INTO EXISTING PAVEMENT SHALL MATCH ELEVATIONS.

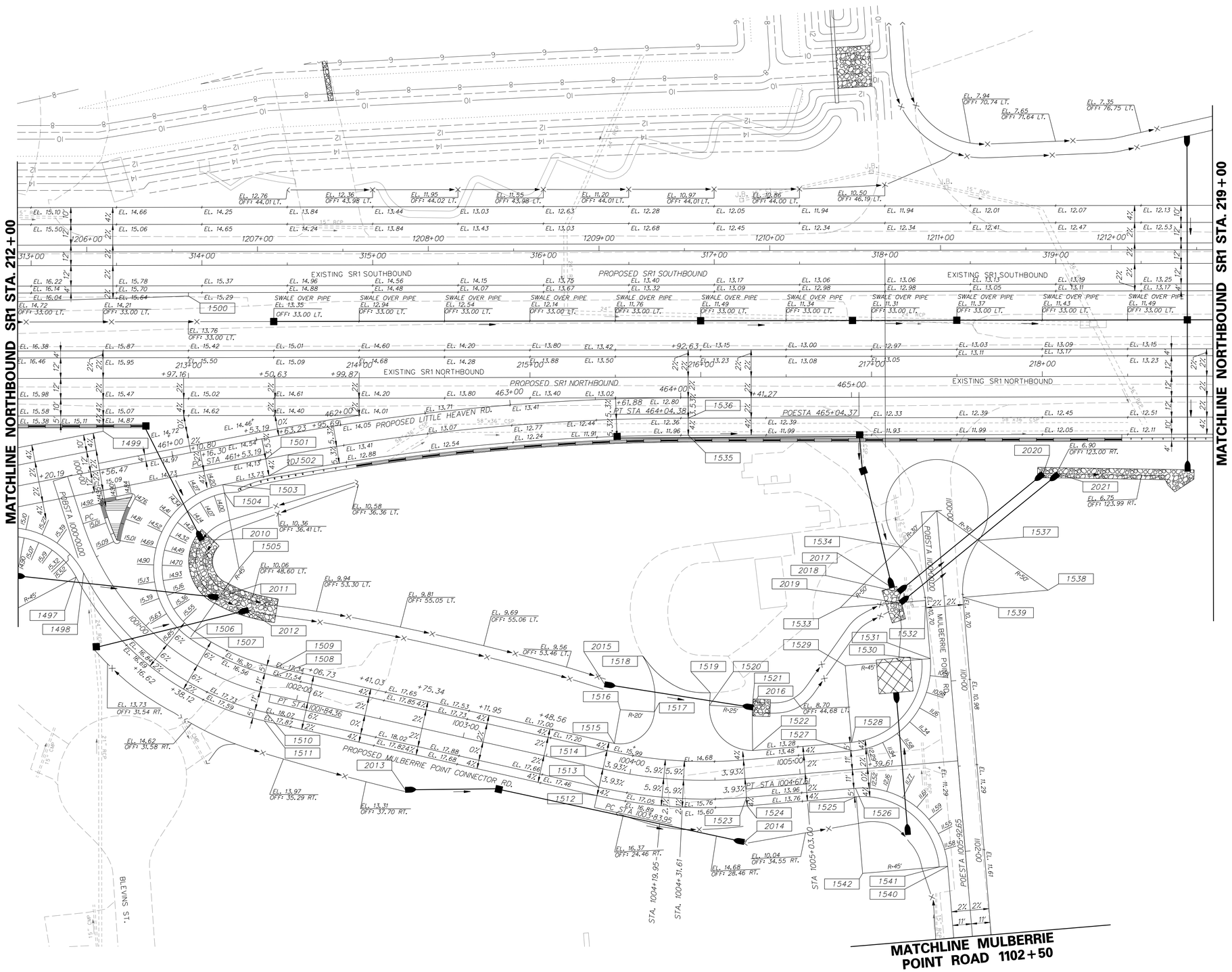

COORDINATE LIST

POINT NO.	STATION	OFFSET	NORTHING	EASTING	ELEV.
1497	1000+54.98	16.00	382412.5063	644357.5024	15.57
1498	1000+54.98	11.00	382416.4003	644354.3660	15.77
1499	460+62.73	-22.00	382411.8725	644270.6993	14.87
1500	313+92.06	18.00	382445.9807	644183.5177	15.31
1501	461+53.19	12.00	382508.4850	644268.5775	14.09
1502	461+53.19	22.00	382512.2052	644277.8598	13.69
1503	1000+37.58	-84.82	382486.6302	644288.1098	14.07
1504	1000+48.72	-83.74	382488.4903	644292.7509	13.87
1505	1001+25.41	-61.00	382505.2311	644334.5211	-
1506	1001+25.41	-16.00	382486.7478	644375.5499	15.76
1507	1001+25.41	-11.00	382484.6941	644380.1087	16.06
1508	1001+84.36	-11.00	382537.5827	644392.3115	17.28
1509	1001+84.36	-16.00	382537.7339	644387.3138	17.08
1510	1001+84.36	11.00	382536.9173	644414.3015	18.00
1511	1001+84.36	16.00	382536.7660	644419.2992	17.80
1512	1003+83.95	16.00	382736.2613	644425.3360	17.09
1513	1003+83.95	11.00	382736.4125	644420.3383	17.29
1514	1003+83.95	-11.00	382737.0780	644398.3484	16.43
1515	1003+87.34	-16.00	382740.4205	644393.4276	16.13
1516	1003+86.60	-35.99	382740.1384	644373.4296	-
1517	1004+09.58	-38.17	382759.9681	644370.8252	-
1518	1003+94.87	-69.44	382747.0119	644340.0248	-
1519	1004+47.86	-51.25	382789.9884	644353.6593	-
1520	1004+47.24	-43.94	382790.9433	644360.9297	-
1521	1004+75.25	-41.00	382815.7304	644357.6742	-
1522	1004+73.44	-16.07	382820.7345	644382.1683	13.92
1523	1004+67.61	11.00	382822.4461	644409.8015	15.12
1524	1004+67.61	16.00	382823.7990	644414.6150	14.92
1525	1005+31.65	16.00	382885.4452	644397.2891	12.62
1526	1005+31.65	11.00	382884.0924	644392.4756	12.82
1527	1005+31.65	-11.00	382878.1398	644371.2962	12.55
1528	1005+31.65	-16.00	382876.7870	644366.4827	12.35
1529	1005+31.65	-61.00	382864.6113	644323.1612	-
1530	1005+76.65	-61.00	382907.9328	644310.9856	10.69
1531	1005+81.65	-61.00	382912.7464	644309.6327	10.89
1532	1100+51.76	11.00	382903.5171	644276.7947	10.68
1533	1100+51.76	61.00	382855.3821	644290.3232	-
1534	1100+19.41	22.87	382883.3323	644248.8649	10.91
1535	464+04.38	22.00	382748.8087	644208.0916	11.96
1536	464+04.38	12.00	382746.8974	644198.2760	12.36
1537	1100+19.41	-22.87	382927.3758	644236.4863	10.91
1538	1100+51.76	-61.00	382972.8316	644257.3137	-
1539	1100+51.76	-11.00	382924.6965	644270.8422	10.68
1540	1005+81.65	61.00	382945.7559	644427.0821	11.67
1541	1005+76.64	61.00	382940.9424	644428.4350	11.47
1542	1005+31.65	61.00	382897.6191	644440.6044	-
2010	1000+80.27	-57.87	382480.7464	644322.3836	-
2011	1001+25.04	-40.18	382496.4340	644353.3886	-
2012	1001+51.35	-42.77	382515.2259	644357.2654	-
2013	1002+73.62	37.29	382625.3457	644443.2836	-
2014	1004+64.51	36.92	382826.0704	644435.6871	-
2015	1003+74.04	-48.56	382728.3124	644360.5060	-
2016	1004+75.85	-41.12	382816.2755	644357.3964	-
2017	1100+42.70	29.81	382882.9551	644273.1623	-
2018	1100+45.47	26.29	382887.0944	644274.8767	-
2019	1100+51.96	25.75	382889.3737	644280.9832	-
2020	-	-	382957.1539	644190.8562	6.90
2021	-	-	382965.8305	644189.2906	6.90

NOTES:

1. OFFSETS SHOWN IN THE GEOMETRY TABLES WITH A MINUS SIGN ARE TO THE LEFT OF THE CONSTRUCTION & R/W BASELINE.
2. UNLESS OTHERWISE NOTED, POINT GEOMETRY ADJACENT TO CURB AND CURB AND GUTTER IS GIVEN TO THE EDGE OF PAVEMENT.
3. RADII ARE GIVEN TO EDGE OF PAVEMENT.
4. UNLESS OTHERWISE NOTED, EDGE OF PAVEMENT ELEVATIONS AT CURB RETURNS ARE GIVEN AT 10 FOOT INTERVALS.
5. ALL WORK REQUIRED FOR CALCULATING AND STAKING OF GRADES SHALL BE PAID FOR UNDER ITEM 763501-CONSTRUCTION ENGINEERING.
6. PROPOSED CURBS OR PAVEMENT THAT TIE INTO EXISTING PAVEMENT SHALL MATCH ELEVATIONS.

11/25/2014
G:\projects\035f1.00 (deldot agmt 123 dots open end)\035f1.16 sr1, little heaven final design\dgn files\ag26lh.dgn
3:30:06 PM

DELAWARE DEPARTMENT OF TRANSPORTATION

ADDENDUMS / REVISIONS

SCALE 0 30 60 90 FEET

SR1, LITTLE HEAVEN GRADE SEPARATED INTERSECTION

CONTRACT	BRIDGE NO.	-
T200412202	DESIGNED BY:	SFP
COUNTY	CHECKED BY:	WFC
KENT		

GRADES AND GEOMETRICS

SHEET NO. 187
TOTAL SHTS. 641

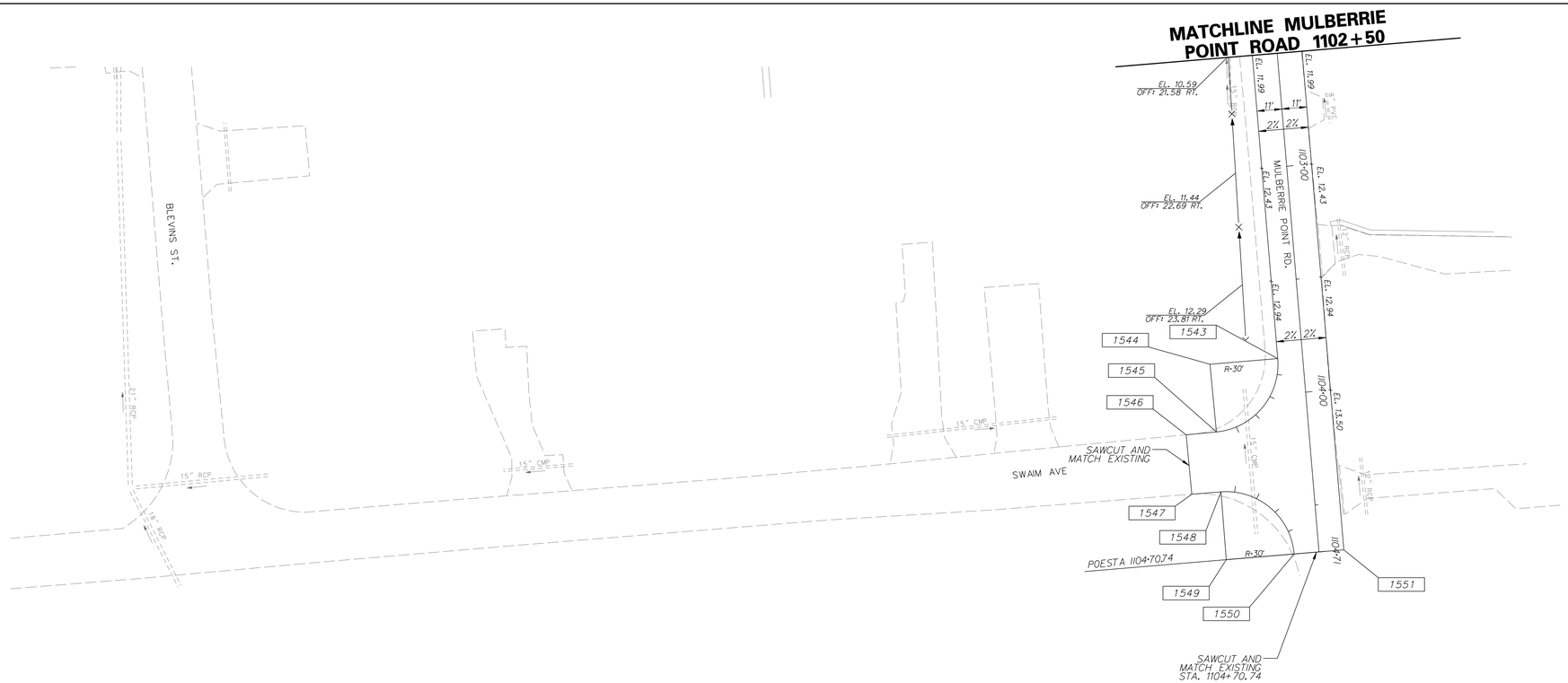

COORDINATE LIST

POINT NO.	STATION	OFFSET	NORTHING	EASTING	ELEV.
1543	1103+84.24	11.00	382993.4721	644596.8587	13.32
1544	1103+84.24	41.00	382964.5899	644604.9716	-
1545	1104+14.23	40.64	382973.0473	644633.7590	-
1546	1104+14.38	54.07	382960.1725	644637.5415	-
1547	1104+40.68	53.76	382967.5871	644662.7792	-
1548	1104+40.74	40.86	382980.0203	644659.3483	-
1549	1104+70.74	41.00	382988.0005	644688.2674	-
1550	1104+70.74	11.00	383016.8815	644680.1503	-
1551	1104+70.74	-11.00	383038.0609	644674.1978	-

NOTES:

1. OFFSETS SHOWN IN THE GEOMETRY TABLES WITH A MINUS SIGN ARE TO THE LEFT OF THE CONSTRUCTION & R/W BASELINE.
2. UNLESS OTHERWISE NOTED, POINT GEOMETRY ADJACENT TO CURB AND CURB AND GUTTER IS GIVEN TO THE EDGE OF PAVEMENT.
3. RADII ARE GIVEN TO EDGE OF PAVEMENT.
4. UNLESS OTHERWISE NOTED, EDGE OF PAVEMENT ELEVATIONS AT CURB RETURNS ARE GIVEN AT 10 FOOT INTERVALS.
5. ALL WORK REQUIRED FOR CALCULATING AND STAKING OF GRADES SHALL BE PAID FOR UNDER ITEM 763501-CONSTRUCTION ENGINEERING.
6. PROPOSED CURBS OR PAVEMENT THAT TIE INTO EXISTING PAVEMENT SHALL MATCH ELEVATIONS.

DELAWARE DEPARTMENT OF TRANSPORTATION

ADDENDUMS / REVISIONS

SCALE 0 30 60 90 FEET

SR1, LITTLE HEAVEN GRADE SEPARATED INTERSECTION

CONTRACT	BRIDGE NO.	-
T200412202	DESIGNED BY:	SFP
COUNTY		
KENT	CHECKED BY:	WFC

GRADES AND GEOMETRICS

SHEET NO. 188
TOTAL SHTS. 641

11/25/2014
9:56:01 AM
S:\Projects\035I7.00 (deldot agmt 1223 dots open end)\035I7.16 sr1, little heaven final design\dgn files\GG27h.dgn

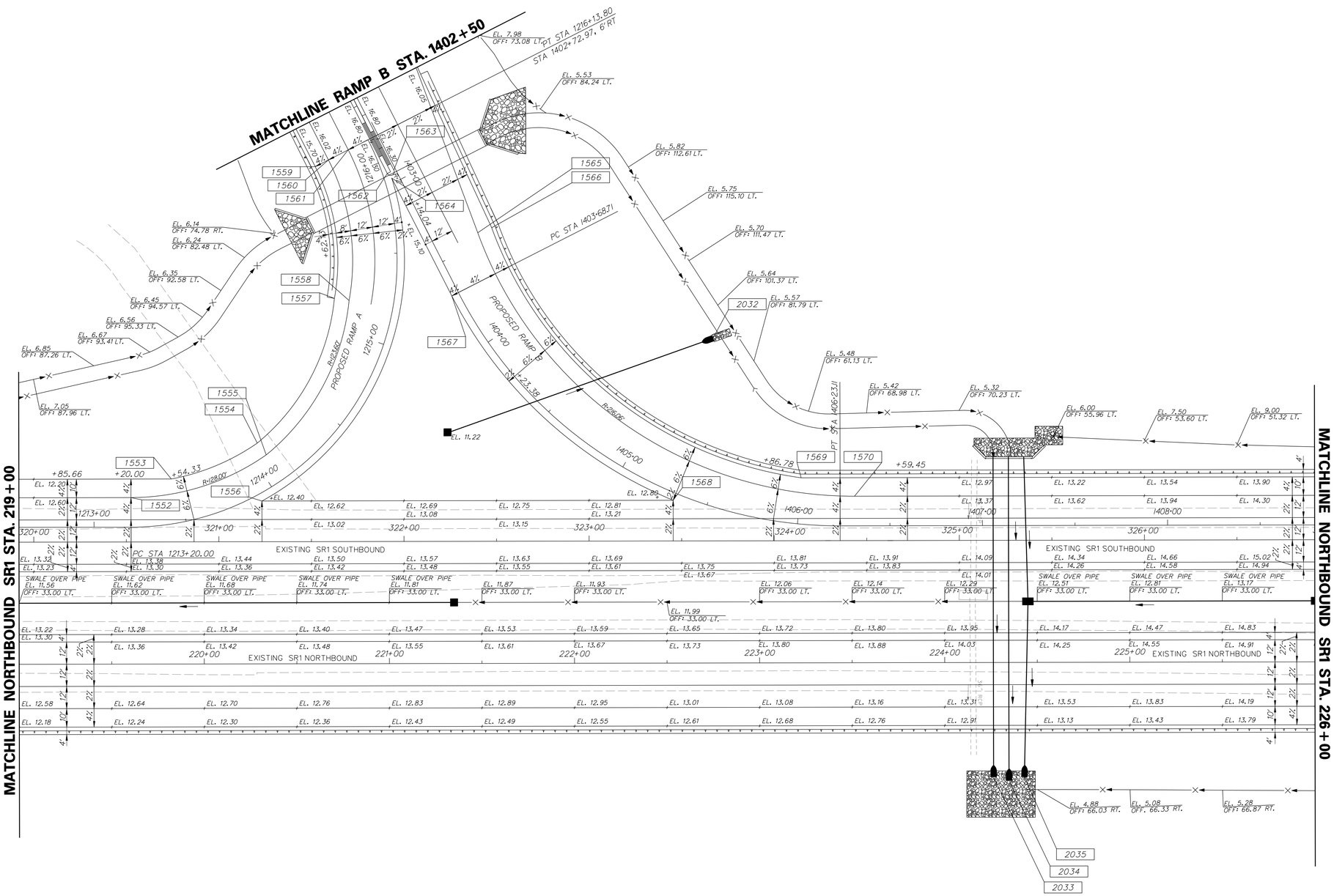

COORDINATE LIST					
POINT NO.	STATION	OFFSET	NORTHING	EASTING	ELEV.
1552	1213+20.00	-16.00	383086.2608	644016.0546	12.42
1553	1213+46.33	-24.00	383105.7648	644002.0691	11.74
1554	1214+07.16	-24.00	383147.6746	643974.2291	11.12
1555	1214+07.52	-16.00	383153.6250	643979.5855	11.60
1556	1213+91.76	4.00	383156.0780	644004.4975	12.59
1557	1215+19.60	-32.00	383173.7931	643889.5578	12.16
1558	1215+20.02	-24.00	383181.7897	643889.1504	12.65
1559	1216+13.79	-32.00	383150.1594	643821.5959	15.04
1560	1216+13.79	-24.00	383156.4708	643816.6799	15.36
1561	1216+13.79	-12.00	383165.9382	643809.3065	15.84
1562	1215+93.15	2.50	383189.0538	643817.8260	15.92
1563	1402+93.91	1.00	383192.2093	643815.3679	15.92
1564	1215+90.10	4.00	383191.8756	643819.8212	15.68
1565	1403+44.69	-24.00	383243.1348	643840.0603	14.14
1566	1403+45.67	-31.94	383250.0030	643835.9581	13.79
1567	1403+68.71	4.00	383235.8064	643876.2154	14.25
1568	1405+32.11	4.00	383374.1328	643962.0383	12.92
1569	1405+99.53	-24.93	383439.7657	643937.0330	12.19
1570	1406+30.89	-16.00	383469.9258	643941.3480	12.99
2032	1405+10.70	-84.51	383378.7005	643871.9922	-
2033	-	-	383572.4454	644076.1348	5.79
2034	-	-	383580.9784	644076.3862	3.87
2035	-	-	383588.7675	644072.9965	5.79

NOTES:

1. OFFSETS SHOWN IN THE GEOMETRY TABLES WITH A MINUS SIGN ARE TO THE LEFT OF THE CONSTRUCTION & R/W BASELINE.
2. UNLESS OTHERWISE NOTED, POINT GEOMETRY ADJACENT TO CURB AND CURB AND GUTTER IS GIVEN TO THE EDGE OF PAVEMENT.
3. RADII ARE GIVEN TO EDGE OF PAVEMENT.
4. UNLESS OTHERWISE NOTED, EDGE OF PAVEMENT ELEVATIONS AT CURB RETURNS ARE GIVEN AT 10 FOOT INTERVALS.
5. ALL WORK REQUIRED FOR CALCULATING AND STAKING OF GRADES SHALL BE PAID FOR UNDER ITEM 763501-CONSTRUCTION ENGINEERING.
6. PROPOSED CURBS OR PAVEMENT THAT TIE INTO EXISTING PAVEMENT SHALL MATCH ELEVATIONS.

3/10/2005
\\VMDOFILE\Snap\PROJECTS\03517.00 (DELDOT AGMT 123 DOTS Open End)\03517.16 SR1, LITTLE HEAVEN FINAL DESIGN\DGN Files\GG28ln.dgn
NEZ209 AM

DELAWARE DEPARTMENT OF TRANSPORTATION	ADDENDUMS / REVISIONS	SCALE 0 30 60 90 FEET	SR1, LITTLE HEAVEN GRADE SEPARATED INTERSECTION	CONTRACT T200412202	BRIDGE NO. -	GRADES AND GEOMETRICS	SHEET NO. 189
				COUNTY KENT	DESIGNED BY: SFP		TOTAL SHTS. 641
					CHECKED BY: WFC		

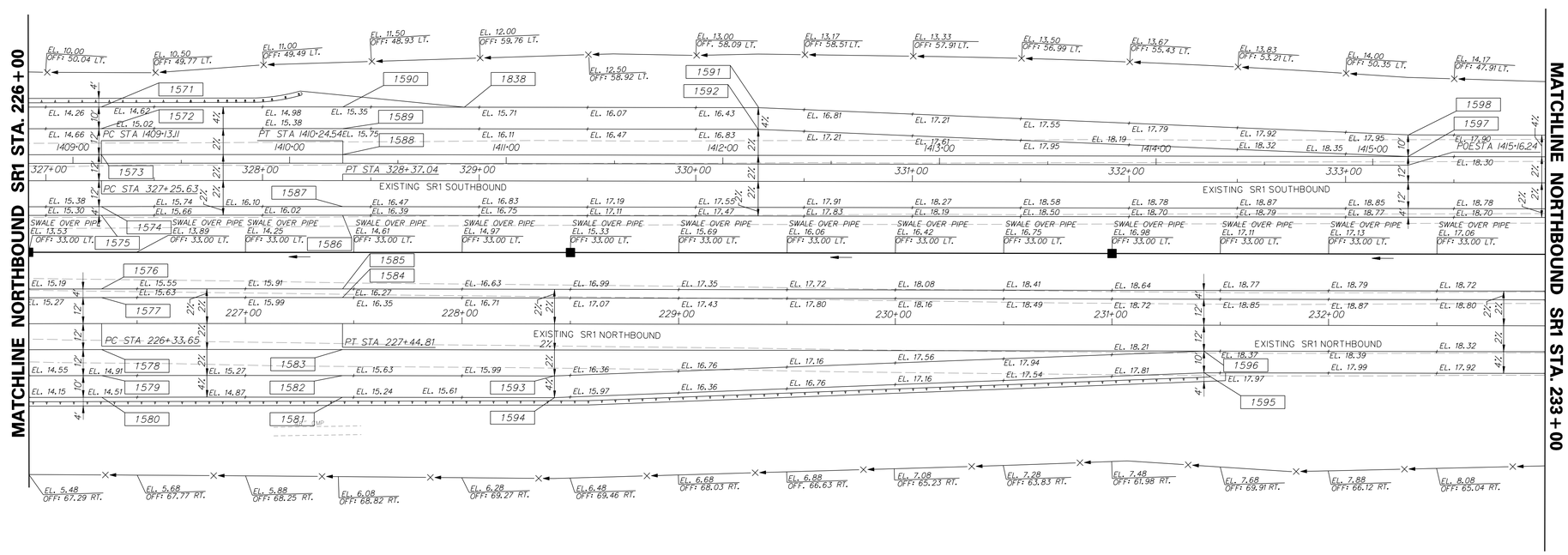

COORDINATE LIST

POINT NO.	STATION	OFFSET	NORTHING	EASTING	ELEV.
1571	1409+13.11	-26.00	383745.0289	643877.5926	14.45
1572	1409+13.11	-16.00	383746.9402	643887.4083	14.85
1573	1409+13.11	-4.00	383749.2337	643899.1870	15.09
1574	327+25.63	12.00	383753.8208	643922.7446	15.57
1575	327+25.63	16.00	383754.5853	643926.6709	15.49
1576	226+33.65	-16.00	383761.0837	643960.0441	15.43
1577	226+33.65	-12.00	383761.8482	643963.9703	15.51
1578	226+33.65	12.00	383766.4353	643987.5279	15.03
1579	226+33.65	24.00	383768.7289	643999.3067	14.79
1580	226+33.65	34.00	383770.6402	644099.1223	14.39
1581	227+44.81	34.00	383879.6698	643988.1022	15.19
1582	227+44.81	24.00	383877.7940	643978.2796	15.59
1583	227+44.81	12.00	383875.5442	643966.4924	15.83
1584	227+44.81	-12.00	383871.0445	643942.9180	16.31
1585	227+44.81	-16.00	383870.2945	643938.9889	16.23
1586	328+37.04	16.00	383863.9200	643905.5918	16.29
1587	328+37.04	12.00	383863.1701	643901.6627	16.37
1588	1410+24.54	-4.00	383858.6704	643878.0883	15.89
1589	1410+24.54	-16.00	383856.4206	643866.3011	15.65
1590	1410+24.54	-26.00	383854.5457	643856.4784	15.25
1591	1412+16.52	-26.00	384043.1195	643820.4852	16.64
1592	1412+16.32	-16.00	384044.7980	643830.3453	17.04
1593	228+42.50	24.00	383973.7548	643959.9635	16.30
1594	228+42.70	34.00	383975.8260	643969.7486	15.90
1595	231+42.70	22.00	384268.2563	643901.7156	17.96
1596	231+42.50	12.00	384266.1851	643891.9304	18.36
1597	333+28.82	-12.00	384341.7280	643785.8867	18.33
1598	333+29.02	-22.00	384340.0495	643776.0265	17.93
1838	1410+80.62	-26.00	383909.6309	643845.9643	15.66

NOTES:

1. OFFSETS SHOWN IN THE GEOMETRY TABLES WITH A MINUS SIGN ARE TO THE LEFT OF THE CONSTRUCTION & R/W BASELINE.
2. UNLESS OTHERWISE NOTED, POINT GEOMETRY ADJACENT TO CURB AND CURB AND GUTTER IS GIVEN TO THE EDGE OF PAVEMENT.
3. RADII ARE GIVEN TO EDGE OF PAVEMENT.
4. UNLESS OTHERWISE NOTED, EDGE OF PAVEMENT ELEVATIONS AT CURB RETURNS ARE GIVEN AT 10 FOOT INTERVALS.
5. ALL WORK REQUIRED FOR CALCULATING AND STAKING OF GRADES SHALL BE PAID FOR UNDER ITEM 763501-CONSTRUCTION ENGINEERING.
6. PROPOSED CURBS OR PAVEMENT THAT TIE INTO EXISTING PAVEMENT SHALL MATCH ELEVATIONS.

11/25/2014
9:26:43 PM
g:\projects\03517.00 (deldot agmt 123 dots open end)\03517.16 sr1, little heaven final design\dgn files\G029lh.dgn

DELAWARE DEPARTMENT OF TRANSPORTATION

ADDENDUMS / REVISIONS

SCALE 0 30 60 90 FEET

SR1, LITTLE HEAVEN GRADE SEPARATED INTERSECTION

CONTRACT	BRIDGE NO.	-
T200412202	DESIGNED BY:	SFP
COUNTY		
KENT	CHECKED BY:	WFC

GRADES AND GEOMETRICS

SHEET NO. 190
TOTAL SHTS. 641

COORDINATE LIST					
POINT NO.	STATION	OFFSET	NORTHING	EASTING	ELEV.
1599	339+27.23	*	*	*	*
1600	339+27.23	*	*	*	*
1601	339+27.23	*	*	*	*
1602	339+27.23	*	*	*	*
1603	238+35.00	*	*	*	*
1604	238+35.00	*	*	*	*
1605	238+35.00	*	*	*	*
1606	238+35.00	*	*	*	*

* MATCH EXISTING

NOTES:

1. OFFSETS SHOWN IN THE GEOMETRY TABLES WITH A MINUS SIGN ARE TO THE LEFT OF THE CONSTRUCTION & R/W BASELINE.
2. UNLESS OTHERWISE NOTED, POINT GEOMETRY ADJACENT TO CURB AND CURB AND GUTTER IS GIVEN TO THE EDGE OF PAVEMENT.
3. RADII ARE GIVEN TO EDGE OF PAVEMENT.
4. UNLESS OTHERWISE NOTED, EDGE OF PAVEMENT ELEVATIONS AT CURB RETURNS ARE GIVEN AT 10 FOOT INTERVALS.
5. ALL WORK REQUIRED FOR CALCULATING AND STAKING OF GRADES SHALL BE PAID FOR UNDER ITEM 763501-CONSTRUCTION ENGINEERING.
6. PROPOSED CURBS OR PAVEMENT THAT TIE INTO EXISTING PAVEMENT SHALL MATCH ELEVATIONS.

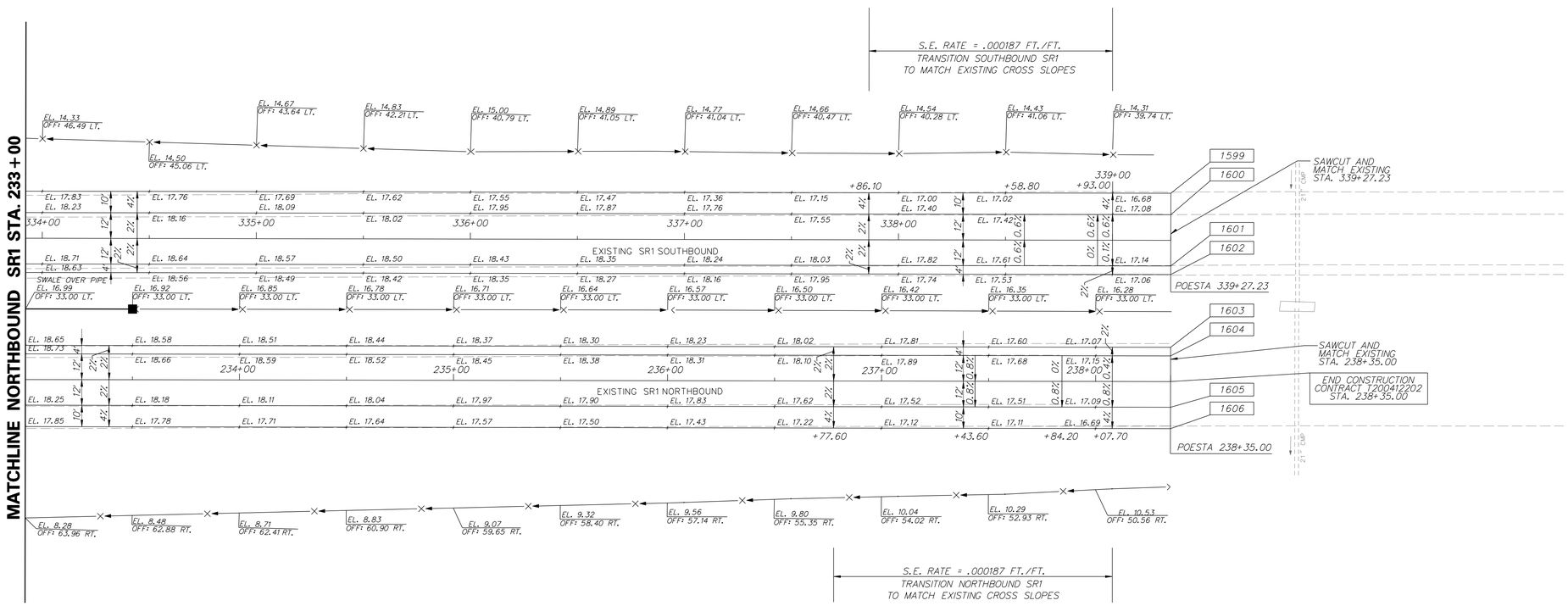

NOTE:
THE CONTRACTOR SHALL TRANSITION THE LAST 200' OF SR1 PAVEMENT BOTH NORTHBOUND AND SOUTHBOUND TO TIE-INTO THE EXISTING ROADWAY CENTERLINE AND ELEVATIONS. GRADES SHALL BE STAKED BY THE CONTRACTOR FOR APPROVAL BY THE ENGINEER IN THE FIELD. ALL COSTS PAID UNDER ITEM #763501.

3/12/2015
G:\PROJECTS\035T.00 (DELDOT AGMT 1223 DOTS Open End)\035T.16 SR1 LITTLE HEAVEN FINAL DESIGN\DGN Files\G030h.dgn
11:36:46 AM

DELAWARE DEPARTMENT OF TRANSPORTATION	ADDENDUMS / REVISIONS	SCALE 0 30 60 90 FEET	SR1, LITTLE HEAVEN GRADE SEPARATED INTERSECTION	CONTRACT T200412202	BRIDGE NO. -	GRADES AND GEOMETRICS	SHEET NO. 191
				COUNTY KENT	DESIGNED BY: SFP		TOTAL SHTS. 641
					CHECKED BY: WFC		

NOTES:

1. OFFSETS SHOWN IN THE GEOMETRY TABLES WITH A MINUS SIGN ARE TO THE LEFT OF THE CONSTRUCTION & R/W BASELINE.
2. UNLESS OTHERWISE NOTED, POINT GEOMETRY ADJACENT TO CURB AND CURB AND GUTTER IS GIVEN TO THE EDGE OF PAVEMENT.
3. RADII ARE GIVEN TO EDGE OF PAVEMENT.
4. UNLESS OTHERWISE NOTED, EDGE OF PAVEMENT ELEVATIONS AT CURB RETURNS ARE GIVEN AT 10 FOOT INTERVALS.
5. ALL WORK REQUIRED FOR CALCULATING AND STAKING OF GRADES SHALL BE PAID FOR UNDER ITEM 763501-CONSTRUCTION ENGINEERING.
6. PROPOSED CURBS OR PAVEMENT THAT TIE INTO EXISTING PAVEMENT SHALL MATCH ELEVATIONS.

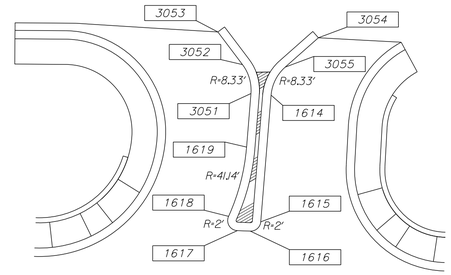

MEDIAN DETAIL

NOT TO SCALE

COORDINATE LIST

POINT NO.	STATION	OFFSET	NORTHING	EASTING	ELEV.
1607	616+76.78	-31.14	382172.3643	644023.6382	16.46
1608	617+01.46	-56.19	382184.0218	643990.5995	17.98
1609	616+76.22	-56.13	382161.3730	644001.1840	-
1610	616+81.27	-56.15	382165.9028	643999.0671	-
1611	616+80.11	-76.12	382156.4780	643981.4270	19.20
1612	616+70.02	-75.54	382147.6811	643986.1270	19.03
1613	617+17.63	-59.13	382197.2658	643981.1482	18.33
1614	617+20.05	-65.83	382198.3590	643973.2124	19.17
1615	617+21.44	-40.71	382208.5281	643996.1957	16.90
1616	617+19.47	-38.76	382207.5918	643998.7947	16.76
1617	617+16.89	-38.70	382205.2989	643999.9377	16.75
1618	617+14.97	-41.42	382202.4120	643998.2884	16.88
1619	617+17.75	-55.32	382198.9959	643984.5377	18.21
1620	617+47.51	-77.74	382215.9729	643951.6789	20.06
1621	617+37.85	-60.70	382214.6742	643971.1653	18.49
1622	617+58.06	-60.67	382232.7391	643962.5827	-
1623	617+37.85	-52.99	382217.9860	643978.1360	17.72
1624	617+58.03	-52.95	382236.0509	643969.5535	-
1625	617+58.48	-32.96	382245.0991	643987.3896	16.70
1626	618+05.53	-34.00	382286.7325	643966.0539	16.66
1627	618+05.64	-24.00	382291.2305	643974.9859	17.06
1628	618+05.64	12.00	382307.0627	644007.3177	17.78
1629	618+05.17	36.00	382317.1925	644029.0751	18.26
1630	618+04.97	46.00	382231.4018	644038.1461	17.86
1839	617+81.92	45.48	382300.2948	644047.8570	17.78
2004	616+95.72	82.16	382237.3190	644118.4047	-
3051	617+18.01	-65.96	382194.6888	643974.8031	19.17
3052	617+16.00	-71.52	382190.5128	643970.5869	19.67
3053	617+10.67	-77.73	382183.1199	643967.2308	19.83
3054	617+30.87	-77.74	382201.1493	643958.7279	20.05
3055	617+24.56	-71.53	382198.1469	643966.9963	19.74

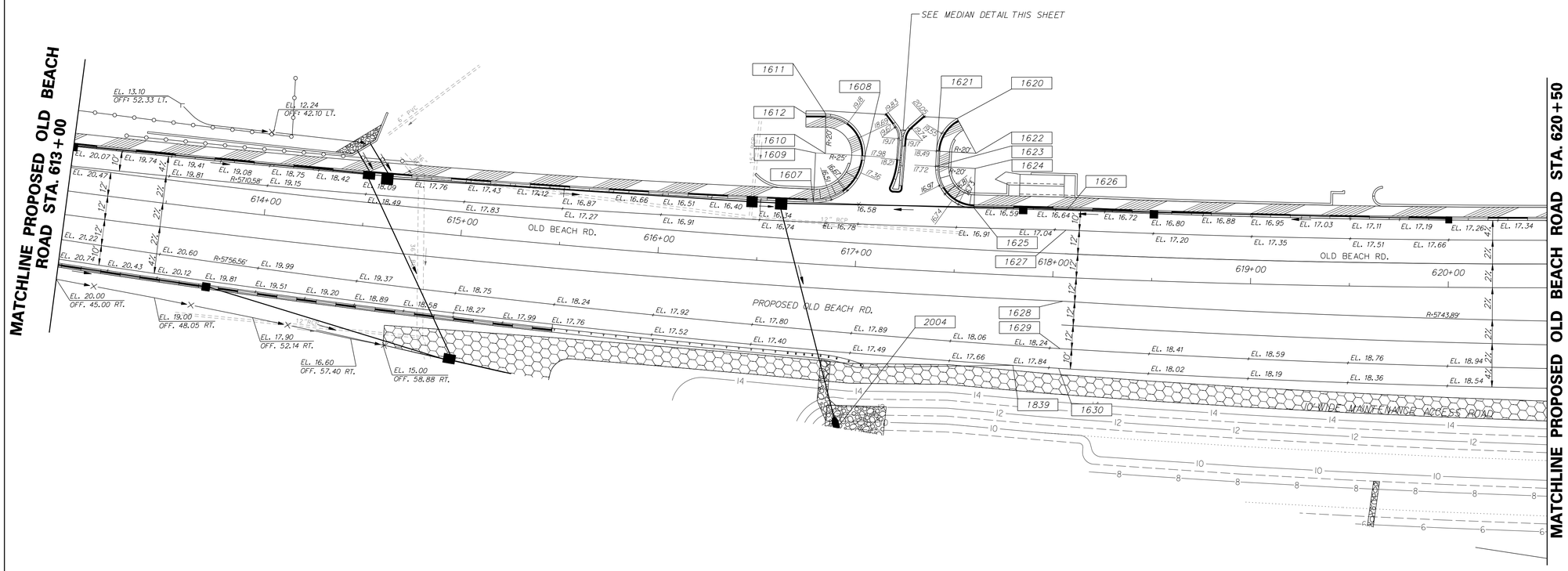

DELAWARE DEPARTMENT OF TRANSPORTATION

ADDENDUMS / REVISIONS

SCALE 0 30 60 90 FEET

SR1, LITTLE HEAVEN GRADE SEPARATED INTERSECTION

CONTRACT	BRIDGE NO.	-
T200412202	DESIGNED BY:	SFP
COUNTY		
KENT	CHECKED BY:	WFC

GRADES AND GEOMETRICS

SHEET NO. 192

TOTAL SHTS. 641

11/25/2014 9:25:34 PM
g:\projects\035\7.00 (deldot agmt 123 dots open end)\035\7.16 sr1,little heaven final design\dgn files\G63lh.dgn

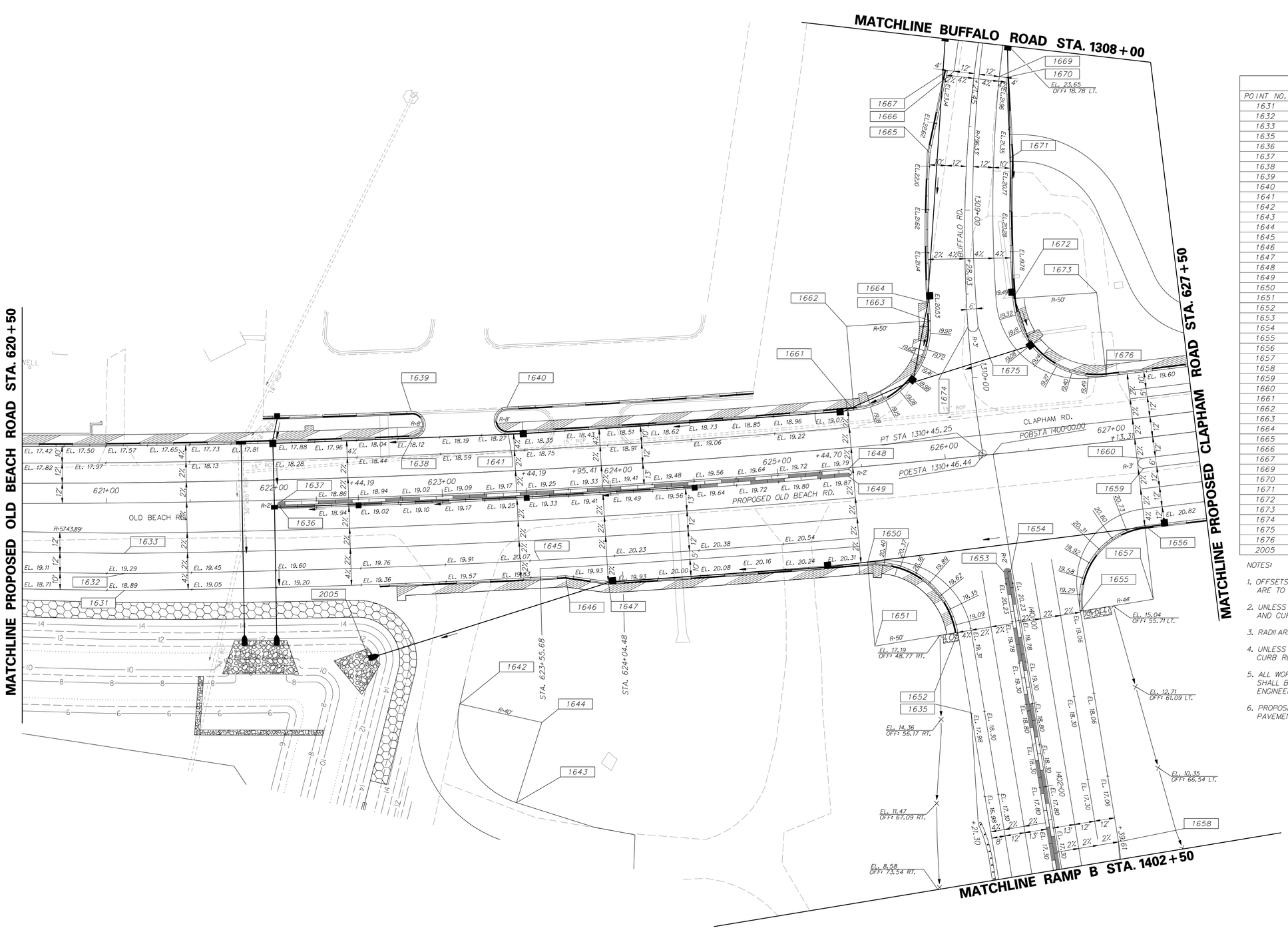

COORDINATE LIST

POINT NO.	STATION	OFFSET	NORTHING	EASTING	ELEV.
1631	621+10.23	52.00	382596.9634	643900.8035	18.93
1632	621+10.32	42.00	382592.1797	643892.0213	19.33
1633	621+10.44	30.00	382586.4393	643881.4828	19.09
1635	1401+49.46	38.00	383074.2467	643724.1464	17.99
1636	622+03.77	5.00	382655.4848	643813.4996	18.88
1637	622+03.77	1.00	382653.4805	643810.0379	18.80
1638	622+83.49	-34.00	382704.2400	643739.5674	18.14
1639	622+83.49	-50.02	382696.0184	643725.8134	18.44
1640	623+40.97	-50.00	382744.9229	643696.5069	20.34
1641	623+40.97	-34.00	382753.1373	643710.0058	18.32
1642	623+04.84	125.10	382804.5812	643864.8994	-
1643	623+34.93	185.26	382862.1955	643900.3152	-
1644	623+51.95	138.42	382852.6763	643851.2297	-
1645	623+55.64	42.00	382805.3852	643767.1182	20.09
1646	623+70.50	52.00	382823.3855	643767.7655	19.93
1647	623+95.41	57.00	382847.3856	643758.7360	19.91
1648	625+41.71	1.00	382940.8187	643632.1544	19.85
1649	625+41.65	5.00	382942.9763	643635.5220	19.93
1650	1400+51.25	84.13	382977.5070	643675.0204	20.39
1651	1401+01.10	88.00	383005.0862	643716.7264	-
1652	1401+01.10	38.00	383044.5305	643685.9995	18.96
1653	1400+70.30	5.00	383051.6366	643641.4227	20.38
1654	1400+70.30	1.00	383054.7921	643638.9646	20.37
1655	1401+00.58	-36.00	383102.5911	643640.1167	19.05
1656	1400+56.63	-82.11	383111.9604	643577.1076	20.79
1657	1401+00.58	-80.00	383137.3022	643613.0770	-
1658	1402+39.61	-36.00	383188.0308	643749.7961	16.27
1659	627+16.59	18.00	383095.0699	643547.4155	20.72
1660	627+16.60	12.00	383091.6126	643542.5117	20.60
1661	625+48.36	-34.00	382927.0407	643599.3030	19.10
1662	1309+64.58	72.00	382899.4317	643557.6168	-
1663	1309+64.58	22.00	382941.7688	643531.0166	20.17
1664	1309+53.99	22.00	382936.0388	643521.7675	20.49
1665	1308+67.26	22.00	382893.8439	643443.3190	22.24
1666	1308+18.59	12.00	382883.2594	643393.7530	23.33
1667	1308+18.59	16.00	382879.5425	643395.2310	23.73
1669	1308+18.59	-14.97	382908.3245	643383.7857	22.29
1670	1308+18.59	-18.99	382912.0543	643382.3026	22.63
1671	1308+67.26	-25.96	382937.2459	643422.9228	20.93
1672	1309+53.99	-27.69	382978.4663	643495.8874	19.45
1673	1309+52.85	-77.68	383020.6051	643468.9741	-
1674	1309+69.56	0.00	382963.0570	643523.5222	20.01
1675	1309+69.56	-6.00	382968.1175	643520.2986	19.90
1676	627+00.71	-39.00	383049.3126	643509.9115	19.54
2005	622+52.87	95.83	382744.0927	643866.9017	-

NOTES:

1. OFFSETS SHOWN IN THE GEOMETRY TABLES WITH A MINUS SIGN ARE TO THE LEFT OF THE CONSTRUCTION & R/W BASELINE.
2. UNLESS OTHERWISE NOTED, POINT GEOMETRY ADJACENT TO CURB AND CURB AND GUTTER IS GIVEN TO THE EDGE OF PAVEMENT.
3. RADII ARE GIVEN TO EDGE OF PAVEMENT.
4. UNLESS OTHERWISE NOTED, EDGE OF PAVEMENT ELEVATIONS AT CURB RETURNS ARE GIVEN AT 10 FOOT INTERVALS.
5. ALL WORK REQUIRED FOR CALCULATING AND STAKING OF GRADES SHALL BE PAID FOR UNDER ITEM 763501-CONSTRUCTION ENGINEERING.
6. PROPOSED CURBS OR PAVEMENT THAT TIE INTO EXISTING PAVEMENT SHALL MATCH ELEVATIONS.

12/1/2014
G:\PROJECTS\035I.00 (DELDOT AGMT 1223 DOTS Open End)\035I.16 SR1, LITTLE HEAVEN FINAL DESIGN\DGN Files\GG32Pn.dgn
2:09:56 PM

DELAWARE DEPARTMENT OF TRANSPORTATION

ADDENDUMS / REVISIONS

SCALE 0 30 60 90 FEET

SR1, LITTLE HEAVEN GRADE SEPARATED INTERSECTION

CONTRACT	BRIDGE NO.	-
T200412202	DESIGNED BY:	SFP
COUNTY	CHECKED BY:	WFC
KENT		

GRADES AND GEOMETRICS

SHEET NO. 193
TOTAL SHTS. 641

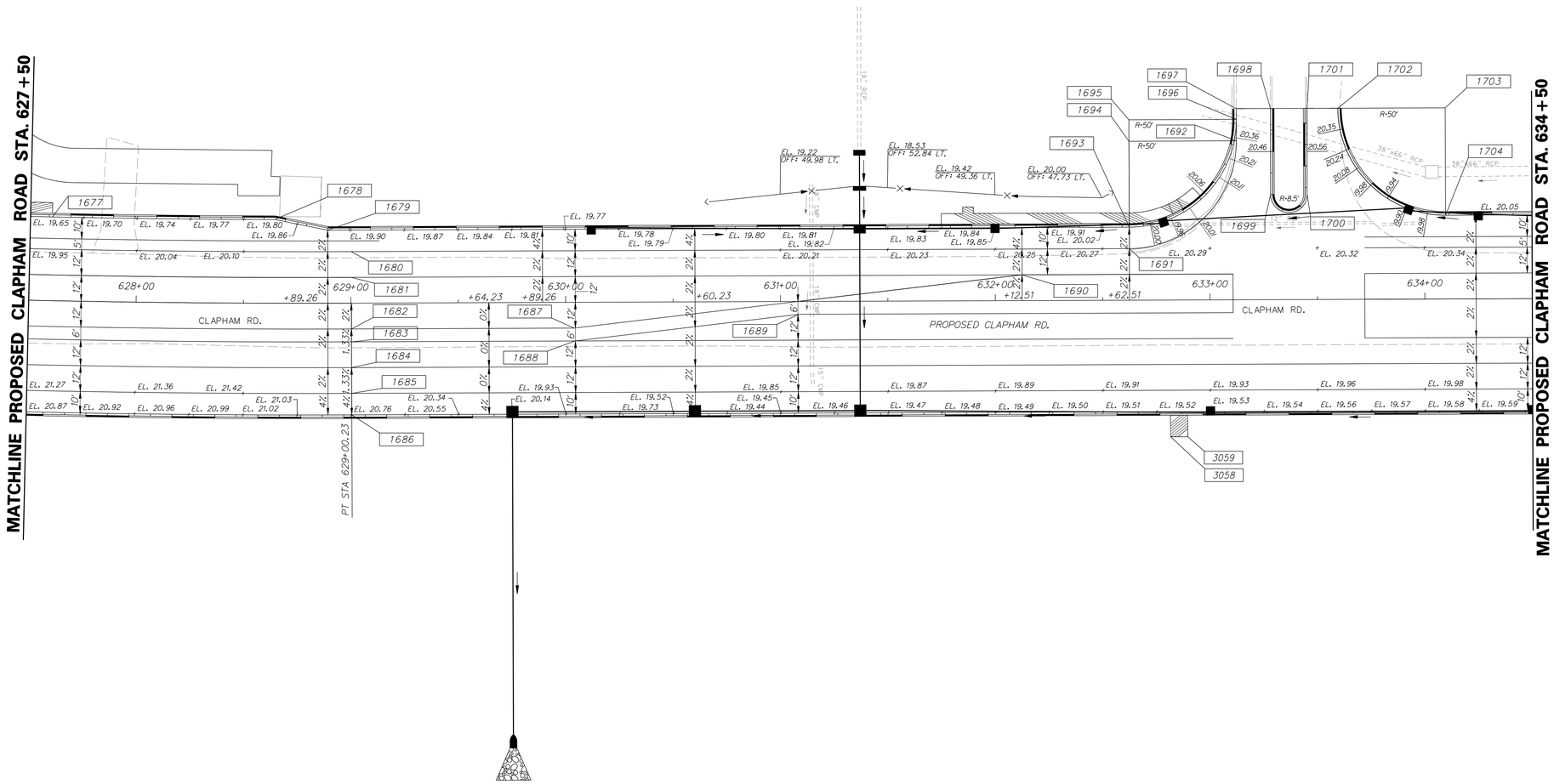

COORDINATE LIST

POINT NO.	STATION	OFFSET	NORTHING	EASTING	ELEV.
1677	627+60.24	-39.00	383097.5430	643475.7147	19.68
1678	628+64.50	-39.00	383181.1441	643414.6249	19.81
1679	628+89.26	-34.00	383203.8430	643403.8873	19.91
1680	629+00.23	-24.00	383218.5723	643405.3140	20.12
1681	629+00.23	-12.00	383225.8000	643414.8932	20.36
1682	629+00.23	12.00	383240.2553	643434.0516	20.76
1683	629+00.23	18.00	383243.8691	643438.8412	20.84
1684	629+00.23	30.00	383251.0968	643448.4204	21.00
1685	629+00.23	42.00	383258.3245	643457.9996	21.16
1686	629+00.23	52.00	383264.3475	643465.9822	20.76
1687	630+03.90	12.00	383323.0176	643371.6060	20.55
1688	630+04.25	18.00	383326.9062	643376.1883	20.50
1689	631+08.48	6.00	383402.8811	643303.8313	20.57
1690	632+12.36	-12.00	383474.9674	643226.8921	20.50
1691	632+62.52	-24.00	383507.7757	643187.1051	20.28
1692	633+12.52	-74.02	383517.5636	643117.0630	20.35
1693	632+62.51	-34.00	383501.7500	643179.1244	20.08
1694	632+62.52	-74.00	383477.6605	643147.1918	-
1695	632+62.51	-84.00	383471.6347	643139.2112	-
1696	633+12.51	-84.02	383511.5378	643109.0824	20.33
1697	633+12.51	-89.00	383508.5351	643105.1056	20.35
1698	633+28.44	-89.00	383521.2536	643095.5092	20.56
1699	633+28.38	-48.95	383545.3237	643127.5136	20.37
1700	633+45.38	-48.93	383558.9100	643117.2955	20.49
1701	633+45.44	-89.00	383534.8242	643085.2700	20.62
1702	633+59.79	-89.00	383546.2732	643076.6316	20.40
1703	634+09.79	-89.00	383586.1865	643046.5163	-
1704	634+09.79	-39.00	383616.3018	643086.4296	20.04
3058	632+81.38	63.67	383575.6330	643245.7270	-
3059	632+89.38	63.67	383582.0191	643240.9085	-

NOTES:

1. OFFSETS SHOWN IN THE GEOMETRY TABLES WITH A MINUS SIGN ARE TO THE LEFT OF THE CONSTRUCTION & R/W BASELINE.
2. UNLESS OTHERWISE NOTED, POINT GEOMETRY ADJACENT TO CURB AND CURB AND GUTTER IS GIVEN TO THE EDGE OF PAVEMENT.
3. RADII ARE GIVEN TO EDGE OF PAVEMENT.
4. UNLESS OTHERWISE NOTED, EDGE OF PAVEMENT ELEVATIONS AT CURB RETURNS ARE GIVEN AT 10 FOOT INTERVALS.
5. ALL WORK REQUIRED FOR CALCULATING AND STAKING OF GRADES SHALL BE PAID FOR UNDER ITEM 763501-CONSTRUCTION ENGINEERING.
6. PROPOSED CURBS OR PAVEMENT THAT TIE INTO EXISTING PAVEMENT SHALL MATCH ELEVATIONS.

3/10/2015
\\WMOFILE\Snap\PROJECTS\035I1.00 DELDOT AGMT 1223 DOTS Open End\035I16 SR1 LITTLE HEAVEN FINAL DESIGN\DGN Files\G633ln.dgn
11:42:49 AM

DELAWARE DEPARTMENT OF TRANSPORTATION

ADDENDUMS / REVISIONS

SCALE 0 30 60 90 FEET

SR1, LITTLE HEAVEN GRADE SEPARATED INTERSECTION

CONTRACT	BRIDGE NO.	-
T200412202	DESIGNED BY:	SFP
COUNTY		
KENT	CHECKED BY:	WFC

GRADES AND GEOMETRICS

SHEET NO. 194
TOTAL SHTS. 641

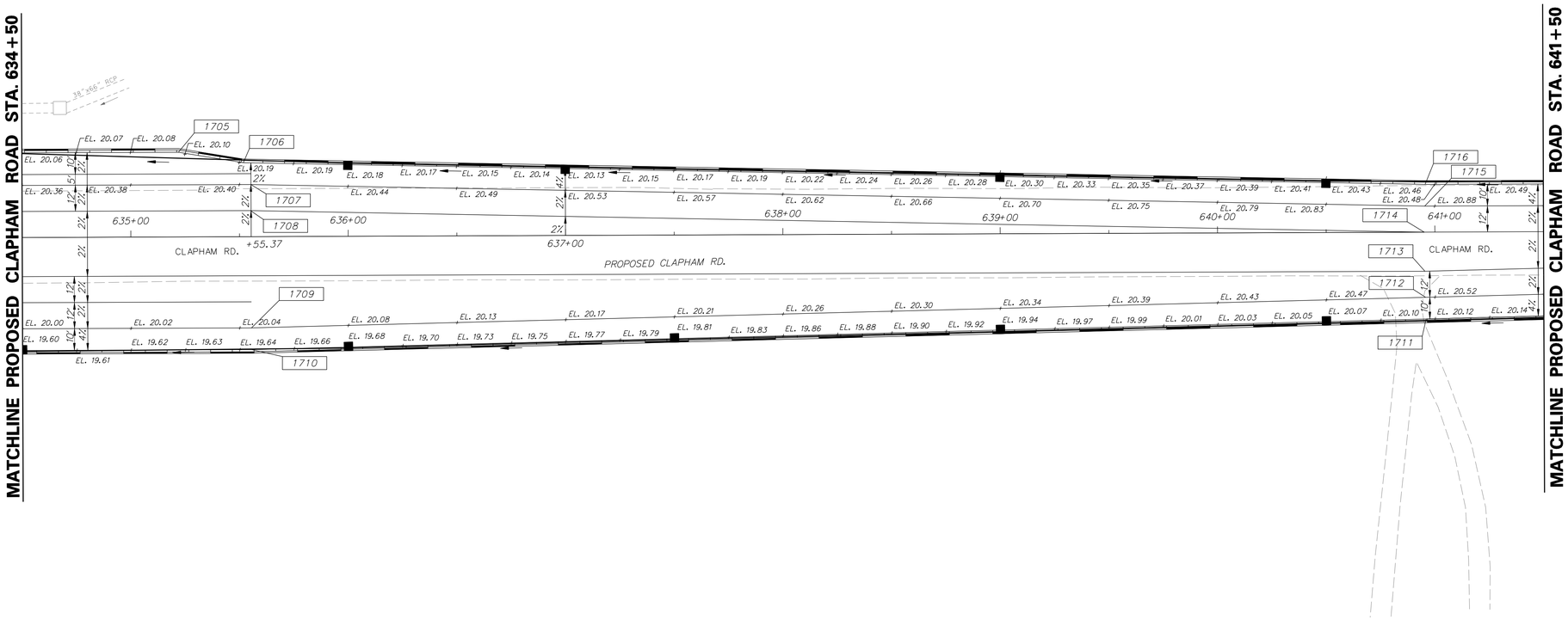

COORDINATE LIST

POINT NO.	STATION	OFFSET	NORTHING	EASTING	ELEV.
1705	635+22.03	-39.00	383705.9056	643018.8219	20.09
1706	635+51.89	-34.08	383732.6996	643004.7690	20.19
1707	635+55.37	-24.00	383741.5491	643010.7191	20.40
1708	635+55.23	-12.00	383748.6703	643020.3785	20.64
1709	635+55.37	42.00	383781.3012	643063.4046	20.04
1710	635+55.48	52.00	383787.4130	643071.3203	19.64
1711	640+95.86	40.00	384211.5471	642736.2645	20.11
1712	640+95.63	30.00	384205.3463	642728.4153	20.51
1713	640+95.37	18.00	384197.9095	642719.0014	20.75
1714	640+95.10	0.00	384196.8534	642704.7908	21.11
1715	640+95.37	-12.00	384179.8403	642695.0534	20.87
1716	640+95.59	-22.00	384173.9961	642686.9389	20.47

NOTES:

1. OFFSETS SHOWN IN THE GEOMETRY TABLES WITH A MINUS SIGN ARE TO THE LEFT OF THE CONSTRUCTION & R/W BASELINE.
2. UNLESS OTHERWISE NOTED, POINT GEOMETRY ADJACENT TO CURB AND CURB AND GUTTER IS GIVEN TO THE EDGE OF PAVEMENT.
3. RADII ARE GIVEN TO EDGE OF PAVEMENT.
4. UNLESS OTHERWISE NOTED, EDGE OF PAVEMENT ELEVATIONS AT CURB RETURNS ARE GIVEN AT 10 FOOT INTERVALS.
5. ALL WORK REQUIRED FOR CALCULATING AND STAKING OF GRADES SHALL BE PAID FOR UNDER ITEM 763501-CONSTRUCTION ENGINEERING.
6. PROPOSED CURBS OR PAVEMENT THAT TIE INTO EXISTING PAVEMENT SHALL MATCH ELEVATIONS.

11/25/2014
9:26:52 PM
g:\projects\035\1.00 (deldot agmt 1223 dots open end)\035\1.6 sr1, little heaven final design\dgn files\G634ln.dgn

DELAWARE DEPARTMENT OF TRANSPORTATION

ADDENDUMS / REVISIONS

SCALE 0 30 60 90 FEET

SR1, LITTLE HEAVEN GRADE SEPARATED INTERSECTION

CONTRACT	BRIDGE NO.	-
T200412202	DESIGNED BY:	SFP
COUNTY		
KENT	CHECKED BY:	WFC

GRADES AND GEOMETRICS

SHEET NO. 195
TOTAL SHTS. 641

COORDINATE LIST

POINT NO.	STATION	OFFSET	NORTHING	EASTING	ELEV.
1717	643+12.04	-22.00	384346.7786	642556.5715	20.57
1718	643+56.28	34.21	384415.9524	642574.7873	20.34
1719	649+05.61	22.00	384847.1091	642234.1799	20.75
1720	649+05.50	12.00	384840.9974	642226.2642	21.14
1721	649+05.37	0.00	384833.6633	642216.7653	21.39

NOTES:

1. OFFSETS SHOWN IN THE GEOMETRY TABLES WITH A MINUS SIGN ARE TO THE LEFT OF THE CONSTRUCTION & R/W BASELINE.
2. UNLESS OTHERWISE NOTED, POINT GEOMETRY ADJACENT TO CURB AND CURB AND GUTTER IS GIVEN TO THE EDGE OF PAVEMENT.
3. RADII ARE GIVEN TO EDGE OF PAVEMENT.
4. UNLESS OTHERWISE NOTED, EDGE OF PAVEMENT ELEVATIONS AT CURB RETURNS ARE GIVEN AT 10 FOOT INTERVALS.
5. ALL WORK REQUIRED FOR CALCULATING AND STAKING OF GRADES SHALL BE PAID FOR UNDER ITEM 763501-CONSTRUCTION ENGINEERING.
6. PROPOSED CURBS OR PAVEMENT THAT TIE INTO EXISTING PAVEMENT SHALL MATCH ELEVATIONS.

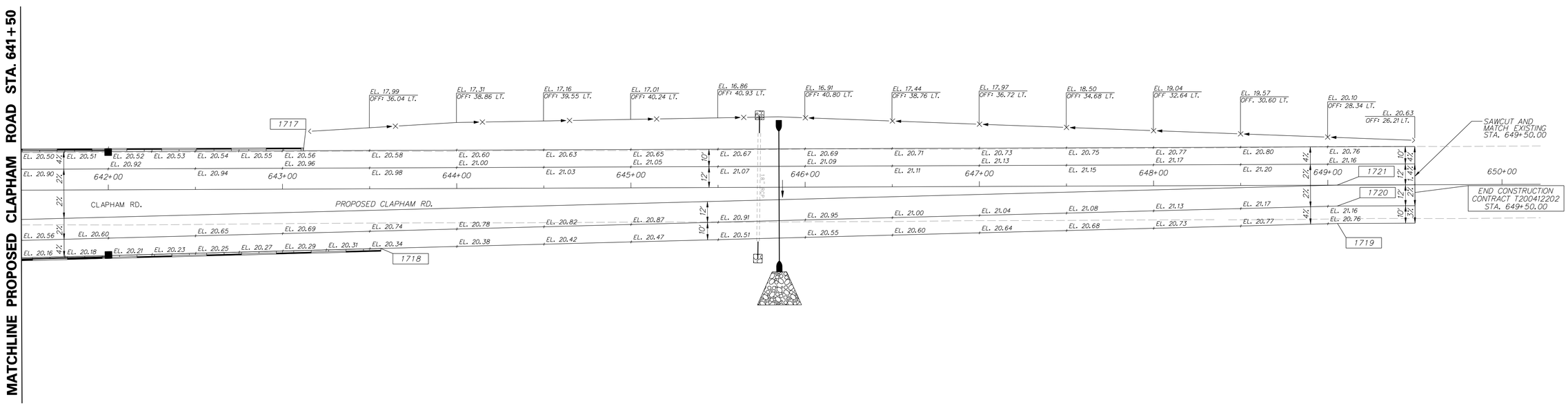

DELAWARE DEPARTMENT OF TRANSPORTATION

ADDENDUMS / REVISIONS

SCALE 0 30 60 90 FEET

SR1, LITTLE HEAVEN GRADE SEPARATED INTERSECTION

CONTRACT	BRIDGE NO.	-
T200412202	DESIGNED BY:	SFP
COUNTY		
KENT	CHECKED BY:	WFC

GRADES AND GEOMETRICS

SHEET NO.
196
TOTAL SHTS.
641

11/25/2014
9:31:09 Projects\035I7.00 (deldot agmt 1223 dots open end)\035I7.J6 sr1,little heaven final design\dgn files\G635h.dgn
3:28:46 PM

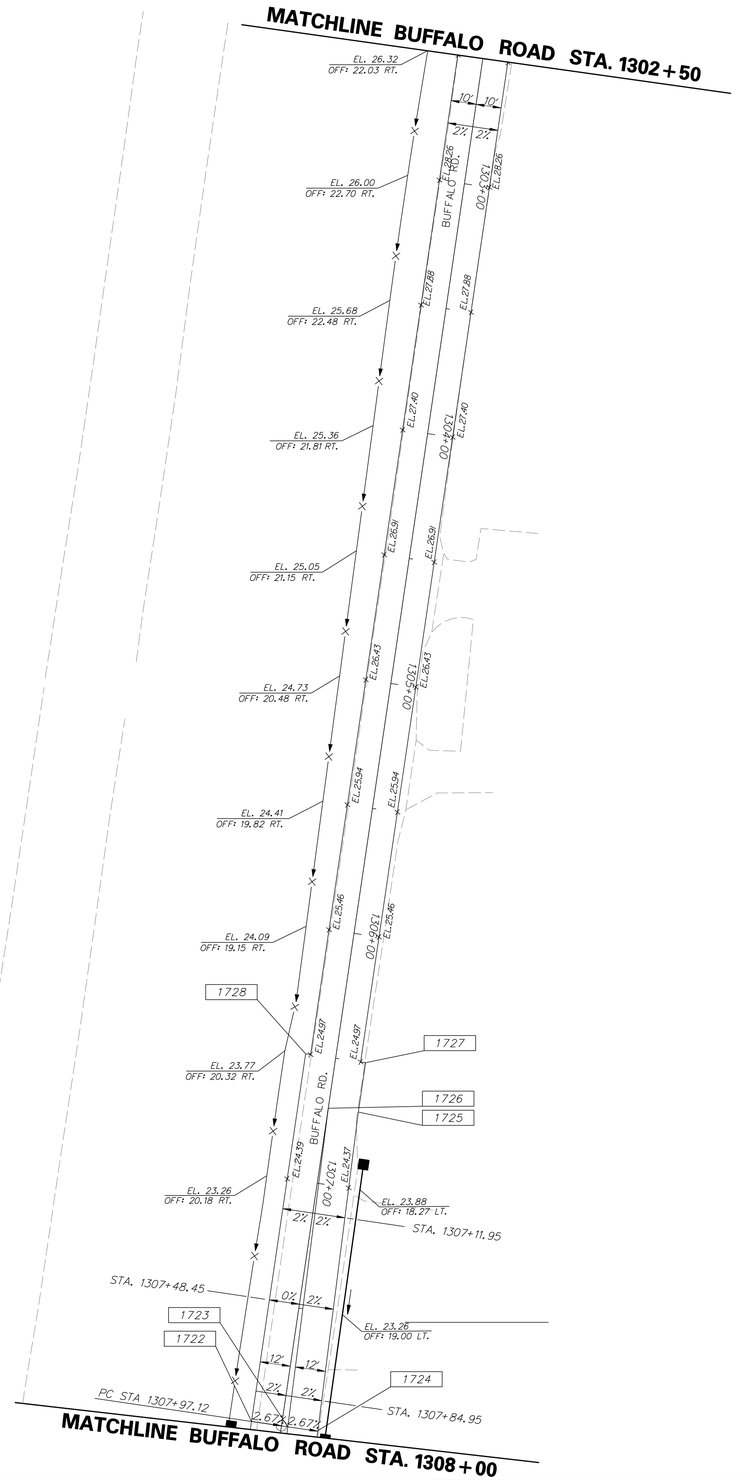

COORDINATE LIST					
POINT NO.	STATION	OFFSET	NORTHING	EASTING	ELEV.
1722	1307+97.12	12.00	382875.4778	643373.3924	23.56
1723	1307+97.12	-2.54	382889.1283	643368.3849	23.17
1724	1307+96.88	-14.54	382900.3088	643364.0264	22.85
1725	1306+69.76	-12.00	382854.1399	643245.5608	24.73
1726	1306+70.00	0.00	382842.9590	643249.9182	24.97
1727	1306+50.00	-12.00	382847.3364	643227.0101	24.93
1728	1306+50.00	12.00	382824.8041	643235.2740	24.93

NOTES:

1. OFFSETS SHOWN IN THE GEOMETRY TABLES WITH A MINUS SIGN ARE TO THE LEFT OF THE CONSTRUCTION & R/W BASELINE.
2. UNLESS OTHERWISE NOTED, POINT GEOMETRY ADJACENT TO CURB AND CURB AND GUTTER IS GIVEN TO THE EDGE OF PAVEMENT.
3. RADII ARE GIVEN TO EDGE OF PAVEMENT.
4. UNLESS OTHERWISE NOTED, EDGE OF PAVEMENT ELEVATIONS AT CURB RETURNS ARE GIVEN AT 10 FOOT INTERVALS.
5. ALL WORK REQUIRED FOR CALCULATING AND STAKING OF GRADES SHALL BE PAID FOR UNDER ITEM 763501-CONSTRUCTION ENGINEERING.
6. PROPOSED CURBS OR PAVEMENT THAT TIE INTO EXISTING PAVEMENT SHALL MATCH ELEVATIONS.

11/25/2014
9:29:07 AM
S:\Projects\035\7.00 (deldot agmt 1223 dots open end)\035\7.6 sr1, little heaven final design\dgn files\GG36lh.dgn

DELAWARE DEPARTMENT OF TRANSPORTATION	ADDENDUMS / REVISIONS	SCALE 0 30 60 90 FEET	SR1, LITTLE HEAVEN GRADE SEPARATED INTERSECTION	CONTRACT T200412202 / COUNTY KENT	BRIDGE NO. - / DESIGNED BY: SFP / CHECKED BY: WFC	GRADES AND GEOMETRICS	SHEET NO. 197 / TOTAL SHTS. 641

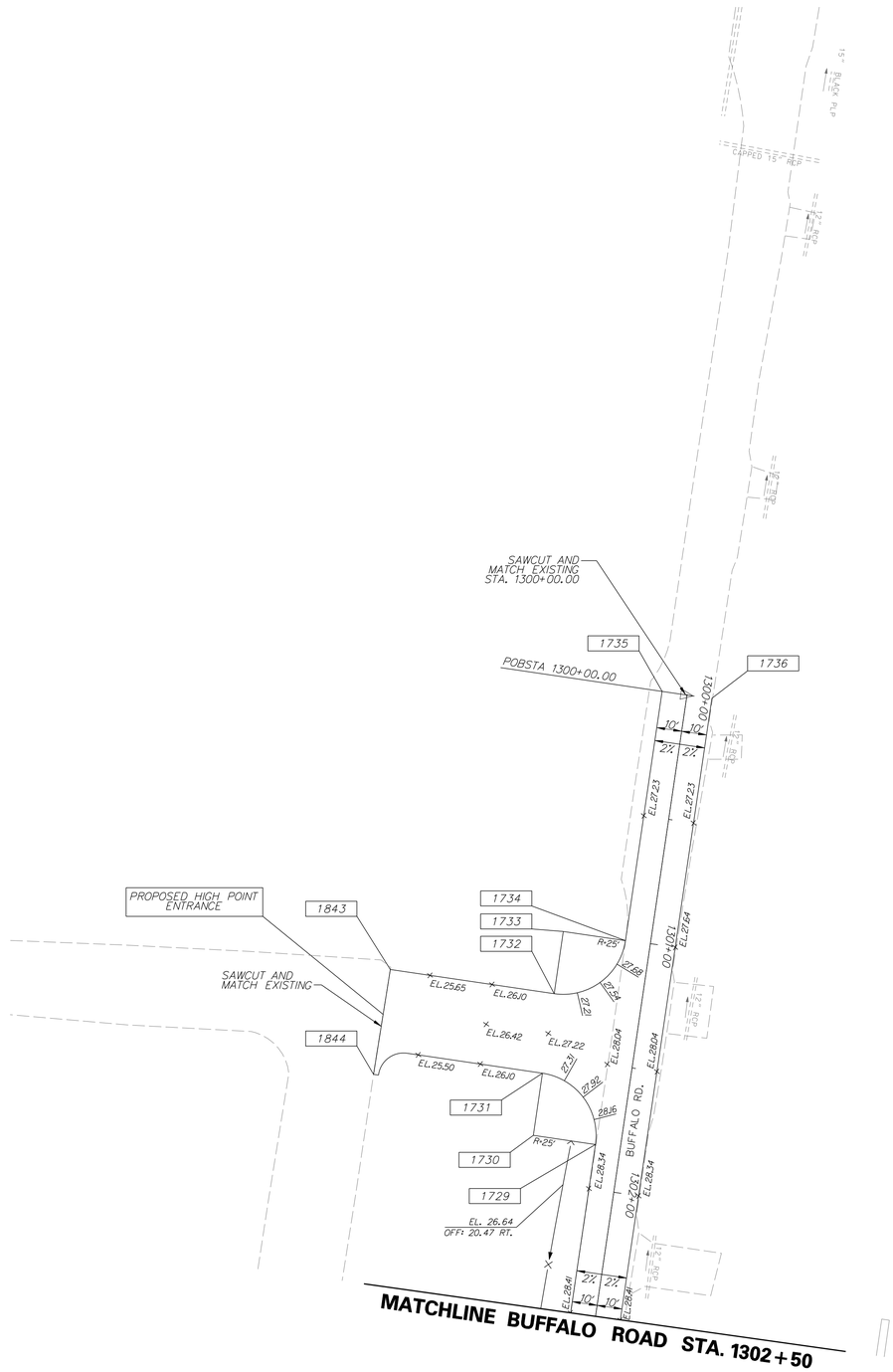

COORDINATE LIST

POINT NO.	STATION	OFFSET	NORTHING	EASTING	ELEV.
1729	1301+82.27	10.00	382665.5786	642795.4750	28.26
1730	1301+82.27	35.00	382642.1083	642804.0859	-
1731	1301+57.27	35.00	382633.4974	642780.6157	26.90
1732	1301+25.27	35.00	382622.4755	642750.5738	26.90
1733	1301+00.27	35.00	382613.8646	642727.1035	-
1734	1301+00.27	10.00	382637.3348	642718.4926	27.64
1735	1300+00.00	10.00	382602.7989	642624.3600	26.83
1736	1300+00.00	-10.00	382621.5751	642617.4712	26.83
1843	1301+25.27	100.95	382560.5610	642773.2893	25.35
1844	1301+67.52	101.48	382574.6198	642813.1396	25.00

NOTES:

1. OFFSETS SHOWN IN THE GEOMETRY TABLES WITH A MINUS SIGN ARE TO THE LEFT OF THE CONSTRUCTION & R/W BASELINE.
2. UNLESS OTHERWISE NOTED, POINT GEOMETRY ADJACENT TO CURB AND CURB AND GUTTER IS GIVEN TO THE EDGE OF PAVEMENT.
3. RADII ARE GIVEN TO EDGE OF PAVEMENT.
4. UNLESS OTHERWISE NOTED, EDGE OF PAVEMENT ELEVATIONS AT CURB RETURNS ARE GIVEN AT 10 FOOT INTERVALS.
5. ALL WORK REQUIRED FOR CALCULATING AND STAKING OF GRADES SHALL BE PAID FOR UNDER ITEM 763501-CONSTRUCTION ENGINEERING.
6. PROPOSED CURBS OR PAVEMENT THAT TIE INTO EXISTING PAVEMENT SHALL MATCH ELEVATIONS.

DELAWARE DEPARTMENT OF TRANSPORTATION

ADDENDUMS / REVISIONS

SCALE 0 30 60 90 FEET

SR1, LITTLE HEAVEN GRADE SEPARATED INTERSECTION

CONTRACT	BRIDGE NO.	-
T200412202	DESIGNED BY:	SFP
COUNTY	CHECKED BY:	WFC
KENT		

GRADES AND GEOMETRICS

SHEET NO.
198
TOTAL SHTS.
641

11/25/2014
9:26:59 PM
G:\projects\035I7.00 (deldot agmt 1223 dots open end)\035I7.16 sr1, little heaven final design\dgn files\GG37th.dgn

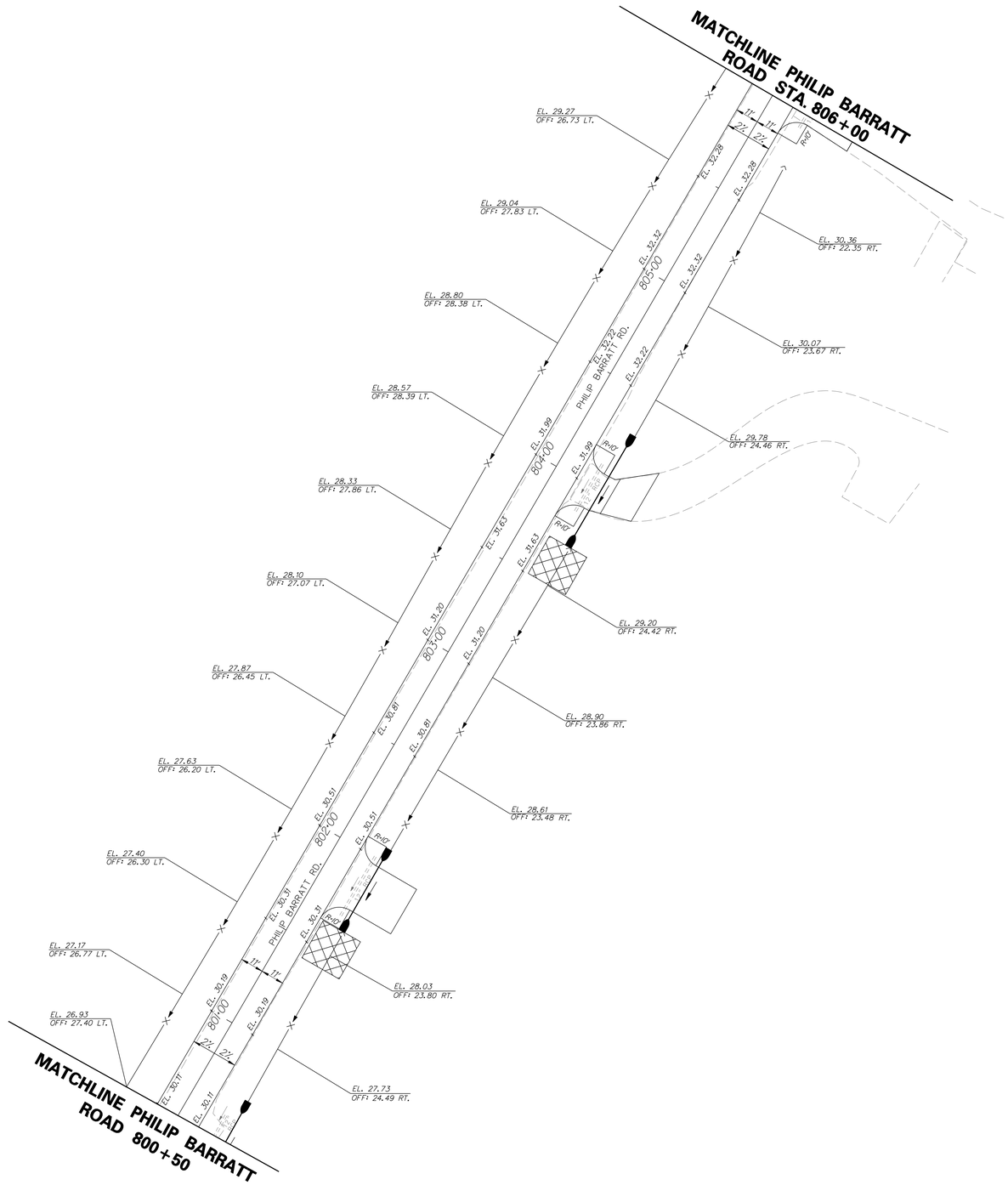

NOTES:

1. OFFSETS SHOWN IN THE GEOMETRY TABLES WITH A MINUS SIGN ARE TO THE LEFT OF THE CONSTRUCTION & R/W BASELINE.
2. UNLESS OTHERWISE NOTED, POINT GEOMETRY ADJACENT TO CURB AND CURB AND GUTTER IS GIVEN TO THE EDGE OF PAVEMENT.
3. RADII ARE GIVEN TO EDGE OF PAVEMENT.
4. UNLESS OTHERWISE NOTED, EDGE OF PAVEMENT ELEVATIONS AT CURB RETURNS ARE GIVEN AT 10 FOOT INTERVALS.
5. ALL WORK REQUIRED FOR CALCULATING AND STAKING OF GRADES SHALL BE PAID FOR UNDER ITEM 763501-CONSTRUCTION ENGINEERING.
6. PROPOSED CURBS OR PAVEMENT THAT TIE INTO EXISTING PAVEMENT SHALL MATCH ELEVATIONS.

11/25/2014
9:26:01 AM
32.8828 PM
\\DPC01\projects\035f1.00 (deldot agmt 123 dots open end)\035f1.16 sr1, little heaven final design\dgn files\GG38fn.dgn

DELAWARE DEPARTMENT OF TRANSPORTATION	ADDENDUMS / REVISIONS	SCALE 0 30 60 90 FEET	**SR1, LITTLE HEAVEN GRADE SEPARATED INTERSECTION**	CONTRACT T200412202	BRIDGE NO. -	**GRADES AND GEOMETRICS**	SHEET NO. 199
				COUNTY KENT	DESIGNED BY: SFP		TOTAL SHTS. 641
					CHECKED BY: WFC		

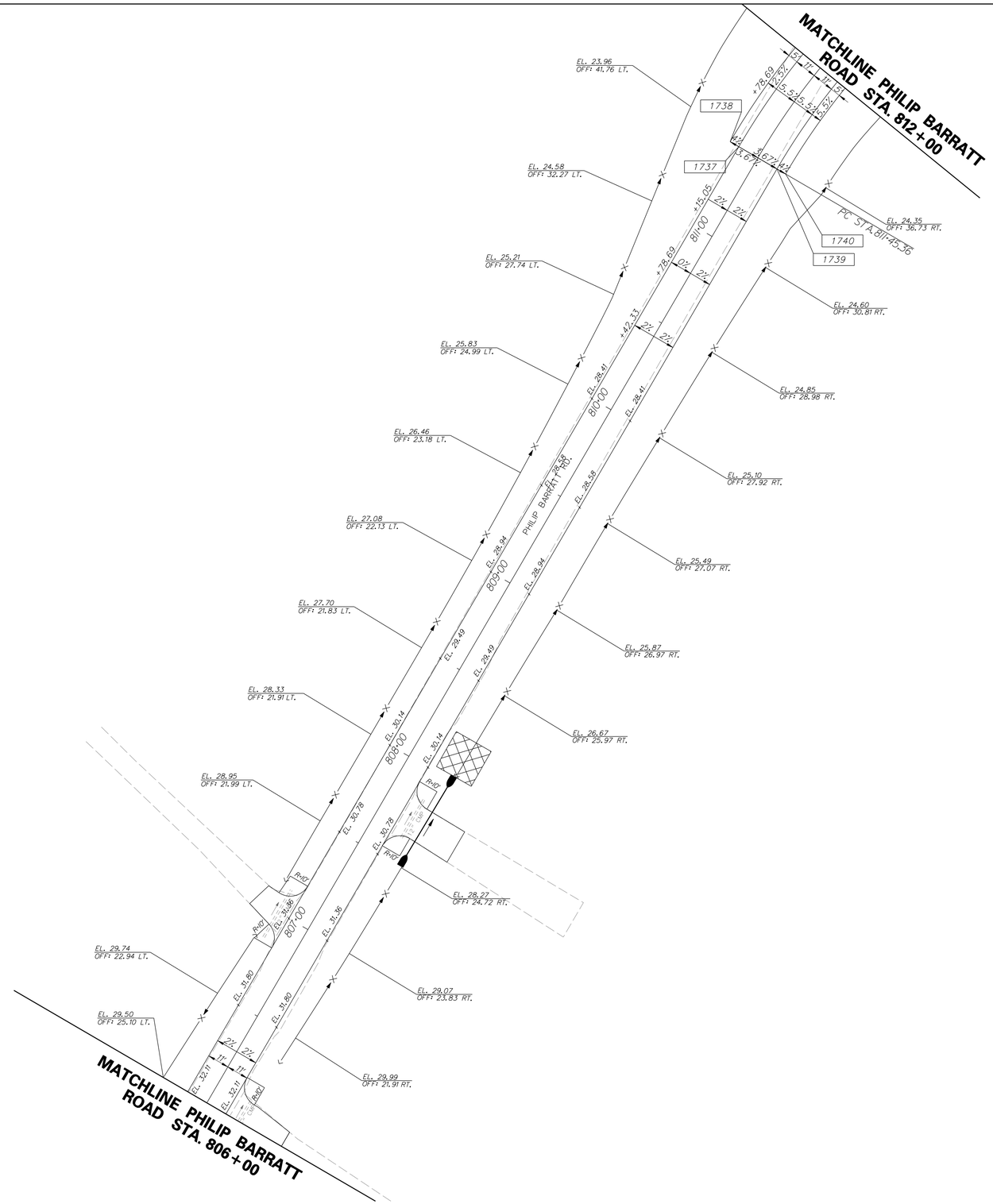

COORDINATE LIST					
POINT NO.	STATION	OFFSET	NORTHING	EASTING	ELEV.
1737	811+45.36	-11.00	374392.8034	642777.8074	29.61
1738	811+45.36	-16.00	374388.9612	642774.6074	29.28
1739	811+45.36	11.00	374409.7093	642791.8855	28.80
1740	811+45.36	16.00	374413.5515	642795.0851	28.50

NOTES:

1. OFFSETS SHOWN IN THE GEOMETRY TABLES WITH A MINUS SIGN ARE TO THE LEFT OF THE CONSTRUCTION & R/W BASELINE.
2. UNLESS OTHERWISE NOTED, POINT GEOMETRY ADJACENT TO CURB AND CURB AND GUTTER IS GIVEN TO THE EDGE OF PAVEMENT.
3. RADII ARE GIVEN TO EDGE OF PAVEMENT.
4. UNLESS OTHERWISE NOTED, EDGE OF PAVEMENT ELEVATIONS AT CURB RETURNS ARE GIVEN AT 10 FOOT INTERVALS.
5. ALL WORK REQUIRED FOR CALCULATING AND STAKING OF GRADES SHALL BE PAID FOR UNDER ITEM 763501-CONSTRUCTION ENGINEERING.
6. PROPOSED CURBS OR PAVEMENT THAT TIE INTO EXISTING PAVEMENT SHALL MATCH ELEVATIONS.

DELAWARE DEPARTMENT OF TRANSPORTATION

ADDENDUMS / REVISIONS

SCALE 0 30 60 90 FEET

SR1, LITTLE HEAVEN GRADE SEPARATED INTERSECTION

CONTRACT	BRIDGE NO.	-
T200412202	DESIGNED BY:	SFP
COUNTY	CHECKED BY:	WFC
KENT		

GRADES AND GEOMETRICS

SHEET NO.
200
TOTAL SHTS.
641

11/25/2014
G:\projects\035f7.00 (deldot agmt 1223 dots open end\035f7.16 sr1, little heaven final design\dgn files\GG39h.dgn
3:26:15 PM

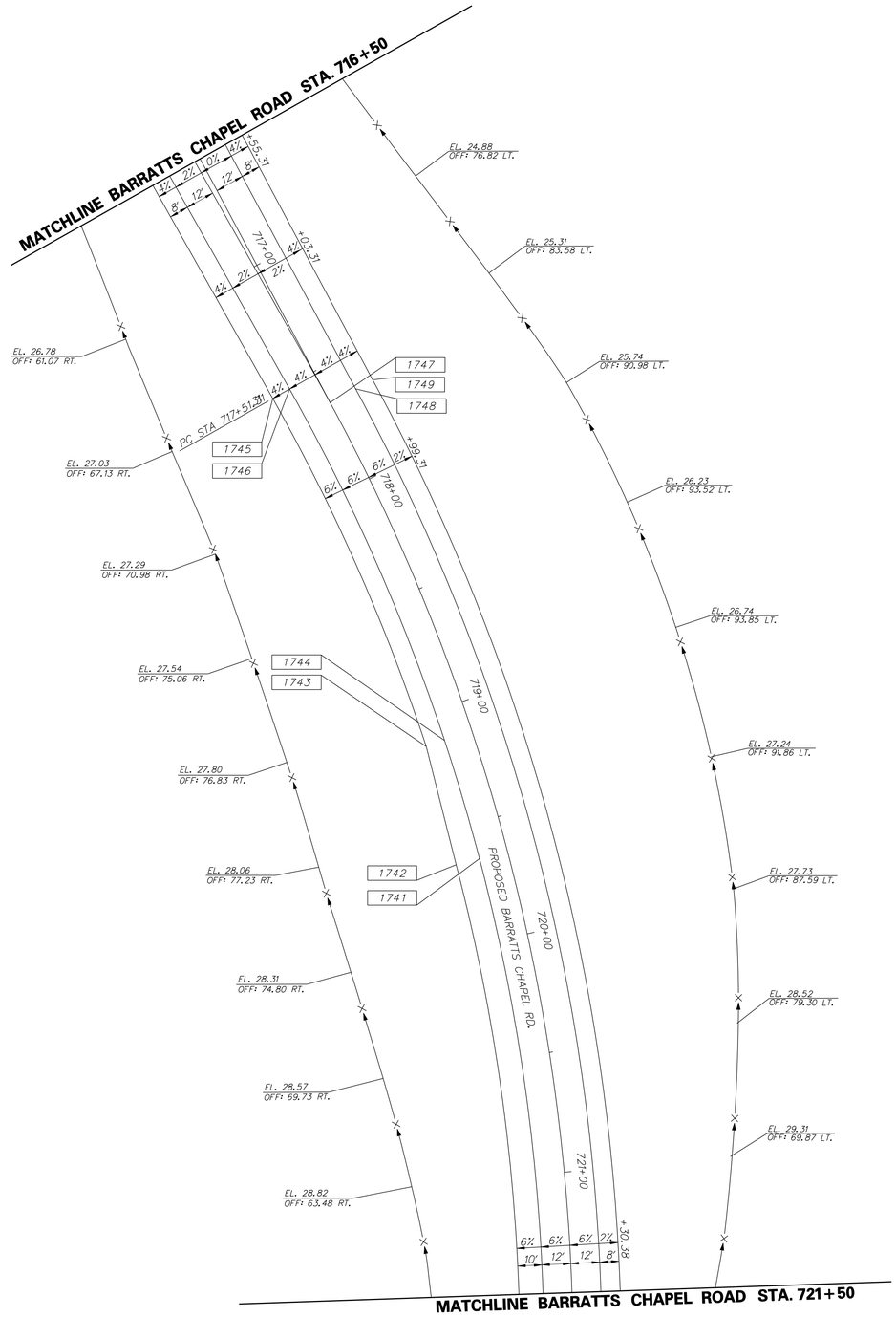

COORDINATE LIST

POINT NO.	STATION	OFFSET	NORTHING	EASTING	ELEV.
1741	719+64.84	12.00	375104.0076	643691.9027	37.31
1742	719+64.84	22.00	375094.0479	643692.7990	36.71
1743	719+13.02	20.00	375089.9429	643642.4181	36.77
1744	719+13.02	12.00	375097.8507	643641.2071	37.25
1745	717+51.31	20.00	375051.1051	643489.6985	34.33
1746	717+51.31	12.00	375058.6307	643486.9847	34.65
1747	717+64.44	0.00	375074.2770	643495.3037	35.51
1748	717+64.48	-12.00	375085.6412	643491.4492	36.06
1749	717+64.51	-20.00	375093.2173	643488.8798	35.78

NOTES:

1. OFFSETS SHOWN IN THE GEOMETRY TABLES WITH A MINUS SIGN ARE TO THE LEFT OF THE CONSTRUCTION & R/W BASELINE.
2. UNLESS OTHERWISE NOTED, POINT GEOMETRY ADJACENT TO CURB AND CURB AND GUTTER IS GIVEN TO THE EDGE OF PAVEMENT.
3. RADII ARE GIVEN TO EDGE OF PAVEMENT.
4. UNLESS OTHERWISE NOTED, EDGE OF PAVEMENT ELEVATIONS AT CURB RETURNS ARE GIVEN AT 10 FOOT INTERVALS.
5. ALL WORK REQUIRED FOR CALCULATING AND STAKING OF GRADES SHALL BE PAID FOR UNDER ITEM 763501-CONSTRUCTION ENGINEERING.
6. PROPOSED CURBS OR PAVEMENT THAT TIE INTO EXISTING PAVEMENT SHALL MATCH ELEVATIONS.

11/25/2014
9:20:01 AM
g:\projects\03517.00 (deldot agmt 123 dots open end)\03517.16 sr1, little heaven final design\dgn files\GG401h.dgn

DELAWARE DEPARTMENT OF TRANSPORTATION

ADDENDUMS / REVISIONS

SCALE 0 30 60 90 FEET

SR1, LITTLE HEAVEN GRADE SEPARATED INTERSECTION

CONTRACT	BRIDGE NO.	-
T200412202	DESIGNED BY:	SFP
COUNTY		
KENT	CHECKED BY:	WFC

GRADES AND GEOMETRICS

SHEET NO.
201
TOTAL SHTS.
641

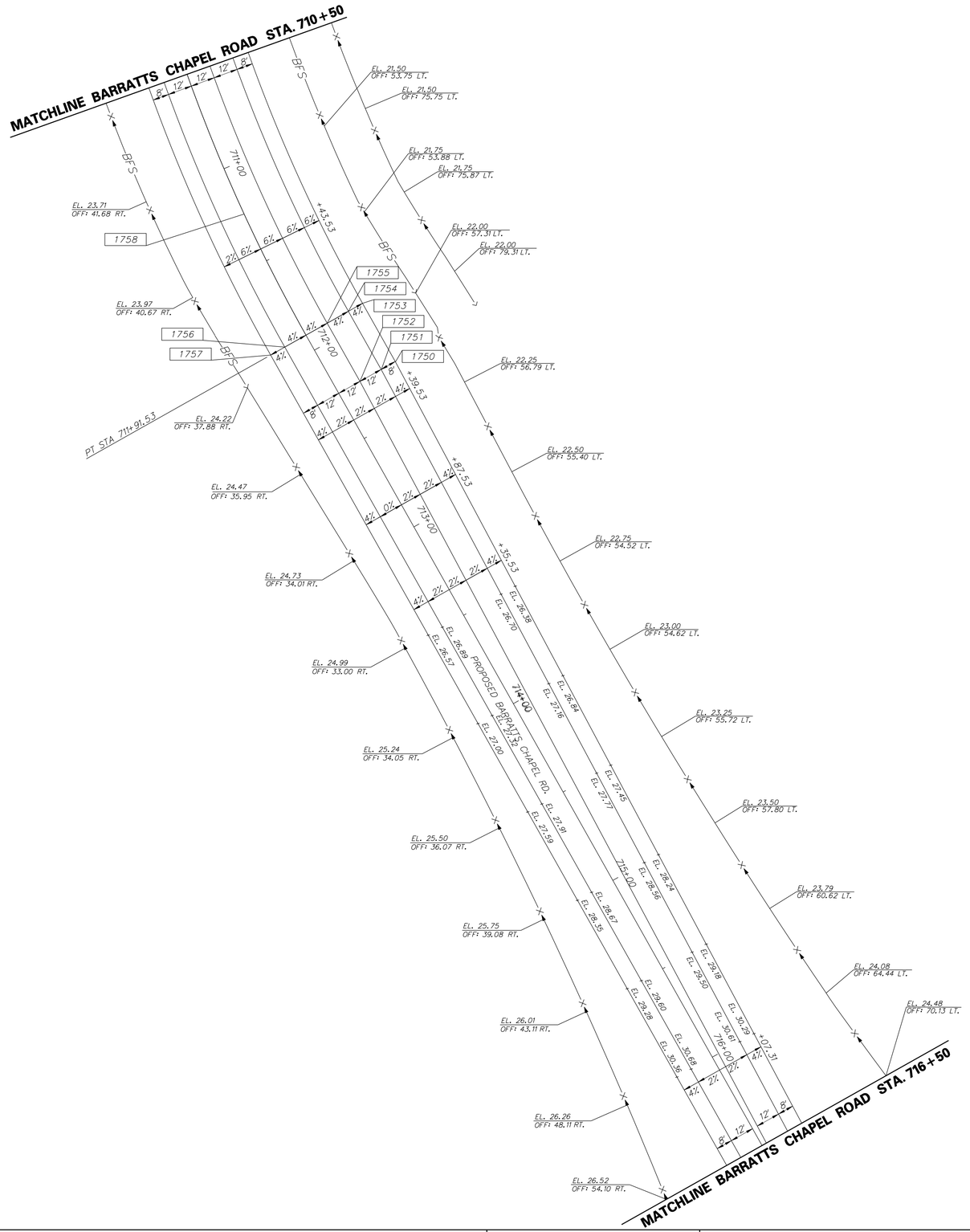

COORDINATE LIST

POINT NO.	STATION	OFFSET	NORTHING	EASTING	ELEV.
1750	712+24.67	-32.00	374921.3710	642976.6440	25.64
1751	712+24.58	-24.00	374913.8149	642979.2735	25.95
1752	712+24.44	-12.00	374902.4809	642983.2177	26.27
1753	711+91.53	-32.00	374910.1312	642945.4750	25.18
1754	711+91.53	-24.00	374902.6055	642948.1888	25.50
1755	711+91.53	-12.00	374891.3171	642952.2595	25.98
1756	711+91.53	12.00	374868.7401	642960.4010	26.94
1757	711+91.53	20.00	374861.2145	642963.1148	26.62
1758	711+24.44	0.00	374859.8346	642892.3702	26.22

NOTES:

1. OFFSETS SHOWN IN THE GEOMETRY TABLES WITH A MINUS SIGN ARE TO THE LEFT OF THE CONSTRUCTION & R/W BASELINE.
2. UNLESS OTHERWISE NOTED, POINT GEOMETRY ADJACENT TO CURB AND CURB AND GUTTER IS GIVEN TO THE EDGE OF PAVEMENT.
3. RADII ARE GIVEN TO EDGE OF PAVEMENT.
4. UNLESS OTHERWISE NOTED, EDGE OF PAVEMENT ELEVATIONS AT CURB RETURNS ARE GIVEN AT 10 FOOT INTERVALS.
5. ALL WORK REQUIRED FOR CALCULATING AND STAKING OF GRADES SHALL BE PAID FOR UNDER ITEM 763501-CONSTRUCTION ENGINEERING.
6. PROPOSED CURBS OR PAVEMENT THAT TIE INTO EXISTING PAVEMENT SHALL MATCH ELEVATIONS.

DELAWARE DEPARTMENT OF TRANSPORTATION

ADDENDUMS / REVISIONS

SCALE 0 30 60 90 FEET

SR1, LITTLE HEAVEN GRADE SEPARATED INTERSECTION

CONTRACT	BRIDGE NO.	-
T200412202	DESIGNED BY:	SFP
COUNTY		
KENT	CHECKED BY:	WFC

GRADES AND GEOMETRICS

SHEET NO. 202
TOTAL SHTS. 641

11/25/2014
9:PROJECTS\035I7.00 (deldot agmt 1223 dots open end)\035I7.16 sr1, little heaven final design\dgn files\CG41h.dgn
3:21:56 PM

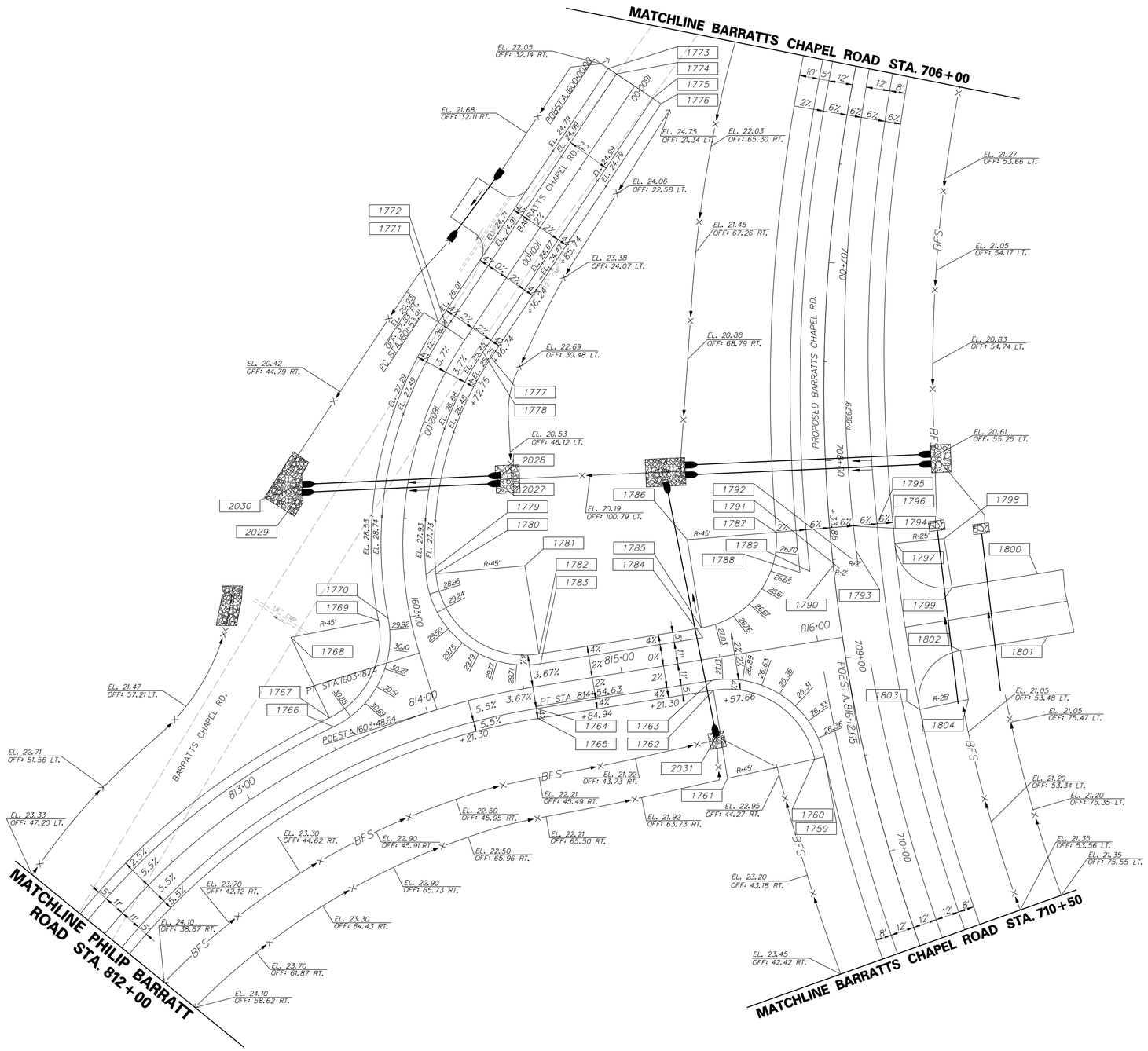

COORDINATE LIST

POINT NO.	STATION	OFFSET	NORTHING	EASTING	ELEV.
1759	815+94.09	58.05	374811.7778	642717.8809	26.39
1760	815+89.10	58.35	374806.7845	642718.1395	26.19
1761	815+44.18	61.00	374761.8448	642720.4674	-
1762	815+44.18	16.00	374762.1685	642675.4686	27.05
1763	815+44.18	11.00	374762.2044	642670.4687	27.25
1764	814+54.63	11.00	374672.6516	642669.8245	28.82
1765	814+54.63	16.00	374672.6156	642674.8244	28.62
1766	1603+41.45	52.30	374570.4034	642661.8878	30.93
1767	1603+36.50	53.02	374569.0210	642657.0827	30.73
1768	1602+98.57	61.00	374556.5794	642613.8368	-
1769	1602+98.57	16.00	374601.5645	642612.6796	29.62
1770	1602+98.57	11.00	374606.5629	642612.5510	29.82
1771	1601+53.91	16.00	374656.2860	642469.5869	26.00
1772	1601+53.91	11.00	374659.9231	642473.0179	26.20
1773	1600+00.00	16.00	374761.8978	642357.6287	25.16
1774	1600+00.00	11.00	374765.5349	642361.0596	25.36
1775	1600+00.00	-11.00	374781.5383	642376.1558	25.36
1776	1600+00.00	-16.00	374785.1754	642379.5867	25.16
1777	1601+53.91	-16.00	374679.5635	642491.5450	25.46
1778	1601+53.91	-11.00	374675.9264	642488.1140	25.66
1779	1602+79.41	-11.00	374629.0250	642593.9789	28.66
1780	1602+79.41	-16.00	374634.0099	642594.3677	28.46
1781	1602+79.41	-61.00	374678.8736	642597.8674	-
1782	1603+37.13	-57.43	374678.5499	642642.8662	29.29
1783	1603+42.08	-56.72	374678.5139	642647.8661	29.49
1784	815+43.23	-11.00	374761.4134	642648.4624	27.33
1785	815+43.23	-16.00	374761.4494	642643.4626	27.19
1786	815+43.23	-61.00	374761.7729	642598.4826	-
1787	708+33.86	27.00	374806.6171	642602.2075	26.77
1788	708+54.69	17.00	374815.0788	642624.2455	26.46
1789	708+54.69	12.00	374820.0703	642624.5367	26.41
1790	708+52.98	0.00	374832.1511	642623.5319	25.69
1791	708+54.69	-3.05	374835.0958	642625.4134	25.51
1792	708+50.57	-9.66	374841.9361	642621.7295	25.12
1793	708+46.29	-12.00	374844.5537	642617.6689	24.99
1794	708+33.99	-12.00	374845.4709	642605.5841	25.03
1795	708+33.86	-24.00	374857.4403	642606.4504	24.31
1796	708+33.76	-32.00	374865.4199	642607.0280	23.83
1797	708+44.82	-32.00	374864.6043	642617.6317	23.80
1798	708+44.82	-57.00	374889.5429	642619.3833	-
1799	708+71.65	-58.17	374889.3630	642644.3827	-
1800	708+70.13	-101.72	374932.9302	642644.6961	-
1801	709+06.59	-102.06	374932.7001	642676.6952	-
1802	709+06.05	-57.67	374888.3073	642676.3759	-
1803	709+32.89	-32.00	374863.1433	642702.2651	23.69
1804	709+32.89	-57.00	374888.1274	642701.3753	-
2027	1602+22.13	-45.57	374673.4048	642554.8281	-
2028	1602+16.84	-45.00	374674.4383	642550.9246	-
2029	1602+42.66	52.37	374574.1424	642542.7047	-
2030	1602+39.51	52.48	374575.1759	642538.8012	-
2031	815+42.00	39.18	374759.8215	642698.6323	-

NOTES:

1. OFFSETS SHOWN IN THE GEOMETRY TABLES WITH A MINUS SIGN ARE TO THE LEFT OF THE CONSTRUCTION & R/W BASELINE.
2. UNLESS OTHERWISE NOTED, POINT GEOMETRY ADJACENT TO CURB AND CURB AND GUTTER IS GIVEN TO THE EDGE OF PAVEMENT.
3. RADII ARE GIVEN TO EDGE OF PAVEMENT.
4. UNLESS OTHERWISE NOTED, EDGE OF PAVEMENT ELEVATIONS AT CURB RETURNS ARE GIVEN AT 10 FOOT INTERVALS.
5. ALL WORK REQUIRED FOR CALCULATING AND STAKING OF GRADES SHALL BE PAID FOR UNDER ITEM 763501-CONSTRUCTION ENGINEERING.
6. PROPOSED CURBS OR PAVEMENT THAT TIE INTO EXISTING PAVEMENT SHALL MATCH ELEVATIONS.

3/12/2015
G:\PROJECTS\035T.00 (DELDOT AGMT 1223 DOTS Open End\035T.16 SR1 LITTLE HEAVEN FINAL DESIGN\DGN Files\G642ln.dgn
11:47:46 AM

DELAWARE DEPARTMENT OF TRANSPORTATION

ADDENDUMS / REVISIONS

SCALE 0 30 60 90 FEET

SR1, LITTLE HEAVEN GRADE SEPARATED INTERSECTION

CONTRACT	BRIDGE NO.	-
T200412202	DESIGNED BY:	SFP
COUNTY	CHECKED BY:	WFC
KENT		

GRADES AND GEOMETRICS

SHEET NO. 203
TOTAL SHTS. 641

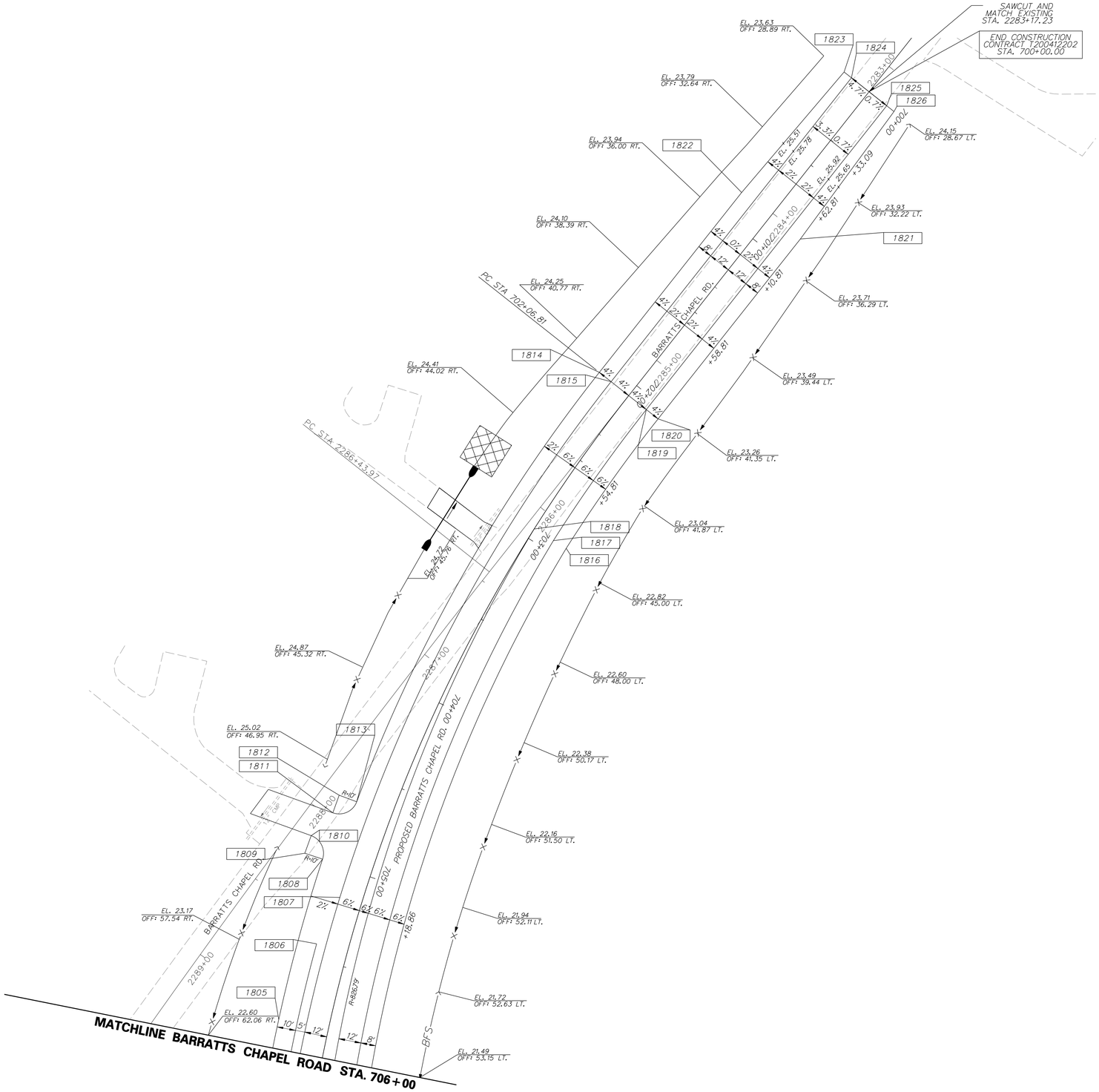

COORDINATE LIST

POINT NO.	STATION	OFFSET	NORTHING	EASTING	ELEV.
1805	705+84.89	27.00	374865.6786	642353.0301	28.01
1806	705+41.98	17.00	374892.3233	642316.5754	28.03
1807	705+15.19	12.00	374908.6750	642294.2034	28.06
1808	704+98.92	27.00	374902.9659	642272.5299	28.33
1809	704+98.92	37.00	374894.1209	642267.8645	-
1810	704+89.35	36.77	374899.0426	642259.1595	-
1811	704+74.60	29.94	374912.4430	642249.0449	-
1812	704+64.94	30.00	374917.3647	642240.3399	-
1813	704+64.94	20.00	374926.0121	642245.3621	28.41
1814	702+06.81	20.00	375091.7833	642040.8300	27.20
1815	702+06.81	12.00	375097.1465	642046.7660	27.52
1816	702+93.68	-20.00	375058.7620	642130.5239	26.36
1817	702+93.86	-12.00	375052.6941	642125.3104	26.84
1818	702+94.12	0.00	375043.5922	642117.4902	27.56
1819	702+06.81	-12.00	375113.2361	642064.5740	26.56
1820	702+06.81	-20.00	375118.5993	642070.5100	26.24
1821	700+84.37	-20.00	375209.4469	641988.4285	25.74
1822	700+84.37	20.00	375182.6309	641958.7485	25.85
1823	700+00.00	17.00	375247.2472	641904.4103	25.03
1824	700+00.00	12.00	375250.5992	641908.1203	25.23
1825	700+00.00	-12.00	375266.6888	641925.9282	25.71
1826	700+00.00	-17.00	375270.0409	641918.0135	25.51

NOTES:

1. OFFSETS SHOWN IN THE GEOMETRY TABLES WITH A MINUS SIGN ARE TO THE LEFT OF THE CONSTRUCTION & R/W BASELINE.
2. UNLESS OTHERWISE NOTED, POINT GEOMETRY ADJACENT TO CURB AND CURB AND GUTTER IS GIVEN TO THE EDGE OF PAVEMENT.
3. RADII ARE GIVEN TO EDGE OF PAVEMENT.
4. UNLESS OTHERWISE NOTED, EDGE OF PAVEMENT ELEVATIONS AT CURB RETURNS ARE GIVEN AT 10 FOOT INTERVALS.
5. ALL WORK REQUIRED FOR CALCULATING AND STAKING OF GRADES SHALL BE PAID FOR UNDER ITEM 763501-CONSTRUCTION ENGINEERING.
6. PROPOSED CURBS OR PAVEMENT THAT TIE INTO EXISTING PAVEMENT SHALL MATCH ELEVATIONS.

DELAWARE DEPARTMENT OF TRANSPORTATION

ADDENDUMS / REVISIONS

SCALE 0 30 60 90 FEET

SR1, LITTLE HEAVEN GRADE SEPARATED INTERSECTION

CONTRACT	BRIDGE NO.	-
T200412202	DESIGNED BY:	SFP
COUNTY		
KENT	CHECKED BY:	WFC

GRADES AND GEOMETRICS

SHEET NO. 204
TOTAL SHTS. 641

11/25/2014
9:20:19 am
S:\Proj\Projects\V35\7.00 (deldot agmt 1223 dots open end)\V35\7.16 sr1, little heaven final design\dgn files\GG43h.dgn
3:27:38 PM

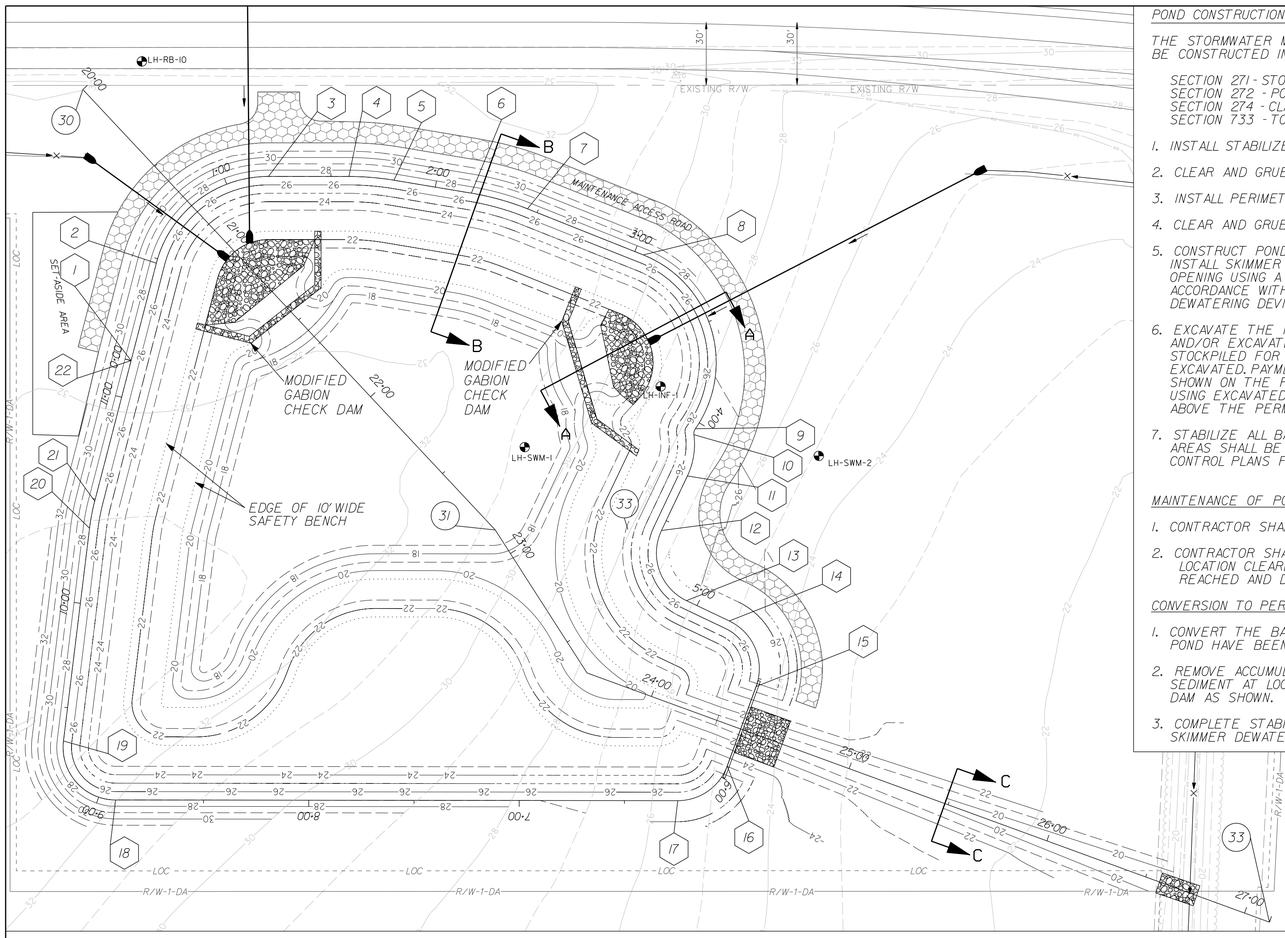

PLAN – DELDOT SWM FACILITY #455

SCALE: NONE

POND CONSTRUCTION SEQUENCE AND NOTES

THE STORMWATER MANAGEMENT POND SHALL FUNCTION AS A SEDIMENT BASIN DURING ROADWAY CONSTRUCTION AND SHALL BE CONSTRUCTED IN ACCORDANCE WITH THE FOLLOWING SECTIONS OF THE STANDARD SPECIFICATIONS AS IS APPLICABLE:

SECTION 271 - STORMWATER MANAGEMENT POND
SECTION 272 - POND OUTLET STRUCTURE, CONCRETE
SECTION 274 - CLAY BORROW, STORMWATER MANAGEMENT POND
SECTION 733 - TOPSOILING

1. INSTALL STABILIZED CONSTRUCTION ENTRANCE.
2. CLEAR AND GRUB FOR INSTALLATION OF PERIMETER EROSION AND SEDIMENT CONTROLS.
3. INSTALL PERIMETER SEDIMENT CONTROLS.
4. CLEAR AND GRUB REMAINING AREA FOR POND CONSTRUCTION.
5. CONSTRUCT POND OUTLET STRUCTURE AND PARTIAL EMBANKMENT AS NEEDED TO INSTALL POND OUTLET STRUCTURE. INSTALL SKIMMER DEWATERING DEVICE USING 4" DIAMETER HOLE IN WEIR STRUCTURE. BLOCK PRIMARY WEIR SPILLWAY OPENING USING A WATERTIGHT METHOD APPROVED BY THE ENGINEER. DE-WATER FOUNDATION AS NEEDED IN ACCORDANCE WITH SECTION 110.13 AND USE SUMP PIT FOR PUMPING. (SEE DELDOT STANDARD DETAILS FOR SKIMMER DEWATERING DEVICE INSTALLATION.)
6. EXCAVATE THE POND TO THE ELEVATIONS SHOWN ON THE GRADING PLAN. RETAIN SUFFICIENT MATERIAL (TOPSOIL AND/OR EXCAVATED BORROW) TO CONSTRUCT THE POND TO THE FINAL CONTOURS. EXCESS EXCAVATION MAY BE STOCKPILED FOR LATER USE IN ROADWAY EMBANKMENT OR PLACED IN THE ROADWAY EMBANKMENT AS IT IS EXCAVATED. PAYMENT FOR THIS WORK TO BE MADE UNDER ITEM 271000. FURNISH AND PLACE THE CLAY LINER AS SHOWN ON THE PLANS WITH PAYMENT TO BE MADE UNDER ITEM 274001. COMPLETE ANY NECESSARY EMBANKMENT USING EXCAVATED MATERIALS TO THE FINAL CONTOURS. PLACE 6" TOPSOILING MATERIAL (ITEM 733002) ON ALL AREAS ABOVE THE PERMANENT POOL ELEVATION.
7. STABILIZE ALL BARE AREAS. ALL AREAS MEETING FINAL GRADE SHALL BE PERMANENTLY STABILIZED. REMAINING AREAS SHALL BE STABILIZED USING TEMPORARY STABILIZATION (NO TOPSOIL). NOTE: SEE EROSION AND SEDIMENT CONTROL PLANS FOR LOCATION OF EROSION AND SEDIMENT CONTROL MEASURES.

MAINTENANCE OF POND AS A SEDIMENT BASIN

1. CONTRACTOR SHALL INSPECT THE BASIN IMMEDIATELY AFTER EVERY RAIN AND MAKE REPAIRS AS NEEDED.
2. CONTRACTOR SHALL CLEARLY MARK THE CLEANOUT ELEVATION (EL.19.00') ON A STAKE DRIVEN INTO THE GROUND AT A LOCATION CLEARLY VISIBLE FROM THE EMBANKMENT. SEDIMENT SHALL BE REMOVED WHEN CLEANOUT ELEVATION IS REACHED AND DISPOSED OF AT A LOCATION APPROVED BY THE ENGINEER.

CONVERSION TO PERMANENT STORMWATER MANAGEMENT POND

1. CONVERT THE BASIN INTO THE PERMANENT STORMWATER MANAGEMENT POND AFTER ALL AREAS DRAINING TO THE POND HAVE BEEN PERMANENTLY STABILIZED AND THE ENGINEER HAS APPROVED THE CONVERSION.
2. REMOVE ACCUMULATED SEDIMENT TO ELEVATION 17.0 AS SHOWN BY LINES AND GRADES ON THE PLAN AND DISPOSE OF SEDIMENT AT LOCATION APPROVED BY THE ENGINEER. INSTALL POND LINER AS SHOWN. INSTALL MODIFIED GABION CHECK DAM AS SHOWN.
3. COMPLETE STABILIZATION OF ALL BARE AREAS. REMOVE EROSION AND SEDIMENT CONTROL MEASURES AND DEACTIVATE SKIMMER DEWATERING DEVICE. PATCH 4" DIAMETER HOLE IN WEIR STRUCTURE USING HYDRAULIC GROUT. REMOVE WEIR BLOCK OFF PLATE.

℄ EMBANKMENT

	STATION	NORTHING	EASTING	RADIUS
1	POB STA.0+00.00	373914.9554	644115.4090	
2	PC STA.0+47.82	373934.4586	644071.7450	
	PI STA.0+90.40	373951.8251	644032.8647	55.00'
3	PT STA.1+20.29	373993.8157	644039.9404	
4	PC STA.1+58.56	374031.5495	644046.2988	
	PI STA.1+69.32	374042.1590	644048.0866	130.00'
5	PT STA.1+80.03	374052.3303	644051.5943	
6	PC STA.2+17.33	374087.5937	644063.7552	
	PI STA.2+31.25	374100.7566	644068.2945	130.00'
7	PT STA.2+45.07	374112.6596	644075.5186	
8	PC STA.3+04.29	374163.2882	644106.2456	
	PI STA.3+73.73	374222.6450	644142.2698	55.00'
9	PRC STA.4+03.39	374173.9902	644191.8044	
	PI STA.4+04.94	374172.9008	644192.9135	4.00'
10	PRC STA.4+06.36	374172.8463	644194.4672	
	PI STA.4+16.71	374172.4836	644204.8126	35.00'
11	PT STA.4+26.49	374166.5519	644213.2962	
	PI STA.4+46.16	374155.2757	644229.4238	25.00'
12	PC STA.4+55.17	374150.1160	644236.8033	
	PI STA.4+80.17	374135.7906	644257.2919	25.00'
13	PT STA.4+94.44	374156.2792	644271.6174	
14	PC STA.5+16.99	374174.7602	644284.5391	
	PI STA.5+39.73	374193.3961	644297.5691	25.00'
15	PT STA.5+53.89	374182.1853	644317.3530	
16	PC STA.5+94.11	374162.3578	644352.3427	
	PI STA.6+11.64	374153.7156	644367.5936	25.00'
17	PT STA.6+24.69	374153.7156	644367.5936	
18	PC STA.8+91.77	373873.0936	644320.0637	
	PI STA.9+19.99	373845.2726	644315.3515	25.00'
19	PT STA.9+34.06	373853.3020	644288.3008	
20	PC STA.10+35.88	373882.2752	644190.6919	
	PI STA.10+42.47	373884.1493	644184.3781	100.00'
21	PT STA.10+49.04	373886.8353	644178.3646	
22	POE STA.11+17.99	373914.9554	644115.4090	

NOTE: ℄ EMBANKMENT IS LOCATED AT TOP OF POND, EL. 27.0'

℄ SPILLWAY

	STATION	NORTHING	EASTING
30	POB STA.20+00.00	373913.7256	643984.5971
31	PI STA.22+86.69	374072.2697	644223.4640
32	PI STA.23+67.38	374103.9964	644297.6546
33	POE STA.27+12.60	374404.1351	644468.2145

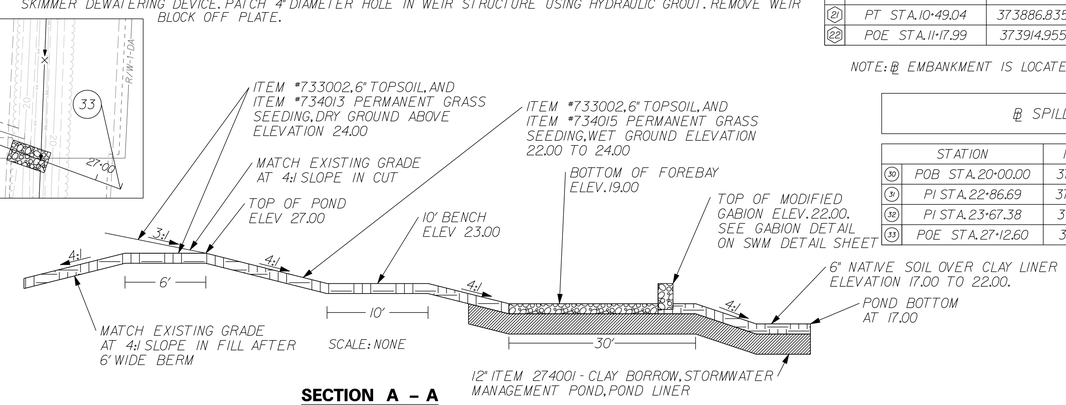

SECTION A – A

SCALE: NONE

POND DESIGN SUMMARY FOR BMP #455				
DESIGN STORM	FACILITY INFLOW	FACILITY DISCHARGE	WATER SURFACE ELEVATION	STORAGE VOLUME (AC.FT)
QUALITY STORM (2.0")	6.15	1.67	22.28	0.281
2 - YEAR	18.07	5.98	22.73	0.741
10 - YEAR	38.35	13.87	23.35	1.552
100 - YEAR	80.21	37.79	24.20	2.863

HAZARD CLASSIFICATION: CLASS A AS PER POND CODE 378

DRAINAGE AREA TO FACILITY: 16.86 ACRES

MANAGEMENT PROVIDED BY FACILITY: WATER QUALITY BY EXTENDED DETENTION OF FIRST 2.0" OF RUNOFF. WATER QUANTITY FOR 2&10 YEAR STORMS.

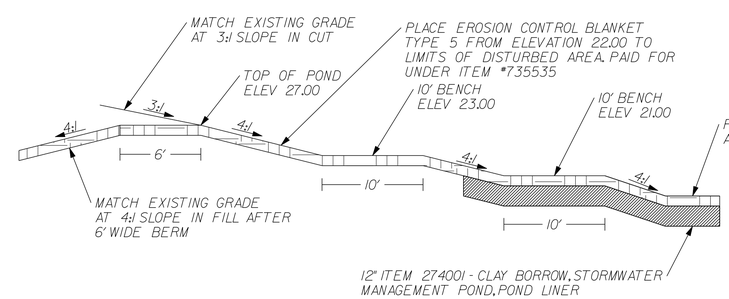

SECTION B – B

SCALE: NONE

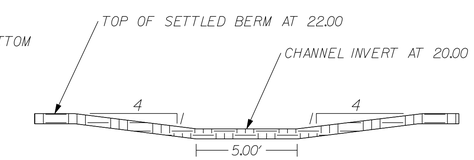

SECTION C – C

SCALE : NONE

DELAWARE DEPARTMENT OF TRANSPORTATION

ADDENDUMS / REVISIONS

NOT TO SCALE

SR1, LITTLE HEAVEN GRADE SEPARATED INTERSECTION

CONTRACT	BRIDGE NO.	–
T200412202	DESIGNED BY:	SFP
COUNTY		
KENT	CHECKED BY:	WFC

STORMWATER MANAGEMENT DETAILS DELDOT SWM FACILTY #455

SHEET NO. 205

TOTAL SHTS. 641

11/25/2024 12:24:13 pm
S:\Projects\0259\7.0\0 Wetlands\Segment 1\223 details\pond end\0259\7.06 sm_little heaven final design\dgn files\swm_detail1-1.dgn

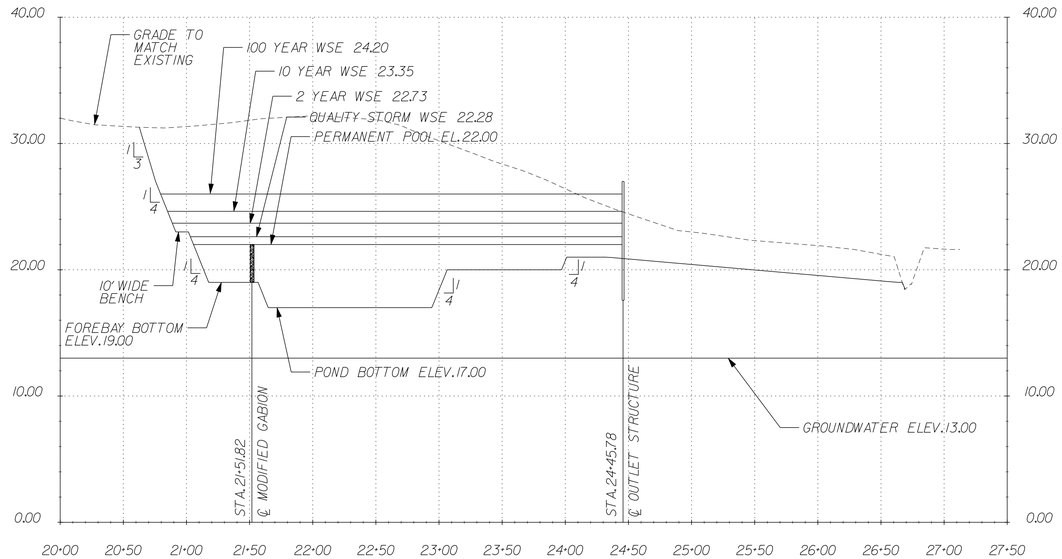

DELDOT SWM FACILITY #455 CROSS SECTION

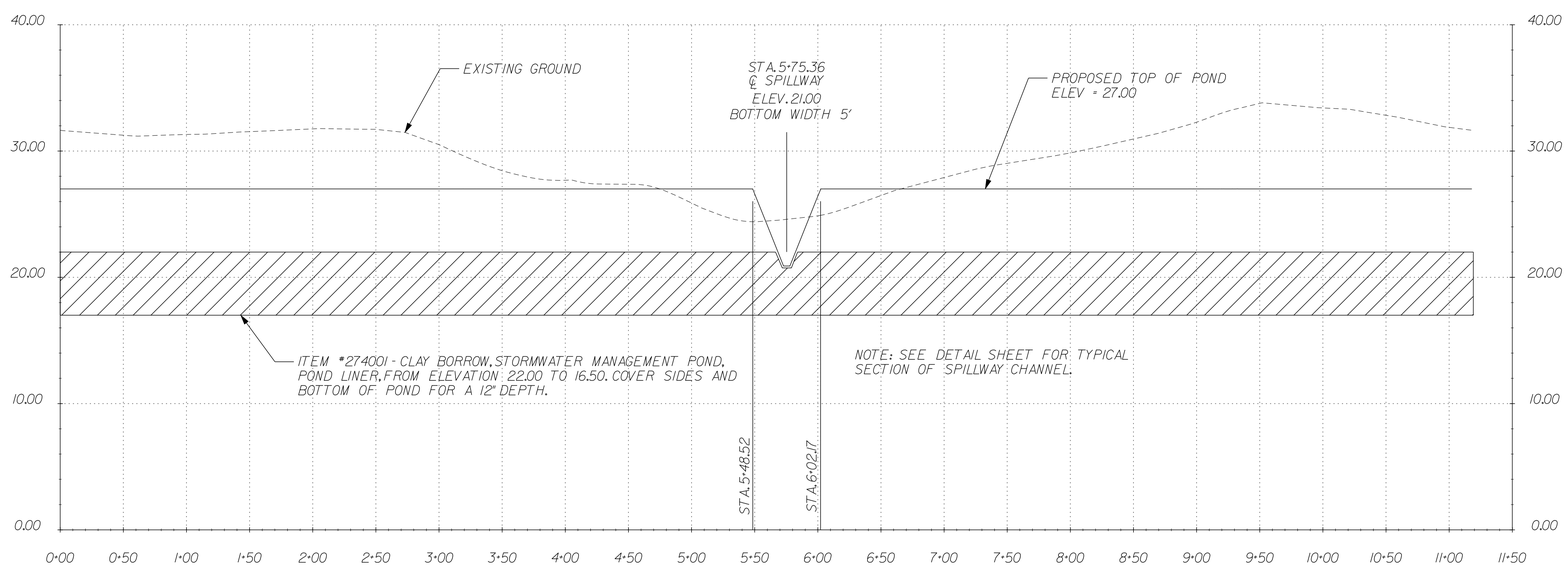

DELDOT SWM FACILITY #455 EMBANKMENT

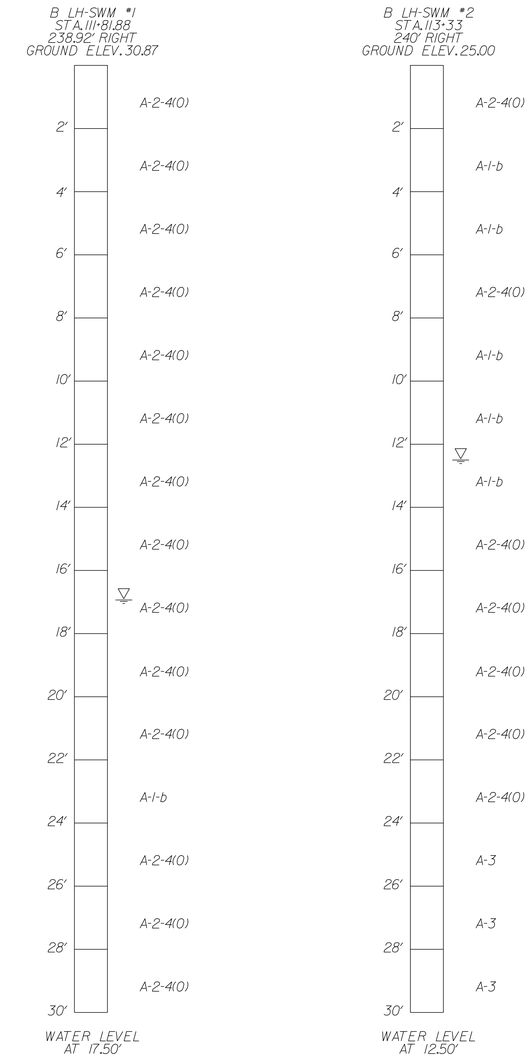

DELAWARE DEPARTMENT OF TRANSPORTATION	ADDENDUMS / REVISIONS	SCALE: HORZ. 1" = 60' VERT. 1" = 6'	SR1, LITTLE HEAVEN GRADE SEPARATED INTERSECTION	CONTRACT T200412202	BRIDGE NO. -	STORMWATER MANAGEMENT DETAILS DELDOT SWM FACILITY #455	SHEET NO. 206
				COUNTY KENT	DESIGNED BY: SFP		TOTAL SHTS. 641
					CHECKED BY: WFC		

11/22/2016
G:\Projects\T200412202 laeadsh agm+ 11223 dsh's sswm emdh\T200412202 sr1_little heaven fthwd\design\dgn files\swm_detail1-2.dgn
2:25:55 PM

WORKING POINTS		
MARK	NORTHING	EASTING
WP-1	374184.3741	644315.2554
WP-2	374160.3481	644357.8572

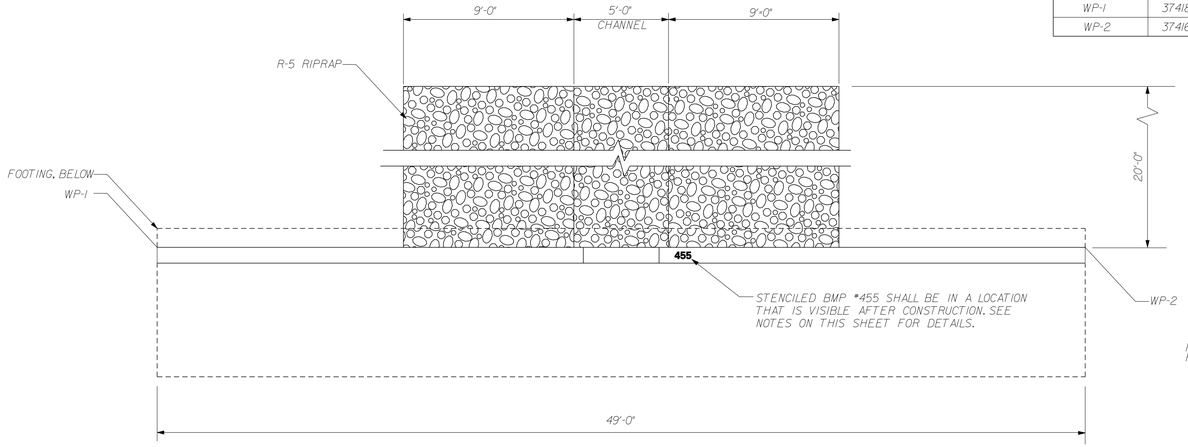

PLAN
SCALE: 1/4"=1'-0"

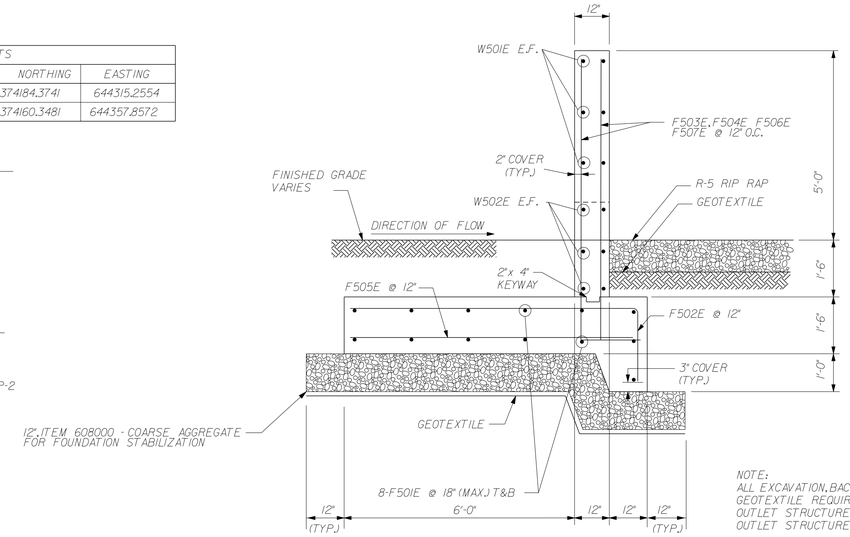

NOTE:
ALL EXCAVATION, BACKFILL, COARSE AGGREGATE, OR GEOTEXTILE REQUIRED FOR THE INSTALLATION OF THE OUTLET STRUCTURE SHALL BE INCLUDED IN ITEM 272000 OUTLET STRUCTURE, CONCRETE, #1.

SECTION A-A
SCALE: 1/2"=1'-0"

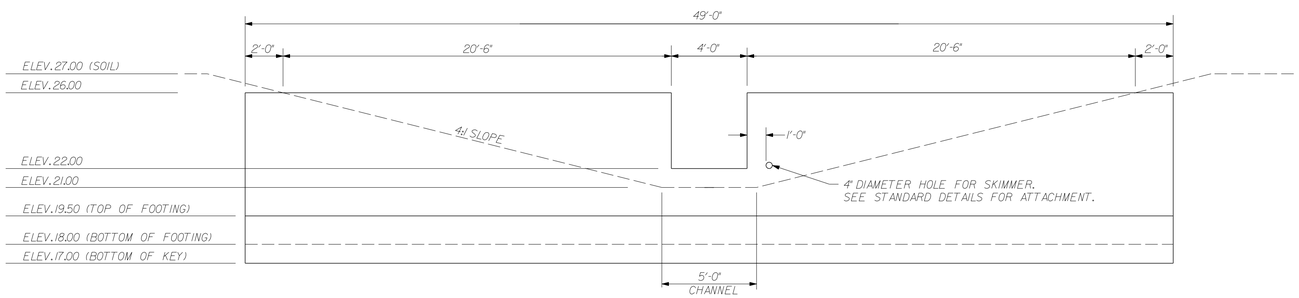

ELEVATION
SCALE: 1/4"=1'-0"

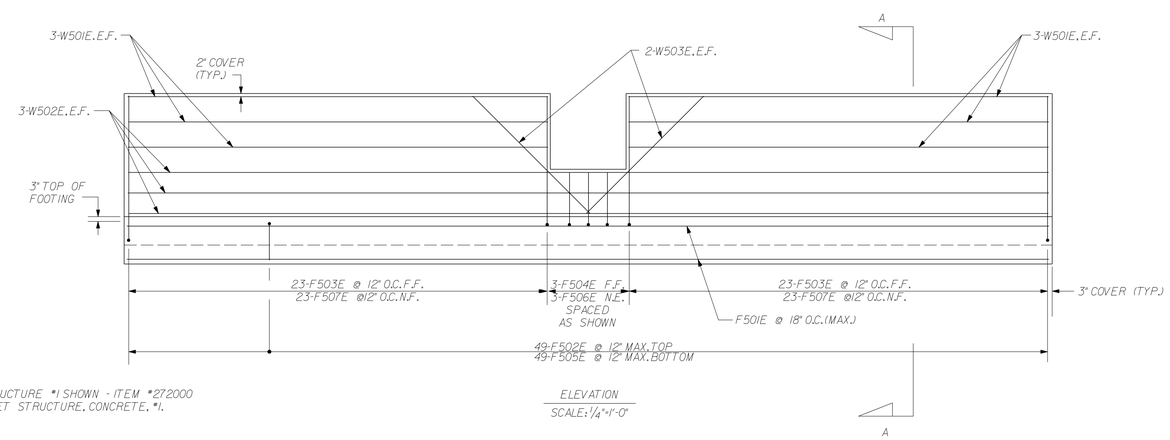

OUTLET STRUCTURE #1 SHOWN - ITEM #272000
-POND OUTLET STRUCTURE, CONCRETE, #1.

ELEVATION
SCALE: 1/4"=1'-0"

GENERAL NOTES:

1. SPECIFICATIONS:

   DELAWARE DEPARTMENT OF TRANSPORTATION - STANDARD SPECIFICATIONS FOR ROAD AND BRIDGE CONSTRUCTION, AUGUST 2001, INCLUDING ALL SUPPLEMENTS.

2. MATERIALS:

   CONCRETE FOR FOOTINGS SHALL BE CLASS "B" CONCRETE WITH f'c - 3000 PSI MIN. AT 28 DAYS. CONCRETE ABOVE FOOTINGS SHALL BE CLASS "A" CONCRETE WITH f'c - 4500 PSI MIN. AT 28 DAYS.

   REINFORCING STEEL SHALL CONFIRM TO A.A.S.H.T.O. M 31-94, GRADE 60. ALL FASTNERS SHALL BE GRADE 8. ALL REINFORCING STEEL AND TIES SHALL BE EPOXY COATED IN ACCORDANCE WITH AASHTO M284.

   GEOTEXTILE SHALL BE PAID FOR UNDER ITEM NUMBER 713002 - GEOTEXTILE, SEPARATION.

3. EXCAVATION SHALL BE PERFORMED IN THE PRESENCE OF THE ENGINEER OR HIS REPRESENTATIVE. AFTER EXCAVATION, ALL EARTH SHALL BE INSPECTED BY A REGISTERED PROFESSIONAL GEOTECHNICAL ENGINEER AND APPROVED FOR AN ALLOWABLE BEARING PRESSURE OF 3000 PSF. BEFORE PROCEEDING WITH CONSTRUCTION. EXCAVATION SHALL BE INCIDENTAL TO ITEM #272000.

4. BACKFILL MATERIAL OVER FOUNDATIONS SHALL BE TYPE F BORROW OR AS APPROVED BY THE ENGINEER. FURNISHING AND PLACING BACKFILL MATERIAL SHALL BE INCLUDED IN ITEM #272000-POND OUTLET STRUCTURE, CONCRETE, #1. ALL DIMENSIONS, ELEVATIONS, AND FIELD CONDITIONS SHALL BE VERIFIED PRIOR TO CONSTRUCTION.

5. FURNISHING, CONSTRUCTING AND PLACING ALL ITEMS ASSOCIATED WITH THE OUTLET STRUCTURE, INCLUDING BUT NOT LIMITED TO, TRASH RACKS, CONCRETE, REINFORCING STEEL, STONE BEDDING, GEOTEXTILE, FASTNERS AND BACKFILL MATERIAL SHALL BE INCLUDED IN ITEM #272000.

6. CONTRACTOR SHALL STENCIL THE APPROVED DELDOT BMP NUMBER ONTO THE CONCRETE OUTLET STRUCTURE. NUMBERS SHALL BE 4" TALL AND STENCILED IN PERMANENT BLACK PAINT. COST SHALL BE INCIDENTAL TO ITEM #272000.

7. CONTRACTOR SHALL SUBMIT SHOP DRAWINGS DETAILING LAYOUT AND DESIGN OF WEIR STRUCTURE. DRAWINGS SHALL BE SEALED BY A PROFESSIONAL ENGINEER REGISTERED IN DELAWARE.

LEGEND:
T&B TOP AND BOTTOM
N.F. NEAR FACE
F.F. FAR FACE
E.F. EACH FACE

REINFORCING BAR LIST

LENGTHS AND QUANTITIES SHOWN REPRESENT ONE OUTLET STRUCTURE.

MARK	SIZE	NUMBER	LENGTH	TYPE	A	B
F501E	5	13	48'-6"	STR.	-	-
F502E	5	49	9'-6"	1	7'-6"	2'-0"
F503E	5	46	9'-2"	1	1'-7"	7'-7"
F504E	5	3	5'-2"	1	1'-7"	3'-7"
F505E	5	49	7'-6"	STR.	-	-
F506E	5	3	3'-7"	STR.	-	-
F507E	5	46	7'-7"	STR.	-	-
W501E	5	12	20'-1"	STR.	-	-
W502E	5	6	48'-8"	STR.	-	-
W503E	5	4	8'-9"	STR.	-	-

BENDING DIAGRAMS

(E) DENOTES EPOXY COATED BARS.
ALL DIMENSIONS ARE FROM OUT TO OUT.

TYPE 1

DELAWARE
DEPARTMENT OF TRANSPORTATION

ADDENDUMS / REVISIONS

SCALE: AS SHOWN

SR1, LITTLE HEAVEN
GRADE SEPARATED INTERSECTION

CONTRACT	BRIDGE NO.	-
T200412202	DESIGNED BY:	SFP
COUNTY	CHECKED BY:	WFC
KENT		

STORMWATER
MANAGEMENT DETAILS
DELDOT SWM FACILITY #455

SHEET NO. 207
TOTAL SHTS. 641

11/25/2014
2:32:02 PM

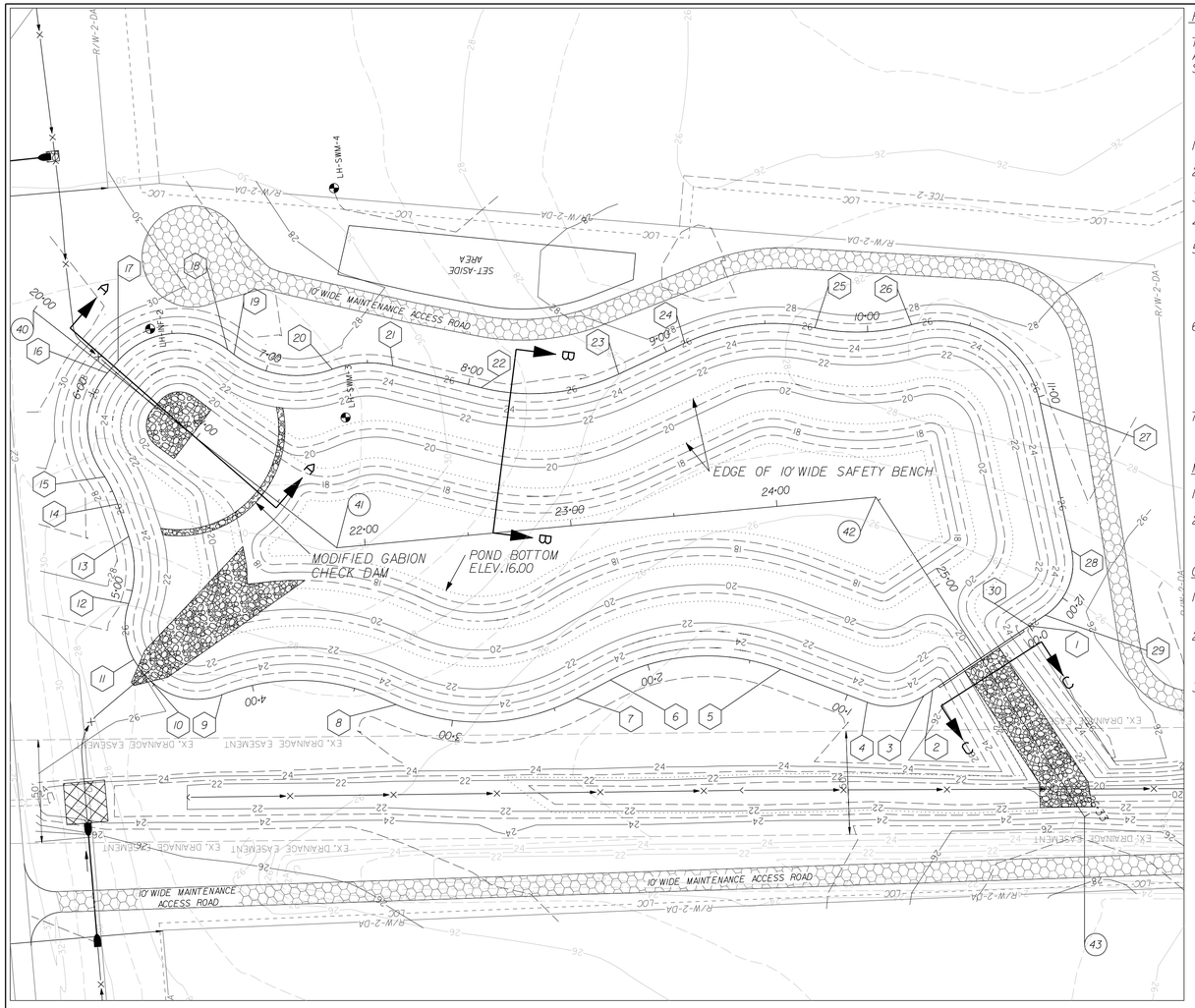

PLAN – DELDOT SWM FACILITY #456

SCALE : NONE

POND CONSTRUCTION SEQUENCE AND NOTES

THE STORMWATER MANAGEMENT POND SHALL FUNCTION AS A SEDIMENT BASIN DURING ROADWAY CONSTRUCTION AND SHALL BE CONSTRUCTED IN ACCORDANCE WITH THE FOLLOWING SECTIONS OF THE STANDARD SPECIFICATIONS AS IS APPLICABLE:

SECTION 271 - STORMWATER MANAGEMENT POND
SECTION 272 - POND OUTLET STRUCTURE.CONCRETE
SECTION 733 - TOPSOILING

1. INSTALL STABILIZED CONSTRUCTION ENTRANCE.
2. CLEAR AND GRUB FOR INSTALLATION OF PERIMETER EROSION AND SEDIMENT CONTROLS.
3. INSTALL PERIMETER SEDIMENT CONTROLS AS SHOWN.
4. CLEAR AND GRUB REMAINING AREA FOR POND CONSTRUCTION.
5. CONSTRUCT POND OUTLET STRUCTURE AND PARTIAL EMBANKMENT AS NEEDED TO INSTALL POND OUTLET STRUCTURE. INSTALL SKIMMER DEWATERING DEVICE USING 4" DIAMETER HOLE IN WEIR STRUCTURE. BLOCK PRIMARY WEIR SPILLWAY OPENING USING A WATERTIGHT METHOD APPROVED BY THE ENGINEER. DE-WATER FOUNDATION AS NEEDED IN ACCORDANCE WITH SECTION 1013 AND USE SUMP PIT FOR PUMPING. (SEE DELDOT STANDARD DETAILS FOR SKIMMER DEWATERING DEVICE INSTALLATION.)
6. EXCAVATE THE POND TO THE ELEVATIONS SHOWN ON THE GRADING PLAN. RETAIN SUFFICIENT MATERIAL TO CONSTRUCT THE POND TO THE FINAL CONTOURS. EXCESS EXCAVATION MAY BE STOCKPILED FOR LATER USE IN ROADWAY EMBANKMENT OR PLACED IN THE ROADWAY EMBANKMENT AS IT IS EXCAVATED. PAYMENT FOR THIS WORK TO BE MADE UNDER ITEM 271000. COMPLETE ANY NECESSARY EMBANKMENT USING EXCAVATED MATERIALS TO THE FINAL CONTOURS. PLACE 6" TOPSOILING MATERIAL (ITEM 733002) ON ALL AREAS ABOVE THE PERMANENT POOL ELEVATION.
7. STABILIZE ALL BARE AREAS. ALL AREAS MEETING FINAL GRADE SHALL BE PERMANENTLY STABILIZED. REMAINING AREAS SHALL BE STABILIZED USING TEMPORARY STABILIZATION (NO TOPSOIL). NOTE: SEE EROSION AND SEDIMENT CONTROL PLANS FOR LOCATION OF EROSION AND SEDIMENT CONTROL MEASURES.

MAINTENANCE OF POND AS A SEDIMENT BASIN

1. CONTRACTOR SHALL INSPECT THE BASIN IMMEDIATELY AFTER EVERY RAIN AND MAKE REPAIRS AS NEEDED.
2. CONTRACTOR SHALL CLEARLY MARK THE CLEANOUT ELEVATION (ELEV. 18.00) ON A STAKE DRIVEN INTO THE GROUND AT A LOCATION CLEARLY VISIBLE FROM THE EMBANKMENT. SEDIMENT SHALL BE REMOVED WHEN CLEANOUT ELEVATION IS REACHED AND DISPOSED OF AT A LOCATION APPROVED BY THE ENGINEER.

CONVERSION TO PERMANENT STORMWATER MANAGEMENT POND

1. CONVERT THE BASIN INTO THE PERMANENT STORMWATER MANAGEMENT POND AFTER ALL AREAS DRAINING TO THE POND HAVE BEEN PERMANENTLY STABILIZED AND THE ENGINEER HAS APPROVED THE CONVERSION.
2. REMOVE ACCUMULATED SEDIMENT TO ELEVATION 16.00 AS SHOWN BY LINES AND GRADES ON THE PLAN AND DISPOSE OF SEDIMENT AT LOCATION APPROVED BY THE ENGINEER. INSTALL MODIFIED GABION CHECK DAM AS SHOWN.
3. COMPLETE STABILIZATION OF ALL BARE AREAS. REMOVE EROSION AND SEDIMENT CONTROL MEASURES AND DEACTIVATE SKIMMER DEWATERING DEVICE. PATCH 4" DIAMETER HOLE IN WEIR STRUCTURE USING HYDRAULIC GROUT.

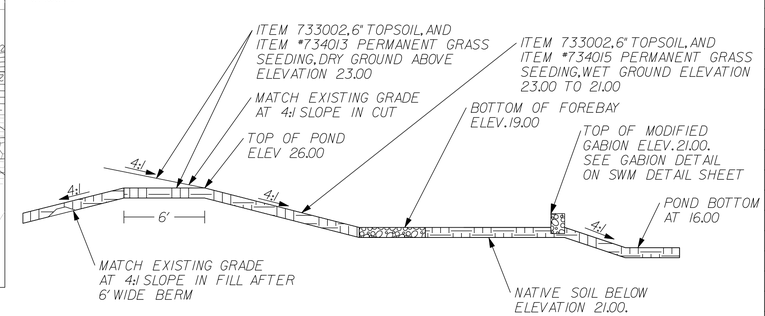

SECTION A – A

POND DESIGN SUMMARY FOR BMP #456				
DESIGN STORM	FACILITY INFLOW	FACILITY DISCHARGE	WATER SURFACE ELEVATION	STORAGE VOLUME (AC.FT)
QUALITY STORM (2.0")	7.12	2.94	21.71	0.633
2 - YEAR	25.71	12.15	22.66	1.800
10 - YEAR	60.99	33.40	24.07	3.745
100 - YEAR	137.95	123.94	24.86	4.941

HAZARD CLASSIFICATION: CLASS A AS PER POND CODE 378

DRAINAGE AREA TO FACILITY: 58.44 ACRES

MANAGEMENT PROVIDED BY FACILITY: WATER QUALITY BY EXTENDED DETENTION OF FIRST 2.0" OF RUNOFF. WATER QUANTITY FOR 2&10 YEAR STORM.

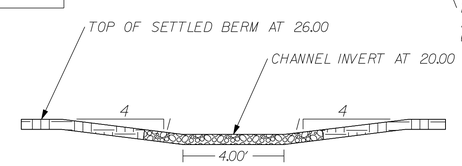

SECTION C – C

SCALE : NONE

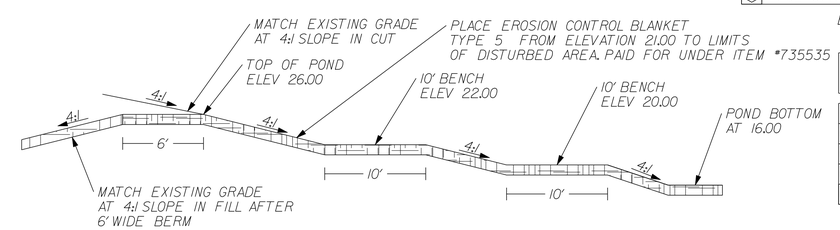

SECTION B – B

SCALE : NONE

℄ EMBANKMENT

	STATION	NORTHING	EASTING	RADIUS
1	POB STA. 0+00.00	375699.7932	644881.6043	
2	PI STA. 0+56.00	375681.3744	644828.7200	
3	PC STA. 0+61.24	375679.6511	644823.7721	
	PI STA. 0+76.66	375674.5781	644809.2065	30.00'
4	PT STA. 0+89.73	375683.4722	644796.6054	
5	PC STA. 1+34.48	375709.2753	644760.0479	
	PI STA. 1+79.76	375735.3878	644723.0520	100.00'
6	PT STA. 2+19.52	375724.8092	644679.0218	
7	PC STA. 2+38.25	375720.4328	644660.8066	
	PI STA. 2+86.67	375709.1211	644613.7255	100.00'
8	PT STA. 3+28.44	375739.0408	644575.6545	
9	PC STA. 3+36.44	375743.9859	644569.3622	
	PI STA. 3+78.03	375769.6794	644536.6689	100.00'
10	PRC STA. 4+15.26	375764.6171	644495.3968	
	PI STA. 4+36.41	375762.0421	644777.3106	33.00'
11	PCC STA. 4+52.88	375780.0420	644463.2957	
	PI STA. 4+59.28	375785.4961	644459.9302	44.00'
12	PCC STA. 4+65.60	375791.6836	644458.2603	
	PI STA. 4+80.48	375806.0422	644454.3851	33.00'
13	PRC STA. 4+93.55	375818.4560	644462.5757	
	PI STA. 5+10.73	375832.7950	644472.0366	50.00'
14	PT STA. 5+26.64	375849.9208	644470.6868	
15	PC STA. 5+43.20	375866.4215	644469.3863	
	PI STA. 5+50.52	375873.7280	644468.8104	66.00'
16	PCC STA. 5+57.79	375880.7303	644466.6454	
	PI STA. 5+59.16	375882.0344	644466.2422	50.00'
17	PRC STA. 5+60.52	375883.3146	644465.7685	
	PI STA. 5+90.92	375911.8261	644455.2173	39.00'
18	PT STA. 6+12.17	375929.0166	644480.2915	
19	PC STA. 6+20.09	375933.4939	644486.8221	
	PI STA. 6+56.51	375954.0881	644516.8611	39.00'
20	PT STA. 6+78.68	375925.5263	644539.4595	
21	PC STA. 6+82.54	375922.5017	644541.8526	
	PI STA. 7+09.96	375901.0002	644558.8648	50.00'
22	PRC STA. 7+32.70	375903.7842	644586.1407	
	PI STA. 7+48.04	375905.3419	644601.4009	50.00'
23	PT STA. 7+62.46	375898.0736	644614.9091	
24	PC STA. 8+06.42	375877.2485	644653.6133	
	PI STA. 8+41.89	375860.4383	644684.8558	100.00'
26	PT STA. 8+74.60	375867.0766	644719.7070	
27	PC STA. 9+09.83	375873.6681	644754.3121	
	PI STA. 9+43.20	375879.9123	644787.0944	100.00'
25	PRC STA. 9+74.25	375865.2177	644817.0566	
	PI STA. 9+98.34	375854.6092	644838.6872	100.00'
26	PRC STA. 10+21.53	375855.0153	644862.7757	
	PI STA. 10+74.51	375855.9085	644915.7493	50.00'
27	PT STA. 11+02.96	375802.9719	644913.5765	
28	PC STA. 11+76.01	375729.9827	644910.5807	
	PI STA. 11+96.42	375709.5938	644909.7438	30.00'
29	PT STA. 12+11.85	375702.8821	644890.4732	
30	POE STA. 12+21.24	375702.8821	644881.6043	

℄ LOCATED AT TOP OF POND, EL. 26.00

℄ SPILLWAY

	STATION	NORTHING	EASTING
40	POB STA. 20+00.00	375967.1382	644453.1654
41	PI STA. 21+86.20	375819.5912	644566.7380
42	PI STA. 24+48.01	375778.5711	644825.3200
43	POE STA. 26+32.64	375603.7245	644884.6218

11/25/2014
9:13:03 AM
C:\pw_projects\035117.00 (deldot agmt 1223 dots open end)\035117.16 sr1, little heaven final design\dgn files\swm_detail2-1.dgn

DELAWARE DEPARTMENT OF TRANSPORTATION

ADDENDUMS / REVISIONS

NOT TO SCALE

SR1, LITTLE HEAVEN GRADE SEPARATED INTERSECTION

CONTRACT	BRIDGE NO.	–
T200412202	DESIGNED BY:	SFP
COUNTY		
KENT	CHECKED BY:	WFC

STORMWATER MANAGEMENT DETAILS DELDOT SWM FACILITY #456

SHEET NO.
208
TOTAL SHTS.
641

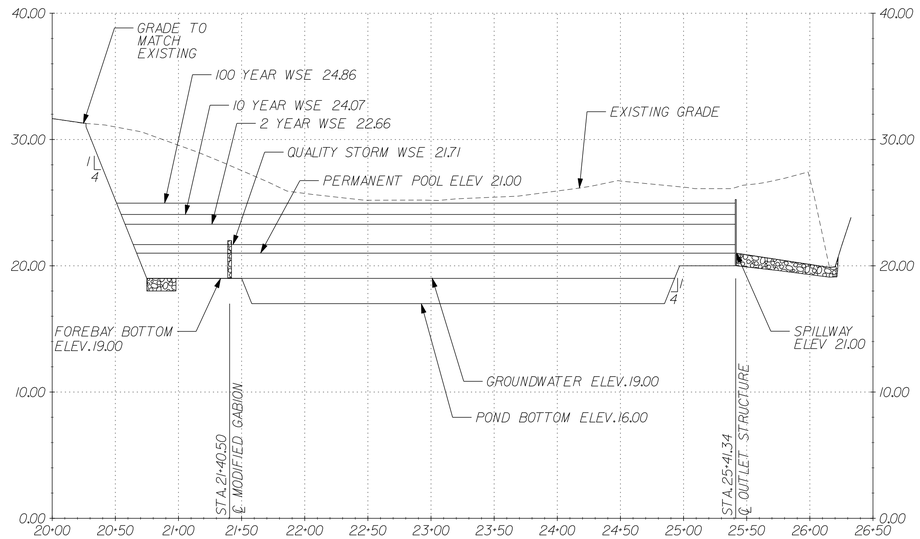

DELDOT SWM FACILITY #456 CROSS SECTION

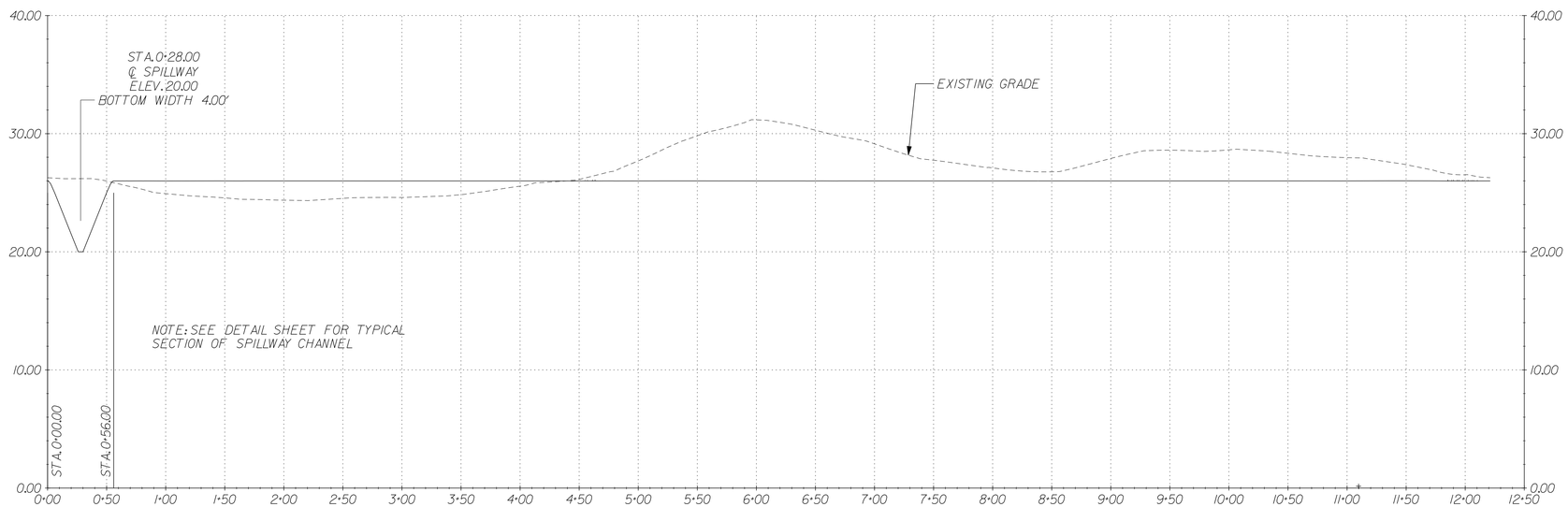

DELDOT SWM FACILITY #456 EMBANKMENT

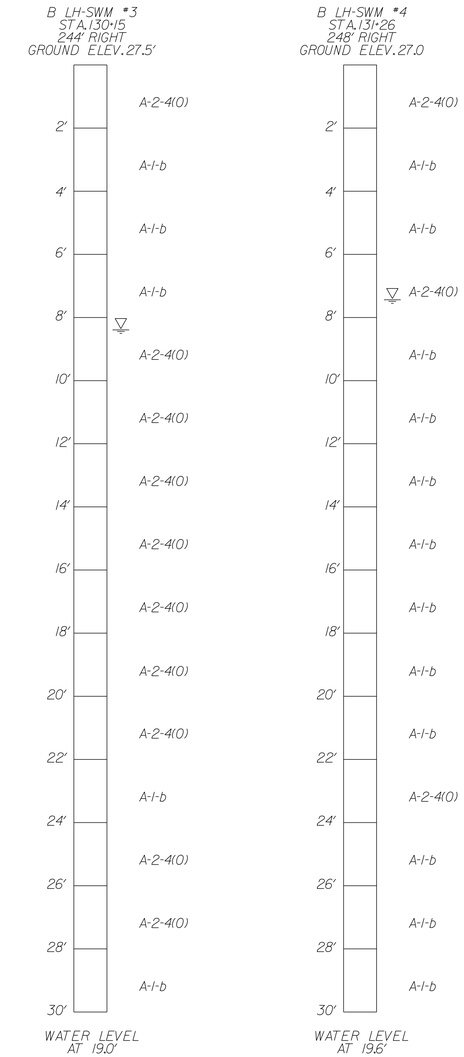

DELAWARE DEPARTMENT OF TRANSPORTATION	ADDENDUMS / REVISIONS	SCALE: HORZ. 1" = 60' VERT. 1" = 6'	SR1, LITTLE HEAVEN GRADE SEPARATED INTERSECTION	CONTRACT T200412202	BRIDGE NO. -	STORMWATER MANAGEMENT DETAILS DELDOT SWM FACILITY #456	SHEET NO. 209
				COUNTY KENT	DESIGNED BY: SFP		TOTAL SHTS. 641
					CHECKED BY: WFC		

11/25/2014
S:\Projects\T0351700 Kaedah agmt 1223 depts sawm smdh\0351700 sr1, little heaven fthwd\design\dgn files\swm_detail2-2.dgn
25350A PW

WORKING POINTS		
MARK	NORTHING	EASTING
WP-1	375697.6988	644878.6311
WP-2	375681.5802	644832.3511

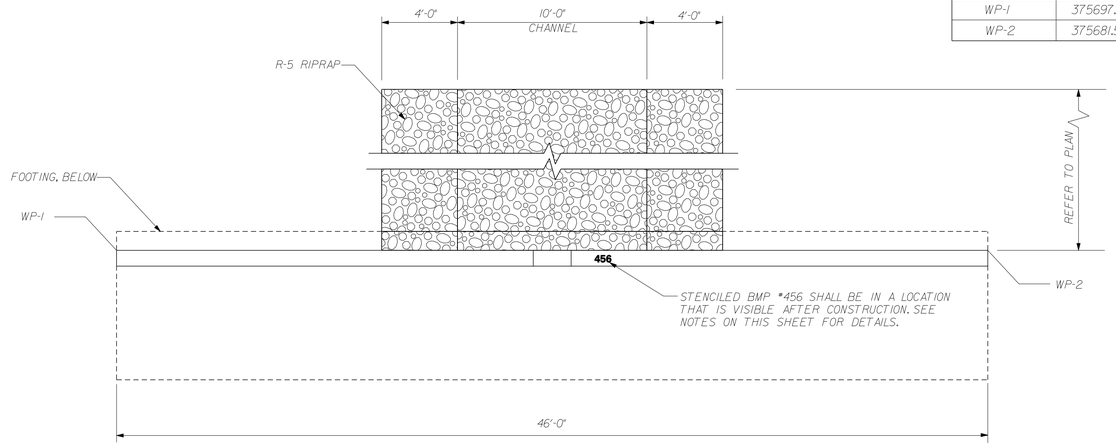

PLAN
SCALE: 1/4"=1'-0"

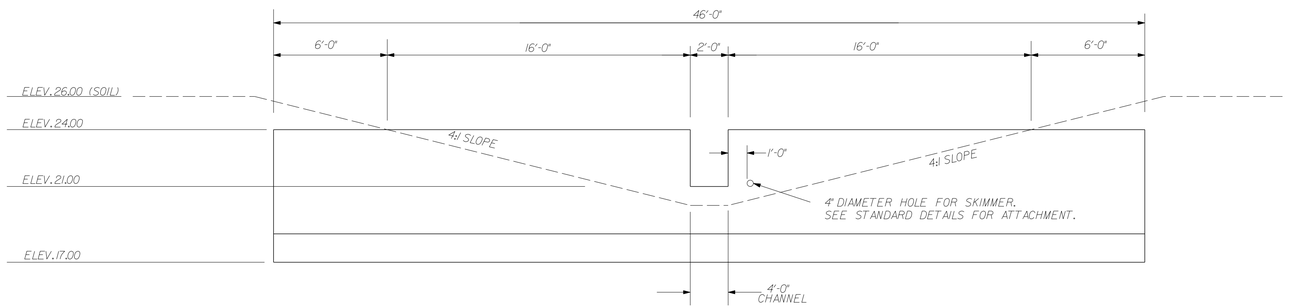

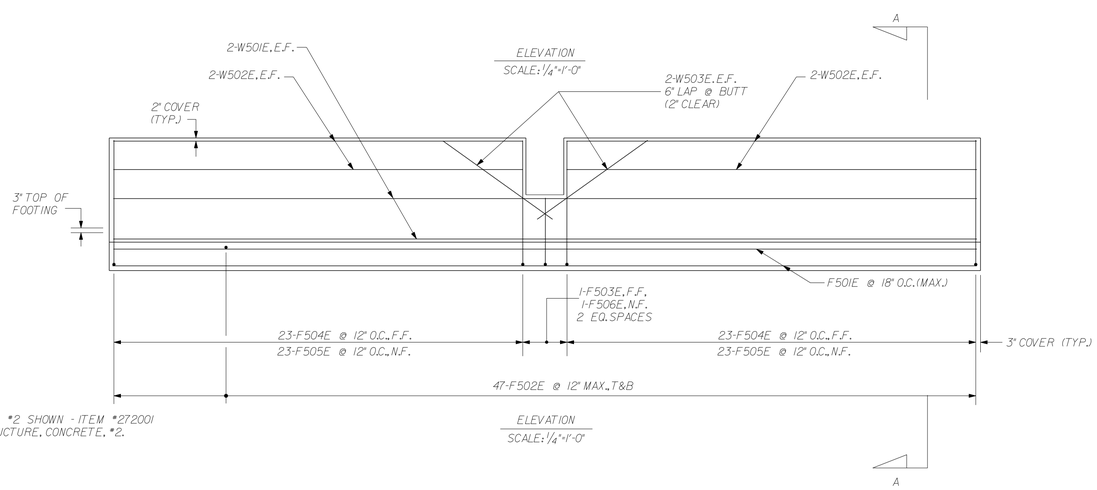

ELEVATION
SCALE: 1/4"=1'-0"

OUTLET STRUCTURE #2 SHOWN - ITEM #272001
-POND OUTLET STRUCTURE, CONCRETE, #2.

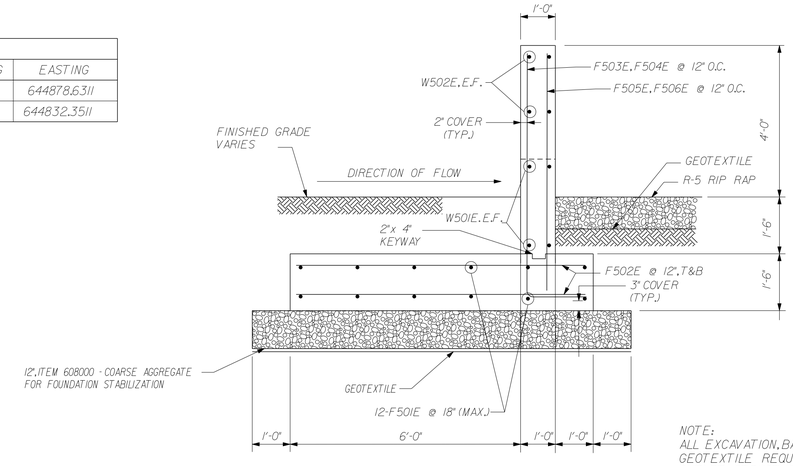

SECTION A-A
SCALE: 1/2"=1'-0"

NOTE:
ALL EXCAVATION, BACKFILL, COARSE AGGREGATE, OR GEOTEXTILE REQUIRED FOR THE INSTALLATION OF THE OUTLET STRUCTURE SHALL BE INCLUDED IN ITEM 272001 OUTLET STRUCTURE, CONCRETE, #2.

GENERAL NOTES:

1. SPECIFICATIONS:

   DELAWARE DEPARTMENT OF TRANSPORTATION - STANDARD SPECIFICATIONS FOR ROAD AND BRIDGE CONSTRUCTION. AUGUST 2001, INCLUDING ALL SUPPLEMENTS.

2. MATERIALS:

   CONCRETE FOR FOOTINGS SHALL BE CLASS "B" CONCRETE WITH f'c - 3000 PSI MIN. AT 28 DAYS. CONCRETE ABOVE FOOTINGS SHALL BE CLASS "A" CONCRETE WITH f'c - 4500 PSI MIN. AT 28 DAYS.

   REINFORCING STEEL SHALL CONFIRM TO A.A.S.H.T.O. M31-94, GRADE 60. ALL FASTNERS SHALL BE GRADE 8. ALL REINFORCING STEEL AND TIES SHALL BE EPOXY COATED IN ACCORDANCE WITH AASHTO M284.

   GEOTEXTILE SHALL BE PAID FOR UNDER ITEM 713002 - GEOTEXTILES, SEPARATION.

3. EXCAVATION SHALL BE PERFORMED IN THE PRESENCE OF THE ENGINEER OR HIS REPRESENTATIVE. AFTER EXCAVATION, ALL EARTH SHALL BE INSPECTED BY A REGISTERED PROFESSIONAL GEOTECHNICAL ENGINEER AND APPROVED FOR AN ALLOWABLE BEARING PRESSURE OF 3000 PSF. BEFORE PROCEEDING WITH CONSTRUCTION.

4. BACKFILL MATERIAL OVER FOUNDATIONS SHALL BE TYPE F BORROW OR AS APPROVED BY THE ENGINEER. FURNISHING AND PLACING BACKFILL MATERIAL SHALL BE INCLUDED IN ITEM #272001-POND OUTLET STRUCTURE, CONCRETE, #2. ALL DIMENSIONS, ELEVATIONS, AND FIELD CONDITIONS SHALL BE VERIFIED PRIOR TO CONSTRUCTION.

5. FURNISHING, CONSTRUCTING AND PLACING ALL ITEMS ASSOCIATED WITH THE OUTLET STRUCTURE, INCLUDING BUT NOT LIMITED TO, TRASH RACKS, CONCRETE, REINFORCING STEEL, STONE BEDDING, GEOTEXTILE, FASTNERS AND BACKFILL MATERIAL SHALL BE INCLUDED IN ITEM #272001.

6. CONTRACTOR SHALL STENCIL THE APPROVED DELDOT BMP NUMBER ONTO THE CONCRETE OUTLET STRUCTURE. NUMBERS SHALL BE 4" TALL AND STENCILED IN PERMANENT BLACK PAINT. COST SHALL BE INCIDENTAL TO ITEM #272001.

7. CONTRACTOR SHALL SUBMIT SHOP DRAWINGS DETAILING THE LAYOUT AND DESIGN OF THE WEIR WALL. DRAWINGS SHALL BE SEALED BY A PROFESSIONAL ENGINEER REGISTERED IN DELAWARE.

LEGEND:
T&B TOP AND BOTTOM
N.F. NEAR FACE
F.F. FAR FACE
E.F. EACH FACE

REINFORCING BAR LIST

LENGTHS AND QUANTITIES SHOWN REPRESENT ONE OUTLET STRUCTURE.

MARK	SIZE	NUMBER	LENGTH	TYPE	A	B
F501E	5	12	45'-6"	STR.	-	-
F502E	5	94	7'-6"	STR.	-	-
F503E	5	1	5'-4"	1	1'-9"	3'-7"
F504E	5	46	8'-4"	1	1'-9"	6'-7"
F505E	5	46	6'-7"	STR.	-	-
F506E	5	1	3'-7"	STR.	-	-
W501E	5	2	45'-6"	STR.	-	-
W502E	5	4	21'-8"	STR.	-	-
W503E	5	2	7'-2"	STR.	-	-

BENDING DIAGRAMS

(E) DENOTES EPOXY COATED BARS.
ALL DIMENSIONS ARE FROM OUT TO OUT.

TYPE 1

DELAWARE DEPARTMENT OF TRANSPORTATION

ADDENDUMS / REVISIONS

SCALE: AS SHOWN

SR1, LITTLE HEAVEN GRADE SEPARATED INTERSECTION

CONTRACT	BRIDGE NO.	-
T200412202	DESIGNED BY:	SFP
COUNTY	CHECKED BY:	WFC
KENT		

STORMWATER MANAGEMENT DETAILS DELDOT SWM FACILITY #456

SHEET NO. 210
TOTAL SHTS. 641

11/25/2004
9:20:01 AM
Z:\Projects\035\7.00 (deldot agmt 1223 dots open end)\035\7.16 sr1, little heaven final design\dgn files\swm_detail 2-3.dgn

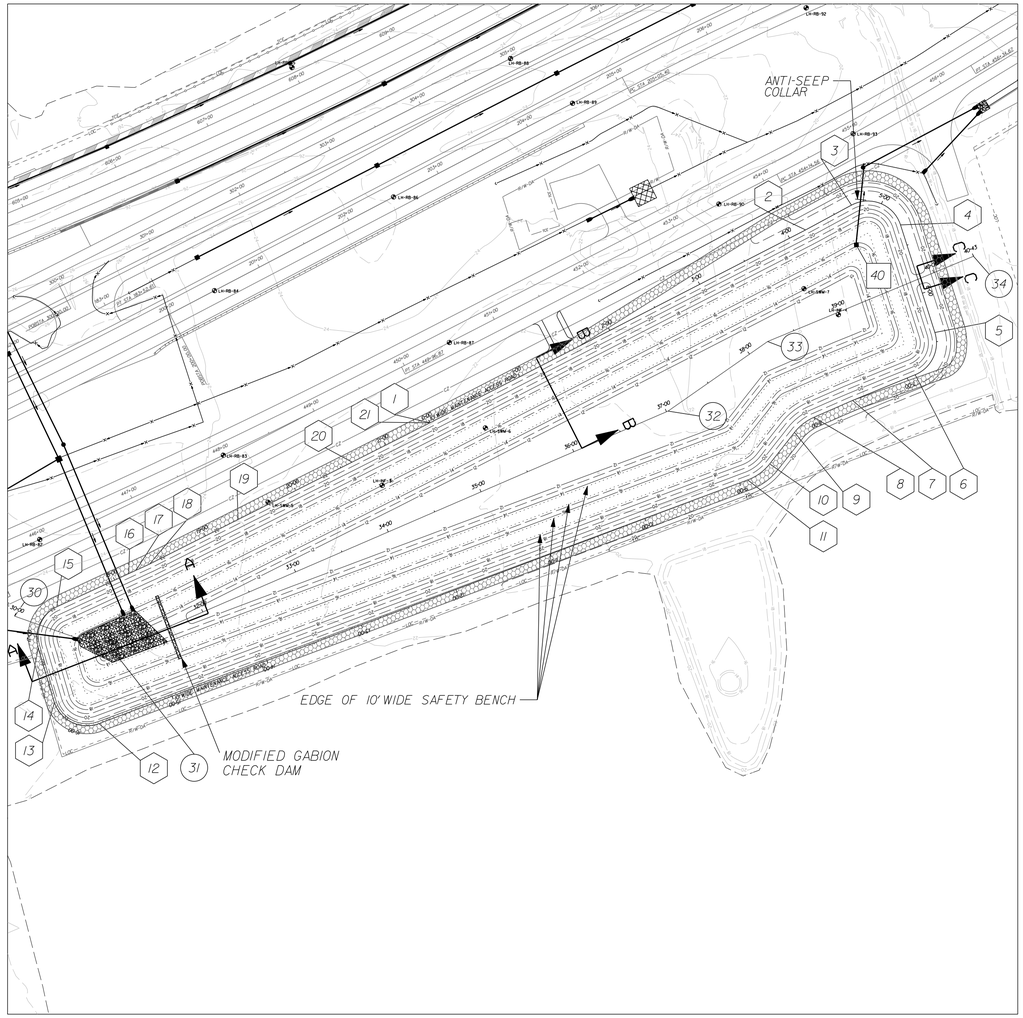

PLAN – DELDOT SWM FACILITY #458

SCALE: NONE

POND DESIGN SUMMARY FOR BMP #458				
DESIGN STORM	FACILITY INFLOW	FACILITY DISCHARGE	WATER SURFACE ELEVATION	STORAGE VOLUME (AC.FT)
QUALITY STORM (2.0")	9.62	1.34	16.31	1.492
2 - YEAR	31.40	3.17	17.61	4.617
10 - YEAR	70.86	19.67	18.77	7.728
100 - YEAR	155.00	52.00	21.18	14.823

HAZARD CLASSIFICATION: CLASS A AS PER POND CODE 378

DRAINAGE AREA TO FACILITY: 63.13 ACRES

MANAGEMENT PROVIDED BY FACILITY: WATER QUALITY BY EXTENDED DETENTION OF FIRST 2.0" OF RUNOFF. WATER QUANTITY FOR 2 & 10 YEAR STORMS.

POND CONSTRUCTION SEQUENCE AND NOTES

THE STORMWATER MANAGEMENT POND SHALL FUNCTION AS A SEDIMENT BASIN DURING ROADWAY CONSTRUCTION AND SHALL BE CONSTRUCTED IN ACCORDANCE WITH THE FOLLOWING SECTIONS OF THE STANDARD SPECIFICATIONS AS IS APPLICABLE:

SECTION 271 - STORMWATER MANAGEMENT POND
SECTION 272 - POND OUTLET STRUCTURE, CONCRETE
SECTION 733 - TOPSOILING

1. INSTALL STABILIZED CONSTRUCTION ENTRANCE.
2. CLEAR AND GRUB FOR INSTALLATION OF PERIMETER EROSION AND SEDIMENT CONTROLS.
3. INSTALL PERIMETER SEDIMENT CONTROLS AS SHOWN.
4. CLEAR AND GRUB REMAINING AREA FOR POND CONSTRUCTION.
5. CONSTRUCT POND OUTLET STRUCTURE AND PARTIAL EMBANKMENT AS NEEDED TO INSTALL POND OUTLET STRUCTURE. INSTALL SKIMMER DEWATERING DEVICE USING REDUCING COUPLERS TO MATCH LOW FLOW ORIFICE IN OUTLET STRUCTURE. BLOCK OFF 4' WIDE WEIR IN OUTLET STRUCTURE USING A WATERTIGHT METHOD APPROVED BY THE ENGINEER. DE-WATER FOUNDATION AS NEEDED IN ACCORDANCE WITH SECTION 110.13 AND USE SUMP PIT FOR PUMPING. (SEE DELDOT STANDARD DETAILS FOR SKIMMER DEWATERING DEVICE INSTALLATION.)
6. EXCAVATE THE POND TO THE ELEVATIONS SHOWN ON THE GRADING PLAN. RETAIN SUFFICIENT MATERIAL TO CONSTRUCT THE POND TO THE FINAL CONTOURS. EXCESS EXCAVATION MAY BE STOCKPILED FOR LATER USE IN ROADWAY EMBANKMENT OR PLACED IN THE ROADWAY EMBANKMENT AS IT IS EXCAVATED. PAYMENT FOR THIS WORK TO BE MADE UNDER ITEM 271000. COMPLETE ANY NECESSARY EMBANKMENT USING EXCAVATED MATERIALS TO THE FINAL CONTOURS. PLACE 6" TOPSOILING MATERIAL (ITEM 733002) ON ALL AREAS ABOVE THE PERMANENT POOL ELEVATION.
7. STABILIZE ALL BARE AREAS. ALL AREAS MEETING FINAL GRADE SHALL BE PERMANENTLY STABILIZED. REMAINING AREAS SHALL BE STABILIZED USING TEMPORARY STABILIZATION (NO TOPSOIL). NOTE: SEE EROSION AND SEDIMENT CONTROL PLANS FOR LOCATION OF EROSION AND SEDIMENT CONTROL MEASURES.

MAINTENANCE OF POND AS A SEDIMENT BASIN

1. CONTRACTOR SHALL INSPECT THE BASIN IMMEDIATELY AFTER EVERY RAIN AND MAKE REPAIRS AS NEEDED.
2. CONTRACTOR SHALL CLEARLY MARK THE CLEANOUT ELEVATION (EL 14.00) ON A STAKE DRIVEN INTO THE GROUND AT A LOCATION CLEARLY VISIBLE FROM THE EMBANKMENT. SEDIMENT SHALL BE REMOVED WHEN CLEANOUT ELEVATION IS REACHED AND DISPOSED OF AT A LOCATION APPROVED BY THE ENGINEER.

CONVERSION TO PERMANENT STORMWATER MANAGEMENT POND

1. CONVERT THE BASIN INTO THE PERMANENT STORMWATER MANAGEMENT POND AFTER ALL AREAS DRAINING TO THE POND HAVE BEEN PERMANENTLY STABILIZED AND THE ENGINEER HAS APPROVED THE CONVERSION.
2. REMOVE ACCUMULATED SEDIMENT TO ELEVATION 11.50 AS SHOWN BY LINES AND GRADES ON THE PLAN AND DISPOSE OF SEDIMENT AT LOCATION APPROVED BY THE ENGINEER. INSTALL MODIFIED GABION CHECK DAMS AS SHOWN.
3. COMPLETE STABILIZATION OF ALL BARE AREAS. REMOVE EROSION AND SEDIMENT CONTROL MEASURES AND DEACTIVATE SKIMMER DEWATERING DEVICE. REMOVE WEIR BLOCK OFF.

℄ POND

	STATION	NORTHING	EASTING	RADIUS
1	POB STA. 0+00.00	381436.1934	644710.3291	
2	PI STA. 4+17.92	381834.4743	644583.7096	
3	PC STA. 4+69.28	381883.3213	644567.0413	
	PI STA. 5+10.30	381922.1371	644553.7938	34.00'
4	PT STA. 5+29.03	381927.9589	644594.3926	
5	PC STA. 6+40.85	381943.8310	644705.0767	
	PI STA. 6+72.23	381948.2861	644736.1441	34.00'
6	PT STA. 6+91.54	381917.6736	644743.0657	
7	PI STA. 7+58.57	381852.2893	644757.8492	
8	PC STA. 7+99.89	381811.7919	644768.0383	
	PI STA. 8+12.41	381799.6494	644771.0949	50.00'
9	PT STA. 8+24.43	381790.3806	644779.5135	
10	PC STA. 8+64.15	381760.9761	644806.2209	
	PI STA. 8+78.12	381750.6388	644815.6101	50.00'
11	PT STA. 8+91.39	381736.9323	644818.2838	
12	PC STA. 15+77.42	381063.5929	644949.6357	
	PI STA. 16+14.01	381027.6847	644956.6405	34.00'
13	PT STA. 16+33.32	381023.3254	644920.3161	
14	PC STA. 16+88.49	381016.7510	644865.5346	
	PI STA. 17+17.87	381013.2504	644836.3647	34.00'
15	PT STA. 17+36.95	381041.6042	644828.6702	
16	PI STA. 18+15.34	381117.2617	644808.1388	
17	PI STA. 18+23.25	381124.8946	644806.0674	
18	PI STA. 18+38.13	381139.2473	644802.1725	
19	PI STA. 19+36.12	381232.8699	644773.2426	
20	PI STA. 20+62.54	381353.6614	644735.9125	
21	POE STA. 21+48.95	381436.1934	644710.3291	

NOTE: ℄ LOCATED AT TOP OF POND, EL. 22.00

℄ SPILLWAY

	STATION	NORTHING	EASTING
30	POB STA. 30+00.00	380998.9257	644830.9476
31	PI STA. 31+03.38	381089.4629	644880.8460
32	PI STA. 37+01.66	381670.4314	644737.9670
33	PI STA. 38+21.89	381779.0375	644686.3968
34	POE STA. 40+42.51	381994.0634	644637.0128

CENTER POINT OF OUTLET STRUCTURE

		NORTHING	EASTING
40	CENTER POINT	381881.5791	644606.6083

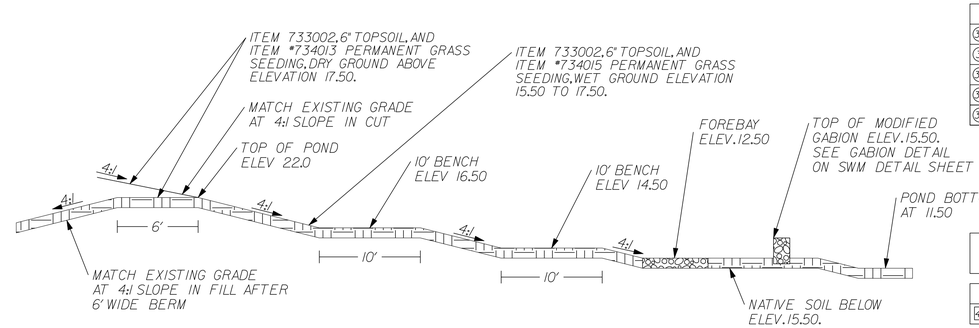

SECTION A – A

SCALE: NONE

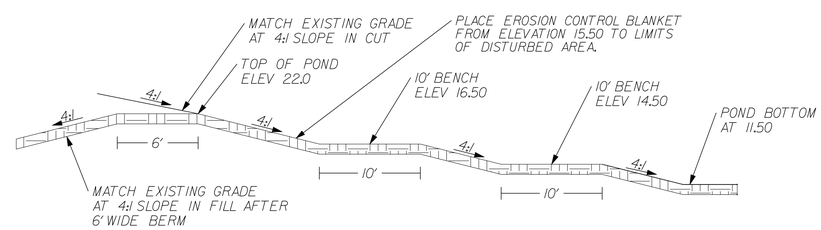

SECTION B–B

SCALE: NONE

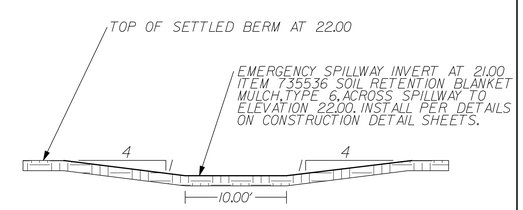

SECTION C – C

SCALE : NONE

DELAWARE DEPARTMENT OF TRANSPORTATION	ADDENDUMS / REVISIONS	NOT TO SCALE	SR1, LITTLE HEAVEN GRADE SEPARATED INTERSECTION	CONTRACT T200412202 / COUNTY KENT	BRIDGE NO. – / DESIGNED BY: SFP / CHECKED BY: WFC	STORMWATER MANAGEMENT DETAILS DELDOT SWM FACILITY # 458	SHEET NO. 211 / TOTAL SHTS. 641

1/5/2015 G:\PROJECTS\03517.00 (DELDOT AGMT 1223 DOTS Open End\03517.16 SR1, LITTLE HEAVEN FINAL DESIGN\DGN Files\swm_detail 3-1.dgn 12:06:00 PM

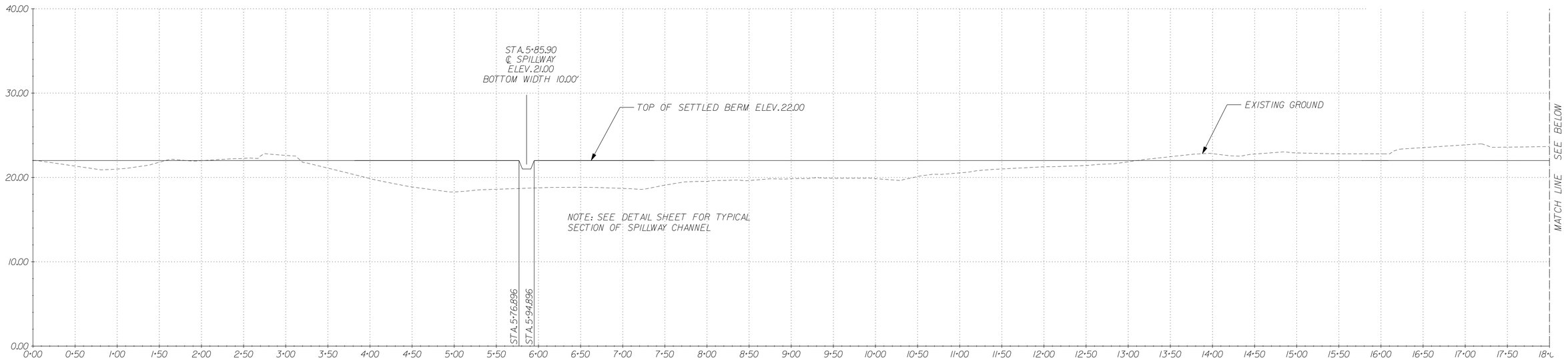

DELDOT SWM FACILITY #458 EMBANKMENT

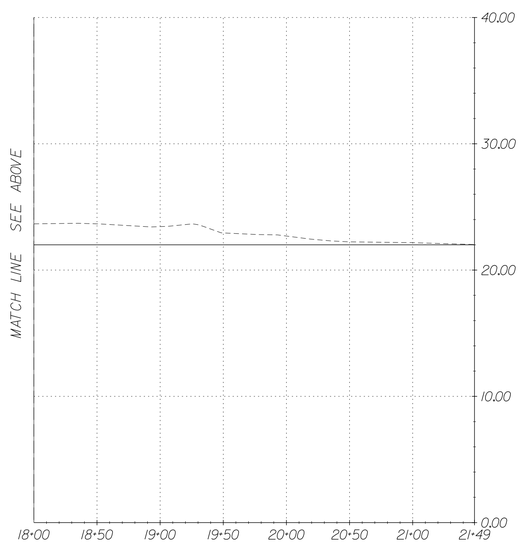

DELDOT SWM FACILITY #458 EMBANKMENT (CONTD.)

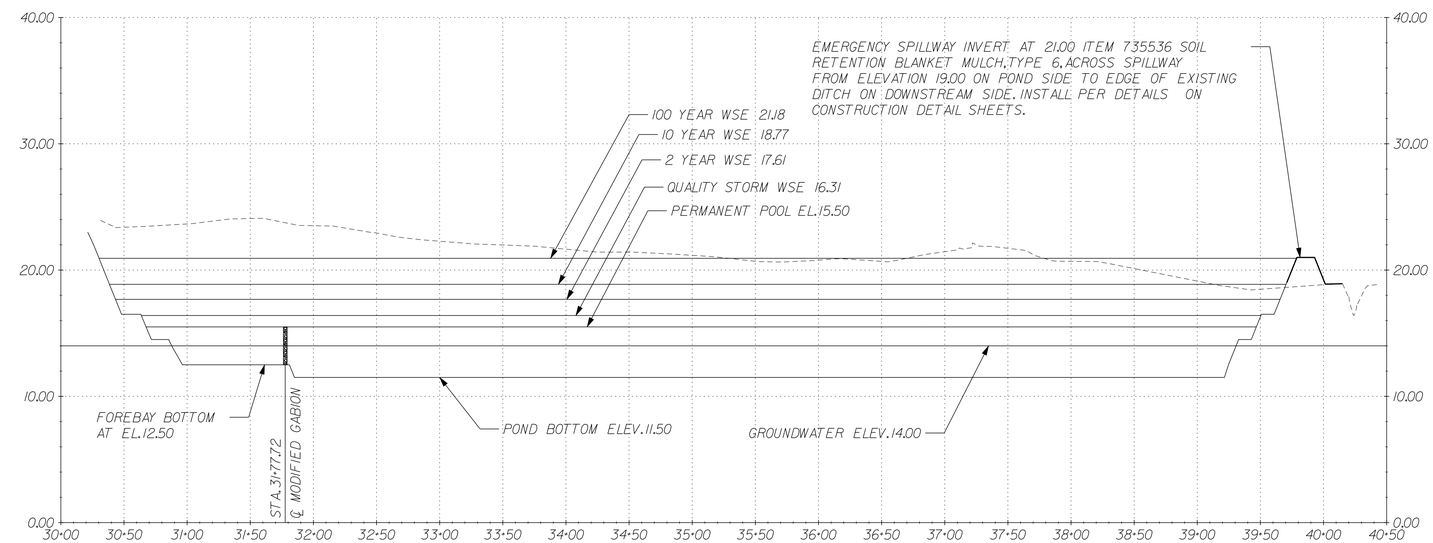

DELDOT SWM FACILITY #458 CROSS SECTION

DELAWARE DEPARTMENT OF TRANSPORTATION	ADDENDUMS / REVISIONS	SCALE: HORZ. 1" = 60' VERT. 1" = 6'	**SR1, LITTLE HEAVEN GRADE SEPARATED INTERSECTION**	CONTRACT T200412202	BRIDGE NO. -	**STORMWATER MANAGEMENT DETAILS DELDOT SWM FACILITY # 458**	SHEET NO. 212
				COUNTY KENT	DESIGNED BY: SFP		TOTAL SHTS. 641
					CHECKED BY: WFC		

11/25/2014
SFNJOHNSON
22:34:20 PM
\\delafiles\projects\2015\200 \\delafiles\projects\2015\7.26 sr1_little heaven\final design\dgn\ dgn\ files\swm_details\3-2.dgn

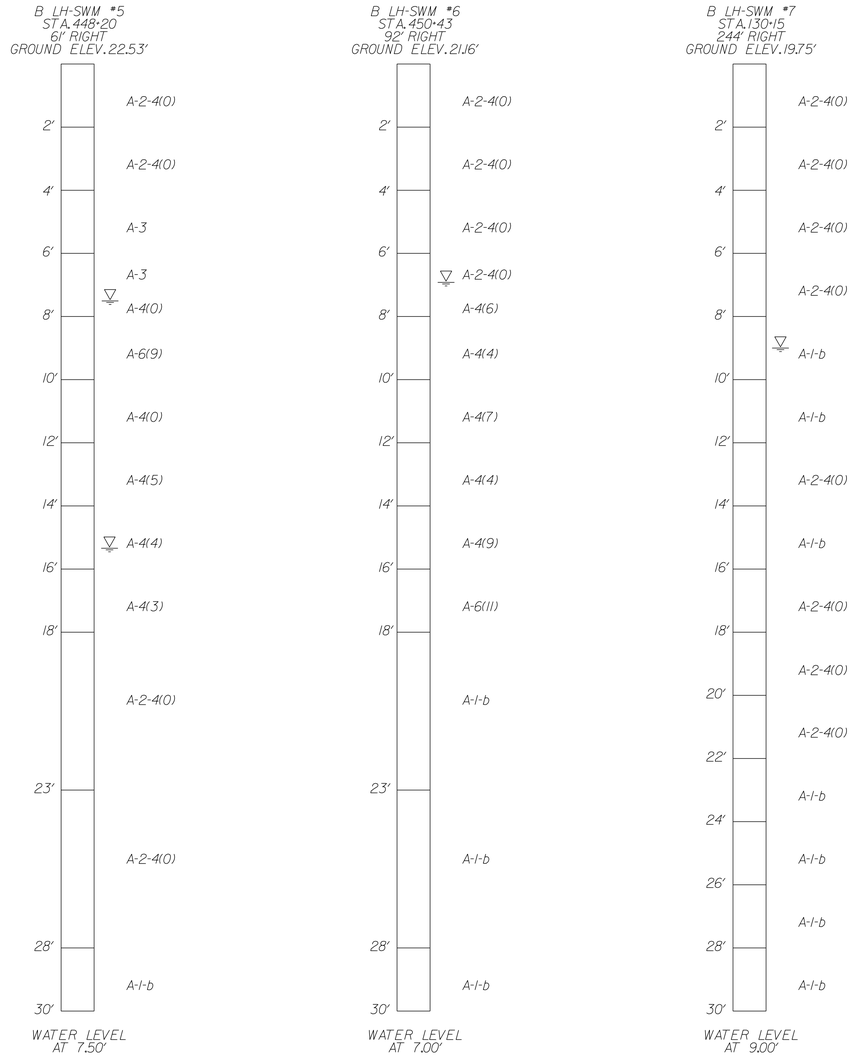

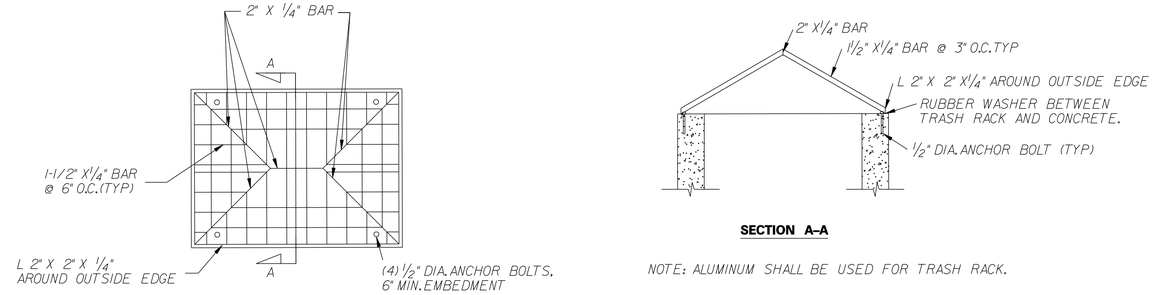

SECTION A–A

NOTE: ALUMINUM SHALL BE USED FOR TRASH RACK.

OVERFLOW TRASH RACK

N.T.S.

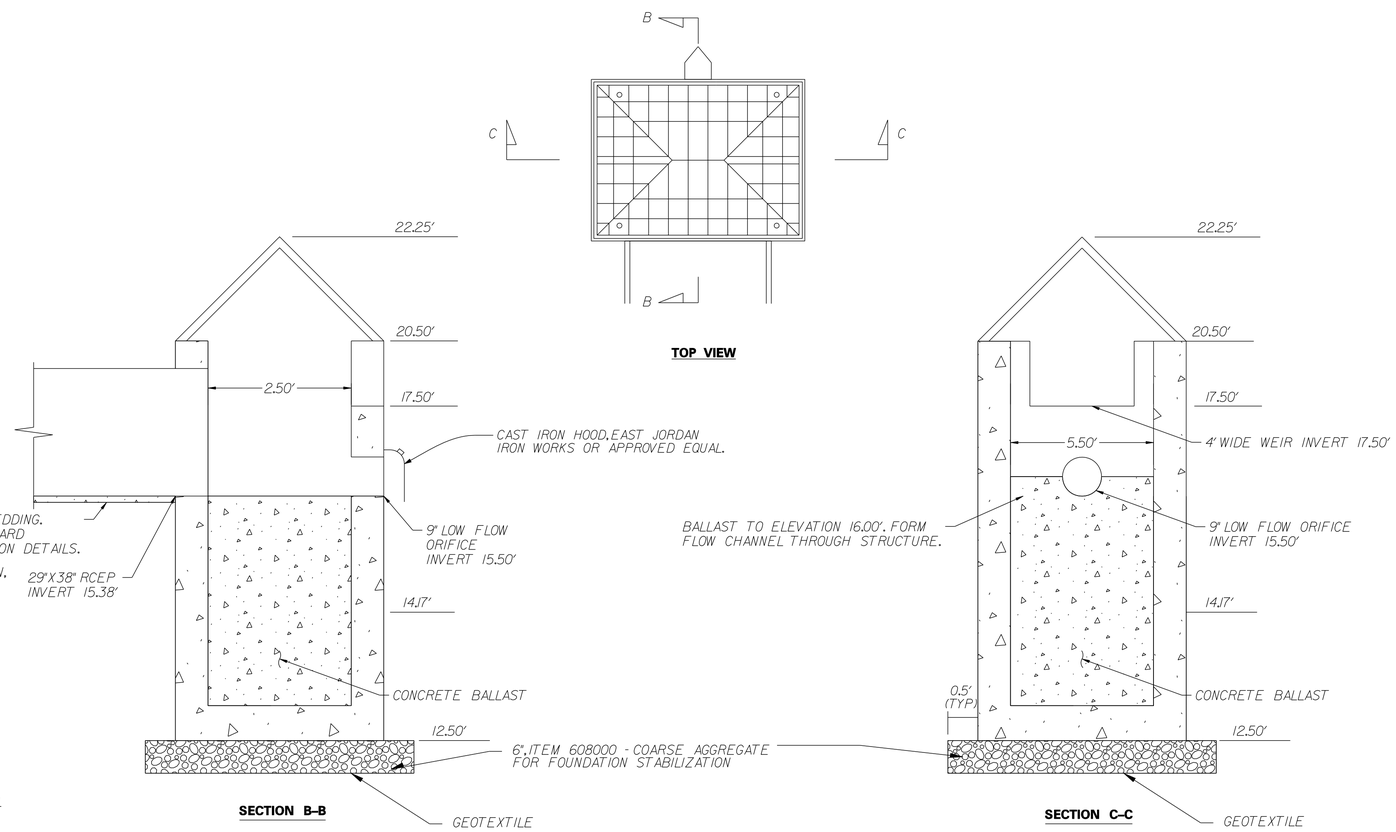

TOP VIEW

SECTION B–B

SECTION C–C

NOTES:

1. FURNISHING,CONSTRUCTING AND PLACING ALL ITEMS ASSOCIATED WITH THE OUTLET STRUCTURE,INCLUDING BUT NOT LIMITED TO,EXCAVATION. TRASH RACKS,CONCRETE,REINFORCING STEEL,STONE BEDDING,GEOTEXTILE,BALLAST,FASTNERS AND BACKFILL MATERIAL SHALL BE INCLUDED IN ITEM #272002 - POND OUTLET STRUCTURE,CONCRETE,#3.

2. ALL CONCRETE FOR OUTLET STRUCTURE SHALL BE PORTLAND CEMENT CONCRETE CLASS A.

3. REINFORCING STEEL SHALL BE EPOXY COATED AND SHALL CONFORM TO AASHTO M31-94,GRADE 60. ALL FASTENERS SHALL BE GRADE 8.

4. GEOTEXTILE SHALL CONFORM TO ITEM 713002 - GEOTEXTILES,SEPARATION.

5. CONTRACTOR SHALL SUBMIT SHOP DRAWINGS DETAILING LAYOUT AND DESIGN OF OUTLET STRUCTURE AND TRASH RACKS SEALED BY A REGISTERED DELAWARE PROFESSIONAL ENGINEER.

6. CONCRETE BALLAST SHALL HAVE A MINIMUM WEIGHT OF 150 LBS/CU.FT.AND SHALL CONFORM TO CLASS B CONCRETE.

7. STRUCTURE SHALL BE CONSTRUCTED FROM PRECAST DELDOT STANDARD 66" X 30" INLET BOX.

8. CONTRACTOR SHALL STENCIL THE APPROVED DELDOT BMP NUMBER ONTO THE CONCRETE OUTLET STRUCTURE. NUMBERS SHALL BE 4" TALL AND STENCILED IN PERMANENT BLACK PAINT. COST SHALL BE INCIDENTAL TO ITEM #272002.

9. REINFORCED CONCRETE PIPE SHALL BE PAID FOR SEPERATELY.

10. NO.57 STONE,GEOTEXTILE,PIPE CRADLE,ANTI-SEEP COLLAR,AND EXCAVATION AND EMBANKMENT SHALL BE INCIDENTAL TO ITEM #272002.

11. HOOD SHALL BE EAST JORDAN IRON WORKS OR APPROVED EQUAL,AND SHALL BE INCIDENTAL TO ITEM #272002. CONTRACTOR SHALL SUBMIT HOOD INFORMATION FOR REVIEW.

OUTLET STRUCTURE NO. 458 DETAIL

N.T.S.

PLAN – DELDOT SWM FACILITY # 459

SCALE: NONE

POND CONSTRUCTION SEQUENCE AND NOTES

THE STORMWATER MANAGEMENT POND SHALL FUNCTION AS A SEDIMENT BASIN DURING ROADWAY CONSTRUCTION AND SHALL BE CONSTRUCTED IN ACCORDANCE WITH THE FOLLOWING SECTIONS OF THE STANDARD SPECIFICATIONS AS IS APPLICABLE:

SECTION 271 - STORMWATER MANAGEMENT POND
SECTION 272 - POND OUTLET STRUCTURE.CONCRETE
SECTION 733 - TOPSOILING

1. INSTALL STABILIZED CONSTRUCTION ENTRANCE.
2. CLEAR AND GRUB FOR INSTALLATION OF PERIMETER EROSION AND SEDIMENT CONTROLS.
3. INSTALL PERIMETER SEDIMENT CONTROLS AS SHOWN.
4. CLEAR AND GRUB REMAINING AREA FOR POND CONSTRUCTION.
5. CONSTRUCT POND OUTLET STRUCTURE AND PARTIAL EMBANKMENT AS NEEDED TO INSTALL POND OUTLET STRUCTURE. INSTALL SKIMMER DEWATERING DEVICE USING 4" DIAMETER HOLE IN WEIR STRUCTURE. BLOCK PRIMARY WEIR SPILLWAY OPENING USING A WATERTIGHT METHOD APPROVED BY THE ENGINEER. DE-WATER FOUNDATION AS NEEDED IN ACCORDANCE WITH SECTION 1101.3 AND USE SUMP PIT FOR PUMPING. (SEE DELDOT STANDARD DETAILS FOR SKIMMER DEWATERING DEVICE INSTALLATION.)
6. EXCAVATE THE POND TO THE ELEVATIONS SHOWN ON THE GRADING PLAN. RETAIN SUFFICIENT MATERIAL TO CONSTRUCT THE POND TO THE FINAL CONTOURS. EXCESS EXCAVATION MAY BE STOCKPILED FOR LATER USE IN ROADWAY EMBANKMENT OR PLACED IN THE ROADWAY EMBANKMENT AS IT IS EXCAVATED. PAYMENT FOR THIS WORK TO BE MADE UNDER ITEM 271000. COMPLETE ANY NECESSARY EMBANKMENT USING EXCAVATED MATERIALS TO THE FINAL CONTOURS. PLACE 6" TOPSOILING MATERIAL (ITEM 733002) ON ALL AREAS ABOVE THE PERMANENT POOL ELEVATION.
7. STABILIZE ALL BARE AREAS. ALL AREAS MEETING FINAL GRADE SHALL BE PERMANENTLY STABILIZED. REMAINING AREAS SHALL BE STABILIZED USING TEMPORARY STABILIZATION (NO TOPSOIL). NOTE: SEE EROSION AND SEDIMENT CONTROL PLANS FOR LOCATION OF EROSION AND SEDIMENT CONTROL MEASURES.

MAINTENANCE OF POND AS A SEDIMENT BASIN

1. CONTRACTOR SHALL INSPECT THE BASIN IMMEDIATELY AFTER EVERY RAIN AND MAKE REPAIRS AS NEEDED.
2. CONTRACTOR SHALL CLEARLY MARK THE CLEANOUT ELEVATION (EL.9.00) ON A STAKE DRIVEN INTO THE GROUND AT A LOCATION CLEARLY VISIBLE FROM THE EMBANKMENT. SEDIMENT SHALL BE REMOVED WHEN CLEANOUT ELEVATION IS REACHED AND DISPOSED OF AT A LOCATION APPROVED BY THE ENGINEER.

CONVERSION TO PERMANENT STORMWATER MANAGEMENT POND

1. CONVERT THE BASIN INTO THE PERMANENT STORMWATER MANAGEMENT POND AFTER ALL AREAS DRAINING TO THE POND HAVE BEEN PERMANENTLY STABILIZED AND THE ENGINEER HAS APPROVED THE CONVERSION.
2. REMOVE ACCUMULATED SEDIMENT TO ELEVATION 6.0 AS SHOWN BY LINES AND GRADES ON THE PLAN AND DISPOSE OF SEDIMENT AT LOCATION APPROVED BY THE ENGINEER. INSTALL MODIFIED GABION CHECK DAMS AS SHOWN.
3. COMPLETE STABILIZATION OF ALL BARE AREAS. REMOVE EROSION AND SEDIMENT CONTROL MEASURES AND DEACTIVATE SKIMMER DEWATERING DEVICE. PATCH 4" DIAMETER HOLE IN WEIR STRUCTURE USING HYDRAULIC GROUT. REMOVE WEIR OPENING BLOCK OFF.

NOTE: ℄ EMBANKMENT IS LOCATED AT TOP OF POND, EL.15.00'

℄ EMBANKMENT				
	STATION	NORTHING	EASTING	RADIUS
1	POB STA.0+00.00	382777.0914	644027.0495	
2	PI STA.0+04.99	382772.1952	644028.0120	
3	PI STA.0+54.99	382723.2660	644038.3341	
4	PI STA.1+05.02	382674.4725	644049.3531	
5	PI STA.1+55.07	382625.8109	644061.0493	
6	PI STA.2+05.12	382577.1952	644072.9811	
7	PI STA.2+55.18	382528.5814	644084.9228	
8	PI STA.3+05.24	382479.9676	644096.8644	
9	PI STA.3+55.95	382432.4986	644114.6856	
10	PI STA.4+06.60	382384.9762	644132.2320	
11	PI STA.3+26.56	382335.8979	644141.7884	
12	PI STA.5+06.60	382286.8197	644151.3448	
13	PI STA.5+56.60	382237.7414	644160.9013	
14	PI STA.6+06.69	382188.0917	644167.5228	
15	PI STA.6+56.80	382138.3770	644173.8107	
16	PC STA.6+85.89	382109.5191	644177.4606	
	PI STA.6+94.51	382100.9695	644178.5419	10.00'
17	PT STA.7+00.12	382098.6374	644170.2457	
18	PC STA.7+07.02	382096.7684	644163.5971	
	PI STA.7+15.68	382094.4265	644155.2659	10.00'
19	PT STA.7+21.29	382102.3353	644151.7522	
20	PI STA.7+61.07	382138.6845	644135.6034	
21	PI STA.8+11.57	382184.9786	644115.4186	
22	PI STA.8+62.10	382231.4341	644095.5441	
23	PI STA.9+12.65	382276.1654	644071.9934	
24	PI STA.9+63.20	382322.5726	644051.9519	
25	PI STA.10+13.75	382368.6234	644031.1045	
26	PI STA.10+64.31	382414.4993	644009.8404	
27	PI STA.11+14.89	382460.1963	643988.1612	
28	PI STA.11+65.49	382505.7154	643966.0773	
29	PI STA.12+16.10	382551.0577	643943.5988	
30	PI STA.12+66.72	382596.2102	643920.7097	
31	PI STA.13+17.33	382640.7650	643896.6981	
32	PI STA.13+67.95	382684.9998	643872.0959	
33	PC STA.14+15.23	382726.1199	643848.7539	
	PI STA.14+47.94	382754.5659	643832.6063	25.00'
34	PT STA.14+61.14	382762.6801	643864.2935	
35	PC STA.15+97.42	382796.4876	643996.3173	
	PI STA.16+23.88	382803.0504	644021.9463	25.00'
36	PT/POE STA.16+38.11	382777.0914	644027.0495	

℄ SPILLWAY			
	STATION	NORTHING	EASTING
70	POB STA.20+00.00	381982.2079	644200.3698
71	PI STA.22+62.85	382235.1700	644128.9580
72	PI STA.23+06.96	382276.8670	644114.5690
73	PI STA.24+69.09	382429.6150	644060.2240
74	PI STA.27+60.79	382704.1118	643961.5147
75	PI STA.28+21.45	382757.8390	643989.6663
76	POE STA.28+92.03	382826.3011	643972.5021

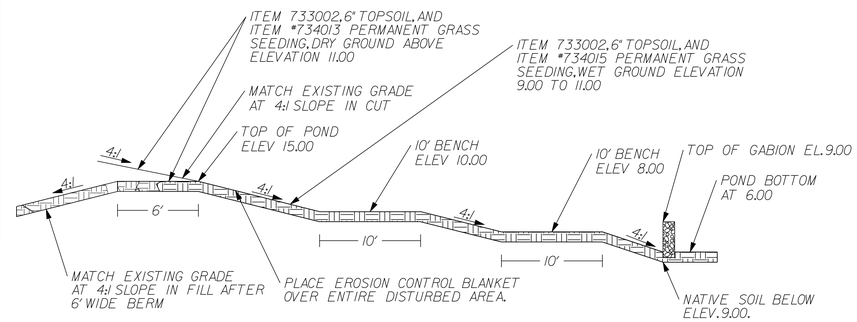

SECTION A – A

SCALE: NONE

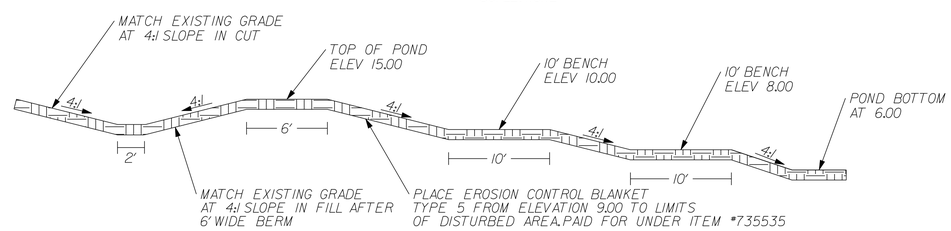

SECTION B – B

SCALE: NONE

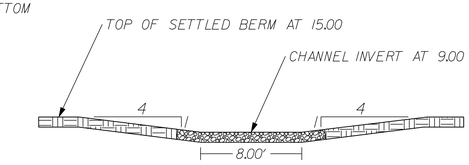

SECTION C – C

SCALE : NONE

POND DESIGN SUMMARY FOR BMP #459				
DESIGN STORM	FACILITY INFLOW	FACILITY DISCHARGE	WATER SURFACE ELEVATION	STORAGE VOLUME (AC.FT)
QUALITY STORM (2.0")	34.04	24.35	10.34	1.099
2 - YEAR	99.55	76.05	11.74	2.757
10 - YEAR	212.46	184.56	13.34	5.002
100 - YEAR	449.80	441.56	14.27	6.486

HAZARD CLASSIFICATION: CLASS A AS PER POND CODE 378
DRAINAGE AREA TO FACILITY: 177.27 ACRES
MANAGEMENT PROVIDED BY FACILITY: WATER QUANTITY FOR 2 & 10 YEAR STORM EVENTS

DELAWARE DEPARTMENT OF TRANSPORTATION

ADDENDUMS / REVISIONS

NOT TO SCALE

SR1, LITTLE HEAVEN GRADE SEPARATED INTERSECTION

CONTRACT	BRIDGE NO.	-
T200412202	DESIGNED BY:	SFP
COUNTY	CHECKED BY:	WFC
KENT		

STORMWATER MANAGEMENT DETAILS DELDOT SWM FACILITY #459

SHEET NO. 214
TOTAL SHTS. 641

11/5/2025 C:\PROJECTS\0259\TASK 100\DELDOT AASHTO 12223 DGN'S\Gavin Emory\0259TASK SR1, LITTLE HEAVEN FINAL DESIGN\DGN FILES\SWM-DETAIL-4.dgn

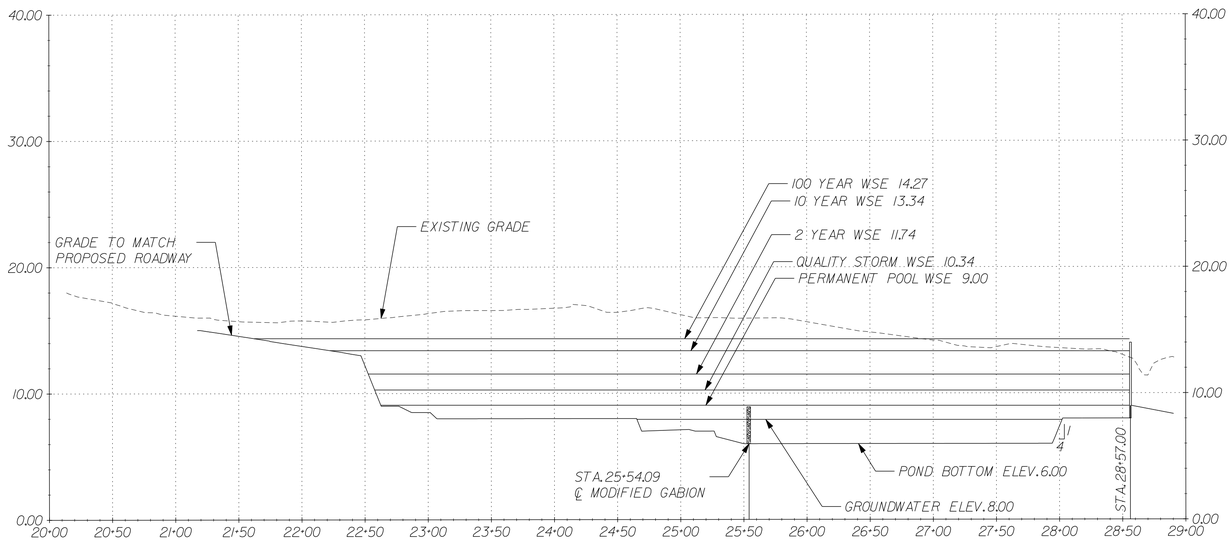

DELDOT SWM FACILITY #459 CROSS SECTION

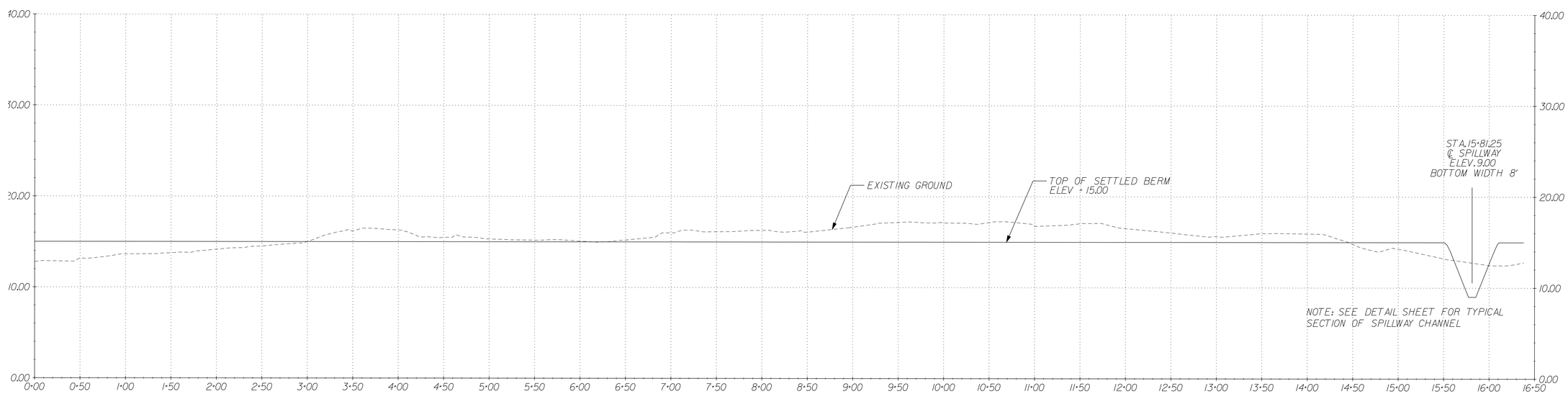

DELDOT SWM FACILITY #459 EMBANKMENT

11/25/2014
C:\PWWORK\ecs\d0351710\b ladesh dgn+ 11223 dsns sswm smsh\0351710J6 sr1_little heaven fmd\design\dgn files\swm_detail 4-2.dgn
22:30:02 PM

DELAWARE DEPARTMENT OF TRANSPORTATION	ADDENDUMS / REVISIONS	SCALE: HORZ. 1" = 60' VERT. 1" = 6'	**SR1, LITTLE HEAVEN GRADE SEPARATED INTERSECTION**	CONTRACT T200412202	BRIDGE NO. -	**STORMWATER MANAGEMENT DETAILS DELDOT SWM FACILITY #459**	SHEET NO. 215
				COUNTY KENT	DESIGNED BY: SFP		TOTAL SHTS. 641
					CHECKED BY: WFC		

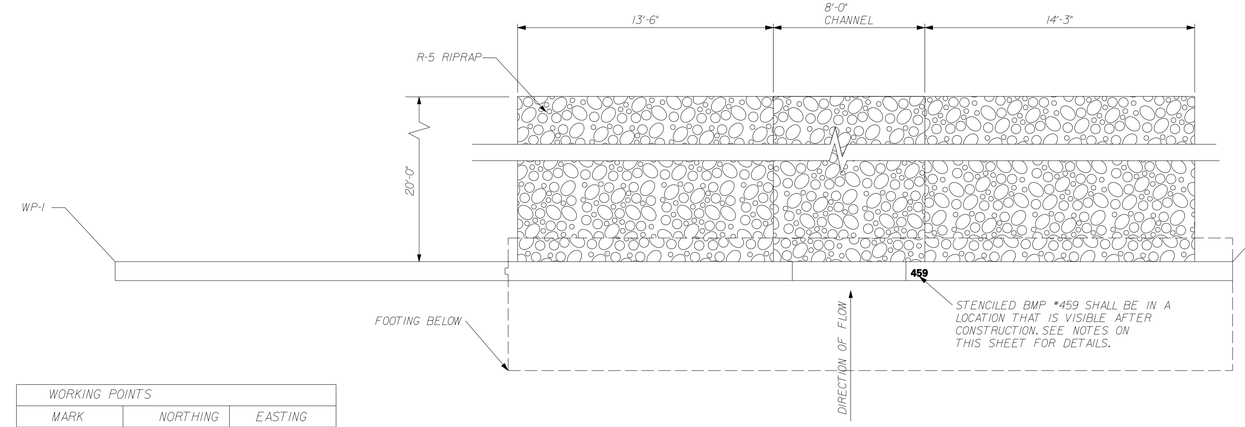

WORKING POINTS		
MARK	NORTHING	EASTING
WP-1	382784.678	643944.468
WP-2	382799.312	644001.613

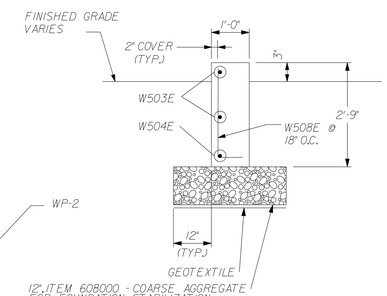

SECTION A-A
SCALE: 1/2"=1'-0"

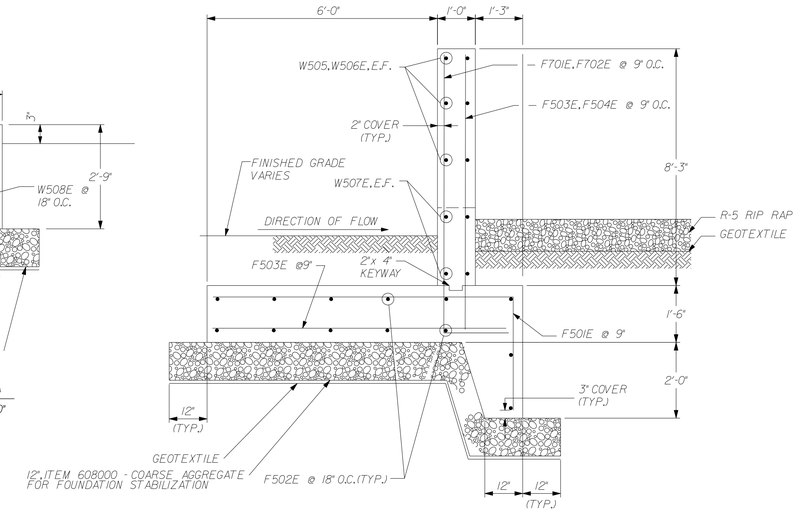

SECTION B-B
SCALE: 1/2"=1'-0"

NOTE: ANY EXCAVATION, BACKFILL, COARSE AGGREGATE, OR GEOTEXTILE REQUIRED FOR THE INSTALLATION OF THE OUTLET STRUCTURE SHALL BE INCLUDED IN ITEM #272003-POND OUTLET STRUCTURE, CONCRETE, #4.

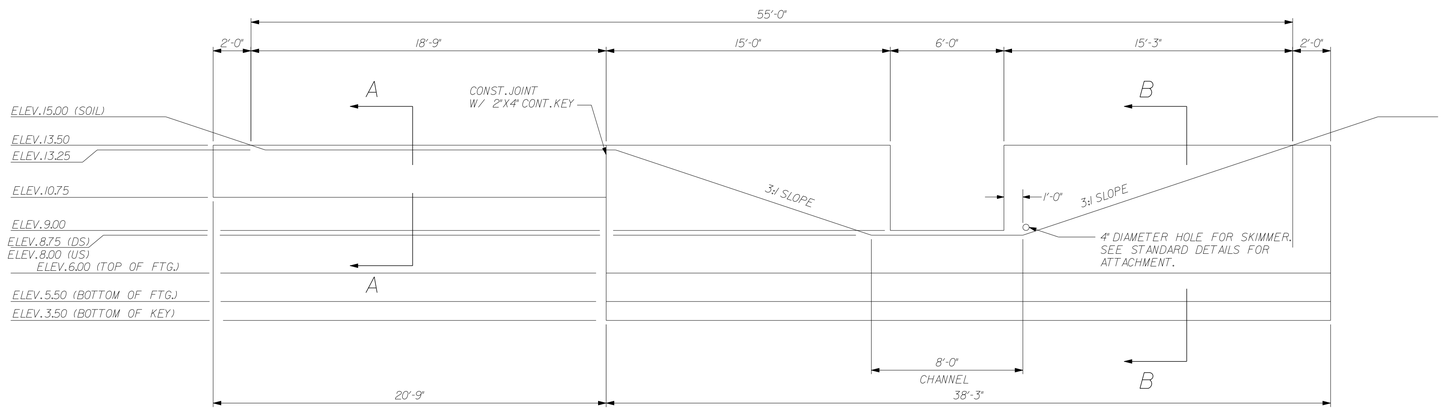

ELEVATION
SCALE: 1/4"=1'-0"

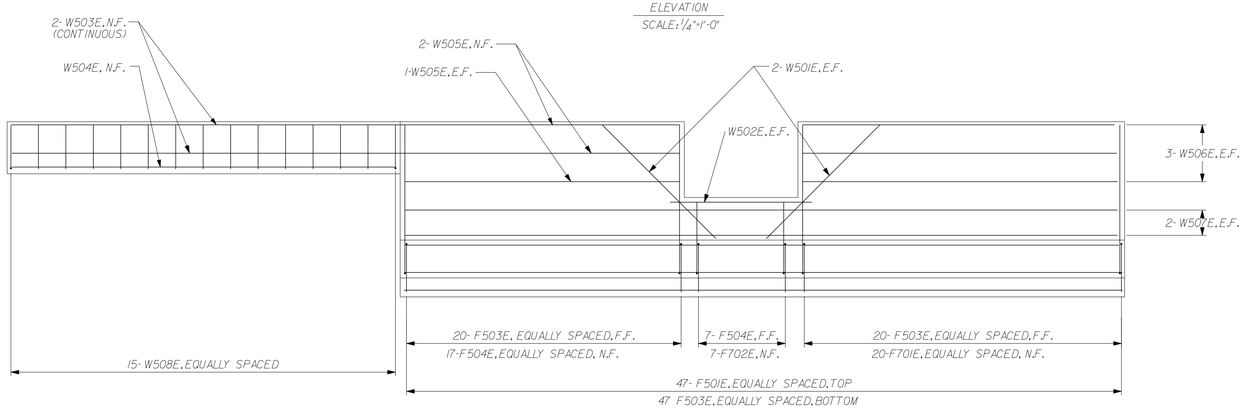

OUTLET STRUCTURE #4 SHOWN - ITEM #272003 -POND OUTLET STRUCTURE, CONCRETE, #4.

ELEVATION
SCALE: 1/4"=1'-0"

LEGEND:
T&B TOP AND BOTTOM
N.F. NEAR FACE
F.F. FAR FACE
E.F. EACH FACE

GENERAL NOTES:

1. SPECIFICATIONS:

   DELAWARE DEPARTMENT OF TRANSPORTATION - STANDARD SPECIFICATIONS FOR ROAD AND BRIDGE CONSTRUCTION, AUGUST 2001, INCLUDING ALL SUPPLEMENTS.

2. MATERIALS:

   CONCRETE FOR FOOTINGS SHALL BE CLASS "B" CONCRETE WITH f'c - 3000 PSI MIN. AT 28 DAYS. CONCRETE ABOVE FOOTINGS SHALL BE CLASS "A" CONCRETE WITH f'c - 4500 PSI MIN. AT 28 DAYS. REINFORCING STEEL SHALL BE A.A.S.H.T.O. M31 GRADE 60. ALL COSTS INCLUDED IN ITEM #272003-POND OUTLET STRUCTURE, CONCRETE, #4.

   REINFORCING STEEL AND TIES SHALL BE EPOXY COATED IN ACCORDANCE WITH A.A.S.H.T.O. M284 WHERE NOTED.

   GEOTEXTILE SHALL BE PAID FOR UNDER ITEM 713002 - GEOTEXTILE, SEPARATION.

3. EXCAVATION SHALL BE PERFORMED IN THE PRESENCE OF THE ENGINEER OR HIS REPRESENTATIVE. AFTER EXCAVATION, ALL EARTH SHALL BE INSPECTED BY A REGISTERED PROFESSIONAL GEOTECHNICAL ENGINEER AND APPROVED FOR AN ALLOWABLE BEARING PRESSURE OF 2000 PSF, BEFORE PROCEEDING WITH CONSTRUCTION.

4. BACKFILL MATERIAL OVER FOUNDATIONS SHALL BE TYPE F BORROW OR AS APPROVED BY THE ENGINEER. FURNISHING AND PLACING BACKFILL MATERIAL SHALL BE INCLUDED IN ITEM #272003-POND OUTLET STRUCTURE, CONCRETE, #4. ALL DIMENSIONS, ELEVATIONS, AND FIELD CONDITIONS SHALL BE VERIFIED PRIOR TO CONSTRUCTION.

5. FURNISHING, CONSTRUCTING AND PLACING ALL ITEMS ASSOCIATED WITH THE OUTLET STRUCTURE, INCLUDING BUT NOT LIMITED TO, TRASH RACKS, CONCRETE, REINFORCING STEEL, STONE BEDDING, GEOTEXTILE, FASTNERS AND BACKFILL MATERIAL SHALL BE INCLUDED IN ITEM #272003.

6. CONTRACTOR SHALL STENCIL THE APPROVED DELDOT BMP NUMBER ONTO THE CONCRETE OUTLET STRUCTURE. NUMBERS SHALL BE 4" TALL AND STENCILED IN PERMANENT BLACK PAINT. COST SHALL BE INCIDENTAL TO ITEM #272003.

7. CONTRACTOR SHALL SUBMIT SHOP DRAWINGS DETAILING LAYOUT AND DESIGN OF WEIR STRUCTURE. DRAWINGS SHALL BE SEALED BY A PROFESSIONAL ENGINEER REGISTERED IN DELAWARE.

REINFORCING BAR LIST

LENGTHS AND QUANTITIES SHOWN REPRESENT ONE OUTLET STRUCTURE.

MARK	SIZE	NUMBER	LENGTH	TYPE	A	B
F501E	5	42	10'-9"	1	3'-0"	7'-9"
F502E	5	14	36'-9"	STR.		
F701E	7	40	10'-5"	1	1'-10"	8'-7"
F702E	7	7	5'-11"	1	1'-10"	4'-1"
F503E	5	40	6'-3"	STR.		
F504E	5	40	7'-10"	STR.		
F505E	5	6	3'-4"	STR.		
W501E	5	2	8'-6"	STR		
W502E	5	1	7'-6"	STR.		
W503E	5	2	35'-4"	STR.		
W504E	5	1	20'-4"	STR.		
W505E	5	4	14'-8"	STR.		
W506E	5	6	16'-11"	STR		
W507E	5	4	37'-9"	STR		
W508E	5	15	3'-0"	1	2'-4"	0'-8"

BENDING DIAGRAMS

(E) DENOTES EPOXY COATED BARS.
ALL DIMENSIONS ARE FROM OUT TO OUT.

TYPE 1

DELAWARE DEPARTMENT OF TRANSPORTATION	ADDENDUMS / REVISIONS	SCALE: AS SHOWN	SR1, LITTLE HEAVEN GRADE SEPARATED INTERSECTION	CONTRACT T200412202 · COUNTY KENT · BRIDGE NO. - · DESIGNED BY: SFP · CHECKED BY: WFC	STORMWATER MANAGEMENT DETAILS DELDOT SWM FACILITY #459	SHEET NO. 216 · TOTAL SHTS. 641

11/25/2014
12:37:21 PM
S:\Contracts\0357.200 (Dewidot sqmh 12223 dotns square ends)\0357.46 sr1_little heaven\final design\dgn files\swm details-3.dgn

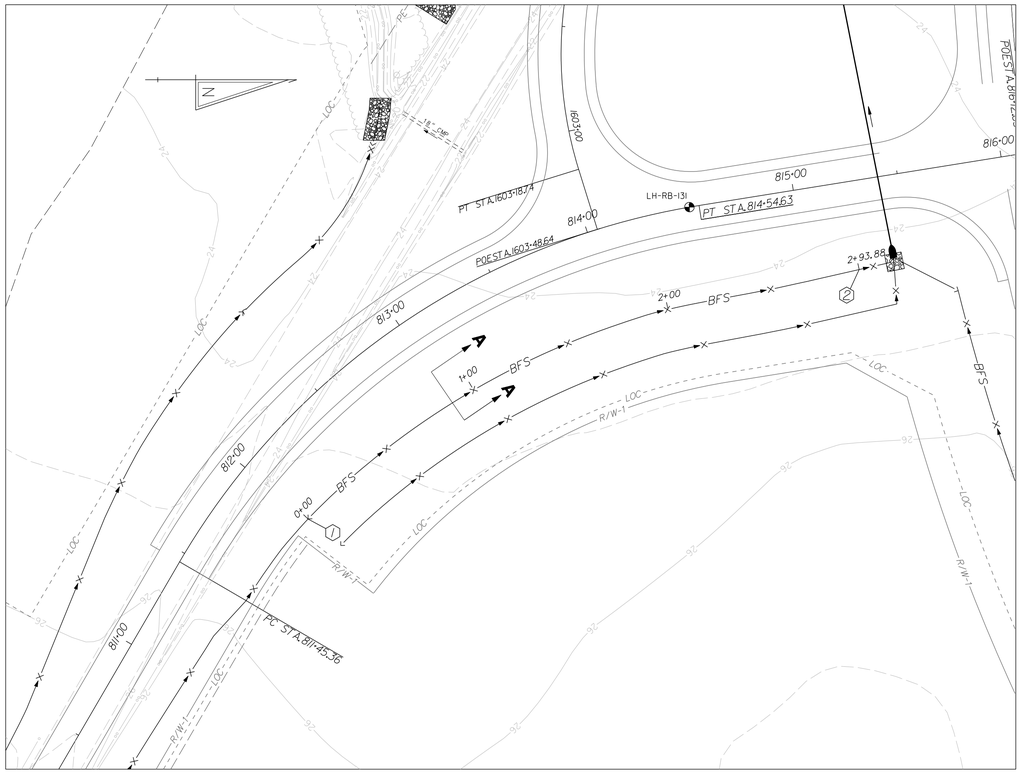

PLAN – DELDOT SWM FACILITY # 460

SCALE : NONE

DRAINAGE AREA TO FACILITY: 2.26 ACRES

MANAGEMENT PROVIDED BY FACILITY: WATER QUALITY BY BIOFILTRATION OF RUNOFF FROM 2.0" RAIN EVENT.

BIOSWALE GENERAL NOTES

1. ALL TREES, BRUSH, STUMPS, OBSTRUCTIONS, AND OTHER OBJECTABLE MATERIAL SHALL BE REMOVED AND DISPOSED OF SO NOT TO INTERFERE WITH THE PROPER FUNCTIONING OF THE BIOFILTRATION SWALE.
2. THE BIOFILTRATION SWALE SHALL BE EXCAVATED OR SHAPED TO LINE, GRADE, AND CROSS SECTION AS REQUIRED TO MEET THE CRITERIA SPECIFIED HEREIN, AND BE FREE OF BANK PROJECTIONS OR OTHER IRREGULARITIES WHICH WILL IMPEDE NORMAL FLOW.
3. FILLS SHALL BE COMPACTED PER DELDOT STANDARDS TO PREVENT UNEQUAL SETTLEMENT THAT WOULD CAUSE DAMAGE IN THE BIOFILTRATION SWALE.
4. ALL EARTH REMOVED AND NOT NEEDED IN CONSTRUCTION SHALL BE STOCKPILED SO THAT IT WILL NOT INTERFERE WITH THE FUNCTIONING OF THE BIOFILTRATION SWALE.
5. CONTRACTOR SHALL INSTALL A 6"x12" CONCRETE MARKER AT THE UPSTREAM END OF THE BIOSWALE. THE MARKER SHALL BE PLACED AT THE TOP OF BANK AND FLUSH WITH THE GROUND. THE APPROVED DELDOT BMP NUMBER SHALL BE STENCILED ONTO THE CONCRETE MARKER WITH 4" TALL LETTERING AND PERMANENT BLACK PAINT. COST SHALL BE INCIDENTAL TO THE BIOSWALE CONSTRUCTION.

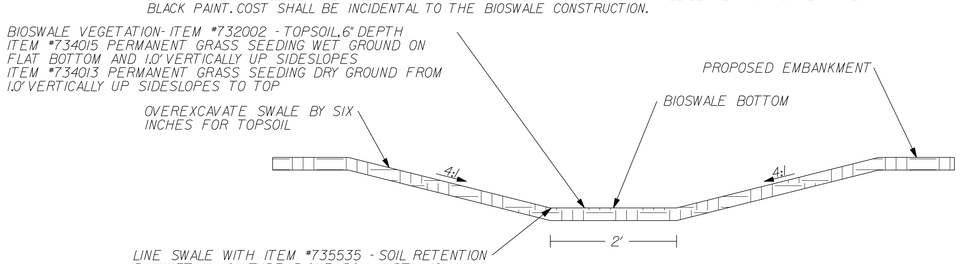

SECTION A – A

SCALE : NONE

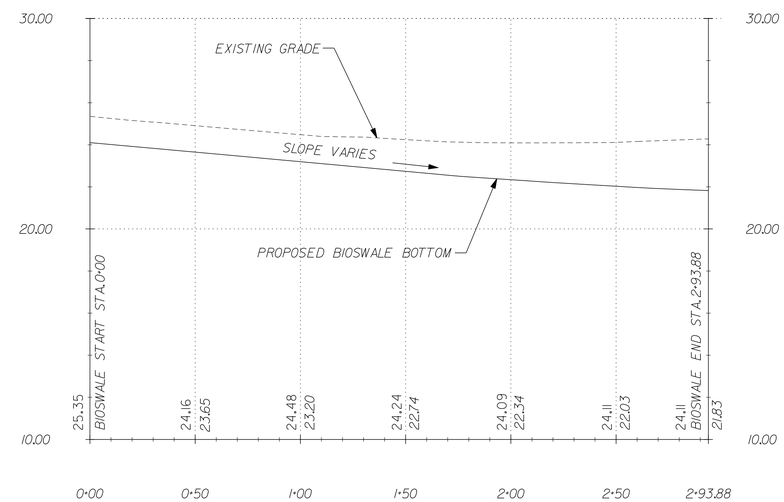

BIOSWALE PROFILE FOR BMP #460

℄ BIOSWALE					
STATION	PHILIP BARRATT ROAD STATION	OFFSET	NORTHING	EASTING	ELEVATION
1 POB STA. 0+00.00	812+00.00	37.713'	374464.2825	642774.0561	24.10'
2 POE STA. 2+93.88	815+25.00	43.409'	374742.7915	642702.7347	21.83'

DELAWARE DEPARTMENT OF TRANSPORTATION	ADDENDUMS / REVISIONS	NOT TO SCALE	SR1, LITTLE HEAVEN GRADE SEPARATED INTERSECTION	CONTRACT T200412202 / COUNTY KENT	BRIDGE NO. – / DESIGNED BY: SFP / CHECKED BY: WFC

STORMWATER MANAGEMENT DETAILS DELDOT SWM FACILITY #460

SHEET NO. 217 / TOTAL SHTS. 641

11/25/2014 10:52:09 jhecht \\0259170.120 \deldot \dgn\ 1223 dsn's \pdem \smd\\0259170.16 sr1_little heaven \final\design\dgn files\swm_detail5.dgn

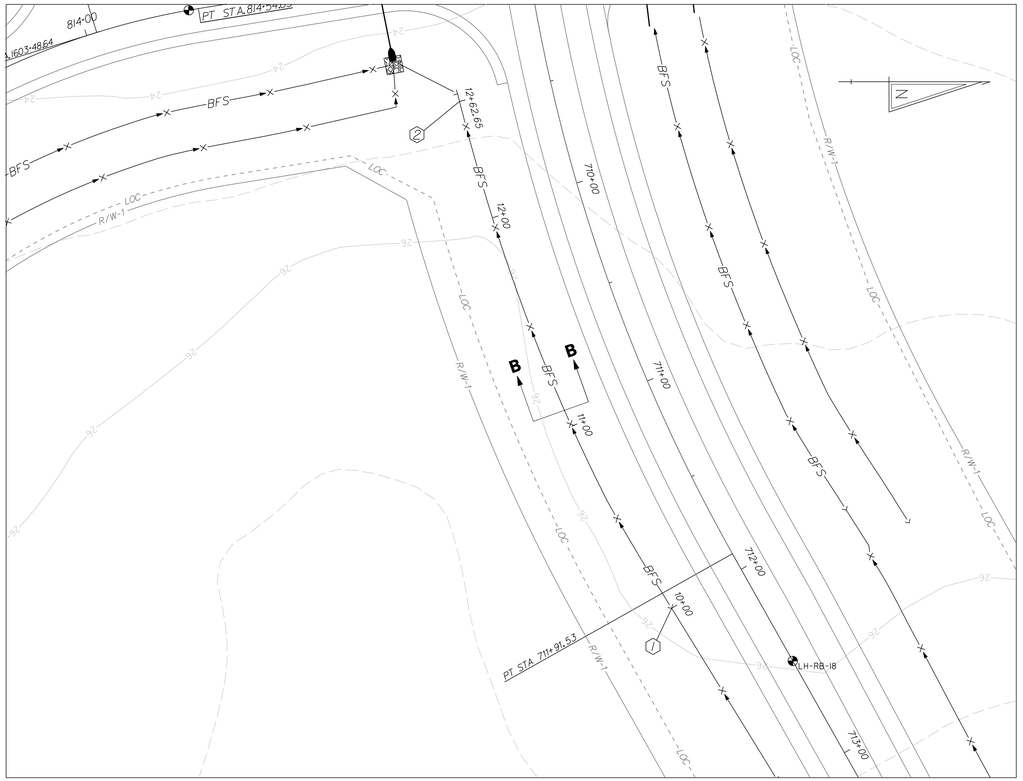

PLAN – DELDOT SWM FACILITY #461

SCALE : NONE

DRAINAGE AREA TO FACILITY: 4.80 ACRES

MANAGEMENT PROVIDED BY FACILITY: WATER QUALITY BY BIOFILTRATION RUNOFF FROM 2.0" RAIN EVENT.

BIOSWALE GENERAL NOTES

1. ALL TREES, BRUSH, STUMPS, OBSTRUCTIONS, AND OTHER OBJECTABLE MATERIAL SHALL BE REMOVED AND DISPOSED OF SO NOT TO INTERFERE WITH THE PROPER FUNCTIONING OF THE BIOFILTRATION SWALE.
2. THE BIOFILTRATION SWALE SHALL BE EXCAVATED OR SHAPED TO LINE, GRADE, AND CROSS SECTION AS REQUIRED TO MEET THE CRITERIA SPECIFIED HEREIN, AND BE FREE OF BANK PROJECTIONS OR OTHER IRREGULARITIES WHICH WILL IMPEDE NORMAL FLOW.
3. FILLS SHALL BE COMPACTED PER DELDOT STANDARDS TO PREVENT UNEQUAL SETTLEMENT THAT WOULD CAUSE DAMAGE IN THE BIOFILTRATION SWALE.
4. ALL EARTH REMOVED AND NOT NEEDED IN CONSTRUCTION SHALL BE STOCKPILED SO THAT IT WILL NOT INTERFERE WITH THE FUNCTIONING OF THE BIOFILTRATION SWALE.
5. CONTRACTOR SHALL INSTALL A 6"x12" CONCRETE MARKER AT THE UPSTREAM END OF THE BIOSWALE. THE MARKER SHALL BE PLACED AT THE TOP OF BANK AND FLUSH WITH THE GROUND. THE APPROVED DELDOT BMP NUMBER SHALL BE STENCILED ONTO THE CONCRETE MARKER WITH 4" TALL LETTERING AND PERMANENT BLACK PAINT. COST SHALL BE INCIDENTAL TO THE BIOSWALE CONSTRUCTION.

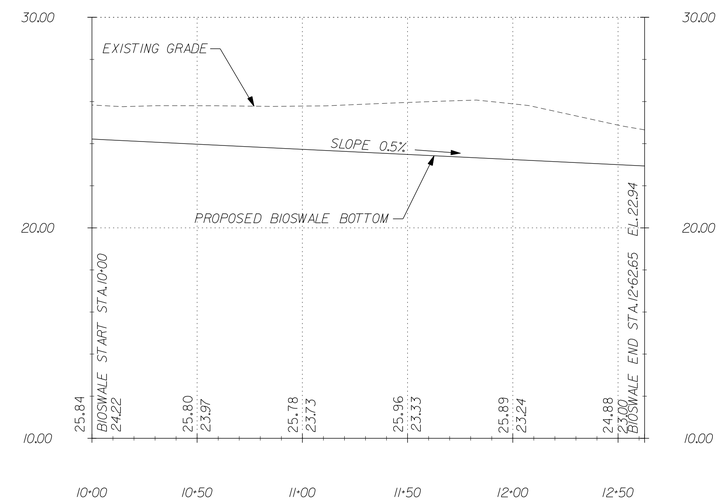

BIOSWALE PROFILE FOR BMP #461

℄ BIOSWALE					
STATION	PRO. BARRATTS CHAPEL ROAD STATION	OFFSET	NORTHING	EASTING	ELEVATION
1 POB STA. 10+00.00	712+00.00	38.41'	374846.7636	642977.3262	24.22'
2 POE STA. 12+62.65	709+50.00	46.67'	374785.8573	642723.0836	22.94'

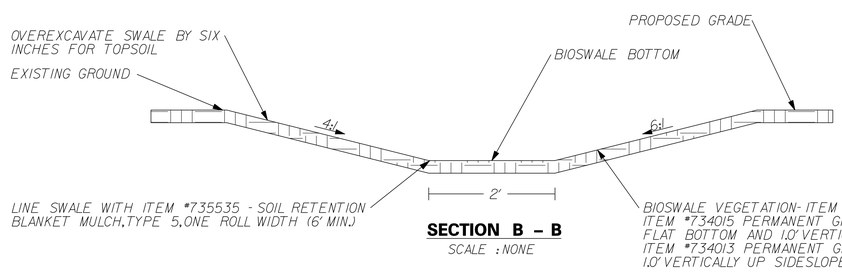

SECTION B – B

SCALE : NONE

DELAWARE DEPARTMENT OF TRANSPORTATION	ADDENDUMS / REVISIONS	NOT TO SCALE	**SR1, LITTLE HEAVEN GRADE SEPARATED INTERSECTION**	CONTRACT T200412202	BRIDGE NO. –	**STORMWATER MANAGEMENT DETAILS DELDOT SWM FACILITY #461**	SHEET NO. 218
				COUNTY KENT	DESIGNED BY: SFP		TOTAL SHTS. 641
					CHECKED BY: WFC		

11/25/2014 25,25,25 \projects\0255770.010 \details dgn\t 1223 details swm sendt\0255770.dgn, sr1_little heaven grade separated intersection swm details.dgn

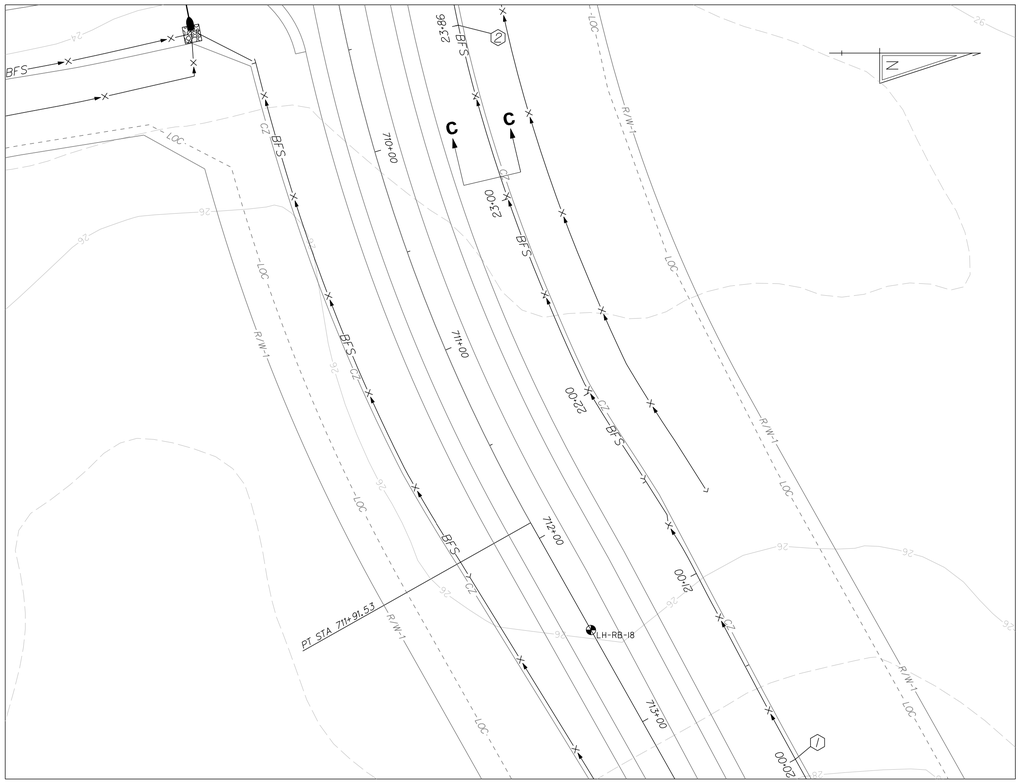

PLAN – DELDOT SWM FACILITY #462

SCALE : NONE

DRAINAGE AREA TO FACILITY: 2.83 ACRES

MANAGEMENT PROVIDED BY FACILITY: WATER QUALITY BY BIOFILTRATION OF RUNOFF FROM 2.0" RAIN EVENT.

BIOSWALE GENERAL NOTES

1. ALL TREES, BRUSH, STUMPS, OBSTRUCTIONS, AND OTHER OBJECTABLE MATERIAL SHALL BE REMOVED AND DISPOSED OF SO NOT TO INTERFERE WITH THE PROPER FUNCTIONING OF THE BIOFILTRATION SWALE.
2. THE BIOFILTRATION SWALE SHALL BE EXCAVATED OR SHAPED TO LINE, GRADE, AND CROSS SECTION AS REQUIRED TO MEET THE CRITERIA SPECIFIED HEREIN, AND BE FREE OF BANK PROJECTIONS OR OTHER IRREGULARITIES WHICH WILL IMPEDE NORMAL FLOW.
3. FILLS SHALL BE COMPACTED PER DELDOT STANDARDS TO PREVENT UNEQUAL SETTLEMENT THAT WOULD CAUSE DAMAGE IN THE BIOFILTRATION SWALE.
4. ALL EARTH REMOVED AND NOT NEEDED IN CONSTRUCTION SHALL BE STOCKPILED SO THAT IT WILL NOT INTERFERE WITH THE FUNCTIONING OF THE BIOFILTRATION SWALE.
5. CONTRACTOR SHALL INSTALL A 6"x12" CONCRETE MARKER AT THE UPSTREAM END OF THE BIOSWALE. THE MARKER SHALL BE PLACED AT THE TOP OF BANK AND FLUSH WITH THE GROUND. THE APPROVED DELDOT BMP NUMBER SHALL BE STENCILED ONTO THE CONCRETE MARKER WITH 4" TALL LETTERING AND PERMANENT BLACK PAINT. COST SHALL BE INCIDENTAL TO THE BIOSWALE CONSTRUCTION.

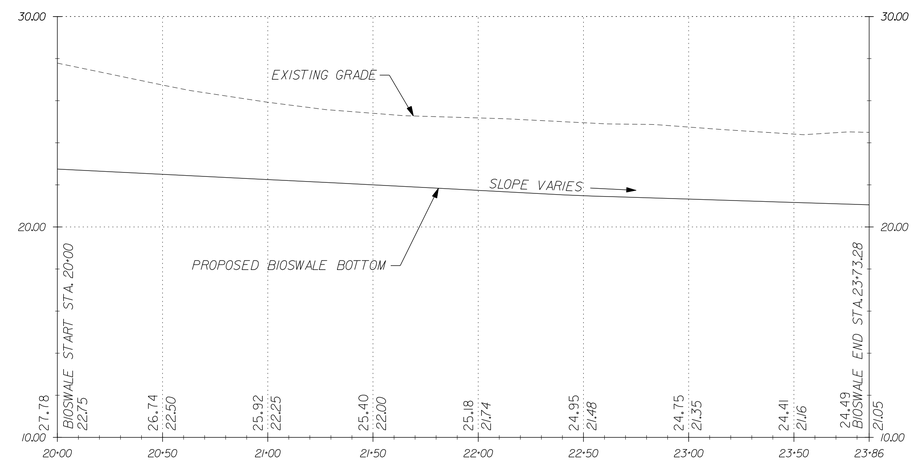

BIOSWALE PROFILE FOR BMP #462

℄ BIOSWALE					
STATION	PHILIP BARRATT ROAD STATION	OFFSET	NORTHING	EASTING	ELEVATION
1 POB STA. 20+00.00	713+50.00	54.401'	374983.1964	643087.5823	22.75'
2 POE STA. 23+85.77	709+50.00	50.489'	374881.3600	642717.7166	21.05'

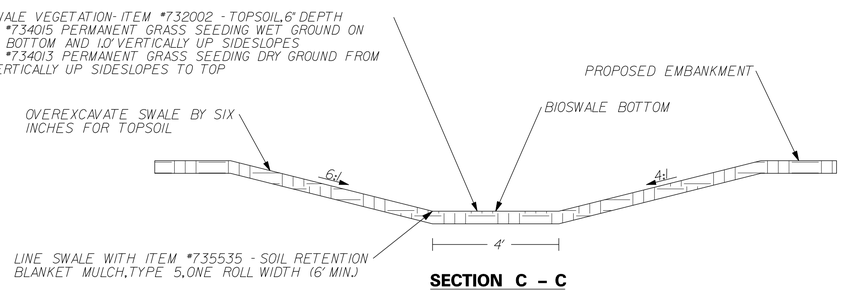

SECTION C – C

SCALE : NONE

DELAWARE DEPARTMENT OF TRANSPORTATION	ADDENDUMS / REVISIONS	NOT TO SCALE	SR1, LITTLE HEAVEN GRADE SEPARATED INTERSECTION	CONTRACT T200412202	BRIDGE NO. –	STORMWATER MANAGEMENT DETAILS SWM FACILITY #462	SHEET NO. 219
				COUNTY KENT	DESIGNED BY: SFP		TOTAL SHTS. 641
					CHECKED BY: WFC		

11/25/2014
12:12:13 PM
S:\Projects\0235170.010 Wilmington Gateway\2235170.16 sr1_little heaven\final design\dgn files\swm_details17.dgn

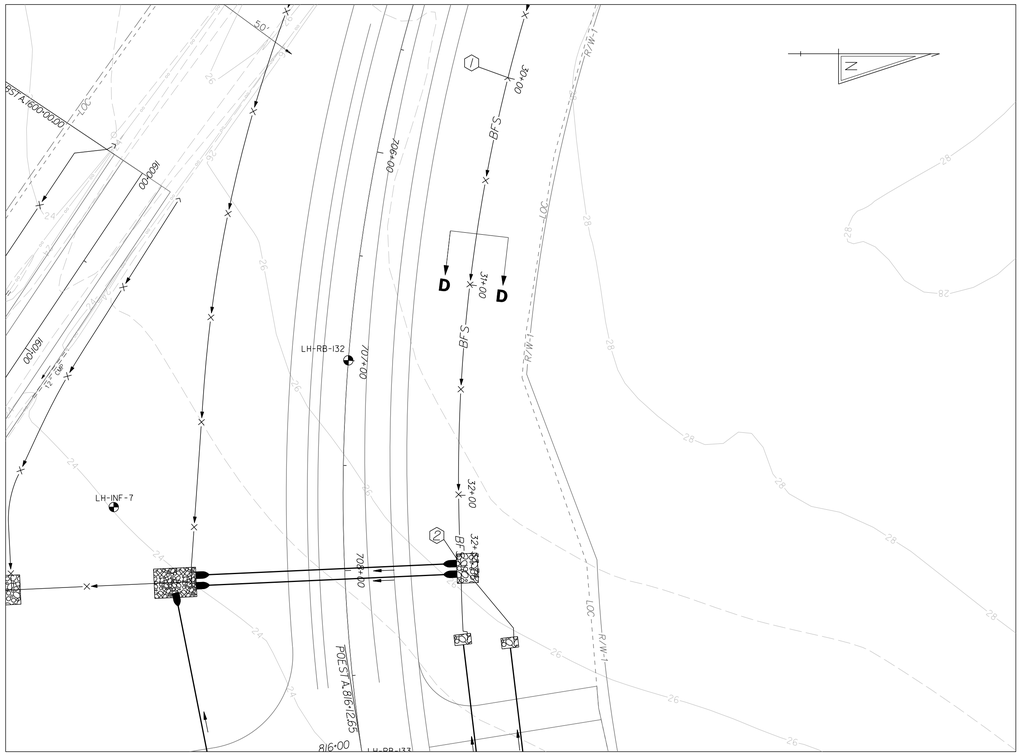

PLAN – DELDOT SWM FACILITY #463

SCALE : NONE

DRAINAGE AREA TO FACILITY: 3.08 ACRES

MANAGEMENT PROVIDED BY FACILITY: WATER QUALITY BY BIOFILTRATION OF RUNOFF FROM 2.0" RAIN EVENT.

BIOSWALE GENERAL NOTES

1. ALL TREES, BRUSH, STUMPS, OBSTRUCTIONS, AND OTHER OBJECTABLE MATERIAL SHALL BE REMOVED AND DISPOSED OF SO NOT TO INTERFERE WITH THE PROPER FUNCTIONING OF THE BIOFILTRATION SWALE.
2. THE BIOFILTRATION SWALE SHALL BE EXCAVATED OR SHAPED TO LINE, GRADE, AND CROSS SECTION AS REQUIRED TO MEET THE CRITERIA SPECIFIED HEREIN, AND BE FREE OF BANK PROJECTIONS OR OTHER IRREGULARITIES WHICH WILL IMPEDE NORMAL FLOW.
3. FILLS SHALL BE COMPACTED PER DELDOT STANDARDS TO PREVENT UNEQUAL SETTLEMENT THAT WOULD CAUSE DAMAGE IN THE BIOFILTRATION SWALE.
4. ALL EARTH REMOVED AND NOT NEEDED IN CONSTRUCTION SHALL BE STOCKPILED SO THAT IT WILL NOT INTERFERE WITH THE FUNCTIONING OF THE BIOFILTRATION SWALE.
5. CONTRACTOR SHALL INSTALL A 6"x12" CONCRETE MARKER AT THE UPSTREAM END OF THE BIOSWALE. THE MARKER SHALL BE PLACED AT THE TOP OF BANK AND FLUSH WITH THE GROUND. THE APPROVED DELDOT BMP NUMBER SHALL BE STENCILED ONTO THE CONCRETE MARKER WITH 4" TALL LETTERING AND PERMANENT BLACK PAINT. COST SHALL BE INCIDENTAL TO THE BIOSWALE CONSTRUCTION.

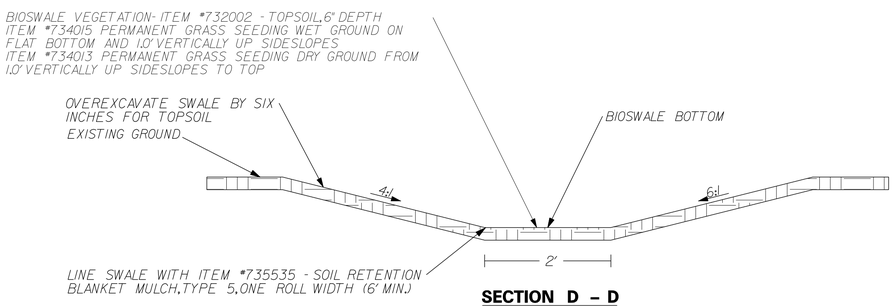

SECTION D – D

SCALE : NONE

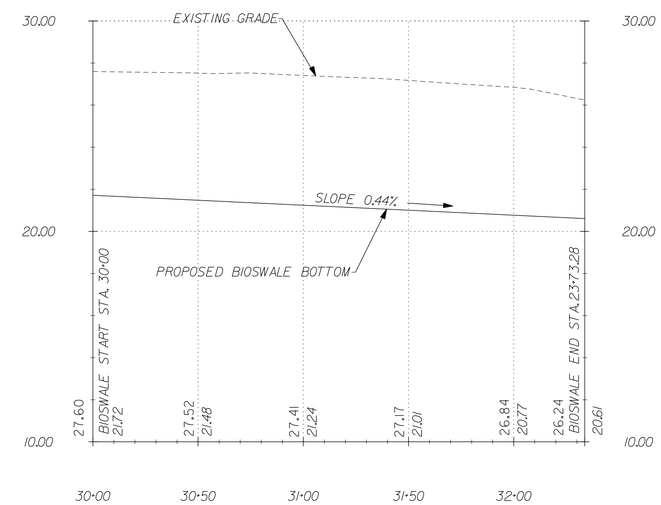

BIOSWALE PROFILE FOR BMP #463

℄ BIOSWALE					
STATION	PHILIP BARRATT ROAD STATION	OFFSET	NORTHING	EASTING	ELEVATION
1 POB STA. 30+00.00	705+50.00	52.916	374952.6521	642352.7858	21.72'
2 POE STA. 32+33.74	708+00.00	55.516	374892.1280	642577.6464	20.61'

DELAWARE DEPARTMENT OF TRANSPORTATION	ADDENDUMS / REVISIONS	NOT TO SCALE	SR1, LITTLE HEAVEN GRADE SEPARATED INTERSECTION	CONTRACT T200412202 / COUNTY KENT	BRIDGE NO. – / DESIGNED BY: SFP / CHECKED BY: WFC
STORMWATER MANAGEMENT DETAILS DELDOT SWM FACILITY #463	SHEET NO. 220 / TOTAL SHTS. 641				

11/25/2014
G:\Projects\T200412202\design\drawings\sheets\T200412202_sheets.dgn 11223 drawn smith\T200412202_sr1_little heaven fthwd\design\dgn files\swm_details.dgn
2025 3:57 PM

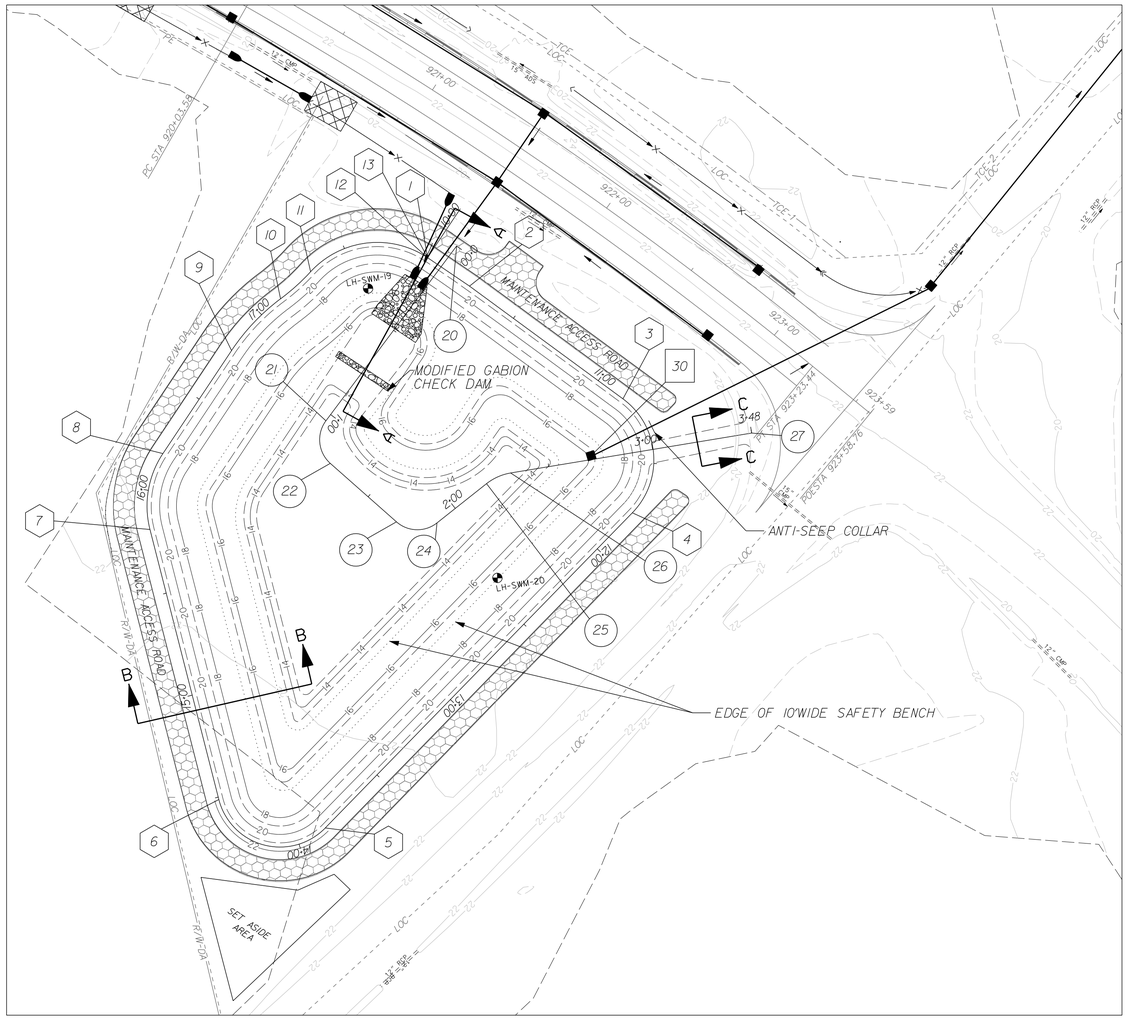

PLAN – DELDOT SWM FACILITY #457

SCALE: NONE

POND CONSTRUCTION SEQUENCE AND NOTES

THE STORMWATER MANAGEMENT POND SHALL FUNCTION AS A SEDIMENT BASIN DURING ROADWAY CONSTRUCTION AND SHALL BE CONSTRUCTED IN ACCORDANCE WITH THE FOLLOWING SECTIONS OF THE STANDARD SPECIFICATIONS AS IS APPLICABLE:

SECTION 271 - STORMWATER MANAGEMENT POND
SECTION 272 - POND OUTLET STRUCTURE.CONCRETE
SECTION 733 - TOPSOILING

1. INSTALL STABILIZED CONSTRUCTION ENTRANCE.
2. CLEAR AND GRUB FOR INSTALLATION OF PERIMETER EROSION AND SEDIMENT CONTROLS.
3. INSTALL PERIMETER SEDIMENT CONTROLS.
4. CLEAR AND GRUB REMAINING AREA FOR POND CONSTRUCTION.
5. CONSTRUCT POND OUTLET STRUCTURE AND PARTIAL EMBANKMENT AS NEEDED TO INSTALL POND OUTLET STRUCTURE. INSTALL SKIMMER DEWATERING DEVICE TO LOW FLOW ORIFICE IN OUTLET STRUCTURE. BLOCK OFF 2.5' WIDE WEIR IN OUTLET STRUCTURE USING A WATERTIGHT METHOD APPROVED BY THE ENGINEER. DE-WATER FOUNDATION AS NEEDED IN ACCORDANCE WITH SECTION 110.13 AND USE SUMP PIT FOR PUMPING. (SEE DELDOT STANDARD DETAILS FOR SKIMMER DEWATERING DEVICE INSTALLATION.)
6. EXCAVATE THE POND TO THE ELEVATIONS SHOWN ON THE GRADING PLAN. RETAIN SUFFICIENT MATERIAL TO CONSTRUCT THE POND TO THE FINAL CONTOURS. EXCESS EXCAVATION MAY BE STOCKPILED FOR LATER USE IN ROADWAY EMBANKMENT OR PLACED IN THE ROADWAY EMBANKMENT AS IT IS EXCAVATED. PAYMENT FOR THIS WORK TO BE MADE UNDER ITEM 271.0000. COMPLETE ANY NECESSARY EMBANKMENT USING EXCAVATED MATERIALS TO THE FINAL CONTOURS. PLACE 6" TOPSOILING MATERIAL (ITEM 733002) ON ALL AREAS ABOVE THE PERMANENT POOL ELEVATION.
7. STABILIZE ALL BARE AREAS. ALL AREAS MEETING FINAL GRADE SHALL BE PERMANENTLY STABILIZED. REMAINING AREAS SHALL BE STABILIZED USING TEMPORARY STABILIZATION (NO TOPSOIL). NOTE: SEE EROSION AND SEDIMENT CONTROL PLANS FOR LOCATION OF EROSION AND SEDIMENT CONTROL MEASURES.

MAINTENANCE OF POND AS A SEDIMENT BASIN

1. CONTRACTOR SHALL INSPECT THE BASIN IMMEDIATELY AFTER EVERY RAIN AND MAKE REPAIRS AS NEEDED.
2. CONTRACTOR SHALL CLEARLY MARK THE CLEANOUT ELEVATION (EL 17.60) ON A STAKE DRIVEN INTO THE GROUND AT A LOCATION CLEARLY VISIBLE FROM THE EMBANKMENT. SEDIMENT SHALL BE REMOVED WHEN CLEANOUT ELEVATION IS REACHED AND DISPOSED OF AT A LOCATION APPROVED BY THE ENGINEER.

CONVERSION TO PERMANENT STORMWATER MANAGEMENT POND

1. CONVERT THE BASIN INTO THE PERMANENT STORMWATER MANAGEMENT POND AFTER ALL AREAS DRAINING TO THE POND HAVE BEEN PERMANENTLY STABILIZED AND THE ENGINEER HAS APPROVED THE CONVERSION.
2. REMOVE ACCUMULATED SEDIMENT TO ELEVATION 13.00 AS SHOWN BY LINES AND GRADES ON THE PLAN AND DISPOSE OF SEDIMENT AT LOCATION APPROVED BY THE ENGINEER. INSTALL MODIFIED GABION CHECKDAM AS SHOWN.
3. COMPLETE STABILIZATION OF ALL BARE AREAS. REMOVE EROSION AND SEDIMENT CONTROL MEASURES AND DEACTIVATE SKIMMER DEWATERING DEVICE. REMOVE WEIR BLOCK OFF.

℄ EMBANKMENT

	STATION	NORTHING	EASTING	RADIUS
1	PC STA.10+00.00	380212.8731	646500.4979	
2	PI STA.10+24.1060	380230.3038	646517.1494	
3	PC STA.11+14.58	380293.3163	646582.0713	
	PI STA.11+55.95	380322.1331	646611.7615	36.00'
4	PT STA.11+76.12	380288.7435	646636.1961	
5	PC STA.13+85.24	380119.9891	646759.6915	
	PI STA.14+38.73	380076.8193	646791.2833	30.00'
6	PT STA.14+48.82	380072.3759	646737.9736	
7	PC STA.15+81.24	380061.3767	646606.0111	
	PI STA.16+01.27	380059.7130	646586.0509	45.00'
8	PT STA.16+18.93	380073.4300	646571.4556	
9	PC STA.16+77.73	380113.7013	646528.6054	
	PI STA.16+94.91	380125.4684	646516.0847	100.00'
10	PRC STA.17+11.76	380140.7399	646508.2100	
	PI STA.17+21.09	380149.6164	646503.6328	100.00'
11	PRC STA.17+30.36	380156.9722	646497.8994	
	PI STA.17+67.17	380186.000	646475.2740	43.00'
12	PT STA.17+91.24	380212.8348	646500.4616	
13	POE STA.17+91.30	380212.8731	646500.4979	

NOTE: ℄ EMBANKMENT IS LOCATED AT TOP OF POND, EL. 21.50'

℄ SPILLWAY

	STATION	NORTHING	EASTING	RADIUS
20	POB STA.0+00.00	380227.4106	646497.3426	
21	PC STA.1+03.70	380152.3998	646568.9438	
	PI STA.1+17.52	380142.4035	646578.4857	15.00'
22	PT STA.1+26.03	380151.0958	646589.2290	
23	PC STA.1+67.99	380177.4929	646621.8546	
	PI STA.1+80.55	380185.3900	646631.6151	15.00'
24	PT STA.1+88.91	380196.3885	646625.5598	
25	PC STA.2+18.96	380222.7175	646611.0640	
	PI STA.2+25.42	380228.3766	646607.9484	
26	PT STA.2+31.61	380234.8365	646607.9643	
27	POE STA.3+47.71	380350.9365	646608.2503	

CENTER POINT OF OUTLET STRUCTURE

		NORTHING	EASTING
30	CENTER POINT	380273.8688	646606.1913

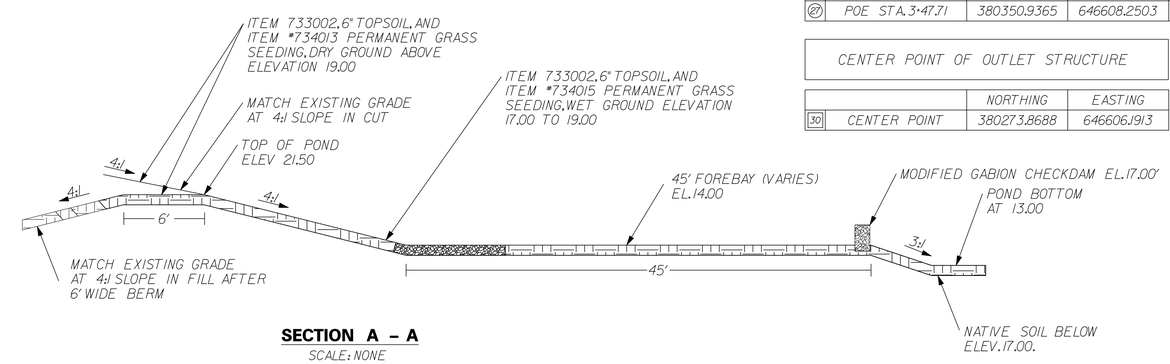

SECTION A – A

SCALE: NONE

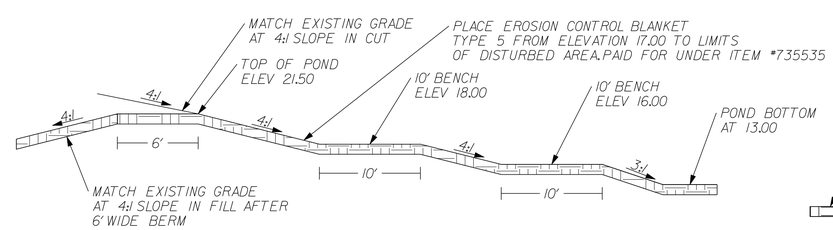

SECTION B – B

SCALE: NONE

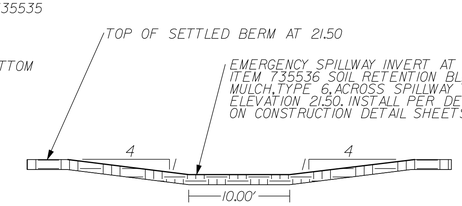

SECTION C – C

SCALE : NONE

POND DESIGN SUMMARY FOR BMP #457				
DESIGN STORM	FACILITY INFLOW	FACILITY DISCHARGE	WATER SURFACE ELEVATION	STORAGE VOLUME (AC.FT)
QUALITY STORM (2.0")	1.71	0.10	17.28	0.136
2 - YEAR	6.43	0.31	17.82	0.419
10 - YEAR	15.08	0.50	18.72	1.060
100 - YEAR	34.13	1.56	20.34	2.411

HAZARD CLASSIFICATION: CLASS A AS PER POND CODE 378

DRAINAGE AREA TO FACILITY: 6.92 ACRES

MANAGEMENT PROVIDED BY FACILITY: WATER QUALITY BY EXTENDED DETENTION OF FIRST 2.0" OF RUNOFF, WATER QUANTITY FOR 2&10 YEAR STORMS.

DELAWARE DEPARTMENT OF TRANSPORTATION

ADDENDUMS / REVISIONS

NOT TO SCALE

SR1, LITTLE HEAVEN GRADE SEPARATED INTERSECTION

CONTRACT	BRIDGE NO.	-
T200412202	DESIGNED BY:	SFP
COUNTY	CHECKED BY:	WFC
KENT		

STORMWATER MANAGEMENT DETAILS DELDOT SWM FACILTY #457

SHEET NO.
221
TOTAL SHTS.
641

11/25/2014
12:27:31 PM
s:\0351700 deldot dgn\ 12223 dot\s dgn\ emd\0351716 sr1_little heaven\final design\dgn files\swm details-1.dgn

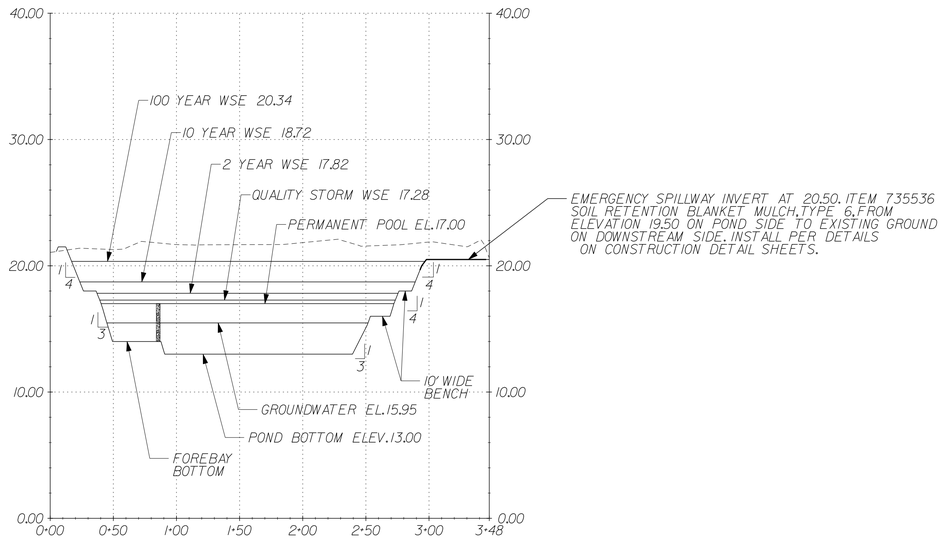

DELDOT SWM FACILITY #457 CROSS SECTION

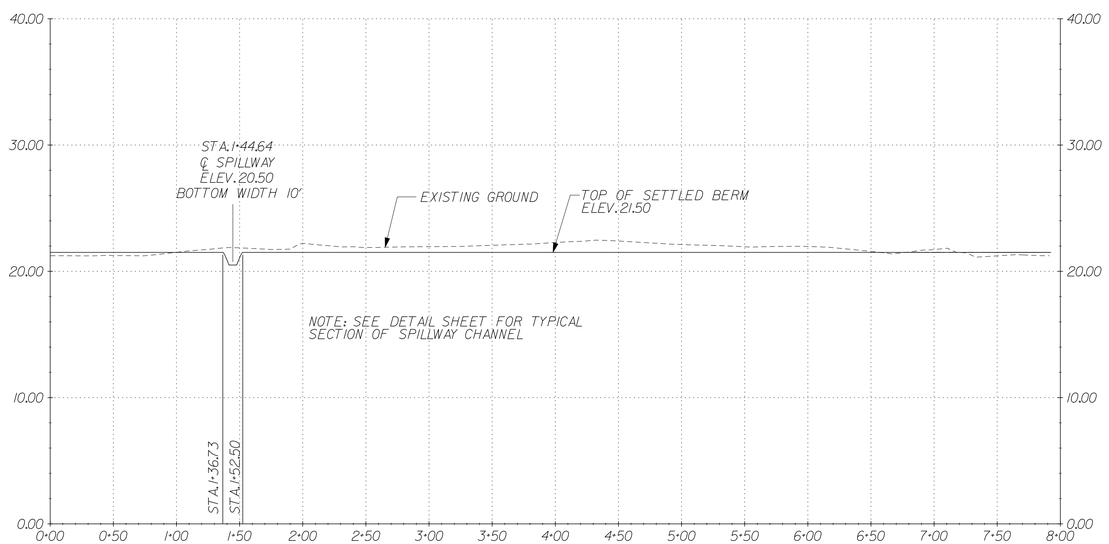

DELDOT SWM FACILITY #457 EMBANKMENT

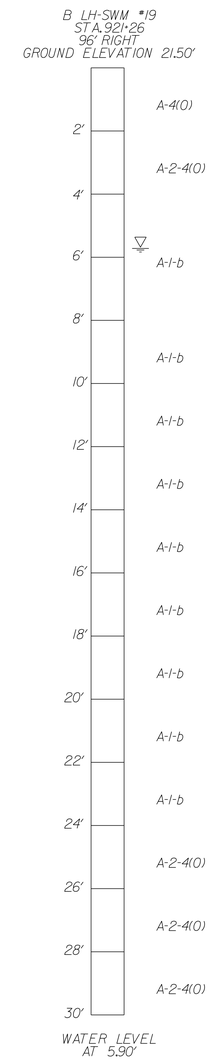

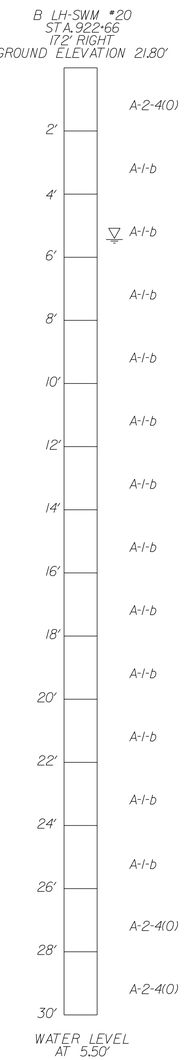

DELAWARE DEPARTMENT OF TRANSPORTATION	ADDENDUMS / REVISIONS	SCALE: HORZ. 1" = 60' VERT. 1" = 6'	**SR1, LITTLE HEAVEN GRADE SEPARATED INTERSECTION**	CONTRACT T200412202	BRIDGE NO. -	**STORMWATER MANAGEMENT DETAILS SWM FACILITY #457**	SHEET NO. 222
				COUNTY KENT	DESIGNED BY: SFP		TOTAL SHTS. 641
					CHECKED BY: WFC		

11/25/2014 9:47:23 \\Dfs\Depts\DOT\Projects\T200412202 \\deldot.agmnt.lan\223 depts\spem\smd\T200412202 swm_little heaven final design\dgn files\swm_detail9-2.dgn PW

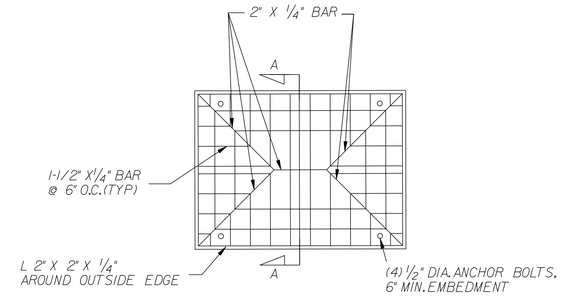

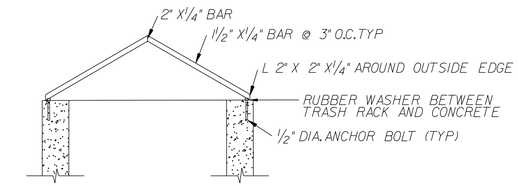

SECTION A–A

NOTE: ALUMINUM SHALL BE USED FOR TRASH RACK.

OVERFLOW TRASH RACK

N.T.S.

NOTES:

1. FURNISHING, CONSTRUCTING AND PLACING ALL ITEMS ASSOCIATED WITH THE OUTLET STRUCTURE, INCLUDING BUT NOT LIMITED TO, EXCAVATION, TRASH RACKS, CONCRETE, REINFORCING STEEL, STONE BEDDING, GEOTEXTILE, BALLAST, FASTNERS AND BACKFILL MATERIAL SHALL BE INCLUDED IN ITEM #272004-POND OUTLET STRUCTURE, CONCRETE, #5.

2. REINFORCING STEEL SHALL BE EPOXY COATED AND SHALL CONFORM TO AASHTO M 31M-94, GRADE 60. ALL FASTENERS SHALL BE GRADE

3. GEOTEXTILE SHALL CONFORM TO ITEM 713002 - GEOTEXTILES, SEPARATION.

4. CONTRACTOR SHALL SUBMIT SHOP DRAWINGS DETAILING LAYOUT AND DESIGN OF OUTLET STRUCTURE SEALED BY A REGISTERED DELAWARE PROFESSIONAL ENGINEER.

5. CONCRETE BALLAST SHALL HAVE A MINIMUM WEIGHT OF 150 LBS/CU.FT. AND SHALL CONFORM TO CLASS B CONCRETE.

6. STRUCTURE SHALL BE CONSTRUCTED FROM PRECAST DELDOT STANDARD 24" X 30" INLET BOX.

7. CONTRACTOR SHALL STENCIL THE APPROVED DELDOT BMP NUMBER ONTO THE CONCRETE OUTLET STRUCTURE. NUMBERS SHALL BE 4" TALL AND STENCILED IN PERMANENT BLACK PAINT. COST SHALL BE INCIDENTAL TO ITEM #272004.

8. REINFORCED CONCRETE PIPE SHALL BE PAID FOR SEPERATELY.

9. NO. 57 STONE, GEOTEXTILE, PIPE CRADLE, ANTI-SEEP COLLAR, AND EXCAVATION AND EMBANKEMENT SHALL BE INCIDENTAL TO ITEM #272004.

10. INLET SCREENS SHALL BE AGRI DRAIN BAR GUARDS, OR APPROVED EQUAL, AND SHALL BE INCIDENTAL TO ITEM #272004. CONTRACTOR SHALL SUBMIT INLET SCREEN INFORMATION FOR REVIEW.

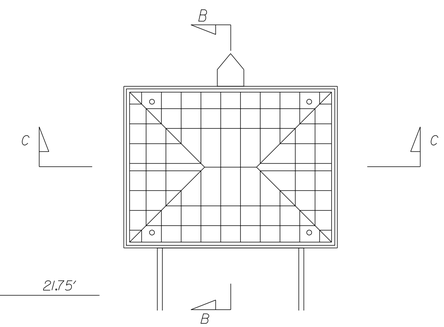

TOP VIEW

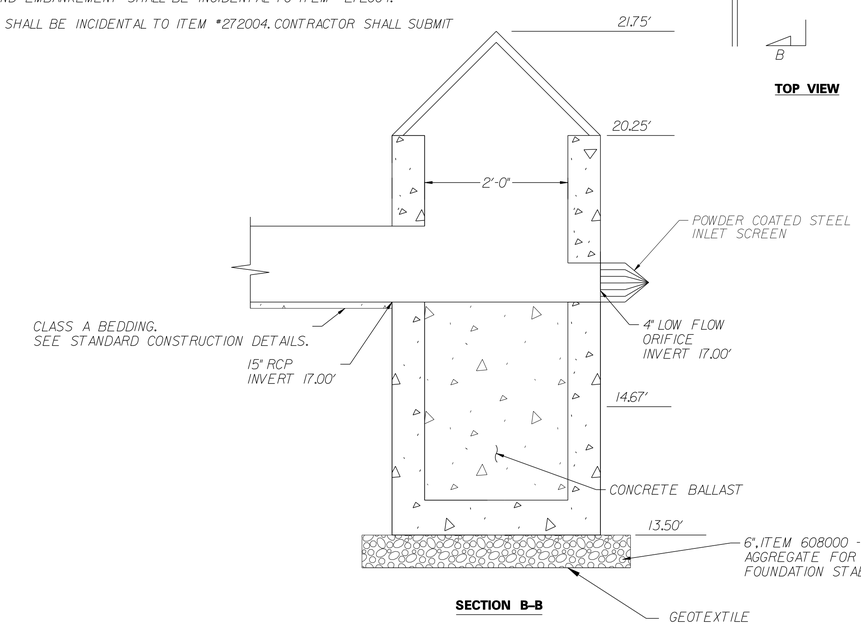

SECTION B–B

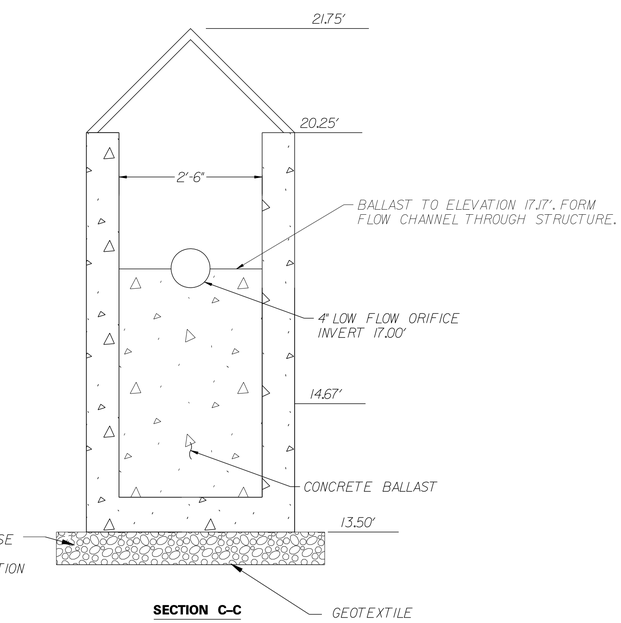

SECTION C–C

OUTLET STRUCTURE NO. 457 DETAIL

N.T.S.

DELAWARE DEPARTMENT OF TRANSPORTATION	ADDENDUMS / REVISIONS	NOT TO SCALE	SR1, LITTLE HEAVEN GRADE SEPARATED INTERSECTION	CONTRACT T200412202	BRIDGE NO. -	STORMWATER MANAGEMENT DETAILS DELDOT SWM FACILITY #457	SHEET NO. 223
				COUNTY KENT	DESIGNED BY: SFP		TOTAL SHTS. 641
					CHECKED BY: WFC		

11/25/2014
9:24:07 PM
C:\PWWorking\dot\d0259170\D0_roadway_drainage_details_swm_structure_details-3.dgn

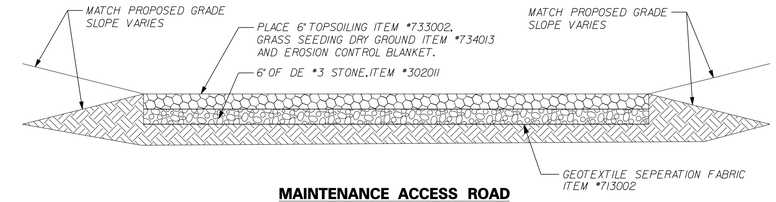

MAINTENANCE ACCESS ROAD

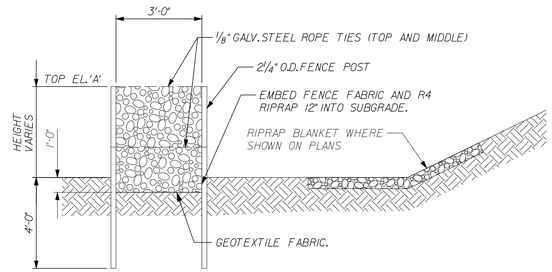

MODIFIED GABION CHECK DAM SECTION

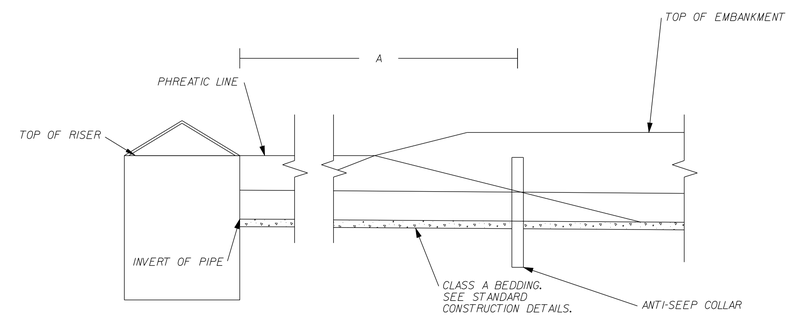

ANTI-SEEP COLLAR SECTION

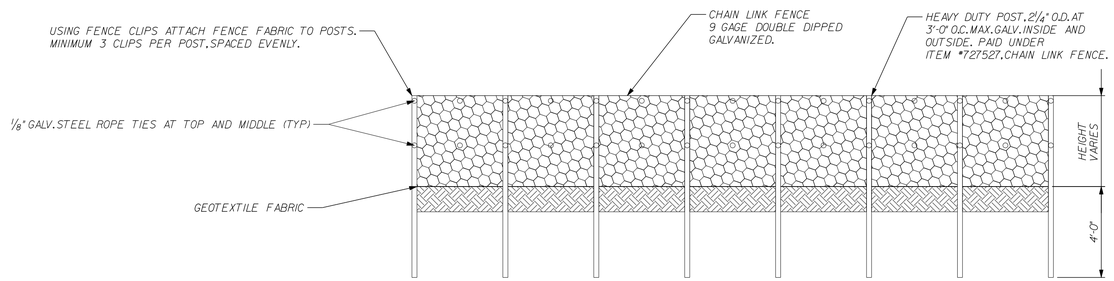

MODIFIED GABION CHECK DAM ELEVATION

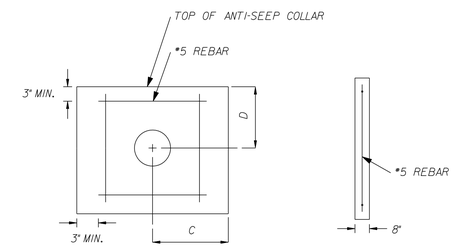

ANTI-SEEP COLLAR DETAILS

SWM FACILITY NO.	A
455	22.00
456	21.00
458	15.50
459	9.00
457	17.00

MODIFIED GABION GENERAL NOTES:

1. FENCE POST SHALL BE TIED TOGETHER USING 1/8" GALVANIZED STEEL ROPE. TWO TIES PER FENCE POST PAIR. FENCE POST SHALL BE PAID UNDER ITEM #727527.CHAIN FENCE.
2. CHAIN LINK FENCE FABRIC SHALL BE TIED TOGETHER USING 1/8" GALVANIZED STEEL ROPE. TIES SHALL BE SPACED EQUIDISTANT BETWEEN POSTS. TWO TIES PER SECTION. CHAIN LINK FENCE SHALL BE PAID UNDER ITEM #727527.CHAIN FENCE.
3. CHAIN LINK FENCE FABRIC SHALL BE ATTACHED TO FENCE POSTS USING FENCE CLIPS. THREE CLIPS PER FENCE POST. COST INCLUDED IN ITEM #727527.
4. THE STONE PLACED INSIDE MODIFIED GABION SHALL BE R-4 RIPRAP. SPECIAL CARE SHALL BE TAKEN WHEN PLACING THE ROCK TO ENSURE THAT THE COATING ON THE FENCE IS NOT DAMAGED. RIPRAP SHALL BE PAID UNDER ITEM #712020.R-4 RIPRAP.
5. GEOTEXTILE BENEATH THE RIPRAP FOREBAY SHALL BE PAID UNDER ITEM #713003.

SWM FACILITY NO.	NO.OF COLLARS	A	B	C	D
455	0	-	-	-	-
456	0	-	-	-	-
458	1	43'-0"	-	4'-0"	3'-0"
459	0	-	-	-	-
457	1	30'-0"	-	3'-0"	3'-0"

ANTI-SEEP COLLAR GENERAL NOTES:

1. CONCRETE FOR ANTI-SEEP COLLAR SHALL BE CLASS "A" CONCRETE.
2. REINFORCING STEEL SHALL CONFIRM TO A.A.S.H.T.O.M.31M-94.GRADE 60. ALL FASTNERS SHALL BE GRADE 8. ALL REINFORCING STEEL AND TIES SHALL BE EPOXY COATED IN ACCORDANCE WITH AASHTO M284.
3. ANTI-SEEP COLLARS SHALL BE INCIDENTAL TO THE ASSOCIATED STORMWATER MANAGEMENT FACILITY OUTLET ITEM.

11/5/2015
12:59:02 PM
USER:T02025 FILE:T:\02517.00 UDELDOT ACMVT 0223 DWTS \Dpwem Emdn\02517.46 SR1 LITTLE HEAVEN FINAL DESIGN\DGN FiIes\swm_details.dgn

DELAWARE DEPARTMENT OF TRANSPORTATION

ADDENDUMS / REVISIONS

NOT TO SCALE

SR1, LITTLE HEAVEN GRADE SEPARATED INTERSECTION

CONTRACT	BRIDGE NO.	-
T200412202	DESIGNED BY:	SFP
COUNTY	CHECKED BY:	WFC
KENT		

STORMWATER MANAGEMENT STANDARD DETAILS

SHEET NO. 224

TOTAL SHTS. 641

WORKING POINT TABLE				
POINT	STATION	OFFSET	NORTHING	EASTING
WP 1	325+45.64	50.92 L	383565.12	643895.39
WP 2	325+38.90	44.26 L	383559.86	643903.19
WP 3	325+14.10	44.26 L	383535.49	643907.94
WP 4	325+07.50	50.92 L	383527.69	644902.68

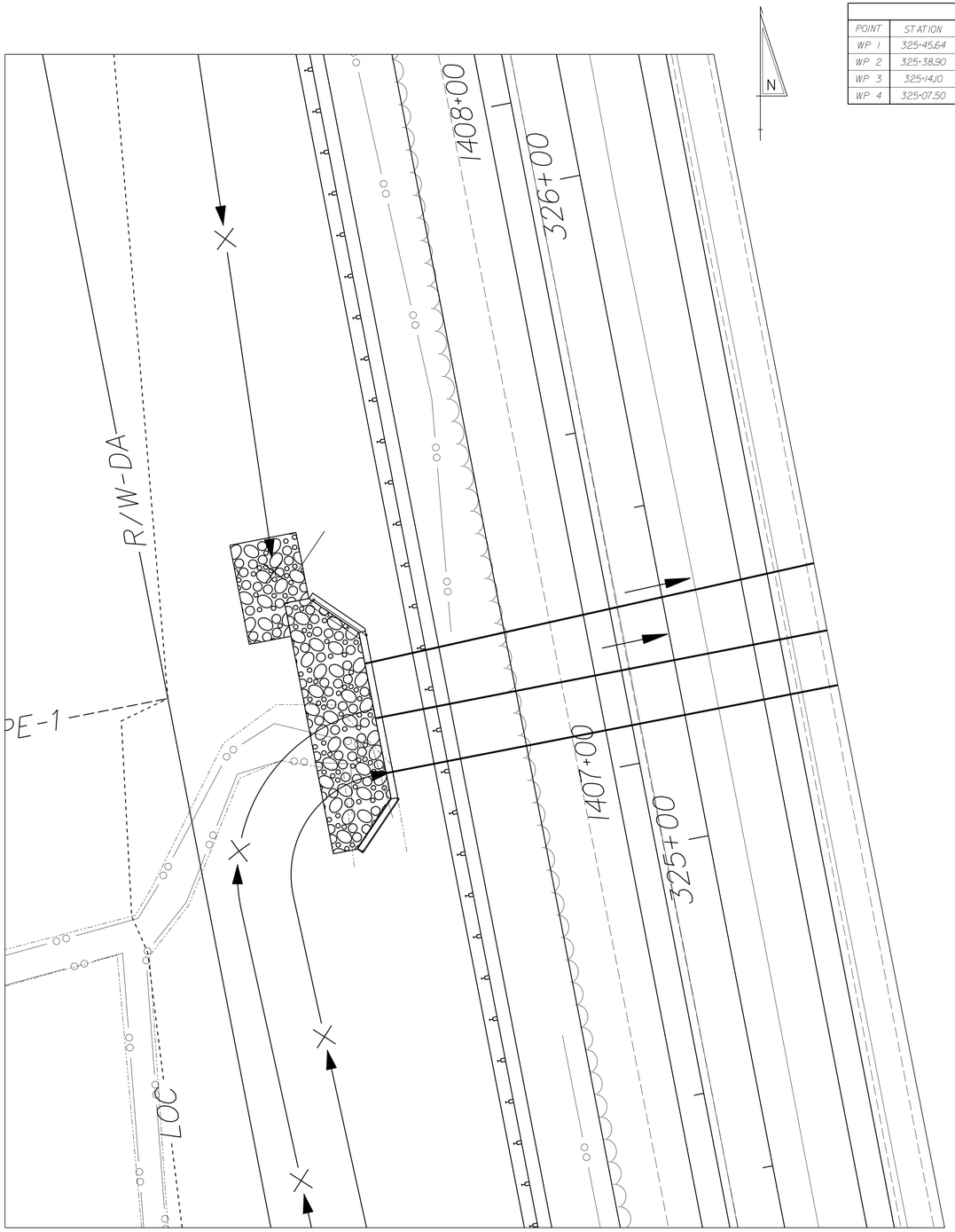

ROADWAY PLAN – ROUTE 1 S.B.
SCALE: 1" = 10'

NOTE:
REFER TO CONSTRUCTION PLANS FOR ADDITIONAL INFORMATION

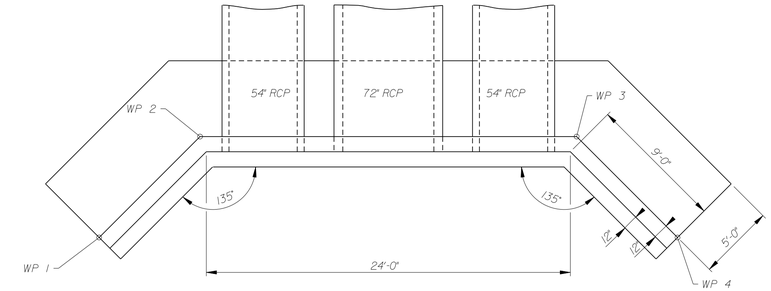

WORKING POINT LAYOUT PLAN
SCALE: 1" = 5'-0"

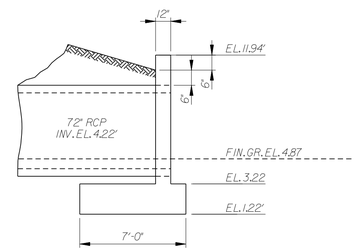

SECTION A–A
SCALE: 1" = 5'-0"

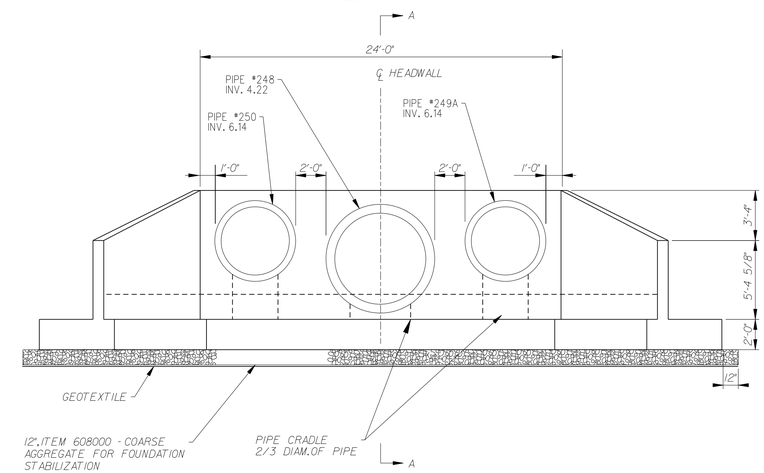

ELEVATION
SCALE: 1" = 5'-0"

1/6/2015
G:\PROJECTS\035\1.00 DELDOT AGMT 1223 DOTS Open End\035\1.16 SR1 LITTLE HEAVEN FINAL DESIGN\DGN Files\headwall detail3.dgn
14:25:56 PM

DELAWARE DEPARTMENT OF TRANSPORTATION	ADDENDUMS / REVISIONS	SCALE 0 30 60 90 FEET	**SR1, LITTLE HEAVEN GRADE SEPARATED INTERSECTION**	CONTRACT T200412202 / COUNTY KENT	BRIDGE NO. – / DESIGNED BY: SFP / CHECKED BY: WFC	**HEADWALL #1 DETAILS STA. 325+35 LEFT**	SHEET NO. 225 / TOTAL SHTS. 641

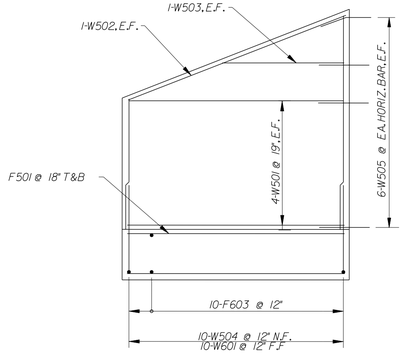

WINGWALL ELEVATION
SCALE: 1" = 3'-0"

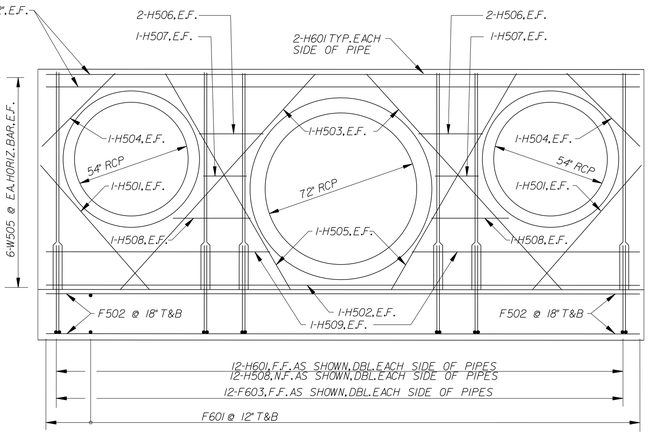

HEADWALL ELEVATION
SCALE: 1" = 3'-0"

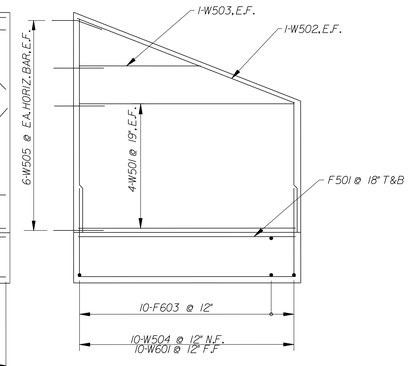

WINGWALL ELEVATION
SCALE: 1" = 3'-0"

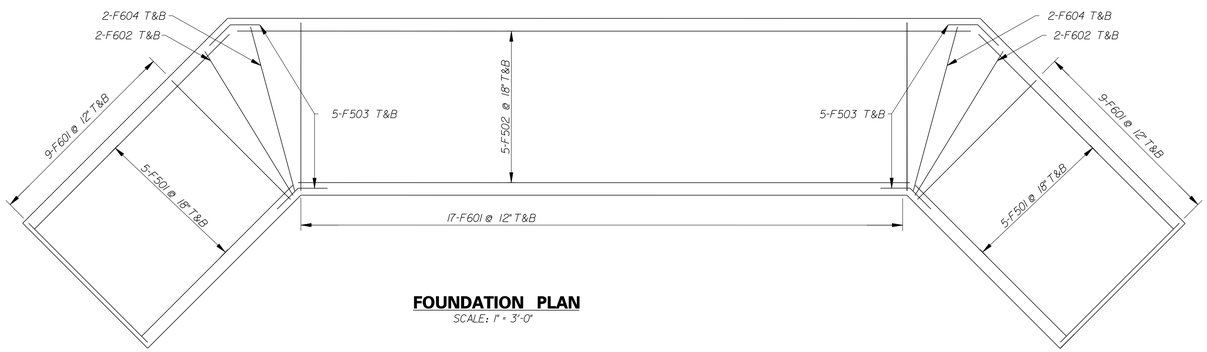

FOUNDATION PLAN
SCALE: 1" = 3'-0"

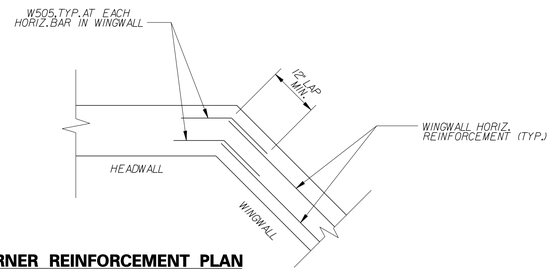

CORNER REINFORCEMENT PLAN
SCALE: NONE

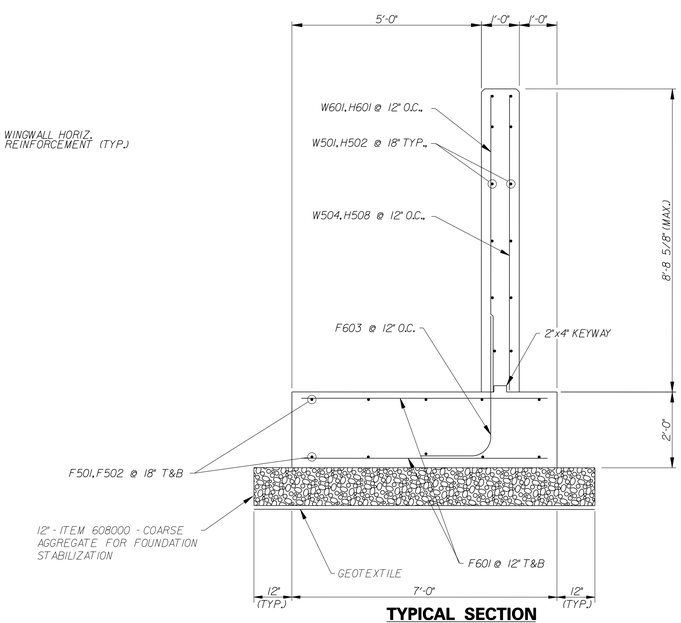

TYPICAL SECTION
SCALE: 1/2" = 1'-0"

NOTES:

1. BAR REINFORCEMENT SHALL CONFIRM TO AASHTO M31 (ASTM A615) - GRADE 60 KSI. ALL BAR REINFORCEMENT IN FOOTINGS TO HAVE 3 INCHES MINIMUM COVER. ALL BAR REINFORCEMENT IN HEADWALLS AND WINGWALLS TO HAVE 2 INCHES MINIMUM COVER. ALL BAR REINFORCEMENT AND CHAIR SUPPORTS SHALL BE PROTECTED WITH FUSION BONDED EPOXY. EPOXY COATED REINFORCING STEEL SHALL CONFORM TO AASHTO M284 (ASTM D3963) AND SHALL BE PAID FOR UNDER ITEM 604000 - BAR REINFORCEMENT, EPOXY COATED.
2. THE CONTRACTOR MAY SUBSTITUTE CONTINUOUS REBAR AT ALL LAP LOCATIONS SHOWN.
3. ALL CONCRETE FOR HEADWALL AND WINGWALL FOUNDATIONS SHALL CONFORM TO AND BE PAID UNDER ITEM 602004 - PCC MASONRY, ABUTMENT FOOTING, CLASS B.
4. ALL CONCRETE FOR HEADWALLS AND WINGWALLS SHALL CONFORM TO AND BE PAID UNDER ITEM 602015 - PCC MASONRY, ABUTMENT ABOVE FOOTING, CLASS A.
5. ALL EXPOSED CONCRETE EDGES SHALL BE CHAMFERED 3/4 INCHES UNLESS NOTED OTHERWISE.
6. HEADWALL SHALL BE CAST-IN-PLACE. IF THE CONTRACTOR ELECTS TO CONSTRUCT A PRECAST UNIT, THE CONTRACTOR SHALL SUBMIT SHOP DRAWINGS DETAILING ALL REBAR, JOINTS, LAYOUT AND DESIGN OF HEADWALL STRUCTURE.
7. EXCAVATION FOR STRUCTURES SHALL BE INCIDENTAL TO ALL ITEMS RELATED TO THE HEADWALL CONSTRUCTION.

REINFORCING BAR SCHEDULE

LOCATION OF BARS	MARK	SIZE	TYPE	LENGTH	NO REQUIRED	DIMENSIONS X-X.X (X FEET - X INCHES .X EIGHTHS OF INCHES) A	B	C	D	E	F/R	G	H	J	REMARKS
FOOTING	F501	5	STR	8-5.5	20										4 SETS OF 5
				TO											
				10-11											
	F502	5	STR	24-3	10										2 SETS OF 5
				TO											
				29-0											
	F503	5	14	2-4	20	1-2	1-2					0-9.7	0-9.7		
	F601	6	STR	6-6	84										
	F602	6	STR	6-8	4										4 SETS OF 2
	F603	6	2	3-6	32	1-8	3-6					0-0			
	F604	6	STR	6-9	4										
WINGWALL STEM	W501	5	STR	8-5.7	16										
	W502	5	STR	9-2	4										
	W503	5	STR	4-10	4										
	W504	5	STR	5-1.4	20										4 SETS OF 10
				TO											
				8-5.2											
	W505	5	14	2-0	24		1-0	1-0				0-8.4	0-8.4		
	W601	6	STR	4-10	20										4 SETS OF 10
				TO											
				8-5.2											
HEADWALL STEM	H501	5	STR	6-6.5	4										
	H502	5	STR	24-0	6										
	H503	5	STR	11-6.2	4										
	H504	5	STR	4-1.2	4										
	H505	5	STR	9-10.5	4										
	H506	5	STR	2-6.5	4										
	H507	5	STR	1-8.5	2										
	H508	5	STR	3-1	9										
	H509	5	STR	8-10.3	4										
	H601	6	STR	8-6.5	9										

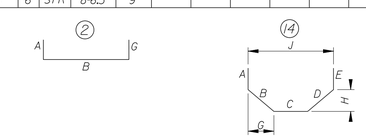

DELAWARE DEPARTMENT OF TRANSPORTATION

ADDENDUMS / REVISIONS

SCALE 0 30 60 90 FEET

SR1, LITTLE HEAVEN GRADE SEPARATED INTERSECTION

CONTRACT	BRIDGE NO.	-
T200412202	DESIGNED BY:	SFP
COUNTY		
KENT	CHECKED BY:	WFC

HEADWALL #1 DETAILS STA. 325+35 LEFT

SHEET NO.
226
TOTAL SHTS.
641

11/25/2014 9:31:PM
pw:\\pwpc\projects\035170\00 (deldot agmt 1223 dots open end)\035170.16 sr1, little heaven final design\dgn files\headwall detail4.dgn

WORKING POINT TABLE				
POINT	STATION	OFFSET	NORTHING	EASTING
WP 1	614+57.00	58.05 L	381961.8830	644086.6613
WP 2	614+52.69	43.39 L	381963.5738	644101.8407
WP 3	614+41.19	34.82 L	381956.2970	644114.1234
WP 4	614+20.00	34.84 L	381936.8135	644122.1118
WP 5	613+36.29	34.03 L	381859.8608	644153.7842

ROADWAY PLAN – ROUTE 1 S.B.
SCALE: 1" = 10'

NOTE:
REFER TO CONSTRUCTION PLANS FOR ADDITIONAL INFORMATION

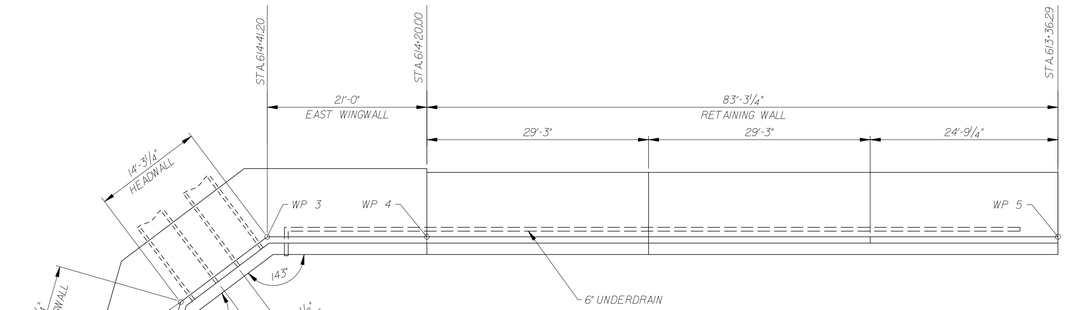

WORKING POINT LAYOUT PLAN
SCALE: 1" = 10'-0"

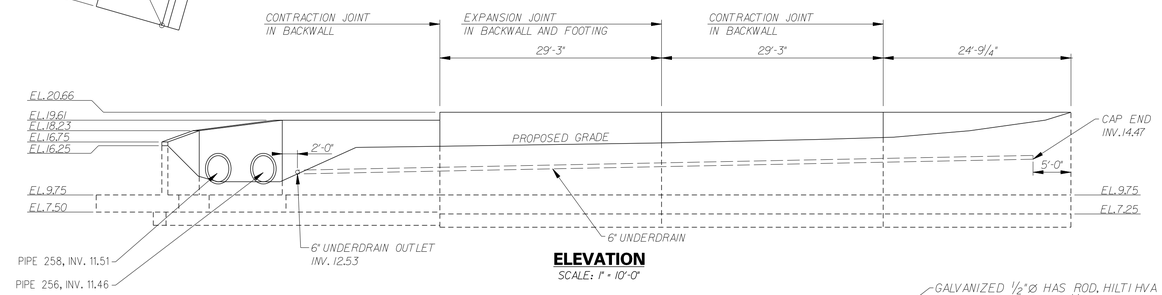

ELEVATION
SCALE: 1" = 10'-0"

TYPICAL SECTION DIMENSIONS		
	613+36.29 TO 614+20.00	614+20.00 TO 614+57.00
SH	10'-11"	9'-10" *
FH	2'-6"	2'-3"
KH	1'-9"	1'-9"
T	1'-6"	1'-6"
S	1'-3"	0'-10"
H	10'-3"	9'-0"
TB	1'-9"	1'-9"
KW	1'-9"	1'-9"
HB	9'-6"	7'-10"
EL.	7.50	7.50

*REFER TO ELEVATION FOR HEIGHT OF WALL (SH) AT HEADWALL AND WEST WINGWALL.

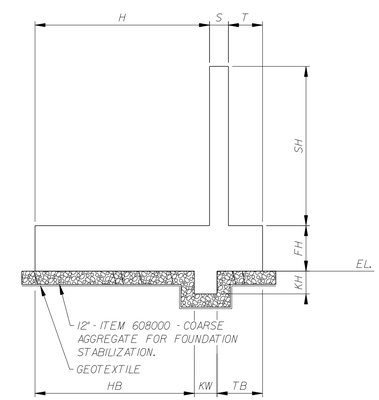

TYPICAL SECTION
SCALE: N.T.S.

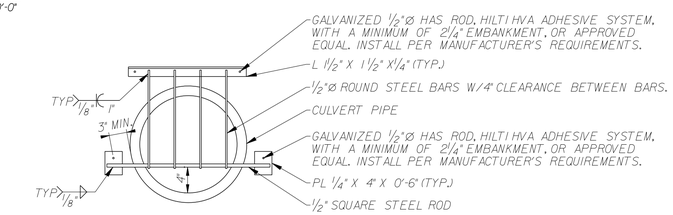

NOTES:

1. SAFETY GRATES SHALL BE PLACE ON ALL INLET CULVERTS.
2. ALL STEEL SHALL BE HOT-DIP GALVANIZED PER ASTM A-153, AFTER FABRICATION AND WELDING.
3. GRATE SHALL BE SIZED TO COMPLETELY COVER PIPE OPENING. CONTRACTOR SHALL PROVIDE SHOP DRAWINGS FOR APPROVAL BY OWNER.
4. PAYMENT FOR GRATE SHALL BE PAID UNDER ITEM 708563.

SAFETY GRATE
SCALE: NONE

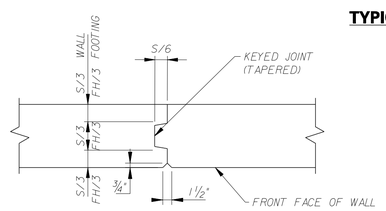

CONTRACTION /CONSTRUCTION JOINT DETAIL
SCALE: N.T.S.

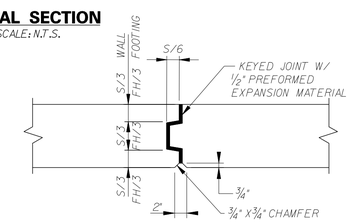

EXPANSION JOINT DETAIL
SCALE: N.T.S.

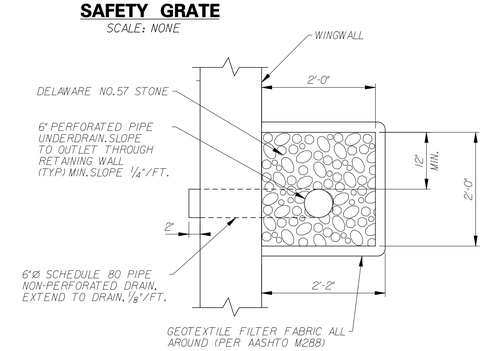

UNDERDRAIN DETAIL
SCALE: N.T.S.

ALL COSTS FOR UNDERDRAIN, STONE AND GEOTEXTILE SHALL BE INCIDENTAL TO ITEM 602015 - PCC MASONRY, ABUTMENT ABOVE FOOTING, CLASS B.

NOTES:

1. REINFORCING SHALL PASS THROUGH CONSTRUCTION JOINTS.
2. REINFORCING SHALL NOT PASS THROUGH EXPANSION OR CONTRACTION JOINTS.
3. KEYS ARE TO END 1 FOOT FROM EXPOSED POUR END.

DELAWARE DEPARTMENT OF TRANSPORTATION

ADDENDUMS / REVISIONS

SCALE 0 30 60 90 FEET

SR1, LITTLE HEAVEN GRADE SEPARATED INTERSECTION

CONTRACT	BRIDGE NO.	-
T200412202	DESIGNED BY:	SFP
COUNTY		
KENT	CHECKED BY:	WFC

HEADWALL #2 DETAILS STA. 614+50 LEFT

SHEET NO.
227
TOTAL SHTS.
641

3/10/2015
\\WADFILE\Snap\PROJECTS\03517.00 (DELDOT AGMT 123 DOTS Open End)\03517.16 SR1, LITTLE HEAVEN FINAL DESIGN\DGN Files\headwall detail.dgn
14:59:25 AM

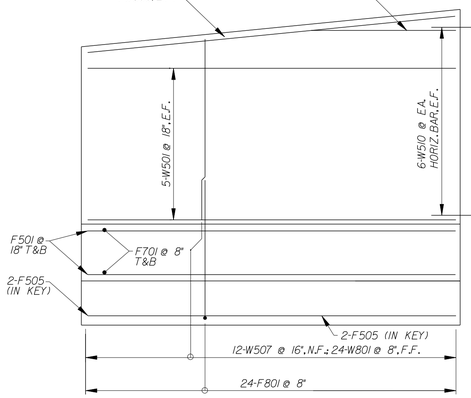

WEST WINGWALL ELEVATION
SCALE: 1" = 3'-0"

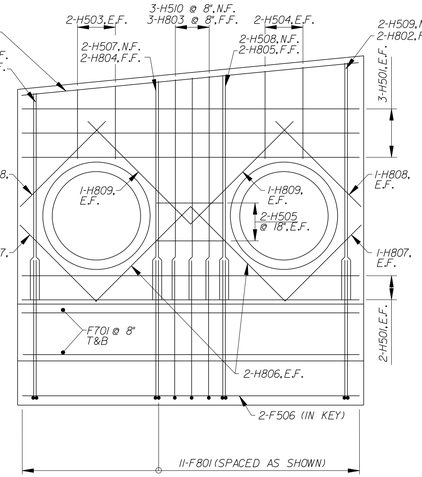

HEADWALL ELEVATION
SCALE: 1" = 3'-0"

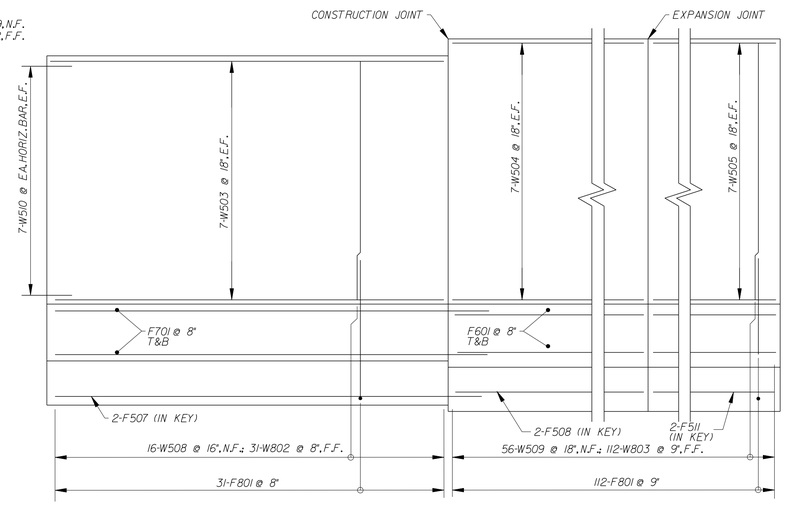

EAST WINGWALL & RETAINING WALL ELEVATION
SCALE: 1" = 3'-0"

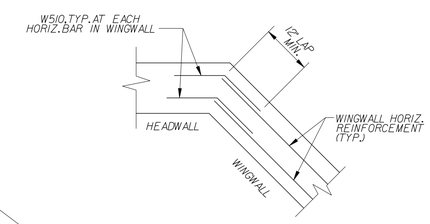

CORNER REINFORCEMENT PLAN
SCALE: NONE

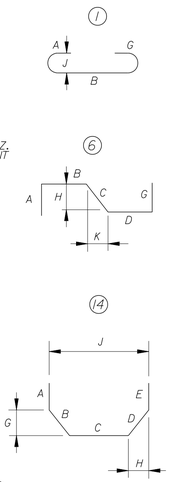

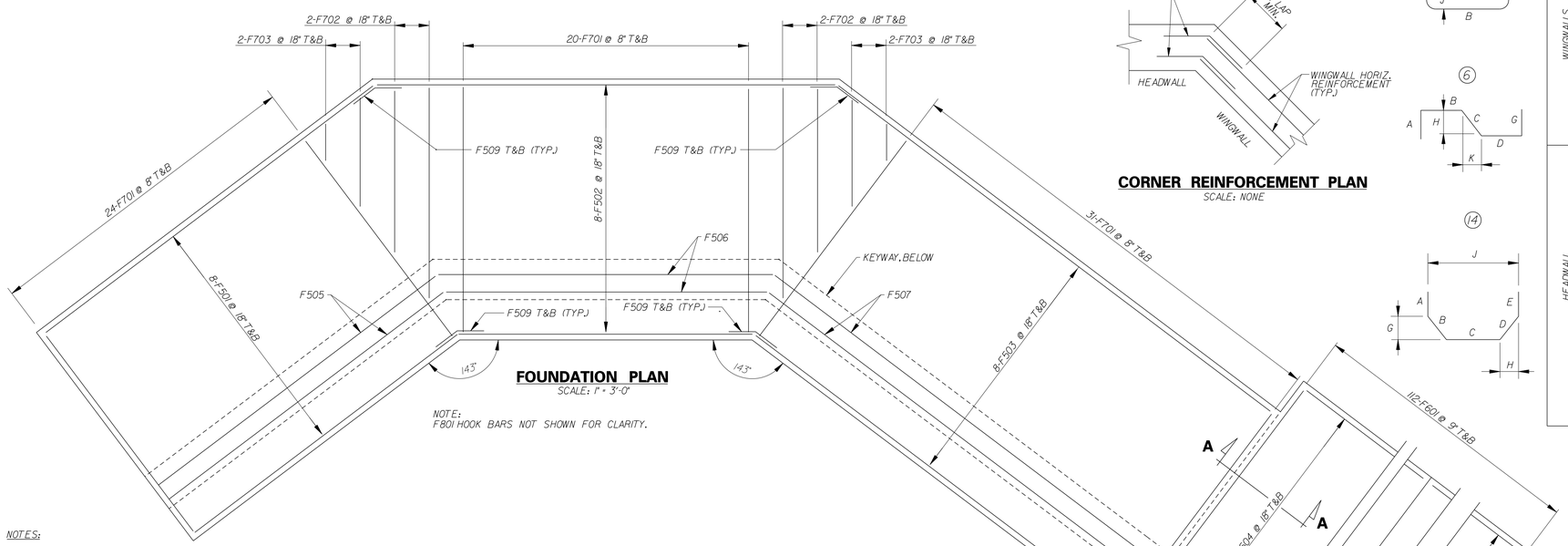

FOUNDATION PLAN
SCALE: 1" = 3'-0"

NOTE:
F801 HOOK BARS NOT SHOWN FOR CLARITY.

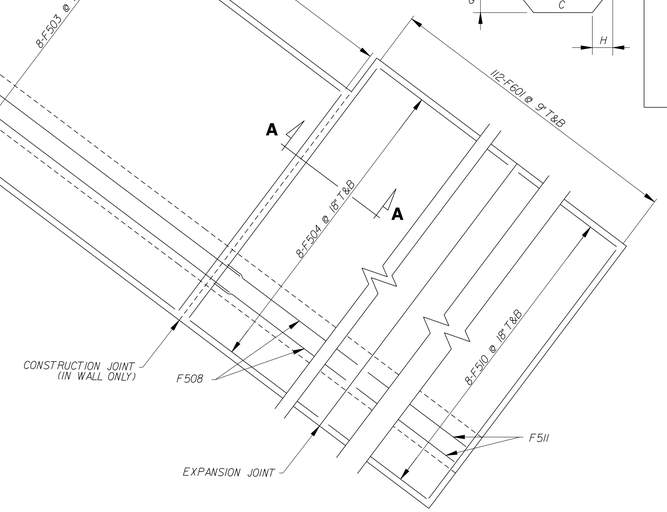

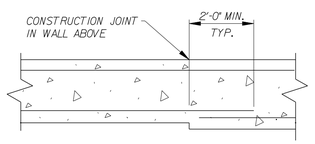

SECTION A–A
FOOTING DETAIL
SCALE: N.T.S.

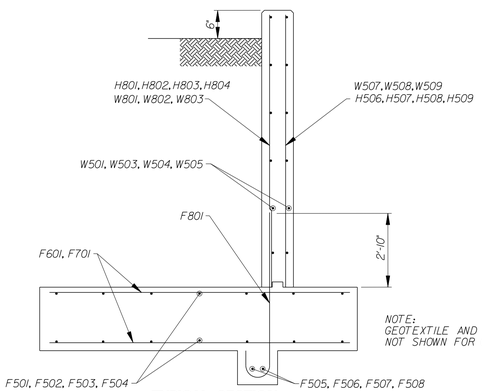

NOTE:
GEOTEXTILE AND COARSE AGGREGATE NOT SHOWN FOR CLARITY.

TYPICAL SECTION
SCALE: N.T.S.

LOCATION OF BARS	MARK	SIZE	TYPE	LENGTH	NO REQ.	DIMENSIONS (X FEET - X INCHES .X EIGHTHS OF INCHES) A	B	C	D	E	F/R	G	H	J	REMARKS
FOOTING	F501	5	STR	14-3	16										2 SETS OF 8
				TO											
				17-9											
	F502	5	STR	12-9	16										2 SETS OF 8
				TO											
				20-0											
	F503	5	STR	19-9	16										2 SETS OF 8
				TO											
				23-6											
	F504	5	STR	28-9	16										
	F505	5	STR	15-0	2										
	F506	5	STR	14-0	2										
	F507	5	STR	21-9	2										
	F508	5	STR	28-9	2										
	F509	5	14	2-4	32	1-2	1-2								
	F510	5	STR	53-6	16										
	F511	5	STR	53-6	2										
	F512	5	6	8-2	8	3-0	5-2								
	F513	5	6	7-0	8		2-0	3-0	2-0						
	F601	6	STR	12-6	224										
	F701	7	STR	10-10	150										
	F702	7	STR	7-0	8										4 SETS OF 2
				TO											
				9-3											
	F703	7	STR	1-6	8										4 SETS OF 2
				TO											
				4-9											
	F801	8	1	8-2	178	0-6	6-1							1-0	
WINGWALLS	W501	5	STR	15-0	10										
	W502	5	STR	5-9	2										
	W503	5	STR	20-9	14										
	W504	5	STR	28-11	14										
	W505	5	STR	53-6	14										
	W506	5	STR	14-7.3	2										
	W507	5	STR	6-9	12										
				TO											
				8-2											
	W508	5	STR	9-8.3	16										
	W509	5	STR	10-6.7	56										
	W510	5	14	2-0	26										
	W801	8	STR	6-9	24										
				TO											
				8-2											
	W802	8	STR	9-8.3	31										
	W803	8	STR	10-6.7	112										
HEADWALL	H501	5	STR	14-3	10										
	H502	5	STR	14-3	2										
	H503	5	STR	2-8	4										
	H504	5	STR	3-6	4										
	H505	5	STR	2-8	4										
	H506	5	STR	8-4	2										
	H507	5	STR	8-9	2										
	H508	5	STR	9-0.4	2										
	H509	5	STR	9-8	2										
	H510	5	STR	8-11.2	3										
	H801	8	STR	8-4	2										
	H802	8	STR	9-8	2										
	H803	8	STR	8-11.2	3										
	H804	8	STR	8-9	2										
	H805	8	STR	9-0.4	2										
	H806	8	STR	5-3	4										
	H807	8	STR	4-3	4										
	H808	8	STR	4-9	4										
	H809	8	STR	5-9	4										

NOTES:

1. BAR REINFORCEMENT SHALL CONFIRM TO AASHTO M31(ASTM A615) - GRADE 60 KSI. ALL BAR REINFORCEMTN IN FOOTINGS TO HAVE 3 INCHES MINIMUM COVER. ALL BAR REINFORCEMENT IN HEADWALLS AND WINGWALLS TO HAVE 2 INCHES MINIMUM COVER. ALL BAR REINFORCEMENT AND CHAIR SUPPORTS SHALL BE PROTECTED WITH FUSION BONDED EPOXY. EPOXY COATED REINFORCING STEEL SHALL CONFORM TO AASHTO M284 (ASTM D3963) AND SHALL BE PAID FOR UNDER ITEM 604000 - BAR REINFORCEMENT, EPOXY COATED.
2. THE CONTRACTOR MAY SUBSTITUTE CONTINUOUS REBAR AT ALL LAP LOCATIONS SHOWN.
3. ALL CONCRETE FOR HEADWALL AND WINGWALL FOUNDATIONS SHALL CONFORM TO AND BE PAID UNDER ITEM 602004 - PCC MASONRY, ABUTMENT FOOTING, CLASS B.
4. ALL CONCRETE FOR HEADWALLS AND WINGWALLS SHALL CONFORM TO AND BE PAID UNDER ITEM 602015 - PCC MASONRY, ABUTMENT ABOVE FOOTING, CLASS A.
5. ALL EXPOSED CONCRETE EDGES SHALL BE CHAMFERED 3/4 INCHES UNLESS NOTED OTHERWISE.
6. HEADWALL SHALL BE CAST-IN-PLACE. IF THE CONTRACTOR ELECTS TO CONSTRUCT A PRECAST UNIT, THE CONTRACTOR SHALL SUBMIT SHOP DRAWINGS DETAILING ALL REBAR, JOINTS, LAYOUT AND DESIGN OF HEADWALL STRUCTURE.
7. EXCAVATION FOR STRUCTURES SHALL BE INCIDENTAL TO ALL ITEMS RELATED TO THE HEADWALL CONSTRUCTION.

DELAWARE DEPARTMENT OF TRANSPORTATION

ADDENDUMS / REVISIONS

SCALE 0 30 60 90 FEET

SR1, LITTLE HEAVEN GRADE SEPARATED INTERSECTION

CONTRACT	BRIDGE NO.	-
T200412202	DESIGNED BY:	SFP
COUNTY		
KENT	CHECKED BY:	WFC

HEADWALL #2 DETAILS STA. 614+50 LEFT

SHEET NO. 228
TOTAL SHTS. 641

11/25/2014 9:20:01 AM
z:\projects\03517.00 (deldot agmt 123 dots open end)\03517.16 sr1, little heaven final design\dgn files\headwall detail2.dgn

ROADSIDE SIGN (RURAL DISTRICT)

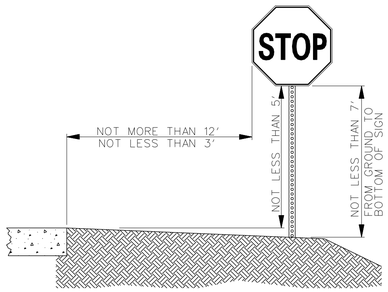

ROADSIDE SIGN (RURAL DISTRICT)

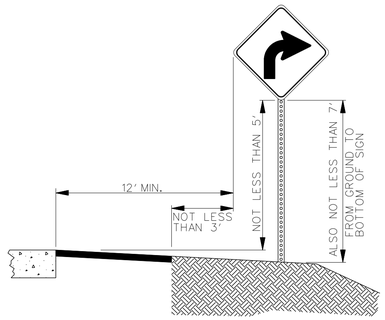

ROADSIDE SIGN PLACEMENT
N.T.S.

BREAK-AWAY ASSEMBLY

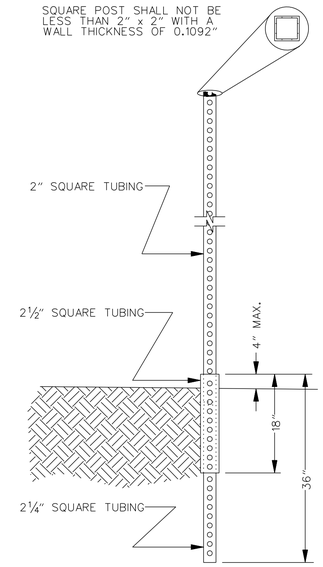

NOTES:

1. SQUARE TUBES ARE TO BE FORMED FROM GALVANIZED SHEET STRUCTURAL (PHYSICAL) QUALITY, ASTM A 446, GRADE A, COATING DESIGNATION G 90, REGULAR SPANGLE, OR HOT ROLLED CARBON SHEET STEEL STRUCTURAL (PHYSICAL) QUALITY, ASTM A 570, GRADE 33.
   A. NOMINAL OUTSIDE DIMENSION, (INCHES):
   2 X 2 +/-.008
   2¼ X 2¼ +/-.010
   2½ X 2½ +/-.010
   B. ALL FOUR SIDES ARE TO HAVE EVENLY SPACED ¼" DIAMETER HOLES ON 1" CENTERS THE ENTIRE LENGTH OF THE TUBE.
   C. TOLERANCE ON HOLE SIZE IS +/-¼". TOLERANCE ON HOLE SPACING IS +/-⅛" IN 20 FEET.
   D. STANDARD CORNER RADIUS SHALL BE 5/32" +/- 1/64".
   E. THE FASTENERS TO BE SUPPLIED UNDER THIS SPECIFICATION SHALL BE ⅜" GRADE 5 UNC CORNER BOLTS WITH CADMIUM OR ZINC PLATING, INSTALLATION OF SIGNS SHALL BE WITH ⅜" X 2½" BOLT WITH LOCKNUT AND WASHER.
2. THE CONTRACTOR SHALL PROVIDE AND INSTALL PVC (POLYVINYL CHLORIDE) SLEEVES (4" INSIDE DIAMETER MINIMUM, 6" INSIDE DIAMETER MAXIMUM) IN PROPOSED CONCRETE SIDEWALKS, ISLANDS, AND MEDIANS FOR FUTURE TRAFFIC SIGN POSTS AS DIRECTED BY THE ENGINEER. THE LOWER END OF THE SLEEVE SHALL BE SET ON THE TOP OF THE SOIL.
3. DEVELOPMENT SIGNS THAT ARE GREATER THAN 36" WIDE SHALL BE DISPLAYED ON TWO POSTS.
   A. DEVELOPMENT SIGN FACE BACKGROUNDS SHALL BE GREEN; LEGENDS SHALL BE SILVER (WHITE).
   B. LEGEND SHALL BE 5" SERIES "C" LETTERS.
   C. NO BORDER ON DEVELOPMENT SIGN PANELS.
   D. MAXIMUM DEVELOPMENT SIGN WIDTH OF 36" FOR SINGLE LINE SIGNS, 54" FOR TWO OR MORE LINES.
   E. DEVELOPMENT SIGNS SHALL BE INSTALLED WITHIN THE RIGHT-OF-WAY OF THE HIGHWAY ON WHICH THE ENTRANCE(S) IS (ARE) LOCATED. THE SIGNS SHALL BE PLACED WITHIN 750 FEET OF THE CENTERLINE OF THE ENTRANCE(S).
4. FOR SINGLE SIGN POSTS WITH BENDING OR YIELDING CHARACTERISTICS, SIGN PANELS SHALL BE ADEQUATELY BOLTED TO THE POST WITH OVERSIZED WASHERS TO PREVENT THE PANEL FROM SEPARATING ON IMPACT AND PENETRATING A WINDSHIELD. THE BOTTOM OF THE SIGN PANEL SHALL BE A MINIMUM OF 7 FEET ABOVE THE GROUND AND THE TOP OF THE PANEL SHALL BE A MINIMUM OF 9 FEET ABOVE THE GROUND TO MINIMIZE THE POSSIBILITY OF THE SIGN PANEL AND POST ROTATING ON IMPACT AND STRIKING THE WINDSHIELD OF A VEHICLE.
5. SIGN FACES SHALL BE FABRICATED OF TYPE "I" ENCLOSED LENS (ENGINEER GRADE) REFLECTIVE SHEETING FOR DEVELOPMENT SIGNS AND ENCAPSULATED LENS (HIGH INTENSITY) REFLECTIVE SHEETING FOR ALL OTHER SIGNS AND SHALL BE APPLIED TO SIGN GRADE ALUMINUM SHEET (MINIMUM THICKNESS +/- 0.125").

SIGN POST SPECIFICATIONS & GENERAL NOTES
N.T.S.

ROADSIDE ASSEMBLY (RURAL DISTRICT)

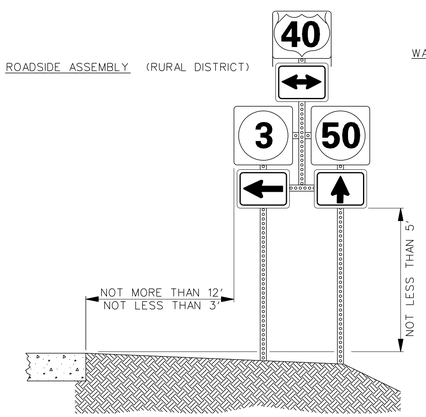

WARNING SIGN (ON ISLAND IN THE LINE OF TRAFFIC)

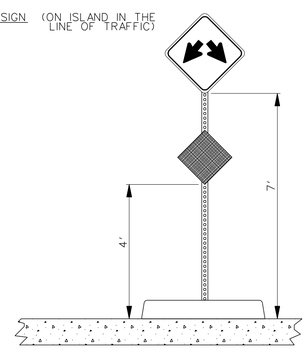

ROADSIDE SIGN PLACEMENT
N.T.S.

ROADSIDE SIGN (BUSINESS OR RESIDENTIAL DISTRICT)

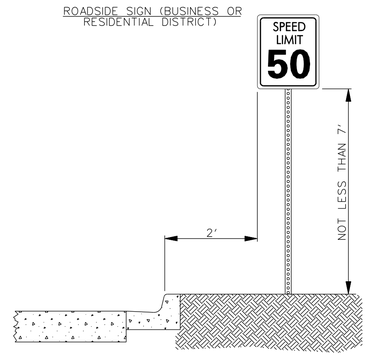

WARNING SIGN WITH SPEED ADVISORY PLATE (RURAL DISTRICT)

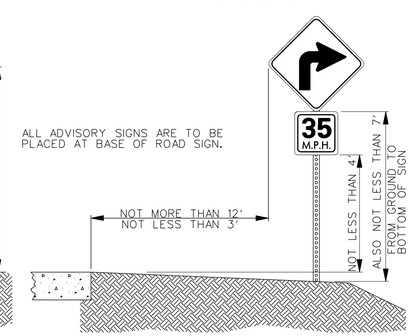

ROADSIDE SIGN PLACEMENT
N.T.S.

11/25/2014
G:\PROJECTS\035I7.00 (DELDOT AGMT 1223 DOTS Open End\035I7.16 SR1 LITTLE HEAVEN FINAL DESIGN\DGN Files\Details01h.dgn
3:54:42 PM

DELAWARE DEPARTMENT OF TRANSPORTATION	ADDENDUMS / REVISIONS	SR1, LITTLE HEAVEN GRADE SEPARATED INTERSECTION	CONTRACT T200412202	BRIDGE NO. -	CONSTRUCTION DETAILS	SHEET NO. 229
			COUNTY KENT	DESIGNED BY: SFP		TOTAL SHTS. 641
				CHECKED BY: WFC		

POST MOUNTED DELINEATORS

* STEEL POST ARE TO BE USED.
* STEEL POSTS ARE GALVANIZED OR GRAY IN COLOR.
* REFLECTORIZATION IS HIGH INTENSITY WHITE OR YELLOW REFLECTIVE SHEETING APPLIED TO CENTER-MOUNT DELINEATORS FOR THE STEEL POST.
* CENTER-MOUNT DELINEATORS ARE ROUND HAVING A 3¼" DIAMETER AND ARE PLACED SINGLY AND DOUBLY (VERTICALLY).
* STEEL POST ARE DRIVEN INTO THE GROUND.
* REFER TO THE SPECIFICATIONS FOR INFORMATION ON MATERIALS THAT ARE ACCEPTABLE.
* REFER TO OTHER DETAILS REGARDING LOCATION AND INSTALLATION OF POST MOUNTED DELINEATORS.

NOTE: SKETCHES ARE DESCRIPTIVE ONLY,NOT TO SCALE. INDICATED HEIGHTS ARE GENERAL. SEE DETAIL 1.2 FOR SPECIFIC HEIGHT INFORMATION.

STEEL POST

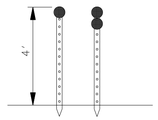

- A-36 STEEL
- 1.12#/FT
- GALVANIZED ASTM A123
- 3/8" HOLES - 4" C-C

NOTE: DELINEATOR COLOR IS TO BE THE SAME AS THE ADJACENT EDGE LINE.

DETAIL 1.1

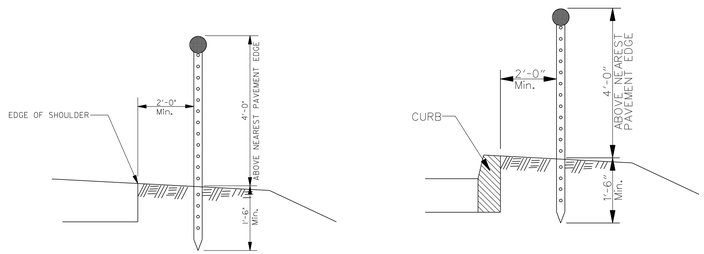

OPEN SECTION **CURBED SECTION**

PLACEMENT OF POST MOUNTED DELINEATOR

DETAIL 1.2

NOTE:
THE CONTRACTOR SHALL PLACE DELINEATORS AT THE SR1 CROSSOVERS AND ADJACENT TO THE PAVEMENT TAPERS AS SHOWN ON THE PLANS OR AS DIRECTED BY THE ENGINEER IN THE FIELD.

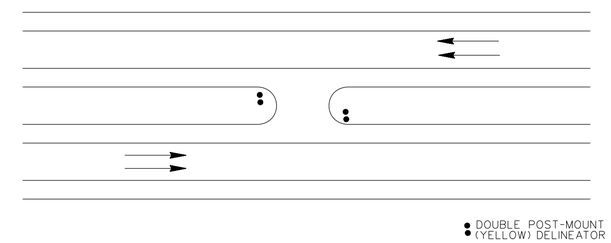

TYPICAL FOR DELINEATOR PLACEMENT AT EMERGENCY CROSSOVER

REFER TO SECTION 3F.03 OF THE DEMUTCD

DETAIL 1.3

MEDIAN BARRIER AND PARAPET DETAIL

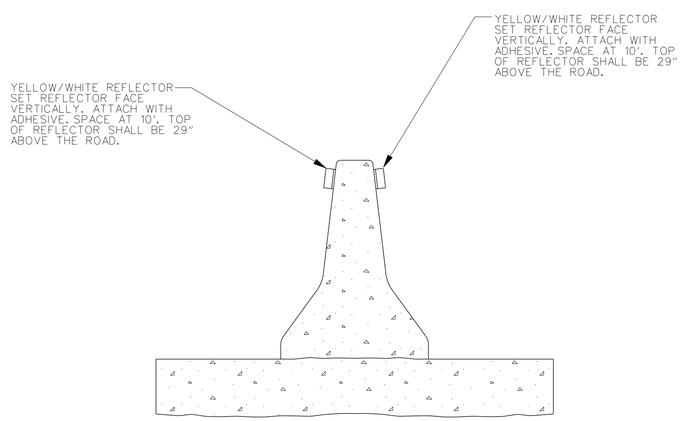

NOTE:
THE BACKS OF THE REFLECTORS SHALL HAVE A RED REFLECTOR. COST TO BE INCLUDED IN THE UNIT PRICE BID FOR ITEMS 720544 AND 720545.

DETAIL 1.4

ACCEL/DECEL LANE DELINEATION

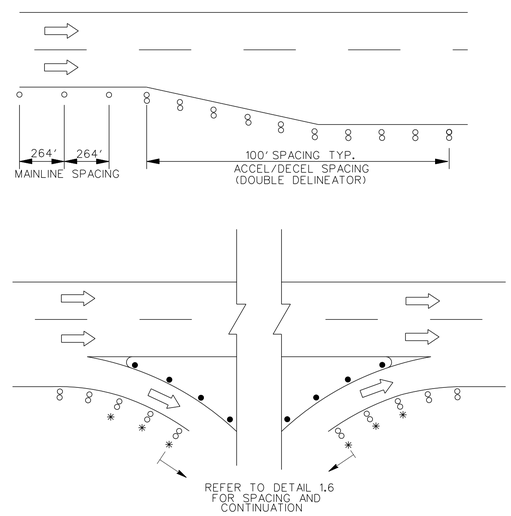

*NOTE: DOUBLE DELINEATORS CONTINUE 3 INSTALLATIONS BEYOND PHYSICAL GORE.

TYPICAL SPACING FOR POST MOUNTED DELINEATORS
MAINLINE - 264'
ACCEL/DECEL AND C/D ROADS - 100' (DOUBLE DELINEATORS)
RAMPS - REFER TO DETAIL 1.6

LEGEND
- ○ SINGLE WHITE
- ⊗ DOUBLE WHITE
- ● SINGLE YELLOW

DETAIL 1.5

RAMP DELINEATION

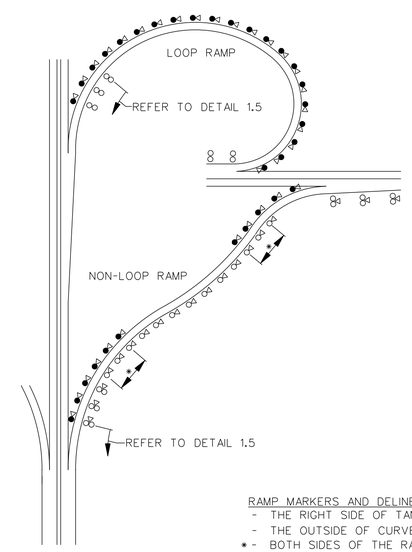

LEGEND
- ○ SINGLE WHITE
- ⊗ DOUBLE WHITE
- ● SINGLE YELLOW
- △ SINGLE RED

RAMP MARKERS AND DELINEATORS SHALL BE PLACED ON:
- THE RIGHT SIDE OF TANGENT SECTIONS
- THE OUTSIDE OF CURVED SECTIONS
- * - BOTH SIDES OF THE RAMP (3 INSTALLATIONS) WHERE THE CURVE ENTERS A TANGENT SECTION OR REVERSES.

RAMP DELINEATOR SPACING
- SPACING SHOULD BE AS SPECIFIED IN THE DEMUTCD TABLE 3F-1

DETAIL 1.6

DELAWARE DEPARTMENT OF TRANSPORTATION	ADDENDUMS / REVISIONS	SR1, LITTLE HEAVEN GRADE SEPARATED INTERSECTION	CONTRACT T200412202	BRIDGE NO. -	CONSTRUCTION DETAILS	SHEET NO. 230
			COUNTY KENT	DESIGNED BY: SFP		TOTAL SHTS. 641
				CHECKED BY: WFC		

11/25/2014
G:\PROJECTS\035T.00 (DELDOT AGMT 1223 DOTS Open End)\035T.16 SR1, LITTLE HEAVEN FINAL DESIGN\DGN Files\Details01lk.dgn
3:54:58 PM

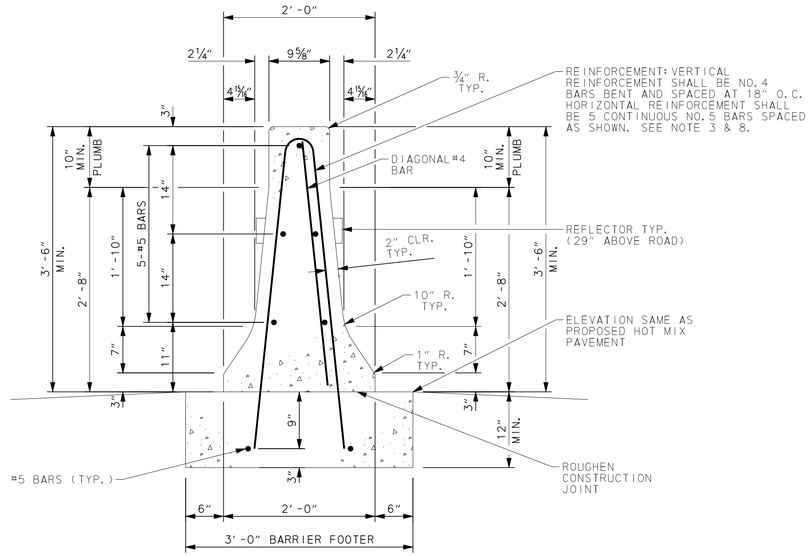

TYPICAL SECTION P.C.C. MEDIAN BARRIER PERMANENT, DOUBLE FACE, MODIFIED ADJACENT TO HOTMIX PAVEMENT SECTION

SCALE: 1" = 1'-0"

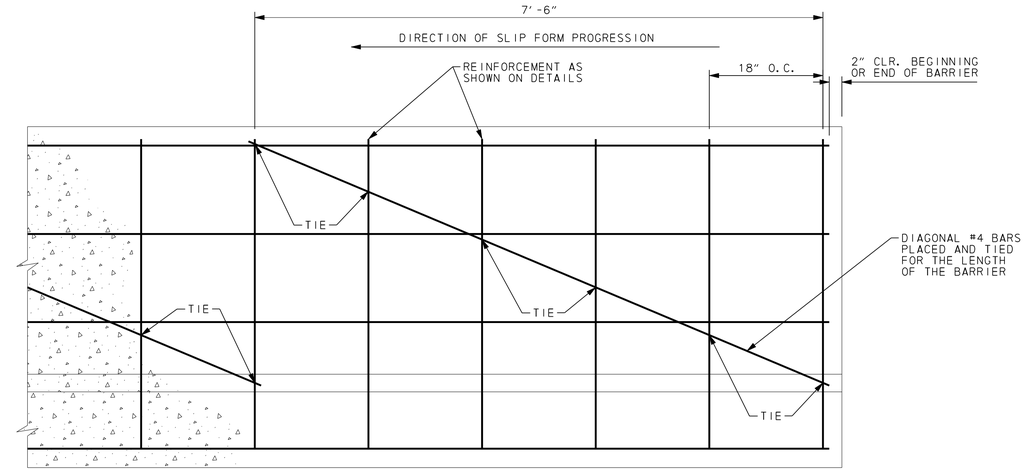

ELEVATION

SCALE: 1" = 1'-0"

DIAGONAL BAR NOTES:

1. APPLICABLE TO SLIP FORM CONSTRUCTION METHOD ONLY.
2. REFER TO DETAILS FOR SPACING OF VERTICAL AND HORIZONTAL REINFORCEMENT.
3. DIAGONAL #4 BARS SHALL BE ASTM A 615, GRADE 60.
4. ALL REINFORCEMENT BARS, INCLUDING ENDS AND TIES, SHALL BE EPOXY COATED.
5. DIAGONAL #4 BARS SHALL BE USED ON ALL BARRIERS, INCLUDING BIFURCATED BARRIERS.

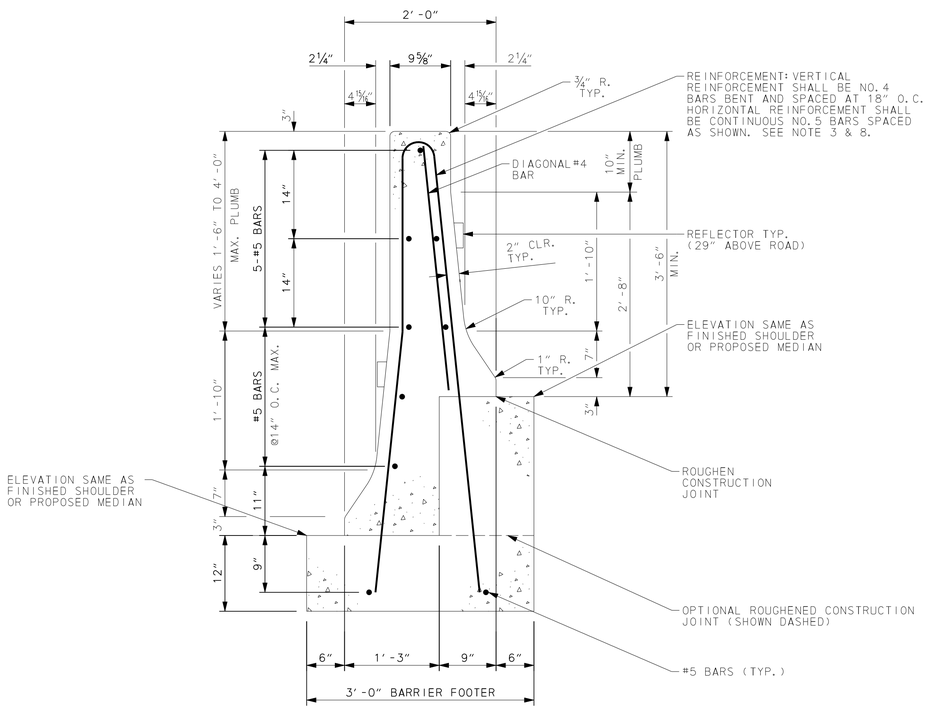

TYPICAL SECTION P.C.C. MEDIAN BARRIER PERMANENT, DOUBLE FACE, BIFURCATED

SCALE: 1" = 1'-0"

STA. 609+72 TO STA. 612+50
STA. 605+25 TO STA. 609+25 (OPPOSITE)

NOTES:

1. THE BARRIER AND FOOTER MAY BE CAST-IN-PLACE OR SLIP FORMED USING 4500 P.S.I. CONCRETE.
2. THE CONTRACTOR HAS THE OPTION TO CONSTRUCT THE BARRIER FOOTER AND BARRIER AFTER CONSTRUCTION OF THE PAVEMENT. THE FOOTER FORMS, IF REQUIRED, SHALL BE REMOVED BEFORE PLACING PAVEMENT.
3. ALL REINFORCEMENT BARS, INCLUDING TIES AND ENDS, SHALL BE EPOXY COATED. ALL BARS SHALL CONFORM TO AASHTO M31 GRADE 60 AND SHALL BE CUT AND BENT BEFORE APPLYING EPOXY COATING. ALL BAR LAPS TO BE 30 BAR DIAMETERS. TIE BARS TOGETHER. ALL COSTS INCLUDED IN ITEM 720587.
4. SPACING OF CONTRACTION JOINTS SHALL BE 20 FEET, REGARDLESS OF THE CONSTRUCTION METHOD. JOINTS ARE TO BE SAWCUT A MINIMUM OF ¼" WIDE AND 1" DEEP AROUND THE ENTIRE BARRIER ABOVE THE FOOTING. COST TO BE INCLUDED IN ITEM 720587.
5. COST OF THE CONCRETE FOOTER, ALL REINFORCEMENT AND EXCAVATION SHALL BE INCLUDED TO THE CONTRACT UNIT PRICE PER LINEAR FOOT IN ITEM 720587.
6. TOLERANCES IN DIMENSIONS SHOWN SHALL BE WITHIN ¼".
7. EXPANSION JOINTS SHALL BE PLACED AT THE END OF EACH DAYS CONCRETE PLACEMENT REGARDLESS OF LENGTH. COST TO BE INCLUDED IN ITEM 720587. EXPANSION JOINTS SHALL COINCIDE BETWEEN BARRIER AND FOOTING. MAXIMUM SPACING FOR EXPANSION JOINTS SHALL BE 200 FEET.
8. HORIZONTAL REINFORCING SHALL NOT PASS THROUGH EXPANSION JOINTS.
9. JOINT MATERIAL FOR EXPANSION JOINTS SHALL BE HELD IN PLACE BY NAILS, WATERPROOF ADHESIVE OR OTHER MEANS APPROVED BY THE ENGINEER.
10. SET REFLECTORS FACE VERTICALLY. ATTACH WITH ADHESIVE. BACKS OF THE REFLECTORS SHALL HAVE A RED REFLECTOR. SPACING OF THE REFLECTORS SHALL BE 100 FEET. COST TO BE INCLUDED IN THE UNIT PRICE FOR ITEM 720544 AND 720545.
11. PORTLAND CEMENT CONCRETE SHALL BE 4500 PSI MINIMUM AND SHALL CONFORM TO THE REQUIREMENTS OF SECTION 812, PORTLAND CEMENT CONCRETE OF THE STANDARD SPECIFICATIONS WITH THE FOLLOWING MODIFICATIONS:
    - *PORTLAND CEMENT SHALL BE WHITE CEMENT.
    - *FINE AGGREGATE SHALL BE WHITE SAND FROM A SOURCE APPROVED BY THE DEPARTMENT.
    - *BAR REINFORCEMENT SHALL BE EPOXY COATED MEETING THE REQUIREMENTS OF SECTION 604 GRADE 60.

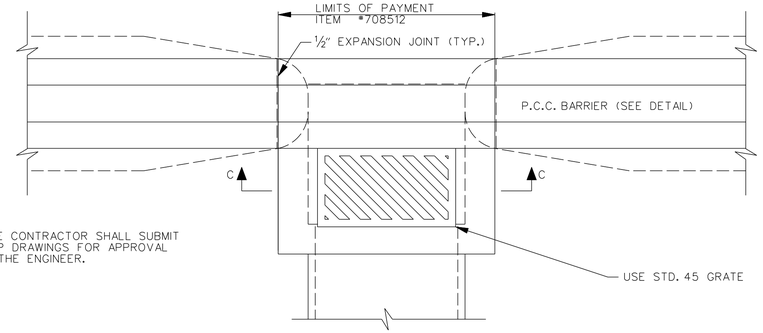

*THE CONTRACTOR SHALL SUBMIT SHOP DRAWINGS FOR APPROVAL BY THE ENGINEER.

GRATE IS TO BE INSTALLED SO SLOTS WILL DIRECT WATER TOWARD THE INLET THROAT. (TYPE 1 GRATE SHOWN)

PROPOSED INLET DETAIL PLAN*

N.T.S.

PAID FOR UNDER ITEM #708512- DRAINAGE INLET, SPECIAL I

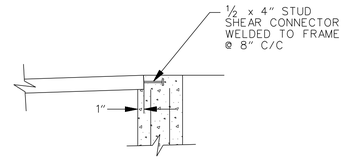

DETAIL A

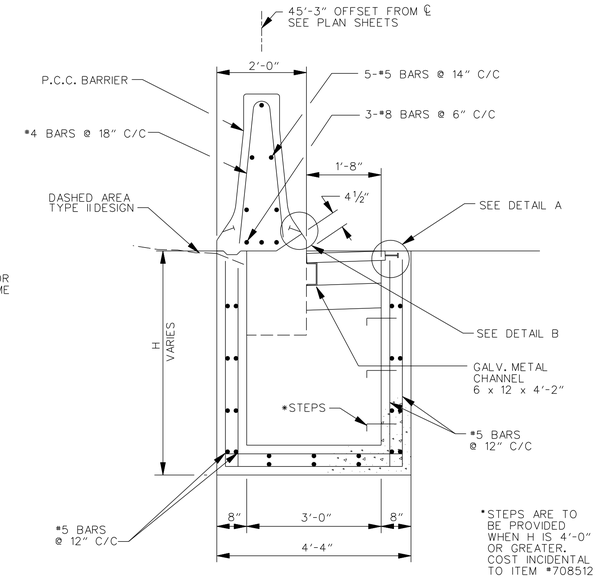

*STEPS ARE TO BE PROVIDED WHEN H IS 4'-0" OR GREATER. COST INCIDENTAL TO ITEM #708512

SECTION A–A

N.T.S.

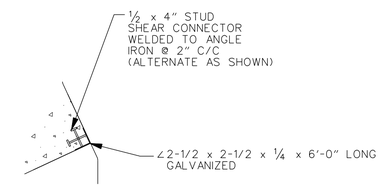

DETAIL B

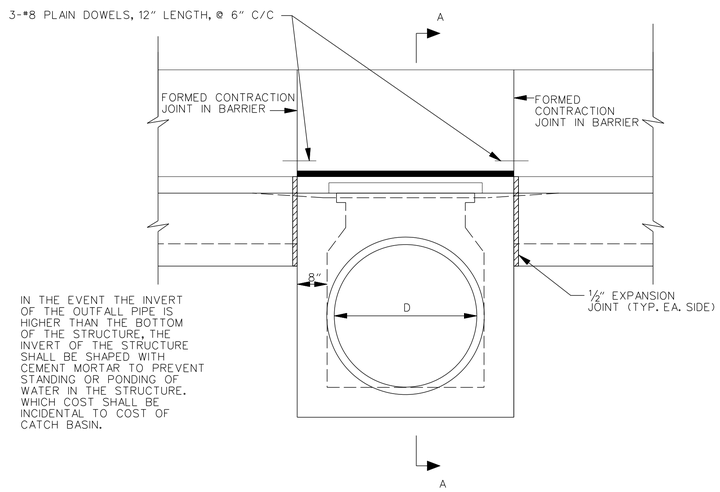

IN THE EVENT THE INVERT OF THE OUTFALL PIPE IS HIGHER THAN THE BOTTOM OF THE STRUCTURE, THE INVERT OF THE STRUCTURE SHALL BE SHAPED WITH CEMENT MORTAR TO PREVENT STANDING OR PONDING OF WATER IN THE STRUCTURE. WHICH COST SHALL BE INCIDENTAL TO COST OF CATCH BASIN.

FRONT ELEVATION

(PAVEMENT REMOVED)

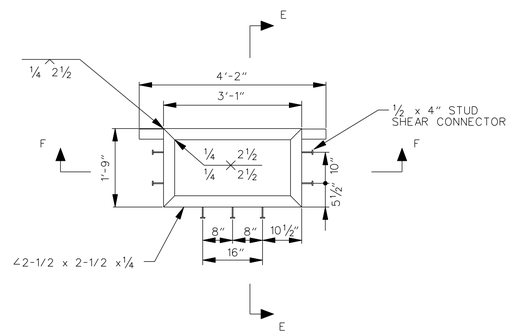

FRAME

GALV. STEEL

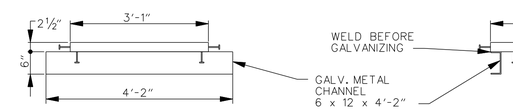

SECTION F–F

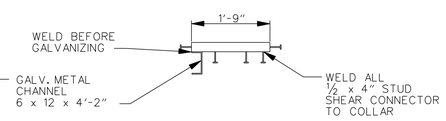

SECTION E–E

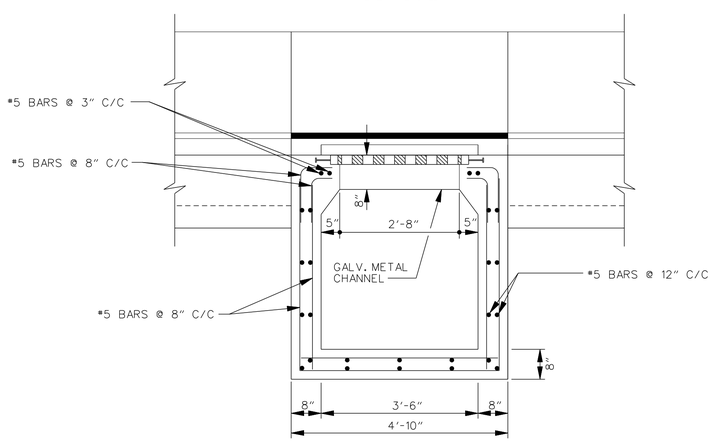

SECTION C–C

NOTES:

1. BARRIER AND DRAINAGE INLET SHALL BE CONSTRUCTED USING 4500 P.S.I. CONCRETE.
2. ALL REINFORCING STEEL SHALL HAVE A MIN. COVER OF 2" AND SHALL BE CUT CLEAR OF ALL OPENINGS BY 2".
3. ALL REINFORCEMENT BARS, INCLUDING TIES AND ENDS, SHALL BE EPOXY COATED. ALL BARS SHALL BE BENT BEFORE APPLYING EPOXY COATING. ALL BAR LAPS TO BE 30 BAR DIAMETERS. TIE BARS TOGETHER. ALL COSTS TO BE INCIDENTAL TO ITEM 708512.
4. CATCH BASIN FRAME AND GRATE, REINFORCING STEEL, STEEL, P.C.C. BARRIER, AND EPOXY COATING OF BARRIER SHALL BE INCLUDED IN THE UNIT BID PRICE PER EACH FOR:
   ITEM #708512 - DRAINAGE INLET SPECIAL I
5. ALL MATERIALS AND WORK WITHIN THE DEFINED LIMITS OF PAVEMENT SHALL BE INCIDENTAL TO ITEM # 708512 UNLESS OTHERWISE DIRECTED BY THE ENGINEER.
6. PORTLAND CEMENT CONCRETE SHALL BE 4500 PSI MINIMUM AND SHALL CONFORM TO THE REQUIREMENTS OF SECTION 812, PORTLAND CEMENT CONCRETE OF THE STANDARD SPECIFICATIONS WITH THE FOLLOWING MODIFICATIONS:
   - *PORTLAND CEMENT SHALL BE WHITE CEMENT.
   - *FINE AGGREGATE SHALL BE WHITE SAND FROM A SOURCE APPROVED BY THE DEPARTMENT.
   - *BAR REINFORCEMENT SHALL BE EPOXY COATED MEETING THE REQUIREMENTS OF SECTION 604 GRADE 60.
7. CONTRACTOR SHALL SUBMIT BARRIER DRAINAGE INLET SHOP DRAWINGS FOR APPROVAL BY THE ENGINEER.

DELAWARE DEPARTMENT OF TRANSPORTATION	ADDENDUMS / REVISIONS	**SR1, LITTLE HEAVEN GRADE SEPARATED INTERSECTION**	CONTRACT T200412202	BRIDGE NO. –	**CONSTRUCTION DETAILS**	SHEET NO. 232
			COUNTY KENT	DESIGNED BY: SFP		TOTAL SHTS. 641
				CHECKED BY: WFC		

1/5/2015 G:\PROJECTS\035T.00 DELDOT AGMT 1223 DOTS Open End\035T.16 SR1 LITTLE HEAVEN FINAL DESIGN\DGN Files\Details01h.dgn 10:50:03 PM

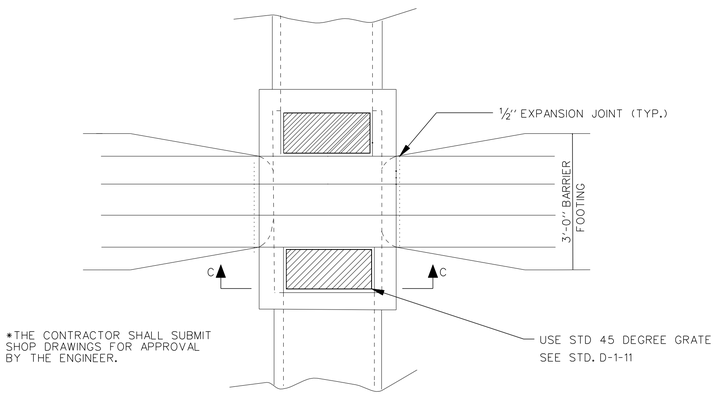

*THE CONTRACTOR SHALL SUBMIT SHOP DRAWINGS FOR APPROVAL BY THE ENGINEER.

GRATE IS TO BE INSTALLED SO SLOTS WILL DIRECT WATER TOWARD THE INLET THROAT. (TYPE 1 GRATE SHOWN)

PROPOSED BARRIER DOUBLE INLET DETAIL PLAN*

N.T.S.

PAID FOR UNDER ITEM *708513- DRAINAGE INLET, SPECIAL II

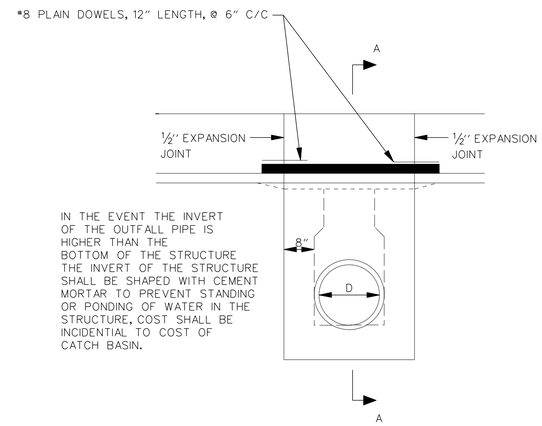

IN THE EVENT THE INVERT OF THE OUTFALL PIPE IS HIGHER THAN THE BOTTOM OF THE STRUCTURE THE INVERT OF THE STRUCTURE SHALL BE SHAPED WITH CEMENT MORTAR TO PREVENT STANDING OR PONDING OF WATER IN THE STRUCTURE. COST SHALL BE INCIDENTIAL TO COST OF CATCH BASIN.

FRONT ELEVATION

(PAVEMENT REMOVED)

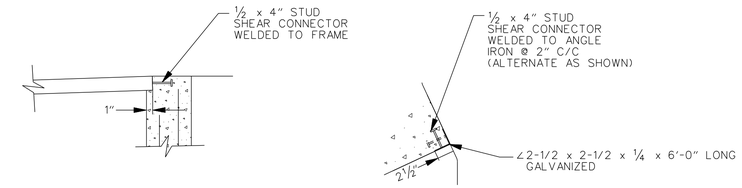

DETAIL A **DETAIL B**

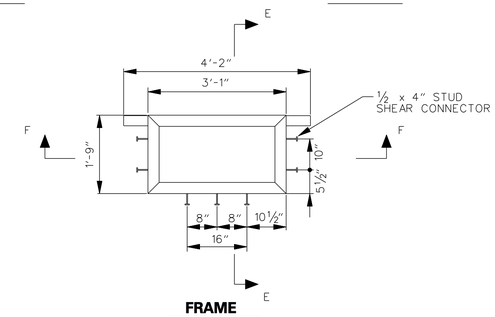

FRAME

GALV. STEEL

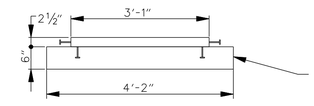

SECTION F–F

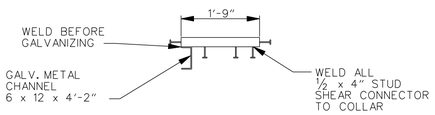

SECTION E–E

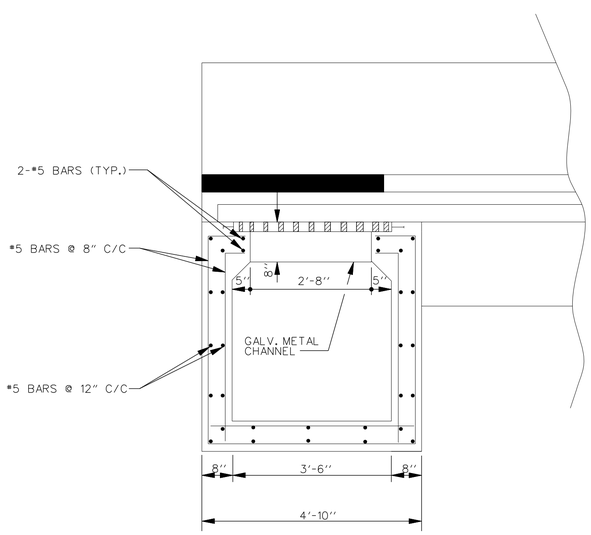

SECTION C–C

N.T.S.

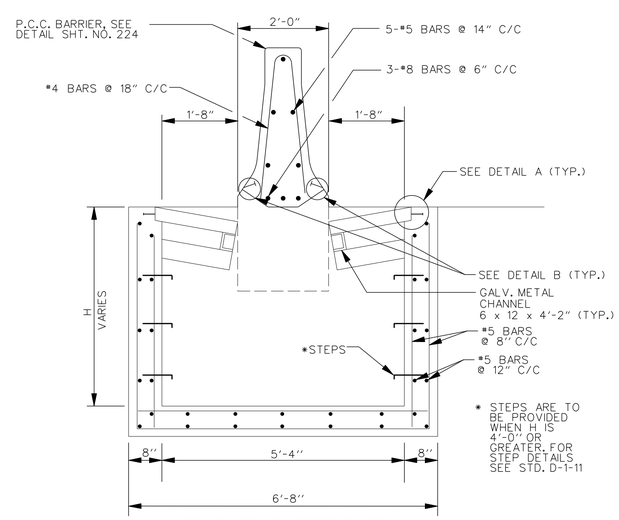

* STEPS ARE TO BE PROVIDED WHEN H IS 4'-0" OR GREATER. FOR STEP DETAILS SEE STD. D-1-11

STANDARD BARRIER INLET

SECTION A–A

N.T.S.

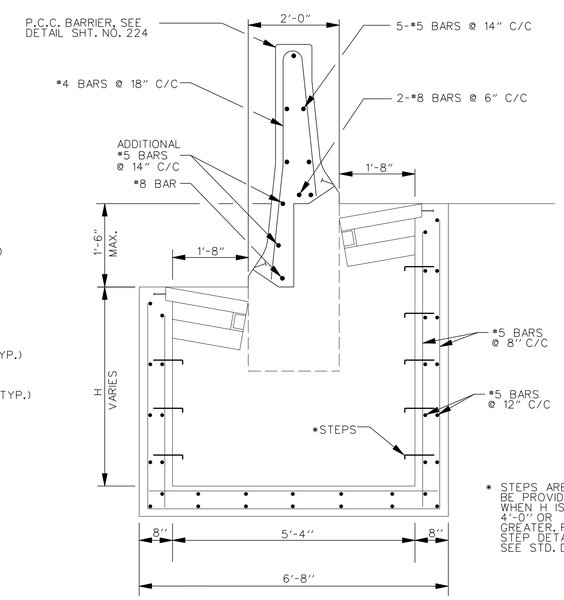

* STEPS ARE TO BE PROVIDED WHEN H IS 4'-0" OR GREATER. FOR STEP DETAILS SEE STD. D-1-11

BIFURCATED BARRIER INLET

SECTION A–A

N.T.S.

NOTES:

1. BARRIER AND DRAINAGE INLET SHALL BE CONSTRUCTED USING 4500 P.S.I. CONCRETE.
2. ALL REINFORCING STEEL SHALL HAVE A MIN. COVER OF 2" AND SHALL BE CLEAR OF ALL OPENINGS BY 2".
3. ALL REINFORCEMENT BARS, INCLUDING TIES AND ENDS, SHALL BE EPOXY COATED. ALL BARS SHALL BE BENT BEFORE APPLYING EPOXY COATING. ALL BAR LAPS TO BE 30 BAR DIAMETERS. TIE BARS TOGETHER. ALL COSTS TO BE INCIDENTAL TO ITEM 708513.
4. CATCH BASIN FRAME AND GRATE, REINFORCING STEEL, STEEL, P.C.C. BARRIER, AND EPOXY COATING OF BARRIER SHALL BE INCLUDED IN THE UNIT BID PRICE PER EACH FOR ITEM *708513 - DRAINAGE INLET SPECIAL II
5. ALL MATERIALS AND WORK WITHIN THE DEFINED LIMITS OF PAVEMENT SHALL BE INCIDENTAL TO ITEM * 708513 UNLESS OTHERWISE DIRECTED BY THE ENGINEER.
6. PORTLAND CEMENT CONCRETE SHALL BE 4500 PSI MINIMUM AND SHALL CONFORM TO THE REQUIREMENTS OF SECTION 812, PORTLAND CEMENT CONCRETE OF THE STANDARD SPECIFICATIONS WITH THE FOLLOWING MODIFICATIONS:
   - *PORTLAND CEMENT SHALL BE WHITE CEMENT.
   - *FINE AGGREGATE SHALL BE WHITE SAND FROM A SOURCE APPROVED BY THE DEPARTMENT.
   - *BAR REINFORCEMENT SHALL BE EPOXY COATED MEETING THE REQUIREMENTS OF SECTION 604 GRADE 60.
7. CONTRACTOR SHALL SUBMIT BARRIER DRAINAGE INLET SHOP DRAWINGS FOR APPROVAL BY THE ENGINEER.

DELAWARE DEPARTMENT OF TRANSPORTATION	ADDENDUMS / REVISIONS	**SR1, LITTLE HEAVEN GRADE SEPARATED INTERSECTION**	CONTRACT T200412202	BRIDGE NO. –	**CONSTRUCTION DETAILS**
			COUNTY KENT	DESIGNED BY: SFP	SHEET NO. 233
				CHECKED BY: WFC	TOTAL SHTS. 641

11/25/2014
G:\PROJECTS\035I.00 (DELDOT AGMT 1223 DOTS Open End)\035I.16 SR1, LITTLE HEAVEN FINAL DESIGN\DGN Files\Details01m.dgn
3:31:50 PM

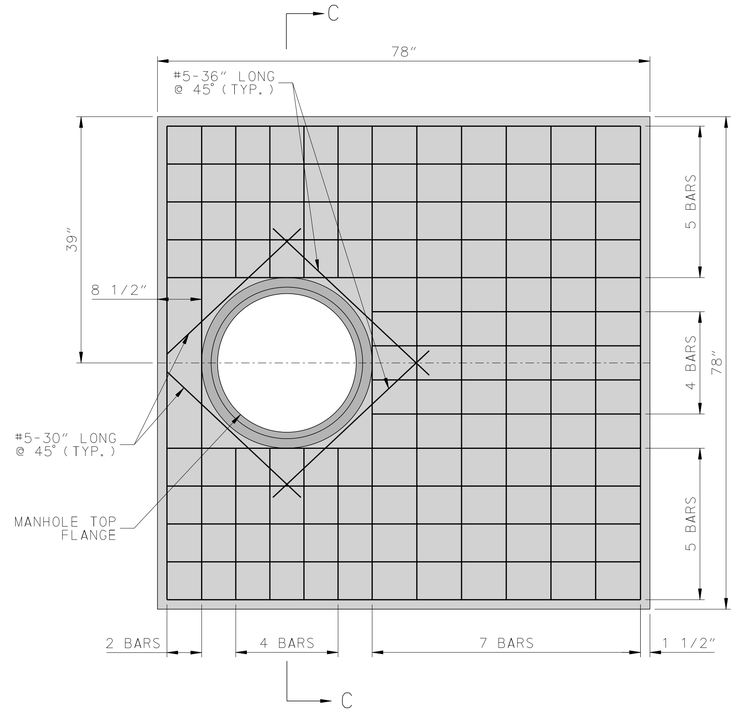

66" x 66" MANHOLE SPECIAL I

ITEM 708582

DRAINAGE INLET, SPECIAL III AND IV, SPECIFICATIONS			
BASIN NO.	SIZE (LxW) (INSIDE DIMENSIONS)	STATION	CROSS SLOPE(S)
DI-9	48"X30"	543+52.96, 39.89' L	0.0%
DI-10	48"X30"	543+10.00, 32.00' R	0.0%
DI-181	48"X48"	1000+87.09, 26.81' R	0.0%
DI-184	48"X30"	216+95.10, 55.02' R	0.0%

MANHOLE, SPECIAL I, SPECIFICATIONS			
BASIN NO.	SIZE (LxW) (INSIDE DIMENSIONS)	STATION	CROSS SLOPE(S)
MH-7	66"x66"	452+93.00, 34.00' R	0.0%

NOTES:
1. INLET AND MANHOLE COVERS SHALL BE PRE-CAST AND MUST BE SIZED TO FIT BOX DIMENSIONS.
2. ALL BARS ARE TO BE #5 SPACED EVENLY @ 6"+/- UNLESS NOTED OTHERWISE.
3. MINIMUM BAR COVER = 1 1/2".

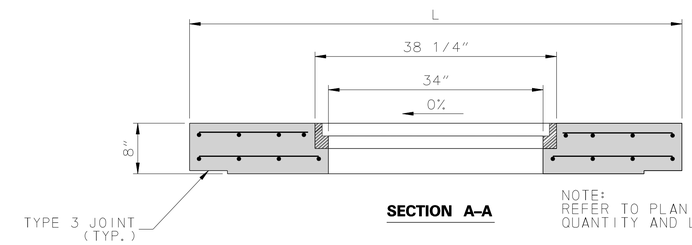

SECTION A–A

NOTE:
REFER TO PLAN FOR REBAR QUANTITY AND LAYOUT

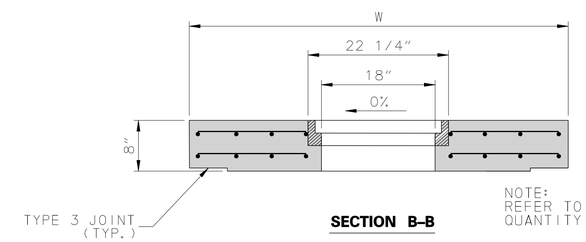

SECTION B–B

NOTE:
REFER TO PLAN FOR REBAR QUANTITY AND LAYOUT

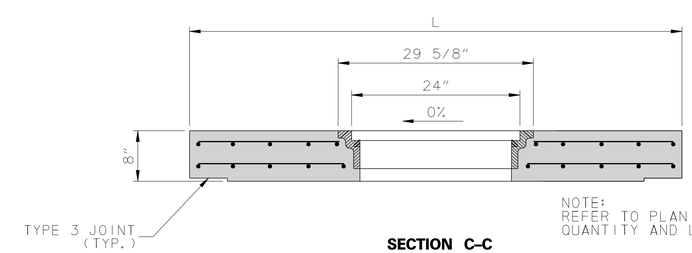

SECTION C–C

NOTE:
REFER TO PLAN FOR REBAR QUANTITY AND LAYOUT

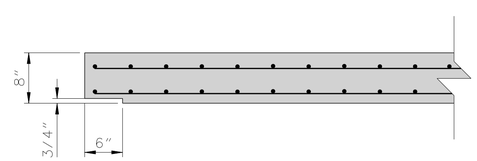

TYPE 3 JOINT DETAIL

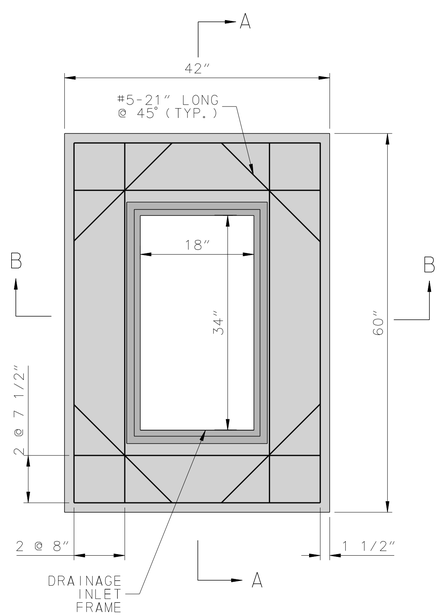

48" x 30" LAWN BASIN

ITEM 708514 - INLET, SPECIAL III

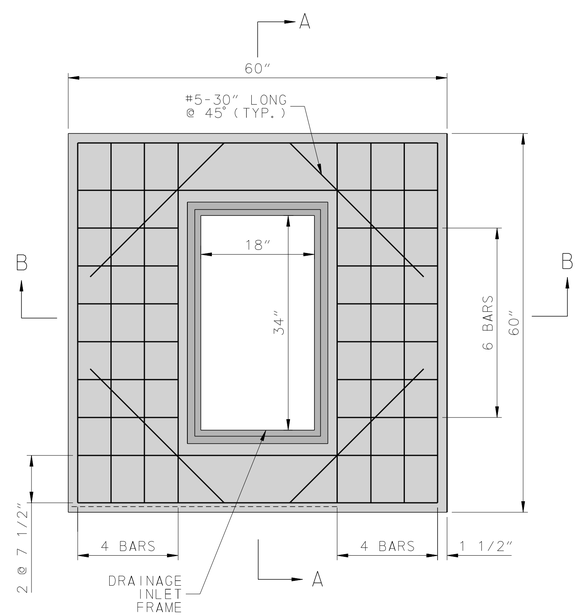

48" x 48" LAWN BASIN

ITEM 708515 - INLET, SPECIAL IV

DELAWARE DEPARTMENT OF TRANSPORTATION

ADDENDUMS / REVISIONS

SR1, LITTLE HEAVEN GRADE SEPARATED INTERSECTION

CONTRACT	BRIDGE NO.	-
T200412202	DESIGNED BY:	SFP
COUNTY		
KENT	CHECKED BY:	WFC

CONSTRUCTION DETAILS

SHEET NO.
234
TOTAL SHTS.
641

11/25/2014
G:\PROJECTS\035T.00 (DELDOT AGMT 1223 DOTS Open End)\035T.16 SR1,LITTLE HEAVEN FINAL DESIGN\DGN Files\Details01n.dgn
3:37:54 PM

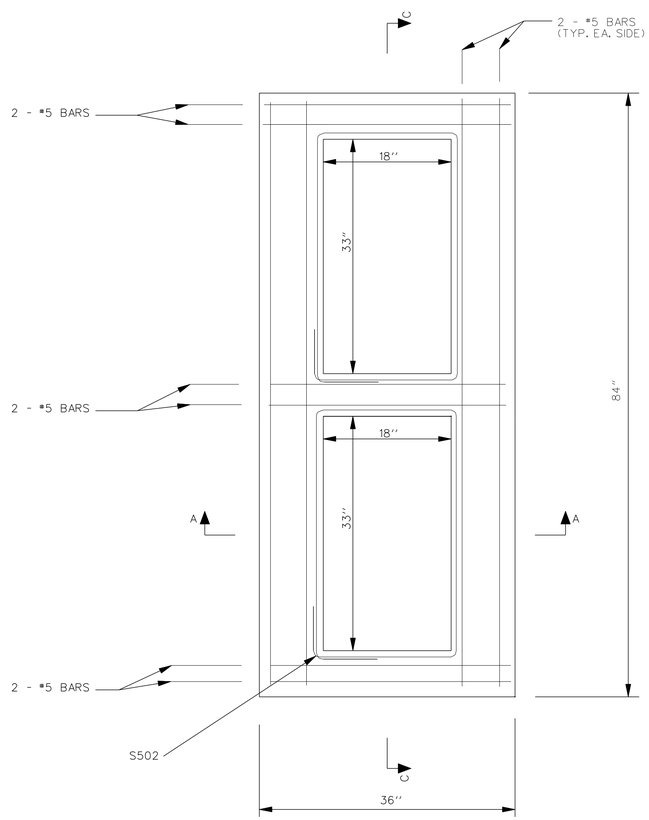

72" x 24" DOUBLE INLET PLAN
N.T.S.

ITEM# 708516 - INLET, SPECIAL V

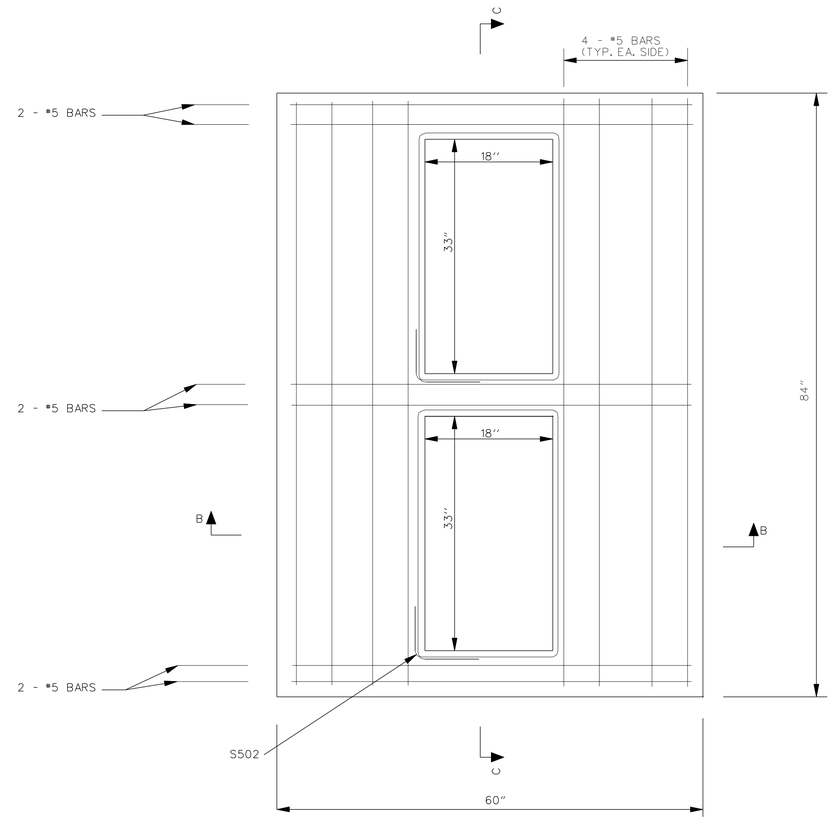

72" x 48" DOUBLE INLET PLAN
N.T.S.

ITEM# 708517 - INLET, SPECIAL VI

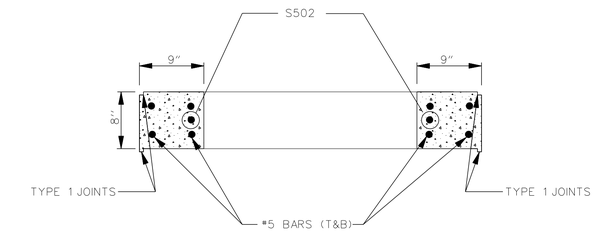

SECTION A–A

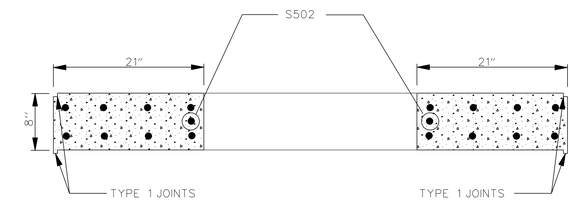

SECTION B–B

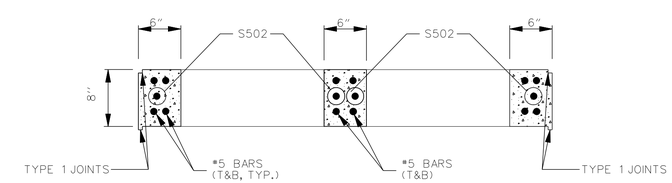

SECTION C–C

11/25/2014
G:\PROJECTS\035I7.00 (DELDOT AGMT 1223 DOTS Open End)\035I7.16 SR1 LITTLE HEAVEN FINAL DESIGN\DGN Files\Details01in.dgn
3:39:19 PM

DELAWARE DEPARTMENT OF TRANSPORTATION	ADDENDUMS / REVISIONS		**SR1, LITTLE HEAVEN GRADE SEPARATED INTERSECTION**	CONTRACT T200412202	BRIDGE NO. –	**CONSTRUCTION DETAILS**	SHEET NO. 235
				COUNTY KENT	DESIGNED BY: SFP		TOTAL SHTS. 641
					CHECKED BY: WFC		

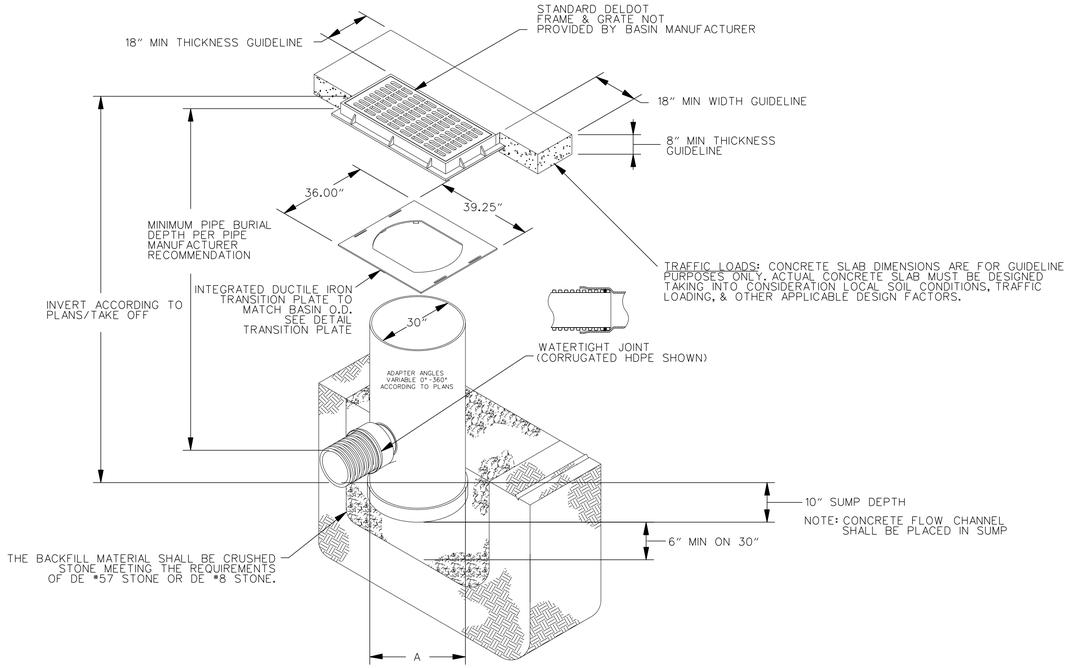

30" DIAMETER PLASTIC DRAINAGE INLET WITH DUCTILE IRON TRANSITION PLATE
ITEM# 708518 – INLET, SPECIAL VII

INSTALLATION VIEW

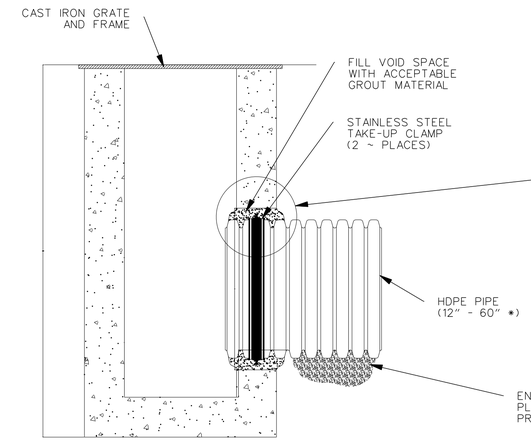

DETAILED CONNECTION VIEW

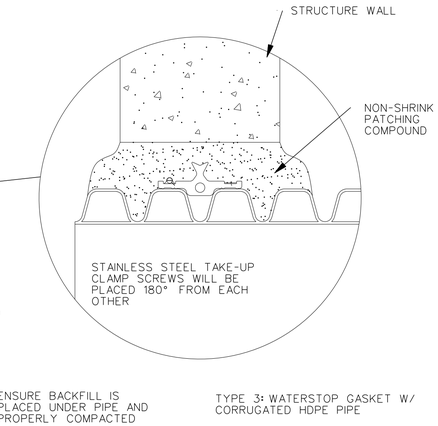

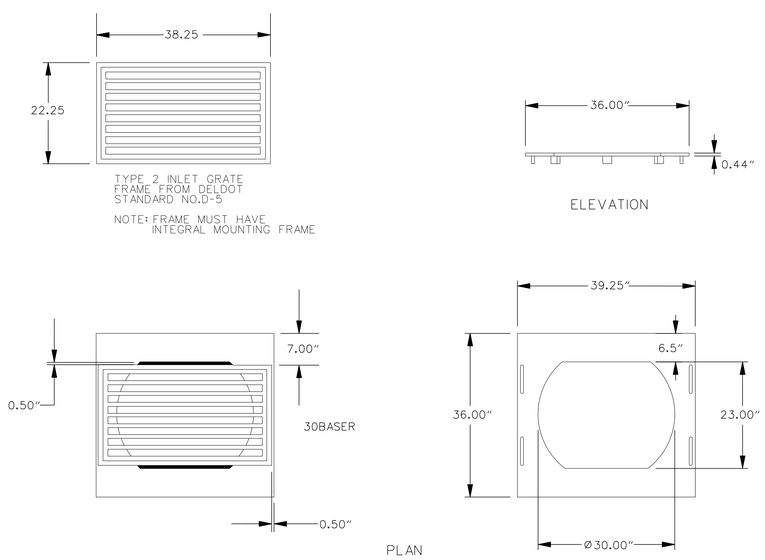

TRANSITION PLATE DETAIL

NOTES:

1. ALL ITEMS SHOWN ON THIS DETAIL SHEET SHALL BE INCIDENTAL TO ITEM NO. 708518.
2. BASE PLATES SHALL BE DUCTILE IRON PER ASTM A526 GRADE 70-50-05.
3. DRAIN BASIN TO BE CUSTOM MANUFACTURED ACCORDING TO PLAN DETAILS.
4. DRAINAGE CONNECTION STUB JOINT TIGHTNESS SHALL CONFORM TO ASTM D3212 FOR CORRUGATED HDPE & SDR 35 PVC.
5. ALL BASINS 4' AND GREATER IN DEPTH SHALL INCLUDE STEPS. ALL COSTS ARE INCIDENTAL TO THE ITEM BEING INSTALLED.
6. CONTRACTOR SHALL SUBMIT SHOP DRAWINGS FOR REVIEW AND APPROVAL BY THE ENGINEER.
7. ALL PLASTIC BASINS, WATERSTOP GASKETS, AND TRANSITION PLATES SHALL BE MANUFACTURED BY ADVANCED DRAINAGE SYSTEMS, INC. OR APPROVED EQUAL.

11/25/2014
G:\PROJECTS\035I.00 (DELDOT AGMT 1223 DOTS Open End)\035I.16 SR1, LITTLE HEAVEN FINAL DESIGN\DGN Files\Details01m.dgn
5:41:28 PM

DELAWARE DEPARTMENT OF TRANSPORTATION

ADDENDUMS / REVISIONS

SR1, LITTLE HEAVEN GRADE SEPARATED INTERSECTION

CONTRACT	BRIDGE NO.	-	CONSTRUCTION DETAILS	SHEET NO.
T200412202	DESIGNED BY:	SFP		236
COUNTY				TOTAL SHTS.
KENT	CHECKED BY:	WFC		641

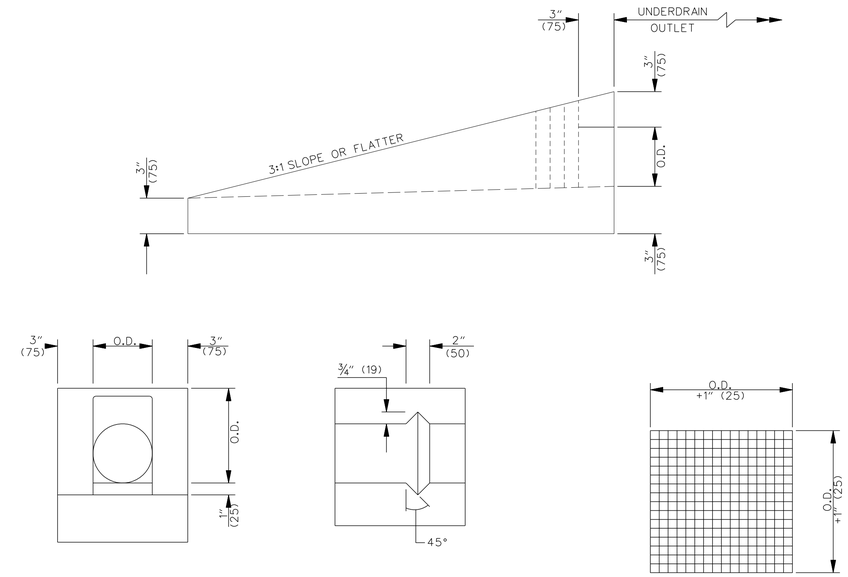

FRONT VIEW **TOP VIEW** **FRONT VIEW**

SLOTTED HEADWALL DETAIL **RODENT SCREEN**

DOWNSPOUT SPLASH APRON FOR UNDERDRAIN OUTLET

N.T.S.

GENERAL NOTES:

1. THE PERFORATED PIPE UNDERDRAIN SHALL BE LOCATED AS SHOWN ON THE TYPICAL SECTIONS OF THE CONSTRUCTION PLANS.
2. GEOTEXTILE FILTER FABRIC SHALL BE PLACED ENTIRELY OVER THE TOP OF UNDERDRAIN TRENCH AND LAPPED AS SHOWN.
3. SLOPE OF UNDERDRAINS SHALL MATCH ROADWAY GRADE, UNLESS OTHERWISE DIRECTED BY THE ENGINEER.
4. OUTLET PIPE CONFIGURATIONS SHALL USE 45 DEGREE ELBOWS OR SHALL USE STRAIGHT PIPE WITH A MINIMUM RADIUS OF 3' (900) TO DIRECT UNDERDRAIN PIPE INTO SIDE OF DRAINAGE INLET OR TO POSITIVE GRADE. PIPE SHALL ALSO BE NON-PERFORATED AND HAVE A SMOOTH INTERIOR. COST TO OUTLET INTO DRAINAGE INLET INCIDENTAL TO THE PIPE OUTLET ITEM.
5. RODENT SCREEN SHALL SNUGLY FIT THE PROVIDED SLOT WITH THE SCREEN LIP FITTING TIGHT TO THE BOTTOM FLOW LINE.
6. A 4' (1200) FLEXIBLE DELINEATOR SHALL BE FURNISHED AND INSTALLED AT THE DIRECTION OF THE ENGINEER TO MARK THE LOCATION OF THE CONCRETE HEADWALL. COST INCIDENTAL TO DOWNSPOUT SPLASH APRONS ITEM.
7. WHEN TWO LINES OF PIPE UNDERDRAIN DRAIN TO A LOW POINT, EACH PIPE MUST HAVE ITS OWN OUTLET.
8. PERFORATED PIPE UNDERDRAIN SHALL NOT BE PLACED UNDER GUARDRAIL IN ORDER TO AVOID PUNCTURING.

*ALL ITEMS INCIDENTAL TO ITEM *715500.

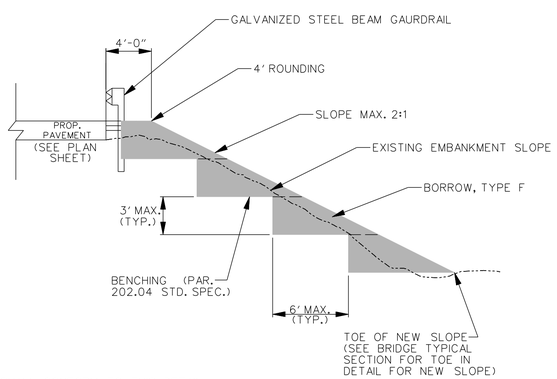

NOTES:
BENCHING SHALL CONFORM TO THIS DETAIL AT ALL LOCATIONS WHERE EXISTING EMBANKMENTS ARE WIDENED. ALL COSTS SHALL BE INCIDENTAL TO THE ITEM BEING PLACED.

BENCHING DETAIL

N.T.S.

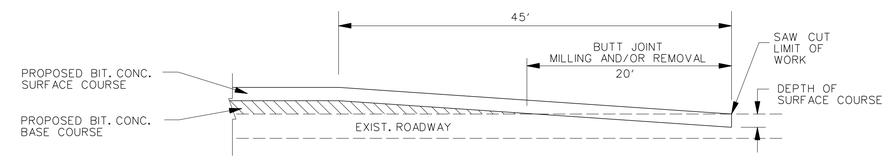

BUTT JOINT DETAIL

N.T.S.

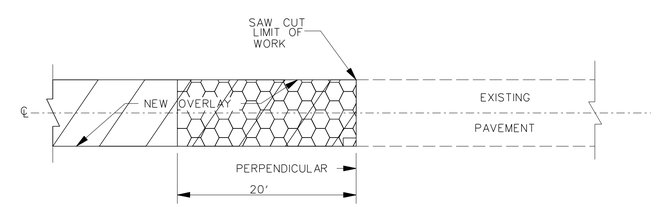

BUTT JOINT PLAN VIEW

N.T.S.

DELAWARE DEPARTMENT OF TRANSPORTATION

ADDENDUMS / REVISIONS

SR1, LITTLE HEAVEN GRADE SEPARATED INTERSECTION

CONTRACT	BRIDGE NO.	-
T200412202	DESIGNED BY:	SFP
COUNTY		
KENT	CHECKED BY:	WFC

CONSTRUCTION DETAILS

SHEET NO.
237
TOTAL SHTS.
641

11/25/2014
G:\PROJECTS\035I7.00 (DELDOT AGMT 1223 DOTS Open End\035I7.16 SR1, LITTLE HEAVEN FINAL DESIGN\DGN Files\Details0lin.dgn
3:48:07 PM

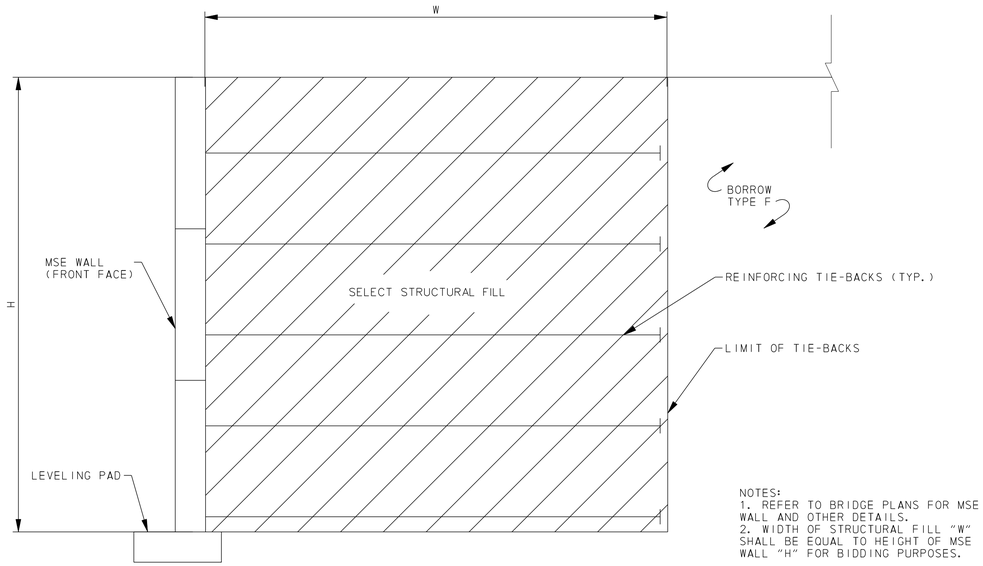

NOTES:
1. REFER TO BRIDGE PLANS FOR MSE WALL AND OTHER DETAILS.
2. WIDTH OF STRUCTURAL FILL "W" SHALL BE EQUAL TO HEIGHT OF MSE WALL "H" FOR BIDDING PURPOSES.

TYPICAL PAYLIMITS DETAIL

N.T.S.

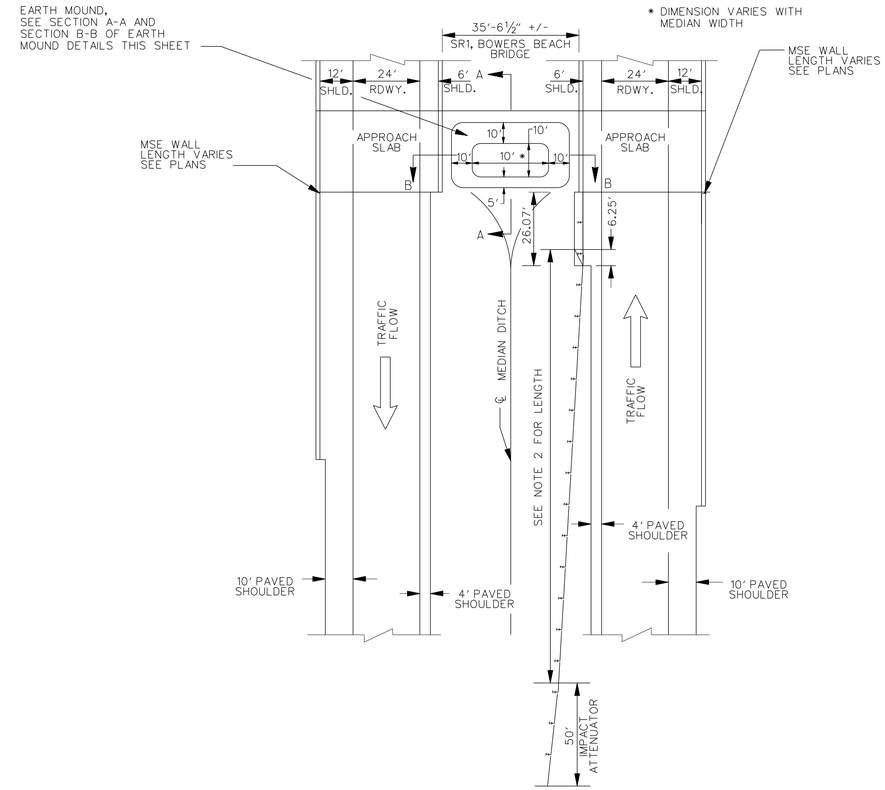

BRIDGE PROTECTION SYSTEM MAINLINE BRIDGE PARAPET AND MEDIAN OPENING PROTECTION PLAN

N.T.S.

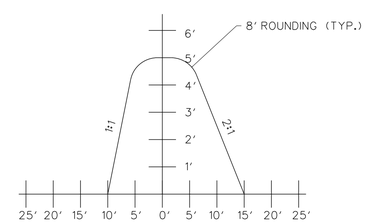

SECTION A–A

N.T.S.

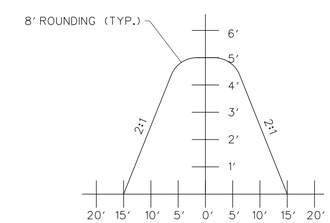

SECTION B–B

N.T.S.

NOTES:

1. LENGTH TO BE BASED ON SLOPE AND/OR OBSTRUCTIONS. SEE PLAN SHEETS FOR LENGTH.

2. LENGTH TO BE BASED ON DISTANCE FROM THE EDGE OF TRAVELLED LANE TO THE CENTER OF THE EARTH MOUND. SEE PLAN SHEETS FOR LENGTH.

3. SEE SUPERELEVATION AND ROADWAY TRANSITION CHARTS FOR PAVEMENT AND CROSS-SLOPE TRANSITIONS.

4. EARTH MOUND SHALL BE CONSTRUCTED WITH BORROW, TYPE F TOPPED WITH 6" TOPSOIL.

11/25/2014
G:\PROJECTS\03517.00 (DELDOT AGMT 1223 DOTS Open End)\03517.16 SR1, LITTLE HEAVEN FINAL DESIGN\DGN Files\DetailsOlth.dgn
3:48:23 PM

DELAWARE DEPARTMENT OF TRANSPORTATION

ADDENDUMS / REVISIONS

SR1, LITTLE HEAVEN GRADE SEPARATED INTERSECTION

CONTRACT	BRIDGE NO.	–	CONSTRUCTION DETAILS	SHEET NO.
T200412202	DESIGNED BY:	SFP		238
COUNTY				TOTAL SHTS.
KENT	CHECKED BY:	WFC		641

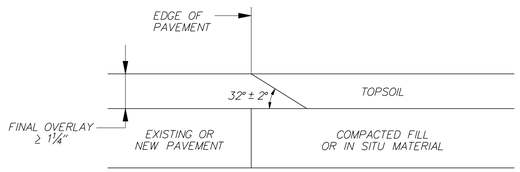

SAFETY EDGE FOR BITUMINOUS CONCRETE PAVEMENTS AND OVERLAYS DETAIL
N.T.S.

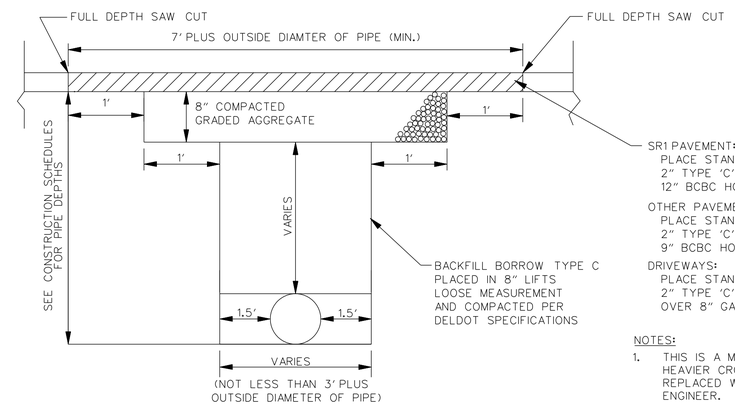

SR1 PAVEMENT:
PLACE STANDARD
2" TYPE 'C' HOT MIX OVER
12" BCBC HOT MIX, PATCHING (IN TWO LIFTS)

OTHER PAVEMENT:
PLACE STANDARD
2" TYPE 'C' HOT MIX OVER
9" BCBC HOT MIX, PATCHING (IN TWO LIFTS)

DRIVEWAYS:
PLACE STANDARD
2" TYPE 'C' HOT MIX
OVER 8" GABC, PATCHING

NOTES:

1. THIS IS A MINIMUM PATCH. IF THE EXISTING ROADWAY HAS A HEAVIER CROSS SECTION THAN SHOWN HERE, IT WILL BE REPLACED WITH THAT CROSS SECTION, OR AS DIRECTED BY THE ENGINEER.
2. ALL MATERIALS AND METHODS FOR CONSTRUCTION SHALL MEET THE REQUIREMENTS SET FORTH IN THE CURRENT DELAWARE DEPARTMENT OF TRANSPORTATION STANDARDS SPECIFICATIONS FOR ROAD AND BRIDGE CONSTRUCTION.

PERMANENT CROSS-ROAD OR LONGITUDINAL PATCH DETAIL (HOT MIX)
N.T.S.

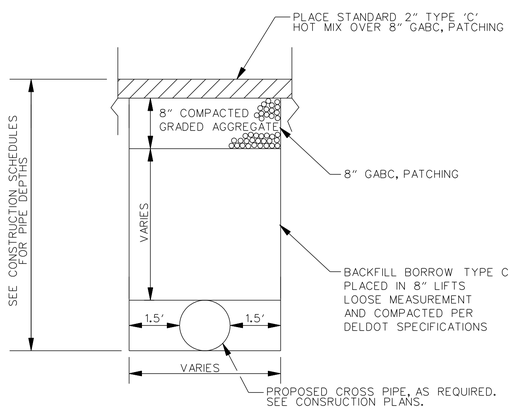

NOTES:

1. ALL MATERIALS AND METHODS FOR CONSTRUCTION SHALL MEET THE REQUIREMENTS SET FORTH IN THE CURRENT DELAWARE DEPARTMENT OF TRANSPORTATION STANDARDS SPECIFICATIONS FOR ROAD AND BRIDGE CONSTRUCTION.
2. TRANSVERSE SLOPES SHOULD BE A MINIMUM OF 6:1, LONGITUDINAL SLOPES SHOULD BE A MINIMUM OF 10:1 UNLESS OTHERWISE PROTECTED.
3. SEE CONSTRUCTION PLAN SHEETS, GRADES AND GEOMETRICS PLAN SHEETS, AND TYPICAL SECTIONS FOR ADDITIONAL MEDIAN CROSSOVER DETAIL (I.E. LOCATIONS, DIMENSIONS, SLOPES, ETC.).

TEMPORARY PATCH DETAIL
N.T.S.

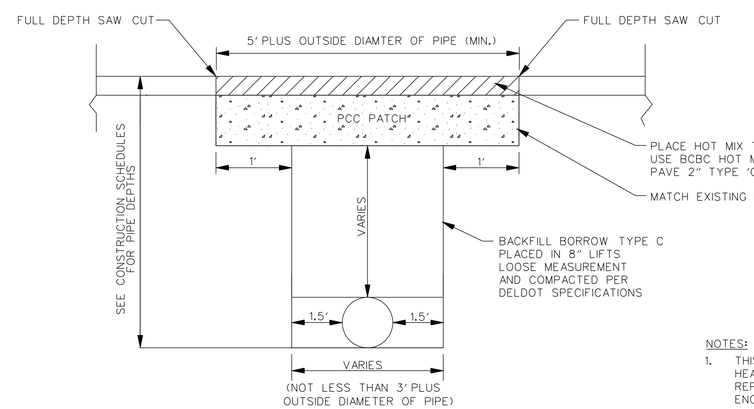

NOTES:

1. THIS IS A MINIMUM PATCH. IF THE EXISTING ROADWAY HAS A HEAVIER CROSS SECTION THAN SHOWN HERE, IT WILL BE REPLACED WITH THAT CROSS SECTION, OR AS DIRECTED BY THE ENGINEER.
2. ALL MATERIALS AND METHODS FOR CONSTRUCTION SHALL MEET THE REQUIREMENTS SET FORTH IN THE CURRENT DELAWARE DEPARTMENT OF TRANSPORTATION STANDARDS SPECIFICATIONS FOR ROAD AND BRIDGE CONSTRUCTION.

PERMANENT CROSS-ROAD OR LONGITUDINAL PATCH DETAIL (PCC)
N.T.S.

*** EXISTING CONCRETE PAVEMENT OVERLAYED WITH HOTMIX LOCATIONS**

FLARED END SECTION – ELLIPTICAL PIPE DETAILS
12" – 33" DIAMETER

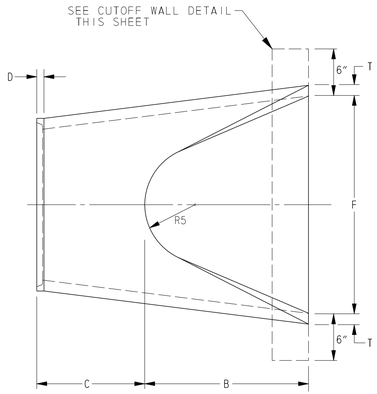

TOP VIEW
N.T.S.

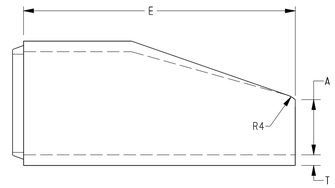

SPIGOT SIDE VIEW
N.T.S.

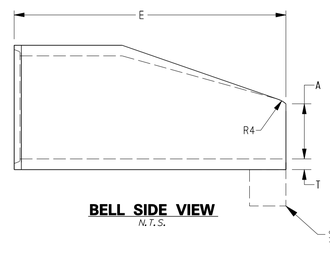

BELL SIDE VIEW
N.T.S.

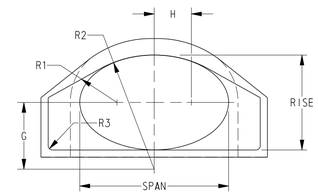

FRONT VIEW
N.T.S.

NOTES:

1. THIS DRAWING IS NOT INTENDED TO SHOW REINFORCEMENT DESIGN - EITHER AS TO PLACEMENT OR STEEL AREA. ACTUAL PROJECT SPECIFICATION OR INDUSTRY STANDARD WILL GOVERN.

ELLIPTICAL FLARED END SECTIONS
TABLE OF DIMENSIONS

NOMINAL RISE	NOMINAL SPAN	EQUIVALENT DIA.	ACTUAL RISE	ACTUAL SPAN	T (INCHES)	A (INCHES)	B	C	D (INCHES)	E	F (INCHES)	G (INCHES)	H (INCHES)	R1 (INCHES)	R2 (INCHES)	R3 (INCHES)	R4 (INCHES)	R5 (INCHES)
14	23	18	14 5/8	22 7/8	2 3/4	6	2'-2"	3'-11"	2	6'-1"	36	12 25/32	5 11/32	8 27/32	20 11/16	1 1/2	3	12
19	30	24	19 1/8	30 1/8	3 1/4	9	2'-7"	3'-6"	2	6'-1"	48	16 11/16	6 27/32	11 15/32	29 1/2	1 1/2	3	14
22	34	27	21 9/16	34	3 1/2	10 1/2	2'-9"	3'-4"	2 1/4	6'-1"	54	18 3/4	7 3/4	12 3/4	33 1/32	1 1/2	3	14 1/2
24	38	30	24	37 7/8	3 3/4	12	4'-6"	1'-6"	2 1/2	6'-0"	60	20 13/16	8 11/16	14	36 9/16	1 1/2	3	15
27	42	33	26 23/32	41 15/16	4 1/2	11	5'-3"	2'-9"	3	8'-0"	72	24 31/32	10 5/16	16 13/16	43 7/8	1 1/2	4	18
29	45	36	28 13/16	45 7/16	4 1/2	11	5'-3"	2'-9"	3	8'-0"	72	24 31/32	10 5/16	16 13/16	43 7/8	1 1/2	4	18
34	53	42	34	53 1/4	5	18	3'-11"	4'-3"	3 1/2	8'-2"	78	28 29/32	12 1/32	19 19/32	50 29/32	1 1/2	4	20
38	60	48	38 5/16	59 15/16	5 1/2	22	4'-0"	4'-2"	3 3/4	8'-2"	84	32 7/16	13 17/32	21 15/16	57 3/32	1 1/2	4	22
43	68	54	43 3/16	67 5/8	6	22	5'-5"	2'-7"	4	8'-0"	90	36 11/16	15 9/32	24 17/32	64 9/32	1 1/2	4	24

FLARED END SECTION
12" – 72" DIAMETER

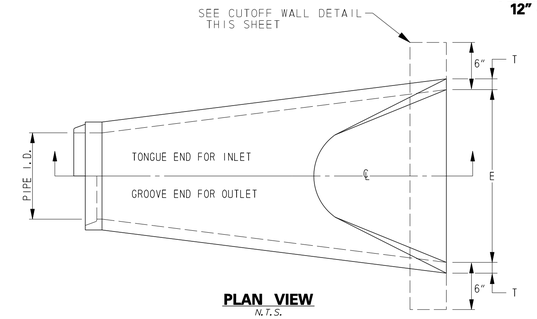

PLAN VIEW
N.T.S.

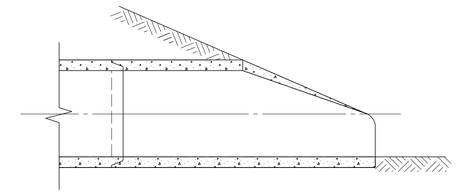

INSTALLATION DETAIL
N.T.S.

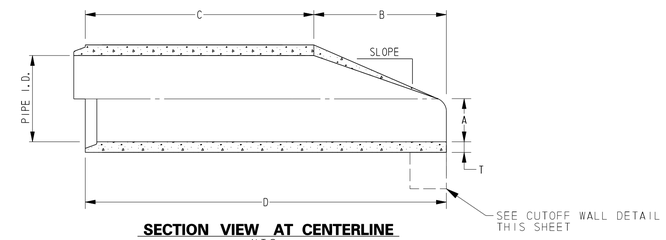

SECTION VIEW AT CENTERLINE
N.T.S.

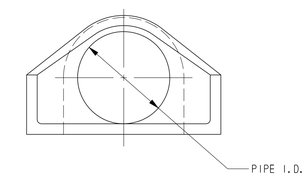

END VIEW
N.T.S.

PIPE INNER DIAMETER (INCHES)	WALL THICKNESS T (INCHES)	A (INCHES)	B (INCHES)	C (INCHES)	D (INCHES)	E (INCHES)	SLOPE
12	2	4	24	48 7/8	72 7/8	30	3:1
15	2 1/4	6	27	46	73	30	3:1
18	2 1/2	9	27	46	73	36	3:1
24	3	9 1/2	43 1/2	30	73 1/2	48	3:1
30	3 1/2	12	54	19 3/4	73 3/4	60	3:1
36	4	15	63	34 3/4	97 3/4	72	3:1
42	4 1/2	21	63	35	98	78	3:1
48	5	24	72	26	98	84	3:1
54	5 1/2	27	65	35	100	90	2:4:1
60	6	30	60	39	99	96	2:1
66	6 1/2	32	78	21	99	102	2:1
72	7	34	78	21	99	108	2:1

NOTES:

1. PRODUCED TO MEET ASTM SPECIFICATIONS.
2. CONTACT A CONCRETE PIPE DIVISION REPRESENTATIVE FOR DETAILS NOT LISTED ON THIS SHEET.

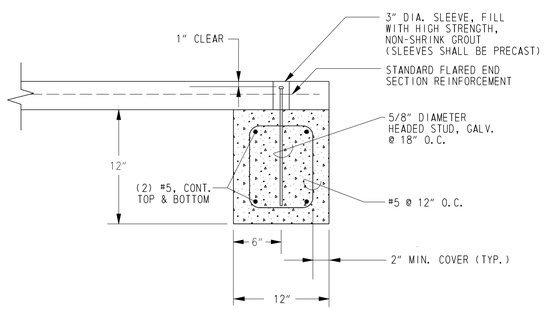

CUTOFF WALL DETAIL
N.T.S.

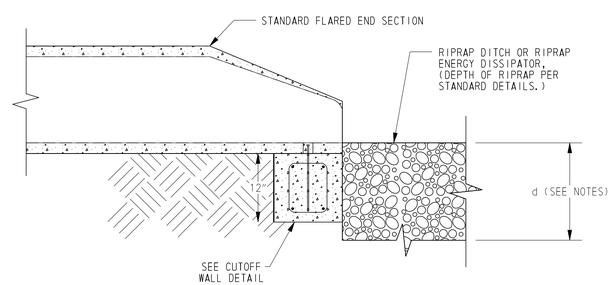

SIDE VIEW WITH OUTLET PROTECTION
N.T.S.

NOTES:

1. FLARED END SECTIONS SHALL BE MANUFACTURED TO ASTM C-76 AND AASHTO M-170 WITH CLASS III REINFORCEMENT.
2. FLARED END SECTIONS SHALL BE BEDDED IN ACCORDANCE WITH DELDOT STANDARD SPECIFICATION 612, REINFORCED CONCRETE PIPE.
3. FLARED END SECTIONS 27 INCHES AND LARGER SHALL INCLUDE A 12 INCH WIDE CUTOFF WALL CONSTRUCTED AS SHOWN. CUTOFF WALL MAY BE CAST-IN-PLACE OR PRECAST CLASS B CONCRETE. ALL COSTS FOR THE CUTOFF WALL SHALL BE INCIDENTAL TO THE FLARED END SECTION.
4. DEPTH OF RIPRAP (d) PER STANDARD DETAILS.

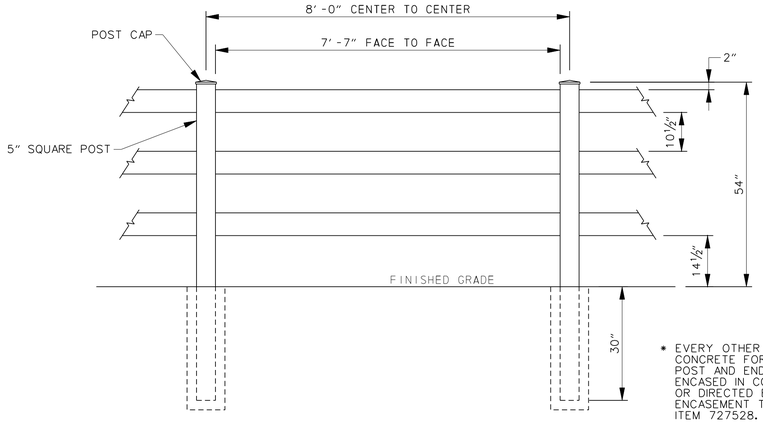

* EVERY OTHER POST SHALL BE ENCASED IN CONCRETE FOR STABILIZATION. BEGINNING POST AND END POST OF EACH RUN SHALL BE ENCASED IN CONCRETE FOR STABILIZATION, OR DIRECTED BY THE ENGINEER. COST OF ENCASEMENT TO BE INCIDENTAL TO ITEM 727528.

THREE RAIL VINYL FENCE DETAIL

NOTES:

1. THE CONTRACTOR SHALL UTILIZE THE PROPER MATERIAL AS SPECIFIED IN THE SPECIAL PROVISIONS.
2. ALL MATERIAL AND WORK SHOWN IN THIS DETAIL ARE INCLUDED IN ITEM 727528 VINYL RAIL FENCE
3. ALL MATERIALS SHALL BE SUBMITTED FOR APPROVAL BY THE ENGINEER.
4. THE CONTRACTOR SHALL STAKEOUT PROPOSED FENCE LOCATION FOR APPROVAL BY THE ENGINEER IN CONJUNCTION WITH THE PROPERTY OWNER.
5. TERMINAL POSTS INCIDENTAL TO ITEMS BEING INSTALLED.
6. VINYL FENCE COLOR SHALL BE WHITE.

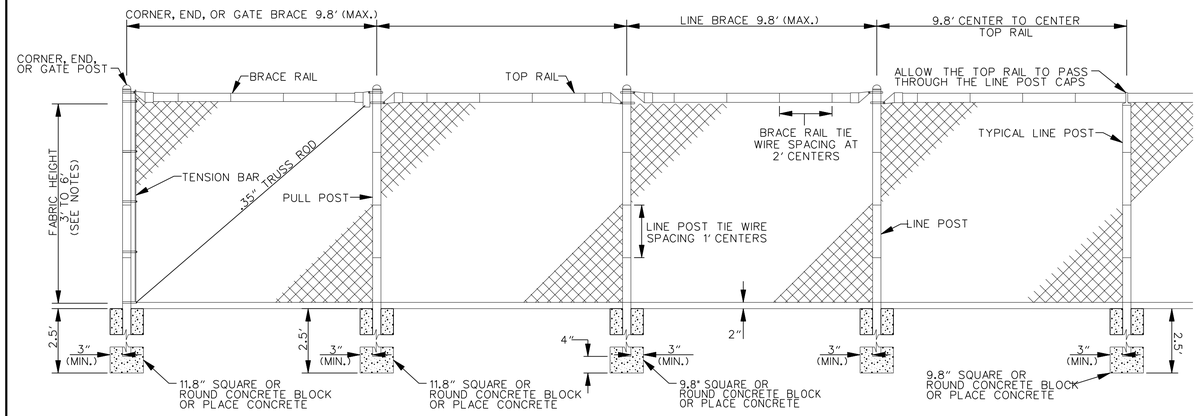

CHAIN LINK FENCE

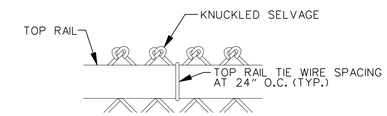

WIRE SELVAGE DETAIL

N.T.S.

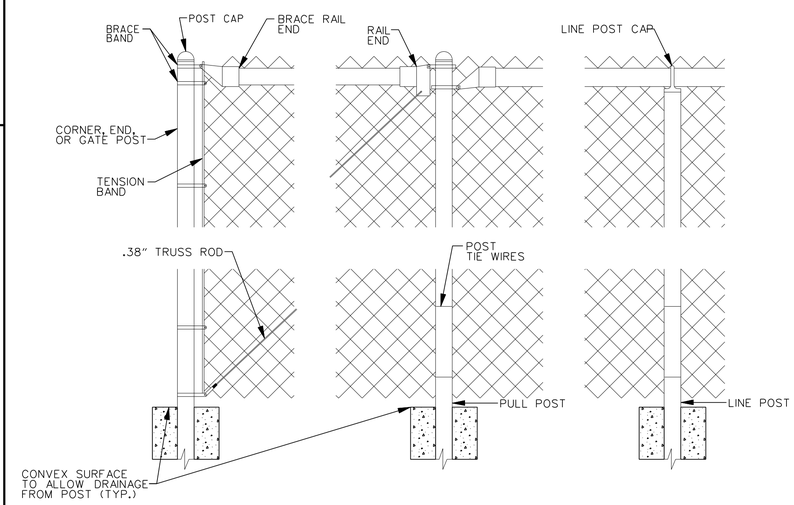

CHAIN LINK DETAIL

N.T.S.

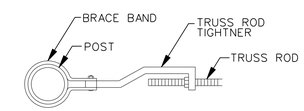

TRUSS ROD TIGHTENER DETAIL

N.T.S.

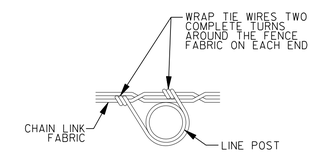

CHAIN LINK FENCE TIE DETAIL

N.T.S.

NOTES:

1. THE INTENT OF THIS CHAIN LINK FENCE IS TO MATCH THE EXISTING TYPE OF FENCE PLACED ALONG HIGH POINT. THE PROPOSED FENCE SHALL HAVE PLASTIC GREEN SLATS. THE CONTRACTOR' SHALL SUBMIT SAMPLES FOR APPROVAL BY THE ENGINEER PRIOR TO CONSTRUCTION.
2. THE CONTRACTOR SHALL UTILIZE THE PROPER MATERIAL AS SPECIFIED IN THE STANDARD SPECIFICATION AND STANDARD CONSTRUCTION DETAIL.
3. ALL MATERIAL AND WORK SHOWN IN THIS DETAIL ARE INCLUDED IN NEW FENCE ITEM.
4. ALL MATERIALS SHALL BE SUBMITTED FOR APPROVAL BY THE ENGINEER.
5. THE CONTRACTOR SHALL STAKEOUT PROPOSED FENCE LOCATION FOR APPROVAL BY THE ENGINEER IN CONJUNCTION WITH THE PROPERTY OWNER.
6. ALL COSTS ARE INCLUDED IN THE FENCE ITEM 727004.

1/6/2015
G:\PROJECTS\035T.00 (DELDOT AGMT 1223 DOTS Open End\035T.16 SR1 LITTLE HEAVEN FINAL DESIGN\DGN Files\Details01h.dgn
SSOK42 TNM

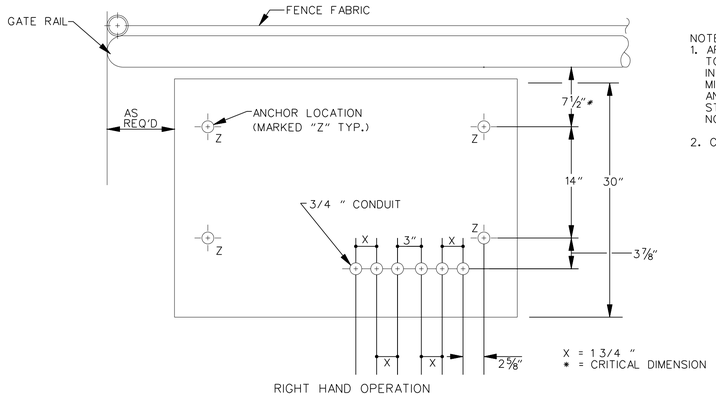

LAYOUT CONCRETE PLAN
N.T.S.

NOTE:
1. AFTER OPERATOR HAS BEEN CORRECTLY POSITIONED TO THE GATE RAIL. ANCHOR BOLTS SHALL BE 1/2 INCH IN DIAMETER BY 4 1/2 INCH MINIMUM LENGTH WITH MINIMUM 1 1/4 INCH THREADED LENGTH EXPOSED. ANCHOR BOLTS SHALL BE EQUIVALENT TO HILTI STANDARD KWIK BOLT II, OR RAWL-STUD CATALOG NO. 7423, OR AN APPROVED EQUAL.

2. CONCRETE SHALL BE CLASS B.

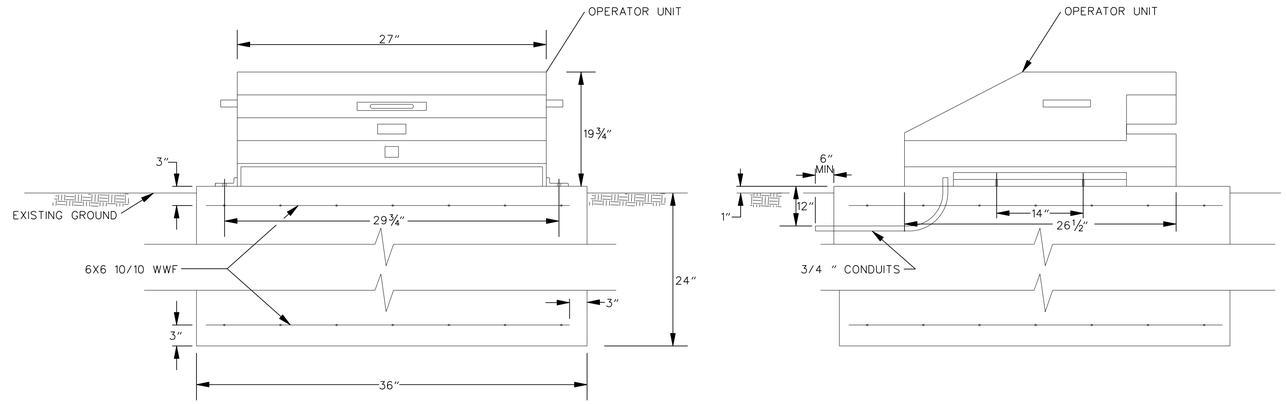

SLIDE GATE OPERATOR
N.T.S.

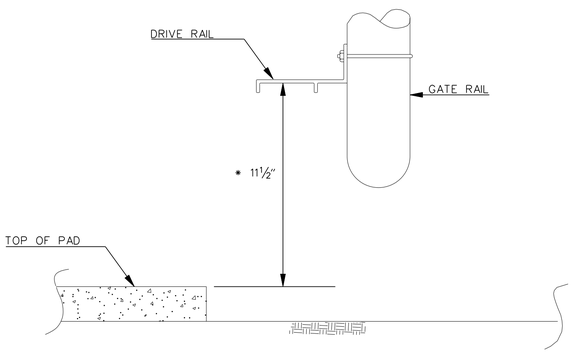

SECTION AT CONCRETE PAD AND GATE RAIL
N.T.S.

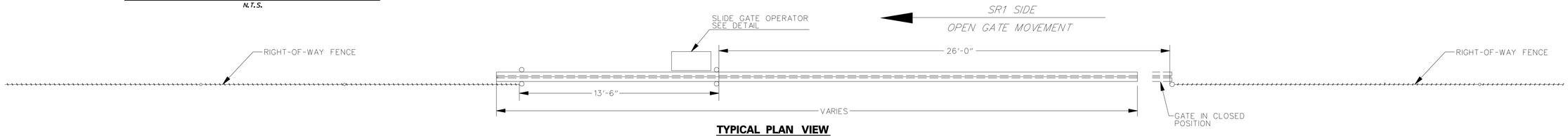

TYPICAL PLAN VIEW
N.T.S.

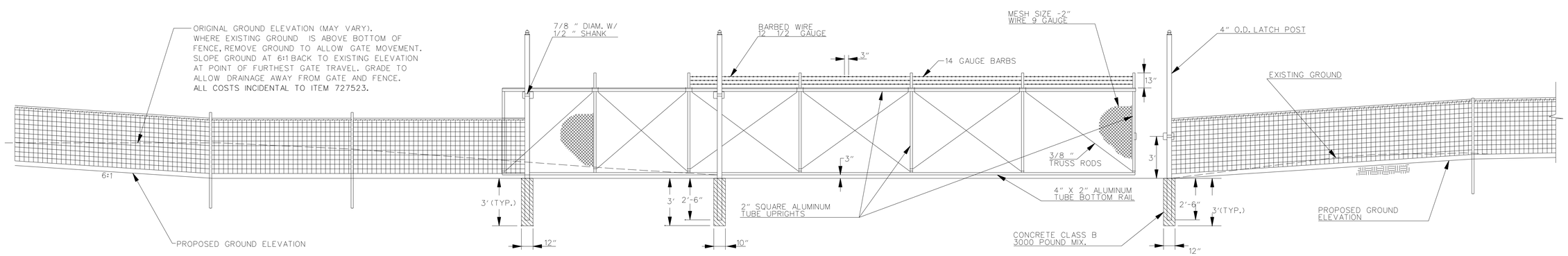

TYPICAL ELEVATION SINGLE CANTILVER SLIDE GATE
N.T.S.

NOTE: ALL ITEMS SHOWN ARE INCIDENTAL TO ITEM 727523.

DELAWARE DEPARTMENT OF TRANSPORTATION	ADDENDUMS / REVISIONS		**SR1, LITTLE HEAVEN GRADE SEPARATED INTERSECTION**	CONTRACT T200412202	BRIDGE NO. -	**CONSTRUCTION DETAILS**	SHEET NO. 242
				COUNTY KENT	DESIGNED BY: SFP		TOTAL SHTS. 641
					CHECKED BY: WFC		

1/6/2015 G:\PROJECTS\03517.00 (DELDOT AGMT 1223 DOTS Open End)\03517.16 SR1, LITTLE HEAVEN FINAL DESIGN\DGN Files\DetailsOlh.dgn 5:03:57 PM

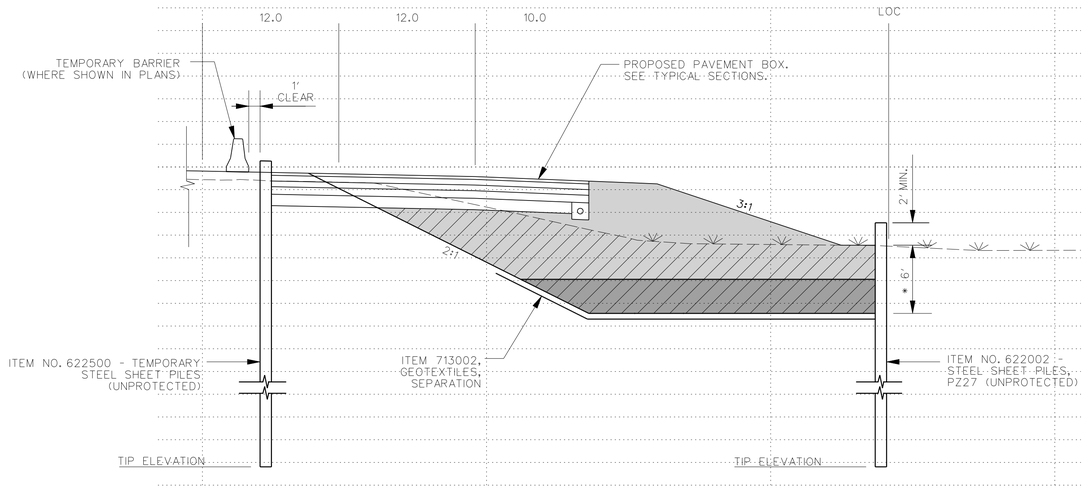

LEGEND

- PAY LIMIT ITEM 204000, MUCK EXCAVATION
- ITEM 209006, BORROW, TYPE F OR EXCAVATED MATERIAL MEETING BORROW, TYPE F
- 3 FEET ITEM 209002, BORROW, TYPE B

TYPICAL MUCK EXCAVATION

SCALE: 1" = 5'

STATION 217+58 TO STATION 225+50 (RIGHT)
STATION 222+87 TO STATION 226+00 (LEFT) - MIRRORED

* CONTRACTOR SHALL EXCAVATE TO THE DEPTH THAT ALL MUCK IS REMOVED WITHIN THE LIMITS SHOWN, OR AS DIRECTED BY ENGINEER.

NOTES:

1. TEMPORARY AND PERMANENT SHEET PILES SHALL BE PZ 27, WITH A MINIMUM YIELD STRENGTH OF 50,000 PSI.
2. SHEET PILES SHALL BE DRIVEN TO A MINIMUM TIP ELEVATION AS FOLLOWS:
   ITEM 622500: 21.0 FEET BELOW EXISTING GRADE.
   ITEM 622002: 26.0 FEET BELOW EXISTING GRADE.
3. PERMANENT SHEET PILES RETAINING WETLANDS SHALL BE CUT OFF 2.0 FEET BELOW THE RETAINED GRADE FOLLOWING CONSTRUCTION. ALL COSTS FOR CUTTING OFF PERMANENT SHEET PILES SHALL BE INCIDENTAL TO ITEM 622002 - STEEL SHEET PILES, PZ27 (UNPROTECTED.)
4. PERMANENT SHEET PILES (ITEM 622002) WILL BE MEASURED VERTICALLY FROM 2.0 FEET ABOVE ORIGINAL GROUND TO THE DRIVEN TIP ELEVATION. ANY ADDITIONAL LENGTH SUPPLIED AT THE CONTRACTOR'S CHOICE WILL NOT BE MEASURED FOR PAYMENT.
5. AFTER PLACING BORROW TYPE F, OR EXCAVATED MATERIAL MEETING TYPE F, TO THE BOTTOM OF THE PROPOSED PAVEMENT BOX, TEMPORARY SHEET PILES SHALL BE REMOVED IN THEIR ENTIRETY.
6. REFER TO CONSTRUCTION PHASING PLANS FOR ADDITIONAL INFORMATION REGARDING SHEET PILE PLACEMENT.
7. BACKFILL AGAINST SLOPED EMBANKMENTS SHALL BE BENCHED AS SHOWN IN THE BENCHING DETAIL. SEE CONSTRUCTION DETAILS. COST FOR BENCHING SHALL BE INCIDENTAL TO THE ITEM BEING PLACED.

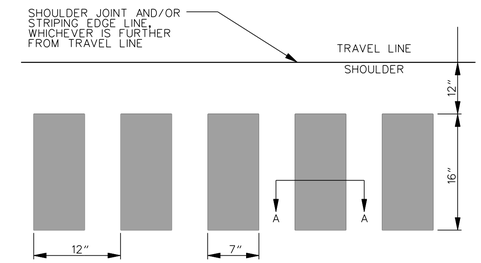

PLAN

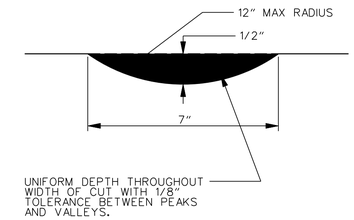

SECTION A-A

CONTINUOUS LONGITUDINAL EDGELINE RUMBLE STRIPS DETAIL

N.T.S.

NOTES:

1. ALL WORK REQUIRED TO COMPLETE THE INSTALLATION OF EDGELINE RUMBLE STRIPS SHALL BE INCIDENTAL TO ITEM 760016-RUMBLE STRIPS, HOT MIX.
2. EDGELINE RUMBLE STRIPS SHALL BE INSTALLED ALONG ALL INSIDE AND OUTSIDE SHOULDERS, AS PER THIS DETAIL, ALONG SR1 AND RAMPS A, B, C, AND D.

SOUTHBOUND PROPOSED SR1: STATION 497+80 TO STATION 523+00
STATION 100+00 TO STATION 182+70
STATION 300+00 TO STATION 339+28

NORTHBOUND PROPOSED SR1: STATION 511+40 TO STATION 523+00
STATION 100+00 TO STATION 183+53
STATION 200+00 TO STATION 238+35

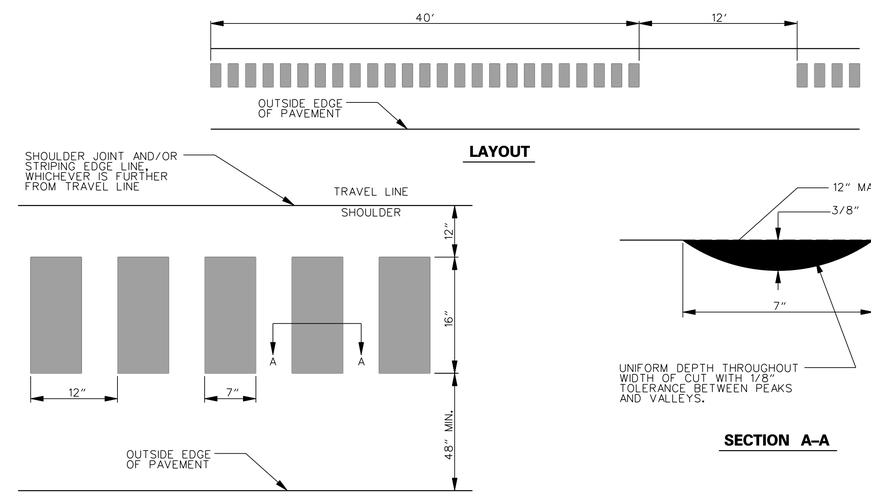

BICYCLE-FRIENDLY EDGELINE RUMBLE STRIPS DETAIL

N.T.S.

NOTES:

1. ALL WORK REQUIRED TO COMPLETE THE INSTALLATION OF EDGELINE RUMBLE STRIPS SHALL BE INCIDENTAL TO ITEM 760012-RUMBLE STRIPS, HOT MIX.
2. EDGELINE RUMBLE STRIPS SHALL BE INSTALLED ALONG ALL SHOULDERS, AS PER THIS DETAIL, ALONG MILFORD NECK RD, TUB MILL POND RD, AND FREDERICA RD.

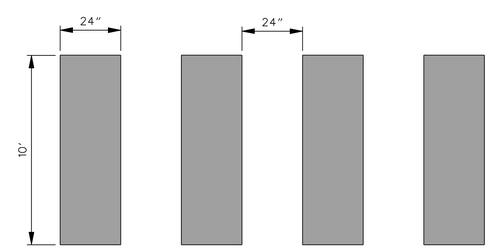

STRIPING OF CROSS WALK SHALL BE THERMO.

PEDESTRIAN CROSS WALK DETAIL

N.T.S.

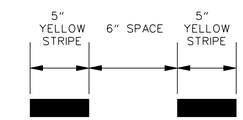

TYPICAL DOUBLE YELLOW PAVEMENT SRIPING (SERVICE ROADS)

N.T.S.

1/22/2015
G:\PROJECTS\03517.00 (DELDOT AGMT 1223 DOTS Open End)\03517.16 SR1, LITTLE HEAVEN FINAL DESIGN\DGN Files\DetailsDlh.dgn
10:39:29 AM

DELAWARE DEPARTMENT OF TRANSPORTATION	ADDENDUMS / REVISIONS	**SR1, LITTLE HEAVEN GRADE SEPARATED INTERSECTION**	CONTRACT T200412202	BRIDGE NO. –	**CONSTRUCTION DETAILS**	SHEET NO. 243
			COUNTY KENT	DESIGNED BY: SFP		TOTAL SHTS. 641
				CHECKED BY: WFC		

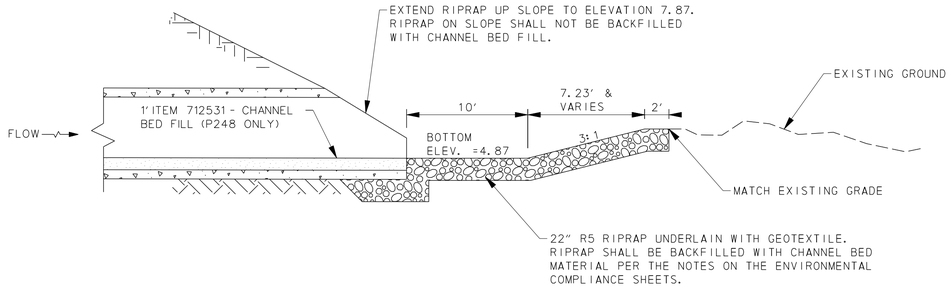

SECTION A–A
N.T.S.

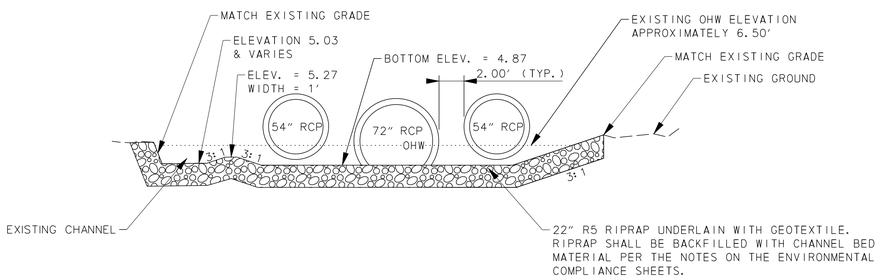

SECTION B–B
N.T.S.

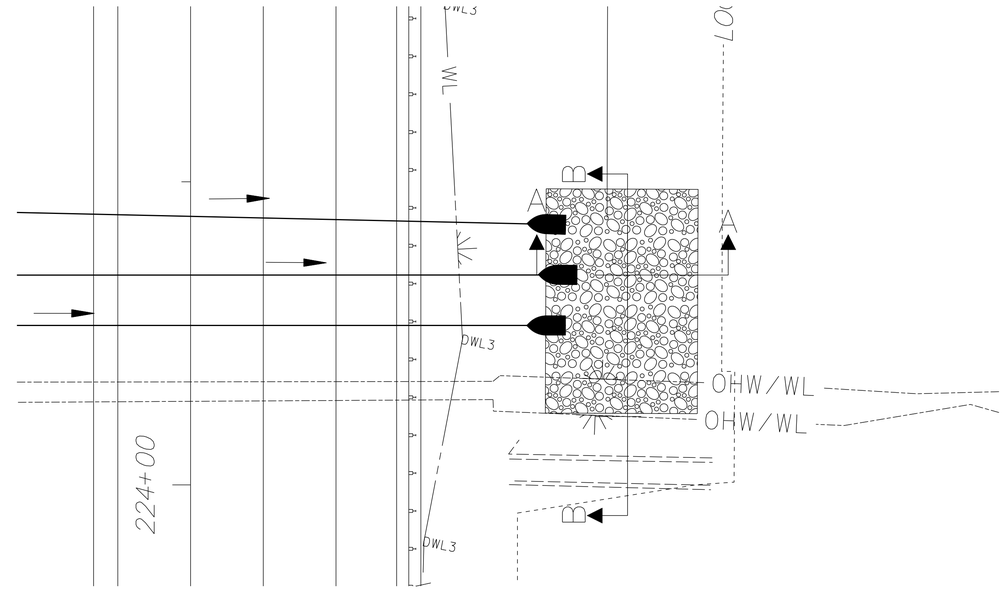

PLAN VIEW
N.T.S.

SR1 BRIDGE CULVERT CROSSING DETAIL
N.T.S.

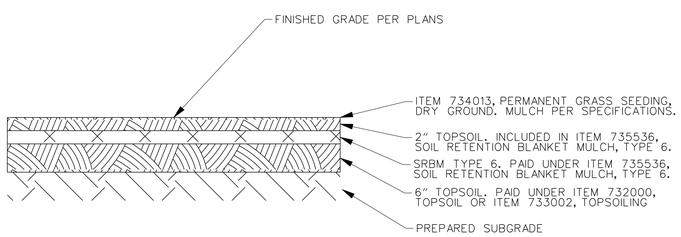

LONGITUDINAL SECTION DETAIL
N.T.S.

NOTES:

1. DETAIL TO BE USED AT ALL LOCATIONS WHERE PERMANENT TRM IS TO BE INSTALLED. THESE LOCATIONS ARE AREAS IDENTIFIED IN THE TRM SCHEDULE ON THE CONSTRUCTION PLANS AND AT STORMWATER FACILITY SPILLWAYS AS NOTED ON THE STORMWATER DETAIL SHEETS.
2. TRM SHALL MEET REQUIREMENTS OF ITEM NO. 735536, SOIL RETENTION BLANKET MULCH, TYPE 6, AND SHALL BE LISTED ON DELDOT'S MOST CURRENT APPROVED SRBM PRODUCT LIST.
3. TRM ANCHORING AND STAPLING SHALL BE PER DELDOT'S STANDARD CONSTRUCTION DETAILS.
4. 2" TOPSOIL PLACED ABOVE TRM SHALL BE INCLUDED IN COST OF ITEM NO 735536.
5. DO NOT SEED 6" TOPSOIL LAYER BENEATH TRM.
6. WIDTH OF TRM SHALL BE AS FOLLOWS:
   FOR STORMWATER MANAGEMENT FACILITY SPILLWAYS - AS STATED ON STORMWATER MANAGEMENT DETAIL SHEETS.
   FOR DITCHES - BOTTOM WIDTH OF CHANNEL PLUS 1 FOOT VERTICALLY UP EACH SIDE.

PERMANENT TRM INSTALLATION DETAIL
N.T.S.

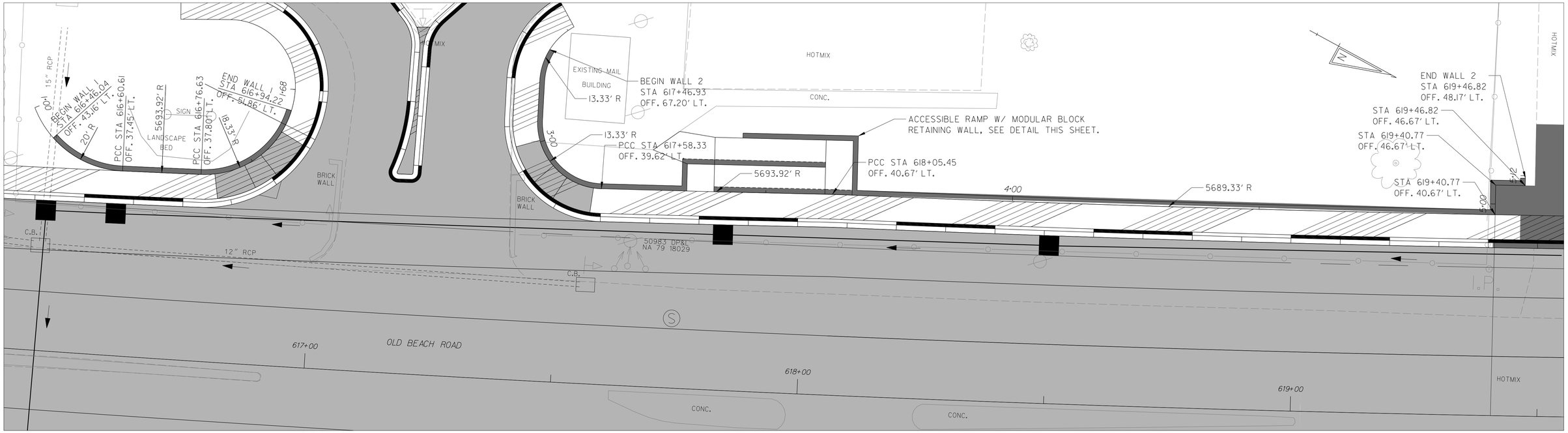

PLAN VIEW – RETAINING WALLS 1 & 2

SCALE: 1" = 10'

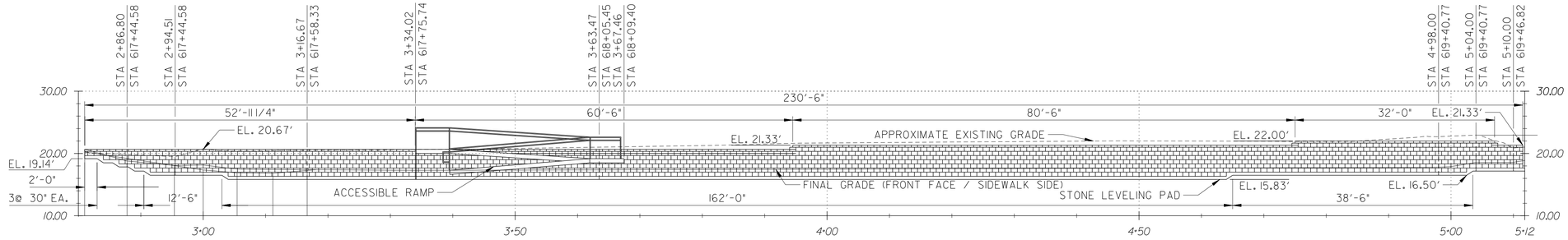

ELEVATION VIEW – RETAINING WALL 2

SCALE: 1" = 10'

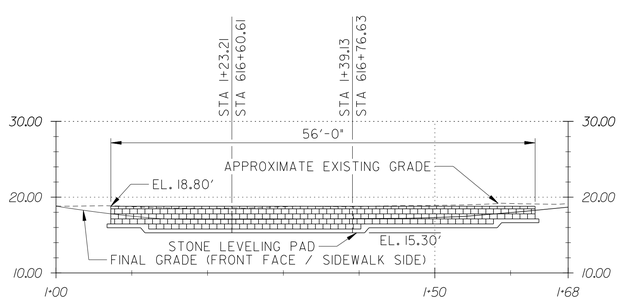

ELEVATION VIEW – RETAINING WALL 1

SCALE: 1" = 10'

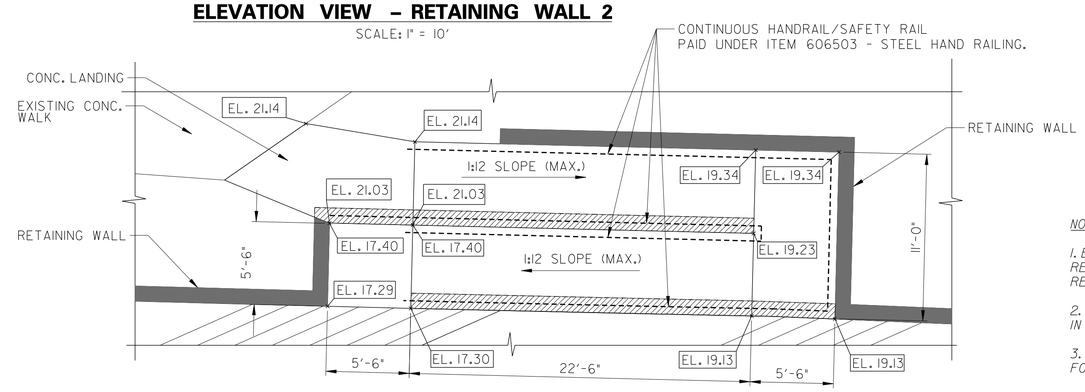

ACCESSIBLE RAMP PLAN

SCALE: 1" = 5'

NOTES:

1. ELEVATIONS SHOWN AT BASE OF STONE LEVELING PADS ARE FOR REFERENCE ONLY. FINAL ELEVATIONS SHALL BE DETERMINED BY RETAINING WALL MANUFACTURER.

2. ALL HANDRAIL SHALL BE HOT DIPPED GALVANIZED AFTER FABRICATION IN ACCORDANCE WITH AASHTO M 123.

3. DIMENSIONS FOR ACCESSIBLE RAMP MAY BE ADJUSTED TO ACCOUNT FOR BATTER/SETBACK OF MODULAR BLOCK COURSES.

DELAWARE DEPARTMENT OF TRANSPORTATION

ADDENDUMS / REVISIONS

SCALE 0 30 60 90 FEET

SR1, LITTLE HEAVEN GRADE SEPARATED INTERSECTION

CONTRACT	BRIDGE NO.	–
T200412202	DESIGNED BY:	SFP
COUNTY		
KENT	CHECKED BY:	WFC

RETAINING WALL PLAN & ELEVATIONS

SHEET NO.
245
TOTAL SHTS.
641

1/5/2015
G:\PROJECTS\03517.00 (DELDOT AGMT 1223 DOTS Open End)\03517.16 SR1, LITTLE HEAVEN FINAL DESIGN\DGN Files\rr-d02fh.dgn
11:00:17 PM

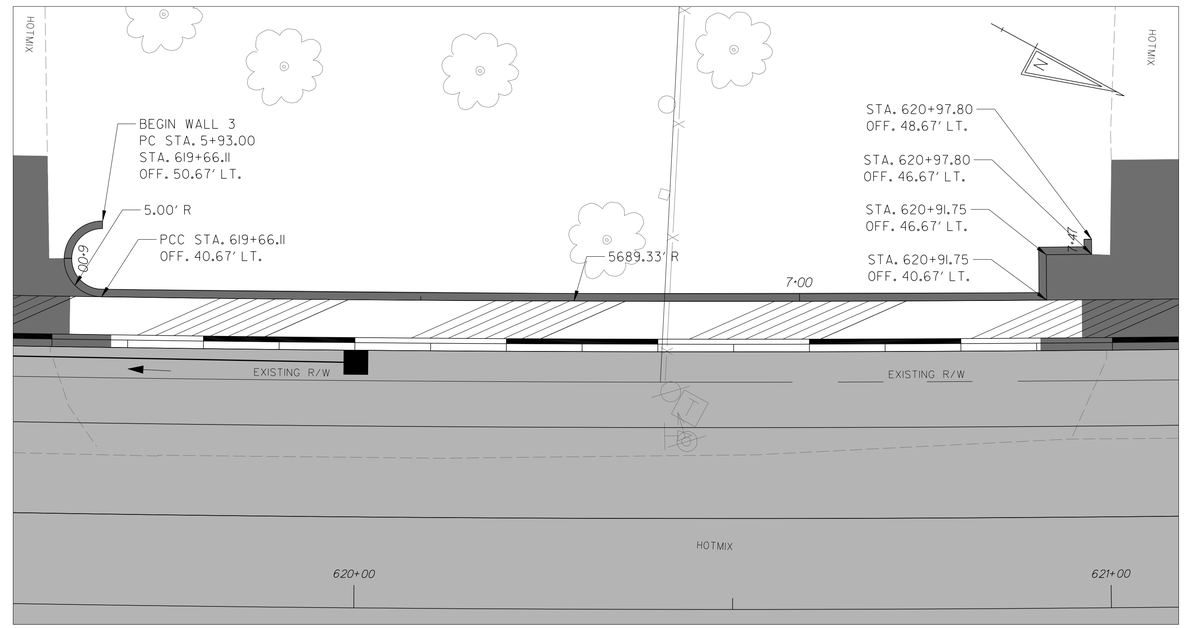

PLAN VIEW – RETAINING WALL 3

SCALE: 1" = 10'

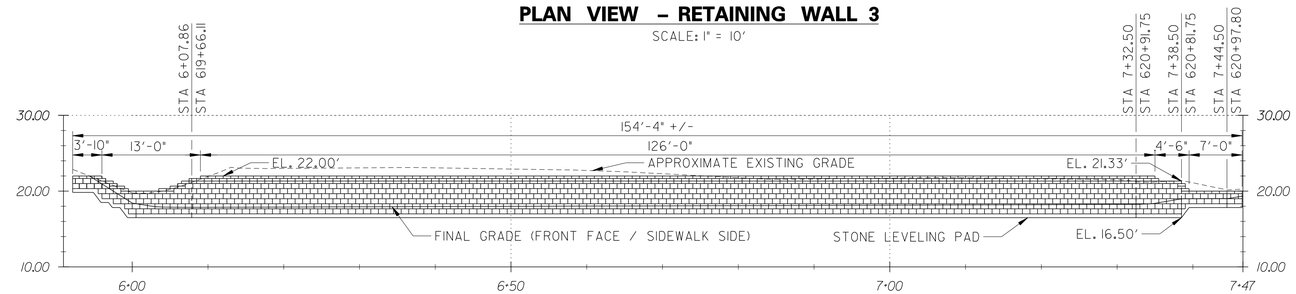

ELEVATION VIEW – RETAINING WALL 3

SCALE: 1" = 10'

11/25/2014
9:57:01 AM
q:\projects\035i7.00 (deldot agmt 1223 dots open end)\035i7.16 sr1, little heaven final design\dgn files\rd03h.dgn

DELAWARE DEPARTMENT OF TRANSPORTATION	ADDENDUMS / REVISIONS		**SR1, LITTLE HEAVEN GRADE SEPARATED INTERSECTION**	CONTRACT T200412202	BRIDGE NO. –	**RETAINING WALL PLAN & ELEVATION**	SHEET NO. 246
				COUNTY KENT	DESIGNED BY: SFP		TOTAL SHTS. 641
					CHECKED BY: WFC		

GENERAL NOTES:

1. THE DETAILS PROVIDED PER THIS PLAN SHEET ARE FOR REFERENCE ONLY AND ARE NOT ENGINEERED DETAILS. THE DETAILS ARE SIMPLY MEANT TO ASSIST THE BIDDER IN DETERMINING A REASONABLE COST FOR CONSTRUCTION OF THE PROPOSED MODULAR RETAINING WALL.

2. THE CONTRACTOR SHALL CONTACT/EMPLOY A MODULAR RETAINING WALL MANUFACTURER FOR THE PROPOSED RETAINING WALL TO BE DESIGNED BY THE PRODUCT MANUFACTURER'S ENGINEER. CONTRACTOR SHALL SUBMIT, FOR APPROVAL, CONSTRUCTION DRAWINGS AND DESIGN CALCULATIONS FOR THE RETAINING WALL SYSTEM PREPARED AND SEALED BY A PROFESSIONAL ENGINEER REGISTERED IN THE STATE OF DELAWARE.

3. ACCEPTABLE MODULAR BLOCK RETAINING WALLS ARE:

   A. "KEYSTONE RETAINING WALL SYSTEMS", AS MANUFACTURED BY ANCHOR CONCRETE PRODUCTS, INC., P.O. BOX 601, BRIDGEPORT, NJ 08014 (TELEPHONE 609-241-1544).

   B. "VERSA-LOK RETAINING WALL SYSTEMS", AS MANUFACTURED BY BLINKLEY & OBER, INC., P.O. BOX 7, EAST PETERSBURG, PA 17520 (TELEPHONE 717-569-0441).

   C. "ALLAN BLOCK RETAINING WALL SYSTEMS" STYLE AB THREE AS MANUFACTURED BY FIZZANO BROS., INC., CHESTER PIKE, CRUM LYNNE, PA 19022 (TELEPHONE 610-833-1100).

   D. APROVED EQUAL.

4. ANY GEOGRID REINFORCEMENT, UNDERDRAINS/DRAINAGE SYSTEM THAT MAY BE DEEMED NECESSARY BY THE MODULAR RETAINING WALL SYSTEM DESIGN ENGINEER SHALL BE INCIDENTAL TO THE PROJECT AND AT NO ADDITIONAL COST TO THE OWNER.

5. SHOP DRAWINGS SHALL INCLUDE THE FOLLOWING INFORMATION: TYPE OF WALL, LOCATION, LENGTH, TOP ELEVATION(S), PROPOSED BOTTOM OF FOOTING OR LEVELING PAD ELEVATION(S), MODULAR BLOCKS, WALL DRAINAGE UNIT, AND CROSS SECTIONS INCLUDING DRAINAGE ZONE, BACKFILL MATERIAL TYPE AND LIMITS, AND QUANTITIES. DETAILS FOR ALL DRAIN OUTLETS, INCLUDING SOLID FLEXIBLE PIPING EXTENDING THRU THE MODULAR BLOCK WALL SHALL BE PROVIDED IN THE SHOP DRAWINGS. CONTRACTOR SHALL VERIFY ALL FIELD DIMENSIONS PRIOR TO SUBMITTAL OF SHOP DRAWINGS.

6. PERFORM REQUIRED DESIGN OF THE RETAINING WALL IN ACCORDANCE WITH THE 2002 AASHTO STANDARD SPECIFICATIONS FOR HIGHWAY BRIDGES WITH CURRENT INTERIMS.

7. WALLS SHALL BE CONSTRUCTED FROM LOW END TO HIGH END.

8. WALLS SHALL BE STEPPED AS NECESSARY TO MAINTAIN A 2" MINIMUM VERTICAL DISTANCE MEASURED FROM THE FINAL FILL TO TOP OF CAP UNIT.

9. WALLS SHALL EXTEND A MINIMUM OF ONE BLOCK UNIT BENEATH THE COMPACTED FILL ALONG THE FRONT FACE.

10. ALL EXPOSED MODULAR BLOCK SURFACES SHALL HAVE A SPLIT-FACED TEXTURE.

11. LEVELING PAD, SIZE, AND MATERIAL, SHALL BE IN ACCORDANCE WITH THE MANUFACTURER'S SPECIFICATIONS.

12. WALLS SHALL HAVE A NEAR VERICAL FACE WITH MINIMUM SETBACKS AS RECOMMENDED BY THE MANUFACTURER.

13. THE CONTRACTOR SHALL INSTALL PER MANUFACTURER'S RECOMMENDATIONS.

14. ALL COSTS FOR PROVIDING ALL MATERIALS AS NOTED AND DETAILED INCLUDING SHOP DRAWINGS SHALL BE INCIDENTAL TO ITEM 602615 - MODULAR BLOCK RETAINING WALL.

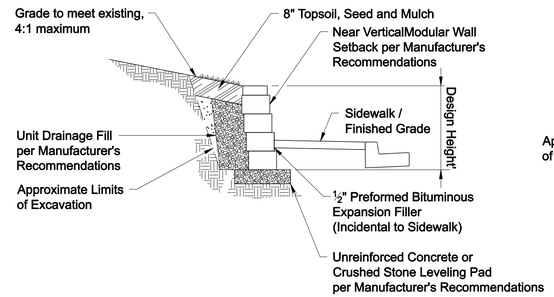

TYPICAL GRAVITY WALL
(RETAINING WALL 1)
N.T.S.

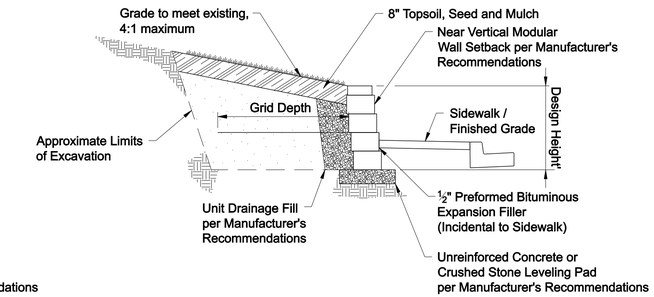

TYPICAL REINFORCED WALL
(RETAINING WALLS 2 & 3)
N.T.S.

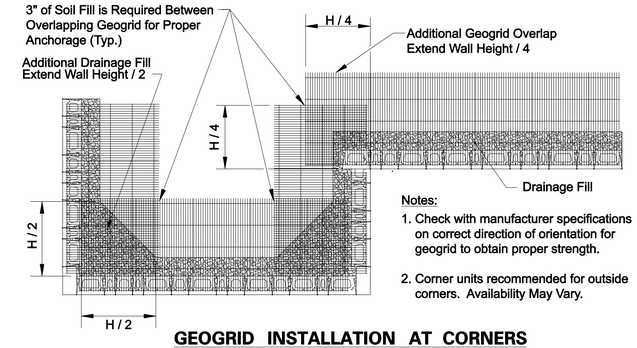

Notes:
1. Check with manufacturer specifications on correct direction of orientation for geogrid to obtain proper strength.
2. Corner units recommended for outside corners. Availability May Vary.

GEOGRID INSTALLATION AT CORNERS
N.T.S.

Base Leveling Pad Notes:
1. The base foundation is to be approved by the site geotechnical engineer prior to placement of the leveling pad.
2. Geogrid not shown for clarity.

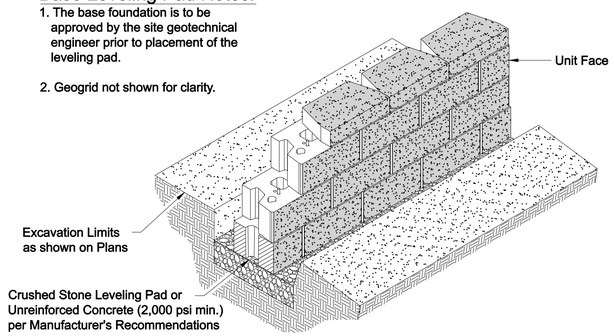

TYPICAL WALL ISOMETRIC SECTION VIEW
N.T.S.

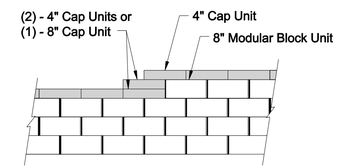

Note:
1. Secure all cap units with Manufacturer's Recommendations.

TOP OF WALL STEPS
N.T.S.

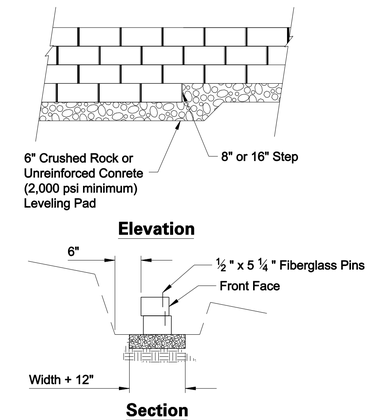

LEVELING PAD DETAILS
N.T.S.

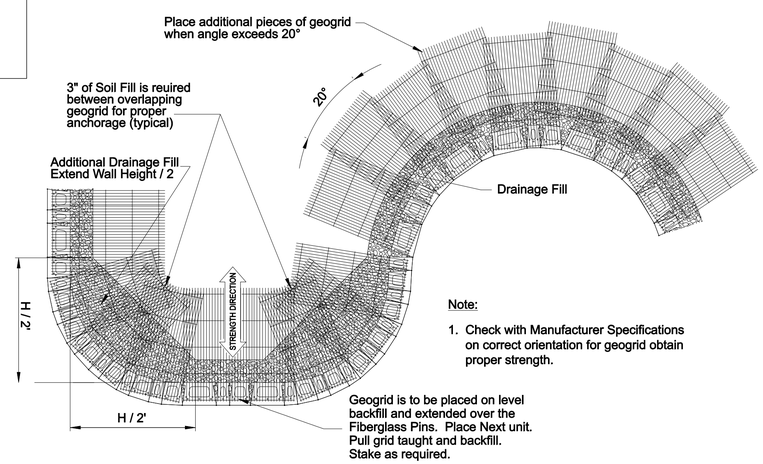

Note:
1. Check with Manufacturer Specifications on correct orientation for geogrid obtain proper strength.

GEOGRID INSTALLATION ON CURVES
N.T.S.

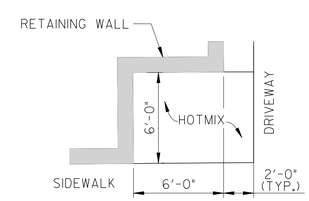

TYPICAL TRASH RECEPTICLE BUMP OUT
N.T.S.

DELAWARE DEPARTMENT OF TRANSPORTATION	ADDENDUMS / REVISIONS	SR1, LITTLE HEAVEN GRADE SEPARATED INTERSECTION	CONTRACT T200412202 / COUNTY KENT	BRIDGE NO. - / DESIGNED BY: SFP / CHECKED BY: WFC	RETAINING WALL DETAILS	SHEET NO. 247 / TOTAL SHTS. 641

11/25/2014 9:26:45 PM
S:\Projects\03517.00 (deldot agmt 123 dots open end)\03517.16 sr1, little heaven final design\dgn files\rd01h.dgn

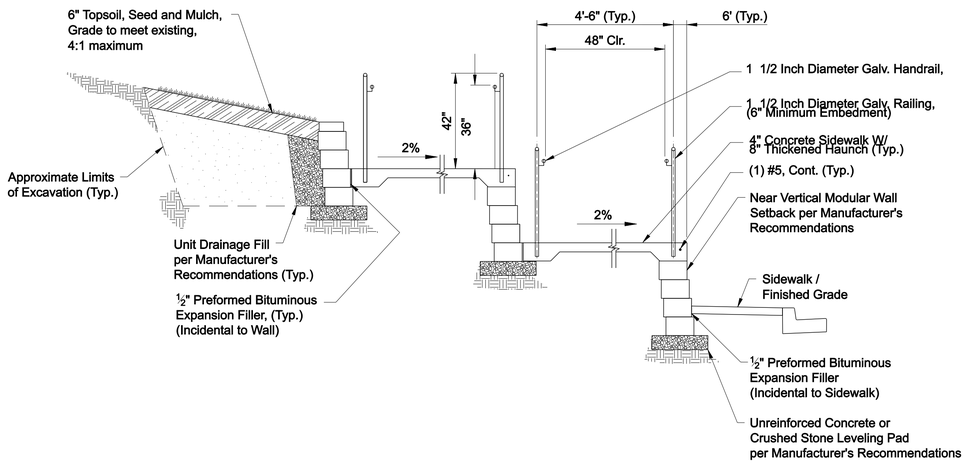

TYPICAL REINFORCED WALL
ACCESSIBLE RAMP SECTION
(RETAINING WALL 2)
N.T.S.

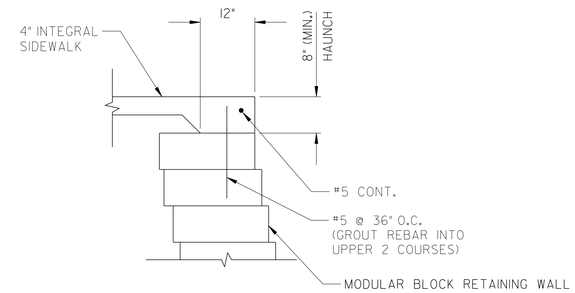

NOTES:

1. HANDRAIL NOT SHOWN FOR CLARITY.
2. HAUCH, REBAR, AND GROUT SHALL BE INCIDENTAL TO ITEM 705001 - PORTLAND CEMENT CONCRETE SIDEWALK, 4".

SECTION AT ACCESSIBLE RAMP
N.T.S.

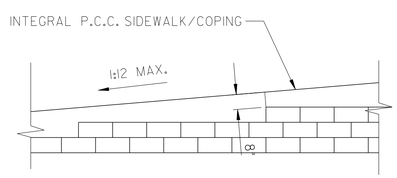

NOTE:
HANDRAIL NOT SHOWN FOR CLARITY.

ELEVATION VIEW – ACCESSIBLE RAMP
SCALE: NONE

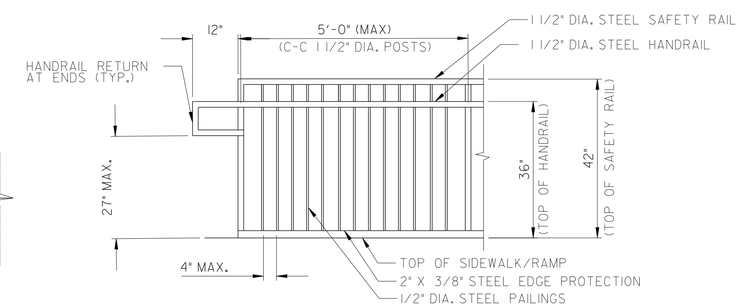

ELEVATION VIEW – HANDRAIL
SCALE: NONE

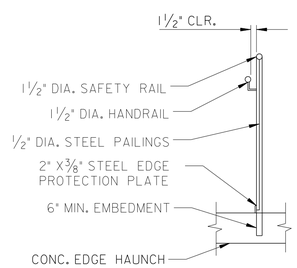

SECTION – HANDRAIL
SCALE: NONE

NOTES:

1. ALL HANDRAIL SHALL BE HOT DIPPED GALVANIZED AFTER FABRICATION IN ACCORDANCE WITH AASHTO M 123.
2. FURNISHING AND INSTALLING HANDRAIL SHALL BE PAID FOR UNDER ITEM 606503 - STEEL HAND RAILING.

11/25/2014
9:Project\035170 (deldot agmt 1223 dots open end)\035170 srl, little heaven final design\dgn files\rd04h.dgn
2:56:18 PM

DELAWARE DEPARTMENT OF TRANSPORTATION	ADDENDUMS / REVISIONS		**SR1, LITTLE HEAVEN GRADE SEPARATED INTERSECTION**	CONTRACT T200412202	BRIDGE NO. -	**RETAINING WALL DETAILS**	SHEET NO. 248
				COUNTY KENT	DESIGNED BY: SFP		TOTAL SHTS. 641
					CHECKED BY: WFC		

NOTES:
1. BRIDGE NOT SYMMETRIC ABOUT BOWERS BEACH ROAD ℄
2. ABUTMENTS ARE NOT PARALLEL TO ℄ BOWERS BEACH ROAD
3. GUARDRAIL NOT SHOWN FOR CLARITY.

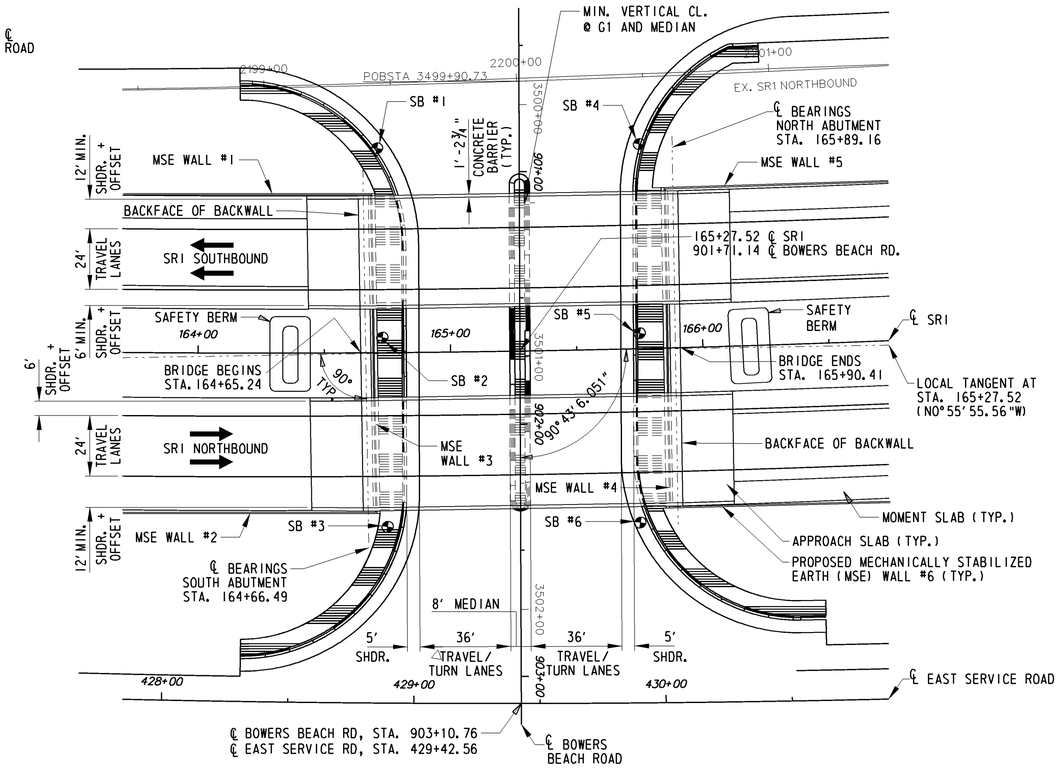

PLAN
SCALE: 1" = 30'-0"

INDEX OF BRIDGE SHEETS

BR. SHEET №	TABLE OF CONTENTS
1	BRIDGE PLAN AND ELEVATION
2	TYPICAL BRIDGE SECTION & GENERAL BRIDGE NOTES & BRIDGE RATING
3	CAST-IN-PLACE PILE DETAILS
4	NORTH MSE WALL PLAN AND ELEVATION
5	SOUTH MSE WALL PLAN AND ELEVATION
6	MSE WALL DETAILS
7	NORTH ABUTMENT PLAN & ELEVATION
8	SOUTH ABUTMENT PLAN & ELEVATION
9	ABUTMENT REINFORCING DETAILS
10	ABUTMENT DETAILS
11	FRAMING PLAN
12	CAMBER PLAN
13	BEAM DETAILS
14	DECK REINFORCING PLAN
15	FINISHED DECK ELEVATIONS
16	FINISHED DECK ELEVATIONS
17	APPROACH SLAB PLAN
18	EXPANSION JOINT & SLEEPER SLAB DETAILS
19	MOMENT SLAB DETAILS
20	REBAR LIST
21	BORING LOG #1
22	BORING LOG #2
23	BORING LOG #3
24	BORING LOG #4
25	BORING LOG #5
26	BORING LOG #6
	TOTAL BRIDGE SHEETS: 26

CURVE DATA - SR1
P.C. STA. 154+13.52
P.I. STA. 169+12.17
P.T. STA. 183+52.61
Δ = 27°36'22.20" LEFT
T = 1498.65'
L = 2939.09'
R = 6100.00'
M = 176.16'
E = 181.40'

GRADE DATA - SR1

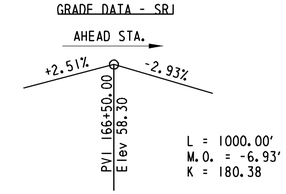

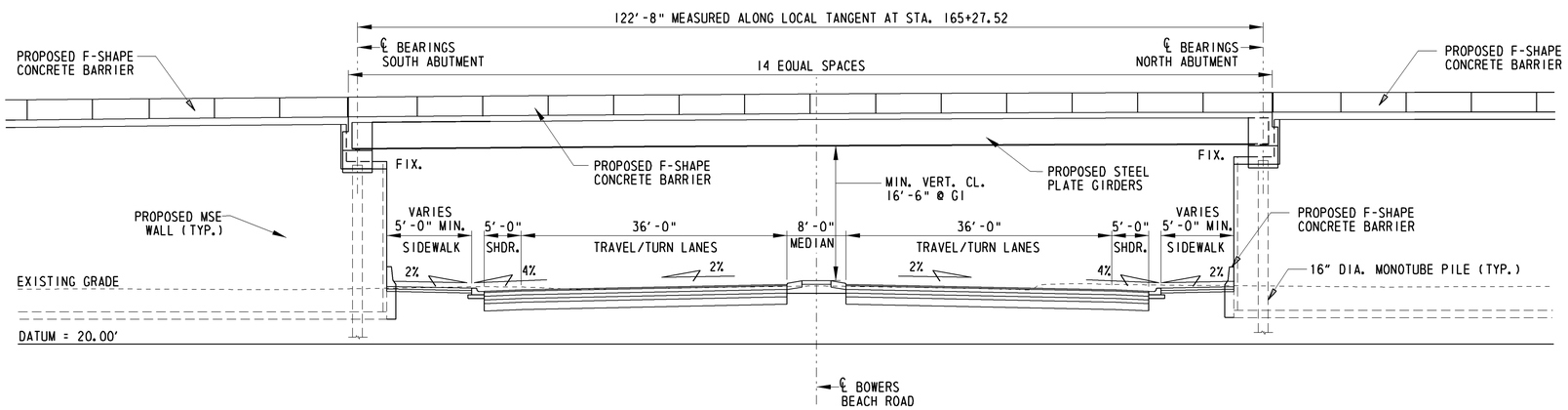

ELEVATION
SCALE: 1" = 10'-0"

Y:\KENT\008\Bridge\2412202\Plans\pe01.dgn

DELAWARE DEPARTMENT OF TRANSPORTATION	ADDENDUMS / REVISIONS	SCALE: AS NOTED	SR1 LITTLE HEAVEN GRADE SEPARATED INTERSECTION	CONTRACT T200412202	BRIDGE NO. 2-008K&L	BRIDGE PLAN AND ELEVATION BRIDGE SHEET 1 OF 26	SHEET NO. 249
				COUNTY KENT	DESIGNED BY: JH/EM		TOTAL SHTS. 641
					CHECKED BY:		

NOTES:
1. FUTURE WIDENING NOT PART OF THIS CONTRACT.
2. STRIPING ON BRIDGE SHALL SHIFT ALONG LENGTH OF BRIDGE TO ACCOUNT FOR ROADWAY CURVATURE. MINIMUM DISTANCES SHALL BE MAINTAINED AT ALL LOCATIONS.
3. DISTANCES MEASURED FROM LOCAL TANGENT (N0°55'55.56"W)

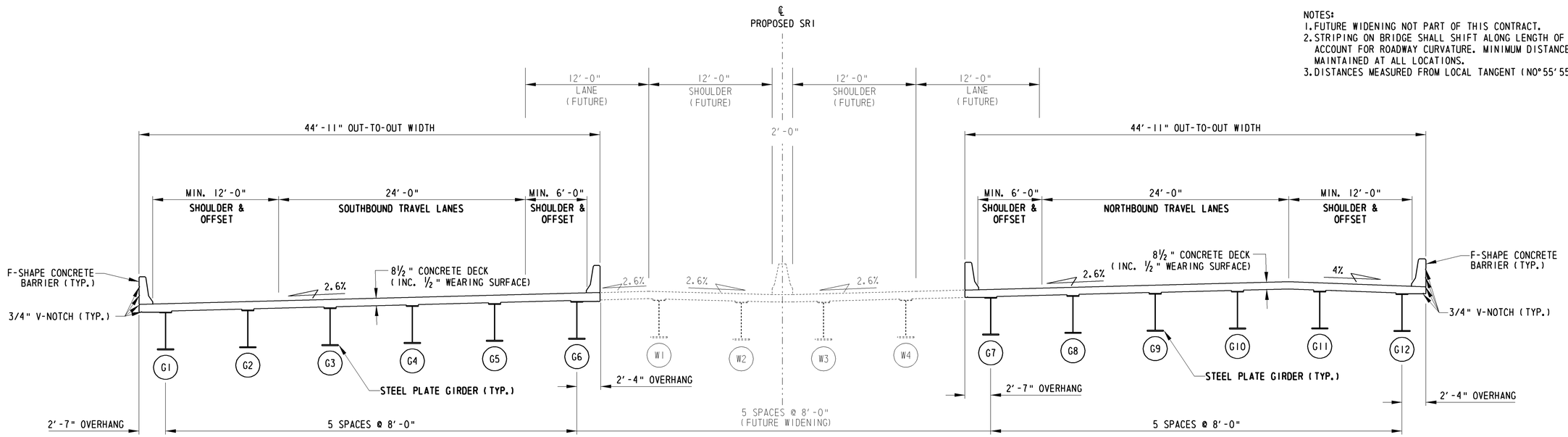

TYPICAL BRIDGE SECTION
(VIEW LOOKING AHEAD STATION)

SCALE: 3/16" = 1'-0"

GENERAL BRIDGE NOTES

1. DESIGN CRITERIA
   AASHTO LRFD BRIDGE DESIGN SPECIFICATIONS, 4TH EDITION (2007)
   WITH 2008 INTERIMS

2. LOADING
   LIVE LOAD - HL-93
   DEAD LOAD - INCLUDES 25 PSF FOR FUTURE WEARING SURFACE
   AND 15 PSF FOR S.I.P. FORMS

3. MATERIAL AND FABRICATION
   CONTRACT PLANS AND DELAWARE DEPARTMENT OF TRANSPORTATION STANDARD SPECIFICATIONS, 2001, WITH CURRENT MODIFICATIONS, ADDITIONS, AND SPECIAL PROVISIONS. WELDING SHALL BE IN ACCORDANCE WITH ANSI/AASTHO/AWS D1.5:2008 BRIDGE WELDING CODE.

4. CONCRETE
   SPECIFIED COMPRESSIVE STRENGTH (f'c):
   DECK SLAB, APPROACH SLAB----------4.5 KSI (CLASS D)
   BARRIER----------4.5 KSI (CLASS A)
   CONCRETE SUBSTRUCTURE----------4.5 KSI (CLASS A)
   CONCRETE MOMENT SLAB/LEVELING PADS---3.0 KSI (CLASS B)
   MIX REQUIREMENTS SHALL CONFORM TO SECTION 812 OF THE STANDARD SPECIFICATIONS. BARRIER CONCRETE SHALL HAVE THE FOLLOWING MODIFICATIONS: PORTLAND CEMENT SHALL BE WHITE CEMENT AND FINE AGGREGATE SHALL BE WHITE SAND FROM A SOURCE APPROVED BY THE DEPARTMENT. ALL PORTLAND CEMENT AND WHITE SAND USED FOR CONSTRUCTION OF ALL WHITE CONCRETE BARRIERS ON THE PROJECT SHALL BE FROM THE SAME SUPPLIER FOR THE ENTIRETY OF THE PROJECT. NO CHANGES OR SUBSTITUTIONS OF SUPPLIERS WILL BE ALLOWED ONCE CONSTRUCTION OF THE WHITE CONCRETE ON THE PROJECT COMMENCES. THE MANUFACTURER OF THE WHITE CONCRETE FOR THE PROJECT SHALL DEDICATE A HOPPER TO THE MANUFACTURE OF THE WHITE CONCRETE FOR THIS PROJECT TO ENSURE NO CROSS CONTAMINATION WITH REGULAR PORTLAND CEMENT OR SAND. THE WHITE CONRETE ITEMS SHALL BE A BLEND OF WHITE CEMENT AND 50% SLAG CEMENT.
   ALL EXPOSED EDGES SHALL BE CHAMFERED 3/4" UNLESS OTHERWISE NOTED.
   CONTRACTOR SHALL BE AWARE OF SECTION 602.11 IN THE EVENT OF COLD WEATHER.

5. REINFORCING STEEL
   ALL REINFORCING STEEL SHALL BE AASHTO M31, GRADE 60, AND SHALL BE EPOXY COATED IN ACCORDANCE WITH AASHTO M284.

6. STRUCTURAL STEEL:
   STEEL PLATE GIRDER TOP AND BOTTOM FLANGES SHALL BE ASTM A709 GRADE HPS 70W. STEEL PLATE GRIDER WEB, STIFFENERS, SOLE PLATES, AND DIAPHRAGMS SHALL BE ASTM A709 GRADE 50W. THE ADDITIONAL REQUIREMENTS FOR CHARPY V-NOTCH TESTING OF AASHTO M270 FOR PRIMARY LOAD CARRYING MEMBERS SHALL BE INCLUDED. STRUCUTRAL STEEL SHALL BE PAINTED AS PER BRIDGE SHEET 13.

7. BEARINGS
   ALL ELASTOMERIC BEARING PADS SHALL BE REINFORCED ELASTOMERIC AND SHALL CONFORM TO SUBSECTION 623.06 OF THE STANDARD SPECIFICATIONS.

8. MISCELLANEOUS PAYMENT NOTES
   A. ANY WATERSTOPS AND DOWELS SHALL BE INCIDENTAL TO THE APPROPRIATE CONCRETE ITEM.

9. THE CONTRACTOR SHALL BE RESPONSIBLE FOR ENSURING NO FALLING MATERIAL OR EQUIPTMENT INTERFERES WITH THE TRAVELLING PUBLIC. A PLAN SHOWING THE CONTRATORS METHOD SHALL BE SUBMITTED TO THE ENGINEER FOR APPROVAL. PAYMENT INCIDENTAL TO ITEM 605001.

10. BARRIER SHALL CAST IN PLACE. NO SLIP FORMING WILL BE ALLOWED ON THE BRIDGE.

LRFR LOAD RATINGS

TYPE OF TRUCK	INVENTORY RATING		OPERATING RATING	
	RATING FACTOR	LOAD RATING (TONS)	RATING FACTOR	LOAD RATING (TONS)
AASHTO HL-93 + HL-93-LANE	1.290	N/A	1.670	N/A
AASHTO HL-93-TANDEM + HL-93-LANE	1.530	N/A	1.980	N/A

ESTIMATED CONTRACT QUANTITIES

ITEM #	DESCRIPTION	UNIT	PROPOSAL
209003	BORROW, TYPE "C"	CY	50
602002	PCC MASONRY, CLASS B	CY	800
602009	PCC MASONRY, APPROACH SLAB, CLASS A	CY	182
602013	PCC MASONRY, SUPERSTRUCTURE, CLASS D	CY	410
602015	PCC MASONRY, ABUTMENT ABOVE FOOTING, CLASS A	CY	135
602017	PCC MASONRY, PARAPET, CLASS A	CY	170
602553	MECHANICALLY STABILIZED EARTH WALLS	SF	17446
604000	BAR REINFORCEMENT, EPOXY COATED	LB	200895
605002	STRUCTURAL STEEL	LS	1
605511	PREFABRICATED EXPANSION JOINT SYSTEM, 3"	LF	180
608000	COARSE AGGREGATE FOR FOUNDATION STABILIZATION	TON	245
618042	FURNISH CIP CONCRETE PILES, 16"	LF	3945
618047	FURNISH CIP CONCRETE TEST PILES, 16"	LF	275
619022	INSTALL CIP CONCRETE PILES, 16"	LF	3945
619026	INSTALL CIP CONCRETE TEST PILES, 16"	LF	275
619519	DYNAMIC PILE TESTING BY DELDOT	EACH	4

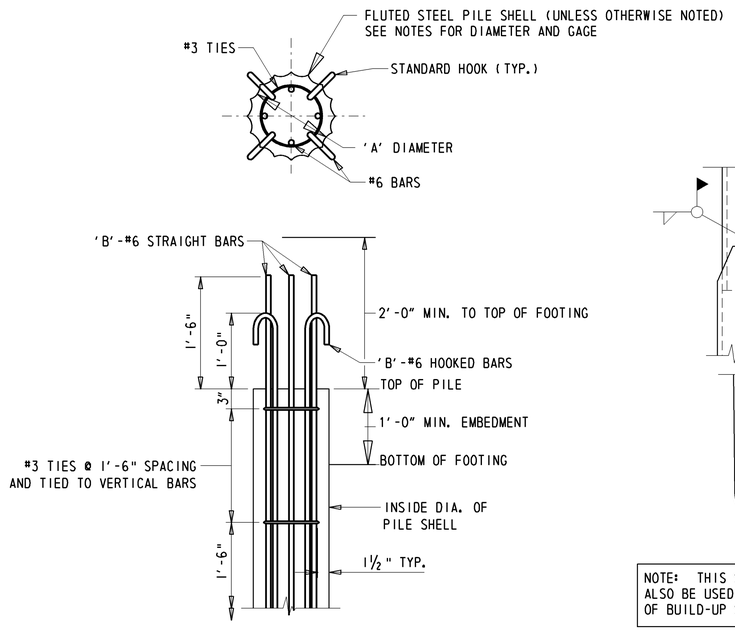

TYPICAL PILE REINFORCEMENT

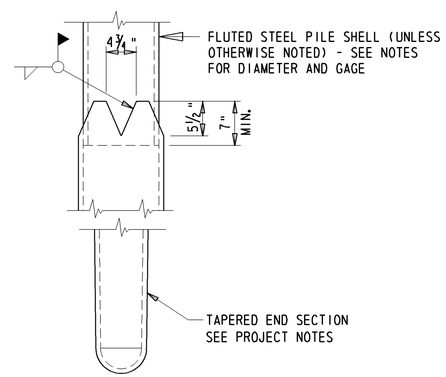

NOTE: THIS SPLICE DETAIL SHALL ALSO BE USED FOR FIELD SPLICES OF BUILD-UP SECTIONS.

TYPICAL PILE SPLICE

CAST-IN-PLACE PILE DETAILS

½" = 1'-0"

CAST-IN-PLACE PILE SIZES

PILE SIZE 'A'	DOWELS OR HOOKS 'B'
12"	3
14"	4
16"	4
18"	4

PROJECT SPECIFIC PILE NOTES

1. PILE TYPE
   THIS PROJECT SHALL UTILIZE 16" DIA. CAST-IN-PLACE PILES, 7 GAGE. THE TAPERED END SECTION SHALL BE A "Y" TAPER (0.40" IN/FT), 8" POINT DIAMETER x 16" BUTT DIAMETER x 20' LENGTH. REINFORCEMENT SHALL EXTEND INTO THE PILE THE MINIMUM OF 20'-0" OR THE STRAIGHT PORTION OF THE PILE.
2. ESTIMATED PRODUCTION PILE LENGTH IS 58'.
3. REQUIRED TEST PILE LENGTH IS 68'.
4. PILES SHALL BE DRIVEN TO AN ULTIMATE BEARING CAPCITY OF 315 KIPS.
5. MINIMUM TIP ELEVATION SHALL NOT BE REQUIRED FOR THIS PROJECT.

GENERAL PILE NOTES

1. FOR MORE INFORMATION REGARDING PILE MATERIALS AND FABRICATION, REFER TO SECTION 618 (PILE MATERIALS) OF THE STANDARD SPECIFICATIONS. FOR MORE INFORMATION REGARDING PILE DRIVING AND INSTALLATION, REFER TO SECTION 619 (INSTALLATION OF PILES) OF THE STANDARD SPECIFICATIONS.
2. EACH TEST PILE SHALL BE DYNAMICALLY TESTED BY THE CONTRACTOR IN ACCORDANCE WITH ITEM #619519 - DYNAMIC PILE TESTING BY CONTRACTOR. THE QUANTITY FOR DYNAMIC PILE TESTING SHALL INCLUDE ONE FOR THE INITIAL DRIVE AND ONE FOR THE RE-STRIKE OF EACH TEST PILE. THE NEED TO RESTRIKE EITHER A TEST PILE OR A PRODUCTION PILE SHALL BE THE SOLE DECISION OF THE ENGINEER.
3. WAVE EQUATION ANALYSIS SHALL BE SUBMITTED BY THE CONTRACTOR FOR REVIEW BY THE ENGINEER (ELECTRONIC PREFERRED, OTHERWISE 8 COPIES MINIMUM).
4. TEST PILES SHALL BE DRIVEN AT EACH LOCATION SHOWN ON THE PLANS. PRODUCTION PILES SHALL BE ORDERED BASED ON THE RESULTS OF THE TEST PILE DRIVING.

CAST-IN-PLACE PILE NOTES

1. COST OF REINFORCING BARS INSIDE THE STEEL SHELL IS INCLUDED IN THE BID PRICE FOR THE APPROPRIATE CAST-IN-PLACE CONCRETE PILE ITEMS. REINFORCEMENT SHALL BE EPOXY COATED.
2. PILES SHALL BE COAL TAR EPOXY COATED.

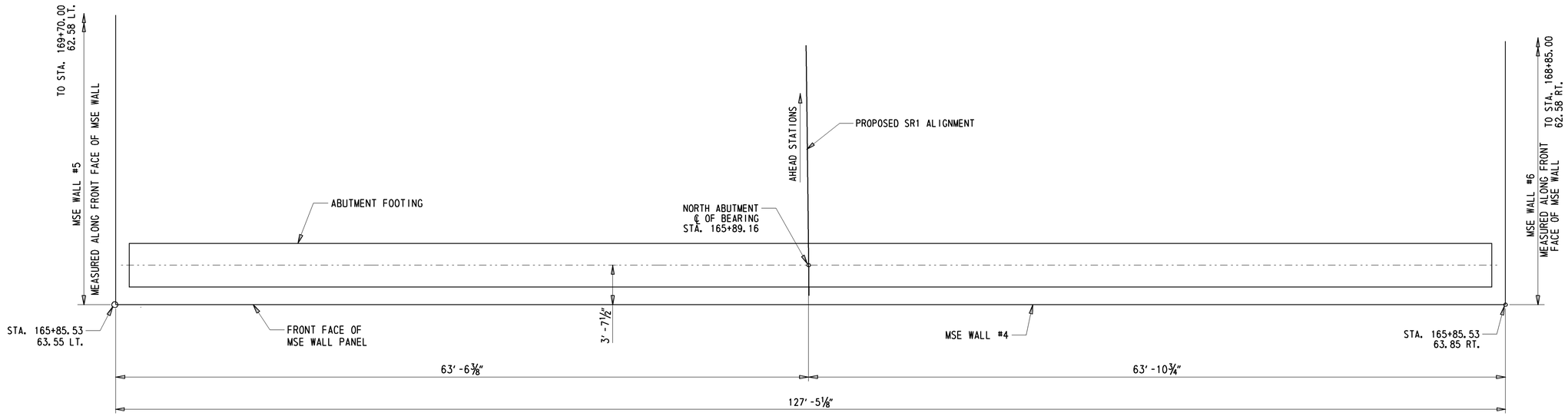

NORTH MSE WALL PLAN

SCALE: 3/16" = 1'-0"

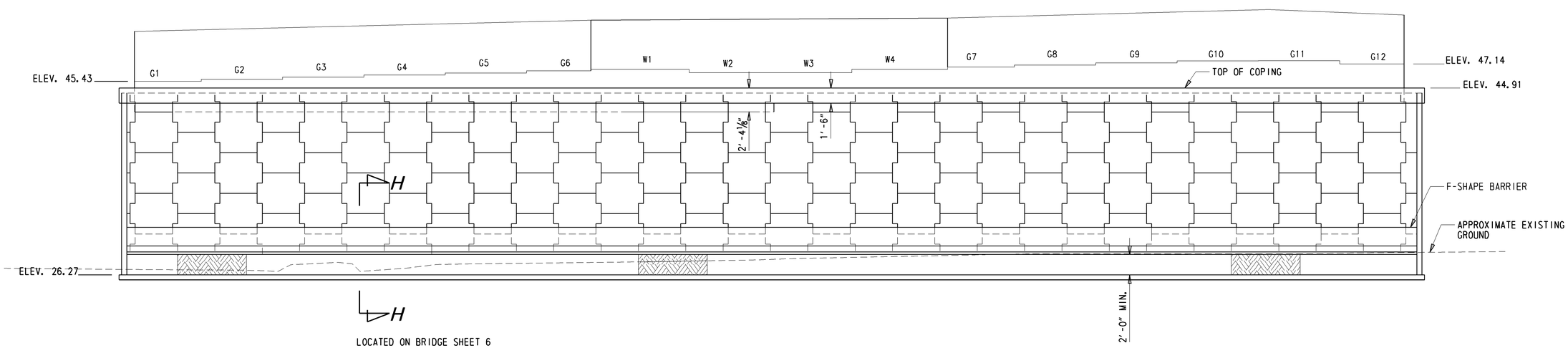

NORTH MSE WALL ELEVATION

SCALE: 3/16" = 1'-0"

NOTE:
COARSE AGGREGATE UNDER ABUTMENT NOT SHOWN FOR CLARITY.

Y:\KENT\008\BRIDGE\2412202\PLANS\ab01.dgn

DELAWARE DEPARTMENT OF TRANSPORTATION	ADDENDUMS / REVISIONS	SCALE: AS NOTED	SR1, LITTLE HEAVEN GRADE SEPARATED INTERSECTION	CONTRACT T200412202	BRIDGE NO. 2-008K&L	NORTH MSE WALL PLAN AND ELEVATION BRIDGE SHEET 4 OF 26	SHEET NO. 252
				COUNTY KENT	DESIGNED BY: EM		TOTAL SHTS. 641
					CHECKED BY: JNH		

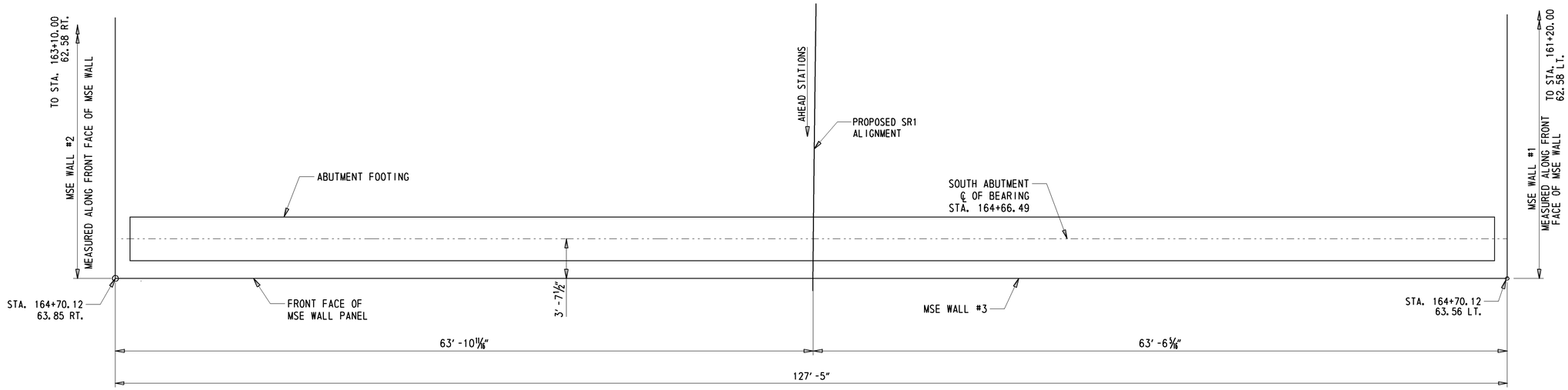

SOUTH MSE WALL PLAN

SCALE: 3/16" = 1'-0"

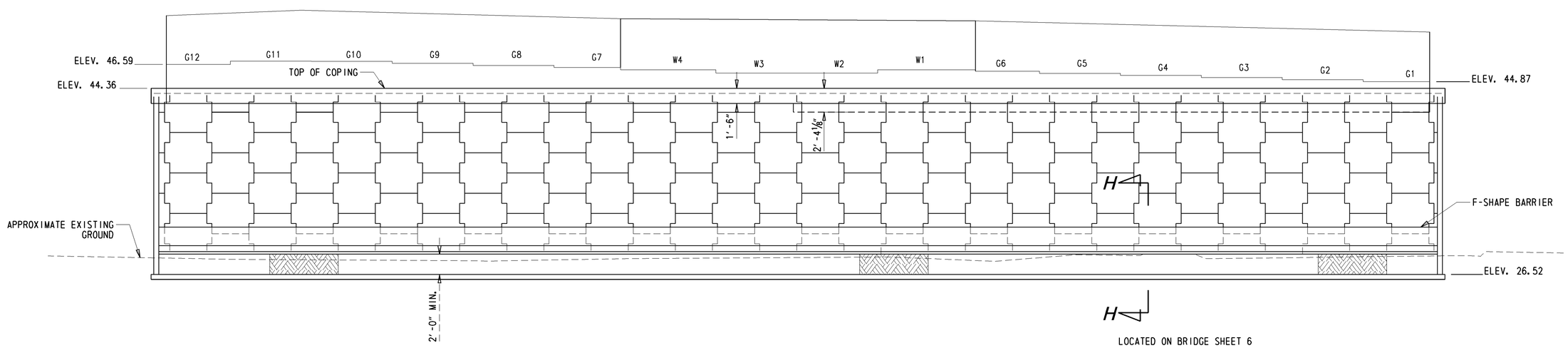

SOUTH MSE WALL ELEVATION

SCALE: 3/16" = 1'-0"

NOTE:
COARSE AGGREGATE UNDER ABUTMENT NOT SHOWN FOR CLARITY.

Y:\KENT\008\BRIDGE\2412202\PLANS\ab01.dgn

DELAWARE DEPARTMENT OF TRANSPORTATION	ADDENDUMS / REVISIONS	SCALE: AS NOTED	SR1, LITTLE HEAVEN GRADE SEPARATED INTERSECTION	CONTRACT T200412202	BRIDGE NO. 2-008K&L	SOUTH MSE WALL PLAN AND ELEVATION BRIDGE SHEET 5 OF 26	SHEET NO. 253
				COUNTY KENT	DESIGNED BY: EM		TOTAL SHTS. 641
					CHECKED BY: JNH		

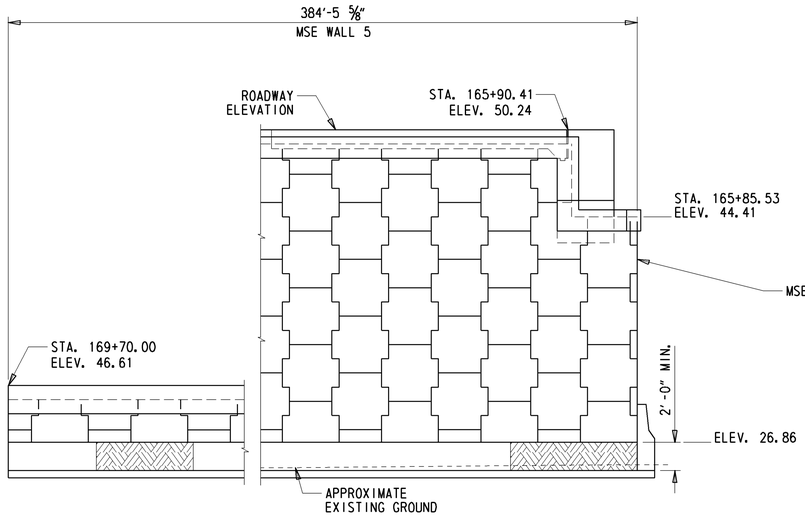

MSE WALL 5 DETAIL

SCALE: 3/16" = 1'-0"

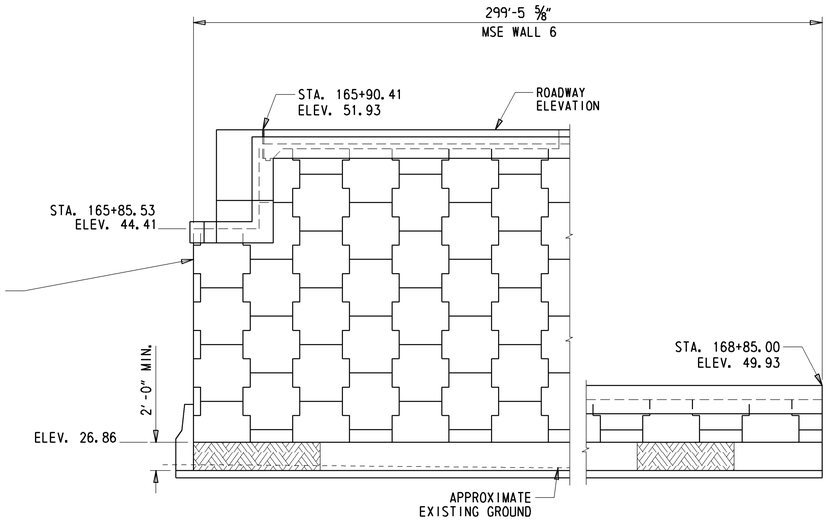

MSE WALL 6 DETAIL

SCALE: 3/16" = 1'-0"

MSE WALL #4

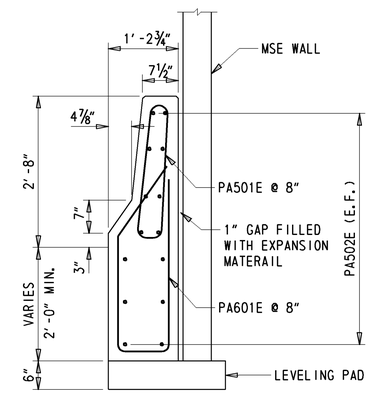

NOTE:
MSE WALL BARRIER SHALL BE DIVIDED INTO 14 EQUAL SECTIONS ACROSS THE LENGTH OF BOTH MSE WALL #3 AND #4

SECTION H-H

MSE WALL BARRIER DETAIL

3/4" = 1'-0"

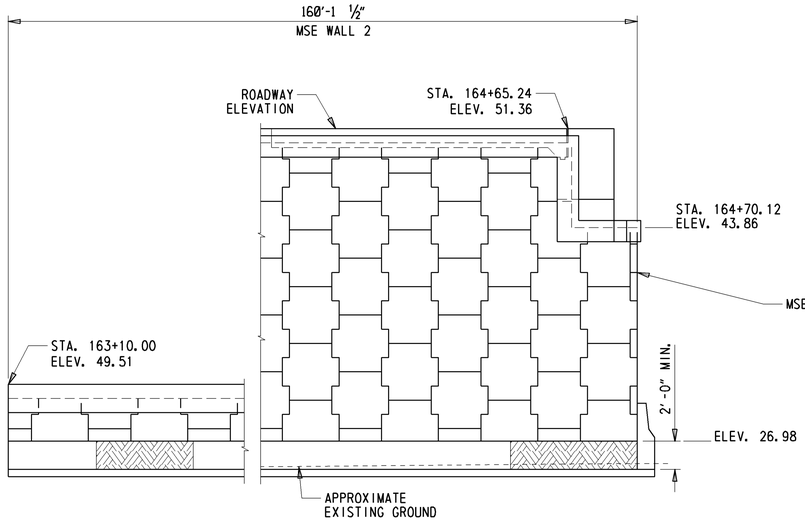

MSE WALL 2 DETAIL

SCALE: 3/16" = 1'-0"

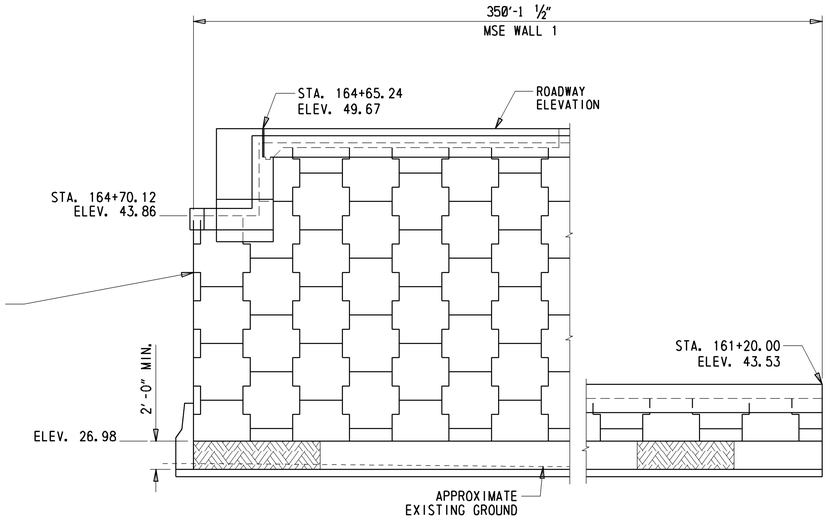

MSE WALL 1 DETAIL

SCALE: 3/16" = 1'-0"

MSE WALL #3

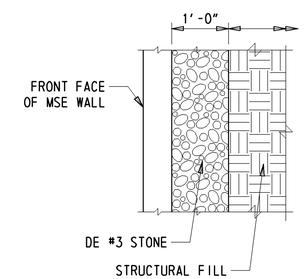

MSE WALL DETAIL

SCALE: 3/4" = 1'-0"

NOTE:
1. LEVELING PAD MAY BE STEPPED IN NO MORE THAN 2'-0' INCREMENTS
2. TOP OF COPING SHALL FOLLOW ROADWAY VERTICAL CURVE BASED ON GRADES AND GEOMETRICS SHEETS

Y:/KENT/008/BRIDGE/2412202/PLANS/ab01.dgn

DELAWARE DEPARTMENT OF TRANSPORTATION	ADDENDUMS / REVISIONS	SCALE: AS NOTED	SR1, LITTLE HEAVEN GRADE SEPARATED INTERSECTION	CONTRACT T200412202	BRIDGE NO. 2-008K&L	MSE WALL DETAILS BRIDGE SHEET 6 OF 26	SHEET NO. 254
				COUNTY KENT	DESIGNED BY: EM		TOTAL SHTS. 641
					CHECKED BY: JNH		

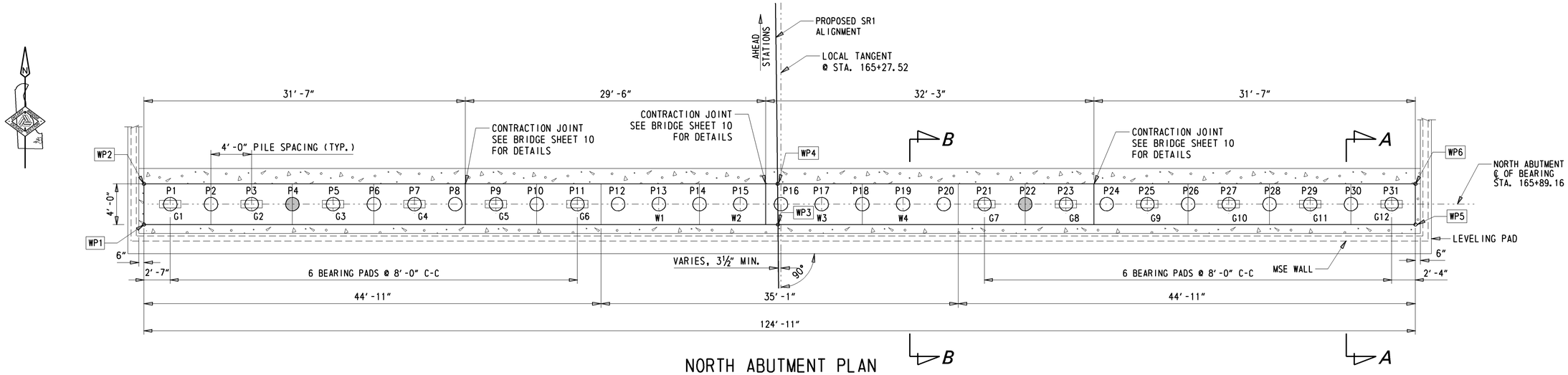

NORTH ABUTMENT PLAN

SCALE: 3/16" = 1'-0"

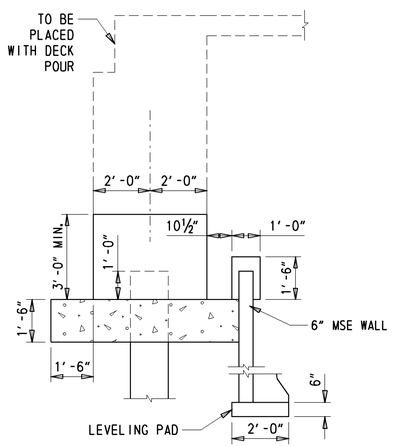

SECTION A-A

SCALE: 3/8" = 1'-0"

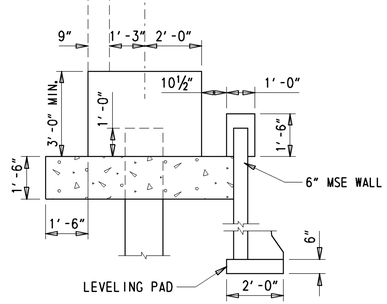

SECTION B-B

SCALE: 3/8" = 1'-0"

WORKING POINT LOCATIONS				
WP	STATION	OFFSET	NORTHING	EASTING
WP1	165+87.77	L 62.29	379453.7147	644762.9351
WP2	165+91.82	L 62.24	379457.7142	644762.8700
WP3	165+87.16	0.00	379454.7286	644825.2199
WP4	165+91.16	0.00	379458.7274	644825.1144
WP5	165+86.55	R 62.62	379455.7479	644887.8354
WP6	165+90.51	R 62.66	379459.7474	644887.7703

BEAM SEAT ELEVATIONS			
G1	45.43	G7	46.83
G2	45.63	G8	47.04
G3	45.84	G9	47.25
G4	46.05	G10	47.45
G5	46.26	G11	47.45
G6	46.47	G12	47.14
W1	46.62	W3	46.41
W2	46.41	W4	46.62

BEAM SEAT WIDTHS			
G1	6'-7"	G6	6'-4"
G2	8'-0"	G12	
G3		G7	6'-8"
G10		G8	
G11		W2	
G4	9'-0"	G9	9'-3"
G5	7'-0"	W4	
W1	9'-6"	W3	9'-8"

NORTH PILE COORDINATES				
PILE	STATION	OFFSET	NORTHING	EASTING
P1	165+89.77	L 59.69	379455.7565	644765.4855
P2	165+89.73	L 55.69	379455.8216	644769.4850
P3	165+89.69	L 51.69	379455.8867	644773.4845
P4	165+89.65	L 47.69	379455.9518	644777.4839
P5	165+89.60	L 43.69	379456.0169	644781.4834
P6	165+89.56	L 39.69	379456.0820	644785.4829
P7	165+89.52	L 35.69	379456.1471	644789.7824
P8	165+89.48	L 31.69	379456.2122	644793.4818
P9	165+89.44	L 27.69	379456.2774	644797.4813
P10	165+89.40	L 23.69	379456.3425	644801.4807
P11	165+89.36	L 19.69	379456.4076	644805.4802
P12	165+89.32	L 15.69	379456.4727	644809.4797
P13	165+89.28	L 11.69	379456.5378	644813.4792
P14	165+89.24	L 7.69	379456.6029	644817.4786
P15	165+89.20	L 3.69	379456.6680	644821.4781
P16	165+89.16	R 0.31	379456.7331	644825.4776

NORTH PILE COORDINATES				
PILE	STATION	OFFSET	NORTHING	EASTING
P17	165+89.12	R 4.31	379456.7982	644829.4771
P18	165+89.08	R 8.31	379456.8633	644833.4765
P19	165+89.04	R 12.31	379456.9284	644837.4760
P20	165+89.00	R 16.31	379456.9935	644841.4754
P21	165+88.95	R 20.31	379457.0586	644845.4750
P22	165+88.91	R 24.31	379457.1237	644849.4744
P23	165+88.87	R 28.31	379457.1888	644853.4740
P24	165+88.83	R 32.31	379457.2539	644857.4733
P25	165+89.79	R 36.31	379457.3190	644861.4729
P26	165+89.75	R 40.31	379457.3841	644865.4723
P27	165+88.71	R 44.31	379457.4493	644869.4718
P28	165+88.67	R 48.31	379457.5144	644873.4712
P29	165+88.63	R 52.31	379457.5795	644877.4708
P30	165+88.60	R 56.31	379457.6446	644881.4701
P31	165+88.56	R 60.31	379457.7097	644885.4697

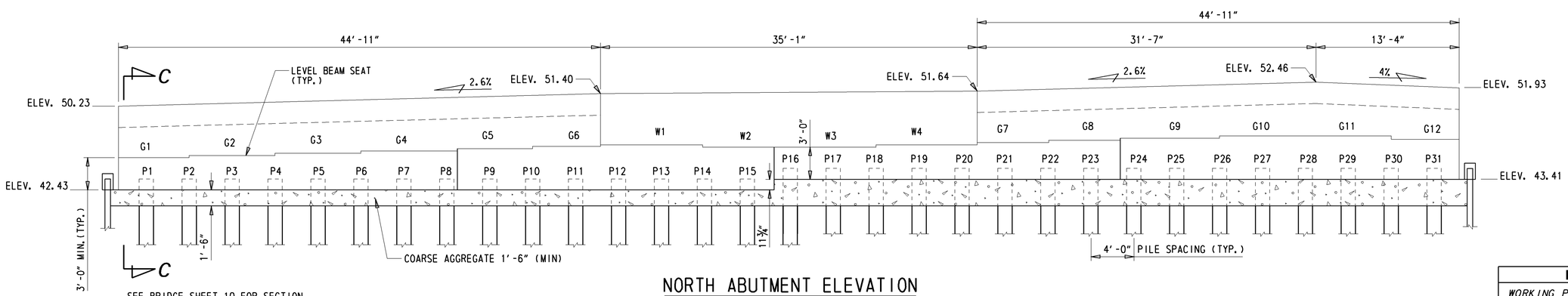

SEE BRIDGE SHEET 10 FOR SECTION

NORTH ABUTMENT ELEVATION

SCALE: 3/16" = 1'-0"

LEGEND	
WORKING POINT	WP5
TEST PILE	●

Y:/KENT/008/BRIDGE/2412202/PLANS/ab01.dgn

DELAWARE DEPARTMENT OF TRANSPORTATION	ADDENDUMS / REVISIONS	SCALE: AS NOTED	SR1, LITTLE HEAVEN GRADE SEPARATED INTERSECTION	CONTRACT T200412202	BRIDGE NO. 2-008K&L	NORTH ABUTMENT PLAN AND ELEVATION BRIDGE SHEET 7 OF 26	SHEET NO. 255
				COUNTY KENT	DESIGNED BY: EM		TOTAL SHTS. 641
					CHECKED BY: JNH		

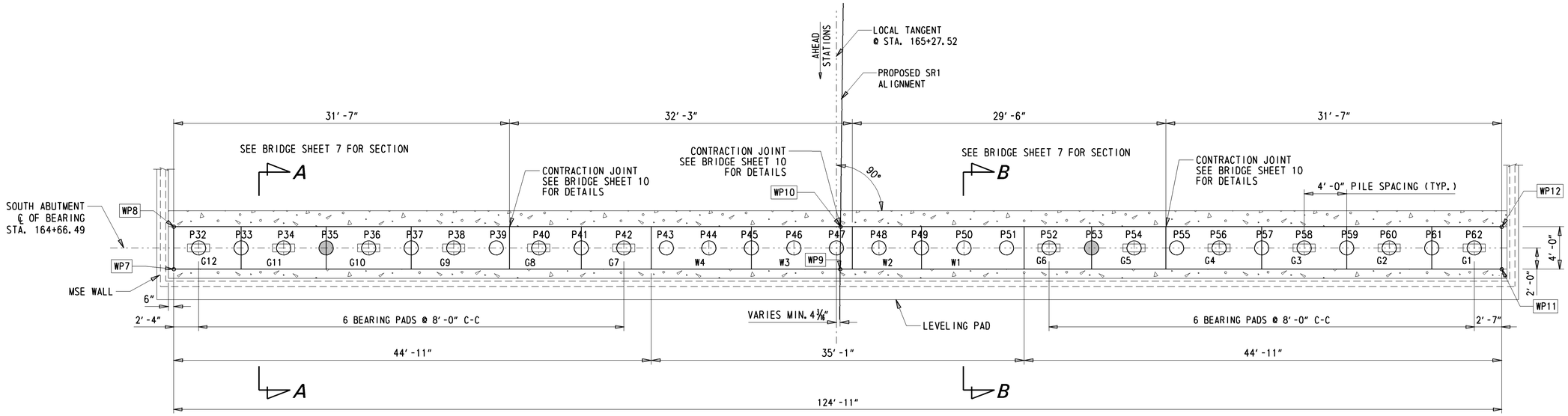

SOUTH ABUTMENT PLAN

SCALE: 3/16" = 1'-0"

WORKING POINT LOCATIONS				
WP	STATION	OFFSET	NORTHING	EASTING
WP7	164+69.09	R 62.68	379337.1001	644889.8306
WP8	164+65.13	R 62.72	379333.1007	644889.8957
WP9	164+68.49	0.00	379336.0799	644827.1560
WP10	164+64.49	0.00	379332.0798	644827.1810
WP11	164+67.88	L 62.23	379335.0671	644764.9303
WP12	164+63.84	L 62.19	379331.0676	644764.9954

BEAM SEAT WIDTHS			
G1	6'-7"	G6	6'-4"
G2	8'-0"	G12	
G3		G7	6'-8"
G10		G8	
G11		W2	
G4	9'-0"	G9	9'-3"
G5	7'-0"	W4	
W1	9'-6"	W3	9'-8"

BEAM SEAT ELEVATIONS			
G1	44.87	G7	46.27
G2	45.08	G8	46.48
G3	45.28	G9	46.69
G4	45.49	G10	46.90
G5	45.70	G11	46.90
G6	45.91	G12	46.59
W1	46.06	W3	45.86
W2	45.86	W4	46.06

SOUTH PILE COORDINATES				
PILE	STATION	OFFSET	NORTHING	EASTING
P32	164+67.09	R 60.37	379335.0624	644887.5300
P33	164+67.05	R 56.37	379334.9973	644883.5305
P34	164+67.01	R 52.37	379334.9322	644879.5311
P35	164+66.97	R 48.37	379334.8671	644875.5316
P36	164+66.93	R 44.37	379334.8020	644871.5321
P37	164+66.89	R 40.37	379334.7369	644867.5327
P38	164+66.85	R 36.37	379334.6718	644863.5332
P39	164+66.81	R 32.37	379334.6067	644859.5338
P40	164+66.77	R 28.37	379334.5416	644855.5343
P41	164+66.73	R 24.37	379334.4765	644851.5348
P42	164+66.69	R 20.37	379334.4114	644847.5353
P43	164+66.65	R 16.37	379334.3463	644843.5359
P44	164+66.61	R 12.37	379334.2812	644839.5364
P45	164+66.57	R 8.37	379334.2161	644865.5369
P46	164+66.53	R 4.37	379334.1510	644831.5374
P47	164+66.49	R 0.37	379334.0859	644827.5380

SOUTH PILE COORDINATES				
PILE	STATION	OFFSET	NORTHING	EASTING
P48	164+66.45	L 3.63	379334.0208	644823.5385
P49	164+66.41	L 7.63	379333.9557	644819.5391
P50	164+66.37	L 11.63	379333.8906	344815.5396
P51	164+66.33	L 15.63	379333.8255	344811.5401
P52	164+66.29	L 19.63	379333.7604	644807.5405
P53	164+66.25	L 23.63	379333.6953	644803.5412
P54	164+66.21	L 27.63	379333.6302	644799.5416
P55	164+66.17	L 31.63	379333.5651	644795.5422
P56	164+66.13	L 35.63	379333.5000	644791.5427
P57	164+66.09	L 39.63	379333.4349	644787.5433
P58	164+66.05	L 43.63	379333.3698	644783.5437
P59	164+66.01	L 47.63	379333.3047	644779.5444
P60	164+65.97	L 51.63	379333.2396	644775.5448
P61	164+65.93	L 55.63	379333.1745	644771.5454
P62	164+65.89	L 59.63	379333.1094	644767.5458

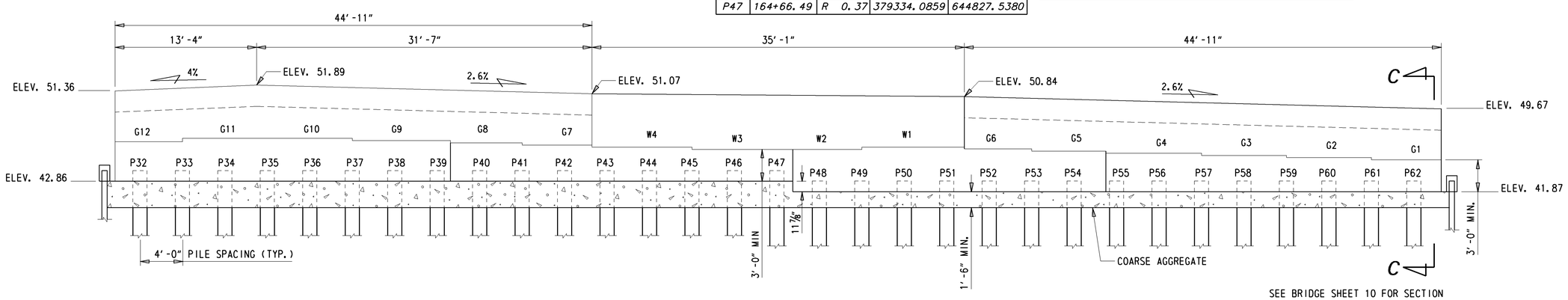

SOUTH ABUTMENT ELEVATION

SCALE: 3/16" = 1'-0"

Y:\KENT\BRIDGE\2412202\PLANS\BRIDGE\ab02.dgn

DELAWARE DEPARTMENT OF TRANSPORTATION	ADDENDUMS / REVISIONS	SCALE: AS NOTED	SR1, LITTLE HEAVEN GRADE SEPARATED INTERSECTION	CONTRACT T200412202	BRIDGE NO. 2-008K&L	SOUTH ABUTMENT PLAN AND ELEVATION BRIDGE SHEET 8 OF 26	SHEET NO. 256
				COUNTY KENT	DESIGNED BY: EM		TOTAL SHTS. 641
					CHECKED BY: JNH		

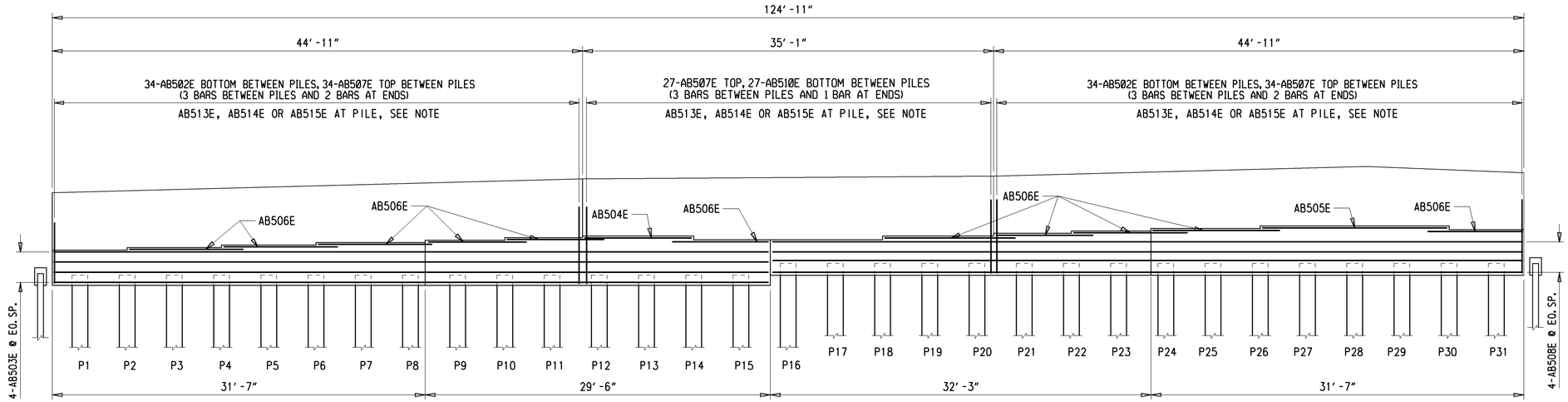

NORTH ABUTMENT REINFORCEMENT

SCALE: 3/16" = 1'-0"

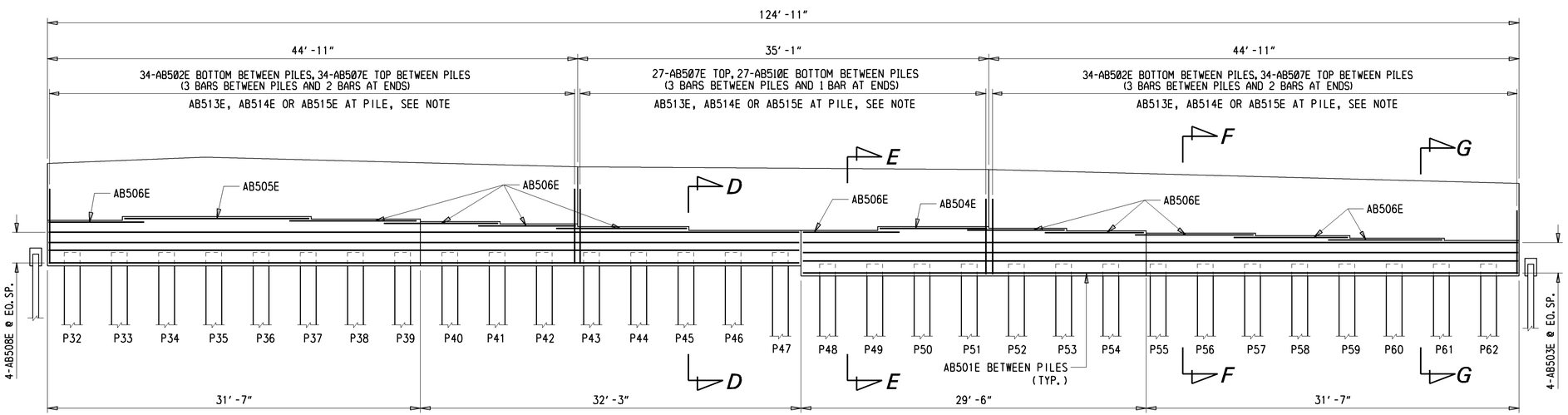

SOUTH ABUTMENT REINFORCEMENT

SCALE: 3/16" = 1'-0"

REINFORCMENT AT PILES NOTE:
P1-P4, P16-P20, P43-P47, AND P59-P62 SHALL HAVE AB513E OVER THEM.
P5-P10, P21-P26, P30-P32, P37-P42, AND P53-P58 SHALL HAVE AB514E OVER THEM.
P11-P15, P27-P29, P33-P36, AND P48-P52 SHALL HAVE AB515E OVER THEM.

NOTES:
1. SEE BRIDGE SHEET 10 FOR ABUTMENT DETAILS
2. MSE WALLS NOT SHOWN FOR CLARITY.
3. FIELD CUT BARS AS NEEDED. PAYMENT UNDER ITEM 604000.

Y:/KENT/BRIDGE/2412202/PLANS/BRIDGE/ab03.dgn

DELAWARE DEPARTMENT OF TRANSPORTATION	ADDENDUMS / REVISIONS	SCALE: AS NOTED	SR1, LITTLE HEAVEN GRADE SEPARATED INTERSECTION	CONTRACT T200412202	BRIDGE NO. 2-008K&L	ABUTMENT REINFORCING DETAILS BRIDGE SHEET 9 OF 26	SHEET NO. 257
				COUNTY KENT	DESIGNED BY: EM		TOTAL SHTS. 641
					CHECKED BY: JNH		

NOTE: FIELD CUT BARS AS NECESSARY. PAYMENT UNDER ITEM 604000.

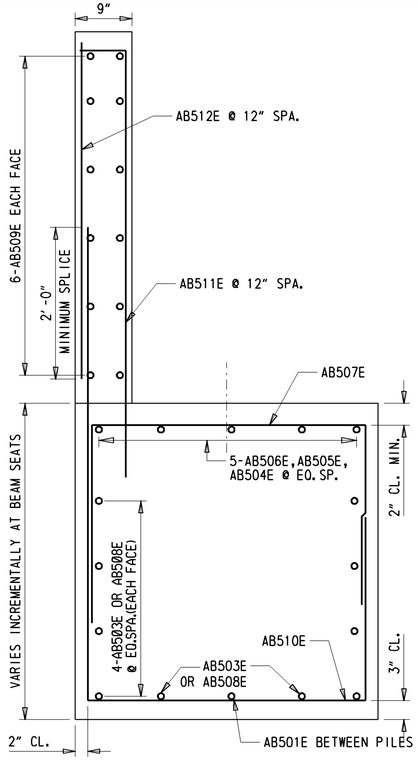

SECTION E-E

SCALE: 1" = 1'-0"

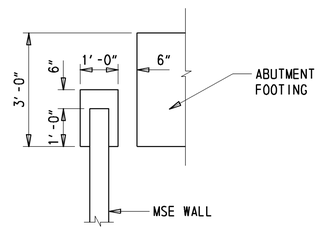

MSE WALL ELEVATION (TYP.)

SCALE: ½" = 1'-0"

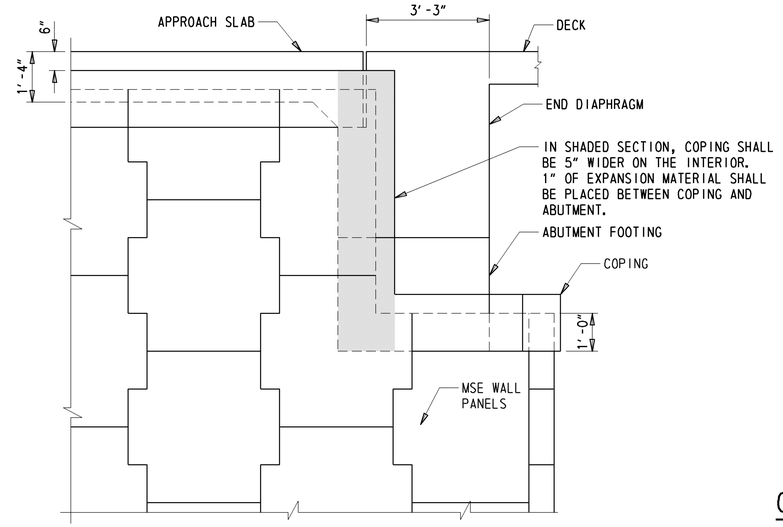

ABUTMENT SECTION

(SECTION C-C)

SCALE: ½" = 1'-0"

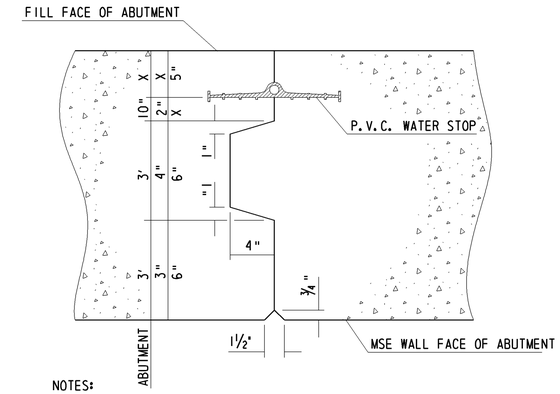

NOTES:
1. "X" SHALL VARY WITH DESIGN DIMENSIONS.
2. REINFORCING SHALL PASS THROUGH CONSTRUCTION JOINT.

CONTRACTION OR CONSTRUCTION JOINT DETAIL

SCALE : N.T.S.

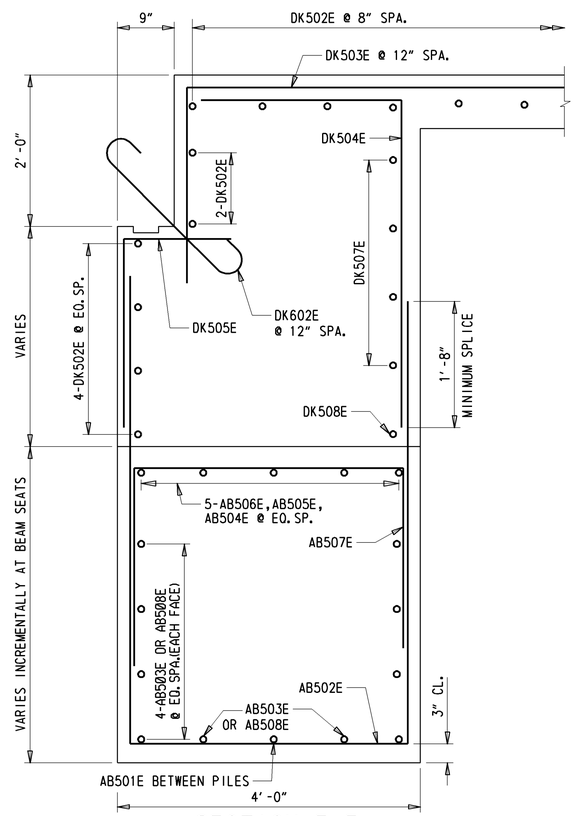

SECTION F-F

SCALE: 1" = 1'-0"

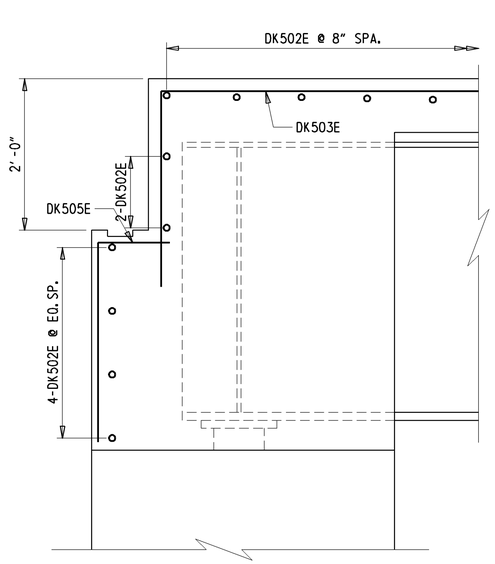

SECTION G-G

SCALE: 1" = 1'-0"

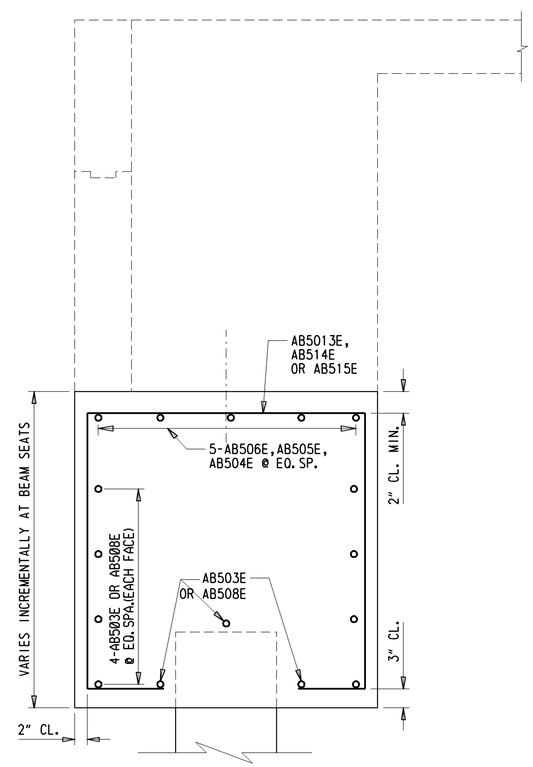

SECTION D-D

SCALE: 1" = 1'-0"

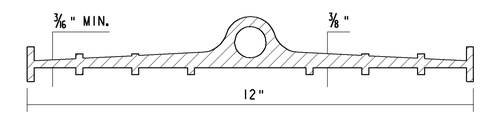

P.V.C. WATER STOP

SCALE: N.T.S.

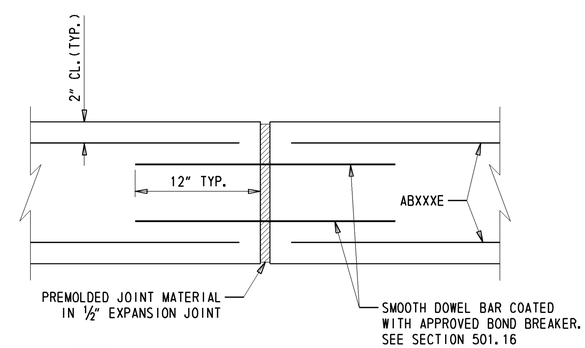

NOTES:
1. ALL EXPOSED JOINTS SHALL HAVE A 3/4" CHAMFER
2. REINFORCING SHALL PASS THROUGH EXPANSION JOINT

TYPICAL EXPANSION JOINT DETAIL

N.T.S.

Y:\KENT*\BRIDGE*2202\PLANS\BRIDGE\AB04.DGN

DELAWARE DEPARTMENT OF TRANSPORTATION	ADDENDUMS / REVISIONS	SCALE: AS NOTED	SR1, LITTLE HEAVEN GRADE SEPARATED INTERSECTION	CONTRACT T200412202 / COUNTY KENT	BRIDGE NO. 2-008K&L / DESIGNED BY: EM / CHECKED BY: JNH	ABUTMENT DETAILS BRIDGE SHEET 10 OF 26	SHEET NO. 258 / TOTAL SHTS. 641

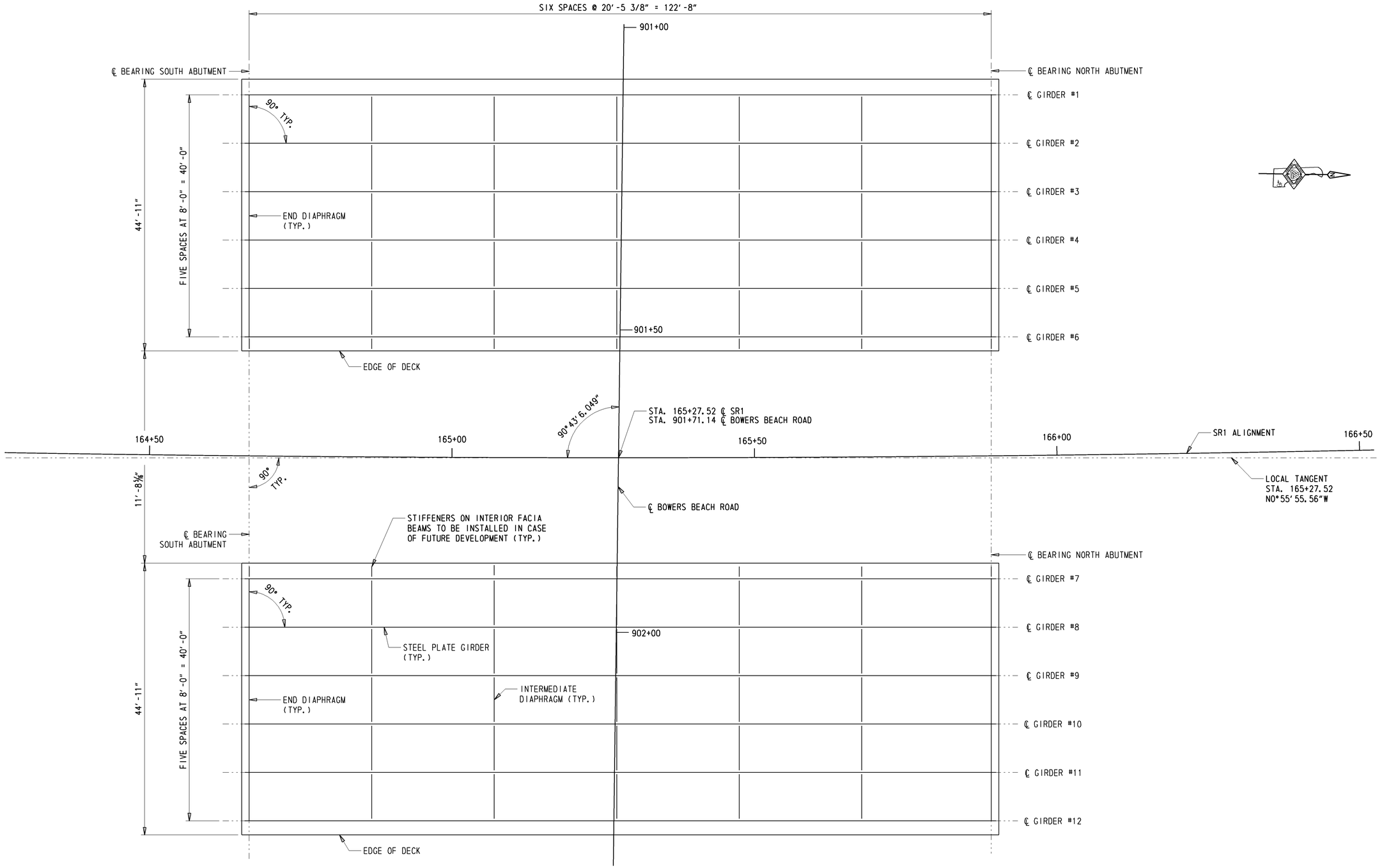

FRAMING PLAN

SCALE: 1/8" = 1'-0"

NOTE:
1. SHEAR CONNECTORS ARE TO BE AUTOMATIC END-WELDED TYPE.
2. DIMENSIONS ARE MEASURED FROM LOCAL TANGENT.

DELAWARE DEPARTMENT OF TRANSPORTATION	ADDENDUMS / REVISIONS	SCALE: AS NOTED	SR1, LITTLE HEAVEN GRADE SEPARATED INTERSECTION	CONTRACT T200412202	BRIDGE NO. 2-008K&L	FRAMING PLAN BRIDGE SHEET 11 OF 26	SHEET NO. 259
				COUNTY KENT	DESIGNED BY: EM		TOTAL SHTS. 641
					CHECKED BY: JNH		

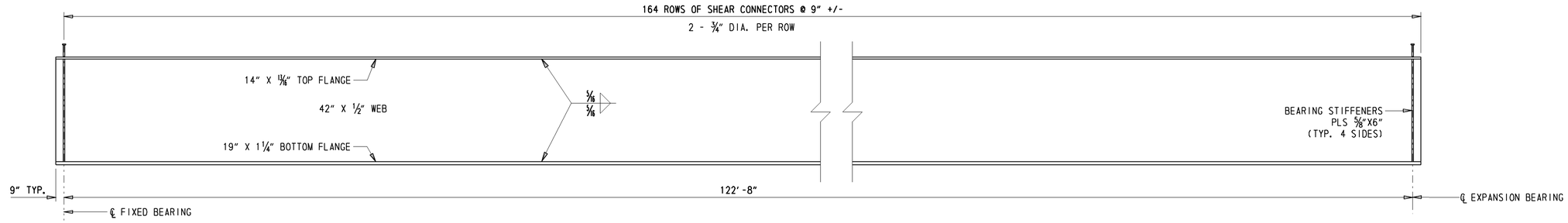

BEAM ELEVATION

SCALE: 1/2" = 1'-0"

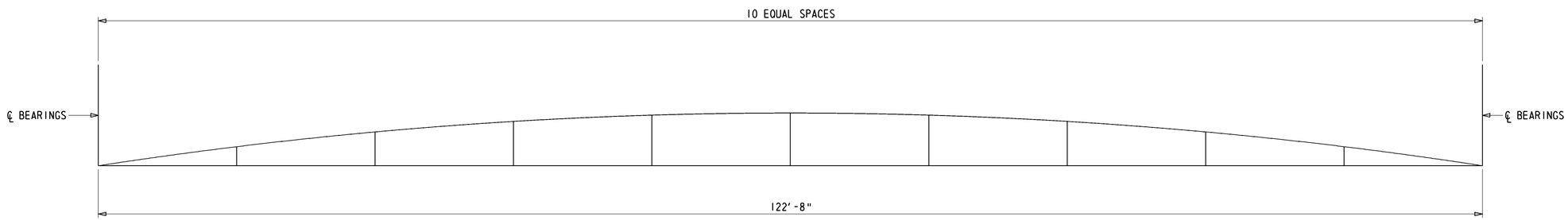

DEFLECTION AND TOTAL CAMBER (INCH)										
GIRDER		0.1L	0.2L	0.3L	0.4L	0.5L	0.6L	0.7L	0.8L	0.9L
GIRDERS 1 & 6 GIRDERS 7 & 12	DLS	9/16	1 1/8	1 1/2	1 3/4	1 7/8	1 3/4	1 1/2	1 1/8	9/16
	DLC	2 5/16	4 3/8	6	7 1/16	7 3/8	7 1/16	6	4 3/8	2 5/16
	SDL	1/8	1/4	3/8	7/16	7/16	7/16	3/8	1/4	1/8
	TD	3 1/16	5 3/4	7 7/8	9 1/4	9 11/16	9 1/4	7 7/8	5 3/4	3 1/16
	VCO	7/16	3/4	1 1/16	1 3/16	1 1/4	1 3/16	1	11/16	7/16
	TD+VCO	3 1/2	6 1/2	8 15/16	10 3/8	10 5/16	10 3/8	8 7/8	6 5/16	3 7/16
GIRDERS 2-5 GIRDERS 8-11	DLS	9/16	1 1/8	1 1/2	1 3/4	1 7/8	1 3/4	1 1/2	1 1/8	9/16
	DLC	2 7/8	5 3/8	7 3/8	8 5/8	9 1/16	8 5/8	7 3/8	5 3/8	2 7/8
	SDL	1/8	5/16	3/8	7/16	1/2	7/16	3/8	5/16	1/8
	TD	3 9/16	6 11/16	9 5/16	10 7/8	11 7/16	10 7/8	9 5/16	6 11/16	3 9/16
	VCO	7/16	3/4	1 1/16	1 3/16	1 1/4	1 3/16	1	11/16	7/16
	TD+VCO	4	7 9/16	10 5/16	12 1/16	12 5/8	12 1/16	10 5/16	7 9/16	4

LEGEND

DLS - DENOTES DEFLECTION DUE TO STRUCTURAL STEEL GIRDER

DLC - DENOTES DEFLECTION DUE TO DECK SLAB, HAUNCH, SIP FORMS

SDL - DENOTES DEFLECTION DUE TO PARAPET AND FUTURE WEARING SURFACE

TD - DENOTES TOTAL DEAD LOAD DEFLECTION

VCO - DENOTES CAMBER FOR VERTICAL CURVE ORDINATE DUE TO ROADWAY PROFILE

ALL BEAMS SHALL BE CAMBERED FOR DEAD LOAD DEFLECTION ORDINATES TO THE DIMENSIONS SHOWN ON THESE PLANS. THE CAMBER TOLERANCE IS ZERO UNDER TO THREE QUARTERS (3/4) INCH OVER.

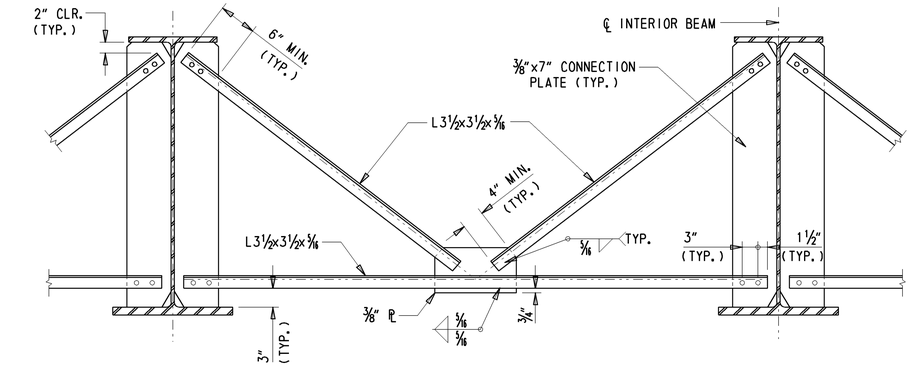

INTERMEDIATE DIAPHRAGM

SCALE: 1" = 1'-0"

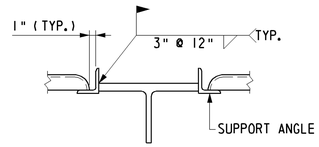

COMPRESSION FLANGE FOR S.I.P. FORMS

SCALE: 1" = 1'-0"

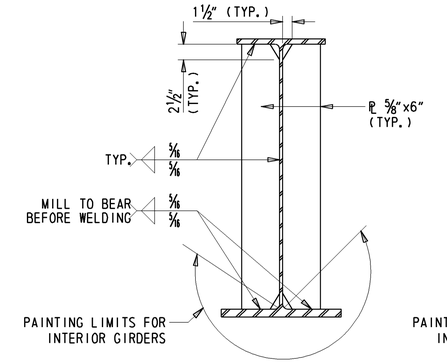

BEARING STIFFENER

SCALE: 1" = 1'-0"

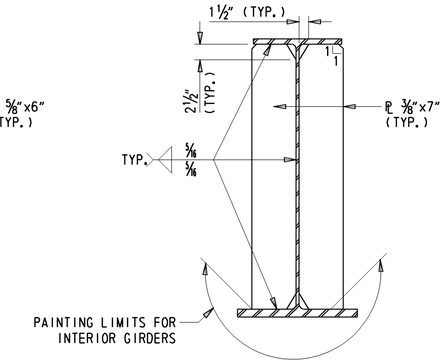

CONNECTION PLATE

SCALE: 1" = 1'-0"

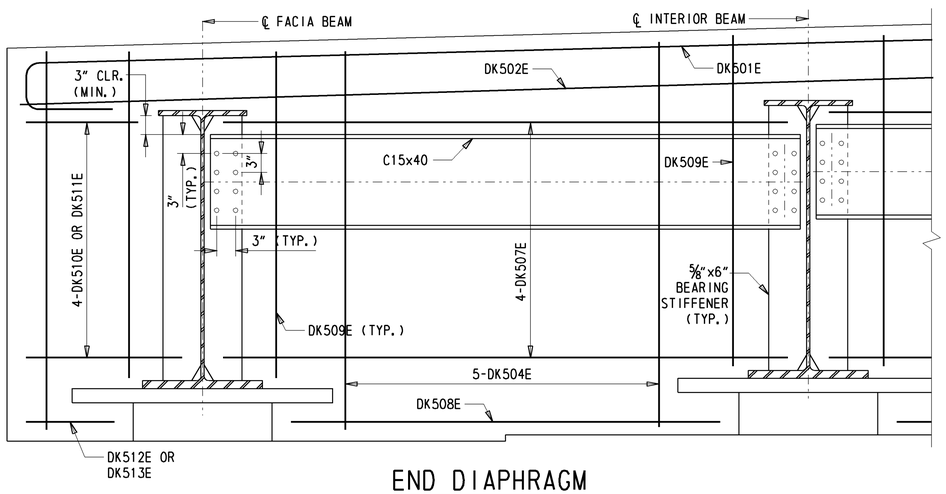

END DIAPHRAGM

SCALE: 1" = 1'-0"

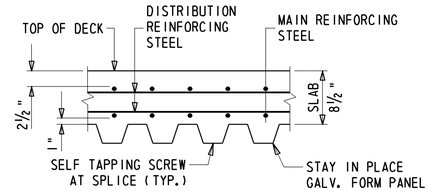

STEEL FORM NOTES:

1. FORMS SHALL BE VERTICALLY ADJUSTED TO ATTAIN LINE AND GRADE REQUIRED ON PLANS.
2. CONCRETE PAYMENT SHALL BE FOR SLAB THICKNESS. NO PAYMENT SHALL BE MADE FOR CONCRETE IN FORM CORRUGATIONS.
3. REFER TO SECTION 602.20 FOR MATERIAL AND PAYMENT INFO.

STEEL FORM SECTION

SCALE: 1" = 1'-0"

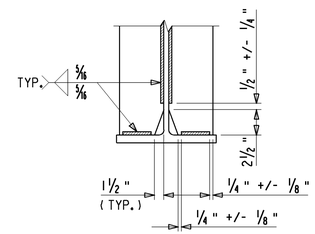

STIFFENER & CONNECTION PLATE WELD TERMINATION

NOT TO SCALE

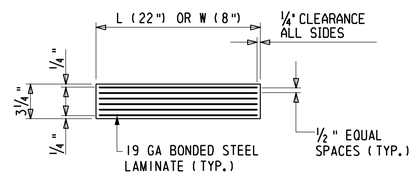

LAMINATED ELASTOMERIC PAD

NOT TO SCALE

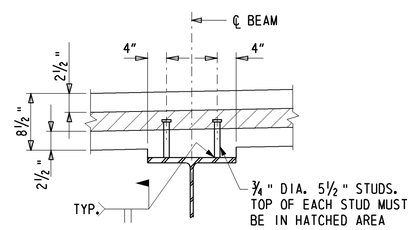

SHEAR CONNECTORS

SCALE: 1" = 1'-0"

GENERAL NOTES:

1. FOR FRAMING PLAN, SEE BRIDGE SHEET 11.
2. ALL BOLTS FOR DIAPHRAGM CONNECTIONS SHALL BE TYPE 3 1" DIA. HIGH STRENGTH BOLTS AASHTO M164 (ASTM A325) IN 1 1/8" DIA. OPEN HOLES.
3. PAYMENT FOR ELASTOMETRIC PADS, SOLE PLATES & ANCHOR BOLTS SHALL BE INCIDENTAL TO ITEM "605002 - STRUCTURAL STEEL".
4. CONTRACTOR SHALL BE RESPONSIBLE FOR SECURING THE GIRDER SYSTEM UNTIL THE DECK HAS CURED.
5. ALL BEAM ENDS SHALL BE PAINTED FOR A DISTANCE OF 5 FEET. FASICA GIRDERS SHALL BE PAINTD THEIR ENTIRE LENGTH. SEE DETAIL FOR PAINTING LIMITS ON FASCIA AND INTERIOR GIRDERS. PAINTING SHALL BE IN ACCORDANCE WITH FEDERAL STANDARD 595C, AND PAINT COLOR FS 20059 SHALL BE USED. PAID UNDER ITEM 605002 - STRUCTURAL STEEL.

BEARING NOTES:

1. STEEL FOR BEARING LAMINATES SHALL CONFORM TO ASTM A709 GRADE 36. SOLE PLATE SHALL BE ASTM A709 GRADE 70W TO MATCH FLANGES OF GIRDERS.
2. NEOPRENE IN BEARING PAD SHALL HAVE A SHORE 'A' DUROMETER HARDNESS OF 60 POINTS AND A SHEAR MODULUS OF 0.150 KSI.
3. ANCHOR BOLTS AND WASHERS SHALL BE UNPAINTED A709 GRADE 50 GALVANIZED STEEL. ALL NUTS SHALL BE UNPAINTED A307 GALVANIZED STEEL. SET NUTS 1/4" CLEAR OF SOLE PLATES AND BURR THREADS ABOVE NUTS.
4. USE SWEDGED ANCHOR BOLTS. BOLTS MAY BE CAST-IN-PLACE OR GROUTED WITH NON-SHRINK GROUT IN PREFORMED (SLEEVED OR DRILLED) HOLES. THE PREFORMED & DRILLED HOLES SHALL HAVE A DIAMETER OF AT LEAST 1" LARGER THAN THE DIAMETER OF THE BOLTS.
5. SOLE PLATES SHALL NOT BE BEVELED.
6. STEEL SURFACES OF SOLE PLATE TO BE MACHINE FINISHED AS SHOWN IN THE DETAILS, MEASURED IN ACCORDANCE WITH ANSI B46.1.
7. STEEL PLATES SHALL MEET A FLATNESS REQUIREMENT OF 0.5 PERCENT IN THE DIRECTION BEING MEASURED (WIDTH, LENGTH, AND DIAGONALS) MAXIMUM, BUT NOT TO EXCEED 1/8 INCH.
8. BEARING PADS SHALL BE PLACED NORMAL TO CENTERLINE OF BEAM.
9. FILL SLOTS AND HOLES IN STEEL AROUND ANCHOR BOLTS WITH AN APPROVED NON-HARDENING CAULKING COMPOUND OR ELASTIC JOINT SEALER.
10. FOR FIXED BEARINGS: USE 2 1/8" DIA. HOLES IN SOLE PLATE AND 3/8"x3" DIA. WASHERS WITH 1 5/8" DIA. HOLE IN WASHER.

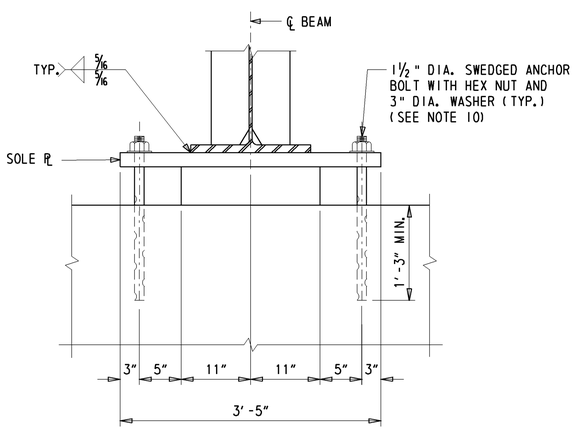

BEARING ELEVATION

SCALE: 1" = 1'-0"

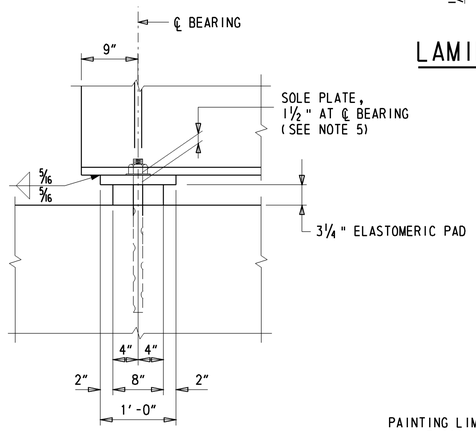

SIDE ELEVATION

SCALE: 1" = 1'-0"

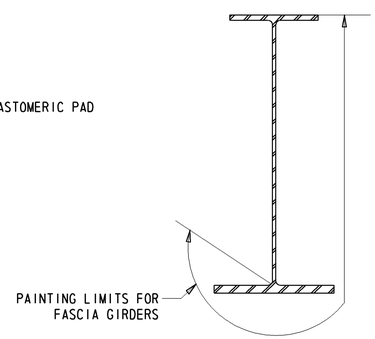

FASCIA PAINTING LIMITS

SCALE: 1" = 1'-0"

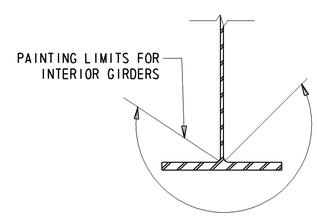

INTERIOR PAINTING LIMITS

SCALE: 1" = 1'-0"

DELAWARE DEPARTMENT OF TRANSPORTATION	ADDENDUMS / REVISIONS	SCALE: AS NOTED	SR1, LITTLE HEAVEN GRADE SEPARATED INTERSECTION	CONTRACT T200412202 / COUNTY KENT	BRIDGE NO. 2-008K&L / DESIGNED BY: EMILY MAURER / CHECKED BY: JNH	BEAM DETAILS BRIDGE SHEET 13 OF 26	SHEET NO. 261 / TOTAL SHTS. 641

Y:/KENT/008/BRIDGE/2412202/Plans/Bridge/bm01.dgn

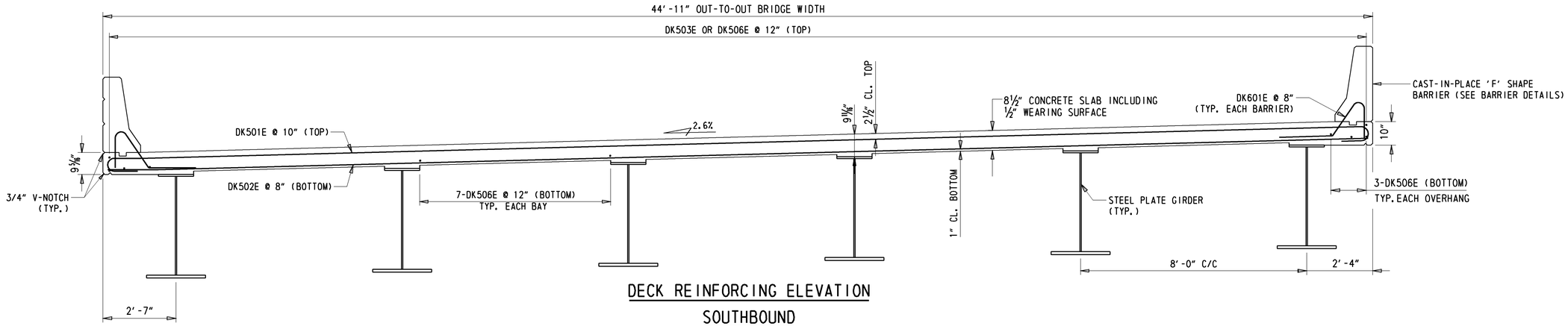

DECK REINFORCING ELEVATION

SOUTHBOUND

SCALE: N.T.S.

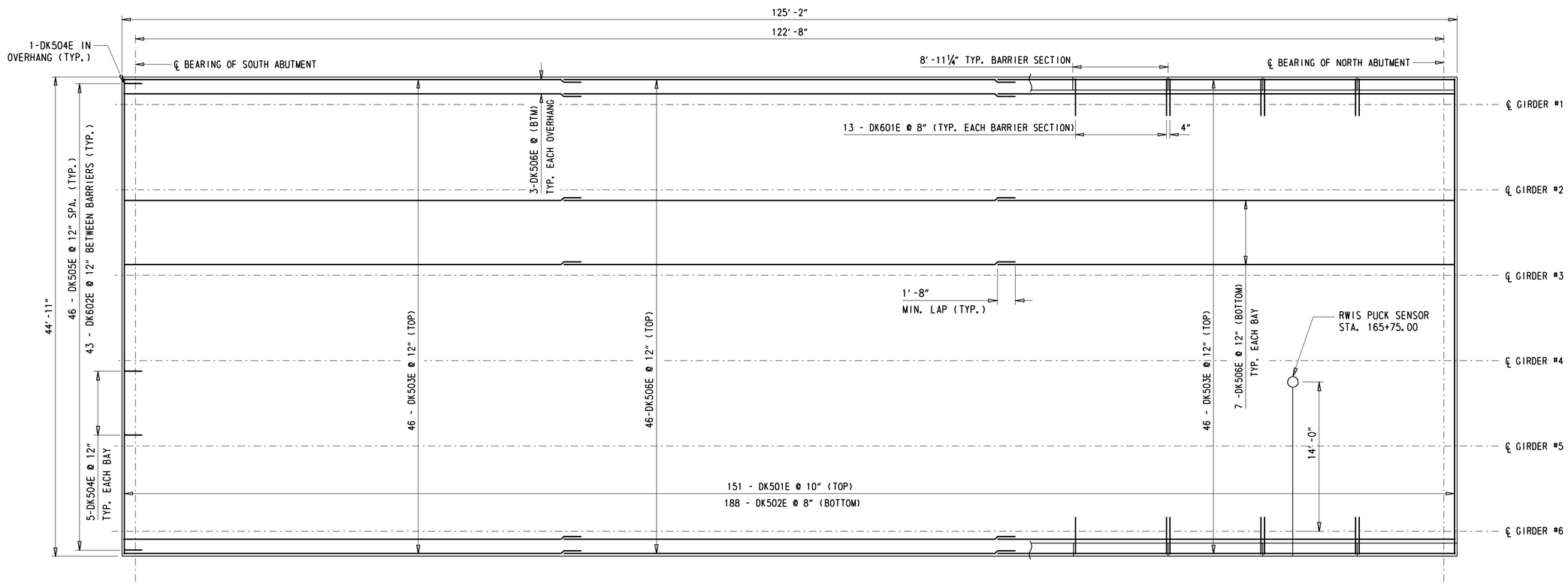

DECK REINFORCING PLAN

SCALE: 3/16" = 1'-0"

NOTES

1. ADJUST REINFORCING BARS TO ALLOW FOR SHEAR CONNECTORS
2. SR1 SOUTHBOUND REINFORCING SHOWN. SR1 NORTHBOUND REINFORCING SIMILAR.

Y:/KENT/008/BRIDGE/2412202/Plans/Bridge/dk01

DELAWARE DEPARTMENT OF TRANSPORTATION	ADDENDUMS / REVISIONS	SCALE: AS NOTED	SR1, LITTLE HEAVEN GRADE SEPARATED INTERSECTION	CONTRACT T200412202	BRIDGE NO. 2-008K&L	DECK REINFORCING PLAN BRIDGE SHEET 14 OF 26	SHEET NO. 262
				COUNTY KENT	DESIGNED BY: EM / JAT		TOTAL SHTS. 641
					CHECKED BY: JNH		

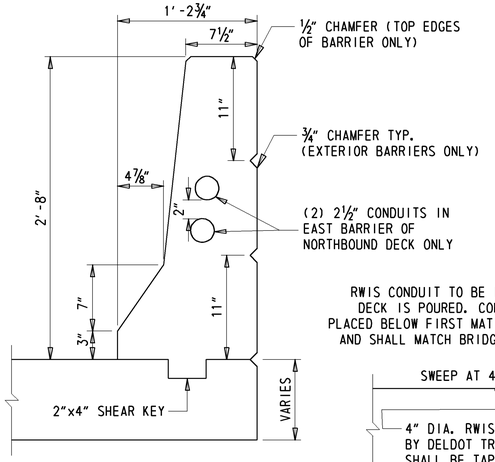

DECK BARRIER SECTION

SCALE: 1½" = 1'-0"

NOTES:
1. SEE BRIDGE SHEET 10 FOR RWIS LOCATION
2. ADJUST REINFORCING IN BARRIER AS NECESSARY TO INSTALL JUNCTION BOX AND CONDUITS. REINFORCING SHALL NOT BE CUT.

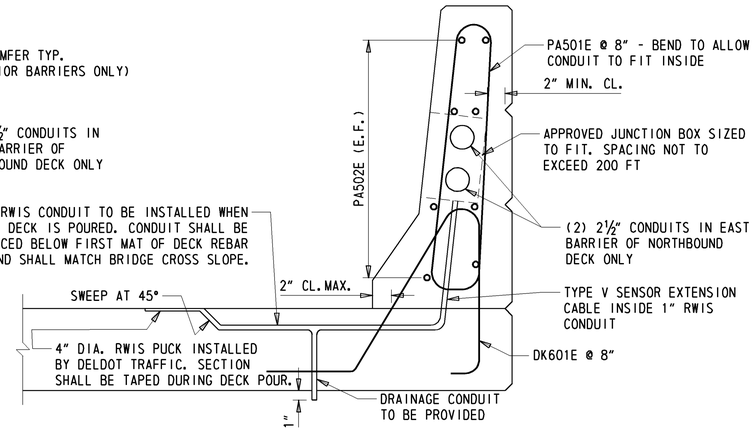

TYPICAL BARRIER REINFORCEMENT

SCALE: 1½" = 1'-0"

NOTES:
1. CONDUIT SHALL TRANSITION OUT OF BARRIER ON INSIDE FACE OF MSE WALL AND GUARDRAIL POSTS. SEE BRIDGE SHEET 18.
2. CONDUIT MUST TRANSITION FROM BARRIER TO GRADE WITHIN END SECTION OF BARRIER.

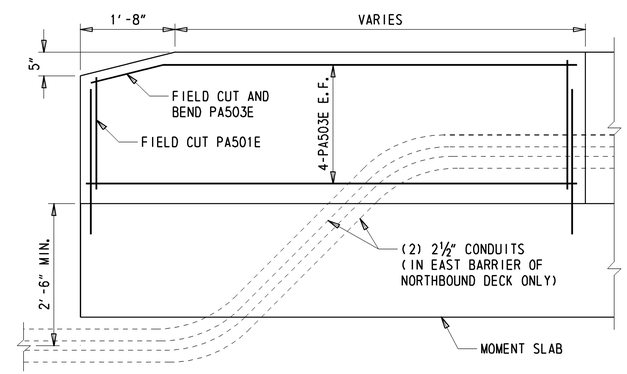

TYPICAL END BARRIER ELEVATION

SCALE: ¾" = 1'-0"

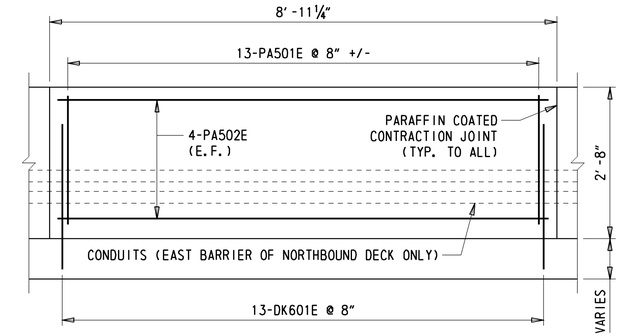

NOTE: CONTRACTION JOINTS SHALL HAVE ¾" CHAMFER

TYPICAL DECK BARRIER ELEVATION

SCALE: ¾" = 1'-0"

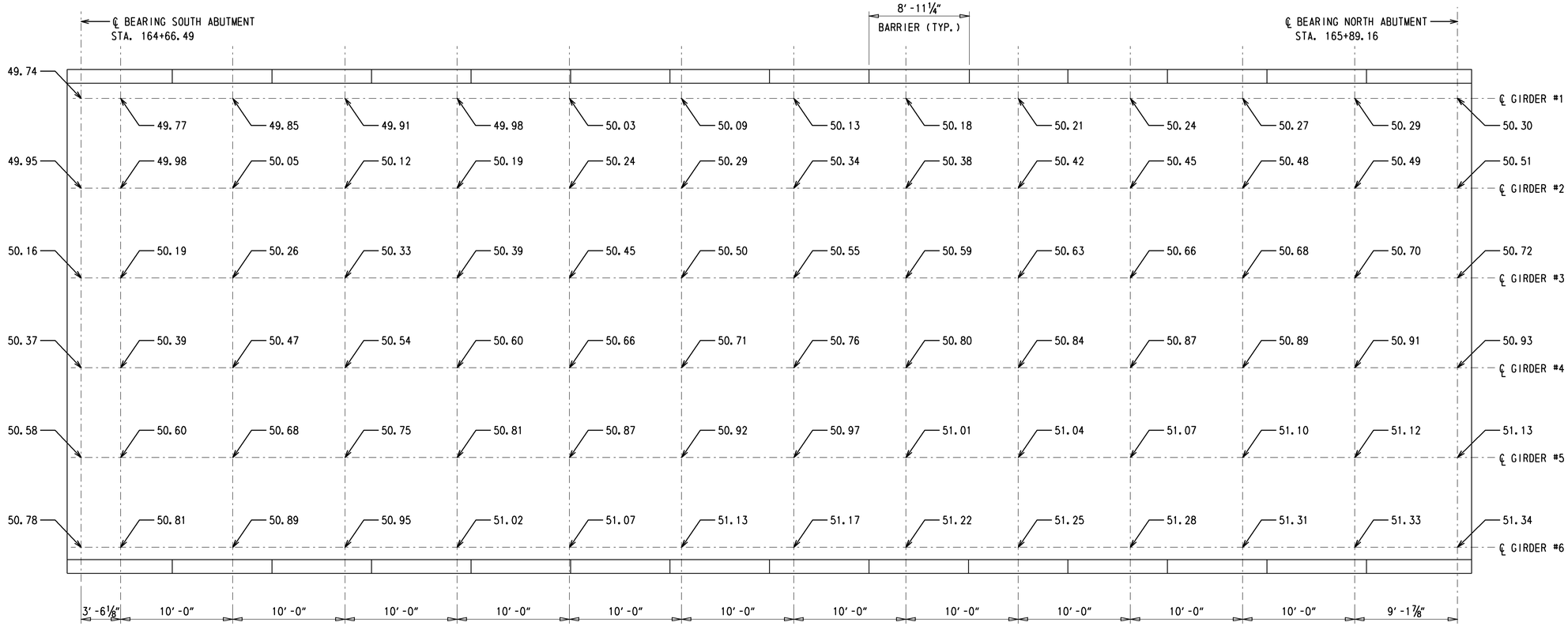

SR1 SOUTHBOUND DECK ELEVATIONS

SCALE: 3/16" = 1'-0"

NOTES:
1. DECK SHALL BE POURED UP HILL.
2. DECK SHALL BE PLACED IN SINGLE POUR UNLESS APPROVAL OF THE ENGINEER IS OBTAINED.
3. SEE UTILITY RELOCATION, LIGHTING, AND ITMS CONDUIT PLANS FOR LOCATION OF JUNCTION BOXES AND RWIS PUCK SENSORS.
4. JUNCTION BOXES SHALL BE PLACED A MINIMUM OF 2'-0" FROM BARRIER JOINTS.

DELAWARE DEPARTMENT OF TRANSPORTATION	ADDENDUMS / REVISIONS	SCALE: AS NOTED	SR1, LITTLE HEAVEN GRADE SEPARATED INTERSECTION	CONTRACT T200412202	BRIDGE NO. 2-008K&L	FINISHED DECK ELEVATIONS BRIDGE SHEET 15 OF 26	SHEET NO. 263
				COUNTY KENT	DESIGNED BY: EM		TOTAL SHTS. 641
					CHECKED BY: JNH		

Y:/KENT/008/BRIDGE/2412202/Plans/Bridge/dk02

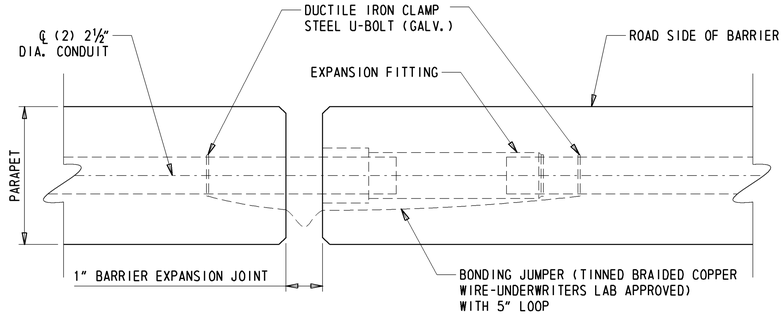

EXPANSION JOINT FOR CONDUIT IN BARRIER

NOT TO SCALE

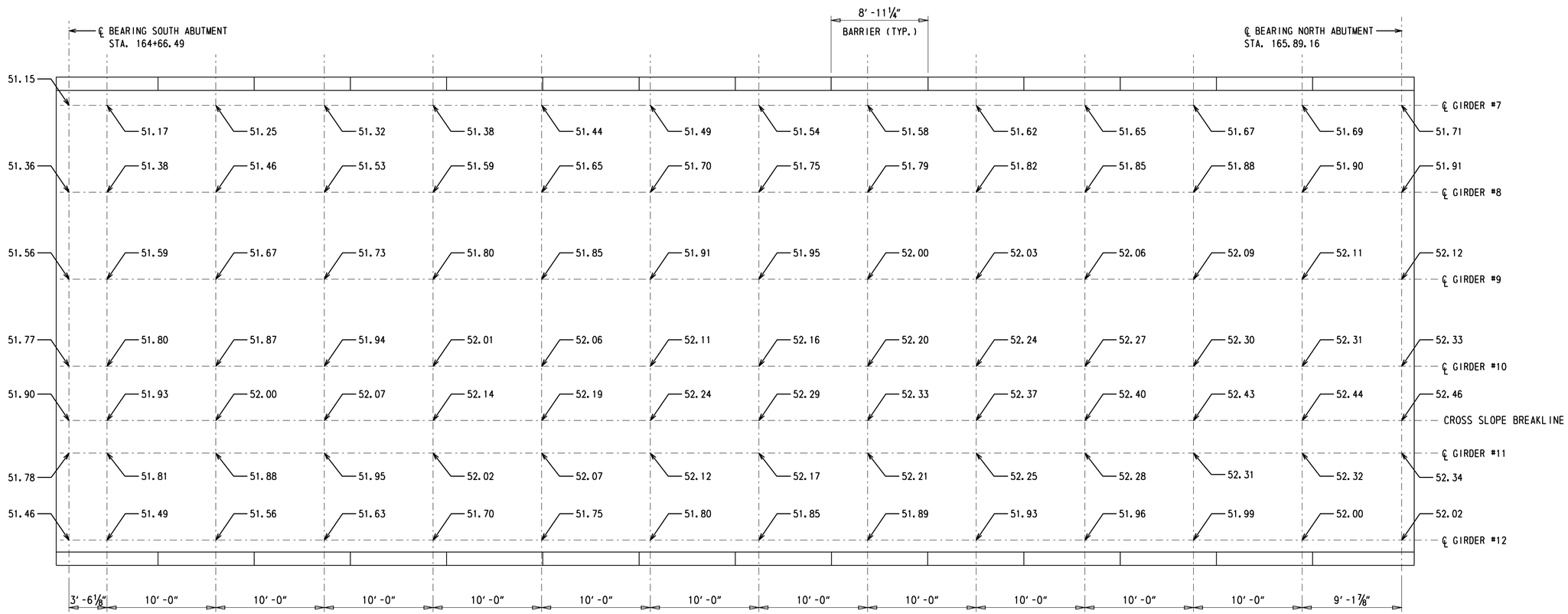

SR1 NORTHBOUND DECK ELEVATIONS

SCALE: 3/16" = 1'-0"

NOTES:
1. DECK SHALL BE POURED UP HILL.
2. DECK SHALL BE PLACED IN SINGLE POUR UNLESS APPROVAL OF THE ENGINEER IS OBTAINED.
3. FOR BARRIER DETAILS SEE BRIDGE SHEET 15.
4. CONDUIT SHALL BE INSTALLED IN EAST BARRIER OF NORTHBOUND SR1 ONLY.

DELAWARE DEPARTMENT OF TRANSPORTATION	ADDENDUMS / REVISIONS	SCALE: AS NOTED	SR1, LITTLE HEAVEN GRADE SEPARATED INTERSECTION	CONTRACT T200412202	BRIDGE NO. 2-008K&L	FINISHED DECK ELEVATIONS BRIDGE SHEET 16 OF 26	SHEET NO. 264
				COUNTY KENT	DESIGNED BY: EM		TOTAL SHTS. 641
					CHECKED BY: JNH		

Y:/KENT/008/BRIDGE/2412202/Plans/Bridge/dk03.dgn

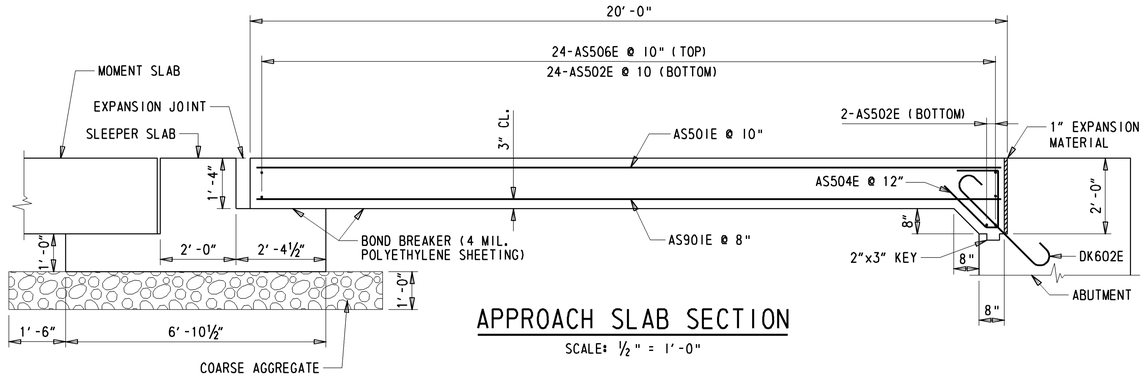

APPROACH SLAB SECTION

SCALE: ½" = 1'-0"

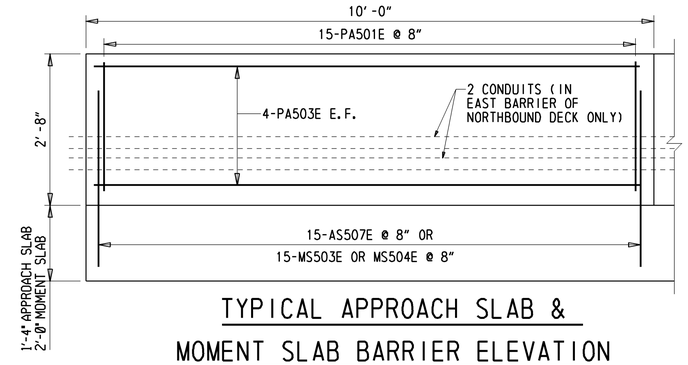

TYPICAL APPROACH SLAB & MOMENT SLAB BARRIER ELEVATION

SCALE: ¾" = 1'-0"

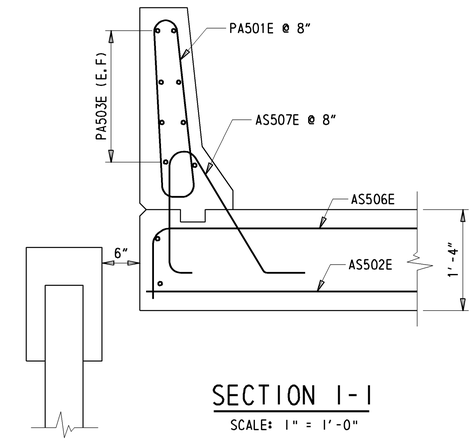

SECTION 1-1

SCALE: 1" = 1'-0"

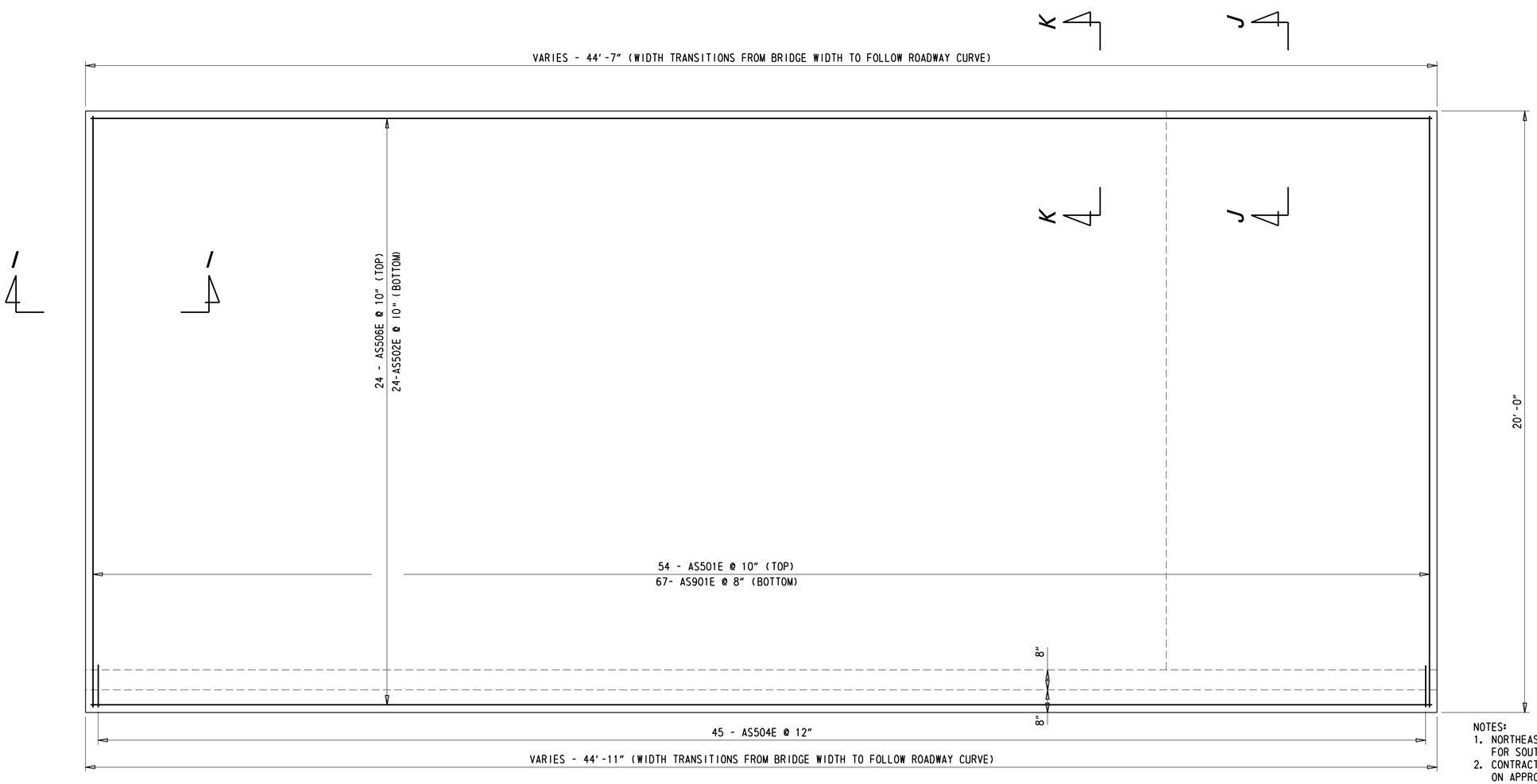

NORTHEAST APPROACH SLAB PLAN

SCALE: ½" = 1'-0"

NOTES:

1. NORTHEAST APPROACH SLAB SHOWN. NORTHWEST APPROACH SLAB SIMILAR. FOR SOUTHWEST AND SOUTHEAST APPROACH SLAB ROTATE 180°.
2. CONTRACTION JOINTS SHALL BE PROVIDED EVERY 10 FEET FOR BARRIER ON APPROACH SLABS AND MOMENT SLABS.
3. EXPANSION JOINTS SHALL BE PROVIDED EVERY 60 FEET FOR BARRIER ON APPROACH SLABS AND MOMENT SLABS.
4. APPROACH SLAB WIDTH SHALL TRANSITION FROM BRIDGE WIDTH TO MATCH ROADWAY CURVE WIDTH BY END OF APPROACH SLAB.
5. FIELD CUT AS502E AND AS506E AS NECESSARY. PAYMENT UNDER ITEM 604000.

Y:/KENT/008/BRIDGE/2412202/Plans/Bridge/as01.dgn

DELAWARE DEPARTMENT OF TRANSPORTATION	ADDENDUMS / REVISIONS	SCALE: AS NOTED	SR1, LITTLE HEAVEN GRADE SEPARATED INTERSECTION	CONTRACT T200412202	BRIDGE NO. 2-008K&L	APPROACH SLAB PLAN BRIDGE SHEET 17 OF 26	SHEET NO. 265
				COUNTY KENT	DESIGNED BY: EM		TOTAL SHTS. 641
					CHECKED BY: JNH		

EXPANSION JOINT NOTES:

1. STEEL FOR JOINTS AND EXTRUSIONS SHALL CONFORM TO AASHTO M270 GRADE 36 (ASTM A709, GR. 36).
2. STRIP SEAL TO D-2628-81 MODIFIED REQUIREMENTS (RECOVERY TESTS EXCLUDED).
3. THE EXPANSION JOINT SHALL BE CAPABLE OF SEALING THE JOINT TO PREVENT MOISTURE AND OTHER CONTAMINANTS FROM DESCENDING THROUGH THE JOINT.
4. THE NEW STRIP SEAL SHALL BE INSTALLED IN ONE PIECE ACROSS THE BRIDGE. SPLICING OF THE SEAL IS NOT PERMITTED.
5. THE ENTIRE EXPANSION DAM ASSEMBLY SHALL BE PAINTED WITH URETHANE PAINT IN ACCORDANCE WITH THE SPECIAL PROVISIONS.
6. THE EXPANSION JOINT IS PAID UNDER ITEM 605511 - PREFABRICATED EXPANSION JOINT SYSTEM, 3".
7. THE CONTRACTOR SHALL ADJUST THE OPEN JOINT AS REQUIRED BY THE WIDTH OF THE STEEL EXTRUSION USED SO AS TO PROVIDE A 2½" JOINT OPENING AT 68°.
8. LUBRICANT-ADHESIVE FOR USE IN INSTALLING AND BONDING NEOPRENE SEAL ELEMENTS TO STEEL JOINT COMPONENTS SHALL BE A ONE-QUART MOISTURE-CURING POLYURETHANE AND HYDROCARBON SOLVENT MIXTURE HAVING THE FOLLOWING PHYSICAL PROPERTIES:

AVERAGE WEIGHT, POUNDS PER GALLON	8+/- 10%
SOLIDS CONTENT	65%
ADHESIVE SHALL REMAIN LIQUID FROM	5 to 120 F
FILM STRENGTH AS PER ASTM D-412	2000 PSI
ELONGATION	250%

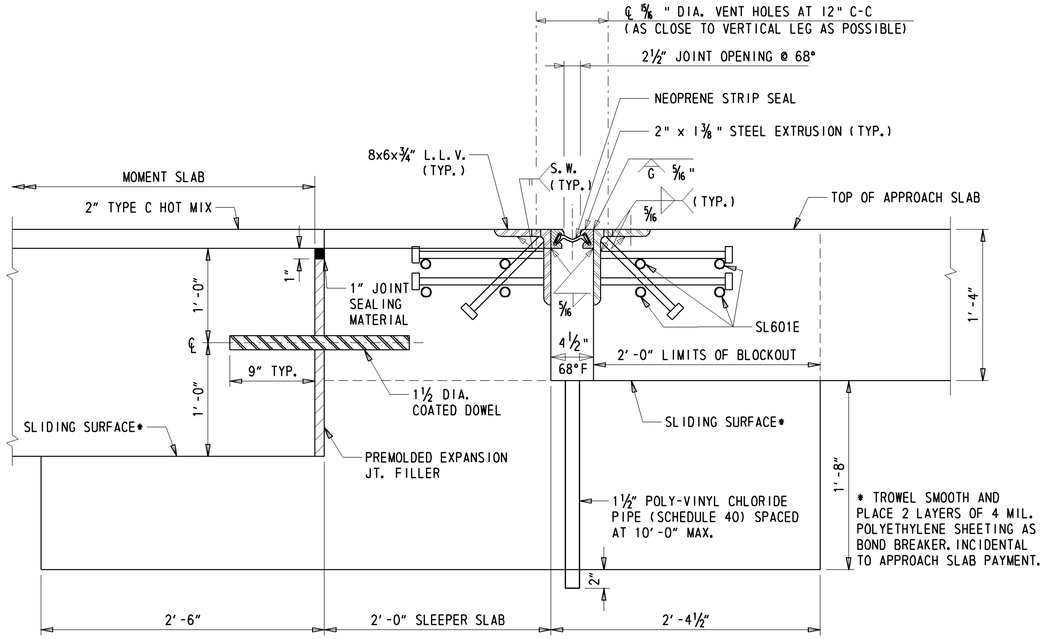

SECTION J-J

SCALE: 1½" = 1'-0"

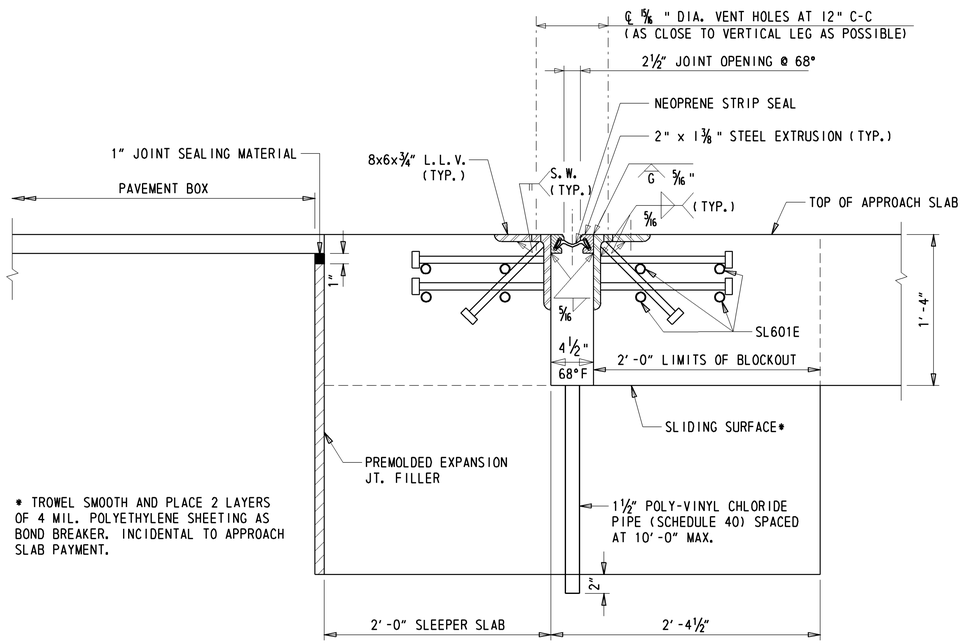

SECTION K-K

SCALE: 1½" = 1'-0"

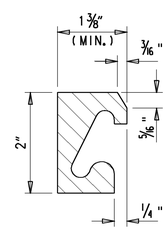

STEEL EXTRUSION DETAIL

SCALE : N.T.S.

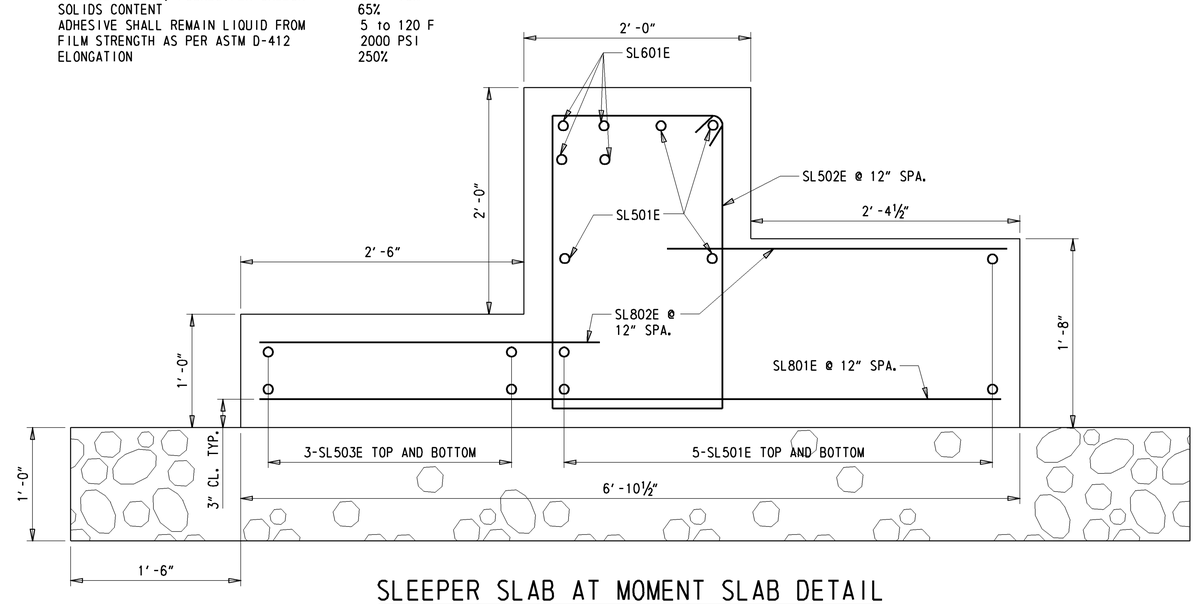

SLEEPER SLAB AT MOMENT SLAB DETAIL

SCALE: 1½" = 1'-0"

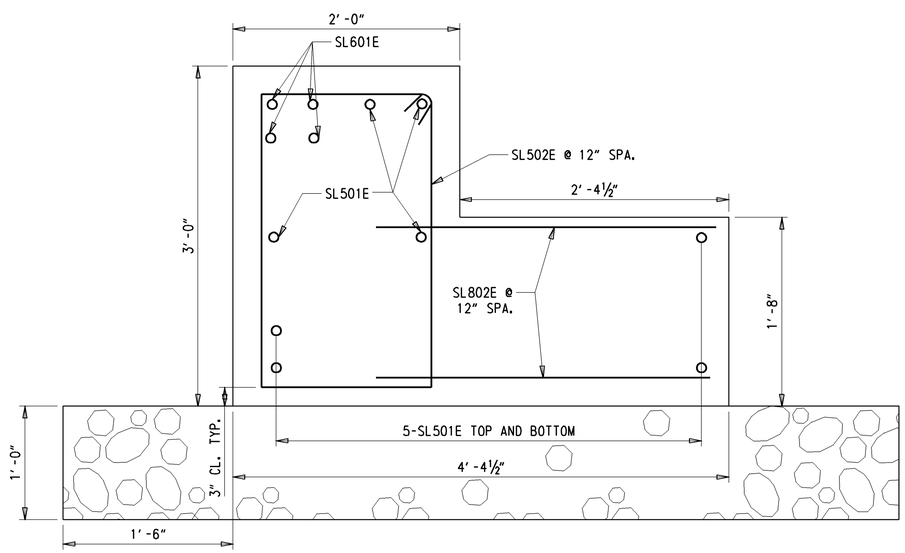

SLEEPER SLAB AT PAVEMENT DETAIL

SCALE: 1½" = 1'-0"

DELAWARE DEPARTMENT OF TRANSPORTATION	ADDENDUMS / REVISIONS	SCALE: AS NOTED	SR1, LITTLE HEAVEN GRADE SEPARATED INTERSECTION	CONTRACT T200412202 / COUNTY KENT	BRIDGE NO. 2-008K&L / DESIGNED BY: EM / CHECKED BY: JNH	EXPANSION JOINT & SLEEPER SLAB DETAILS BRIDGE SHEET 18 OF 26	SHEET NO. 266 / TOTAL SHTS. 641

Y:\KENT*\BRIDGE*2202\PLANS\BRIDGE\EX01.DGN

NOTES:

1. CONTRACTION JOINTS IN BARRIER SHALL BE PROVIDED EVERY 10 FEET MAX. EXPANSION JOINTS IN BARRIER SHALL BE PROVIDED EVERY 60 FEET MAX.
2. CROSS-SLOPE OF MOMENT SLAB TO MATCH SHOULDER CROSS-SLOPE
3. ADJUST REINFORCING IN PARAPET TO ACCOMMODATE PLACEMENT OF JUNCTION BOXES. REINFORCING SHALL NOT BE CUT.
3. SEE CORRESPONDING HIGHWAY SHEETS FOR LOCATION OF MOMENT SLABS.
4. FIELD CUT BARS AS NECESSARY. PAYMENT UNDER ITEM 604000. ALL FIELD CUT BARS SHALL BE RECOATED WITH EPOXY ON EXPOSED SURFACES.

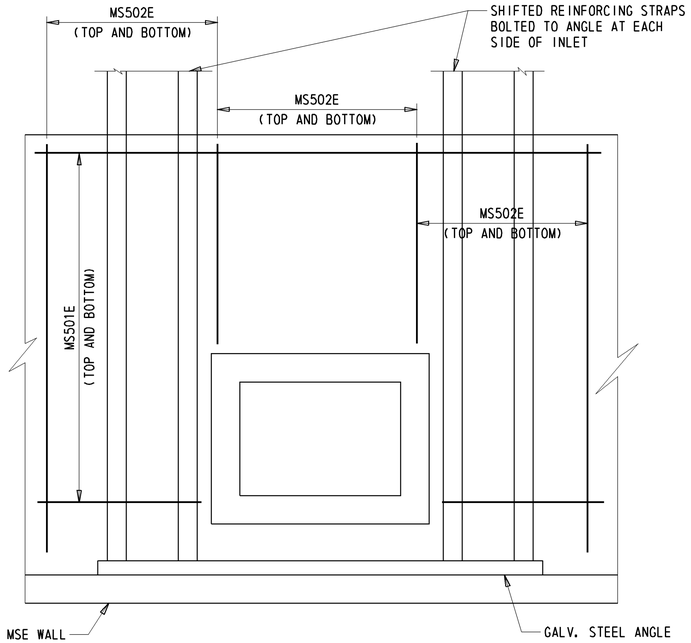

MOMENT SLAB WITH INLET PLAN

SCALE: 3/4" = 1'-0"

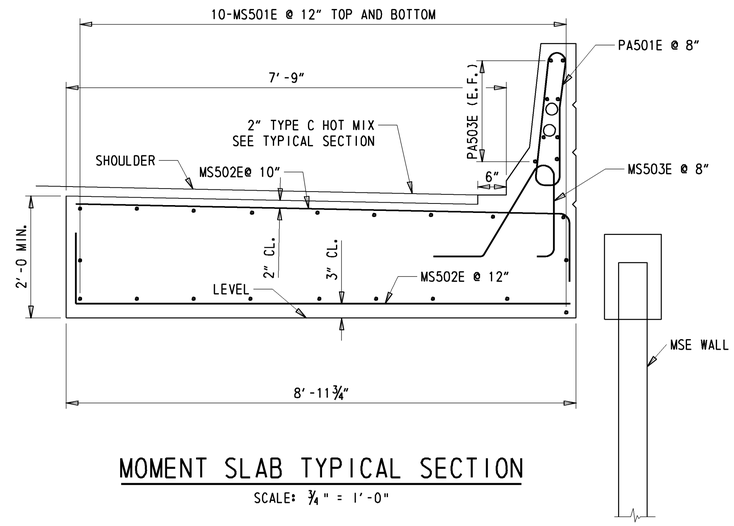

MOMENT SLAB TYPICAL SECTION

SCALE: 3/4" = 1'-0"

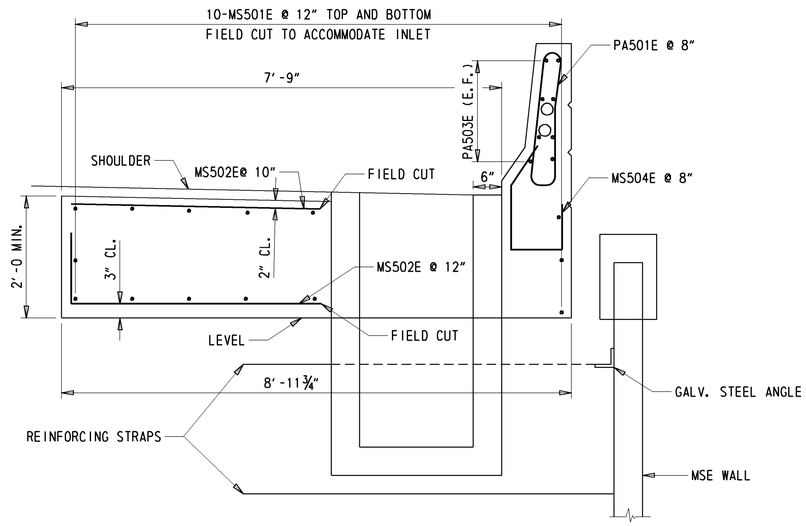

MOMENT SLAB WITH INLET SECTION

SCALE: 3/4" = 1'-0"

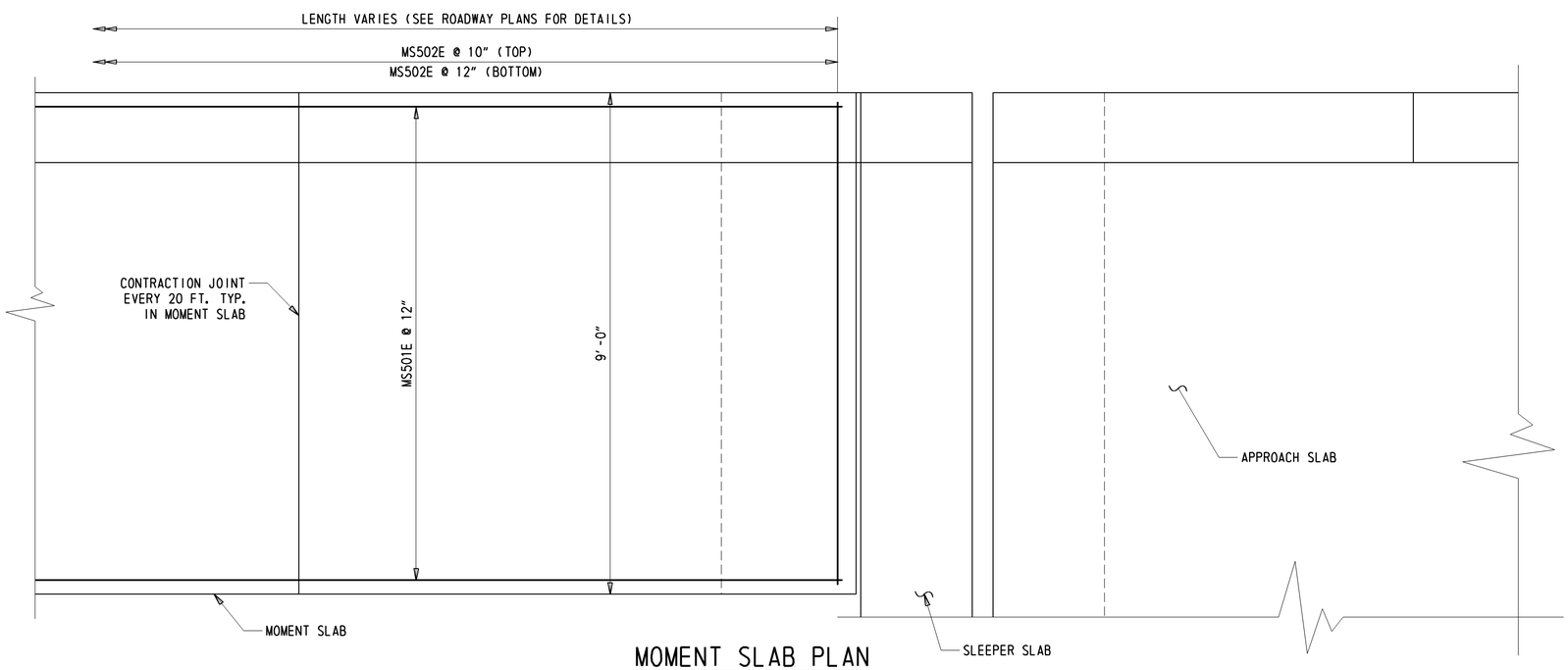

MOMENT SLAB PLAN

SCALE 3/4" = 1'-0"

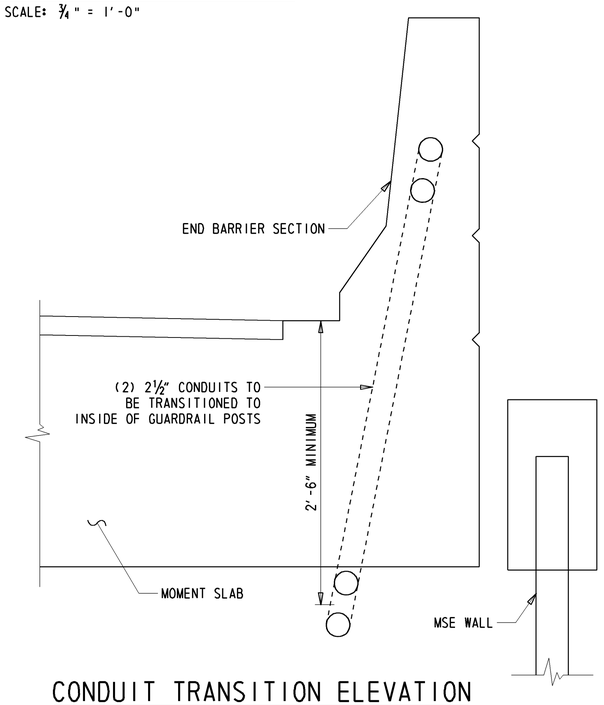

CONDUIT TRANSITION ELEVATION

SCALE: 1 1/2" = 1'-0"

DELAWARE DEPARTMENT OF TRANSPORTATION	ADDENDUMS / REVISIONS	SCALE: AS NOTED	SR1, LITTLE HEAVEN GRADE SEPARATED INTERSECTION	CONTRACT T200412202	BRIDGE NO. 2-008K&L	MOMENT SLAB DETAILS BRIDGE SHEET 19 OF 26	SHEET NO. 267
				COUNTY KENT	DESIGNED BY: EMILY MAURER		TOTAL SHTS. 641
					CHECKED BY: JNH		

Y:/KENT/BRIDGE/2412202\PLANS\BRIDGE\st01.dgn

(1) ANY MARK NUMBER WITH SUFFIX 'E' DENOTES EPOXY COATED REINFORCING STEEL.

(2) ALL MARK 'LOCATION PREFIXES' SHALL CONSIST OF TWO LETTERS AND ARE AS FOLLOWS: AB = ABUTMENT, AS = APPROACH SLAB, BC = BOX CULVERT, BW = BACKWALL, CL = COLUMN, DK = DECK, DL = DOWEL, FT = FOOTING, HW = HEADWALL, MS = MISC. BARS, PA = PARAPET, PR = PIER, SC = SHEETPILE CAP, SL = SLAB, TW = TOEWALL, WL = WALL (UNIQUE LOCATION), WW = WINGWALL

SPECIFICATIONS					BENDING DIMENSIONS (FEET-INCHES /QUARTER INCH)										
QTY.	SIZE	LENGTH	MARK	TYPE	A	B	C	D	E	F/R	G	H	J	K	O
58	5	2-40	AB501E	STR		2-40	0-80	2-100							
136	5	14-80	AB502E	17		5-60	3-80	5-60							
22	5	60-90	AB503E	STR		60-90									
10	5	9-10	AB504E	STR		9-10									
10	5	15-80	AB505E	STR		15-80									
110	5	9-90	AB506E	STR		9-90									
188	5	8-80	AB507E	17		2-60	3-80	2-60							
22	5	63-60	AB508E	STR	0-60	63-60	3-80	2-80			0-60				
24	5	34-90	AB509E	STR		34-90									
52	5	12-50	AB510E	17		6-20	3-80	2-70							
70	5	6-50	AB511E	17			0-50	6-00							
70	5	4-50	AB512E	STR		4-50									
18	5	10-00	AB513E	S6	0-60	2-80	3-80	2-80			0-60				
28	5	10-100	AB514E	S6	0-60	3-10	3-80	3-10			0-60				
16	5	12-10	AB515E	S6	0-60	3-82	3-80	3-82			0-60				
216	5	19-80	AS501E	STR		19-80									
104	5	44-70	AS502E	STR		44-70									
180	5	4-61	AS504E	16	0-100	1-70	0-40	1-91				1-70		0-93	1-13
96	5	46-70	AS506E	17		1-00	44-70	1-00							
240	5	5-53	AS507E	SP1	0-60	1-12	1-00					1-100			
268	9	19-80	AS901E	STR		19-80									
302	5	45-90	DK501E	1	0-70	44-70					0-70		0-50		
400	5	44-70	DK502E	STR		44-70									
184	5	45-00	DK503E	17			42-60	2-60							
108	5	7-50	DK504E	17	0-100		4-60	2-110				0-70			1-10
184	5	3-60	DK505E	17		1-00	2-60								
338	5	42-60	DK506E	STR		42-60									
80	5	7-70	DK507E	STR		7-70									
20	5	5-100	DK508E	STR		5-100									
48	5	4-10	DK509E	STR		4-10									
16	5	2-23	DK510E	STR		2-23									
16	5	1-113	DK511E	STR		1-113									
4	5	1-40	DK512E	STR		1-40									
4	5	1-10	DK513E	STR		1-10									
728	6	4-90	DK601E	SP1	0-60	1-21	1-00					1-51			
172	6	4-40	DK602E	1	0-80	3-00					0-80		0-60		
2706	5	5-93	PA501E	T7		2-40	0-50	2-40	0-23		0-60	2-40			

SPECIFICATIONS					BENDING DIMENSIONS (FEET-INCHES /QUARTER INCH)										
QTY.	SIZE	LENGTH	MARK	TYPE	A	B	C	D	E	F/R	G	H	J	K	O
840	5	8-70	PA502E	STR		8-70									
872	5	9-80	PA503E	STR		9-80									
364	6	7-42	PA601E	T11			1-60	2-00	0-102	3-00		1-23		0-101	
1056	5	19-80	MS501E	STR		19-80									
2098	5	10-20	MS502E	17			8-80	1-60							
1347	5	5-53	MS503E	SP1	0-60	1-12	1-00					1-100			
25	5	4-30	MS504E	16	0-100	0-91	1-112	0-81				0-81			1-112
56	5	44-70	SL501E	STR		44-70									
184	5	9-70	SL502E	T1	0-52	1-80	2-80	1-80	2-80		0-52				
24	5	8-80	SL503E	STR		8-80									
16	6	44-70	SL601E	STR		44-70									
40	8	6-62	SL801E	STR		6-62									
368	8	3-00	SL802E	STR		3-00									

SPECIFICATIONS					BENDING DIMENSIONS (FEET-INCHES /QUARTER INCH)										
QTY.	SIZE	LENGTH	MARK	TYPE	A	B	C	D	E	F/R	G	H	J	K	O

ASTM STANDARD ENGLISH REINFORCING BARS

BAR SIZE	NOMINAL DIMENSIONS: DIAMETER (INCHES)	NOMINAL DIMENSIONS: AREA (INCHES²)	NOMINAL DIMENSIONS: WEIGHT (LBS./FT.)
3	0.375	0.110	0.376
4	0.500	0.200	0.668
5	0.625	0.310	1.043
6	0.750	0.440	1.502
7	0.875	0.600	2.044
8	1.000	0.790	2.670
9	1.128	1.000	3.400
10	1.270	1.270	4.303
11	1.410	1.560	5.313
14	1.693	2.250	7.650
18	2.257	4.000	13.600

RECOMMENDED END HOOKS, APPLICABLE TO ALL GRADES	180° HOOKS		90° HOOKS
D	A OR G	J	A OR G
2¼"	5"	3"	6"
3"	6"	4"	8"
3¾"	7"	5"	10"
4½"	8"	6"	1-0"
5¼"	10"	7"	1-2"
6"	11"	8"	1-4"
9½"	1-3"	11¾"	1-7"
10¾"	1-5"	1-1¼"	1-10"
1-0"	1-7"	1-2¾"	2-0"
1-6¼"	2-3"	1-9¾"	2-7"
2-0"	3-0"	2-4½"	3-5"

STIRRUP AND TIE HOOKS, APPLICABLE TO ALL GRADES	90° HOOK	135° HOOK	
D	A OR G	A OR G	A OR G
1½"	4"	4"	2½"
2"	4½"	4½"	3"
2½"	6"	5½"	3¾"
4½"	1-0"	8"	4½"
5¼"	1-2"	9"	5¼"
6"	1-4"	10½"	6"

NOTES:

1. FIGURES SHOWN IN CIRCLES REPRESENT BAR BEND TYPES.
2. STANDARD BAR BENDS INCLUDE ONLY THOSE TYPES BELOW, INDICATED AS SUCH.
3. ALL DIMENSIONS OUT-TO-OUT, EXCEPT "A" AND "G" ON STD. 180° AND 135° HOOKS.
4. "J" DIMENSIONS ON 180° HOOKS TO BE SHOWN ONLY WHERE NECESSARY TO RESTRICT HOOK SIZE, OTHERWISE STANDARD 'ACI' HOOKS ARE TO BE USED.
5. WHERE "J" IS NOT SHOWN, "J" WILL BE KEPT EQUAL TO OR LESS THAN "H" ON TYPES 3, 5 AND 22. WHERE "J" CAN EXCEED "H", IT SHALL BE SHOWN.
6. "H" DIMENSIONS OF STIRRUPS TO BE SHOWN AS NEEDED TO FIT WITHIN THE CONCRETE.
7. UNLESS OTHERWISE NOTED, DIAMETER "D" IS THE SAME FOR ALL BENDS AND HOOKS ON A BAR (EXCEPT FOR BEND TYPES 11 AND 13).
8. WHERE SLOPE DIFFERS FROM 45° OFFSET, "H" AND "K" MUST BE SHOWN.
9. WHERE BARS ARE TO BE BENT MORE ACCURATELY THAN STANDARD BENDING TOLERANCES, BENDING DIMENSIONS REQUIRING CLOSER FABRICATION SHOULD HAVE LIMITS INDICATED.
10. FOR RECOMMENDED DIAMETER "D", OF BENDS, HOOKS, ETC., REFER TO TABLE ABOVE, 'CRSI' OR 'ACI' TABLES WHERE APPLICABLE AND REQUIRED.
11. TYPE S1-S6, S11, T1-T3 AND T6-T9 APPLICABLE TO BAR SIZES #3 THROUGH #8.

STANDARD BAR BENDS

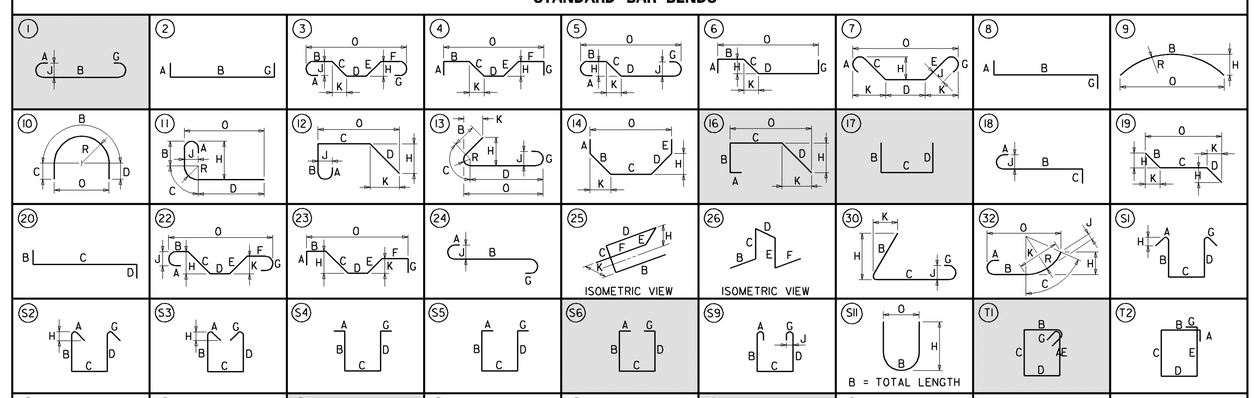

SPECIAL BAR BENDS

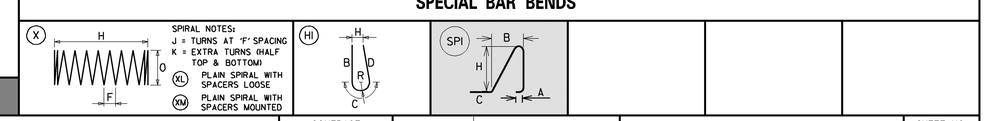

STIRRUP AND TIE HOOKS

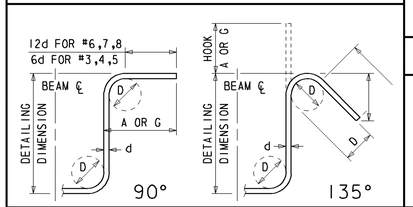

180° AND 90° END HOOKS

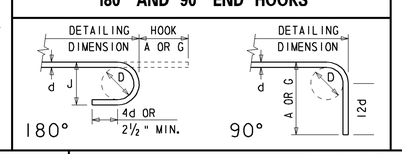

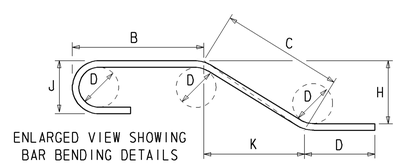

DELAWARE DEPARTMENT OF TRANSPORTATION

ADDENDUMS / REVISIONS

SR1, LITTLE HEAVEN GRADE SEPARATED INTERSECTION

CONTRACT	BRIDGE NO.	2-008K&L
24-122-02	DESIGNED BY:	EM
COUNTY	CHECKED BY:	MJG
KENT		

REINFORCEMENT BAR LIST
BRIDGE SHEET 20 OF 26

SHEET NO. 268
TOTAL SHTS. 617

W:\MSV8\CELLS\PROJDEV\SB.CEL

BORING: LH-SB # 1 | DATE DRILLED: 12/19/2007
STATION: 164+80.37 | OFFSET: L 81.01' | ELEVATION: + 28.1' | NORTHING: 379347.324 | EASTING: 644752.069
COMMENTS:

DEPTH (FT.)	NO.	SAMPLE DEPTH	BLOWS/6"	SAMPLE DESCRIPTION	CLASS./G. I.	REMARKS
	1	0.0'	5 11 8 5	MOIST MEDIUM DENSE BROWN SILTY FINE TO COARSE SAND W/TRACE OF GRAVEL. 16" RECOVERY	A-2-4(0)	
2.53	2	2.0'	5 6 5 9	MOIST MEDIUM DENSE BROWN SILTY FINE TO COARSE SAND W/TRACE OF GRAVEL. 20" RECOVERY	A-2-4(0)	
5.06	3	4.0'	6 9 9 10	MOIST MEDIUM DENSE BROWN FINE TO COARSE SAND W/TRACE OF SILT AND GRAVEL. 20" RECOVERY	A-3	
7.59	4	6.0'	8 7 12 12	WET VERY STIFF BROWN FINE SANDY SILT W/ SOME COARSE SAND. 21" RECOVERY	A-4(0)	
10.12	5	8.0'	8 10 10 9	SATURATED MEDIUM DENSE BROWN FINE TO COARSE SAND W/SOME SILT. 18" RECOVERY	A-2-4(0)	
	6	10.0'	7 9 12 14	SATURATED MEDIUM DENSE BROWN FINE SAND W/TRACE OF COARSE SAND AND SILT. 24" RECOVERY	A-3	
12.65	7	12.0'	4 12 17 15	SATURATED MEDIUM DENSE BROWN FINE SAND W/SOME COARSE SAND, TRACE OF SILT AND GRAVEL. 24" RECOVERY	A-3	
15.18	8	14.0'	4 6 7 8	SATURATED MEDIUM DENSE BROWN FINE SAND W/SOME SILT, TRACE OF COARSE SAND. 24" RECOVERY	A-2-4(0)	
17.71	9	16.0'	10 7 9 11	SATURATED MEDIUM DENSE BROWN FINE SAND W/SOME COARSE SAND AND SILT, TRACE OF GRAVEL. 24" RECOVERY	A-2-4(0)	
20.24	10	18.0'	2 5 4 6	SATURATED LOOSE BROWN FINE TO COARSE SAND W/SOME SILT, TRACE OF GRAVEL. 12" RECOVERY	A-2-4(0)	
22.77						
25.3	11	24.0'	1 2 2	SATURATED VERY LOOSE BROWN SILTY FINE SAND W/TRACE OF COARSE SAND. 18" RECOVERY	A-2-4(0)	
27.83						
30.36	12	29.0'	3 7 5	SATURATED MEDIUM DENSE ORANGE FINE TO COARSE SAND W/SOME SILT, TRACE OF GRAVEL. 18" RECOVERY	A-2-4(0)	
32.89						
35.42	13	34.0'	7 8 9	SATURATED MEDIUM DENSE BROWN COARSE SAND AND GRAVEL W/SOME FINE SAND, TRACE OF SILT. 11" RECOVERY	A-1-B	
37.95						
	14	39.0'	5	SATURATED MEDIUM DENSE LIGHT BROWN FINE	A-2-4(0)	

BORING (CONT.): LH-SB # 1

DEPTH (FT.)	NO.	SAMPLE DEPTH	BLOWS/6"	SAMPLE DESCRIPTION	CLASS./G. I.	REMARKS
40.48		40.5'	6 7	TO COARSE SAND W/SOME SILT, TRACE OF GRAVEL. 11" RECOVERY		
43.01						
45.54	15	44.0' 45.5'	8 6 7	SATURATED STIFF WHITE AND ORANGE CLAY W/ TRACE OF COARSE TO FINE SAND. 12" RECOVERY	A-6(18)	
48.07						
50.6	16	49.0' 50.5'	4 6 7	SATURATED STIFF GRAY COARSE SANDY CLAY W/SOME FINE SAND, TRACE OF ORGANIC MATTER. 18" RECOVERY	A-7-5(12)	
53.13						
55.66	17	54.0' 54.7'	27 50/2"	SATURATED HARD GRAY FINE SANDY SILT W/ SOME COARSE SAND AND ORGANIC MATTER. 8" RECOVERY	A-4(0)	
58.19						
60.72	18	59.0' 60.5'	7 11 20	SATURATED HARD GRAY FINE SANDY SILT W/ TRACE OF COARSE SAND AND ORGANIC MATTER. 18" RECOVERY	A-4(0)	
63.25						
65.78	19	64.0' 65.5'	8 12 41	SATURATED HARD GRAY FINE SANDY SILT W/ SOME COARSE SAND, TRACE OF ORGANIC MATTER. 18" RECOVERY	A-4(0)	
68.31						
70.84	20	69.0' 70.5'	9 13 22	SATURATED DENSE GRAY COARSE TO FINE SAND W/TRACE OF SILT AND ORGANIC MATTER. 18" RECOVERY	A-1-B	
73.37						
75.9	21	74.0' 75.5'	28 31 36	SATURATED VERY DENSE GRAY FINE TO COARSE SAND W/SOME SILT, TRACE OF GRAVEL AND ORGANIC MATTER. 18" RECOVERY	A-2-4(0)	
78.43						
80.96	22	79.0' 80.5'	22 29 46	SATURATED VERY DENSE GRAY COARSE TO FINE SAND AND GRAVEL W/SOME SILT, TRACE OF ORGANIC MATTER AND MICA. 15" RECOVERY	A-1-B	

BORING (CONT.): LH-SB # 1

DEPTH (FT.)	NO.	SAMPLE DEPTH	BLOWS/6"	SAMPLE DESCRIPTION	CLASS./G. I.	REMARKS
83.49						
86.02	23	84.0' 84.8'	28 50/4"	SATURATED HARD GRAY FINE SANDY SILT W/ TRACE OF COARSE SAND, GRAVEL AND ORGANIC MATTER. 10" RECOVERY	A-4(0)	
88.55						
91.08	24	89.0' 90.0'	54 55	SATURATED VERY DENSE GRAY COARSE TO FINE SAND W/TRACE OF SILT, GRAVEL AND ORGANIC MATTER. 12" RECOVERY	A-3	
93.61						
96.14	25	94.0' 94.2'	50/2"	SATURATED VERY DENSE GRAY COARSE TO FINE SAND W/SOME GRAVEL, TRACE OF SILT. 2" RECOVERY	A-1-B	
98.67						
101.2						
103.73						
106.26						
108.79						
111.32						
113.85						
116.38						
118.91						
121.44						

Y:/KENT/008/BRIDGE/2412202/Plans/Bridge/bo01.dgn

DELAWARE DEPARTMENT OF TRANSPORTATION

ADDENDUMS / REVISIONS

S.R. 1, LITTLE HEAVEN GRADE SEPERATED INTERSECTION

CONTRACT: T200412202
COUNTY: KENT
BRIDGE NO. 2-008K&L
DESIGNED BY: EMILY MAURER
CHECKED BY:

BORING LOG #1
BRIDGE SHEET 21 OF 26

SHEET NO. 269
TOTAL SHTS. 641

BORING: LH-SB # 2 | DATE DRILLED: 12/12/2007
STATION: 164+80 | OFFSET: L 6.02' | ELEVATION: + 27.3' | NORTHING: 379347.591 | EASTING: 644827.069
COMMENTS:

DEPTH (FT.)	NO.	SAMPLE DEPTH	BLOWS/6"	SAMPLE DESCRIPTION	CLASS./G. I.	REMARKS
	1	0.5'	7	MOIST MEDIUM DENSE LIGHT BROWN SILTY	A-2-4(0)	
			5	FINE TO COARSE SAND W/TRACE OF GRAVEL.		
		2.0'	4	18" RECOVERY		
2.53	2	2.0'	4	MOIST MEDIUM DENSE LIGHT BROWN FINE TO	A-3	
			5	COARSE SAND W/TRACE OF SILT.		
			6			
		4.0'	5	14" RECOVERY		
	3	4.0'	10	MOIST MEDIUM DENSE LIGHT BROWN FINE TO	A-2-4(0)	
5.06			11	COARSE SAND W/SOME SILT, TRACE OF		
			13	GRAVEL.		
		6.0'	12	20" RECOVERY		
	4	6.0'	9	WET MEDIUM DENSE LIGHT BROWN SILTY FINE	A-2-4(0)	
		7.0'	7	TO COARSE SAND. 12" RECOVERY		
7.59	4A	7.0'	8	WET VERY STIFF GRAY SILT W/SOME CLAY,	A-4(3)	
		8.0'	9	TRACE OF FINE TO COARSE SAND. 12" RECOVERY		
	5	8.0'	3	WET VERY STIFF LIGHT GRAY FINE SANDY	A-4(0)	ODOR OF FUEL.
			7	SILT W/TRACE OF COARSE SAND. 16" RECOVERY		
		9.5'	10			
10.12	5A	9.5'	13		A-2-4(0)	ODOR OF FUEL.
	6	10.0'	9	WET MEDIUM DENSE LIGHT BROWN FINE SAND	A-3	
		10.0'	7	W/SOME COARSE SAND, TRACE OF COARSE		
			9	SAND. 6" RECOVERY		
		12.0'	8	SATURATED MEDIUM DENSE LIGHT BROWN FINE		
12.65	7	12.0'	10	SAND W/SOME COARSE SAND, TRACE OF SILT	A-2-4(0)	
			11	AND GRAVEL.		
			6	22" RECOVERY		
		14.0'	6	SATURATED MEDIUM DENSE LIGHT BROWN FINE		
	8	14.0'	6	TO COARSE SAND W/SOME SILT, TRACE OF	A-3	
15.18			14	GRAVEL. 24" RECOVERY		
			24	SATURATED DENSE LIGHT BROWN FINE TO		
		16.0'	26	COARSE SAND W/TRACE OF GRAVEL AND SILT.		
	9	16.0'	8	15" RECOVERY	A-1-B	
			18	SATURATED VERY DENSE LIGHT BROWN COARSE		
17.71		17.4'	50/5"	SAND W/SOME FINE SAND, TRACE OF SILT AND		
				GRAVEL. 12" RECOVERY		
	10	18.0'	10	SATURATED MEDIUM DENSE BROWN COARSE TO	A-1-B	
			11	FINE SAND W/TRACE OF SILT AND GRAVEL.		
			12			
20.24		20.0'	12	16" RECOVERY		
22.77						
	11	24.0'	3	SATURATED LOOSE LIGHT BROWN FINE SAND W/	A-2-4(0)	
			3	SOME SILT AND GRAVEL.		
25.3			4			
		26.0'	5	22" RECOVERY		
27.83						
	12	29.0'	4	SATURATED LOOSE LIGHT BROWN FINE TO	A-2-4(0)	
			4	COARSE SAND W/SOME SILT, TRACE OF		
30.36			6	GRAVEL.		
		31.0'	10	22" RECOVERY		
32.89						
	13	34.0'	6	SATURATED MEDIUM DENSE LIGHT BROWN	A-1-B	
			6	COARSE TO FINE SAND W/SOME SILT, TRACE		
35.42			7	OF GRAVEL.		
		36.0'	10	16" RECOVERY		
37.95						
	14	39.0'	4	SATURATED LOOSE LIGHT BROWN FINE SAND W/	A-2-4(0)	
			4	SOME SILT AND COARSE SAND, TRACE OF		

BORING (CONT.): LH-SB # 2

DEPTH (FT.)	NO.	SAMPLE DEPTH	BLOWS/6"	SAMPLE DESCRIPTION	CLASS./G. I.	REMARKS
		41.0'	6	GRAVEL.		
			5	22" RECOVERY		
43.01						
	15	44.0'	2	SATURATED STIFF GRAYISH BROWN CLAY W/	A-6(15)	
			4	TRACE OF FINE TO COARSE SAND.		
45.54			6			
		46.0'	7	24" RECOVERY		
48.07						
	16	49.0'	7	SATURATED VERY STIFF GRAY CLAY W/SOME	A-7-5(13)	
			10	FINE TO COARSE SAND.		
50.6		50.5'	15	18" RECOVERY		
53.13						
	17	54.0'	20	SATURATED VERY DENSE GRAY SILTY COARSE	A-2-4(0)	
		54.6'	50/1"	TO FINE SAND W/SOME GRAVEL.		
55.66				7" RECOVERY		
58.19						
	18	59.0'	6	SATURATED VERY STIFF GRAYISH GREEN	A-4(2)	
			10	CLAYEY FINE SANDY SILT W/TRACE OF COARSE		
60.72		60.5'	13	SAND AND ORGANIC MATTER.		
				18" RECOVERY		
63.25						
	19	64.0'	8	SATURATED VERY STIFF GRAY FINE SANDY	A-4(0)	
			11	SILT W/TRACE OF COARSE SAND AND ORGANIC		
65.78		65.5'	17	MATTER.		
				18" RECOVERY		
68.31						
	20	69.0'	7	SATURATED VERY DENSE GRAY SILTY FINE	A-2-4(0)	
			19	SAND W/SOME SEA SHELLS, TRACE OF COARSE		
70.84		70.5'	37	SAND AND ORGANIC MATTER.		
				14" RECOVERY		
73.37						
	21	74.0'	23	SATURATED VERY DENSE GRAY COARSE TO FINE	A-2-4(0)	
			25	SAND W/SOME SILT AND SEA SHELLS, TRACE		
75.9		75.5'	37	OF GRAVEL.		
				17" RECOVERY		
78.43						
	22	79.0'	3	SATURATED MEDIUM DENSE GRAY FINE TO	A-3	
			4	COARSE SAND W/SOME SEA SHELLS, TRACE OF		
80.96		80.5'	10	SILT, GRAVEL AND ORGANIC MATTER.		
				18" RECOVERY		

BORING (CONT.): LH-SB # 2

DEPTH (FT.)	NO.	SAMPLE DEPTH	BLOWS/6"	SAMPLE DESCRIPTION	CLASS./G. I.	REMARKS
83.49						
	23	84.0'	21	SATURATED VERY DENSE GRAY COARSE TO FINE	A-1-B	
		85.2'	44	SAND W/SOME GRAVEL, TRACE OF SILT AND		
			50/2"	ORGANIC MATTER.		
86.02				14" RECOVERY		
88.55						
	24	89.0'	50/3"	SATURATED VERY DENSE BROWN FINE TO	A-3	
		89.3'		COARSE SAND W/TRACE OF SILT, GRAVEL AND		
91.08				ORGANIC MATTER.		
				3" RECOVERY		
93.61						
	25	94.0'	36	SATURATED VERY DENSE GRAYISH BROWN FINE	A-3	
		94.7'	50/2"	TO COARSE SAND W/TRACE OF SILT, GRAVEL		
96.14				AND ORGANIC MATTER.		
				4" RECOVERY		
98.67						
	26	99.0'	50/1"	SATURATED VERY DENSE GRAY COARSE TO FINE	A-1-B	
		99.1'		SAND W/TRACE OF GRAVEL, SILT AND ORGANIC		
101.2				MATTER.		
				1" RECOVERY		
103.73						
106.26						
108.79						
111.32						
113.85						
116.38						
118.91						
121.44						

Y:/KENT/008/BRIDGE/2412202/Plans/Bridge/bo02.dgn

DELAWARE DEPARTMENT OF TRANSPORTATION

ADDENDUMS / REVISIONS

S.R. 1, LITTLE HEAVEN GRADE SEPARATED INTERSECTION

CONTRACT: T200412202
COUNTY: KENT
BRIDGE NO. 2-008K&L
DESIGNED BY: EMILY MAURER
CHECKED BY:

BORING LOG #2
BRIDGE SHEET 22 OF 26

SHEET NO. 270
TOTAL SHTS. 641

BORING: LH-SB # 3 | **DATE DRILLED:** 12/11/2007

STATION: 164+80 | **OFFSET:** R 68.96' | **ELEVATION:** + 27.7' | **NORTHING:** 379347.858 | **EASTING:** 644902.070

COMMENTS: MUD ROTARY @ 24.0'.

DEPTH (FT.)	NO.	SAMPLE DEPTH	BLOWS/6"	SAMPLE DESCRIPTION	CLASS./G. I.	REMARKS
	1	0.0'	3	MOIST MEDIUM DENSE BROWN SILTY FINE TO	A-2-4(0)	
			8	COARSE SAND W/TRACE OF GRAVEL AND		
			15	ORGANIC MATTER.		
		1.8'	12	20" RECOVERY		
2.53	2	2.0'	5	MOIST LOOSE BROWN FINE TO COARSE SAND W/	A-2-4(0)	
			4	SOME SILT.		
			3			
		4.0'	5	19" RECOVERY		
	3	4.0'	2	MOIST MEDIUM DENSE BROWN FINE TO COARSE	A-2-4(0)	
5.06			3	SAND W/SOME SILT, TRACE OF GRAVEL.		
			8			
		6.0'	9	18" RECOVERY		
	4	6.0'	4	MOIST MEDIUM DENSE BROWN FINE TO COARSE	A-2-4(0)	
			7	SAND W/SOME SILT.		
7.59			15			
		8.0'	18	20" RECOVERY		
	5	8.0'	5	WET VERY STIFF BROWN FINE SANDY SILT W/	A-4(0)	
			10	SOME CLAY, TRACE OF COARSE SAND.		
			13			
10.12		10.0'	15	23" RECOVERY		
	6	10.0'	40	SATURATED VERY DENSE ORANGISH BROWN FINE	A-3	
			40	TO COARSE SAND W/TRACE OF SILT AND		
			45	GRAVEL.		
		12.0'	50	20" RECOVERY		
12.65	7	12.0'	7	SATURATED DENSE BROWN COARSE TO FINE	A-1-B	
			15	SAND W/SOME SILT, TRACE OF GRAVEL.		
			18			
		14.0'	21	16" RECOVERY		
	8	14.0'	23	SATURATED VERY DENSE BROWNISH BLACK FINE	A-3	
15.18		15.0'	52	TO COARSE SAND W/TRACE OF GRAVEL AND		
				SILT.		
				10" RECOVERY		
	9	16.0'	14	SATURATED VERY DENSE ORANGISH BROWN	A-1-B	
			27	COARSE TO FINE SAND W/TRACE OF GRAVEL		
17.71			31	AND SILT.		
		18.0'	30	14" RECOVERY		
	10	18.0'	7	SATURATED MEDIUM DENSE ORANGISH BROWN	A-1-B	
			8	COARSE TO FINE SAND W/TRACE OF GRAVEL		
			10	AND SILT.		
20.24		20.0'	8	12" RECOVERY		
22.77						
	11	24.0'	4	SATURATED LOOSE BROWN FINE TO COARSE	A-2-4(0)	
			5	SAND W/SOME SILT.		
25.3			4			
		26.0'	5	20" RECOVERY		
27.83						
	12	29.0'	3	SATURATED LOOSE BROWN FINE SAND W/SOME	A-2-4(0)	
			4	SILT AND COARSE SAND.		
30.36			4			
		31.0'	4	21" RECOVERY		
32.89						
	13	34.0'	3	SATURATED LOOSE BROWN FINE TO COARSE	A-2-4(0)	
			3	SAND W/SOME SILT, TRACE OF GRAVEL.		
35.42			4			
		36.0'	7	22" RECOVERY		
37.95						
	14	39.0'	4	SATURATED LOOSE ORANGISH BROWN SILTY	A-2-4(0)	

BORING (CONT.): LH-SB # 3

DEPTH (FT.)	NO.	SAMPLE DEPTH	BLOWS/6"	SAMPLE DESCRIPTION	CLASS./G. I.	REMARKS
40.48			5	FINE SAND W/TRACE OF COARSE SAND.		
			5			
		41.0'	10	20" RECOVERY		
43.01						
	15	44.0'	4	SATURATED STIFF BROWNISH GRAY CLAY W/	A-7-6(20)	
			4	TRACE OF FINE TO COARSE SAND.		
			6			
45.54		46.0'	8	24" RECOVERY		
48.07						
	16	49.0'	3	SATURATED STIFF GRAY CLAY W/SOME FINE TO	A-7-5(16)	
			5	COARSE SAND, TRACE OF ORGANIC MATTER.		
50.6			8			
		51.0'	16	24" RECOVERY		
53.13						
	17	54.0'	9	SATURATED HARD GRAY FINE SANDY CLAY W/	A-6(3)	
			14	SOME ORGANIC MATTER, TRACE OF COARSE		
55.66		55.3'	50/4"	SAND.		
				16" RECOVERY		
58.19						
	18	59.0'	6	SATURATED VERY STIFF GRAY CLAYEY FINE	A-4(4)	
			10	SANDY SILT W/TRACE OF COARSE SAND AND		
60.72		60.5'	14	ORGANIC MATTER.		
				18" RECOVERY		
63.25						
	19	64.0'	8	SATURATED HARD DARK GRAY CLAYEY FINE	A-4(4)	
			11	SANDY SILT W/TRACE OF COARSE SAND AND		
65.78		65.5'	20	ORGANIC MATTER.		
				18" RECOVERY		
68.31						
	20	69.0'	10	SATURATED HARD DARK GRAY COARSE SANDY	A-4(0)	
			20	SILT W/SOME FINE SAND, TRACE OF ORGANIC		
70.84		70.3'	50/4"	MATTER AND SEA SHELLS.		
				16" RECOVERY		
73.37						
	21	74.0'	26	SATURATED VERY DENSE GRAY FINE SAND W/	A-2-4(0)	
			42	SOME SILT, TRACE OF COARSE SAND, ORGANIC		
75.9		75.4'	50/5"	MATTER AND SEA SHELLS.		
				17" RECOVERY		
78.43						
	22	79.0'	24	SATURATED VERY DENSE GRAY COARSE SAND	A-1-B	
			47	AND GRAVEL W/SOME FINE SAND AND SILT.		
		80.3'	50/4"	16" RECOVERY		
80.96						

Y:/KENT/008/BRIDGE/24122202/Plans/Bridge/bo03.dgn

DELAWARE DEPARTMENT OF TRANSPORTATION

ADDENDUMS / REVISIONS

S.R. 1, LITTLE HEAVEN GRADE SEPARATED INTERSECTION

CONTRACT	BRIDGE NO.	2-008K&L	SHEET NO.
T200412202	DESIGNED BY: EMILY MAURER		271
COUNTY: KENT	CHECKED BY:		TOTAL SHTS.
			641

BORING LOG #3
BRIDGE SHEET 23 OF 26

BORING: LH-SB # 4 | DATE DRILLED: 12/19/2007
STATION: 165+82 | OFFSET: L 81.12' | ELEVATION: + 27.5' | NORTHING: 379447.464 | EASTING: 644750.381
COMMENTS:

DEPTH (FT.)	NO.	SAMPLE DEPTH	BLOWS/6"	SAMPLE DESCRIPTION	CLASS./G. I.	REMARKS
	1	0.5' 1.0'	20	NO SIEVE ANALYSIS - INDICATION OF FINE TO COARSE SAND W/SOME SILT. 4" RECOVERY		18" HOT-MIX & BASE
2.53	2	2.0' 4.0'	21 12 15 17	MOIST MEDIUM DENSE LIGHT BROWN SILTY FINE TO COARSE SAND W/TRACE OF GRAVEL. 18" RECOVERY	A-2-4(0)	
5.06	3	4.0' 6.0'	5 9 11 11	MOIST MEDIUM DENSE LIGHT BROWN FINE TO COARSE SAND W/SOME SILT. 16" RECOVERY	A-2-4(0)	
7.59	4	6.0' 8.0'	6 7 13 14	WET VERY STIFF LIGHT BROWN FINE SANDY SILT W/TRACE OF COARSE SAND. 20" RECOVERY	A-4(0)	
10.12	5	8.0' 10.0'	11 17 20 18	SATURATED DENSE LIGHT BROWN COARSE TO FINE SAND W/TRACE OF SILT AND GRAVEL. 20" RECOVERY	A-1-B	
	6	10.0' 12.0'	12 13 14 15	SATURATED MEDIUM DENSE LIGHT BROWN COARSE TO FINE SAND W/TRACE OF SILT AND GRAVEL. 24" RECOVERY	A-1-B	
12.65	7	12.0' 14.0'	4 6 9 16	SATURATED MEDIUM DENSE LIGHT BROWN FINE TO COARSE SAND W/TRACE OF SILT AND GRAVEL. 18" RECOVERY	A-3	
15.18	8	14.0' 16.0'	7 5 5 4	SATURATED LOOSE LIGHT BROWN COARSE TO FINE SAND W/SOME SILT, TRACE OF GRAVEL. 14" RECOVERY	A-1-B	
17.71	9	16.0' 18.0'	3 4 4 6	SATURATED LOOSE LIGHT BROWN COARSE TO FINE SAND W/SOME SILT, TRACE OF GRAVEL. 24" RECOVERY	A-2-4(0)	
20.24	10	18.0' 20.0'	3 4 6 9	SATURATED LOOSE LIGHT BROWN FINE TO COARSE SAND W/SOME SILT. 24" RECOVERY	A-2-4(0)	
22.77						
25.3	11	24.0' 25.5'	2 3 4	SATURATED LOOSE LIGHT BROWN FINE TO COARSE SAND W/SOME SILT. 16" RECOVERY	A-2-4(0)	
27.83						
30.36	12	29.0' 30.5'	3 3 3	SATURATED LOOSE LIGHT BROWN COARSE TO FINE SAND W/SOME SILT. 18" RECOVERY	A-2-4(0)	
32.89						
35.42	13	34.0' 35.5'	6 6 5	SATURATED MEDIUM DENSE LIGHT BROWN COARSE SAND W/SOME FINE SAND AND GRAVEL, TRACE OF SILT. 14" RECOVERY	A-1-B	
37.95						
	14	39.0'	4 3	SATURATED LOOSE LIGHT BROWN FINE TO COARSE SAND W/SOME SILT, TRACE OF	A-2-4(0)	

BORING (CONT.): LH-SB # 4

DEPTH (FT.)	NO.	SAMPLE DEPTH	BLOWS/6"	SAMPLE DESCRIPTION	CLASS./G. I.	REMARKS
		40.5'	4	GRAVEL. 15" RECOVERY		
43.01						
	15	44.0' 45.5'	2 3 5	SATURATED FIRM LIGHT BROWN CLAY W/TRACE OF FINE TO COARSE SAND. 18" RECOVERY	A-6(14)	
45.54						
48.07						
50.6	16	49.0' 50.5'	2 6 8	SATURATED STIFF GRAY CLAY W/SOME FINE TO COARSE SAND. 18" RECOVERY	A-6(12)	
53.13						
55.66	17	54.0' 55.5'	9 9 8	SATURATED VERY STIFF GRAYISH GREEN FINE TO COARSE SANDY CLAY W/SOME ORGANIC MATTER. 18" RECOVERY	A-6(4)	
58.19						
60.72	18	59.0' 60.5'	6 7 7	SATURATED MEDIUM DENSE GRAYISH GREEN SILTY FINE SAND W/SOME COARSE SAND, TRACE OF GRAVEL AND ORGANIC MATTER. 18" RECOVERY	A-2-4(0)	
63.25						
65.78	19	64.0' 65.5'	13 23 42	SATURATED HARD GRAY FINE SANDY SILT W/ TRACE OF COARSE SAND. 18" RECOVERY	A-4(0)	
68.31						
70.84	20	69.0' 70.5'	18 22 38	SATURATED HARD GRAY FINE SANDY SILT W/ TRACE OF COARSE SAND, ORGANIC MATTER AND SEA SHELLS. 18" RECOVERY	A-4(0)	
73.37						
75.9	21	74.0' 75.5'	28 38 30	SATURATED VERY DENSE GRAY COARSE TO FINE SAND W/SOME SILT, TRACE OF GRAVEL. 18" RECOVERY	A-1-B	
78.43						
80.96	22	79.0' 80.5'	18 22 24	SATURATED DENSE GRAY COARSE TO FINE SAND W/SOME GRAVEL AND SILT, TRACE OF ORGANIC MATTER AND SEA SHELLS. 18" RECOVERY	A-1-B	

BORING (CONT.): LH-SB # 4

DEPTH (FT.)	NO.	SAMPLE DEPTH	BLOWS/6"	SAMPLE DESCRIPTION	CLASS./G. I.	REMARKS
83.49						
86.02	23	84.0' 85.5'	12 15 18	SATURATED DENSE DARK GRAY COARSE SAND W/ SOME FINE SAND AND GRAVEL, TRACE OF SILT, ORGANIC MATTER AND SEA SHELLS. 18" RECOVERY	A-1-B	
88.55						
91.08						
93.61						
96.14						
98.67						
101.2						
103.73						
106.26						
108.79						
111.32						
113.85						
116.38						
118.91						
121.44						

Y:/KENT/008/BRIDGE/2412202/Plans/Bridge/bo04.dgn

DELAWARE DEPARTMENT OF TRANSPORTATION

ADDENDUMS / REVISIONS

S.R. 1, LITTLE HEAVEN GRADE SEPARATED INTERSECTION

CONTRACT: T200412202
COUNTY: KENT
BRIDGE NO. 2-008K&L
DESIGNED BY: EMILY MAURER
CHECKED BY:

BORING LOG #4
BRIDGE SHEET 24 OF 26

SHEET NO. 272
TOTAL SHTS. 641

BORING: LH-SB # 5 | DATE DRILLED: 12/15/2007
STATION: 165+82 | OFFSET: L 6.14' | ELEVATION: | NORTHING: 379449.575 | EASTING: 644825.352
COMMENTS:

DEPTH (FT.)	NO.	SAMPLE DEPTH	BLOWS/6"	SAMPLE DESCRIPTION	CLASS./G. I.	REMARKS
	1	0.0'	2 3 3 3	MOIST LOOSE BROWN FINE TO COARSE SAND W/ SOME SILT, TRACE OF GRAVEL. 18" RECOVERY	A-2-4(0)	
2.53	2	2.0'	3 4 3 3	MOIST LOOSE BROWN SILTY FINE TO COARSE SAND W/TRACE OF GRAVEL. 18" RECOVERY	A-2-4(0)	
5.06	3	4.0'	12 14 21 28	MOIST DENSE BROWN FINE TO COARSE SAND W/ TRACE OF SILT. 16" RECOVERY	A-3	
7.59	4	6.0'	22 28 32 46	MOIST VERY DENSE BROWN SILTY FINE TO COARSE SAND W/TRACE OF GRAVEL. 18" RECOVERY	A-2-4(0)	
10.12	5	8.0'	7 10 9 11	WET MEDIUM DENSE BROWN FINE TO COARSE SAND W/SOME SILT, TRACE OF GRAVEL. 16" RECOVERY	A-2-4(0)	
12.65	6	10.0'	8 9 9 10	SATURATED MEDIUM DENSE BROWN FINE SAND W/SOME COARSE SAND AND SILT, TRACE OF GRAVEL. 18" RECOVERY	A-2-4(0)	
15.18	7	12.0'	4 4 7 8	SATURATED MEDIUM DENSE BROWN SILTY FINE SAND W/TRACE OF COARSE SAND AND GRAVEL. 18" RECOVERY	A-2-4(0)	
17.71	8	14.0'	7 8 8 9	SATURATED MEDIUM DENSE BROWN FINE SAND W/SOME COARSE SAND, TRACE OF SILT AND GRAVEL. 18" RECOVERY	A-3	
20.24	9	16.0'	8 9 9 10	SATURATED MEDIUM DENSE BROWN FINE SAND W/SOME COARSE SAND, TRACE OF SILT AND GRAVEL. 14" RECOVERY	A-3	
22.77	10	18.0'	4 4 4 4	SATURATED LOOSE BROWN FINE SAND W/SOME COARSE SAND AND SILT, TRACE OF GRAVEL. 18" RECOVERY	A-2-4(0)	
25.3	11	24.0'	4 3 3	SATURATED LOOSE BROWN FINE SAND W/SOME SILT AND COARSE SAND, TRACE OF GRAVEL. 16" RECOVERY	A-2-4(0)	
30.36	12	29.0'	3 5 5	SATURATED LOOSE BROWN FINE SAND W/SOME SILT AND COARSE SAND. 18" RECOVERY	A-2-4(0)	
32.89	13	34.0'	12 9 11	SATURATED MEDIUM DENSE BROWN COARSE SAND W/SOME GRAVEL AND FINE SAND, TRACE OF SILT. 12" RECOVERY	A-1-B	
37.95	14	39.0'	7	SATURATED MEDIUM DENSE BROWN FINE TO	A-2-4(0)	

BORING (CONT.): LH-SB # 5

DEPTH (FT.)	NO.	SAMPLE DEPTH	BLOWS/6"	SAMPLE DESCRIPTION	CLASS./G. I.	REMARKS
40.48		40.5'	6 6	COARSE SAND W/SOME SILT, TRACE OF GRAVEL. 13" RECOVERY		
43.01						
	15	44.0'	6 5 4	SATURATED STIFF GRAY CLAY W/SOME FINE SAND, TRACE OF COARSE SAND. 12" RECOVERY	A-6(9)	
45.54		45.5'				
48.07						
	16	49.0'	7 8 14	SATURATED VERY STIFF GRAY CLAY W/SOME FINE SAND, TRACE OF COARSE SAND. 12" RECOVERY	A-7-6(14)	
50.6		50.5'				
53.13						
	17	54.0'	10 21 47	SATURATED HARD BROWN FINE SANDY CLAY W/ SOME COARSE SAND. 18" RECOVERY	A-6(1)	
55.66		55.5'				
58.19						
	18	59.0'	9 13 25	SATURATED DENSE GRAYISH GREEN SILTY FINE SAND W/SOME COARSE SAND, TRACE OF ORGANIC MATTER. 18" RECOVERY	A-2-4(0)	
60.72		60.5'				
63.25						
	19	64.0'	13 16 26	SATURATED HARD GRAY FINE SANDY SILT W/ TRACE OF COARSE SAND AND ORGANIC MATTER. 18" RECOVERY	A-4(1)	
65.78		65.5'				
68.31						
	20	69.0'	9 18 28	SATURATED DENSE GRAY SILTY FINE SAND W/ SOME COARSE SAND, TRACE OF ORGANIC MATTER AND SEA SHELLS. 15" RECOVERY	A-2-4(0)	
70.84		70.5'				
73.37						
	21	74.0'	28 42 62	SATURATED VERY DENSE GRAY COARSE TO FINE SAND W/SOME SILT, TRACE OF GRAVEL, ORGANIC MATTER AND SEA SHELLS. 16" RECOVERY	A-1-B	
75.9		75.5'				
78.43						
	22	79.0'	22 45 50/2"	SATURATED VERY DENSE GRAY COARSE TO FINE SAND W/SOME SILT AND GRAVEL, TRACE OF ORGANIC MATTER AND SEA SHELLS.	A-1-B	
80.96						

BORING (CONT.): LH-SB # 5

DEPTH (FT.)	NO.	SAMPLE DEPTH	BLOWS/6"	SAMPLE DESCRIPTION	CLASS./G. I.	REMARKS
83.49						
	23	84.0' 85.0'	16 53	SATURATED VERY DENSE GRAY COARSE TO FINE SAND W/TRACE OF SILT, GRAVEL, ORGANIC MATTER AND SEA SHELLS. 12" RECOVERY	A-1-B	
86.02						
88.55		88.5'		14" RECOVERY		
	24	89.0' 89.3'	50/3"	SATURATED VERY DENSE GRAYISH BROWN FINE TO COARSE SAND W/TRACE OF SILT, GRAVEL AND ORGANIC MATTER. 2" RECOVERY	A-3	
91.08						
93.61						
	25	94.0' 94.3'	50/3"	SATURATED VERY DENSE GRAY COARSE TO FINE SAND W/TRACE OF SILT, GRAVEL AND ORGANIC MATTER. 3" RECOVERY	A-1-B	
96.14						
98.67						
101.2						
103.73						
106.26						
108.79						
111.32						
113.85						
116.38						
118.91						
121.44						

DELAWARE DEPARTMENT OF TRANSPORTATION

ADDENDUMS / REVISIONS

S.R. 1, LITTLE HEAVEN GRADE SEPARATED INTERSECTION

CONTRACT	BRIDGE NO. 2-008K&L	BORING LOG #5 BRIDGE SHEET 25 OF 26	SHEET NO.
T200412202	DESIGNED BY: EMILY MAURER		273
COUNTY KENT	CHECKED BY:		TOTAL SHTS. 641

Y:/KENT/008/BRIDGE/2412202/Plans/Bridge/bo05.dgn

BORING: LH-SB # 6 | DATE DRILLED: 12/11/2007
STATION: 165+82 | OFFSET: R 68.85' | ELEVATION: + 28.6' | NORTHING: 379451.686 | EASTING: 644900.323
COMMENTS: MUD ROTARY @ 29.0'. HOLE MOVED 10' CLOSER TO S.R. 1.

DEPTH (FT.)	NO.	SAMPLE DEPTH	BLOWS/6"	SAMPLE DESCRIPTION	CLASS./G. I.	REMARKS
	1	0.5'	4 4 3	MOIST LOOSE LIGHT BROWN FINE TO COARSE SAND W/SOME SILT, TRACE OF GRAVEL. 18" RECOVERY	A-2-4(0)	6" TOPSOIL
2.53	2	2.0'	1 1 1 1	MOIST VERY LOOSE LIGHT BROWN FINE TO COARSE SAND W/SOME SILT. 18" RECOVERY	A-2-4(0)	
5.06	3	4.0'	2 2 6 14	MOIST LOOSE LIGHT BROWN SILTY FINE TO COARSE SAND W/SOME GRAVEL. 16" RECOVERY	A-2-4(0)	
7.59	4	6.0'	24 18 20 21	MOIST DENSE LIGHT BROWN FINE TO COARSE SAND W/TRACE OF SILT. 22" RECOVERY	A-3	
10.12	5	8.0'	18 18 16 15	MOIST HARD LIGHT BROWN FINE TO COARSE SANDY SILT W/TRACE OF GRAVEL. 22" RECOVERY	A-4(0)	
	6	10.0'	24 18 20 21	WET DENSE LIGHT BROWN COARSE TO FINE SAND W/TRACE OF SILT. 16" RECOVERY	A-3	
12.65	7	12.0'	3 5 5 8	SATURATED LOOSE LIGHT BROWN SILTY FINE SAND W/TRACE OF COARSE SAND. 16" RECOVERY	A-2-4(0)	
15.18	8	14.0'	5 8 13 18	SATURATED MEDIUM DENSE LIGHT BROWN COARSE TO FINE SAND W/TRACE OF SILT AND GRAVEL. 20" RECOVERY	A-1-B	
17.71	9	16.0'	11 12 11 15	SATURATED MEDIUM DENSE LIGHT BROWN COARSE TO FINE SAND W/TRACE OF SILT AND GRAVEL. 22" RECOVERY	A-1-B	
20.24	10	18.0'	18 16 15 19	SATURATED DENSE LIGHT BROWN COARSE TO FINE SAND W/TRACE OF GRAVEL AND SILT. 16" RECOVERY	A-1-B	
22.77						
25.3	11	24.0'	5 4 4 3	SATURATED LOOSE LIGHT BROWN FINE TO COARSE SAND W/SOME SILT, TRACE OF GRAVEL. 18" RECOVERY	A-2-4(0)	
27.83						
30.36	12	29.0'	1 2 2 3	SATURATED VERY LOOSE LIGHT BROWN FINE TO COARSE SAND W/SOME SILT, TRACE OF GRAVEL. 22" RECOVERY	A-2-4(0)	
32.89						
35.42	13	34.0'	1 2 3	SATURATED LOOSE LIGHT BROWN FINE SAND W/ SOME SILT, TRACE OF COARSE SAND. 18" RECOVERY	A-2-4(0)	
37.95						
	14	39.0'	3 6	SATURATED MEDIUM DENSE LIGHT BROWN FINE SAND W/SOME SILT, COARSE SAND AND	A-2-4(0)	

BORING (CONT.): LH-SB # 6

DEPTH (FT.)	NO.	SAMPLE DEPTH	BLOWS/6"	SAMPLE DESCRIPTION	CLASS./G. I.	REMARKS
		40.5'	7	GRAVEL. 8" RECOVERY		
43.01						
45.54	15	44.0' 45.5'	7 9 10	SATURATED MEDIUM DENSE LIGHT BROWN COARSE TO FINE SAND W/SOME GRAVEL, TRACE OF SILT. 16" RECOVERY	A-1-B	
48.07						
50.6	16	49.0' 50.5'	3 5 4	SATURATED STIFF LIGHT BROWN CLAY W/SOME COARSE SAND, TRACE OF FINE SAND. 18" RECOVERY	A-7-6(13)	
53.13						
55.66	17	54.0' 55.5'	6 8 12	SATURATED VERY STIFF GRAY COARSE SANDY CLAY W/SOME FINE SAND. 18" RECOVERY	A-7-5(6)	
58.19						
60.72	18	59.0' 60.5'	3 7 9	SATURATED MEDIUM DENSE GRAY SILTY FINE TO COARSE SAND W/TRACE OF ORGANIC MATTER. 18" RECOVERY	A-2-4(0)	
63.25						
65.78	19	64.0' 65.5'	7 11 11	SATURATED VERY STIFF GRAY FINE SANDY SILT W/SOME COARSE SAND, TRACE OF ORGANIC MATTER. 12" RECOVERY	A-4(3)	
68.31						
70.84	20	69.0' 70.5'	8 10 12	SATURATED VERY STIFF GRAY FINE SANDY SILT W/SOME COARSE SAND AND ORGANIC MATTER. 10" RECOVERY	A-4(4)	
73.37						
75.9	21	74.0' 75.5'	15 25 30	SATURATED VERY DENSE GRAY FINE TO COARSE SAND W/SOME SILT, TRACE OF ORGANIC MATTER. 18" RECOVERY	A-2-4(0)	
78.43						
80.96	22	79.0' 80.2'	25 39 50/2"	SATURATED VERY DENSE GRAY COARSE TO FINE SAND W/SOME GRAVEL, TRACE OF SILT, ORGANIC MATTER AND SEA SHELLS. 14" RECOVERY	A-1-B	

BORING (CONT.): LH-SB # 6

DEPTH (FT.)	NO.	SAMPLE DEPTH	BLOWS/6"	SAMPLE DESCRIPTION	CLASS./G. I.	REMARKS
83.49						
86.02	23	84.0' 85.3'	25 35 50/3"	SATURATED VERY DENSE GRAY COARSE TO FINE SAND W/SOME GRAVEL AND SILT, TRACE OF ORGANIC MATTER. 15" RECOVERY	A-1-B	
88.55						
91.08	24	89.0' 89.8'	47 50/3"	SATURATED VERY DENSE GRAY FINE TO COARSE SAND W/TRACE OF SILT, GRAVEL AND ORGANIC MATTER. 9" RECOVERY	A-3	
93.61						
96.14						
98.67						
101.2						
103.73						
106.26						
108.79						
111.32						
113.85						
116.38						
118.91						
121.44						

Y:/KENT/008/BRIDGE/2412202/Plans/Bridge/bo06.dgn

DELAWARE DEPARTMENT OF TRANSPORTATION

ADDENDUMS / REVISIONS

S.R. 1, LITTLE HEAVEN GRADE SEPARATED INTERSECTION

CONTRACT: T200412202
COUNTY: KENT
BRIDGE NO. 2-008K&L
DESIGNED BY: EMILY MAURER
CHECKED BY:

BORING LOG #6 BRIDGE SHEET 26 OF 26

SHEET NO. 274
TOTAL SHTS. 641

RIPRAP TREATMENT NOTES:

1. ALL RIPRAP IN THE CHANNEL BOTTOM SHALL BE RECESSED ONE FOOT BELOW THE STREAM BED ELEVATION AND CHOKED WITH BORROW TYPE 'B' SO THAT ALL OF THE VOIDS IN THE RIPRAP ARE FILLED WITH MATERIAL. PAYMENT UNDER ITEM #209002 - BORROW TYPE 'B'. THE RIPRAP SHALL THEN BE COVERED WITH A MINIMUM OF 12" CHANNEL BED FILL. PAYMENT UNDER ITEM #712531 - CHANNEL BED FILL.
2. ALL RIPRAP ON THE STREAM BANK, OUTSIDE THE CHANNEL BED, SHALL BE CHOKED WITH DELAWARE #57 STONE, FILLED WITH TOPSOIL, AND SEEDED. PLACE JUST ENOUGH CHOKE MATERIAL TO PREVENT THE LOSS OF TOPSOIL THROUGH THE RIPRAP, AND THEN FINISH FILLING THE VOIDS WITH TOPSOIL SO THAT THE RIPRAP PEAKS ARE BARELY VISIBLE. AN ADDITIONAL 4-INCH TOPSOIL LAYER SHALL BE PLACED ON TOP OF THE RIPRAP. SLOPE SEEDING SHALL BE WITH ITEM #732004 PERMANENT GRASS SEEDING, DRY GROUND. PAYMENT FOR RIPRAP AND DELAWARE #57 STONE SHALL BE PAID FOR UNDER THE RIPRAP ITEM.

INDEX OF CULVERT SHEETS

BR. SHEET No	TABLE OF CONTENTS
1	CULVERT PLAN, SECTION AND ELEVATION
2	REINFORCEMENT DETAILS
3	BORING LOG #9
4	BORING LOG #10
	TOTAL CULVERT SHEETS: 4

LRFR LOAD RATINGS

TYPE OF TRUCK	INVENTORY RATING		OPERATING RATING	
	RATING FACTOR	LOAD RATING (TONS)	RATING FACTOR	LOAD RATING (TONS)
AASHTO HL-93	1.63	58.54	2.11	75.89
AASHTO HL-93 TANDEM	1.62	40.54	2.10	52.55
AASHTO HS20T	1.63	58.54	2.11	75.89

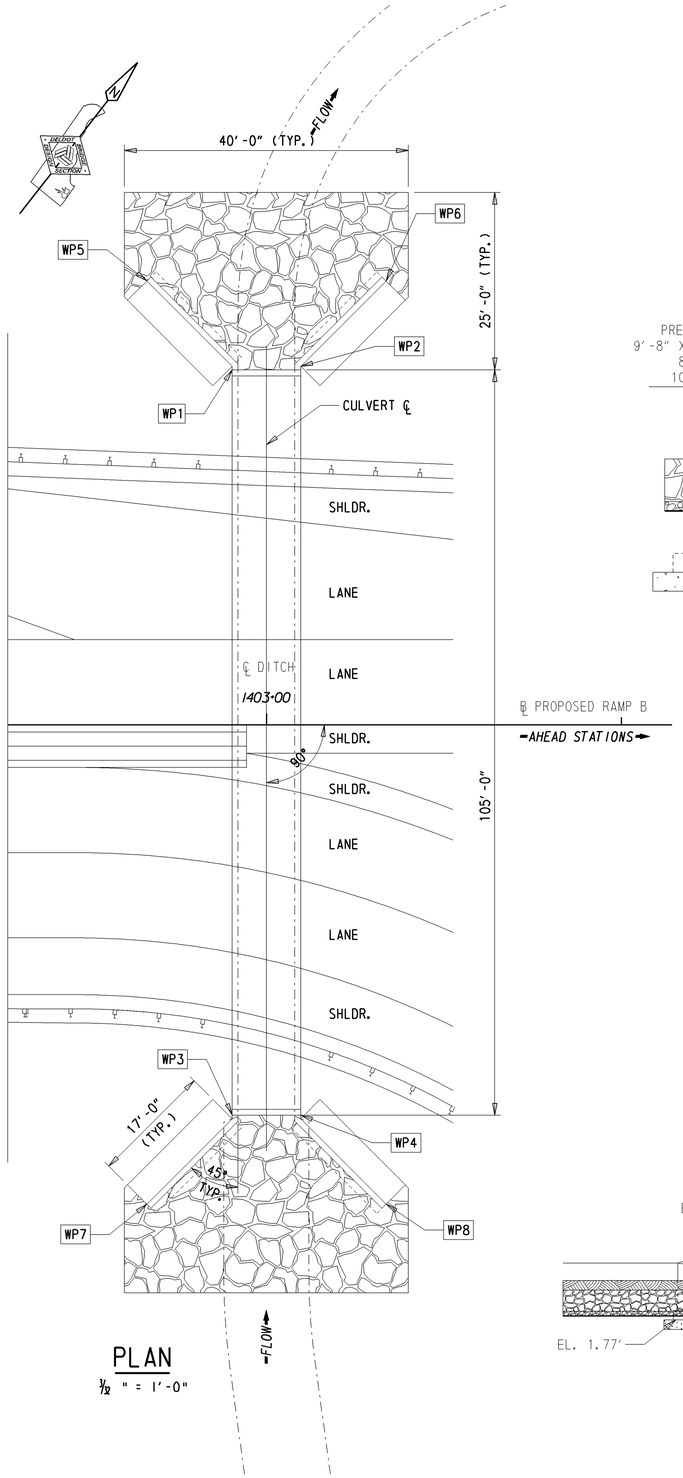

PLAN

1/12" = 1'-0"

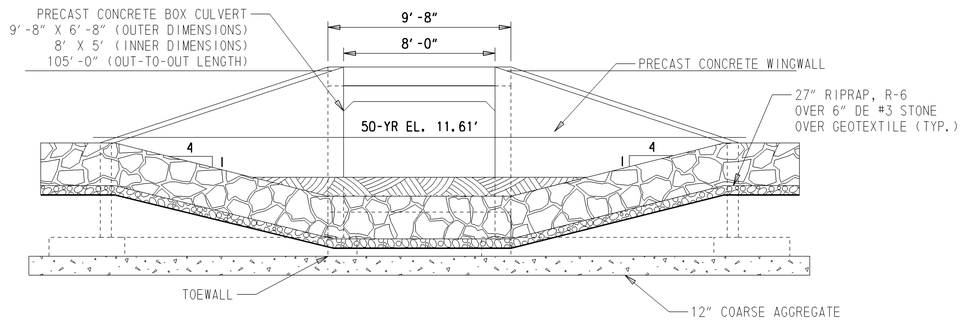

ELEVATION

1/4" = 1'-0"

HYDRAULIC DATA

DRAINAGE AREA:	0.32 sq mi
DESIGN FREQUENCY:	50-YR
DESIGN DISCHARGE I	189.47 cfs
50-YR FLOOD EL.:	11.61 ft
PROPOSED OPENNING:	40 sf

WORKING POINTS

PT.	STATION	OFFSET	NORTHING	EASTING
1	1402+95.17	50.00 L	383233.21	643785.02
2	1403+04.83	50.00 L	383239.15	643792.64
3	1402+95.17	50.00 R	383150.38	643849.54
4	1403+04.83	50.00 R	383156.21	643857.17
5	1402+83.15	62.52 L	383235.70	643767.84
6	1403+16.85	62.52 L	383256.42	643794.43
7	1402+83.15	67.52 R	383133.12	643847.75
8	1403+16.85	67.52 R	383153.83	643874.35

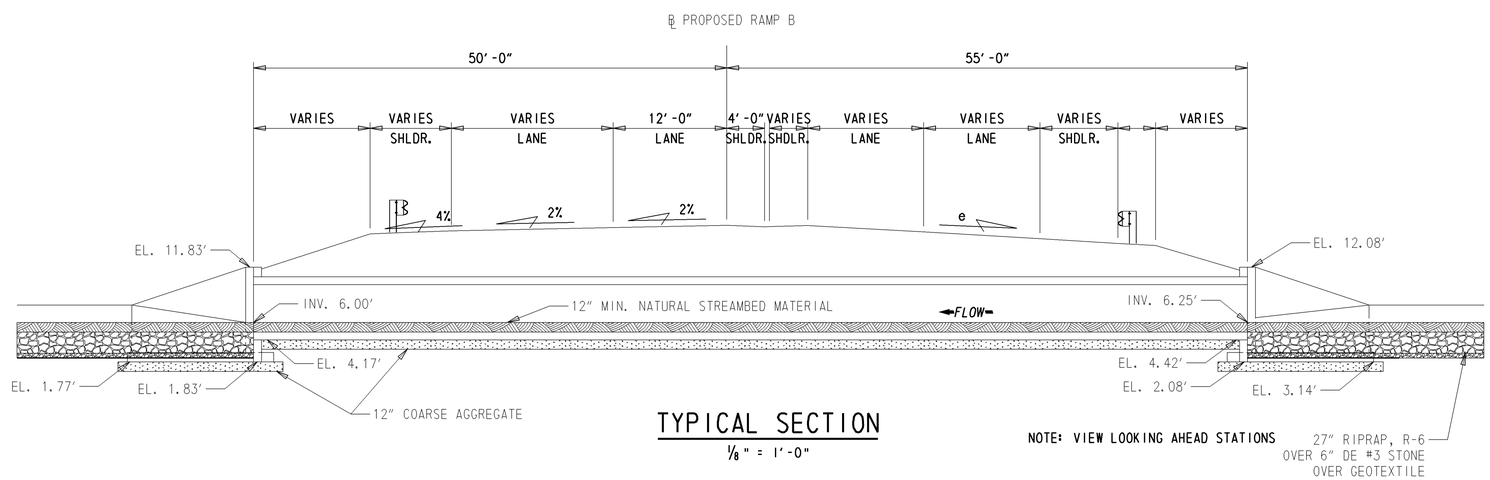

TYPICAL SECTION

1/8" = 1'-0"

NOTE: VIEW LOOKING AHEAD STATIONS

DELAWARE DEPARTMENT OF TRANSPORTATION	ADDENDUMS / REVISIONS	SR1, LITTLE HEAVEN GRADE SEPARATED INTERSECTION	CONTRACT 24-122-02	BRIDGE NO. 2-007D	CULVERT PLAN, SECTION AND ELEVATION CULVERT SHEET 1 OF 4	SHEET NO. 275
			COUNTY KENT	DESIGNED BY: JAT		TOTAL SHTS. 641
				CHECKED BY: EM		

Y:\KENT\008\BRIDGE\2412202\PLANS\CULVERT\PE01.DGN

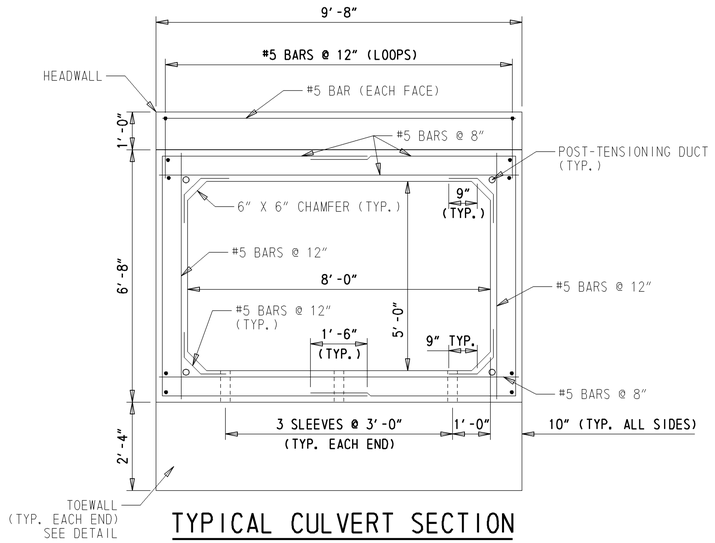

TYPICAL CULVERT SECTION

½″ = 1′-0″

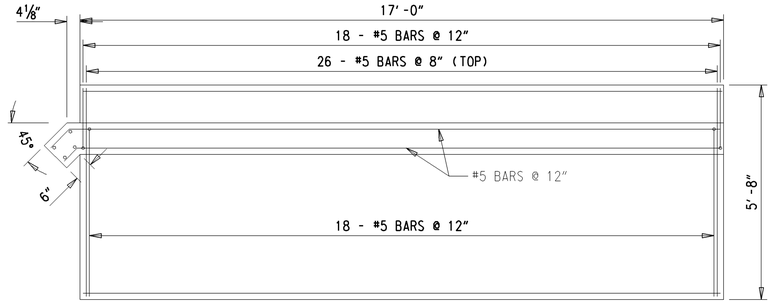

WINGWALL PLAN

½″ = 1′-0″

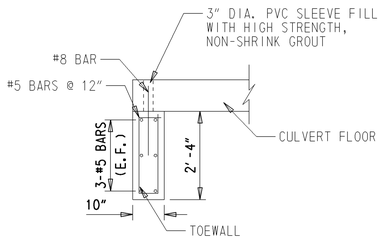

TYPICAL TOEWALL SECTION

½″ = 1′-0″

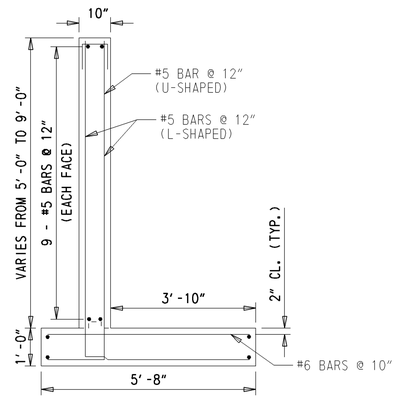

TYPICAL WINGWALL SECTION

½″ = 1′-0″

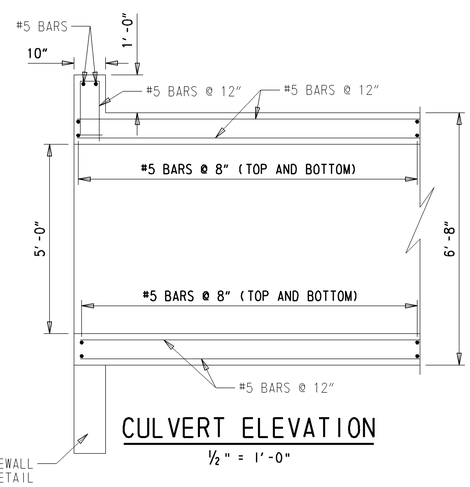

CULVERT ELEVATION

½″ = 1′-0″

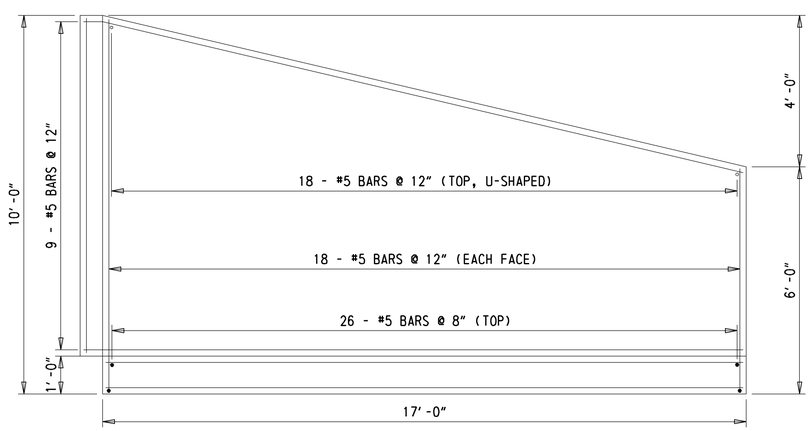

WINGWALL ELEVATION

½″ = 1′-0″

NOTES FOR PRECAST ELEMENTS

1. DESIGN PLANS / WORKING DRAWINGS
   INFORMATION PERTAINING TO THE PRECAST REINFORCED CONCRETE BOX CULVERT AND WINGWALL SECTIONS IS INTENDED TO SERVE AS AN INDICATION OF THE TYPE OF CONSTRUCTION ACCEPTABLE FOR USE. THE CONTRACTOR WILL BE REQUIRED TO PREPARE AND SUBMIT FOR APPROVAL A COMPLETE SET OF DETAILED SHOP PLANS FOR THE PRECAST CONCRETE UNITS THEY PROPOSE TO FURNISH. THE SHOP DRAWINGS SHALL INCLUDE:
   A. AN OVERALL PLAN SHOWING ALL UNITS TOGETHER AND DETAILS OF EACH TYPE OF UNIT.
   B. A PLAN VIEW OF REINFORCEMENT FOR ANY IRREGULAR SHAPED (SKEWED, CURVED, ETC.) SECTIONS.
   C. REINFORCING BAR LIST
   D. BILL OF MATERIALS OR ALL ACCESSORIES
   E. METHOD AND SEQUENCE OF POST-TENSIONING

2. PRECAST ELEMENTS, ACCESSORIES, AND INSTALLATION PAYMENT FOR ITEM 602506 - PRECAST CONCRETE CULVERT SHALL INCLUDE:
   A. ALL PRECAST ELEMENTS (BOX CULVERT AND WINGWALLS INCLUDING TOEWALLS AND FOOTERS).
   B. ALL ASSOCIATED BAR REINFORCEMENT
   C. ALL ACCESSORIES (INCLUDING, BUT NOT LIMITED TO, WEEP HOLES, CONCRETE FINISH, POST-TENSIONING TENDONS, CONNECTION PLATES, GROUT, JOINT WRAP, THREADED INSERTS) MENTIONED IN THE FOLLOWING NOTES UNLESS NOTED OTHERWISE.
   D. DELIVERY AND INSTALLATION OF ALL PRECAST ELEMENTS AND ALL ACCESSORIES.

3. CONCRETE STRENGTHS
   THE MINIMUM COMPRESSIVE STRENGTH AT 28 DAYS EQUALS 5000 psi. MIX REQUIREMENTS SHALL CONFORM TO SECTION 812 OF THE SPECIFICATIONS. ALL EXPOSED EDGES SHALL BE CHAMFERED ¾″ UNLESS OTHERWISE NOTED.

4. REINFORCEMENT MATERIALS REQUIREMENT:
   AASHTO M31 (ASTM A615) - GRADE 60. BAR REINFORCEMENT TO HAVE 2″ MINIMUM COVER EXCEPT AS NOTED OR DETAILED. ALL BAR REINFORCEMENT AND CHAIR SUPPORTS SHALL BE PROTECTED WITH FUSION BONDED EPOXY. EPOXY COATED REINFORCING STEEL SHALL CONFORM TO AASHTO M284 (ASTM D3963).

5. CONCRETE SEALER
   SILICONE ACRYLIC CONCRETE SEALER SHALL BE APPLIED TO THE EXPOSED FACE OF ALL CONCRETE ELEMENTS. PAYMENT SHALL BE MADE UNDER ITEM #602646 - SILICONE ACRYLIC CONCRETE SEALER.

6. BOX CULVERT POST-TENSIONING
   THE PRECAST BOX CULVERT SECTIONS SHALL BE POST-TENSIONED TOGETHER WITH A MINIMUM OF FOUR ½″ DIA. 270 ksi LOW RELAXATION SHEATHED TENDONS. EACH TENDON SHALL BE POST-TENSIONED TO 31 KIPS MINIMUM. THE ULTIMATE STRENGTH ON EACH TENDON EQUALS 41 KIPS. POST-TENSIONING DETAILS (PLACEMENT, SEQUENCE OF TENSIONING, etc.) SHALL BE SHOWN IN THE SUBMITTED SHOP DRAWINGS. ALL POCKETS FOR POST-TENSIONING DUCTS IN ANY EXTERIOR SURFACE SHALL BE FILLED WITH NON-SHRINK GROUT.

7. TOEWALLS AND HEADWALLS
   THE HEADWALLS SHALL BE CAST MONLITHICALLY WITH THE END CULVERT SECTIONS AS SHOWN ON THE PLANS. THE TOEWALLS SHALL BE CAST SEPARATELY WITH THE END CULVERT SECTIONS AS SHOWN ON THE PLANS.

8. WINGWALL CONNECTIONS
   A BOLTED CONNECTION SHALL BE USED TO CONNECT THE WINGWALLS TO THE END CULVERT SECTIONS. THE BOLTED CONNECTION MUST CONSIST OF A MINIMUM OF TWO 3′-0″ WIDE x 2′-0″ TALL x ¼″ THICK GALVANIZED PLATES PER JOINT WITH AT LEAST FOUR ¾″ BOLTS PER PLATE. FOR THE ANGLED WINGWALLS, THE PLATES MUST BE ANGLED TO MAINTAIN THE 3′-0″ MINIMUM WIDTH. BOLTED CONNECTION DETAILS SHALL BE SHOWN IN THE SUBMITTED SHOP DRAWINGS. HOLES FOR ANCHOR BOLTS MAY BE FIELD DRILLED.

9. JOINTS BETWEEN PRECAST SECTIONS
   NEOPRENE GASKETS SHALL BE PROVIDED AT THE JOINTS BETWEEN ALL PRECAST UNITS IN ORDER TO MAKE THE JOINTS WATERTIGHT. ALL JOINTS BETWEEN PRECAST BOX SECTIONS SHALL BE TONGUE AND GROOVE. ALL WINGWALL TO WINGWALL AND WINGWALL TO BOX CULVERT JOINTS SHALL HAVE A SHEAR KEY. THE LOCATIONS OF THE JOINTS IN THE BOX CULVERT SHALL BE DETERMINED BY THE PRECASTER AND SUBMITTED IN THE SHOP DRAWINGS FOR APPROVAL. THE REINFORCEMENT SHALL HAVE 2″ COVER AT THE END OF EACH SECTION AND MEET OR EXCEED THE MINIMUM BAR SPACING DENOTED IN THE PLANS ACROSS EACH SECTION. ALL JOINT EXTERIORS SHALL BE COVERED WITH A MINIMUM 9″ WIDE WRAP CENTERED ON THE JOINT AS PER THE SPECIAL PROVISION FOR ITEM #602506-PRECAST CONCRETE CULVERT.

BORING: LH-SB # 9			DATE DRILLED: 3/4/2009		
STATION: 1402+99.45	OFFSET: R 26.86'		ELEVATION: + 19.4'	NORTHING: -	EASTING: -
COMMENTS:					

DEPTH (FT.)	NO.	SAMPLE DEPTH	BLOWS/6"	SAMPLE DESCRIPTION	CLASS./G. I.	REMARKS
	1	0.5'	3 3 3	MOIST LOOSE DARK BROWN FINE TO COARSE SAND WITH SOME SILT, TRACE OF GRAVEL.	A-2-4(0)	
		2.0'		16" RECOVERY		
	2	2.0'	4 3 3	MOIST LOOSE ORANGISH BROWN FINE TO COARSE SAND W/SOME SILT, TRACE OF GRAVEL.	A-2-4(0)	
3.5		4.0'		16" RECOVERY		
	3	4.0'	3 3 4	MOIST LOOSE BROWN COARSE TO FINE SAND WITH TRACE OF SILT AND GRAVEL.	A-1-b	
		6.0'	6	15" RECOVERY		
	4	6.0'	7 8 11 13	MOIST MEDIUM DENSE BROWN COARSE SAND W/ SOME FINE SAND AND GRAVEL, TRACE OF SILT.	A-1-b	
7.00		8.0'		17" RECOVERY		
	5	8.0'	3 4 3 2	WET LOOSE BROWN FINE SAND AND GRAVEL W/ SOME COARSE SAND AND SILT.	A-2-4(0)	
		10.0'		15" RECOVERY		
10.5	6	10.0'	3 4 3 4	WET LOOSE BROWNISH GRAY SILT FINE SAND W/ SOME COARSE SAND, TRACE OF GRAVEL.	A-2-4(0)	
		12.0'		24" RECOVERY		
	7	12.0'	2 2 2 2	WET VERY LOOSE BROWN COARSE TO FINE SAND W/ SOME GRAVEL, TRACE OF SILT.	A-1-b	
14.0		14.0'		24" RECOVERY		
	8	14.0'	3 2 2 1	WET VERY LOOSE BROWN COARSE TO FINE SAND W/ SOME SILT, TRACE OF GRAVEL.	A-1-b(0)	
		16.0'		24" RECOVERY		
	9	16.0'	4 4 4 5	WET LOOSE BROWNISH BLACK FINE TO COARSE SAND W/ SOME SILT, TRACE OF GRAVEL.	A-2-4(0)	
17.5		18.0'		21" RECOVERY		
	10	18.0'	6 5 6 7	WET MEDIUM DENSE BROWNISH BLACK COARSE TO FINE SAND W/ SOME SILT, TRACE OF GRAVEL.	A-1-b(0)	BOTTOM OF FOOTING
		20.0'		20" RECOVERY		
	11	20.0'	8 7 6 7	WET MEDIUM DENSE BROWNISH BLACK COARSE TO FINE SAND W/ SOME SILT, TRACE OF GRAVEL.	A-1-b(0)	
21.0		22.0'		18" RECOVERY		
	12	22.0'	8 7 8 5	WET MEDIUM DENSE BROWNISH BLACK COARSE TO FINE SAND W/ SOME SILT, TRACE OF GRAVEL.	A-1-b(0)	
		24.0'		21" RECOVERY		
	13	24.0'	11 7 4 5	WET MEDIUM DENSE BROWNISH ORANGE COARSE TO FINE SAND AND GRAVEL W/ SOME SILT.	A-1-b(0)	
24.5		26.0'		19" RECOVERY		
	14	26.0'	8 8 7 6	WET MEDIUM DENSE BROWNISH ORANGE COARSE SAND AND GRAVEL W/ SOME FINE SAND, TRACE OF SILT.	A-1-b(0)	
28.0		28.0'		20" RECOVERY		
	15	28.0'	5 2 5 5	WET LOOSE BROWNISH ORANGE COARSE TO FINE SAND W/ SOME GRAVEL, TRACE OF SILT.	A-1-b(0)	
		30.0'		23" RECOVERY		
	16	30.0'	8 7 8 9	WET MEDIUM DENSE BROWNISH ORANGE COARSE TO FINE SAND W/ SOME SILT, TRACE OF GRAVEL.	A-1-b(0)	
31.5		32.0'		21" RECOVERY		
	17	32.0'	6 7 7 8	WET MEDIUM DENSE BROWNISH ORANGE COARSE TO FINE SAND W/ SOME GRAVEL, TRACE OF SILT.	A-1-b(0)	
		34.0'		20" RECOVERY		
	18	34.0'	11 4 6 7	WET LOOSE BROWNISH ORANGE COARSE TO FINE SAND W/ SOME SILT, TRACE OF GRAVEL.	A-1-b	
35.0		36.0'		16" RECOVERY		
	19	36.0'	8 8 9 12	WET MEDIUM DENSE BROWNISH ORANGE COARSE TO FINE SAND W/ TRACE OF SILT AND GRAVEL.	A-1-b	
		38.0'		23" RECOVERY		
	20	38.0'	6 7 8 9	WET MEDIUM DENSE BROWNISH ORANGE AND BLACK COARSE TO FINE SAND W/ TRACE OF SILT AND GRAVEL.	A-1-b	
38.5		40.0'		22" RECOVERY		

BORING (CONT.): LH-SB # 9

DEPTH (FT.)	NO.	SAMPLE DEPTH	BLOWS/6"	SAMPLE DESCRIPTION	CLASS./G. I.	REMARKS
	21	40.0'	8 10 11 12	WET MEDIUM DENSE BROWNISH ORANGE AND BLACK COARSE TO FINE SAND W/ TRACE OF SILT AND GRAVEL.	A-1-b	
42.0		42.0'		24" RECOVERY		
	22	42.0'	8 8 8 10	WET MEDIUM DENSE BROWNISH ORANGE AND BLACK COARSE TO FINE SAND W/ TRACE OF SILT AND GRAVEL.	A-1-b	
		44.0'		19" RECOVERY		
	23	44.0'	10 11 13 17	WET MEDIUM DENSE BROWNISH ORANGE AND BLACK COARSE TO FINE SAND AND GRAVEL W/ SOME SILT.	A-1-b	
45.5		46.0'		20" RECOVERY		
	24	46.0'	9 9 13 12	SATURATED MEDIUM DENSE BROWN AND BLACK FINE SAND W/ SOME SILT, TRACE OF COARSE SAND AND GRAVEL.	A-2-4(0)	
		48.0'		10" RECOVERY		
	25	48.0'	4 5 6 7	SATURATED STIFF GRAY CLAYEY FINE SANDY SILT W/ SOME ORGANIC MATTER, TRACE OF COARSE SAND.	A-4(6)	
49.0		50.0'		21" RECOVERY		
52.5						

Y:/KENT/008/BRIDGE/2412202/Plans/Bridge/bo01.dgn

DELAWARE DEPARTMENT OF TRANSPORTATION

ADDENDUMS / REVISIONS

S.R. 1, LITTLE HEAVEN GRADE SEPERATED INTERSECTION

CONTRACT	BRIDGE NO. 2-007D	BORING LOG #9 CULVERT SHEET 3 OF 4	SHEET NO.
T200412202	DESIGNED BY: EMILY MAURER		277
COUNTY			TOTAL SHTS.
KENT	CHECKED BY:		641

BORING: LH-SB # 10			DATE DRILLED: 3/5/2009		
STATION: 1402+99.45	OFFSET: L 28.87'		ELEVATION: + 19.7'	NORTHING: -	EASTING: -
COMMENTS:					

DEPTH (FT.)	NO.	SAMPLE DEPTH	BLOWS/6"	SAMPLE DESCRIPTION	CLASS./G. I.	REMARKS
	1	0.5'	3 3 4	MOIST LOOSE BROWN FINE TO COARSE SAND WITH SOME SILT, TRACE OF GRAVEL. 17" RECOVERY	A-2-4(0)	
3.85	2	2.0' 4.0'	2 2 2 2	MOIST VERY LOOSE BROWN FINE TO COARSE SAND W/SOME SILT AND GRAVEL. 15" RECOVERY	A-2-4(0)	
	3	4.0' 6.0'	2 3 5 7	MOIST LOOSE BROWN FINE TO COARSE SAND WITH TRACE OF SILT AND GRAVEL. 16" RECOVERY	A-3	
7.7	4	6.0' 8.0'	7 8 9 11	MOIST MEDIUM DENSE BROWN COARSE SAND W/ SOME FINE SAND, TRACE OF GRAVEL AND SILT. 21" RECOVERY	A-1-b	
	5	8.0' 10.0'	4 5 7 9	WET MEDIUM DENSE BROWN COARSE TO FINE SAND W/ SOME GRAVEL AND SILT. 17" RECOVERY	A-1-b	
11.55	6	10.0' 12.0'	7 9 9 13	WET MEDIUM DENSE BROWN FINE SAND W/ SOME SILT AND COARSE SAND, TRACE OF GRAVEL. 21" RECOVERY	A-2-4(0)	
	7	12.0' 14.0'	2 3 2 2	WET LOOSE BROWN FINE TO COARSE SAND W/ SOME SILT, TRACE OF GRAVEL. 23" RECOVERY	A-2-4(0)	
15.4	8	14.0' 16.0'	2 3 3 3	WET LOOSE BROWN FINE TO COARSE SAND W/ SOME SILT, TRACE OF GRAVEL. 22" RECOVERY	A-2-4(0)	
	9	16.0' 18.0'	2 3 3 5	WET LOOSE BROWN FINE TO COARSE SAND W/ SOME SILT, TRACE OF GRAVEL. 22" RECOVERY	A-2-4(0)	
19.25	10	18.0' 20.0'	2 2 5 6	WET LOOSE BROWN FINE TO COARSE SAND W/ SOME SILT, TRACE OF GRAVEL. 23" RECOVERY	A-2-4(0)	BOTTOM OF FOOTING
	11	20.0' 22.0'	2 3 5 8	WET LOOSE BROWN COARSE TO FINE SAND W/ SOME SILT, TRACE OF GRAVEL. 23" RECOVERY	A-1-b	
23.1	12	22.0' 24.0'	1 2 4 4	WET LOOSE BROWN COARSE TO FINE SAND W/ SOME SILT, TRACE OF GRAVEL. 22" RECOVERY	A-1-b(0)	
	13	24.0' 26.0'	3 2 3 4	WET LOOSE BROWN COARSE TO FINE SAND W/ SOME SILT, TRACE OF GRAVEL. 16" RECOVERY	A-1-b(0)	
26.95	14	26.0' 28.0'	8 10 8 5	WET MEDIUM DENSE BROWN COARSE SAND AND GRAVEL W/ SOME FINE SAND, TRACE OF SILT. 20" RECOVERY	A-1-b(0)	
	15	28.0' 30.0'	4 8 4 4	WET MEDIUM DENSE BROWN FINE TO COARSE SAND W/ SOME GRAVEL, TRACE OF SILT. 21" RECOVERY	A-1-b(0)	
30.8	16	30.0' 32.0'	8 3 4 5	WET LOOSE BROWN COARSE TO FINE SAND W/ SOME GRAVEL, TRACE OF SILT. 19" RECOVERY	A-1-b(0)	
	17	32.0' 34.0'	10 4 5 5	WET LOOSE BROWN COARSE TO FINE SAND W/ TRACE OF SILT AND GRAVEL. 19" RECOVERY	A-1-b(0)	
34.65	18	34.0' 36.0'	1 2 3 3	WET LOOSE BROWN COARSE TO FINE SAND W/ SOME SILT, TRACE OF GRAVEL. 16" RECOVERY	A-3	
	19	36.0' 38.0'	4 5 6 8	WET MEDIUM DENSE BROWN COARSE TO FINE SAND W/ TRACE OF SILT AND GRAVEL. 22" RECOVERY	A-1-b	
38.5	20	38.0' 40.0'	6 4 6 6	WET LOOSE BROWN COARSE TO FINE SAND W/ TRACE OF SILT AND GRAVEL. 15" RECOVERY	A-1-b	

BORING (CONT.): LH-SB # 10

DEPTH (FT.)	NO.	SAMPLE DEPTH	BLOWS/6"	SAMPLE DESCRIPTION	CLASS./G. I.	REMARKS
	21	40.0' 42.0'	7 8 9 10	WET MEDIUM DENSE BROWN COARSE TO FINE SAND W/ SOME GRAVEL, TRACE OF SILT. 22" RECOVERY	A-1-b	
42.35	22	42.0' 44.0'	7 7 7 11	WET MEDIUM DENSE BROWN COARSE TO FINE SAND W/ SOME SILT AND GRAVEL. 15" RECOVERY	A-1-b	
46.2	23	44.0' 46.0'	8 12 20 20	SATURATED DENSE ORANGISH BROWN FINE SAND W/ SOME GRAVEL, SILT AND COARSE SAND. 17" RECOVERY	A-2-4(0)	
	24	46.0' 47.0'	10 11	SATURATED MEDIUM DENSE ORANGISH BROWN FINE SAND W/ SOME SILT AND COARSE SAND, TRACE OF GRAVEL. 12" RECOVERY	A-2-4(0)	
	24A	47.0' 47.5'	12	SATURATED STIFF BROWN SILT W/ SOME CLAY AND FINE TO COARSE SAND, TRACE OF GRAVEL. 6" RECOVERY	A-4(4)	
	24B	47.5' 48.0'	10	NO SIEVE ANALYSIS - INDICATION OF SATURATED STIFF GRAY SILT W/ SOME SAND 6" RECOVERY	A-4(4)	
50.05	25	48.0' 50.0'	8 9 10 9	SATURATED MEDIUM DENSE DARK BROWN FINE SAND W/ SOME SILT, COARSE SAND AND GRAVEL. 22" RECOVERY	A-2-4(0)	
53.9						
57.75						

Y:/KENT/008/BRIDGE/2412202/Plans/Bridge/bo01.dgn

DELAWARE DEPARTMENT OF TRANSPORTATION

ADDENDUMS / REVISIONS

S.R. 1, LITTLE HEAVEN GRADE SEPERATED INTERSECTION

CONTRACT	BRIDGE NO. 2-007D	BORING LOG #10 CULVERT SHEET 4 OF 4	SHEET NO.
T200412202	DESIGNED BY: EMILY MAURER		278
COUNTY: KENT	CHECKED BY:		TOTAL SHTS. 641

TRAFFIC CONTROL NOTES

1) FOR THIS PROJECT, NIGHT WORK SHALL CORRESPOND TO THE HOURS OF 7:00 PM TO 6:00 AM AND IS SUBJECT TO THE RESTRICTIONS ON LANE CLOSURES IN ITEM - 743000 OR OTHER RESTRICTIONS AS NOTED IN THE CONTRACT DOCUMENTS OR AS DIRECTED BY THE ENGINEER.

2) FOR THIS PROJECT PEAK HOURS ARE DEFINED AS 7:00 AM TO 9:00 AM AND 3:00 PM TO 6:00 PM, MONDAY THROUGH FRIDAY AND IS SUBJECT TO THE RESTRICTIONS ON LANE CLOSURES IN ITEM - 743000 OR OTHER RESTRICTIONS AS NOTED IN THE CONTRACT DOCUMENTS OR AS DIRECTED BY THE ENGINEER.

3) THE CONTRACTOR IS RESPONSIBLE FOR THE MAINTENANCE OF EXISTING PAVEMENT WITHIN THE PROJECT LIMITS FOR THE DURATION OF THE CONTRACT OR AS DIRECTED BY THE ENGINEER OR DESIGNEE. ALL REPAIRS ARE AT THE CONTRACTOR'S EXPENSE AS DIRECTED BY THE ENGINEER.

4) THE CONTRACTOR SHALL BE RESPONSIBLE FOR COORDINATING THEIR WORK WITH OTHER CONTRACTORS IN THE AREA. ANY COSTS ARE INCIDENTAL TO THE CONTRACT.

5) ENDS OF PORTABLE P.C.C. SAFETY BARRIER SHALL BE PROTECTED WITH AN IMPACT ATTENUATOR. CRASH CUSHIONS SHALL NOT BE ALLOWED ON THIS PROJECT UNLESS OTHERWISE APPROVED BY THE ENGINEER. IMPACT ATTENUATORS ON ROADWAYS WITH SPEED LIMITS EQUALING OR EXCEEDING 40 MPH SHALL BE TL-3, OTHERWISE TL-2.

6) THE CONTRACTOR SHALL NOT BE PERMITTED TO CROSS OVER THE UNPAVED MEDIAN OF SR1 OUTSIDE THE AREA PROTECTED BY P.C.C. SAFETY BARRIER UNDER ANY CIRCUMSTANCES.

7) ALL P.C.C. SAFETY BARRIER WITH LESS THAN 4' BETWEEN THE BACK OF THE BARRIER TO THE WORK ZONE MUST BE PINNED. ALL COSTS ARE INCIDENTAL TO THE BARRIER.

8) THE DEPARTMENT SHALL ONLY PAY FOR ITEM #743005, FURNISH AND MAINTAIN PORTABLE LIGHT ASSEMBLY, FOR WORK THAT IS SPECIFICALLY RESTRICTED TO NIGHT AS NOTED IN THE CONTRACT DOCUMENTS OR AS DIRECTED BY THE ENGINEER. THE COST OF ANY FLOODLIGHTING NECESSARY DUE TO THE WORK BY THE CONTRACTOR ON ANY ITEM OCCURING AFTER DARK THAT IS NOT SPECIFICALLY IDENTIFIED AS NIGHT WORK WITHIN THE CONTRACT DOCUMENTS SHALL BE INCIDENTAL TO THE BID PRICE OF THE ITEM BEING CONSTRUCTED AFTER DARK. ALL PERSONS WITHIN THE WORKSITE SHALL WEAR REFLECTORIZED VESTS. IT SHALL BE THE CONTRACTOR'S RESPONSIBILTY TO ADEQUATELY ILLUMINATE THE WORK ZONE TO ENSURE THE SAFETY OF WORKERS AND THE TRAVELLING PUBLIC.

9) A TYPE II TRUCK MOUNTED ATTENUATOR (TMA) SHALL BE REQUIRED ON THIS PROJECT DURING THE FOLLOWING PAVEMENT OPERATIONS: TEMPORARY/PERMANENT PAVEMENT MARKINGS, ROADSIDE SPRAYING, PATCHING, MILLING, SWEEPING, TEMPORARY TRAFFIC BARRIER PLACEMENT OR AS DIRECTED BY THE ENGINEER. THE ROLL AHEAD DISTANCE SHALL BE AS PER THE MANUFACTURER'S RECOMMENDATIONS. THE TMA SHALL CONFORM TO THE REQUIREMENTS OF SECTION 6F.82 OF THE DELAWARE MUTCD.

10) LANE SHIFTS ON NORTHBOUND AND SOUTHBOUND SR1 SHALL BE SET UP TO FOLLOW THE TEMPORARY SIGNING AND STRIPING SHOWN IN TYPICAL APPLICATION (TA) -36. LANE SHIFTS ON CLAPHAM ROAD, BOWERS BEACH ROAD, BARRATTS CHAPEL ROAD SHALL BE SET UP TO FOLLOW THE TEMPORARY SIGNING AND STRIPING SHOWN IN TA-11B.

11) THE CONTRACTOR SHALL ADJUST THE PLACEMENT OF ADVANCE WARNING SIGNS PRIOR TO EACH PHASE.. PLACEMENT SHALL BE APPROVED BY THE ENGINEER IN THE FIELD.

12) THIS PROJECT IS CONSIDERED A SIGNIFICANT PROJECT AS DEFINED BY DELDOT'S WORK ZONE MOBILITY PROCEDURES AND GUIDELINES. A TYPE B TRANSPORTATION MANAGEMENT PLAN (TMP) HAS BEEN PREPARED AND IS AVAILABLE FOR VIEWING BY CONTACTING THE DEPARTMENT'S SAFETY PROGRAMS MANAGER AT (302)659-4060. ALL MONITORING REQUIREMENTS OF THE TMP SHALL BE CONDUCTED BY DELDOT FORCES UNLESS OTHERWISE DIRECTED BY THE ENGINEER. MODIFICATIONS TO THE TMP SHALL BE COMPLETED BY THE CONTRACTOR IF CHANGES TO THE TIME RESTRICTIONS OR THE TRAFFIC CONTROL PLAN ARE DESIRED. THE MODIFIED TMP SHALL BE PREPARED BY A PROFESSIONAL ENGINEER, REGISTERED IN THE STATE OF DELAWARE.

13) ALL NECESSARY SIGNS SHALL BE INSTALLED PRIOR TO THE OPENING/REOPENING OF A ROADWAY OR RAMP.

14) ALL SIGNAL AHEAD WARNING SIGNS ACCOMPANYING A NEW SIGNAL SHALL HAVE A "NEW" PLAQUE ABOVE THEM, WHICH ARE TO REMAIN INSTALLED FOR 6 MONTHS.

15) THROUGHOUT THE CONSTRUCTION PHASING, M.O.T., AND EROSION AND SEDIMENT CONTROL PLANS, THE CONTRACTOR SHALL REFER TO OLD BEACH ROAD AS CLAPHAM ROAD.

16) THE CONSTRUCTION SEQUENCING SHEETS SHOW WHERE AND WHEN TRAFFIC CLOSURES SHALL BE IMPLEMENTED. ALL LANE CLOSURES AND TRAFFIC SHIFTS SHALL FOLLOW THE LATEST VERSION OF DEMUTCD IN REGARDS TO TRAFFIC CONTROL DEVICE PLACEMENT, TEMPORARY SIGNING, AND TEMPORARY STRIPING REQUIREMENTS. ALL COSTS FOR THIS WORK SHALL BE PAID UNDER THEIR RESPECTIVE ITEMS.

17) THE CONTRACTOR SHALL INSTALL TRUCK CROSSING (W11-10) WARNING SIGNS PRIOR TO ALL STABILIZED CONSTRUCTION ENTRANCES.

18) DURING THE DURATION BETWEEN PHASES AND/OR STAGES, THE LIMITS OF THE WORK ZONE MAY BE ADJUSTED AS DIRECTED BY THE TRAFFIC ENGINEER IN THE FIELD, THE CONTRACTOR MAY ELECT TO REMOVE OR BAG TEMPORARY WARNING SIGNS NOT IN USE. A WARNING SIGN SHALL NOT BE PAID WHEN THE SIGN IS NOT IN USE, THIS INCLUDES IF THE CONTRACTOR CHOOSES TO BAG THE SIGNING.

LANE RESTRICTIONS

WORK ZONE	NORTHBOUND		SOUTHBOUND	
	1-Lane Closure Permittedl	1-Lane Closure NOT Recommended	1-Lane Closure Permittedl	1-Lane Closure NOT Recommended
Non-Summer Weekday				
Monday - Thursday	9:00 AM - 3:00 PM 6:00 PM - 7:00 AM	7:00 AM - 9:00 AM 3:00 PM - 6:00 PM	6:00 PM - 3:00 PM	3:00 PM - 6:00 PM
Friday	8:00 AM - 2:00 PM 6:00 PM - 7:00 AM	7:00 AM - 8:00 AM 2:00 PM - 6:00 PM	9:00 PM - 10:00 AM	10:00 AM - 9:00 PM
Summer Weekday				
Monday - Thursday	7:00 PM - 7:00 AM	7:00 AM - 7:00 PM	7:00 PM - 8:00 AM	8:00 AM - 7:00 PM
Friday	7:00 PM - 7:00 AM	7:00 AM - 7:00 PM	11:00 PM - 7:00 AM	7:00 AM - 11:00 PM
Non-Summer Weekend				
Saturday	5:00 PM - 3:00 PM	3:00 PM - 5:00 PM	5:00 PM - 10:00 AM	10:00 AM - 5:00 PM
Sunday	7:00 PM - 10:00 AM	10:00 AM - 7:00 PM	24 Hours	N/A
Summer Weekend				
Saturday	9:00 PM - 8:00 AM	8:00 AM - 9:00 PM	7:00 PM - 8:00 AM	8:00 AM - 7:00 PM
Sunday	10:00 PM - 9:00 AM	9:00 AM - 10:00 PM	7:00 PM - 9:00 AM	9:00 AM - 7:00 PM

LANE RESTRICTION NOTES:

1. IN ADDITION TO THE CONDITIONS NOTED ELSEWHERE IN THE CONTRACT DOCUMENTS, THERE SHALL BE NO LANE CLOSURES ON THE ROADWAYS INDICATED BELOW DURING THE FOLLOWING TIME PERIODS:

SR 1 - TRAVEL LANES

A. HOLIDAY WEEKEND (HOLIDAY OBSERVED ON FRIDAY):
NORTHBOUND AND SOUTHBOUND LANES 11:00 A.M. THURSDAY TO 11:00 A.M. MONDAY

B. HOLIDAY WEEKEND (HOLIDAY OBSERVED ON MONDAY):
NORTHBOUND AND SOUTHBOUND LANES 11:00 A.M. FRIDAY TO 11:00 A.M. TUESDAY

C. HOLIDAY WEEKDAY (TUESDAY, WEDNESDAY, OR THURSDAY):
NORTHBOUND AND SOUTHBOUND LANES 11:00 A.M. DAY PRIOR TO 11:00 A.M. DAY AFTER

D. HOLIDAY WEEKEND (THANKSGIVING HOLIDAY-THURSDAY):
NORTHBOUND AND SOUTHBOUND LANES 11:00 A.M. WEDNESDAY TO 11:00 A.M. MONDAY

2. SUMMER LANE RESTRICTIONS WILL BE IN EFFECT ON SR 1 FROM MAY 1ST THROUGH SEPTEMBER 30TH. NON-SUMMER LANE RESTRICTIONS WILL BE IN EFFECT ON SR 1 FROM OCTOBER 1ST THROUGH APRIL 30TH.

3. LANE CLOSURES ON ROADWAYS OTHER THAN SR 1 MAY OCCUR MONDAY THROUGH FRIDAY, 8:00 AM TO 4:00 PM, OR AS PERMITTED BY THE CENTRAL DISTRICT SAFETY OFFICER.

4. SEE THE CONTRACT SPECIFICATIONS, ITEM 743000 AND THE CONSTRUCTION STAGING FOR ADDITIONAL CONDITIONS REGARDING LANE CLOSURES.

PROJECT NOTES FOR SEDIMENT AND STORMWATER MANAGEMENT

1) DUST CONTROL
DUST IS TO BE CONTROLLED EXCLUSIVELY THROUGH THE USE OF WATER. COSTS ASSOCIATED WITH THE FURNISHING AND APPLICATION OF WATER FOR DUST CONTROL SHALL BE INCIDENTAL TO ALL THE CONTRACT ITEMS.

2) SLOPE MAINTENANCE
PRIOR TO APPLYING TOPSOIL OR ANY SEEDING ITEM ON FINAL SLOPES, THE SLOPES SHALL BE TRACKED BY DRIVING A BULLDOZER UP AND DOWN THE SLOPES SUCH THAT THE CLEATS MAKE HORIZONTALLY ORIENTED INDENTATIONS IN THE SLOPE. ALL COSTS ASSOCIATED WITH PERFORMING THIS WORK SHALL BE INCIDENTAL TO THE SEEDING ITEM BEING APPLIED TO THE FINAL SLOPE.

3) EXISTING INLETS AND PIPES
ALL EXISTING INLETS AND PIPES WITHIN THE PROJECT LIMITS TO REMAIN SHALL BE CLEANED OUT. THE COST OF CLEANING OUT THE EXISTING PIPES TO REMAIN IS INCIDENTAL TO ITEM #201000.

4) CHECKDAM REMOVAL
ALL CHECKDAMS ARE TO BE REMOVED AT THE COMPLETION OF THE JOB OR AS DIRECTED BY THE ENGINEER IN THE FIELD. THIS WORK SHALL BE INCIDENTAL TO THE CONTRACT.

5) HERBICIDE APPLICATION
THE CONTRACTOR SHALL APPLY AS DIRECTED BY ENGINEER IN THE FIELD. ALL WORK PAID FOR UNDER ITEM #735501.

6) REVIEW AND OR APPROVAL OF THE SEDIMENT AND STORMWATER MANAGEMENT PLAN SHALL NOT RELIEVE THE CONTRACTOR FROM HIS OR HER RESPONSIBILITIES FOR COMPLIANCE WITH THE REQUIREMENTS OF THE SEDIMENT AND STORMWATER REGULATIONS, NOR SHALL IT RELIEVE THE CONTRACTOR FROM ERRORS OR OMISSIONS IN THE APPROVED PLAN.

7) SOIL DISTURBANCE
FOLLOWING SOIL DISTURBANCE OR REDISTURBANCE, PERMANENT OR TEMPORARY STABILIZATION SHALL BE COMPLETED WITHIN 14 CALENDAR DAYS.

8) THE CONTRACTOR SHALL BE RESPONSIBLE FOR MAINTENANCE AND REPAIR OF ALL EROSION AND SEDIMENT CONTROLS, AND STORMWATER MANAGEMENT PRACTICES DURING THE PROJECT.

9) SLOPE DRAINS
THE CONTRACTOR SHALL INSTALL AND MAINTAIN TEMPORARY SLOPE DRAINS DURING THE CONSTRUCTION OF THE EMBANKMENT, LOCATIONS TO BE DETERMINED IN THE FIELD AS DIRECTED BY THE ENGINEER. ALL COSTS SHALL BE INCLUDED IN ITEM #261000, TEMPORARY SLOPE DRAIN, 12".

10) EROSION CONTROL MEASURES SHALL BE INSTALLED AS SHOWN ON THE PLANS OR AS DIRECTED BY ENGINEER IN THE FIELD.

11) CONTRACTOR SHALL MOW GRASS AREAS AS DIRECTED BY THE ENGINEER. PAYMENT SHALL BE MADE UNDER ITEM 736502 - MOWING.

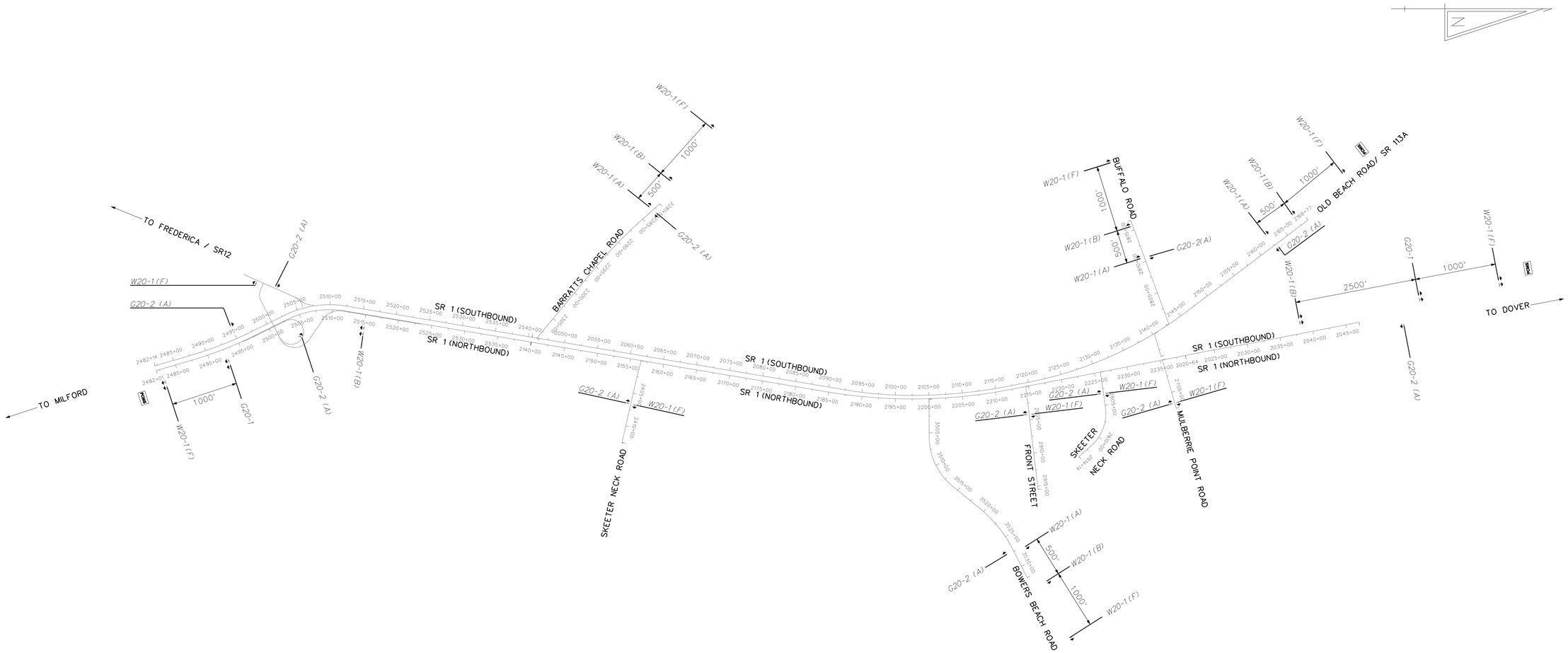

PERMANENT WARNING SIGNS LAYOUT

NOTE: THE CONTRACTOR SHALL BE RESPONSIBLE FOR FURNISHING FOUR (4) REMOTE COMMUNICATION MESSAGE SIGNS TO BE PLACED:
1. SOUTHBOUND SR 1 AT DELAWARE AIR FORCE BASE (DAFB)
2. SOUTHBOUND CLAPHAM ROAD SOUTH OF MAGNOLIA
3. NORTHBOUND SR 1 AT MILFORD NECK ROAD
4. SPARE

THE REMOTE MESSAGE SIGN PLACEMENT SHALL BE COORDINATED WITH DELDOT TRAFFIC PRIOR TO CONSTRUCTION AND REMAIN FOR THE ENTIRE DURATION OF THE PROJECT. ALL COSTS FOR THIS WORK SHALL BE PAID AS ITEM #743551 - FURNISH AND MAINTAIN REMOTE COMMUNICATION PORTABLE CHANGABLE MESSAGE SIGNS.

PCMS PORTABLE CHANGEABLE MESSAGE BOARD LOCATION

*NOTE: THE CONTRACTOR SHALL LAYOUT SIGNS FOR APPROVAL BY THE ENGINEER PRIOR TO INSTALLATION. ALL SPEED REDUCTION SIGNS SHALL BE PAID UNDER ITEM #743024. THE COVERING OF ANY CONFLICTING SIGNS SHALL BE INCIDENTAL TO ITEM #743024. ALL PERMANENT WARNING SIGNS LOCATED ON SR 1 SHALL BE PLACED BOTH ON THE SHOULDER AND THE MEDIAN. ALL SIGNS PAID UNDER ITEM #743024.

CONSTRUCTION ZONE WARNING SIGNS

*DISTANCE LEGEND

LETTER	DISTANCE
A	500 FT
B	1000 FT
C	1500 FT
D	½ MILE
E	1 MILE
F	AHEAD
G	BOTH SHOULDERS CLOSED

NOTE: ALL SIGNS PAID UNDER ITEM #743024.

ROAD WORK NEXT 2.5 MILE
G20-1
72" X 48"

END ROAD WORK
G20-2 (A)
48" X 24"

ROAD WORK *
W20-1
48" X 48"

DELAWARE DEPARTMENT OF TRANSPORTATION

ADDENDUMS / REVISIONS

SCALE 0 400 800 1600 2400 FEET

SR1, LITTLE HEAVEN GRADE SEPARATED INTERSECTION

CONTRACT	BRIDGE NO.	-
T200412202	DESIGNED BY: SEP	
COUNTY	CHECKED BY: WEC	
KENT		

CONSTRUCTION PHASING, M.O.T. AND EROSION CONTROL NOTES

SHEET NO. 280
TOTAL SHTS. 641

1/15/2015 G:\PROJECTS\03517.00 (DELDOT AGMT 123 DOTS Open End)\03517.16 SR1 LITTLE HEAVEN FINAL DESIGN\DGN Files\gws02lh_800scale.dgn 12:28:43 PM

PHASE I

STAGE 1:

1. PLACE CHANGEABLE MESSAGE SIGNS ON NORTHBOUND SR1, SOUTHBOUND SR1, SOUTHBOUND CLAPHAM ROAD, BARRATTS CHAPEL ROAD AND BOWERS BEACH ROAD TEN (10) CALENDAR DAYS IN ADVANCE OF CONSTRUCTION TO INFORM TRAVELING PUBLIC OF IMPENDING ROAD CONSTRUCTION.

2. INSTALL PERMANENT ADVANCE WARNING SIGNS.

STAGE 2:

1. PLACE E&S MEASURES FOR EXISTING DRAINAGE SYSTEM AND THE EMBANKMENT FOR PROPOSED BARRATTS CHAPEL ROAD OR AS DIRECTED BY THE ENGINEER. PLACE SAFETY FENCE ALONG PROPOSED BARRATTS CHAPEL ROAD, AS SHOWN. INSTALL ALL STABILIZED CONSTRUCTION ENTRANCES REQUIRED FOR PHASE I, SHOWN IN THESE PLANS OR AS DIRECTED IN THE FIELD. WORK IN THIS OPERATION SHALL BE PERFORMED DURING OFF PEAK HOURS.

2. CLEAR ALL EXISTING VEGETATION AND DEBRIS WITHIN THE PROPOSED LIMITS OF CONSTRUCTION. DEMOLISH EXISTING BUILDINGS AS SHOW ON THE PLANS AND HAUL MATERIAL TO AN APPROVED OFFSITE FACILITY.

STAGE 3:

1. COMPLETE UTILITY RELOCATION OF KENT COUNTY SEWER, DELMARVA ELECTRIC AND VERIZON FACILITIES AS DESCRIBED ON THE PLANS AND UTILITY STATEMENT.

STAGE 4: (STATION 212+50 TO STATION 240+00)

1. DURING OFF PEAK HOURS, UTILIZE TA-33 TO RECONSTRUCT THE EXISTING SHOULDER ON THE WEST SIDE OF NORTHBOUND SR 1 FOR FUTURE MAINTENANCE OF TRAFFIC BETWEEN STATION 217+61 TO 240+00, OR AS DIRECTED BY THE ENGINEER IN THE FIELD.

2. REMOVE EXISTING SR1 CROSSOVER PAVEMENT AND PLACE PAVEMENT MARKINGS AT MULBERRIE POINT ROAD, AS SHOWN. MAINTAIN A MINIMUM 8 FOOT SHOULDER WIDTH FOR FUTURE TRAFFIC SHIFTS.

3. INSTALL DRAINAGE PIPE CROSSING EXISTING SR1 NORTHBOUND AT STATION 218+85. ALL WORK IN THIS OPERATION SHALL BE PERFORMED DURING NIGHT HOURS UTILIZING TA-33, WHERE APPLICABLE. CONTRACTOR SHALL PATCH EXISTING PAVEMENT UP TO EXISTING GRADE USING LIKE MATERIALS BY THE END OF THE WORK SHIFT. BLOCK UPSTREAM OPENINGS IN THE INLET UNTIL A LATER STAGE.

4. CONTRACTOR SHALL INSTALL INLET PROTECTION AND OTHER EROSION AND SEDIMENT CONTROL DEVICES ON PROPOSED DRAINAGE.

STAGE 5: (STATION 217+50 TO STATION 238+35)

1. UTILIZE TA-33 TO SET TEMPORARY PCC BARRIER ON EXISTING NORTHBOUND SR1 FROM STATION 217+60 TO STATION 239+00, AS SHOWN. WORK TO BE PERFORMED DURING OFF PEAK HOURS OR AS DIRECTED BY THE ENGINEER.

2. PLACE TEMPORARY PIPE AT STATION 224+10 IN ORDER TO DRAIN DITCH PAST THE SHEET PILE LIMITS. PLACE TEMPORARY PIPE EXTENSIONS AT THE EXISTING PIPE INFLOW AND OUTFALL AT STATION 224+10. DEWATER EXISTING PIPE, LAY ADDITIONAL PIPE AND POUR CONCRETE COLLAR FOR EXTENSION BEYOND THE SHEET PILES SHOWN.

3. DURING NIGHT TIME HOURS, DRIVE PERMANENT SHEET PILES ALONG THE LIMITS OF CONSTRUCTION AS SHOWN IN THIS STAGE. INSTALL PUMPING PITS WHERE SHOWN, OR AS DIRECTED BY THE ENGINEER TO DEWATER DURING CONSTRUCTION.

4. SAWCUT AND REMOVE HOT-MIX ONE FOOT BEHIND THE PCC BARRIER IN ORDER TO DRIVE TEMPORARY SHEET PILES BETWEEN THE EXISTING ROADWAY AND THE PROPOSED EXCAVATION FOR THE PIPES AND PROPOSED HOT-MIX PAVEMENT, AS SHOWN.

5. BEHIND PCC BARRIER, EXCAVATE MUCK AND GRADE PROPOSED DITCH SHOWN IN THIS STAGE. INSTALL A PORTION OF THE DRAINAGE PIPE CROSSING EXISTING NORTHBOUND SR1 AT STATION 224+50. BACKFILL TO BOTTOM OF GABC.

6. REMOVE TEMPORARY SHEET PILES BETWEEN NEW AND EXISTING PAVEMENT, EXCEPT FROM STATION 223+94 TO 225+03.

7. CONSTRUCT THE PORTION OF PROPOSED NORTHBOUND SR1 PAVEMENT SHOWN IN THIS STAGE TO THE TOP OF TYPE B HOT-MIX. INSTALL PROPOSED GUARDRAIL FROM STATION 219+00 TO 227+00, OR AS DIRECTED BY THE ENGINEER AND PROTECT APPROACH WITH PCC BARRIER AND A TEMPORARY IMPACT ATTENUATOR. INSTALL LIGHTING FACILITIES AND ITMS FEATURES.

STAGE 6: (STATION 202+00 TO STATION 238+35)

1. PLACE CHANGEABLE MESSAGE SIGNS ON NORTHBOUND AND SOUTHBOUND SR1 TEN (10) CALENDAR DAYS IN ADVANCE OF CONSTRUCTION TO INFORM TRAVELING PUBLIC OF IMPENDING ROAD CONSTRUCTION AND AN UPCOMING LANE SHIFT.

2. DURING OFF PEAK HOURS, UTILIZE TA-33 TO RECONSTRUCT THE EXISTING SHOULDER ON THE EAST SIDE OF SOUTHBOUND SR 1 FOR FUTURE MAINTENANCE OF TRAFFIC BETWEEN STATION 303+00 TO 309+00, OR AS DIRECTED BY THE ENGINEER IN THE FIELD.

3. UTILIZE TA-33 TO REMOVE BARRIER PREVIOUSLY PLACED IN STAGE 5 AND SET TEMPORARY PCC BARRIER ON EXISTING NORTHBOUND SR1 FROM STATION 215+00 TO STATION 233+00 ON THE LEFT SIDE, AS SHOWN ONE FOOT TO THE RIGHT OF THE REMAINING SHEET PILES. SET TEMPORARY PCC BARRIER ON EXISTING SOUTHBOUND SR1 FROM STATION 313+50 TO 341+00 ON THE RIGHT SIDE AS SHOWN ON THE MOT TYPICAL SECTION IN THIS STAGE. WORK TO BE PERFORMED DURING OFF PEAK HOURS OR AS DIRECTED BY THE ENGINEER.

4. ONE FOOT BEHIND PCC BARRIER, SAWCUT AND REMOVE HOTMIX ON SOUTHBOUND SR1 IN ORDER TO DRIVE TEMPORARY SHEET PILES BETWEEN THE EXISTING ROADWAY AND THE PROPOSED EXCAVATION FOR THE PIPES, AS SHOWN.

5. CONSTRUCT PROPOSED DRAINAGE SHOWN IN THIS STAGE BETWEEN STATION 224+25 TO 235+50 IN THE MEDIAN. PROPOSED INLETS LOCATED AT 224+50, 226+00, AND 228+50 SHALL BE CONSTRUCTED AS JUNCTION BOXES AND LATER CONVERTED INTO CATCH BASINS TO DRAIN AT PROPOSED GRADES. INSTALL THE SECOND PORTION OF THE DRAINAGE PIPE CROSSING EXISTING NORTHBOUND SR1 AND THE MEDIAN AT STATION 224+50. SHEET PILES AT THE DOWN STREAM END SHALL BE REMOVED TO INSTALL PIPES. CONTRACTOR SHALL PATCH EXISTING PAVEMENT UP TO EXISTING GRADE USING LIKE MATERIALS. CONSTRUCT TEMPORARY PAVEMENT AND PLACE TEMPORARY STRIPING IN THE MEDIAN FOR NEW TRAFFIC CONFIGURATION IN THE NEXT STAGE, AS SHOWN.

STAGE 7: (STATION 222+64 TO STATION 238+35)

1. PLACE CHANGEABLE MESSAGE SIGNS ON NORTHBOUND AND SOUTHBOUND SR1 TEN (10) CALENDAR DAYS IN ADVANCE OF CONSTRUCTION TO INFORM TRAVELING PUBLIC OF IMPENDING ROAD CONSTRUCTION AND AN UPCOMING LANE SHIFT.

2. UTILIZE TA-33 TO REMOVE BARRIER PREVIOUSLY PLACED IN STAGE 6 IN THE SOUTHBOUND DIRECTION ON SR1. SHIFT TRAFFIC ONTO THE TEMPORARY PAVEMENT AND RESET TEMPORARY PCC BARRIER ON EXISTING SOUTHBOUND SR1 FROM STATION 325+00 TO STATION 335+00 ON THE LEFT SIDE, AS SHOWN. WORK TO BE PERFORMED DURING OFF PEAK HOURS OR AS DIRECTED BY THE ENGINEER.

3. DRIVE TEMPORARY SHEET PILES ALONG THE SOUTHBOUND SR1 SHOULDER, AS SHOWN IN THIS STAGE. INSTALL PUMPING PITS WHERE SHOWN, OR AS DIRECTED BY THE ENGINEER TO DEWATER DURING CONSTRUCTION.

4. CONTRACTOR SHALL INSTALL PIPE CROSSING EXISTING SR1 SOUTHBOUND AT STATION 325+40 AND BUILD HEADWALL. SHEET PILES AT THE DOWNSTREAM END SHALL BE REMOVED TO CONNECT PIPES.

5. REMOVE A PORTION OF SHEET PILES IN ORDER FOR THE EXISTING DITCH TO DRAIN INTO THE NEW PIPE. BLOCK THE UPSTREAM END OF THE EXISTING PIPE CROSSING SR1 AT STATION 325+10 AND FILL PIPE WITH FLOWABLE FILL CONCRETE.

6. CONSTRUCT ALL THE REMAINING DRAINAGE SHOWN IN THIS STAGE FROM STATION 325+00 TO THE PROJECT'S LIMITS ON THE WEST SIDE OF EXISTING SR1 AND THE MEDIAN. CONTRACTOR SHALL PATCH EXISTING PAVEMENT UP TO EXISTING GRADE USING LIKE MATERIALS.

7. UTILIZE TA-33 TO REMOVE TEMPORARY PCC BARRIER ON EXISTING SOUTHBOUND AND NORTHBOUND SR1. SHIFT TRAFFIC TO THE ORIGINAL CONDITIONS AND PLACE TEMPORARY STRIPING. WORK TO BE PERFORMED DURING OFF PEAK HOURS OR AS DIRECTED BY THE ENGINEER.

8. CONTRACTOR SHALL INSTALL SEDIMENT TRAP AND OTHER EROSION AND SEDIMENT CONTROL DEVICES ON PROPOSED DRAINAGE.

STAGE 8: (STATION 215+50 TO STATION 238+35)

1. UTILIZE TA-33 TO REMOVE THE TEMPORARY SHEET PILES INDICATED IN THIS STAGE, OR AS DIRECTED BY THE ENGINEER.

2. INSTALL DRAINAGE PIPE CROSSING EXISTING SR1 SOUTHBOUND AT STATION 319+77. ALL WORK IN THIS OPERATION SHALL BE PERFORMED DURING NIGHT HOURS UTILIZING TA-33, WHERE APPLICABLE. CONTRACTOR SHALL PATCH EXISTING PAVEMENT UP TO EXISTING GRADE USING LIKE MATERIALS BY THE END OF THE WORK SHIFT. BLOCK INFLOW OF THIS PIPE UNTIL A LATER STAGE.

3. UTILIZE TA-33 TO SAWCUT AND REMOVE TEMPORARY PAVEMENT IN THE MEDIAN FROM STATION 218+00 TO 231+50 OR AS DIRECTED BY THE ENGINEER. EIGHT (8) FOOT MINIMUM SHOULDERS SHALL REMAIN FOR FUTURE MAINTENANCE OF TRAFFIC. CONSTRUCT PROPOSED DRAINAGE BETWEEN STATION 218+85 TO 224+50 IN THE MEDIAN AND CONVERT JUNCTION BOXES AT STATIONS 224+50, 226+00, AND 228+50 TO CATCH BASINS AND ADJUST TO PROPOSED GRADES. ALL WORK IN THIS OPERATION SHALL BE PERFORMED DURING NIGHT HOURS.

4. CONSTRUCT PROPOSED DRAINAGE BETWEEN STATION 317+35 TO 325+00. ALL WORK IN THIS OPERATION SHALL BE PERFORMED DURING OFF PEAK HOURS UTILIZING TA-33, WHERE APPLICABLE. CONSTRUCT PROPOSED CULVERT AT STATION 1403+00 AND TEMPORARY PIPE SHOWN IN THIS STAGE. CONTRACTOR SHALL PATCH EXISTING PAVEMENT UP TO EXISTING GRADE BY THE END OF THE WORK SHIFT. SEDIMENT TRAP SHALL BE INSTALLED AND DITCH MUST BE STABILIZED PRIOR TO ANY EXCAVATION OF STORMWATER FACILITY #459.

5. EXCAVATE THE NORTH END OF STORMWATER FACILITY #459 AS A TEMPORARY DITCH. PLACE THE EXCAVATED SUITABLE FILL MATERIAL IN PORTIONS OF THE EMBANKMENT FOR PROPOSED BARRATTS CHAPEL ROAD OR STOCKPILE AT AN APPROVED LOCATION FOR PROPOSED SR1 APPROACHES.

6. CONTRACTOR SHALL INSTALL INLET PROTECTION AND OTHER EROSION AND SEDIMENT CONTROL DEVICES ON PROPOSED DRAINAGE.

STAGE 9: (STATION 621+00 TO STATION 629+00 & STATION 213+48 TO STATION 218+85)

1. UTILIZING TA-10 LANE CLOSURE INSTALL TEMPORARY JUNCTION BOX AND 15" RCP AT STATION 622+20, AS SHOWN, IN ORDER TO MAINTAIN THE EXISTING DRAINAGE SYSTEM. CONTRACTOR SHALL PATCH EXISTING PAVEMENT UP TO EXISTING GRADE BY THE END OF THE WORK SHIFT.

2. INSTALL DRAINAGE PIPE CROSSING EXISTING CLAPHAM ROAD AT STATION 622+00 UTILIZING TA-10 LANE CLOSURE. PROPOSED INLET LOCATED ON THE CENTERLINE SHALL BE CONSTRUCTED AS A JUNCTION BOX AND LATER CONVERTED INTO A CATCH BASIN TO DRAIN AT PROPOSED GRADES. CONTRACTOR SHALL PATCH EXISTING PAVEMENT UP TO EXISTING GRADE BY THE END OF THE WORK SHIFT.

3. DEWATER EXISTING PIPE AND INSTALL PROPOSED PIPE CROSSING EXISTING CLAPHAM ROAD AT STATION 621+80 AND TIE INTO EXISTING DRAINAGE SYSTEM UTILIZING TA-10 LANE CLOSURE. CONTRACTOR SHALL PATCH EXISTING PAVEMENT UP TO EXISTING GRADE USING LIKE MATERIALS BY THE END OF THE WORK SHIFT.

4. CONTRACTOR SHALL SUBMIT FOR APPROVAL THE MAINTENANCE OF TRAFFIC AND SEQUENCE OF CONSTRUCTION FOR THE CONSTRUCTION OF THE INTERSECTION AT PROPOSED CLAPHAM ROAD AND BUFFALO ROAD AND THE HIGH POINT ENTRANCES.

5. UTILIZE TA-10 LANE CLOSURE TO INSTALL DRAINAGE ON WEST SIDE OF CLAPHAM ROAD BETWEEN STATION 621+00 TO 629+00 AND BUFFALO ROAD WEST OF CLAPHAM ROAD. CONSTRUCT NEW HIGH POINT ENTRANCE LOCATED ON BUFFALO ROAD. BEGIN INSTALLING PROPOSED TRAFFIC SIGNAL AND LIGHTING CONDUIT AND OTHER FEATURES. REMOVE EXISTING DRAINAGE AND TEMPORARY DRAINAGE PREVIOUSLY INSTALLED IN THIS STAGE. POUR PROPOSED P.C.C. CURB AND CONSTRUCT FULL DEPTH PAVEMENT WIDENING ON CLAPHAM ROAD AND FULL DEPTH PAVEMENT FOR BUFFALO ROAD INTERSECTION REALIGNMENT TO TOP OF TYPE B LIFT. MILL EXISTING ROADWAY ON PROPOSED CLAPHAM ROAD TO ELIMINATE DROP-OFF. PLACE TEMPORARY STRIPING AND POUR PROPOSED SIDEWALK.

6. CONSTRUCT PROPOSED DRAINAGE SHOWN IN THIS STAGE BETWEEN STATION 213+48 TO 218+85 IN THE MEDIAN OF EXISTING SR1. ALL WORK IN THIS OPERATION SHALL BE PERFORMED DURING NIGHT HOURS UTILIZING TA-33, WHERE APPLICABLE.

7. AT SR1 STATION 319+05, FILL EXISTING PIPE CROSSING SR1 WITH FLOWABLE FILL CONCRETE. CONTRACTOR SHALL INSTALL INLET PROTECTION AND OTHER EROSION AND SEDIMENT CONTROL DEVICES ON PROPOSED DRAINAGE.

STAGE 10: (STATION 622+50 TO STATION 629+00 & STATION 319+82 TO 339+27)

1. CONTINUE EXCAVATION OF STORMWATER FACILITY #459. PLACE THE EXCAVATED SUITABLE FILL MATERIAL IN PORTIONS OF THE EMBANKMENT FOR PROPOSED BARRATTS CHAPEL ROAD OR STOCKPILE AT AN APPROVED LOCATION FOR PROPOSED SR1 APPROACHES. SEDIMENT TRAP DOWNSTREAM FROM STORMWATER FACILITY #459 SHALL BE REMOVED UPON COMPLETION OF POND CONSTRUCTION AND DITCH DOWNSTREAM IS VEGETATED. PIPE CROSSING SR1 AT STATION 218+85 CAN BE OPENED TO DRAIN.

2. UTILIZING TA-10, INSTALL PROPOSED DRAINAGE ALONG THE EAST SIDE OF CLAPHAM ROAD FROM STATION 622+50 TO STATION 627+27, AS SHOWN ON THE PLANS OR AS DIRECTED BY THE ENGINEER. CONTRACTOR SHALL INSTALL INLET PROTECTION AND OTHER EROSION AND SEDIMENT CONTROL DEVICES ON PROPOSED DRAINAGE.

3. UTILIZE TA-10 ON NORTHBOUND CLAPHAM ROAD TO SET TEMPORARY PCC BARRIER FROM STATION 624+00 TO STATION 629+50, AS SHOWN, IN ORDER TO CONSTRUCT THE EAST SIDE OF THE ROADWAY FROM STATION 625+50 TO STATION 629+00 AND A PORTION OF RAMP A AND RAMP B, WITHOUT INTERFERING WITH SOUTHBOUND SR1 TRAFFIC TO THE TOP OF TYPE B HOT-MIX. CONTINUE INSTALLING PROPOSED TRAFFIC SIGNAL AND LIGHTING CONDUIT AND DEVICES ALONG THE RAMPS AND CLAPHAM ROAD. POUR PCC CURB AND P.C.C. MEDIAN. INSTALL GUARDRAIL, CANTILEVERED SIGN FOUNDATION AND STRUCTURE AND ITMS FEATURES. REGRADE DITCHES TO FINAL GRADES.

4. UTILIZE TA-33 TO SET TEMPORARY PCC BARRIER ON EXISTING SOUTHBOUND SR1 FROM STATION 319+82 TO STATION 340+27 IN ORDER TO CONSTRUCT RAMP B DECELERATION LANE AND A PORTION OF RAMP A ACCELERATION LANE. WORK TO BE PERFORMED DURING OFF PEAK HOURS OR AS DIRECTED BY THE ENGINEER.

5. BEHIND PCC BARRIER, SAWCUT AND CONSTRUCT RAMP B DECELERATION LANE AND THE PORTION OF RAMP A SHOWN TO THE TOP OF TYPE B HOT-MIX. REGRADE DITCHES TO PROPOSED GRADES.

6. UTILIZE TA-33 TO REMOVE TEMPOARY PCC BARRIER ON EXISTING SOUTHBOUND SR1 FROM STATION 319+82 TO NORTH PROJECT LIMIT. BARREL OFF DECELERATION LANE UNTIL STAGE 12. WORK TO BE PERFORMED DURING OFF PEAK HOURS OR AS DIRECTED BY THE ENGINEER.

STAGE 11: (STATION 629+00 TO STATION 649+50)

1. USE TA-10 TO CONSTRUCT PROPOSED DRAINAGE DEVICES FROM STATION 629+00 TO STATION 649+50 ON BOTH SIDES OF CLAPHAM ROAD AS SHOWN ON THE PLANS OR AS DIRECTED BY THE ENGINEER. CONTRACTOR SHALL INSTALL INLET PROTECTION AND OTHER EROSION AND SEDIMENT CONTROL DEVICES ON PROPOSED DRAINAGE.

2. UTILIZE TA-10 TO EXTEND TEMPORARY PCC BARRIER FROM STATION 629+50 TO STATION 650+00 ON NORTHBOUND CLAPHAM ROAD, AS SHOWN. SAWCUT ONE FOOT INTO THE NORTHBOUND TRAVEL LANE, EXCAVATE, POUR P.C.C. CURB, AND CONSTRUCT FULL DEPTH WIDENING BETWEEN STATION 629+00 TO 649+50, TO THE TOP OF TYPE B HOT-MIX. REMOVE TEMPORARY PCC BARRIER AND TAPER MILL EXISTING PAVEMENT TO ELIMINATE DROP-OFF.

STAGE 12: (STATION 629+00 TO STATION 649+50)

1. UTILIZE TA-10 TO SET TEMPORARY PCC BARRIER FROM STATION 628+50 TO STATION 650+00 ON SOUTHBOUND CLAPHAM ROAD. SAWCUT ONE FOOT INTO THE SOUTHBOUND TRAVEL LANE, EXCAVATE, POUR P.C.C. CURB, AND CONSTRUCT FULL DEPTH WIDENING BETWEEN STATION 629+00 TO 649+50, TO THE TOP OF TYPE B HOT-MIX. REMOVE TEMPORARY PCC BARRIER AND TAPER MILL EXISTING PAVEMENT TO ELIMINATE DROP-OFF. REGRADE DITCHES TO FINAL GRADES.

STAGE 13: (STATION 625+50 TO STATION 649+50)

1. PLACE CHANGEABLE MESSAGE SIGNS ON NORTHBOUND SR1, SOUTHBOUND SR1, AND SOUTHBOUND CLAPHAM ROAD TEN (10) CALENDAR DAYS IN ADVANCE OF CLOSING THE EXISTING ACCESS FROM NORTHBOUND SR1 TO CLAPHAM ROAD AND SOUTHBOUND CLAPHAM ROAD THROUGH TRAFFIC.

2. COMPLETE TRAFFIC SIGNAL DEVICE INSTALLATIONS AT THE INTERSECTION OF BUFFALO ROAD AND CLAPHAM ROAD. ACTIVATE LIGHTING ON RAMPS AND INTERSECTION. ACTIVATE TRAFFIC SIGNAL. OPEN RAMP A AND RAMP B TO TRAFFIC. SIGN SOUTHBOUND PROPOSED CLAPHAM ROAD AS CLOSED TO THROUGH TRAFFIC AS SHOWN ON DETOUR PLANS. USE DETOUR, SHOWN IN PLANS, TO CLOSE EXISTING CLAPHAM ROAD ACCESS TO SR1. AT SR1 AND CLAPHAM ROAD JUNCTION, COVER EXISTING SIGNAL HEADS AND LEAVE SIGNAL DEVICES IN-PLACE FOR LATER USE. WORK TO BE PERFORMED DURING OFF PEAK HOURS OR AS DIRECTED BY THE ENGINEER.

3. UTILIZE TA-10 LANE CLOSURE TO MILL EXISTING PAVEMENT AND OVERLAY PROPOSED CLAPHAM ROAD TO FINAL GRADE WITH TYPE C HOT-MIX FROM STATION 625+50 TO 649+50. PAVE BUFFALO ROAD, RAMP A AND RAMP B WITH TYPE C HOT-MIX TO FINAL GRADE. WORK TO BE PERFORMED DURING OFF PEAK HOURS OR AS DIRECTED BY THE ENGINEER.

4. LAYOUT AND PLACE PERMANENT PAVEMENT MARKING ON PROPOSED CLAPHAM ROAD, BUFFALO ROAD, RAMPS AND ALL CONNECTING STREETS FOR FINAL STRIPING SCHEME, WHERE APPLICABLE OR AS DIRECTED BY THE ENGINEER.

5. REMOVE ALL E&S CONTROL DEVICES AS DIRECTED BY ENGINEER IN THE FIELD.

STAGE 14: (STATION 603+40 TO STATION 625+50 & STATION 1200+00 TO STATION 1212+50)

1. UTILIZE TA-33 TO SET TEMPORARY PCC BARRIER ON EXISTING SOUTHBOUND SR1, FROM STATION 300+50 TO 320+50 LEFT. PLACE BARRELS ALONG EXISTING SOUTHBOUND SR1 FROM STATION 603+50 TO 605+50 TO MAINTAIN ACCESS FOR THE RESIDENTS LOCATED IN THIS SECTION DURING CONSTRUCTION.

2. INSTALL REMAINING DRAINAGE ON CLAPHAM ROAD BETWEEN STATION 602+00 TO 621+00. DIVERT STREAM AND PUMP WATER TO STORMWATER FACILITY #459 ACROSS CLOSED PORTION OF CLAPHAM ROAD. EXCAVATE AND REMOVE EXISTING PIPE CROSSING AT 614+80. INSTALL PROPOSED DRAINAGE PIPES CROSSING CLAPHAM ROAD AND BUILD HEADWALL.

3. CONSTRUCT PROPOSED FULL DEPTH PAVEMENT TO THE TOP OF THE TYPE B LIFT BETWEEN STATION 605+50 TO 625+50. CONSTRUCT P.C.C. CURB, CONCRETE MEDIAN AT INTERSECTION, POUR PROPOSED SIDEWALK, BUILD RETAINING WALLS, INSTALL FENCE, INSTALL LIGHTING FACILITIES AND PLACE TEMPORARY STRIPING.

4. COMPLETE CONSTRUCTION OF FACILITY #459. BEHIND PCC BARRIER, SAWCUT AND CONSTRUCT REMAINING PORTION OF RAMP A. THE ACCELERATION LANE SHALL BE CONSTRUCTED TO MATCH THE EXISTING TRAVEL LANES ELEVATION AND CROSS SLOPE SO THAT THE NEW PAVEMENT CAN BE UTILIZED FOR MAINTENANCE OF TRAFFIC LANE SHIFTS. TEMPORARY PAVEMENT SHALL BE CONSTRUCTED BETWEEN STATION 307+00 TO 312+00, AS SHOWN, TO TIE INTO THE EXISTING CLAPHAM ROAD CONNECTION FOR FUTURE LANE SHIFTS AND TO MAINTAIN ACCESS FROM NORTHBOUND SR1 UNTIL PHASE IV. PROPOSED ELEVATIONS AND CROSS SLOPES WILL BE ACHIEVED IN A LATER PHASE. INSTALL LIGHTING FACILITIES.

5. PLACE TEMPORARY PAVEMENT MARKINGS ON RAMP A. CONTRACTOR SHALL INSTALL INLET PROTECTION AND OTHER EROSION AND SEDIMENT CONTROL DEVICES ON PROPOSED DRAINAGE, AS DIRECTED IN THE FIELD BY THE ENGINEER. REMOVE TEMPORARY DRAINAGE PIPE. REMOVE TEMPORARY BARRIER UNDER TA-33 LANE CLOSURE AND OPEN ACCELERATION LANE.

STAGE 15: (STATION 206+00 TO STATION 219+00)

1. ADJUST SIGNAL HEADS AND ACTIVATE FINAL TRAFFIC SIGNAL CONFIGURATION AT THE INTERSECTION OF BUFFALO ROAD AND CLAPHAM ROAD. RE-ACTIVATE EXISTING SIGNAL AND OPEN EXISTING ACCESS FROM NORTHBOUND SR1 TO CLAPHAM ROAD.

2. CONSTRUCT PROPOSED PIPE CROSSING EXISTING SR1 SOUTHBOUND AND NORTHBOUND AT STATION 310+00 AND BETWEEN STATION 310+00 TO 314+00 IN THE MEDIAN. TIE-IN TO THE EXISTING DRAINAGE IN THE MEDIAN AND THE EAST SIDE OF EXISTING SR1. FILL EXISTING PIPE AT STATION 209+70 WITH FLOWABLE FILL. ALL WORK IN THIS OPERATION SHALL BE PERFORMED DURING NIGHT HOURS UTILIZING TA-33 LANE CLOSURE, WHERE APPLICABLE. CONTRACTOR SHALL PATCH EXISTING PAVEMENT UP TO EXISTING GRADE USING LIKE MATERIALS BY THE END OF THE WORK SHIFT.

3. CONSTRUCT PROPOSED DRAINAGE ALONG MULLBERRIE POINT CONNECTOR ROAD AND LITTLE HEAVEN ROAD. DRAINAGE SHALL BE CONSTRUCTED FROM NORTHBOUND SR1 STATION 219+00 RT. TO LITTLE HEAVEN ROAD STATION 454+50. PATCH MULBERRIE POINT ROAD EXISTING PAVEMENT BY THE END OF THE WORK SHIFT.

4. UTILIZING TA-33 AND, WHEN APPLICABLE, USE THE DETOUR ROUTE SHOWN IN THE PLANS (MULBERRIE POINT ROAD ACCESS TO SR1) TO REMOVE EXISTING 58"x36" PIPE FROM STATION 214+00 TO 218+50 RT. CONTRACTOR SHALL PATCH EXISTING PAVEMENT UP TO EXISTING GRADE USING LIKE MATERIALS BY THE END OF THE WORK SHIFT.

5. CONTRACTOR SHALL INSTALL INLET PROTECTION AND OTHER EROSION AND SEDIMENT CONTROL DEVICES ON PROPOSED DRAINAGE. SEDIMENT TRAP SHALL BE INSTALLED AND DITCH MUST BE STABILIZED PRIOR TO ANY EXCAVATION OF STORMWATER FACILITY #458.

6. PERMANENT SHEET PILES SHALL BE CUT OFF 2 FEET BELOW PROPOSED GRADE, AS INDICATED IN THE CONSTRUCTION DETAILS.

STAGE 16: (STATION 445+50 TO STATION 455+50)

1. CONSTRUCT STORMWATER FACILITY #458. PLACE THE EXCAVATED SUITABLE FILL MATERIAL IN PORTIONS OF THE EMBANKMENT FOR PROPOSED BARRATTS CHAPEL ROAD OR STOCKPILE AT AN APPROVED LOCATION FOR PROPOSED SR1 APPROACHES. SEDIMENT TRAP DOWNSTREAM FROM STORMWATER FACILITY #458 SHALL BE REMOVED UPON COMPLETION OF POND CONSTRUCTION AND DITCH DOWNSTREAM IS VEGETATED.

2. ALL DISTURBED AREAS SHALL BE GRADED TO DRAIN PROPERLY. THE CONTRACTOR SHALL PLACE TOPSOIL, PERMANENT SEEDING AND MULCH BLANKET ON ALL AREAS IN FINAL CONDITIONS OR DIRECTED BY THE ENGINEER.

3. THE CONTRACTOR SHALL COORDINATE THE PLACEMENT OF THE FINAL SIGNAGE WITH STATE FORCES PRIOR TO PROCEEDING TO THE NEXT PHASE, WHERE APPLICABLE. THE CONTRACTOR SHALL NOT REMOVE ANY TEMPORARY SIGNAGE UNLESS APPROVED BY THE ENGINEER IN THE FIELD.

4. THE CONTRACTOR SHALL REMOVE ALL EROSION AND SEDIMENT CONTROL SYSTEMS STILL REMAINING IN THIS PHASE PER THE APPROVAL OF THE SEDIMENT CONTROL INSPECTOR.

PHASE II

STAGE 1: (STATION 528+00 TO 545+00)

1. DIRECT EASTBOUND BARRATTS CHAPEL ROAD TO RIGHT-OUT MOVEMENT ONLY UTILIZING PAVEMENT MARKINGS AND SIGNING.

2. REMOVE SOUTHBOUND SR1 LEFT TURN MOVEMENT AT BARRATTS CHAPEL ROAD, AS SHOWN, UTILIZING PAVEMENT MARKINGS AND SIGNING.

3. SAWCUT AND REMOVE EXISTING SR1 CROSSOVER PAVEMENT AT STATION 544+50 TO 545+00, AS SHOWN. UTILIZE PAVEMENT MARKINGS AND SIGNING TO INDICATE THIS REMOVAL TO THE TRAVELLING PUBLIC.

STAGE 2: (STATION 105+50 TO 131+50)

1. CLEAN OUT EXISTING DITCHES AT STATION 538+16 AND 551+44. INSTALL PROPOSED PIPES AND STONE CHECK DAMS IN EXISTING DITCHES AS SHOWN IN THIS STAGE.

2. CONSTRUCT STORMWATER FACILITY #455 AND #456 AND PROPOSED DITCHING SHOWN IN THIS STAGE OF CONSTRUCTION. PLACE THE EXCAVATED SUITABLE FILL MATERIAL IN PORTIONS OF THE EMBANKMENT FOR PROPOSED BARRATTS CHAPEL ROAD OR STOCKPILE AT AN APPROVED LOCATION FOR PROPOSED SR1 APPROACHES. A DECELERATION LANE SHALL BE BARRELED OFF FOR TRUCK TRAFFIC.

STAGE 3: (STATION 118+50 TO 127+50)

1. CONSTRUCT PROPOSED DRAINAGE SHOWN IN THIS STAGE BETWEEN STATION 118+50 TO 127+50. ALL INLETS SHOULD BE CONSTRUCTED SO THAT TOP OF GRATES SHALL DRAIN IN EXISTING CONDITIONS AND LATER ADJUSTED TO PROPOSED GRADES. ALL WORK IN THIS STAGE SHALL BE PERFORMED DURING NIGHT HOURS UTILIZING TA-33, WHERE APPLICABLE. CONTRACTOR SHALL PATCH EXISTING PAVEMENT UP TO EXISTING GRADE USING LIKE MATERIALS BY THE END OF THE WORK SHIFT. CONTRACTOR SHALL INSTALL INLET PROTECTION AND OTHER EROSION AND SEDIMENT CONTROL DEVICES ON PROPOSED DRAINAGE.

STAGE 4: (STATION 106+00 TO STATION 118+50 & STATION 531+25 TO STATION 548+00)

1. CONSTRUCT PROPOSED DRAINAGE SHOWN IN THIS STAGE BETWEEN STATION 106+00 TO THE INLET AT 115+09 IN THE MEDIAN, THE PIPE RUN CROSSING EXISTING NORTHBOUND SR1 AT 110+50 AND SOUTHBOUND SR1 AT STATION 115+09, AND BETWEEN STATIONS 531+25 TO 548+00 ALONG THE WEST SIDE OF SOUTHBOUND SR1. ALL INLETS SHOULD BE CONSTRUCTED SO THAT TOP OF GRATES SHALL DRAIN IN EXISTING CONDITIONS AND LATER ADJUSTED TO PROPOSED GRADES. ALL WORK IN THIS STAGE SHALL BE PERFORMED DURING NIGHT HOURS UTILIZING TA-33, WHERE APPLICABLE. CONTRACTOR SHALL PATCH EXISTING PAVEMENT UP TO EXISTING GRADE USING LIKE MATERIALS BY THE END OF THE WORK SHIFT. CONTRACTOR SHALL INSTALL INLET PROTECTION AND OTHER EROSION AND SEDIMENT CONTROL DEVICES ON PROPOSED DRAINAGE.

2. REMOVE THE REMAINING EXISTING DRAINAGE PIPES AND INLETS FROM STATION 109+00 TO 118+00 IN THE MEDIAN. GRADE MEDIAN FROM STATION 118+00 TO 115+09 TO DRAIN TO THE INLET AT 115+09. FILL EXISTING PIPE CROSSING AT STATION 538+25 WITH FLOWABLE FILL CONCRETE. CONTRACTOR SHALL INSTALL INLET PROTECTION AND OTHER EROSION AND SEDIMENT CONTROL DEVICES ON PROPOSED DRAINAGE.

STAGE 5: (STATION 125+00 TO STATION 134+00 & STATION 548+00 TO STATION 575+50)

1. CONSTRUCT PROPOSED DRAINAGE SHOWN IN THIS STAGE BETWEEN STATION 125+00 TO THE INLET AT STATION 131+50 ON BOTH EAST AND WEST SIDES OF EXISTING NORTHBOUND SR1, THE PIPE RUN CROSSING EXISTING NORTHBOUND AND SOUTHBOUND SR1 AT STATION 131+50, AND BETWEEN STATION 548+00 TO 575+50, ALONG THE WEST SIDE OF SOUTHBOUND SR1. CONSTRUCT THE DRAINAGE IN THE MEDIAN FROM STATION 131+50 TO 134+00 AND TIE-IN TO EXISTING DRAINAGE SYSTEM. ALL INLETS SHOULD BE CONSTRUCTED SO THAT TOP OF GRATES SHALL DRAIN IN EXISTING CONDITIONS AND LATER ADJUSTED TO PROPOSED GRADES. ALL WORK IN THIS STAGE SHALL BE PERFORMED DURING NIGHT HOURS UTILIZING TA-33, WHERE APPLICABLE. CONTRACTOR SHALL PATCH EXISTING PAVEMENT UP TO EXISTING GRADE USING LIKE MATERIALS BY THE END OF THE WORK SHIFT.

2. REMOVE THE REMAINING EXISTING DRAINAGE PIPES AND INLETS FROM STATION 125+00 TO 131+50 IN THE MEDIAN. EXCAVATE, SAWCUT AND REMOVE EXISTING PIPE AT STATION 128+50 TO CONSTRUCT PROPOSED DITCH ON THE EAST SIDE OF NORTHBOUND SR1. FILL THE REMAINING EXISTING PIPE CROSSING WITH FLOWABLE FILL CONCRETE. CONTRACTOR SHALL INSTALL INLET PROTECTION AND OTHER EROSION AND SEDIMENT CONTROL DEVICES ON PROPOSED DRAINAGE.

STAGE 6: (STATION 497+50 TO STATION 544+50)

1. UTILIZE TA-33 DURING OFF PEAK HOURS TO RECONSTRUCT THE SHOULDER ON THE EAST SIDE OF EXISTING SOUTHBOUND SR1 BETWEEN STATION 497+50 TO 528+40 AND 531+80 TO 544+50, OR AS DIRECTED BY THE ENGINEER IN THE FIELD, FOR MAINTENANCE OF TRAFFIC.

2. UTILIZE TA-33 DURING OFF PEAK HOURS TO RECONSTRUCT THE SHOULDER ON THE WEST SIDE OF EXISTING NORTHBOUND SR1 BETWEEN STATION 106+00 TO 119+00, OR DETERMINED BY THE ENGINEER IN THE FIELD, FOR MAINTENANCE OF TRAFFIC.

3. INSTALL DRAINAGE PIPE CROSSING EXISTING NORTHBOUND AND SOUTHBOUND SR1 AT STATION 101+00 AND GRADE DITCH FROM STATION 100+00 TO 105+00 IN THE MEDIAN, UTILIZING TA-33 LANE CLOSURE. ALL WORK IN THIS OPERATION SHALL BE PERFORMED DURING NIGHT HOURS UTILIZING TA-33, WHERE APPLICABLE. CONTRACTOR SHALL PATCH EXISTING PAVEMENT UP TO EXISTING GRADE USING LIKE MATERIALS BY THE END OF THE WORK SHIFT.

STAGE 7: (STATION 497+80 TO STATION 527+00, STATION 535+05 TO 549+40 & STATION 699+83 TO STATION 723+40)

1. UTILIZING TA-33 DURING OFF PEAK HOURS, SET TEMPORARY PCC BARRIER ALONG EXISTING SOUTHBOUND SR1 FROM STATION 516+00 TO 528+00 AND STATION 534+80 TO 550+40 OR AS DIRECTED BY THE ENGINEER. PLACE BARRELS ALONG EXISTING SOUTHBOUND SR1 FROM STATION 497+50 TO 516+00 TO MAINTAIN ACCESS FOR THE RESIDENTS LOCATED IN THIS SECTION DURING CONSTRUCTION. PLACE TEMPORARY STRIPING FROM STATION 497+50 TO 550+40.

2. CONSTRUCT PROPOSED DRAINAGE BETWEEN STATION 497+50 TO 528+00 ALONG SR1 AND PROPOSED BARRATTS CHAPEL ROAD, AS SHOWN IN THIS STAGE. CONTRACTOR SHALL INSTALL INLET PROTECTION AND OTHER EROSION AND SEDIMENT CONTROL DEVICES ON PROPOSED DRAINAGE.

3. SAWCUT AND CONSTRUCT THE PORTION OF THE PROPOSED AUXILIARY LANE SOUTH OF BARRATTS CHAPEL ROAD ON EXISTING SOUTHBOUND SR1 FROM STATION 497+50 TO 528+00, UP TO THE TOP OF TYPE B HOT-MIX. INSTALL GUARDRAIL AND CANTILEVERED SIGN FOUNDATION AND STRUCTURE. INSTALL ITMS FEATURES.

4. CONSTRUCT THE PORTION OF PROPOSED BARRATTS CHAPEL ROAD SHOWN IN THIS STAGE TO FINAL GRADE. INSTALL UNDERGROUND TRAFFIC SIGNAL CONDUITS AND JUNCTION WELLS FOR FUTURE TRAFFIC SIGNAL AT PROPOSED BARRATTS CHAPEL ROAD AND PROPOSED CLAPHAM ROAD, WHERE APPLICABLE. UTILIZE TA-10 TO CONSTRUCT TIE INTO PHILIP BARRATT ROAD, AS SHOWN, TO THE TOP OF TYPE B HOT-MIX. PROPOSED BARRATTS CHAPEL ROAD SHALL BE BARRELED OFF UNTIL THIS STAGE IS COMPLETE. PLACE PERMANENT STRIPING AND SIGNING, WHERE APPLICABLE.

5. SAWCUT AND CONSTRUCT PROPOSED BARRATTS CHAPEL DECELERATION LANE AND PORTION OF ACCELERATION LANE, AS SHOWN, BETWEEN STATION 535+05 TO 549+40 TO THE TOP OF TYPE B HOT-MIX. THE ACCELERATION LANE SHALL BE CONSTRUCTED TO MATCH THE EXISTING TRAVEL LANES' ELEVATION AND CROSS SLOPE SO THAT THE NEW PAVEMENT CAN BE UTILIZED FOR MAINTENANCE OF TRAFFIC LANE SHIFTS. FINAL ELEVATIONS AND CROSS SLOPES WILL BE ACHIEVED IN A LATER PHASE. INSTALL LIGHTING FACILITIES.

6. UTILIZE TA-33 DURING OFF PEAK HOURS, TO REMOVE TEMPORARY PCC BARRIER. TAPER MILL EXISTING SOUTHBOUND SR1 PAVEMENT TO ELIMINATE DROP OFF FROM STATION 497+81 TO 550+65, WHERE APPLICABLE. PLACE TEMPORARY STRIPING. CONTRACTOR SHALL NOT STRIPE THE LEFT OUT MOVEMENT FROM PROPOSED BARRATTS CHAPEL ROAD ONTO SR1 AND INSTALL NECESSARY "RIGHTS ONLY" SIGNING.

STAGE 8: (STATION 699+83 TO STATION 811+00 - BARRATTS CHAPEL ROAD TIE-INS)

1. PLACE CHANGEABLE MESSAGE SIGNS ON NORTHBOUND SR1, SOUTHBOUND SR1, AND BARRATTS CHAPEL ROAD TEN (10) CALENDAR DAYS IN ADVANCE OF CONSTRUCTION TO INFORM TRAVELING PUBLIC THAT PHILIP BARRATT ROAD WILL BE CLOSED TO THRU TRAFFIC AND DETOUR WILL BE IN USE FOR THIS STAGE.

2. OPEN PROPOSED BARRATTS CHAPEL ROAD TO TRAFFIC. WEDGE TRANSITION ONTO EXISTING BARRATTS CHAPEL ROAD WITH TYPE C HOT-MIX TO ACHIEVE SUPER ELEVATED FINAL GRADES. CLOSE PORTION OF PHILIP BARRATT ROAD FOR CONSTRUCTION, AS SHOWN.

3. CONSTRUCT TIE-INS OF PROPOSED BARRATTS CHAPEL ROAD AND REMOVE EXISTING PAVEMENT, AS SHOWN.

STAGE 9: (STATION 527+00 TO STATION 535+05 & STATION 798+19 TO STATION 810+95)

1. PLACE CHANGEABLE MESSAGE SIGNS ON NORTHBOUND SR1, SOUTHBOUND SR1, AND BARRATTS CHAPEL ROAD TEN (10) CALENDAR DAYS IN ADVANCE OF CONSTRUCTION TO INFORM TRAVELING PUBLIC THAT ACCESS TO OLD BARRATTS CHAPEL ROAD FROM SR1 WILL BE REMOVED IN THIS STAGE. ALL VEHICLES INCLUDING EMERGENCY WILL USE DETOUR.

2. UTILIZING TA-33 DURING OFF PEAK HOURS, TO SET TEMPORARY PCC BARRIER AND TEMPORARY STRIPING ALONG EXISTING SR1 SOUTHBOUND FROM STATION 526+50 TO 537+00 OR AS DIRECTED BY THE ENGINEER.

3. SAWCUT AND CONSTRUCT THE REMAINING PORTION OF PROPOSED BARRATTS CHAPEL ACCELERATION LANE. THE ACCELERATION LANE SHALL BE CONSTRUCTED TO MATCH THE EXISTING TRAVEL LANES' ELEVATION AND CROSS SLOPE SO THAT THE NEW PAVEMENT CAN BE UTILIZED FOR MAINTENANCE OF TRAFFIC LANE SHIFTS. FINAL ELEVATIONS AND CROSS SLOPES WILL BE ACHIEVED IN A LATER PHASE. INSTALL LIGHTING FACILITIES AND ITMS FEATURES.

4. COMPLETE CONSTRUCTING PROPOSED DRAINAGE ON PHILIP BARRATT ROAD, AS SHOWN IN THIS STAGE. BLOCK THE UPSTREAM END OF THE EXISTING PIPE CROSSING OLD BARRATS CHAPEL ROAD AT STATION 798+57 AND FILL PIPE WITH FLOWABLE FILL CONCRETE. CONTRACTOR SHALL INSTALL INLET PROTECTION AND OTHER EROSION AND SEDIMENT CONTROL DEVICES ON PROPOSED DRAINAGE.

5. UTILIZE TA-10 ON BARRATTS CHAPEL ROAD TO MILL AND OVERLAY THE EXISTING PAVEMENT WITH 3" TYPE C HOT-MIX TO FINAL GRADE BETWEEN STATION 798+19 TO STATION 810+95. CONSTRUCT TURN AROUND AT STATION 799+25. PLACE PERMANENT STRIPING AND SIGNING.

6. INSTALL SECURITY GATE TO ALLOW ACCESS TO EMERGENCY VEHICLES ONLY.

7. UTILIZE TA-33 DURING OFF PEAK HOURS, TO REMOVE TEMPORARY PCC BARRIER. TAPER MILL EXISTING SOUTHBOUND SR1 PAVEMENT TO ELIMINATE DROP-OFF, WHERE NECESSARY. PLACE TEMPORARY STRIPING.

8. ALL DISTURBED AREAS SHALL BE GRADED TO DRAIN PROPERLY. THE CONTRACTOR SHALL PLACE TOPSOIL, PERMANENT SEEDING AND MULCH BLANKET ON ALL AREAS IN FINAL CONDITIONS OR DIRECTED BY THE ENGINEER.

9. THE CONTRACTOR SHALL COORDINATE THE PLACEMENT OF THE FINAL SIGNAGE WITH STATE FORCES PRIOR TO PROCEEDING TO THE NEXT PHASE, WHERE APPLICABLE. THE CONTRACTOR SHALL NOT REMOVE ANY TEMPORARY SIGNAGE UNLESS APPROVED BY THE ENGINEER IN THE FIELD.

10. THE CONTRACTOR SHALL REMOVE ALL EROSION AND SEDIMENT CONTROL SYSTEMS STILL REMAINING IN THIS PHASE PER THE APPROVAL OF THE SEDIMENT CONTROL INSPECTOR.

PHASE III

STAGE 1: (STATION 101+25 TO STATION 122+25)

1. PLACE CHANGEABLE MESSAGE SIGNS ON NORTHBOUND SR1, SOUTHBOUND SR1 AND SKEETER NECK ROAD TEN (10) CALENDAR DAYS IN ADVANCE OF CONSTRUCTION TO INFORM TRAVELING PUBLIC THAT SKEETER NECK ROAD WILL BE CLOSED TO THRU TRAFFIC AND DETOUR WILL BE IN USE FOR THIS STAGE.

2. UTILIZE TA-33 DURING OFF PEAK HOURS TO SET TEMPORARY PCC BARRIER ALONG THE EAST SIDE OF EXISTING SR1 NORTHBOUND FROM STATION 100+20 TO 122+25 OR AS DIRECTED BY THE ENGINEER. USE DETOUR, SHOWN IN THE PLANS, TO CLOSE EXISTING SKEETER NECK ROAD ACCESS TO SR1 AND DIRECT TRAFFIC TO BOWERS BEACH ROAD.

3. REGRADE DRAINAGE FACILITIES FOR THIS PORTION OF WORK TO FINAL GRADES. CONTRACTOR SHALL RESTORE ANY EROSION AND SEDIMENT CONTROL DEVICES DISTURBED IN THIS OPERATION.

4. BEHIND PCC BARRIER, SAWCUT AND CONSTRUCT THE PORTION OF PROPOSED NORTHBOUND SR1 BETWEEN STATION 101+25 TO 122+24. COMPLETE TIE-IN CONSTRUCTION TO EXISTING NORTHBOUND SR1 TO THE TOP OF TYPE B HOT-MIX. CONSTRUCT SKEETER NECK ROAD ACCESS TO PROPOSED NORTHBOUND SR1 FULL DEPTH PAVEMENT. INSTALL GUARDRAIL, ITMS FEATURES, AND LIGHTING FACILITIES WITHIN THESE LIMITS.

STAGE 2: (STATION 122+24 TO STATION 145+00, STATION 400+00 TO STATION 428+31, STATION 430+64 TO STATION 465+04, STATION 212+50 TO STATION 219+00, & STATION 1000+00 TO STATION 1005+82)

1. DURING OFF PEAK HOURS, UTILIZE TA-33 TO RELOCATE TEMPORARY PCC BARRIER ALONG THE OUTSIDE SHOULDER OF EXISTING NORTHBOUND SR1 FROM STATION 122+00 TO 145+00 OR AS DIRECTED BY THE ENGINEER. BARREL OFF PROPOSED SR1 NORTHBOUND. MAINTAIN EXISTING INGRESS AND EGRESS TO ALL OTHER SIDE STREETS OR DRIVEWAYS. REMOVE DETOUR ON SKEETER NECK ROAD.

2. CONSTRUCT APPROPRIATE DRAINAGE DEVICES ON BOTH SIDES OF LITTLE HEAVEN ROAD AS SHOWN ON THE PLANS OR AS DIRECTED BY THE ENGINEER. CONTRACTOR SHALL INSTALL INLET PROTECTION AND OTHER EROSION AND SEDIMENT CONTROL DEVICES ON PROPOSED DRAINAGE. INSTALL TEMPORARY PIPES WHERE PROPOSED DITCHES CROSS CONNECTING STREETS OR DRIVEWAYS TO BE REMOVED AT A LATER PHASE.

3. CONSTRUCT THE PORTION OF PROPOSED NORTHBOUND SR1 FROM STATION 122+25 TO 145+00 AND THE PORTION OF LITTLE HEAVEN ROAD FROM THE TIE INTO PROPOSED NORTHBOUND SR1 TO STATION 460+00, TO THE FINAL GRADE WITH TYPE B HOT-MIX, WHILE MAINTAINING ACCESS TO BOWERS BEACH ROAD AND OTHER CONNECTING SIDE STREETS TO SR1. INSTALL PROPOSED GUARDRAIL, ITMS FEATURES, LIGHTING CONDUIT AND DEVICES, AND CANTILEVERED SIGN FOUNDATION AND STRUCTURE. ALONG LITTLE HEAVEN ROAD. BETWEEN STATION 401+00 TO 411+00, WEDGE 10' SHOULDER TO MATCH THE TRAVEL LANE CROSS SLOPE FOR PHASE IV TRAFFIC PATTERN. FINAL CROSS SLOPE SHALL BE ACHIEVED IN A LATER PHASE.

4. PLACE CHANGEABLE MESSAGE SIGNS ON NORTHBOUND SR1 AND MULBERRIE POINT ROAD TEN (10) CALENDAR DAYS IN ADVANCE OF CONSTRUCTION TO INFORM TRAVELING PUBLIC THAT MULBERRIE POINT ROAD WILL BE CLOSED TO THRU TRAFFIC AND DETOUR WILL BE IN USE FOR THIS STAGE.

5. UTILIZE TA-33 DURING OFF PEAK HOURS TO SET TEMPORARY PCC BARRIER ALONG THE EAST SIDE SHOULDER OF EXISTING NORTHBOUND SR1 FROM STATION 209+00 TO 220+00 OR AS DIRECTED BY THE ENGINEER. USE DETOUR, SHOWN IN THE PLANS, TO CLOSE EXISTING MULBERRIE POINT ROAD ACCESS TO SR1 AND DIRECT TRAFFIC TO BOWERS BEACH ROAD.

6. BEHIND PCC BARRIER, COMPLETE TRANSITION FROM LITTLE HEAVEN ROAD AT 460+00 TO EXISTING NORTHBOUND SR1 AT STATION 219+00, TO THE TOP OF TYPE B HOT-MIX. CONSTRUCT PROPOSED MULBERRIE POINT CONNECTOR ROAD TO FINAL GRADE. USE TA-10 LANE CLOSURE TO TIE INTO MULBERRIE POINT ROAD. INSTALL GUARDRAIL, BUILD PERMANENT PCC BARRIER, POUR PCC MEDIAN, INSTALL ITMS FEATURES, INSTALL FENCE AND INSTALL LIGHTING CONDUIT AND DEVICES ALONG LITTLE HEAVEN ROAD.

7. UTILIZE TA-33 DURING OFF PEAK HOURS TO REMOVE ALL TEMPORARY BARRIER.

8. LAYOUT AND PLACE TEMPORARY PAVEMENT MARKINGS ON LITTLE HEAVEN ROAD FOR PHASE IV TRAFFIC PATTERN.

9. ALLOW MULBERRIE POINT ROAD TRAFFIC TO UTILIZE NEW ACCESS TO SR1, RIGHT-OUT MOVEMENT ONLY.

STAGE 3: (STATION 1100+00 TO STATION 1104+71)

1. CONSTRUCT ANY REMAINING DRAINAGE DEVICES FOR MULBERRIE POINT ROAD FROM STATION 1100+00 TO STATION 1104+71.

2. UTILIZE TA-10 ON MULBERRIE POINT ROAD TO CONSTRUCT FULL DEPTH PAVEMENT ON THE WESTBOUND SIDE BETWEEN STATION 1100+00 TO 1104+71 AND DRIVEWAY TIE-INS TO FINAL GRADE.

3. UTILIZE TA-10 ON MULBERRIE POINT ROAD TO CONSTRUCT FULL DEPTH PAVEMENT ON THE EASTBOUND SIDE BETWEEN STATION 1100+00 TO 1104+71. CONSTRUCT THE PROPOSED CUL-DE-SAC AND REMOVE EXISTING ACCESS TO NORTHBOUND SR1 AND HAUL AWAY MATERIAL TO AN APPROVED OFFSITE FACILITY.

4. PLACE PERMANENT PAVEMENT MARKINGS.

STAGE 4: (STATION 901+50 TO STATION 923+59 OFFSET LEFT)

1. PLACE CHANGEABLE MESSAGE SIGNS ON NORTHBOUND SR1, SOUTHBOUND SR1, AND BOWERS BEACH ROAD TEN (10) CALENDAR DAYS IN ADVANCE OF CONSTRUCTION TO INFORM TRAVELING PUBLIC OF IMPENDING ROAD CONSTRUCTION.

2. CONSTRUCT STORMWATER FACILITY #457. PLACE THE EXCAVATED SUITABLE FILL MATERIAL IN PORTIONS FOR THE SR1 NORTHBOUND BRIDGE EMBANKMENT OR STOCKPILE AT AN APPROVED LOCATION.

3. CONSTRUCT PROPOSED DRAINAGE FOR BOWERS BEACH ROAD FROM STATION 904+00 TO 923+59 AS SHOWN ON THE PLANS OR AS DIRECTED BY THE ENGINEER. CONTRACTOR SHALL INSTALL INLET PROTECTION AND OTHER EROSION AND SEDIMENT CONTROL DEVICES ON PROPOSED DRAINAGE.

4. UTILIZE TA-10 ON WESTBOUND BOWERS BEACH ROAD TO CONSTRUCT NORTH SIDE OF BOWERS BEACH ROAD TO THE TOP OF THE TYPE B HOT-MIX. BEGIN INSTALLING PROPOSED TRAFFIC SIGNAL AT LITTLE HEAVEN ROAD AND BOWERS BEACH INTERSECTION. INSTALL PROPOSED TRAFFIC SIGNAL POLES, CONDUIT, AND JUNCTION BOXES IN PERMANENT LOCATIONS. POUR PCC CURB, PCC SIDEWALK, AND TIE-IN DRIVEWAYS. PROVIDE INGRESS AND EGRESS TO ALL SIDE STREETS OR DRIVEWAYS ALL THE TIME.

STAGE 5: (STATION 901+50 TO STATION 923+59 OFFSET RIGHT)

1. PLACE CHANGEABLE MESSAGE SIGNS ON NORTHBOUND SR1, SOUTHBOUND SR1, AND BOWERS BEACH ROAD TEN (10) CALENDAR DAYS IN ADVANCE OF CONSTRUCTION TO INFORM TRAVELING PUBLIC OF IMPENDING ROAD CONSTRUCTION.

2. UTILIZE TA-10 ON EASTBOUND BOWERS BEACH ROAD TO CONSTRUCT SOUTH SIDE OF BOWERS BEACH ROAD TO THE TOP OF THE TYPE B HOT-MIX. CONTINUE INSTALLING PROPOSED TRAFFIC SIGNAL AT LITTLE HEAVEN ROAD AND BOWERS BEACH INTERSECTION. INSTALL PROPOSED TRAFFIC SIGNAL POLES, CONDUIT, AND JUNCTION BOXES IN PERMANENT LOCATIONS. POUR PCC CURB, PCC SIDEWALK, AND TIE-IN DRIVEWAYS. PROVIDE INGRESS AND EGRESS TO ALL DRIVEWAYS ALL THE TIME.

3. UTILIZE TA-33 DURING OFF PEAK HOURS TO INSTALL PROPOSED TRAFFIC SIGNAL POLES, CONDUIT, AND JUNCTION BOXES IN PERMANENT LOCATIONS ON SOUTHBOUND SR1 BETWEEN STATION 587+00 TO STATION 590+60 OFFSET LEFT.

4. UTILIZE TA-10 ON BOWERS BEACH ROAD IN ORDER TO MILL EXISTING PAVEMENT AND PAVE 2" TYPE C HOT-MIX OVERLAY TO FINAL GRADE FROM STATION 907+00 TO 923+49.

5. LAYOUT AND PLACE FINAL CONFIGURATION OF PERMANENT PAVEMENT MARKINGS ON BOWERS BEACH ROAD FROM STATION 908+00 TO 923+49 OR AS DIRECTED BY THE ENGINEER. PLACE TEMPORARY PAVEMENT MARKINGS ON LITTLE HEAVEN ROAD AND BOWERS BEACH ROAD FROM STATION 900+00 TO 908+00 FOR PHASE IV TRAFFIC PATTERN.

6. PLACE CHANGEABLE MESSAGE SIGNS ON NORTHBOUND SR1, SOUTHBOUND SR1, SOUTHBOUND CLAPHAM ROAD, BARRATTS CHAPEL ROAD AND BOWERS BEACH ROAD TEN (10) CALENDAR DAYS IN ADVANCE OF CONSTRUCTION TO INFORM TRAVELING PUBLIC OF A NEW TRAFFIC PATTERN. INSTALL TEMPORARY SIGNING PER PHASE IV TRAFFIC PATTERN.

7. ACTIVATE PHASE IV TEMPORARY TRAFFIC SIGNAL CONFIGURATION AT THE INTERSECTION OF LITTLE HEAVEN ROAD AND BOWERS BEACH ROAD FOR NORTHBOUND SR1 TRAFFIC ON LITTLE HEAVEN ROAD.

8. ALL DISTURBED AREAS SHALL BE GRADED TO DRAIN PROPERLY. THE CONTRACTOR SHALL PLACE TOPSOIL, PERMANENT SEEDING AND MULCH BLANKET ON ALL AREAS IN FINAL CONDITIONS OR DIRECTED BY THE ENGINEER. ONCE ALL AREAS ARE STABILIZED CONTRACTOR SHALL CONVERT STORMWATER FACILITY #457 TO A PERMANENT FACILITY.

9. THE CONTRACTOR SHALL COORDINATE THE PLACEMENT OF THE FINAL SIGNAGE WITH STATE FORCES PRIOR TO PROCEEDING TO THE NEXT PHASE, WHERE APPLICABLE. THE CONTRACTOR SHALL NOT REMOVE ANY TEMPORARY SIGNAGE UNLESS APPROVED BY THE ENGINEER IN THE FIELD.

10. THE CONTRACTOR SHALL REMOVE ALL EROSION AND SEDIMENT CONTROL SYSTEMS STILL REMAINING IN THIS PHASE PER THE APPROVAL OF THE SEDIMENT CONTROL INSPECTOR.

PHASE IV

STAGE 1: (STATION 109+36 TO STATION 117+67 & STATION 460+20 TO STATION 464+42)

1. UTILIZE TA-33 AT BOTH TRANSITIONS FROM EXISTING NORTHBOUND SR1 TO PROPOSED NORTHBOUND SR1 AND LITTLE HEAVEN ROAD TO EXISTING NORTHBOUND SR1 IN ORDER TO SHIFT NORTHBOUND SR1 TRAFFIC TO THE OUTSIDE LANE OF LITTLE HEAVEN ROAD. FROM STATION 109+36 TO 117+67 AND STATION 460+20 TO 464+42, PLACE HOT-MIX WEDGE AT THE TRANSITIONS FROM EXISTING TO PROPOSED NORTHBOUND SR1 TO ACHIEVE THE PROPOSED SUPERELEVATION CROSS SLOPE. MULBERRIE POINT CONNECTOR ROAD AND ALL OTHER STREETS CONNECTING TO LITTLE HEAVEN ROAD SHALL BE RIGHTS OUT ONLY AND SIGNED PROPERLY. PLACE TEMPORARY STRIPING AT BOTH TRANSITIONS AND CONNECTING STREETS. REMOVE EXISTING SIGNAL DEVICES AT SR1 AND CLAPHAM ROAD. ALL WORK IN THIS OPERATION SHALL BE PERFORMED DURING NIGHT HOURS.

2. UTILIZE TA-33 TO SET TEMPORARY PCC BARRIER BETWEEN PROPOSED CLAPHAM ROAD STATION 522+00 TO PROPOSED SR1 STATION 120+00 ALONG THE MEDIAN ON EXISTING NORTHBOUND SR1, AS SHOWN, OR DIRECTED BY THE ENGINEER. WORK TO BE PERFORMED DURING OFF PEAK HOURS. ALL EMERGENCY VEHICLES WILL USE NEW TRAFFIC PATTERN.

STAGE 2: (STATION 100+00 TO STATION 113+75 - CROSSOVER)

1. UTILIZE TA-33 TO SET TEMPORARY PCC BARRIER BETWEEN STATION 521+60 TO 542+00 ALONG THE MEDIAN ON EXISTING SOUTHBOUND SR1, AS SHOWN OR DIRECTED BY THE ENGINEER TO CONSTRUCT SHOULDERS AND CROSSOVER. WORK TO BE PERFORMED DURING OFF PEAK HOURS.

2. BEHIND PCC BARRIER, CONSTRUCT THE EMERGENCY VEHICLE CROSSOVER AND SHOULDERS, AS SHOWN, TO THE TOP OF TYPE B HOT-MIX.

3. UTILIZE TA-33 DURING OFF PEAK HOURS TO REMOVE PCC BARRIER FROM SOUTHBOUND SR1. RELOCATE THE BARRIER ON NORTHBOUND SR1 TO THE EDGE OF THE PROPOSED PAVEMENT BETWEEN 107+00 TO 120+00, AS SHOWN IN THE CONSTRUCTION TYPICAL SECTION IN THE NEXT STAGE, OR AS DIRECTED BY THE ENGINEER. OPEN CROSSOVER TO EMERGENCY VEHICLES ONLY.

STAGE 3: (PROPOSED CLAPHAM ROAD STATION 514+00 TO PROPOSED SR1 STATION 130+00)

1. USE TA-33 LANE CLOSURE ON NORTHBOUND SR1 TO MILL EXISTING PAVEMENT AND OVERLAY WITH TYPE C HOT-MIX TO FINAL GRADE FROM SOUTH PROJECT LIMIT TO PROPOSED SR1 STATION 130+00. WORK TO BE PERFORMED DURING OFF PEAK HOURS OR AS DIRECTED BY THE ENGINEER. PLACE PERMANENT PAVEMENT MARKINGS ON PROPOSED NORTHBOUND SR1.

STAGE 4: (STATION 107+00 TO NORTH PROJECT LIMIT)

1. UTILIZE TA-33 DURING OFF PEAK HOURS TO SET TEMPORARY PCC BARRIER ALONG EAST SIDE OF EXISTING SOUTHBOUND SR1 FROM STATION 107+00 TO NORTH PROJECT LIMIT AND THE WEST SIDE OF PROPOSED NORTHBOUND SR1 AND LITTLE HEAVEN ROAD FROM STATION 120+00 TO NORTH PROJECT LIMIT, AS SHOWN IN PLANS. UTILIZE TA-6 DURING OFF PEAK HOURS TO SET TEMPORARY PCC BARRIER ALONG BOTH SIDES OF BOWERS BEACH ROAD AT THE BRIDGE LOCATION, AS SHOWN IN PLANS.

2. REMOVE A PORTION OF EXISTING NORTHBOUND SR1 FROM STATION 586+00 TO STATION 589+50 AND INSTALL PROPOSED SIGNAL FEATURES, AS SHOWN IN THE PLANS. EXISTING TRAFFIC SIGNAL CABINET AND OTHER EXISTING TRAFFIC SIGNAL DEVICES WITHIN THE WORK AREA SHALL REMAIN FULLY OPERATIONAL AND SHALL NOT BE DISTURBED OR REMOVED UNTIL ALL PROPOSED TRAFFIC SIGNAL DEVICES ARE INSTALLED AND IN OPERATION AT THE END OF THIS STAGE.

3. CONSTRUCT WETLAND MITIGATION SITE TO THE EAST OF STORMWATER FACILITY #456. PLACE THE EXCAVATED SUITABLE FILL MATERIAL IN PORTIONS FOR THE SR1 BRIDGE EMBANKMENT OR STOCKPILE AT AN APPROVED LOCATION.

4. CONSTRUCT PROPOSED DRAINAGE FOR PROPOSED SR1 STATION 115+00 TO PROPOSED NORTHBOUND SR1 STATION 209+20, AS SHOWN ON THE PLANS OR AS DIRECTED BY THE ENGINEER. TIE INTO EXISTING DRAINAGE SYSTEM WHERE INDICATED IN ORDER TO MAINTAIN POSITIVE DRAINAGE. CONTRACTOR SHALL INSTALL INLET PROTECTION AND OTHER EROSION AND SEDIMENT CONTROL DEVICES ON PROPOSED DRAINAGE.

5. REMOVE EXISTING PAVEMENT AS INDICATED IN THE PLANS AND ALL UNNECESSARY TEMPORARY DRAINAGE FEATURES.

6. CONSTRUCT REMAINING EMBANKMENT, PROPOSED SR1 ROADWAY, AND SHOULDER WIDENING AS SHOWN, TO FINAL GRADE. CONSTRUCT BRIDGE ABUTMENTS AND MSE WALLS. INSTALL GUARDRAIL, LIGHTING SCHEME, ITMS FEATURES, RIGHT-OF-WAY FENCE, SECURITY GATES, AND POUR PERMANENT PCC BARRIER, AS SHOWN ON THE PLANS. COMPLETE ALL FOUR TRANSITIONS FROM EXISTING SR1 TO PROPOSED SR1 TO THE TOP OF TYPE B LIFT.

NOTE: SOUTHBOUND TRANSITIONS SHALL BE CONSTRUCTED AT A 31 FOOT MINIMUM WIDTH AT PROPOSED GRADE SO THAT TWO LANE TRAFFIC CAN BE MAINTAINED AFTER TEMPORARY BARRIER IS SET ON THE COMPLETED SURFACE, IN STAGE 1 OF PHASE V, AND TRAFFIC PATTERN IS SWITCHED ONTO SOUTHBOUND PROPOSED SR1. PROPOSED ELEVATION SHALL BE ACHIEVED BY TRANSITIONING THE TOP OF GABC TO THE EXISTING TRAVEL LANE ELEVATION, PLACE BCBC HOT-MIX TO THE TOP OF PROPOSED BCBC LIFT AND OVERLAY TO THE TOP OF TYPE B HOT-MIX. HOT-MIX WILL BE SAWCUT ON THE WEST EDGE TO CONSTRUCT OUTSIDE LANES AT A LATER PHASE.

7. PLACE CHANGEABLE MESSAGE SIGNS ON SOUTHBOUND SR1 AND BOWERS BEACH ROAD TEN (10) CALENDAR DAYS IN ADVANCE OF CONSTRUCTION TO INFORM TRAVELING PUBLIC THAT ROAD WILL BE CLOSED TO THRU TRAFFIC AND DETOUR WILL BE IN USE FOR THIS STAGE.

8. SET BRIDGE BEAMS UNDER ROAD CLOSURE AT NIGHT, UTILIZING DETOUR PLAN SHOWN IN THE PLANS. DURING THE DETOUR AT NIGHT COVER ANY CONFLICTING SIGNING. COMPLETE REMAINING BRIDGE CONSTRUCTION ACTIVITIES BEHIND BARRIER ON BOWERS BEACH ROAD OR AS DIRECTED BY THE ENGINEER.

9. INSTALL PROPOSED TRAFFIC SIGNAL POLES, CONDUIT, AND JUNCTION BOXES IN PERMANENT LOCATIONS AT THE PROPOSED CLAPHAM ROAD AND BOWERS BEACH ROAD INTERSECTION. POSITION THE SIGNAL HEADS. INSTALL PROPOSED LIGHTING CONDUIT AND DEVICES. REMOVE EXISTING SIGNAL POLES AND OTHER TRAFFIC DEVICES.

10. LAYOUT AND PLACE PERMANENT PAVEMENT MARKINGS AND REMOVE ALL E&S CONTROL DEVICES AS DIRECTED BY ENGINEER IN THE FIELD.

STAGE 5: (STATION 212+50 TO NORTH PROJECT LIMIT)

1. PLACE CHANGEABLE MESSAGE SIGNS ON NORTHBOUND SR1, SOUTHBOUND SR1, SOUTHBOUND CLAPHAM ROAD, BARRATTS CHAPEL ROAD AND BOWERS BEACH ROAD TEN (10) CALENDAR DAYS IN ADVANCE OF CONSTRUCTING THE NORTHBOUND SR1 TIE-IN TO INFORM THE TRAVELING PUBLIC OF THE NEW TRAFFIC PATTERNS.

2. UTILIZE TA-33 DURING OFF PEAK HOURS TO REMOVE PCC BARRIER ALONG LITTLE HEAVEN ROAD AND BOWERS BEACH ROAD OR AS DIRECTED BY THE ENGINEER.

3. UTILIZE TA-33 ON EXISTING NORTHBOUND SR1 TO MILL EXISTING PAVEMENT AND OVERLAY WITH A WEDGE LIFT TO THE TOP OF TYPE B HOT-MIX FROM STATION 212+50 TO NORTH LIMIT OR AS DIRECTED BY THE ENGINEER. WORK TO BE PERFORMED DURING NIGHT TIME HOURS.

4. UTILIZE TA-33 TO PLACE 2" TYPE C HOT-MIX TO FINAL GRADE ON PROPOSED NORTHBOUND SR1 FROM STATION 212+50 TO NORTH LIMIT OR AS DIRECTED BY THE ENGINEER. WORK TO BE PERFORMED DURING NIGHT TIME HOURS.

5. UTILIZE TA-33 ON PROPOSED NORTHBOUND SR1 TO MILL PAVEMENT AND OVERLAY WITH 2" TYPE C HOT-MIX TO FINAL GRADE FROM STATION 130+00 TO 140+00 OR AS DIRECTED BY THE ENGINEER. WORK TO BE PERFORMED DURING NIGHT TIME HOURS.

6. LAYOUT AND PLACE PERMANENT PAVEMENT MARKING ON PROPOSED NORTHBOUND SR1 AND LITTLE HEAVEN ROAD RAMP.

7. OPEN PROPOSED NORTHBOUND SR1 TO TRAFFIC. SHIFT ALL SIGNALIZED INTERSECTIONS TO A NEW TEMPORARY TRAFFIC SIGNAL CONFIGURATION.

STAGE 6: (LITTLE HEAVEN ROAD STATION 401+00 TO PROPOSED NORTHBOUND SR1 231+50)

1. PLACE CHANGEABLE MESSAGE SIGNS ON NORTHBOUND LITTLE HEAVEN AND BOWERS BEACH ROAD TEN (10) CALENDAR DAYS IN ADVANCE OF CONSTRUCTION TO INFORM TRAVELING PUBLIC OF IMPENDING ROAD CONSTRUCTION.

2. UTILIZE TA-33 ON LITTLE HEAVEN ROAD TO MILL 2" OF TYPE B HOT-MIX AND PAVE 2" TYPE C HOT-MIX OVERLAY TO FINAL GRADE. CORRECT SHOULDER'S CROSS SLOPE BETWEEN STATION 401+00 TO 411+00.

3. LAYOUT AND PLACE FINAL CONFIGURATION OF PERMANENT PAVEMENT MARKINGS ON LITTLE HEAVEN ROAD.

4. SWITCH TRAFFIC SIGNAL HEADS TO FINAL PROPOSED TRAFFIC PATTERN CONFIGURATION ON LITTLE HEAVEN ROAD.

5. OPEN LITTLE HEAVEN ROAD NORTH OF BOWERS BEACH ROAD TO A 2-DIRECTIONAL TRAFFIC PATTERN.

6. ALL DISTURBED AREAS SHALL BE GRADED TO DRAIN PROPERLY. THE CONTRACTOR SHALL PLACE TOPSOIL, PERMANENT SEEDING AND MULCH BLANKET ON ALL AREAS IN FINAL CONDITIONS OR DIRECTED BY THE ENGINEER.

7. THE CONTRACTOR SHALL COORDINATE THE PLACEMENT OF THE FINAL SIGNAGE WITH STATE FORCES PRIOR TO PROCEEDING TO THE NEXT PHASE, WHERE APPLICABLE. THE CONTRACTOR SHALL NOT REMOVE ANY TEMPORARY SIGNAGE UNLESS APPROVED BY THE ENGINEER IN THE FIELD.

8. THE CONTRACTOR SHALL REMOVE ALL EROSION AND SEDIMENT CONTROL SYSTEMS STILL REMAINING IN THIS PHASE PER THE APPROVAL OF THE SEDIMENT CONTROL INSPECTOR.

PHASE V

STAGE 1: (STATION 109+50 TO STATION 121+00 & STATION 311+00 TO NORTH PROJECT LIMIT)

1. PLACE CHANGEABLE MESSAGE SIGNS ON NORTHBOUND SR1, SOUTHBOUND SR1, SOUTHBOUND CLAPHAM ROAD, BARRATTS CHAPEL ROAD AND BOWERS BEACH ROAD TEN (10) CALENDAR DAYS IN ADVANCE OF CONSTRUCTING THE SOUTHBOUND SR1 TIE-IN TO INFORM THE TRAVELING PUBLIC OF THE NEW TRAFFIC PATTERNS.

2. SET TEMPORARY PCC BARRIER ON PROPOSED SOUTHBOUND SR1 BEHIND PREVIOUSLY PLACED BARRIER BETWEEN STATION 109+50 TO STATION 121+00 AND PROPOSED SR1 STATION 177+50 TO PROPOSED SOUTHBOUND SR1 STATION 311+00, AS SHOWN, PRIOR TO OPENING PROPOSED SOUTHBOUND SR1 TO TRAFFIC. SEE CONSTRUCTION SEQUENCING TYPICAL SECTION.

3. UTILIZE TA-33 TO REMOVE TEMPORARY PCC BARRIER ON EXISTING SOUTHBOUND SR1 FROM STATION 311+50 TO NORTH LIMIT. PLACE TEMPORARY PAVEMENT MARKINGS ON PROPOSED SOUTHBOUND SR1. OPEN PROPOSED SOUTHBOUND SR1 TO TRAFFIC. WORK TO BE PERFORMED DURING NIGHT TIME HOURS.

4. UTILIZE TA-33 TO SET TEMPORARY PCC BARRIER ON PROPOSED SOUTHBOUND SR1 FROM STATION 311+00 TO 316+60, AS INDICATED IN THE PLANS. WORK TO BE PERFORMED DURING NIGHT TIME HOURS.

5. USE PROPOSED AND PHILIP BARRATT ROAD TO DETOUR SOUTHBOUND PROPOSED CLAPHAM ROAD TRAFFIC AROUND SOUTHBOUND SR1 TRANSITION, AS SHOWN. SET BARRICADES AND CLOSE PROPOSED CLAPHAM ROAD RAMP TO SOUTHBOUND SR1. WORK TO BE PERFORMED DURING NIGHT TIME HOURS.

6. UTILIZE TA-33 ON PROPOSED CLAPHAM ROAD TO REMOVE TEMPORARY PCC BARRIER ON EXISTING SOUTHBOUND SR1 FROM PROPOSED SR1 STATION 107+00 TO PROPOSED SOUTHBOUND SR1 STATION 311+50. PLACE BARRELS TO CHANNELIZE TRAFFIC PROPERLY.

STAGE 2: (SOUTHBOUND SR1 STATION 122+00 TO SOUTH PROJECT LIMIT)

1. WHILE THE TRANSITION FROM SOUTHBOUND CLAPHAM ROAD TO SOUTHBOUND SR1 IS CLOSED AND BEHIND TEMPORARY BARRIER AS SHOWN, SAWCUT ALONG THE BARRIER AND PAVE WEDGE LIFTS TO THE TOP OF BCBC HOT-MIX. AT PROPOSED CLAPHAM ROAD STATION 540+00 AND PROPOSED SR1 STATION 107+60, SAWCUT LATERALLY AND TAPERMILL A TRANSITION IN ORDER TO TIE INTO THE PREVIOUSLY PLACED ASPHALT. PAVE AREA TO THE TOP OF TYPE B, HOT-MIX.

2. RECONSTRUCT DRAINAGE FACILITIES BETWEEN 529+50 TO 544+00 ON WEST SIDE OF PROPOSED SOUTHBOUND SR1 AND INSTALL LIGHTING FACILITIES.

3. UTILIZE TA-33 TO REMOVE TEMPORARY PCC BARRIER ON PROPOSED SOUTHBOUND SR1 FROM STATION 106+50 TO 122+00. WORK TO BE PERFORMED DURING OFF PEAK HOURS.

4. UTILIZE TA-33 ON SOUTHBOUND SR1 TO OVERLAY EXISTING PAVEMENT WITH 2" OF TYPE C HOT-MIX TO FINAL GRADE FROM STATION 122+00 TO SOUTH PROJECT LIMIT OR AS DIRECTED BY ENGINEER IN THE FIELD. WORK TO BE PERFORMED DURING OFF PEAK HOURS.

5. LAYOUT AND PLACE PERMANENT PAVEMENT MARKINGS ON SOUTHBOUND SR1, TRANSITIONS AND ALL CORRESPONDING STREETS FOR FINAL CONFIGURATION FROM STATION 122+00 TO SOUTH PROJECT LIMIT. OPEN TRANSITION FROM PROPOSED CLAPHAM ROAD TO PROPOSED SR1 SOUTHBOUND.

STAGE 3: (NORTHBOUND SR1 STATION 300+40 TO NORTH PROJECT LIMIT)

1. BEHIND TEMPORARY BARRIER, SAWCUT ALONG THE BARRIER AND PAVE WEDGE LIFTS TO THE TOP OF BCBC HOT-MIX. AT RAMP A STATION 1204+50, SAWCUT LATERALLY AND TAPERMILL A TRANSITION IN ORDER TO TIE INTO THE PREVIOUSLY PLACED ASPHALT. PAVE AREA TO THE TOP OF TYPE B, HOT-MIX. SAWCUT AND REMOVE TEMPORARY PAVEMENT AS SHOWN. INSTALL REMAINING LIGHTING FEATURES.

2. RECONSTRUCT DRAINAGE FACILITIES FROM 307+00 TO 312+00 ON WEST SIDE OF SOUTHBOUND SR1. CONSTRUCT APPROPRIATE DRAINAGE DEVICES BETWEEN PROPOSED SR1 STATION 182+00 TO SOUTHBOUND SR1 STATION 307+50 AS SHOWN ON THE PLANS OR AS DIRECTED BY THE ENGINEER.

3. USE TA-33 ON PROPOSED CLAPHAM ROAD TO CONSTRUCT FULL DEPTH CONSTRUCTION BETWEEN 605+50 TO 612+00, AS SHOWN. POUR PERMANENT BIFURCATED PCC BARRIER BETWEEN STATION 605+50 TO 615+50, GUARDRAIL BETWEEN STATION 615+50 TO 617+00, AND PROTECT END OF BARRIER AT 605+50 WITH A TEMPORARY IMPACT ATTENUATOR.

4. UTILIZE TA-33 TO REMOVE TEMPORARY PCC BARRIER ON PROPOSED SOUTHBOUND SR1 FROM PROPOSED SR1 STATION 177+50 TO PROPOSED SOUTHBOUND SR1 STATION 316+60. WORK TO BE PERFORMED DURING OFF PEAK HOURS.

5. UTILIZE TA-33 ON SOUTHBOUND SR1 TO OVERLAY EXISTING PAVEMENT WITH 2" OF TYPE C HOT-MIX TO FINAL GRADE FROM NORTH PROJECT LIMIT TO PROPOSED SOUTHBOUND SR1 STATION 302+00 OR AS DIRECTED BY ENGINEER IN THE FIELD. WORK TO BE PERFORMED DURING OFF PEAK HOURS.

6. LAYOUT AND PLACE PERMANENT PAVEMENT MARKINGS ON PROPOSED SOUTHBOUND SR1, TRANSITIONS AND ALL CORRESPONDING STREETS FOR FINAL CONFIGURATION FROM NORTH PROJECT LIMIT TO STATION 302+00.

STAGE 4: (STATION 575+50 TO STATION 603+40 OFFSET LEFT)

1. PLACE CHANGEABLE MESSAGE SIGNS ON SOUTHBOUND CLAPHAM ROAD AND BOWERS BEACH ROAD TEN (10) CALENDAR DAYS IN ADVANCE OF CONSTRUCTION TO INFORM TRAVELING PUBLIC OF IMPENDING ROAD CONSTRUCTION.

2. INSTALL DRAINAGE PIPE CROSSING EXISTING SR1 SOUTHBOUND AT STATION 594+75. ALL WORK IN THIS OPERATION SHALL BE PERFORMED DURING NIGHT HOURS UTILIZING TA-33, WHEN APPLICABLE. CONTRACTOR SHALL PATCH EXISTING PAVEMENT UP TO EXISTING GRADE USING LIKE MATERIALS BY THE END OF THE WORK SHIFT.

3. CONSTRUCT THE PROPOSED DRAINAGE FACILITIES ON THE WEST SIDE OF PROPOSED CLAPHAM ROAD FROM STATION 575+50 TO 600+00 AS SHOWN ON THE PLANS OR AS DIRECTED BY THE ENGINEER.

4. AT SR1 STATION 587+00, 592+50, AND 597+50, FILL EXISTING PIPE CROSSING SR1 WITH FLOWABLE FILL CONCRETE. CONTRACTOR SHALL INSTALL INLET PROTECTION AND OTHER EROSION AND SEDIMENT CONTROL DEVICES ON PROPOSED DRAINAGE.

5. USE TA-33 TRAFFIC CONTROL BETWEEN STATION 586+92 TO 603+50 TO SAWCUT FOUR FEET OFF OF EXISTING CURB, INSTALL UNDERDRAIN, CONSTRUCT PROPOSED CURB AND SIDEWALK, AND CONSTRUCT PAVEMENT WITH FULL DEPTH PAVEMENT BOX.

STAGE 5: (STATION 539+50 TO STATION 605+50 OFFSET RIGHT)

1. UTILIZE TA-33 DURING OFF PEAK HOURS TO SET TEMPORARY PCC BARRIER ALONG WEST SIDE OF PROPOSED SOUTHBOUND SR1 FROM STATION 116+00 TO 128+00, AS INDICATED IN PLANS.

2. CONSTRUCT PROPOSED DRAINAGE FROM STATION 589+00 TO 592+75. REGRADE DITCHES AND ADJUST DRAINAGE INLETS FOR THIS PORTION OF WORK AS DIRECTED BY THE ENGINEER.

3. CONTRACTOR SHALL SUBMIT FOR APPROVAL THE MAINTENANCE OF TRAFFIC AND SEQUENCE OF CONSTRUCTION FOR THE CONSTRUCTION OF THE INTERSECTION AT PROPOSED CLAPHAM ROAD AND BOWERS BEACH ROAD.

4. WHILE PROPOSED CLAPHAM ROAD IS ONE LANE SOUTHBOUND, UTILIZE TA-33 TO CONSTRUCT EAST SIDE OF PROPOSED CLAPHAM ROAD BETWEEN STATION 540+00 TO 605+50 TO THE TOP OF TYPE B HOT-MIX. CONSTRUCT PCC MEDIAN FROM STATION 588+63 TO 593+85 AND REMOVE ALL ABANDONED PAVEMENT.

5. UTILIZE TA-3 ON BOWERS BEACH ROAD TO PLACE ALL PROPOSED CURB, MEDIAN, AND SIDEWALK UNDER THE BRIDGE.

6. UTILIZE TA-33 DURING OFF PEAK HOURS TO REMOVE TEMPORARY PCC BARRIER AND PLACE TEMPORARY STRIPING, WHERE NECESSARY.

STAGE 6: (STATION 537+50 TO STATION 617+00 & STATION 900+00 TO STATION 908+00)

1. PLACE CHANGEABLE MESSAGE SIGNS ON NORTHBOUND SR1, SOUTHBOUND SR1, SOUTHBOUND CLAPHAM ROAD, BARRATTS CHAPEL ROAD AND BOWERS BEACH ROAD TEN (10) CALENDAR DAYS IN ADVANCE OF CONSTRUCTION TO INFORM THE TRAVELING PUBLIC OF THE NEW TRAFFIC PATTERN.

2. UTILIZE TA-10 ON BOWERS BEACH ROAD IN ORDER TO MILL EXISTING PAVEMENT AND PAVE 2" TYPE C HOT-MIX OVERLAY TO FINAL GRADE FROM STATION 900+75 TO 902+75 AND FROM STATION 903+75 TO 908+00.

3. LAYOUT AND PLACE FINAL CONFIGURATION OF PERMANENT PAVEMENT MARKINGS ON BOWERS BEACH ROAD, WHERE NECESSARY.

4. SWITCH TRAFFIC SIGNAL HEADS TO FINAL PROPOSED TRAFFIC PATTERN CONFIGURATION AT THE INTERSECTION OF BOWERS BEACH ROAD AND LITTLE HEAVEN ROAD.

5. UTILIZE TA-10 ON PROPOSED CLAPHAM ROAD IN ORDER TO MILL EXISTING PAVEMENT AND PAVE 2" TYPE C HOT-MIX OVERLAY TO FINAL GRADE FROM STATION 537+50 TO 617+00.

6. LAYOUT AND PLACE FINAL CONFIGURATION OF PERMANENT PAVEMENT MARKINGS ON PROPOSED CLAPHAM ROAD.

7. SWITCH TRAFFIC SIGNAL HEADS TO FINAL PROPOSED TRAFFIC PATTERN CONFIGURATION AT THE INTERSECTION OF BOWERS BEACH ROAD AND PROPOSED CLAPHAM ROAD.

8. OPEN PROPOSED CLAPHAM ROAD TO A 2-DIRECTIONAL TRAFFIC PATTERN.

9. ALL DISTURBED AREAS SHALL BE GRADED TO DRAIN PROPERLY. THE CONTRACTOR SHALL PLACE TOPSOIL, PERMANENT SEEDING AND MULCH BLANKET ON ALL AREAS IN FINAL CONDITIONS OR DIRECTED BY THE ENGINEER.

10. THE CONTRACTOR SHALL COORDINATE THE PLACEMENT OF THE FINAL SIGNAGE WITH STATE FORCES, WHERE APPLICABLE. THE CONTRACTOR SHALL REMOVE ANY TEMPORARY SIGNAGE.

11. THE CONTRACTOR SHALL REMOVE ALL EROSION AND SEDIMENT CONTROL SYSTEMS STILL REMAINING IN THIS PHASE PER THE APPROVAL OF THE SEDIMENT CONTROL INSPECTOR.

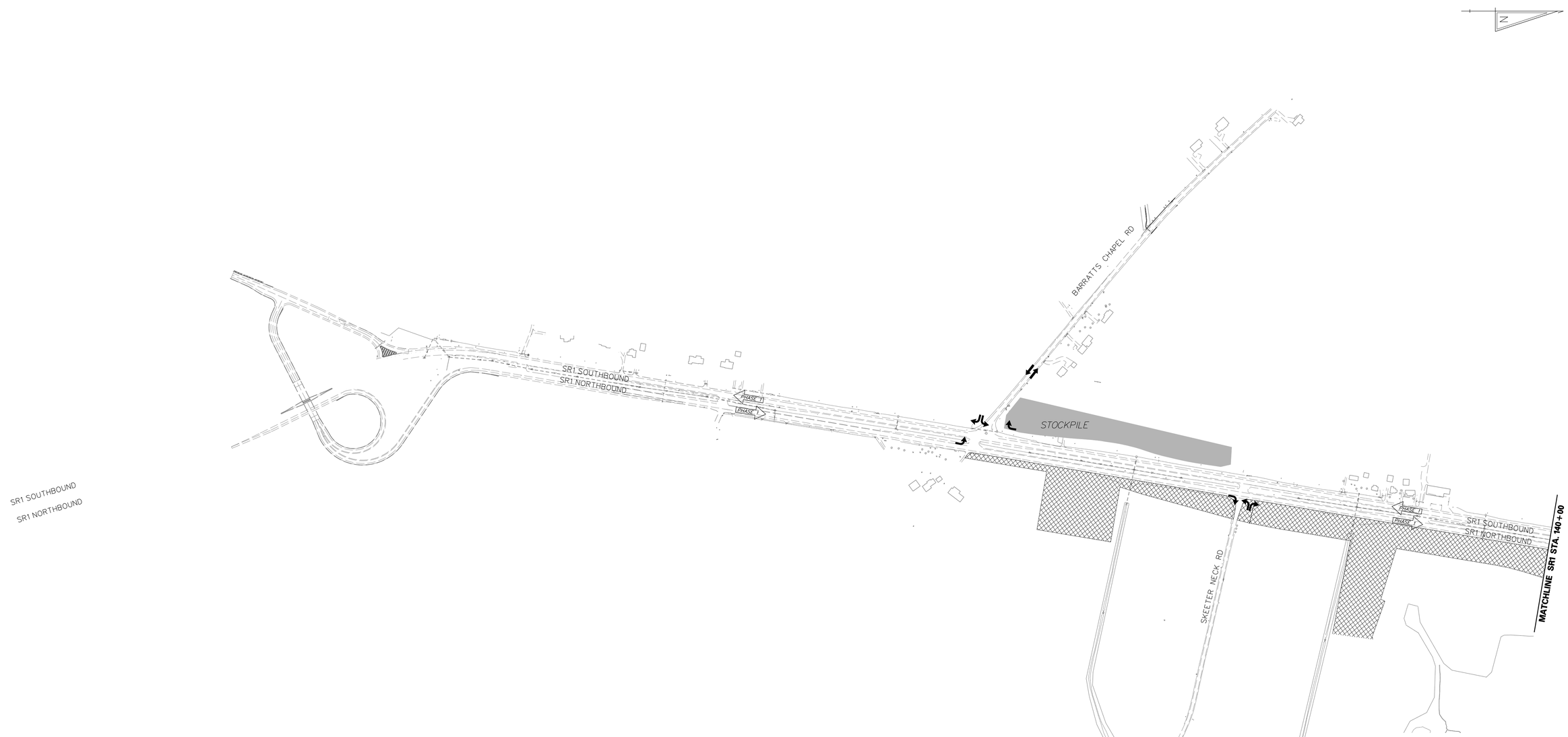

PHASE I: (STAGES 1–16)

CONSTRUCTION PHASING PLANS LEGEND

- WORK AREA
- WORK AREA (REMOVAL)
- WORK COMPLETED IN PREVIOUS PHASING
- TRAFFIC FLOW ARROW
- PHASE 2-WAY SR1 TRAFFIC FLOW ARROW

* SEE 60 SCALE PLANS FOR STAGING

EROSION AND SEDIMENT CONTROL PLANS LEGEND

* SEE 60 SCALE PLANS FOR STAGING

DELAWARE DEPARTMENT OF TRANSPORTATION

ADDENDUMS / REVISIONS

SCALE 0 300 600 900 FEET

SR1, LITTLE HEAVEN GRADE SEPARATED INTERSECTION

CONTRACT	BRIDGE NO.	-
T200412202	DESIGNED BY:	SFP
COUNTY	CHECKED BY:	WFC
KENT		

CONSTRUCTION PHASING, M.O.T. AND E&S CONTROL

SHEET NO.
286
TOTAL SHTS.
641

11/25/2014
GSP_Project\035I7.00 (deldot agmt 1223 dots open end)\035I7.16 sr1,little heaven final design\dgn files\cp0001h.dgn
4:55:51 PM

EXISTING SIGNAL CABINET AND OTHER TRAFFIC SIGNAL DEVICES SHALL NOT BE DISTURBED UNTIL PROPOSED SIGNAL DEVICES ARE INSTALLED AND OPERATIONAL.

CLAPHAM ROAD SHALL BE CLOSED TO THRU TRAFFIC IN THIS PHASE, STAGE 13. EXISTING SIGNAL SHALL BE COVERED AND RE-ACTIVATED WHEN CLAPHAM ROAD OPENS TO THRU TRAFFIC.

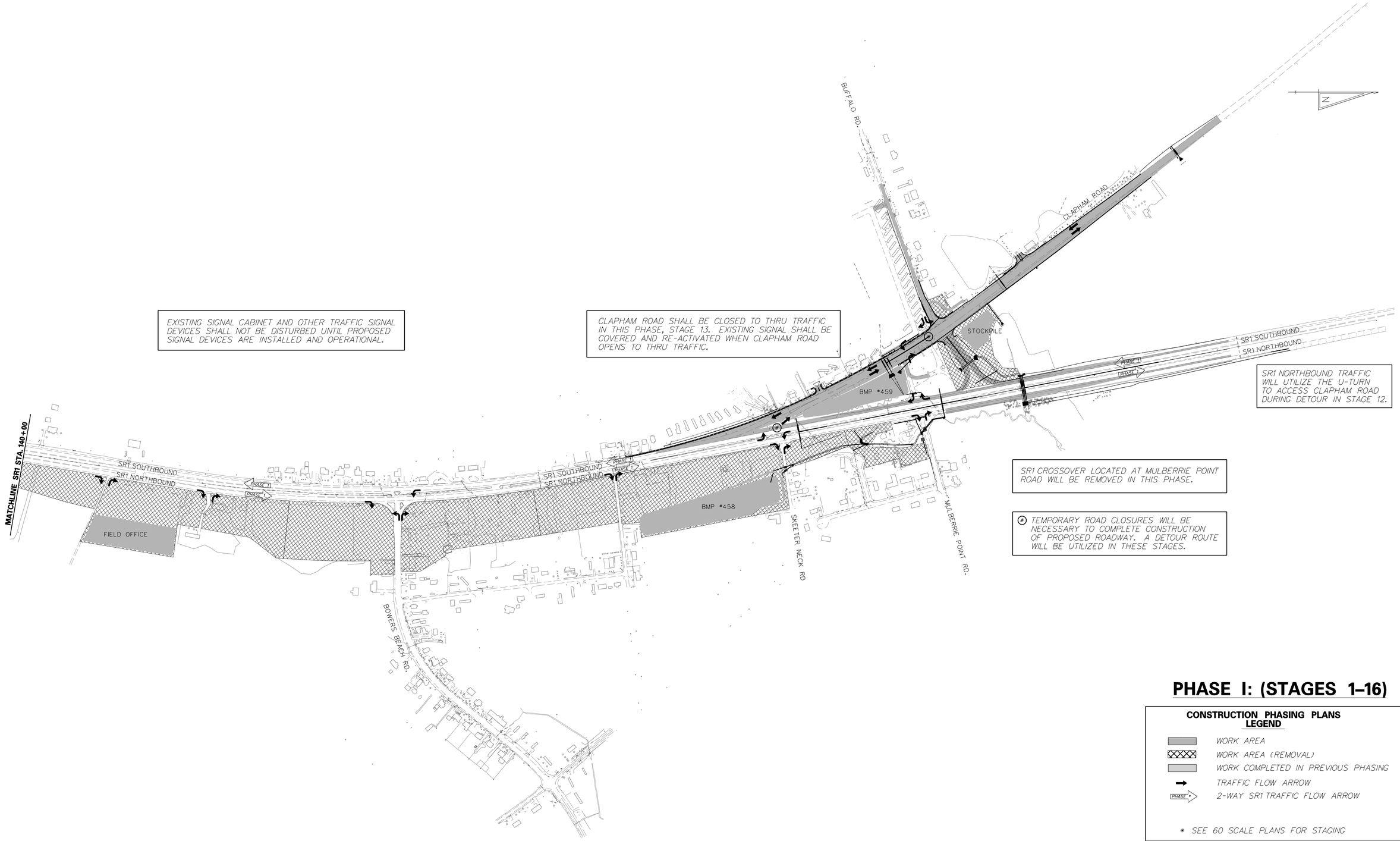

SR1 NORTHBOUND TRAFFIC WILL UTILIZE THE U-TURN TO ACCESS CLAPHAM ROAD DURING DETOUR IN STAGE 12.

SR1 CROSSOVER LOCATED AT MULBERRIE POINT ROAD WILL BE REMOVED IN THIS PHASE.

(*) TEMPORARY ROAD CLOSURES WILL BE NECESSARY TO COMPLETE CONSTRUCTION OF PROPOSED ROADWAY. A DETOUR ROUTE WILL BE UTILIZED IN THESE STAGES.

PHASE I: (STAGES 1–16)

CONSTRUCTION PHASING PLANS LEGEND

- WORK AREA
- WORK AREA (REMOVAL)
- WORK COMPLETED IN PREVIOUS PHASING
- TRAFFIC FLOW ARROW
- 2-WAY SR1 TRAFFIC FLOW ARROW

* SEE 60 SCALE PLANS FOR STAGING

EROSION AND SEDIMENT CONTROL PLANS LEGEND

* SEE 60 SCALE PLANS FOR STAGING

DELAWARE DEPARTMENT OF TRANSPORTATION	ADDENDUMS / REVISIONS	SCALE 0 300 600 900 FEET	SR1, LITTLE HEAVEN GRADE SEPARATED INTERSECTION	CONTRACT T200412202 / COUNTY KENT	BRIDGE NO. - / DESIGNED BY: SFP / CHECKED BY: WFC	CONSTRUCTION PHASING, M.O.T. AND E&S CONTROL	SHEET NO. 287 / TOTAL SHTS. 641

11/25/2014
G:\projects\035I7.00 (deldot agmt 1223 dots open end)\035I7.16 sr1, little heaven final design\dgn files\cp0002h.dgn
4:56:46 PM

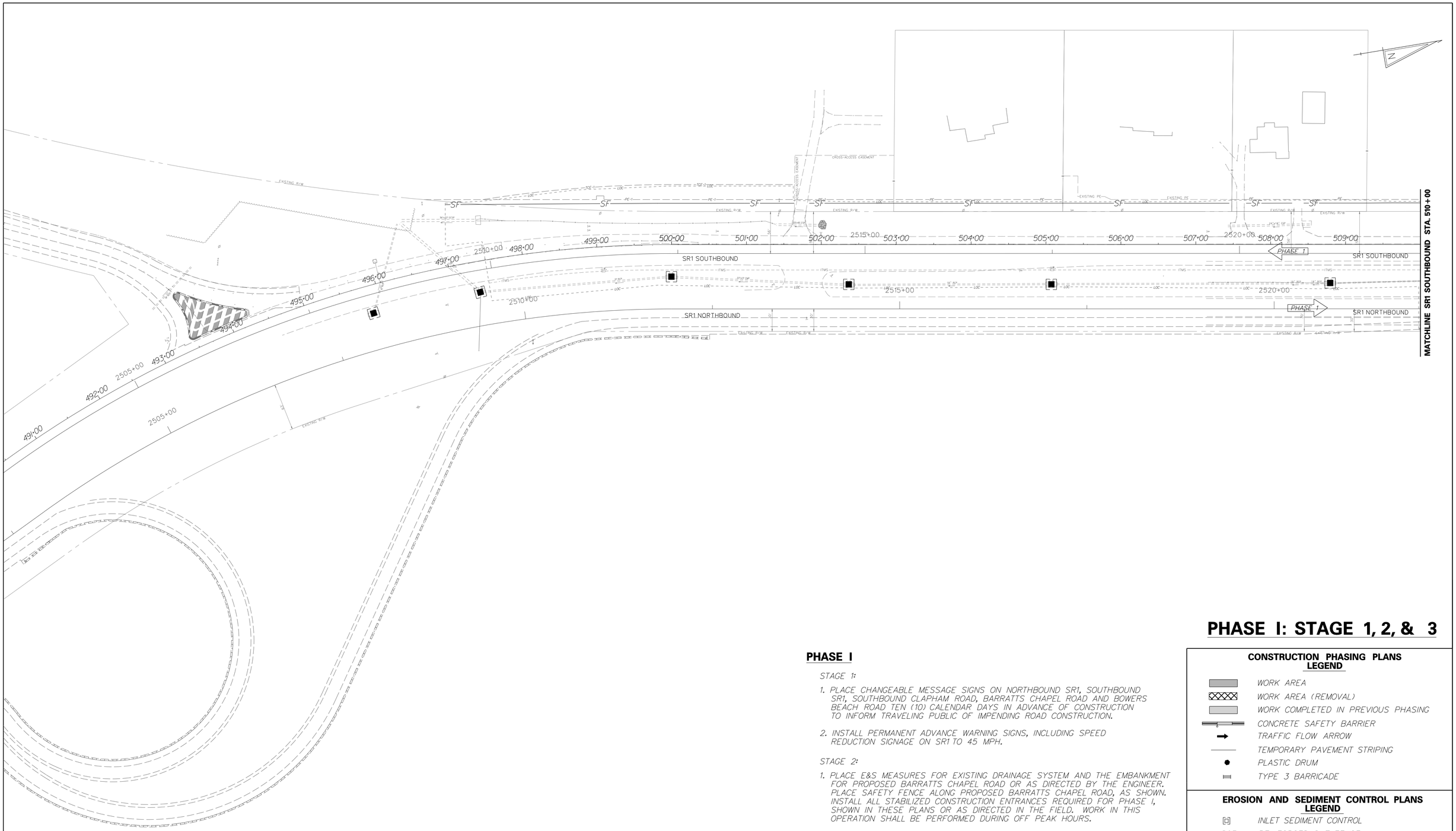

PHASE I: STAGE 1, 2, & 3

PHASE I

STAGE 1:

1. PLACE CHANGEABLE MESSAGE SIGNS ON NORTHBOUND SR1, SOUTHBOUND SR1, SOUTHBOUND CLAPHAM ROAD, BARRATTS CHAPEL ROAD AND BOWERS BEACH ROAD TEN (10) CALENDAR DAYS IN ADVANCE OF CONSTRUCTION TO INFORM TRAVELING PUBLIC OF IMPENDING ROAD CONSTRUCTION.

2. INSTALL PERMANENT ADVANCE WARNING SIGNS, INCLUDING SPEED REDUCTION SIGNAGE ON SR1 TO 45 MPH.

STAGE 2:

1. PLACE E&S MEASURES FOR EXISTING DRAINAGE SYSTEM AND THE EMBANKMENT FOR PROPOSED BARRATTS CHAPEL ROAD OR AS DIRECTED BY THE ENGINEER. PLACE SAFETY FENCE ALONG PROPOSED BARRATTS CHAPEL ROAD, AS SHOWN. INSTALL ALL STABILIZED CONSTRUCTION ENTRANCES REQUIRED FOR PHASE I, SHOWN IN THESE PLANS OR AS DIRECTED IN THE FIELD. WORK IN THIS OPERATION SHALL BE PERFORMED DURING OFF PEAK HOURS.

2. CLEAR ALL EXISTING VEGETATION AND DEBRIS WITHIN THE PROPOSED LIMITS OF CONSTRUCTION. DEMOLISH EXISTING BUILDINGS AS SHOW ON THE PLANS AND HAUL MATERIAL TO AN APPROVED OFFSITE FACILITY.

STAGE 3:

1. COMPLETE UTILITY RELOCATION OF KENT COUNTY SEWER, DELMARVA ELECTRIC AND VERIZON FACILITIES AS DESCRIBED ON THE PLANS AND UTILITY STATEMENT.

CONSTRUCTION PHASING PLANS LEGEND

- WORK AREA
- WORK AREA (REMOVAL)
- WORK COMPLETED IN PREVIOUS PHASING
- CONCRETE SAFETY BARRIER
- TRAFFIC FLOW ARROW
- TEMPORARY PAVEMENT STRIPING
- PLASTIC DRUM
- TYPE 3 BARRICADE

EROSION AND SEDIMENT CONTROL PLANS LEGEND

- INLET SEDIMENT CONTROL
- —RSF— REINFORCED SILT FENCE
- CHECK DAM
- STABILIZED CONSTRUCTION ENTRANCE
- SEDIMENT TRAP
- TSD TEMPORARY SLOPE DRAIN

DELAWARE DEPARTMENT OF TRANSPORTATION

ADDENDUMS / REVISIONS

SCALE 0 60 120 180 FEET

SR1, LITTLE HEAVEN GRADE SEPARATED INTERSECTION

CONTRACT	BRIDGE NO.	-
T200412202	DESIGNED BY:	SFP
COUNTY		
KENT	CHECKED BY:	WFC

CONSTRUCTION PHASING, M.O.T. AND E&S CONTROL

SHEET NO. 288

TOTAL SHTS. 641

1/5/2015
G:\PROJECTS\035I.00 (DELDOT AGMT 1223 DOTS Open End)\035I.16 SR1 LITTLE HEAVEN FINAL DESIGN\DGN Files\cp1020lh.dgn
4:46:31 PM

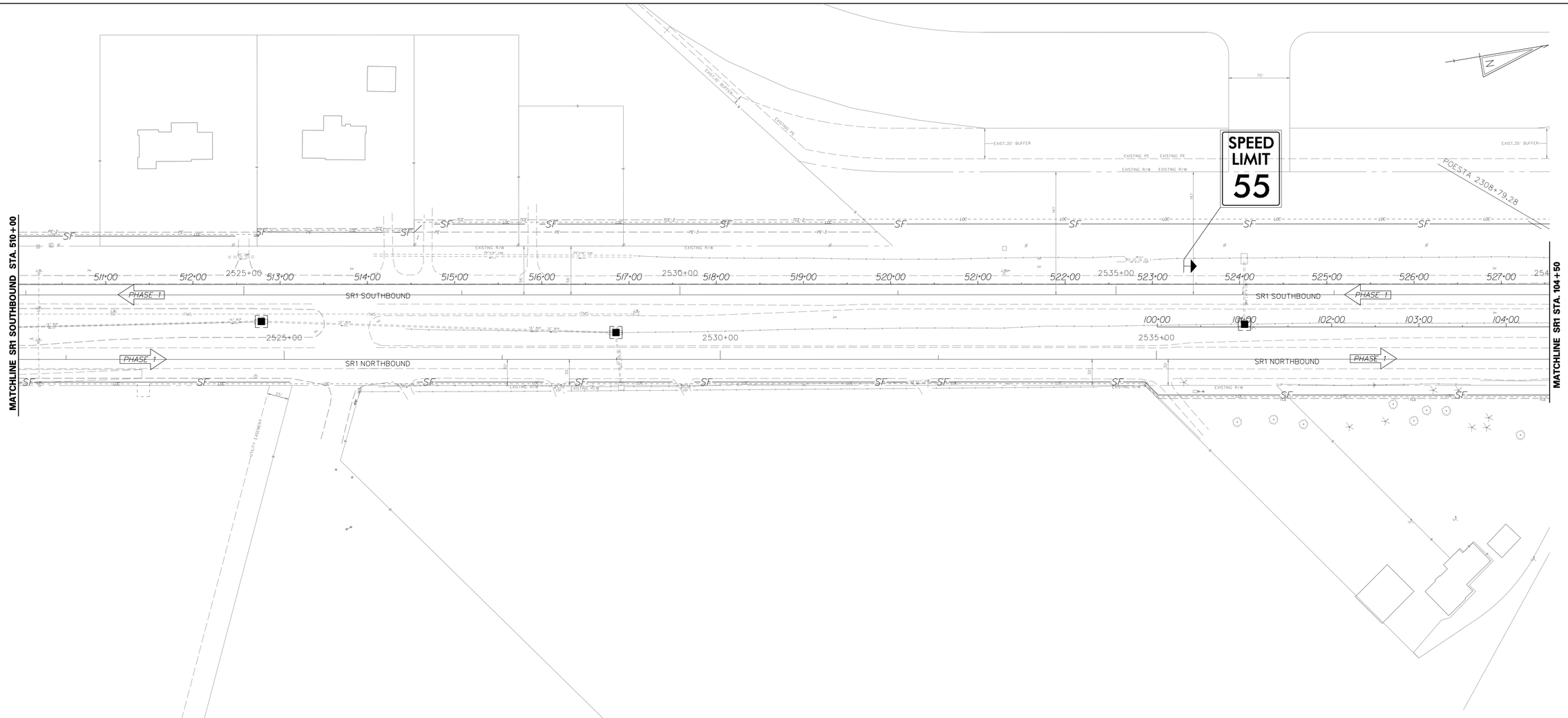

PHASE I: STAGE 1, 2, & 3

PHASE I

STAGE 1:

1. PLACE CHANGEABLE MESSAGE SIGNS ON NORTHBOUND SR1, SOUTHBOUND SR1, SOUTHBOUND CLAPHAM ROAD, BARRATTS CHAPEL ROAD AND BOWERS BEACH ROAD TEN (10) CALENDAR DAYS IN ADVANCE OF CONSTRUCTION TO INFORM TRAVELING PUBLIC OF IMPENDING ROAD CONSTRUCTION.

2. INSTALL PERMANENT ADVANCE WARNING SIGNS.

STAGE 2:

1. PLACE E&S MEASURES FOR EXISTING DRAINAGE SYSTEM AND THE EMBANKMENT FOR PROPOSED BARRATTS CHAPEL ROAD OR AS DIRECTED BY THE ENGINEER. PLACE SAFETY FENCE ALONG PROPOSED BARRATTS CHAPEL ROAD, AS SHOWN. INSTALL ALL STABILIZED CONSTRUCTION ENTRANCES REQUIRED FOR PHASE I, SHOWN IN THESE PLANS OR AS DIRECTED IN THE FIELD. WORK IN THIS OPERATION SHALL BE PERFORMED DURING OFF PEAK HOURS.

2. CLEAR ALL EXISTING VEGETATION AND DEBRIS WITHIN THE PROPOSED LIMITS OF CONSTRUCTION. DEMOLISH EXISTING BUILDINGS AS SHOW ON THE PLANS AND HAUL MATERIAL TO AN APPROVED OFFSITE FACILITY.

STAGE 3:

1. COMPLETE UTILITY RELOCATION OF KENT COUNTY SEWER, DELMARVA ELECTRIC AND VERIZON FACILITIES AS DESCRIBED ON THE PLANS AND UTILITY STATEMENT.

CONSTRUCTION PHASING PLANS LEGEND

- WORK AREA
- WORK AREA (REMOVAL)
- WORK COMPLETED IN PREVIOUS PHASING
- CONCRETE SAFETY BARRIER
- TRAFFIC FLOW ARROW
- TEMPORARY PAVEMENT STRIPING
- PLASTIC DRUM
- TYPE 3 BARRICADE

EROSION AND SEDIMENT CONTROL PLANS LEGEND

- INLET SEDIMENT CONTROL
- —RSF— REINFORCED SILT FENCE
- CHECK DAM
- SCE STABILIZED CONSTRUCTION ENTRANCE
- ST SEDIMENT TRAP
- TSD TEMPORARY SLOPE DRAIN

DELAWARE DEPARTMENT OF TRANSPORTATION	ADDENDUMS / REVISIONS	SCALE 0 30 60 90 FEET	SR1, LITTLE HEAVEN GRADE SEPARATED INTERSECTION	CONTRACT T200412202 / COUNTY KENT	BRIDGE NO. - / DESIGNED BY: SFP / CHECKED BY: WFC	CONSTRUCTION PHASING, M.O.T. AND E&S CONTROL	SHEET NO. 289 / TOTAL SHTS. 641

1/16/2015
8:30:52 AM
g:\projects\035\7.00 (deldot agmt 1223 dots open end)\035\7.16 sr1,little heaven finaldesign\dgn files\cpl0202hk.dgn

DRAINAGE PIPE SCHEDULE (TEMPORARY)						
NO.	SIZE / TYPE	CLASS	LENGTH	SLOPE	INV. EL.	DIS. EL.
T-01	14" X23"/RCEP	IV	40.00'	0.0053	30.03'	29.82'
T-02	36"/RCP	IV	16.00'	0.0102	XX.XX'	XX.XX'

CONSTRUCTION PHASING PLANS LEGEND

- WORK AREA
- WORK AREA (REMOVAL)
- WORK COMPLETED IN PREVIOUS PHASING
- CONCRETE SAFETY BARRIER
- TRAFFIC FLOW ARROW
- TEMPORARY PAVEMENT STRIPING
- PLASTIC DRUM
- TYPE 3 BARRICADE

EROSION AND SEDIMENT CONTROL PLANS LEGEND

- INLET SEDIMENT CONTROL
- —RSF— REINFORCED SILT FENCE
- CHECK DAM
- STABILIZED CONSTRUCTION ENTRANCE
- SEDIMENT TRAP
- TEMPORARY SLOPE DRAIN

PHASE I: STAGE 1, 2, & 3

NOTE: SEE ENVIRONMENTAL COMPLIANCE SHEETS FOR CONSTRUCTION SAFETY FENCE LIMITS.

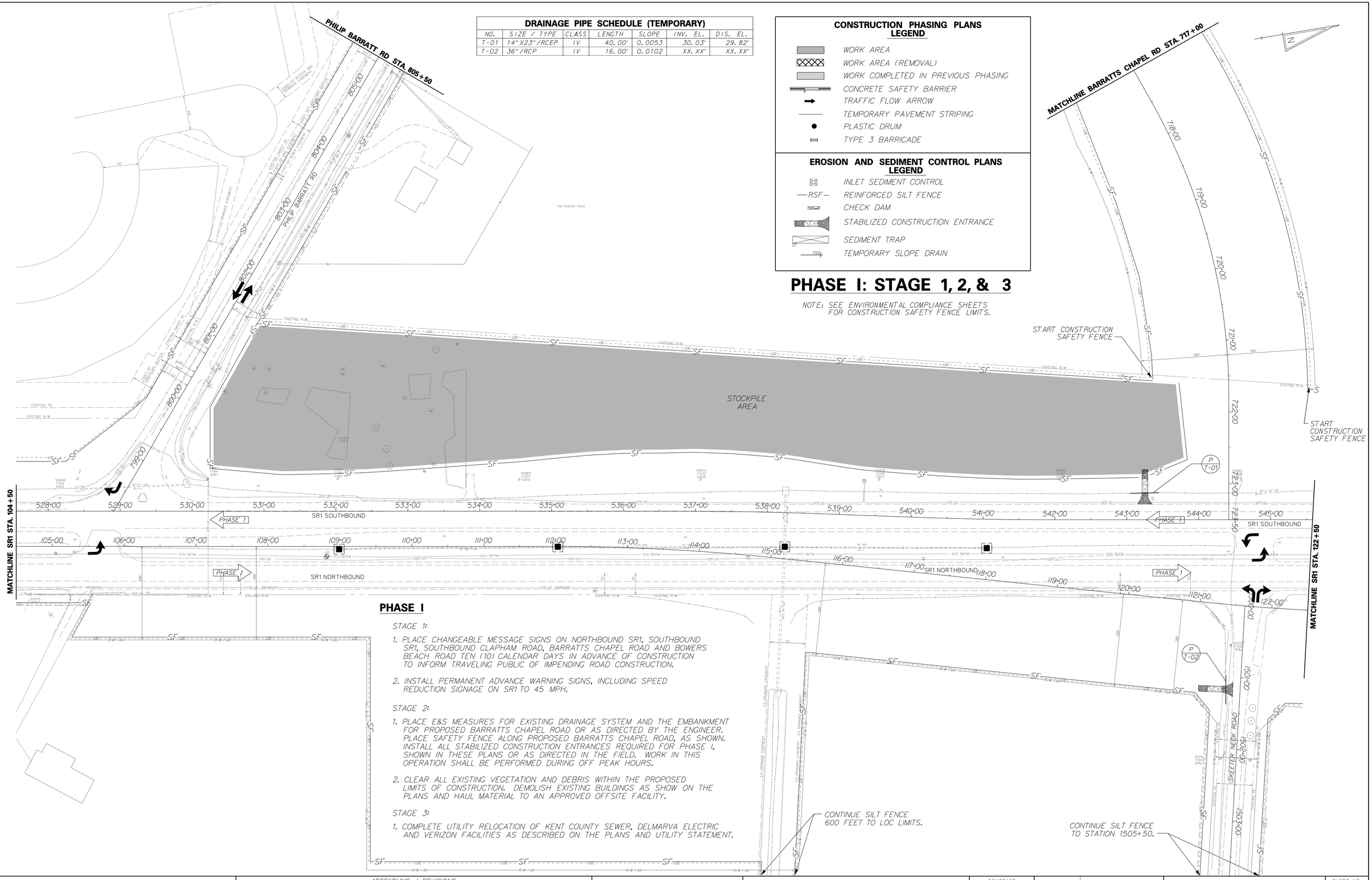

PHASE I

STAGE 1:

1. PLACE CHANGEABLE MESSAGE SIGNS ON NORTHBOUND SR1, SOUTHBOUND SR1, SOUTHBOUND CLAPHAM ROAD, BARRATTS CHAPEL ROAD AND BOWERS BEACH ROAD TEN (10) CALENDAR DAYS IN ADVANCE OF CONSTRUCTION TO INFORM TRAVELING PUBLIC OF IMPENDING ROAD CONSTRUCTION.
2. INSTALL PERMANENT ADVANCE WARNING SIGNS, INCLUDING SPEED REDUCTION SIGNAGE ON SR1 TO 45 MPH.

STAGE 2:

1. PLACE E&S MEASURES FOR EXISTING DRAINAGE SYSTEM AND THE EMBANKMENT FOR PROPOSED BARRATTS CHAPEL ROAD OR AS DIRECTED BY THE ENGINEER. PLACE SAFETY FENCE ALONG PROPOSED BARRATTS CHAPEL ROAD, AS SHOWN. INSTALL ALL STABILIZED CONSTRUCTION ENTRANCES REQUIRED FOR PHASE I, SHOWN IN THESE PLANS OR AS DIRECTED IN THE FIELD. WORK IN THIS OPERATION SHALL BE PERFORMED DURING OFF PEAK HOURS.
2. CLEAR ALL EXISTING VEGETATION AND DEBRIS WITHIN THE PROPOSED LIMITS OF CONSTRUCTION. DEMOLISH EXISTING BUILDINGS AS SHOW ON THE PLANS AND HAUL MATERIAL TO AN APPROVED OFFSITE FACILITY.

STAGE 3:

1. COMPLETE UTILITY RELOCATION OF KENT COUNTY SEWER, DELMARVA ELECTRIC AND VERIZON FACILITIES AS DESCRIBED ON THE PLANS AND UTILITY STATEMENT.

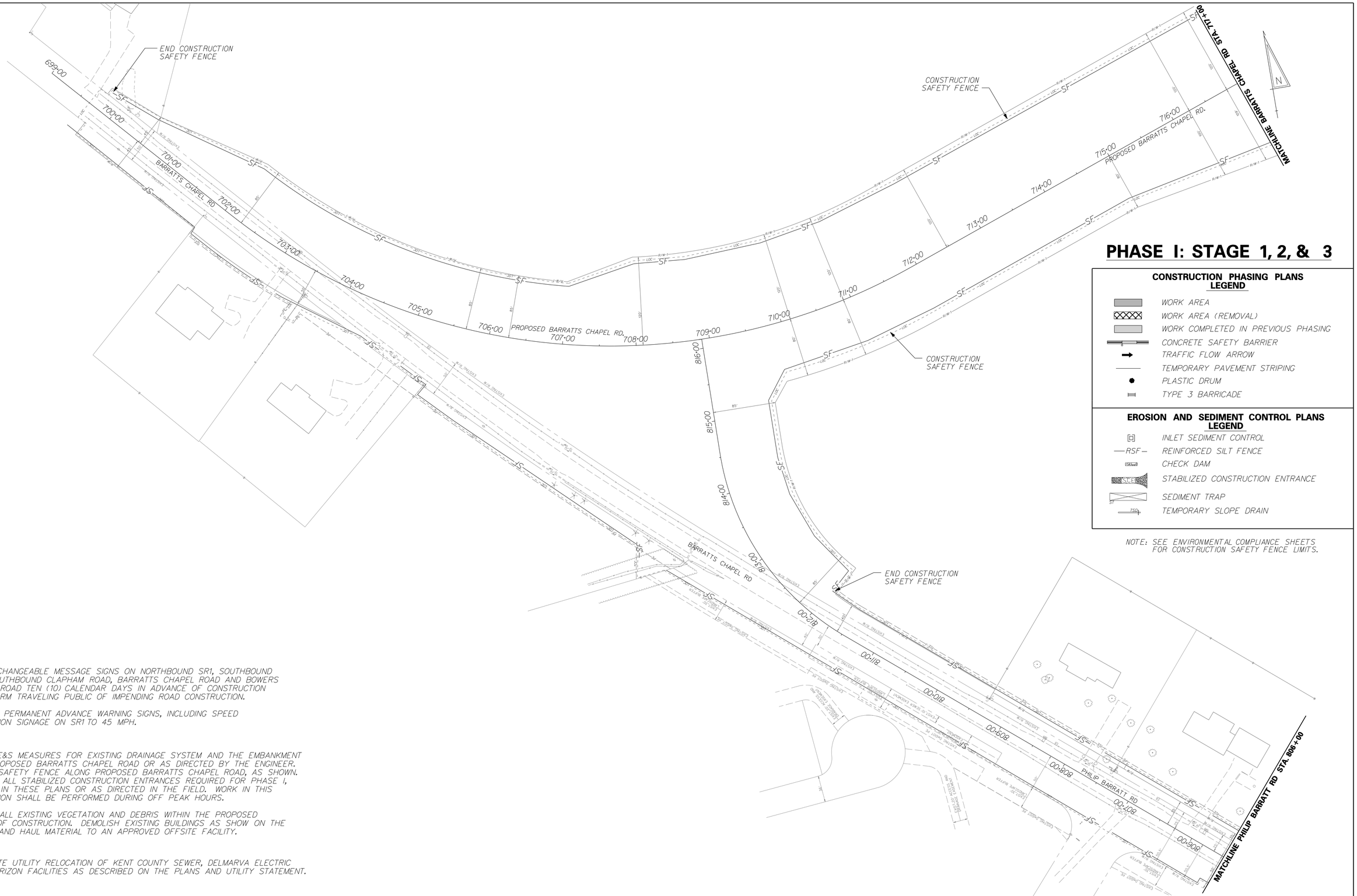

PHASE I: STAGE 1, 2, & 3

CONSTRUCTION PHASING PLANS LEGEND

- WORK AREA
- WORK AREA (REMOVAL)
- WORK COMPLETED IN PREVIOUS PHASING
- CONCRETE SAFETY BARRIER
- TRAFFIC FLOW ARROW
- TEMPORARY PAVEMENT STRIPING
- PLASTIC DRUM
- TYPE 3 BARRICADE

EROSION AND SEDIMENT CONTROL PLANS LEGEND

- INLET SEDIMENT CONTROL
- —RSF— REINFORCED SILT FENCE
- CHECK DAM
- SCE STABILIZED CONSTRUCTION ENTRANCE
- ST SEDIMENT TRAP
- TSD TEMPORARY SLOPE DRAIN

NOTE: SEE ENVIRONMENTAL COMPLIANCE SHEETS FOR CONSTRUCTION SAFETY FENCE LIMITS.

PHASE I

STAGE 1:

1. PLACE CHANGEABLE MESSAGE SIGNS ON NORTHBOUND SR1, SOUTHBOUND SR1, SOUTHBOUND CLAPHAM ROAD, BARRATTS CHAPEL ROAD AND BOWERS BEACH ROAD TEN (10) CALENDAR DAYS IN ADVANCE OF CONSTRUCTION TO INFORM TRAVELING PUBLIC OF IMPENDING ROAD CONSTRUCTION.
2. INSTALL PERMANENT ADVANCE WARNING SIGNS, INCLUDING SPEED REDUCTION SIGNAGE ON SR1 TO 45 MPH.

STAGE 2:

1. PLACE E&S MEASURES FOR EXISTING DRAINAGE SYSTEM AND THE EMBANKMENT FOR PROPOSED BARRATTS CHAPEL ROAD OR AS DIRECTED BY THE ENGINEER. PLACE SAFETY FENCE ALONG PROPOSED BARRATTS CHAPEL ROAD, AS SHOWN. INSTALL ALL STABILIZED CONSTRUCTION ENTRANCES REQUIRED FOR PHASE I, SHOWN IN THESE PLANS OR AS DIRECTED IN THE FIELD. WORK IN THIS OPERATION SHALL BE PERFORMED DURING OFF PEAK HOURS.
2. CLEAR ALL EXISTING VEGETATION AND DEBRIS WITHIN THE PROPOSED LIMITS OF CONSTRUCTION. DEMOLISH EXISTING BUILDINGS AS SHOW ON THE PLANS AND HAUL MATERIAL TO AN APPROVED OFFSITE FACILITY.

STAGE 3:

1. COMPLETE UTILITY RELOCATION OF KENT COUNTY SEWER, DELMARVA ELECTRIC AND VERIZON FACILITIES AS DESCRIBED ON THE PLANS AND UTILITY STATEMENT.

1/5/2015 G:\PROJECTS\03517.00 (DELDOT AGMT 1223 DOTS Open End)\03517.16 SR1, LITTLE HEAVEN FINAL DESIGN\DGN Files\cp10204h.dgn 12:34:04 PM

DELAWARE DEPARTMENT OF TRANSPORTATION	ADDENDUMS / REVISIONS	SCALE 0 30 60 90 FEET	SR1, LITTLE HEAVEN GRADE SEPARATED INTERSECTION	CONTRACT T200412202	BRIDGE NO. –	CONSTRUCTION PHASING, M.O.T. AND E&S CONTROL	SHEET NO. 291
				COUNTY KENT	DESIGNED BY: SFP		TOTAL SHTS. 641
					CHECKED BY: WFC		

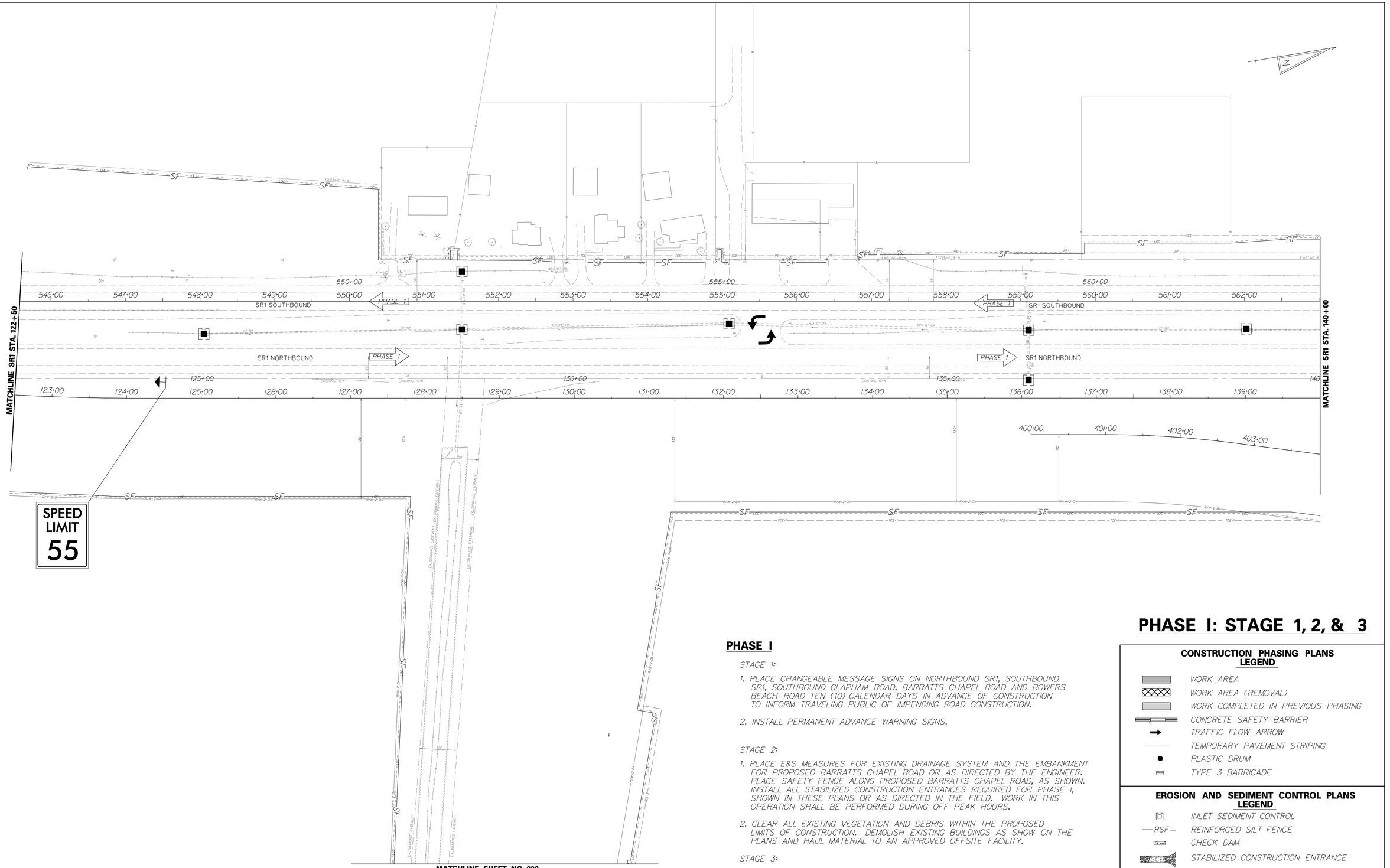

PHASE I

STAGE 1:

1. PLACE CHANGEABLE MESSAGE SIGNS ON NORTHBOUND SR1, SOUTHBOUND SR1, SOUTHBOUND CLAPHAM ROAD, BARRATTS CHAPEL ROAD AND BOWERS BEACH ROAD TEN (10) CALENDAR DAYS IN ADVANCE OF CONSTRUCTION TO INFORM TRAVELING PUBLIC OF IMPENDING ROAD CONSTRUCTION.

2. INSTALL PERMANENT ADVANCE WARNING SIGNS.

STAGE 2:

1. PLACE E&S MEASURES FOR EXISTING DRAINAGE SYSTEM AND THE EMBANKMENT FOR PROPOSED BARRATTS CHAPEL ROAD OR AS DIRECTED BY THE ENGINEER. PLACE SAFETY FENCE ALONG PROPOSED BARRATTS CHAPEL ROAD, AS SHOWN. INSTALL ALL STABILIZED CONSTRUCTION ENTRANCES REQUIRED FOR PHASE I, SHOWN IN THESE PLANS OR AS DIRECTED IN THE FIELD. WORK IN THIS OPERATION SHALL BE PERFORMED DURING OFF PEAK HOURS.

2. CLEAR ALL EXISTING VEGETATION AND DEBRIS WITHIN THE PROPOSED LIMITS OF CONSTRUCTION. DEMOLISH EXISTING BUILDINGS AS SHOW ON THE PLANS AND HAUL MATERIAL TO AN APPROVED OFFSITE FACILITY.

STAGE 3:

1. COMPLETE UTILITY RELOCATION OF KENT COUNTY SEWER, DELMARVA ELECTRIC AND VERIZON FACILITIES AS DESCRIBED ON THE PLANS AND UTILITY STATEMENT.

PHASE I: STAGE 1, 2, & 3

CONSTRUCTION PHASING PLANS LEGEND

- WORK AREA
- WORK AREA (REMOVAL)
- WORK COMPLETED IN PREVIOUS PHASING
- CONCRETE SAFETY BARRIER
- TRAFFIC FLOW ARROW
- TEMPORARY PAVEMENT STRIPING
- PLASTIC DRUM
- TYPE 3 BARRICADE

EROSION AND SEDIMENT CONTROL PLANS LEGEND

- INLET SEDIMENT CONTROL
- —RSF— REINFORCED SILT FENCE
- CHECK DAM
- STABILIZED CONSTRUCTION ENTRANCE
- SEDIMENT TRAP
- TSD TEMPORARY SLOPE DRAIN

DELAWARE DEPARTMENT OF TRANSPORTATION	ADDENDUMS / REVISIONS	SCALE 0 30 60 90 FEET	SR1, LITTLE HEAVEN GRADE SEPARATED INTERSECTION	CONTRACT T200412202 / COUNTY KENT	BRIDGE NO. - / DESIGNED BY: SFP / CHECKED BY: WFC	CONSTRUCTION PHASING, M.O.T. AND E&S CONTROL	SHEET NO. 292 / TOTAL SHTS. 641

1/16/2015 9:09:50 AM
g:\pc\projects\03517.00 (geldot agmt 123 dots open end)\03517.16 sr1 little heaven final design\dgn files\cp10205fh.dgn

PHASE I

STAGE 1:

1. PLACE CHANGEABLE MESSAGE SIGNS ON NORTHBOUND SR1, SOUTHBOUND SR1, SOUTHBOUND CLAPHAM ROAD, BARRATTS CHAPEL ROAD AND BOWERS BEACH ROAD TEN (10) CALENDAR DAYS IN ADVANCE OF CONSTRUCTION TO INFORM TRAVELING PUBLIC OF IMPENDING ROAD CONSTRUCTION.

2. INSTALL PERMANENT ADVANCE WARNING SIGNS, INCLUDING SPEED REDUCTION SIGNAGE ON SR1 TO 45 MPH.

STAGE 2:

1. PLACE E&S MEASURES FOR EXISTING DRAINAGE SYSTEM AND THE EMBANKMENT FOR PROPOSED BARRATTS CHAPEL ROAD OR AS DIRECTED BY THE ENGINEER. PLACE SAFETY FENCE ALONG PROPOSED BARRATTS CHAPEL ROAD, AS SHOWN. INSTALL ALL STABILIZED CONSTRUCTION ENTRANCES REQUIRED FOR PHASE I, SHOWN IN THESE PLANS OR AS DIRECTED IN THE FIELD. WORK IN THIS OPERATION SHALL BE PERFORMED DURING OFF PEAK HOURS.

2. CLEAR ALL EXISTING VEGETATION AND DEBRIS WITHIN THE PROPOSED LIMITS OF CONSTRUCTION. DEMOLISH EXISTING BUILDINGS AS SHOW ON THE PLANS AND HAUL MATERIAL TO AN APPROVED OFFSITE FACILITY.

STAGE 3:

1. COMPLETE UTILITY RELOCATION OF KENT COUNTY SEWER, DELMARVA ELECTRIC AND VERIZON FACILITIES AS DESCRIBED ON THE PLANS AND UTILITY STATEMENT.

PHASE I: STAGE 1, 2, & 3

CONSTRUCTION PHASING PLANS LEGEND

- WORK AREA
- WORK AREA (REMOVAL)
- WORK COMPLETED IN PREVIOUS PHASING
- CONCRETE SAFETY BARRIER
- TRAFFIC FLOW ARROW
- TEMPORARY PAVEMENT STRIPING
- PLASTIC DRUM
- TYPE 3 BARRICADE

EROSION AND SEDIMENT CONTROL PLANS LEGEND

- INLET SEDIMENT CONTROL
- —RSF— REINFORCED SILT FENCE
- CHECK DAM
- SCE STABILIZED CONSTRUCTION ENTRANCE
- SEDIMENT TRAP
- TSD TEMPORARY SLOPE DRAIN

DELAWARE DEPARTMENT OF TRANSPORTATION	ADDENDUMS / REVISIONS	SCALE 0 30 60 90 FEET	SR1, LITTLE HEAVEN GRADE SEPARATED INTERSECTION	CONTRACT T200412202 / COUNTY KENT	BRIDGE NO. - / DESIGNED BY: SEP / CHECKED BY: WEC	CONSTRUCTION PHASING, M.O.T. AND E&S CONTROL	SHEET NO. 293 / TOTAL SHTS. 641

1/5/2015
G:\PROJECTS\03517.00 (DELDOT AGMT 1223 DOTS Open End)\03517.16 SR1 LITTLE HEAVEN FINAL DESIGN\DGN Files\cpl0205alh.dgn
12:34:26 PM

PHASE I

STAGE 1:

1. PLACE CHANGEABLE MESSAGE SIGNS ON NORTHBOUND SR1, SOUTHBOUND SR1, SOUTHBOUND CLAPHAM ROAD, BARRATTS CHAPEL ROAD AND BOWERS BEACH ROAD TEN (10) CALENDAR DAYS IN ADVANCE OF CONSTRUCTION TO INFORM TRAVELING PUBLIC OF IMPENDING ROAD CONSTRUCTION.
2. INSTALL PERMANENT ADVANCE WARNING SIGNS, INCLUDING SPEED REDUCTION SIGNAGE ON SR1 TO 45 MPH.

STAGE 2:

1. PLACE E&S MEASURES FOR EXISTING DRAINAGE SYSTEM AND THE EMBANKMENT FOR PROPOSED BARRATTS CHAPEL ROAD OR AS DIRECTED BY THE ENGINEER. PLACE SAFETY FENCE ALONG PROPOSED BARRATTS CHAPEL ROAD, AS SHOWN. INSTALL ALL STABILIZED CONSTRUCTION ENTRANCES REQUIRED FOR PHASE I, SHOWN IN THESE PLANS OR AS DIRECTED IN THE FIELD. WORK IN THIS OPERATION SHALL BE PERFORMED DURING OFF PEAK HOURS.
2. CLEAR ALL EXISTING VEGETATION AND DEBRIS WITHIN THE PROPOSED LIMITS OF CONSTRUCTION. DEMOLISH EXISTING BUILDINGS AS SHOW ON THE PLANS AND HAUL MATERIAL TO AN APPROVED OFFSITE FACILITY.

STAGE 3:

1. COMPLETE UTILITY RELOCATION OF KENT COUNTY SEWER, DELMARVA ELECTRIC AND VERIZON FACILITIES AS DESCRIBED ON THE PLANS AND UTILITY STATEMENT.

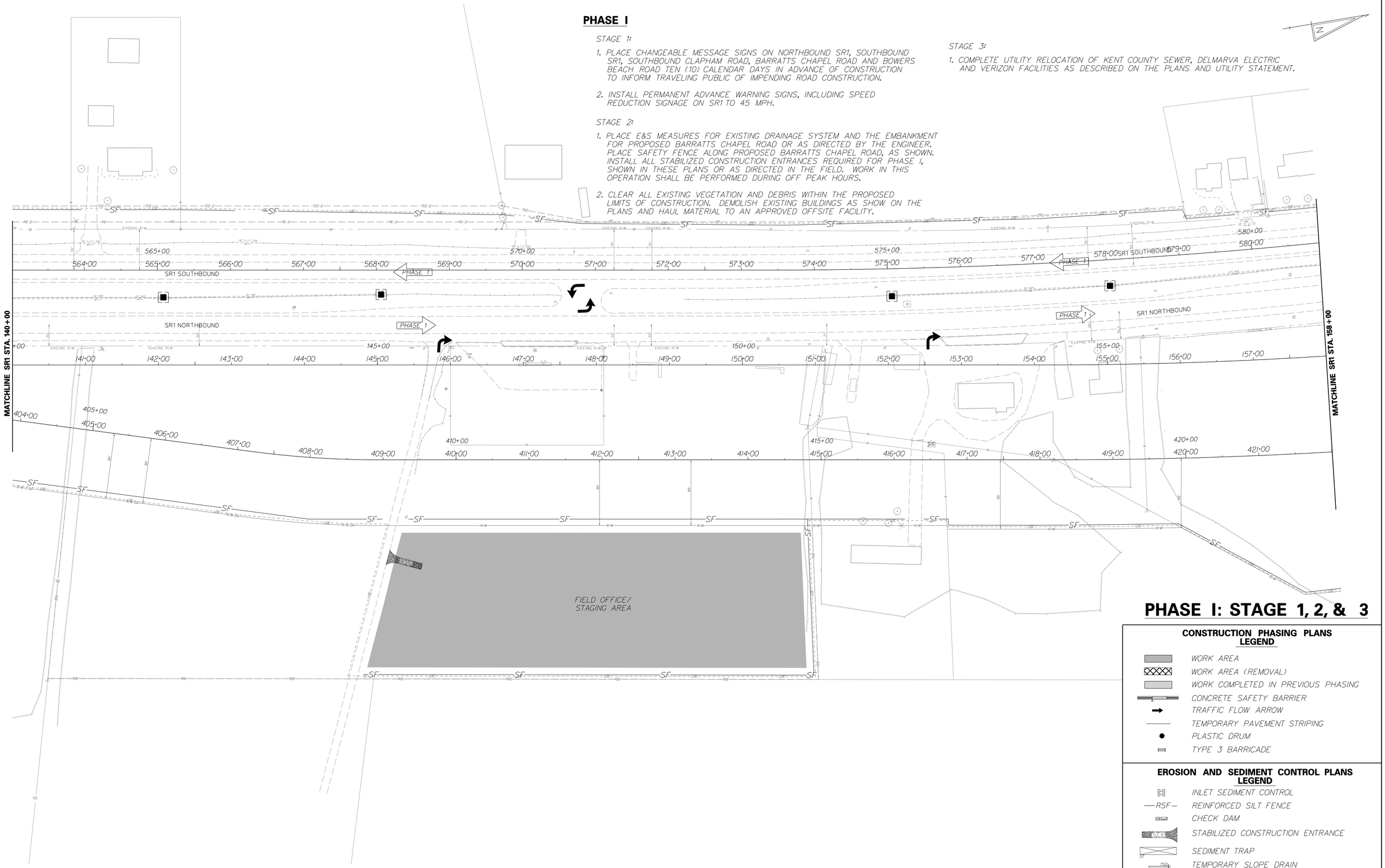

PHASE I: STAGE 1, 2, & 3

CONSTRUCTION PHASING PLANS LEGEND

- WORK AREA
- WORK AREA (REMOVAL)
- WORK COMPLETED IN PREVIOUS PHASING
- CONCRETE SAFETY BARRIER
- TRAFFIC FLOW ARROW
- TEMPORARY PAVEMENT STRIPING
- PLASTIC DRUM
- TYPE 3 BARRICADE

EROSION AND SEDIMENT CONTROL PLANS LEGEND

- INLET SEDIMENT CONTROL
- —RSF— REINFORCED SILT FENCE
- CHECK DAM
- STABILIZED CONSTRUCTION ENTRANCE
- SEDIMENT TRAP
- TEMPORARY SLOPE DRAIN

DELAWARE DEPARTMENT OF TRANSPORTATION	ADDENDUMS / REVISIONS	SCALE 0 30 60 90 FEET	SR1, LITTLE HEAVEN GRADE SEPARATED INTERSECTION	CONTRACT T200412202 / COUNTY KENT	BRIDGE NO. - / DESIGNED BY: SFP / CHECKED BY: WFC	CONSTRUCTION PHASING, M.O.T. AND E&S CONTROL	SHEET NO. 294 / TOTAL SHTS. 641

1/5/2015
G:\PROJECTS\035T.00 (DELDOT AGMT 1223 DOTS Open End)\035T.16 SR1 LITTLE HEAVEN FINAL DESIGN\DGN Files\cpl0206in.dgn
12:26:29 PM

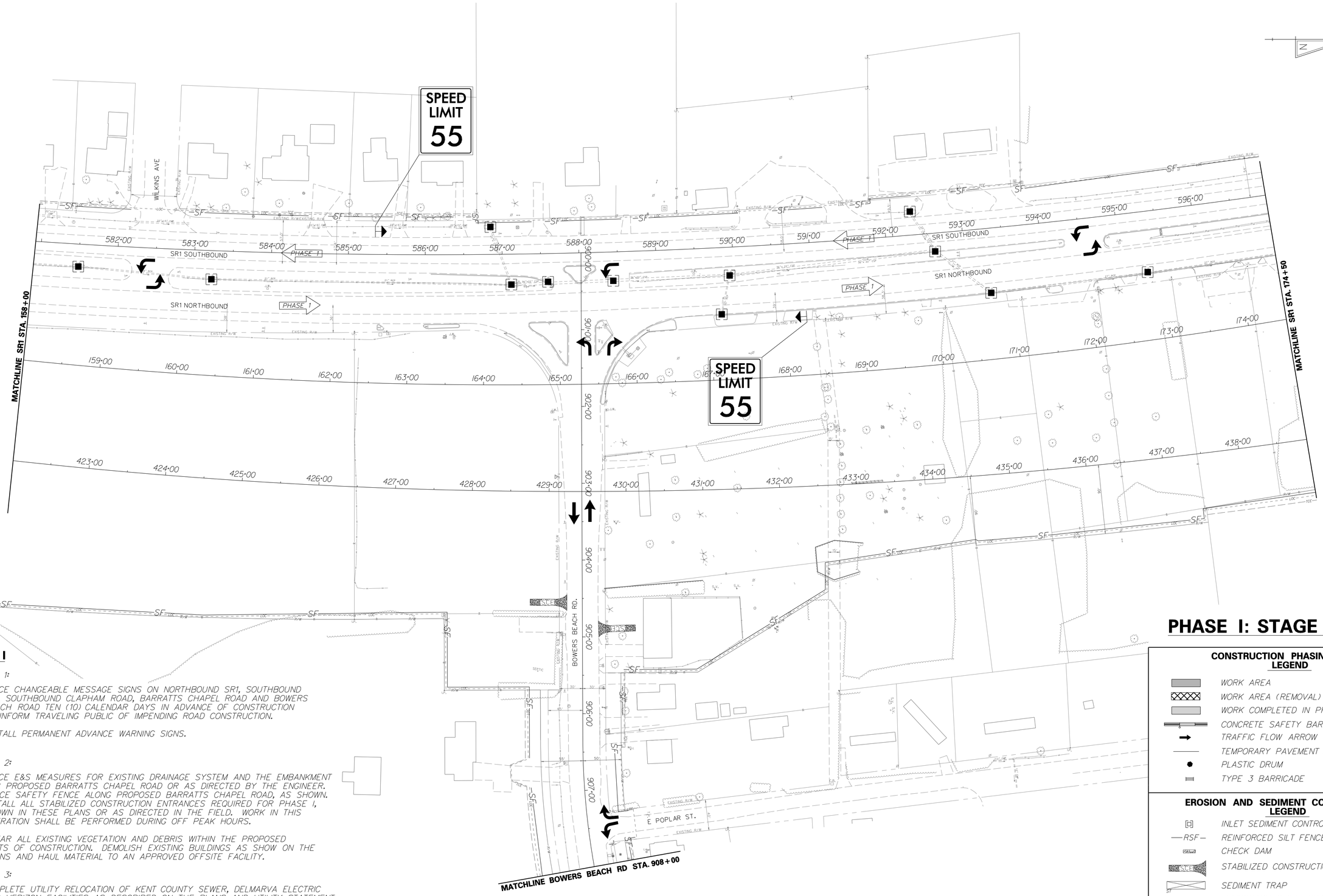

PHASE I: STAGE 1, 2, & 3

PHASE I

STAGE 1:

1. PLACE CHANGEABLE MESSAGE SIGNS ON NORTHBOUND SR1, SOUTHBOUND SR1, SOUTHBOUND CLAPHAM ROAD, BARRATTS CHAPEL ROAD AND BOWERS BEACH ROAD TEN (10) CALENDAR DAYS IN ADVANCE OF CONSTRUCTION TO INFORM TRAVELING PUBLIC OF IMPENDING ROAD CONSTRUCTION.

2. INSTALL PERMANENT ADVANCE WARNING SIGNS.

STAGE 2:

1. PLACE E&S MEASURES FOR EXISTING DRAINAGE SYSTEM AND THE EMBANKMENT FOR PROPOSED BARRATTS CHAPEL ROAD OR AS DIRECTED BY THE ENGINEER. PLACE SAFETY FENCE ALONG PROPOSED BARRATTS CHAPEL ROAD, AS SHOWN. INSTALL ALL STABILIZED CONSTRUCTION ENTRANCES REQUIRED FOR PHASE I, SHOWN IN THESE PLANS OR AS DIRECTED IN THE FIELD. WORK IN THIS OPERATION SHALL BE PERFORMED DURING OFF PEAK HOURS.

2. CLEAR ALL EXISTING VEGETATION AND DEBRIS WITHIN THE PROPOSED LIMITS OF CONSTRUCTION. DEMOLISH EXISTING BUILDINGS AS SHOW ON THE PLANS AND HAUL MATERIAL TO AN APPROVED OFFSITE FACILITY.

STAGE 3:

1. COMPLETE UTILITY RELOCATION OF KENT COUNTY SEWER, DELMARVA ELECTRIC AND VERIZON FACILITIES AS DESCRIBED ON THE PLANS AND UTILITY STATEMENT.

CONSTRUCTION PHASING PLANS LEGEND

- WORK AREA
- WORK AREA (REMOVAL)
- WORK COMPLETED IN PREVIOUS PHASING
- CONCRETE SAFETY BARRIER
- TRAFFIC FLOW ARROW
- TEMPORARY PAVEMENT STRIPING
- PLASTIC DRUM
- TYPE 3 BARRICADE

EROSION AND SEDIMENT CONTROL PLANS LEGEND

- INLET SEDIMENT CONTROL
- —RSF— REINFORCED SILT FENCE
- CHECK DAM
- SCE STABILIZED CONSTRUCTION ENTRANCE
- ST SEDIMENT TRAP
- TSD TEMPORARY SLOPE DRAIN

DELAWARE DEPARTMENT OF TRANSPORTATION	ADDENDUMS / REVISIONS	SCALE 0 30 60 90 FEET	SR1, LITTLE HEAVEN GRADE SEPARATED INTERSECTION	CONTRACT T200412202 / COUNTY KENT	BRIDGE NO. - / DESIGNED BY: SFP / CHECKED BY: WFC	CONSTRUCTION PHASING, M.O.T. AND E&S CONTROL	SHEET NO. 295 / TOTAL SHTS. 641

1/6/2015
G:\Projects\035I7.00 (deldot agmt 1223 dots open end)\035I7.16 sr1,little heaven final design\dgn files\cp10207h.dgn
8:00:13 AM

PHASE I

STAGE 1:

1. PLACE CHANGEABLE MESSAGE SIGNS ON NORTHBOUND SR1, SOUTHBOUND SR1, SOUTHBOUND CLAPHAM ROAD, BARRATTS CHAPEL ROAD AND BOWERS BEACH ROAD TEN (10) CALENDAR DAYS IN ADVANCE OF CONSTRUCTION TO INFORM TRAVELING PUBLIC OF IMPENDING ROAD CONSTRUCTION.

2. INSTALL PERMANENT ADVANCE WARNING SIGNS, INCLUDING SPEED REDUCTION SIGNAGE ON SR1 TO 45 MPH.

STAGE 2:

1. PLACE E&S MEASURES FOR EXISTING DRAINAGE SYSTEM AND THE EMBANKMENT FOR PROPOSED BARRATTS CHAPEL ROAD OR AS DIRECTED BY THE ENGINEER. PLACE SAFETY FENCE ALONG PROPOSED BARRATTS CHAPEL ROAD, AS SHOWN. INSTALL ALL STABILIZED CONSTRUCTION ENTRANCES REQUIRED FOR PHASE I, SHOWN IN THESE PLANS OR AS DIRECTED IN THE FIELD. WORK IN THIS OPERATION SHALL BE PERFORMED DURING OFF PEAK HOURS.

2. CLEAR ALL EXISTING VEGETATION AND DEBRIS WITHIN THE PROPOSED LIMITS OF CONSTRUCTION. DEMOLISH EXISTING BUILDINGS AS SHOW ON THE PLANS AND HAUL MATERIAL TO AN APPROVED OFFSITE FACILITY.

STAGE 3:

1. COMPLETE UTILITY RELOCATION OF KENT COUNTY SEWER, DELMARVA ELECTRIC AND VERIZON FACILITIES AS DESCRIBED ON THE PLANS AND UTILITY STATEMENT.

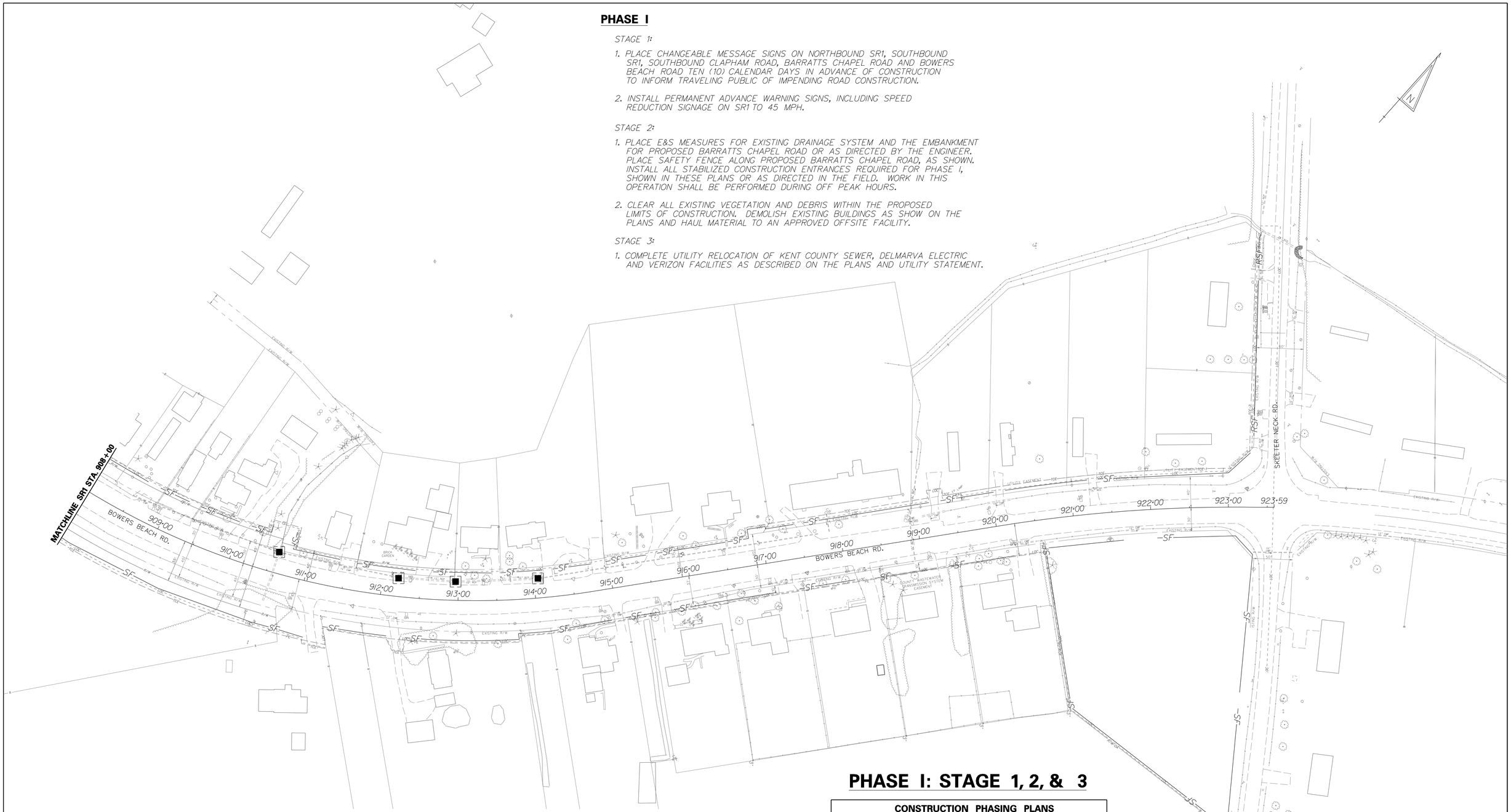

PHASE I: STAGE 1, 2, & 3

EROSION AND SEDIMENT CONTROL PLANS LEGEND

- INLET SEDIMENT CONTROL
- —RSF— REINFORCED SILT FENCE
- CHECK DAM
- SCE STABILIZED CONSTRUCTION ENTRANCE
- SEDIMENT TRAP
- TSD TEMPORARY SLOPE DRAIN

CONSTRUCTION PHASING PLANS LEGEND

- WORK AREA
- WORK AREA (REMOVAL)
- WORK COMPLETED IN PREVIOUS PHASING
- CONCRETE SAFETY BARRIER
- TRAFFIC FLOW ARROW
- TEMPORARY PAVEMENT STRIPING
- PLASTIC DRUM
- TYPE 3 BARRICADE

DELAWARE DEPARTMENT OF TRANSPORTATION

ADDENDUMS / REVISIONS

SCALE 0 30 60 90 FEET

SR1, LITTLE HEAVEN GRADE SEPARATED INTERSECTION

CONTRACT	BRIDGE NO.	-
T200412202	DESIGNED BY:	SFP
COUNTY	CHECKED BY:	WFC
KENT		

CONSTRUCTION PHASING, M.O.T. AND E&S CONTROL

SHEET NO.
296
TOTAL SHTS.
641

1/5/2015
G:\PROJECTS\03517.00 (DELDOT AGMT 1223 DOTS Open End)\03517.16 SR1, LITTLE HEAVEN FINAL DESIGN\DGN Files\cp10208h.dgn
12:12:38 PM

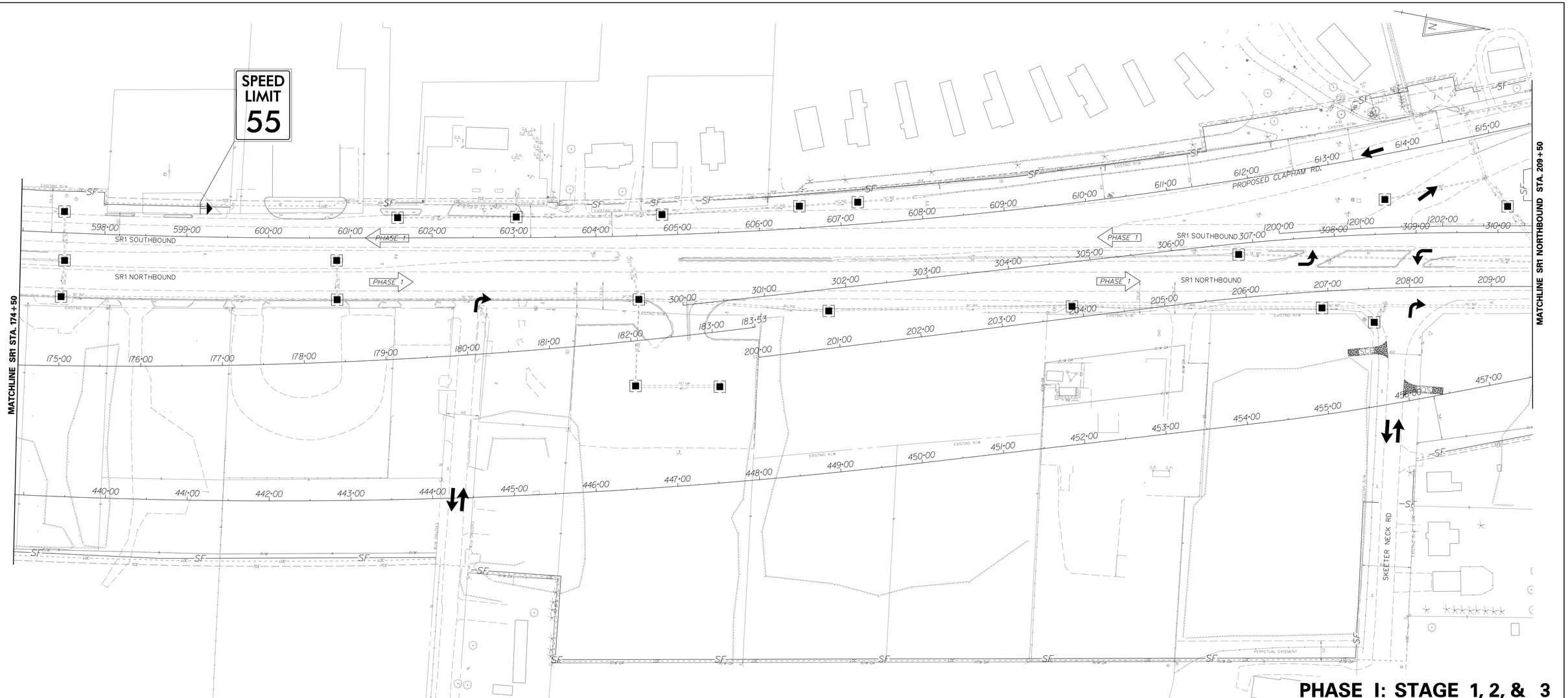

PHASE I: STAGE 1, 2, & 3

PHASE I

STAGE 1:

1. PLACE CHANGEABLE MESSAGE SIGNS ON NORTHBOUND SR1, SOUTHBOUND SR1, SOUTHBOUND CLAPHAM ROAD, BARRATTS CHAPEL ROAD AND BOWERS BEACH ROAD TEN (10) CALENDAR DAYS IN ADVANCE OF CONSTRUCTION TO INFORM TRAVELING PUBLIC OF IMPENDING ROAD CONSTRUCTION.

2. INSTALL PERMANENT ADVANCE WARNING SIGNS.

STAGE 2:

1. PLACE E&S MEASURES FOR EXISTING DRAINAGE SYSTEM AND THE EMBANKMENT FOR PROPOSED BARRATTS CHAPEL ROAD OR AS DIRECTED BY THE ENGINEER. PLACE SAFETY FENCE ALONG PROPOSED BARRATTS CHAPEL ROAD, AS SHOWN. INSTALL ALL STABILIZED CONSTRUCTION ENTRANCES REQUIRED FOR PHASE I, SHOWN IN THESE PLANS OR AS DIRECTED IN THE FIELD. WORK IN THIS OPERATION SHALL BE PERFORMED DURING OFF PEAK HOURS.

2. CLEAR ALL EXISTING VEGETATION AND DEBRIS WITHIN THE PROPOSED LIMITS OF CONSTRUCTION. DEMOLISH EXISTING BUILDINGS AS SHOW ON THE PLANS AND HAUL MATERIAL TO AN APPROVED OFFSITE FACILITY.

STAGE 3:

1. COMPLETE UTILITY RELOCATION OF KENT COUNTY SEWER, DELMARVA ELECTRIC AND VERIZON FACILITIES AS DESCRIBED ON THE PLANS AND UTILITY STATEMENT.

CONSTRUCTION PHASING PLANS LEGEND

- WORK AREA
- WORK AREA (REMOVAL)
- WORK COMPLETED IN PREVIOUS PHASING
- CONCRETE SAFETY BARRIER
- TRAFFIC FLOW ARROW
- TEMPORARY PAVEMENT STRIPING
- PLASTIC DRUM
- TYPE 3 BARRICADE

EROSION AND SEDIMENT CONTROL PLANS LEGEND

- INLET SEDIMENT CONTROL
- —RSF— REINFORCED SILT FENCE
- CHECK DAM
- SCE STABILIZED CONSTRUCTION ENTRANCE
- ST SEDIMENT TRAP
- TSD TEMPORARY SLOPE DRAIN

DELAWARE DEPARTMENT OF TRANSPORTATION	ADDENDUMS / REVISIONS	SCALE 0 30 60 90 FEET	SR1, LITTLE HEAVEN GRADE SEPARATED INTERSECTION	CONTRACT T200412202 / COUNTY KENT	BRIDGE NO. - / DESIGNED BY: SFP / CHECKED BY: WFC	CONSTRUCTION PHASING, M.O.T. AND E&S CONTROL	SHEET NO. 297 / TOTAL SHTS. 641

1/16/2015
G:\Projects\035170.00 (deldot agmt 1223 dots open end)\035170.46 sr1,little heaven final design\dgn files\cpl0209h.dgn
8:10:56 AM

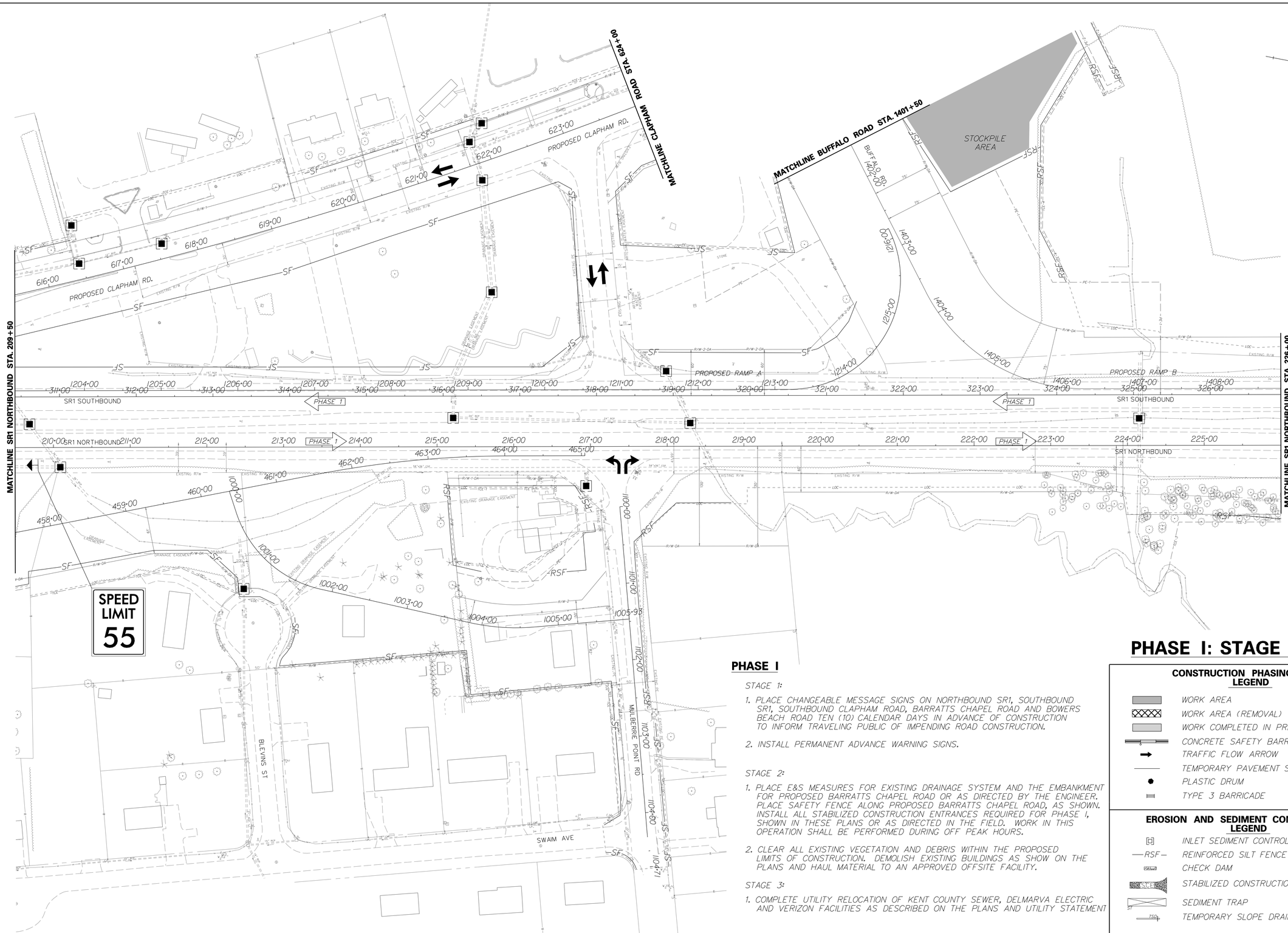

PHASE I: STAGE 1, 2, & 3

PHASE I

STAGE 1:

1. PLACE CHANGEABLE MESSAGE SIGNS ON NORTHBOUND SR1, SOUTHBOUND SR1, SOUTHBOUND CLAPHAM ROAD, BARRATTS CHAPEL ROAD AND BOWERS BEACH ROAD TEN (10) CALENDAR DAYS IN ADVANCE OF CONSTRUCTION TO INFORM TRAVELING PUBLIC OF IMPENDING ROAD CONSTRUCTION.
2. INSTALL PERMANENT ADVANCE WARNING SIGNS.

STAGE 2:

1. PLACE E&S MEASURES FOR EXISTING DRAINAGE SYSTEM AND THE EMBANKMENT FOR PROPOSED BARRATTS CHAPEL ROAD OR AS DIRECTED BY THE ENGINEER. PLACE SAFETY FENCE ALONG PROPOSED BARRATTS CHAPEL ROAD, AS SHOWN. INSTALL ALL STABILIZED CONSTRUCTION ENTRANCES REQUIRED FOR PHASE I, SHOWN IN THESE PLANS OR AS DIRECTED IN THE FIELD. WORK IN THIS OPERATION SHALL BE PERFORMED DURING OFF PEAK HOURS.
2. CLEAR ALL EXISTING VEGETATION AND DEBRIS WITHIN THE PROPOSED LIMITS OF CONSTRUCTION. DEMOLISH EXISTING BUILDINGS AS SHOW ON THE PLANS AND HAUL MATERIAL TO AN APPROVED OFFSITE FACILITY.

STAGE 3:

1. COMPLETE UTILITY RELOCATION OF KENT COUNTY SEWER, DELMARVA ELECTRIC AND VERIZON FACILITIES AS DESCRIBED ON THE PLANS AND UTILITY STATEMENT

CONSTRUCTION PHASING PLANS LEGEND

- WORK AREA
- WORK AREA (REMOVAL)
- WORK COMPLETED IN PREVIOUS PHASING
- CONCRETE SAFETY BARRIER
- TRAFFIC FLOW ARROW
- TEMPORARY PAVEMENT STRIPING
- PLASTIC DRUM
- TYPE 3 BARRICADE

EROSION AND SEDIMENT CONTROL PLANS LEGEND

- INLET SEDIMENT CONTROL
- —RSF— REINFORCED SILT FENCE
- CHECK DAM
- STABILIZED CONSTRUCTION ENTRANCE
- SEDIMENT TRAP
- TEMPORARY SLOPE DRAIN

DELAWARE DEPARTMENT OF TRANSPORTATION

ADDENDUMS / REVISIONS

SCALE 0 60 120 180 FEET

SR1, LITTLE HEAVEN GRADE SEPARATED INTERSECTION

CONTRACT	BRIDGE NO.	-
T200412202	DESIGNED BY:	SFP
COUNTY		
KENT	CHECKED BY:	WFC

CONSTRUCTION PHASING, M.O.T. AND E&S CONTROL

SHEET NO.
298
TOTAL SHTS.
641

1/16/2015
9:\projects\035\7.00 (delds) agmt 1223 dots open end\035\7.16 sr1,little heaven final design\dgn files\cp1020lh.dgn
9:40:00 AM

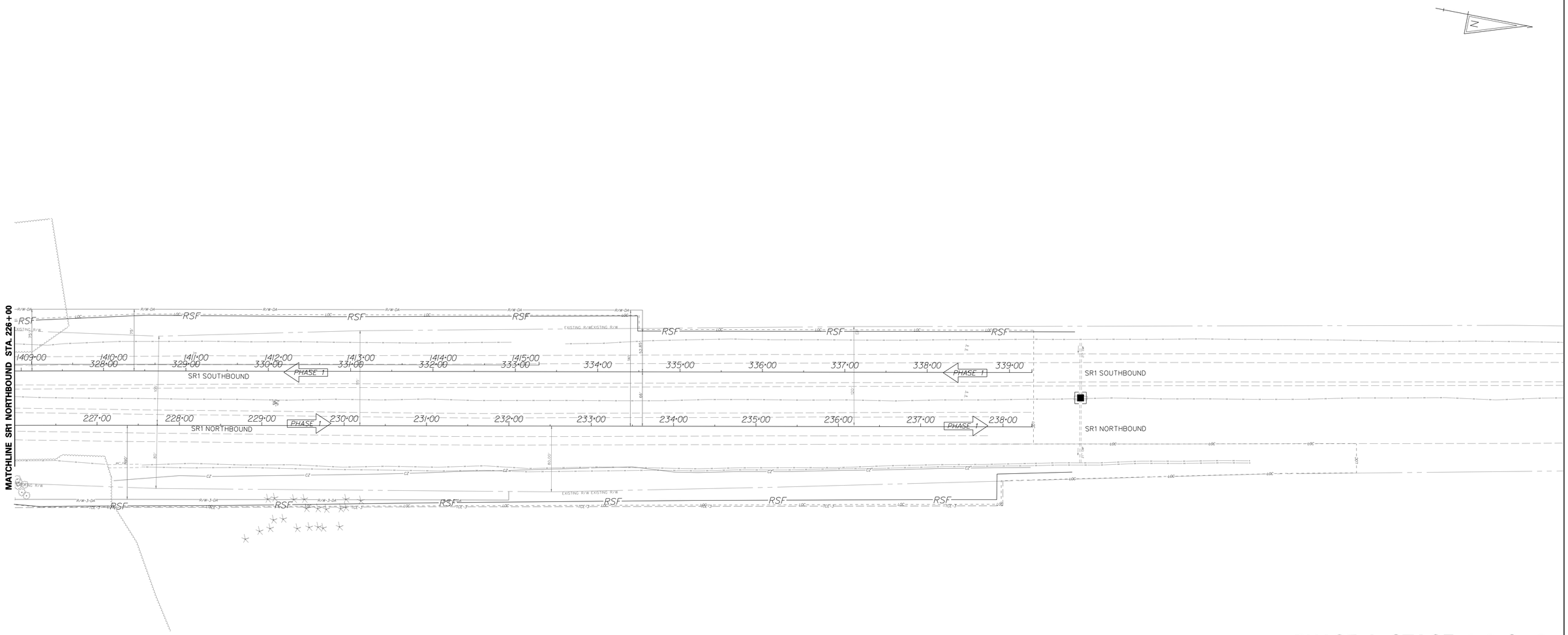

PHASE I

STAGE 1:

1. PLACE CHANGEABLE MESSAGE SIGNS ON NORTHBOUND SR1, SOUTHBOUND SR1, SOUTHBOUND CLAPHAM ROAD, BARRATTS CHAPEL ROAD AND BOWERS BEACH ROAD TEN (10) CALENDAR DAYS IN ADVANCE OF CONSTRUCTION TO INFORM TRAVELING PUBLIC OF IMPENDING ROAD CONSTRUCTION.

2. INSTALL PERMANENT ADVANCE WARNING SIGNS, INCLUDING SPEED REDUCTION SIGNAGE ON SR1 TO 45 MPH.

STAGE 2:

1. PLACE E&S MEASURES FOR EXISTING DRAINAGE SYSTEM AND THE EMBANKMENT FOR PROPOSED BARRATTS CHAPEL ROAD OR AS DIRECTED BY THE ENGINEER. PLACE SAFETY FENCE ALONG PROPOSED BARRATTS CHAPEL ROAD, AS SHOWN. INSTALL ALL STABILIZED CONSTRUCTION ENTRANCES REQUIRED FOR PHASE I, SHOWN IN THESE PLANS OR AS DIRECTED IN THE FIELD. WORK IN THIS OPERATION SHALL BE PERFORMED DURING OFF PEAK HOURS.

2. CLEAR ALL EXISTING VEGETATION AND DEBRIS WITHIN THE PROPOSED LIMITS OF CONSTRUCTION. DEMOLISH EXISTING BUILDINGS AS SHOW ON THE PLANS AND HAUL MATERIAL TO AN APPROVED OFFSITE FACILITY.

STAGE 3:

1. COMPLETE UTILITY RELOCATION OF KENT COUNTY SEWER, DELMARVA ELECTRIC AND VERIZON FACILITIES AS DESCRIBED ON THE PLANS AND UTILITY STATEMENT.

PHASE I: STAGE 1, 2, & 3

CONSTRUCTION PHASING PLANS LEGEND

- WORK AREA
- WORK AREA (REMOVAL)
- WORK COMPLETED IN PREVIOUS PHASING
- CONCRETE SAFETY BARRIER
- TRAFFIC FLOW ARROW
- TEMPORARY PAVEMENT STRIPING
- PLASTIC DRUM
- TYPE 3 BARRICADE

EROSION AND SEDIMENT CONTROL PLANS LEGEND

- INLET SEDIMENT CONTROL
- —RSF— REINFORCED SILT FENCE
- CHECK DAM
- SCE STABILIZED CONSTRUCTION ENTRANCE
- ST SEDIMENT TRAP
- TSD TEMPORARY SLOPE DRAIN

DELAWARE DEPARTMENT OF TRANSPORTATION

ADDENDUMS / REVISIONS

SCALE 0 60 120 180 FEET

SR1, LITTLE HEAVEN GRADE SEPARATED INTERSECTION

CONTRACT	BRIDGE NO.	-
T200412202	DESIGNED BY:	SFP
COUNTY		
KENT	CHECKED BY:	WFC

CONSTRUCTION PHASING, M.O.T. AND E&S CONTROL

SHEET NO.
299
TOTAL SHTS.
641

1/5/2015
G:\PROJECTS\035I7.00 (DELDOT AGMT 1223 DOTS Open End\035I7.16 SR1 LITTLE HEAVEN FINAL DESIGN\DGN Files\cpl02llh.dgn
15:02:21 PM

PHASE I

STAGE 1:

1. PLACE CHANGEABLE MESSAGE SIGNS ON NORTHBOUND SR1, SOUTHBOUND SR1, SOUTHBOUND CLAPHAM ROAD, BARRATTS CHAPEL ROAD AND BOWERS BEACH ROAD TEN (10) CALENDAR DAYS IN ADVANCE OF CONSTRUCTION TO INFORM TRAVELING PUBLIC OF IMPENDING ROAD CONSTRUCTION.

2. INSTALL PERMANENT ADVANCE WARNING SIGNS, INCLUDING SPEED REDUCTION SIGNAGE ON SR1 TO 45 MPH.

STAGE 2:

1. PLACE E&S MEASURES FOR EXISTING DRAINAGE SYSTEM AND THE EMBANKMENT FOR PROPOSED BARRATTS CHAPEL ROAD OR AS DIRECTED BY THE ENGINEER. PLACE SAFETY FENCE ALONG PROPOSED BARRATTS CHAPEL ROAD, AS SHOWN. INSTALL ALL STABILIZED CONSTRUCTION ENTRANCES REQUIRED FOR PHASE I, SHOWN IN THESE PLANS OR AS DIRECTED IN THE FIELD. WORK IN THIS OPERATION SHALL BE PERFORMED DURING OFF PEAK HOURS.

2. CLEAR ALL EXISTING VEGETATION AND DEBRIS WITHIN THE PROPOSED LIMITS OF CONSTRUCTION. DEMOLISH EXISTING BUILDINGS AS SHOW ON THE PLANS AND HAUL MATERIAL TO AN APPROVED OFFSITE FACILITY.

STAGE 3:

1. COMPLETE UTILITY RELOCATION OF KENT COUNTY SEWER, DELMARVA ELECTRIC AND VERIZON FACILITIES AS DESCRIBED ON THE PLANS AND UTILITY STATEMENT.

PHASE I: STAGE 1, 2, & 3

CONSTRUCTION PHASING PLANS LEGEND

- WORK AREA
- WORK AREA (REMOVAL)
- WORK COMPLETED IN PREVIOUS PHASING
- CONCRETE SAFETY BARRIER
- TRAFFIC FLOW ARROW
- TEMPORARY PAVEMENT STRIPING
- PLASTIC DRUM
- TYPE 3 BARRICADE

EROSION AND SEDIMENT CONTROL PLANS LEGEND

- INLET SEDIMENT CONTROL
- —RSF— REINFORCED SILT FENCE
- CHECK DAM
- SCE STABILIZED CONSTRUCTION ENTRANCE
- ST SEDIMENT TRAP
- TSD TEMPORARY SLOPE DRAIN

DELAWARE DEPARTMENT OF TRANSPORTATION	ADDENDUMS / REVISIONS	SCALE 0 60 120 180 FEET	SR1, LITTLE HEAVEN GRADE SEPARATED INTERSECTION	CONTRACT T200412202 / COUNTY KENT	BRIDGE NO. - / DESIGNED BY: SFP / CHECKED BY: WEC

CONSTRUCTION PHASING, M.O.T. AND E&S CONTROL

SHEET NO. 300 / TOTAL SHTS. 641

1/5/2015 G:\PROJECTS\035T.00 DELDOT AGMT 1223 DOTS Open End\035T.16 SR1 LITTLE HEAVEN FINAL DESIGN\DGN Files\cpl02l2h.dgn 4:34:45 PM