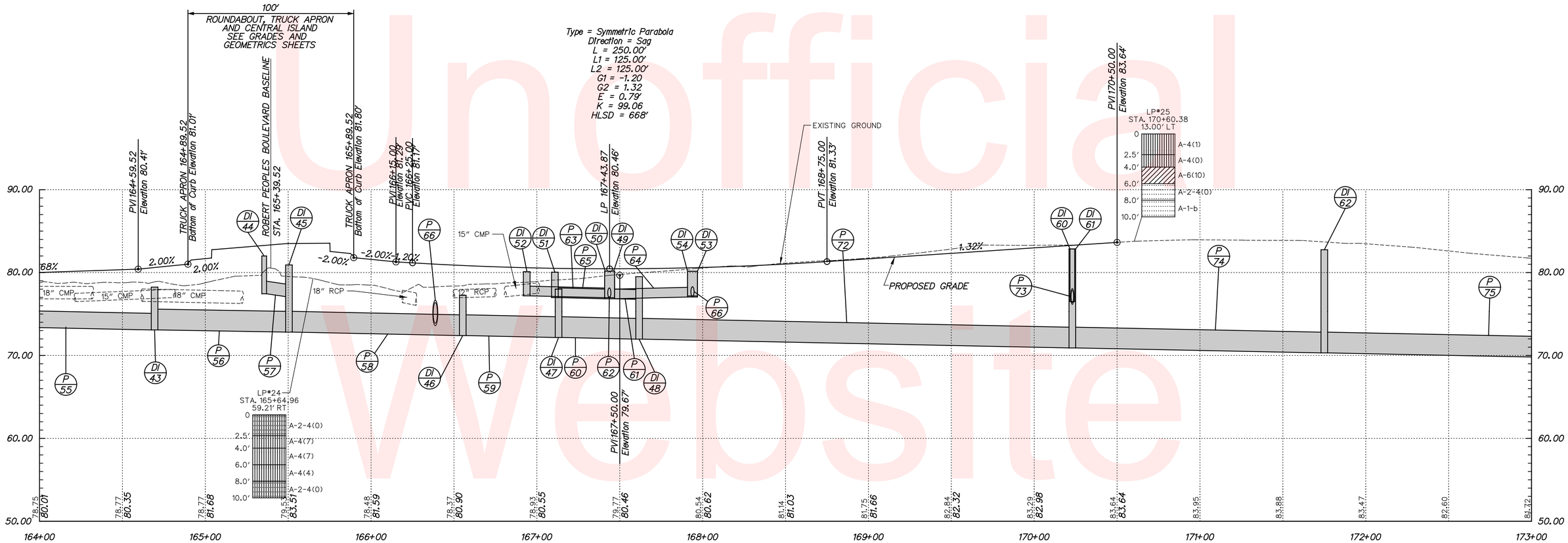

HOWELL SCHOOL ROAD

Unofficial Website Copy

VERTICAL SCALE FEET 18 12 6 0

DELAWARE DEPARTMENT OF TRANSPORTATION	ADDENDUMS / REVISIONS	SCALE 0 30 60 90 FEET	HSIP NCC, N54, HOWELL SCHOOL ROAD, SR 896 TO SR 71	CONTRACT T200504110 / COUNTY NEW CASTLE	BRIDGE NO. BR 1-376 & 1-378 / DESIGNED BY: RMG / CHECKED BY: PAH	PROFILES	SHEET NO. 39 / TOTAL SHTS. 138

Unofficial Website Copy

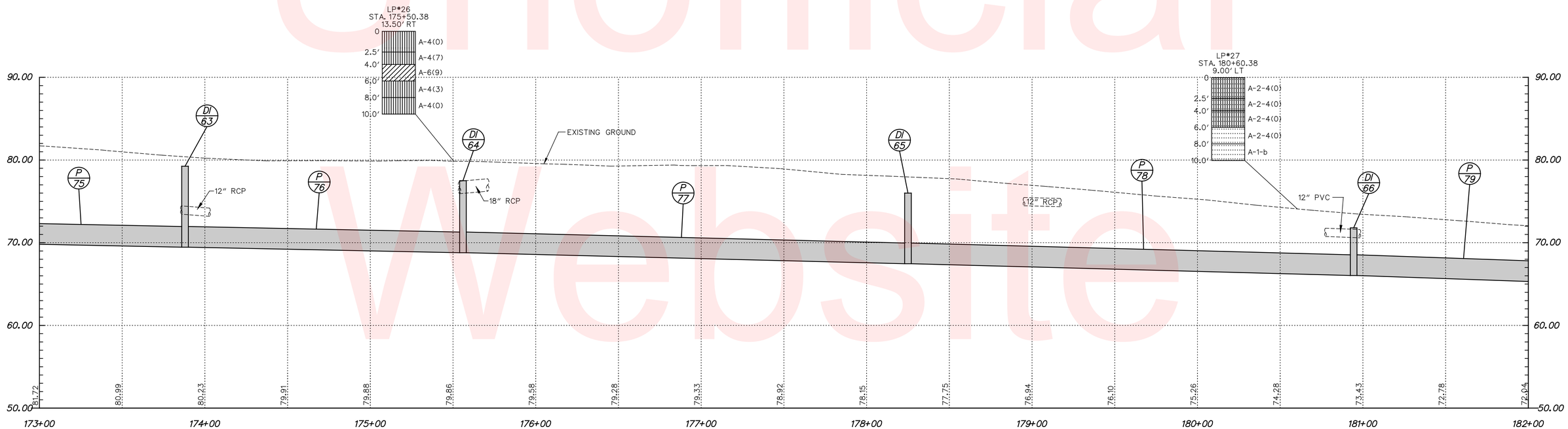

HOWELL SCHOOL ROAD

VERTICAL SCALE FEET 18 12 6 0

DELAWARE DEPARTMENT OF TRANSPORTATION	ADDENDUMS / REVISIONS	SCALE 0 30 60 90 FEET	HSIP NCC, N54, HOWELL SCHOOL ROAD, SR 896 TO SR 71	CONTRACT T200504110 / COUNTY NEW CASTLE	BRIDGE NO. BR 1-376 & 1-378 / DESIGNED BY: RMG / CHECKED BY: PAH	PROFILES	SHEET NO. 40 / TOTAL SHTS. 138

Unofficial Website Copy

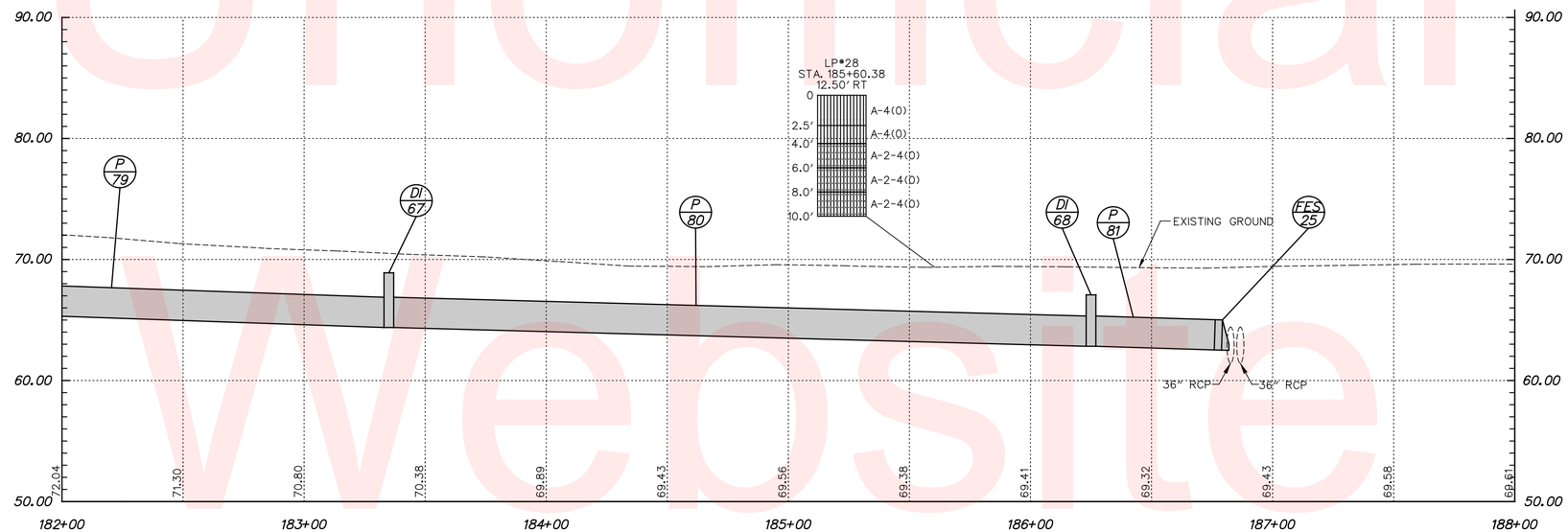

HOWELL SCHOOL ROAD

VERTICAL SCALE FEET 18 12 6 0

DELAWARE DEPARTMENT OF TRANSPORTATION	ADDENDUMS / REVISIONS	SCALE 0 30 60 90 FEET	HSIP NCC, N54, HOWELL SCHOOL ROAD, SR 896 TO SR 71	CONTRACT T200504110	BRIDGE NO. BR 1-376 & 1-378	PROFILES	SHEET NO. 41
				COUNTY NEW CASTLE	DESIGNED BY: RMG		TOTAL SHTS. 138
					CHECKED BY: PAH		

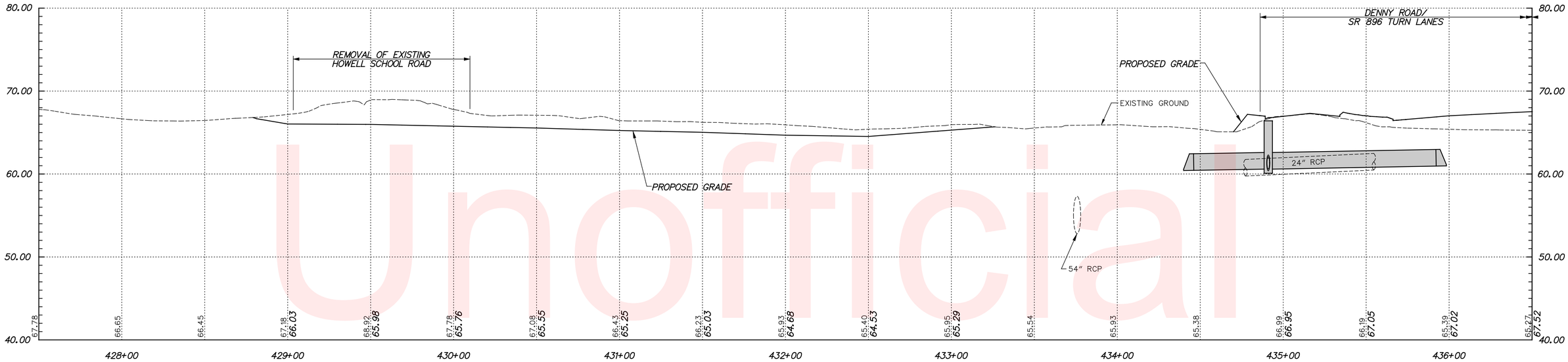

SR 896

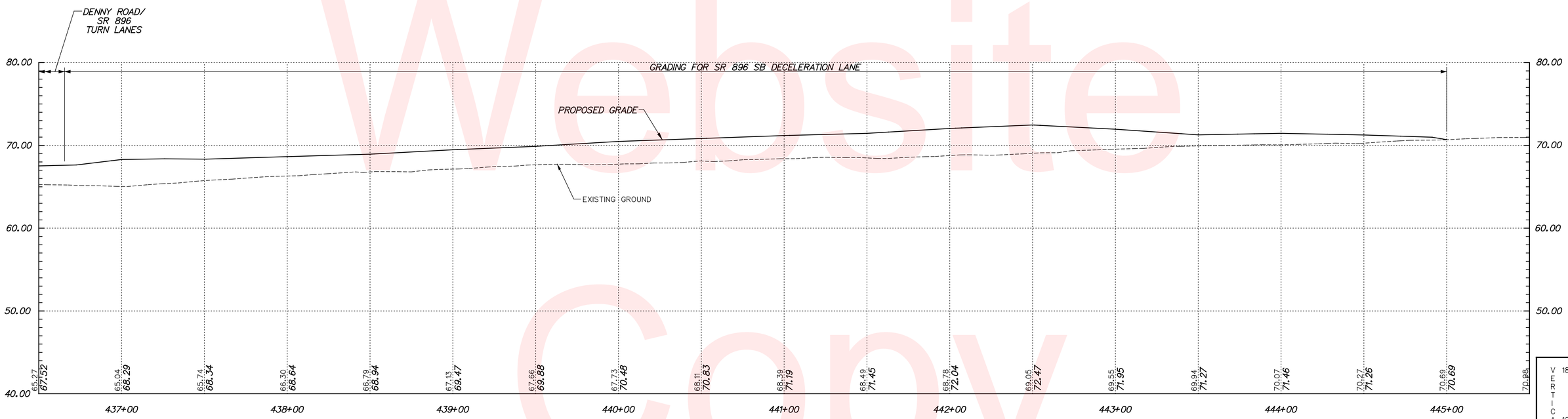

SR 896

NOTE:
THE EXISTING ALIGNMENT FOR SR 896 IS LOCATED THROUGH THE CENTER MEDIAN. THE PROPOSED GRADES REFLECT THE ADJUSTMENTS BEING MADE TO THE MEDIAN TO ACCOMODATE THE REMOVAL OF EXISTING HOWELL SCHOOL ROAD AND THE WIDENING FOR THE PROPOSED LEFT TURN LANES.

VERTICAL SCALE FEET: 18, 12, 6, 0

Unofficial Website Copy

DELAWARE DEPARTMENT OF TRANSPORTATION	ADDENDUMS / REVISIONS	SCALE 0 30 60 90 FEET	HSIP NCC, N54, HOWELL SCHOOL ROAD, SR 896 TO SR 71	CONTRACT T200504110 / COUNTY NEW CASTLE	BRIDGE NO. BR 1-376 & 1-378 / DESIGNED BY: RMG / CHECKED BY: PAH	PROFILES	SHEET NO. 42 / TOTAL SHTS. 138

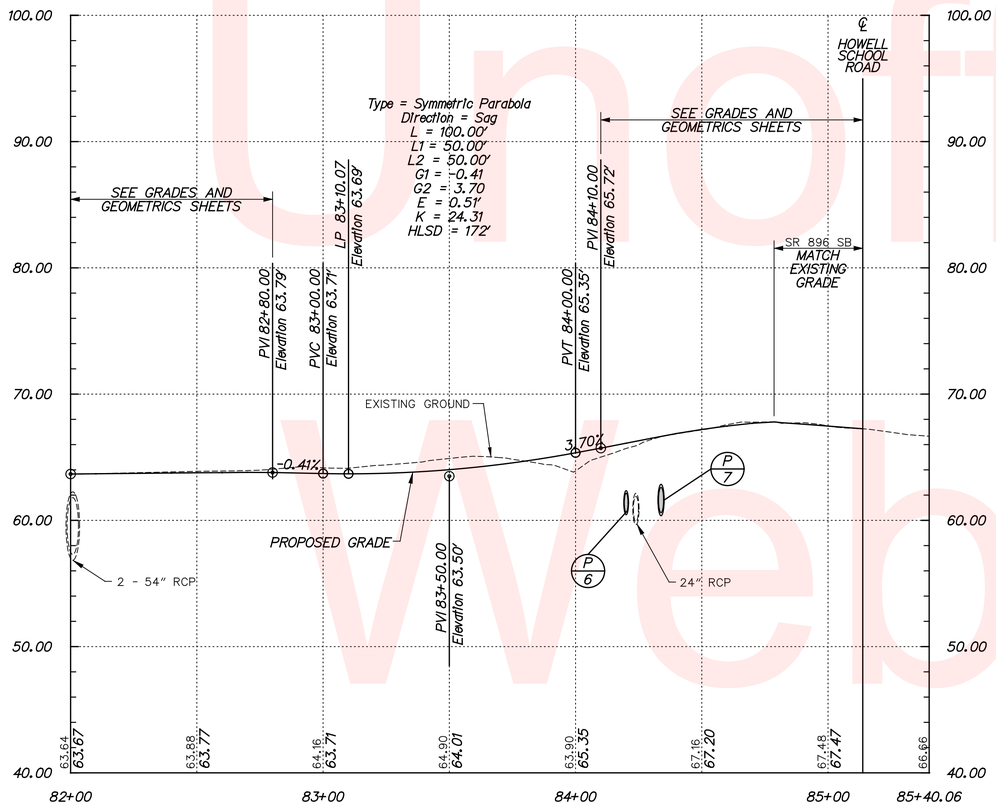

SR 896 NB LEFT TURN LANE PROFILE

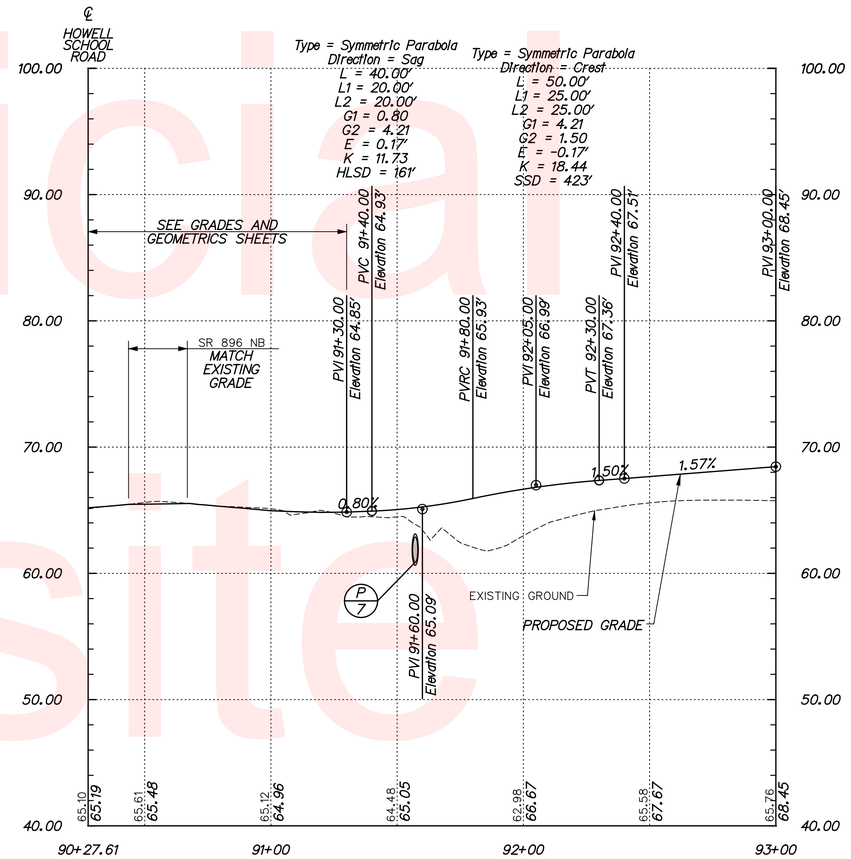

SR 896 SB LEFT TURN LANE PROFILE

Unofficial Website Copy

VERTICAL SCALE FEET 18 12 6 0

DELAWARE DEPARTMENT OF TRANSPORTATION	ADDENDUMS / REVISIONS	SCALE 0 30 60 90 FEET	HSIP NCC, N54, HOWELL SCHOOL ROAD, SR 896 TO SR 71	CONTRACT T200504110	BRIDGE NO. BR 1-376 & 1-378	PROFILES	SHEET NO. 43
				COUNTY NEW CASTLE	DESIGNED BY: RMG		TOTAL SHTS. 138
					CHECKED BY: PAH		

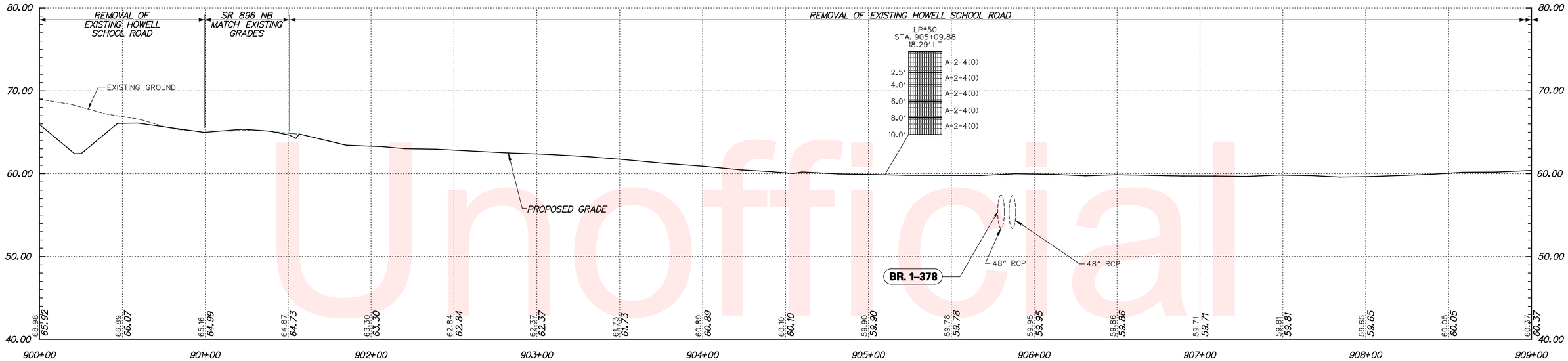

EXISTING HOWELL SCHOOL ROAD

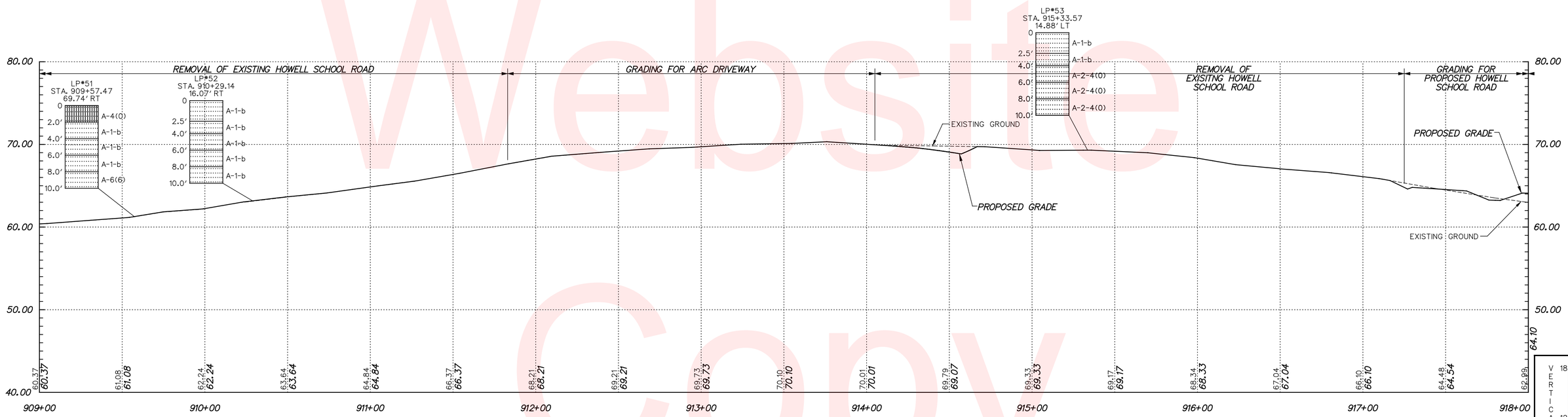

EXISTING HOWELL SCHOOL ROAD

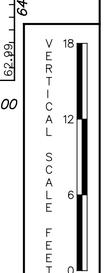

Unofficial Website Copy

DELAWARE DEPARTMENT OF TRANSPORTATION	ADDENDUMS / REVISIONS	SCALE 0 30 60 90 FEET	HSIP NCC, N54, HOWELL SCHOOL ROAD, SR 896 TO SR 71	CONTRACT T200504110 / COUNTY NEW CASTLE	BRIDGE NO. BR 1-376 & 1-378 / DESIGNED BY: RMG / CHECKED BY: PAH	PROFILES	SHEET NO. 44 / TOTAL SHTS. 138

Unofficial Website Copy

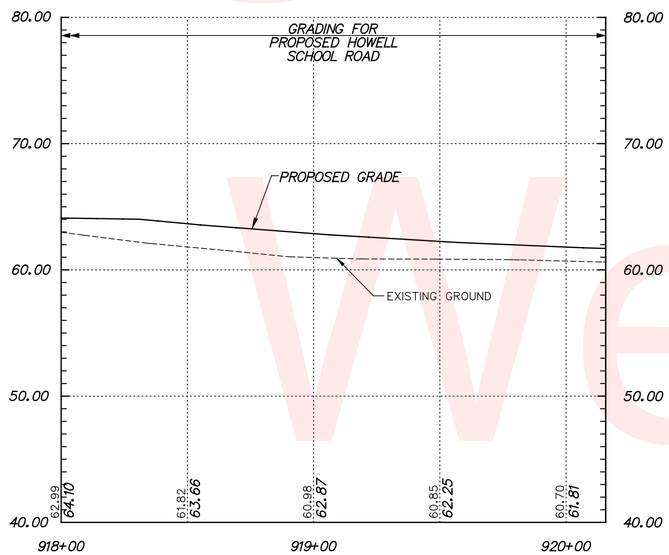

EXISTING HOWELL SCHOOL ROAD

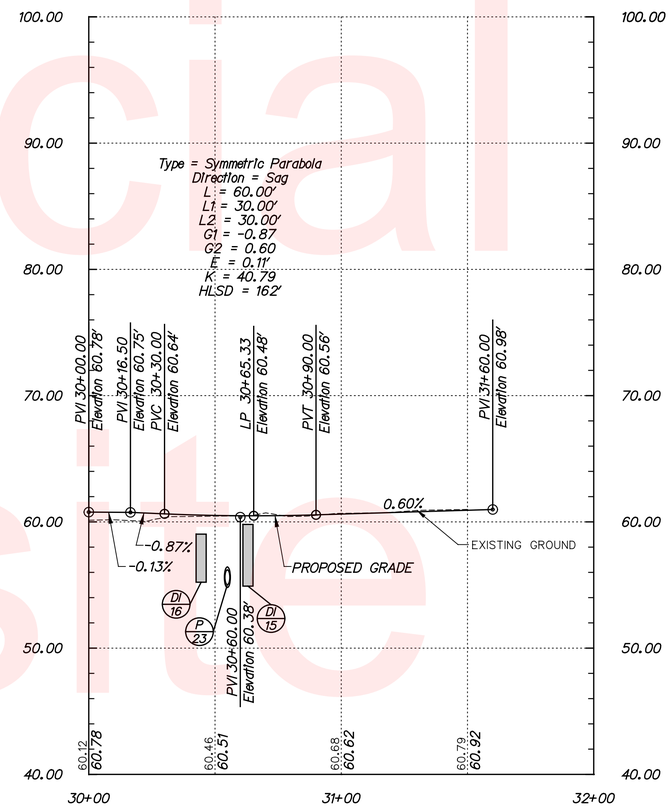

LUMS POND MAIN ENTRANCE

NOTE:
SEE SHEET 106 FOR TEMPORARY ROADWAY DETAILS

VERTICAL SCALE FEET 18 12 6 0

DELAWARE DEPARTMENT OF TRANSPORTATION	ADDENDUMS / REVISIONS	SCALE 0 30 60 90 FEET	HSIP NCC, N54, HOWELL SCHOOL ROAD, SR 896 TO SR 71	CONTRACT T200504110	BRIDGE NO. BR 1-376 & 1-378	PROFILES	SHEET NO. 45
				COUNTY NEW CASTLE	DESIGNED BY: RMG		TOTAL SHTS. 138
					CHECKED BY: PAH		

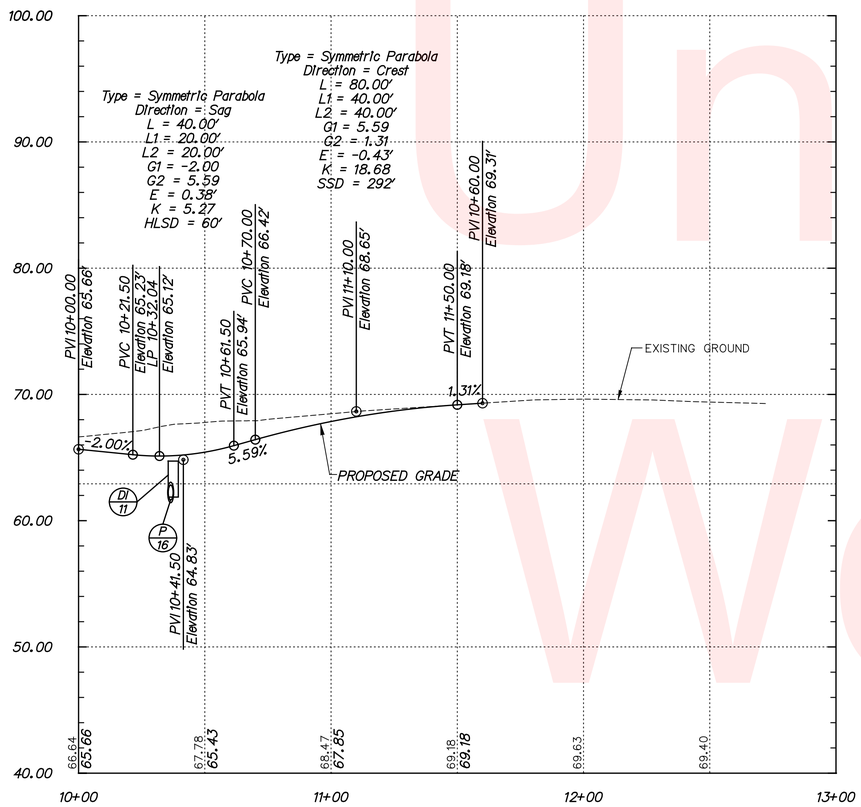

MEADOW GLEN DRIVE

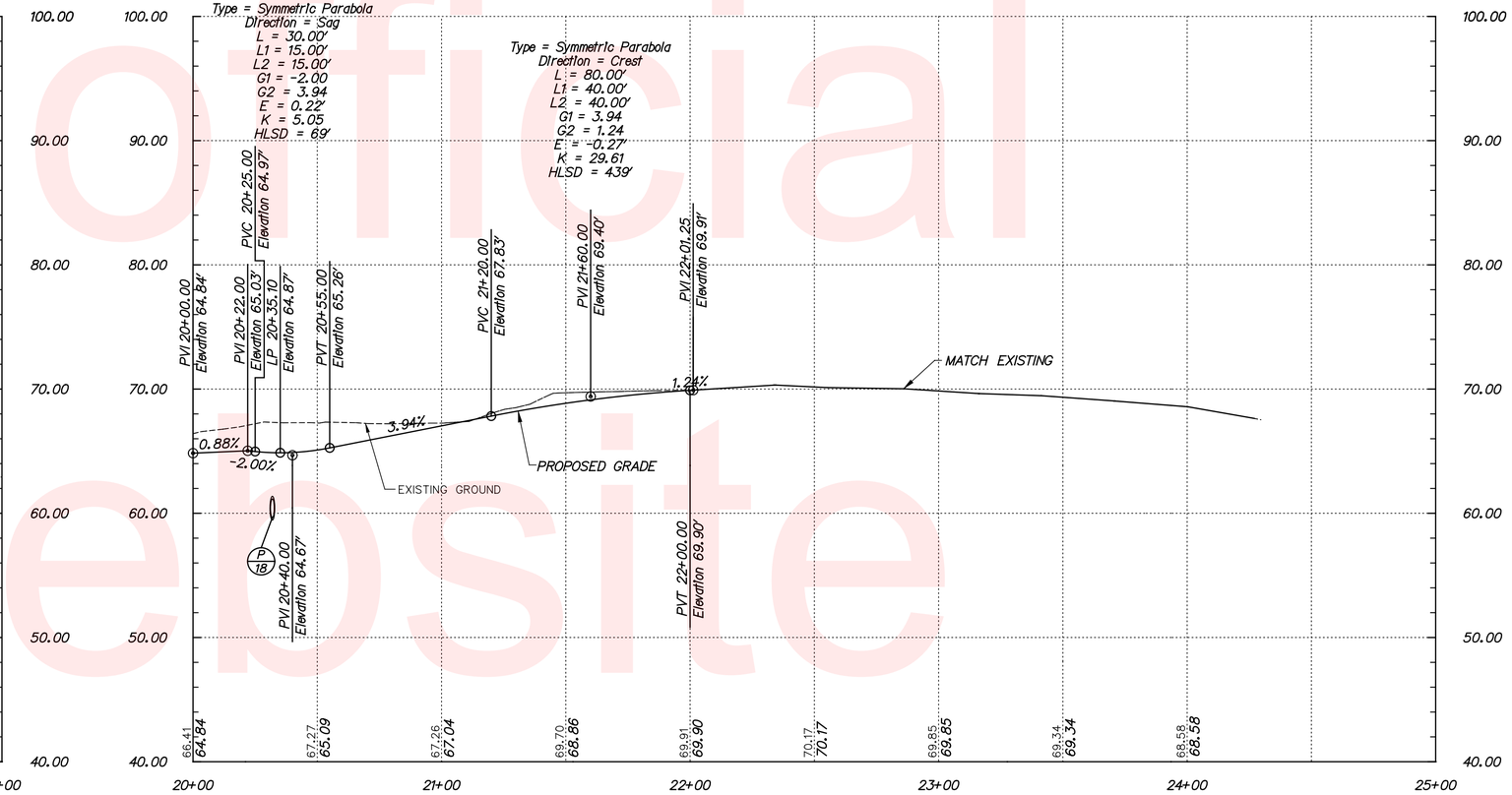

OLD HOWELL SCHOOL ROAD

Unofficial Website Copy

VERTICAL SCALE FEET 18 12 6 0

DELAWARE DEPARTMENT OF TRANSPORTATION	ADDENDUMS / REVISIONS	SCALE 0 30 60 90 FEET	HSIP NCC, N54, HOWELL SCHOOL ROAD, SR 896 TO SR 71	CONTRACT T200504110 / COUNTY NEW CASTLE	BRIDGE NO. BR 1-376 & 1-378 / DESIGNED BY: RMG / CHECKED BY: PAH	PROFILES	SHEET NO. 46 / TOTAL SHTS. 138

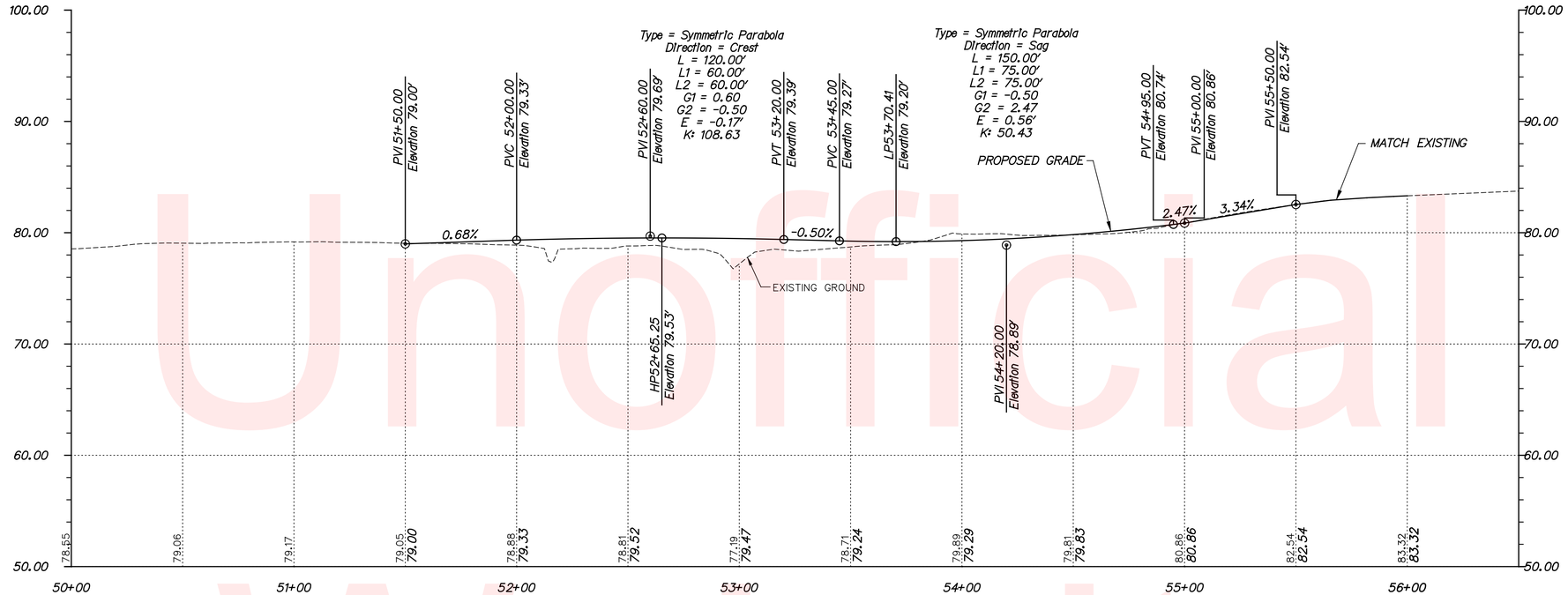

CONSTRUCTION PHASING – PHASE 2B
TEMPORARY ROADWAY
ROBERT PEOPLES BOULEVARD

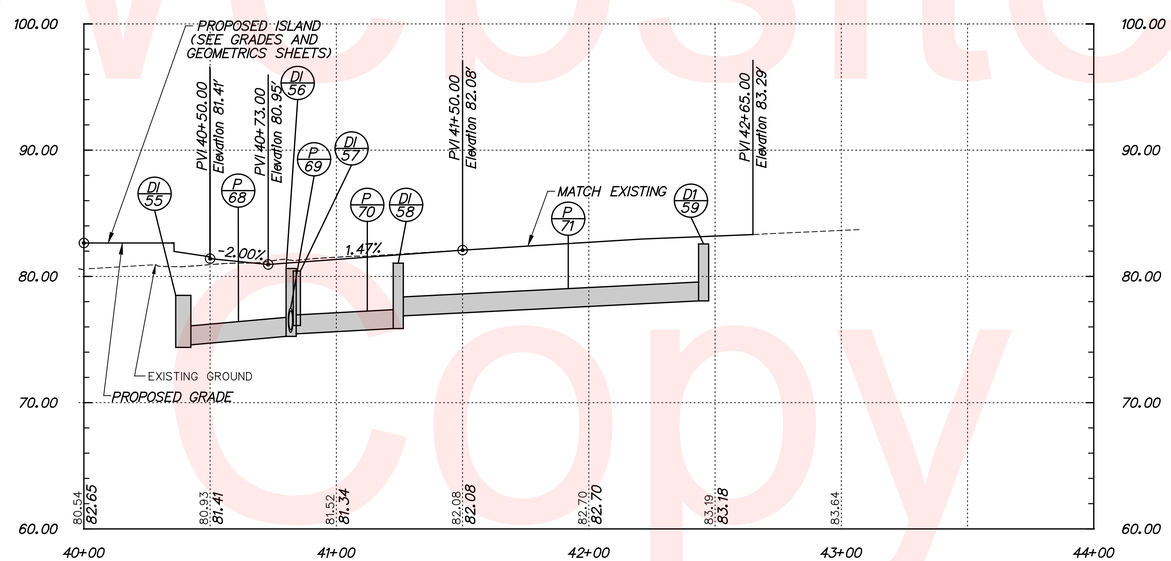

ROBERT PEOPLES BOULEVARD

VERTICAL SCALE FEET 18 12 6 0

Unofficial Website Copy

DELAWARE DEPARTMENT OF TRANSPORTATION	ADDENDUMS / REVISIONS	SCALE 0 30 60 90 FEET	HSIP NCC, N54, HOWELL SCHOOL ROAD, SR 896 TO SR 71	CONTRACT T200504110 / COUNTY NEW CASTLE	BRIDGE NO. BR 1-376 & 1-378 / DESIGNED BY: RMG / CHECKED BY: PAH	PROFILES	SHEET NO. 47 / TOTAL SHTS. 138

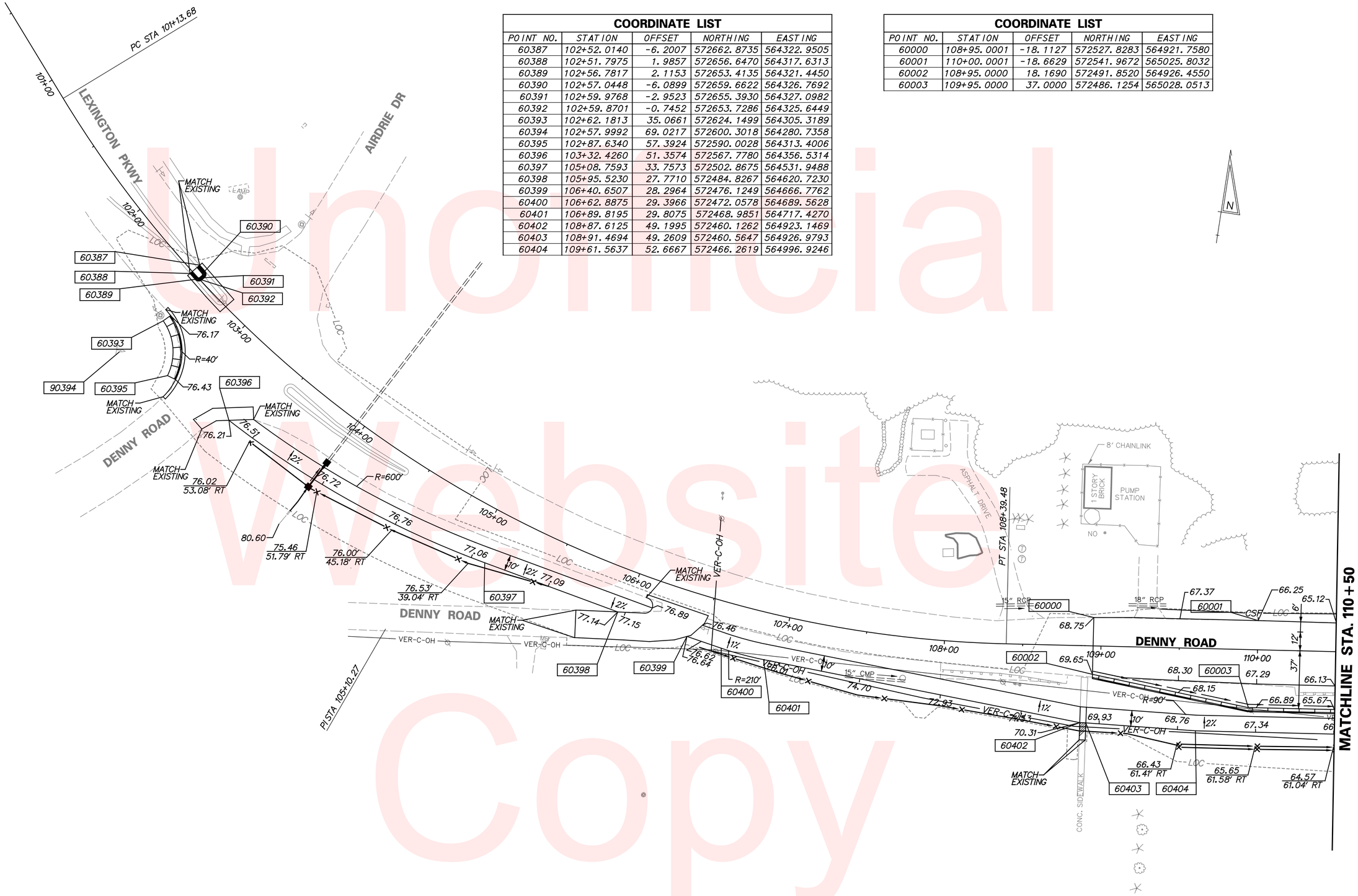

COORDINATE LIST				
POINT NO.	STATION	OFFSET	NORTHING	EASTING
60387	102+52.0140	-6.2007	572662.8735	564322.9505
60388	102+51.7975	1.9857	572656.6470	564317.6313
60389	102+56.7817	2.1153	572653.4135	564321.4450
60390	102+57.0448	-6.0899	572659.6622	564326.7692
60391	102+59.9768	-2.9523	572655.3930	564327.0982
60392	102+59.8701	-0.7452	572653.7286	564325.6449
60393	102+62.1813	35.0661	572624.1499	564305.3189
60394	102+57.9992	69.0217	572600.3018	564280.7358
60395	102+87.6340	57.3924	572590.0028	564313.4006
60396	103+32.4260	51.3574	572567.7780	564356.5314
60397	105+08.7593	33.7573	572502.8675	564531.9488
60398	105+95.5230	27.7710	572484.8267	564620.7230
60399	106+40.6507	28.2964	572476.1249	564666.7762
60400	106+62.8875	29.3966	572472.0578	564689.5628
60401	106+89.8195	29.8075	572468.9851	564717.4270
60402	108+87.6125	49.1995	572460.1262	564923.1469
60403	108+91.4694	49.2609	572460.5647	564926.9793
60404	109+61.5637	52.6667	572466.2619	564996.9246

COORDINATE LIST				
POINT NO.	STATION	OFFSET	NORTHING	EASTING
60000	108+95.0001	-18.1127	572527.8283	564921.7580
60001	110+00.0001	-18.6629	572541.9672	565025.8032
60002	108+95.0000	18.1690	572491.8520	564926.4550
60003	109+95.0000	37.0000	572486.1254	565028.0513

Unofficial Website Copy

DELAWARE DEPARTMENT OF TRANSPORTATION

ADDENDUMS / REVISIONS

SCALE 0 30 60 90 FEET

HSIP NCC, N54, HOWELL SCHOOL ROAD, SR 896 TO SR 71

CONTRACT T200504110 | COUNTY NEW CASTLE | BRIDGE NO. BR 1-376 & 1-378 | DESIGNED BY: RMG | CHECKED BY: PAH

GRADES & GEOMETRICS

SHEET NO. 48 | TOTAL SHTS. 138

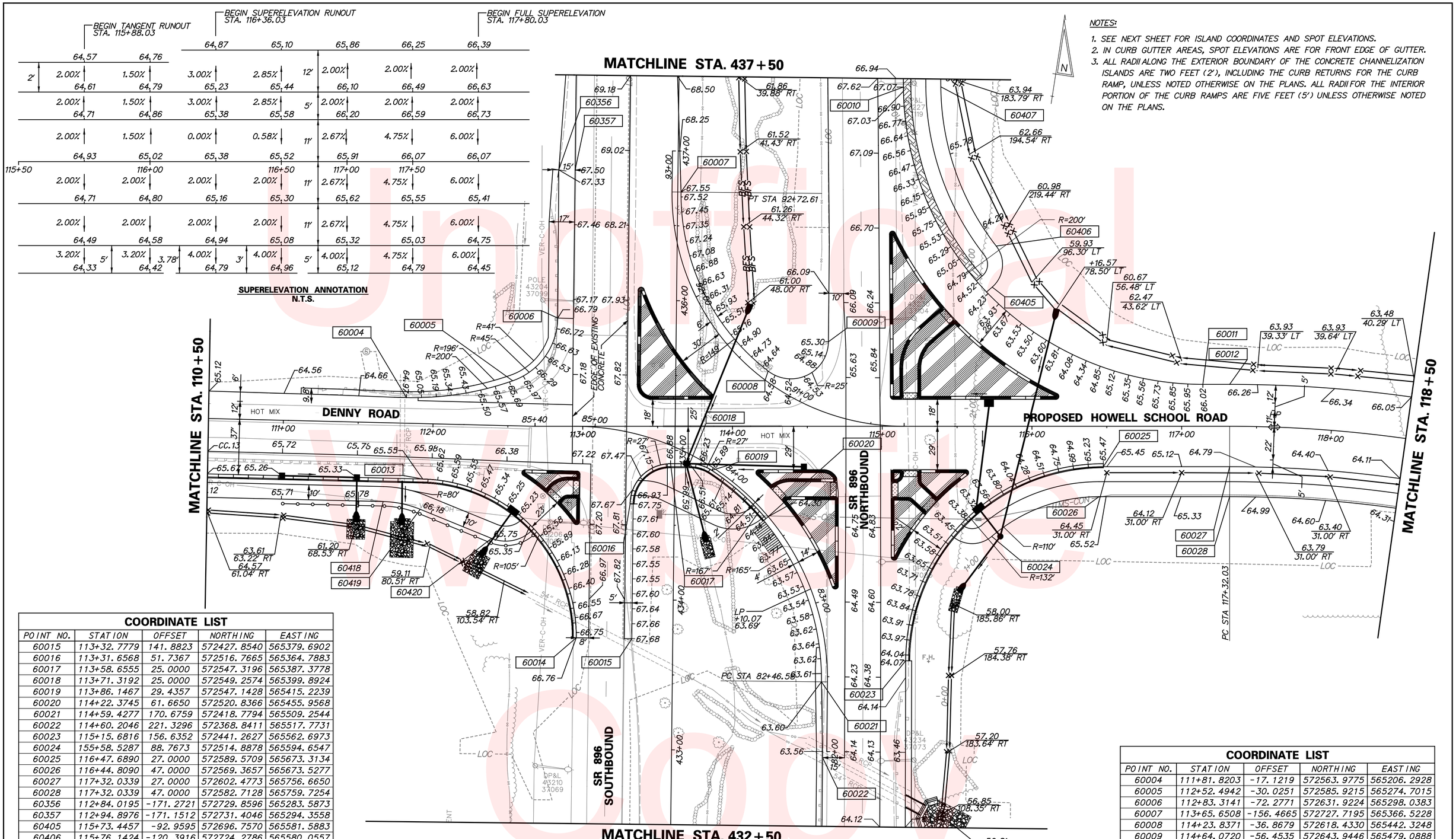

NOTES:

1. SEE NEXT SHEET FOR ISLAND COORDINATES AND SPOT ELEVATIONS.
2. IN CURB GUTTER AREAS, SPOT ELEVATIONS ARE FOR FRONT EDGE OF GUTTER.
3. ALL RADII ALONG THE EXTERIOR BOUNDARY OF THE CONCRETE CHANNELIZATION ISLANDS ARE TWO FEET (2'), INCLUDING THE CURB RETURNS FOR THE CURB RAMP, UNLESS NOTED OTHERWISE ON THE PLANS. ALL RADII FOR THE INTERIOR PORTION OF THE CURB RAMPS ARE FIVE FEET (5') UNLESS OTHERWISE NOTED ON THE PLANS.

COORDINATE LIST

POINT NO.	STATION	OFFSET	NORTHING	EASTING
60015	113+32.7779	141.8823	572427.8540	565379.6902
60016	113+31.6568	51.7367	572516.7665	565364.7883
60017	113+58.6555	25.0000	572547.3196	565387.3778
60018	113+71.3192	25.0000	572549.2574	565399.8924
60019	113+86.1467	29.4357	572547.1428	565415.2239
60020	114+22.3745	61.6650	572520.8366	565455.9568
60021	114+59.4277	170.6759	572418.7794	565509.2544
60022	114+60.2046	221.3296	572368.8411	565517.7731
60023	115+15.6816	156.6352	572441.2627	565562.6973
60024	155+58.5287	88.7673	572514.8878	565594.6547
60025	116+47.6890	27.0000	572589.5709	565673.3134
60026	116+44.8090	47.0000	572569.3657	565673.5277
60027	117+32.0339	27.0000	572602.4773	565756.6650
60028	117+32.0339	47.0000	572582.7128	565759.7254
60356	112+84.0195	-171.2721	572729.8596	565283.5873
60357	112+94.8976	-171.1512	572731.4046	565294.3558
60405	115+73.4457	-92.9595	572696.7570	565581.5883
60406	115+76.1424	-120.3916	572724.2786	565580.0557
60407	115+39.1521	-226.7583	572823.7325	565527.2249
60418	111+67.8993	52.6667	572492.9740	565201.5238
60419	111+92.7834	57.2390	572491.6616	565226.7904
60420	112+40.8872	75.5343	572479.7477	565276.8580

COORDINATE LIST

POINT NO.	STATION	OFFSET	NORTHING	EASTING
60004	111+81.8203	-17.1219	572563.9775	565206.2928
60005	112+52.4942	-30.0251	572585.9215	565274.7015
60006	112+83.3141	-72.2771	572631.9224	565298.0383
60007	113+65.6508	-156.4665	572727.7195	565366.5228
60008	114+23.8371	-36.8679	572618.4330	565442.3248
60009	114+64.0720	-56.4535	572643.9446	565479.0888
60010	115+14.1528	-226.5809	572819.7318	565502.5470
60011	117+14.1497	-27.9998	572654.0927	565730.5754
60012	117+32.0338	-28.0000	572656.8295	565748.2488
60013	111+94.0377	37.0000	572511.8927	565225.4140
60014	112+95.6740	141.2701	572422.7814	565342.9296

Unofficial Copy

DELAWARE DEPARTMENT OF TRANSPORTATION

ADDENDUMS / REVISIONS

SCALE 0 30 60 90 FEET

HSIP NCC, N54, HOWELL SCHOOL ROAD, SR 896 TO SR 71

CONTRACT T200504110 | COUNTY NEW CASTLE | BRIDGE NO. BR 1-376 & 1-378 | DESIGNED BY: RMG | CHECKED BY: PAH

GRADES & GEOMETRICS

SHEET NO. 49 | TOTAL SHTS. 138

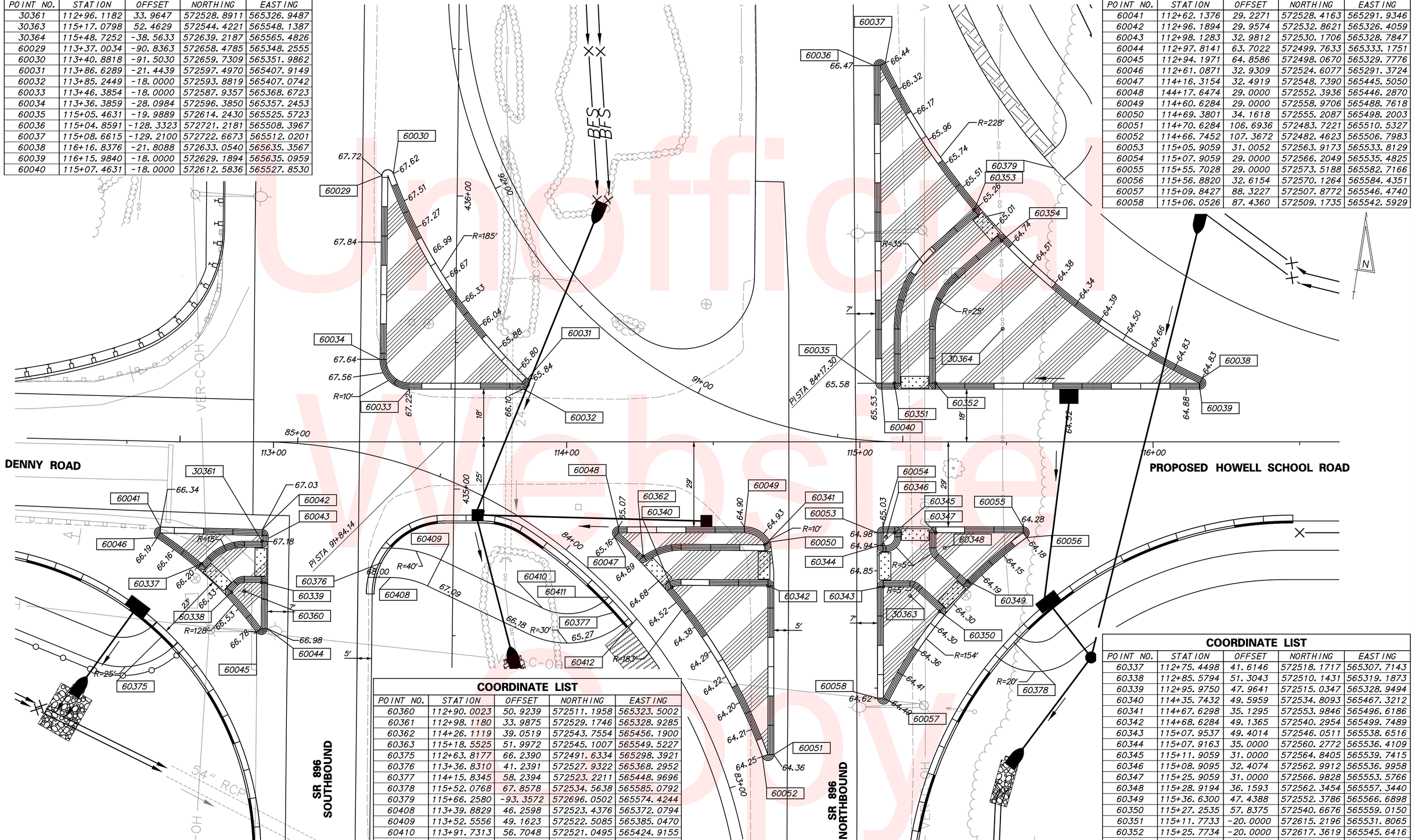

COORDINATE LIST

POINT NO.	STATION	OFFSET	NORTHING	EASTING
30361	112+96.1182	33.9647	572528.8911	565326.9487
30363	115+17.0798	52.4629	572544.4221	565548.1387
30364	115+48.7252	-38.5633	572639.2187	565565.4826
60029	113+37.0034	-90.8363	572658.4785	565348.2555
60030	113+40.8818	-91.5030	572659.7309	565351.9862
60031	113+86.6289	-21.4439	572597.4970	565407.9149
60032	113+85.2449	-18.0000	572593.8819	565407.0742
60033	113+46.3854	-18.0000	572587.9357	565368.6723
60034	113+36.3859	-28.0984	572596.3850	565357.2453
60035	115+05.4631	-19.9889	572614.2430	565525.5723
60036	115+04.8591	-128.3323	572721.2181	565508.3967
60037	115+08.6615	-129.2100	572722.6673	565512.0201
60038	116+16.8376	-21.8088	572633.0540	565635.3567
60039	116+15.9840	-18.0000	572629.1894	565635.0959
60040	115+07.4631	-18.0000	572612.5836	565527.8530

COORDINATE LIST

POINT NO.	STATION	OFFSET	NORTHING	EASTING
60041	112+62.1376	29.2271	572528.4163	565291.9346
60042	112+96.1894	29.9574	572532.8621	565326.4059
60043	112+98.1283	32.9812	572530.1706	565328.7847
60044	112+97.8141	63.7022	572499.7633	565333.1751
60045	112+94.1971	64.8586	572498.0670	565329.7776
60046	112+61.0871	32.9309	572524.6077	565291.3724
60047	114+16.3154	32.4919	572548.7390	565445.5050
60048	144+17.6474	29.0000	572552.3936	565446.2870
60049	114+60.6284	29.0000	572558.9706	565488.7618
60050	114+69.3801	34.1618	572555.2087	565498.2003
60051	114+70.6284	106.6936	572483.7221	565510.5327
60052	114+66.7452	107.3672	572482.4623	565506.7983
60053	115+05.9059	31.0052	572563.9173	565533.8129
60054	115+07.9059	29.0000	572566.2049	565535.4825
60055	115+55.7028	29.0000	572573.5188	565582.7166
60056	115+56.8820	32.6154	572570.1264	565584.4351
60057	115+09.8427	88.3227	572507.8772	565546.4740
60058	115+06.0526	87.4360	572509.1735	565542.5929

COORDINATE LIST

POINT NO.	STATION	OFFSET	NORTHING	EASTING
60360	112+90.0023	50.9239	572511.1958	565323.5002
60361	112+98.1180	33.9875	572529.1746	565328.9285
60362	114+26.1119	39.0519	572543.7554	565456.1900
60363	115+18.5525	51.9972	572545.1007	565549.5227
60375	112+63.8177	66.2390	572491.6334	565298.3921
60376	113+36.8310	41.2391	572527.9322	565368.2952
60377	114+15.8345	58.2394	572523.2211	565448.9696
60378	115+52.0768	67.8578	572534.5638	565585.0792
60379	115+66.2580	-93.3572	572696.0502	565574.4244
60408	113+39.8829	46.2598	572523.4376	565372.0794
60409	113+52.5556	49.1623	572522.5085	565385.0470
60410	113+91.7313	56.7048	572521.0495	565424.9155
60411	114+14.2255	53.0098	572528.1430	565446.5793
60412	114+23.9067	60.3796	572522.3414	565457.2743

COORDINATE LIST

POINT NO.	STATION	OFFSET	NORTHING	EASTING
60337	112+75.4498	41.6146	572518.1717	565307.7143
60338	112+85.5794	51.3043	572510.1431	565319.1873
60339	112+95.9750	47.9641	572515.0347	565328.9494
60340	114+35.7432	49.5959	572534.8093	565467.3212
60341	114+67.6298	35.1295	572553.9846	565496.6186
60342	114+68.6284	49.1365	572540.2954	565499.7489
60343	115+07.9537	49.4014	572546.0511	565538.6516
60344	115+07.9163	35.0000	572560.2772	565536.4109
60345	115+11.9059	31.0000	572564.8405	565539.7415
60346	115+08.9095	32.4074	572562.9912	565536.9958
60347	115+25.9059	31.0000	572566.9828	565553.5766
60348	115+28.9194	36.1593	572562.3454	565557.3440
60349	115+36.6300	47.4388	572552.3786	565566.6898
60350	115+27.2535	57.8375	572540.6676	565559.0150
60351	115+11.7733	-20.0000	572615.2196	565531.8065
60352	115+25.7734	-20.0000	572617.3619	565545.6416
60353	115+38.9350	-79.0015	572677.6826	565549.6199
60354	115+48.3273	-68.6148	572668.8554	565560.4910

Unofficial Website Copy

DELAWARE DEPARTMENT OF TRANSPORTATION

ADDENDUMS / REVISIONS

SCALE 0 15 30 45 FEET

HSIP NCC, N54, HOWELL SCHOOL ROAD, SR 896 TO SR 71

CONTRACT	BRIDGE NO. BR 1-376 & 1-378
T200504110	DESIGNED BY: RMG
COUNTY	CHECKED BY: PAH
NEW CASTLE	

GRADES & GEOMETRICS

SHEET NO. 50

TOTAL SHTS. 138

END FULL SUPERELEVATION STA. 121+36.20

END SUPERELEVATION RUNOUT STA. 122+80.20

END TANGENT RUNOUT STA. 123+28.20

	62.88	62.78	62.61	62.65	62.76	62.92	63.18
5'	2.00%	2.00%	2.00%	2.74%	4.00%	4.00%	4.00%
	62.98	62.88	62.71	62.79	62.96	63.12	63.38
11'	6.00%	5.42%	3.34%	1.26%	0.00%	0.83%	2.00%
	62.32	62.29	62.34	62.65	62.96	63.21	63.60
121+00		121+50	122+00	122+50		123+00	
22'	6.00%	5.42%	3.34%	2.00%	2.00%	2.00%	2.00%
	61.61	61.09	61.61	62.21	62.52	62.77	63.16
5	6.00%	5.42%	4.00%	4.00%	4.00%	4.00%	4.00%
	60.70	60.82	61.41	62.01	62.32	62.57	62.96

SUPERELEVATION ANNOTATION
N.T.S.

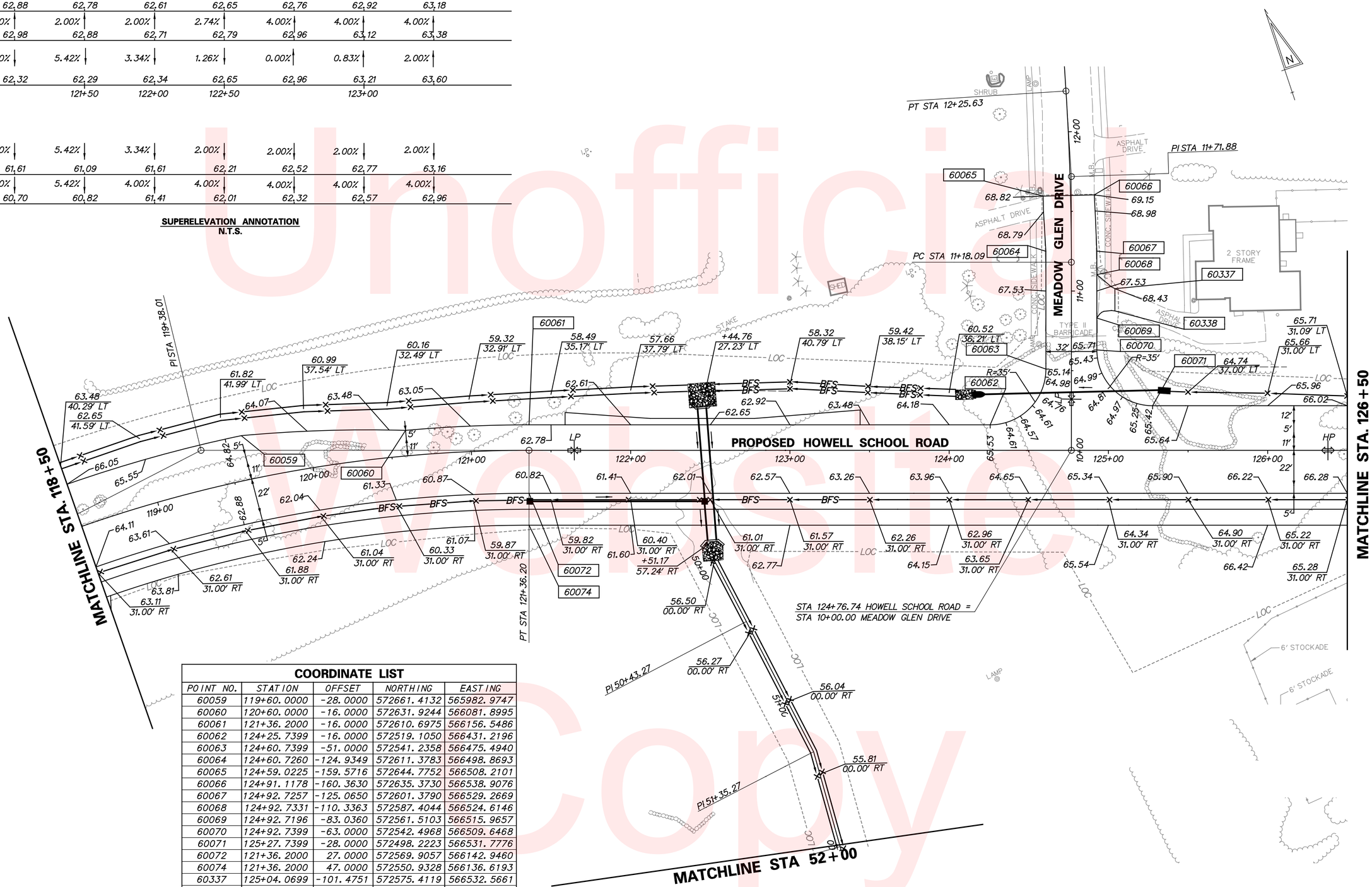

COORDINATE LIST

POINT NO.	STATION	OFFSET	NORTHING	EASTING
60059	119+60.0000	-28.0000	572661.4132	565982.9747
60060	120+60.0000	-16.0000	572631.9244	566081.8995
60061	121+36.2000	-16.0000	572610.6975	566156.5486
60062	124+25.7399	-16.0000	572519.1050	566431.2196
60063	124+60.7399	-51.0000	572541.2358	566475.4940
60064	124+60.7260	-124.9349	572611.3783	566498.8693
60065	124+59.0225	-159.5716	572644.7752	566508.2101
60066	124+91.1178	-160.3630	572635.3730	566538.9076
60067	124+92.7257	-125.0650	572601.3790	566529.2669
60068	124+92.7331	-110.3363	572587.4044	566524.6146
60069	124+92.7196	-83.0360	572561.5103	566515.9657
60070	124+92.7399	-63.0000	572542.4968	566509.6468
60071	125+27.7399	-28.0000	572498.2223	566531.7776
60072	121+36.2000	27.0000	572569.9057	566142.9460
60074	121+36.2000	47.0000	572550.9328	566136.6193
60337	125+04.0699	-101.4751	572575.4119	566532.5661
60338	125+04.0699	-87.5079	572562.1620	566528.1477

Unofficial Website Copy

DELAWARE DEPARTMENT OF TRANSPORTATION	ADDENDUMS / REVISIONS	SCALE 0 30 60 90 FEET	HSIP NCC, N54, HOWELL SCHOOL ROAD, SR 896 TO SR 71	CONTRACT T200504110 / COUNTY NEW CASTLE	BRIDGE NO. BR 1-376 & 1-378 / DESIGNED BY: RMG / CHECKED BY: PAH	GRADES & GEOMETRICS	SHEET NO. 51 / TOTAL SHTS. 138

COORDINATE LIST				
POINT NO.	STATION	OFFSET	NORTHING	EASTING
60075	127+05.0000	-28.0000	572442.1482	566699.9347
60076	127+55.0000	-16.0000	572414.9475	566743.5710
60077	131+27.3310	-16.0000	572297.1651	567096.7815
60078	132+00.0000	-16.0000	572277.5269	567165.3023
60079	129+72.4337	27.0000	572305.3732	566936.2363
60080	129+92.4337	37.0000	572289.5600	566952.0458
60081	129+96.9286	47.0000	572278.6516	566953.1465
60082	129+97.4337	52.0000	572273.7486	566952.0440
60083	21+01.0829	7.0000	572227.1863	566936.5172
60084	21+86.4233	7.0000	572181.1162	566879.5456

COORDINATE LIST				
POINT NO.	STATION	OFFSET	NORTHING	EASTING
60085	23+21.3229	7.0000	572166.1653	566745.4770
60086	23+44.9177	23.7365	572180.1837	566720.1727
60087	23+50.2557	38.9779	572194.7397	566713.1784
60088	23+65.2143	38.7751	572192.8803	566698.3344
60089	23+58.6980	20.3313	572175.2722	566706.8547
60090	23+68.1268	7.0000	572160.9781	566698.9615
60091	24+26.9838	7.0000	572154.4550	566640.4671
60092	24+26.9838	-11.0643	572136.5021	566642.4692
60093	24+16.1318	-20.6264	572128.2015	566654.3140
60094	24+15.5866	-34.2184	572114.7537	566656.3622

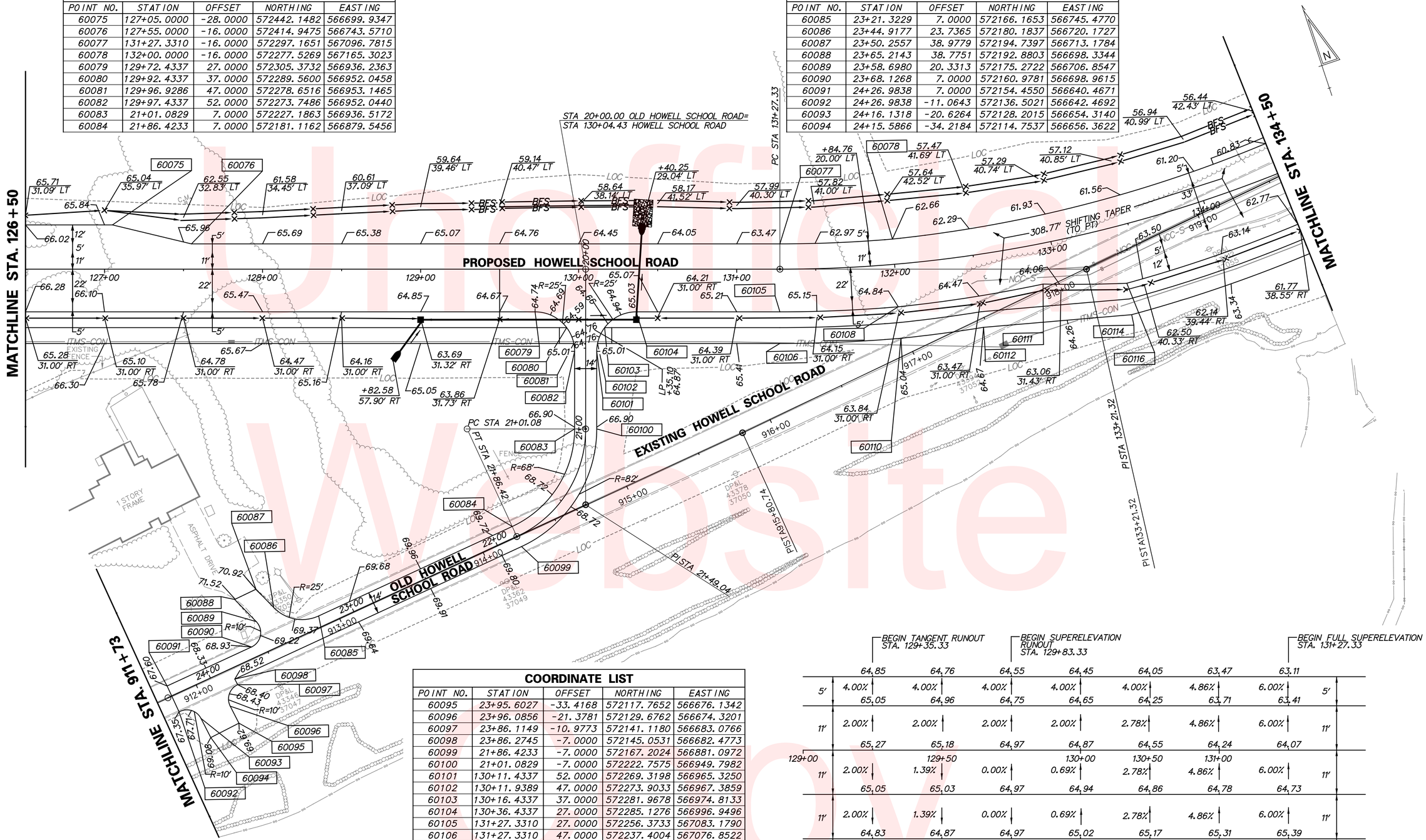

COORDINATE LIST				
POINT NO.	STATION	OFFSET	NORTHING	EASTING
60095	23+95.6027	-33.4168	572117.7652	566676.1342
60096	23+96.0856	-21.3781	572129.6762	566674.3201
60097	23+86.1149	-10.9773	572141.1180	566683.0766
60098	23+86.2745	-7.0000	572145.0531	566682.4773
60099	21+86.4233	-7.0000	572167.2024	566881.0972
60100	21+01.0829	-7.0000	572222.7575	566949.7982
60101	130+11.4337	52.0000	572269.3198	566965.3250
60102	130+11.9389	47.0000	572273.9033	566967.3859
60103	130+16.4337	37.0000	572281.9678	566974.8133
60104	130+36.4337	27.0000	572285.1276	566996.9496
60105	131+27.3310	27.0000	572256.3733	567083.1790
60106	131+27.3310	47.0000	572237.4004	567076.8522
60108	132+00.0000	27.0000	572235.7226	567155.2326
60110	132+00.0000	46.9971	572216.2815	567150.5497
60111	132+90.0000	25.4025	572220.3764	567246.6988
60112	132+50.0000	46.1111	572206.3127	567202.3373
60114	133+38.1903	56.5437	572184.2600	567293.7680
60116	133+40.0000	36.5084	572204.1036	567297.1276

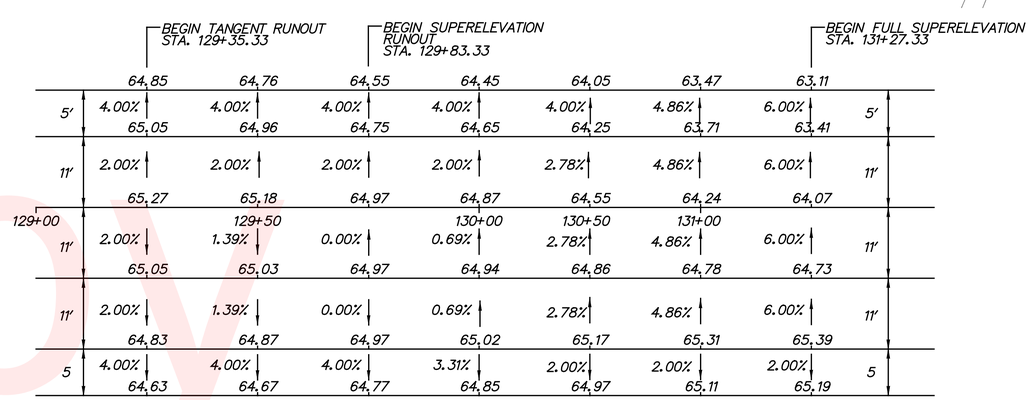

SUPERELEVATION ANNOTATION
N.T.S.

Unofficial Website Copy

DELAWARE DEPARTMENT OF TRANSPORTATION	ADDENDUMS / REVISIONS	SCALE 0 30 60 90 FEET	HSIP NCC, N54, HOWELL SCHOOL ROAD, SR 896 TO SR 71	CONTRACT T200504110	BRIDGE NO. BR 1-376 & 1-378	GRADES & GEOMETRICS	SHEET NO. 52
				COUNTY NEW CASTLE	DESIGNED BY: RMG		TOTAL SHTS. 138
					CHECKED BY: PAH		

COORDINATE LIST				
POINT NO.	STATION	OFFSET	NORTHING	EASTING
60119	135+08.7735	-21.5000	572266.4972	567465.4532
60120	138+70.0000	-21.5000	572312.2100	567823.7756
60121	141+70.0000	-16.0000	572344.7189	568122.0597
60122	135+08.7820	33.5000	572211.9404	567472.4218
60124	135+08.7816	53.5028	572192.0984	567474.9528
60125	135+68.9769	31.5000	572221.5419	567531.8796
60127	135+59.5384	53.5002	572198.5241	567525.3011
60128	135+98.8445	53.8213	572203.1798	567564.3319
60130	136+43.9769	106.5000	572156.6361	567615.7678
60131	136+43.9214	160.0000	572103.5592	567622.4832
60132	136+67.9769	160.0000	572106.6034	567646.3452
60133	136+67.9769	119.5000	572146.7778	567641.2200
60135	137+12.2765	52.8846	572218.4636	567676.7334
60136	137+87.6008	35.1700	572245.5680	567749.2104
60138	137+67.9769	19.5000	572258.6287	567727.7612

COORDINATE LIST				
POINT NO.	STATION	OFFSET	NORTHING	EASTING
60139	138+70.0000	19.5000	572271.5396	567828.9641
60141	138+70.1253	35.1700	572256.0114	567831.0714
60142	141+42.9521	40.1779	572285.5697	568102.3385
60143	141+62.9254	40.1233	572288.1515	568122.1444
60144	141+70.1253	29.6700	572299.4319	568127.9635
60146	141+70.0000	14.0000	572314.9600	568125.8562
60147	136+12.6565	23.5000	572235.0053	567574.1957
60148	136+39.9769	23.5000	572238.4626	567601.2965
60149	136+41.9769	25.5000	572236.7318	567603.5335
60150	136+41.9769	47.9936	572214.4190	567606.3800
60151	136+38.4334	49.2655	572212.7089	567603.0260
60152	136+11.7073	27.2603	572231.1550	567573.7300
60153	136+71.9769	23.5000	572242.5122	567633.0392
60154	136+98.3134	23.5000	572245.8450	567659.1640
60155	136+99.5042	27.1068	572242.4179	567660.8017
60156	136+69.9769	25.5000	572240.2752	567631.3084
60157	136+73.6179	53.7627	572212.7004	567638.4967
60158	136+69.9769	52.6195	572213.3737	567634.7403

END FULL SUPERELEVATION STA. 135+08.77

END SUPERELEVATION RUNOUT STA. 136+52.77

END TANGENT RUNOUT STA. 137+00.77

		60.40	60.52	60.56	60.28	60.27	59.98	59.98	
5′	6.00%	60.70	4.28% 60.73	4.00% 60.76	4.00% 60.48	4.00% 60.47	4.00% 60.18	4.00% 60.18	5′
11′	6.00%	61.36	4.28% 61.20	2.20% 61.00	2.00% 60.70	2.00% 60.69	2.00% 60.40	2.00% 60.40	11′
5.5′	6.00%	61.69	4.28% 61.44	2.20% 61.12	2.00% 60.81	2.00% 60.80	2.00% 60.51	2.00% 60.51	5.5′
135+00 5.5′	6.00%	62.02	135+50 4.28% 61.67	136+00 2.20% 61.25	136+50 0.12% 60.82	0.00% 60.80	137+00 1.97% 60.40	2.00% 60.40	5.5′
11′	6.00%	62.68	4.28% 62.14	2.20% 61.49	0.12% 60.83	0.00% 60.80	1.97% 60.18	2.00% 60.18	11′
5′	2.00%	62.58	2.00% 62.04	2.00% 61.39	2.00% 60.73	2.00% 60.70	2.00% 60.08	2.00% 60.08	5′
12′	2.00%	62.34	2.00% 61.80	2.00% 61.15	2.00% 60.63	2.00% 60.60	2.00% 60.98	2.00% 59.98	5′

SUPERELEVATION ANNOTATION
N.T.S.

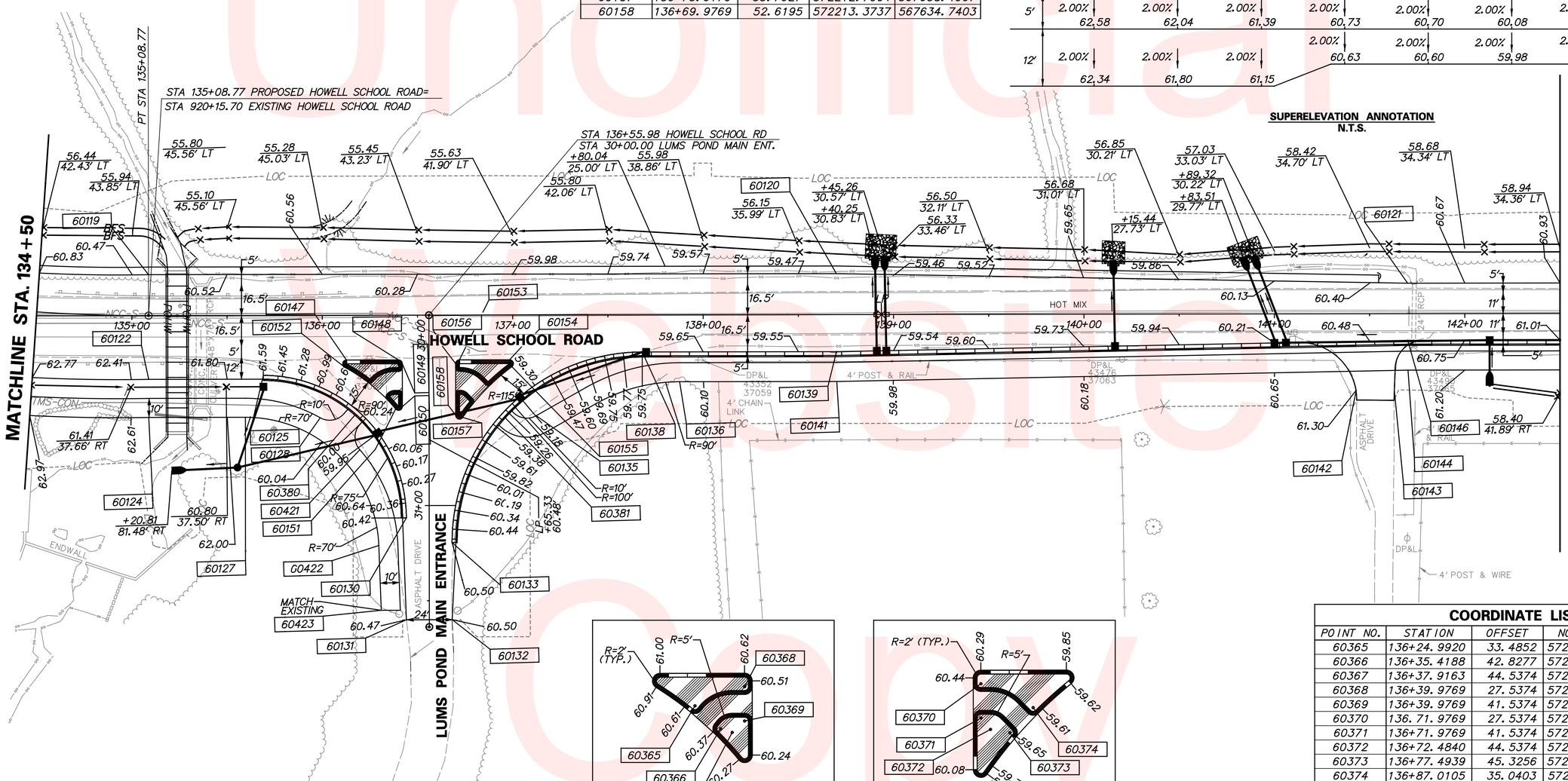

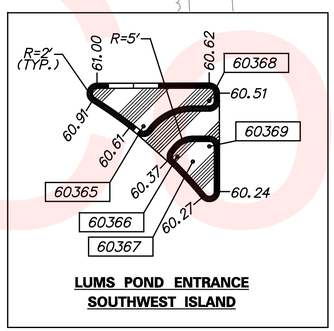

LUMS POND ENTRANCE SOUTHWEST ISLAND

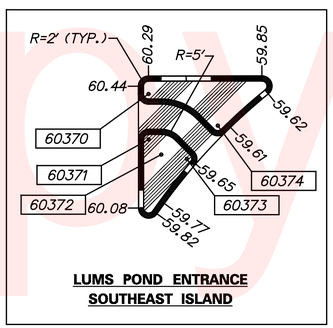

LUMS POND ENTRANCE SOUTHEAST ISLAND

COORDINATE LIST				
POINT NO.	STATION	OFFSET	NORTHING	EASTING
60365	136+24.9920	33.4852	572226.6614	567587.6956
60366	136+35.4188	42.8277	572218.7134	567599.2209
60367	136+37.9163	44.5374	572217.3335	567601.9147
60368	136+39.9769	27.5374	572234.4576	567601.8074
60369	136+39.9769	41.5374	572220.5702	567603.5791
60370	136.71.9769	27.5374	572238.5072	567633.5501
60371	136+71.9769	41.5374	572224.6198	567635.3218
60372	136+72.4840	44.5374	572221.7080	567636.2045
60373	136+77.4939	45.3256	572221.5602	567641.2739
60374	136+87.0105	35.0403	572232.9671	567649.4123
60380	136+17.4697	51.9342	572207.4087	567582.5685
60381	136+95.9980	53.9805	572215.3166	567660.7245
60421	136+19.5864	70.6379	572189.1233	567587.0351
60422	136+29.4938	120.9576	572140.4618	567603.2308
60423	136+30.7311	155.00	572106.8497	567608.7662

NOTES:
1. IN CURB GUTTER AREAS, SPOT ELEVATIONS ARE FOR FRONT EDGE OF GUTTER.
2. ALL RADII ALONG THE EXTERIOR BOUNDARY OF THE CONCRETE CHANNELIZATION ISLANDS ARE TWO FEET (2′), INCLUDING THE CURB RETURNS FOR THE CURB RAMP, UNLESS NOTED OTHERWISE ON THE PLANS. ALL RADII FOR THE INTERIOR PORTION OF THE CURB RAMPS ARE FIVE FEET (5′) UNLESS OTHERWISE NOTED ON THE PLANS.

Unofficial Website Copy

DELAWARE DEPARTMENT OF TRANSPORTATION

ADDENDUMS / REVISIONS

SCALE 0 30 60 90 FEET

HSIP NCC, N54, HOWELL SCHOOL ROAD, SR 896 TO SR 71

CONTRACT	BRIDGE NO. BR 1-376 & 1-378
T200504110	DESIGNED BY: RMG
COUNTY	CHECKED BY: PAH
NEW CASTLE	

GRADES & GEOMETRICS

SHEET NO. 53
TOTAL SHTS. 138

COORDINATE LIST				
POINT NO.	STATION	OFFSET	NORTHING	EASTING
60159	143+57.7772	-16.0000	572368.4819	568308.3272
60160	144+57.7639	-16.0000	572382.0822	568407.0600
60161	145+50.0000	-14.0000	572393.6033	568498.5956
60162	146+30.6500	-31.3594	572422.5796	568575.8364
60163	146+42.4710	-31.1096	572424.0626	568587.5667
60164	148+57.8738	-14.0000	572438.6634	568803.1541
60165	149+57.8605	-14.0000	572452.3456	568902.4811
60166	143+57.7772	14.0000	572338.7230	568312.1237
60168	143+57.7772	29.6700	572323.1790	568314.1067
60169	144+57.7639	14.0000	572352.4053	568411.4507
60171	144+57.7639	29.6700	572336.9040	568413.7442
60172	145+28.9096	50.0000	572327.2053	568487.0966
60173	145+37.5203	50.0000	572328.4660	568495.6172
60174	146+23.6034	40.0000	572350.9573	568579.3098
60175	146+32.9830	40.0000	572352.3301	568588.5883
60176	147+84.7881	45.0000	572369.6020	568739.4906
60177	148+03.4644	45.0000	572372.3354	568757.9658
60178	148+20.3496	45.0000	572374.8067	568774.6691

COORDINATE LIST				
POINT NO.	STATION	OFFSET	NORTHING	EASTING
60179	148+37.4413	45.0000	572377.3082	568791.5767
60180	148+57.8738	29.6700	572395.4636	568809.5456
60182	148+57.8738	14.0000	572410.9649	568807.2522
60183	149+57.8605	14.0000	572424.5707	568906.0245
60185	149+57.8605	29.6700	572409.0267	568908.0075

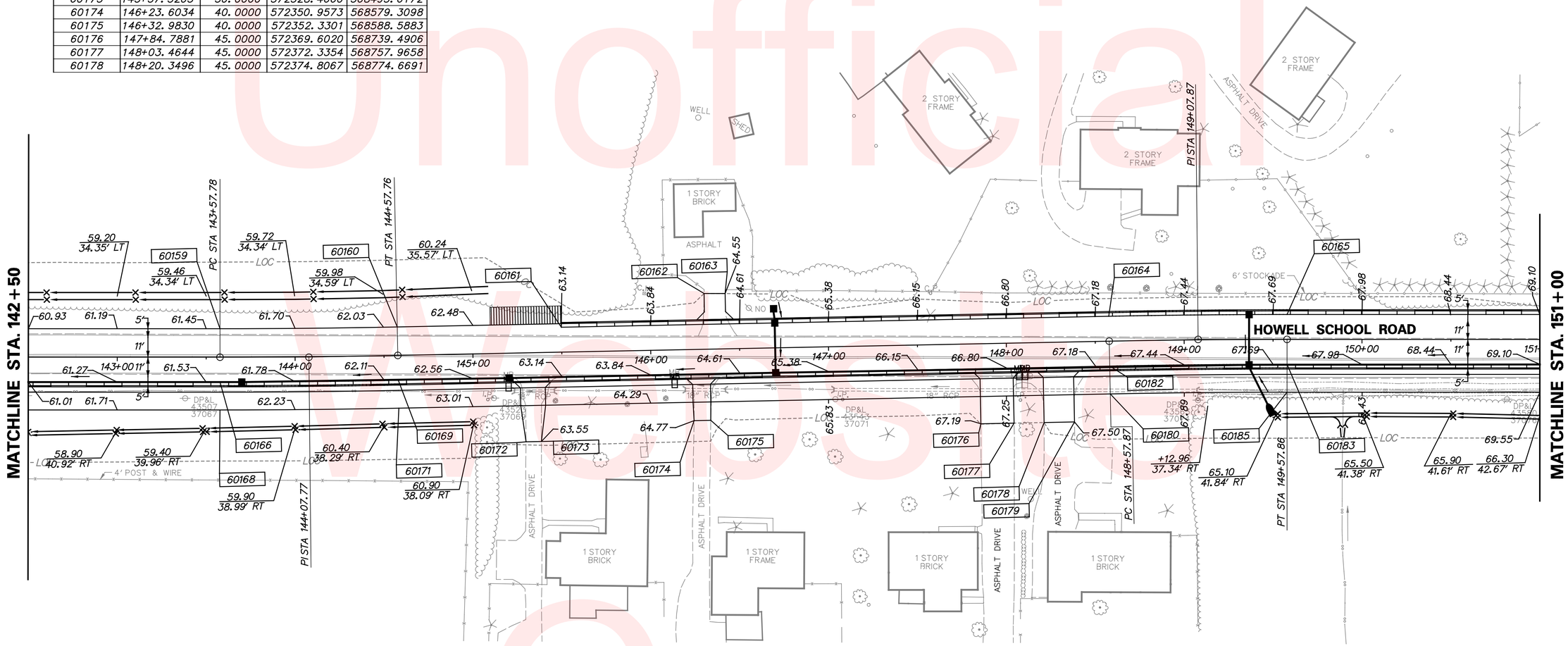

NOTE:
1. IN CURB GUTTER AREAS, SPOT ELEVATIONS ARE FOR FRONT EDGE OF GUTTER.

Unofficial Web Copy

DELAWARE DEPARTMENT OF TRANSPORTATION	ADDENDUMS / REVISIONS	SCALE 0 30 60 90 FEET	HSIP NCC, N54, HOWELL SCHOOL ROAD, SR 896 TO SR 71	CONTRACT T200504110	BRIDGE NO. BR 1-376 & 1-378	GRADES & GEOMETRICS	SHEET NO. 54
				COUNTY NEW CASTLE	DESIGNED BY: RMG		TOTAL SHTS. 138
					CHECKED BY: PAH		

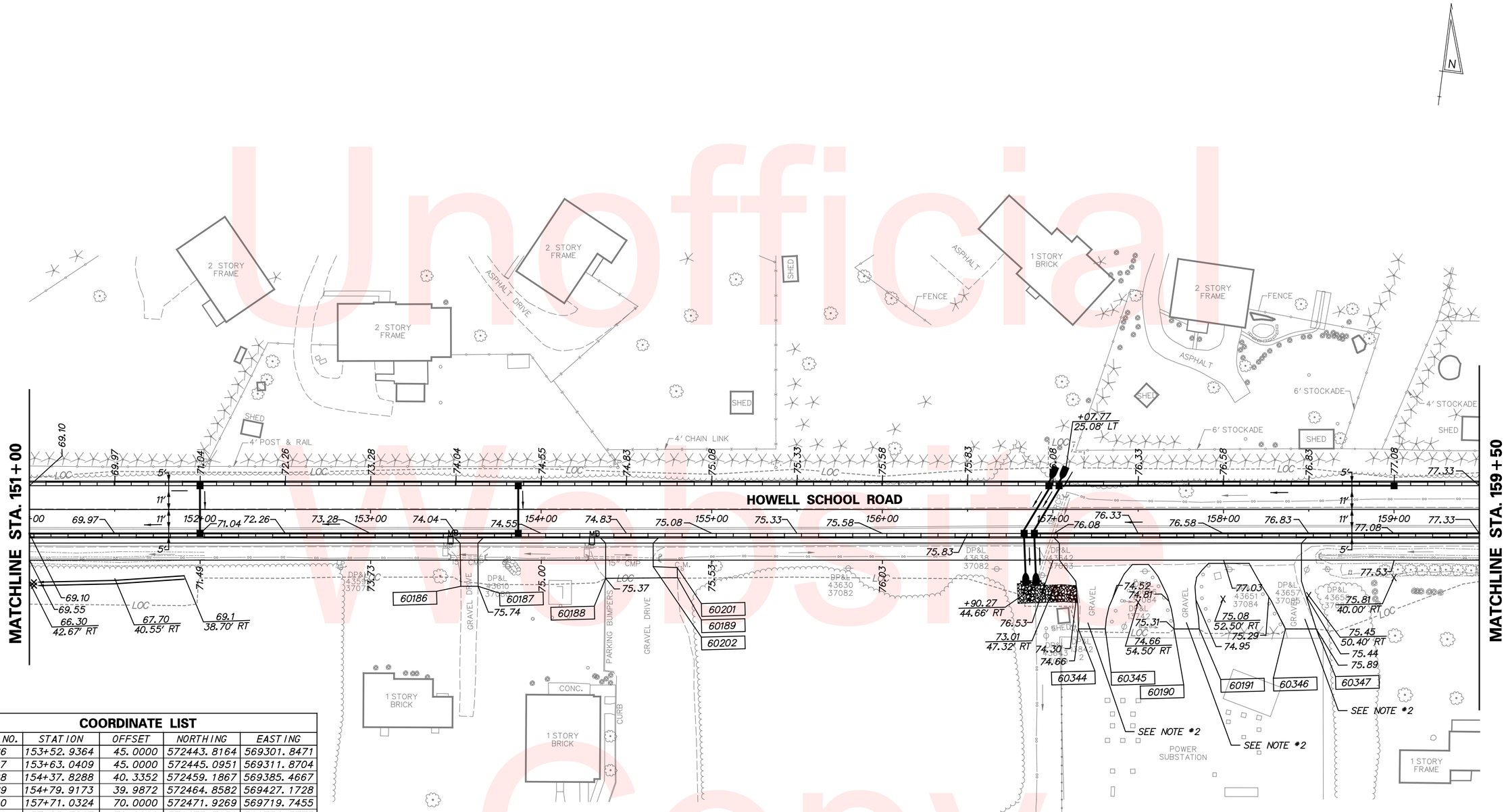

COORDINATE LIST				
POINT NO.	STATION	OFFSET	NORTHING	EASTING
60186	153+52.9364	45.0000	572443.8164	569301.8471
60187	153+63.0409	45.0000	572445.0951	569311.8704
60188	154+37.8288	40.3352	572459.1867	569385.4667
60189	154+79.9173	39.9872	572464.8582	569427.1728
60190	157+71.0324	70.0000	572471.9269	569719.7455
60191	157+85.7827	70.0000	572473.7936	569734.3773
60201	154+79.7867	34.0458	572470.7352	569426.2914
60202	154+65.7014	33.4612	572469.5327	569412.2454
60344	157+14.9502	70.0000	572464.8298	569664.1142
60345	157+30.7517	70.0000	572466.8295	569679.7887
60346	158+36.3241	70.0000	572480.1895	569784.5124
60347	158+54.3634	70.0000	572482.4724	569802.4066

NOTES:

1. IN CURB GUTTER AREAS, SPOT ELEVATIONS ARE FOR FRONT EDGE OF GUTTER.
2. MATCH EXISTING ENTRANCE GEOMETRICS AT DELMARVA SUB STATION ENTRANCE AS DIRECTED BY THE ENGINEER.

Unofficial Website Copy

DELAWARE DEPARTMENT OF TRANSPORTATION	ADDENDUMS / REVISIONS	SCALE 0 30 60 90 FEET	HSIP NCC, N54, HOWELL SCHOOL ROAD, SR 896 TO SR 71	CONTRACT T200504110	BRIDGE NO. BR 1-376 & 1-378	GRADES & GEOMETRICS	SHEET NO. 55
				COUNTY NEW CASTLE	DESIGNED BY: RMG		TOTAL SHTS. 138
					CHECKED BY: PAH		

COORDINATE LIST

POINT NO.	STATION	OFFSET	NORTHING	EASTING
60192	161+68.8590	-14.0000	572605.5961	570103.7436
60193	162+88.3623	-14.0000	572627.4476	570219.4587
60194	163+16.6700	-14.0000	572634.3520	570246.9114
60195	164+42.6413	-41.5272	572691.7731	570362.3641
60196	164+31.1999	-22.7921	572670.8133	570355.8379
60197	164+12.2760	-17.8250	572661.3805	570338.6971
60198	41+03.3183	-30.2651	572773.8438	570423.4786
60199	41+22.7838	-26.0000	572793.6902	570425.2722
60200	41+21.8935	-35.6667	572791.5963	570415.7931
60203	42+14.9171	-35.6667	572883.8875	570404.1436
60204	42+35.9806	-35.8906	572904.7566	570401.2796
60205	42+35.9806	-49.3399	572903.0727	570387.9397
60206	42+71.0160	-84.3399	572933.4490	570348.8275
60207	42+77.7400	-84.3331	572940.1209	570347.9922
60208	42+77.7394	-74.9779	572941.2920	570357.2738
60209	42+75.1242	-74.7832	572938.7217	570357.7945
60210	42+51.9806	-49.8522	572918.8826	570385.4276
60211	42+51.9806	-36.0672	572920.6090	570399.1041
60212	42+65.0000	-36.2081	572933.5083	570397.3338
60213	42+65.0000	-28.5410	572934.4685	570404.9406
60214	42+25.9659	-6.1978	572898.5399	570431.9964
60215	42+61.9745	-6.2248	572934.2616	570427.4600
60216	42+65.0000	-6.2331	572937.2622	570427.0728
60217	42+65.0000	5.8756	572938.7787	570439.0862

COORDINATE LIST

POINT NO.	STATION	OFFSET	NORTHING	EASTING
60218	42+62.0012	5.8859	572935.8048	570439.4720
60219	42+65.0000	27.6046	572941.5000	570460.6441
60220	42+65.0000	33.2715	572942.2097	570466.2664
60221	42+25.9854	5.9945	572900.0862	570444.0902
60222	42+15.0448	33.6665	572892.6973	570472.9145
60223	42+15.0000	28.0000	572891.9432	570467.2982
60224	41+47.5300	33.6667	572825.7140	570481.3701
60226	41+22.5300	33.6667	572800.9108	570484.5010
60227	41+22.5300	26.0000	572799.9507	570476.8946
60228	40+94.5793	37.1265	572773.6135	570491.4340
60229	40+93.3089	32.2997	572771.7487	570486.8043
60230	166+66.5370	-17.8241	572693.3134	570593.4117
60231	167+62.3381	-14.0000	572689.7609	570689.2234
60232	159+71.4566	40.3900	572526.6624	569914.8113
60233	159+79.2267	40.3900	572527.6456	569922.5189
60234	160+65.3501	40.0000	572538.9313	570007.9005
60235	160+75.2559	40.0000	572540.1849	570017.7267
60236	161+68.8590	14.0000	572577.8212	570107.2870
60238	161+68.8590	29.6667	572562.2805	570109.2696
60239	162+64.1050	46.7100	572562.6775	570209.5701
60240	162+74.5262	46.7100	572565.1360	570220.1973
60241	162+88.3623	14.0000	572600.2932	570226.2881
60413	164+07.3993	-139.7288	572778.4132	570304.2345
60414	166+71.4050	-139.7269	572815.2296	570597.9341
60415	164+06.8988	149.7061	572497.5975	570374.3442
60416	166+59.7590	120.1761	57255.2946	570587.0251

COORDINATE LIST

POINT NO.	STATION	OFFSET	NORTHING	EASTING
60243	162+88.3623	29.6667	572585.0997	570230.1093
60244	162+96.7302	58.2239	572559.4459	570245.1898
60245	163+04.5620	59.1823	572560.4267	570253.0188
60247	163+16.3915	29.6667	572591.9362	570257.2920
60248	163+16.6700	14.0000	572607.1977	570253.7408
60249	164+12.1646	17.8112	572626.7934	570347.2809
60250	163+79.0189	54.1131	572583.5034	570323.9905
60252	164+20.0000	39.3292	572607.8361	570360.1273
60253	164+03.8496	57.0177	572586.7429	570348.7798
60254	164+31.2983	22.6954	572626.7236	570367.0283
60255	164+41.0657	24.9675	572626.9024	570377.0547
60256	40+93.3794	-32.3462	572763.7225	570422.6585
60257	40+91.1924	-48.5645	572759.5216	570406.8418
60258	164+94.4280	50.9001	572614.7684	570435.1305
60259	164+87.5428	97.9930	572567.4184	570439.9395
60260	165+05.3338	100.1293	572569.6860	570457.7143
60261	165+87.6149	48.0704	572627.1954	570514.6768
60262	166+55.6890	18.2573	572657.2014	570582.6661
60263	166+97.8379	55.1548	572620.4236	570624.9194
60264	167+07.5839	54.7687	572620.8372	570634.6643
60265	167+62.3381	14.0000	572661.7610	570689.3027
60348	166+69.3828	65.3165	572610.1812	570596.4933
60349	166+79.3676	64.0314	572611.4946	570606.4743

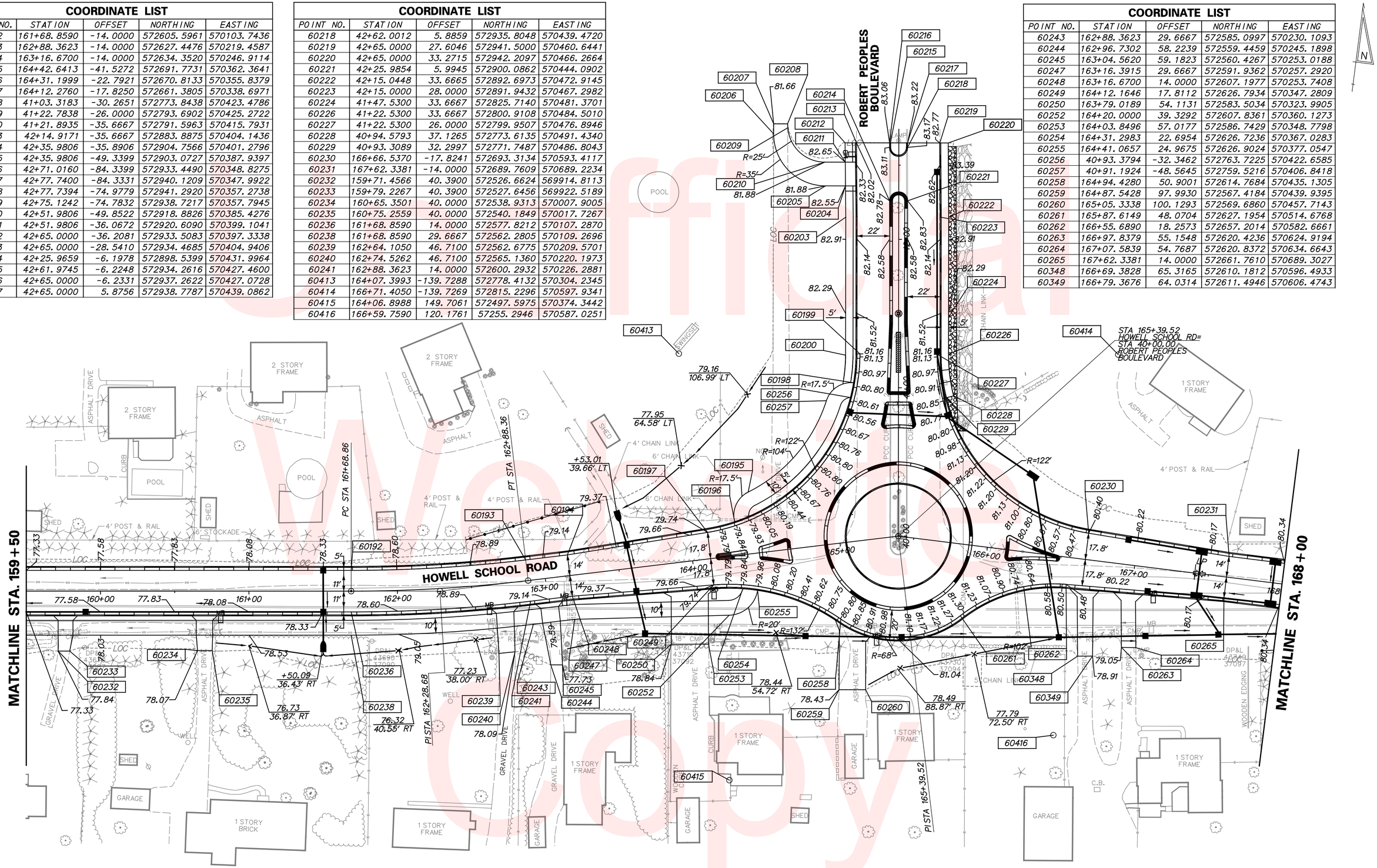

NOTES:
1. SEE NEXT SHEET FOR ISLAND COORDINATES AND SPOT ELEVATIONS.
2. IN CURB GUTTER AREAS, SPOT ELEVATIONS ARE FOR FRONT EDGE OF GUTTER.

Unofficial Web Copy

DELAWARE DEPARTMENT OF TRANSPORTATION	ADDENDUMS / REVISIONS	SCALE 0 30 60 90 FEET	HSIP NCC, N54, HOWELL SCHOOL ROAD, SR 896 TO SR 71	CONTRACT T200504110 / COUNTY NEW CASTLE	BRIDGE NO. BR 1-376 & 1-378 / DESIGNED BY: RMG / CHECKED BY: PAH	GRADES & GEOMETRICS	SHEET NO. 56 / TOTAL SHTS. 138

COORDINATE LIST

POINT NO.	STATION	OFFSET	NORTHING	EASTING
60266	164+18.0231	-2.6012	572648.0182	570347.9837
60267	164+26.1585	-2.6441	572650.0441	570355.8630
60268	164+35.1648	-2.9570	572652.5443	570364.5210
60269	164+37.2930	-0.9611	572651.1277	570367.0718
60270	164+37.2930	0.8556	572649.3658	570367.5148
60271	164+35.0398	2.8395	572646.8924	570365.8135
60272	164+26.2791	1.9767	572645.5923	570357.1070
60273	164+17.8949	1.3939	572644.1125	570348.8339
60274	164+45.2931	-2.2030	572654.2834	570374.5273
60275	164+47.0100	-4.1828	572656.6221	570375.7095
60276	164+62.8122	-7.2989	572663.4984	570390.2744
60277	164+66.6422	-4.2431	572661.4691	570394.7341
60278	164+66.8983	7.4334	572650.2077	570397.8303
60279	164+64.2733	9.5335	572647.5308	570395.7969
60280	164+46.8848	4.8264	572647.8545	570377.7855
60281	164+45.2929	2.8684	572649.3651	570375.7640
60282	40+72.5497	-8.0954	572746.0939	570449.3270
60283	40+76.2126	-11.3497	572749.3204	570445.6396

COORDINATE LIST

POINT NO.	STATION	OFFSET	NORTHING	EASTING
60284	40+88.6634	-8.9850	572761.9693	570446.4264
60285	40+90.3719	-7.0045	572763.9124	570448.1774
60286	40+99.9925	-5.5728	572773.6366	570448.3929
60287	41+02.0653	-7.5741	572775.4424	570446.1478
60288	41+43.7543	-6.0553	572816.9934	570442.4337
60289	41+43.7701	5.9379	572818.5111	570454.3304
60290	41+02.0943	7.7495	572777.3903	570461.3472
60291	41+00.0075	5.7541	572775.0700	570459.6287
60292	40+90.3584	7.1413	572765.6706	570462.2134
60293	40+88.6470	9.1184	572764.2203	570464.3894
60294	40+76.1955	11.4640	572752.1605	570468.2759
60295	40+72.5375	8.2043	572748.1231	570465.4999
60296	166+12.1338	-7.4873	572682.8224	570539.0381
60297	166+14.8717	-9.5471	572684.8899	570541.7701
60298	166+47.4878	-0.4273	572675.8627	570574.4119
60299	166+47.1984	3.5463	572671.8882	570574.1338
60300	166+16.0542	7.2713	572668.0750	570543.0003
60301	166+12.3994	4.1732	572671.1627	570539.3368
60417	165+39.5188	0.0000	572675.1292	570466.4446

NOTES:

1. IN CURB GUTTER AREAS, SPOT ELEVATIONS ARE FOR FRONT EDGE OF GUTTER.
2. ALL RADII ALONG THE EXTERIOR BOUNDARY OF THE CONCRETE CHANNELIZATION ISLANDS ARE TWO FEET (2'), INCLUDING THE CURB RETURNS FOR THE CURB RAMP, UNLESS NOTED OTHERWISE ON THE PLANS. ALL RADII FOR THE INTERIOR PORTION OF THE CURB RAMPS ARE FIVE FEET (5') UNLESS OTHERWISE NOTED ON THE PLANS.

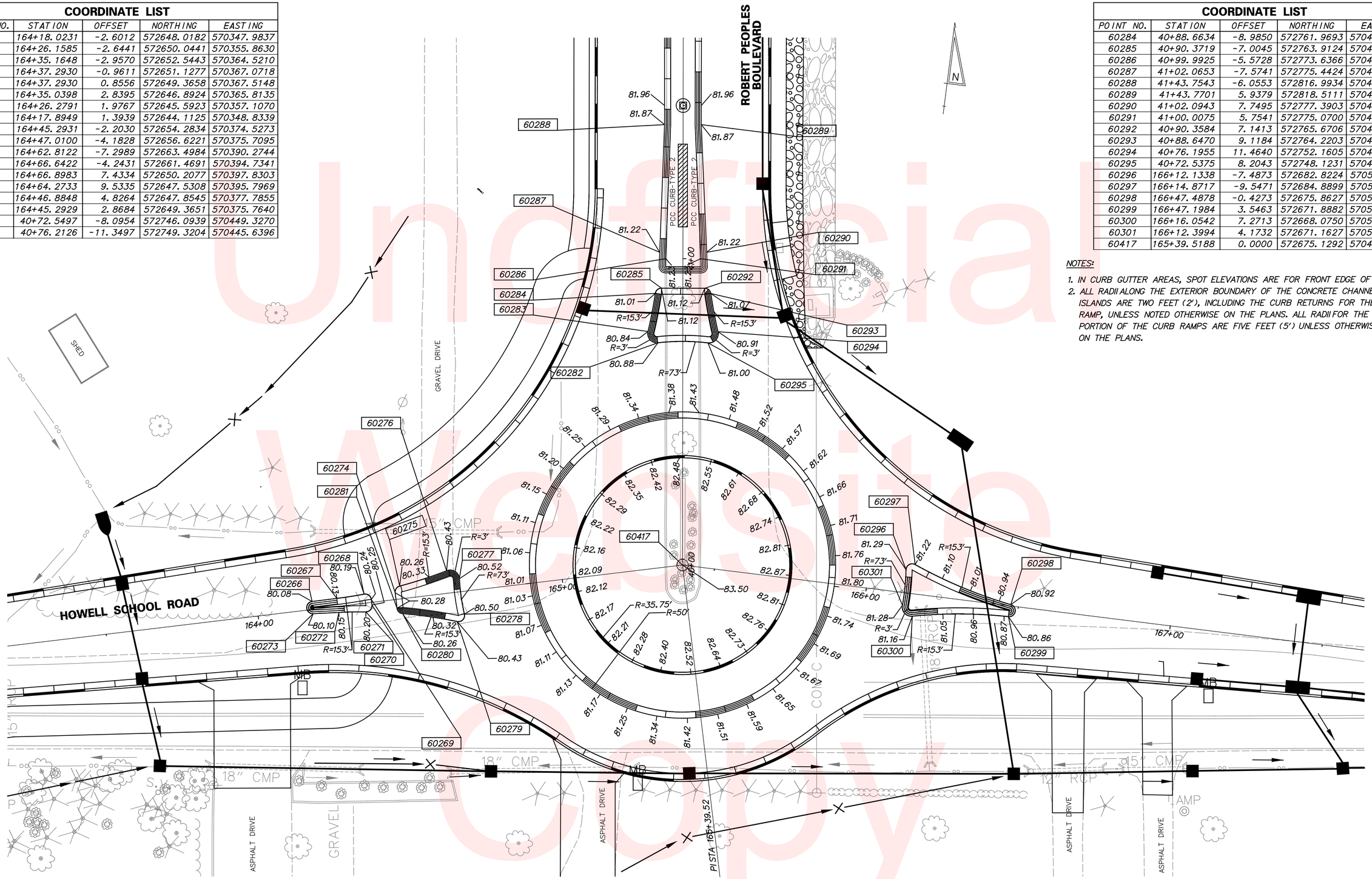

Unofficial Website Copy

DELAWARE DEPARTMENT OF TRANSPORTATION	ADDENDUMS / REVISIONS	SCALE 0 15 30 45 FEET	HSIP NCC, N54, HOWELL SCHOOL ROAD, SR 896 TO SR 71	CONTRACT T200504110	BRIDGE NO. BR 1-376 & 1-378	GRADES & GEOMETRICS	SHEET NO. 57
				COUNTY NEW CASTLE	DESIGNED BY: RMG		TOTAL SHTS. 138
					CHECKED BY: PAH		

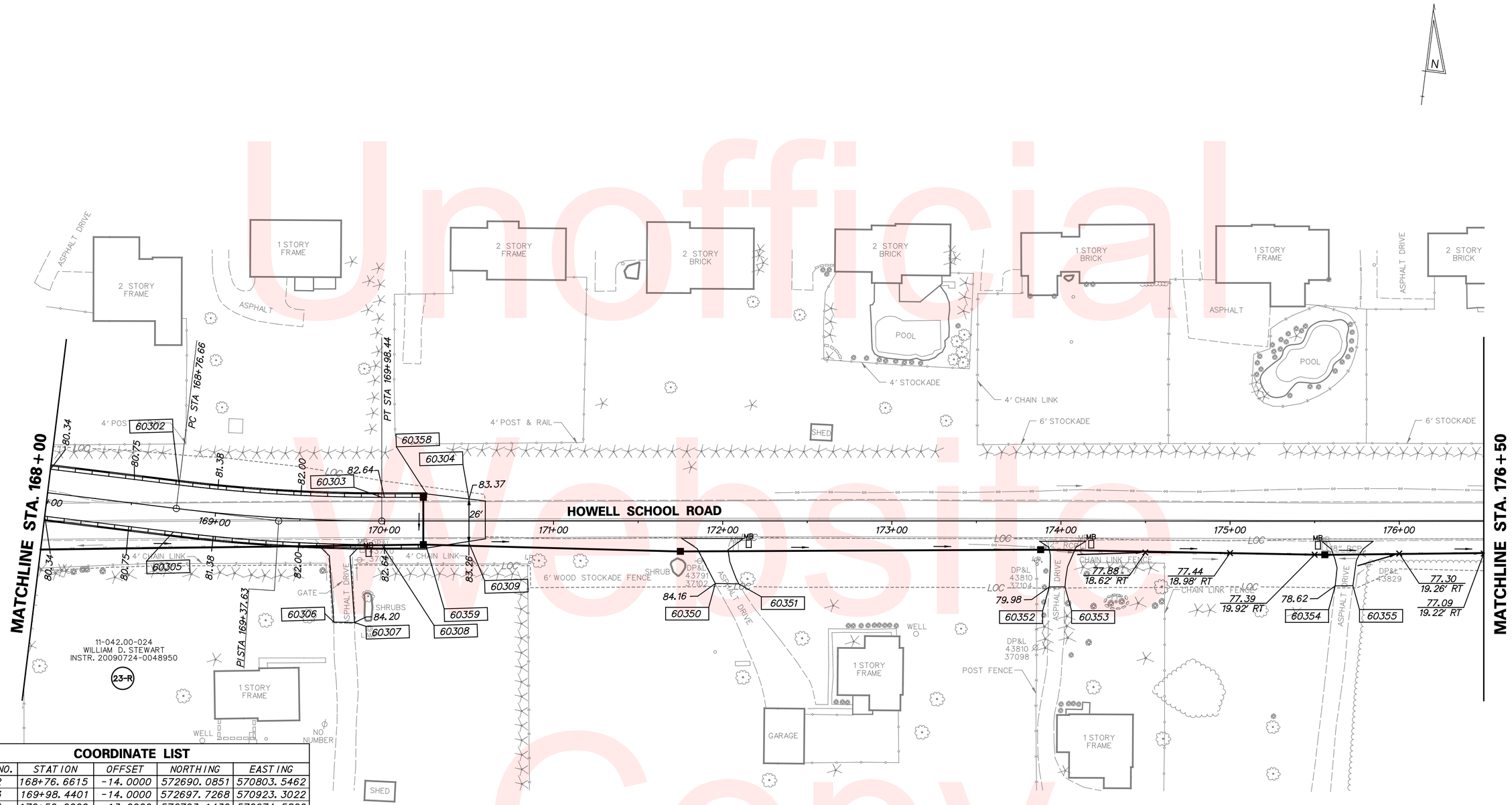

COORDINATE LIST				
POINT NO.	STATION	OFFSET	NORTHING	EASTING
60302	168+76.6615	-14.0000	572690.0851	570803.5462
60303	169+98.4401	-14.0000	572697.7268	570923.3022
60304	170+50.0000	-13.0000	572703.1430	570974.5866
60305	168+76.6615	14.0000	572662.0852	570803.6256
60306	169+71.6867	60.1500	572621.0034	570904.3319
60307	169+83.2326	60.1500	572622.2696	570916.5066
60308	169+98.4401	14.0000	572669.9439	570926.7824
60309	170+50.0000	13.0000	572677.3446	570977.8182
60350	171+95.6585	36.9756	572671.6591	571125.3272
60351	172+09.5386	37.1987	572673.1629	571139.1273
60352	173+93.0713	39.0002	572694.1869	571321.4608
60353	174+02.3837	38.9513	572695.3929	571330.6949
60354	175+62.1383	38.3787	572715.8172	571489.1396
60355	175+72.6278	38.2737	572717.2251	571499.5346
60358	170+25.0000	-16.0000	572703.0125	570949.4076
60359	170+25.0000	16.0000	572671.2606	570953.3849

NOTE:
1. IN CURB GUTTER AREAS, SPOT ELEVATIONS ARE FOR FRONT EDGE OF GUTTER.

Unofficial Website Copy

DELAWARE DEPARTMENT OF TRANSPORTATION

ADDENDUMS / REVISIONS

SCALE 0 30 60 90 FEET

HSIP NCC, N54, HOWELL SCHOOL ROAD, SR 896 TO SR 71

CONTRACT	BRIDGE NO. BR 1-376 & 1-378	GRADES & GEOMETRICS	SHEET NO.
T200504110	DESIGNED BY: RMG		58
COUNTY			TOTAL SHTS.
NEW CASTLE	CHECKED BY: PAH		138

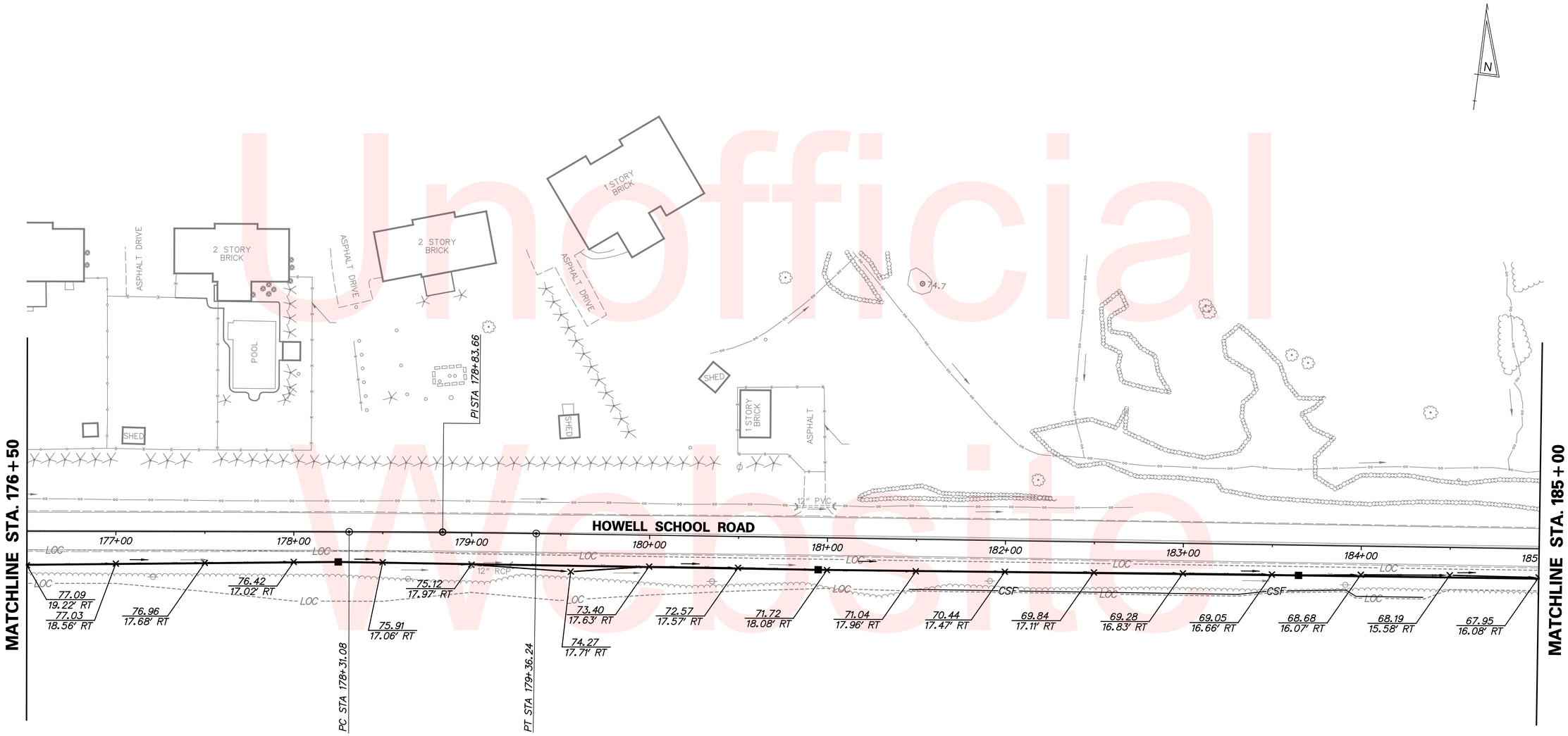

Unofficial Website Copy

DELAWARE DEPARTMENT OF TRANSPORTATION	ADDENDUMS / REVISIONS	SCALE 0 30 60 90 FEET	HSIP NCC, N54, HOWELL SCHOOL ROAD, SR 896 TO SR 71	CONTRACT T200504110	BRIDGE NO. BR 1-376 & 1-378	GRADES & GEOMETRICS	SHEET NO. 59
				COUNTY NEW CASTLE	DESIGNED BY: RMG		TOTAL SHTS. 138
					CHECKED BY: PAH		

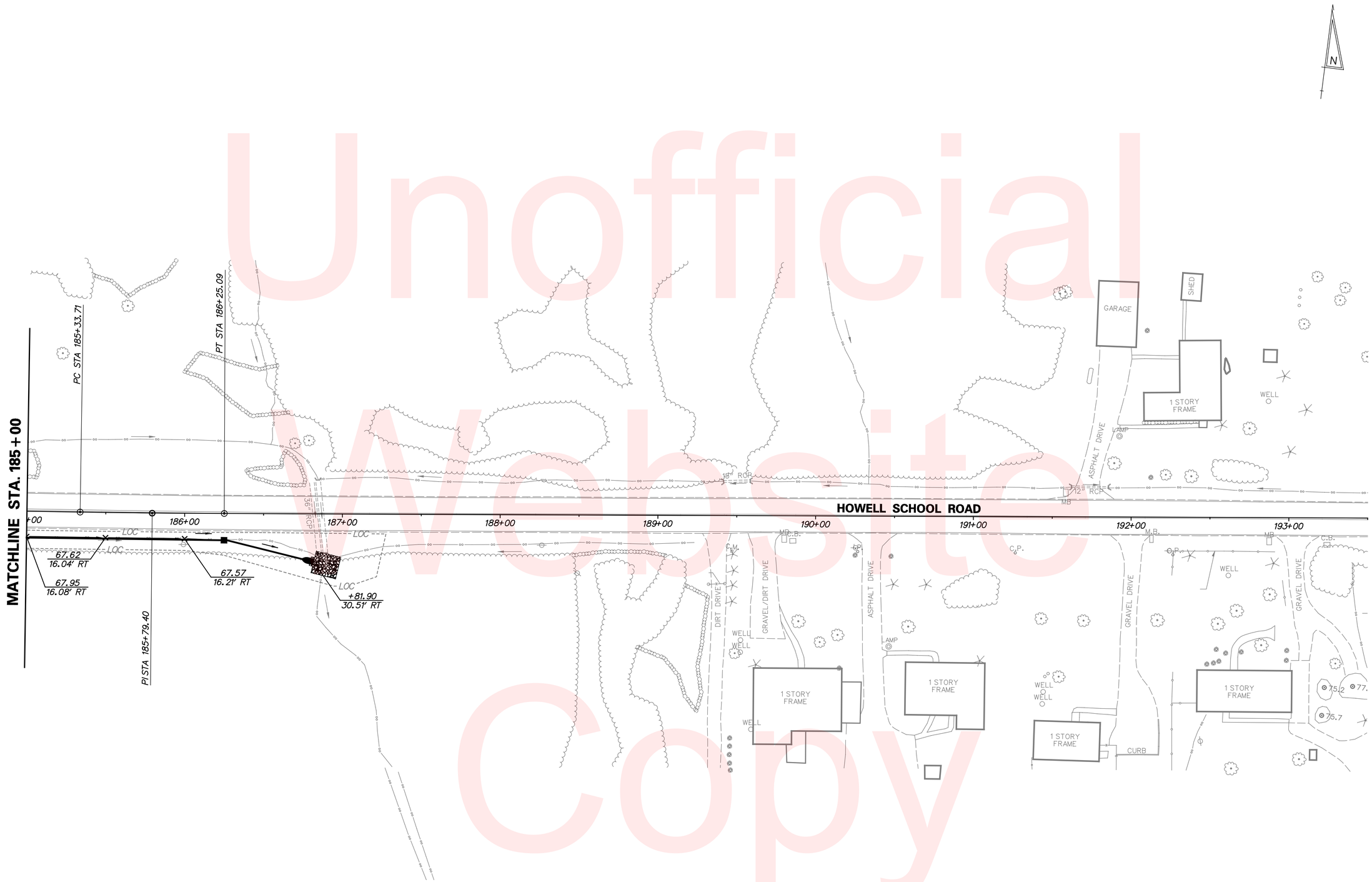

Unofficial Website Copy

DELAWARE DEPARTMENT OF TRANSPORTATION	ADDENDUMS / REVISIONS	SCALE 0 30 60 90 FEET	HSIP NCC, N54, HOWELL SCHOOL ROAD, SR 896 TO SR 71	CONTRACT T200504110	BRIDGE NO. BR 1-376 & 1-378	GRADES & GEOMETRICS	SHEET NO. 60
				COUNTY NEW CASTLE	DESIGNED BY: RMG		TOTAL SHTS. 138
					CHECKED BY: PAH		

COORDINATE LIST				
POINT NO.	STATION	OFFSET	NORTHING	EASTING
60310	428+79.5640	102.3579	571955.6870	565577.1816
60311	429+12.1470	102.9079	571988.2012	565573.3977
60312	429+19.0250	99.2532	571994.5615	565568.8558
60313	432+03.4070	100.6533	572277.2528	565530.6174
60314	432+03.2845	96.4476	572276.5342	565526.4718
60315	428+79.0171	147.2554	571961.0484	565621.7612
60316	430+68.1738	150.3324	572150.0907	565598.9875
60317	431+25.7784	157.1470	572208.4348	565597.5638

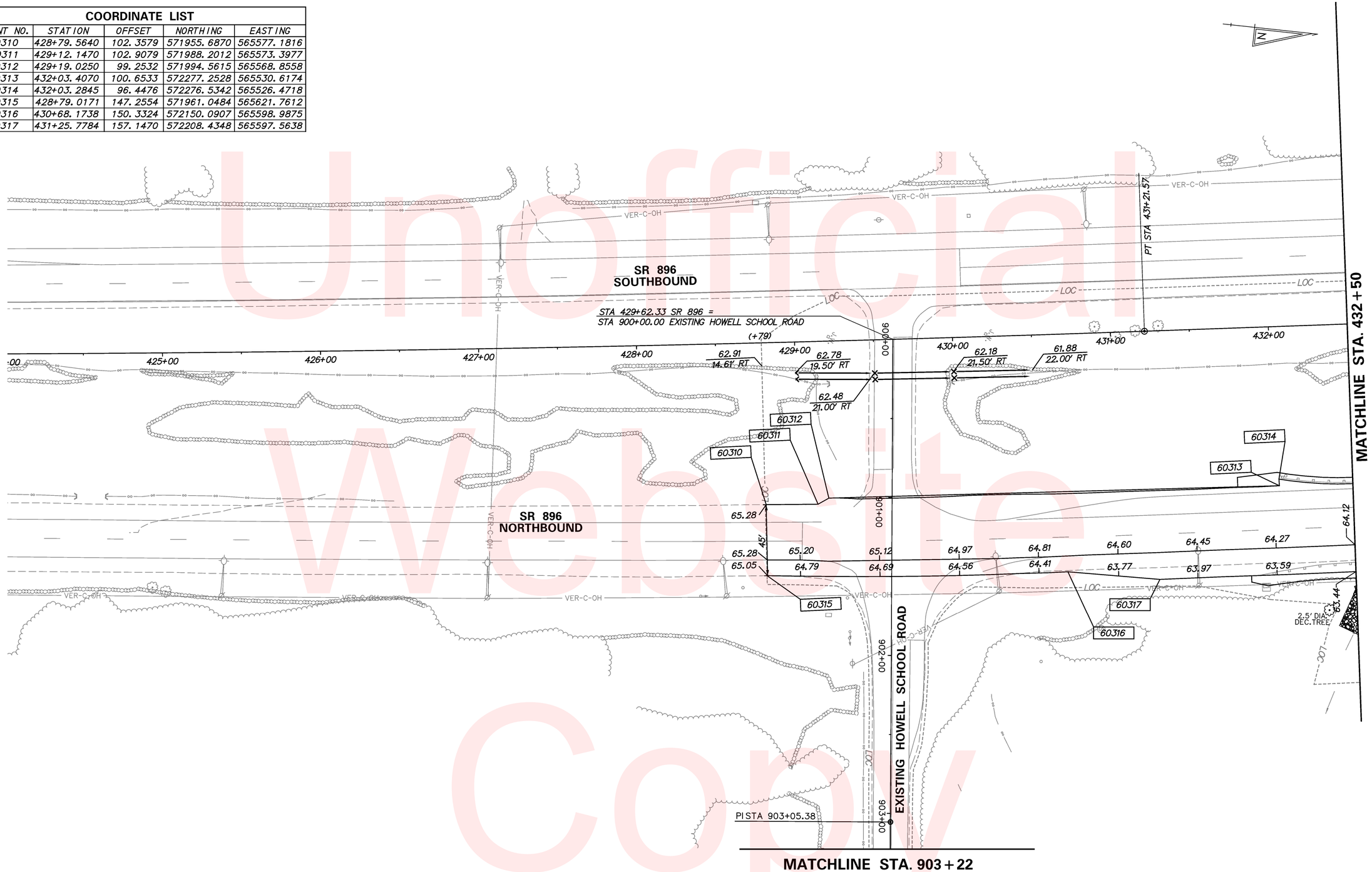

Unofficial Website Copy

DELAWARE
DEPARTMENT OF TRANSPORTATION

ADDENDUMS / REVISIONS

SCALE
0 30 60 90
FEET

HSIP NCC, N54, HOWELL SCHOOL ROAD, SR 896 TO SR 71

CONTRACT	BRIDGE NO. BR 1-376 & 1-378
T200504110	DESIGNED BY: RMG
COUNTY	
NEW CASTLE	CHECKED BY: PAH

GRADES & GEOMETRICS

SHEET NO.
61
TOTAL SHTS.
138

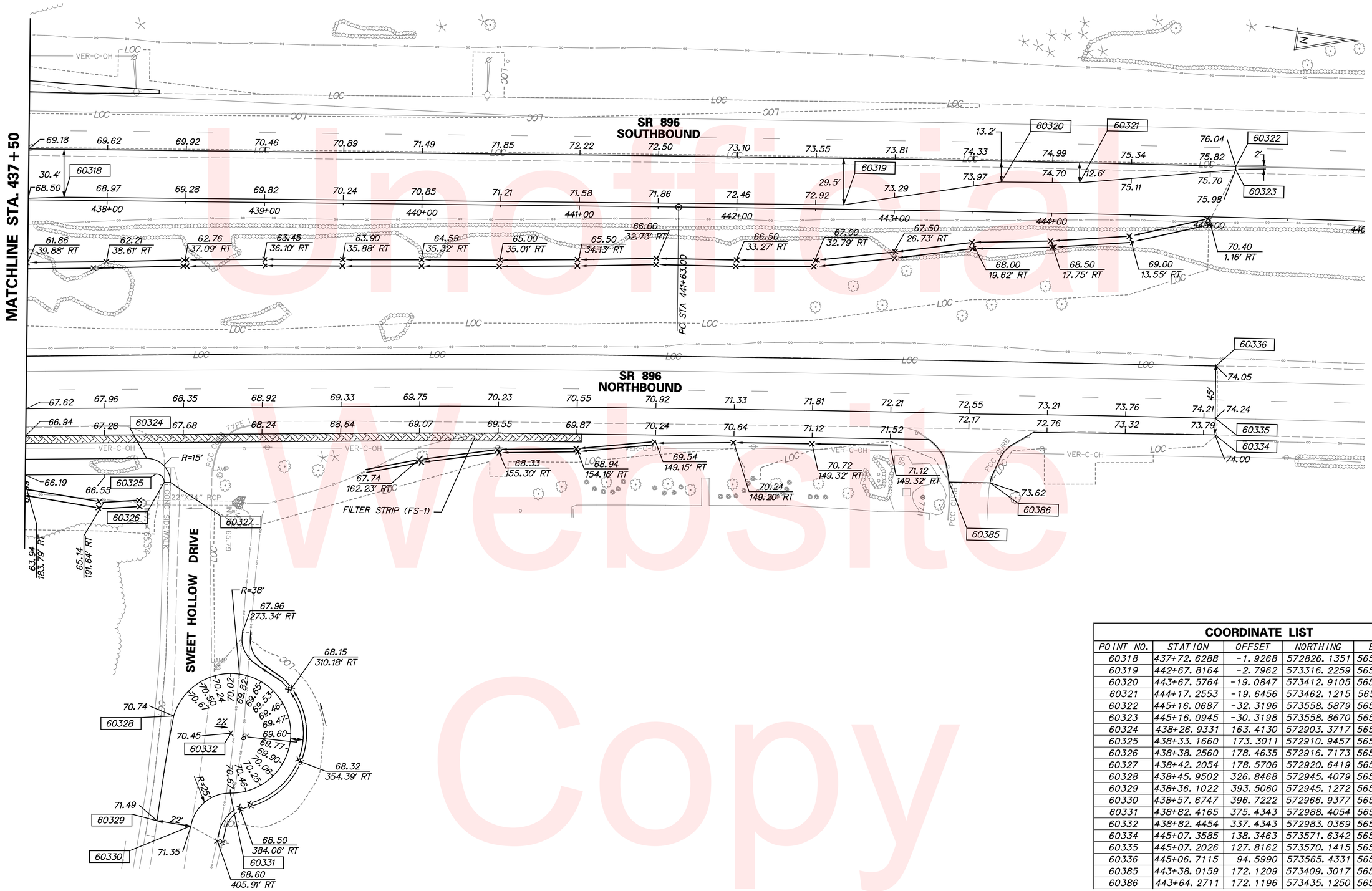

COORDINATE LIST				
POINT NO.	STATION	OFFSET	NORTHING	EASTING
60318	437+72.6288	-1.9268	572826.1351	565348.2325
60319	442+67.8164	-2.7962	573316.2259	565277.2775
60320	443+67.5764	-19.0847	573412.9105	565247.6308
60321	444+17.2553	-19.6456	573462.1215	565240.5061
60322	445+16.0687	-32.3196	573558.5879	565215.1865
60323	445+16.0945	-30.3198	573558.8670	565217.1669
60324	438+26.9331	163.4130	572903.3717	565504.1835
60325	438+33.1660	173.3011	572910.9457	565513.0862
60326	438+38.2560	178.4635	572916.7173	565517.4733
60327	438+42.2054	178.5706	572920.6419	565517.0184
60328	438+45.9502	326.8468	572945.4079	565663.2597
60329	438+36.1022	393.5060	572945.1272	565730.6418
60330	438+57.6747	396.7222	572966.9377	565730.7615
60331	438+82.4165	375.4343	572988.4054	565706.1754
60332	438+82.4454	337.4343	572983.0369	565668.5565
60334	445+07.3585	138.3463	573571.6342	565385.5748
60335	445+07.2026	127.8162	573570.1415	565375.1498
60336	445+06.7115	94.5990	573565.4331	565342.2644
60385	443+38.0159	172.1209	573409.3017	565441.0592
60386	443+64.2711	172.1196	573435.1250	565437.5688

Unofficial Website Copy

DELAWARE
DEPARTMENT OF TRANSPORTATION

ADDENDUMS / REVISIONS

SCALE
0 30 60 90
FEET

HSIP NCC, N54, HOWELL SCHOOL ROAD, SR 896 TO SR 71

CONTRACT T200504110
COUNTY NEW CASTLE

BRIDGE NO. BR 1-376 & 1-378
DESIGNED BY: RMG
CHECKED BY: PAH

GRADES & GEOMETRICS

SHEET NO. 62
TOTAL SHTS. 138

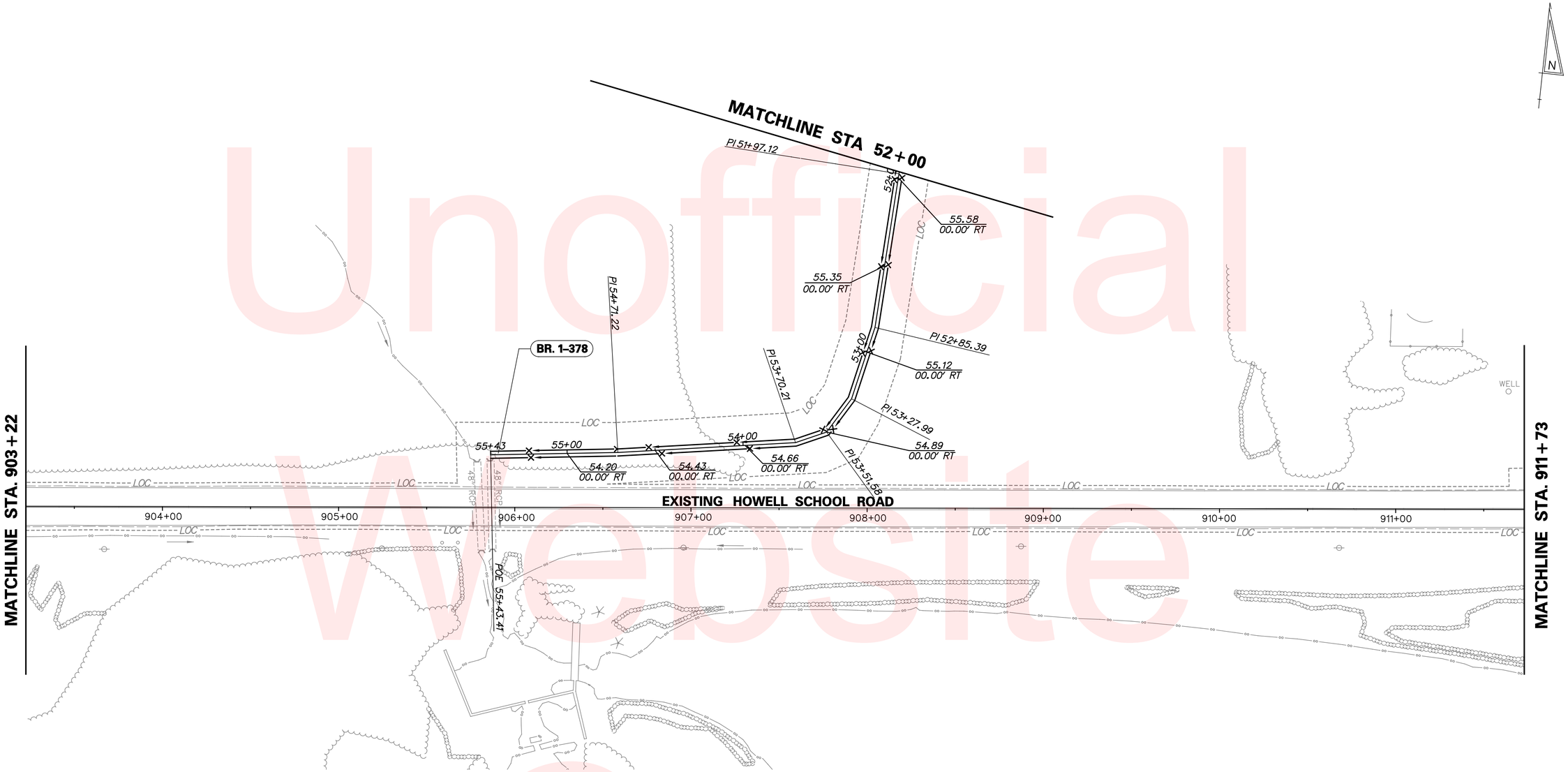

Unofficial Website Copy

DELAWARE DEPARTMENT OF TRANSPORTATION	ADDENDUMS / REVISIONS	SCALE 0 30 60 90 FEET	HSIP NCC, N54, HOWELL SCHOOL ROAD, SR 896 TO SR 71	CONTRACT T200504110	BRIDGE NO. BR 1-376 & 1-378	GRADES & GEOMETRICS	SHEET NO. 63
				COUNTY NEW CASTLE	DESIGNED BY: RMG		TOTAL SHTS. 138
					CHECKED BY: PAH		

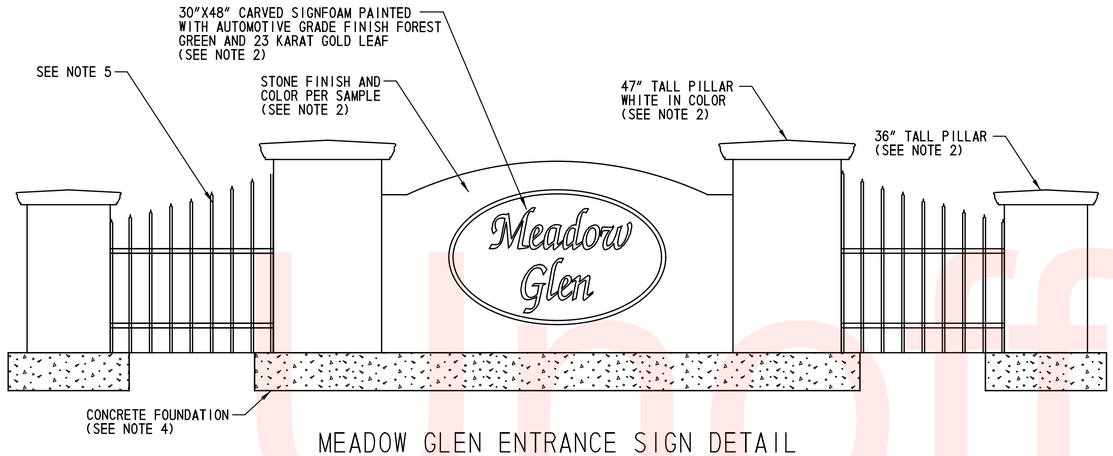

MEADOW GLEN ENTRANCE SIGN DETAIL

N.T.S.

NOTES

1. *ALL WORK AND MATERIALS ASSOCIATED WITH THE SUPPLY, FABRICATION AND INSTALLATION OF THE PROPOSED MEADOW GLEN SIGNS ON EACH SIDE OF THE ENTRANCE OF MEADOW GLEN DRIVE SHALL BE PAID FOR UNDER ITEM 763537 - SUBDIVISION ENTRANCE SIGN. SHOP DRAWINGS SHALL BE SUPPLIED AS OUTLINED IN THE SPECIAL PROVISION FOR THE ABOVE REFERENCED CONCEPTUAL DETAIL, AND SUBMITTED FOR APPROVAL PRIOR TO FABRICATION.*
2. *PRIOR TO THE REMOVAL OF THE EXISTING MEADOW GLEN SUBDIVISION ENTRANCE SIGN AT SWEET HOLLOW DRIVE, CONTRACTOR SHALL SURVEY THE DIMENSIONS AND FEATURES OF THE EXISTING SIGN, AS NOTED IN THE DETAIL. SHOP DRAWINGS FOR PROPOSED ENTRANCE SIGNS SHALL BE PREPARED IN ACCORDANCE WITH EXISTING SIGN DIMENIONS AND SPECIFICATIONS. THE INTENT IS THAT THE NEW SIGNS MATCH THE EXISTING SIGN IN KIND. PAYMENT FOR SURVEYING AND VERIFYING THE EXISTING SIGN SHALL BE PAID FOR UNDER ITEM 763501 - CONSTRUCTION ENGINEERING.*
3. *PAYMENT FOR THE REMOVAL AND DISPOSAL OF THE EXISTING SIGN AT SWEET HOLLOW DRIVE SHALL BE PAID FOR UNDER ITEM 211000 - REMOVAL OF STRUCTURES AND OBSTRUCTIONS.*
4. *THE PROPOSED SIGN FOUNDATION SHALL BE INCLUDED IN THE SHOP DRAWING SUBMITTAL. ALL WORK AND MATERIALS ASSOCIATED WITH THE SIGN FOUNDATION SHALL BE PAID FOR UNDER ITEM 763537 - SUBDIVISION ENTRANCE SIGN.*
5. *DECORATIVE FENCE SHALL BE INDUSTRIAL STRENGTH ALUMINUM DECORATIVE FENCE, COLOR SHALL BE BLACK. PAYMENT FOR FENCE FABRICATION, SUPPLY AND INSTALLATION SHALL BE PAID FOR UNDER ITEM 763537 - SUBDIVISION ENTRANCE SIGN.*
6. *COORDINATE ELECTRIC SERVICE TRANSFER AND METER INSTALLATION WITH DELMARVA POWER, AS DIRECTED BY THE ENGINEER.*
7. *SEE CONSTRUCTION PLANS FOR LANDSCAPING DETAILS AROUND PROPOSED SIGNS.*

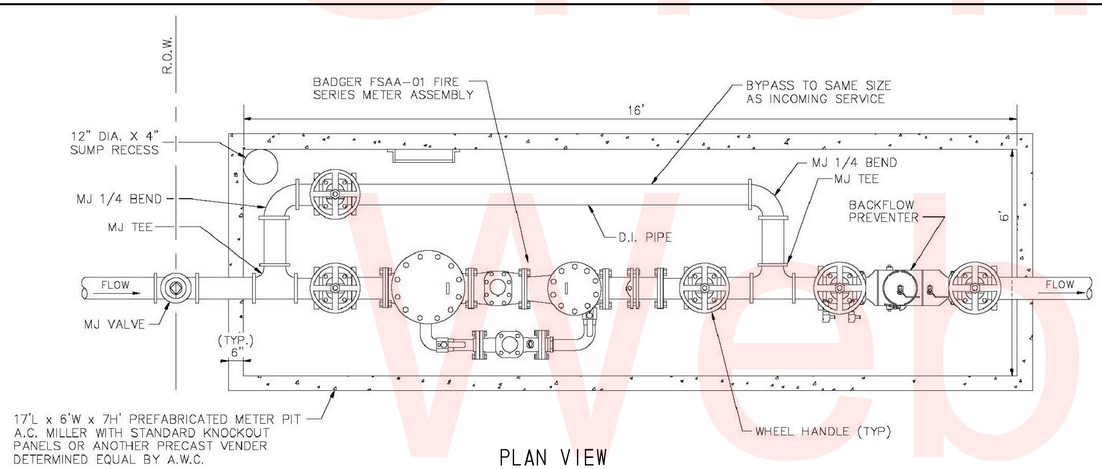

PLAN VIEW

SIZE	4 IN.	6 IN.	8 IN.	10 IN.	12 IN.
A	22.88 IN.	29.0 IN.	30.25 IN.	34.06 IN.	34.06 IN.
B	16.13 IN.	19.50 IN.	17.75 IN	20.31 IN	20.31 IN
C	28 IN. (TYP.)	28 IN. (TYP.)	28 IN. (TYP.)	28 IN. (TYP.)	28 IN. (TYP.)
D	33.0 IN.	45.0 IN.	53.0 IN.	68.0 IN.	68.0 IN.
E	20.63 IN.	22.38 IN.	25.06 IN.	25.31 IN.	33.0 IN.
F	24 IN. (TYP.)	24 IN. (TYP.)	24 IN. (TYP.)	24 IN. (TYP.)	24 IN. (TYP.)
NET WEIGHT	312 LBS	507 LBS	767 LBS	1073 LBS	1073 LBS
BY-PASS SIZE (NOM)	4 IN.	6 IN.	8 IN.	10 IN.	12 IN.

NOTES

1. SPECIFICATIONS DUE TO CHANGE WITHOUT NOTICE CONTACT ARTESIAN WATER COMPANY (A.W.C.), CARMEN HUNTER, (302)453-7153, FOR LATEST REVISION.
2. METER TO BE INSTALLED BEFORE TOP HALF OF PIT IS PLACED.
3. METER PIT TOP SLAB, FLOOR SLAB, AND WALLS TO BE REINFORCED.
4. EXTERIOR OF VAULT TO HAVE ONE COAT OF COOPERS BITUMASTIC C4-SP APPLIED.
5. PIPING MUST BE RESTRAINED WITH REACTION ANGLES ON THE EXTERIOR WALLS WITH RODDING THRU THE WALL TO THE FIRST FLANGE ON EACH END.
6. INFISHIELD EXTERNAL GATOR WRAP REQUIRED OVER TOP/BOTTOM JOINT.
7. WATER METER ASSEMBLIES TO BE INSTALLED IN ACCORDANCE WITH SPECIFICATION FOR ITEM 614508 - WATER SERVICE METER ASSEMBLIES, AND AS DIRECTED BY ARTESIAN WATER COMPANY. PAYMENT FOR SUPPLY AND INSTALLATION OF WATER METER ASSEMBLIES IS INCLUDED UNDER ITEM 614508 - WATER SERVICE METER ASSEMBLIES.

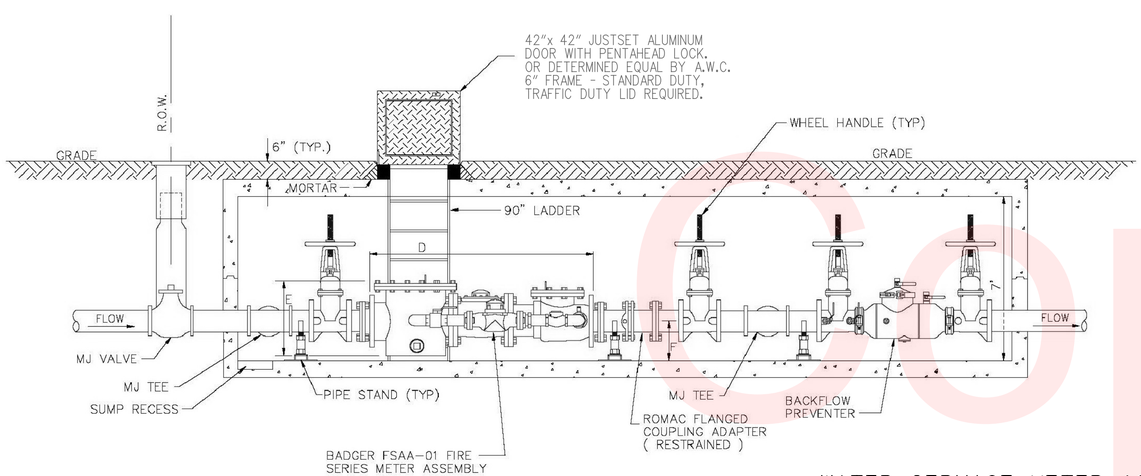

PROFILE VIEW

WATER SERVICE METER ASSEMBLIES

N.T.S.

Unofficial Website Copy

DELAWARE DEPARTMENT OF TRANSPORTATION	ADDENDUMS / REVISIONS	HSIP NCC, N54, HOWELL SCHOOL ROAD, SR 896 TO SR 71	CONTRACT T200504110	BRIDGE NO. BR 1-376 & 1-378	CONSTRUCTION DETAILS	SHEET NO. 64
			COUNTY NEW CASTLE	DESIGNED BY: RMG		TOTAL SHTS. 138
				CHECKED BY: PAH		

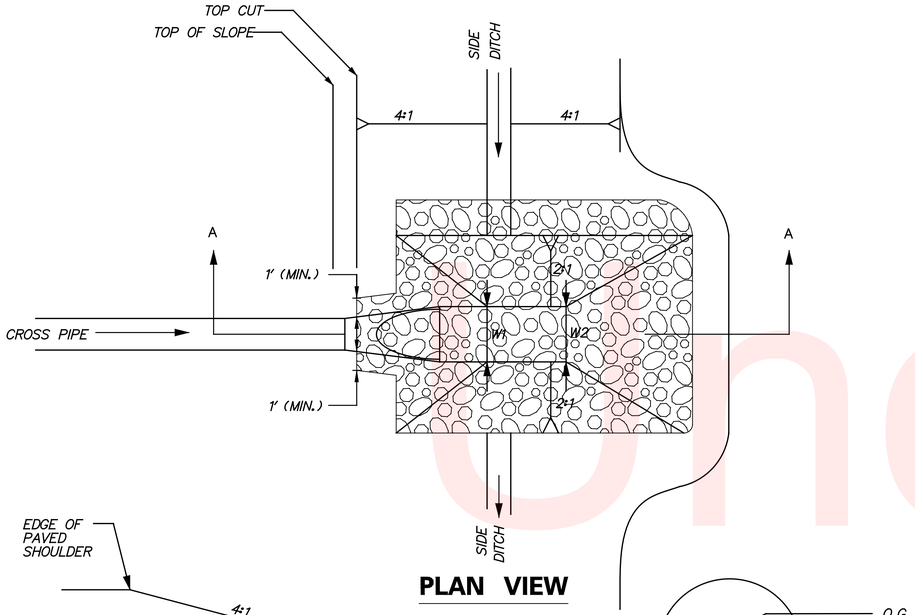

PLAN VIEW

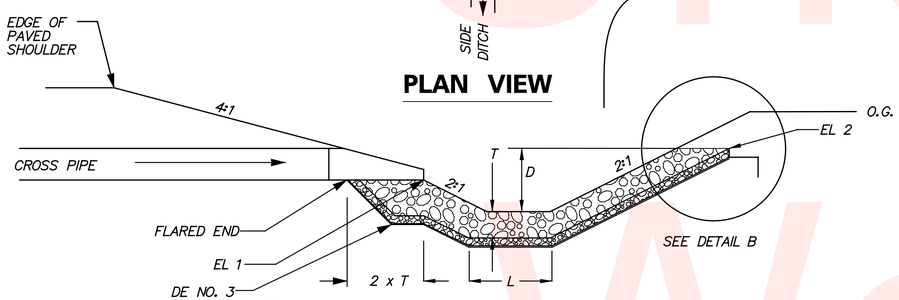

SECTION A–A

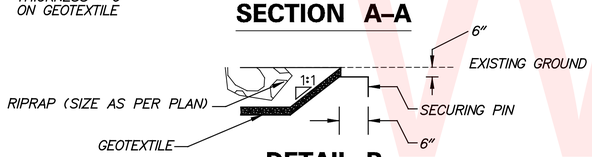

DETAIL B

NOTES:
1. PLACE RIPRAP AND CHOKE WITH DE NO. 3 STONE.
2. EL 2 SHALL BE HIGHER THAN EL 1
3. TOP OF RIPRAP ON SIDE SLOPES OF DITCHES SHALL BE 2 FEET ABOVE BOTTOM OF DITCHES.

TYPE 2 ENERGY DISSIPATOR DETAIL

ENERGY DISSIPATOR SCHEDULE

STATION	OFFSET	RIP RAP SIZE	D (FT)	T (FT)	W1 (FT)	W2 (FT)	L (FT)	EL 1 (FT)	EL 2 (FT)
111+50	62'	R4	2.0	1.2	3.0	3.0	7.0	61.30	62.75
111+80	60'	R5	2.0	1.7	6.5	6.5	21.0	59.15	60.50
112+33	87'	R4	2.0	1.2	3.0	3.0	9.0	60.00	61.00
113+85	78'	R4	0.5	1.2	4.0	4.0	10.0	60.40	60.50
115+50	110'	R4	0.5	1.2	3.0	3.0	12.0	58.10	58.20
122+45	-27'	R4	2.0	1.2	8.0	8.0	9.0	56.49	58.00
124+15	-35'	R4	0.5	1.2	3.0	3.0	8.0	61.40	61.50
130+40	-29'	R4	2.0	1.2	3.0	3.0	10.0	59.00	60.00
138+90	-28'	R4	2.0	1.2	8.0	8.0	6.0	56.31	59.42
140+15	-25	R4	2.0	1.2	4.0	4.0	4.0	56.73	59.72
140+87	-27	R4	2.0	1.2	4.0	4.0	4.0	56.73	59.72
156+90	45'	R4	0.5	1.2	7.0	7.0	10.0	72.30	72.70
186+82	30'	R5	2.0	1.7	5.0	5.0	9.0	62.49	64.00
905+81	-31'	R4	2.0	1.2	7.0	7.0	10.0	53.80	54.00
432+62*	167'	R5	2.0	1.7	22.0	22.0	22.0	56.81	55.90

*RIPRAP SHALL BE BACKFILLED AND SEEDED. SEE NOTE 4D, SHEET 79.

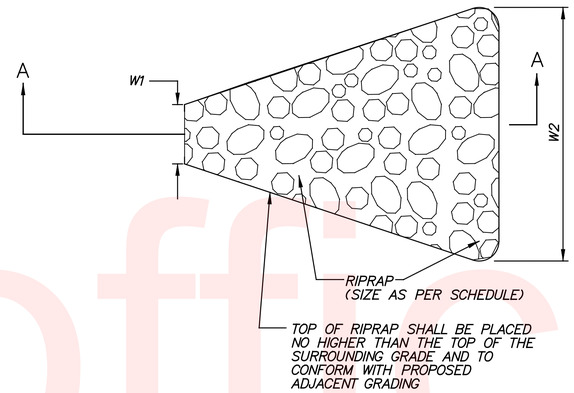

PLAN VIEW

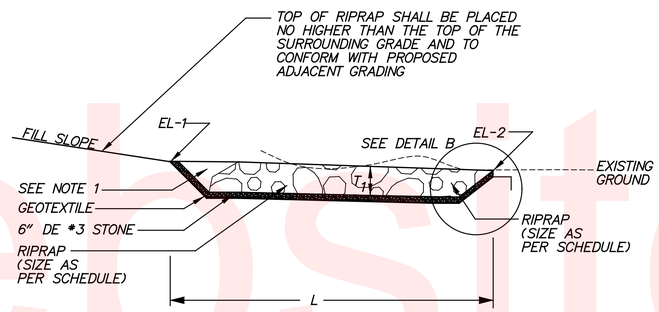

SECTION A–A

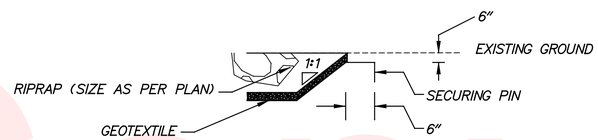

DETAIL B
ENERGY DISSIPATOR DETAIL

ENERGY DISSIPATOR SCHEDULE

STATION	OFFSET	RIP RAP SIZE	D (FT)	T (FT)	W1 (FT)	W2 (FT)	L (FT)	EL 1 (FT)	EL 2 (FT)
157+03	45'	R4	0.0	1.2	10.0	10.0	18.5	74.30	73.00

NOTES:
1. PLACE RIPRAP AND CHOKE WITH DE NO. 3 STONE.
2. TOP OF RIPRAP ON SIDE SLOPES OF DITCHES SHALL BE 2 FEET ABOVE BOTTOM OF DITCHES.

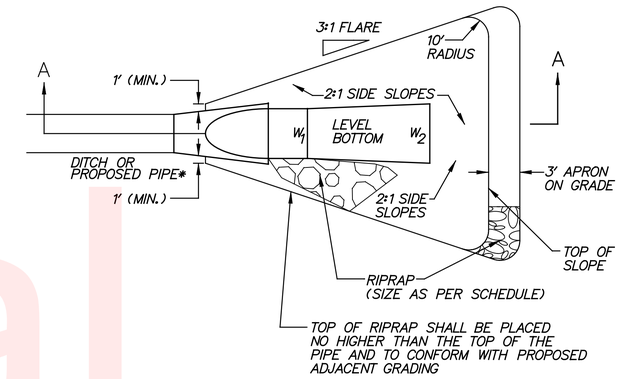

PLAN VIEW

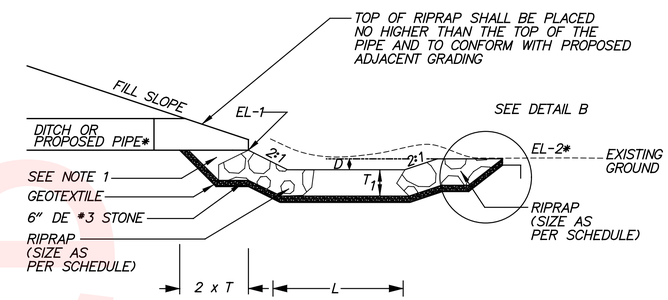

SECTION A–A

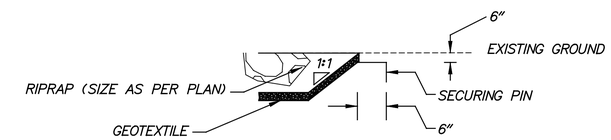

DETAIL B
TYPE 1 ENERGY DISSIPATOR DETAIL

ENERGY DISSIPATOR SCHEDULE

STATION	OFFSET	RIP RAP SIZE	D (FT)	T (FT)	W1 (FT)	W2 (FT)	L (FT)	EL 1 (FT)	EL 2 (FT)
122+52	57'	R4	0.5	1.2	9.0	9.0	10.0	56.49	56.60

NOTES:
1. PLACE RIPRAP AND CHOKE WITH DE NO. 3 STONE.
2. TOP OF RIPRAP ON SIDE SLOPES OF DITCHES SHALL BE 2 FEET ABOVE BOTTOM OF DITCHES.

Unofficial Website Copy

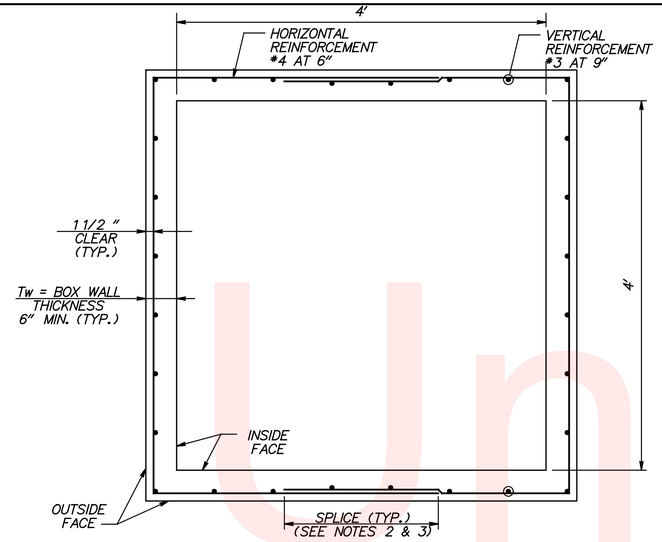

HORIZONTAL SECTION
WITH TWO REINFORCEMENT LAYERS

(RISER SECTIONS AND BASE SECTIONS)

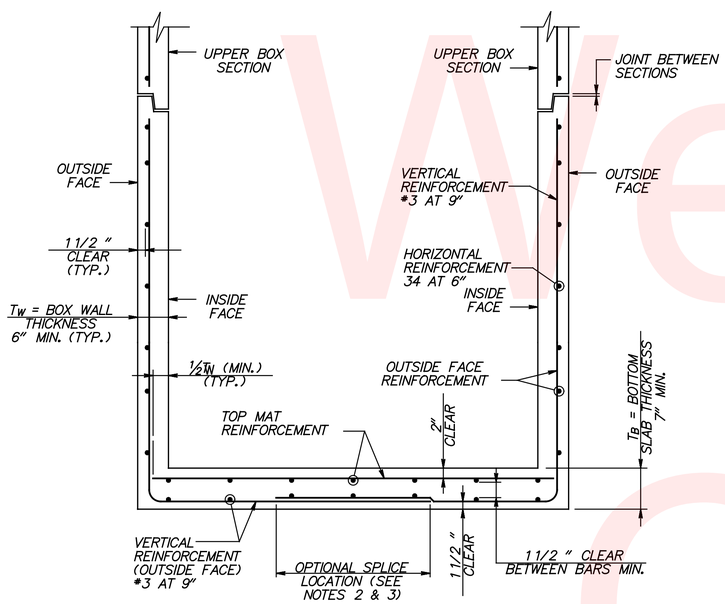

VERTICAL SECTION OF BASE SECTION
WITH TWO REINFORCEMENT LAYERS

PRECAST INLET BOX FOR DI-61 AND DI-62
STA 170+23 RT AND 171+75 RT
WITH REINFORCEMENT BARS

STA 170+23 RT AND STA 171+75 RT

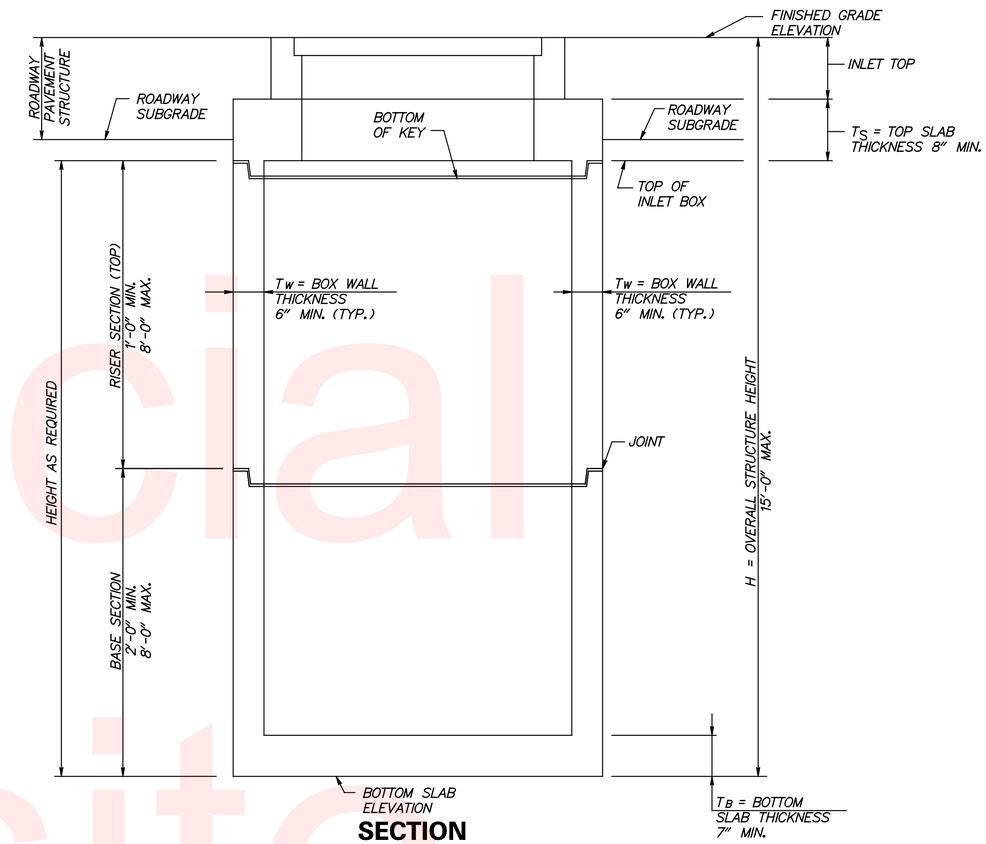

SECTION

DI-61 & DI-62 JOINT DETAIL

STRUCTURE	T.G.	INV.	PIPE OPENING WALL, BOTTOM SLAB ADDITIONAL 1'	TOTAL DEPTH
170+23 RT DI-61	82.85	70.91	1	12.94 <15
171+75 RT DI-62	82.75	70.31	1	13.44 <15

Unofficial Website Copy

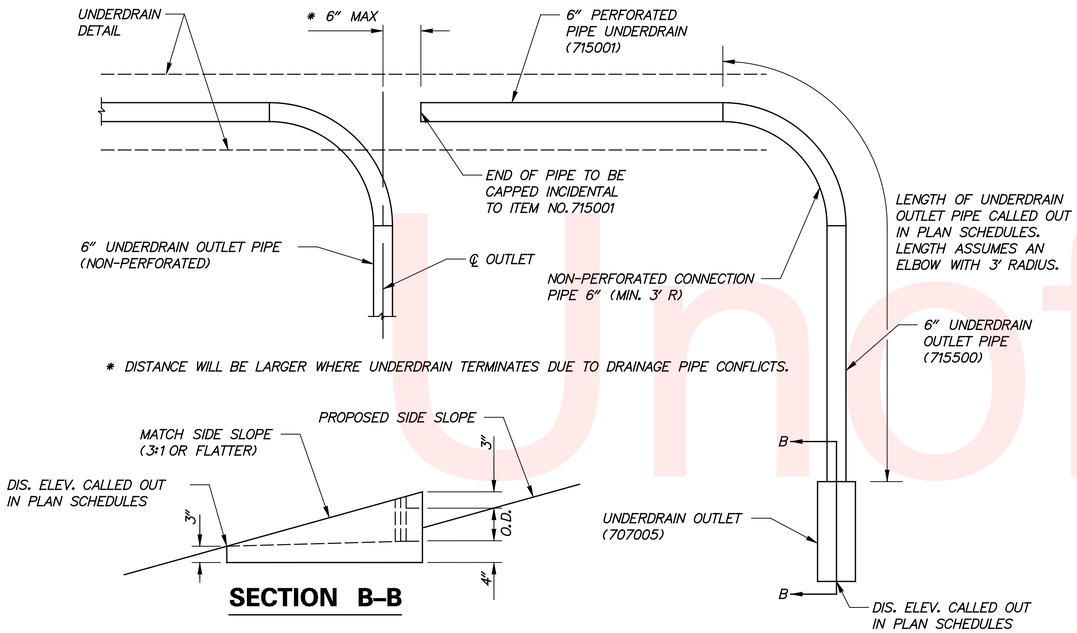

SECTION B–B

NOTES:

1. CONNECT PIPE UNDERDRAINS TO INLETS USING A THREE FOOT LENGTH OF NON-PERFORATED CONNECTION PIPE. FURNISHING AND INSTALLING CONNECTION PIPE AND PIPE END CAPS TO BE INCLUDED IN THE UNIT PRICE BID FOR ITEM NO. 715001 - PERFORATED PIPE UNDERDRAINS, 6". CONNECTION PIPES AND END CAPS SHALL BE THE SAME MATERIAL AS FOR PERFORATED PIPE UNDERDRAINS.
2. PAYMENT FOR CONNECTING PIPE UNDERDRAINS OR UNDERDRAIN OUTLET PIPE TO INLETS TO BE INCLUDED IN THE UNIT PRICE BID FOR THE RESPECTIVE ITEM.
3. CONNECTION PIPE SHALL BE INSTALLED WITH A MINIMUM RADIUS OF 3 FEET.
4. CUT GEOTEXTILE IN WALL OF UNDERDRAIN TRENCH FOR CONNECTION PIPE SO AS TO MINIMIZE EXPOSURE OF TRENCH. WRAP SECTION OF CONNECTION PIPE OUTSIDE TRENCH IN GEOTEXTILE AND PROVIDE SIX INCH LAP AROUND CONNECTION PIPE AT UNDERDRAIN TRENCH WALL. GEOTEXTILE TO BE INCLUDED IN THE UNIT PRICE BID FOR ITEM NO. 715001 - PERFORATED PIPE UNDERDRAINS, 6".
5. NON-PERFORATED UNDERDRAIN OUTLET PIPE SHALL HAVE A SMOOTH INSIDE WALL AND BE THE SAME MATERIAL AS FOR PERFORATED PIPE UNDERDRAINS OR AS APPROVED BY THE ENGINEER. ALL REQUIRED CONNECTIONS SHALL BE INCIDENTAL TO ITEM NO. 715500, UNDERDRAIN OUTLET PIPE, 6".
6. SLOPE OF UNDERDRAIN OUTLET SHALL MATCH THE ROAD SIDE SLOPE AT OUTLET LOCATION. FOR SLOPES STEEPER THAN 3:1, USE A 3:1 SLOPED HEADWALL.

UNDERDRAIN OUTLET

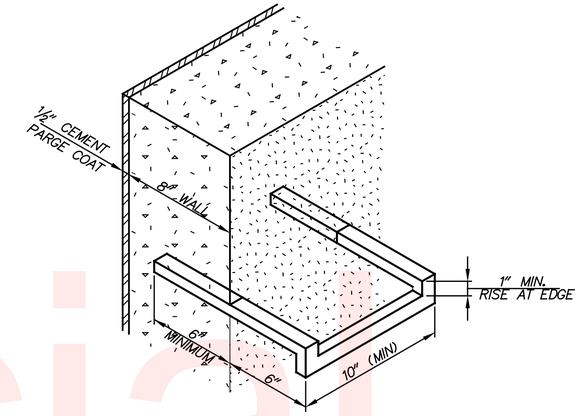

1. STEPS ARE REQUIRED TO BE INSTALLED IN EACH EXISTING CATCH BASIN/DRAINAGE INLET, MANHOLE, OR TYPE B JUNCTION BOX EXCEEDING 48 INCHES IN DEPTH MEASURED FROM THE TOP OF GRADE OR COVER ELEVATION TO THE INVERT OF THE LOWEST PIPE.
2. THE TOP STEP SHALL BE LOCATED NO MORE THAN 24 INCHES BELOW THE TOP OF GRATE OR COVER.
3. STEPS SHALL BE ALIGNED SO AS TO FORM A CONTINUOUS VERTICAL LADDER AND BE SPACED EQUALLY AND VERTICALLY AT 12 INCH INTERVALS UNLESS OTHERWISE DIRECTED.
4. THE BOTTOM STEP SHALL BE NO MORE THAN 12 INCHES ABOVE THE FINISHED BOTTOM OF THE UNIT EXCEPT WHEN STRUCTURALLY IMPRACTICAL.
5. DRAINAGE INLET STEPS SHALL BE OF THE TYPE CONSTRUCTED OF MOLDED PLASTIC WITH A REINFORCING BAR CORE, CONFORMING TO THE REQUIREMENTS OF AASHTO M 31/M 31M, AND ASTM A 478, AND D 4101.
6. THE MINIMUM CROSS SECTIONAL DIMENSION OF THE STEP SHALL BE ¾ INCHES.
7. THE DIMENSIONS AND SPECIFICATIONS HEREON SHOWN OR DESCRIBED ARE SPECIFICS OR MINIMUM STANDARDS MUST BE ADHERED TO. THE PICTORIAL REPRESENTATION IS FOR THE PURPOSE OF DISPLAYING DIMENSIONS AND DOES NOT CONSTITUTE A STANDARD IN ITSELF. THE CONTRACTOR SHALL SUBMIT EVIDENCE OF DELAWARE DEPARTMENT OF TRANSPORTATION APPROVAL OF THE STEP UNITS.

STANDARD STEPS

N.T.S.

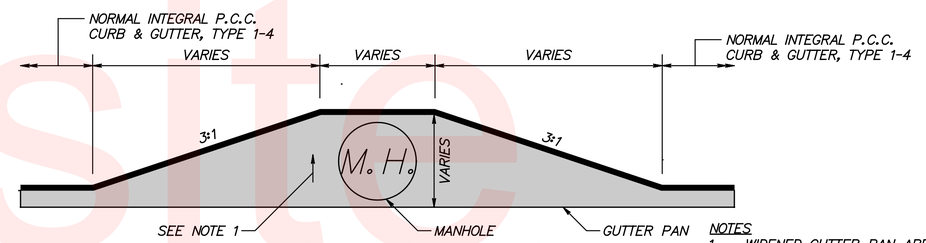

CURB BUMPOUT FOR MANHOLE

N.T.S.
STA. 138+23 RT.
STA. 167+77 LT.

NOTES

1. WIDENED GUTTER PAN AREA TO BE BUILT AT NORMAL GUTTER CROSS SLOPE.
2. MODIFIED GUTTER PAN AROUND MANHOLE SHALL BE POURED TO CONFORM TO THE DIMENSIONS OF THE MANHOLE STACK BELOW GRADE.
3. WORK ASSOCIATED WITH CURB BUMPOUT SHALL BE INCIDENTAL TO ITEM 701016 - INTEGRAL P.C.C. CURB AND GUTTER, TYPE 1-4.

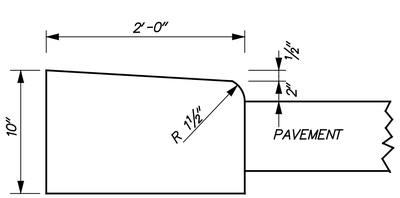

P.C.C. CURB, TYPE 2 MODIFIED

N.T.S.

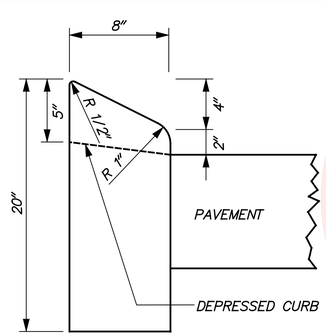

P.C.C. CURB, TYPE 1–2 MODIFIED

N.T.S.
(TO BE USED AT ROBERT PEOPLES BOULEVARD TIE IN WITH EXISTING MEDIAN ISLAND STA. 42+56)

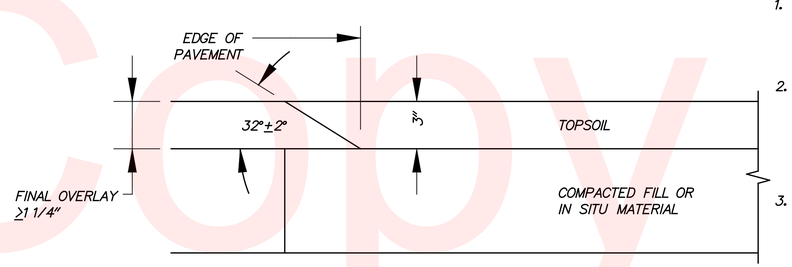

BITUMINOUS CONCRETE PAVEMENTS AND OVERLAYS

NOTES:

1. THE SAFETY EDGE SHALL NOT BE CONSTRUCTED ADJACENT TO OTHER PAVEMENTS, CURB, CURB & GUTTER, CONCRETE SAFETY BARRIER OR MAINTENANCE PAVEMENT UNDER GUARDRAIL. THE CONTRACTOR SHALL STAKE OUT THE LIMITS OF THE AREAS NOT TO RECEIVE THE SAFETY EDGE FOR APPROVAL BY THE ENGINEER PRIOR TO BEGINNING PAVEMENT OPERATIONS.
2. IN BITUMINOUS CONCRETE PAVEMENT SECTIONS, PRIOR TO THE CONSTRUCTION OF THE SAFETY EDGE IN OVERLAY SECTIONS AND MILL/OVERLAY SECTIONS, THE EXISTING TOPSOIL OR IN-SITU MATERIAL AT THE EDGE OF PAVEMENT SHALL BE COMPACTED SO THAT IT IS LEVEL WITH THE BOTTOM OF THE FINAL SURFACE LAYER PRIOR TO PLACING THE FINAL SURFACE OVERLAY. AFTER THE FINAL SURFACE OVERLAY IS PLACED, TOPSOIL SHALL BE PLACED TO THE TOP OF THE FINAL SURFACE OVERLAY.
3. IN BITUMINOUS CONCRETE PAVEMENT SECTIONS WHERE FULL DEPTH TOPSOIL IS PROPOSED TO BE PLACED ADJACENT TO THE EDGE OF PAVEMENT, THE TOPSOIL SHALL BE PLACED AND COMPACTED ALONG THE PAVEMENT EDGE TO THAT IS IT LEVEL WITH THE BOTTOM OF THE FINAL SURFACE LAYER PRIOR TO PLACING THE FINAL SURFACE OVERLAY. AFTER THE FINAL SURFACE OVERLAY IS PLACED, THE TOPSOIL SHALL BE PLACED TO THE TOP OF THE FINAL SURFACE OVERLAY. ALL COSTS FOR PLACING AND COMPACTING THE TOPSOIL SHALL BE INCLUDED IN THE PRICE OF THE TOPSOIL ITEM.

Unofficial Website Copy

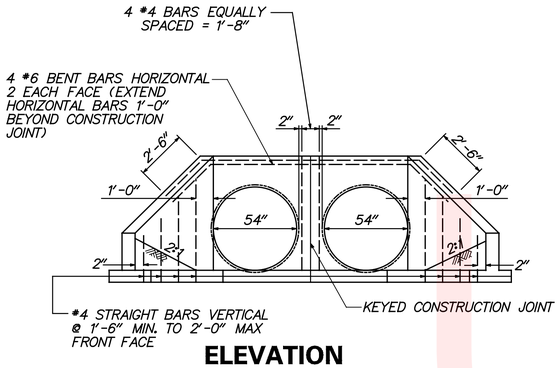

ELEVATION

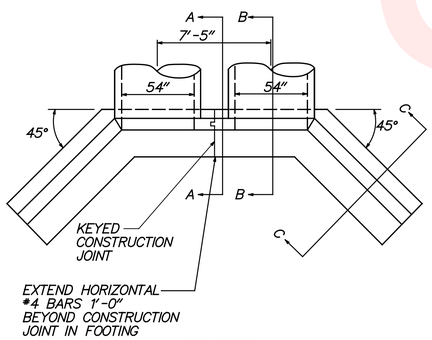

PLAN

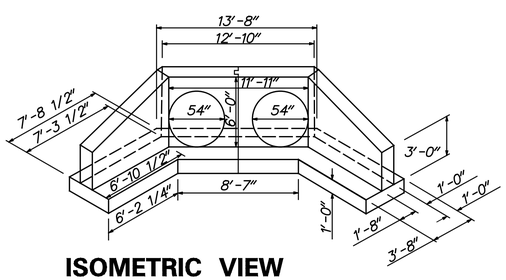

ISOMETRIC VIEW

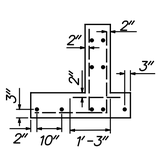

DISPOSITION OF BAR DETAIL

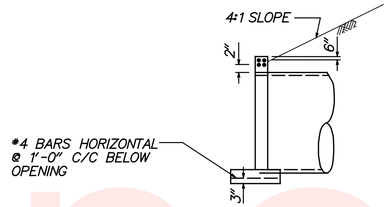

SECTION B–B

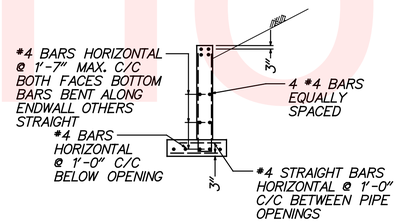

SECTION A–A
2' STEM BETWEEN PIPES

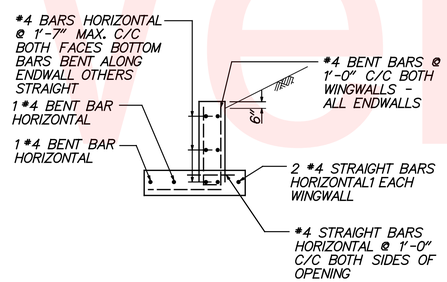

SECTION C–C

NOTES:

1. SPECIFICATIONS: CURRENT DELDOT.
2. CONCRETE SHALL BE CLASS B AND MEET f' = 3000 PSI.
3. CHAMFER: ALL EXPOSED EDGES 1"X1" OR AS DIRECTED.

HEADWALL DETAIL FOR EW–1

NOT TO SCALE

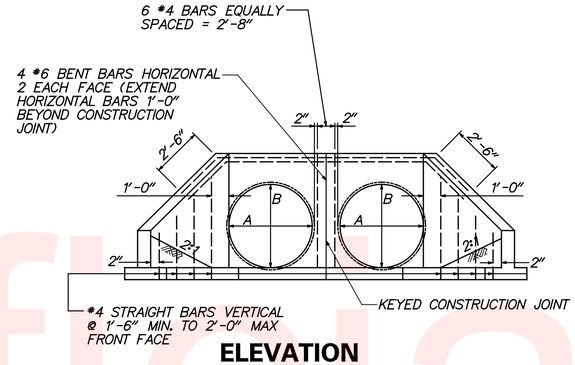

ELEVATION

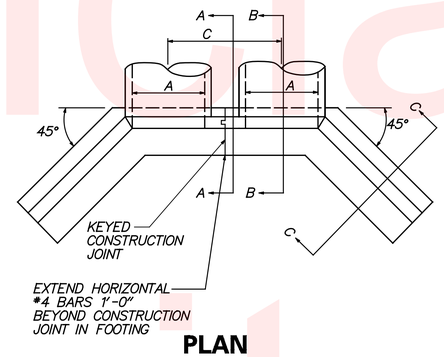

PLAN

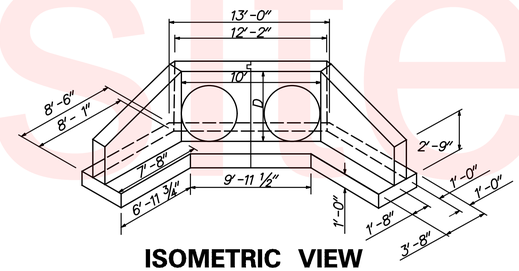

ISOMETRIC VIEW

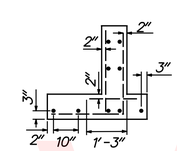

DISPOSITION OF BAR DETAIL

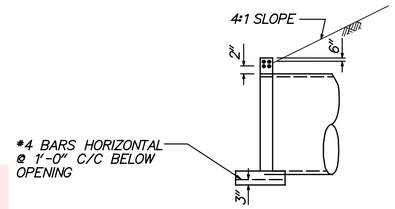

SECTION B–B

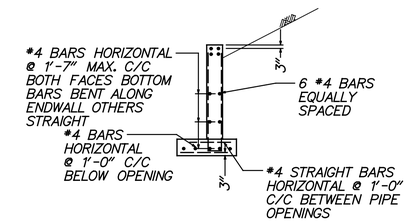

SECTION A–A
2' STEM BETWEEN PIPES

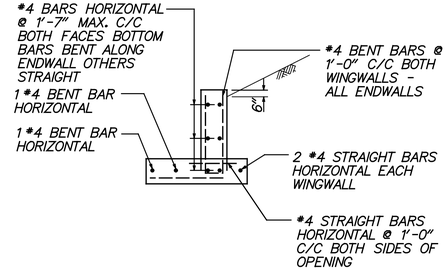

SECTION C–C

NOTES:

1. SPECIFICATIONS: CURRENT DELDOT.
2. CONCRETE SHALL BE CLASS B AND MEET f' = 3000 PSI.
3. CHAMFER: ALL EXPOSED EDGES 1"X1" OR AS DIRECTED.

HEADWALL DETAIL FOR EW–2 AND EW–3

NOT TO SCALE

STRUCTURE	A	B	C	D
EW-2	45"	29"	7'-7"	3'-6"
EW-3	45"	29"	7'-7"	3'-6"

Unofficial Website Copy

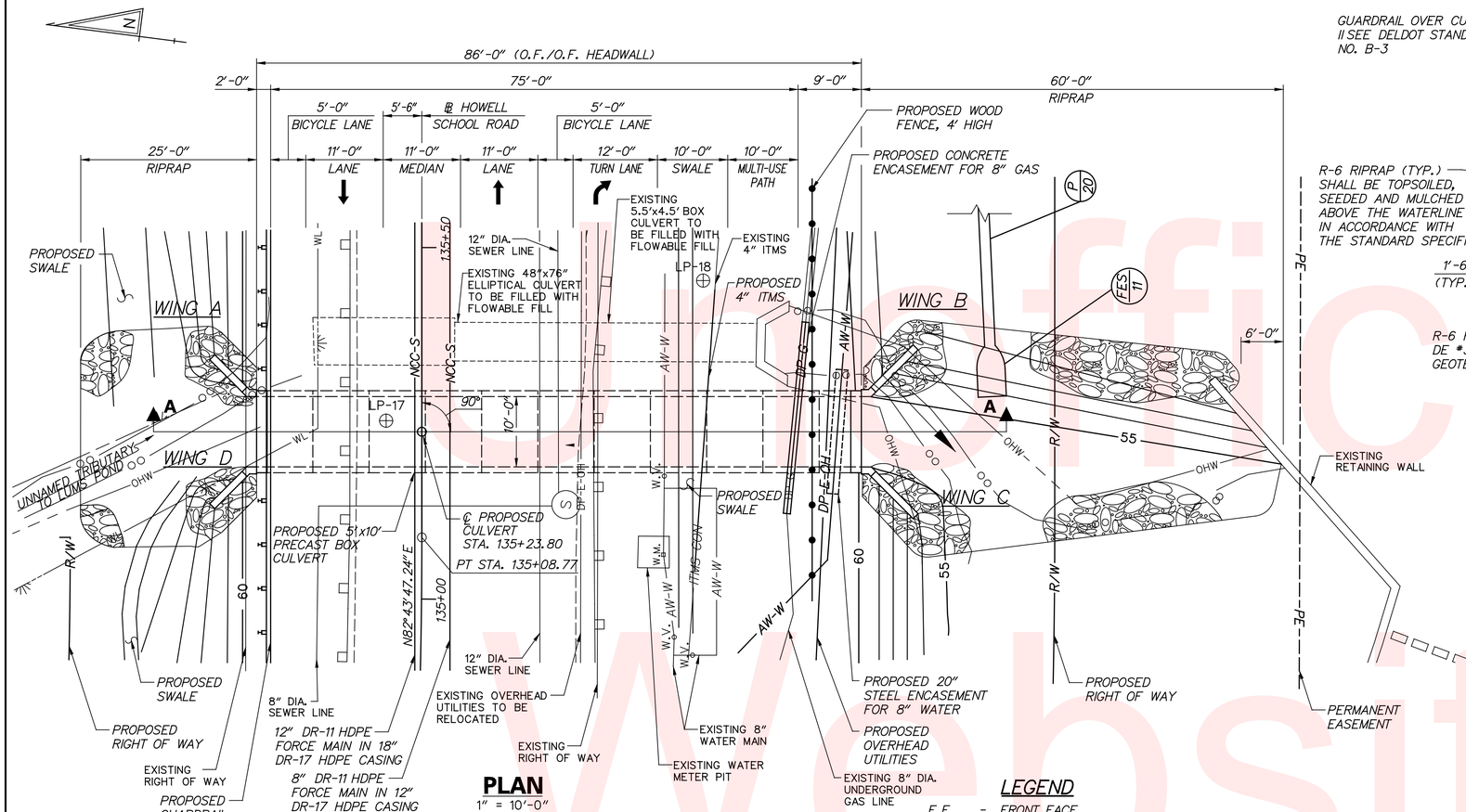

PLAN
1" = 10'-0"

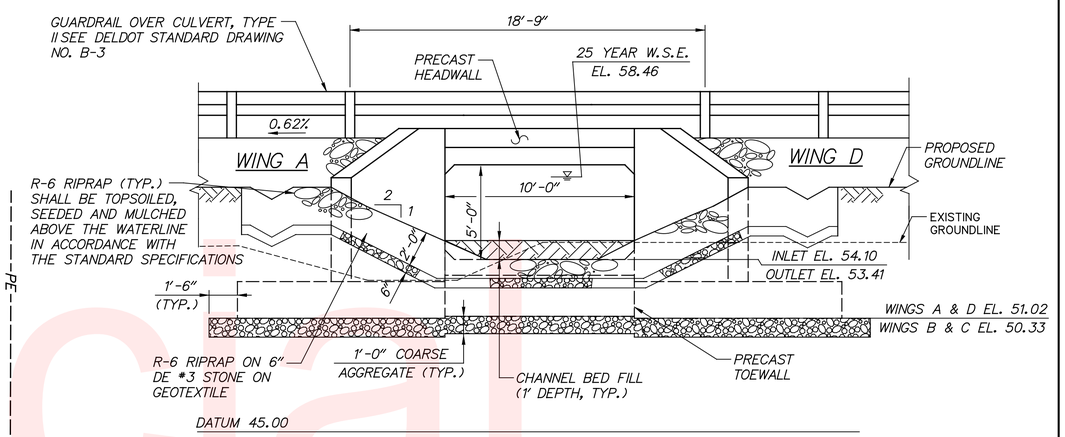

NORTH ELEVATION
(LOOKING DOWNSTREAM)
1/4" = 1'-0"

HYDRAULIC DATA:

DRAINAGE AREA = 0.312 SQ. MI.
EXISTING STRUCTURE DATA:
- MAGNITUDE = 158 CFS
- FREQUENCY = 25-YEAR
- OUTLET VELOCITY = 12.07 FPS
- W.S. ELEVATION = 60.34'
- 100-YEAR FLOOD =
- MAGNITUDE = 214 CFS
- OUTLET VELOCITY = 12.11 FPS
- W.S. ELEVATION = 60.57'

PROPOSED STRUCTURE DATA:
- MAGNITUDE = 160.00 CFS
- FREQUENCY = 25-YEAR
- OUTLET VELOCITY =10.38 FPS
- W.S. ELEVATION = 58.46'
- 100 YEAR FLOOD:
- MAGNITUDE = 217 CFS
- VELOCITY = 11.31 FPS
- W.S. ELEVATION = 59.24'

FLOOD OF RECORD: UNKNOWN

LEGEND

F.F.	-	FRONT FACE
R.F.	-	REAR FACE
O.F.	-	OUTSIDE FACE
P.G.	-	PROFILE GRADE
W.P.	-	WORK POINT
W.S.E.	-	WATER SURFACE EL
B.O.F.	-	BOTTOM OF FOOTING
— 60 —	-	EXISTING CONTOUR

TEST BORING LOCATIONS

BORING NO.	STATION	OFFSET
LP-17	STA. 135+25.40	5.1' L
LP-18	STA. 135+45.30	40.0' R

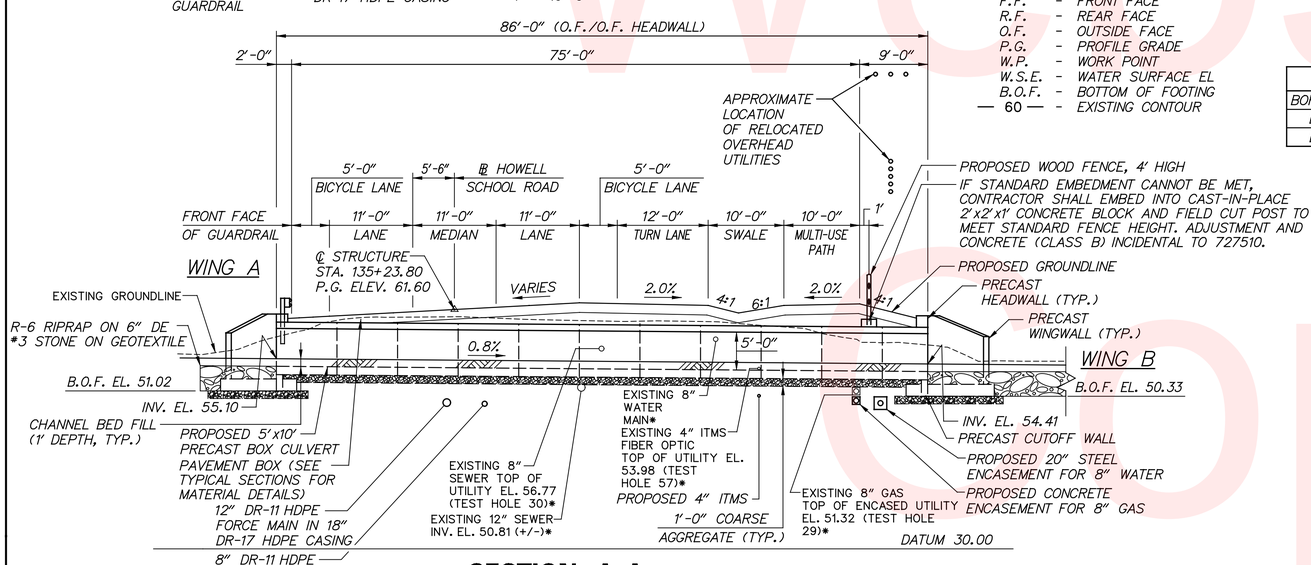

SECTION A–A
1" = 10'-0"

*TO BE RELOCATED

VERTICAL CURVE DATA

ON TANGENT
P.V.T. STA. = 127+00.00
P.V.T EL. = 66.74'
GRADE = -0.6236%
TANGENT LENGTH = 975.00

HORIZONTAL CURVE DATA

P.I. STA. 133+21.32
P.T. STA. 135+08.77
Δ = 24°42'42.54" LEFT
D = 6°44'26.45"
T = 193.99'
L = 381.44'
R = 850.00'

CULVERT IS ON TANGENT
STARTING AT P.T. STA. 135+08.77
BEARING = N82°43'47.24"E

INDEX OF BRIDGE SHEETS

SHEET NO.	TABLE OF CONTENTS
68	GENERAL PLAN AND ELEVATION
69	GENERAL NOTES AND RATING
70	STAKEOUT PLAN
71	CULVERT DETAILS
72	WINGWALLS A AND D
73	WINGWALLS B AND C
74	WINGWALL REINFORCEMENT SCHEDULE
75	HEADWALL REINFORCEMENT SCHEDULE
76	SOIL BORINGS

Unofficial Website Copy

GENERAL NOTES:

1. LOCATION
   REPLACEMENT OF BRIDGE NO. 1-376 (CULVERT ON HOWELL SCHOOL ROAD CARRYING UNNAMED TRIBUTARY TO LUMS POND), NEW CASTLE COUNTY, DE.

2. DESIGN CRITERIA
   2007 AASHTO LRFD BRIDGE DESIGN SPECIFICATIONS.

3. DESIGN LOADING
   VEHICLE LIVE LOAD IS HL-93
   DEAD LOAD INCLUDES SURFACE AREA DENSITY OF 0.025 KSF FOR FUTURE WEARING SURFACE.

4. PORTLAND CEMENT CONCRETE
   PORTLAND CEMENT CONCRETE FOR THE PRECAST CONCRETE CULVERT SHALL BE f'c=5000 PSI. (f'c=28 DAY COMPRESSIVE STRENGTH). MIXING REQUIREMENTS SHALL CONFORM TO SECTION 812 OF THE SPECIFICATIONS A HIGHER STRENGTH CONCRETE MAY BE SUBSTITUED FOR A LOWER STRENGTH CONCRETE AT NO ADDITIONAL COST TO THE DEPARTMENT.

5. CONSTRUCTION JOINTS
   KEYED CONSTRUCTION JOINTS SHALL BE 2" x 4" EXCEPT AS INDICATED.

6. RAKE-FINISH ALL HORIZONTAL CONSTRUCTION JOINTS EXCEPT AS INDICATED.

7. BAR REINFORCEMENT
   STEEL REINFORCING SHALL CONFORM TO AASHTO M31(ASTM A615), GRADE 60. ALL REINFORCEMENT STEEL SHALL BE PROTECTED WITH FUSION BONDED EPOXY. EPOXY COATED REINFORCING STEEL SHALL CONFORM TO AASHTO M284 (ASTM D3963), AND IS DENOTED WITH A SUFFIX "E" IN THE BAR MARKS.

8. PROVDE MINIMUM LAP AND EMBEDMENT LENGTH OF 30 DIAMETERS OR IN ACCORDANCE WITH AASHTO, WHICHEVER IS GREATER.

9. PROVIDE WEEPHOLES (REINFORCED) AS SHOWN ON THE DRAWINGS OR AS INDICATED BY THE ENGINEER.

10. REMOVAL OF STRUCTURES AND OBSTRUCTIONS
    THE EXISTING WINGWALLS WHICH INTERFERE WITH THE PROPOSED STRUCTURE SHALL BE REMOVED IN ACCORDANCE WITH SECTION 211 DELAWARE STANDARD SPECIFICATION. THE LIMIT OF REMOVAL SHALL BE AS REQUIRED TO ACCOMODATE THE NEW CONSTRUCTION. PAYMENT UNDER ITEM 211000 - REMOVAL OF STRUCTURE AND OBSTRUCTION.

11. FLOWABLE FILL
    AFTER FLOW HAS BEEN DIRECTED TO THE NEW CULVERT, TO THE SATISFACTION OF THE FIELD ENGINEER, THE EXISTING CULVERT SHALL BE FILLED WITH FLOWABLE FILL. FORMWORK TO CONTAIN FLOWABLE FILL SHALL BE INCLUDED IN THIS ITEM. PAYMENT UNDER ITEM 208001 - FLOWABLE FILL.

12. STABILIZING STRUCTURAL EXCAVATIONS
    ALL EXCAVATIONS SHALL CONFORM TO CURRENT OSHA OR OTHER APPLICABLE LOCAL, STATE AND FEDERAL REGULATIONS. SHORING SHALL BE REQUIRED FOR ANY EXCAVATION EXCEEDING 5 FEET IN HEIGHT, THE COST OF SHORING SHALL BE INCIDENTAL TO ITEM 207000 - EXCAVATION AND BACKFILL FOR STRUCTURES. IN LIEU OF SHORING, THE CONTRACTOR MAY USE A 2:1 CUT SLOPE. NO PAYMENT SHALL BE MADE FOR ADDITIONAL EXCAVATION OR FILL OUTSIDE THE LIMITS AS DEFINED IN SECTION 207 OF THE STANDARD SPECIFICATIONS.

13. PROVIDE ADEQUATE WATER DIVERSION AND DEWATERING METHODS DURING EXCAVATION AND FOUNDATION CONSTRUCTION SUCH THAT THE EXCAVATION IS DRY ENOUGH FOR INSPECTION AND CONCRETE PLACEMENT.

14. STRUCTURAL BACKFILL SHALL CONFORM TO THE REQUIREMENTS OF BORROW TYPE C. PAYMENT UNDER ITEM 210000 - FURNISHING BORROW TYPE C FOR STRUCTURE BACKFILL.

15. DO NOT EXCEED A 2 FT DIFFERENCE IN FILL ELEVATION ON THE SIDES DURING PLACEMENT OF THE BACKFILL. DO NOT ALLOW WHEELS OF ROLLERS TO COME CLOSER THAN 1 FT TO THE FACE OF THE STRUCTURE DURING COMPACTION OF THE BACKFILL.

16. IF UNSUITABLE STRATA IS ENCOUNTERED IN THE EXISTING SOIL AT THE LEVEL OF THE PROPOSED FOUNDATION, THE UNSUITABLE MATERIAL SHALL BE REMOVED BY UNDERCUT EXCAVATION AS SPECIFIED IN SECTION 212000 OF THE STANDARD SPECIFICATIONS. REPLACE THE UNDERCUT SOIL WITH NO. 57 STONE TO THE ELEVATION OF THE PROPOSED FOUNDATION. THE ENGINEER SHALL SPECIFY THE LIMITS OF REMOVAL FOR NECESSARY UNDERCUT EXCAVATIONS. PAYMENT FOR UNDERCUTTING AND NO. 57 STONE SHALL BE INCLUDED UNDER ITEM NO. 212000.

17. TOP AND 6" OF THE SIDES OF CULVERT SHALL BE WATERPROOFED. WATERPROOFING SHALL BE AFTER INSTALLATION OF TIE RODS, AND GROUTING OF ALL JOINTS. PAYMENT UNDER ITEM 602547 - WATERPROOFING CONCRETE DECK.

18. SUBMIT DESIGN COMPUTATIONS SHOWING STRIPPING, HANDLING, SHIPPING, AND MINIMUM STRESSES TO THE ENGINEER FOR APPROVAL.

19. FLAT SHEET WELDED WIRE FABRIC SHALL NOT BE USED IN THE PRECAST BOX CULVERT.

20. THE CONTRACTOR IS RESPONSIBLE FOR OBTAINING A HAULING PERMIT FOR THE TRANSPORTATION AND DELIVERY OF THE BOX CULVERT AND CONSTRUCTION EQUIPMENT.

21. THE FABRICATOR IS RESPONSIBLE FOR ANY ADDITIONAL REINFORCEMENT REQUIRED FOR HANDLING, TRANSPORTATION AND INSTALLATION.

22. PROVIDE ATTACHMENTS ON EACH INSIDE CORNER FOR PULLING ADJACENT BOX CULVERT SEGMENTS SNUG DURING PLACEMENT.

23. USE EPOXY BONDING COMPOUND IN ACCORDANCE WITH ASTM C881-90 WHEREVER CAST-IN-PLACE CONCRETE COMES IN CONTACT WITH PRECAST CEMENT CONCRETE.

24. THE CONTRACTOR HAS THE OPTION TO CONSTRUCT THE FOUR SIDED CONCRETE BOX CULVERT (5'x 10') AS DETAILED ON THESE PLANS AS A CAST-IN-PLACE CONCRETE BOX CULVERT WITHOUT CHANGING THE INSIDE DIMENSIONS AND THE OVERALL LENGTH OF THE CULVERT. THE CONTRACTOR SHALL SUBMIT A P.E. STAMPED DETAILS AND CALCULATIONS FOR THE PROPOSED CHANGES FOR ENGINEER'S APPROVAL.

25. MAINTENANCE OF TRAFFIC
    MAINTENANCE OF TRAFFIC SHALL BE SET UP AS OUTLINED IN THE PLANS. PAYMENT UNDER ITEM 743000 - MAINTENANCE OF TRAFFIC.

26. UTILITIES
    THE CONTRACTOR IS RESPONSIBLE FOR WORKING AROUND AND PROTECTING ALL UTILITES DURING CONSTRUCTION, WHERE NECESSARY. THE COST OF THIS WORK SHALL BE INCIDENTAL TO ITEM 207000-EXCAVATION AND BACKFILL FOR STRUCTURES. FOR EXACT LOCATION OF UNDERGROUND UTILITIES, IT IS THE RESPONSIBILITY OF THE CONTRACTOR TO CONTACT MISS UTILITY AT (800) 282-8555.

27. ALL AREAS DISTURBED BY THE CONTRACTOR'S OPERATION OUTSIDE THE LIMITS OF CONSTRUCTION SHALL BE TOPSOILED, SEEDED AND MULCHED AT CONTRACTOR'S EXPENSE.

28. TREE REMOVAL
    CONTRACTOR SHALL REMOVE ONLY TREES WITHIN LIMITS OF CONSTRUCTION UNLESS OTHERWISE NOTED ON PLAN OR BY FIELD ENGINEER. PAYMENT FOR REMOVAL OF ANY TREE, REGARDLESS OF SIZE, SHALL BE INCIDENTAL TO ITEM 201000 - CLEARING AND GRUBBING.

PRECAST NOTES:

1. DESIGN PLANS/WORKING DRAWINGS
   INFORMATION PERTAINING TO THE PRECAST REINFORCED CONCRETE BOX CULVERT AND WINGWALL SECTIONS IS INTEDENDED TO SERVE AS AN INDICATION OF THE TYPE OF CONSTRUCTION ACCEPTABLE FOR USE. THE CONTRACTOR WILL BE REQUIRED TO PREPARE AND SUBMIT FOR APPROVAL A COMPLETE SET OF DETAILED SHOP DRAWINGS FOR THE PRECAST CONCRETE UNITS THEY PROPOSE TO FURNISH. THE SHOP DRAWINGS SHALL INCLUDE:
   A. AN OVERALL PLAN SHOWING ALL UNITS TOGETHER AND EACH TYPE OF UNIT
   B. A PLAN VIEW OF REINFORCEMENT FOR ANY IRREGULAR SHAPED (SKEWED, CURVED, ETC.) SECTIONS
   C. REINFORCING BAR LIST
   D. BILL OF MATERIALS INCLUDING ALL ACCESSORIES
   E. METHOD AND SEQUENCE OF POST-TENSIONING

2. PRECAST ELEMENTS, ACCESSORIES AND INSTALLATION
   PAYMENT FOR ITEM 602736 - PRECAST CONCRETE CULVERT AND ITEM 602738 - PRECAST CONCRETE RETAINING WALL SHALL INCLUDE:
   A. ALL PRECAST ELEMENTS BOX CULVERT, TOEWALLS, AND HEADWALLS UNDER ITEM 602736 AND WINGWALLS UNDER ITEM 602738.
   B. ALL ASSOCIATED REINFORCEMENT.
   C. ALL ACCESSORIES (INCLUDING BUT NOT LIMITED TO, WEEPHOLES, CONCRETE FINISH, POST-TENSIONING TENDONS, CONNECTION PLATES, GROUT, JOINT WRAP, THREADED INSERTS) MENTIONED IN THE FOLLOWING NOTES UNLESS OTHERWISE NOTED.
   D. DELIVERY AND INSTALLATION OF ALL PRECAST ELEMENTS AND ALL ACCESSORIES.

3. MISCELLANEOUS CONCRETE NOTES
   A. ALL EXPOSED SURFACES SHALL BE PROTECTED WITH A WATER MISCIBLE, PENETRATING SILANE SEALER SUCH AS ENVIROSEAL 20 BY BASF SUPERIOR OR APPROVED EQUAL. PAYMENT TO BE INCLUDED IN ITEM 602736 - PRECAST CONCRETE CULVERT AND ITEM 602738 - PRECAST RETAINING WALL.
   B. ALL EXPOSED EDGES SHALL BE CHAMFERED 3/4" UNLESS OTHERWISE NOTED.

4. BOX CULVERT POST-TENSIONING
   THE PRECAST BOX CULVERT SECTIONS SHALL BE POST-TENSIONED TOGETHER WITH A MINIMUM OF FOUR POST-TENSIONING TENDONS. THE CULVERT SHALL BE POST-TENSIONED SUCH THAT THE NEOPRENE GASKETS ARE COMPRESSED ALL AROUND AND THERE IS A 1/2" MAXIMUM GAP BETWEEN SECTIONS. MAXIMUM POST-TENSIONING FORCE SHALL BE 28,900 LBS. POST-TENSIONING DETAILS (PLACEMENT, SEQUENCE OF TENSIONING, ETC.) SHALL BE SHOWN IN THE SUBMITTED SHOP DRAWINGS. ALL POCKETS FOR POST-TENSIONING DUCTS SHALL BE FILLED WITH NON-SHRINK GROUT.

5. WINGWALL POST-TENSIONING
   A. THE PRECAST WINGWALL SECTIONS SHALL BE POST-TENSIONED TOGETHER AND POSITIVELY CONNECTED TO THE BOX CULVERT WITH A MINIMUM OF TWO POST-TENSIONING TENDONS. POST-TENSIONING SHALL BE AS PER NOTE 4.
   B. AT LOCATIONS WHERE POST TENSIONING OF THE WINGWALLS IS NOT FEASIBLE, A BOLTED CONNECTION MAY BE USED. BOLTED CONNECTION DETAILS SHALL BE AS SHOWN IN THE SUBMITTED SHOP DRAWINGS.

6. BOLTED CONNECTIONS
   THE BOLTED CONNECTION MUST CONSIST OF A MINIMUM OF TWO 3'-0" WIDE x 2'-0" TALL x 1/4" THICK PLATES PER JOINT WITH AT LEAST FOUR 3/4" BOLTS PER PLATE. ANGLED PLATES SHALL HAVE 8 BOLTS. SLOTTED HOLES IN THE PLATE SHALL NOT BE PERMITTED. HOLES FOR ANCHOR BOLTS MAY BE FIELD DRILLED.

7. JOINTS BETWEEN PRECAST SECTIONS
   A. NEOPRENE GASKETS SHALL BE PROVIDED AT THE JOINTS BETWEEN ALL PRECAST UNITS IN ORDER TO MAKE THE JOINTS WATERTIGHT. AFTER INSTALLATION, THE GASKETS SHALL BE COMPRESSED SUCH THAT GAPS ARE NOT VISIBLE.
   B. ALL JOINTS BETWEEN PRECAST BOX CULVERT SECTIONS SHALL BE TONGUE AND GROOVE.
   C. ALL WINGWALL TO WINGWALL AND WINGWALL TO BOX CULVERT JOINTS SHALL HAVE A SHEAR KEY.
   D. THE LOCATIONS OF THE JOINTS IN THE BOX CULVERT SHALL BE DETERMINED BY THE PRECASTER AND SUBMITTED IN THE SHOP DRAWINGS FOR APPROVAL.
   E. THE REINFORCEMENT SHALL HAVE 2" COVER AT THE END OF EACH SECTION AND MEET OR EXCEED THE MINIMUM AREA OF STEEL PER FOOT DENOTED IN THE PLANS.
   F. ALL JOINT EXTERIORS SHALL BE COVERED WITH A MINIMUM 9" WIDE WRAP CENTERED ON THE JOINT AS PER THE SPECIAL PROVISIONS.

8. TOEWALLS
   A. TOEWALLS SHALL BE PLACED BENEATH THE BOTTOM SLAB OF THE CULVERT AT THE INLET AND OUTLET AND CONNECTED BY DOWELS GROUTED INTO THE BOTTOM SLAB AS SHOWN.
   B. THE 1" GROUT LEVELING PAD SHALL BE PLACED IMMEDIATELY PRIOR TO PLACEMENT OF THE CULVERT SECTION.
   C. COARSE AGGREGATE PLACED BENEATH THE CULVERT SHALL BE CONTAINED IN PLACE (BY FORMWORK OR OTHER ACCEPTABLE MEANS) WHILE ADJACENT EXCAVATIONS (I.E. INSTALLATION OF WINGWALLS) ARE COMPLETED. ANY VOIDS BETWEEN THE BOTTOM SLAB OF THE CULVERT AND COARSE AGGREGATE SHALL BE FILLED WITH FLOWABLE FILL PRIOR TO ANY BACKFILLING.

LOAD RATING NOTES:

*LOAD DUE TO FUTURE WEARING SURFACE (25 PSF) IS INCLUDED IN THE RATINGS
TS = TOP SLAB
BS = BOTTOM SLAB

CULVERT LOAD RATINGS

TRUCK	LOAD (TON)	INVENTORY RATING			OPERATING RATING		
		CONTROL POINT	RATING FACTOR	LOAD RATING	CONTROL POINT	RATING FACTOR	LOAD RATING
AASHTO HL-93	N/A	8.78' (TS)	1.10	39.60 TONS	8.78' (TS)	1.74	62.64 TONS
DELAWARE 4 AXLE SINGLE UNIT S432 TRUCK	37	1.14' (BS)	1.25	45.58 TONS	1.14' (BS)	1.62	59.09 TONS
T435 (DE 4 AXLE SEMI)	35	8.78' (TS)	1.33	46.59 TONS	8.78' (TS)	1.73	60.39 TONS
T540 (DE 5 AXLE SEMI)	40	8.78' (TS)	1.33	53.25 TONS	8.78' (TS)	1.73	69.02 TONS
S220 (DE 2 AXLE SINGLE UNIT)	20	8.78' (TS)	2.05	40.92 TONS	8.78' (TS)	2.65	53.04 TONS
S327 (DE 3 AXLE SINGLE UNIT, INTERSTATE)	27	8.78' (TS)	1.46	39.49 TONS	8.78' (TS)	1.90	51.19 TONS
S335 (DE SINGLE AXLE SINGLE UNIT)	35	8.78' (TS)	1.03	36.02 TONS	8.78' (TS)	1.33	46.70 TONS
T330 (DE 3 AXLE SEMI)	30	8.78' (TS)	2.05	61.38 TONS	8.78' (TS)	2.05	79.57 TONS

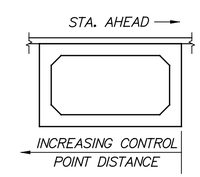

LOAD RATING DETAIL

Unofficial Website Copy

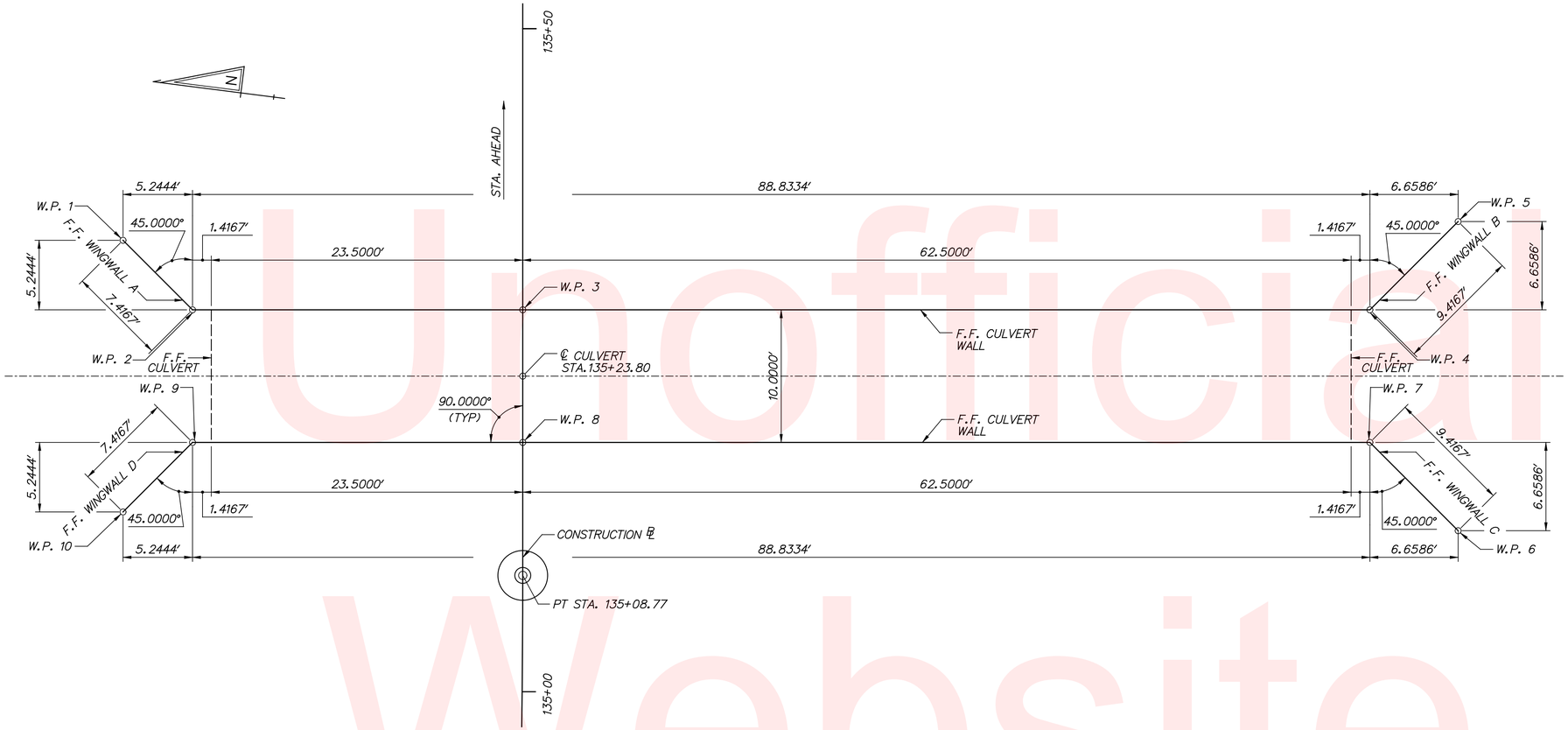

STAKEOUT PLAN

1" =5'

WORKING POINTS				
NO.	STATION	OFFSET	NORTHING	EASTING
1	135+34.0426	30.1568 L	572278.2822	567489.4237
2	135+28.8000	24.9142 L	572272.4182	567484.8866
3	135+28.8000	0.0000	572247.7043	567488.0395
4	135+28.8000	63.9142 R	572184.3040	567496.1278
5	135+35.4569	70.5711 R	572178.5430	567503.5735
6	135+12.1431	70.5711 R	572175.5927	567480.4472
7	135+18.8000	63.9142 R	572183.0385	567486.2082
8	135+18.8000	0.0000	572246.4388	567478.1199
9	135+18.8000	24.9142 L	572271.1527	567474.9670
10	135+13.5574	30.1568 L	572275.6898	567469.1031

Unofficial Website Copy

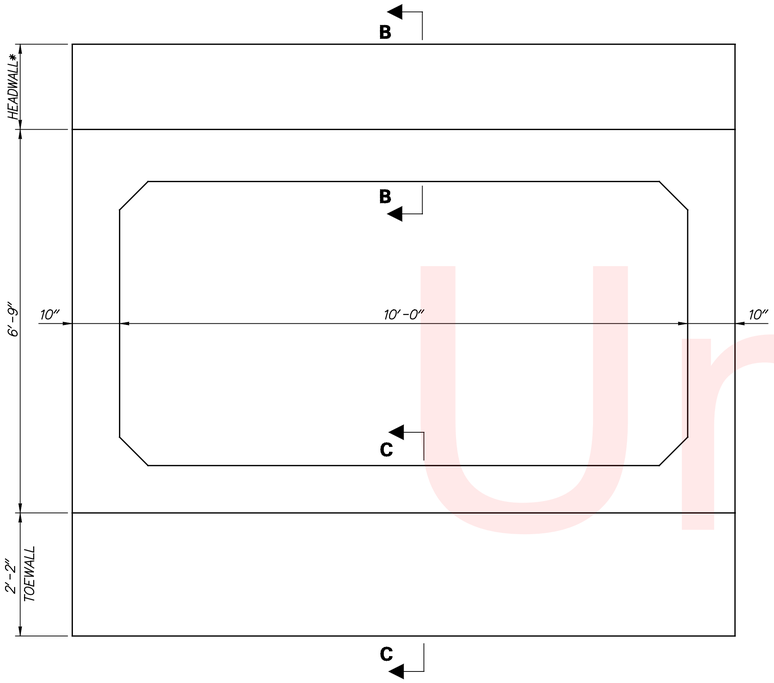

* HEADWALL HEIGHT IS 1'-0" UPSTREAM AND 1'-6" DOWNSTREAM.

ELEVATION

3/4" = 1'

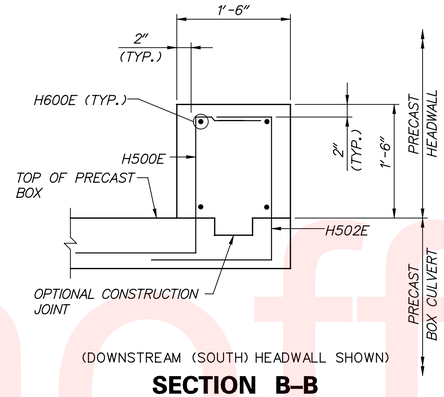

(DOWNSTREAM (SOUTH) HEADWALL SHOWN)

SECTION B–B

1" = 1'

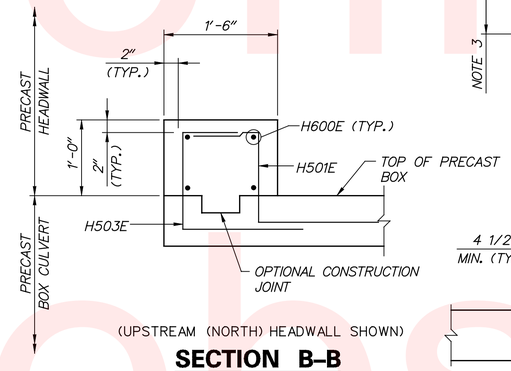

(UPSTREAM (NORTH) HEADWALL SHOWN)

SECTION B–B

1" = 1'

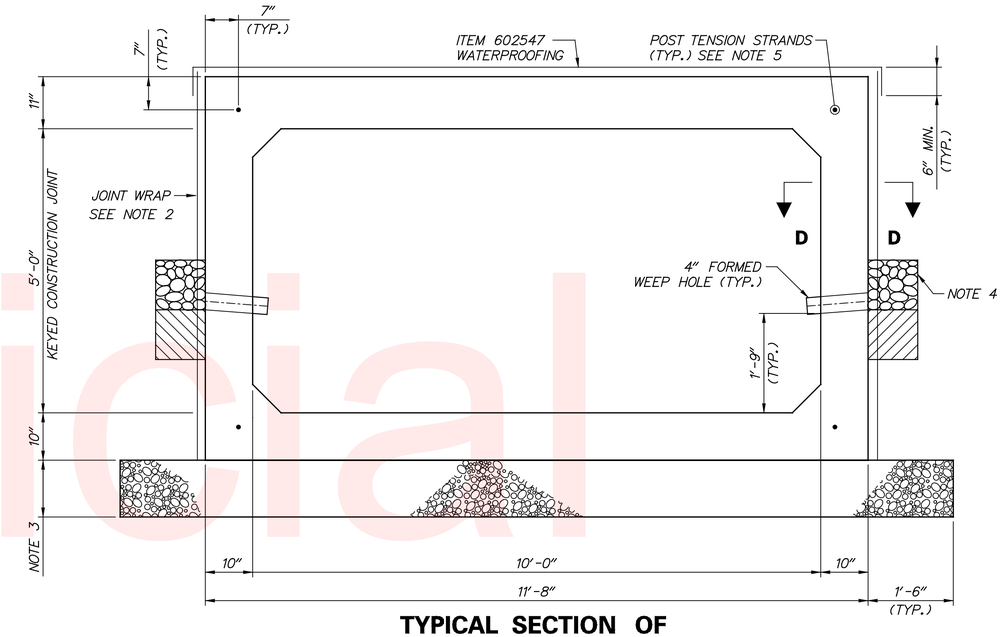

TYPICAL SECTION OF PRECAST BOX CULVERT

3/4" = 1'

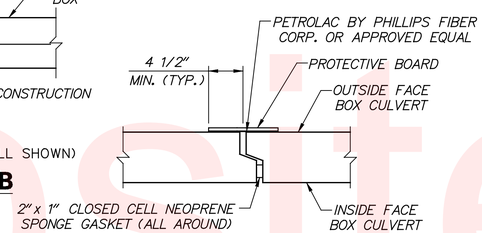

PRECAST SEGMENT JOINT DETAIL

1" = 1'

BOX CULVERT NOTES:

1. THE CONTRACTOR HAS THE OPTION TO USE CAST-IN-PLACE HEADWALLS IN LIEU OF PRECAST.
2. JOINT EXTERIORS SHALL BE COVERED WITH A JOINT WRAP PER THE SPECIFICATIONS. SEE JOINT DETAIL THIS SHEET.
3. MINIMUM 12" BEDDING BELOW BOTTOM OF PRECAST REINFORCED CONCRETE BOX CULVERT. USE NO. 8 COARSE AGGREGATE FOR BEDDING.
4. WEEPHOLE CONSISTS OF 4" DIA. P.V.C. PIPE AND 1/2 C.Y. OF NO. 57 COARSE AGGREGATE ON A 1/2 C.Y. CLAY BASE. ALL WEEP HOLE MATERIALS WILL BE INCIDENTAL TO ITEM 602736. PROVIDE ONE WEEP HOLE PER SIDE IN EVERY OTHER BOX SEGMENT.
5. 1" PVC CONDUIT WITH 1/2" LOW RELAXATION POLYPROPYLENE - SHEATHED PRESTRESSING STRANDS WITH CORROSION INHIBITOR.

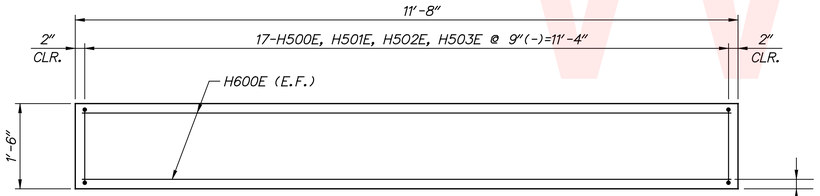

HEADWALL PLAN

3/4" = 1'

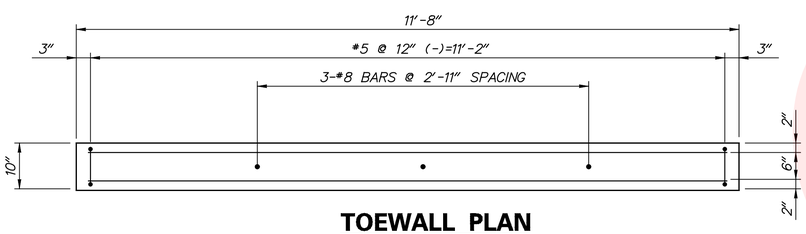

TOEWALL PLAN

3/4" = 1'

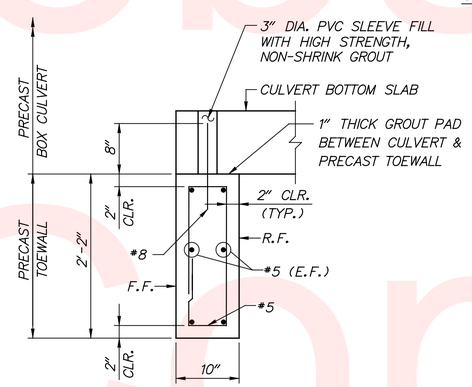

SECTION C–C

1" = 1'

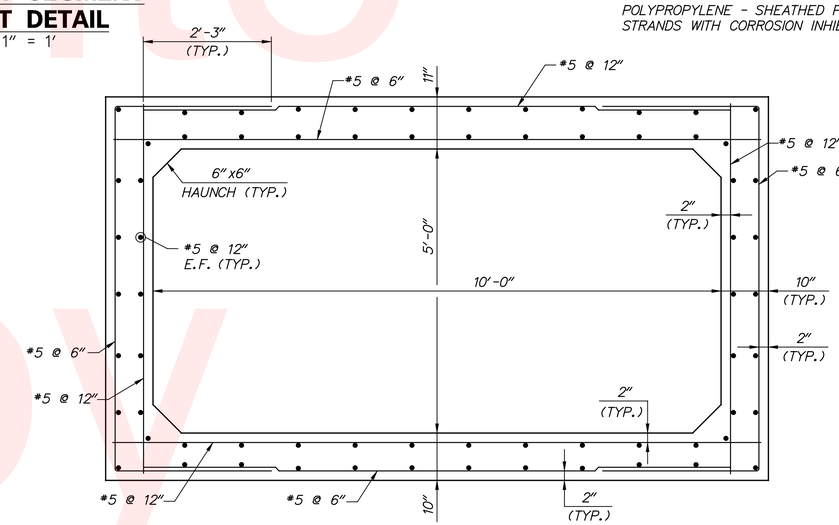

PRECAST CONCRETE BOX CULVERT REINFORCEMENT

3/4" = 1'

Unofficial Website Copy

DELAWARE DEPARTMENT OF TRANSPORTATION	ADDENDUMS / REVISIONS	HSIP NCC, N54, HOWELL SCHOOL ROAD, SR 896 TO SR 71	CONTRACT T200504110	BRIDGE NO. BR 1-376 & 1-378	CULVERT DETAILS	SHEET NO. 72
			COUNTY NEW CASTLE	DESIGNED BY: LAR		TOTAL SHTS. 138
				CHECKED BY: AWF		

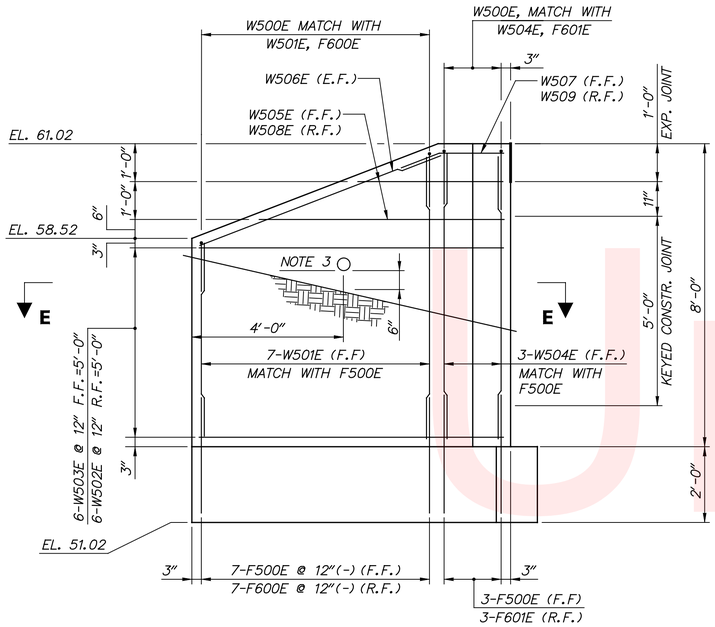

ELEVATION – WING A

(WING D SIMILAR)
1/2"=1'

ELEVATION NOTES:

1. PROVIDE 1/2" JOINT MATERIAL AT WINGWALL AND HEADWALL INTERFACE.
2. WEEPHOLE REINFORCEMENT NOT SHOWN.
3. WEEPHOLE INVERT EL. 56.65

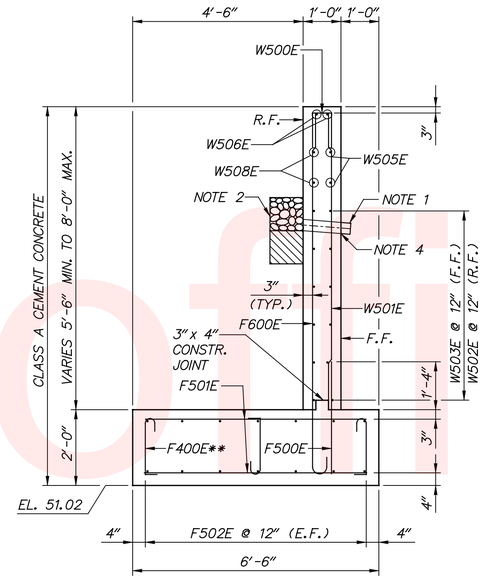

TYPICAL SECTION – WING A

(WING D SIMILAR)
1/2"=1'

** TIE TOP AND BOTTOM MATS OF REINFORCING STEEL WITH F400 TIE BARS AT A MAXIMUM SPACING OF 4'-0" IN BOTH DIRECTIONS. ALTERNATE 90° AND 135° HOOKS AT TOP IN ALTERNATE TIES.

WEEPHOLE NOTES:

1. 4" DIAMETER FORMED WEEPHOLE.
2. WEEPHOLE CONSISTS OF 4" DIA. P.V.C. PIPE AND 1/2 C.Y. OF NO. 57 COARSE AGGREGATE ON A 1/2 C.Y. CLAY BASE. ALL WEEP HOLE MATERIALS WILL BE INCIDENTAL TO ITEM 602738.
3. FOR INVERT LOCATIONS, SEE ELEVATIONS THIS SHEET. WEEPHOLE SLOPED AT 1/4 IN./FT.

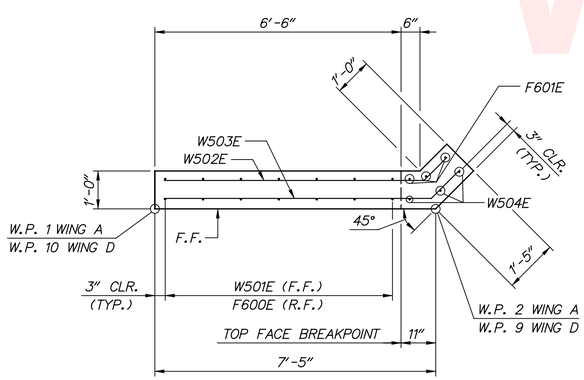

SECTION E – E

1/2"=1'

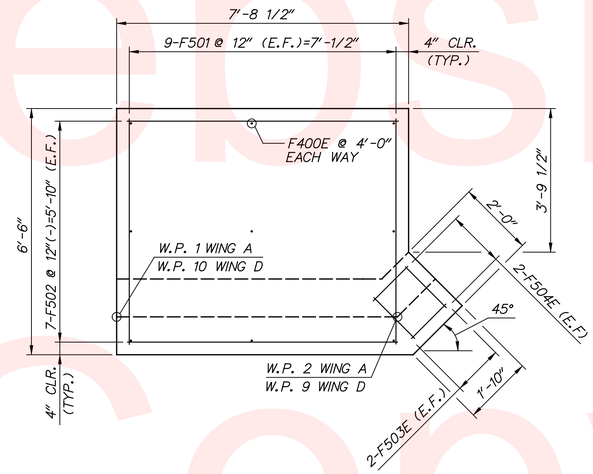

FOOTING PLAN – WING A

(WING D SIMILAR)
1/2"=1'

NOTES:

- FOR GENERAL NOTES, SEE SHEET 68.
- FOR STAKEOUT PLAN, SEE SHEET 69.

Unofficial Website Copy

DELAWARE DEPARTMENT OF TRANSPORTATION	ADDENDUMS / REVISIONS	HSIP NCC, N54, HOWELL SCHOOL ROAD, SR 896 TO SR 71	CONTRACT T200504110	BRIDGE NO. BR 1-376 & 1-378	WINGWALLS A AND D	SHEET NO. 73
			COUNTY NEW CASTLE	DESIGNED BY: LAR		TOTAL SHTS. 138
				CHECKED BY: AWF		

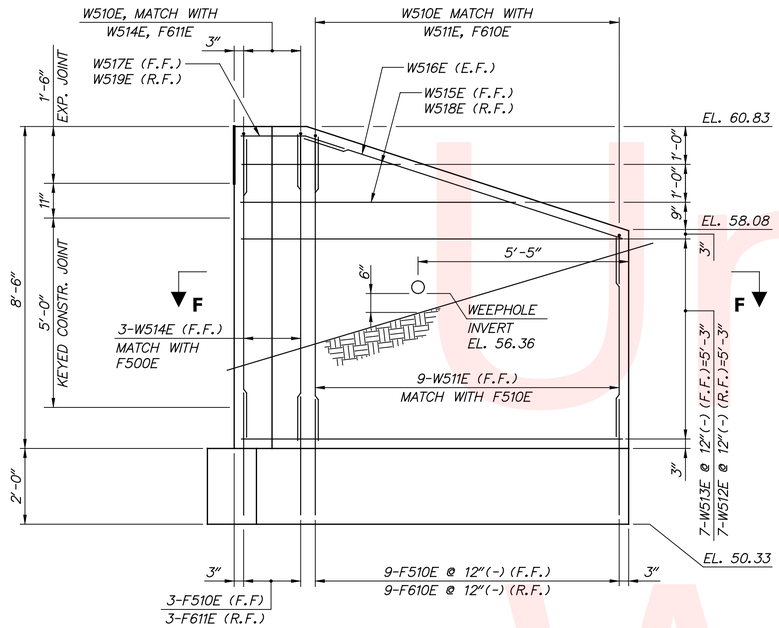

ELEVATION – WING B

(WING C SIMILAR)
1/2"=1'

ELEVATION NOTES:

1. PROVIDE 1/2" JOINT MATERIAL AT WINGWALL AND HEADWALL INTERFACE.
2. WEEPHOLE REINFORCEMENT NOT SHOWN.

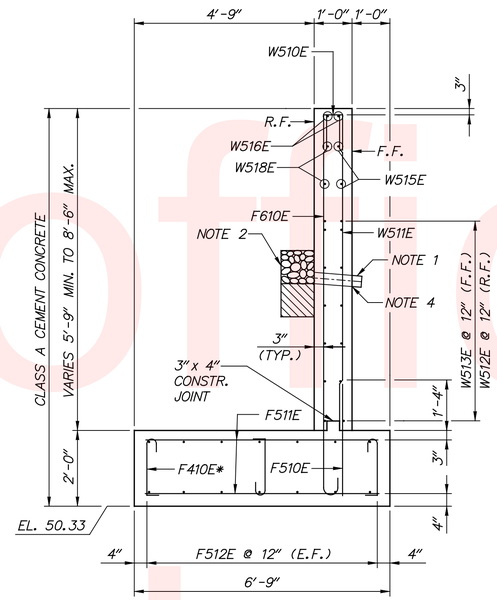

TYPICAL SECTION – WING B

(WING C SIMILAR)
1/2"=1'

WEEPHOLE NOTES:

1. 4" DIAMETER FORMED WEEPHOLE.
2. WEEPHOLE CONSISTS OF 4" DIA. P.V.C. PIPE AND 1/2 C.Y. OF NO. 57 COARSE AGGREGATE ON A 1/2 C.Y. CLAY BASE. ALL WEEP HOLE MATERIALS WILL BE INCIDENTAL TO ITEM 602738.
3. FOR INVERT LOCATIONS, SEE ELEVATIONS THIS SHEET. WEEPHOLE SLOPED AT 1/4 IN./FT.

* TIE TOP AND BOTTOM MATS OF REINFORCING STEEL WITH F400 TIE BARS AT A MAXIMUM SPACING OF 4'-0" IN BOTH DIRECTIONS. ALTERNATE 90° AND 135° HOOKS AT TOP IN ALTERNATE TIES.

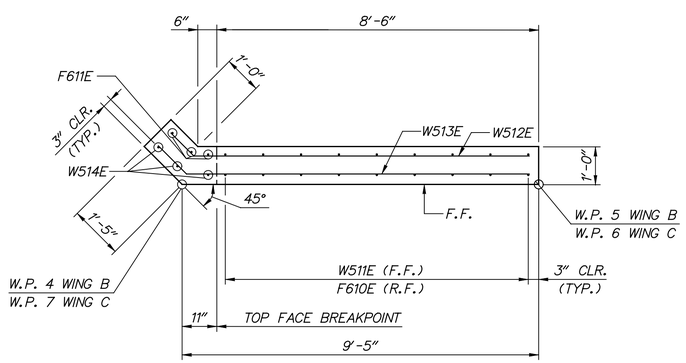

SECTION F – F

1/2"=1'

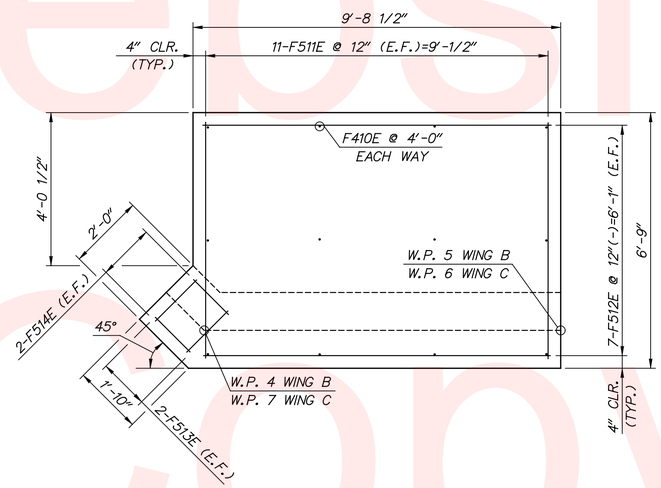

FOOTING PLAN – WING B

(WING C SIMILAR)
1/2"=1'

NOTES:

- FOR GENERAL NOTES, SEE SHEET 70.
- FOR STAKEOUT PLAN, SEE SHEET 71.

Unofficial Website Copy

STEEL REINFORCEMENT SCHEDULE

SPECIFICATIONS					BENDING DIMENSIONS (FEET-INCHES/QUARTER INCH)											
QTY.	SIZE	LENGTH	MARK	TYPE	A	B	C	D	E	F/R	G	H	I	J	K	O
REINFORCMENT BARS FOR WINGWALLS A AND D (TOTAL QUANTITY LISTED)																
18	4	2-08.5	F400E	T5	0-06.0	1-06.0					0-04.5			0-04.0		
20	5	3-01.0	F500E	STR		3-01.0										
18	5	6-00.0	F501E	STR		6-00.0										
14	5	7-02.5	F502E	STR		7-02.5										
4	5	1-06.0	F503E	STR		1-06.0										
4	5	1-04.0	F504E	STR		1-04.0										
14	6	7-00.9	F600E	18	0-08.0	7-00.9	0-00.0							0-06.0		
		TO				TO										
		9-05.2				9-05.2										
6	6	9-06.0	F601E	18	0-08.0	9-06.0	0-00.0							0-06.0		
20	5	4-06.0	W500E	17		2-00.0	0-06.0	2-00.0								
14	5	5-00.9	W501E	STR		5-00.9										
		TO				TO										
		7-04.2				7-04.2										
12	5	7-08.4	W502E	16	0-00.0	0-00.0	6-10.2	0-10.2				0-07.3			0-07.3	7-05.5
12	5	8-00.7	W503E	16	0-00.0	0-00.0	7-00.3	1-00.4				0-08.8			0-08.8	7-09.1
6	5	7-06.0	W504E	STR		7-06.0										
4	5	4-06.8	W505E	16	0-00.0	0-00.0	2-08.6	1-00.4				0-08.8			0-08.8	4-03.1
		TO					TO									
		6-04.1					5-03.7									
4	5	6-08.8	W506E	STR		6-08.8										
2	5	2-09.7	W507E	99	1-00.4	0-09.3	1-00.0									
4	5	4-02.5	W508E	16	0-00.0	0-00.0	2-08.6	0-10.2				0-07.3			0-07.3	3-11.5
		TO					TO									
		5-11.5					5-01.3									
2	5	2-05.5	W509E	99	0-10.3	0-07.2	1-00.0									
REINFORCMENT BARS FOR WINGWALLS B AND C (TOTAL QUANTITY LISTED)																
24	4	2-08.5	F410E	T5	0-06.0	1-06.0					0-04.5			0-04.0		
24	5	3-01.0	F510E	STR		3-01.0										
22	5	6-03.0	F511E	STR		6-03.0										
16	5	9-02.5	F512E	STR		9-02.5										
4	5	1-06.0	F513E	STR		1-06.0										
4	5	1-04.0	F514E	STR		1-04.0										
18	6	7-03.8	F610E	18	0-08.0	7-03.8	0-00.0							0-06.0		
		TO				TO										
		9-11.0				9-11.0										
6	6	10-00.0	F611E	18	0-08.0	10-00.0	0-00.0							0-06.0		
24	5	4-06.0	W510E	17		2-00.0	0-06.0	2-00.0								
18	5	5-03.8	W511E	STR		5-03.8										
		TO				TO										
		7-11.0				7-11.0										
14	5	9-08.4	W512E	16	0-00.0	0-00.0	8-10.2	0-10.2				0-07.3			0-07.3	9-05.5
14	5	10-00.7	W513E	16	0-00.0	0-00.0	9-00.3	1-00.4				0-08.8			0-08.8	9-09.1
6	5	8-00.0	W514E	STR		8-00.0										
4	5	4-01.4	W515E	16	0-00.0	0-00.0	3-01.0	1-00.4				0-08.8			0-08.8	5-02.2
		TO					TO									
		7-02.4					6-02.0									
4	5	8-05.5	W516E	STR		8-08.5										
2	5	2-09.7	W517E	99	1-00.4	0-09.3	1-00.0									
4	5	3-08.8	W518E	16	0-00.0	0-00.0	2-10.6	0-10.2				0-07.3			0-07.3	4-10.6
		TO					TO									
		6-09.9					5-11.7									
2	5	2-05.5	W519E	99	0-10.3	0-07.2	1-00.0									

NOTE: STEEL REINFORCEMENT SCHEDULE FOR INFORMATIONAL PURPOSES ONLY.

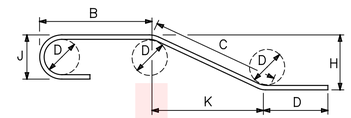

1. STANDARD BAR BENDS INCLUDE ONLY TYPES 1-32, S1-S12, AND T1-T16.
2. ALL DIMENSIONS ARE OUT-TO-OUT OF BAR EXCEPT "A" AND "G" ON STANDARD 180° AND 135° HOOKS.
3. "J" DIMENSIONS ON 180° HOOKS TO BE SHOWN ONLY WHERE NECESSARY TO RESTRICT HOOK SIZE, OTHERWISE STANDARD HOOKS ARE TO BE USED.
4. WHERE "J" IS NOT SHOWN, "J" WILL BE KEPT EQUAL TO OR LESS THAN "H" ON TRUSS BARS. WHERE "J" CAN EXCEED "H", IT SHOULD BE SHOWN.
5. "H" DIMENSIONS STIRRUPS TO BE SHOWN WHERE NECESSARY TO FIT WITHIN CONCRETE.
6. UNLESS OTHERWISE NOTED, DIAMETER "D" IS THE SAME FOR ALL BENDS AND HOOKS ON A BAR.
7. WHERE SLOPE DIFFERS FROM 45 DIMENSIONS, "H" AND "K" MUST BE SHOWN.
8. WHERE BARS ARE TO BE BENT MORE ACCURATELY THAN STANDARD BENDING TOLERANCES, BENDING DIMENSIONS WHICH REQUIRE CLOSER FABRICATION SHOULD HAVE LIMITS INDICATED.
9. FIGURES IN CIRCLES SHOW TYPES.
10. FOR RECOMMENDED DIAMETER "D", OF BENDS, HOOKS, ETC., SEE 'CRSI' OR 'ACI' TABLES.
11. TYPE S1-S12, T1-T16 APPLY TO BAR SIZES #3 THROUGH #6.

STANDARD BAR BENDS

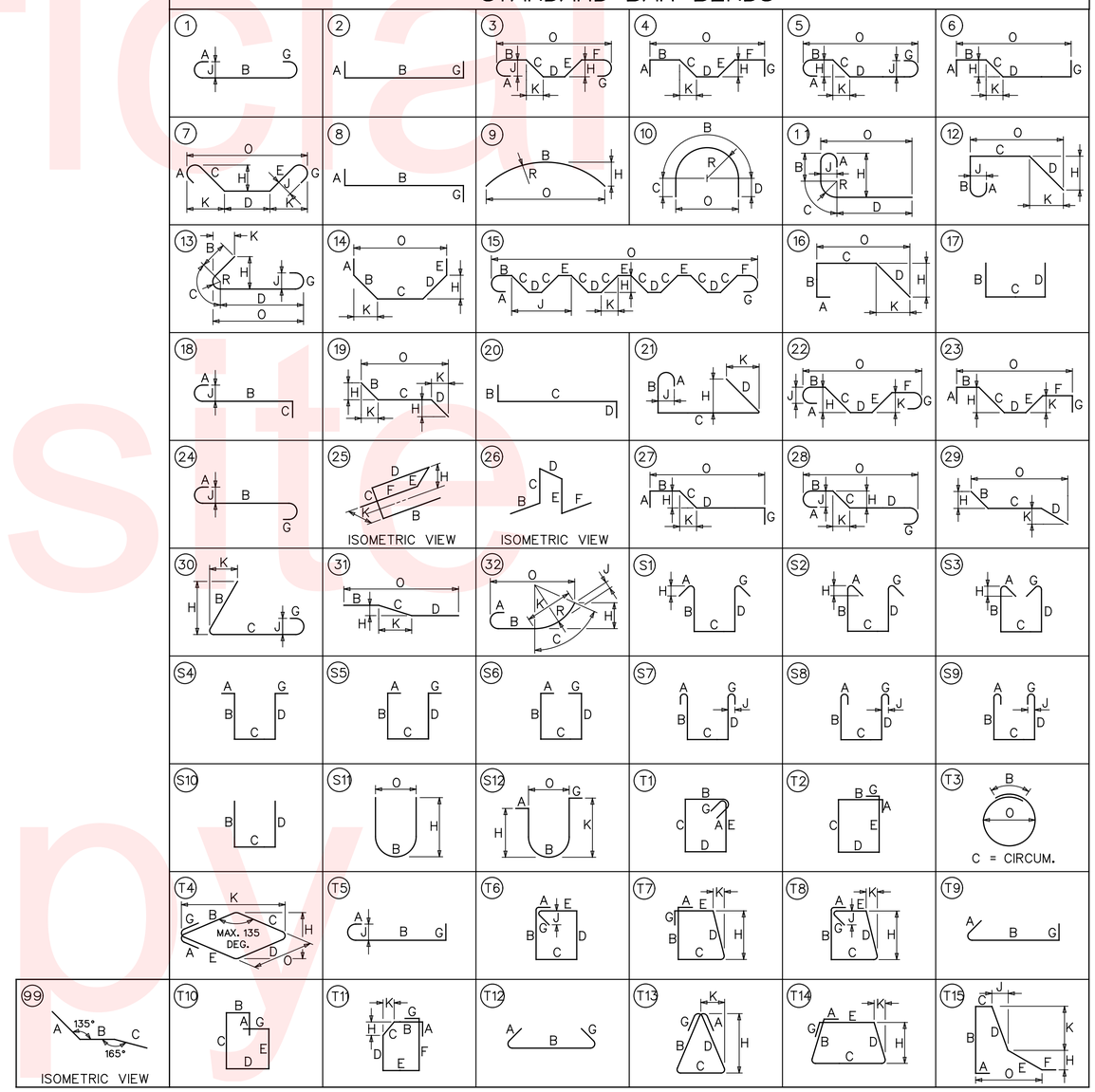

Unofficial Website Copy

DELAWARE DEPARTMENT OF TRANSPORTATION	ADDENDUMS / REVISIONS	HSIP NCC, N54, HOWELL SCHOOL ROAD, SR 896 TO SR 71	CONTRACT T200504110 / COUNTY NEW CASTLE	BRIDGE NO. BR 1-376 & 1-378 / DESIGNED BY: LAR / CHECKED BY: AWF	WINGWALL REINFORCEMENT SCHEDULE

SHEET NO. 75 / TOTAL SHTS. 138

STEEL REINFORCEMENT SCHEDULE

SPECIFICATIONS					BENDING DIMENSIONS (FEET-INCHES/QUARTER INCH)											
QTY.	SIZE	LENGTH	MARK	TYPE	A	B	C	D	E	F/R	G	H	I	J	K	O
REINFORCEMENT BARS FOR HEADWALLS																
17	5	2-04.0	H500E	8	1-02.0	2-00.0					1-08.0					
17	5	1-10.0	H501E	8	1-02.0	1-06.0					1-08.0					
17	5	2-04.0	H502E	2	1-02.0	2-00.0					1-08.0					
17	5	1-10.0	H503E	2	1-02.0	1-06.0					1-08.0					
8	6	11-08.0	H600E	STR		11-08.0										

NOTE: STEEL REINFORCEMENT SCHEDULE FOR INFORMATIONAL PURPOSES ONLY.

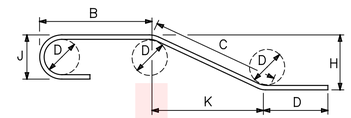

1. STANDARD BAR BENDS INCLUDE ONLY TYPES 1-32, S1-S12, AND T1-T16.
2. ALL DIMENSIONS ARE OUT-TO-OUT OF BAR EXCEPT "A" AND "G" ON STANDARD 180° AND 135° HOOKS.
3. "J" DIMENSIONS ON 180° HOOKS TO BE SHOWN ONLY WHERE NECESSARY TO RESTRICT HOOK SIZE, OTHERWISE STANDARD HOOKS ARE TO BE USED.
4. WHERE "J" IS NOT SHOWN, "J" WILL BE KEPT EQUAL TO OR LESS THAN "H" ON TRUSS BARS. WHERE "J" CAN EXCEED "H", IT SHOULD BE SHOWN.
5. "H" DIMENSIONS STIRRUPS TO BE SHOWN WHERE NECESSARY TO FIT WITHIN CONCRETE.
6. UNLESS OTHERWISE NOTED, DIAMETER "D" IS THE SAME FOR ALL BENDS AND HOOKS ON A BAR.
7. WHERE SLOPE DIFFERS FROM 45 DIMENSIONS, "H" AND "K" MUST BE SHOWN.
8. WHERE BARS ARE TO BE BENT MORE ACCURATELY THAN STANDARD BENDING TOLERANCES, BENDING DIMENSIONS WHICH REQUIRE CLOSER FABRICATION SHOULD HAVE LIMITS INDICATED.
9. FIGURES IN CIRCLES SHOW TYPES.
10. FOR RECOMMENDED DIAMETER "D", OF BENDS, HOOKS, ETC., SEE 'CRSI' OR 'ACI' TABLES.
11. TYPE S1-S12, T1-T16 APPLY TO BAR SIZES #3 THROUGH #6.

STANDARD BAR BENDS

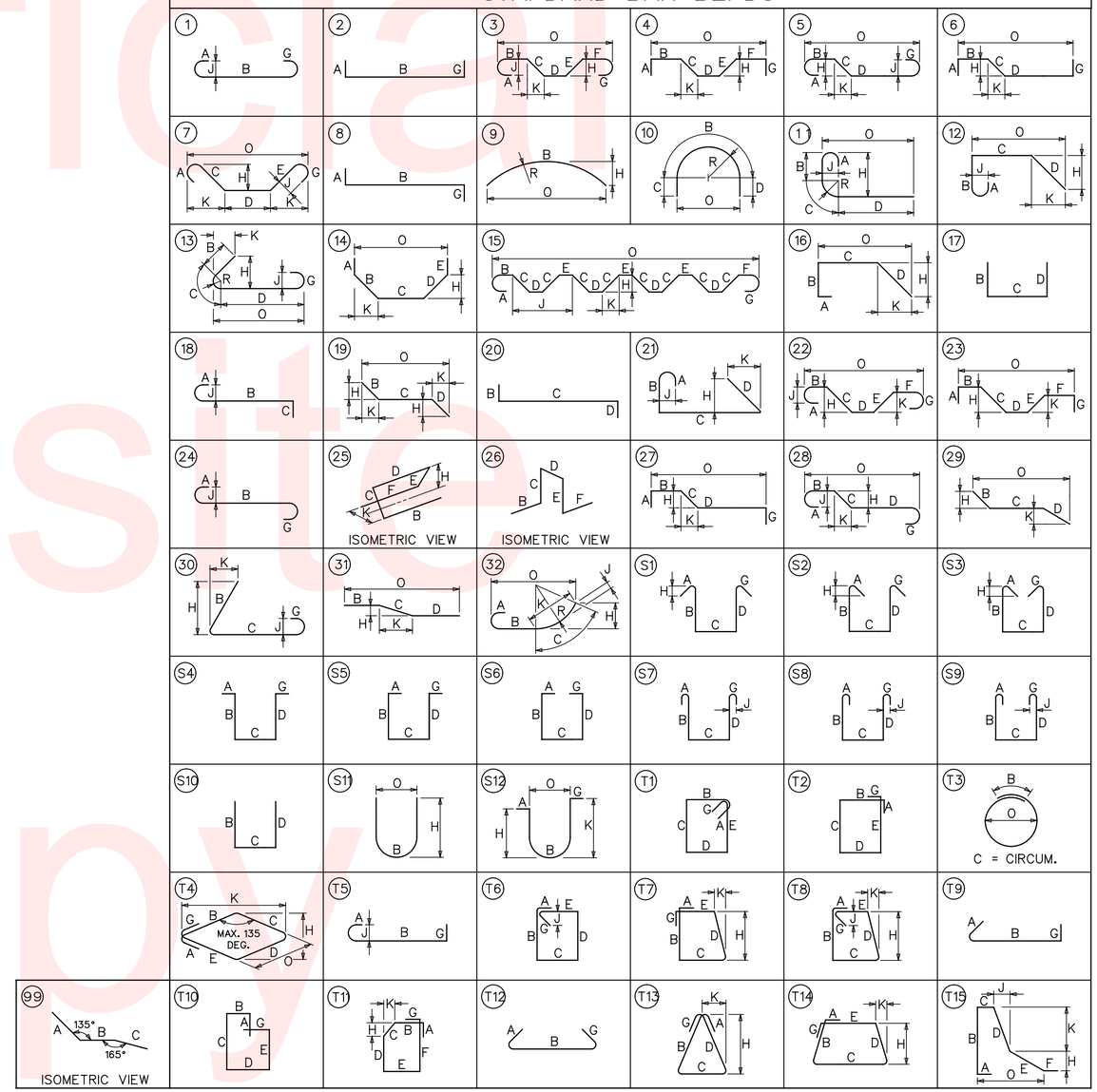

Unofficial Website Copy

DELAWARE DEPARTMENT OF TRANSPORTATION	ADDENDUMS / REVISIONS	HSIP NCC, N54, HOWELL SCHOOL ROAD, SR 896 TO SR 71	CONTRACT T200504110	BRIDGE NO. BR 1-376 & 1-378	HEADWALL REINFORCEMENT SCHEDULE
			COUNTY NEW CASTLE	DESIGNED BY: LAR	SHEET NO. 76
				CHECKED BY: AWF	TOTAL SHTS. 138